Scotsman

Installation and User's Manual for Ice Maker-Dispenser

Models MDT5N25 and MDT5N40

MDT5N25 & MDT5N40 User Manual

INTRODUCTION

To the owner or user: This manual is intended to provide you, and the maintenance or service technician with the information needed to install, start up, clean, and maintain this ice maker-dispenser.

The machine is a combination nugget ice maker and countertop dispenser, with the option of wall mounting.

The ice dispensing section is a seamless plastic storage bin, with a stainless steel rotating vane to sweep the ice into the dispensing chute.

Table of Contents

FOR THE INSTALLER: Specifications . . . . . Page 2
FOR THE INSTALLER: Environmental Limitations . . . . . Page 3
FOR THE INSTALLER . . . . . Page 4
FOR THE INSTALLER: Wall Mount Kit . . . . . Page 5
FOR THE PLUMBER . . . . . Page 6
FOR THE ELECTRICIAN . . . . . Page 7
FOR THE INSTALLER: Final Check List & Start Up . . . . . Page 8
OPERATION: Ice Vending . . . . . Page 9
DISPENSE AREA SANITATION . . . . . Page 10
CLEANING and SANITIZING . . . . . Page 11
MAINTENANCE AND CLEANING . . . . . Page 12
SERVICE DIAGNOSIS . . . . . Page 13
SERVICE DIAGNOSIS: Circuit Board . . . . . Page 14

Note this symbol when it appears.

⚠WARNING

It marks a possible hazard.

FOR THE INSTALLER: Specifications

This ice maker-dispenser is designed to be mounted on a machine stand, or a countertop, or using wall mounting kit KWB3, hung from a wall. The sink may be retained, or removed and the optional longer splash panel (KSP5) installed in place of the original. Instructions for each kit are included in this service manual.

Before beginning the installation, check that all the materials and kits required are available at the installation location.

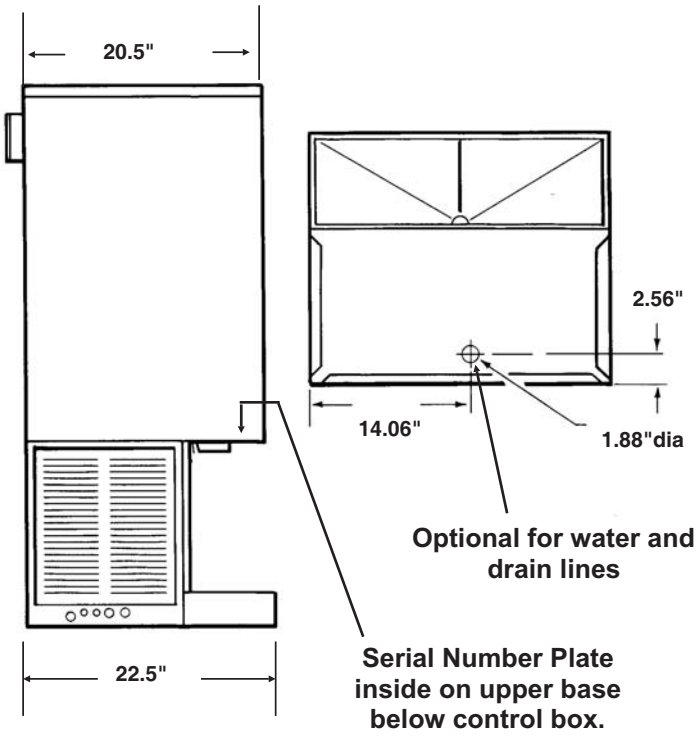

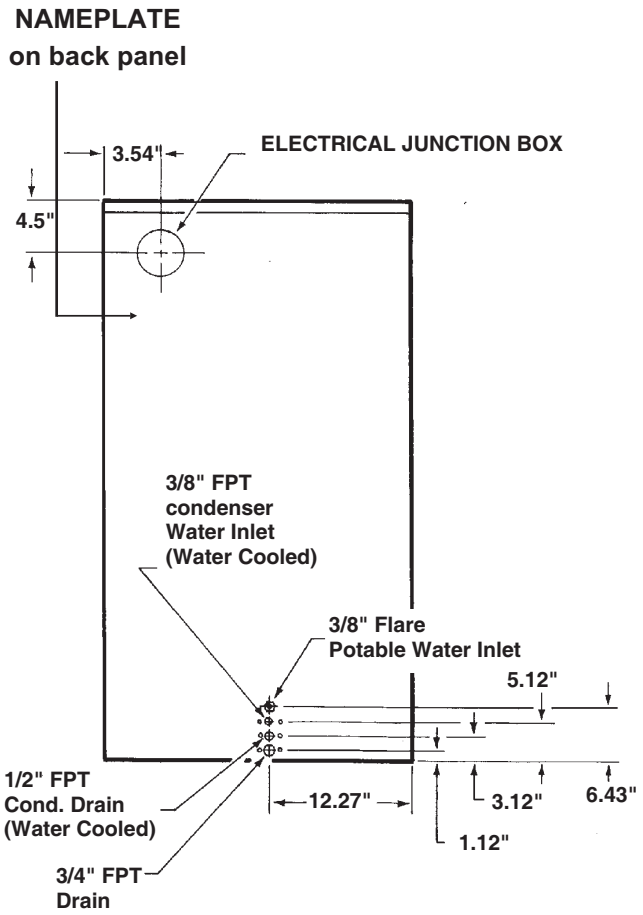

SPECIFICATIONS

Model Number	Dimensions (w/o stand) H" x W" x D"	Basic Electric	Cond. Type	Ref. Charge, R-404A in ounces*	Minimum Circuit Ampacity	Maximum Fuse Size
MDT5N40A-1J	48.5 x 26 x 22.5	115/60/1	Air	24	19.3	25
MDT5N40W-1J	same	115/60/1	Water	17	17.8	20
MDT5N40A-6J	same	230/50/1	Air	24	11.5	15
MDT5N40W-6J	same	230/50/1	Water	17	10.9	15
MDT5N25A-1J	41 x 26 x 22.5	115/60/1	Air	24	19.3	25
MDT5N25W-1J	same	115/60/1	Water	17	17.8	20
MDT5N25A-6J	same	230/50/1	Air	24	11.5	15
MDT5N25W-6J	same	230/50/1	Water	17	10.9	15

Always check the nameplate for charge info.

FOR THE INSTALLER: Environmental Limitations

Installation Limitations

This ice system is designed to be installed indoors, in a controlled environment.

	Minimum	Maximum
Air Temp	50^0F.	100^0F.
Water Temp	40^0F.	100^0F.
Water Pressure	20 PSI	80 PSI
Voltage (115v)	104	126

Operating the machine outside of the above limitations, or outdoors, is potentially damaging to the machine; also it is misuse of the machine, which may void the warranty.

Scotsman Ice Systems are designed and manufactured with the highest regard for safety and performance. They meet or exceed the standards of UL and NSF.

Scotsman assumes no liability or responsibility of any kind for products manufactured by Scotsman that have been altered in any way, including the use of any part and/or other components not specifically approved by Scotsman.

Scotsman reserves the right to make design changes and/or improvements at any time.

Specifications and design are subject to change without notice.

Water Limitations

An ice machine is a food manufacturing plant; it takes a raw material, water, and turns it into a food product, ice. The purity of the water is very important in obtaining pure ice and in maximizing product life. This section is not intended as a complete resource for water questions, but it does offer these general recommendations:

1. Filter the water used to produce ice. That is the water going to the “potable” water connection. Water filters vary greatly in ability and function. Install one that filters out suspended solids to a dimension of 5 microns or smaller. The finer the filter the better, but finer filters will clog sooner than course ones. It may be necessary to add a course filter ahead of the fine filter to prolong filter life.

2. Check with a water treatment specialist for a water test, and recommendations regarding filters and treatment.

Service Limitations

Do not install in a location where the top of the machine is within 6" of a fixed ceiling. Do not install air cooled models in a location where there is less than 6" clearance to the left and right of the cabinet.

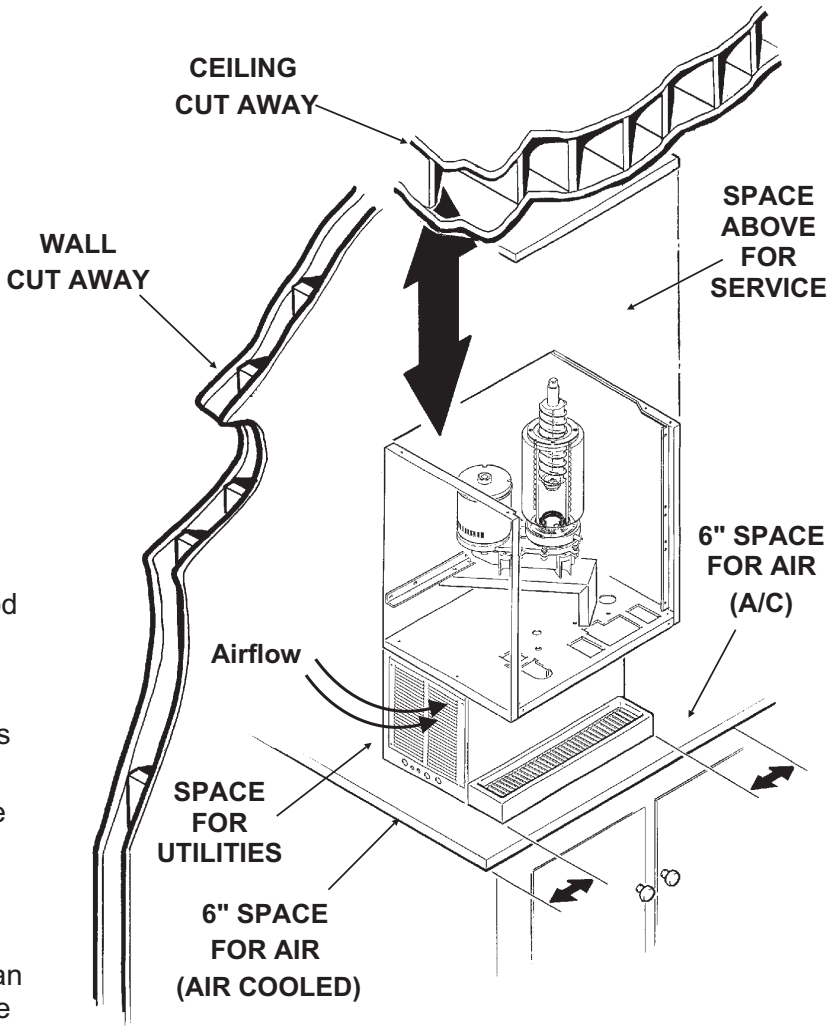

FOR THE INSTALLER

Location

After uncrating and inspection, the unit is ready for installation. It is important that the machine be installed in a location where it has enough space above and behind it for service. Air cooled models require a minimum of 6 inches to the left and right of the machine for air circulation.

Machine Stand Installation

Tip the stand on its back and install the legs, return the stand to the upright position. Adjust leg levelers so that the stand does not “rock”.

Counter Top or Machine Stand Installation

The base of the icemaker-dispenser must be sealed to the object it rests upon. Food grade silastic sealant such as Scotsman part number 19-0529-01 is recommended.

Place a bead of the sealant on the machine stand or counter top to match the outside edge of the cabinet base and sink.

The icemaker-dispenser is heavy: use of a mechanical hoist is recommended to lift it to the height required to install it.

The DMS machine stand has holes in the top that match up with threaded holes in the icemaker-dispenser. Place the cabinet onto the machine stand, so that the unit is lined up with the holes. Secure the ice maker-dispenser to the machine stand with bolts and washers.

In both counter top and machine stand installations, wipe off and neatly smooth any excess sealant. Level the machine stand and cabinet.

Unpack and install the sink brackets. Fit the sink assembly onto the two sink brackets, and press onto the bead of sealant. Wipe off and neatly smooth any excess sealant from under the sink edge.

Unpack and install the ice and water spouts.

Ice Spout: Slide up and over ice outlet. No fastener is required to hold it in place.

Water Spout: Slide over stainless steel water discharge tube, locate and match up with notches in the base. Rotate clockwise to move spout into installed position.

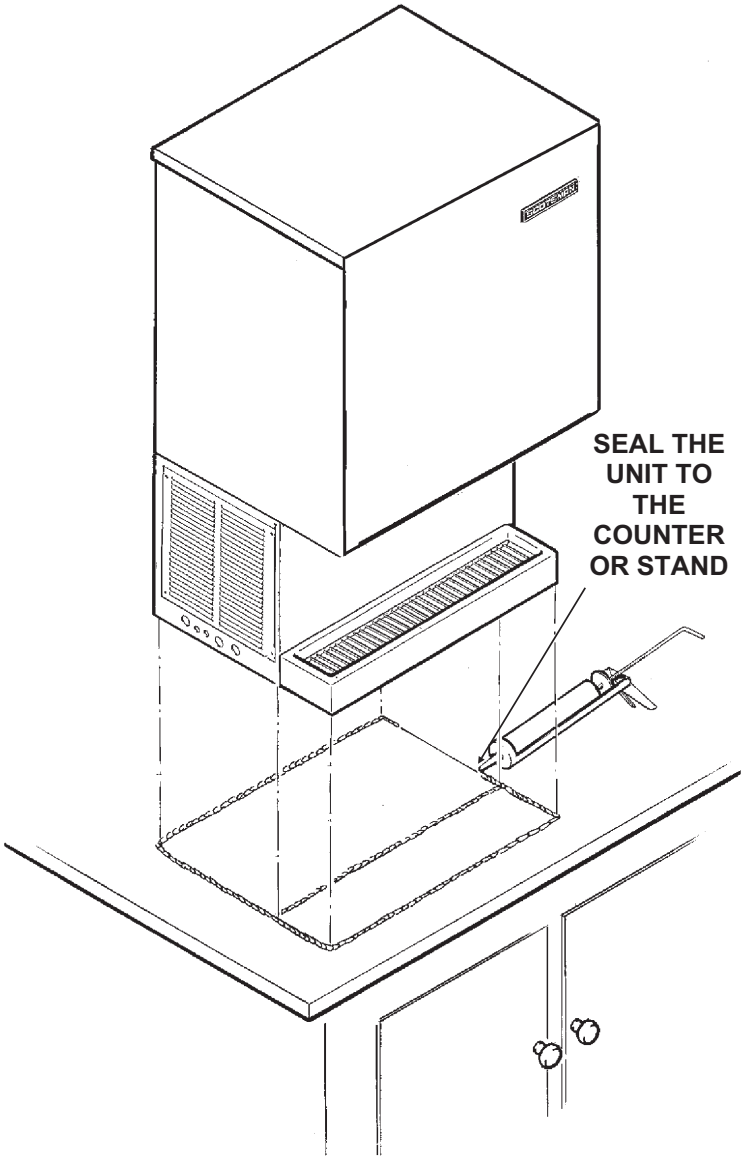

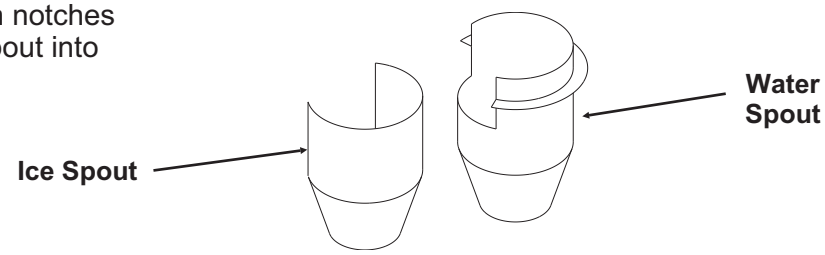

FOR THE INSTALLER: Wall Mount Kit

CAUTION

It is recommended that the wall mounting installation be done by an experienced contractor. The weight of the machine when in use may exceed 350 pounds. The unit should be mounted on a solid, rigid wall with proper fasteners for that type of wall and of adequate strength to support the weight of the machine when in use.

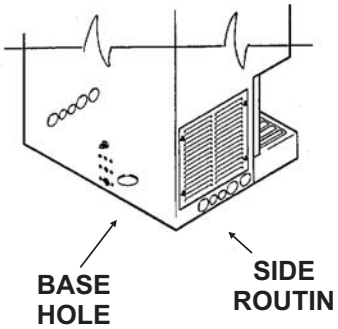

Clearance between the wall and the icemaker is a maximum of 1 inch. Check utility connections first. The electrical junction box will have to be removed, and the electrical connections made inside the cabinet in compliance with local codes. The plumbing connections may be made through the base, or at either side through the pre-punched holes, using standard plumbing practices.

Interior plumbing lines must be disconnected from the original connections and plugged when routing through the side or base.

1. Remove machine top. Attach bracket “A” to machine using (3) nuts, (3) flat washers, (3) lock washers, and (3) 5/16-18 bolts received with the kit.

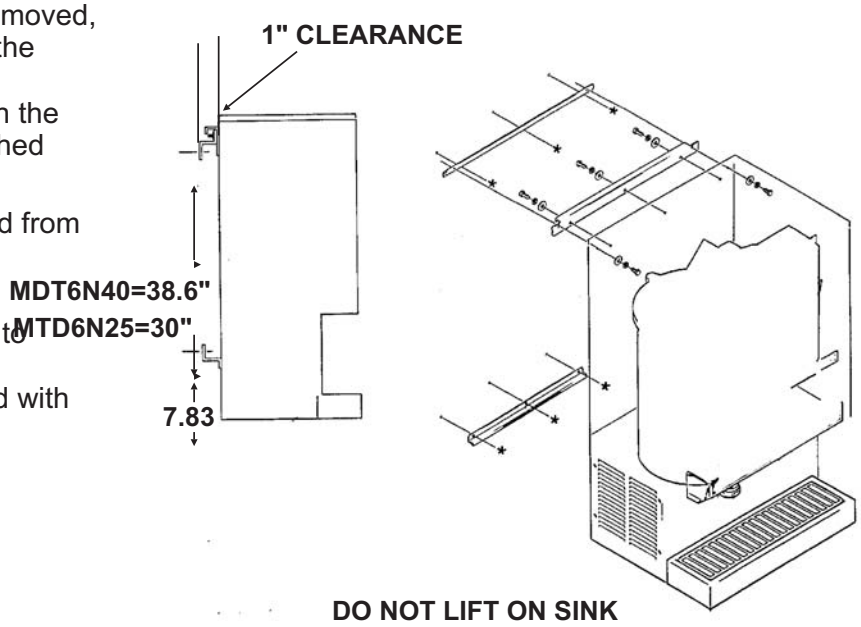

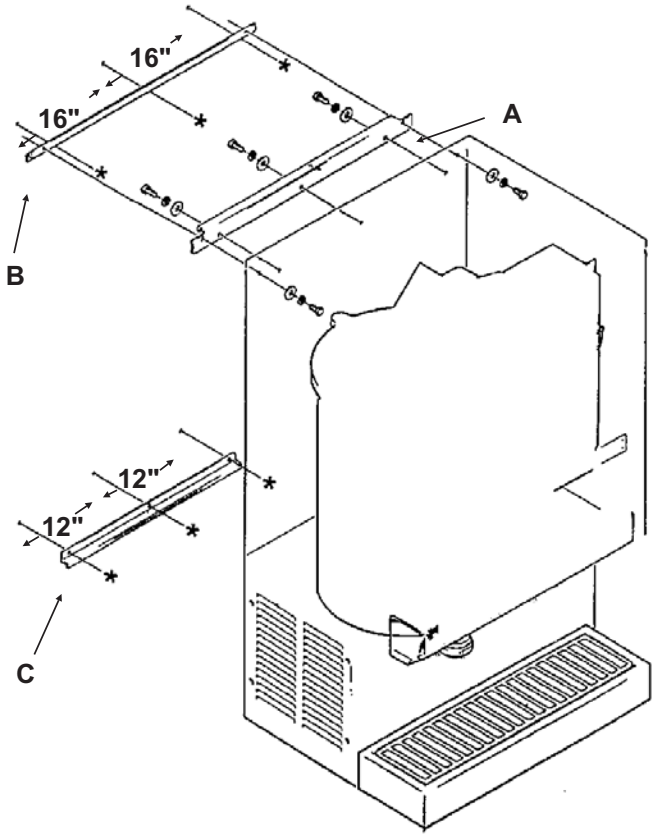

2. Mount brackets “B” and “C” to the wall at the dimensions shown for the unit. (hardware for this is not included).

Use fasteners and wall of sufficient strength to carry the use and weight of the icemaker-dispenser.

3. Lift unit up and hook bracket “A” over bracket “B”. Slide unit until the two remaining holes are aligned and secure with the remaining (2) 1/4-20 bolts, flat washers and lock washers.

CONFORM TO ALL APPLICABLE CODES

Water Inlet

Air Cooled Models: The recommended water supply is clean, cold water. Use 3/8" O.D. copper tubing, connect to the 3/8" male flare at the back of the cabinet. Install a hand valve near the machine to control the water supply.

Note: Back flow prevention for the potable water supply is provided by the air gap between the float valve orifice and the water reservoir overflow.

Water Treatment: In most areas, a water filter of some type will be useful. In areas where the water is highly concentrated with minerals the water should be tested by a water treatment specialist, and the recommendations of the specialist regarding filtration and/or treatment should be followed.

Water Cooled Models: A separate 3/8" O.D. copper line is recommended, with a separate hand valve to control it. It is connected to a 3/8" FPT condenser inlet at the back of the cabinet. The water pressure to all lines must always be above 20 psig, and below 80 psig.

Drains

Air Cooled Models: There is one 3/4" FPT drain at the back of the cabinet, the drain line is of the gravity type, and 1/4 inch per foot fall is an acceptable pitch for the drain tubing. There should be a vent at the highest point of the drain line, and the ideal drain receptacle would be a trapped and vented floor drain. Use only 3/4" rigid tubing.

Water Cooled Models: In addition to the above mentioned drain, a separate condenser drain must be installed. Connect it to the 1/2" condenser drain connection at the back of the cabinet.

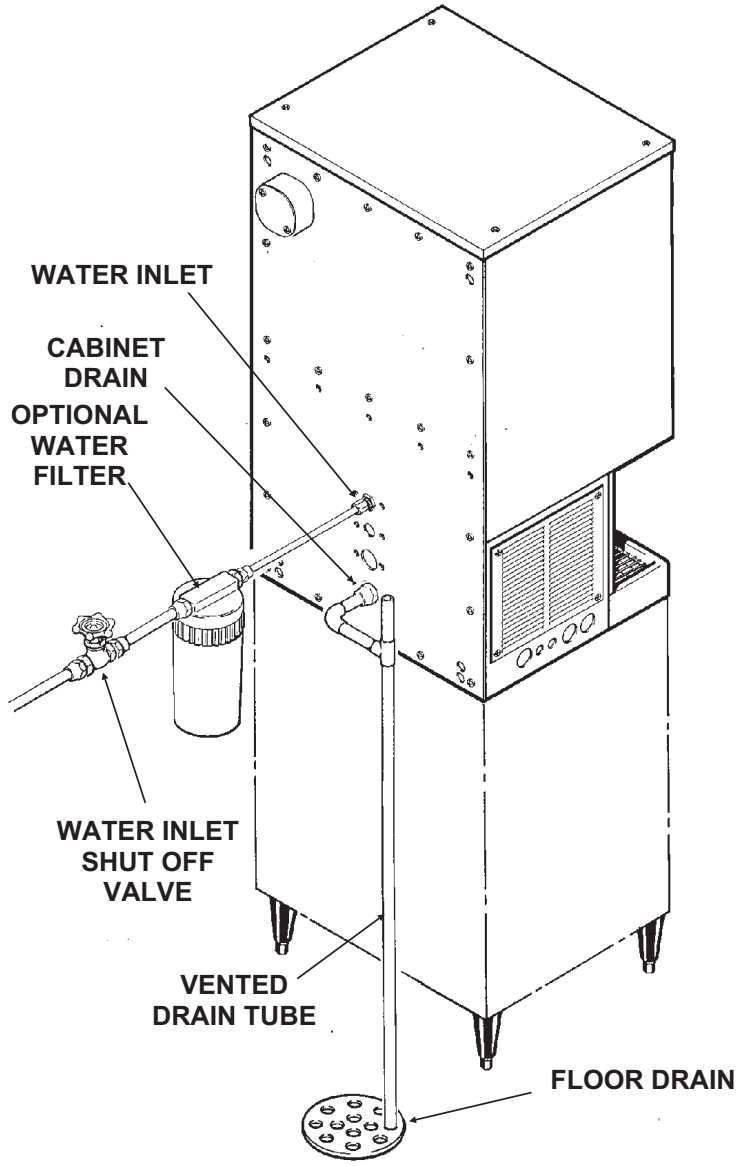

WATER COOLED DETAIL

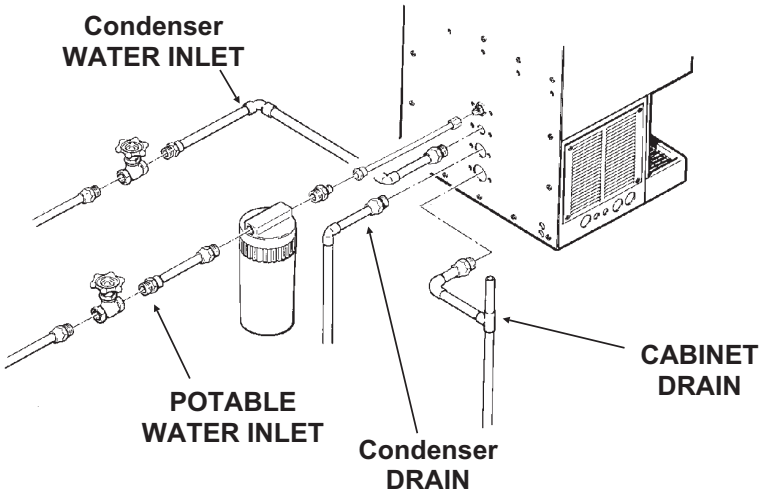

FOR THE ELECTRICIAN

CONFORM TO ALL APPLICABLE CODES

The electrical power to the unit is supplied through the junction box at the rear of the machine.

Check the nameplate (located on the back panel) for the voltage requirements, and for the minimum circuit ampacity. The machine requires a solid chassis to earth ground wire.

The ice maker should be connected to its own electrical circuit so it is individually fused. Voltage variation must remain within design limitations, even under starting conditions.

All external wiring must conform to national, state, and local electrical codes. The use of a licensed electrician is required to perform the electrical installation.

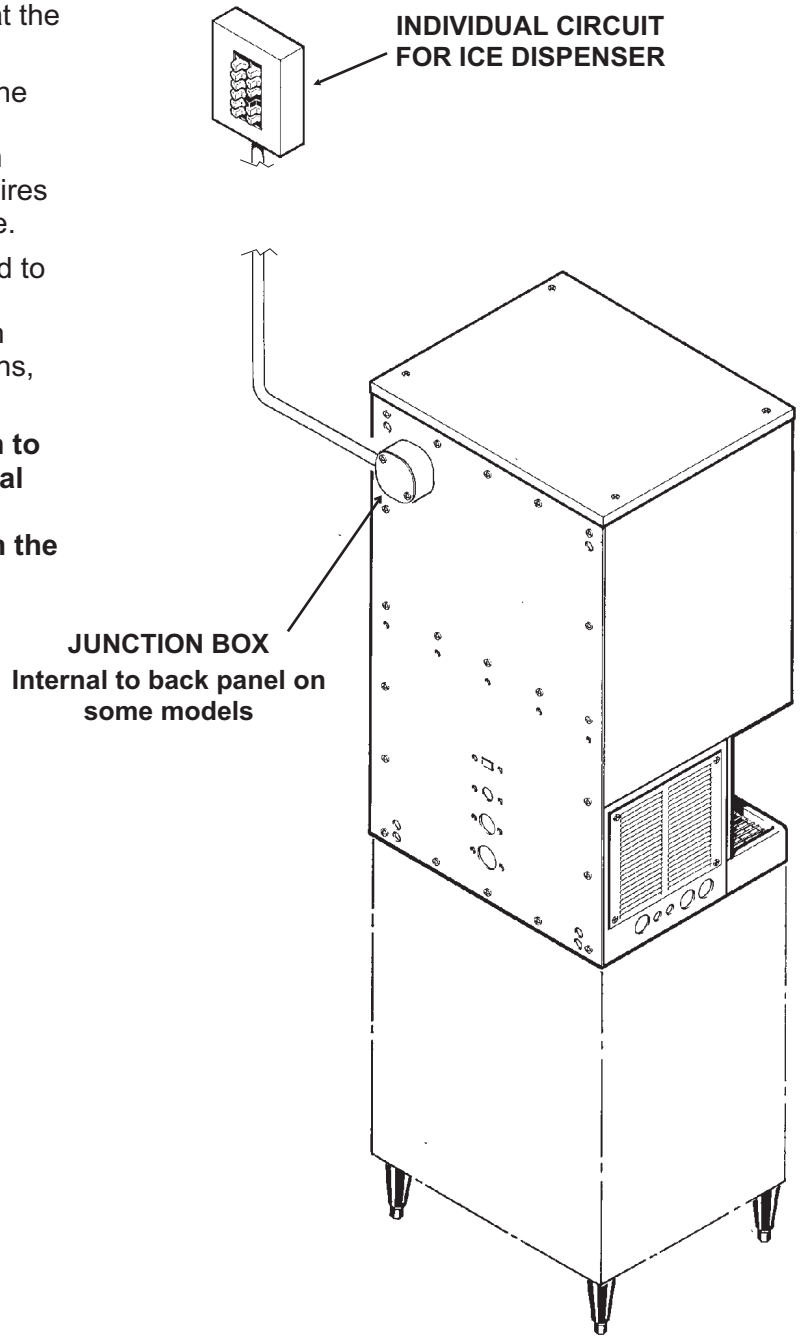

FOR THE INSTALLER: Final Check List & Start Up

1. Is the icemaker-dispenser installed indoors, in a location where the air and water temperatures are controlled, and where they do not go beyond design limitations?

2. Is there an electrical disconnect (switch or plug as required) within sight of the installed machine? Is the machine on a separate circuit? Has the voltage been checked and compared to nameplate requirements?

3. Have all of the plumbing connections been made and checked for leaks?

4. Has the machine been leveled?

5. Is there a minimum of 6 inches of clearance at the left and right sides of an air cooled machine?

6. Is there a minimum of 6 inches of clearance at the top and back of the machine for service and utility connections?

Wall mounted only: Is the machine properly installed and secured to the wall?

7. Is there a water shut off valve installed near the machine?

INITIAL START UP

Pre Start Inspection

1. Remove the two front panels.

2. Check that all shipping blocks have been removed.

3. Remove any and all packing tape (check inside the storage bin).

4. Inspect the interior of the machine for loose screws or wires. Check that no refrigerant lines are rubbing each other. Check that the fan blade on air cooled models turns freely.

5. Check that the machine is installed correctly according to the final check list.

Start Up

1. Go through the pre start inspection.

2. Open the water hand valve, observe that water enters the water reservoir, fills the tube from the reservoir to the evaporator and then shuts off. Check for leaks.

3. Switch the master switch on. The electrical start up sequence is automatic; there will be a short (15 second) delay before the machine starts.

4. On air cooled models, warm air will begin to flow from the condenser. Water cooled models will begin to discharge warm water (110°F) down the drain.

5. The unit should soon be making ice.

BACK VIEW OF COMPLETED INSTALLATION

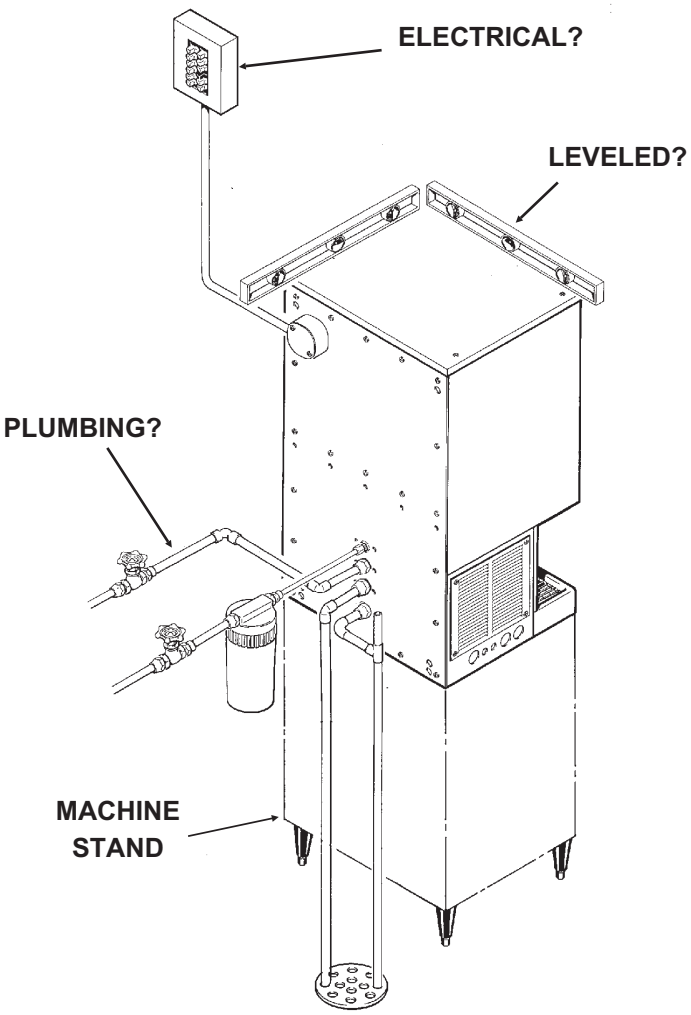

6. There are no adjustments to make, so replace the panels.

7. Check ice dispensing by holding a container in front of the Touch Free ice sensor (just below the ice delivery spout). Ice should flow from the spout when a container is present, and stop dispensing when the container is removed.

8. Switch off the icemaker-dispenser, remove the top panel and the top of the ice storage bin. Sanitize the interior of the ice storage bin by wiping it with a mixture of 1 ounce of household bleach to 2 gallons of water, allow to air dry. Replace all covers and panels. Switch the icemaker-dispenser back on.

9. Give the owner/user the service manual, instruct him/her in the operation and maintenance requirements of the unit. Make sure they know who to call for service.

10. Fill out the Customer Evaluation and Warranty Registration form, and mail it in to Scotsman.

OPERATION: Ice Vending

Dispensing takes place when the Touch Free sensor's infrared beam bounces back to the sensor from a container placed directly in front of it.

If the container is in front of the Touch Free sensor on the left side, the ice dispensing vane will rotate and sweep ice over the ice dispensing chute. Ice will continue to discharge out this chute as long as the vane is turning. It stops when the dispensing vane stops.

- If the user does not remove the container, ice will be dispensed for 60 seconds and then stop.

If the container is in front of the Touch Free sensor on the right side, the inlet water valve will open and water will flow into the container.

- If the user does not remove the container water will be dispensed for 90 seconds and then stop.

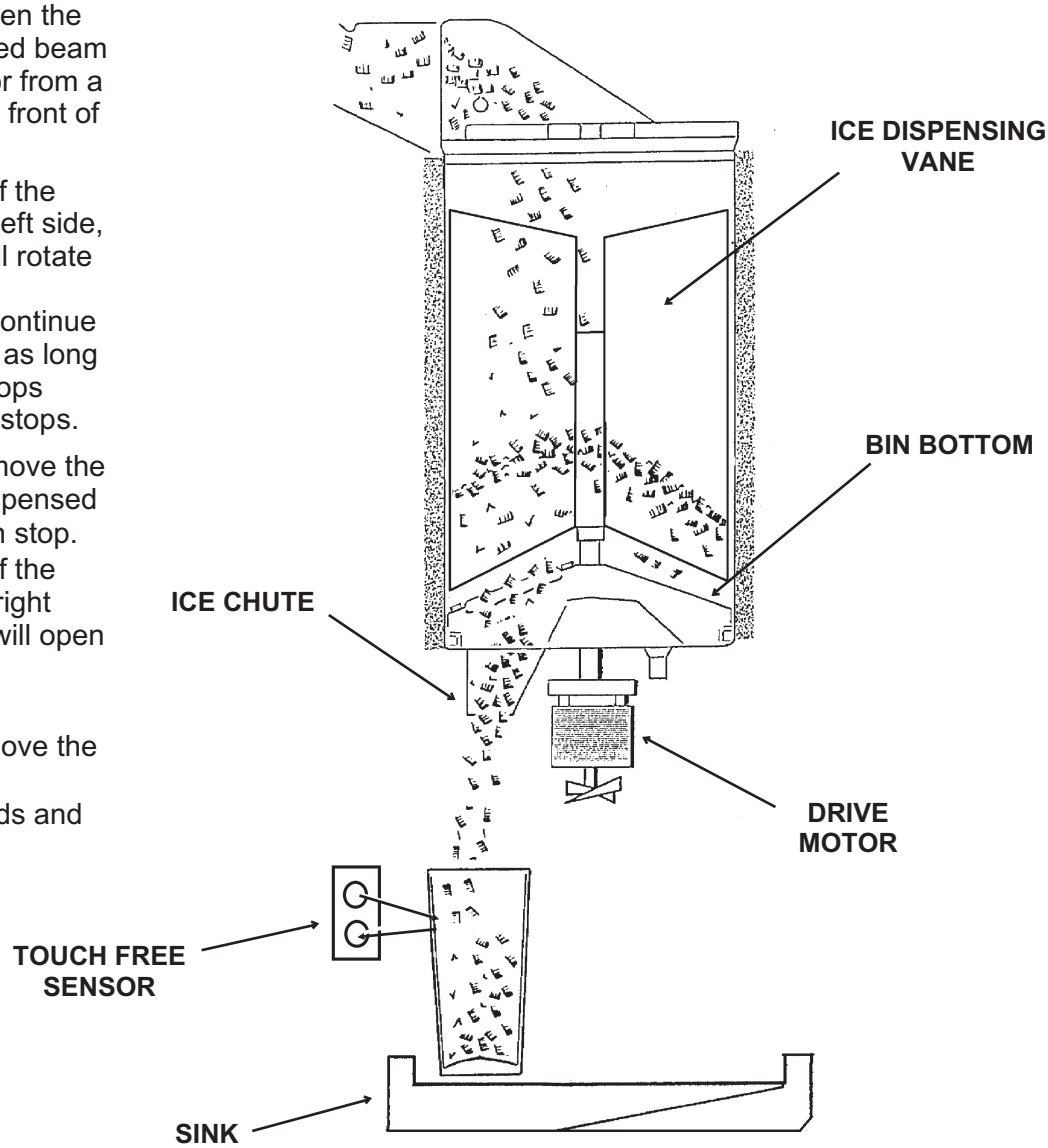

The Touch Free System:

Hold or Place a Container in Front of The Touch Free Sensor & Under The Ice or Water Spout;

Ice or Water Will Be Dispensed Without Touching The Dispenser

Note: Clear glass containers may not reflect the sensor's infrared beam and activate dispensing unless the user's hand or fingers are at the back of the container.

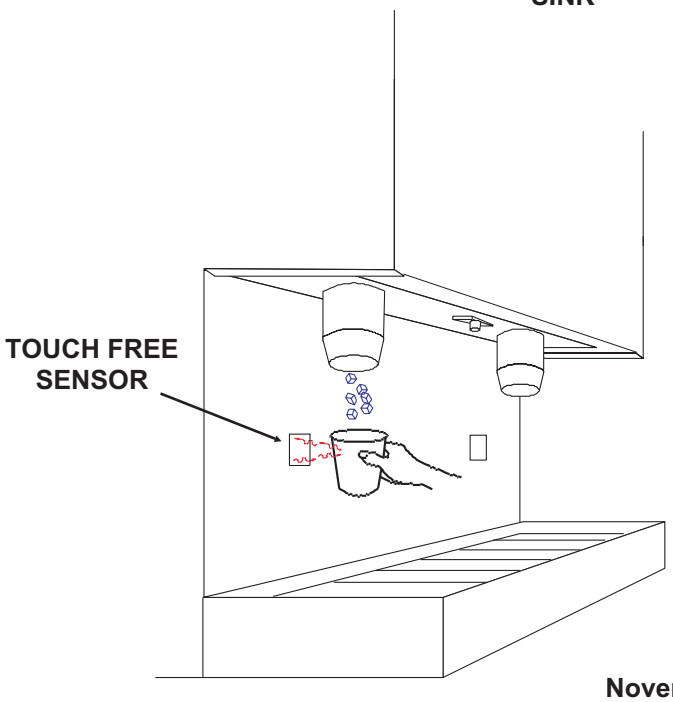

DISPENSE AREA SANITATION

The dispense area; spouts, sink, grill and splash panel will need periodic cleaning and maintenance.

1. The ice chute may be pulled down to remove it from the ice dispenser. Wash and sanitize it.

2. The sink grill may be removed for washing and sanitizing.

3. The sink should be flushed with hot water and wiped clean with sanitizer.

4. The splash panel requires special attention to clean it.

- Push and release the Splash Panel Cleaning switch located to the left of the water spout. This disables the Touch Free sensors so the splash panel may be cleaned without vending ice and/or water.
- Wash the splash panel and wipe with with sanitizer.
- Re-push the clean switch or allow 2 minutes to pass for the Touch Free system to reset.

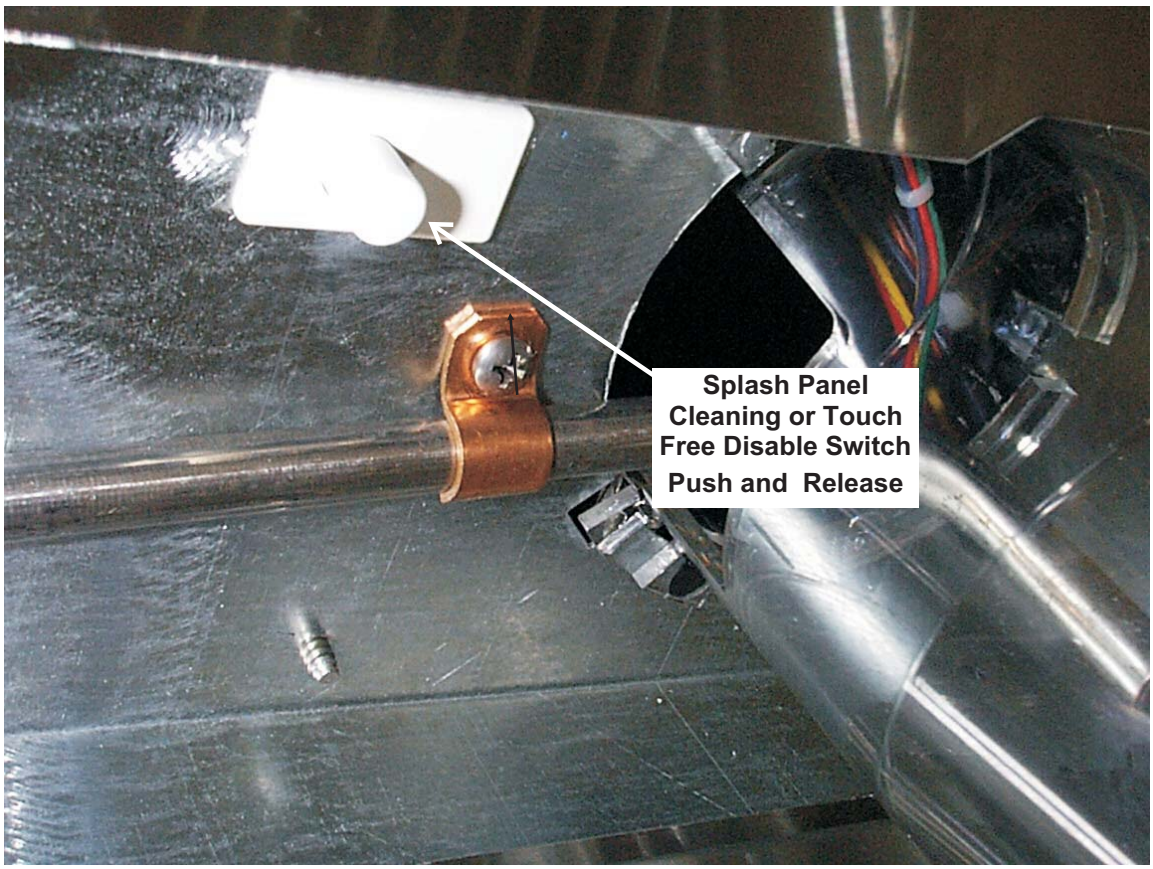

CLEANING and SANITIZING

A Scotsman Ice System represents a sizable investment of time and money in any company's business. In order to receive the best return for that investment, it MUST receive periodic maintenance.

It is the USER'S RESPONSIBILITY to see that the unit is properly maintained. It is always preferable, and less costly in the long run, to avoid possible down time by keeping it clean; adjusting it as needed; and by replacing worn parts before they can cause failure. The following is a list of recommended maintenance that will help keep the machine running with a minimum of problems.

Maintenance and Cleaning/Sanitizing should be scheduled at a **minimum of twice per year.**

Electrical power will be ON when doing in place cleaning.

ICEMAKING SYSTEM: In place cleaning

1. Check and clean any water treatment devices, if any are installed.

2. Remove screws and remove the upper front panel.

3. Move the ON-OFF switch to OFF.

4. Remove the cover to the ice storage bin, and remove the ice.

5. Remove the cover to the water reservoir and block the float up.

6. Drain the water reservoir and freezer assembly using the drain tube attached to the freezer water inlet. Return the drain tube to its normal upright position and replace the end cap.

7. Prepare the cleaning solution: Mix eight ounces of Scotsman Ice Machine Scale Remover with three quarts of hot water. The water should be between 90-115 degrees F.

Scotsman Ice Machine Scale Remover contains acids.

These compounds may cause burns. If swallowed, DO NOT induce vomiting. Give large amounts of water or milk. Call Physician immediately. In case of external contact, flush with water. Keep out of the reach of children.

⚠WARNING

8. Slowly pour the cleaning solution into the water reservoir until it is full. Wait 15 minutes, then switch the master switch to ON.

9. As the ice maker begins to use water from the reservoir, continue to add more cleaning solution to maintain a full reservoir.

10. After all of the cleaning solution has been added to the reservoir, and the reservoir is nearly empty, switch the master switch to OFF.

11. After draining the reservoir, as in step 6, wash and rinse the water reservoir.

To Sanitize:

Repeat steps 8-11, only use an approved sanitizing solution in place of the cleaning solution. A possible sanitizing solution to use could be 1 ounce of household bleach mixed with 2 gallons of warm (95°F. - 115°F.) water.

12. Remove the block from the float in the water reservoir.

13. Switch the master switch to ON

14. Continue ice making for at least 15 minutes, to flush out any cleaning solution. Check ice for acid taste - continue icemaking until ice tastes sweet.

DO NOT USE any ice produced from the cleaning solution.

Be sure no ice remains in the bin.

15. Remove all ice from the storage bin.

16. Add warm water to the ice storage bin and thoroughly wash and rinse all surfaces within the bin.

17. Sanitize the bin cover, dispensing vane, bin bottom, and interior with an approved sanitizer using the directions for that sanitizer.

18. Replace the ice storage bin cover, and the front panel.

MAINTENANCE AND CLEANING

⚠WARNING

Moving Parts Hazard.
Disconnect electrical power to the icemaker - dispenser before beginning.

1. Air Cooled Models: Check the air cooled condenser for lint, dirt or grease build-up. Clean with vacuum or soft brush until light can be seen thru the fins.

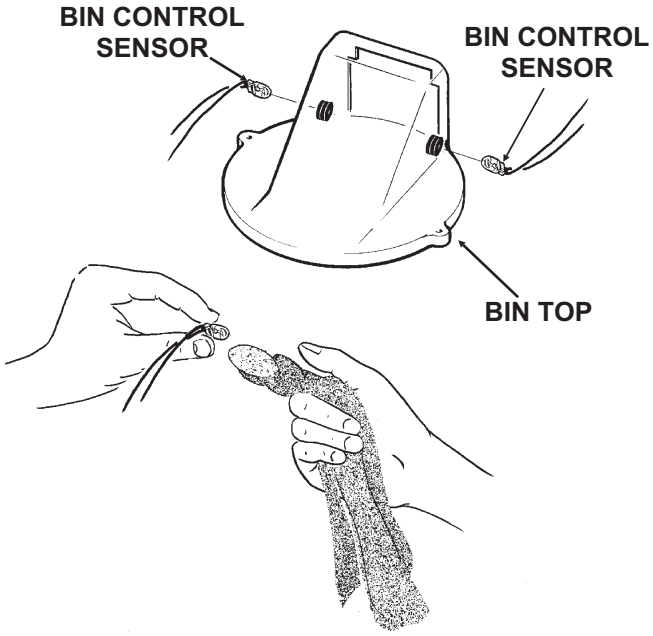

2. The ice machine senses water level by a probe located in the water reservoir. At least twice a year, the probe should be removed from the reservoir, and the tip wiped clean of mineral build-up.

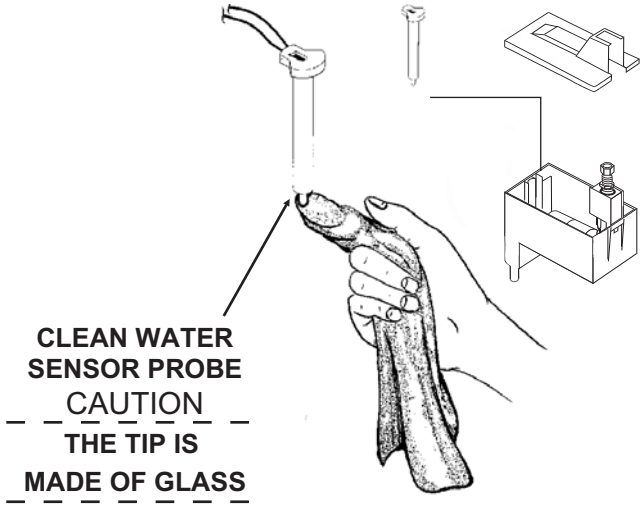

3. The bin control uses devices that sense light, therefore they must be kept clean enough so that they can “see”. At least twice a year, remove the bin control sensors from the grommets in the ice chute, and wipe them clean.

4. The bearing in the breaker should also be checked at least **two times per year**.

A. Check the bearing by:

- removing the ice chute cover
- unscrewing the ice sweep
- removing the water shed
- unscrewing the breaker cover.

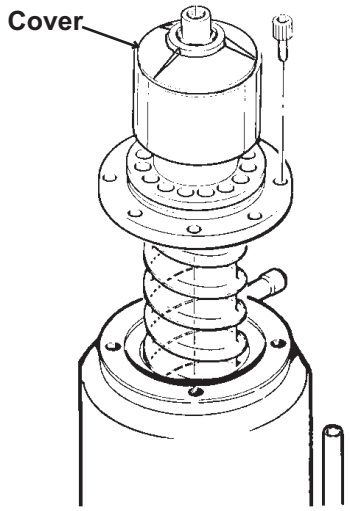

Inspect the bearing. There should be plenty of grease and it should not appear watery or contaminated.

If the bearing needs grease, inject grease into the bearing using Scotsman grease needle pn 02-3559-01 and Scotsman bearing grease cartridge, pn A36808-001. Be sure to inject grease evenly and thoroughly.

5. Check and tighten all bolts and screws.

Note: In some areas, the water supply to the ice maker will contain a high concentration of minerals, and that will result in an evaporator and auger becoming coated with these minerals, requiring a more frequent removal than twice per year. If in doubt about the condition of the evaporator and auger, the auger can be removed so the parts can be inspected.

SERVICE DIAGNOSIS

Symptom	Possible Cause	Probable Correction
No ice made, nothing operates	Unit off due to no power	Restore power
	Unit off due to master switch in OFF position	Switch master switch to ON
	Unit off due to low water level	Check water supply, filter, strainer, float valve. Correct water supply
	Unit off due to ice level sensors (photo-electric eyes) blocked	Check/clean ice level sensors
	Unit off due to scale on water level sensor	Clean water level sensor
	Unit off due to water temperature too high	Thermistor will shut down unit at temperatures over 110°F.
Unit operates, no ice is vended	Check for ice in the bin	If no ice, check that ice maker can make ice
		Check that machine cannot keep up with needs
	Check for jam up of ice in dispense chute	Pull chute down and allow ice to fall out. Return chute to its normal place.
	If there is ice, check that the bin vane rotates. if not	Check for power to the bin drive motor, if none, check condition of Touch-Free ice sensor.
	If there is power to the bin drive motor, but the vane does not turn	Disconnect electrical power, remove all ice, check mechanical condition of ice vane. Replace if broken.
		If ice vane is mechanically sound, check bin drive, replace if broken.
Compressor on, auger motor is off	Auger motor windings open	Replace auger motor
	Auger motor relay does not make	Replace circuit board
	Contactor stuck	Replace contactor
Compressor does not operate	Off due to high pressure control open	Check condenser, fan motor, fan blade, or water supply on water cooled.
	Contactor coil is open	Replace contactor
	Contactor contacts do not make	Replace contactor
	Start capacitor failed	Replace start capacitor
	Potential relay failed	Replace relay
	Compressor windings open	Replace compressor
	Compressor locked	Replace compressor

SERVICE DIAGNOSIS: Circuit Board

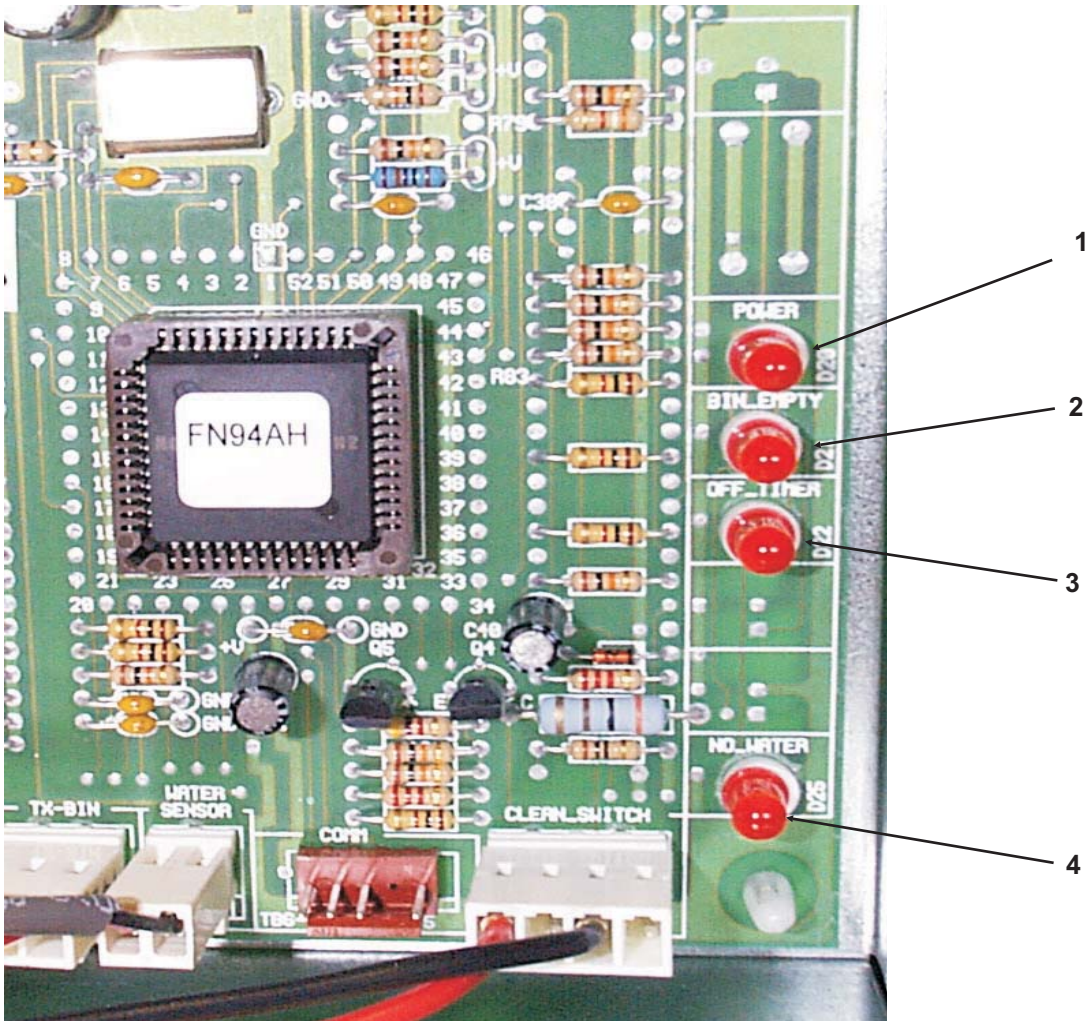

Explanation of Indicator Light	Position On Board	Name and Meaning of Light or Reset
On at all times when the master switch is ON and machine is connected to electrical power.	1	**Power**, ON = Normal
On when ice level is low (unit making ice).	2	**Bin Empty**, ON = Needs Ice
Normal 6 minute off/delay start. To prevent short cycling, the machine will not restart after **any** shut off (except power to the board) until 6 minutes have passed.	3	**Off Timer**, ON = Unit cycling off
On when water level is low in the reservoir.	4	**No Water**, ON = Trouble

SCOTSMAN ICE SYSTEMS
775 Corporate Woods Parkway, Vernon Hills, IL 60061
800-533-6006
www.scotsman-ice.com

17-3282-01