Scotsman Ice Systems

PRODIGY® Eclipse®

EH222 – 800-1000 lb Cube Ice Machine

Prodigy® Eclipse® Remote Cooled Modular Cube Ice Maker

EH222 shown on ice dispenser.

Compressor Unit

Remote Condenser

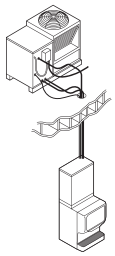

Eclipse System connected to single remote condenser.

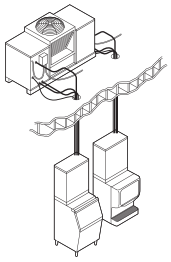

Two Eclipse Systems connected to a dual remote condenser.

Features

Equipped with Prodigy® self-monitoring technology AutoAlert™ indicator lights, patented WaterSense adaptive purge control as well as Prodigy's superior cost-saving energy efficiency.

Eclipse® technology moves the compressor and condenser to the roof, moving noise and heat away from customers & workers, resulting in a quieter environment.

The small footprint and narrow profile offer the ability to place the ice machine where ice is needed, at the drive through window or in the dining room at a self-service beverage station.

Flexible design allows Eclipse® ice machines to be paired with a wide variety of dispensers or storage bins, supplying ice to any area of your operation.

Offers quick and flexible installation because it can be connected to either a single remote condenser, dual remote condenser or properly sized universal rack or multi-pass condenser system.

24 Hour Volume Production

EH222 800 lb			EH222 1000 lb		
70˚F/21˚C 50˚F/10˚C lb/kg	Air Water	AHRI 90˚F/32˚C 70˚F/21˚C lb/kg	70˚F/21˚C 50˚F/10˚C lb/kg	Air Water	AHRI 90˚F/32˚C 70˚F/21˚C lb/kg
855/389		728/331	1035/470		874/397

Modular Dispenser & Bin Options

Model Number*	Dimensions W" x D" x H"	AHRI Certified Bin Capacity lb/kg	Application Capacity lb/kg	Finish	Ship Weight lb/kg
ID150/ABS	22 x 30 x 35	-	150/68	SS	150/68
ID200	30 x 30 x 35	-	200/91	SS	200/91
ID250	30 x 30 x 39	-	250/114	SS	300/136
B322S	22 x 34 x 44	290/132	370/168	SS	140/64
BH1100BB	48 x 34 x 50	860/393	1100/499	SS w/ GBB**	280/127
BH1100SS	48 x 34 x 50	860/393	1100/499	SS	280/127

* See Scotsman Price List for Required Bin Tops.

** Stainless Steel with Galvanized Back & Bottom.

Cube Ice

Small Cube
⅞" x ⅞" x ⅜"
(2.22 x 2.22 x .95 cm)

Common ice form, ideal for mixed drinks.

Warranty

- 3 years parts and labor on all components.
- 5 years parts and labor on the evaporator.
- 5 years parts on the compressor and condenser.

Warranty valid in North, South & Central America.
Contact factory for warranty in other regions.

Scotsman Ice Systems · 775 Corporate Woods Parkway · Vernon Hills, IL 60061
1-800-SCOTSMAN
Fax: 847-913-9844
E-mail: customer.relations@scotsman-ice.com
www.scotsman-ice.com

EH222 – 800-1000 lb Cube Ice Machine

Scotsman®
Ice Systems

Revit drawings available at
www.scotsman-ice.com

REVIT BY Scotsman Ice Systems

EH222 – 800-1000 lb Cube Ice Machine

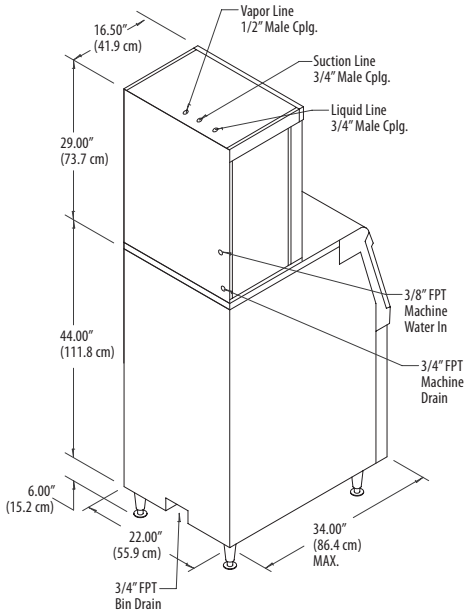

EH222 on B322S bin.

Installation Note: Allow 6" space at back for ventilation and utility connections.

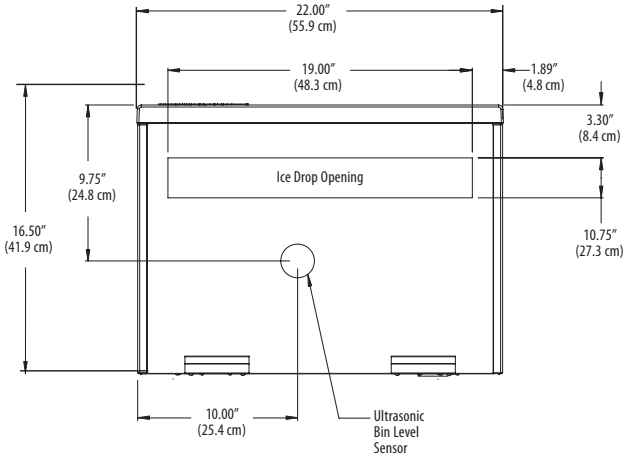

22" Prodigy Eclipse plan view.

Specifications

Model Number	Compressor Unit	Basic Electrical Volts/Hz/Phase	Max. Fuse Size or HACR Circuit Breaker (amps)	Circuit Wires	Min. Circuit Ampacity	Energy Consumption kWh/100 lb (45.4 kg) 90˚F(32˚C)/70˚F(21˚C)	Water Usage Gallons/100 lb (liters/45.4 kg) Potable 90˚F(32˚C)/ 70˚F(21˚C)	Water Usage Gallons/100 lb (liters/45.4 kg) Condenser 90˚F(32˚C)/ 70˚F(21˚C)
EH222SL-1	-	115/60/1	15	2	Cord	-	-	-
	C0800CP-32**	208-230/60/1	20	2	14.8	5.3	17.6/66.7	-
	C1410CP-32***	208-230/60/1	30	2	16.5	5.5	18.1/68.6	-
	C0800CP-3**	208-230/60/3	15	3	10.6	5.3	17.6/66.7	-
	C1410CP-3***	208-230/60/3	20	3	12.6	5.5	18.1/68.6	-

**Use for EH222 800 lb. ***Use for EH222 1000 lb. = ENERGY STAR®

All Models

Dimensions (W x D x H):

EH222 Unit:	22" x 16.5" x 29" (55.9 x 41.9 x 73.7 cm)
Shipping Carton:	25.5" x 19.5" x 34" (67.8 x 49.5 x 86.3 cm)
Compressor Unit:	30" x 18" x 35" (76.2 x 45.7 x 88.9 cm)
Shipping Carton:	33" x 21" x 38" (83.8 x 53.3 x 96.5 cm
Shipping Weight:	EH222 110 lb. / 50 kg. C0800CP 215 lb. / 98 kg. C1410CP 225 lb. / 102 kg.
BTUs per hour:	8,200˚/13,700**/20,000***

**Use for EH222 800 lb. ***Use for EH222 1000 lb.

Accessories

Model Number	Description
KVS(1)	Vari-Smart™ Ice Level Control - Program ice bin levels to match ice needs.
KSBU	Smart-Board™ Advanced Control - Use additional operational data for fast diagnosis.
KSBU-N	Smart-Board™ Advanced Control with Network - Network capable.
ERC680-32	Remote Condenser for Eclipse 0800 lb., 208-230/60/1
ERC1086-32	Remote Condenser for Eclipse 1000-1400 lb., 208-230/60/1
ER2C6810-32	Remote Condenser for Eclipse two 800/1000 lb., 208-230/60/1
3RTE20-EH	Line set, Precharged, R-404A, 20ft.
3RTE35-EH	Line set, Precharged, R-404A, 35ft.
3RTE50-EH	Line set, Precharged, R-404A, 50ft.
3RTE75-EH	Line set, Precharged, R-404A, 75ft.

(1) KVS included standard on EH222 Scotsman recommends all ice machines have water filtration. See Scotsman Sanitation Matrix for details.

Operating Requirements

	Minimum	Maximum
Air Temperatures	50°F (10°C)	100°F (38°C)
Water Temperatures	40°F (4.4°C)	100°F (38°C)
Remote Cond. Temps	-20°F (-29°C)	120°F (49°C)
Water Pressures	20 PSIG (1.4 bar)	80 PSIG (5.5 bar)
Electrical Voltage	-5%	+10%

Scotsman Ice Systems · 775 Corporate Woods Parkway · Vernon Hills, IL 60061
1-800-SCOTSMAN
Fax: 847-913-9844
E-mail: customer.relations@scotsman-ice.com
www.scotsman-ice.com

© 2013 Scotsman Ice Systems.