Scotsman Ice Systems

PRODIGY Eclipse

EH330 – 1400 lb Cube Ice Machine

Prodigy® Eclipse® Remote Cooled Modular Cube Ice Maker

EH330 shown on beverage dispenser.

Features

Low height for easy installation under low ceilings and soffits.

AutoAlert™ indicator lights constantly communicate about operating status and actually signal your staff when it's time to descale, sanitize, and more-making upkeep practically foolproof.

Energy efficient design is ENERGY STAR® certified and eligible for numerous utility company rebates.

Eclipse technology moves the compressor and condenser to the roof, moving noise and heat away from customers and workers, resulting in a quieter environment.

An optional advanced feature Smart-Board™ provides NAFEM data protocol and operational data that can be displayed on-screen or transmitted remotely, resulting in early alert and fast diagnosis of operating issues.

An optional Vari-Smart™ ultrasonic ice level control eliminates the need for bin thermostats.

Compressor Unit

Remote Condenser

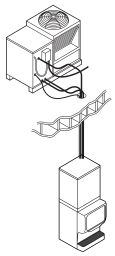

Eclipse System connected to single remote CP & condenser.

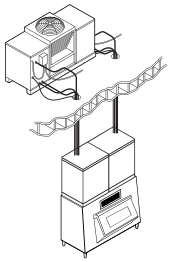

Two Eclipse Systems connected to a dual remote CP & condenser.

24 Hour Volume Production

EH330 1400 lb

70˚F 50˚F lb/kg	Air Water	AHRI 90˚F 70˚F lb/kg
1411/641		1230/558

Dispenser Options

Model Number*	Dimensions W" x D" x H"	Application Capacity	Finish	Ship Weight lb/kg
ED200	30 x 30 x 35	200/91	SS	200/91
ED250	30 x 30 x 40	250/114	SS	300/136
IDC255	30 x 30 x 40	255/116	SS	350/159

* See Scotsman Price List for Required Bin Tops.

c UL us

NSF

CERTIFIED ISO 9001:2008

AHRI CERTIFIED www.ahridirectory.org Automatic Commercial Ice-Makers AHRI Standard 810

NAFEM DATA PROTOCOL COMPLIANT

agion Nature's antimicrobial

energy ENERGY STAR

Cube Ice

Small Cube
⅞" x ⅞" x ⅜"
(2.22 x 2.22 x .95 cm)

Common ice form, ideal for mixed drinks.

Warranty

- 3 years parts and labor on all components.
- 5 years parts and labor on the evaporator.
- 5 years parts on the compressor and condenser.

Warranty valid in North, South & Central America. Contact factory for warranty in other regions.

Scotsman Ice Systems · 775 Corporate Woods Parkway · Vernon Hills, IL 60061
1-800-SCOTSMAN
Fax: 847-913-9844
E-mail: customer.relations@scotsman-ice.com
www.scotsman-ice.com

EH330 – 1400 lb Cube Ice Machine

Scotsman®
Ice Systems

Revit drawings available at
www.scotsman-ice.com

REVIT BY Scotsman Ice Systems

EH330-1400 lb Cube Ice Machine

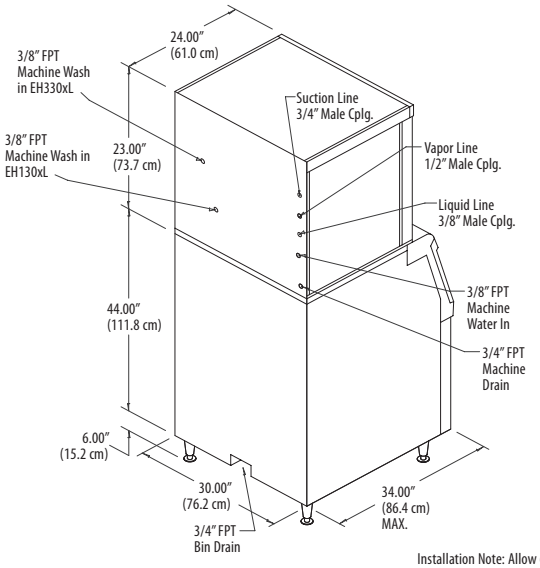

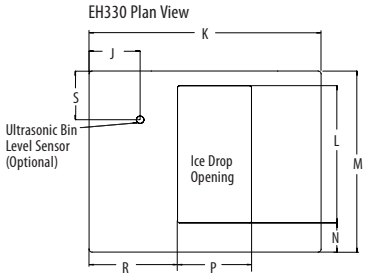

Installation Note: Allow 6" space at left, back and light side for ventilation and utility connections.

Specifications

Model Number Cube size medium or small	Compressor Unit	Basic Electrical Volts/Hz/Phase	Max. Fuse Size or HACR Circuit Breaker (amps)	Circuit Wires	Min. Circuit Ampacity	Energy Consumption kWh/100 lb (45.4 kg) 90˚F(32˚C)/70˚F(21˚C)	Water Usage Gallons/100 lb (liters/45.4 kg) Potable 90˚F(32˚C)/ 70˚F(21˚C)	Water Usage Gallons/100 lb (liters/45.4 kg) Condenser 90˚F(32˚C)/ 70˚F(21˚C)
EH330SL-1	-	115/60/1	15	2	Cord	-	-	-
	C1200CP-32A	208-230/60/1	30	2	17.9	4.8	17.4/65.9	-

Plan View Dimensions

EH330

J	K	L	M	N	P	R	S
6.65" (16.9 cm)	30" (76.2 cm)	18.3" (46.5 cm)	24" (61 cm)	3.9" (9.9 cm)	9.63" (24.5 cm)	11.52" (29.3 cm)	6.47" (16.4 cm)

All Models

Dimensions (W x D x H):

EH30xL Unit:	30" x 24" x 23" (76.2 x 61.0 x 58.4 cm)
Shipping Carton:	33.5" x 27.5" x 28" (85.1 x 70.0 x 71.1 cm)
CP Unit:	30" x 18" x 35" (76.2 x 45.7 x 88.9 cm)
Shipping Carton:	33" x 21" x 38" (83.8 x 53.3 x 96.5 cm
Shipping Weight:	EH330xL 175 lb. / 80 kg C1200CP 220 lb. / 100 kg

BTUs per hour: 19,000 (EH330)

Accessories

Model Number	Description
KVS	Vari-Smart™ Ice Level Control - Program ice bin levels to match ice needs.
KSBU	Smart-Board™ Advanced Control - Use additional operational data for fast diagnosis.
ERC1086-32	Remote Condenser for EH330, 208-230/60/1
3RTE20-EH	Line set, Precharged 20ft. Prodigy Eclipse R-404A
3RTE35-EH	Line set, Precharged 35ft. Prodigy Eclipse R-404A
3RTE50-EH	Line set, Precharged 50ft. Prodigy Eclipse R-404A
3RTE75-EH	Line set, Precharged 75ft. Prodigy Eclipse R-404A

Scotsman recommends all ice machines have water filtration. See Scotsman Sanitation Matrix for details.

Operating Requirements

	Minimum	Maximum
Air Temperatures	50°F (10°C)	100°F (38°C)
Water Temperatures	40°F (4.4°C)	100°F (38°C)
Remote Cond. Temps	-20°F (-29°C)	120°F (49°C)
Water Pressures	20 PSIG (1.4 bar)	80 PSIG (5.5 bar)
Electrical Voltage	-5%	+10%

Specifications and desgin are subject to change wihout notice.

= ENERGY STAR®

Scotsman Ice Systems · 775 Corporate Woods Parkway · Vernon Hills, IL 60061
1-800-SCOTSMAN
Fax: 847-913-9844
E-mail: customer.relations@scotsman-ice.com
www.scotsman-ice.com

© 2013 Scotsman Ice Systems.