Scotsman Ice Systems

PRODIGY

Modular Remote Low Side Flake & Nugget Ice Machine

Prodigy® Flake and Prodigy® Nugget Ice Machine

Shown on B948S bin with optional KLP8S legs.

Features

AutoAlert™ indicator lights constantly communicate about operating status and actually signal your staff when it's time to descale, sanitize and more - making upkeep practically foolproof.

Preventative maintenance is simplier than ever with easily-removed panels allowing clear access to internal components and a diagnostic code display insuring the right fix the first time.

Ideal for customers with central refrigeration systems.

Maximize capacity by placing 2 units next to each other side by side on a 48" bin, bringing ice production levels up to 3100 lbs. per 24 hours.

An optional advanced feature Smart-Board™ provides NAFEM data protocol and additional operational data that can be displayed on-screen or transmitted remotely, resulting in early alert and fast diagnosis of operating issues.

An optional Vari-Smart™ ultrasonic ice level control sensor allows you the flexibility to program ice levels, for up to 7 days, keeping just the right amount of freshly made ice in the bin.

Industry leading 3 year parts and labor warranty

24 Hour Volume Production*

Flake Ice Machine

F1222L			F1522L		
70˚F/21˚C 50˚F/10˚C lb/kg	Air Water	90˚F/32˚C 70˚F/21˚C lb/kg	70˚F/21˚C 50˚F/10˚C lb/kg	Air Water	90˚F/32˚C 70˚F/21˚C lb/kg
1180/535		1000/454	1445/655		1205/547

Nugget Ice Machine

N0922L			N1322L		
70˚F/21˚C 50˚F/10˚C lb/kg	Air Water	90˚F/32˚C 70˚F/21˚C lb/kg	70˚F/21˚C 50˚F/10˚C lb/kg	Air Water	90˚F/32˚C 70˚F/21˚C lb/kg
1090/494		915/415	1330/605		1100/499

*See user manual for EPR settings when connecting to a rack system.

c UL us

NSF

NAFEM DATA PROTOCOL COMPLIANT

CERTIFIED ISO 9001:2008

agion Nature's antimicrobial

Modular Bin Options

Model Number	Dimensions W" x D" x H"	Application Capacity lb/kg	AHRI Certified Bin Capacity lb/kg	Finish	Ship Weight lb/kg
B948S*	48 x 34 x 44**	893/406	700/319	SS	220/100
BH1100BB-A	48 x 34 x 50**	1100/499	860/390	SS w/GBB***	280/127
BH1100SS-A	48 x 34 x 50**	1100/499	860/390	SS	280/127
BH1300BB-A	60 x 34 x 50**	1400/635	1100/499	SS w/GBB***	310/140
BH1300SS-A	60 x 34 x 50**	1400/635	1100/499	SS	310/140
BH1600BB-A	60 x 34 x 62**	1375/624	1755/796	SS w/GBB***	370/168
BH1600SS-A	60 x 34 x 62**	1375/624	1755/796	SS	370/168

*Contact Scotsman for bin top requirements. ** Add 6" H for bin legs. *** Stainless Steel with Galvanized Back & Bottom

Bin: 948S

Flake Ice

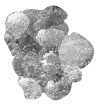

Nugget Ice

Warranty

- 3 years parts and labor on all components.

Warranty valid in North, South & Central America.
Contact factory for warranty in other regions.

Scotsman Ice Systems · 775 Corporate Woods Parkway · Vernon Hills, IL 60061
1-800-SCOTSMAN
Fax: 847-913-9844
E-mail: customer.relations@scotsman-ice.com
www.scotsman-ice.com

Modular Remote Low Side Flake & Nugget Ice Machine

Scotsman®
Ice Systems

Revit drawings available at
www.scotsman-ice.com

REVIT BY Scotsman Ice Systems

Modular Remote Low Side Flake & Nugget Ice Machine

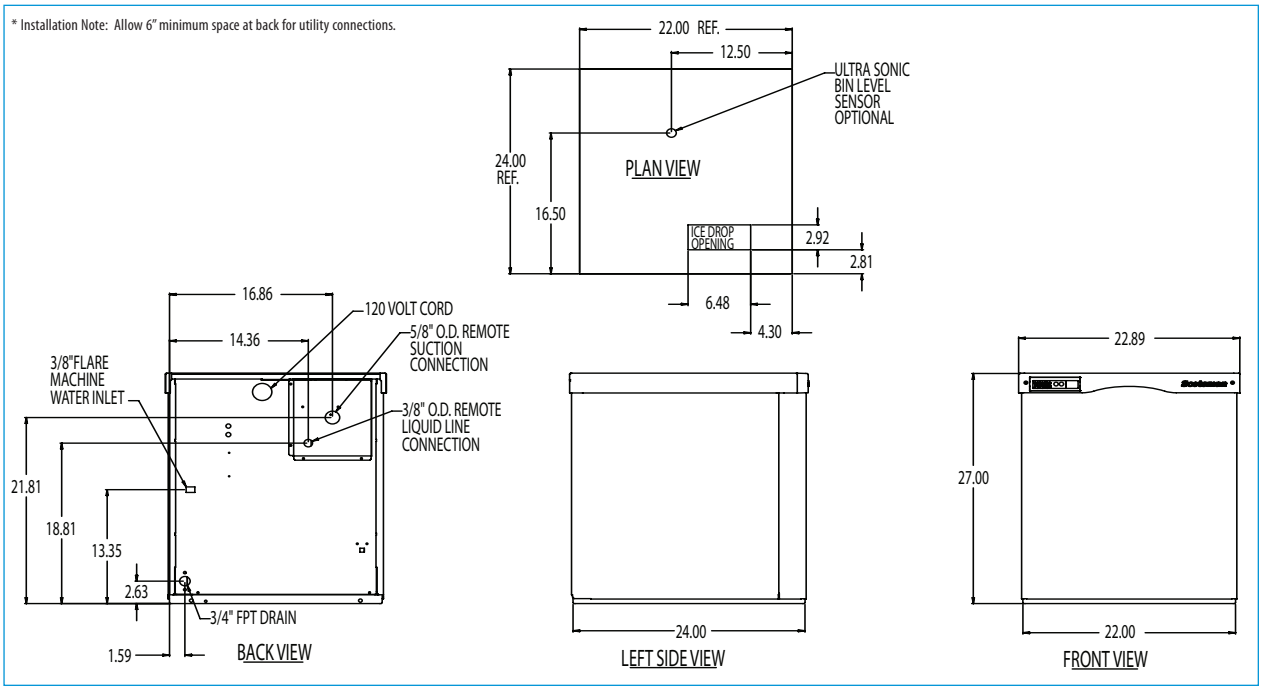

Specifications

Model Number	Condenser Unit	Basic Electrical Volts/Hz/Phase	Max. Fuse Size (amps)	Circuit Wires	Min. Circuit Ampacity	Energy Consumption kWh/100 lb (45.4 kg) 90˚F(32˚C)/70˚F(21˚C)	Water Usage Gallons/100 lb (liters/45.4 kg) Potable 90˚F(32˚C)/ 70˚F(21˚C)	Condenser 90˚F(32˚C)/ 70˚F(21˚C)
F1222L-1	Remote Low Side	115/60/1	15	2	Cord	0.82	12.0/45.5	-
F1522L-1	Remote Low Side	115/60/1	15	2	Cord	0.72	12.0/45.5	-
N0922L-1	Remote Low Side	115/60/1	15	2	Cord	0.87	12.0/45.5	-
N1322L-1	Remote Low Side	115/60/1	15	2	Cord	0.73	12.0/45.5	-

All Models

Dimensions (W x D x H):

Unit:
22.9" x 24" x 27"
(58.2 x 61.0 x 68.6 cm)

Shipping Carton:
25.5" x 27.5" x 32.5"
(64.8 x 69.9 x 82.6 cm)

Shipping Weight:
217 lb / 98 kg, F1222L & N0922L
224 lb / 102 kg, F1522L & N1322L

BTU per hour:
6,000 F1222L & N0922L
7,200 F1522L & N1322L

Refrigerant*:
R-404A
* Refrigerant must be added at initial start-up.

Accessories

Model Number	Description
KVS	Vari-Smart™ Ice Level Control - Program ice bin levels to match ice needs.
KSBU	Smart-Board™ Advanced Control - Use additional operational data for fast diagnosis.
KSBU-N	Smart-Board™ Advanced Control with Network - Network capable.
NME954-RHS-A/C	Remote Condenser Package for F1222L & N0922L, 208-230V/60/1
NRTE45	Line set, R-404A, 45 ft. not pre-charged, for NMECondenser Packages
COMPWARNME954RHSA	Extra 4 Year Compressor Warranty for NME954-RHS-A/C
KPAS	Prodigy Advanced Sustainability kit- Includes KVS and KSBU-N

* Scotsman recommends all ice machines have water filtration. See Scotsman Sanitation Matrix for details.

Operating Requirements

	Minimum	Maximum
Air Temperatures	50°F (10°C)	100°F (38°C)
Water Temperatures	40°F (4.4°C)	100°F (38°C)
Remote Cond. Temps	-20°F (-29°C)	120°F (49°C)
Water Pressures	20 PSIG (1.4 bar)	80 PSIG (5.5 bar)
Electrical Voltage	-10%	+10%

Specifications and design are subject to change without notice.

Scotsman Ice Systems · 775 Corporate Woods Parkway · Vernon Hills, IL 60061
1-800-SCOTSMAN
Fax: 847-913-9844
E-mail: customer.relations@scotsman-ice.com
www.scotsman-ice.com

© 2013 Scotsman Ice Systems.

SIS-SS-PRD-FNL
01-13