Scotsman®
Ice Systems

MDT3F12 – TouchFree® Ice Machine / Dispenser

Flake Ice Machine / Dispenser

Features

Makes and dispenses flaked ice.

Sleek, european design with attractive rounded corners and informative instruction labels.

Up to 25% less fan noise allows installation of the unit in the quietest hallways.

Improved dispensing with easier access and room for most containers.

TouchFree® actuation provides convenient one-hand operations and eliminates the risk of cross contamination.

Flexible utility location.

24 Hour Volume Production

Air Cooled		
70˚F/21˚C 50˚F/10˚C lb/kg	Air Water	90˚F/32˚C 70˚F/21˚C lb/kg
392/178		294/133

Flake Ice

Cools more quickly than other ice forms. Ideal for healthcare.

c UL us

NSF

CERTIFIED ISO 9001:2008

Water / Ice Selection Switch

Select ice only or ice and water at the touch of a switch, conveniently located on the front panel.

Warranty

- 2 years parts and labor on all components.
- 5 years parts on compressor.

Warranty valid in North, South & Central America.
Contact factory for warranty in other regions.

Ice Vending Capacity

Peak Vends Per Hour*

Number of Vends Per Hour from Full Bin + Recovery = Total Vends

Model Number	Bin Storage lb./kg.	1 Hour Recovery Cap lb./kg.	2 fl. oz. Bin		2 fl. oz. Recovery		Total 2 fl. oz. Vends	4 fl. oz. Bin		4 fl. oz. Recovery		Total 4 fl. oz. Vends	6 fl. oz. Bin		6 fl. oz. Recovery		Total 6 fl. oz. Vends	8 fl. oz. Bin		8 fl. oz. Recovery		Total 8 fl. oz. Vends
MDT3F12A	12/5	16/7	192	+	261	=	453	96	+	131	=	227	64	+	87	=	151	48	+	65	=	113

1 lb. apx. = 32 fl. oz.
*Based on 70˚ Air and 50˚ Water Temperatures

Scotsman Ice Systems · 775 Corporate Woods Parkway · Vernon Hills, IL 60061
1-800-SCOTSMAN
Fax: 847-913-9844
E-mail: customer.relations@scotsman-ice.com
www.scotsman-ice.com

MDT3F12 – TouchFree® Ice Machine / Dispenser

Scotsman®
Ice Systems

Revit drawings available at
www.scotsman-ice.com

REVIT BY Scotsman Ice Systems

MDT3F12 – TouchFree® Ice Machine / Dispenser

Installation Note: Allow 6" space at left, back and right side for ventilation and utility connections.

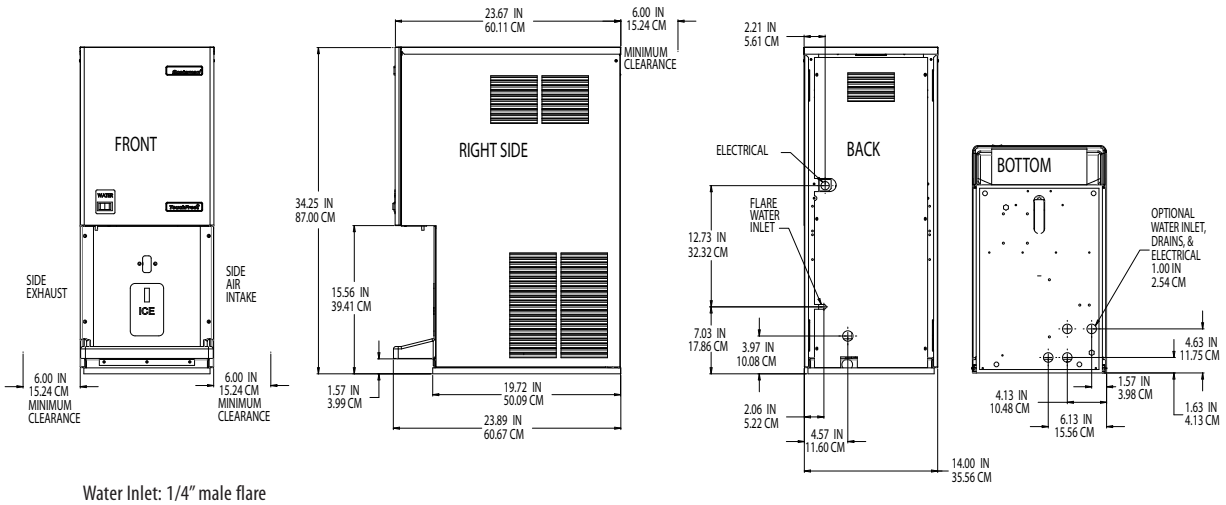

Water Inlet: 1/4" male flare
Bin Drain ID: 5/8" vinyl tube
Sink Drain ID: 3/4" vinyl tube

Specifications

Model Number	Condenser Unit	Storage Capacity lb/kg	Basic Electrical Volts/Hz/ Phase	Max. Fuse Size or HACR Circuit Breaker (amps)	Circuit Wires	Min. Circuit Ampacity	Energy Consumption kWh/100 lb (45.4 kg) 90˚F(32˚C)/70˚F(21˚C)	Water Usage Gallons/100 lb (liters/45.4 kg) Potable 90˚F(32˚C)/ 70˚F(21˚C)	Water Usage Gallons/100 lb (liters/45.4 kg) Condenser 90˚F(32˚C)/ 70˚F(21˚C)
MDT3F12A-1	Air	12/5	115/60/1	15	2	9.4	5.6	12/45.5	-

All units are stainless steel. Not designed for outdoor installations.

Refrigerant: R-134a

All Models

Dimensions (W x D x H):
Unit:
14" x 23.75" x 34.31"
(35.6 x 60.3 x 87.1 cm)
Shipping Carton:
17" x 26" x 39.75"
(43.2 x 66 x 101 cm)
Shipping Weight:
150 lb / 68 kg

Accessories

Model Number	Description
KWB4	Wall Mounting Kit for MDT3F12, MDT4F12
KPC-MDT	Portion Control Kit for MDT3, MDT4, MDT5 & MDT6
KTPS-MDT	Tamper Proof Screw Kit (including tool) to convert 1 MDT Dispenser

* Scotsman recommends all ice machines have water filtration. See Scotsman Sanitation Matrix for details.

Operating Requirements

	Minimum	Maximum
Air Temperatures	50°F (10°C)	100°F (38°C)
Water Temperatures	40°F (4.4°C)	100°F (38°C)
Remote Cond. Temps	-20°F (-29°C)	120°F (49°C)
Water Pressures	20 PSIG (1.4 bar)	80 PSIG (5.5 bar)
Electrical Voltage	-5%	+10%

Specifications and design are subject to change without notice.

Scotsman Ice Systems · 775 Corporate Woods Parkway · Vernon Hills, IL 60061
1-800-SCOTSMAN
Fax: 847-913-9844
E-mail: customer.relations@scotsman-ice.com
www.scotsman-ice.com

© 2012 Scotsman Ice Systems.