Scotsman® Ice Systems

PRODIGY® Eclipse®

EH430 – 1400-2000 lb Cube Ice Machine

Prodigy® Eclipse® Remote Cooled Modular Cube Ice Maker

EH430 shown on beverage dispenser.

Compressor Unit

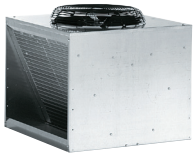

Remote Condenser

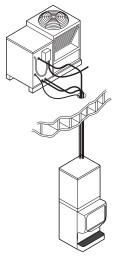

Eclipse System connected to single remote condenser.

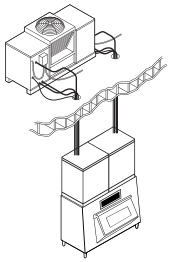

Two Eclipse Systems connected to a dual remote condenser.

Features

Equipped with Prodigy® self-monitoring technology AutoAlert™ indicator lights, patented WaterSense adaptive purge control as well as Prodigy's superior cost-saving energy efficiency.

Eclipse® technology moves the compressor and condenser to the roof, moving noise and heat away from customers & workers, resulting in a quieter environment.

The small footprint and narrow profile offer the ability to place the ice machine where ice is needed, at the drive through window or in the dining room at a self-service beverage station.

Flexible design allows Eclipse® ice machines to be paired with a wide variety of dispensers or storage bins, supplying ice to any area of your operation.

Offers quick and flexible installation because it can be connected to either a single remote condenser, dual remote condenser or properly sized universal rack or multi-pass condenser system.

24 Hour Volume Production

EH430 1400 lb			EH430 1800 lb			EH430 2000 lb		
70°F/21°C 50°F/10°C lb/kg	Air	AHRI 90°F/32°C 70°F/21°C lb/kg	70°F/21°C 50°F/10°C lb/kg	Air	AHRI 90°F/32°C 70°F/21°C lb/kg	70°F/21°C 50°F/10°C lb/kg	Air	AHRI 90°F/32°C 70°F/21°C lb/kg
1520/691	Water	1200/545	1755/798	Water	1567/712	1884/856	Water	1767/803

Modular Dispenser & Bin Options

Model Number*	Dimensions W" x D" x H"	AHRI Cert. Bin Capacity lb/kg	Application Capacity lb/kg	Finish	Ship Weight lb/kg
ID250	30 x 30 x 40	-	250/114	SS	300/136
B948S	48 x 34 x 44	700/319	893/406	SS	220/100
BH1100BB	48 x 34 x 50	860/393	1100/499	SS w/ GBB**	280/127
BH1100SS	48 x 34 x 50	860/393	1100/499	SS	280/127
BH1300BB	60 x 34 x 50	1100/499	1400/635	SS w/ GBB**	310/140
BH1300SS	60 x 34 x 50	1100/499	1400/635	SS	310/140
BH1600BB	60 x 34 x 62	1375/624	1755/796	SS w/ GBB**	370/168
BH1600SS	60 x 34 x 62	1375/624	1755/796	SS	370/168

* See Scotsman Price List for Required Bin Tops.

** Stainless Steel with Galvanized Back & Bottom.

c UL us · NSF · CERTIFIED ISO 9001:2008 · NAFEM DATA PROTOCOL COMPLIANT · AHRI CERTIFIED · agion Nature's antimicrobial · ENERGY STAR

Cube Ice

Small Cube
⅞" x ⅞" x ⅜"
(2.22 x 2.22 x .95 cm)

Medium Cube
⅞" x ⅞" x ⅞"
(2.22 x 2.22 x 2.22 cm)

Common ice form, ideal for mixed drinks.

Warranty

- 3 years parts and labor on all components.
- 5 years parts and labor on the evaporator.
- 5 years parts on the compressor and condenser.

Warranty valid in North, South & Central America.
Contact factory for warranty in other regions.

Scotsman Ice Systems · 775 Corporate Woods Parkway · Vernon Hills, IL 60061
1-800-SCOTSMAN
Fax: 847-913-9844
E-mail: customer.relations@scotsman-ice.com
www.scotsman-ice.com

EH430 – 1400-2000 lb Cube Ice Machine

Scotsman®
Ice Systems

Revit drawings available at
www.scotsman-ice.com

EH430 – 1400-2000 lb Cube Ice Machine

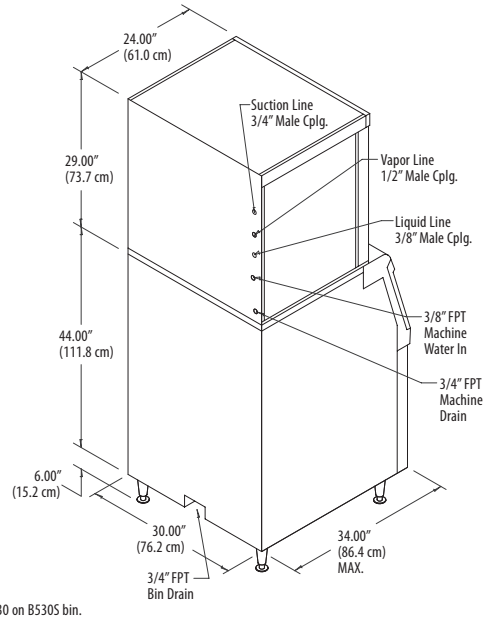

EH430 on B530S bin.

Installation Note: Allow 6" space at back for ventilation and utility connections.

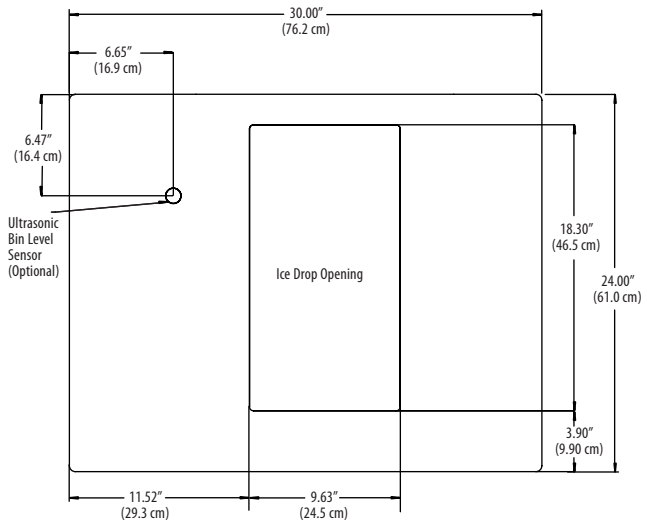

30" Prodigy Eclipse plan view.

Specifications

Model Number	Compressor Unit	Basic Electrical Volts/Hz/Phase	Max. Fuse Size or HACR Circuit Breaker (amps)	Circuit Wires	Min. Circuit Ampacity	Energy Consumption kWh/100 lb (45.4 kg) 90˚F(32˚C)/70˚F(21˚C)	Water Usage Gallons/100 lb (liters/45.4 kg) Potable 90˚F(32˚C)/ 70˚F(21˚C)	Condenser 90˚F(32˚C)/ 70˚F(21˚C)
EH430SL-1	-	115/60/1	15	2	Cord	-	-	-
EH430ML-1	-	115/60/1	15	2	Cord	-	-	-
	C1410CP-32*	208-230/60/1	30	2	16.5	4.7	18.5/70.1	-
	C1800CP-32**	208-230/60/1	50	2	31.4	5.0	17.6/66.7	-
	C2000CP-32***	208-230/60/1	50	2	30.9	5.0	17.4/65.9	-
	C1410CP-3*	208-230/60/3	20	3	12.6	4.7	18.5/70.1	-
	C1800CP-3**	208-230/60/3	30	3	19.0	5.0	17.6/66.7	-
	C2000CP-3***	208-230/60/3	30	3	21.0	5.0	17.4/65.9	

*Use for EH430 1400 lb. **Use for EH430 1800 lb. ***Use for EH430 2000 lb. = ENERGY STAR®

All Models

Dimensions (W x D x H):

EH430 Unit:	30" x 24" x 29" (76.2 x 61.0 x 73.7 cm)
Shipping Carton:	33.5" x 27.5" x 34" (85.1 x 70.0 x 86.3 cm)
Compressor Unit:	30" x 18" x 35" (76.2 x 45.7 x 88.9 cm)
Shipping Carton:	33" x 21" x 38" (83.8 x 53.3 x 96.5 cm
Shipping Weight:	EH430 185 lb. / 84 kg. C1410CP 225 lb. / 102 kg C1800CP 235 lb. / 107 kg C2000CP 245 lb. / 111 kg
BTUs per hour:	20,000*/31,600**/35,300***

*Use for EH430 1400 lb. **Use for EH430 1800 lb. ***Use for EH430 2000 lb.

Accessories

Model Number	Description
KVS	Vari-Smart™ Ice Level Control - Program ice bin levels to match ice needs.
KSB	Smart-Board™ Advanced Control - Use additional operational data for fast diagnosis.
KSB-N	Smart-Board™ Advanced Control with Network - Network capable.
ERC1086-32	Remote Condenser for Eclipse 1000-1400 lb., 208-230/60/1
ERC2086-32	Remote Condenser for Eclipse 1800-2000 lb., 208-230/60/1
ER2C1316-32	Remote Condenser for Eclipse two 1400 lb., 208-230/60/1
3RTE20-EH	Line set, Precharged, R-404A, 20ft.
3RTE35-EH	Line set, Precharged, R-404A, 35ft.
3RTE50-EH	Line set, Precharged, R-404A, 50ft.
3RTE75-EH	Line set, Precharged, R-404A, 75ft.

Scotsman recommends all ice machines have water filtration. See Scotsman Sanitation Matrix for details.

Operating Requirements

	Minimum	Maximum
Air Temperatures	50°F (10°C)	100°F (38°C)
Water Temperatures	40°F (4.4°C)	100°F (38°C)
Remote Cond. Temps	-20°F (-29°C)	120°F (49°C)
Water Pressures	20 PSIG (1.4 bar)	80 PSIG (5.5 bar)
Electrical Voltage	-5%	+10%

Specifications and design are subject to change without notice.

Scotsman Ice Systems · 775 Corporate Woods Parkway · Vernon Hills, IL 60061
1-800-SCOTSMAN
Fax: 847-913-9844
E-mail: customer.relations@scotsman-ice.com
www.scotsman-ice.com

© 2012 Scotsman Ice Systems.