DCE33 SERVICE PARTS

The section contains the parts list for the DCE33. The DCE33 has been manufactured in either a White or a Black finish.
A "D" series model was introduced in 2011 (as in DCE33A-1BD), it has a different timer and wiring diagram.
Please check the part description before ordering any part.

Table of Contents

Cabinet ..... Page 2

Pump, Evaporator, Storage Bin ..... Page 3

Drain Pump Components ..... Page 4

Condensing Unit ..... Page 5

Reservoir ..... Page 6

CONTROL BOX - Up To DCE33A-1BD or DCE33PA-1BD ..... Page 7

CONTROL BOX - for DCE33A-1BD or DCE33PA-1BD ..... Page 8

Compressor ..... Page 9

Drain Pump Model Wiring Diagram - Prior to August 2000 ..... Page 11

Gravity Drain Model Wiring Diagram - Prior to August 2000 ..... Page 12

Drain Pump Model Wiring Diagram after August 2000 up to D series ..... Page 13

Gravity Drain Model Wiring Diagram after August 2000 up to D series ..... Page 14

Wiring Diagram for DCE33A-1BD or DCE33PA-1BD ..... Page 15

Schematic Diagram DCE33A-1BD or DCE33PA-1BD ..... Page 16

DCE33 SERVICE PARTS

Cabinet

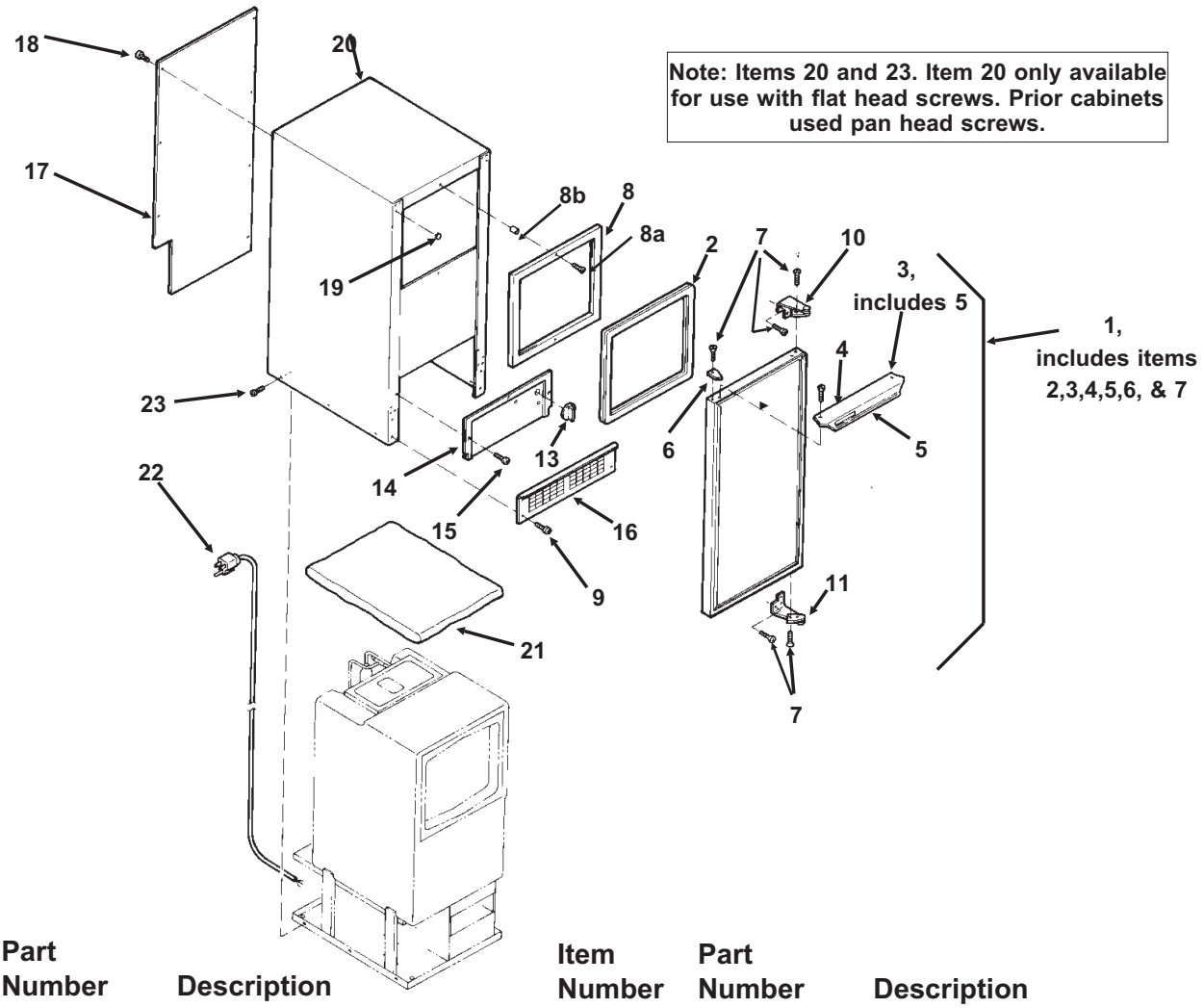

Note: Items 20 and 23. Item 20 only available for use with flat head screws. Prior cabinets used pan head screws.

Item Number	Part Number	Description
1.	A32117-003	**White** Door Assembly
	A32117-010	Black door assembly
2.	13-0826-01	Gasket (white)
	13-0826-03	Gasket (grey)
3.	A29043-001	**Alum.** Door Handle (white)
	A29043-003	Alum. Door Handle, (black)
4.	03-1607-01	**Head Screw (2)**
5.	15-0730-01	Nameplate strip (white)
	15-0730-02	Nameplate strip (black)
6.	15-0648-01	**Alum**. Hinge Fill Plate, Rt.
	15-0648-02	**Alum.** Hinge Fill Plate, Lt.
7.	03-1418-24	**Screw (10)**
8.	13-0828-01	Gasket (white)
	13-0828-02	Gasket (grey)
8a	03-1419-08	Screw
8b	02-2701-01	Spacer
9.	03-1419-26	Screw, black
	03-1419-29	Screw, white
10.	15-0799-01	**Hinge**

Item Number	Part Number	Description
11.	15-0799-02	**Hinge**
13.	02-3141-01	Knob, Bin Thermo
14.	A34877-002	Cont Box cover - white
	A34877-003	Cont Box cover - black
15.	03-1404-07	Screw (3)
16.	02-2243-02	Kickplate - black
17.	A29102-001	Rear Panel
18.	03-1404-08	Screw (9)
19.	02-2481-01	Plug (6) (white)
	02-2481-02	Plug, black
20.	A38803-021	Cabinet (white)
	A38803-022	Cabinet (black)
for flat head screws, use began w/sn 05111320015862		
21.	A26787-001	Insulation (in Bag)
22.	12-2571-01	Power cord & wire harness
	12-1638-21	For D series
23	03-1431-00	Screw, pan head
	03-1419-29	Flat head screw, white

DCE33 SERVICE PARTS

Pump, Evaporator, Storage Bin

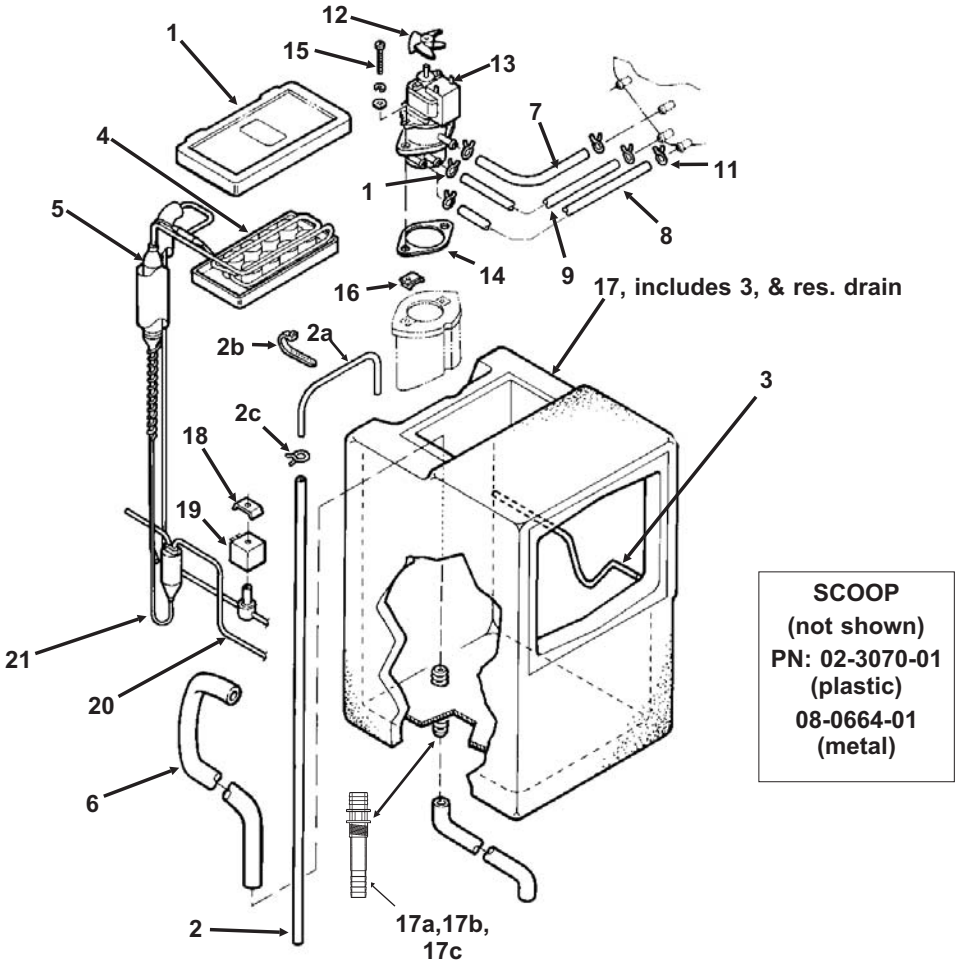

Item Number	Part Number	Description
1.	02-2274-01	Platen Cover
2.	13-0674-01	Tube, 37"
2a	A27027-001	Copper inlet tube
2b	no number	Tube holder
2c	02-1727-01	Hose clamp
3.	A34816-001	Bin Thermostat bracket
4.	02-3489-20	Evaporator, does NOT include suction line and accumulator
5.	A36699-020	Evaporator, Complete
6.	13-0899-01	Res. drain hose
7.	13-0674-16	Tube, 5/8" Req. 4.25"
8.	13-0674-15	Tube,1/2", Req 3.25"
9.	13-0674-15	Tube, 1/2", Req. 3-5/8"
10.	02-1775-02	Clamp (2)
11.	02-0534-02	Clamp (4)
12.	02-1719-00	Fan Blade
13.	A30625-001	Spray Pump
14.	13-0687-00	Gasket
15.	03-1719-01	Screw
16.	no longer used	Speed Nut (2)
17.	A36930-020	Bin Assembly, includes reservoir drain hose & drain fittings
17a	02-3323-01	Drain fitting (foamed in bin)
17b	13-0617-13	O-Ring
17c	03-1394-05	Pal nut
18	12-2569-03	Clip, Hot Gas Valve
19.	12-2569-02	Coil, Hot Gas Valve replaces coils that have encapsulated wires
	11-0562-22	Coil, hot gas valve replaces coils that have terminals
20.	11-0562-21	Hot Gas Valve kit
21	02-3490-01	Drier

DCE33 SERVICE PARTS

Drain Pump Components

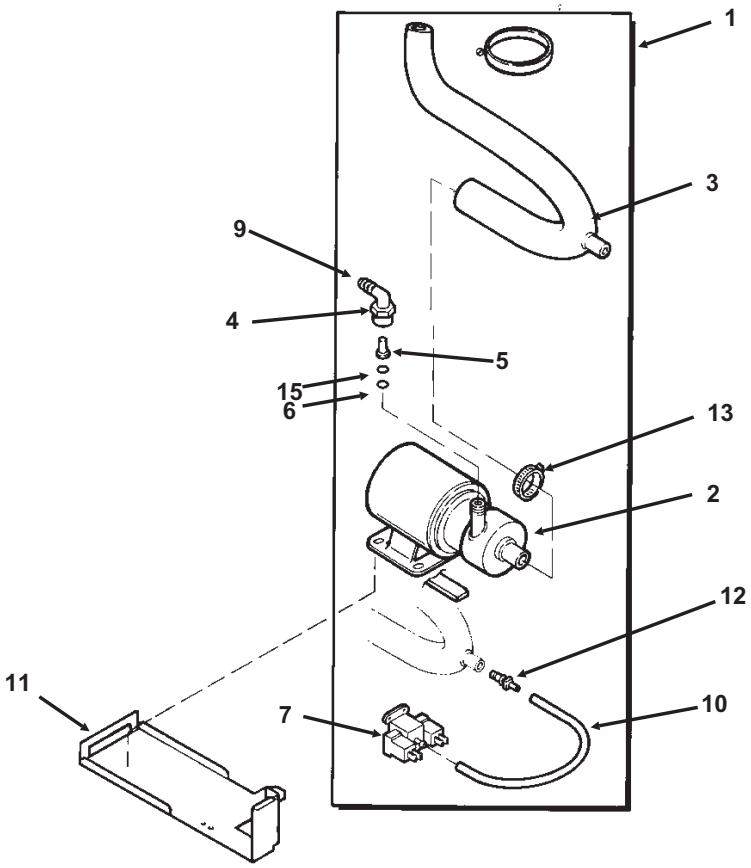

Item Number	Part Number	Description
1.	A36892-020	Drain Pump Kit, for all except DCE33A-1BD
	A39885-001	Drain pump kit, for DCE33A-1BD

use to **convert** any DCE33 gravity model to pump type. Pump must be ordered separately.

2	12-2503-21	Drain pump only,

use to **replace** drain pumps or w/kit to convert.

Pump Kit Service Parts

3	02-3369-01	Inlet hose
4	02-3522-01	Elbow
5	02-3374-01	Check valve
6	13-0617-08	O-ring
7	11-0504-01	Pressure switch
8	obsolete	Impeller & housing kit
9	A37334-001	Discharge hose
10	05-0591-01	Switch hose
11	A36746-001	Mounting bracket
12	02-3406-01	Barbed connector
13	02-2814-11	Clamp
14	12-2580-01	Harness
	12-3001-01	Harness, for converted-to-pump DCE33A-1BD or DCE33PA-1D
15	03-3904-01	Check valve spring

DCE33 SERVICE PARTS

Condensing Unit

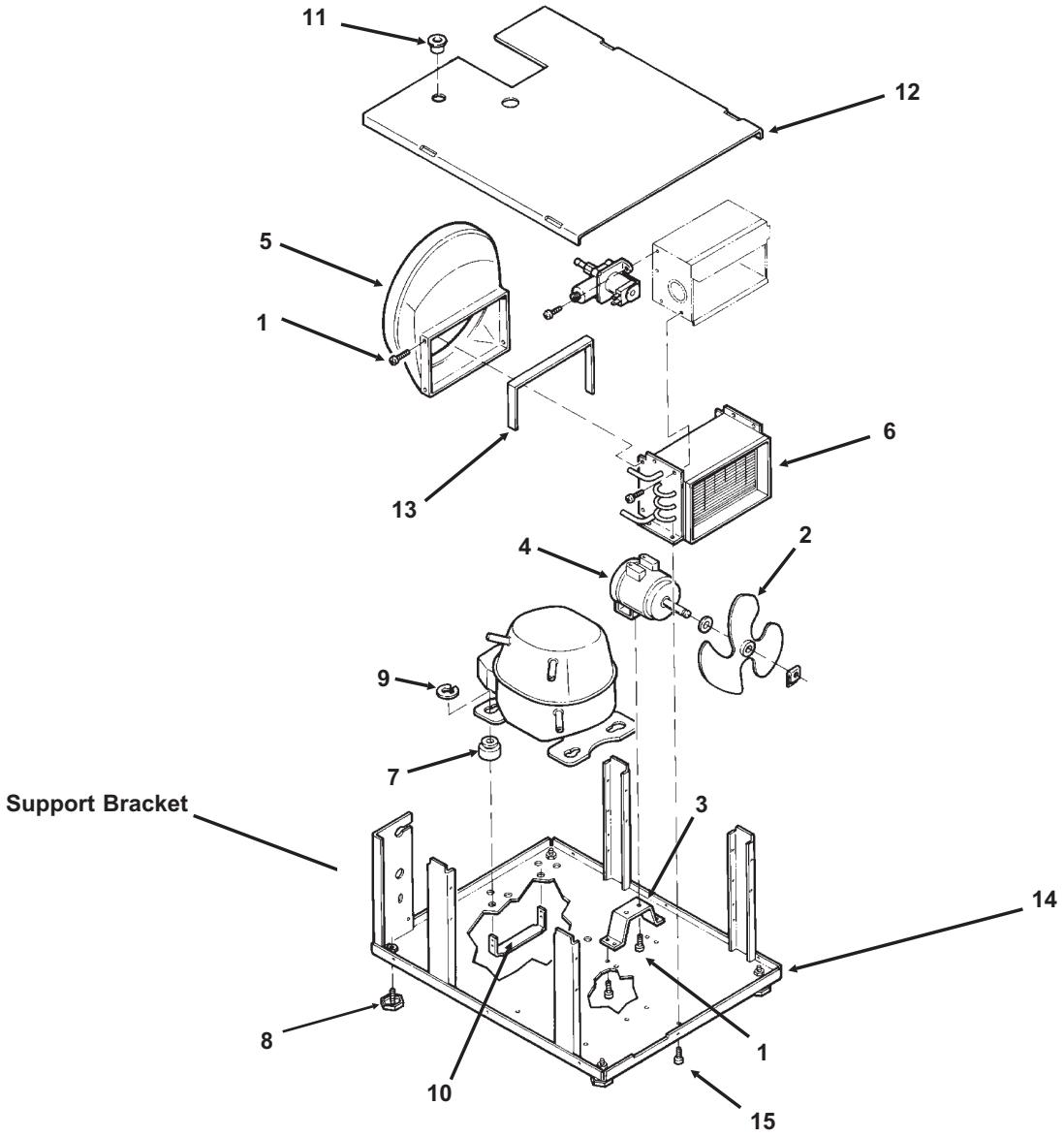

Item Number	Part Number	Description
1.	03-1404-08	Screw (4)
2.	18-3710-01	Fan Blade
3.	A28798-001	Fan Motor Bracket
4.	12-2396-21	Fan Motor
	18-8752-10	Blade pad
	18-8752-11	Blade nut
5.	02-2871-01	Fan Shroud
6.	18-3729-01	Condenser
7.	18-4700-28	Grommet
8.	03-1608-01	Leg Leveler
9.	03-1407-08	Washer
	03-3821-01	Clip
10.	A29015-001	Bracket

Item Number	Part Number	Description
11	12-1213-10	Bushing
12	A37732-001	Upper base plate
13	13-0609-00	Foam tape
14	A28921-001	Lower base plate
	A38638-001	Lower base plate
	use began w/sn 05111320015862	
	Support brackets part of item 12	
15	03-1531-01	Screw

DCE33 SERVICE PARTS

Reservoir

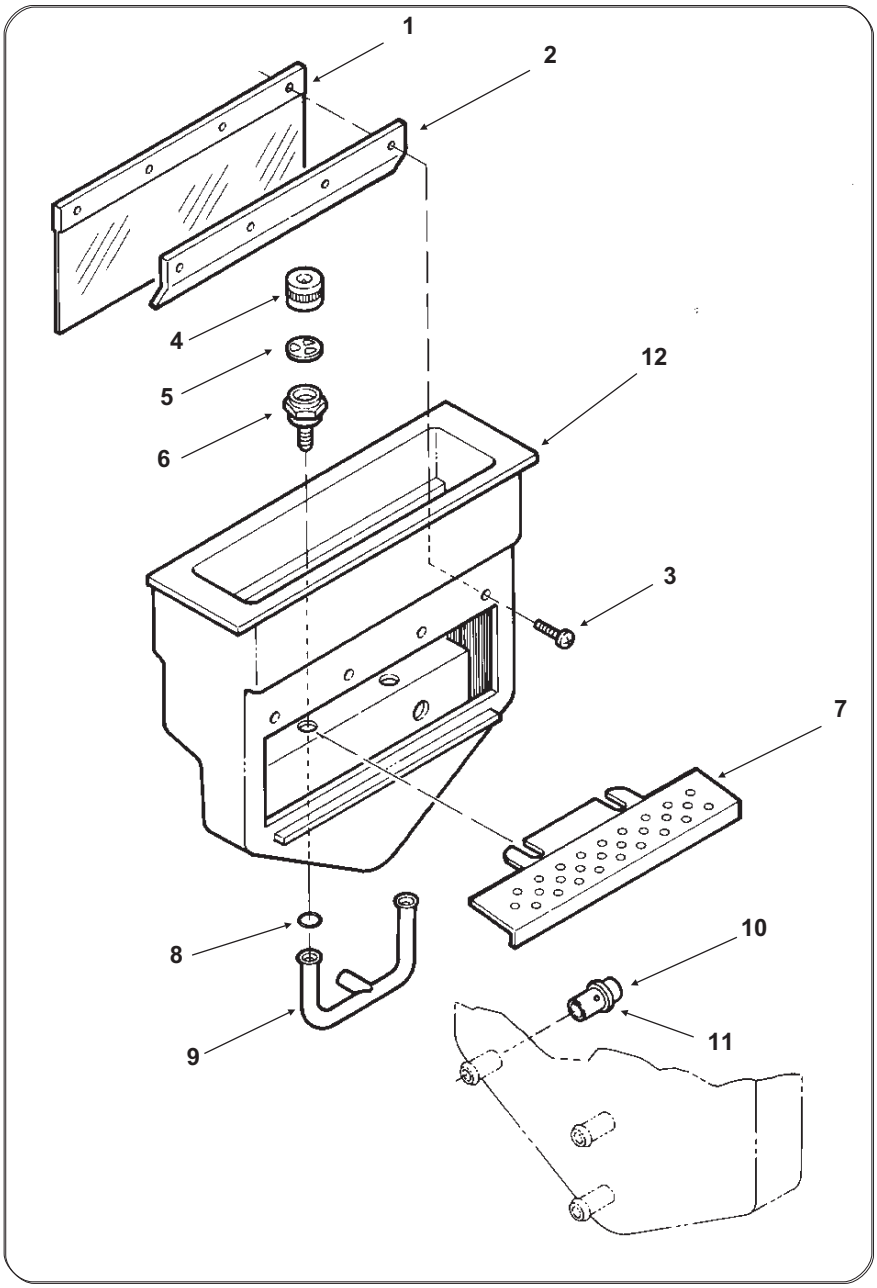

Item Number	Part Number	Description
1.	02-2479-21	Curtain
2.	A24155-001	Curtain stiffener
3.	03-1404-16	Screw
4.	02-1841-00	Nozzle
5.	A09543-000	Spinner
6.	02-1840-00	Jet Base
7.	A22518-000	Cube Chute
8.	13-0617-08	O-ring
9.	02-2704-01	Spray Bar Assembly
10.	05-0593-01	SS nipple
11.	13-0617-01	O-ring
12.	02-1923-01	Bin Insert
13	A22532-001	Bin insert assy

DCE33 SERVICE PARTS

CONTROL BOX - Up To DCE33A-1BD or DCE33PA-1BD

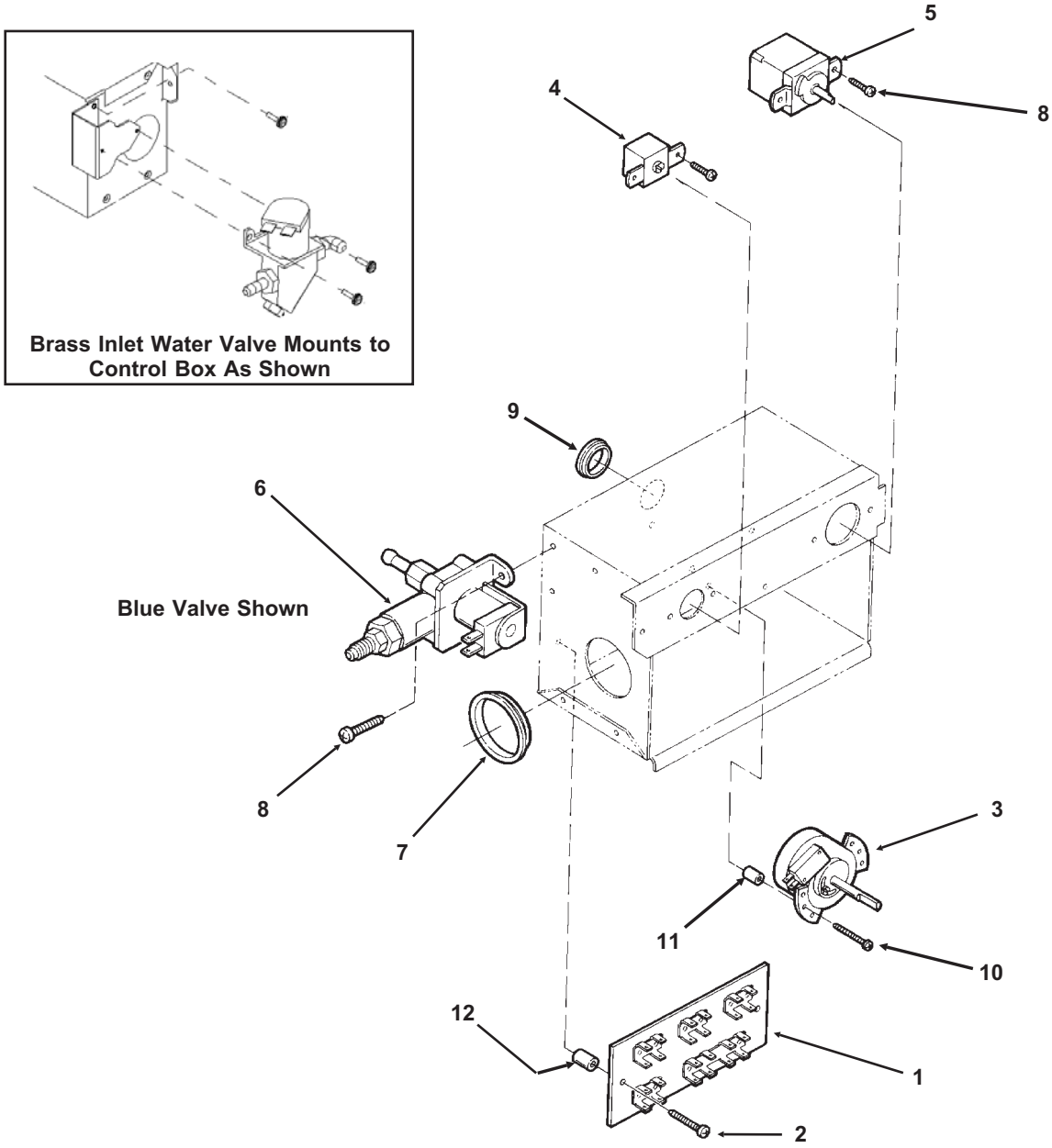

Item Number	Part Number	Description
1.	A25981-001	Terminal Board
2.	03-1638-01	Screw
3.	12-1980-01	Timer And Switch
4.	11-0503-21	Cube Size Control
5.	11-0407-21	Bin Level Control
	02-3141-01	Knob for item 5
6.	12-2907-21	Inlet Water Valve Kit (includes new fittings)
	12-2907-31	Coil only for brass valve
	12-2410-31	Coil only for plastic valve

Item Number	Part Number	Description
7.	12-1213-12	Bushing
8.	03-1403-17	Screw
9	12-1213-04	Snap bushing
10	03-1638-02	Screw
11	02-2242-06	Stand off
12	02-2242-05	Stand off
Not Shown		
13	A39918-001	Kit to retrofit electronic timer to prior model.

DCE33 SERVICE PARTS

CONTROL BOX - for DCE33A-1BD or DCE33PA-1BD

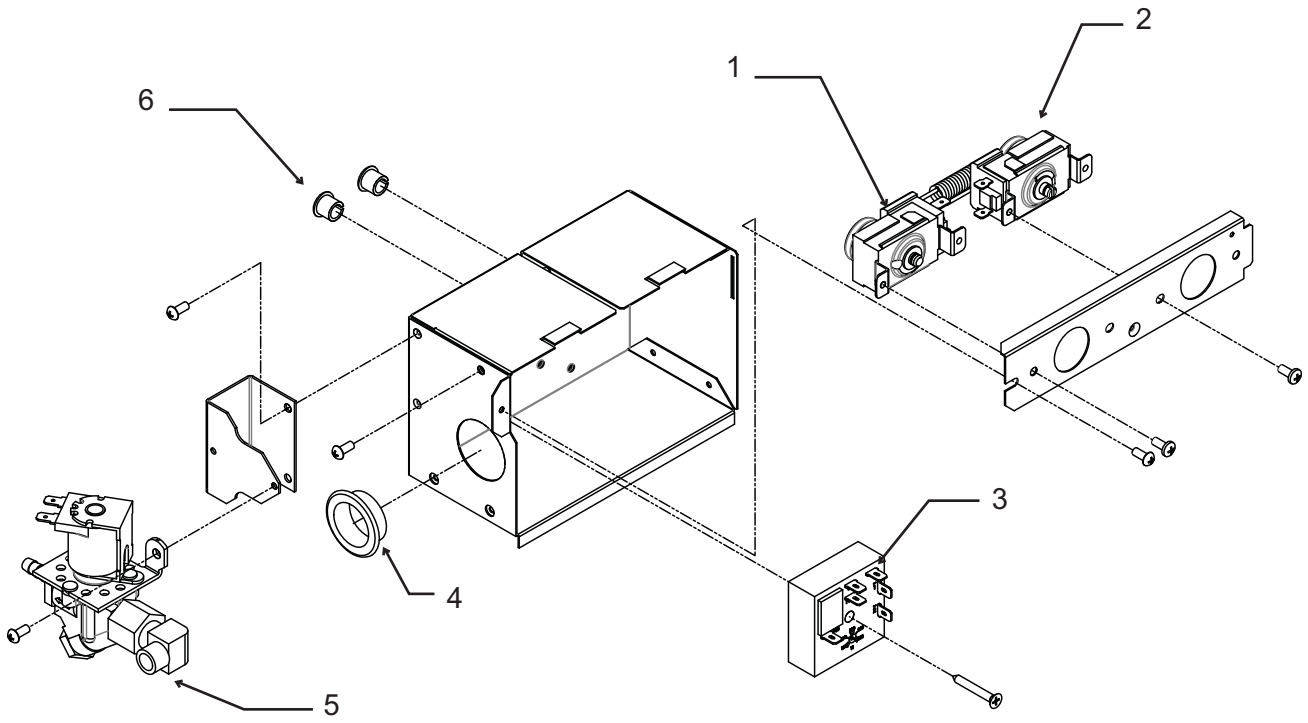

Item Number	Part Number	Description
1	11-0503-21	Cube size control
2	11-0407-21	Bin level control
3	12-2985-01	Timer
	03-1419-16	Screw
4	12-1213-12	Snap bushing
5	12-2907-21	Inlet water valve kit, includes new fittings
	12-2907-31	Coil only for inlet water valve
6	12-1213-04	Snap bushing

DCE33 SERVICE PARTS

Compressor

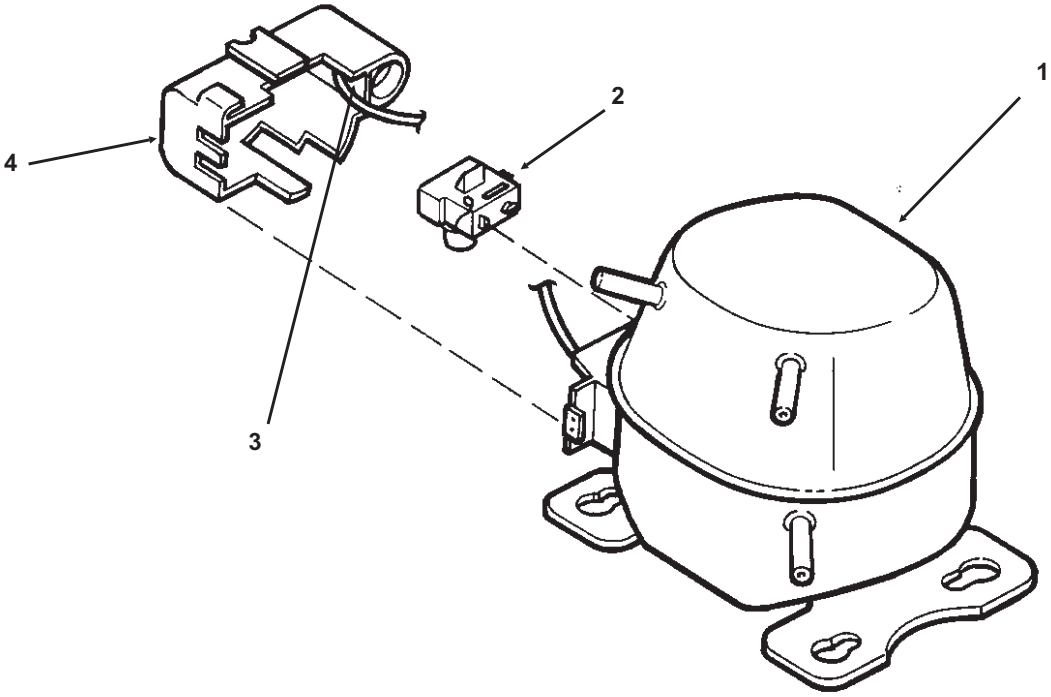

Item Number	Part Number	Description
1.	18-8776-21	Compressor Kit, Includes Relay, Overload, Instructions
2.	18-8776-51	Relay
3	18-8776-52	Overload
4.	18-8776-54	Cover

DCE33 SERVICE PARTS

Kit Parts

K-SS Door Sleeve Kit

02-3846-01	Sleeve
02-3847-01	Handle
03-1403-50	Screw for handle
03-1407-06	Washer
03-1410-03	Lockwasher
03-3811-01	Screw

DCE33 SERVICE PARTS

Drain Pump Model Wiring Diagram - Prior to August 2000

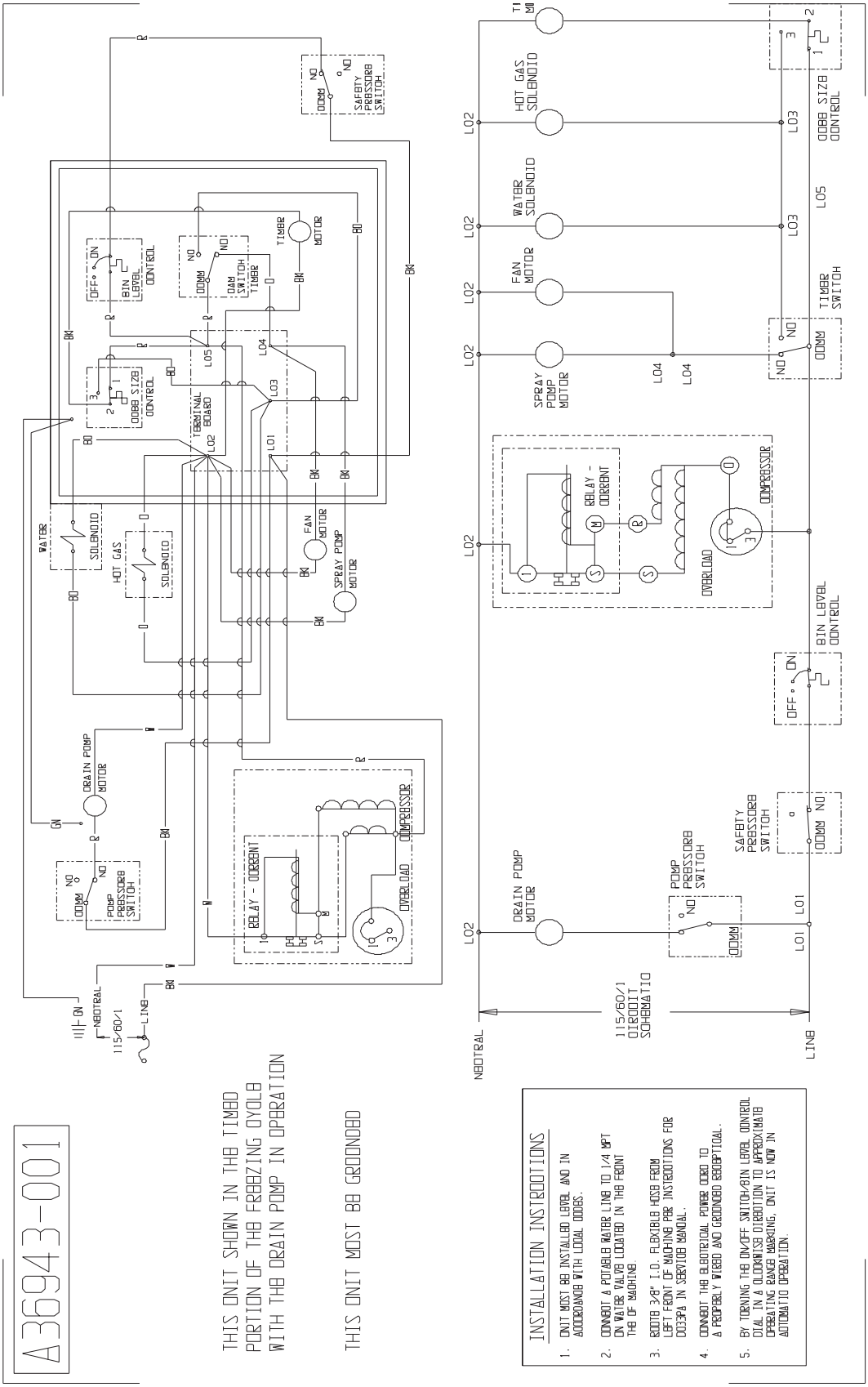

DCE33 SERVICE PARTS

Gravity Drain Model Wiring Diagram - Prior to August 2000

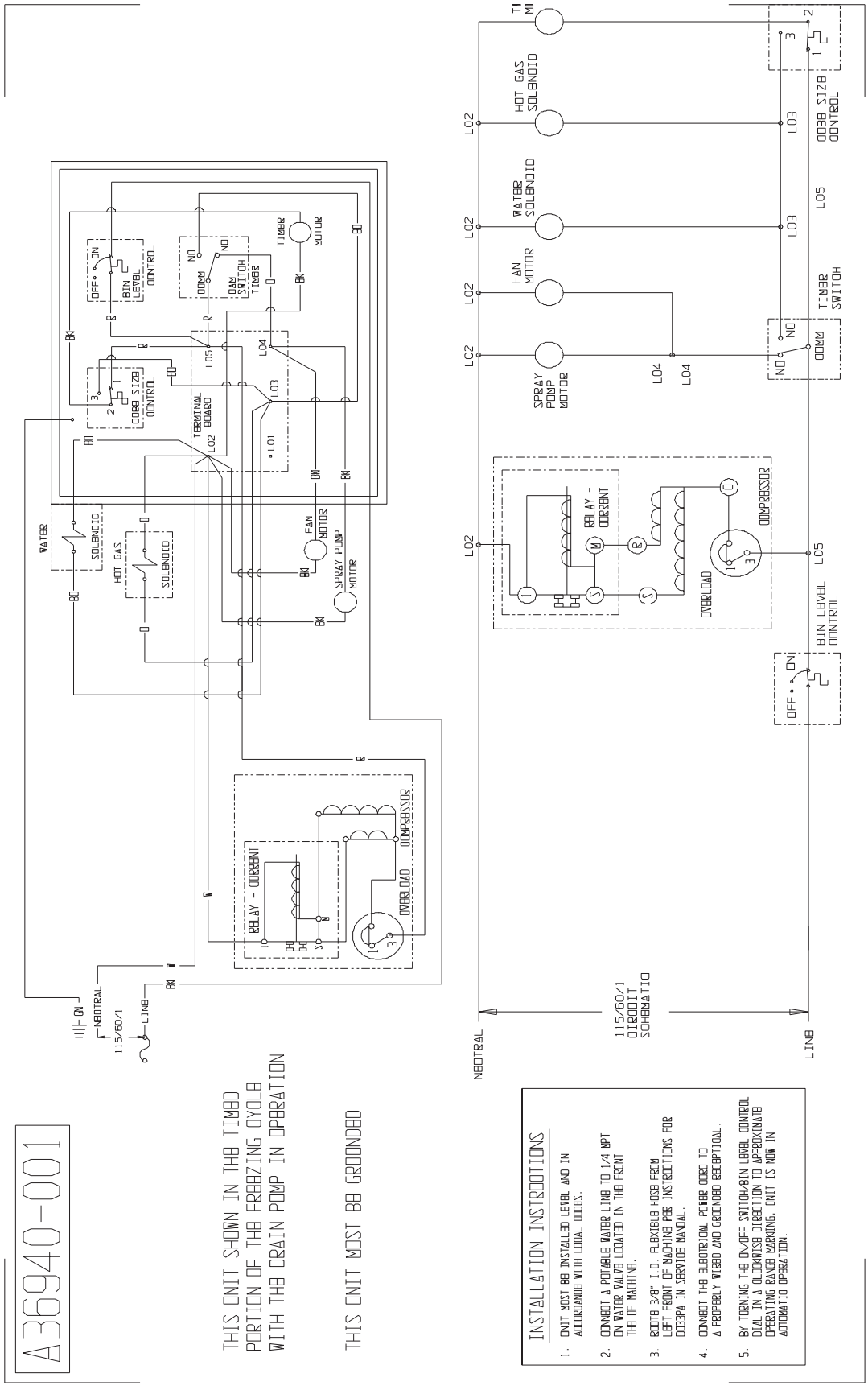

DCE33 SERVICE PARTS

Drain Pump Model Wiring Diagram after August 2000 up to D series

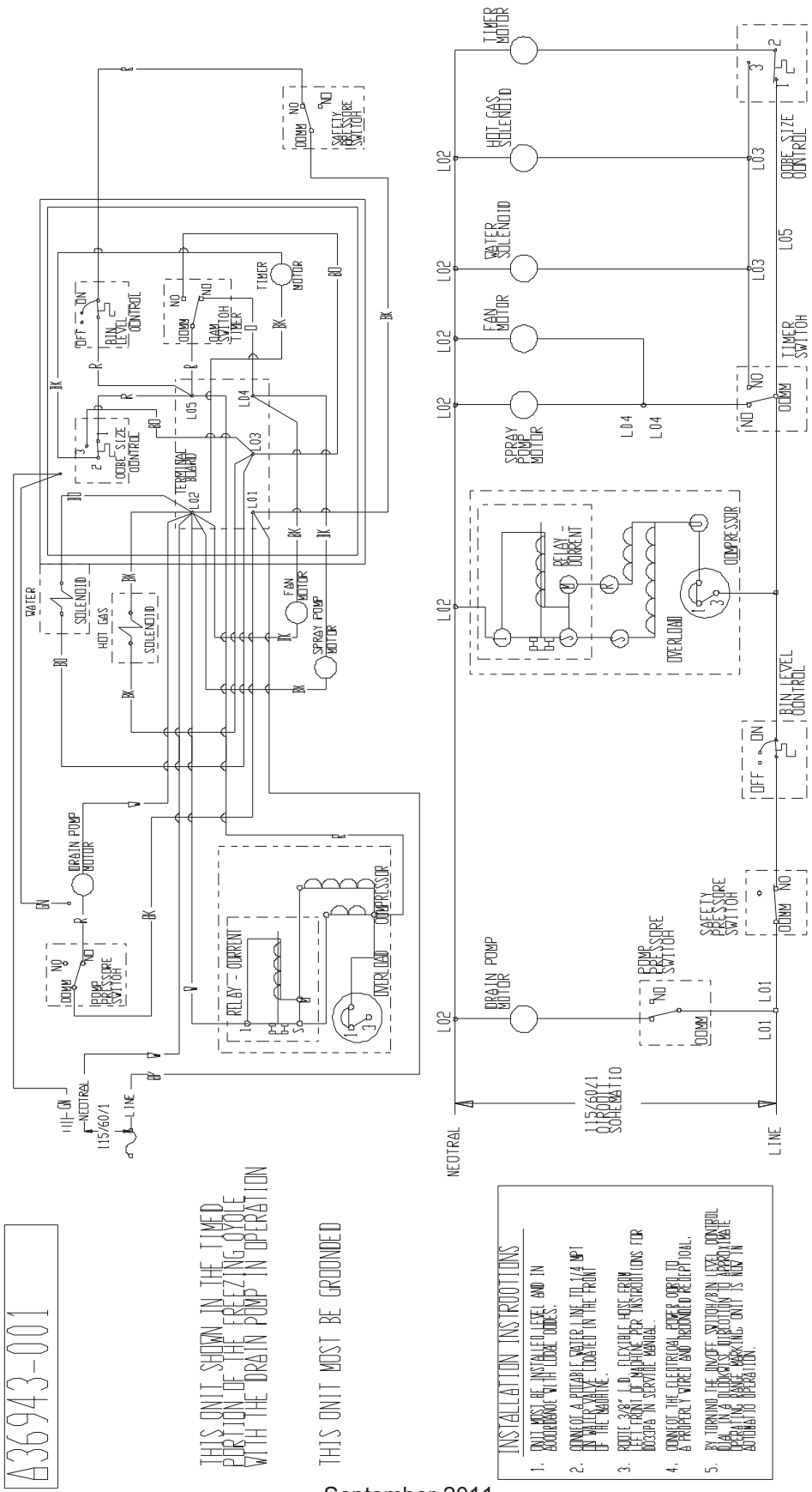

DCE33 SERVICE PARTS

Gravity Drain Model Wiring Diagram after August 2000 up to D series

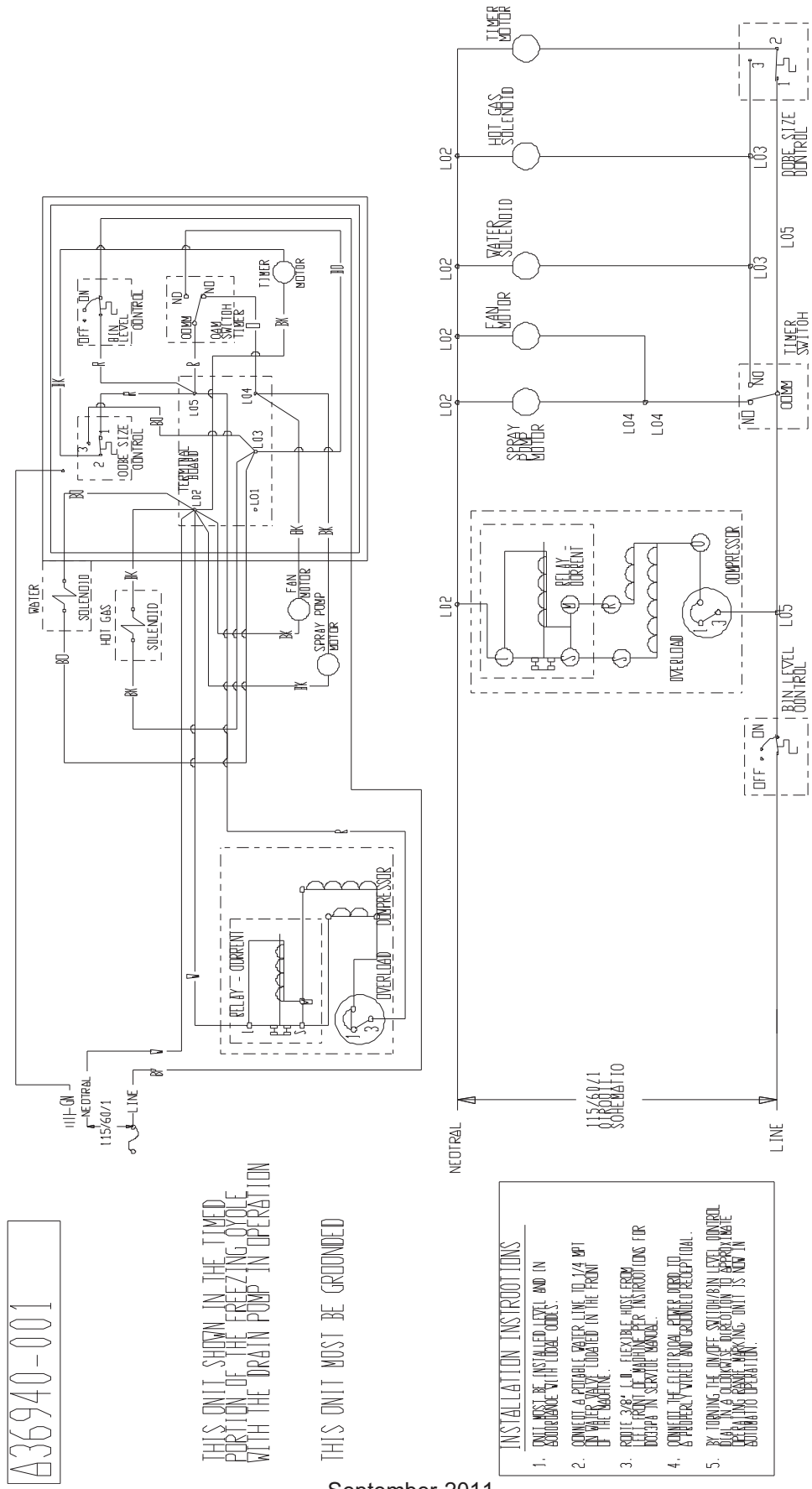

DCE33 SERVICE PARTS

Wiring Diagram for DCE33A-1BD or DCE33PA-1BD

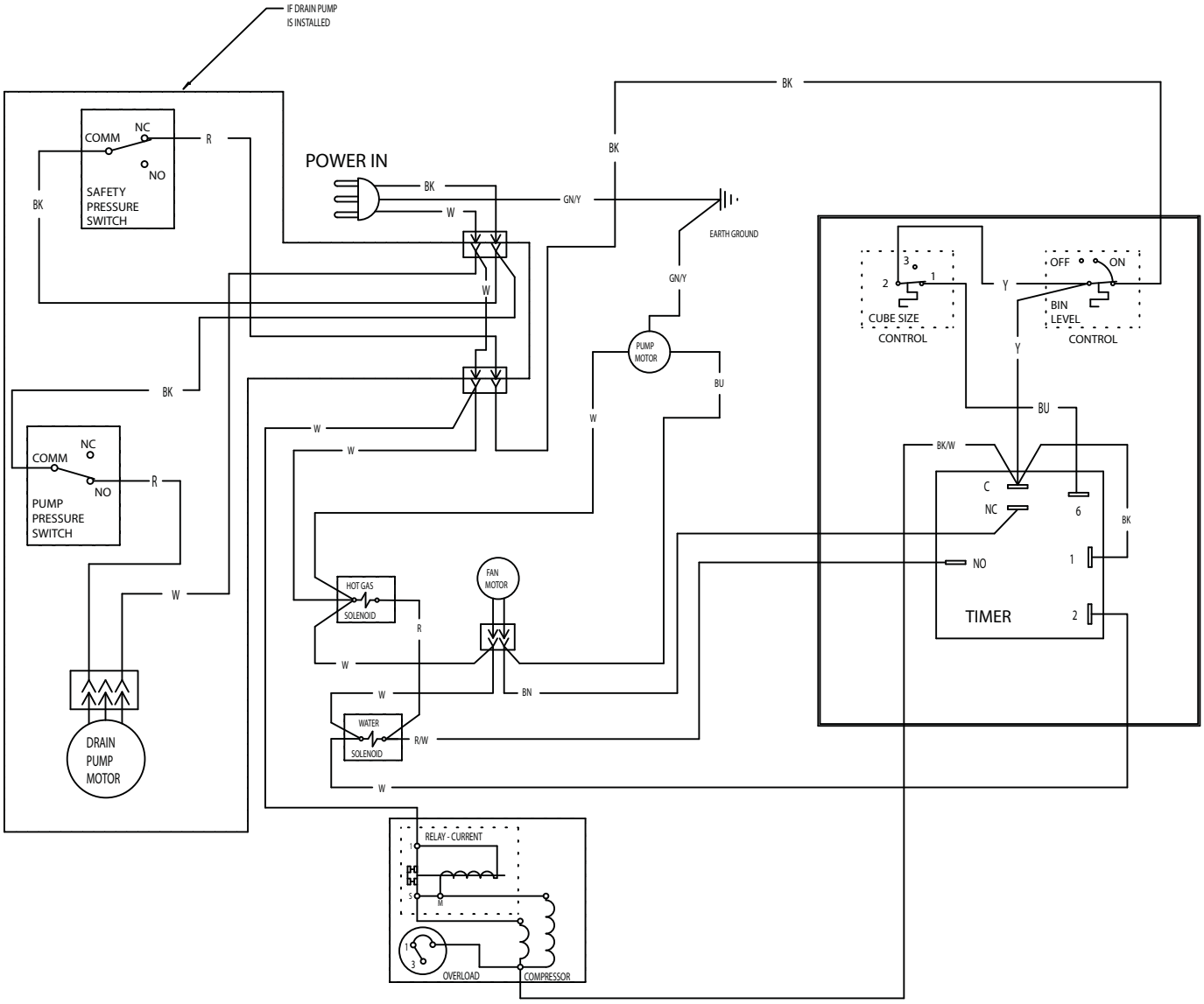

DCE33 SERVICE PARTS

Schematic Diagram DCE33A-1BD or DCE33PA-1BD

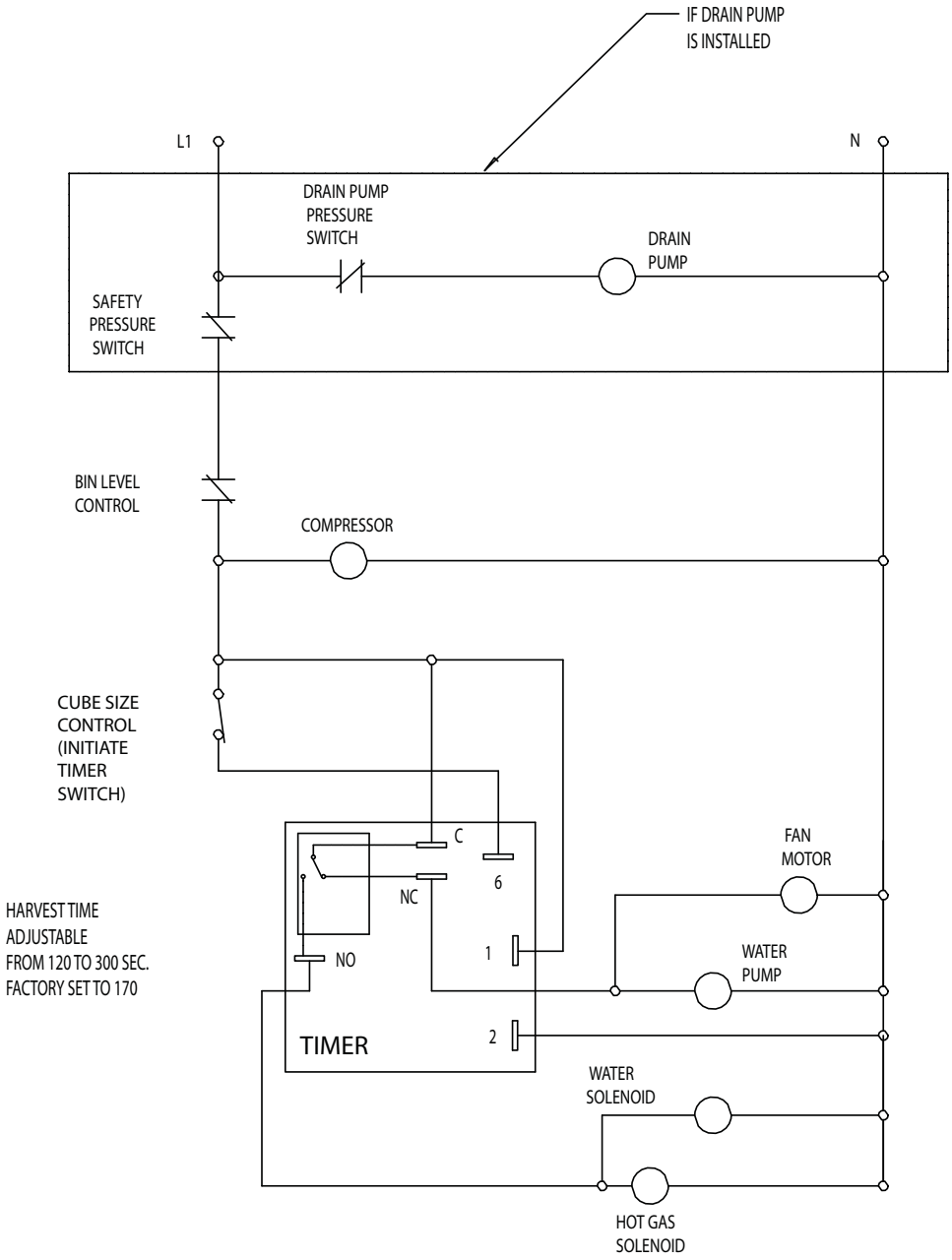

SWITCHES ON THIS UNIT
SHOWN IN TIMED PORTION
OF THE FREEZE CYCLE
WITH DRAIN PUMP IN OPERATION