Service Parts

This is the illustrated parts list for the NU130. There are two models, one is a gravity drain and the other includes a drain pump. Some units could have had drain pumps field installed.

Table of Contents

Door Components . . . . . Page 2
Cabinet . . . . . Page 3
Storage Bin and Ice Chute . . . . . Page 4
Reservoir, Water Sensor and Misc . . . . . Page 5
Refrigeration . . . . . Page 6
Under Bin Parts . . . . . Page 7
Ice Making Section . . . . . Page 8
Control System . . . . . Page 9
Wiring Diagram . . . . . Page 10
Schematic Diagram . . . . . Page 11

Service Parts

Door Components

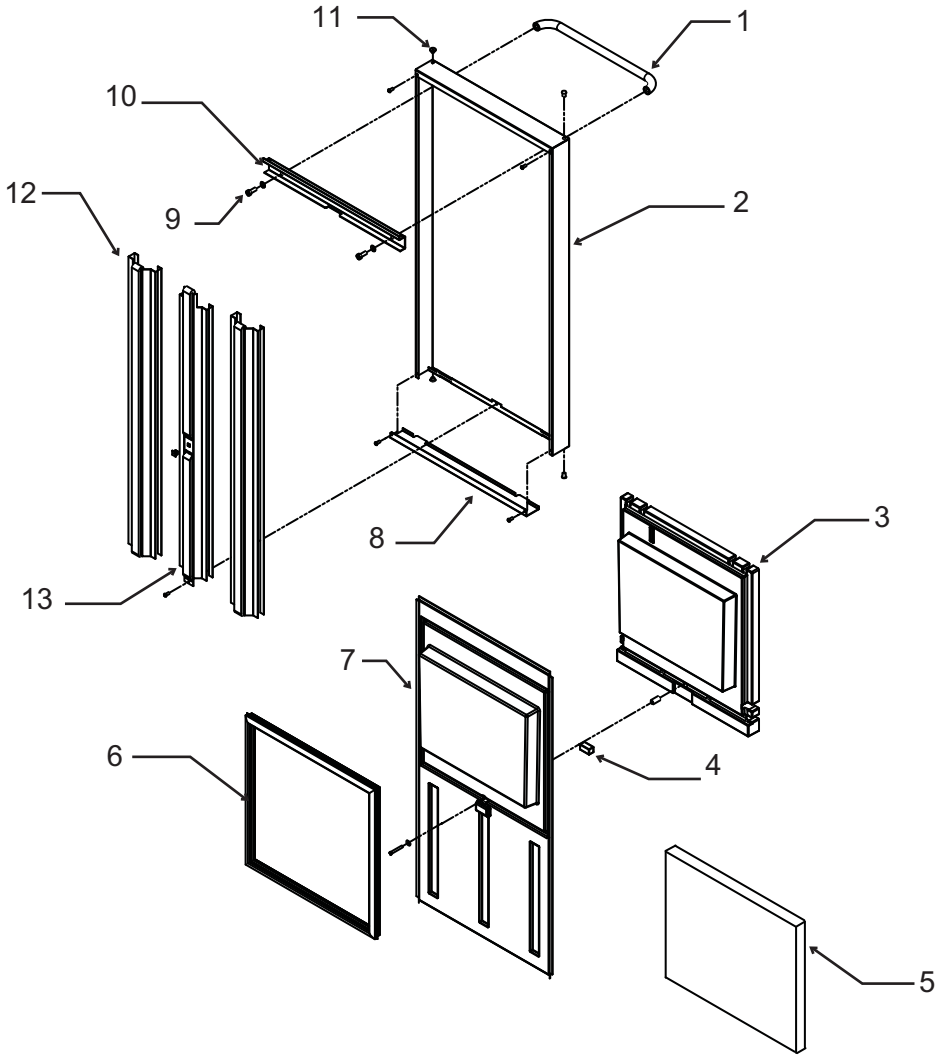

Item Number	Part Number	Description
1	02-3847-01	Handle, door
2	A39678-001	Door panel
3	02-4445-01	Insulation, upper
4	11-0587-01	Magnet, door
5	02-4570-01	Insulation, lower
6	13-0949-03	Door gasket
7	02-4569-01	Liner, door
8	A39676-001	Door bottom
9	03-3814-02	Screw, handle
10	A39675-001	Bracket, door handle
11	03-3927-01	Bushing, door hinge, same on bottom
12	A39677-001	Door support
13	A39677-002	Door support, center
14	A39860-022	Complete door, assembled. Includes all above parts

Service Parts

Cabinet

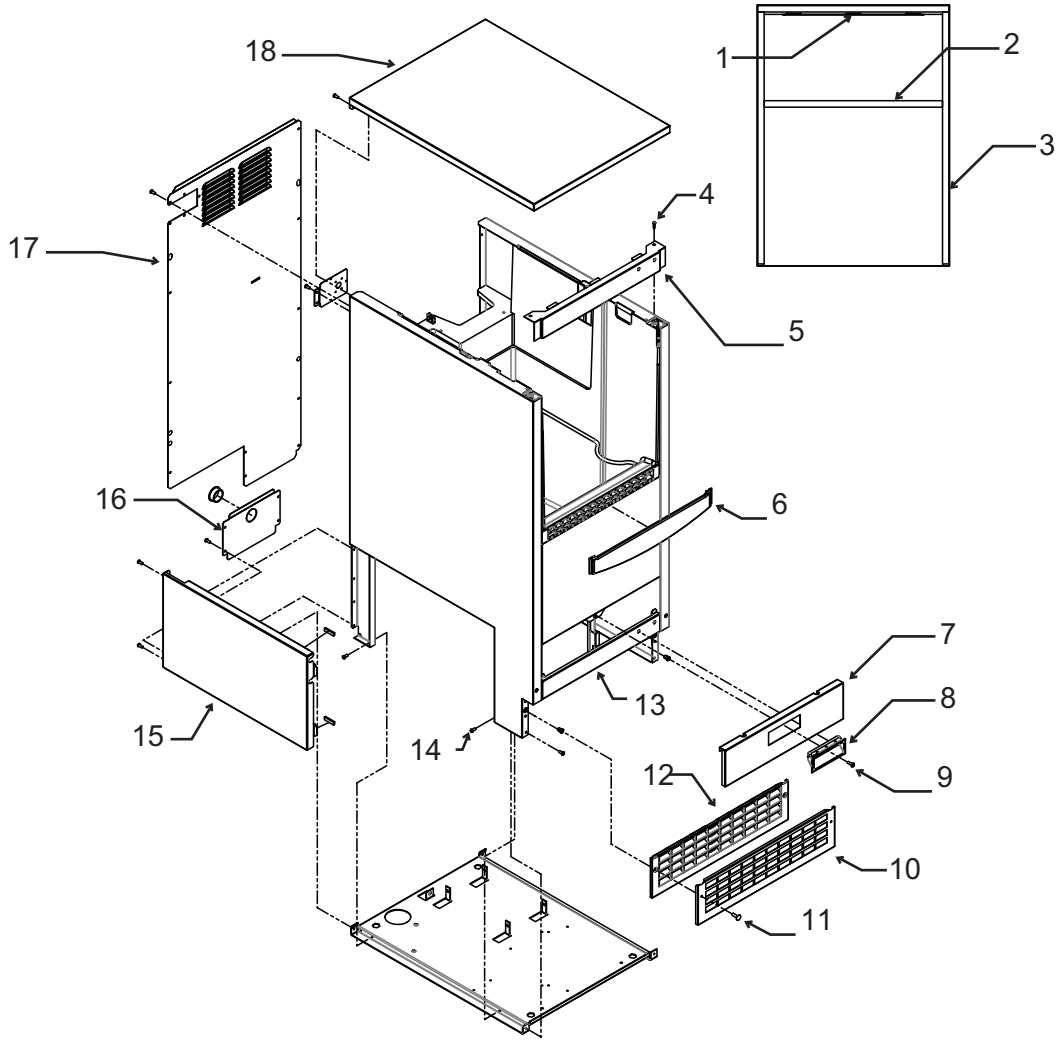

Item Number	Part Number	Description
1	13-0943-03	Gasket, top panel
2	13-0943-04	Gasket, top panel
3	13-0943-05	Gasket, top panel
4	03-3836-03	Screw
5	A39699-001	Top hinge bracket
6	02-4392-01	Inlay
7	A39381-003	Front service panel
8	02-4441-01	Handle
9	03-1403-86	Screw
10	A39469-001	Kick plate cover
11	03-3813-02	Screw
12	02-4390-01	Kick plate
13	A39700-001	Bottom hinge bracket
14	03-1531-01	Screw
15	A39615-001	Side service panel
16	A39683-001	Drain panel
17	A39924-001	Back panel
18	A39923-001	Top panel only
18a	02-4426-01	Insulation, top panel
Not Illustrated		
19	02-4568-02	Hinge, on right top
20	02-4568-01	Hinge, on right botm
21	03-3834-01	Pin, hinge

Service Parts

Storage Bin and Ice Chute

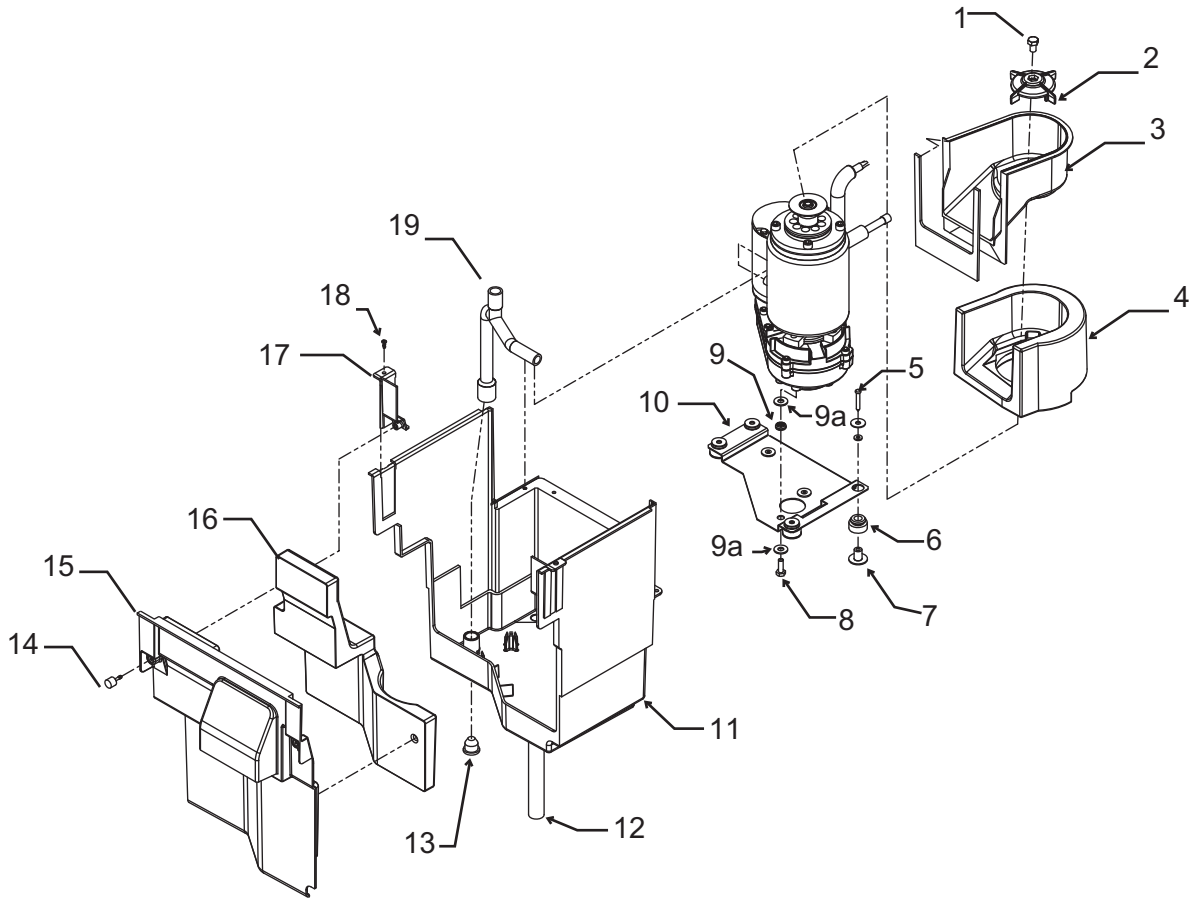

Item Number	Part Number	Description
1	03-1405-16	Screw, 5/16-18
2	02-4628-01	Ice sweep
3	02-4537-21	Chute
4	Chute insulation, part of item 3	
5	03-1404-41	Screw
6	03-3935-01	Grommet
7	03-3936-01	Flanged bushing
8	03-1405-07	Cap screw
9	03-3937-01	Vibration grommet
9a	03-1407-06	Washer
10	A39681-001	Mounting plate only
11	02-4582-01	Shelf, gear and evap asy
12	A39792-001	Drain
13	13-0840-01	Drain plug
14	03-3892-01	Thumb screw
15	02-4585-21	Cover
16	Cover insulation, part of item 15	
17	02-4375-01	Support bracket, left
	02-4375-02	Support bracket, right
18	03-3836-03	Screw
19	02-4572-01	Tube, reservoir to evap

Service Parts

Reservoir, Water Sensor and Misc

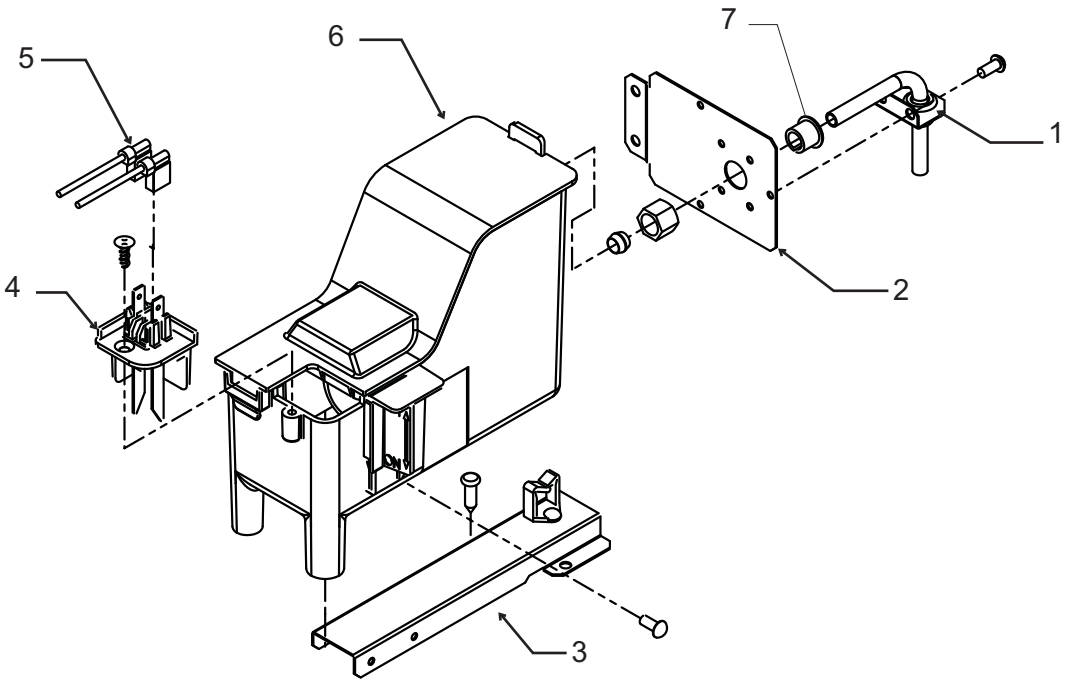

Item Number	Part Number	Description
1	A39826-001	Brace
2	A39693-001	Bracket
3	A39775-001	Reservoir mounting bracket
4	A39790-001	Water level sensor
5	12-3039-01	Water sensor harness
6	A39789-001	Reservoir w/valve and cover
6a	02-2217-02	Float valve only

Misc:

1m	19-0664-01	Pre-Mixed Squirt Bottle of Clear 1 scale remover
2m	19-0664-12	12 pack of item 1m
3m	19-0653-12	Case of undiluted Clear 1 scale remover

Service Parts

Refrigeration

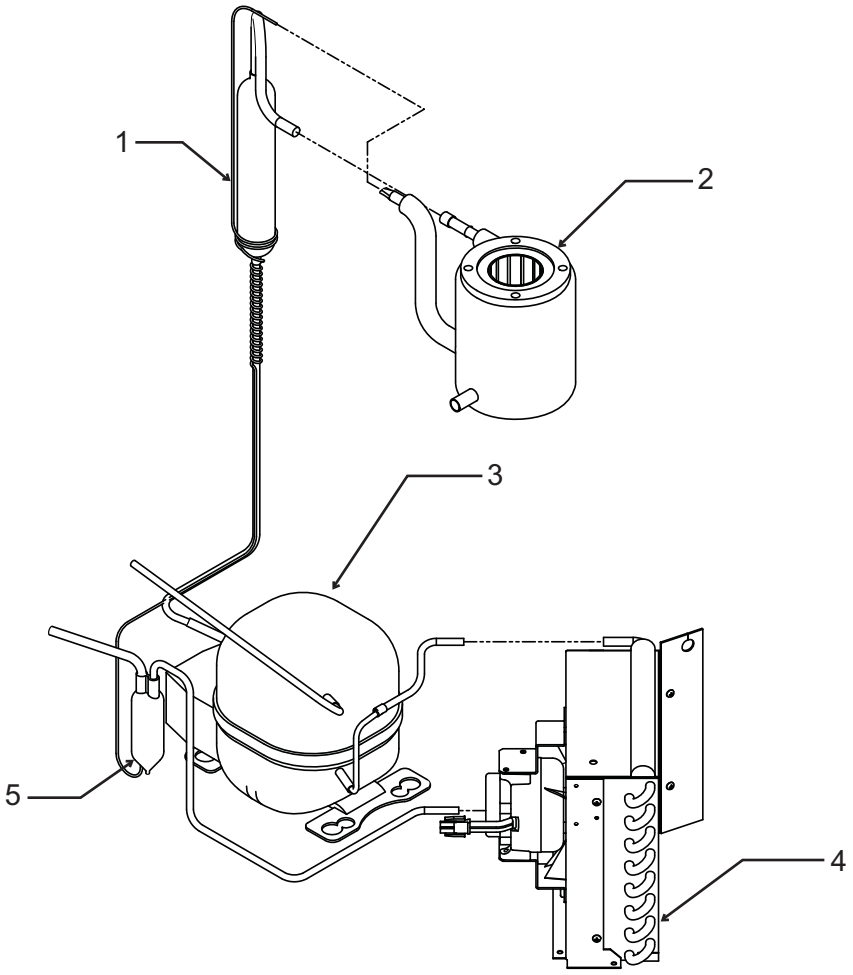

Item Number	Part Number	Description
1	A39384-001	Suction line w/cap tube
2	02-4558-01	Evaporator
3	18-8939-21	Compressor
Compressor includes overload, relay and drier		
3a	18-8939-51	Overload
3b	18-8939-52	Relay
4	18-8940-01	Condenser
5	02-4416-01	Dryer

Service Parts

Under Bin Parts

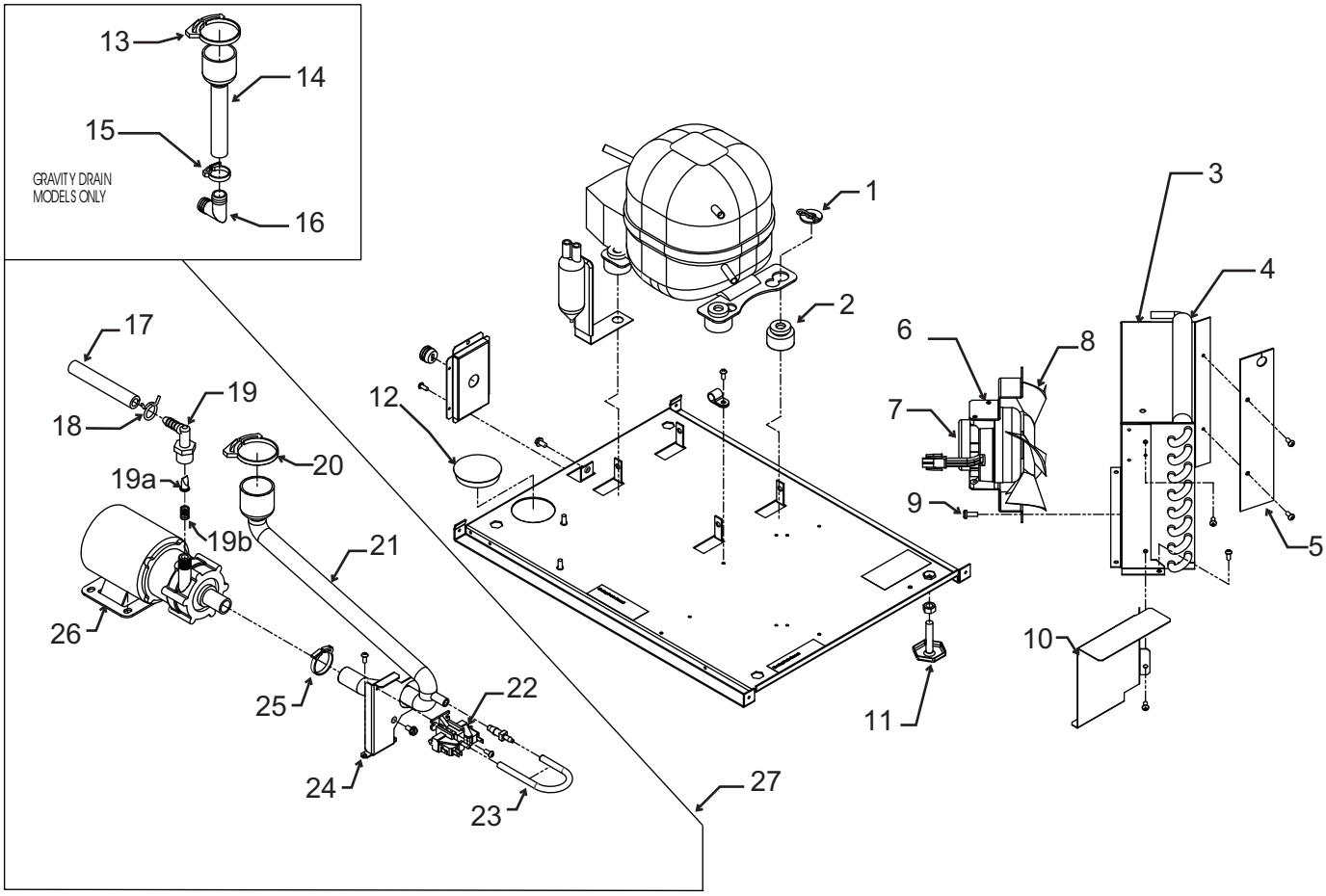

Item Number	Part Number	Description
1	03-3821-01	Clip
1a	03-1407-08	Washer
2	18-4700-28	Grommet
3	A39460-001	Shroud
4	13-0909-01	Gasket - order 1 & cut to fit
5	02-4450-01	Air baffle
6	A39556-001	Fan motor bracket
7	12-3024-01	Fan motor
8	02-4197-01	Fan blade
9	03-3818-01	Screw
10	A39825-001	Pump model rain shield
11	03-1608-01	Leg leveler
12	02-1875-18	Hole plug
13	02-2814-13	Hose clamp
14	02-4412-01	Drain hose
15	02-2814-08	Hose clamp
16	16-0671-01	Elbow
17	A37334-001	Discharge hose
18	02-0534-02	Hose clamp
19	02-3522-01	Elbow
20	02-2814-13	Hose clamp
21	02-4413-01	Drain tube
22	11-0504-01	Pressure switch
23	05-0591-01	Switch hose
24	A39370-001	Switch bracket
25	02-2814-13	Hose clamp
26	12-2503-21	Pump & motor only
27	A39462-021	Pump kit

Service Parts

Ice Making Section

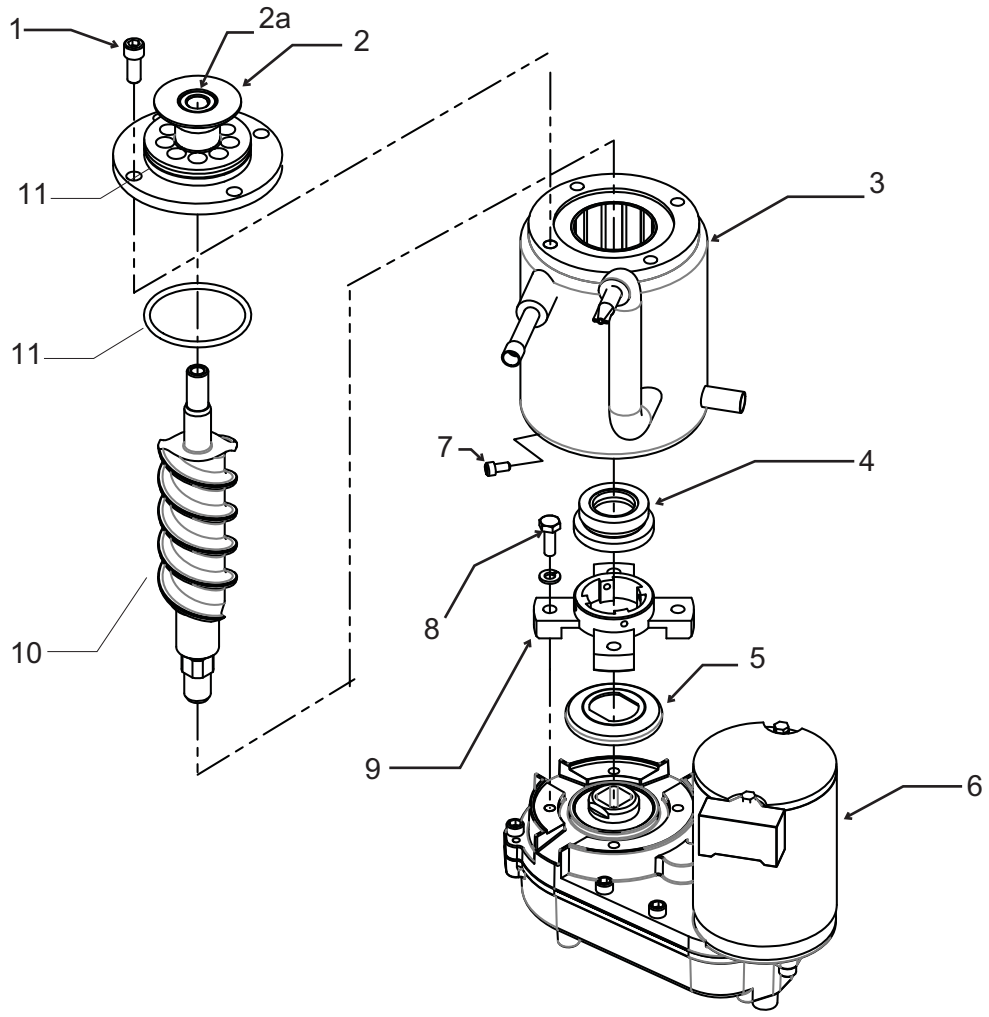

Item Number	Part Number	Description
1	03-1544-08	Cap screw
2	A39531-001	Breaker w/bearing
2a	02-4619-01	Bearing only
3	02-4558-01	Evaporator
4	02-4599-21	Water seal
5	02-4662-01	Water shed
6	02-4580-21	Gear reducer complete
6a	on hold	Motor*
6b	on hold	Capacitor*
7	03-1544-04	Cap screw
8	03-1405-54	Cap screw
9	02-4625-01	Adapter
10	02-4591-21	Auger
11	13-0617-58	O-ring

* Must connect wires correctly. See label on motor.

Service Parts

Control System

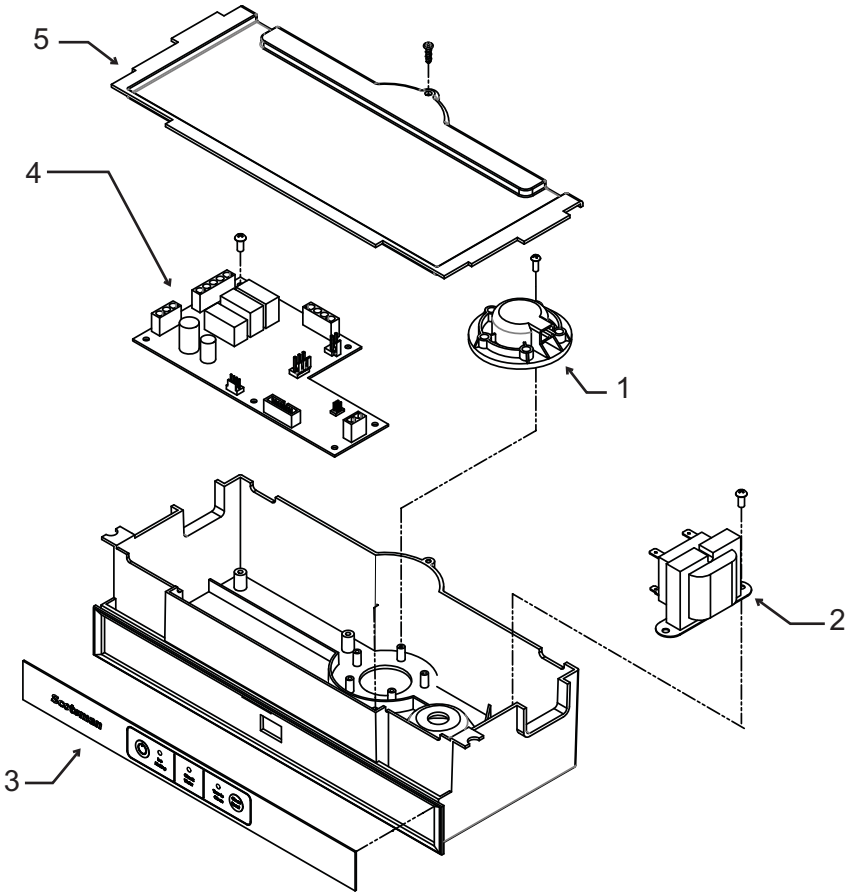

Item Number	Part Number	Description
1	11-0579-01	Ice level sensor
2	12-2924-01	Transformer
3	11-0588-02	Control panel
4	11-0589-21	Controller
5	02-4386-01	Cover
Not Illustrated:		
	12-1638-21	Power cord

Service Parts

Wiring Diagram

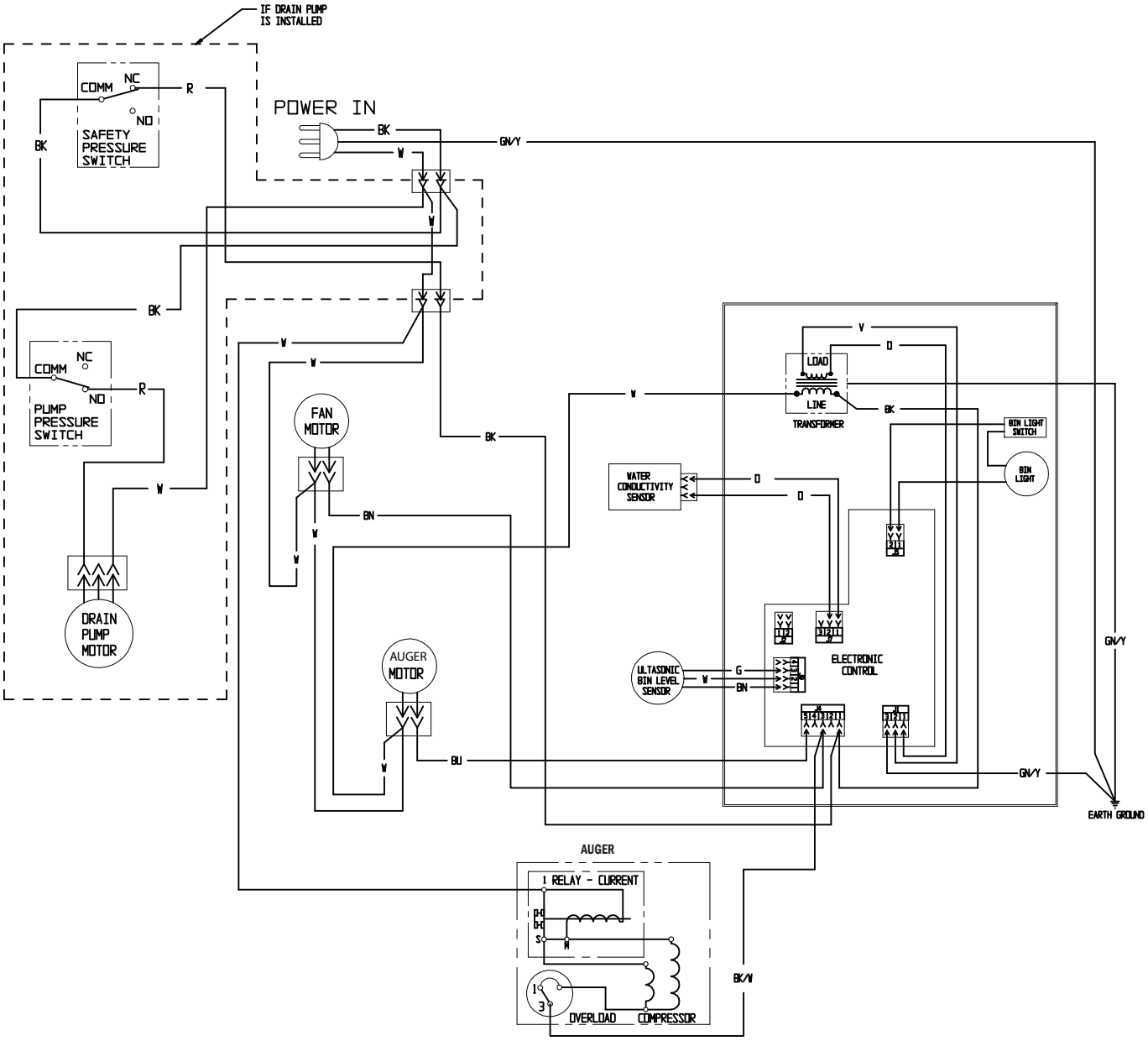

Service Parts

Schematic Diagram

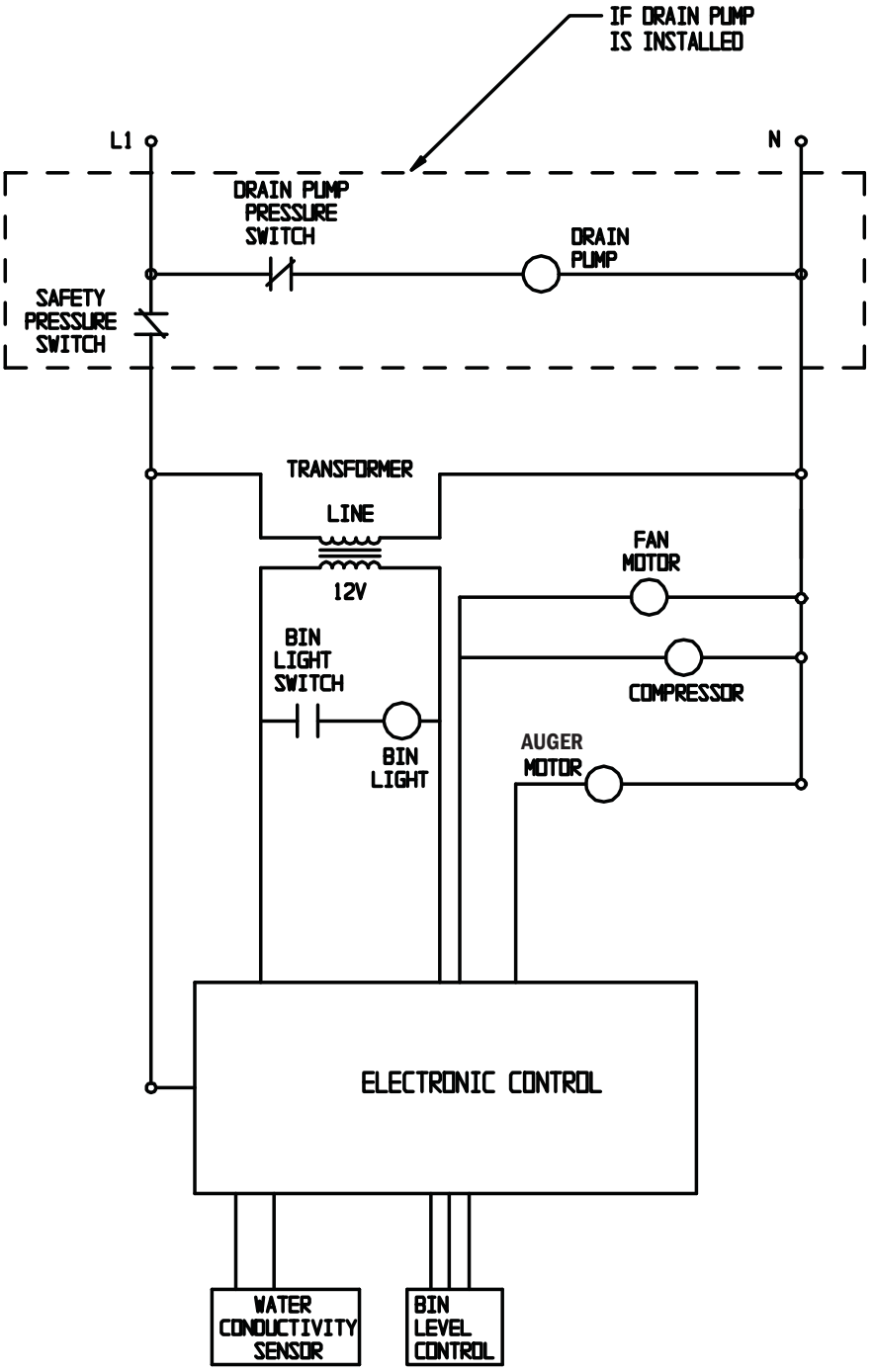

SWITCHES ON THIS UNIT
SHOWN IN FREEZE CYCLE
WITH DRAIN PUMP IN OPERATION
AND BIN DOOR CLOSED