TABLE OF CONTENTS

WARRANTY 1
TABLE OF CONTENTS 2
TO THE USER 3
SPECIFICATIONS 4
DIMENSIONS 5
DIMENSIONS FOR BUILT-IN INSTALLATIONS 6
INSTALLATION LIMITATIONS 7
INSTALLATION INSTRUCTIONS ..... 8, 9 & 10
SPK18-H PUMP KIT INSTALLATION INSTRUCTIONS ..... 11 & 12
CLEANING INSTRUCTIONS 13

EXPLODED VIEWS

BIN INSERT 14
WATER PUMP 15
CONTROL BOX 16
CABINET 17
INTERNAL COMPONENTS 18

WIRING DIAGRAMS

AC10 WIRING DIAGRAM 19
AC10 WIRING DIAGRAM w/CONDENSATE PUMP 20

MAINTENANCE INSTRUCTIONS

CABINET REMOVAL 21
TIMER MOTOR 22
BIN THERMOSTAT REPLACEMENT 22
WATER PUMP REPLACEMENT 23
ADJUSTING CUBE SIZE CONTROL 23
INLET WATER SOLENOID REPLACEMENT 23

SERVICE INFORMATION

SERVICEMAN'S INFORMATION 24
SERVICE ANALYSIS 25-27
ACCESSORY PARTS 28

THIS PAGE
INTENTIONALLY
LEFT BLANK

THIS PAGE
INTENTIONALLY
LEFT BLANK

TO THE USER

Your Scotsman Model AC10 Ice Cube Maker is a product carefully engineered and quality constructed to provide you with many years of faithful performance and a minimum of maintenance costs.

Produced by the world's leading manufacturer of automatic ice making equipment, your Scotsman Ice Cube Maker incorporates the same reliable systems already proven over years of actual operation by thousands of users.

Many of you will have an opportunity to see and use clear, solid, slow melting Scotsman Cubes for the first time. You will quickly compare the clear, glass-like quality of your Scotsman Cubes to the type produced by your home refrigerator, freezer. By comparison, cubes made in trays in your refrigerator are very white or cloudy, they also melt faster than clear ice.

A brief explanation shows why.

First, all water contains some mineral deposits such as iron, calcium, etc. in various degrees. These deposits do not freeze. Therefore, when you freeze water in refrigerator trays, these minerals do not freeze but are trapped inside the ice cubes, contributing to their cloudiness.

In your Scotsman Ice Cube Maker the water to make ice is continually moved or circulated by a small electric pump that sprays the water under gentle pressure into the inverted cube molds. As water hits these cold refrigerated molds, only the water freezes, building gradually into a full cube. The minerals or impurities fall back down into a reservoir or sump area where they are flushed down the drain at the end of each freezing or ice making cycle.

This manual also contains information regarding the various working systems and helpful hints on the care and maintenance of your Scotsman Ice Cube Maker.

We would like to suggest you take the time now to briefly review this manual, and if you have any further questions regarding the care or operation of your ice cube maker, contact:

SERVICE DEPARTMENT
SCOTSMAN ICE SYSTEMS
505 Front Street
Albert Lea, Minnesota 56007
Phone: 507/373-3961

P.S. Whenever writing, please be sure to include the model and serial numbers of your ice cube maker.

SCOTSMAN®

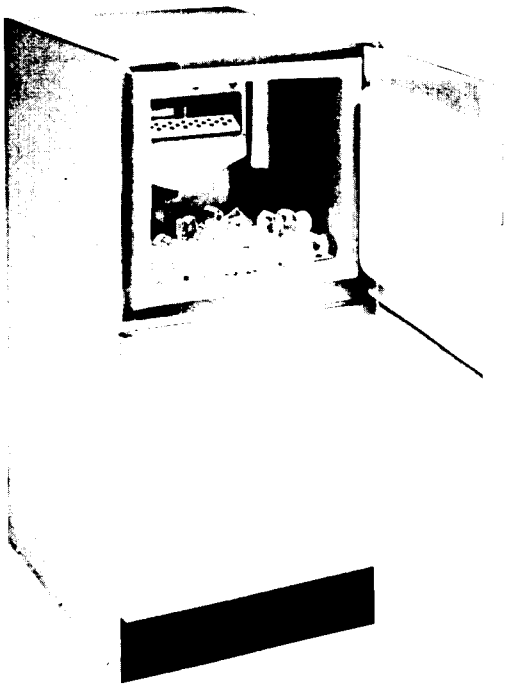

MODEL AC10 ICE CUBE MAKER

SPECIFICATIONS

Size: 15" wide 20-1/2" deep 33-1/8" high.

Weight: 85 pounds

Cabinet: Stainless Steel

Finish: Stainless Steel

Storage Bin: Polyethylene

Door: Swings to right

Door Latch: Magnetic Gasket 4 Sides

Lower Compartment Panel:
Removable by pulling outward at top.

Power Rating	5.0 Amperes
Wire Size:	18 Gauge
Fuse Size -- Maximum:	15 Amperes
Refrigerant Metering Device:	Capillary Tube
Cubes per Harvest:	8
Harvest Means:	Hot Gas
Compressor Make:	Danfoss
Compressor Specs:	1/8 H.P. 115/60/1
Refrigerant Charge:	5 oz. R-12.

Requirements:
Power: 115 volts - 60 Hertz Single Phase
Water: 1/4" cold water line
Drain: Required for water Outlet.

MODEL AC10

Daily Ice Capacity is directly related to inlet water temperature, ambient temperature, and age of machine. Under normal conditions the AC10 will make up to 30 pounds of ice in 24 hours.

To keep your SCOTSMAN ICEMAKER performing at it's maximum capacity, it is necessary to perform periodic maintainance as outlined on page 12 of this manual.

IMPORTANT NOTE: The unit should be cleaned at least twice a year. Some water conditions will require more frequent cleaning. The condenser must be cleaned as often as required to remove dust and lint build-up. A dirty condenser will drastically reduce ice production.

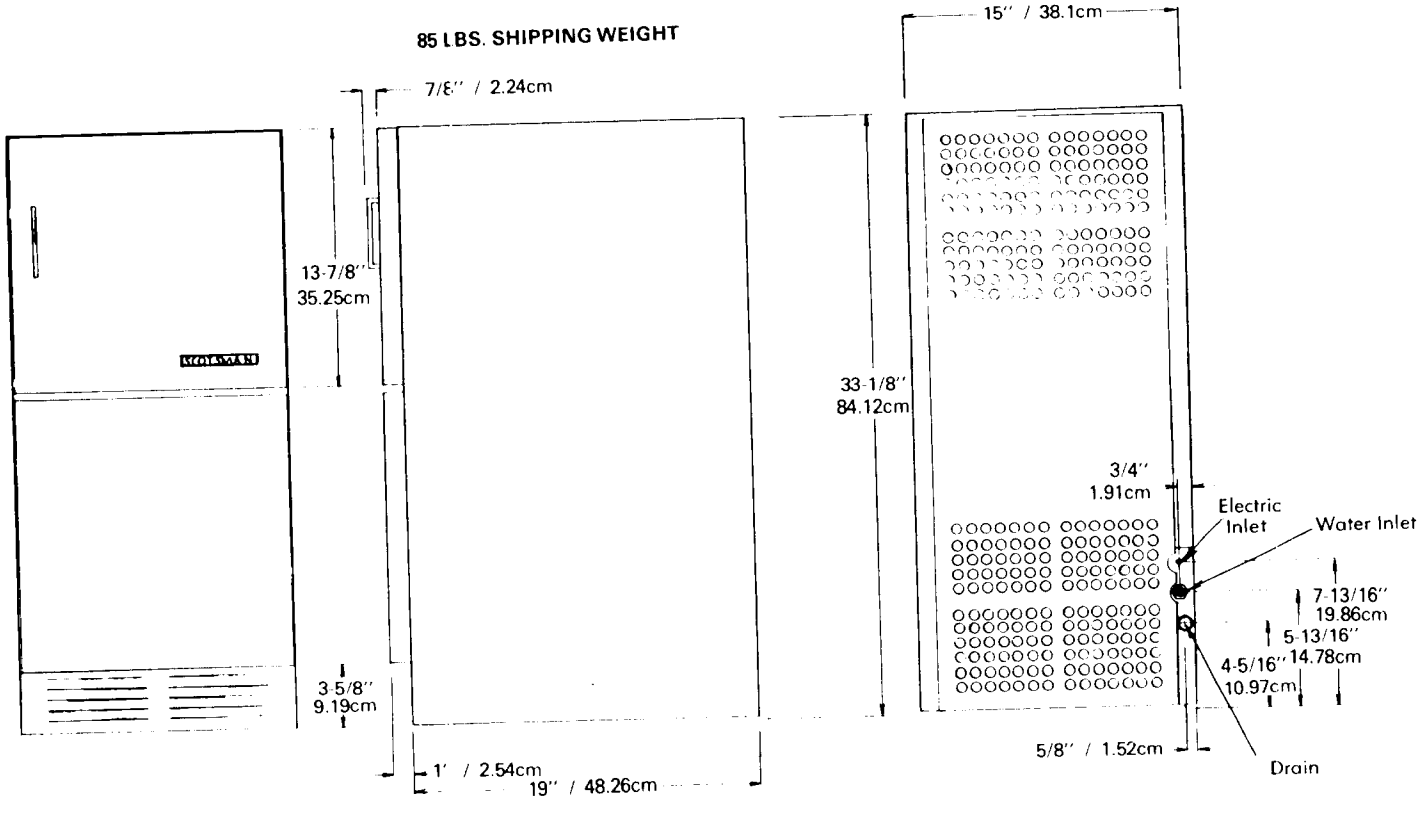

DIMENSIONAL DRAWING FOR BUILT-IN INSTALLATIONS

NOTE: THE FRONT KICK PLATE MUST NOT BE BLOCKED OR OBSTRUCTED IN ANY WAY. THE AIR COOLED, FORCED DRAFT, CONDENSER MUST "BREATHE" THROUGH THIS OPENING.

NOTE: AS SOME SERVICE PROCEDURES REQUIRE ACCESS TO THE ENTIRE UNIT, IT IS **IMPORTANT** TO ALLOW ENOUGH SPACE TO REMOVE THE MACHINE FROM THE INSTALLATION. PLEASE KEEP THIS IN MIND WHILE INSTALLING YOUR AC10 ICE CUBE MAKER.

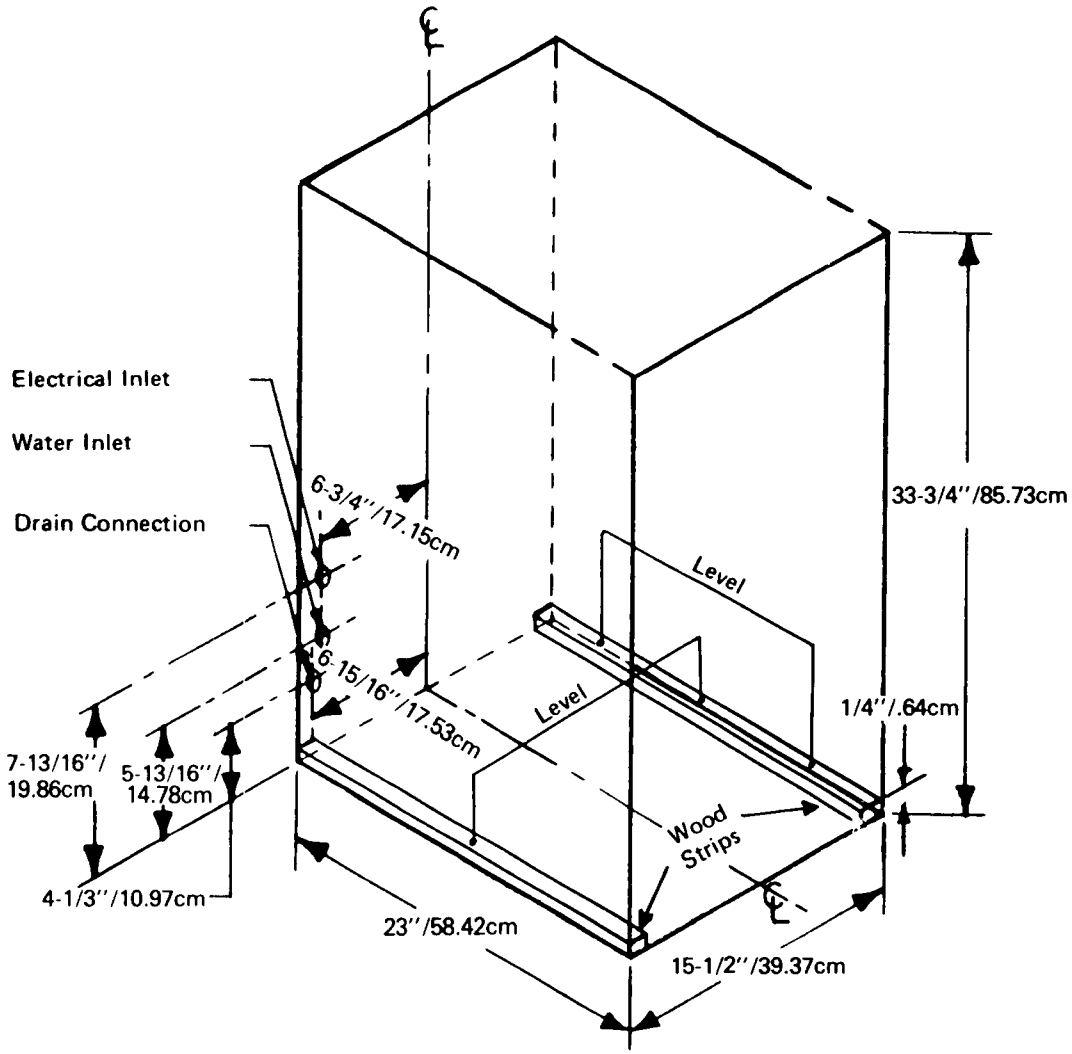

MODEL AC10 RECESSED

To recess the Model AC10 into a cabinet, provide an opening 33-3/4 inches high, 15-1/2 inches wide and 23 inches deep.

The above dimensions allow 4 inches at the back of the Ice Maker for electric cord, water line and drain line.

Requirements: For either recessed or freestanding installation.
Power: 115 volts, 60 cycle, single phase.
Water: 1/4 inch flare connector provided on the Ice Maker.
Drain: Installation of an adequate drain is necessary. See pages 9, 10 and 11 for complete instructions.

INSTALLATION LIMITATIONS

ELECTRICAL

1. Scotsman, like most manufacturers, purchases electrical motors that are rated to operate within 10% variance above or below nameplate ratings.

   Improper voltages supplied to Scotsman equipment can cause premature failures and burnouts. Failures of this type are not considered as factory fault or defect.

AMBIENT

2. WARNING — This machine is not designed for outdoor installations. This machine will not operate when air temperatures are below 50° F. or above 100° F.

   NOTE: Some units incorporate a "hot gas" defrost system, therefore, it is vitally important that the operation head pressure are in the 135-155 pound PSI gauge range. Water cooled models pose no problem since pressure can be regulated by adjustment to the water regulating valve.

   Air cooled units require a minimum 50° F. ambient air, otherwise, the hot gas system will not defrost the formed ice cubes, resulting in a freeze up that will ruin the freezer section, necessitating a costly repair.

   This unit was not fabricated nor intended to be installed outdoors.

WATER

3. Scotsman Ice Systems require 20 pounds flowing water pressure to operate satisfactorily. Pressures lower than 20 pounds or interruptions in the water supply can cause serious mechanical damage to this product.

   This machine will not operate when water supply temperatures are below 40° F. or above 100° F.

   When choosing the water supply for this product, consideration should be given to:

   A. Length of run
   B. Water clarity and purity
   C. Adequate supply pressures

   Since water is the most important single ingredient in producing ice, you cannot over emphasize the three items mentioned above. Low water pressure (below 20 pounds) may cause malfunction of the ice system. Water containing excessive minerals will tend to produce cloudy colored cubes and scale build up on parts in the water system.

   Heavily clorinated water can be controlled using charcoal or carbon filters.

WARNING: THIS MACHINE IS NOT DESIGNED FOR OUTDOOR INSTALLATIONS OR INSTALLATIONS WHERE AIR TEMPERATURES ARE BELOW 50° F OR ABOVE 100° F AND THE WATER TEMPERATURE IS BELOW 40° F OR ABOVE 100° F. IF THIS WARNING IS NOT COMPLIED WITH, IT WILL CONSTITUTE MISUSE UNDER THE TERMS OF THE SCOTSMAN MANUFACTURERS LIMITED WARRANTY RESULTING IN A LOSS OF WARRANTY COVERAGE.

STEP ONE — LOCATION

Place the unit on a solid, level floor or base with access to electrical power, a water supply and a drain. Level, if necessary, as shown in the drawing for built-in installations. The bottom of the unit must be 1/4" above the floor or floor covering in front of the cabinet, wall, etc. Adequate space must be left at the sides and top of the opening for removal of the unit.

STEP TWO — ELECTRICAL POWER SUPPLY

The ice maker should be on a separate electrical circuit. It is suggested an electrician be contacted to insure this circuit has a **MAXIMUM FUSING OF 15 AMPS** and is properly grounded. Low voltage from overloaded circuits can cause premature failure of cuber electrical components. A solid ground wire from cuber frame or grounding screw to an "earth" ground should also be installed.

NOTE: FAILURE TO GROUND THE UNIT PROPERLY MAY RESULT IN AN ELECTRICAL SHOCK HAZARD WHICH COULD CAUSE SEVERE OR FATAL SHOCK INJURY.

STEP THREE — WATER SUPPLY

A 1/4 inch flare connector is provided at the front of the icemaker for the cold water supply. The supply line should not be smaller than 1/4 inch O.D. copper. A shut off valve conveniently located in the water line is recommended. The water supply line should be directed thru the opening in the back of the icemaker marked "Potable Water Inlet."

For under counter installation, allow approximately 19 inches of 1/4 inch water line and 12 inches of drain line (measured from the back of the ice maker) to direct thru the openings at the rear. Final connections are to be made after icemaker is in position.

NOTE: DO NOT USE A SELF-PIERCING TAP LINE VALVE. THIS TYPE OF VALVE DOES NOT PROVIDE SUFFICIENT WATER VOLUME OR PRESSURE FOR PROPER OPERATION AND THE SMALL OPENING PLUGS RAPIDLY WITH MINERAL DEPOSITS.

STRAINERS AND FILTERS

Scotsman recommends the installation of a Water Strainer, Part Number 16-0162-00, on all units. Use two fittings, Part Number 16-0621-03, to install strainer. Local water conditions may require the use of an adequate filter in the water supply line to prevent extensive damage caused by sediment build-up. Unit or component failure due to the lack of proper strainer of filter installation is not eligible for warranty coverage.

NOTE: EXCESSIVE NOISE DURING THE HARVEST CYCLE IS USUALLY CAUSED BY HIGH WATER PRESSURE. THIS SITUATION CAN BE CORRECTED BY THE INSTALLATION OF A WATER PRESSURE REGULATOR, PART NUMBER 11-0200-00. USE TWO FITTINGS, PART NUMBER 16-0621-03. (See Page 27)

STEP FOUR — DRAIN INSTALLATION

Where a drain exists which is not higher than the opening the back of the ice maker labeled "Condenser Drain", a gravity drain is adequate. At no time can the drain tube be raised higher than the cabinet hole. If the drain tube is run thru the floor behind the unit, provide a 7/8" hole at least 2-1/2 inches behind the back panel of the machine. This will prevent a kink from forming in the line. Proper drain installation requires the use of 5/8" OD copper tube or 5/8" I.D. flexible plastic tubing. It is important to insure that the plastic tubing does not kink. Allow 1/4" pitch per foot on drain lines over 4 feet long. DO NOT plumb the drain line into the sewer in any air tight manner. It is extremely important to provide an air gap between the unit drain and any external drain. This prevents sewer gas from backing into the unit and also eliminates most air locks. An air lock or improper drain installation will cause water to back up into the bin and melt the ice stored there.

NOTE: IF A GRAVITY DRAIN IS NOT AVAILABLE, USE THE SPK18H CONDENSATE PUMP KIT. COMPLETE INSTRUCTIONS FOR THIS INSTALLATION ARE INCLUDED WITH THE KIT.

IMPORTANT NOTE

The AC10 is equipped with an air cooled condenser which is designed to "breathe" through the front of the unit. Cool air is drawn in to the right side of the kickplate and the warm air is exhausted through the left side. If the kickplate is blocked in any way or if the condenser is dirty, ice production will be drastically reduced. It is extremely important to clean the condenser regularly and insure adequate air space in front of the kickplate. Unit or component failures due to a dirty condenser or blocked kickplate are not eligible for warranty coverage.

START-UP PROCEDURE

WARNING: NEVER RUN THE UNIT WITHOUT THE WATER TURNED ON. THIS COULD DAMAGE THE MACHINE.

1. Turn on the cold water supply to the machine.
2. Turn on the electrical power.
3. Push the lever of the Off-On switch to your right. The machine will now automatically produce ice in about thirty minutes.

The normal storage bin capacity is 26 pounds of ice (about 700 cubes) or when the cubes touch the thermostat capillary tube on the right hand side of the bin. The bin is considered full when cubes are ten inches above the bottom of the bin. When the machine is initially installed, the unit will operate continuously for approximately 24 to 36 hours or until the ice storage bin has been filled. Once the storage bin has been filled, the unit will cycle on the bin control to maintain a full bin of ice.

DRAIN INSTALLATION

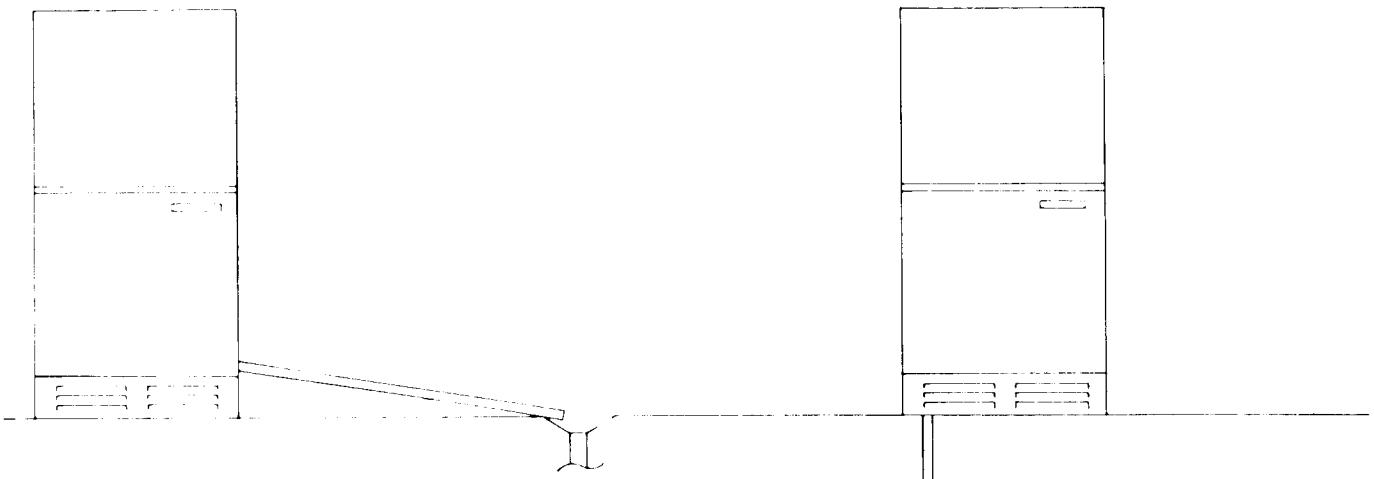

NOTE: THE INSTALLATION SHOWN BELOW IS ONLY ACCEPTABLE WHEN THE SPK-18H PUMP IS USED. THIS PUMP IS AVAILABLE AS A KIT FOR FIELD INSTALLATION.

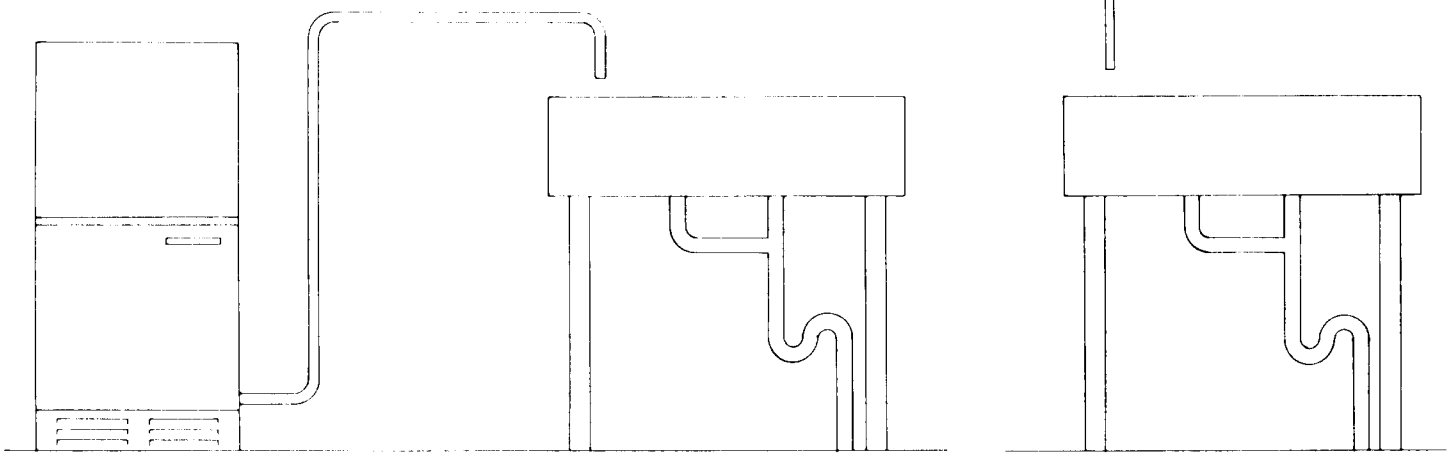

NOTE: SCOTSMAN DOES NOT SUGGEST THE INSTALLATION OF ANY DRAIN LINE RUN DIRECTLY OUTSIDE TO A LAWN, DRIVEWAY, FLOWER BED, ETC. CONNECT THE UNIT DRAIN TO AN EXISTING DRAIN LINE ACCORDING TO THE DRAIN INSTALLATION INSTRUCTIONS.

SPK 18-H INSTALLATION INSTRUCTIONS

1. Secure pump to utility bracket located in left rear corner of machine.
2. Leave original black drain tube (1-1/2" long) as is connected to brass bin drain tube.
3. Rotate original 5/8" x 5/8" plastic elbow so it points towards left rear corner of machine.
4. Leave original black drain tube (4" long) as is connected to original 5/8" x 5/8" plastic elbow.
5. Remove original 5/8" x 5/8" x 5/8" plastic tee and rotate into position shown.
6. Use original black drain tube (2" long) from end of original drain assembly and place on plastic tee and insert into pump.
7. Reconnect reservoir overflow tube to unused leg of plastic tee.
8. Attach 3/8" I.D. tygon tubing (144" long) supplied with pump kit to pump outlet port and route tubing through hole in rear of machine.

AUXILIARY SAFETY SWITCH WIRING INSTRUCTIONS

1. Disconnect electrical supply.
2. Remove Black (BLK) wire connecting on-off toggle switch to bin temperature control.
3. Connect leads from safety switch (yellow cord) to the terminals of the toggle switch and temperature control from which black wire was removed. Inspect terminals to insure proper spacing between terminals and also between terminals and control box. Adjust if necessary.

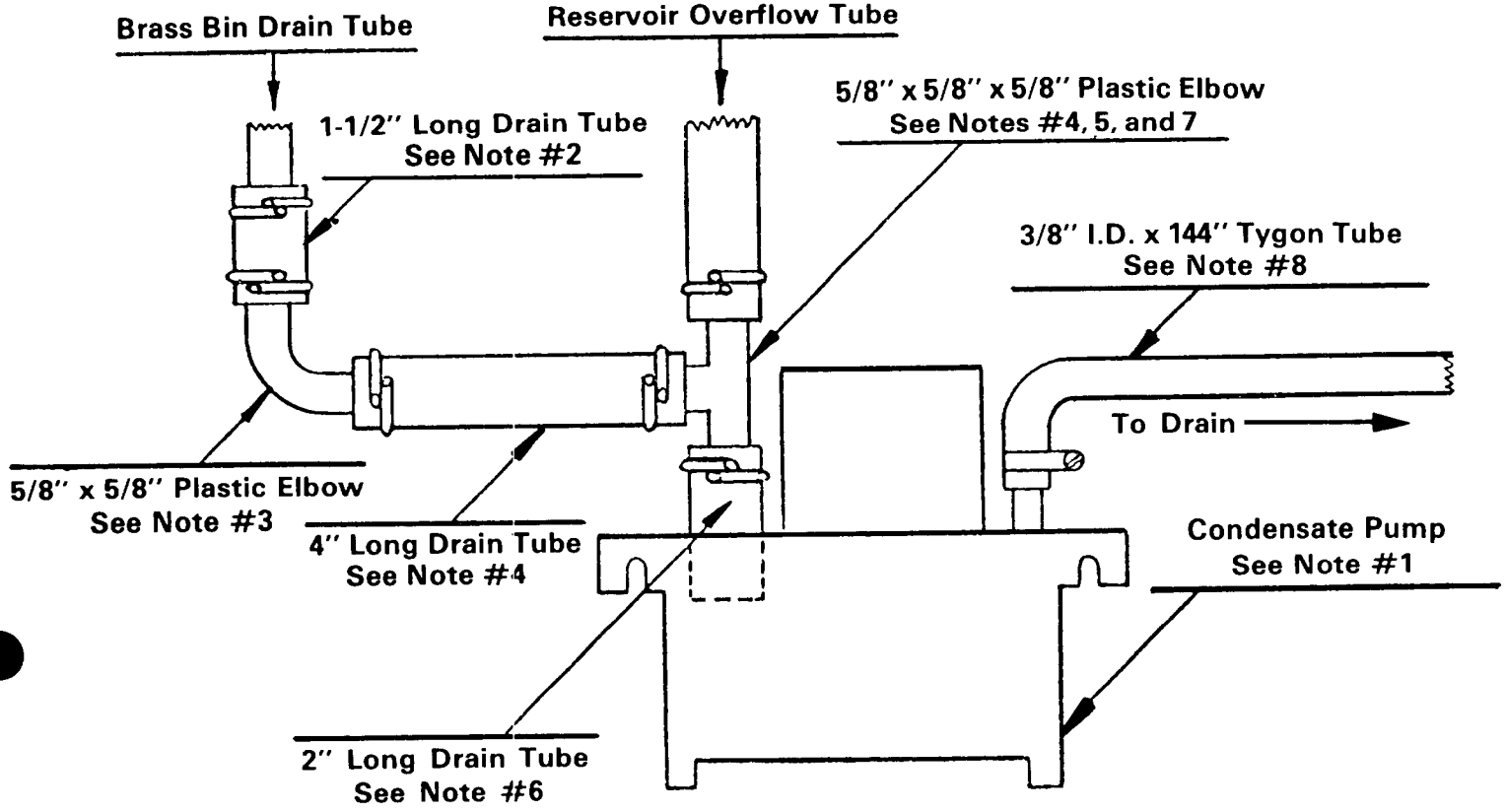

1. Run the 3/8" I.D. flexible plastic tubing from the rear of the machine to your drain location.

2. Check chart below for max. length of drain line and lift.

3. Start the machine according to the instructions in the Service Manual.

4. The pump is equipped with a safety switch which will stop the ice-maker if the pump malfunctions and the reservoir is not pumped out. This safety switch is connected to the control box by the yellow cord.

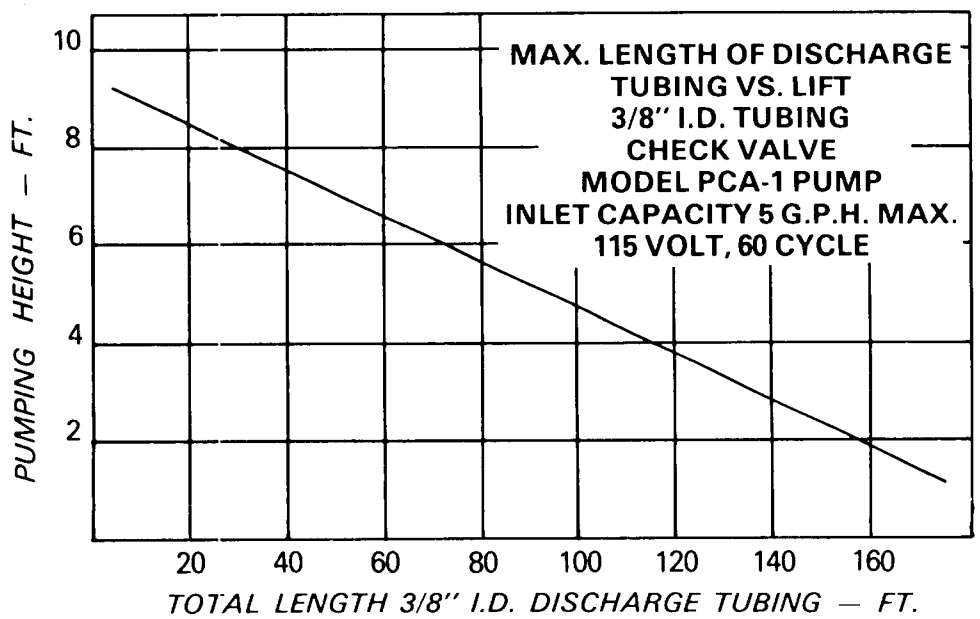

HOW TO USE THE CHART

The chart provides a simple ratio between the amount of vertical lift (head) in your installation compared to the maximum length of discharge tubing (run) needed. Figures derived assume an inlet capacity of five gallons per hour maximum. It is also assumed that 3/8" I.D. Flexible plastic tubing will be used.

NOTE: A relatively short pumping cycle is normal for a unit of this type. This in no way denotes a defective unit nor is short cycling harmful to the unit as long as the check valve is functional.

WARNING: DO NOT REMOVE FLUTED PLASTIC FITTING AND/OR CHECK VALVE FROM THE PUMP. REMOVAL OF EITHER WILL AUTOMATICALLY VOID THE WARRANTEE.

It can easily be seen, then, that, with a head (vertical rise) of 6', (for example) the maximum total length of discharge tubing to be used on the "run" (vertical plus horizontal) would be slightly less than 70'.

CLEANING AND CARE

Cabinet Exterior:

Clean with warm water and soap. Waxing is not required but is permissible on metal parts. Do not apply wax on the rubber gasket around the door opening or on plastic parts.

Machine Compartment:

IT IS VERY IMPORTANT TO CLEAN THE CONDENSER REGULARLY. A DIRTY OR BLOCKED CONDENSER WILL DRASTICALLY REDUCE ICE PRODUCTION.

Do not attempt to clean this area unless the off-on switch is turned off — lever pushed to the left. Use a vacuum cleaner to remove dust from the front of the condenser. DO NOT REMOVE THE COVER ON THE CONTROL BOX UNLESS THE POWER SUPPLY IS DISCONNECTED. **NOTE:** Failure to disconnect the electrical power prior to removing the control box cover may result in severe or fatal shock injury.

Storage Bin:

Use only warm water and soap. The chemicals in some cleaning agents will damage plastic.

Freezing Unit and Water System:

All water contains some minerals and impurities, scale, iron, etc. Cleaning schedule should be timed accordingly. The following procedure should be used to clean the interiors of the freezer, tanks and water lines.

1. Remove all cubes from the storage bin.

2. With the unit operating and the water spraying from the jets behind the plastic curtain (freezing cycle), slowly pour three (3) ounces of Scotsman Ice Machine Cleaner into the trough or reservoir below the jets.

3. Let the machine operate in the normal manner for one hour, then wait for a harvest cycle (when cubes fall out of the freezer and into the storage bin.)

At this time turn the machine off.

4. Pour a gallon of warm water over the cubes that have been made during the cleaning cycle. This will melt the cubes and clean the drain.

5. Dispose of any surplus cubes that are left in the storage bin.

6. Use a gallon or more of clean, cold water and flush out the interior surfaces of the freezer and storage bin.

7. Wipe all interior surfaces and turn machine on for normal operation.

8. Scotsman Ice Machine Cleaner is a mild food grade acid. Ordinary care in its use is adequate. All cubes made with this solution should be discarded as they have an acidulent taste.

CAUTION: Contains phosphoric and Hydroxyacetic acids. These compounds are corrosive and may cause burns. If swallowed DO NOT induce vomiting. Give large amounts of water or milk. Call physician immediately. In case of external contact, flush with water. Keep out of reach of children.

BIN INSERT ASS'Y

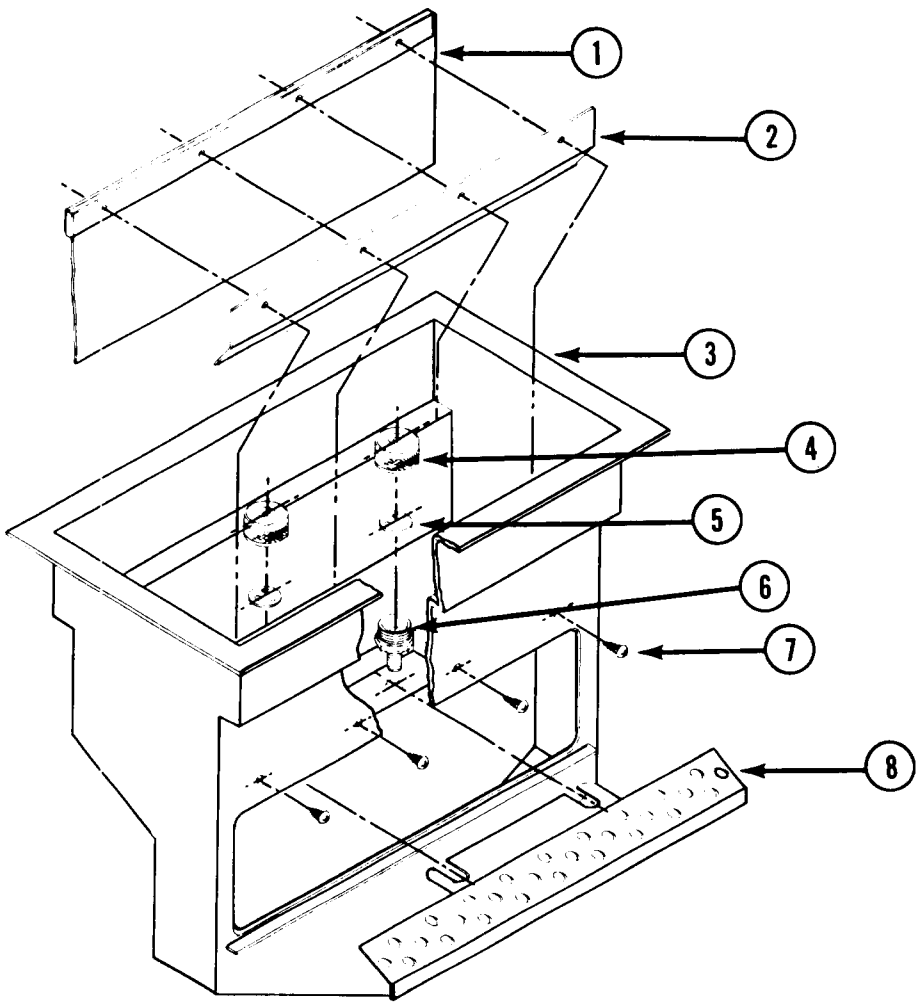

ITEM NO.	PART NO.	DESCRIPTION
1.	02-2053-01	Curtain
2.	A24155-001	Curtain Stiffner
3.	02-1923-00	Bin Insert
4.	02-1841-00	Jet Top
5.	A09543-000	Spinner
6.	02-1840-00	Spray Jet
7.	03-1404-16	Screws
8.	A22518-000	Cube Chute

WARNING: When removing jet top (4), be careful not to drop the small spinner (5). If dropped into the sump, the spinner may damage the water pump.

NOTE: The unit will not make ice properly if the spinners are not in place.

WATER PUMP COMPLETE

A22536-021 (115/60/1)
A22536-026 (230/50/1)

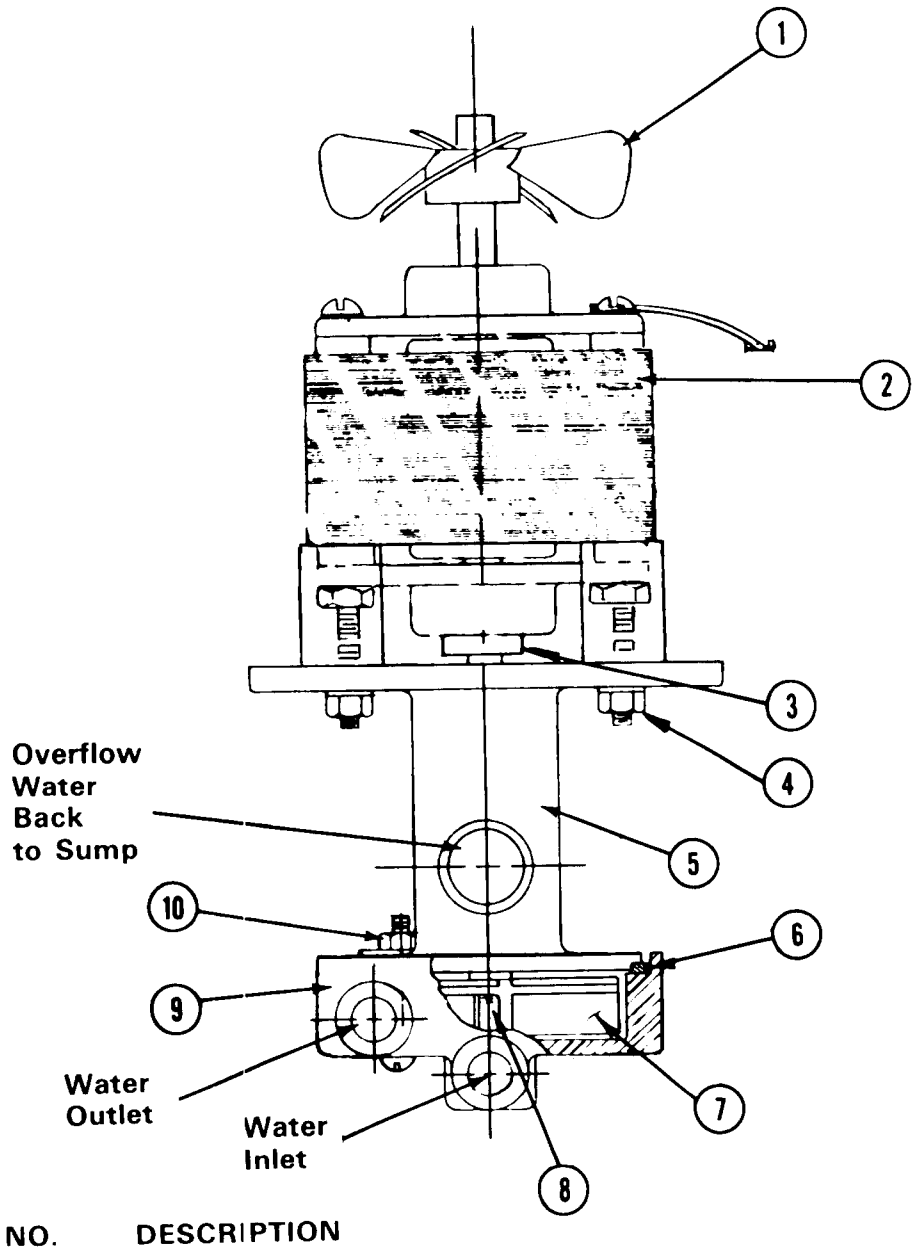

ITEM NO.	PART NO.	DESCRIPTION
1.	02-1719-00	Fan Blade
2.	12-1714-01	Motor(115/60/1)
	12-1714-06	Motor(230/50/1)
3.	13-0690-00	Rubber Washer
4.	03-1417-14	Lockwasher
	03-1406-02	Nut
5.	02-1711-00	Water Pump Body
6.	13-0617-07	O-Ring
7.	02-1712-00	Impeller
8.	03-1417-14	Lockwasher
	03-1403-05	Screw
9.	02-1710-00	Pump Base
10.	03-1403-60	Screw
	03-1408-23	Washer
	03-1406-02	Nut

ITEM NO.	PART NO.	DESCRIPTION
*11.	13-0687-00	Gasket, Water Pump (Installed Between Pump & Bin)
*12.	A20564-001	Water Pump Tube
*13.	A20564-002	Water Pump Tube
*14.	A20565-001	Water Pump Tube

* Not Shown

CABINET PARTS

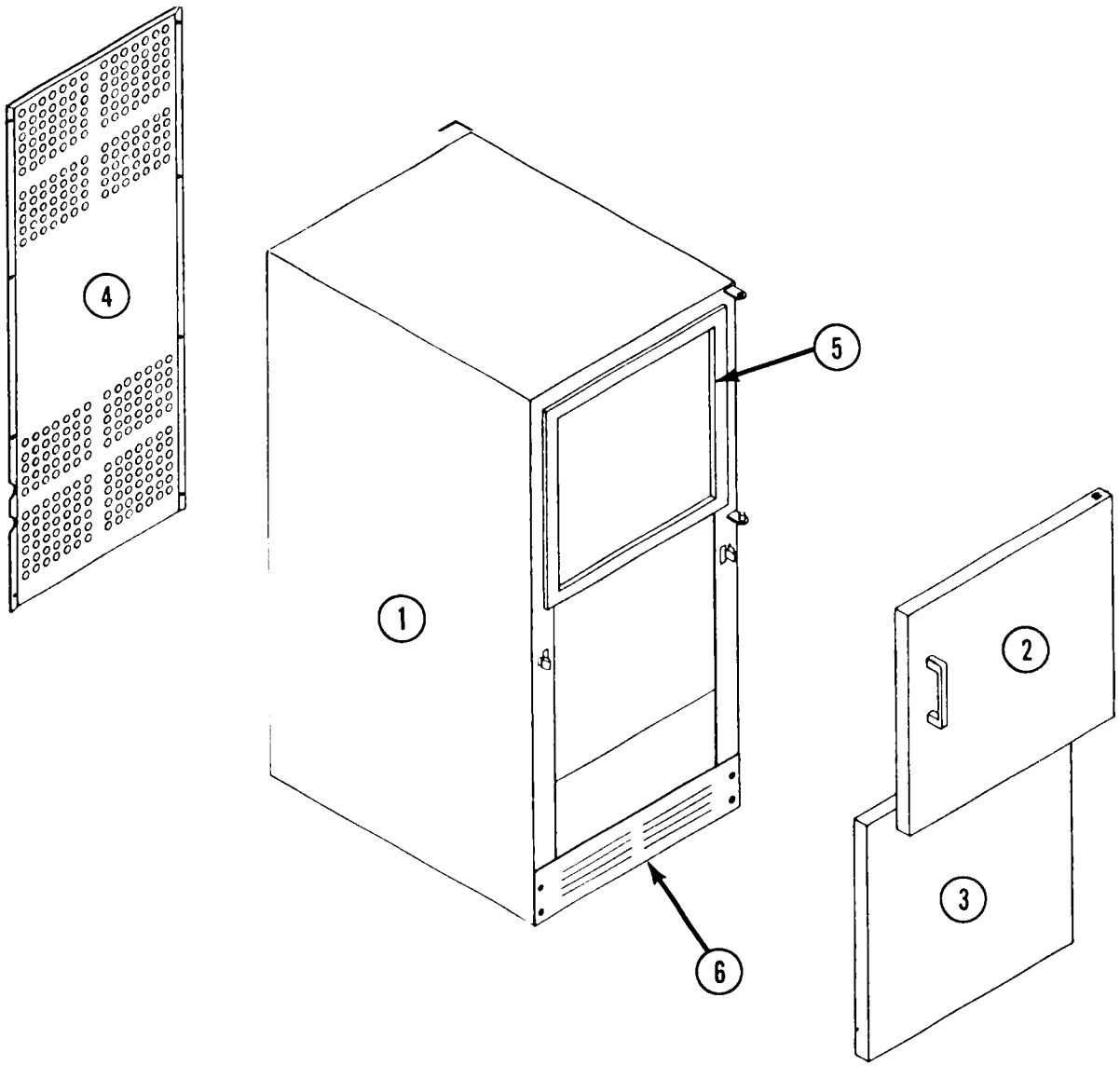

ITEM NO.	PART NO.	NAME
1.	A18592-002	Cabinet Assembly
2.	A19901-005	Access Door Complete
3.	A26575-001	Front Service Door
4.	A18595-000	Rear Service Panel
5.	13-0634-00	Gasket (magnetic)
6.	02-2243-02	Kick Plate (Black)

CONTROL BOX ASSEMBLY

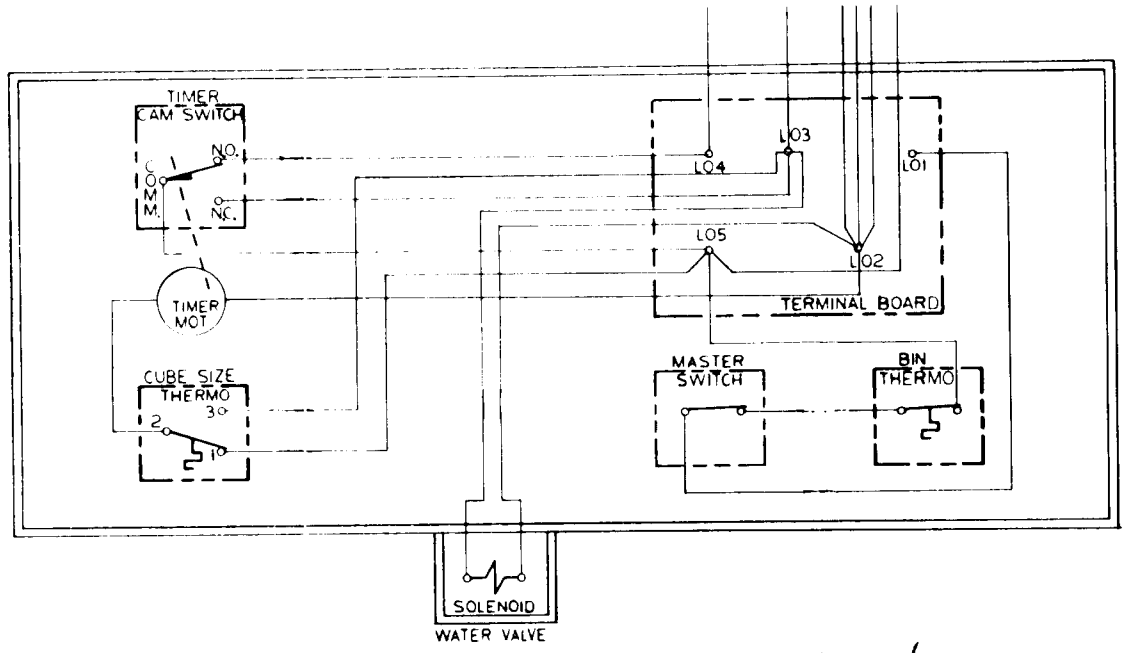

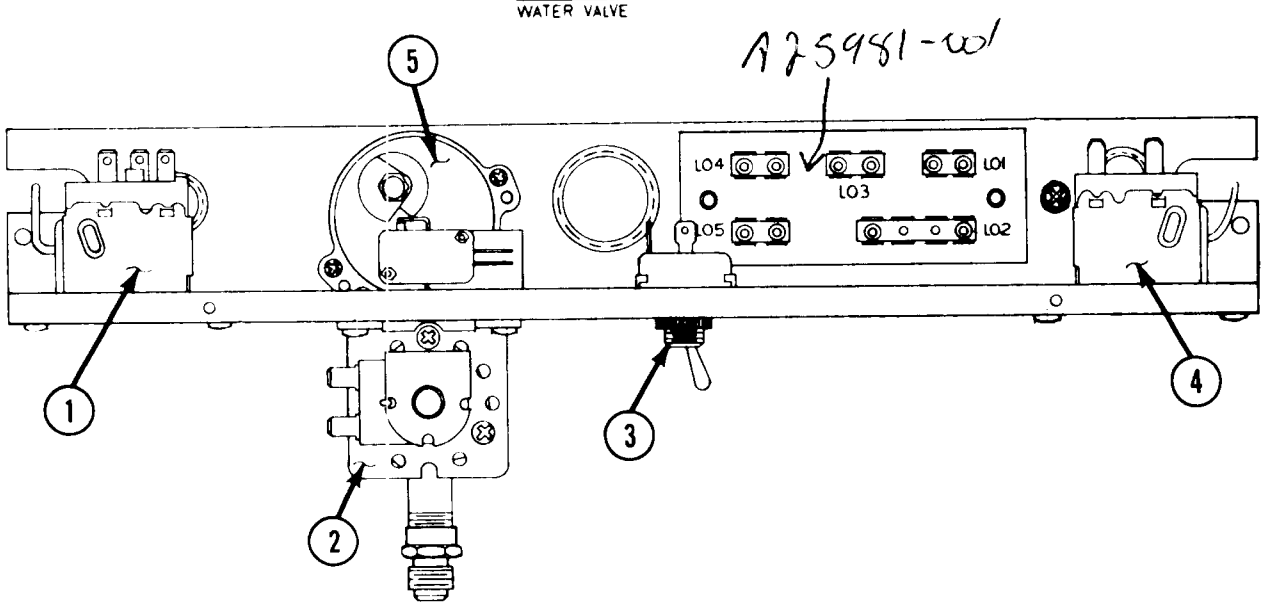

ITEM NO.	PART NO.	DESCRIPTION
1.	11-0395-01	Cube Size Control
2.	12-1646-02	Water Solenoid (115/60/1)
	12-1646-03	Water Solenoid (230/50/1)
	16-0672-01	Nylon Valve Fitting
3.	12-0426-01	Master Switch
4.	11-0366-00	Bin Thermostat
5.	12-1980-01	Timer (15/60/1)
	12-1980-06	Timer (230/50/1)

INTERNAL COMPONENTS

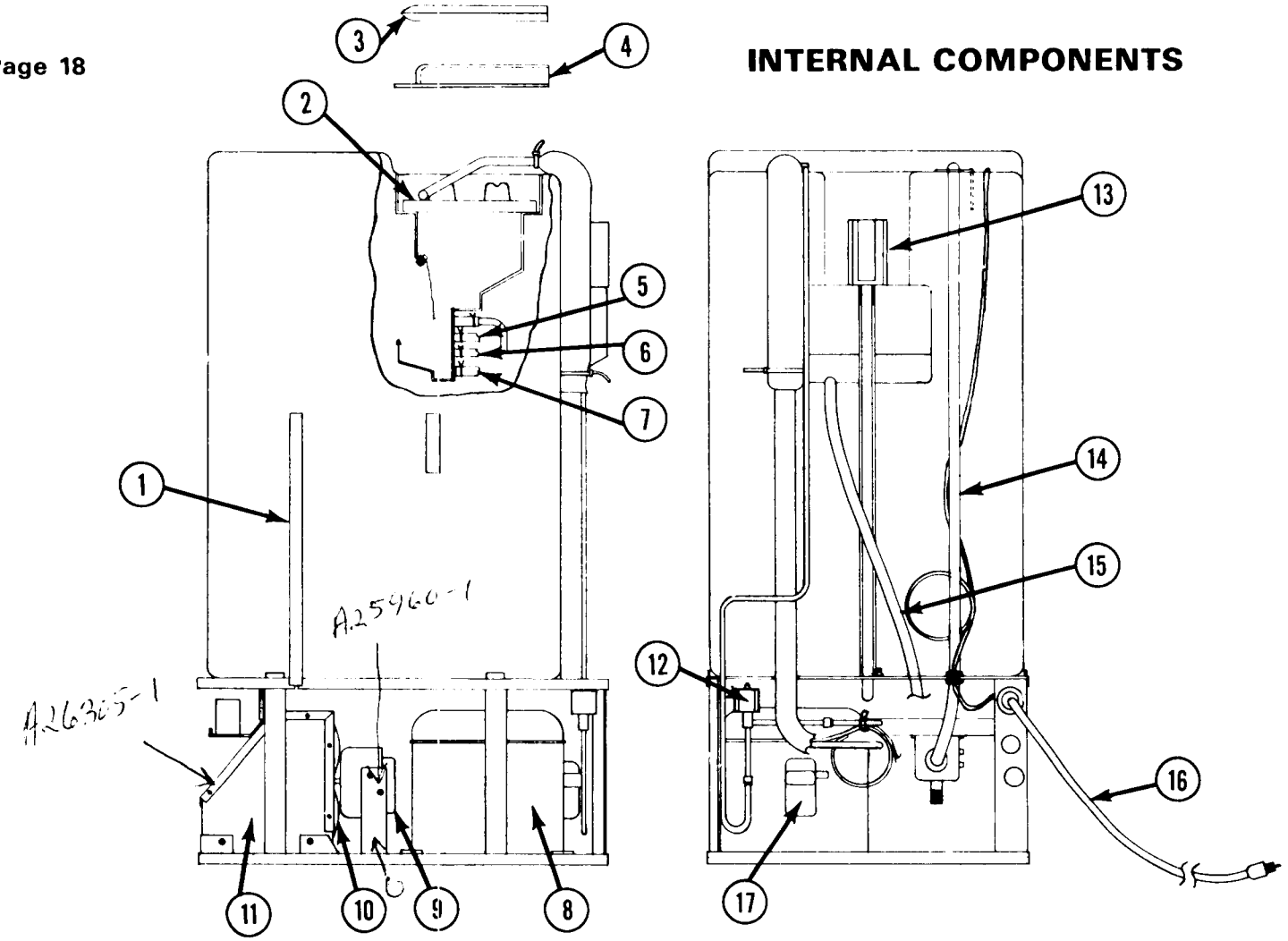

ITEM NO.	PART NO.	DESCRIPTION
1.	02-1634-01	Storage Bin
2.	A26115-020	Evaporator
	A26127-020	Evaporator Assembly Complete (Includes evaporator, cap. tube and suction line).
3.	A19588-000	Insulation
4.	02-2274-01	Cover
5.	A20565-001	Water Tube
6.	A20564-001	Water Tube
7.	A20564-002	Water Tube
8.	18-2150-01	Compressor (115/60/1)
	18-2150-02	Compressor (230/50/1)
9.	12-2015-01	Fan Motor (115/60/1)
	12-2015-02	Fan Motor (230/50/1)
10.	18-3710-01	Fan Blade
11.	18-3708-01	Condenser
12.	12-2008-01	Hot Gas Valve Coil (115/60/1)
	12-2008-02	Hot Gas Valve Coil (230/50/1)
	12-2009-01	Hot Gas Valve Clamp
	12-2010-01	Hot Gas Valve Body
13.	A22536-021	Water Pump (115/60/1)
	A22536-026	Water Pump (230/50/1)
14.	13-0674-01	Tubing (order number of feet required)
15.	13-0674-04	Tubing (order number of feet required)
16.	12-1638-07	Electrical Cord
17.	18-2150-21	Starting Device (115/60/1)
	18-2150-22	Starting Device (230/50/1)
	18-2150-24	Cover
18.	02-1918-00	Drier (not shown)

AC10
WIRING DIAGRAM
(115/60/1)

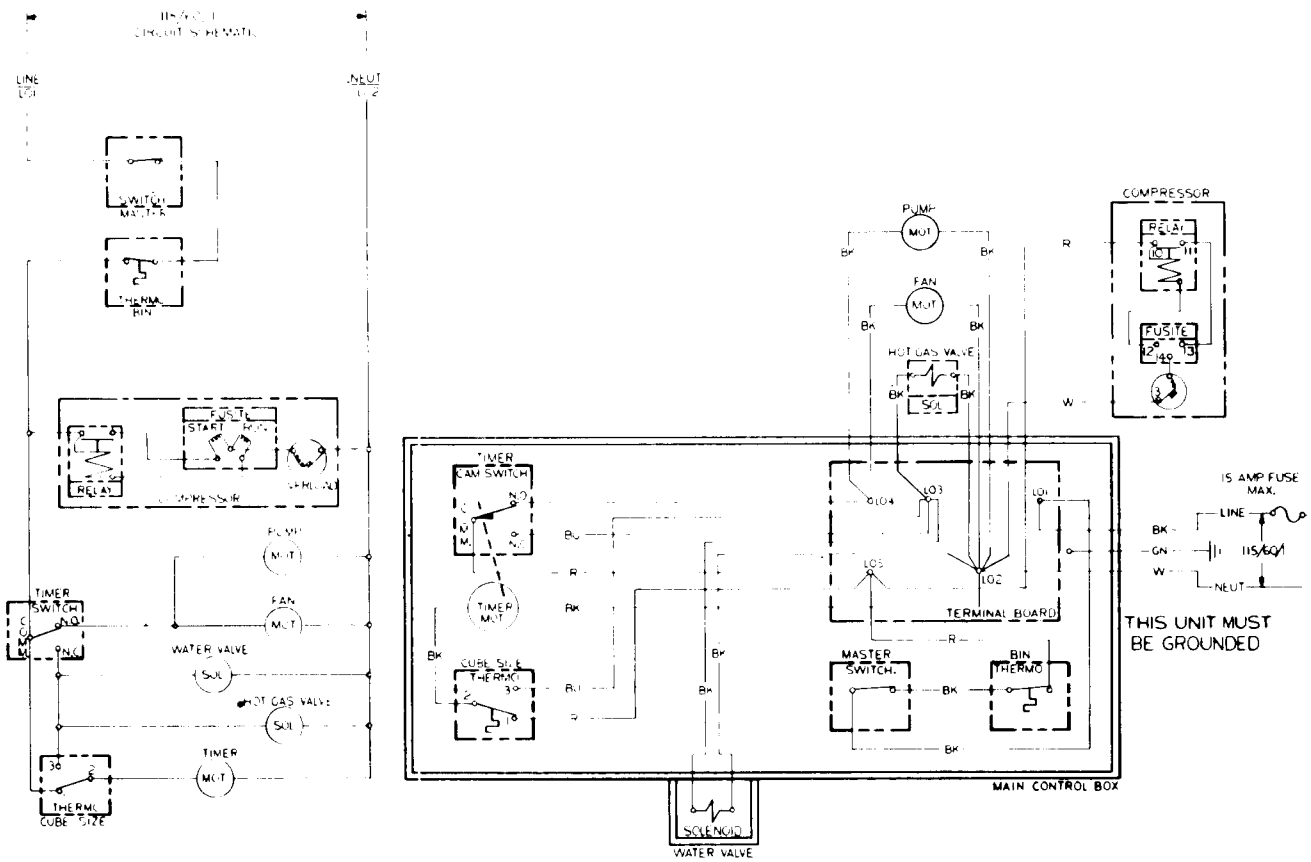

ALL CONTROLS SHOWN IN TIMED PORTION OF FREEZING CYCLE

A26304-001

AC10
(With Condensate Pump)
WIRING DIAGRAM
(115/60/1)

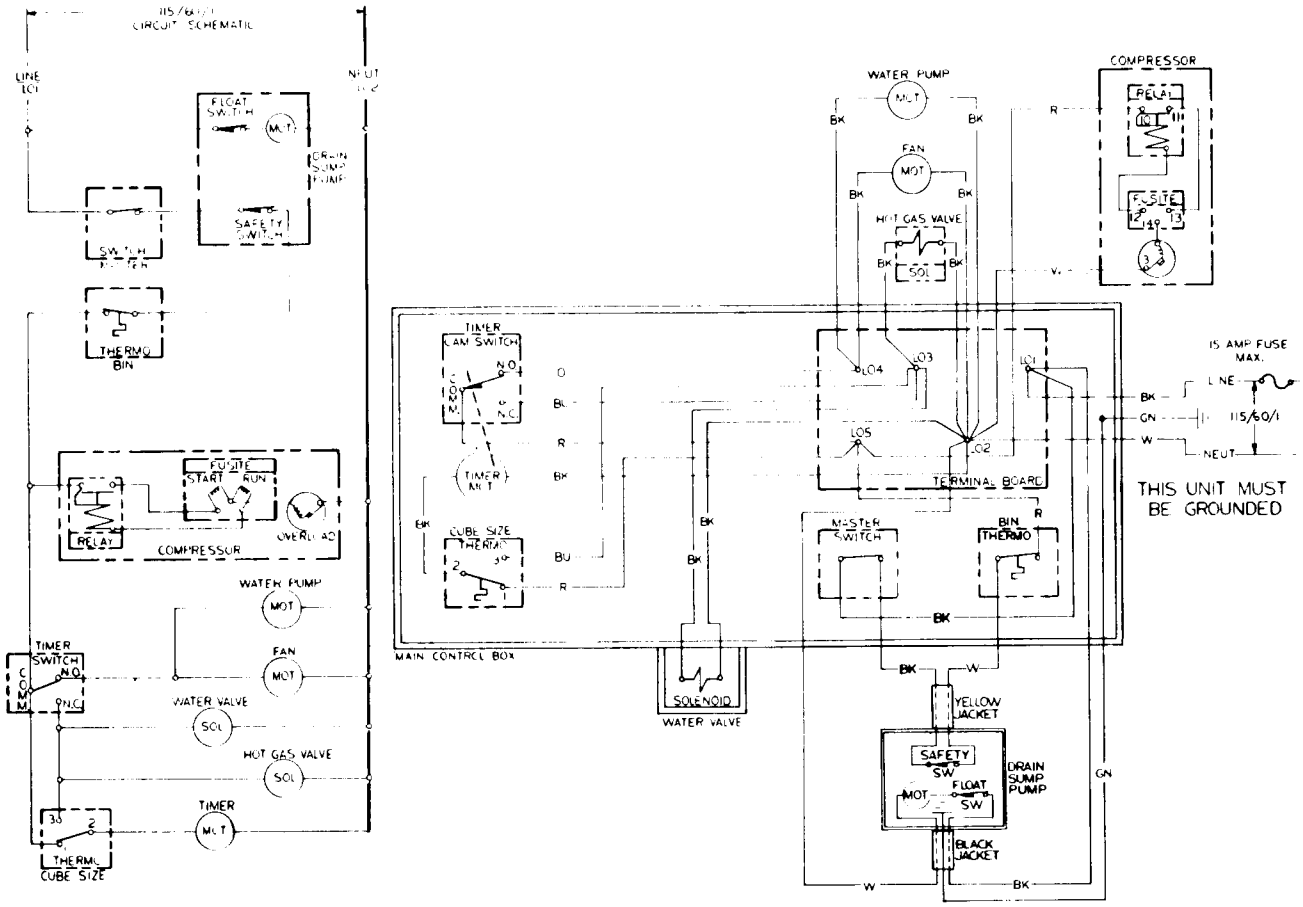

ALL CONTROLS SHOWN IN TIMED PORTION OF FREEZING CYCLE

A26304-091

MAINTENANCE INSTRUCTIONS

WARNING: DISCONNECT ELECTRICAL AND WATER SUPPLY BEFORE SERVICING MACHINE. FAILURE TO DISCONNECT ELECTRICAL POWER MAY RESULT IN SEVERE OR FATAL SHOCK INJURY.

Cabinet Removal.

1. Remove lower door by pulling forward at both top corners.

2. Remove upper door by taking out the hinge screw at the top right hand corner and lifting up and forward.

3. Remove 8 screws (2 on each side) from under the door gasket. It is not necessary to remove the gasket from the cabinet.

4. Remove the 4 screws in the kickplate.

5. Remove the 9 screws in the back panel. Also remove the 4 screws in the brace behind the water pump.

6. Remove the 6 screws (3 on each side) from the lower edge of the cabinet.

7. Remove the cabinet by lifting straight up.

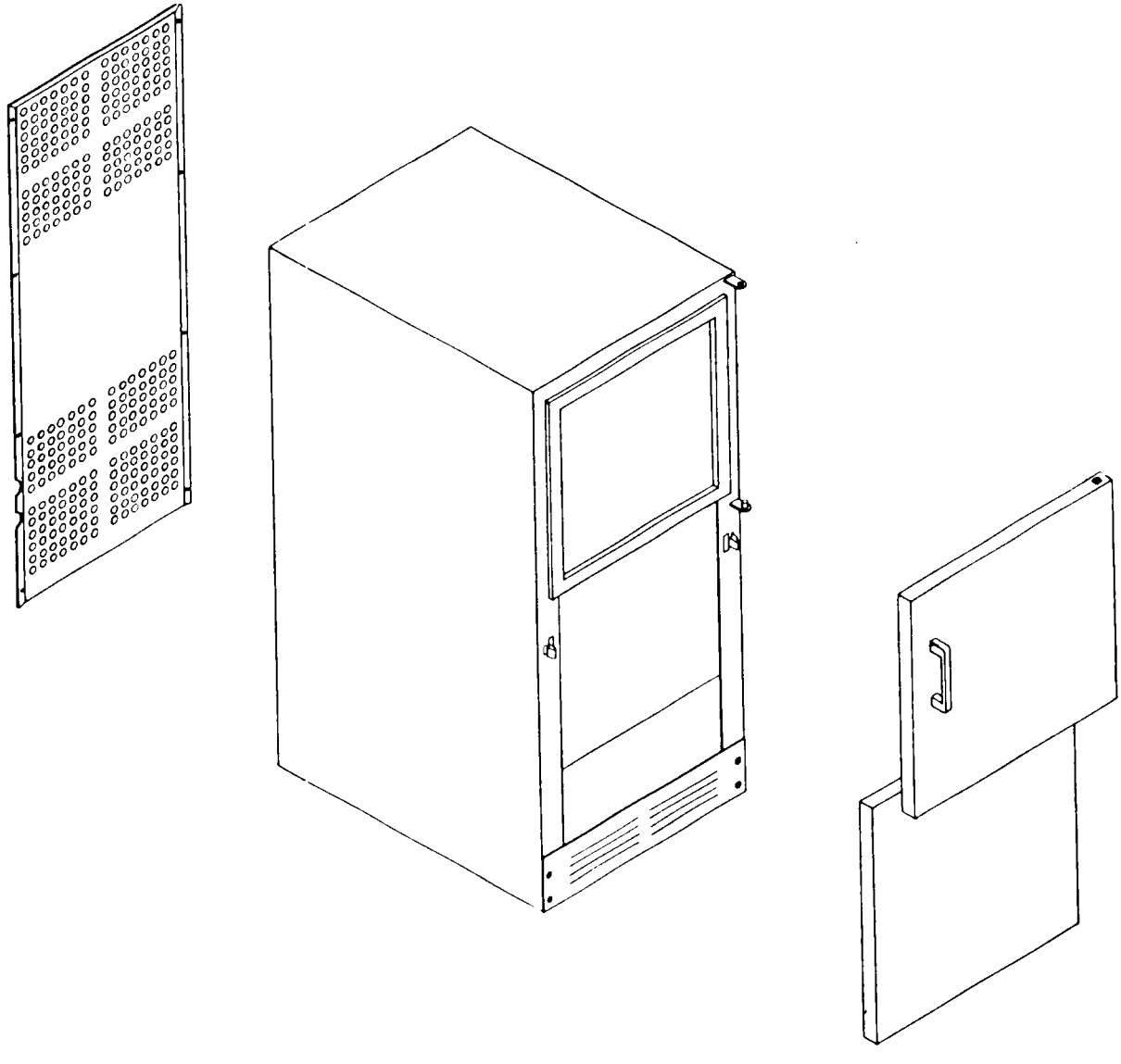

TIMER MOTOR REPLACEMENT

WARNING: DISCONNECT THE ELECTRICAL SUPPLY BEFORE SERVICING MACHINE. FAILURE TO DISCONNECT ELECTRICAL POWER PAY RESULT IN SEVERE OR FATAL SHOCK INJURY.

1. Remove lower service panel.

2. Push the toggle switch to the "OFF" position.

3. Remove the control box cover.

4. Remove mounting screws from timer.

5. Remove the electrical connections from the malfunctioning timer and replace them on the new part.

6. Mount the new timer motor in the control box.

7. Check the timer motor for proper operation.

NOTE: THE TIMER MOTOR **WILL NOT** RUN UNTIL THE CUBE SIZE CONTROL, PART NUMBER 11-0395-01, SUPPLIES POWER TO IT DURING THE LATTER PART OF THE FREEZING CYCLE. (SEE SERVICEMAN'S INFORMATION).

BIN THERMOSTAT REPLACEMENT

WARNING: DISCONNECT THE ELECTRICAL POWER BEFORE SERVICING MACHINE. FAILURE TO DISCONNECT ELECTRICAL POWER MAY RESULT IN SEVERE OR FATAL SHOCK INJURY.

1. Follow steps 1 thru 7 for cabinet removal.

2. Remove the two pieces of tape-on insulation from the capillary tube on the right hand side of the bin.

3. Push the end of the capillary tube through the hole into the bin.

4. Pull the tube out of the bin through the forward hole.

5. Remove the mounting screw holding the thermostat to the control box.

6. Remove the spade connections and replace them on the new control.

7. Remount the new thermostat in the control box and position the capillary tube.

8. Re-assemble the machine and check the operation of the thermostat by placing an ice cube against the capillary tube. Holding ice against the capillary tube will shut the unit off. Warming the capillary tube with your hand will turn the unit back on.

NOTE: The capillary tube should run parallel and 1/4" away from the bin wall for proper operation.

IMPORTANT: The bin thermostat is not eligible for warranty replacement if the capillary tube has been cut.

WATER PUMP REPLACEMENT

WARNING: DISCONNECT ELECTRICAL SUPPLY BEFORE SERVICING MACHINE. FAILURE TO DISCONNECT ELECTRICAL POWER MAY RESULT IN SEVERE OR FATAL SHOCK INJURY.

1. Follow steps 1 thru 7 for Cabinet Removal.

2. Remove 3 hose clamps and hoses from behind bin insert.

3. Remove the 2 screws which hold the water pump in place.

4. Lift out.

4. Cut the wire leads as close to the pump body as possible. Lift out the pump.

5. To install the replacement pump, follow previous steps in reverse. WARNING: Do not kink the three water tubes. Any obstruction will cause rapid failure of motor.

6. Cut replacement wires approximately 6 inches from motor and use wire nuts to reconnect.

ADJUSTING CUBE SIZE CONTROL

1. TO INCREASE CUBE SIZE, turn the adjustment knob clockwise. This will set the control to activate the timer at a colder evaporator temperature which will lengthen the freezing cycle and produce a larger cube.

2. TO DECREASE CUBE SIZE, turn the adjustment knob counter-clockwise. This will set the control to activate the timer at a warmer evaporator temperature which will shorten the freezing cycle and produce a smaller cube.

3. The adjustment knob should be turned a few degrees in the desired direction and the results check on the next batch of ice.

INLET WATER SOLENOID REPLACEMENT

WARNING: DISCONNECT ELECTRICAL AND WATER SUPPLY BEFORE SERVICING MACHINE. FAILURE TO DISCONNECT ELECTRICAL POWER MAY RESULT IN A SEVERE OR FATAL SHOCK INJURY.

1. Disconnect the electrical leads by removing the plug from the solenoid.

2. Remove the water inlet line and water tubing from the valve.

3. Remove mounting screws and solenoid from unit.

4. Reverse the previous steps to replace the valve.

SERVICEMAN'S INFORMATION

The AC10 is AIR COOLED. It is designed to operate in a wide range of ambient conditions through the combined reactions of the CUBE SIZE CONTROL and TIMER. This is explained below.

1. The CUBE SIZE CONTROL senses evaporator temperature. At the start of a freezing cycle, the evaporator is warm and the CUBE SIZE CONTROL is open so power IS NOT supplied to the TIMER MOTOR. This means that the unit is making ice but the TIMER MOTOR IS NOT running.

2. During the latter part of the freezing cycle, the CUBE SIZE CONTROL senses the desired temperature, and closes the circuit to the TIMER MOTOR.

3. Once the TIMER MOTOR is energized, it will complete the ice making cycle and initiate the harvest or defrost cycle according to the position of the cam.

4. The cubes are harvested or defrosted by re-directing the flow of the hot refrigerant gas through the evaporator. The warm evaporator ejects the cubes and resets the CUBE SIZE CONTROL in proper position to start the next ice making cycle.

5. When the TIMER MOTOR rotates to the end of the defrost or harvest cycle, the CUBE SIZE CONTROL takes over the electrical circuit and power is cut to the TIMER MOTOR. The TIMER MOTOR IS NOW DE-ACTIVATED AND DOES NOT run until the CUBE SIZE CONTROL again activates it during the latter part of the freezing cycle.

6. See ADJUSTING CUBE SIZE CONTROL for complete instructions.

SERVICE ANALYSIS

SYMPTOM	POSSIBLE CAUSE	CORRECTION
Machine does not make ice.	Fuse in Power Line Blown	Check fuses in the house fuse box. Other loads on the same line may have caused fuse to blow. Use a 15 amp circuit and fuse.
	On-Off Switch in Off Position	The lever of the switch should be pushed to your left for "on" position.
	Water Supply Turned Off	Slightly loosen water connection in the front of the machine. If no water is present the water supply has been turned off.
	Timer does not run.	Check cam for rotation of clock.
	Wiring broken or connection off	Check electrical circuitry.
	Compressor does not run	Any of the following may be the cause. Starting relay, overload, or defective compressor.
	Water pump not operating	Clean or replace pump.
	Bin thermostat not operating correctly	Check thermostat by warming with hand and cooling with ice cube. Replace if necessary.
Low ice capacity.	High Room or Water Temperature	Provide ventilation to the unit. Decrease temperature as much as possible. If water supply pipe to the machine is very warm have plumber check installation.
	Unit connected to hot water line	Connect to cold water line.
	High head pressure	Dirty condenser. Clean.
	Leaky water valves	Clean, repair or replace valves.
Cubes too large.	Timer too slow or stops	Replace timer motor.
	Cube Size control set improperly	Check and adjust for proper operation.
	Timer switch defective	Replace switch.
	Cam on timer loose	Tighten cam locking nut.

SERVICE ANALYSIS

SYMPTOM	POSSIBLE CAUSE	CORRECTION
Machine noisy during harvest cycle.	Excessive incoming water pressure	Install pressure regulator in incoming water line. Set water pressure at 25 pounds.
Cubes cloudy.	Spray Jets Dirty	Clean (see page 12).
	Shortage of Water	Check water supply for partially closed valves or supply line, low water pressure, (See instructions under "Cuber Runs Short of Water") or plastic curtain not hanging properly.
	Machine not level	Level.
	Dirty water supply	Connect water supply to water softener and/or filter.
	Accumulation of dirt in water system	Clean with Scotsman Ice Machine Cleaner.
Cubes too small.	Restricted Capillary Tube	Purge and recharge. If necessary replace capillary tube.
	Moisture and air in system	Purge - recharge - replace drier. Use 02-1918-00 drier.
	Shortage of water	Check water supply (See if Cuber runs out of water).
	Shortage of refrigerant	Charge unit properly. (See serial number plate for correct charge).
	Cube size control set improperly	Check and adjust for proper operation.
Cuber runs short of water.	Water sprays out curtains	Clean spray jets. Be sure plastic curtain hangs properly.
	Water valves leaking	Check and repair valves if necessary.
	Water leaking from pump hoses	Check clamp and hoses. Replace if necessary.
Compressor cycles intermittently.	Low voltage	Minimum voltage to be 10% less than normal rating.
	Air in the system	Purge and recharge.

SERVICE ANALYSIS

SYMPTOM	POSSIBLE CAUSE	CORRECTION
Cubes pile up in freezer.	Curtain or cube chute out of place or improperly installed.	Check position of curtain and chute. Correct or replace.
Poor harvest cycle.	Too short defrost time	Check timer - replace if necessary. Adjust timer switch.
	Restriction of incoming water	Clean water lines.
	Water valve sticking, not opening, or out of adjustment.	Clean, replace or adjust valve.
	Air vent holes in ice cups plugged	Clean small holes in top of the cups. See page 12 on cleaning.
Excessive bin meltage.	Drain line plugged	Clear line of obstruction.
	Drain not installed properly. Line does not have proper gravity flow so water backs up into bin.	See instructions for proper installation procedure.

ACCESSORY PARTS AVAILABLE

NOTE: TWO 1/4" PIPE THREAD X 1/4" COMPRESSION FITTINGS ARE REQUIRED FOR INSTALLATION. P/N 16-0621-03.

Water Pressure Regulator Part No. 11-0200-00.

Installation of a pressure regulator in the incoming water line will minimize any objectional or excessive noise emitted during the ahrvest cycle. This valve comes preset from the factory at 25 lbs. Excessive water pressure will not harm the machine, however, it may be the cause of objectional noises.

Water Strainer Part No. 16-0162-00.

Installation of a water strainer in an easily accessible area will greatly simplify service if a machine is installed on a water supply system that may have sand or sediment in the water. The machine comes equipped with a strainer screen in the water solenoid valve which is adequate for the majority of installations, however, if sand or sediment could be a problem, installation of this water strainer from a service standpoint is highly recommended. The diagram below shows the direction of water flow. The cleaning plug must be in a downward position slanting up into the incoming water. Notice the arrow stamped on each strainer to show correct flow direction.

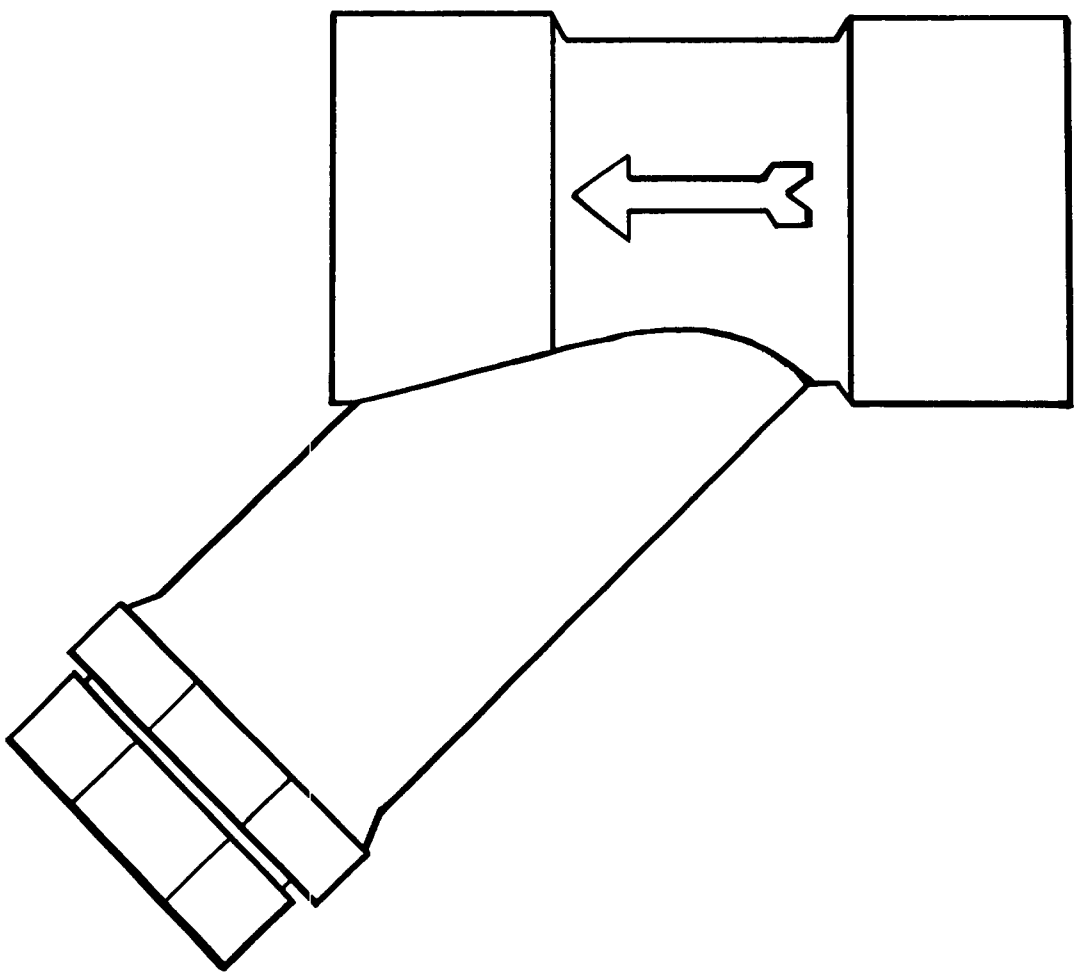

TABLE OF CONTENTS

Table of Contents i

List of Illustrations iii

Specifications v

SECTION I - GENERAL INFORMATION & INSTALLATION 1-1

I. Introduction 1-1

II. Unpacking and Inspection 1-1

III. Location and Leveling 1-2

IV. Electrical Connections 1-2

V. Water Supply and Drain Connections 1-2

VI. Final Check List 1-3

SECTION II - OPERATING INSTRUCTIONS 2-1

I. Start Up 2-1

SECTION III - PRINCIPLES OF OPERATION 3-1

I. Freezing Cycle 3-1

II. Harvest Cycle 3-2

III. Component Description 3-2

SECTION IV - ADJUSTMENT AND REMOVAL AND REPLACEMENT PROCEDURES 4-1

I. Adjustment of the Bin Level Control 4-1

II. Adjustment of the Cube Size Control 4-2

III. Adjustment of the Leg Levelers 4-3

IV. Adjustment of the Timer & Switch Assembly 4-3

V. Removal and Replacement of the Bin Insert Assembly 4-4

VI. Removal and Replacement of the Bin Level Control 4-4

VII. Removal and Replacement of the Compressor Assembly 4-6

VIII. Removal and Replacement of the Condenser Assembly 4-6

IX. Removal and Replacement of the Condensate Pump - SPK18H Optional Kit 4-7

X. Removal and Replacement of the Cube Size Control 4-7

XI. Removal and Replacement of the Curtain Assembly 4-7

XII. Removal and Replacement of the Drier 4-8

TABLE OF CONTENTS (Cont'd)

XIII. Removal and Replacement of the Fan Motor Assembly 4-9

XIV. Removal and Replacement of the Water Pump Assembly 4-9

XV. Redecorating the Door Panel 4-10

XVI. Reversing Door Hinges for a Left Hand Door 4-10

SECTION V - MAINTENANCE & CLEANING INSTRUCTIONS 5-1

I. General 5-1

II. Icemaker 5-1

III. CLEANING - Icemaker 5-1

SECTION VI - SERVICE DIAGNOSIS 6-1

I. Icemaking - Refrigeration System 6-1

SECTION VII - WIRING DIAGRAMS 7-1

Wiring Diagram AC11 - Air-Cooled 7-2

Wiring Diagram AC11 - Air-Cooled with Sump Drain Pump 7-3

SECTION VIII - THE PARTS ILLUSTRATIONS AND PARTS LIST 8-1

I. General 8-1

II. How to Use the Illustrations and Parts List 8-1

III. How to Order Parts or Assemblies 8-1

LIST OF ILLUSTRATIONS

	Specifications	v
Figure 1-1.	Installation Practice	1-4
Figure 2-1.	Location and Access to Controls	2-1
Figure 2-2.	Timer Cam Positions	2-2
Figure 3-1.	Freezing Cycle	3-1
Figure 3-2.	Harvest Cycle	3-2
Figure 4-1.	Adjustment of the Bin Level Control	4-2
Figure 4-2.	Cube Size Shape	4-3
Figure 4-3.	Removal of the Bin Insert Assembly	4-5
Figure 4-4.	Replacing the Curtain Assembly	4-8
Figure 5-1.	Start Positions for the Freeze/Harvest Cycles	5-1
Figure 7-1.	Wiring Diagram AC11 - Air-Cooled	7-2
Figure 7-2.	Wiring Diagram AC11 - Air-Cooled with Sump Drain Pump	7-3
Figure 8-A.	AC11 Automatic Cuber Flow Chart	8-2
Figure 8-1.	AC11 Cabinet	8-3
Figure 8-2.	Major Assemblies	8-6, 8-7
Figure 8-3.	Bin Insert Assembly	8-12
Figure 8-4.	Compressor Assembly	8-14
Figure 8-5.	Control Box Assembly	8-15
Figure 8-00.	How to Use the Illustrated Parts List	8-17

FORWARD

TO THE USER

Your SCOTSMAN Automatic Cuber is a product carefully engineered and quality constructed to provide you with many years of faithful performance with a minimum of maintenance costs.

Produced by the world's leading manufacturer of automatic icemaking equipment, your SCOTSMAN Automatic Cuber incorporates the same reliable systems already proven over years of actual operation by thousands of users.

Many of you will have an opportunity for the first time to see and use clear, solid, slow melting SCOTSMAN ice cubes. You will quickly compare the clear, glass-like quality of your SCOTSMAN cubes to the type of ice cubes produced by your refrigerator-freezer. By comparison, ice cubes made in trays in your refrigerator are very white or cloudy; they also melt faster than clear ice.

A brief explanation shows why:

First, all water contains some mineral deposits such as iron, calcium, etc. in various degrees. These deposits do not freeze. Therefore, when you freeze water in refrigerator trays, these minerals do not freeze but are trapped inside the ice cubes, contributing to their cloudiness.

In your SCOTSMAN Automatic Cuber, the water to make ice cubes is continually moved or circulated by a small electric pump, that sprays the water under gentle pressure into the inverted ice cube molds, only the water freezes, gradually building into a full ice cube. The minerals or impurities fall back down into a reservoir or sump area where they are flushed down the drain, at the end of each freezing or icemaking cycle.

This manual also contains information regarding the various working systems and helpful hints on the care and maintenance of your Automatic Cuber.

We would like to suggest you take the time now, to briefly review this manual, and if you have any further questions regarding the care or operation of your SCOTSMAN Automatic Cuber, contact:

SERVICE DEPARTMENT
SCOTSMAN ICE SYSTEMS
Albert Lea, Minnesota 56007

NOTE: Whenever writing, please be sure to include the model and serial numbers of your SCOTSMAN Automatic Cuber.

SPECIFICATIONS
MODEL AC11

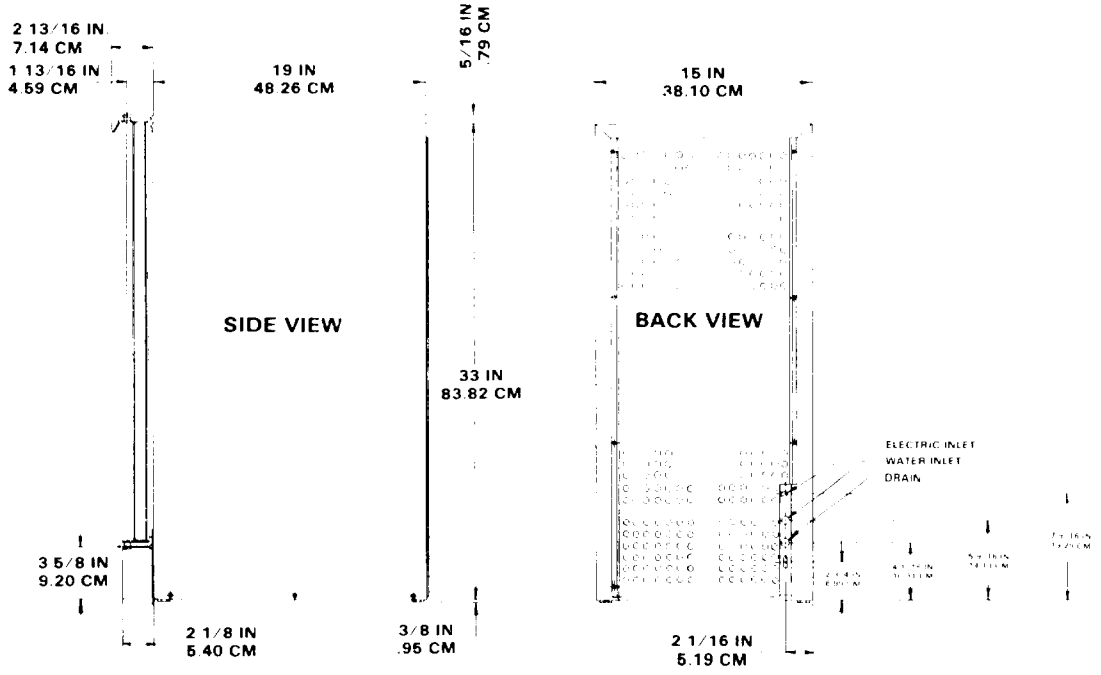

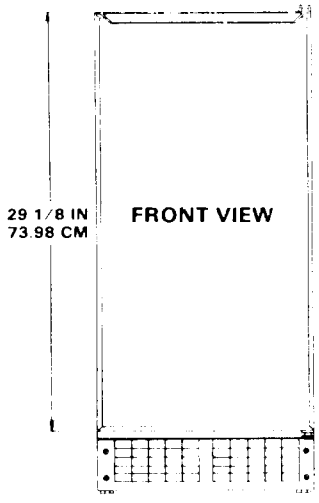

SPECIFICATIONS (Cont'd)

MODEL AC11

Bin Storage: 26 lbs.*

Air-Cooled: Model AC11A-1

Electrical: 115/60/1

Est. Ship Wt.: 96 lbs. Standard
100 lbs. w/Sump Pump

EASY SERVICE ACCESS

Magnetic Gasket Door Latch

Adjustable Leg Levelers

Eight Cubes Per Harvest

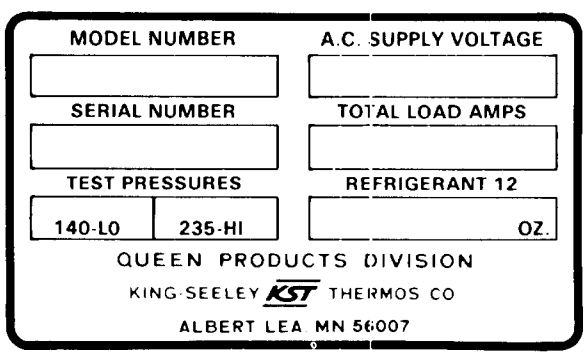

SEE NAMEPLATE, shown at left, for electrical and refrigeration specifications. NAMEPLATE is located on the front of the chassis base at the left end of the Condenser Assembly, seen with the Kickplate removed.

*Storage based on 90-percent of total volume x 34 lb. average density of ice. A.R.I. Standard.

We reserve the right to make product improvements at any time. Specifications and design are subject to change without notice.

This icemaker has been engineered to our own rigid safety and performance standards. The National Sanitation Fondation (NSF) seal, signifies that it is listed with the NSF and that it complies with the materials and construction standards of the NSF. In addition, the Underwriters Laboratories, Inc., (UL) Listing Mark and the Canadian Standards Association (CSA) Monogram, both signify that its construction and design have been inspected and tested by them. NSF, UL and CSA inspectors also periodically examine production icemakers at the factory, to assure continued compliance.

To retain the safety and performance built into this icemaker, it is important that installation and maintenance be conducted in the manner outlined in this manual.

SECTION I

GENERAL INFORMATION & INSTALLATION

I. INTRODUCTION

This manual provides the specifications and the step-by-step procedures for the installation, start-up and operation, and the maintenance and cleaning for the SCOTSMAN Model AC11 Automatic Cuber. The Model AC11 Automatic Cubers are quality designed, engineered and constructed, and thoroughly tested icemaking and ice storage systems, providing the utmost in flexibility to fit the needs of a particular user. Separate sections detail more specifically: General Information and Installation; Start Up Operation; Principles of Operation; Adjustment and Removal and Replacement Procedures; Wiring Diagrams; and, the Illustrated Assemblies and Parts Lists.

Most service and maintenance can be performed with the front door open, kickplate removed or the rear panel removed.

DESCRIPTION

An attractive compact cabinet of stainless steel. The full-length Door, is attached with heavy duty hinges designed to allow reversing the right-hand to left-hand Door opening, as well as flush mounting.

SEALED REFRIGERATION SYSTEM

To provide quiet efficient operation of the Icemaker, the Compressor motor is internally spring-mounted. The Compressor motor is covered by a five year parts warranty.

SELF-CONTAINED STORAGE BIN

These Automatic Cubers store their own ice supply in a heavily insulated ice storage bin.

OVERALL DIMENSIONS

The standard overall dimensions of the cabinet depth, counter top height, etc., allows the Automatic Cuber to be installed in harmony with other kitchen built-in appliances, such as, dishwasher, oven-range-broiler, etc.

Flush in-the-wall mounting is another installation option, for den, playroom, the office, etc. Even the freestanding installation is often desirable with this attractive cabinet compact enough to fit most anywhere.

II. UNPACKING AND INSPECTION

1. Call your authorized SCOTSMAN Disributor or Dealer, for proper installation. He's listed under ICE MAKING EQUIPMENT and MACHINERY in the yellow pages of the telephone book.
2. Visually inspect the exterior of the shipping container and skid. Any severe damage noted should be reported to the delivering carrier; and, a concealed damage claim filed subject to internal inspection, with carrier representative present.
3. Remove screws and shipping tape, and all doors and service panels from the cabinet, and inspect for any concealed damage. Notify carrier of any concealed damage claims, as stated in step 2 above.
4. Remove all internal support packing and tape.
5. Check that refrigerant lines do not rub or touch lines or other surfaces, and that fan blade moves freely.
6. Check that the Compressor is snug on all mounting pads.
7. Use clean damp cloth or disposable paper wiper to clean interior surfaces of the ice storage bin and the exterior surfaces of the cabinet.
8. SEE NAMEPLATE on front of chassis base, located at left end of the Condenser Assembly, with Kickplate removed. Check that location source voltage corresponds with the voltage specified on the nameplate.

CAUTION

Improper voltage supplied to the Icemaker will void your parts replacement program.

III. LOCATION AND LEVELING

WARNING

This Automatic Cuber is NOT designed for outdoor installations where air temperatures are below 50 degrees F., or above 100 degrees F., and the water temperature is below 40 degrees F., or above 100 degrees F. Extended periods of operation at temperatures exceeding these limitations will constitute misuse, under the terms of the SCOTSMAN Manufacturer's limited warranty, resulting in LOSS of warranty coverage.

1. Position the Cabinet in the selected permanent location.

NOTE

Prior consideration for location site shall include:

1. *Minimum room temperature 50 degrees F., and maximum room temperature 100 degrees F.*
2. *Water inlet temperatures: Minimum 40 degrees F., and Maximum 100 degrees F.*
3. *Well ventilated location for Air-Cooled model, advising user to frequently clean Condenser, located directly behind the front Kickplate.*
4. *SERVICE ACCESS: Adequate space for all service connections, through the rear of the Cabinet. A six-inch minimum clearance at the front Kickplate, for routing cooling air drawn into and exhausted out of the compartment to maintain proper condensing operation on Air-Cooled models. Built-in installations must provide adequate space for simple and rapid removal of the cabinet for service requirements.*

2. Level the Cabinet in both the left-to-right and front-to-rear directions. The leveling legs can be adjusted with an open end wrench.

IV. ELECTRICAL CONNECTIONS

SEE NAMEPLATE for current requirements to determine wire size to be used for electrical hookup. The Automatic Cuber requires a solid earth ground wire. See wiring diagram.

Be certain the Automatic Cuber is connected to its own electrical circuit and individually fused with a maximum of a 15 ampere fuse or circuit breaker. The maximum allowable voltage variation should not exceed ten percent of the nameplate rating, even under starting conditions. Low voltages can cause erratic operation and may be responsible for serious damage to the overload switch and motor windings.

All external wiring should conform to the national, state and local electrical code requirements. Usually an electrical permit and services of a licensed electrician will be required.

V. WATER SUPPLY AND DRAIN CONNECTIONS

A. WATER CONNECTIONS: The recommended water supply line is a 1/4 inch O.D. copper tubing. Connect to cold water supply line with standard plumbing fittings, with a shutoff valve installed in an accessible place between the water supply and the Cabinet.

In some cases, a plumbing permit and services of a licensed plumber will be required.

WARNING

DO NOT operate this unit when the water supply is OFF, or is below 20 PSI, the recommended minimum water pressure. Position the master switch to the OFF position, until proper water supply is resumed.

B. DRAIN CONNECTIONS: All drains are gravity type and must be 1/4 inch fall per foot on horizontal runs. The drains to be installed to confrom with local code. The drain receptacle should be an open, trapped or vented construction. See Figure 1-1 to be properly informed on venting.

Recommended drain is 5/8-inch O.D. copper tubing or 5/8-inch I.D. flexible tubing.

WARNING

This Icemaker will NOT operate when water supply temperature is below 40 degrees F., or above 100 degrees F. Requires 20 PSI minimum flowing water pressure, without interruption.

C. SPECIAL SHUTDOWN PERIODS:

WARNING

This Icemaker is NOT designed for outside installations where air temperatures are below 50 degrees F., or above 100 degrees F., and the water temperature is below 40 degrees F., or above 100 degrees F. Extended periods of operation at temperatures exceeding these limitations will constitute misuse, under the terms of the SCOTSMAN Manufacturer's limited warranty coverage.

Complete draining of the Bin Insert sump, all water supply and drain lines are required for Automatic Cubers that are installed in locations where air temperatures during extended periods are below 50 degrees F., and the water temperatures during this period would be below 40 degrees F. It is at locations where normal use is for warm and hot weather season periods, after which those seasonal activities and associated ice usage are no longer normal, such as: swimming pool area; backyard recreational area; lakesite clubhouse; mountain summer cabin; summer boat or yacht; summer recreational vehicle. or other similar areas.

Failing to drain the water from the AC11 Automatic Cuber, to prevent freezeup and severe damage to equipment, will void the Warranty Program. Properly prepare the Automatic Cuber for the cold season period of inactive use, in order to prevent unfortunate damage and heavy costs of repair, and to be assured of being able to resume and enjoy normal high quality ice cube making when the next season use begins.

D. FILTERS AND WATER TREATMENT:

Contact your local water treatment specialists for technical data and detailed information on the most suitable treatment devices to fit your needs.

CAUTION

Standard water softeners and specifically charcoal filters generally do not provide the protection required by this Icemaker. UNDERSTAND: Component malfunctions or service requirements related to local water conditions, ARE NOT COVERED by Warranty.

VI. FINAL CHECK LIST

1. Is the Cabinet level? (IMPORTANT)
2. Have all electrical connections and piping connections including water supply line shutoff valve been made?
3. Has the voltage been tested and checked against the nameplate rating?
4. Have the Bin and Cabinet been wiped clean?
5. Have the Compressor hold down clips been checked, to be sure the Compressor is snug on the mounting pads?
6. Has the owner/user been given the Service Manual and instructed on how to operate the Icemaker?
7. Has the Manufacturer's Registration Card been properly filled out? Check for correct Model and Serial numbers from Serial nameplate, mailed to the SCOTSMAN factory.
8. Check all refrigerant lines and conduit lines, to guard against vibration or rubbing and possible failure.
9. Are there at least six inches clearance in front of the Kickplate for proper air circulation?
10. Is the Cabinet in a room where ambient temperatures are a minimum of 50 degrees F. all year around?
11. Has water supply pressure been checked to insure a minimum of 20 PSI?
12. Has the owner been given name and telephone number of the authorized SCOTSMAN Distributor, or Service Agency serving him?

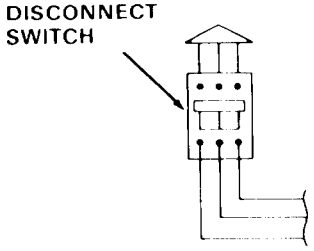

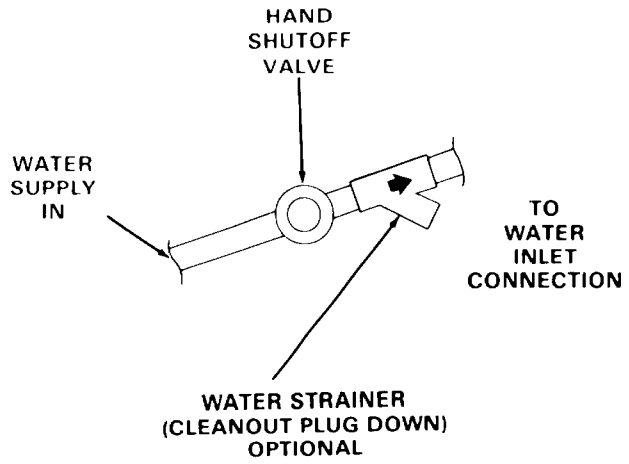

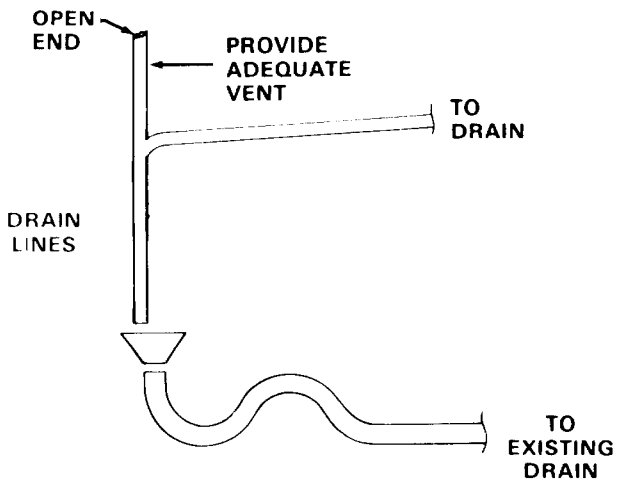

OPEN, TRAPPED OR VENTED DRAIN. RECOMMENDED 1/4-INCH FALL PER FOOT OF RUN ON DRAIN LINES.

WARNING

THIS ICEMAKER IS NOT DESIGNED FOR OUTSIDE INSTALLATION AND WILL NOT OPERATE IN AMBIENT TEMPERATURES BELOW 50-DEGREES F., NOR ABOVE 100-DEGREES F.

THIS ICEMAKER WILL NOT OPERATE WHEN WATER TEMPERATURES ARE BELOW 40-DEGREES F., NOR ABOVE 100-DEGREES F.

77 116A

SECTION II

OPERATING INSTRUCTIONS

I. START UP

1. Open the Door to gain access to the front of the Control Box Assembly.
2. Rotate the Bin Level Control knob, located on the front of the Control Box Cover, CLOCKWISE, to the normal operating position, the middle of the short heavy line. See Figures 2-1 & 2-2.

NOTE

Observe that the Compressor starts operating, the Water Solenoid Valve OPENS and inlet water flows from the valve through tubing to the top of one end of the Platen Assembly, where the water flows around the inverted ice cube molds and drains through a small hole at the other end. Water also overflows through a short standpipe; and, all the water is drained into the bottom of the Bin Insert Assembly. Excess water, beyond a reserve of about two cups, drains out of the Bin Insert Assembly through a standpipe and exits the cabinet to the drain.

This cycle will take about three and one-half minutes to flush out the system and provide a necessary reservoir of water for use in the Freezing Cycle, which will begin when the Timer CLOSES the Water Inlet Solenoid Valve.

3. Check that the plastic Curtain hangs down evenly inside the opening at the front of the Bin Insert Assembly.
4. Check operation of the Freezing Cycle:
   a. Compressor is in operation.
   b. Water Pump is operating and water is being sprayed from the spray Nozzle Assemblies into the inverted ice cube cups.
   c. Icemaking process begins: feeling inside inverted ice cube cups reveals temperatures changing to cold and very shortly ice begins to form.

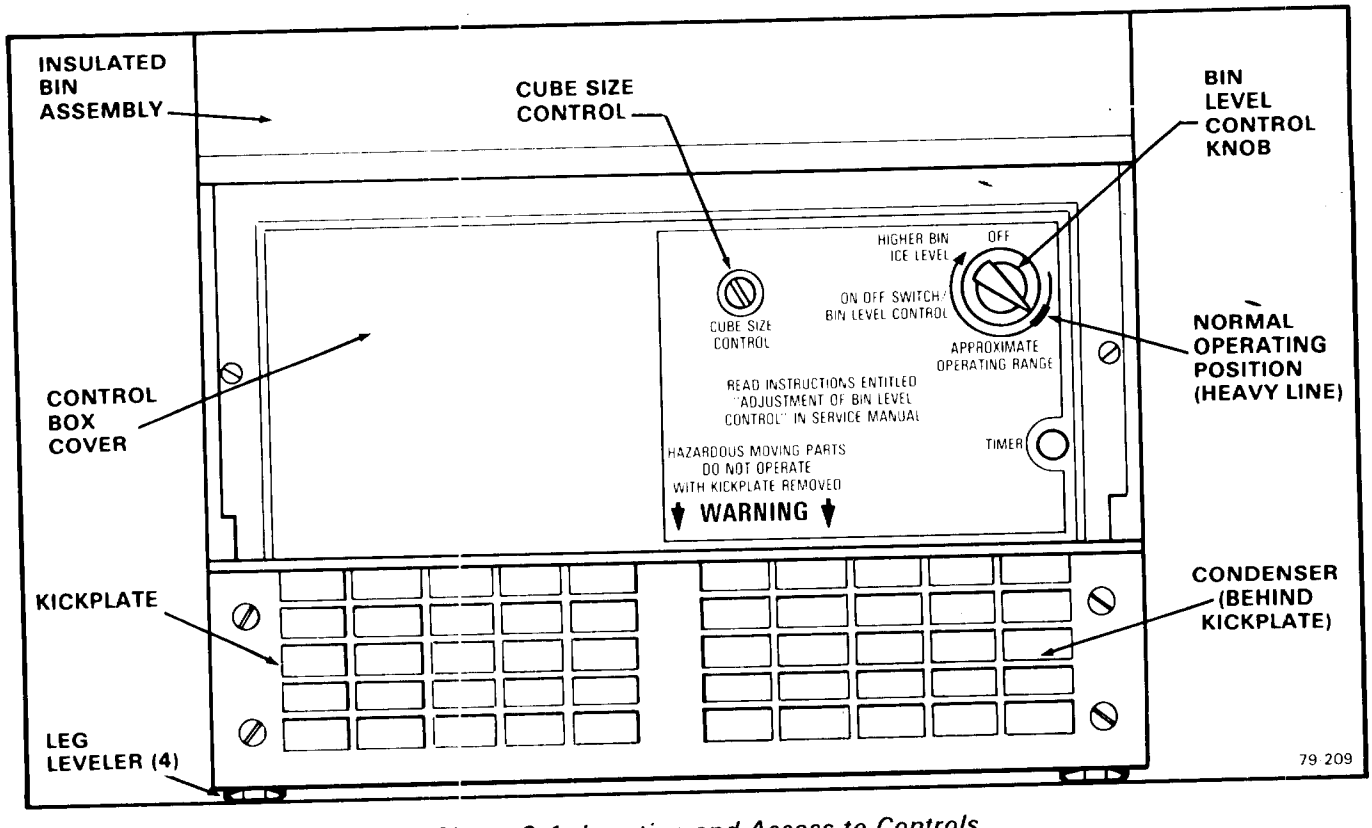

Figure 2-1. Location and Access to Controls.

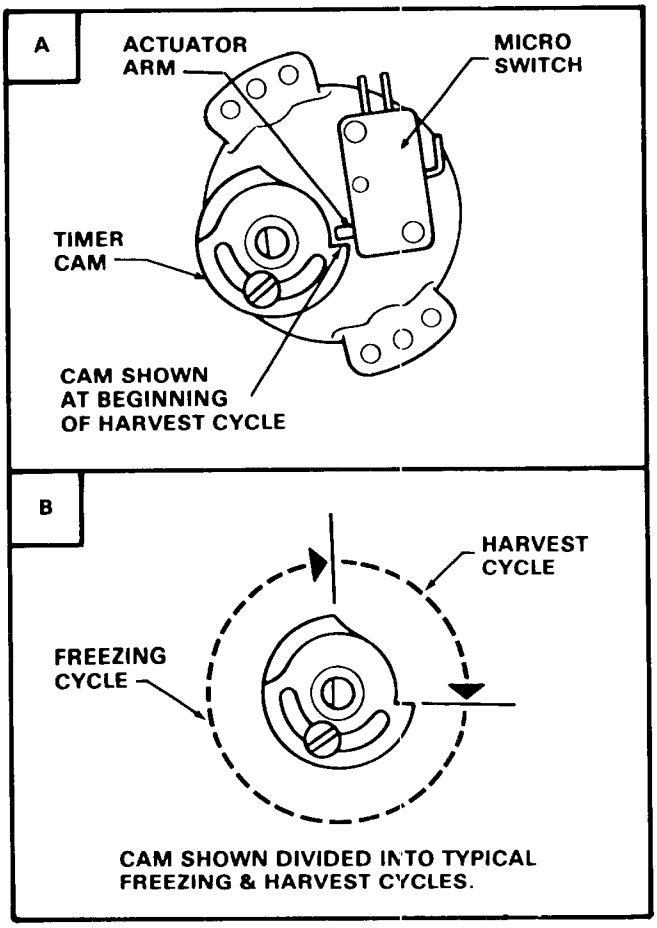

Figure 2-2. Timer Cam Positions.

NOTE

Freezing time will range between 16 and 20 minutes in a 70 degree F. ambient atmosphere. Longer time for temperatures above 70 degrees F. and shorter, when below. Average complete cycle range is about 19 to 26 minutes.

WARNING

DO NOT operate this Icemaker when the water supply is shut OFF, or is BELOW the recommended 20 PSI. Rotate the Bin Level Control knob COUNTERCLOCKWISE, to the OFF position, immediately.

5. Observe first ice cube harvest:
   a. Check size of ice cubes: when too small after a second harvest, refer to procedure IV-II for Adjustment of the Cube Size Control, to increase size of ice cube.

NOTE

Normal cube size is with a one-quarter inch depression in the crown. See Figure 4-2.

   b. Check texture of ice cubes: when partially cloudy throughout, suggests ice cube machine operating short of water near end of freezing cycle, or possibly an extreme problem water condition, wherein filtering or treatment equipment is recommended. Refer to paragraph I-V-D on Filters and Water Treatment.

6. Hold ice against the Bin Level Control tube to test shutoff. The ice should cause the icemaking process to shut OFF within two minutes.

NOTE

Within minutes after the ice is removed from the sensing Tube, the thermostat will warm up and cause the icemaking process to restart. This control is factory set and should not be reset until testing is performed. Normal setting is about 35 degrees F. CUT-OUT and 40 degrees F. CUT-IN.

7. Thoroughly explain to the owner/user the significant specifications of the AC11 Automatic Cuber, the start up and operation, maintenance and cleaning procedures. Answer all questions by the owner about the icemaker; and, inform the owner of the name and telephone number of the authorized SCOTSMAN Distributor, or Service Agency serving him.

SECTION III

PRINCIPLES OF OPERATIONS

How It Works

I. FREEZING CYCLE

Water from the sump in the Reservoir is pumped through the Spray Bar and two Nozzle Assemblies attached to it. See Figure 3-1. Each stationary Nozzle has a Jet Spinner, through which water is sprayed into the inverted cube molds of the Evaporator. At the beginning of the Freeze Cycle the electrical circuit is completed to the Compressor and the Water Pump. The Water Pump operates continuously during the Freeze Cycle.

Refrigerant is compressed in the Compressor and discharged into the Condenser as a high pressure, high temperature gas. The refrigerant is cooled and condensed by moving air and condenses to a high pressure, high temperature liquid. This liquid refrigerant then passes through a small capillary tube where the temperature and pressure of the liquid refrigerant are lowered. The low pressure, low temperature liquid refrigerant, then enters the Evaporator. The refrigerant is warmed by water being sprayed against the Evaporator and begins to boil off, to become a gas. The refrigerant next travels through the Accumulator where any remaining liquid refrigerant then returns to the Compressor as a low pressure, low temperature gas and the cycle starts again.

During the Freezing Cycle, both the Water Inlet Solenoid Valve and the Hot Gas Solenoid Valve are CLOSED.

When the ice cubes are about 3/4 formed, the Cube Size Control bulb located on the suction line will sense the temperature at which it is preset to CLOSE. This will complete the electrical circuit to the Timer. The Timer then controls the remainder of the cycle.

The Timer will keep the Icemaker operating in the Freeze Cycle for the next four and one-half minutes. This will give the cubes time to fully form. The Timer will switch the Icemaker into the Harvest Cycle through the contacts of the Timer Assembly microswitch.

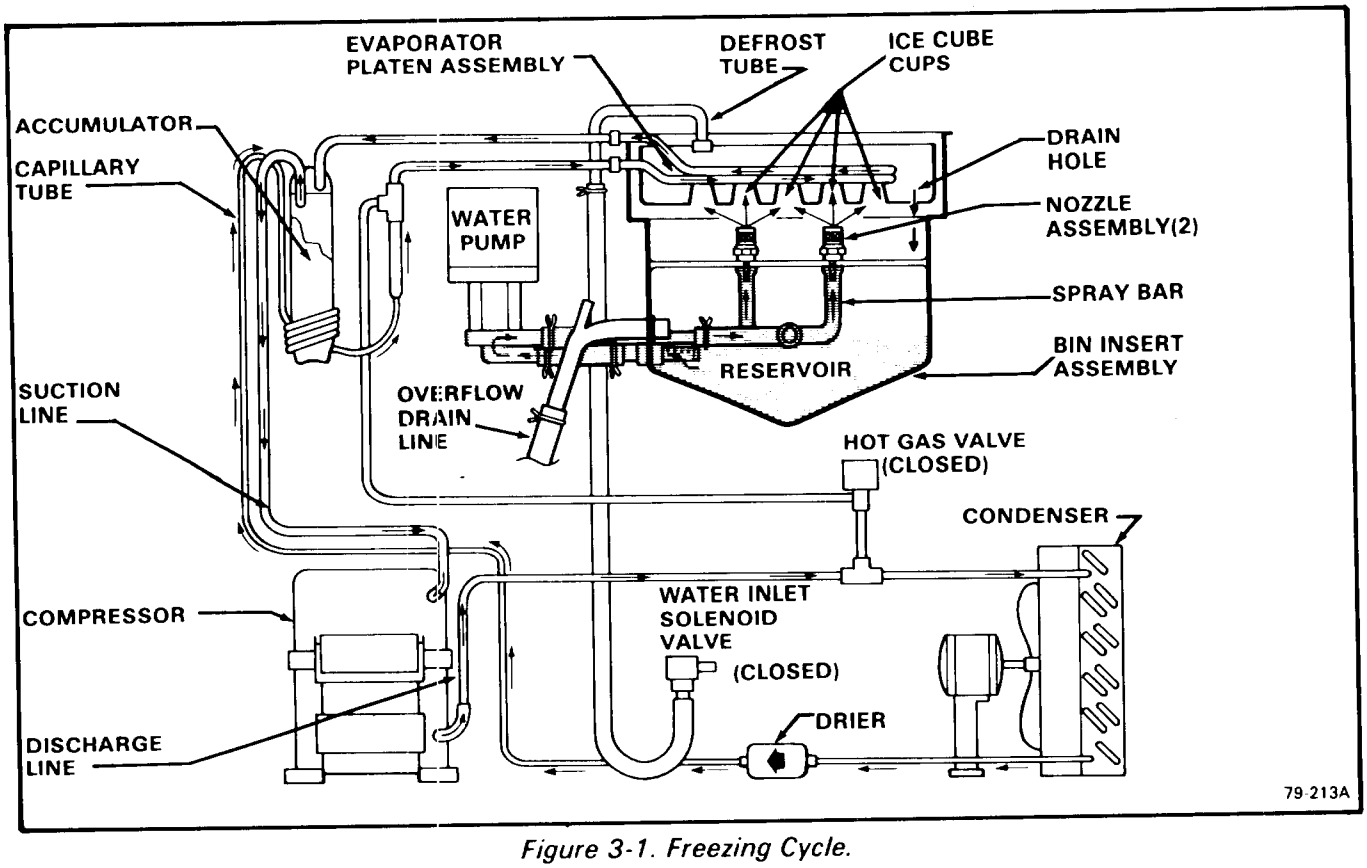

Figure 3-1. Freezing Cycle.

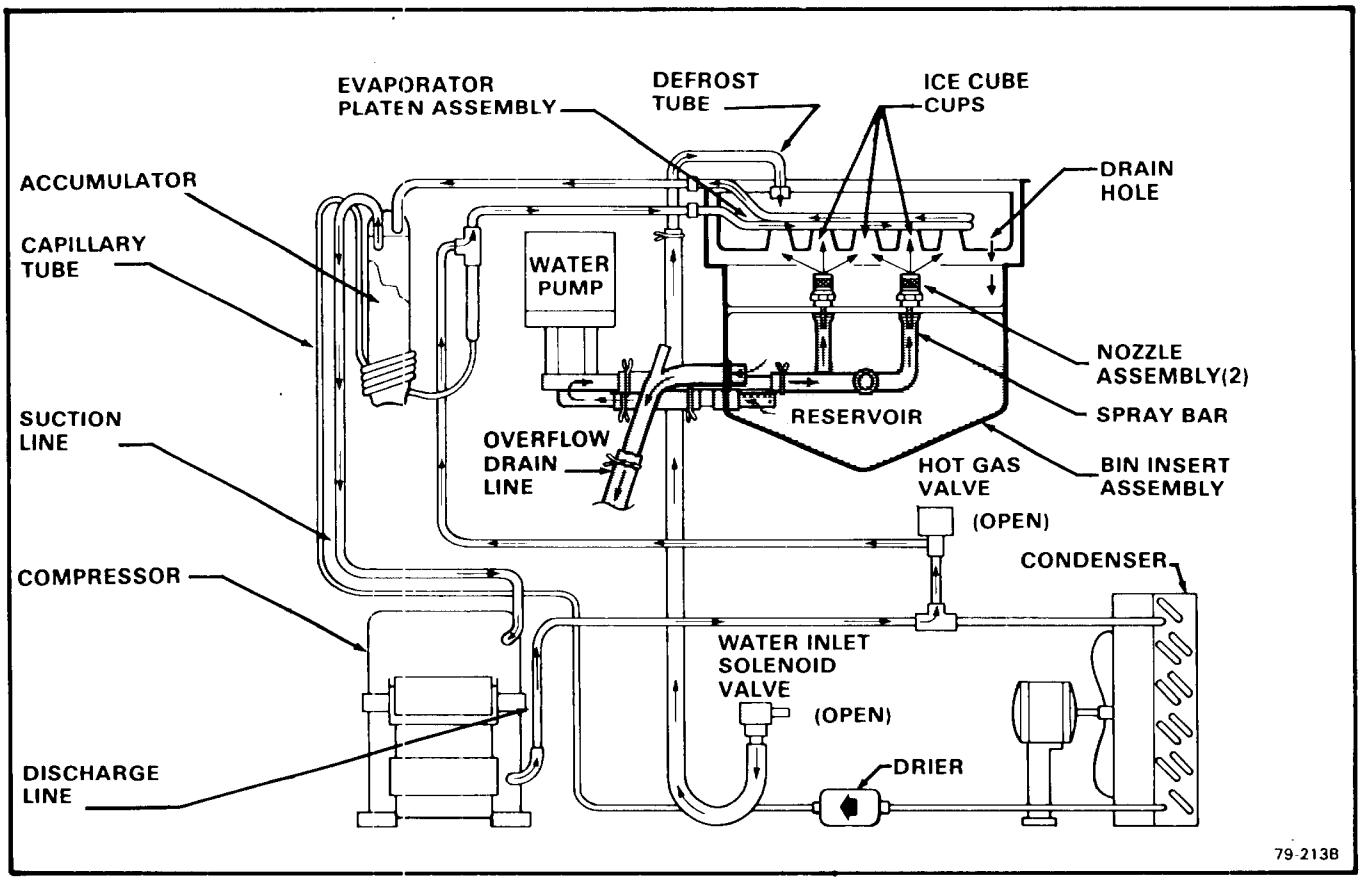

Figure 3-2. Harvest Cycle

II. HARVEST CYCLE

When the Timer switches the Icemaker into the Harvest Cycle, hot gas being discharged from the Compressor is diverted through the Hot Gas Solenoid Valve into the Evaporator. During this cycle, the hot gas circulates from the Compressor to the Evaporator and back again, bypassing the Condenser and capillary tube. In the electrical circuit, the Compressor is operating and both the Water Inlet Solenoid Valve and the Hot Gas Solenoid Valve are energized. See Figure 3-2.

Opening the Water Inlet Solenoid Valve allows a fresh water supply to be discharged into the top of the Platen Assembly Evaporator. The finished ice cubes are released from the Evaporator by the warming effect of the hot gas flowing through the Evaporator tubes and the water flow around the ice cube molds. The released ice cubes drop onto the slanted Front Cube Chute and into the ice storage bin. At the end of the Harvest Cycle, the Timer cam will start.

III. COMPONENT DESCRIPTIONS

A. BIN THERMOSTAT CONTROL

The Bin Thermostat Control is located in the right-hand section of the Control Box. The sensing capillary tube of the control, is routed out of the Control Box into the ice storage bin, through the Bulb Holder Tube, which enters the right rear of the Bin and is installed along the right inner wall of the Bin. The Control functions to automatically SHUT OFF the Icemaker, when the ice storage bin is filled and ice contacts the capillary tube. It also signals the RE-START of the Icemaker when the capillary tube starts to warm up after ice has been removed from the bin.

NOTE

Altitude adjustment should ONLY be performed on Icemakers installed at 2,000-foot level locations and ABOVE, and adjust only in increments of one-fourth turn of a screw at a time.

B. COMPRESSOR START RELAY

The current relay located or the Compressor, functions to carry the Compressor line current.

C. CUBE SIZE CONTROL

The temperature sensing Cube Size Control affects the length of the Freezing Cycle prior to initiating the Finishing Timer. The Cube Size Control closes its contacts when the Evaporator reaches a preset temperature, starting the Finishing Timer. A variation in either ambient air or incoming water temperature will affect the efficiency of the refrigeration system. This will vary the length of time it takes the Evaporator to reach the temperature at which the Cube Size Control is preset to CLOSE; which, in turn, will affect the overall cycle time.

NOTE

Be sure to refer to procedure IV-II, Adjustment of the Cube Size Control, BEFORE attempting to adjust the control.

D. FINISHING TIMER - Timer & Switch Assembly

The function of the Finishing Timer begins when activated by the Cube Size Control. The Timer controls an eight minute dual function: four and one-half minutes are programmed to finish freezing the ice cubes and the final three and one-half minute portion is for the defrost operation and harvest of the ice cubes. All electrical circuitry is connected through the terminal board and the Finishing Timer and shunted by the single-pole, double-throw microswitch to either the Freezing Cycle or the Harvest Cycle. The microswitch is actuated by a Cam Assembly directly connected to the Timer Motor. The Timer Cam can be adjusted to vary the defrost timer, as required.

E. HOT GAS SOLENOID VALVE

The Hot Gas Solenoid Valve functions only during the harvest cycle, to divert the hot discharge gas from the Compressor, bypassing the Condenser and capillary tube, for direct flow to the Evaporator Platen Assembly to release ice cubes from the inverted ice cube molds. The Hot Gas Solenoid Valve is comprised of two parts, the Body and the Coil assemblies. Installed in the discharge line of the Compressor, the energized solenoid coil lifts the valve stem within the valve body to cause the hot discharge gas to be diverted when the Finishing Timer has advanced to the start of the harvest cycle.

F. SPRAY BAR AND NOZZLE ASSEMBLIES

The Spray Bar and Nozzle Assemblies are designed to channel recirculating water through two Jet Spinners, for uniformly spraying the water into the inverted ice cube cups.

NOTE

Refer to procedure V-III, CLEANING - Icemachine and, for problems requiring removal of parts refer to procedure IV-V for details for removing Spray Bar and Nozzle Assemblies.

G. WATER INLET SOLENOID VALVE

The Water Inlet Solenoid Valve functions only during the Harvest Cycle when it is energized to permit a metered, one-eighth gallon-per-minute rate of incoming water, to flow through the Defrost Tube onto the top of the plastic Platen Assembly, assisting in the harvest of ice cubes. The water drains through holes in the Platen Assembly into the Reservoir in the lower section of the Bin Insert Assembly; and there, the water is recirculated through the Water Pump for return to the Spray Bar and Nozzle Assemblies.

REFRIGERANT CHARGE

MODEL	AC11 Refrig. Chg.
Air-Cooled	5 oz. R-12 (Approx.)

NOTE

Always CHECK NAMEPLATE on individual Icemaker for specific refrigerant charge, BEFORE charging the refrigeration system. The above listed refrigerant charge is approximate charge for the AC11 Cubers, however it is important to CHECK NAMEPLATE for each Icemaker.

SECTION IV

ADJUSTMENT AND REMOVAL AND REPLACEMENT

The procedures provided in this Section are arranged in alphabetical order, to make specific Adjustment and Removal and Replacement information easy to locate.

Read the instructions thoroughly before performing any Adjustment or Removal and Replacement Procedures.

I. ADJUSTMENT OF THE BIN LEVEL CONTROL

NOTE

The individual customer, or user of the AC11 Automatic Cuber is responsible for the normally minor adjustments required to maintain the desired ice level in the storage bin; that is, just as it is the customer's responsibility to adjust the room thermostat in the home, to maintain the individual temperature level desired during the various annual seasons. All installations vary as to altitude, geographic location, ambient temperatures, and also where installed in the home or building, such as: near a source of heat, stove, hot air vent, sunny window; in a cool area, in a basement, on a porch, unheated room. A location very often is warm during summer and relatively cool in winter. All these variations and changing temperatures can and do cause the icemaking process to operate differently than the original setting: usually, either not enough ice is being made, or too much. The following steps are easy to understand and perform. Read thoroughly and perform minor adjustments, when necessary, to ensure a continued supply of ice cubes to the level you require, within the known limits of the AC11 Automatic Cuber. When these adjustments do not serve to correct the problem, refer to Section VI Service Diagnosis, or contact your authorized SCOTSMAN Service Agency.

WARNING

The Bin Level Control device has very sensitive response to adjustment. Over-adjusting or erratic guessing, can foul the instrument, cause ultimate delay and possible part replacement, WHICH COULD HAVE BEEN PREVENTED.

Altitude adjustment should ONLY be performed on icemaker installed at 2,000 foot level locations, and ABOVE, and adjust only in increments of a maximum of one-eighth turn of knob rotation at a time.

Adjustment of the Bin Level Control is normally performed, to cause more ice to be produced to result in a higher ice level in the bin; or, to cause less ice to be produced, to result in a response to a TOO COLD or too much ice condition. Be sure to adjust ONLY in a maximum of one-eighth turn of control knob rotation at a time.

A. TO PRODUCE MORE ICE: IF UNIT CUTS-OFF TOO SOON:

1. Locate the Bin Level Control knob protruding through the Control Box Cover. See Figure 4-1.
2. Rotate the Bin Level Control knob one-eighth of a turn CLOCKWISE toward HIGHER BIN ICE LEVEL.
3. Observe that the icemaking process of FREEZING and HARVEST cycle continue uninterrupted, until the ice level in the bin reaches the Bin Level Control Tube and causes the icemaking process to shut OFF. If the bin thermostat cut-off is again TOO SOON, repeat step 2 above, in one-eighth of a turn increments, until the proper ice level in the bin and Bin Thermostat cut-off are satisfactory.

B. TO PRODUCE LESS ICE; IF UNIT DOES NOT CUT-OFF, TOO MUCH ICE:

1. Locate the Bin Level Control knob protruding through the Control Box Cover.
2. Rotate the Bin Level Control knob one-eighth of a turn COUNTER-CLOCKWISE toward OFF.

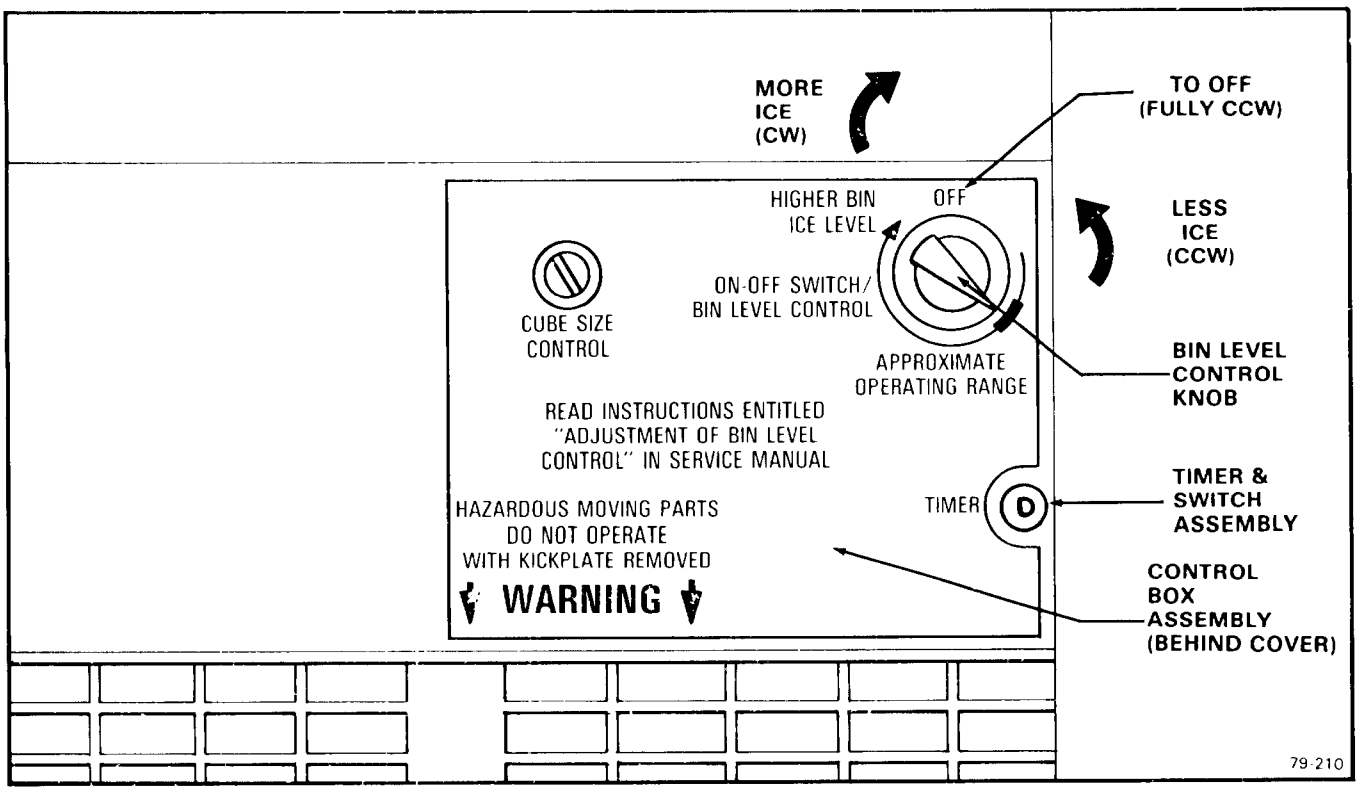

Figure 4-1. Adjustment of the Bin Level Control.

3. Observe that the icemaking process STOPS, and gradually the ice melting in the bin will cause the ice level to decrease BELOW the Bin Level Control Tube, which will eventually warm up and restart the icemaking process. If the warm up time is too fast and the icemaking process still makes too much ice, the bin is still TOO COLD, so repeat step 2 above, in one-eighth of a turn increments, until the proper ice level in the bin and the Bin Thermostat cut-in are satisfactory.

II. ADJUSTMENT OF THE CUBE SIZE CONTROL

CAUTION

BEFORE performing actual adjustment to the Cube Size Control, check other possible causes for cube size problems, refer to Section VI, SERVICE DIAGNOSIS for problem review and analysis.

DO NOT perform adjustment when a new Cube Size Control is installed, until the control bulb has been properly installed in the tube well, on the refrigerant tube of the Platen Assembly and the icemaking system has progressed through several complete freezing and harvest cycles, to observe size and quality of ice cubes and whether or not a cube size problem exists.

Adjustment of the Cube Size Control is performed:

A. IF ICE CUBES ARE SHALLOW SIZE (indentation is too deep):

1. Locate the Cube Size Control inside the opening in the upper left section of the Control Box Cover.
2. Rotate the adjusting screw one-eighth of a turn CLOCKWISE toward COLDER.
3. Observe size of ice cubes in next two ice cube harvests and repeat step 2 above, in one-eighth turn increments, until proper ice cube size is achieved. See Figure 4-2.

B. IF ICE CUBES ARE OVERSIZE (indentation is too full):

1. Locate the Cube Size Control inside the opening in the upper left section of the Control Box Cover.
2. Rotate the adjusting screw one-eighth of a turn COUNTERCLOCKWISE toward WARMER.
3. Observe size of ice cubes in next two ice cube harvests and repeat step 2 above, in one-eighth turn increments, until proper ice cube size is achieved. See Figure 4-2.

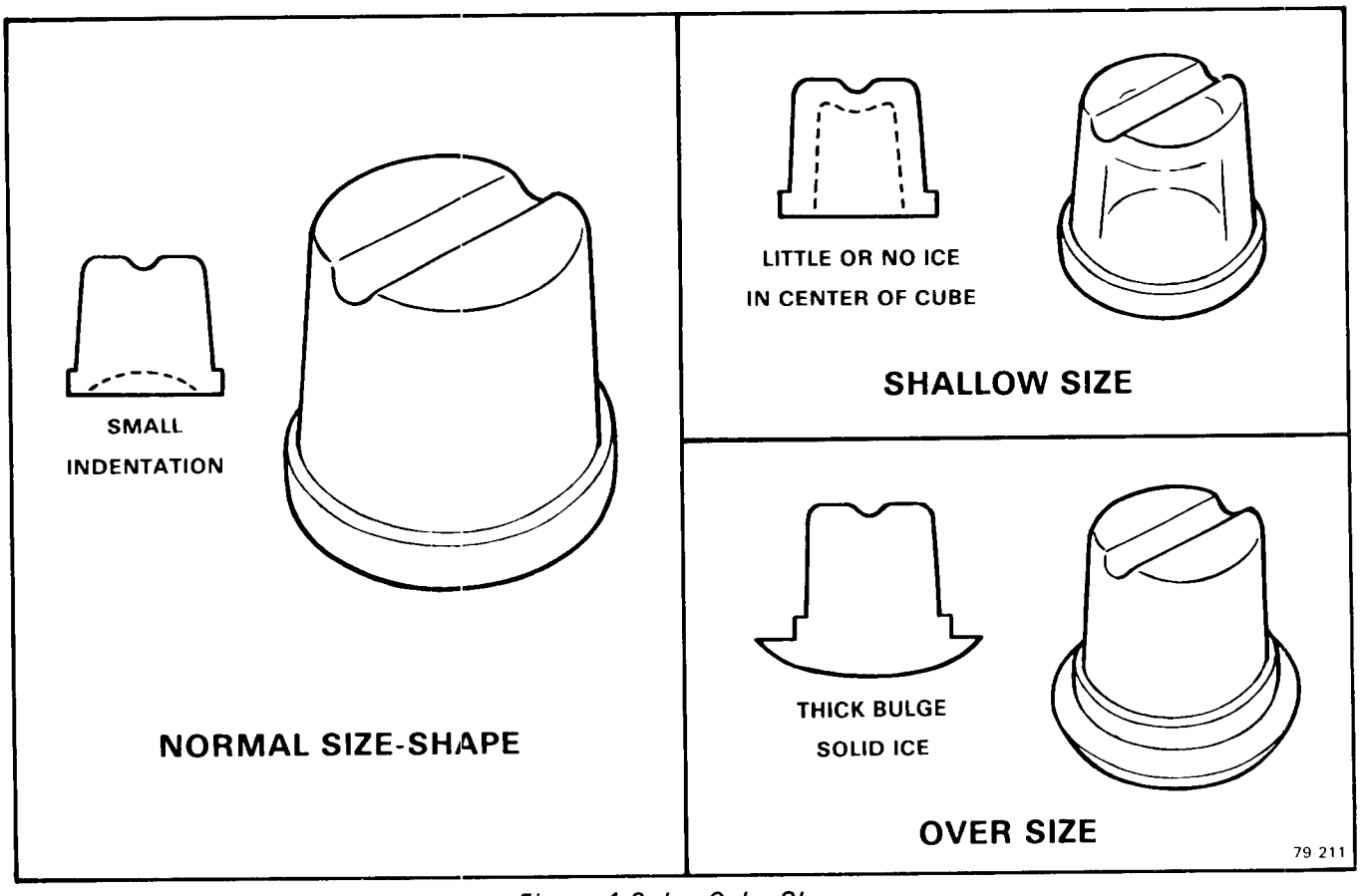

Figure 4-2. Ice Cube Shape.

III. ADJUSTMENT OF THE LEG LEVELERS

Adjustment of the Leg Levelers should be performed during the initial installation of the Cabinet and anytime the Cabinet is moved from the original location to another site.

A. Using an open-end wrench and a carpenter's bubble level, rotate the threaded Leveler in each Leg to RAISE or LOWER the Cabinet until the Cabinet is level in the front-to-rear direction.

B. Repeat step A, for leveling in the side-to-side leveling and repeat adjustments as necessary.

IV. ADJUSTMENT OF THE TIMER & SWITCH ASSEMBLY

The Timer and Switch Assembly is factory set, so one complete revolution of the cam on the Timer represents eight minutes. Four and one-half minutes comprise the freezing cycle event during cam rotation, and the final three and one-half minutes program the defrost and harvest cycle. Rotating the shaft of the Timer Cam CLOCKWISE will allow positioning the actuator arm of the microswitch on the cam at the selected start position for either the freezing cycle or harvest cycle, as required in the CLEANING instructions.

TO ADJUST THE TIMER & SWITCH ASSEMBLY:

A. HARVEST CYCLE: Slowly rotate the shaft of the Timer and Switch Assembly, located in a hole in the front of the Control Box Cover, CLOCKWISE, until the actuator arm on the microswitch initiates the harvest cycle. An audible click can be heard, but in a noisy area, look at the cam and switch to observe the event. See Figure 4-1.

B. FREEZING CYCLE: Slowly rotate the shaft of the Timer and Switch Assembly, located in a hole in the front of the Control Box Cover, CLOCKWISE, until the actuator arm on the microswitch initiates the freezing cycle.

C. The length of the harvest cycle can be changed by loosening the adjustment screw on the cam. The minimum harvest setting is two minutes; the maximum is three and one-half minutes, as set at the factory. It is important that the length of the

harvest cycle allow enough time for all eight ice cubes to be ejected from the evaporator. Too short of a time will cause the evaporator to freeze up and stop ejecting ice into the bin. Too much time, wastes ice-making capacity, energy and water. Adjustment of the harvest cycle may require a corresponding adjustment of the Cube Size Control.

WARNING

Be sure the electrical power supply and the inlet water supply are OFF, BEFORE starting any of the following REMOVAL AND REPLACEMENT procedures as a precaution to prevent possible personal injury or damage to equipment.

V. REMOVAL AND REPLACEMENT OF THE BIN INSERT ASSEMBLY

A. To Remove the Bin Insert Assembly:

1. Remove hinge screws and the Door Assembly.
2. Remove screws from the Control Box Cover, Kickplate, Rear Panel and the lower sides of the wrap-around Cabinet.
3. Remove the Bin Level Control knob, the Control Box Cover, Kickplate, the Rear Panel and lift up to remove the Cabinet from the Bin and Chassis Assembly.
4. Disconnect and remove three Water Pump clamps and tubes from the rear of the Bin Insert Assembly.
5. Disconnect the Tygon Tube from the copper Overflow Tube at the rear of the Bin Insert Assembly.
6. Remove the metal strap tube holder, the Platen Inlet Tube, Platen Cover, and carefully lift and temporarily place out of the way, the Evaporator Platen Assembly and attached Accumulator.
7. Lift the Bin Insert Assembly up and out of the Bin.
8. Remove four screws, the Curtain Stiffener and the Curtain Assembly from the Bin Insert. See Figure 4-3.
9. Unscrew and remove two Nozzle Assemblies, the Spray Bar Assembly, O-Ring, and the Cube Chute, from the Bin Insert. Then, unscrew and separate the Nozzle and Spinner from the Jet Base of each Nozzle Assembly. Inspect the parts for cleaning or replacement.
10. Remove O-Ring on the end of the copper Overflow Tube, inside the Bin Insert rear wall. Inspect the O-Ring for cuts, tears, excessive wear and replace if defective.
11. Remove hose clamp and pull the Overflow Tube out the rear of the Bin Insert.

B. To replace The Bin Insert Assembly, reverse the removal procedure.

NOTE

When replacing a Nozzle Assembly or an O-Ring, with the Bin Insert Assembly in normal installed position, the installation of the O-Ring is performed by feel, because it cannot be seen behind the Bin Insert Assembly. To save much lost time in trial and error, first install the Nozzle Assembly, reach up behind the Bin Insert Assembly to feel the thread of Nozzle, then fit the O-Ring on the threads, then attach thread of Nozzle to threaded end of Spray Bar.

VI. REMOVAL AND REPLACEMENT OF THE BIN LEVEL CONTROL

A. To Remove the Bin Level Control:

1. Open the Door Assembly
2. Remove screws, the Kickplate and the Rear Panel.
3. Remove the knob from the Bin Level Control at the front of the Control Box Assembly.
4. Remove screws and the Control Box Cover.
5. Remove two screws, then lower and carefully move the Bin Level Control out of the Control Box, enough to gain access to the electrical lead connections.
6. Disconnect electrical leads from the Bin Level Control.
7. At the upper right rear of the foamed Bin, carefully pull the capillary line out of the copper tube. Keep copper tube in the Bin.
8. From the front of the Cabinet, carefully remove the Bin Level Control from the Control Box, being careful not to kink, or break open, the attached length of capillary line.

B. To replace the Bin Level Control, reverse the removal procedure.

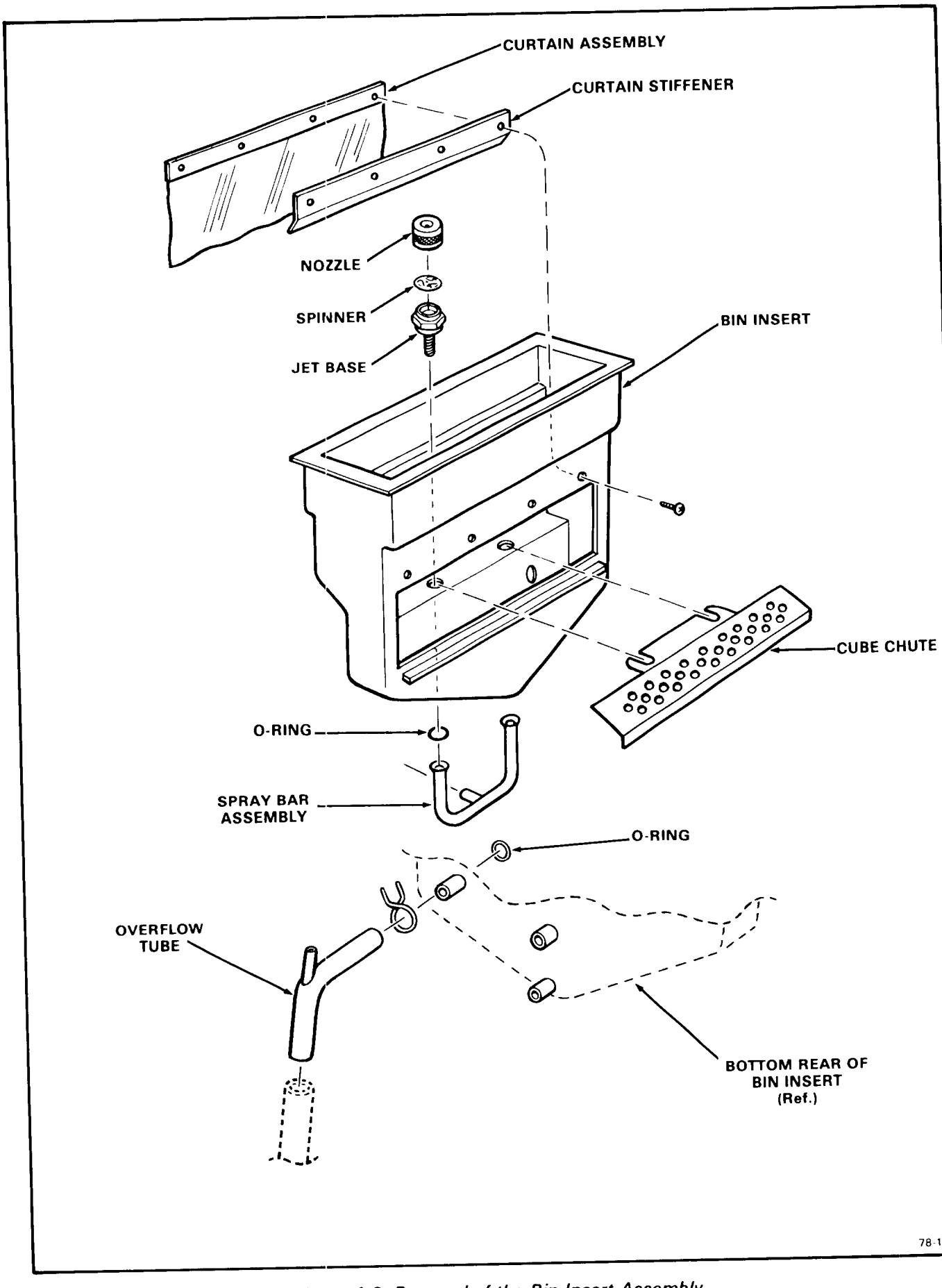

Figure 4-3. Removal of the Bin Insert Assembly.

VII. REMOVAL AND REPLACEMENT OF THE COMPRESSOR ASSEMBLY

NOTE

Always install a replacement Drier, anytime the sealed refrigeration system is opened. Do not replace the Drier until all other repair or replacement has been completed.

A. To Remove the Compressor Assembly:

1. Remove hinge screws and the Door Assembly.
2. Remove screws and the Bin Level Control knob, the Control Box Cover, the Kickplate and the Rear Panel.
3. Remove screws from the lower sides of the wrap-around Cabinet and lift up to remove the Cabinet from the Bin and Chassis Assembly.
4. Disconnect the electrical leads from the Compressor Junction Box.

CAUTION

If tap line valves are used, proper refrigeration practice demands that the process tube be pinched OFF, the tap line valves cut OFF, and the end of the process tube sealed by soldering.

5. Bleed off or blow the refrigerant charge.

CAUTION

Be sure to use extra precaution to shield the plastic Fan Shroud and the rubber Grommets at the Compressor base, BEFORE and during unsoldering and soldering of refrigerant lines.

6. Unsolder and disconnect both the suction line and the discharge line from the Compressor.
7. Unsolder the process header tube from the Compressor and retain for installation on the replacement Compressor.
8. Remove four Compressor Mounting Clips.

NOTE

The metal Bin Bottom, on which the foamed Bin Assembly rests, may have to be partially lifted and temporarily propped up on the Compressor side, to allow removal of the Compressor. Use care to prevent excessive bending or possible kinking of refrigeration tubing.

9. Lift Compressor off of the two Compressor Mounting Brackets, protruding through holes in the Base Assembly, and remove the Compressor from the Base.
10. Remove four rubber Grommets from the base of the Compressor; also, retain the four Compressor Mounting Clips Grommets, and the two Compressor Mounting Brackets left underneath the Base Assembly.

NOTE

Thoroughly evacuate the system to remove moisture and non-condensables after Compressor replacement.

B. To replace the Compressor Assembly, reverse the removal procedure.

VIII. REMOVAL AND REPLACEMENT OF THE CONDENSER ASSEMBLY - AIR COOLED

NOTE

Always install a replacement Drier, anytime the sealed refrigeration system is opened. Do not replace the drier until all other repair or replacement has been completed.

A. To Remove the Condenser:

1. Remove hinge screws and the Door Assembly.
2. Remove screws from the lower sides of the wrap-around Cabinet and lift up to remove the Cabinet from the Bin and Chassis Assembly.
4. Disconnect the electrical leads from the Fan Motor.
5. Tip the Bin and Chassis Assembly to the left to gain access to the bottom right; then, from underneath remove two screws, which attach the Fan Assembly, and three screws which attach the Condenser to the Base Assembly. Lower the assembly to the floor in the upright position.

6. Remove the Fan Assembly.
7. Remove two screws at each end of the Fan Shroud and remove the shroud.
8. Disconnect the inlet water line from the Water Solenoid Valve at the left end of the Control Box Assembly.
9. Remove two screws at each end of the Control Box Assembly and remove the Control Box Assembly from the Condenser; then, temporarily set aside with wiring attached, to allow room for the unsoldering and removal of the Condenser.

CAUTION

If tap line valves are used, proper refrigeration practice demands that the process tube be pinched OFF, the tap line valves cut OFF, and the end of the process tube sealed by soldering.

10. Bleed off or blow the refrigerant charge.
11. Unsolder and disconnect both the inlet and outlet tubes from the Condenser and remove the Condenser from the Base.

NOTE

Thoroughly evacuate the system to remove moisture and non-condensables after Condenser replacement.

B. To replace the Condenser, reverse the removal procedure.

IX. REMOVAL AND REPLACEMENT OF THE CONDENSATE PUMP - SPK18-H OPTIONAL KIT

Refer to the Installation Instructions, included in the SPK18-H Condensate Pump Kit. This kit includes the Condensate Pump and all the associated parts and tubing, plus a detailed set of installation instructions, illustrations and wiring diagrams to ensure proper installation and operation of a replacement Condensate Pump.

X. REMOVAL AND REPLACEMENT OF THE CUBE SIZE CONTROL

A. To Remove the Cube Size Control:

1. Remove the hinge screws and the Door Assembly.
2. Remove screws and the Bin Level Control knob, the Control Box Cover, the Kickplate and the Rear Panel.
3. Remove Door Assembly and hinges per steps 1 and 2 of procedure IV-XV-A; remove two screws and the Trim Gasket from front opening to Bin; and, remove screws from lower sides of the wrap-around Cabinet and lift up to remove the Cabinet from the Bin and Chassis Assembly.
4. Remove two screws, then, carefully lower and move the Cube Size Control out of the Control Box, enough to gain access to the electrical lead connections.
5. Disconnect electrical leads from the Cube Size Control.
6. Carefully remove the coiled capillary bulb from the tube well at the rear of the Platen Assembly.
7. From the front of the Cabinet, carefully remove the Cube Size Control from the Control Box, being careful not to kink, or break open, the attached length of capillary line.

B. To replace the Cube Size Control, reverse the removal procedures. Refer to procedure IV-II, ADJUSTMENT OF THE CUBE SIZE CONTROL.

XI. REMOVAL AND REPLACEMENT OF THE CURTAIN ASSEMBLY

A. To Remove the Curtain Assembly:

1. Open the Door Assembly.
2. Remove four screws above the front opening of the Bin Insert Assembly and remove the Curtain Stiffener and the Curtain Assembly from inside the Bin Insert Assembly. Note the exact position of these two parts for correct positioning during reassembly.

B. To Replace the Curtain Assembly:

CAUTION

BE CERTAIN the positioning of the Curtain Stiffener and Curtain Assembly is exactly the same as when removed. Improper positioning of these parts will cause recirculating spray water to leak out the front opening of the Bin Insert Assemby and result in reduced and irregular size and shape ice cubes. See Figure 4-4.

1. Position the Curtain Stiffener inside the Bin Insert Assembly, with the holes in the Curtain Stiffener aligned with the holes above and BEHIND the front opening of the Bin Insert Assembly; and, VERY IMPORTANT, the angle on the Curtain Stiffener facing toward the REAR and DOWN.

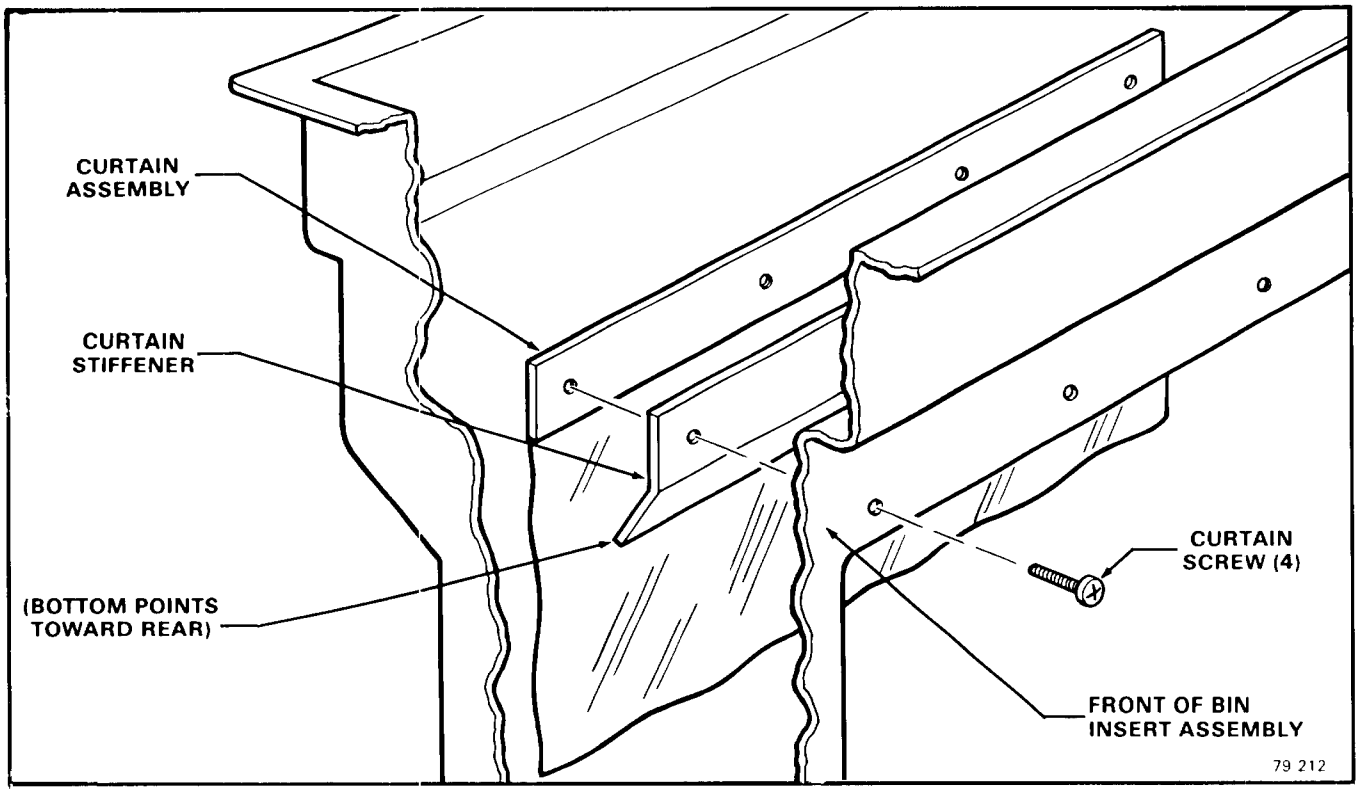

Figure 4-4. Replacing Curtain Assembly.

2. Align the holes in the Curtain Assembly BEHIND the holes in the Curtain Stiffener and secure with the four screws passing through the front of the Bin Insert Assembly, the Curtain Stiffener and into the Curtain Assembly.

XII. REMOVAL AND REPLACEMENT OF THE DRIER

NOTE

Always install a replacement Drier, anytime the sealed refrigeration system is opened. Do not replace the Drier until all other repair or replacement has been completed.

A. To Remove the Drier:

1. Remove hinge screws and the Door Assembly.
2. Remove screws and the Bin Level Control knob, the Control Box Cover, the Kickplate and the Rear Panel.
3. Remove screws from the lower sides of the wrap-around Cabinet and lift up to remove the Cabinet from the Bin and Chassis Assembly.

CAUTION

If tap line valves are used, proper refrigeration practice demands that the process tube be pinched OFF, the tap line valves cut OFF, and the end of the process tube sealed by soldering.

4. Bleed off or blow the refrigeration charge.

CAUTION

Be sure to use extra precaution to shield the plastic Fan Shroud, Compressor rubber grommets and electrical wiring, BEFORE and during unsoldering and soldering the Drier and refrigerant lines.

5. Unsolder the capillary tube from one end of the Drier and the refrigerant line from the other end of the Drier. Leave the service line on the Drier at this time and remove the Drier from the Chassis.
6. After removing the Drier from the Chassis, unsolder and remove the service line and retain for use on the replacement Drier.

B. To Replace the Drier:

CAUTION

1. If the factory seal is broken on the replacement Drier, exposing it to the atmosphere more than a few minutes, the Drier will absorb moisture from the atmosphere and lose substantial ability for moisture removal.

2. Be sure the replacement Drier is installed with the arrow positioned in the direction of the refrigerant flow.

1. Remove the factory seals from the replacement Drier and install and solder the service line in the identical opening and position as it was installed on the removed Drier.
2. Observe same precautions of step A-4, above, install and solder the system refrigerant line and the capillary line into the replacement Drier, one at each end.
3. Purge the system and check for leaks.
4. Thoroughly evacuate the system to remove moisture and non-condensables after Drier replacement.
5. Charge the system with refrigerant, by weight. SEE NAMEPLATE.
6. Replace the wrap-around Cabinet, Rear Panel, Control Box Cover, Bin Level Control knob, Kickplate, and the Door Assembly in the reverse order of the removal procedures.

XIII. REMOVAL AND REPLACEMENT OF THE FAN MOTOR ASSEMBLY

A. To Remove the Fan Motor Assembly:

1. Remove hinge screws and the Door Assembly.
2. Remove screws and the Bin Level Control knob, the Control Box Cover, the Kickplate and the Rear Panel.
3. Remove screws from the lower sides of the wrap-around Cabinet and lift up to remove the Cabinet from the Bin and Chassis Assembly.
4. Disconnect electrical leads in Control Box from the Fan Motor.
5. Tip the Bin and Chassis Assembly to the left to gain access to the bottom right; then, from underneath remove two screws which attach the Fan Assembly to the Base Assembly. Lower the assembly to the floor in an upright position.
6. Remove the Fan Assembly.
7. Remove the nut from the end of the Fan Motor shaft and remove the Fan Blade.
8. Remove two screws and separate the Fan Motor from the Motor Bracket.

B. To replace the Fan Motor Assembly, reverse the removal procedure.

XIV. REMOVAL AND REPLACEMENT OF THE WATER PUMP ASSEMBLY.

A. To Remove the Water Pump Assembly:

1. Remove hinge screws and the Door Assembly.
2. Remove screws and the Bin Level Control knob, the Control Box Cover, the Kickplate and the Rear Panel.
3. Remove screws from the lower sides of the wrap-around Cabinet and lift up to remove the Cabinet from the Bin and Chassis Assembly.
4. Disconnect and remove three Water Pump clamps and tubes from the rear of the Bin Insert Assembly.
5. Disconnect the electrical leads from the Water Pump.
6. Remove two screws, plain washers, special washers, spacers, and lift out the Water Pump Assembly, with electrical leads attached.
7. Retain the gasket under the Pump, for use in the replacement procedures.

B. To replace the Water Pump Assembly, reverse the removal procedure.

WARNING

1. DO NOT kink the three water tubes during reassembly, any obstruction will cause rapid failure of the motor, excessive water leaks and reduced ice cube production.

2. Secure the free end of the Grounding Strap on the replacement Water Pump, to the top of the Chassis with the top center screw while replacing the Rear Panel. BE SURE WATER PUMP IS GROUNDED.

XV. REDECORATING THE DOOR PANEL

A. To Install a Decorator Panel:

NOTE

Any panel 14-3/4 inches wide by 28-3/4 inches long and one-fourth inch thick, or less, may be used as a decorator panel. Materials such as wood, plastic and various synthetics are normal selections. A thin gauged sheet of most any metal, plain, embossed, painted or special finish, can also be used, by having a piece of matching sized corrugated cardboard or similar material, of the thickness required to make up the extra space needed with the sheetmetal, to add up to one-fourth inch thickness. Other possibilities include use of the same wood or material to blend into a built-in cabinet, or a portable bar cabinet.

1. Remove single screw and the lefthand Hinge Filler Plate from the top left corner of the Door Assembly.
2. Remove two screws from the top of the Door and lift off the Door Handle.
3. Open the Door slightly, about one-third or so; then, remove the front screw from the top right Hinge Assembly.
4. Loosen the rear screw of the top right Hinge Assembly, just enough to allow the Door to sag, or move forward, enough to gain access to the top opening of the extruded groove in the right side of the Door Assembly.
5. From the top of the Door, insert the decorator panel evenly into the openings of the left and right extruded one-fourth inch grooves; then, carefully slide the decorator panel fully into the bottom groove in the Door Assembly.
6. Check the sides, bottom and top of the decorator panel, the extruded grooves and the top of the Door Assembly for proper alignment and even fitting.
7. Push the top right corner of the Door iN to align screw hole in the Door and front hole in the top Hinge Assembly; then, install screw and tighten front and rear screws and the top Hinge Assembly.
8. Replace the Door Handle and the lefthand Hinge Filler Plate in the reverse order of removal.

NOTE

A simple, yet added touch in decorating may be easily performed by installing a strip of 3/4-inch plastic, self-adhesive tape, such as No. 471 Plastic Scotch Tape, available in various colors, to match the decor, down the outside of the Door Assembly frame, in an existing 3/4-inch groove.

XVI. REVERSING DOOR HINGES FOR A LEFT HAND DOOR

NOTE

All AC11 A-1 Automatic Cubers are shipped from the factory with a right-hand Door Assembly; i.e., the door hinges are installed on the right-hand side and the door is opened to the right side. The Door Assembly and attaching hinges were designed so the door hinges can be removed and positions reversed, when necessary, to permit the door to be opened to the left. With a minimum of effort and only one different part, which is provided, these instructions describe how to reverse positions of the existing hinges, to result in a door that opens to the left.

1. Open the Door Assembly slightly, to expose both screws attaching the Hinge Assembly to the top right-hand corner of the Door; then, remove the two screws.
2. While holding the Door open and steady, or have an assistant do so, similarly remove the two screws from the bottom Hinge Assembly; then, remove the Door from the Cabinet.
3. Remove single screw and the left-hand Hinge Filler Plate from the top left corner of the Door.

NOTE

In an envelope, shipped with the AC11 Automatic Cuber, is a right-hand Hinge Filler Plate spare part. Remove the spare part for use in the next step; and be sure to store the removed left-hand Hinge Filler Plate in the same envelope and save for possible future use.

4. Install the right-hand Hinge Filler Plate on the top right corner of the Door and attach with the single screw, removed in step 3, above.

5. Remove three plastic Plug Buttons from the top, left-hand front corner of the Cabinet; then, remove three plastic Plug Buttons in the lower, left front section of the Cabinet, just above the Kickplate. Retain the Plug Buttons.
6. Remove three screws and the Hinge Assembly from the top, right corner of the Cabinet, NOTE THE INSTALLED POSITION; then rotate that Hinge Assembly 180-degrees and install it in position, at the lower, left front section of the Cabinet, attaching with the removed three screws.
7. Install three of the plastic Plug Buttons in the three holes in the top, right front corner of the Cabinet.
8. Similarly remove, observe and rotate 180-degrees, then install and attach the Hinge Assembly from the lower, right front section of the Cabinet, to the top, left front corner of the Cabinet.
9. Install the remaining three plastic Plug Buttons in the three holes in the lower, right front section of the Cabinet.
10. Carefully install the Door Assembly on the repositioned Hinge Assemblies, on the left side of the Cabinet and align the holes in the hinges with the holes in the Door.
11. Attach the Door Assembly within the top and bottom Hinge Assemblies, using two screws in each Hinge Assembly.
12. Close the Door Assembly; then, open and close the Door a couple of times to check for proper overall fit and ease of opening and closing operation.

SECTION V

MAINTENANCE & CLEANING INSTRUCTIONS

I. GENERAL

The periods and procedures for maintenance and cleaning are given as guides and are not to be construed as absolute or invariable. Cleaning especially will vary, depending upon local water conditions and the ice volume produced; and, each Icemaker must be maintained individually, in accordance with its own particular location requirements.

II. ICEMACHINE

THE FOLLOWING MAINTENANCE SHOULD BE SCHEDULED AT LEAST TWO TIMES PER YEAR ON THIS ICE-MACHINE.

1. Check and clean water line Strainers.
2. Check that the cabinet is level, in side-to-side and front-to-rear directions.
3. Clean the Water System, Evaporator, Bin Insert Assembly Reservoir and Spray Nozzles, using a solution of SCOTSMAN Ice Machine Cleaner. Refer to procedure V-III, CLEANING-Icemachine.

NOTE

Cleaning requirements vary according to local water conditions and individual user operation. Continuous check of the clarity of ice cubes and visual inspection of the water spraying parts and jet spinners, before and after cleaning will indicate frequency and procedure to be followed in local areas.

4. Check that plastic curtain hangs down evenly outside the opening at the front of the Bin Insert Assembly.
5. With Icemaker and Fan Motor OFF on Air-Cooled Models, clean Condenser, using vacuum cleaner, whisk broom or brush.
6. Check for water leaks and tighten drain line connections. Pour water down Bin drain line to be sure that drain line is open and clear.
7. Check size, condition and texture of ice cubes. Perform adjustments as required. Refer to procedure IV-II.
8. Check Bin Level Control Bulb to test shutoff. Hold ice cubes on the Bulb Holder Tube, which should cause the Icemaker to shut OFF within two minutes.

NOTE

Within minutes after the ice is removed from the Bulb Holder Tube, the sensing bulb inside the Tube, will warm up and cause the Icemaker to restart. This control is factory set and should not be reset until testing is performed.

III. CLEANING - Icemachine

1. Open the Door Assembly.
2. Rotate the Bin Level Control knob COUNTERCLOCKWISE to the OFF position, to shut OFF the Icemaker.
3. Rotate the shaft of the Timer & Switch Assembly, located in the hole in the front of the Control Box Cover, CLOCKWISE, to the start position for the freezing cycles See Figure 5-1.

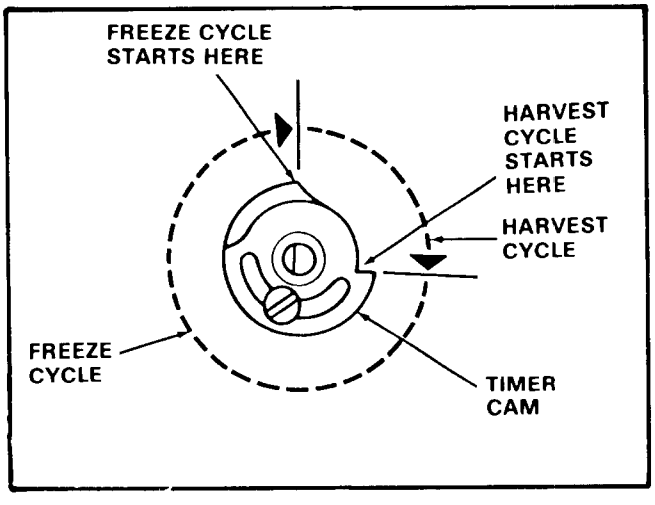

Figure 5-1. START positions for the Freeze/Harvest Cycles.

WARNING

SCOTSMAN Ice Machine Cleaner contains Phosphoric and Hydroxyacetic acids. These compounds are corrosive and may cause burns if swallowed, DO NOT induce vomiting. Give large amounts of water or milk. Call physician immediately. In case of external contact, flush with water. KEEP OUT OF THE REACH OF CHILDREN.

4. Carefully pour the cleaning solution into the Bin Insert Assembly through the front opening.
5. Immediately rotate the Bin Level Control knob CLOCKWISE, to the heavy-lined area marked APPROXIMATE OPERATING RANGE, to start the icemaking process.
6. Allow the system to operate for about one hour.
7. At end of one hour, rotate the shaft of the Timer & Switch Assembly, CLOCKWISE, to start a harvest cycle. Repeat procedure to effect four complete harvest cycles. See Figure 5-1.

NOTE

During each harvest cycle, fresh inlet water is introduced into the water system and acts to rinse all water-related parts and to wash away most mineral concentration through the Reservoir overflow drain.

8. Check each ice cube harvest, until the ice cubes are clear.

CAUTION

DO NOT use ice cubes produced from the cleaning solution. Be sure none remains in the Bin.

9. Add hot water to the Bin to melt the ice cubes and thoroughly wash and rinse all surfaces within the Bin.
10. Wash and wipe down all interior surfaces of the Bin with a clean cloth or disposable paper wiper soaked in the cleaning solution.
11. Wipe all washed surfaces dry with clean cloths or clean dry disposable paper wipers.
12. Close the Door Assembly.
13. Clean and sanitize the interior Bin surfaces each week.

SECTION VI

SERVICE DIAGNOSIS

The Service Diagnosis Section is for use in aiding the serviceman in diagnosing a particular problem for pin-pointing the area in which the problem lies, thus an ever available reference for proper corrective action.

The following charts list corrective actions for the causes of known symptoms of certain problems that can occur in the Icemaking Refrigeration System.

I. ICEMAKING - REFRIGERATION SYSTEM

SYMPTOM	POSSIBLE CAUSE	CORRECTION
Will not operate.	Master switch in OFF position. Blown fuse in power line. Bin Thermostat OPEN due to low air temperature. Faulty master switch. Timer contacts open.	Set switch to ON position. Check fuse. SEE NAMEPLATE for basic electricals. Check for cause and replace fuse. See ambient limits Paragraph I-III. Replace switch. Replace microswitch in Timer.
Does not make ice.	Water supply shut OFF. Timer not functioning. Broken wiring, loose connection. Compressor not operating. Water pump not operating. Faulty bin thermostat.	Slightly loosen water inlet connection, if no water flows, check shutoff valve and source. Check that cam rotates. Check all electrical circuitry. Check, replace defective start relay, overload, or compressor. Clean, repair or replace. Test, warm with hand, cool with ice. Replace when found faulty.
Poor harvest.	Defrost time is too short. Restriction in water inlet line. Water valve sticks, does not open. Hot gas solenoid valve does not open, binds, is defective. Plugged air vent holes in upper part of ice cube cup molds.	Check and adjust or replace timer switch. Check, clean strainer, or replace. Clean water lines. Clean, adjust, or replace valve. Replace hot gas solenoid valve. Clean out air vent holes. Check cleaning procedure schedule.
Cubes jam in freezer.	Curtain assembly or cube chute improperly installed, positioned wrong.	Correct positioning or replace part.

ICEMAKING - REFRIGERATION SYSTEM (Cont'd)

SYMPTOM	POSSIBLE CAUSE	CORRECTION
Cloudy ice cubes.	Shortage of water. Accumulated impurities visible. Dirty water supply. Dirty spray jets. Cabinet not level.	SEE shortage of water correction. SEE CLEANING procedure V-III. Install water filter or water softener. SEE CLEANING procedure V-III. SEE leveling procedure I-III.
Cubes too large.	Cube size control set too cold. Cam on Timer is loose. Timer switch is defective. Timer is slow or stops.	Rotate cube size control toward CCW WARMER. Tighten cam locking nut. Replace switch. Replace Timer motor.
Cubes too small.	Cube size control set too warm. Shortage of water. Loss of refrigerant. Restricted capillary tube. Air-Moisture in the system.	Rotate cube size control toward COLDER. CW Check water supply system. SEE NAMEPLATE and properly charge system with refrigerant. Purge and recharge. Replace cap tube when necessary. Purge and recharge. Replace drier.
Cube size irregular.	Some spray jets plugged. Shortage of water.	Clean spray jets. SEE shortage of water CORRECTION.
Noisy during harvest cycle.	Excessive inlet water. pressure.	Install water pressure regulator in water inlet line. Set at 25 PSIG.
Compressor cycles intermittently.	Low voltage. (Minimum voltage to be 10% less than normal rating.)	Check for circuit overload. Check building supply to voltage, contact power company.
Decreased ice capacity.	High room temperature, or poor air circulation. Inlet water temperature too warm. Connection is to hot water line. High head pressure from dirty condenser. High head pressure from faulty fan. Leaky water valve. Leaky hot gas solenoid valve. Defective compressor. Overcharge of refrigerant. Undercharge of refrigerant. Air-Moisture in the system. Partially restricted capillary tube.	Relocate to decrease temperature or cut ventilation openings. Have plumber check installation. Reconnect to cold water line. Clean condenser, check obstructions. Repair or replace fan motor. Repair or replace water valve. Replace valve. Replace compressor. SEE NAMEPLATE and slowly purge to correct refrigerant charge. Check for leaks, repair & recharge SEE NAMEPLATE. Purge and recharge. Replace drier. Purge and recharge. Replace cap tube when necessary.
Shortage of water.	Water sprays out curtain. Leaking hose connections. Plugged water filter. Water supply inadequate or plugged. Water valve will not open. Water valve plugged. Water valve leaking.	Check spray jets for even spray. Adjust curtain to hang evenly. Check clamps and hoses, correct conditions, replace parts. Check water filter and replace. Check water supply. Unplug part or lines. Repair or replace valve. Check line and valve. Repair or replace valve.
Excessive ice meltage in bin.	Bin drain or drain line plugged. Bin drain not properly installed. Improper venting or gravity flow routing, so water backs into bin.	Clear the obstruction. SEE Drain Connection procedure I-V.

SECTION VII

WIRING DIAGRAMS

This Section is provided as an aid in understanding the electrical circuitry of the Automatic Cuber.

WARNING

When conducting a continuity check of the Automatic Cuber:

1. **Disconnect the main power source.**
2. **DO NOT use an incandescent lamp or jumper wire, conduct all tests with a volt-ohm-meter.**

The Wiring Diagrams in this section are:

Figure 7-1. Wiring Diagram AC11 - Air-Cooled.
Figure 7-2. Wiring Diagram AC11 - Air-Cooled with Sump Drain Pump.

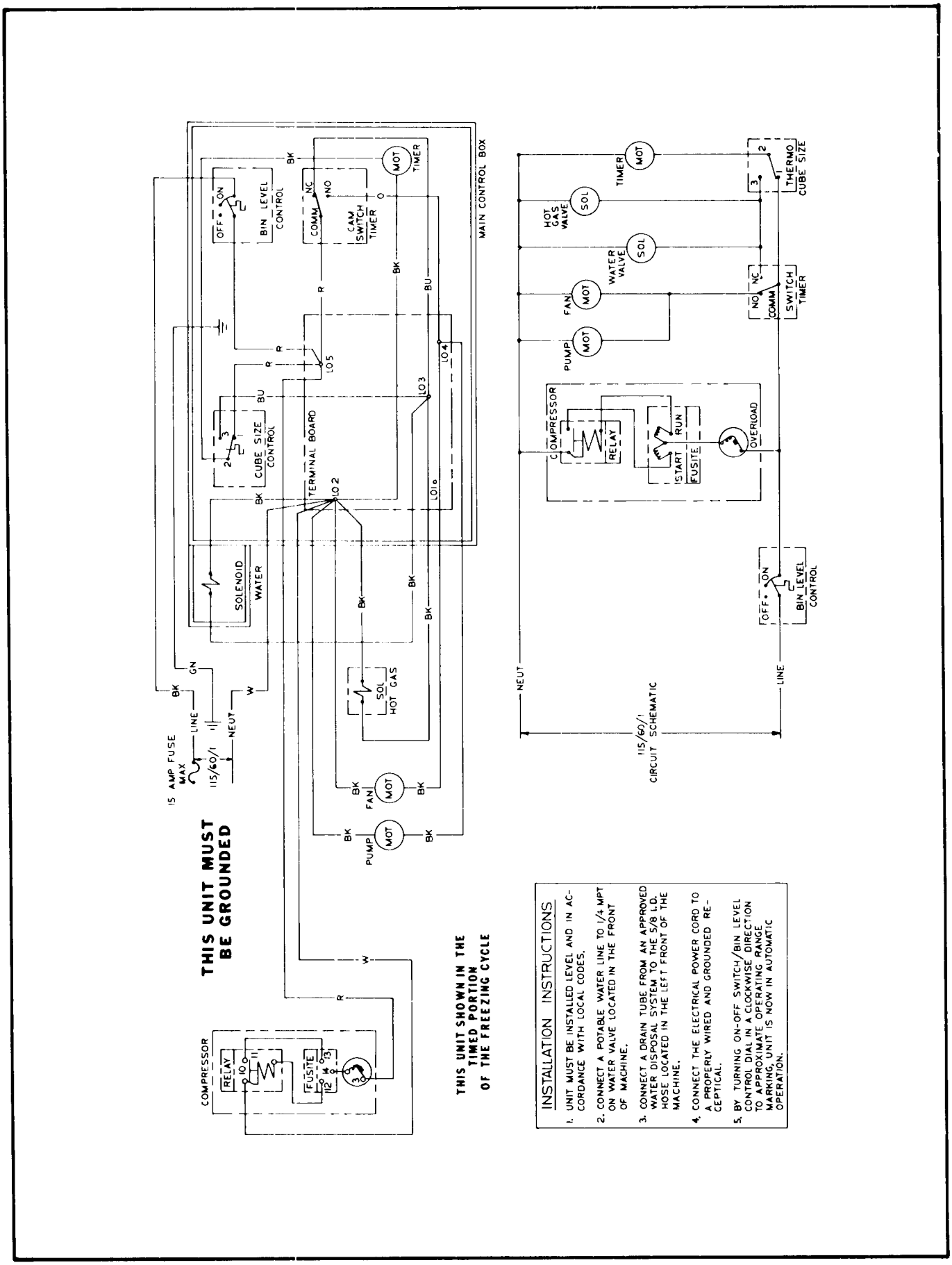

Figure 7-1. Wiring Diagram AC11 - Air-Cooled.

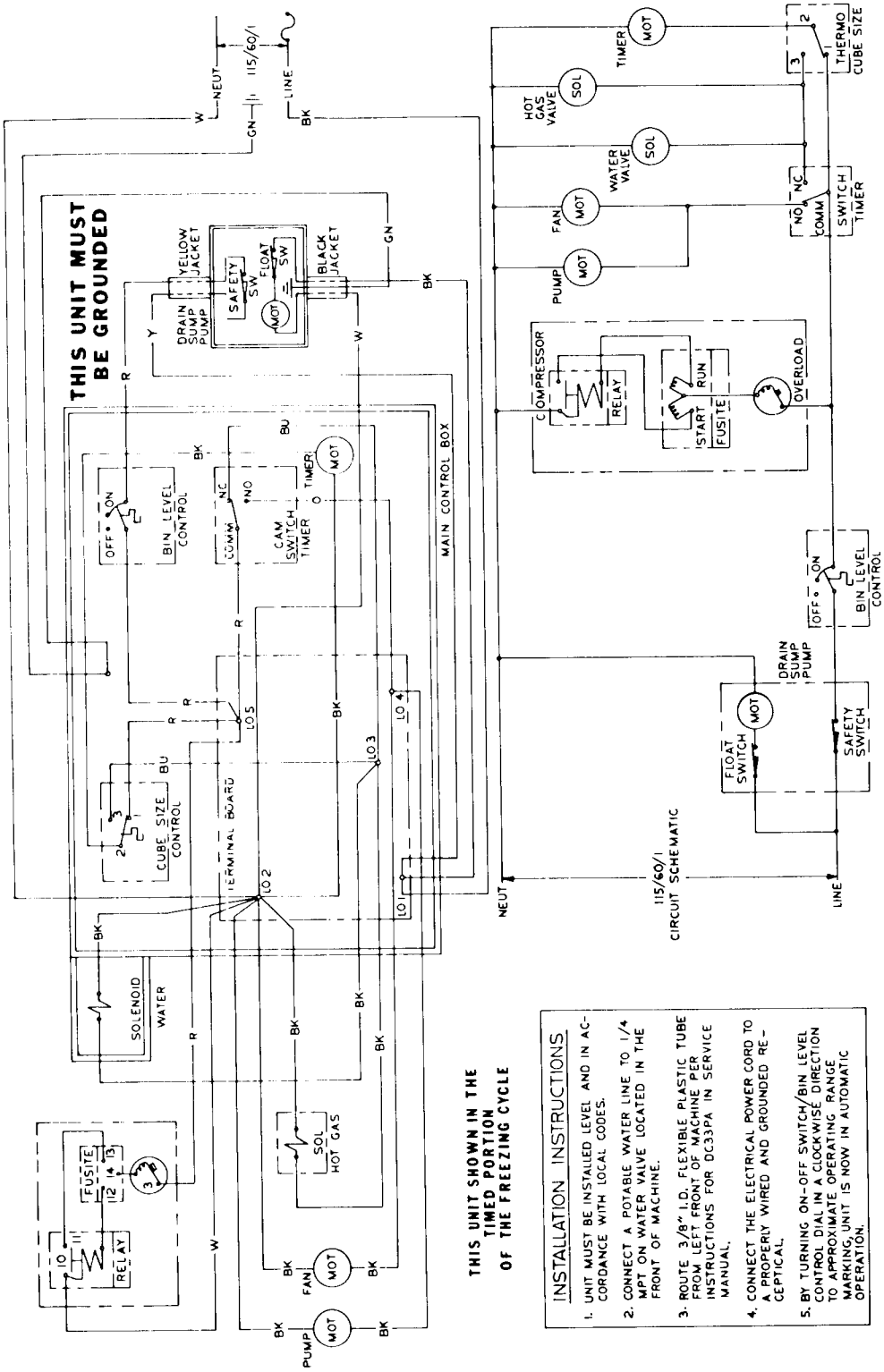

Figure 7-2 Wiring Diagram AC11 - Air-Cooled with Sump Drain Pump.

SECTION VIII

THE PARTS ILLUSTRATIONS AND PARTS LISTS

I. GENERAL

This section contains the Parts Illustrations and the Parts List for each of the major assemblies in the AC11 Automatic Cuber.

Each Parts Illustration shows an assembly as an exploded view, with an Index Number for each part or sub-assembly, given in disassembly order. These Index Numbers key with the Parts List for the assembly and are found in the parts List Column headed Index Number. The Description Column gives the identifying nomenclature for the item indexed. The Part Number Column gives the number of item. The Number Required Column gives the number of items required per assembly, but not necessarily the total number of parts required per Cuber.

All assemblies are cross-referenced both from the major assembly listing where they first appear in the Parts Listing to their break-down listing, and from the break-down listing, back to the major assembly (next higher assembly) listing.

A *No Number* designation, when used in the Part Number Column indicated the unit is not available from SCOTSMAN as an assembly. This designation is used only for the convenience and clarity of division in cataloging.

When an Index Number is followed by a letter (e.g. la, lb), the letter indicates the part listed is part of the assembly indexed by the basic Index Number. The number required of the part indexed by the number and letter combination is only one of the assemblies indexed by the basic Index Number and not necessarily the total number or parts used in the Cuber. Where the notation *Ref* occurs in the Number Required Column the number of the assemblies or parts required for use in the Cuber will be found under a previous Index Number or in the next higher assembly Parts Listing. The next higher listing Figure/Index number is shown in the Description Column immediately following the items description.

II. HOW TO USE THE ILLUSTRATIONS AND PARTS LIST

To find the part number of a required part or assembly, turn to the List of Illustrations and find the page number of the Parts Illustration of the major or sub-assembly containing the part. Turn to the indicated page and locate the part and its Index Number on the specific illustration. Find the Index Number on the required part in the Parts List to determine the complete description of the part.

III. HOW TO ORDER PARTS OR ASSEMBLIES

When ordering parts or assemblies, to avoid costly delays and errors in shipment, give the part number, the complete description shown in the list, and the quantities of each part or assembly required. Also include the Model name, the serial number of the Cuber for which the part is required, and for parts which require color matching, the color of the Cabinet. See Figure 8-00, at the end of the Section for detailed ordering instructions.

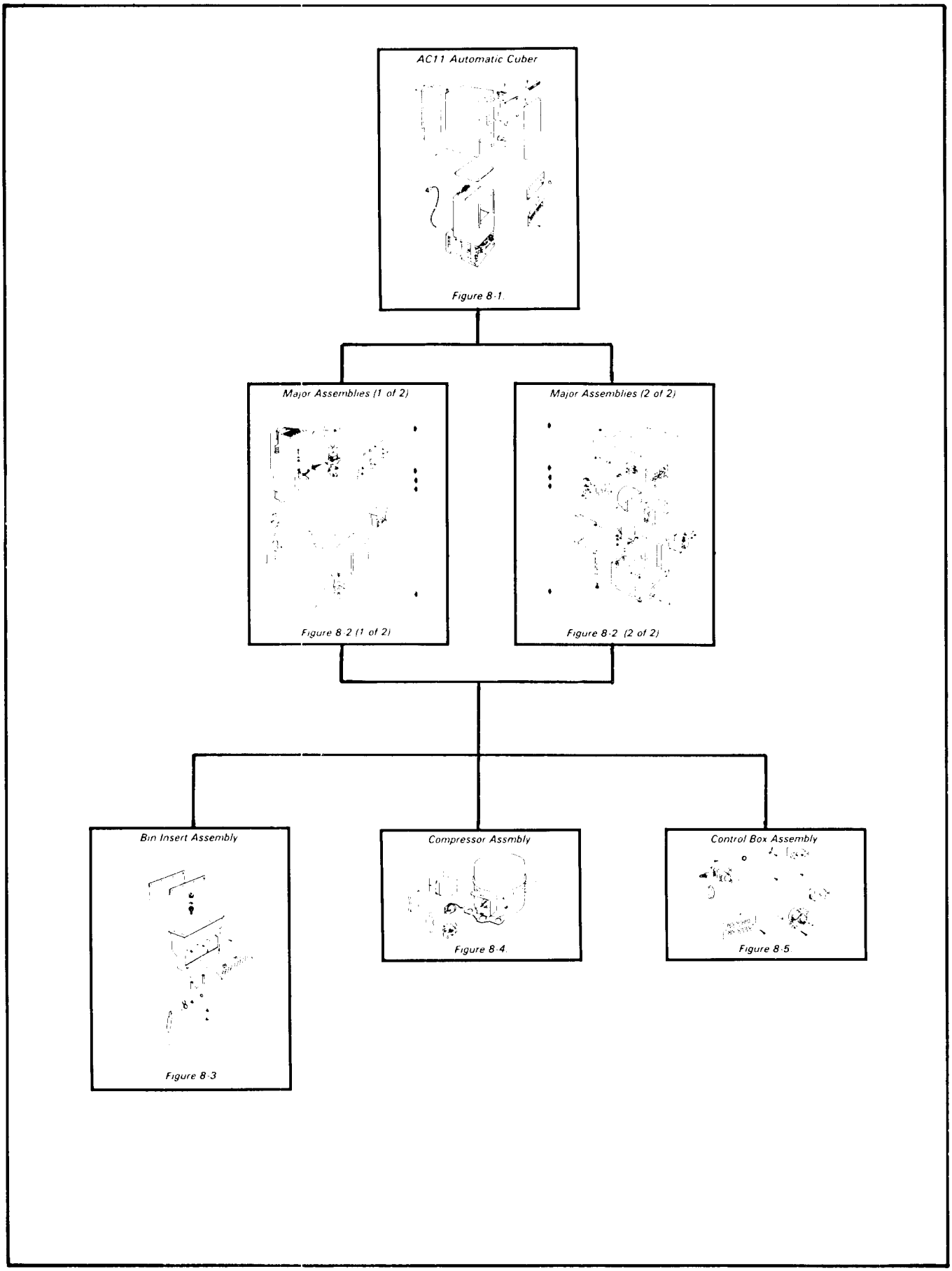

Figure 8-A. AC11 Automatic Cuber Flow Chart.

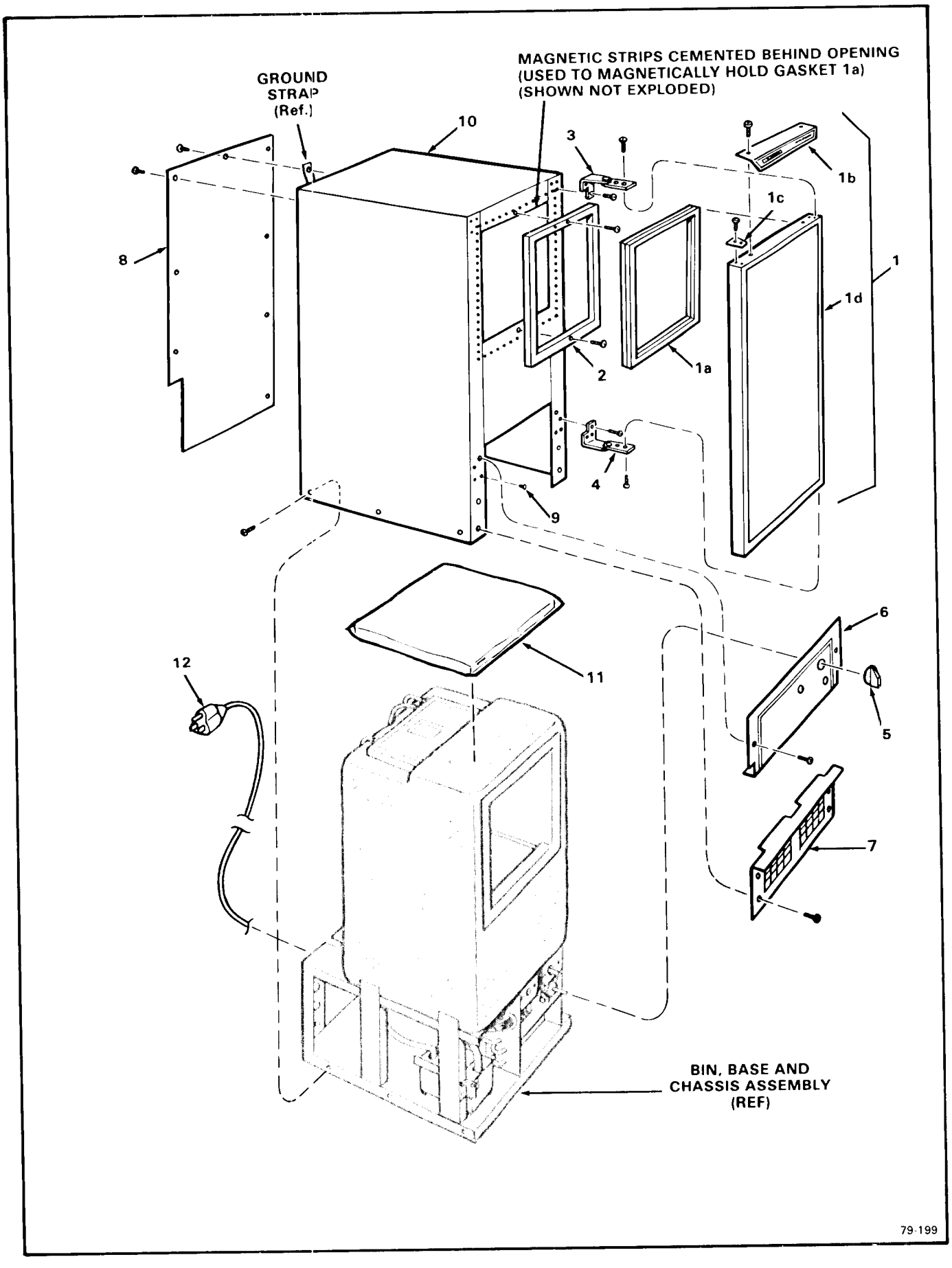

Figure 8-1. AC11 Cabinet.

Figure 8-1. AC11 Cabinet.

INDEX NO.	DESCRIPTION	PART NUMBER	REQ'D NUMBER
	AC11 Cabinet	No Number	1
	***		
1	Door Assembly (Also order SS33 Stainless Steel Panel Kit)	WDK33	1
	Stainless Steel Panel (slides into door grooves, See IV-XV-A)	SS33	1
	(attaching parts are Index 3 &4)		
1a	Gasket (magnet holds in Door grooves)	13-0826-01	1
1b	Handle, Door	A29043-001	1
	attaching part, Index 1		
	Screw, No. 10-32 x 7/16 Phil Recess Flat Hd (ss)	13-1607-01	2
1c	Plate, Hinge Filler - Right	15-0648-01	1
	Plate, Hinge Filler - Left	15-0648-02	1
	(Right Hinge Filler Plate is shipped in envelope)		
	attaching part, Index 1c		
	Screw, No. 8-32 x 3/8 Phil Recess Flat Hd Machine	03-1418-24	1
1d	Frame, Foam Insulation, Panel & Door	No Number	Ref.
	(Not available, order P/N WDK33)		
	***		
2	Gasket, Decor Trim	13-0828-01	1
	attaching part, Index 2		
	Screw, No. 6 x 1/2 S/T Flat Hd	03-1419-14	2
	***		
3	Hinge	15-0653-01	1
4	Hinge	15-0653-02	1
	attaching parts, Index 3 & 4		
	Screw, No. 8-32 x 3/8 Phil Recess Flat Hd Machine	03-1418-24	10
	(3 Screws each Hinge to Index 10, 2 Screws to Index 1d)		
	***		
5	Knob, Bin Thermostat	15-0656-01	1
	***		
6	Cover, Control Box	No Number	1
	attaching part, Index 6		

Figure 8-1. DC33 Cabinet (Cont'd)

INDEX NO.	DESCRIPTION	PART NUMBER	REQ'D NUMBER
	Screw, No. 6 x 1/2 T/F Tap	03-1404-07	2
	***		
7	Kickplate	02-2243-02	1
	attaching part, Index 7		
	Screw, No. 8 x 3/8 S/T Flat Hd	No Number	4
	***		
8	Door, Rear Service	A29102-001	1
	attaching part, Index 8		
	Screw, No. 6 x 3/8 T/F Tap	03-1404-05	7
	(Top center screw also attaches Water Pump grounding strap)		
	***		
9	Button, Plug (Fits in unused Hinge screw holes)	02-2481-01	6
	***		
10	Cabinet Assembly - (wrap-around)	A28861-002	1
	attaching part, Index 10		
	Lockwasher, No. 10 External Tooth - Carbon Steel Zinc Plated	No Number	1
	Screw, No. 10-24 x 3/8 S/T Pan Hd	No Number	6
	***		
	(Install tooth lockwasher under any screw, UL requirement)		
	***		
11	Insulation Assembly, (15-inch x 15-inch, in plastic bag)	A26787-001	1
	***		
12	Cord Assembly, Power	12-1638-07	1
	***		

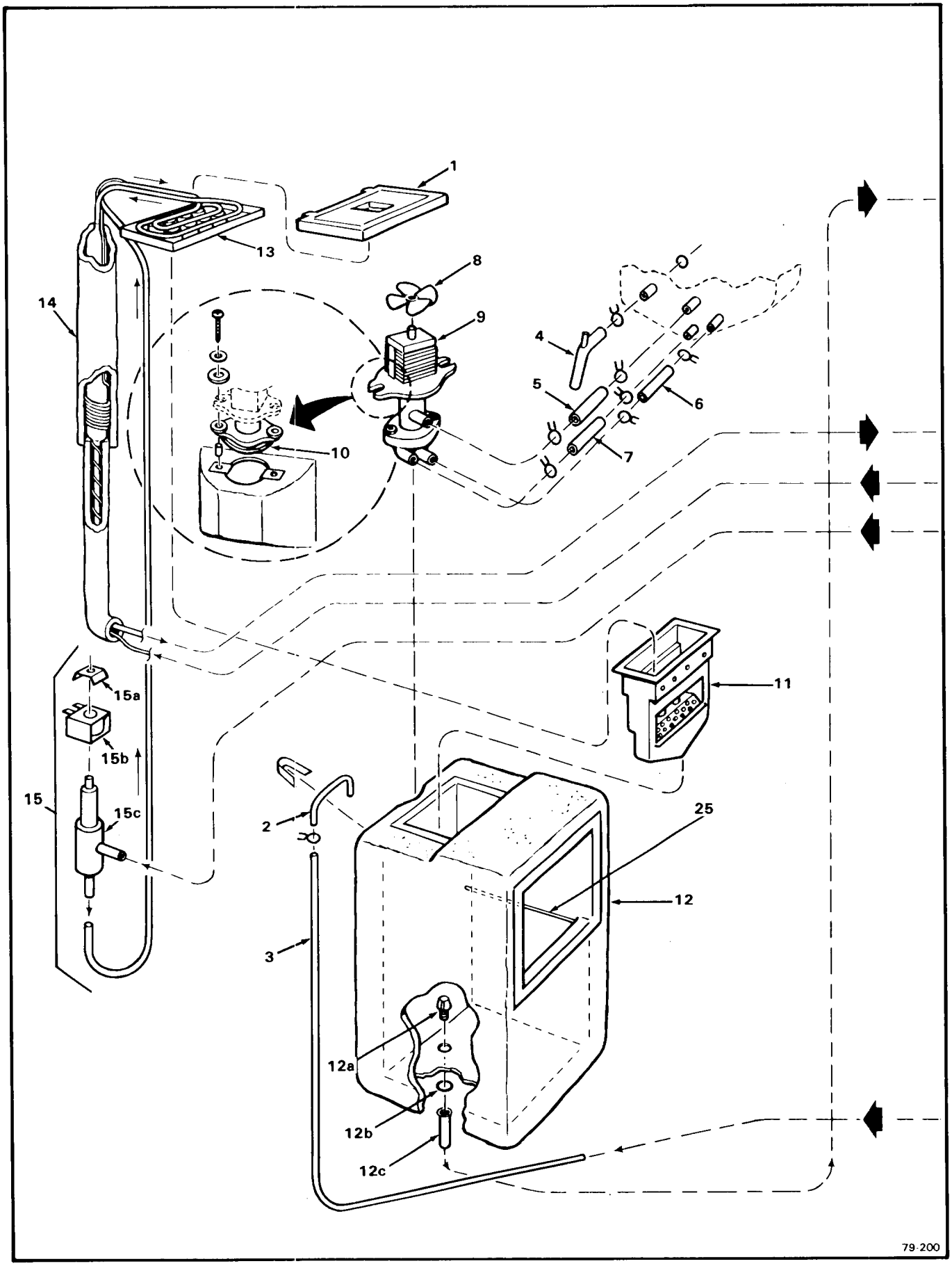

Figure 8-2 Major Assemblies (sheet 1 of 2)

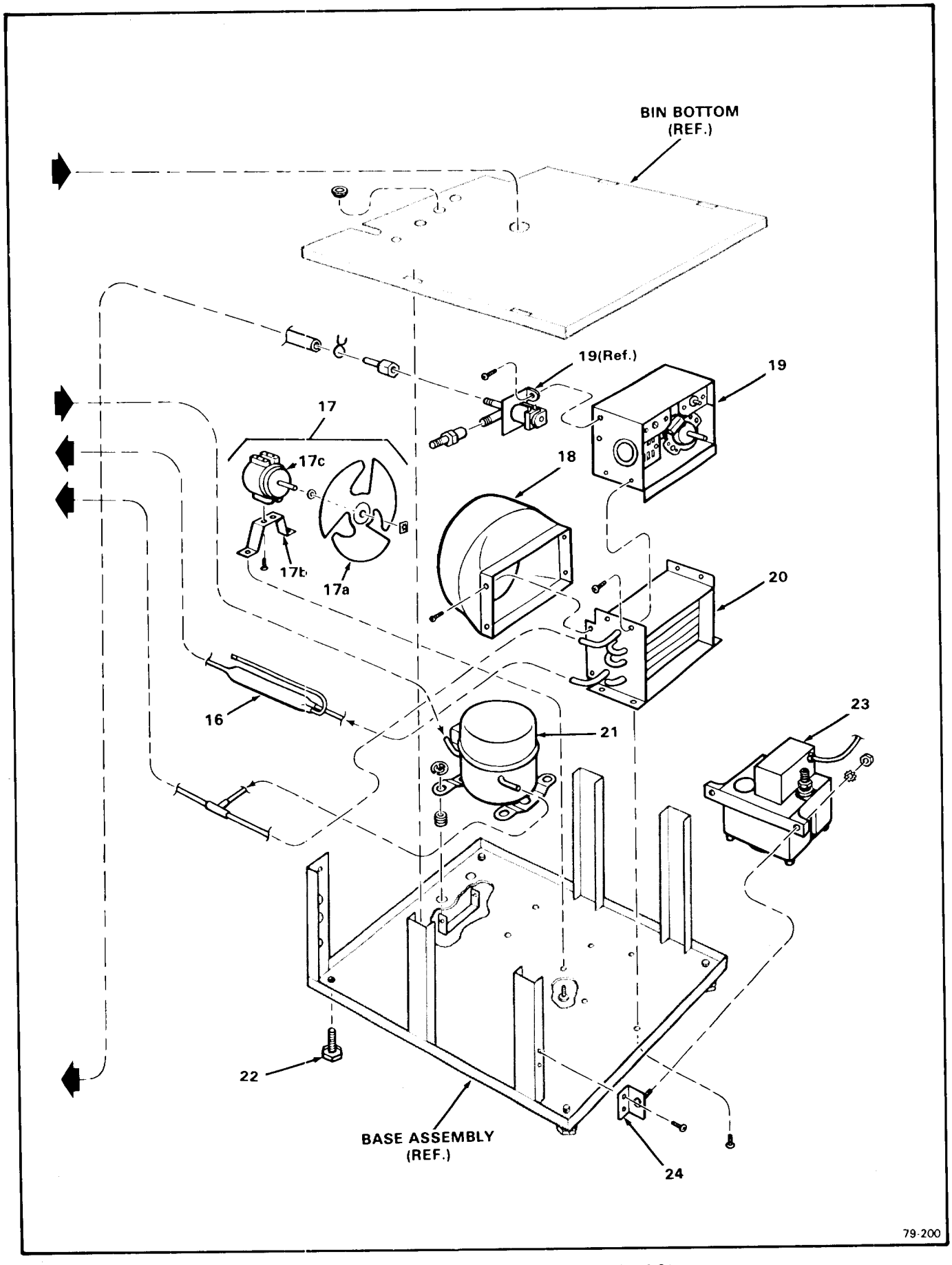

Figure 8-2. Major Assemblies (sheet 2 of 2)

Figure 8-2. Major Assemblies

INDEX NO.	DESCRIPTION	PART NUMBER	REQ'D NUMBER
	Major Assemblies	No Number	Ref.
	***		
1	Cover, Platen	02-2274-01	1
	***		
2	Tube, Platen Inlet	No Number	1
3	Tube, 1/4-inch I.D. (37-inch lg.) (Order by the foot)	13-0674-01	1
	attaching parts, Index 2 & 3		
	Holder, Tube	No Number	1
	Clamp, 7/16-inch O.D.	02-1727-00	2
	***		
4	Tube, Overflow	A24230-001	1
	attachine part, Index 4		
	O-Ring	13-0617-01	1
	Clamp	02-0535-01	1
	***		
5	Tube, 5/8-inch I.D. (4-1/4-inch lg.) (Order by the foot)	13-0688-02	1
6	Tube, 1/2-inch I.D. (3-1/4-inch lg.) (Order by the foot)	13-0688-01	1
7	Tube, 1/2-inch I.D. (3-5/8-inch lg.) (Order by the foot)	13-0688-01	1
	attaching parts, Index 5, 6, 7		
	Clamp (Index 5)	02-1775-02	2
	Clamp (Index 6 & 7)	02-0534-01	4
	***		
8	Blade, Fan	02-1719-00	1
	***		
9	Pump Assembly, Water	A27953-001	1
10	Gasket	13-0687-00	1
	attaching parts, Index 9 & 10		
	Spacer	No Number	2
	Washer, Special	No Number	2
	Washer Plain	No Number	2

Figure 8-2. Major Assemblies (Cont'd)

INDEX NO.	DESCRIPTION	PART NUMBER	REQ'D NUMBER
	Screw, No. 6 x 1/4 T/F Tap	03-1404-04	2
	Nut, U-Speed	03-1423-04	2
	***		
11	Insert Assembly, Bin	A22532-001	1
	(See Figure 8-3)		
	***		
12	Bin Assembly, Storage - Complete	A29111-001	1
12a	Fitting, Drain	02-1751-00	1
12b	O-Ring - 9/16-inch I.D.	13-0617-13	1
12c	Tube, Drain	02-1957-00	1
	***		
13	Evaporator (Only - less Accumulator & lines)	A26115-020	1
	***		
14	Evaporator Assembly - Complete	A26127-020	1
	***		
15	Valve Assemblies, Hot Gas	No Number	1
15a	Clamp, Hot Gas Valve	12-2009-01	1
15b	Coil, Hot Gas Valve	12-2008-01	1
15c	Body, Hot Gas Valve	12-2010-01	1
	***		
16	Drier	02-2488-01	1
	***		
17	Fan Motor and Bracket Assembly	No Number	1
	attaching parts, Index 17		
	Screw, No. 8 x 3/8 T/F Tap	03-1404-08	2
17a	Blade, Fan	18-3710-01	1
17b	Bracket, Mounting	No Number	1
17c	Motor, Fan	12-2121-01	1
	attaching parts		
	Pad, Vibration (p/o Fan Motor)	No Number	1

Figure 8-2. Major Assemblies (Cont'd)

INDEX NO.	DESCRIPTION	PART NUMBER	REQ'D NUMBER
	Nut, Fan Mounting (p/o Fan Motor)	No Number	1
	Screw (p/o Fan Motor)	No Number	2
	***		
18	Shroud, Fan	02-2496-01	1
	attaching part, Index 18		
	Screw, No. 8 x 3/8 T/F Tap	03-1404-08	4
	***		
19	Box Assembly, Control	No Number	1
	(See Figure 8-5)		
	attaching part, Index 19		
	Screw, No. 8 x 3/8 T/F Tap	03-1404-08	4
	***		
20	Condenser Assembly	18-3729-01	1
	attaching part, Index 20		
	Screw, No. 8 x 3/8 T/F Tap	03-1404-08	3
	***		
21	Compressor Assembly	18-4800-01	1
	(See Figure 8-4)		
	attaching part, Index 21		
	Grommet	18-4700-28	4
	Bracket, Compressor Mounting	A29015-001	2
	Clip	02-2497-01	4
	***		
22	Leveler, Leg	03-1608-01	4
	***		
23	Pump Sump - (Optional)	SPK18H Kit	1
	attaching part, Index 23		
24	Bracket, Mounting - Sump Pump	No Number	1
	Screw, No. 8 x 3/8 T/F Tap	03-1404-08	2
	Lockwasher, No. 10 External Tooth	03-1417-05	1

Figure 8-2. Major Assemblies (Cont'd)

INDEX NO.	DESCRIPTION	PART NUMBER	REQ'D NUMBER
	Nut, No. 10-24 Hex	03-1406-06	1
	***		
25	Tube, Bulb Holder (shown not exploded)	A29047-001	1
	(Bin Level Control capi lary tube inserted into tube)		
	***		

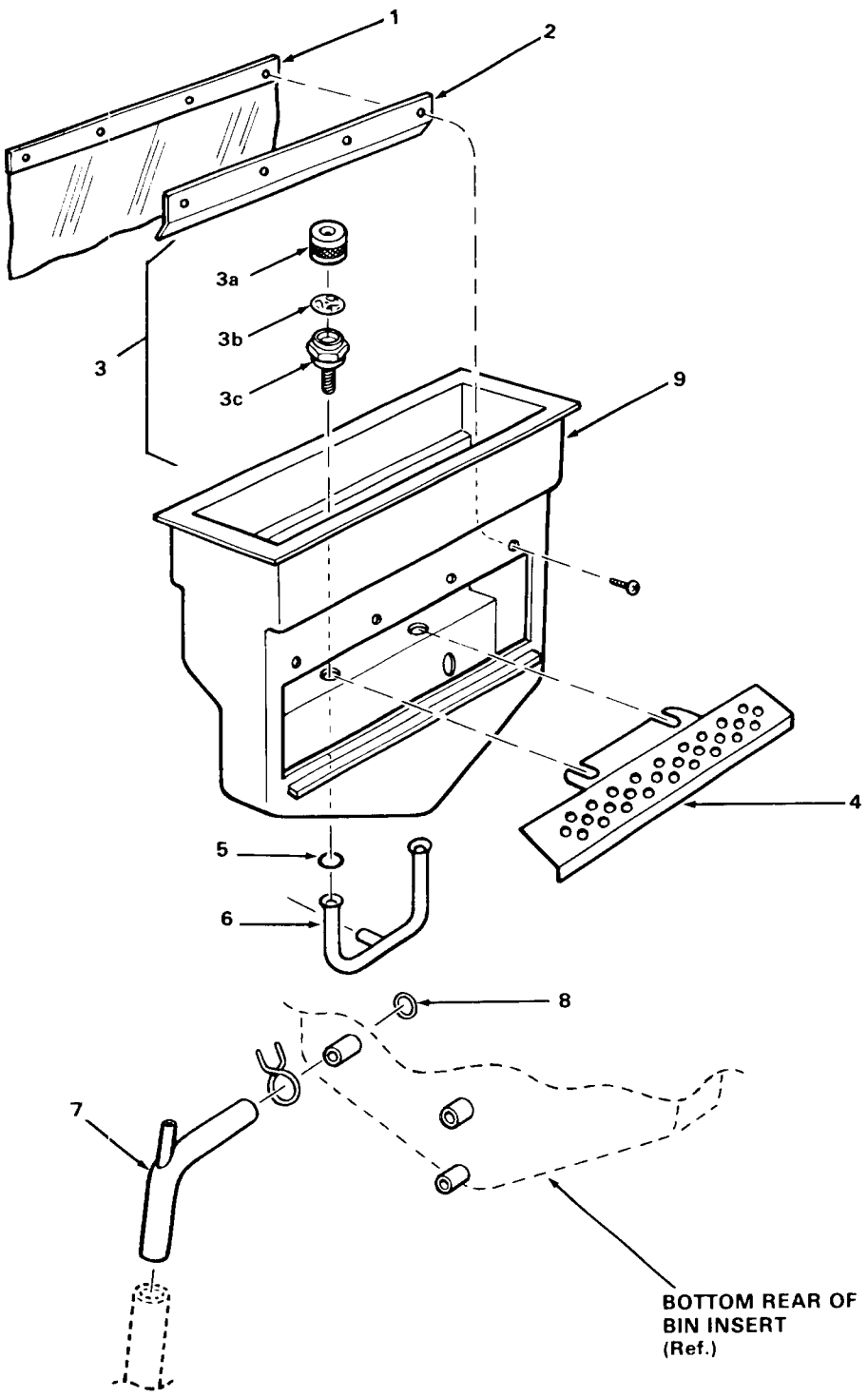

Figure 8-3. Bin Insert Assembly.

Figure 8-3. Bin Insert Assembly.

INDEX NO.	DESCRIPTION	PART NUMBER	REQ'D NUMBER
	Bin Insert Assembly - Complete	A22532-000	Ref.
	(See Figure/Index 8-2/11		
	for next higher Assembly)		
	***		
1	Curtain Assembly	02-2053-01	1
2	Stiffener, Curtain	A24155-001	1
	attaching parts, Index 1 & 2		
	Screw, No. 10 x 3/8 T/F Tap	03-1404-16	4
	***		
3	Nozzle Assembly (Screws into Index 6)	No Number	2
3a	Nozzle	02-1841-00	1
3b	Spinner	A09543-000	1
3c	Base, Jet	02-1840-00	1
	***		
4	Chute, Cube	A22518-000	1
	***		
5	O-Ring (1/4-inch I.D.)	13-0617-08	2
	***		
6	Bar Assembly, Spray	A19278-000	1
	***		
7	Tube, Overflow	A24230-001	1
	***		
8	O-Ring (1/2-inch I.D.)	13-0617-01	1
	***		
9	Insert, Bin	02-1923-00	1
	***		

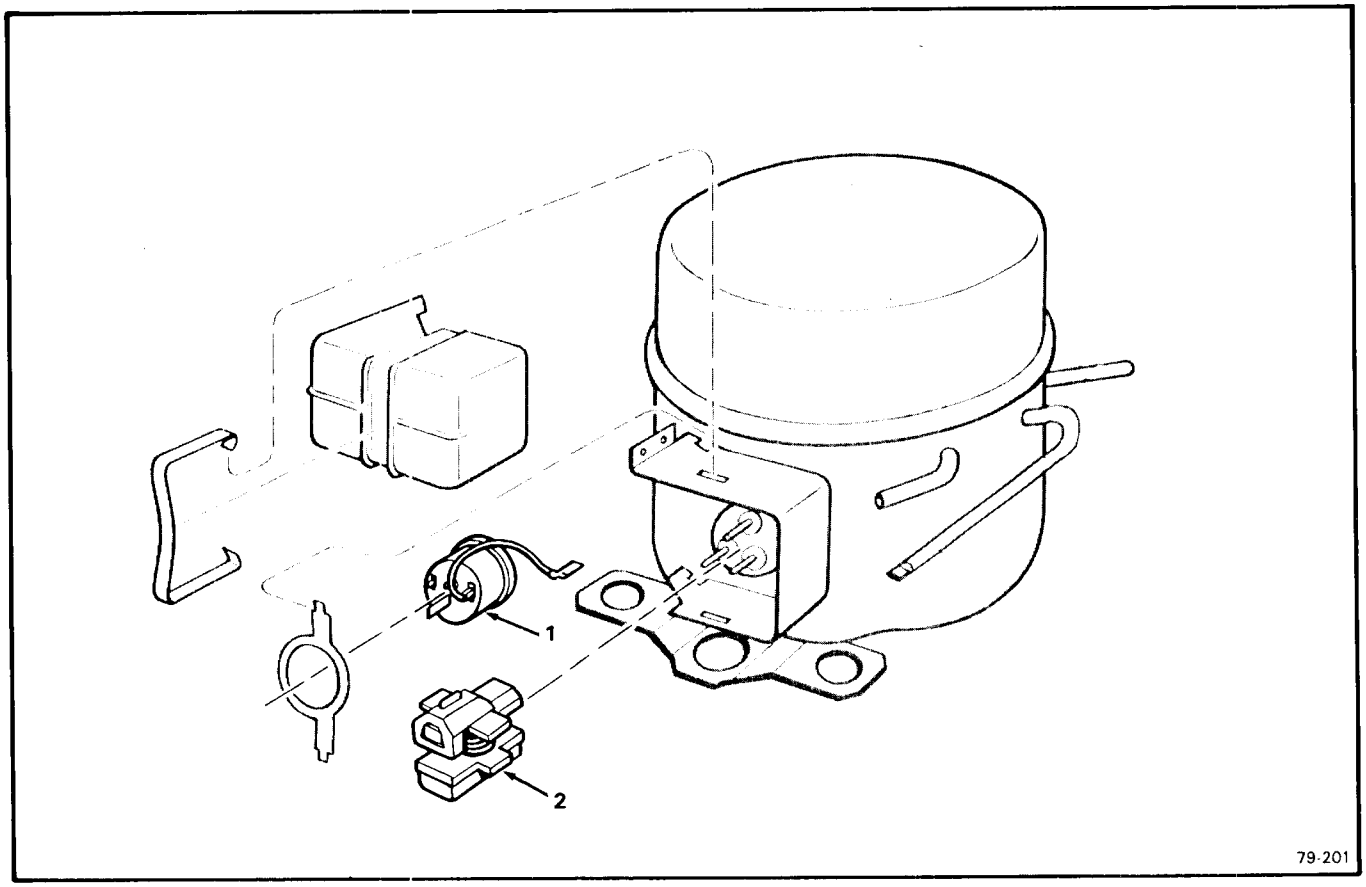

Figure 8-4. Compressor Assembly.

Figure 8-4. Compressor Assembly.

INDEX NO.	DESCRIPTION	PART NUMBER	REQ'D NUMBER
	Compressor Assembly	18-4800-01	Ref.
	(See Figure/Index 8-2/21		
	for next higher Assembly)		
	***		
1	Overload	18-4800-42	1
	***		
2	Relay, Start	18-4800-44	1
	***		

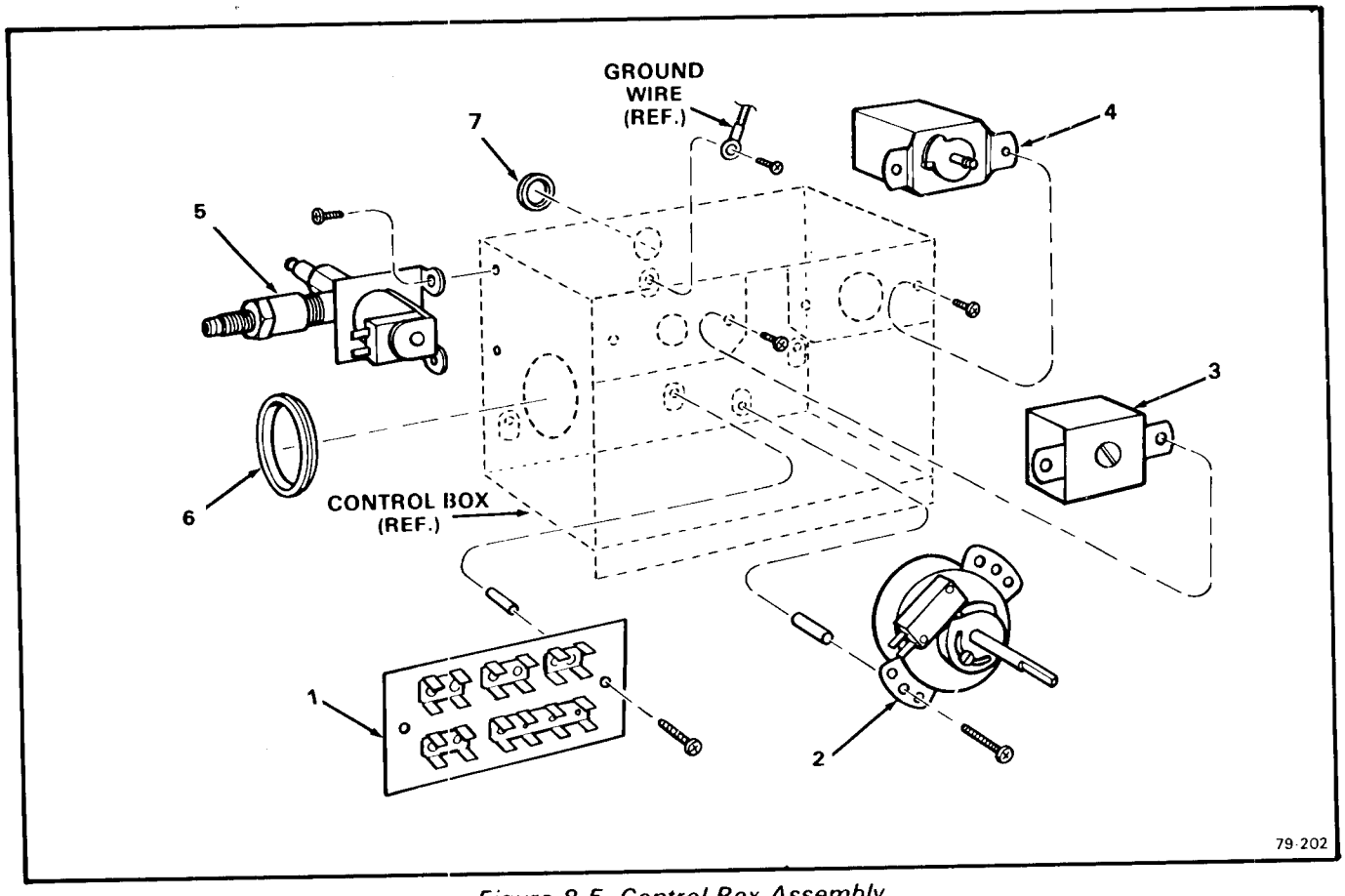

Figure 8-5. Control Box Assembly.

Figure 8-5. Control Box Assembly.

INDEX NO.	DESCRIPTION	PART NUMBER	REQ'D NUMBER
	Control Box Assembly	No Number	Ref.
	(See Figure/Index 8-2/19		
	for next higher Assembly)		
	***		
1	Board Assembly, Terminal	No Number	1
	attaching part, Index 1		
	Stand-Off - (5/8-inch lg.)	No Number	2
	Screw, No. 6-32 x 3/4 Phil Recess Pan Hd	03-1403-07	2
	***		
2	Timer & Switch Assembly	12-1980-01	1
	attaching part, Index 2		
	Stand-Off	No Number	2
	Screw, No. 6-32 x 1-1/2 Phil Recess Pan Hd	No Number	2
	***		

INDEX NO.	DESCRIPTION	PART NUMBER	REQ'D NUMBER
3	Control, Cube Size	11-0395-02	1
	attaching part, Index 3		
	Screw, No. 8-32 x 3/8 Phil Recess Pan Hd	03-1403-17	2
	***		
4	Control, Bin Level	11-0407-01	1
	attaching part, Index 4		
	Screw, No. 8-32 x 3/8 Phil Recess Pan Hd	03-1403-17	2
	***		
5	Valve Assembly, Water	12-1646-07	1
	***		
6	Bushing	12-1213-12	1
	***		
7	Grommet	No Number	1
	***		

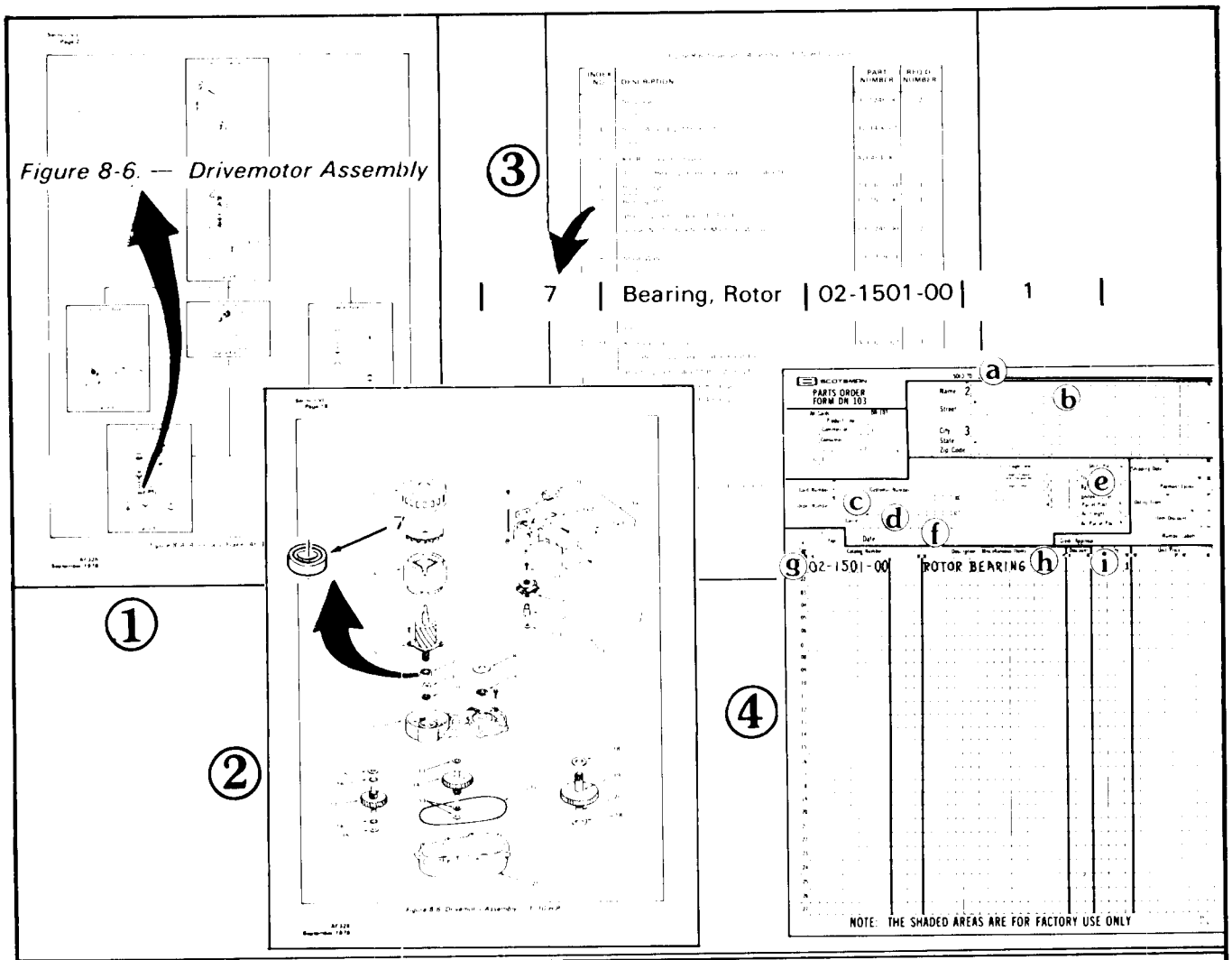

HOW TO USE A SCOTSMAN PARTS MANUAL WHEN ORDERING PARTS FOR ICE SYSTEMS PRODUCTS

IMPORTANT A. All Part Numbers have TEN DIGITS (spaces), required for use in the Computer System. BE SURE to fill in **ALL SPACES** in the CATALOG NUMBER column, on the Parts Order form as shown above.

B. Enter the QUANTITY of the Parts ordered, in the last digit column under the QUANTITY column heading, the one under the small 55 number, for parts from 1 thru 9. For 10 or more parts use two columns.

To be sure you receive the proper parts in the proper quantities, ALWAYS use the PART NUMBERS and DESCRIPTIONS given in the Parts Manuals.

The figures above illustrate the way a Parts Manual would be used, if the Part being ordered were the ROTOR BEARING that is used in the DRIVEMOTOR ASSEMBLY of an A-325 Automatic Flaker, for example.

PROCEDURE:

1. At the beginning of Section VIII, THE PARTS ILLUSTRATIONS AND PARTS LISTS, in each Parts and Service Manual, is Figure 8-A; which, is a flow chart prepared from exploded views in Section VIII. Use the flow chart to quickly determine which Figure contains the Assembly, Component or Part.

FIGURE 1: Since the Part required in the above example is in the DRIVEMOTOR ASSEMBLY, shown as FIGURE 8-6.

2. Open the Manual to page showing FIGURE 8-6.

3. Locate the PART and its INDEX NUMBER on the exploded view illustration.

FIGURE 2: The INDEX NUMBER for the PART is 7.

4. Check the numerical sequence in the associated Parts List following the illustration.

5. LOCATE the INDEX NUMBER 7, in the INDEX NO. column, the first column on the left side of the Parts List page.

FIGURE 3: INDEX NO. 7 is listed as a BEARING, ROTOR in the DESCRIPTION column. The Part Number for the Rotor Bearing is 02-1501-00 as listed in the PART NUMBER column on the right side of the Parts List page. And, one Rotor Bearing is listed in the REQ'D NUMBER column, or that ONLY one of those parts is required for one Drivemotor Assembly.

6. Write an order for the Part. (Use SCOTSMAN Parts Order Form DN103)

FIGURE 4: a. Distributor Name.
b. (Use for DROP-SHIP order ONLY).
c. Distributor Purchase Order Number.
d. Carrier
e. How shipped (Truck, Rail, UPS, etc.)
f. Date ordered
g. Part Catalog Number
(use full TEN digits (spaces) listed in Parts Manual, including dashes between numbers.
h. Description - as listed in Parts Manual.
i. Quantity - number of parts ordered.
(use far right column)

Figure 8-00. How To Use The Illustrated Parts List.

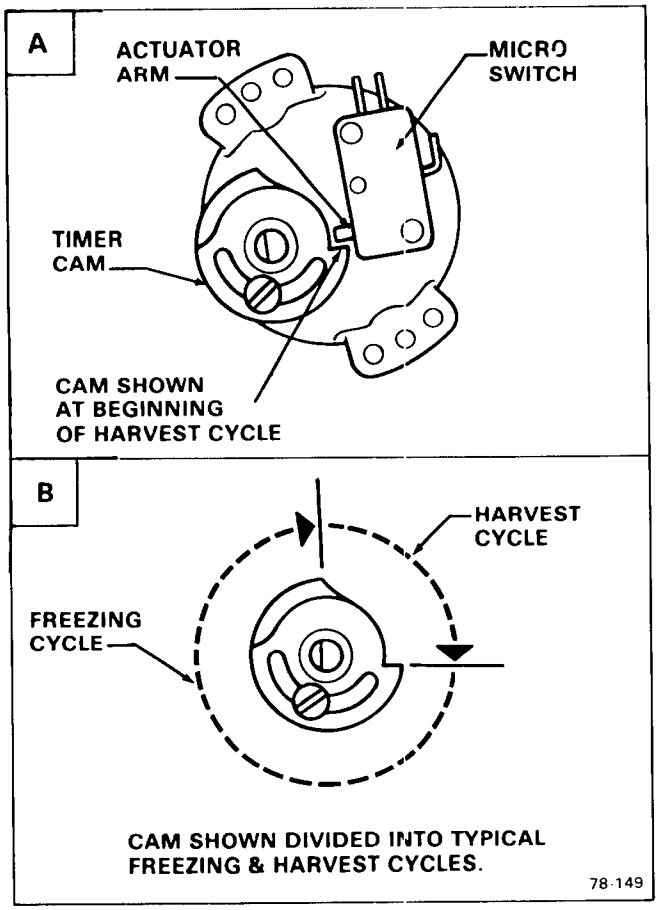

Figure 2-2. Timer Cam Positions.

NOTE

During START UP, advancing two harvest cycles, with the Compressor OFF, allows a check that: the Water Inlet Solenoid Valve operates properly; the incoming water flows; the Reservoir is filled in preparaton for the freezeing cycle, and; checks the function of the overflow and drain.

7. When the second cycle is completed, move the Compressor ON-OFF toggle switch to the ON position.

8. Check that the Front Cube Chute is properly positioned: with the rear edge resting on the two Cube Chute Supports; is inclined downward to the front, and; is fastened at the bottom of the opening at the front of the Freezing Chamber.

9. Check that the plastic Curtain hangs down evenly outside the opening at the front of the Freezing Chamber.

10. Check operation of Freezing Cycle:

    a. Compressor is in operation.

    b. Water Pump is operating and water is being sprayed from Spray Tubes into inverted ice cups.

    c. Icemaking process begins: feeling inside ice cube cups reveals cold temperatures and very shortly ice begins to form.

NOTE

Freezing time will range between 14 and 18 minutes in a 70-degree F. ambient atmosphere. Longer time for temperatures above 70-degrees F. and shorter, when below. Average complete cycle range is about 17 to 25 minutes.

WARNING

DO NOT operate this Icemaker when the water supply is shut OFF, or is BELOW the recommended 20 PSI water pressure. Move the Master ON-OFF toggle switch underside of the Control Box to the OFF position immediately.

11. Observe first ice cube harvests:

    a. Check size of ice cubes: when too small after a second harvest, refer to procedure IV-II, for adjustment to Cube Size Control to increase size of ice cube.

NOTE

Normal cube size is with a one-quarter inch depression in the crown.

    b. Check texture of ice cubes: when partially cloudy throughout, suggests unit operating short of water near end of freezing cycle, or possibly an extreme problem water condition, wherein filtering or purifying equipment is recommended. Contact SCOTSMAN-Queen Products Division, Service Department, Albert Lea, Minnesota, for further details.

12. With the Icemaker in the Harvest Cycle, hold a handful of ice cubes on the Bin Thermostat Control Bulb to test shutoff. The ice should cause the Icemaker to shut OFF at the end of Harvest Cycle.

NOTE

Within minutes after the ice is removed from the sensing bulb, the bulb will warm up and cause the icemaker to restart. This control is factory set and should not be reset until testing is performed. Normal setting is about 35-degrees F. CUT-OUT and 40-degrees CUT-IN.

13. Thoroughly explain to the owner/user the significant specifications of the Icemaker, the start up and operation, maintenance and cleaning procedures. Answer all questions about the Icemaker, by the owner; and and, inform the owner of the name and telephone number of the authorized SCOTSMAN Service Agency serving him.

SECTION III

PRINCIPLES OF OPERATIONS

How It Works

I. FREEZING CYCLE

Water from the sump in the Reservoir is pumped through the Water Manifold, which consists of a manifold Tube and four spray Bars attached to it. See Figure 3-1. Each stationary Spray Bar has three jets, Jet Spinners, through which water is sprayed into the inverted cube molds of the Freezer Assembly Evaporator. At the beginning of the Freeze Cycle the electrical circuit is completed to the Compressor, Water Pump, and the coil of the Finish Relay. The Water Pump operates continuously during the Freeze Cycle through contacts of the Finish Relay. In Water-Cooled models water also flows through the Condenser and out the drain. While in the Condenser water removes heat from the refrigerant and allows the refrigerant to condense from a gas to a liquid.

Refrigerant is compressed in the Compressor and discharged into the Condenser as a high pressure, high temperature gas. The refrigerant is cooled and condensed by either air or water and condenses to a high pressure, high temperature liquid. This liquid refrigerant then passes through a small capillary tube where the temperature and pressure of the liquid refrigerant are lowered. The low pressure, low temperature liquid refrigerant, then enters the Evaporator. The refrigerant is warmed by water being sprayed against the Evaporator and begins to boil off, to become a gas. The refrigerant next travels through the Accumulator where any remaining liquid refrigerant then returns to the Compressor as a low pressure, low temperature gas and the cycle starts again.

During the Freezing Cycle, both the Water Inlet Solenoid Valve and the Hot Gas Solenoid Valve are CLOSED.

When the ice cubes are about 3/4 formed, the Cube Size Control bulb located on the suction line will sense the temperature at which it is preset to CLOSE. This will complete the electrical circuit to the Timer. The Timer then controls the remainder of the cycle.

The Timer will keep the Icemaker operating in the Freeze Cycle for the next six minutes. This will give the cubes time to fully form. After six minutes, the Timer will switch the Icemaker into the Harvest Cycle, through the contacts of the Timer Assembly microswitch.

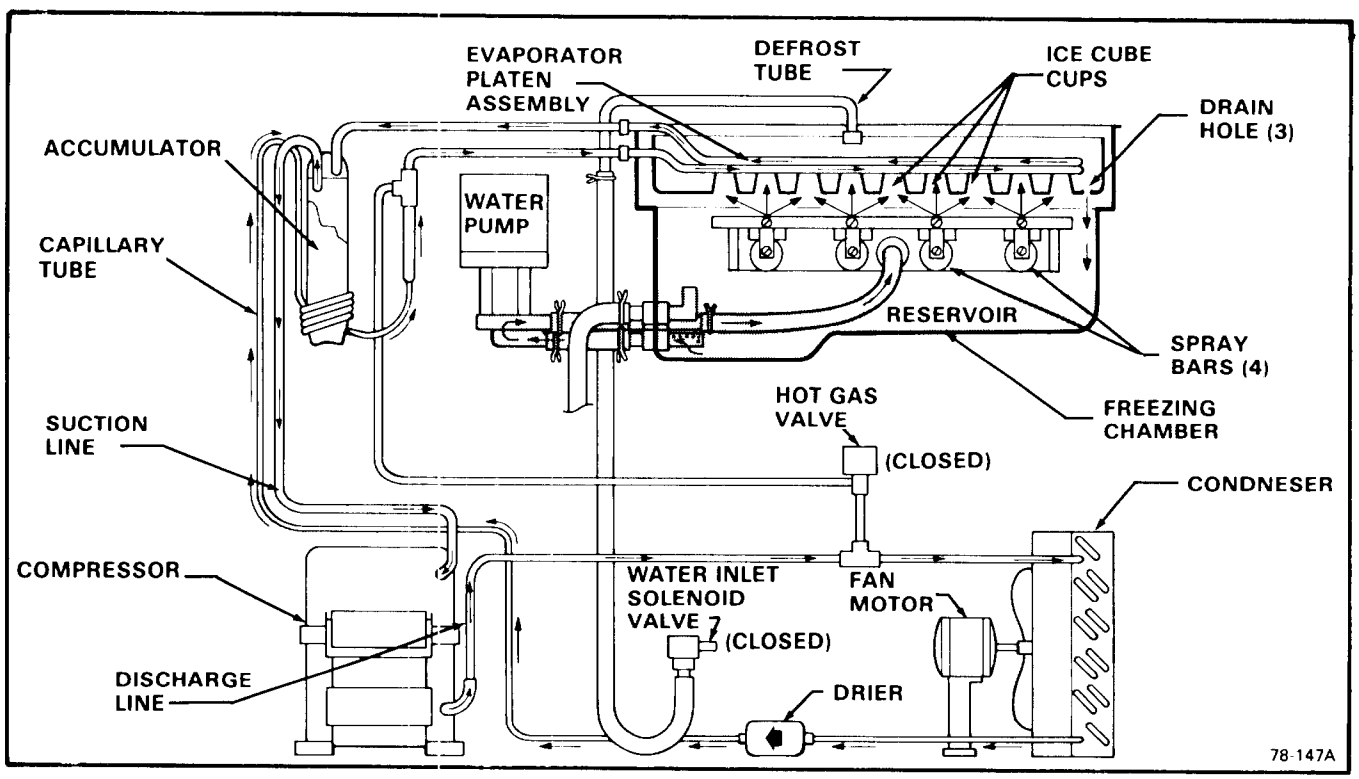

Figure 3-1. Freezing Cycle

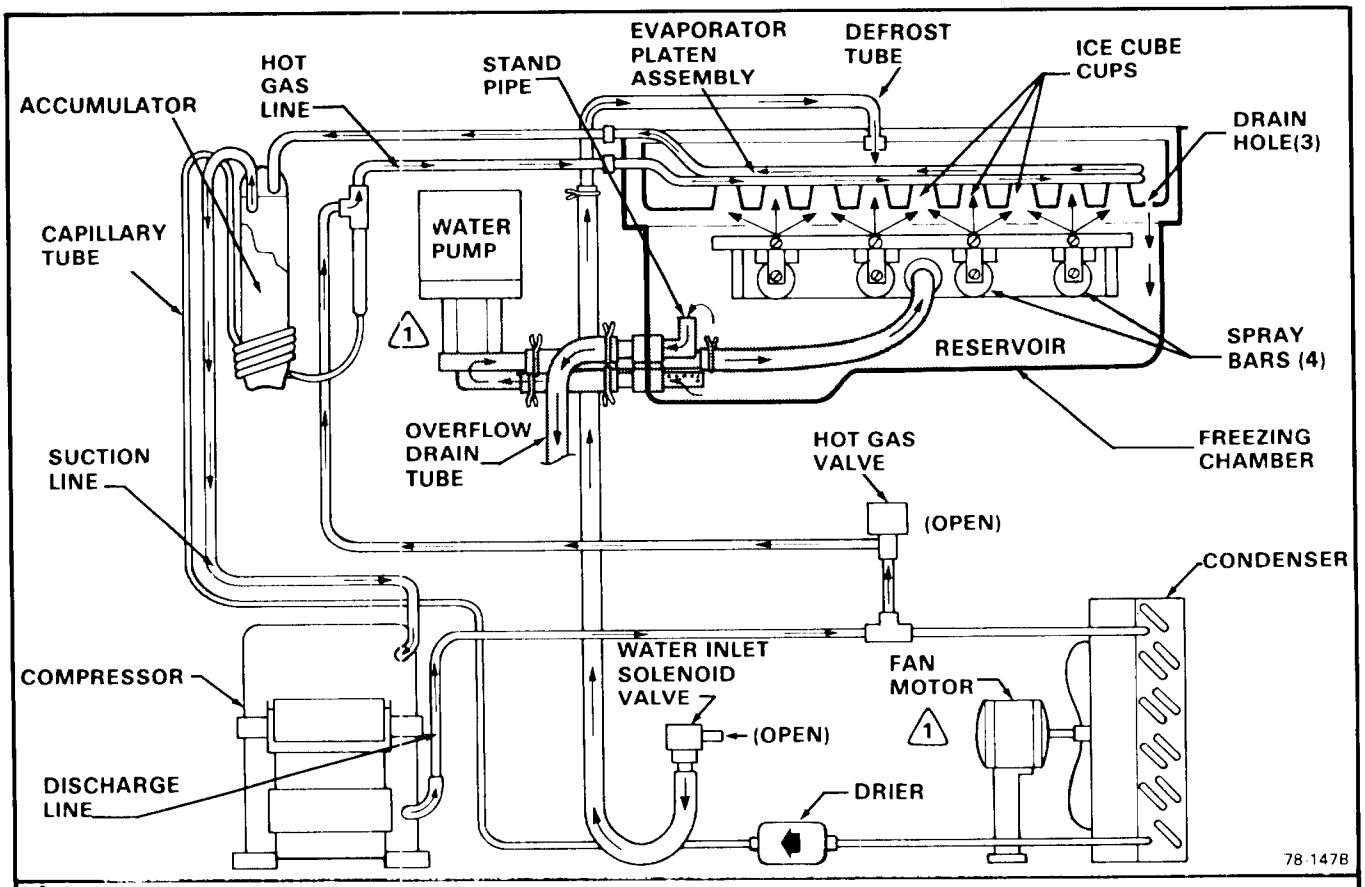

1 On Air-Cooled Models, the Water Pump Motor and Fan Motor may cycle intermittently during the Harvest Cycle.

On Water-Cooled Models, the Water Pump Motor is OFF during Harvest Cycle.

Figure 3-2. Harvest Cycle.

II. HARVEST CYCLE

When the Timer switches the Icemaker into the Harvest Cycle, hot gas being discharged from the Compressor is diverted through the Hot Gas Solenoid Valve into the Evaporator. During this cycle, the hot gas circulates from the Compressor to the Evaporator and back again, bypassing the Condenser and capillary tube. In the electrical circuit, the Compressor is operating and both the Water Inlet Solenoid Valve and the Hot Gas Solenoid Valve are energized. See Figure 3-2. Opening the Water Inlet Solenoid Valve allows a fresh water supply to be discharged into the top of the Platen Assembly Evaporator. The finished ice cubes are released from the Evaporator by the warming effect of the hot gas flowing through the Evaporator tubes and the water flow around the ice cube molds. The released ice cubes drop onto the slanted Front Cube Chute and into the ice storage bin. At the end of the two minute Harvest Cycle, the Timer cam will push the actuator arm of the microswitch IN. If the Bin Thermostat is still CLOSED, a whole new cycle will begin. If the Bin Thermostat is OPEN, the Icemaker will shut OFF at this time.

III. FUNCTIONAL SEQUENCE - Air-Cooled Models

The AC-20 Automatic Cubers are designed to operate on 115 volts, 60 Hertz, single phase. Other voltage requirements are available on special order. Therefore, always CHECK NAMEPLATE for electrical information BEFORE proceeding with electrical wiring connections to the Icemaker.

The following text and associated wiring diagrams describe the sequential series of events as they occur in Air-Cooled Model AC-20 Cubers, during the modes of initial START UP, the Freezing Cycle, the Harvest Cycle, and the significant changes in switch positions and contact points during those cycles.

A. FREEZING CYCLE - START MODE

(See Figure 3-3)

The Bin Thermostat is CLOSED, signalling the call for ice. The Finish Relay Coil is energized through the N/O contacts of the Timer Switch and the Bin Thermostat; contacts 7-4, 8-5, and 9-6 of the Finish Relay CLOSE. A circuit is made through the CLOSED 9-6 contacts of the Finish Relay, to the Pump Motor and Fan Motor. The Bin Thermostat circuit energizes the Compressor Relay. The CLOSED 7-4 contacts of the Finish Relay provide a lockout, parallel circuit, so, once the cycle has begun, if the Bin Thermostat were to OPEN, the Freezing Cycle would continue to function through the 7-4 contacts of the Finish Relay. See Figure 3-4.

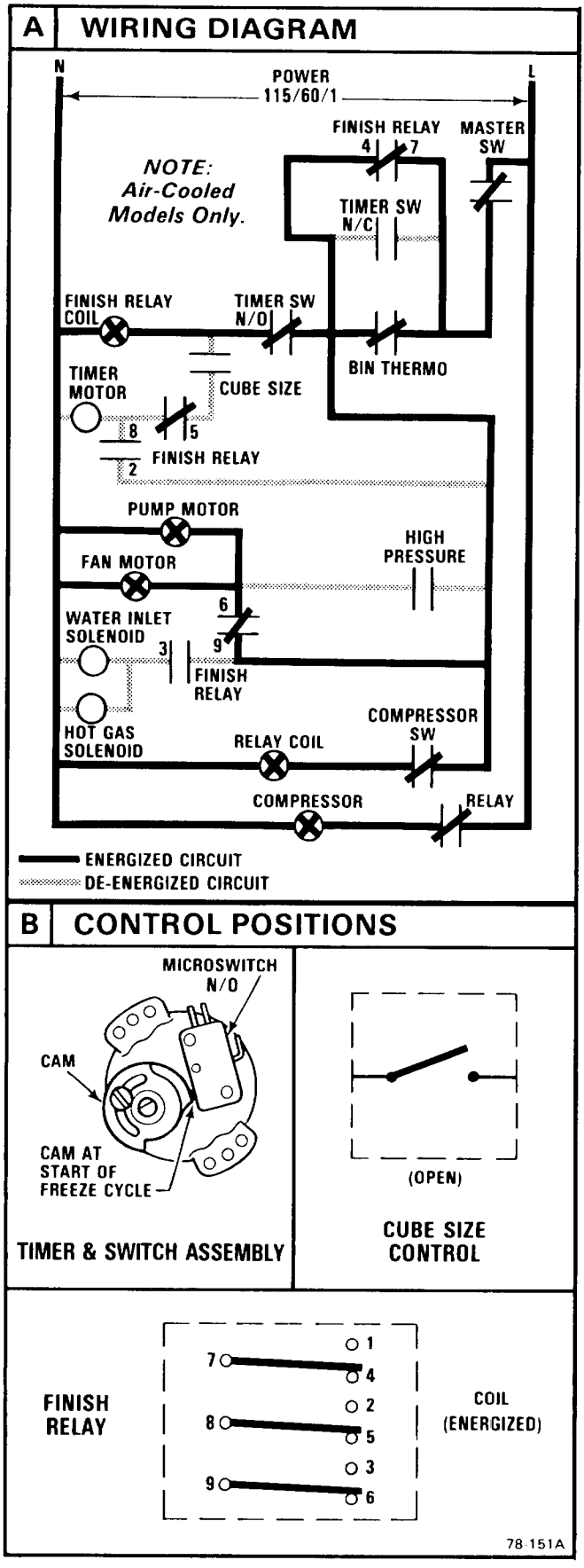

Figure 3-3. Freeze Cycle - START Mode

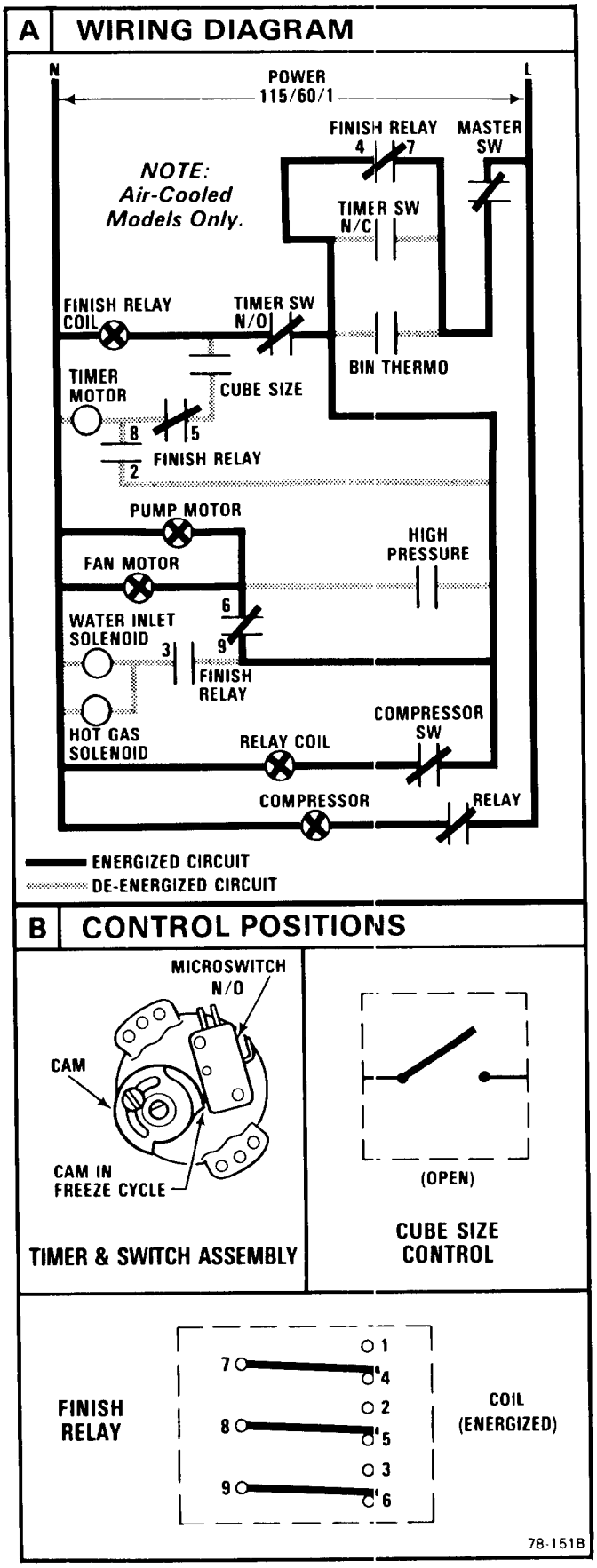

Figure 3-4. Freeze Cycle - START Mode, with Bin Thermo OPEN.

B. FREEZING CYCLE - TIMED MODE

(See Figure 3-5)

As the Freezing Cycle progresses, the Evaporator temperature decreases. When the Capillary bulb of the Cube Size Control, installed on the outlet line of the Evaporator, senses a preset temperature, the contacts of the Cube Size Control CLOSES. A circuit to the Timer Motor is made through the 8-5 contacts of the Finish Relay, the Cube Size Control, the CLOSED N/O contacts of the Timer Switch and the Bin Thermostat. If the Bin Thermostat were to OPEN, the Timer Motor would continue to operate through the lockout, parallel circuit provided by the 7-4 contacts of the Finish Relay. See Figure 3-6. The Water Pump, Condenser Fan Motor and the Compressor remain ON.

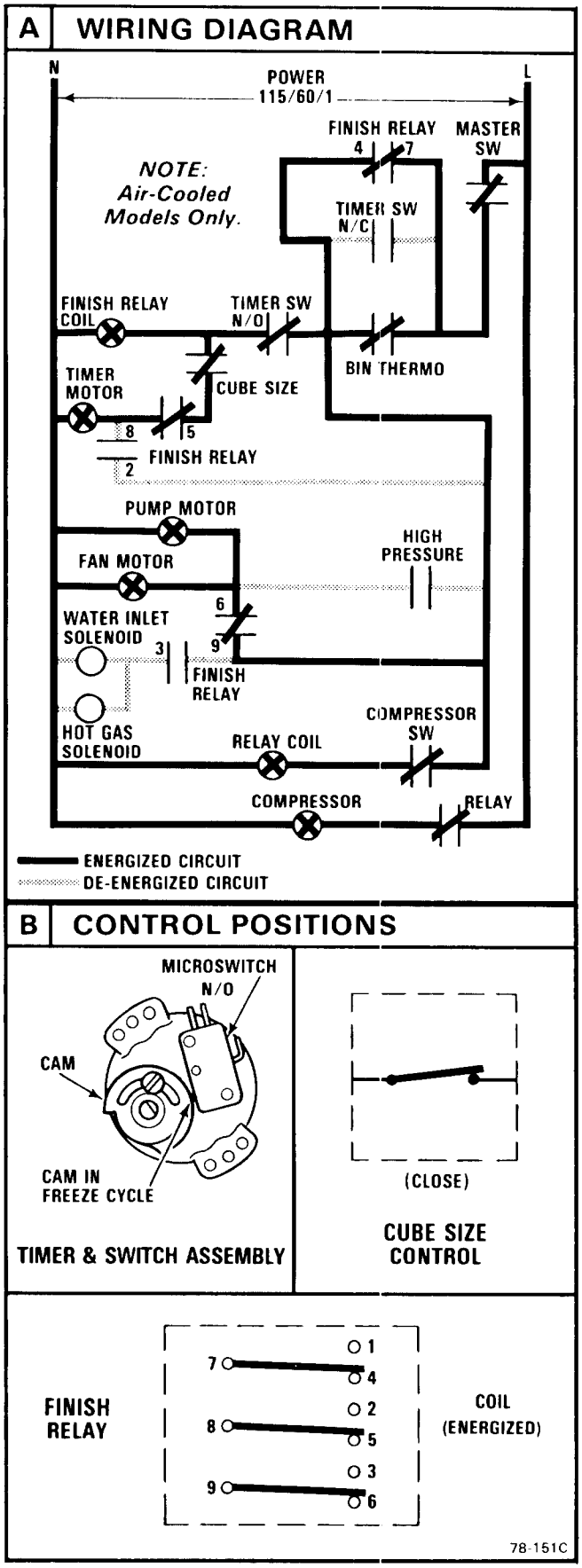

Figure 3-5. Freeze Cycle - Timed Mode

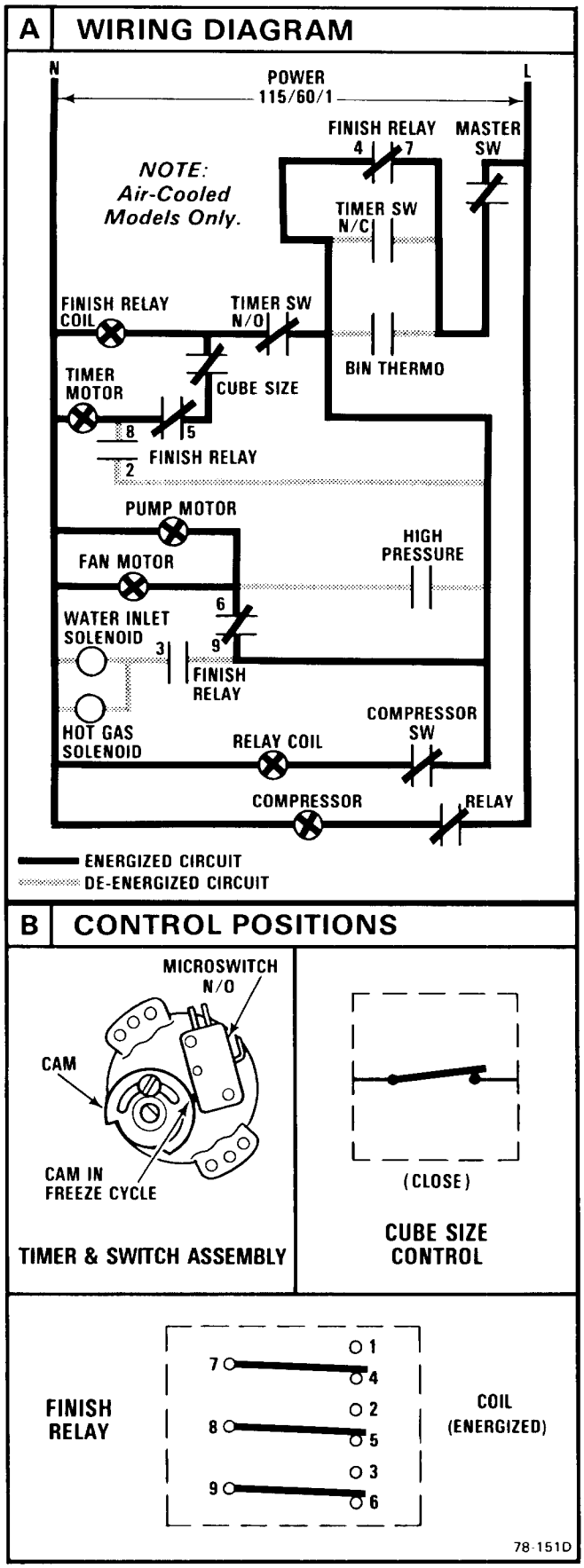

Figure 3-6. Freeze Cycle - Timed Mode, with Bin Thermo OPEN.

C. HARVEST CYCLE MODE

(See Figure 3-7)

The Timer cam has advanced to the point when the actuator arm of the Timer Microswitch drops into the Cam slot, which OPENS the N/O contacts and CLOSES the N/C contacts of the microswitch; this OPENS the 7-4, 8-5 and 9-6 contacts of the Finish Relay, while CLOSING the 8-2 and 9-3 contacts. The Timer Motor will continue to operate through the 8-2 contacts of the Finish Relay and the CLOSED N/C contacts of the Timer Switch. The Water Inlet Solenoid Valve and the Hot Gas Solenoid Valve are energized through the CLOSED 9-3 contacts of the Finish Relay and the CLOSED N/C contacts of Timer Switch. The Water Pump motor and the Fan Motor may cycle intermittently during the Harvest Cycle, through contacts of the High Pressure Fan Control. The Compressor continues to operate through the Bin Thermostat circuit. The N/C contacts of the Timer Switch provide a lockout, parallel circuit to prevent the icemaking system from shutting OFF, should the Bin Thermostat OPEN before the Harvest Cycle is completed. See Figure 3-8. The Timer cam continues to advance to the position to push the actuator arm of the Timer microswitch IN.

THEN:

1. If the Bin Thermostat contacts are CLOSED, the Freezing Cycle will START again. See Figure 3-3.
2. If, the Bin Thermostat is SATISFIED and the contacts are OPEN, the Finish Relay CANNOT re-energize and the system shuts OFF. See Figure 3-9.

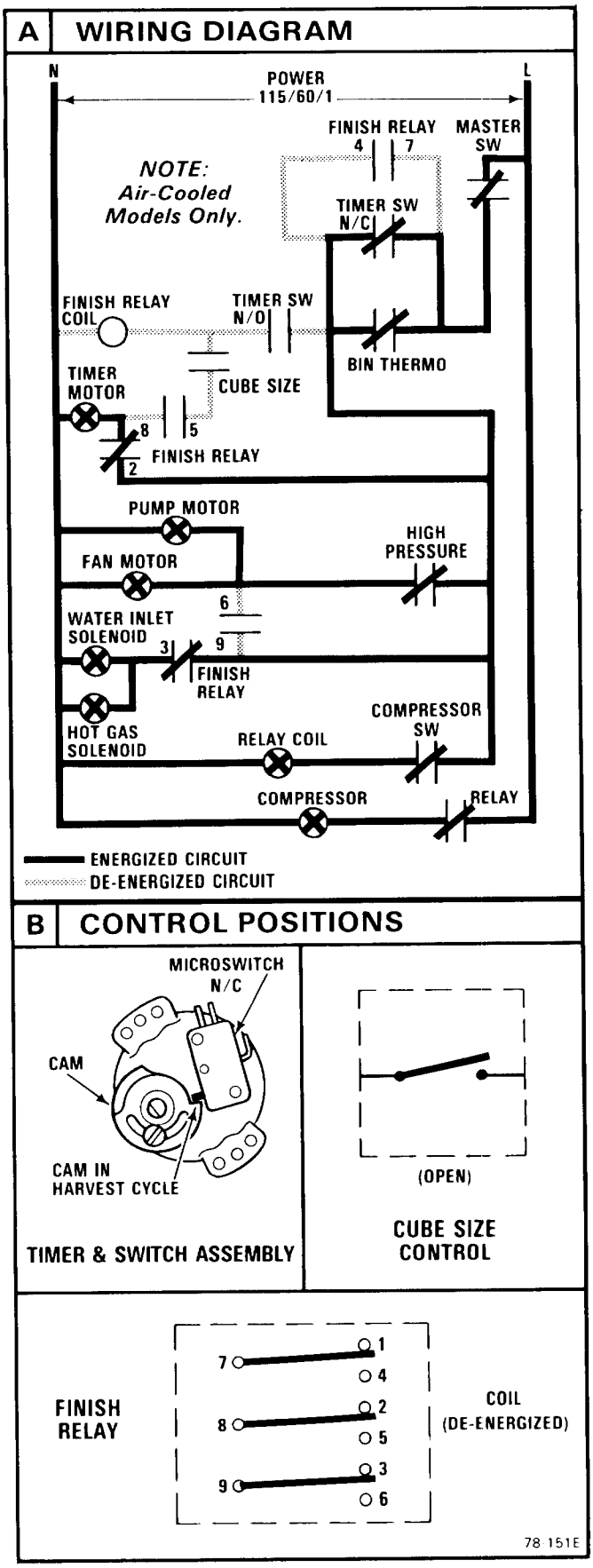

Figure 3-7. Harvest Cycle Mode

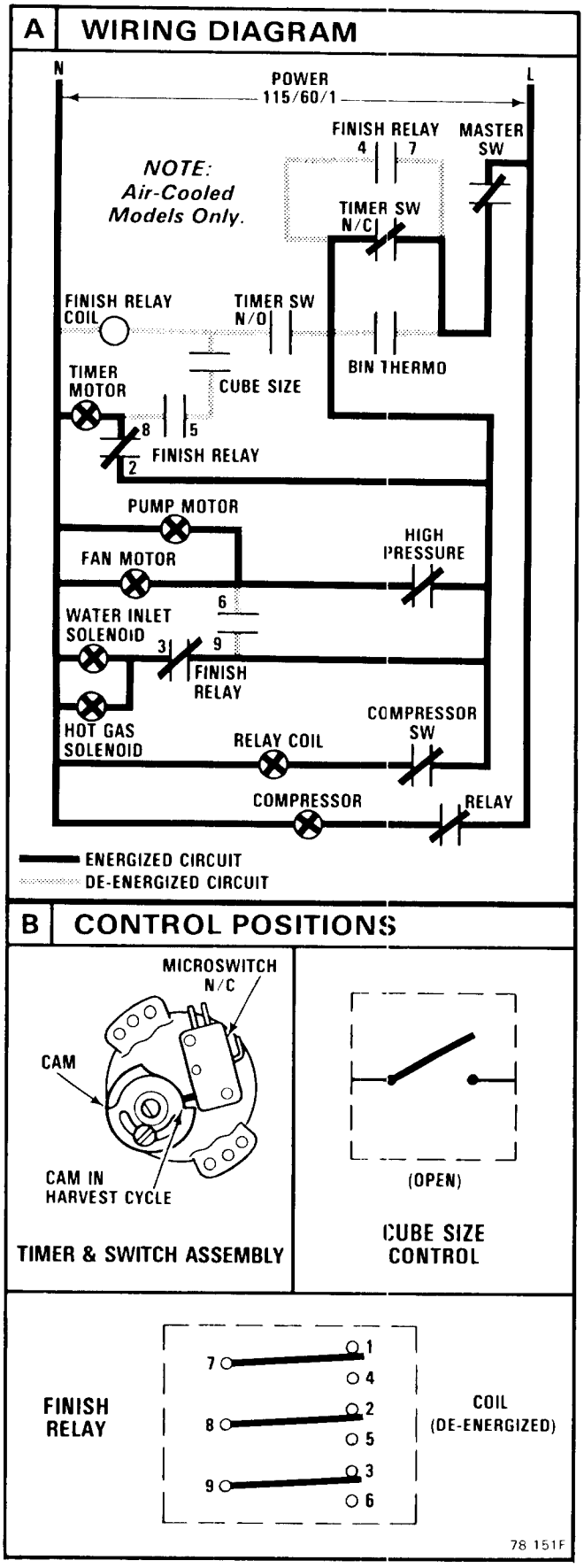

Figure 3-8. Harvest Cycle Mode - with Bin Thermo OPEN

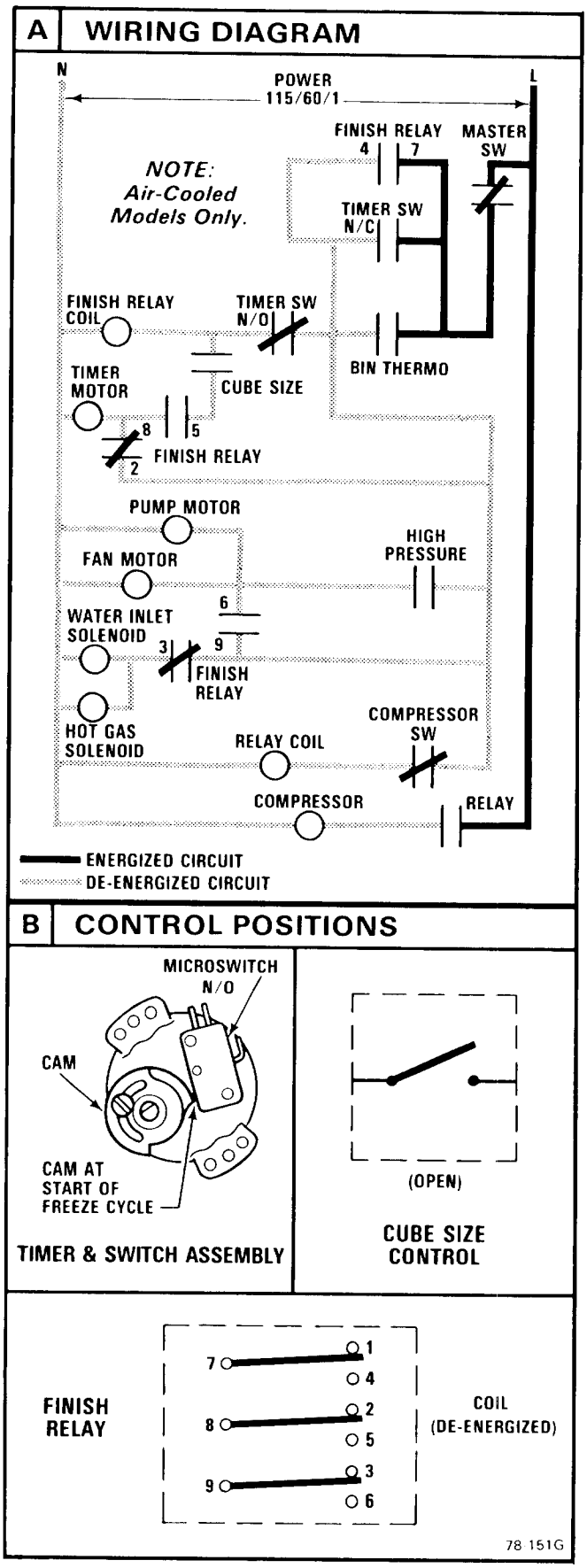

Figure 3-9. Cuber OFF - Bin Thermo OPEN, with Bin Filled with Ice

IV. FUNCTIONAL SEQUENCE - Water-Cooled Models

The AC20 Automatic Cubers are designed to operate on the 115 volt, 60 Hertz, single phase. Other voltage requirements are available on special order. Therefore, always check NAMEPLATE for electrical information before proceeding with electrical wiring connections to the Icemaker.

The following text and associated wiring diagrams describe the sequential series of events as they occur in Water-Cooled Model AC-20 Cubers, during the modes of initial START UP, Freezing Cycle, Harvest Cycle, and the significant changes in switch positions and contact points during those cycles.

A. FREEZING CYCLE - START MODE

(See Figure 3-10)

The High Pressure Control is CLOSED and the Bin Thermostat CLOSES calling for ice to be made, The Finish Relay Coil is energized through the N/O contacts of the Timer Switch and the Bin Thermostat; contacts 7-4, 8-5, and 9-6 of the Finish Relay CLOSE. A circuit is made through the CLOSED 9-6 contacts of the Finish Relay, to the Pump Motor. The Bin Thermostat circuit energizes the Compressor Relay. The CLOSED 7-4 contacts of the Finish Relay provide a lockout, parallel circuit, so, once the cycle has begun, if the Bin Thermostat were to OPEN, the Freezing Cycle would continue to function through the 7-4 contacts of the Finish Relay. See Figure 3-11.

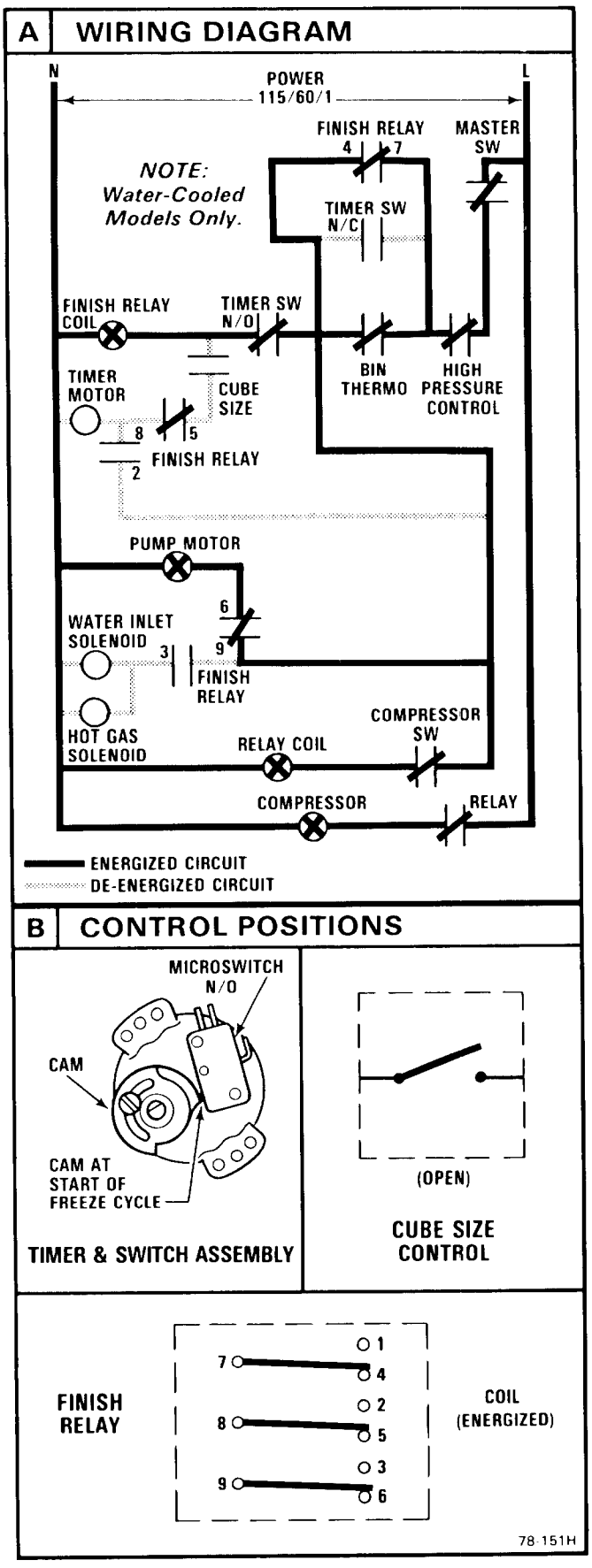

Figure 3-10. Freeze Cycle - START Mode

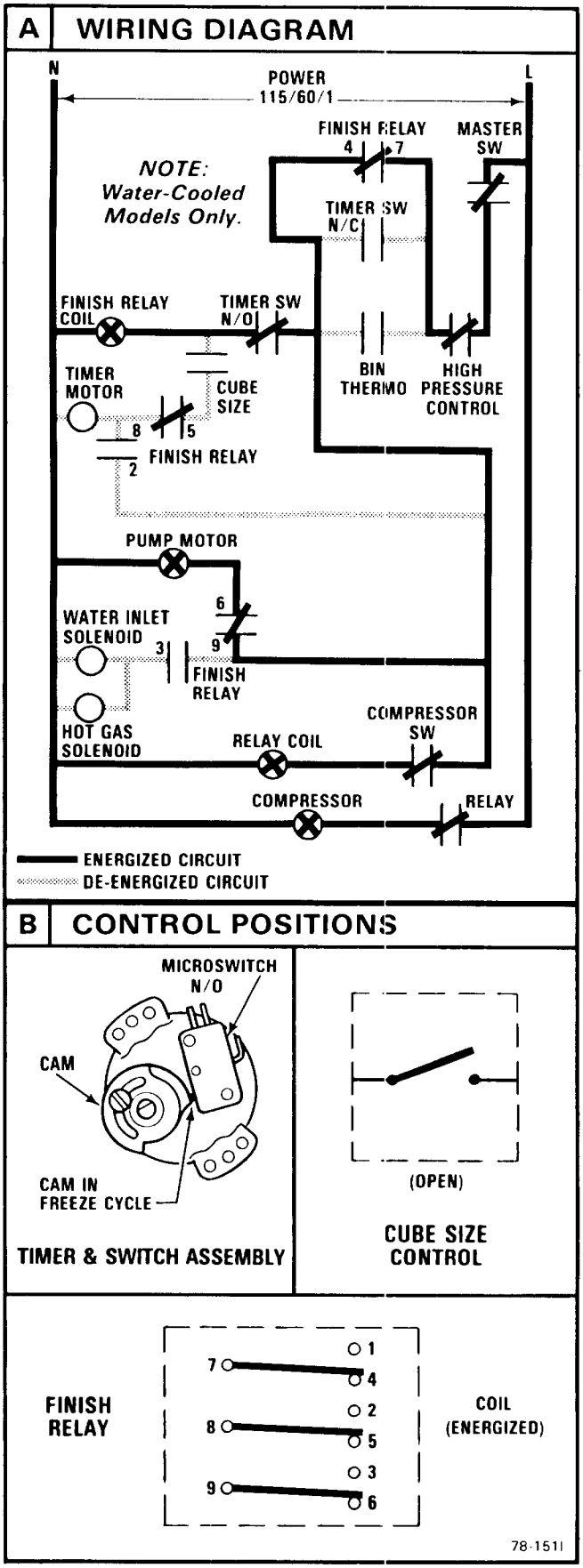

Figure 3-11. Freeze Cycle - START Mode, with Bin Thermo OPEN

B. FREEZING CYCLE - TIMED MODE

(See Figure 3-12)

As the Freezing Cycle progresses, the Evaporator temperature decreases. When the capillary bulb of the Cube Size Control, installed on the outlet line of the Evaporator, senses a preset temperature, the contacts of the Cube Size Control CLOSES. A circuit to the Timer Motor is made through the 8-5 contacts of the Finish Relay, the Cube Size Control, the CLOSED N/O contacts of the Timer Switch and the Bin Thermostat. If the Bin Thermostat were to OPEN, the Timer Motor would continue to operate through the lockout, parallel circuit provided by the 7-4 contacts of the Finish Relay. The Water Pump and the Compressor remain ON. See Figure 3-13.

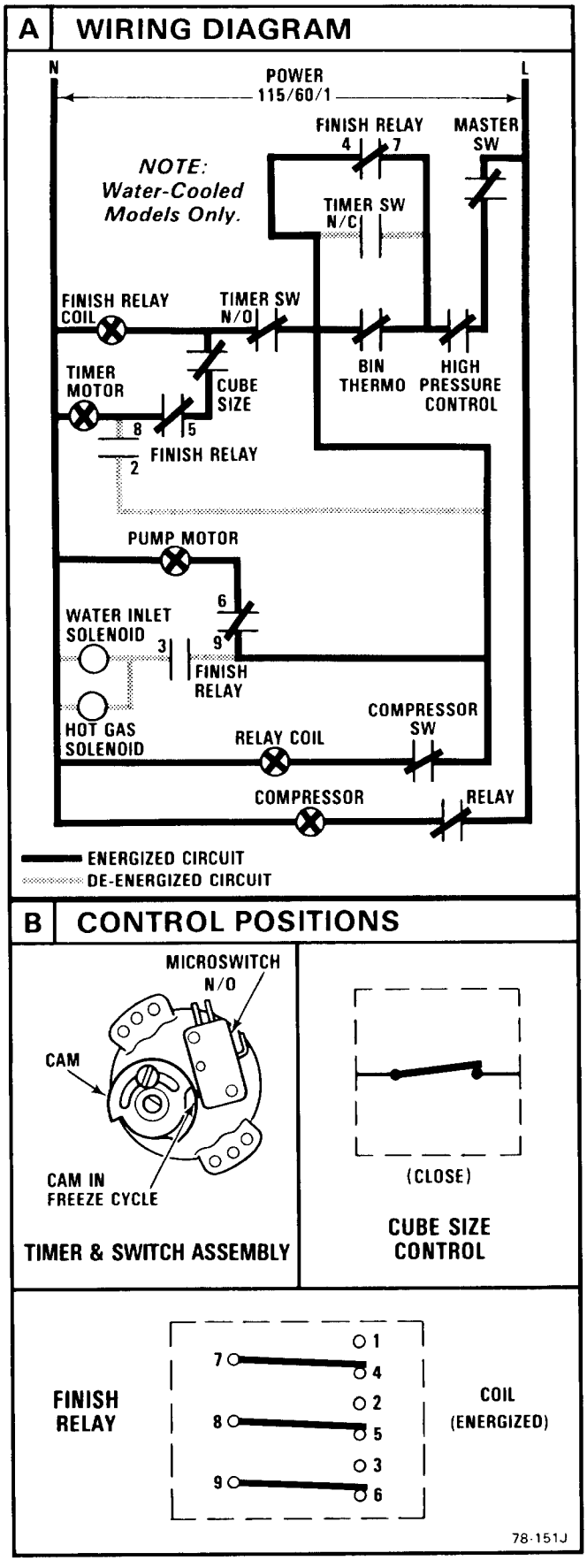

Figure 3-12. Freeze Cycle - Timed Mode

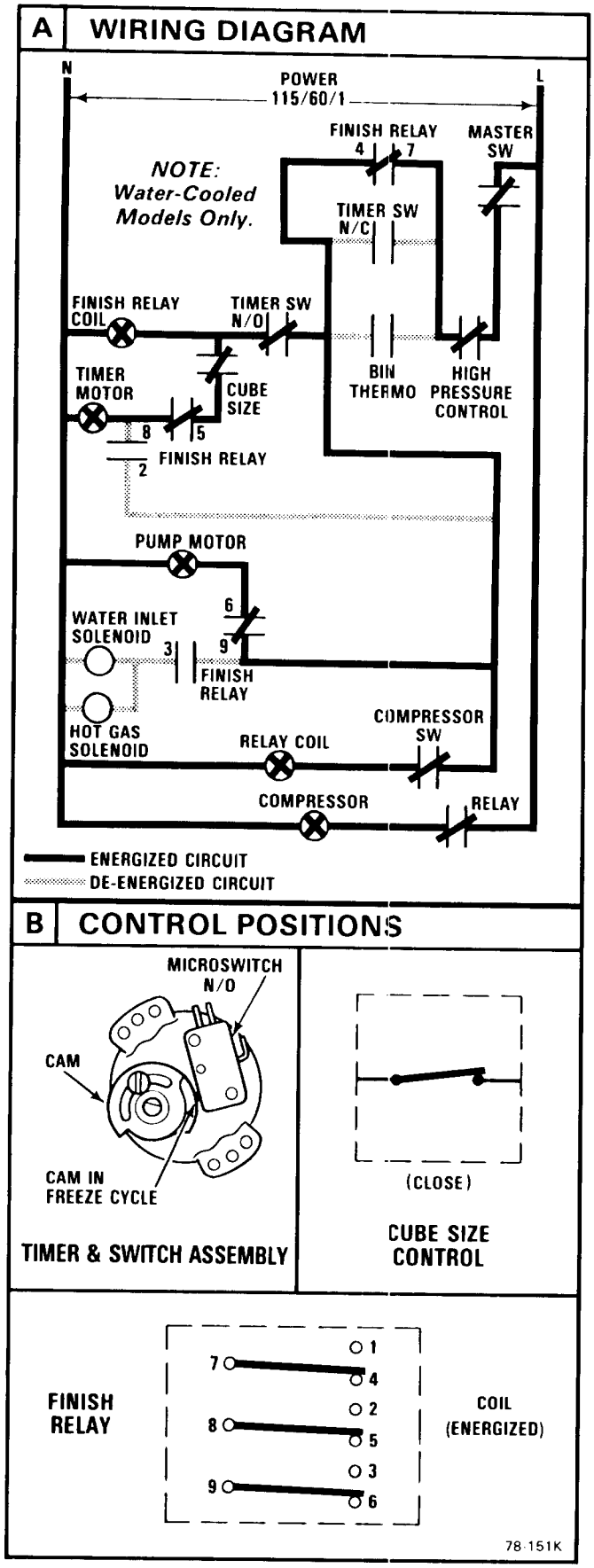

Figure 3-13. Freeze Cycle - Timed Mode, with Bin Thermo OPEN

C. HARVEST CYCLE MODE

(See Figure 3-14)

The Timer cam has advanced to the point when the actuator arm of the Timer microswitch drops into the Cam slot, which opens the N/O contacts and CLOSES the N/C contacts of the microswitch; the electrical circuit to the Finish Relay Coil is now incomplete and the coil de-energizes. This OPENS the 7-4, 8-5 and 9-6 contacts of the Finish Relay, while CLOSING the 8-2 and 9-3 contacts. The Timer Motor will continue to operate through the 8-2 contacts of the Timer Switch. The Water Inlet Solenoid Valve and the Hot Gas Solenoid Valve are energized through the CLOSED 9-3 contacts of the Finish Relay and the CLOSED N/C contacts of the Timer Switch. The Water Pump Motor is NOT ON during the Harvest Cycle on the Water-Cooled models. The Compressor continues to operate through the Bin Thermostat circuit. The N/C contacts of the Timer Switch provide a lockout, parallel circuit to prevent the ice-making system from shutting OFF, should the Bin Thermostat OPEN before the Harvest Cycle is completed. See Figure 3-15. The Timer cam continues to advance to the position where it will push the actuator arm of the Timer microswitch.

THEN:

1. If the Bin Thermostat contacts are CLOSED, the Freezing Cycle will START again. See Figure 3-10.
2. If, the Bin Thermostat is SATISFIED and the contacts are OPEN, the Finish Relay CANNOT re-energize and the system shuts OFF. See Figure 3-16.

NOTE

The High Pressure Control will shut the entire Cuber down, any time the discharge pressure gets above the setting of the High Pressure Control. This control must be manually reset for the Cuber to begin operating again.

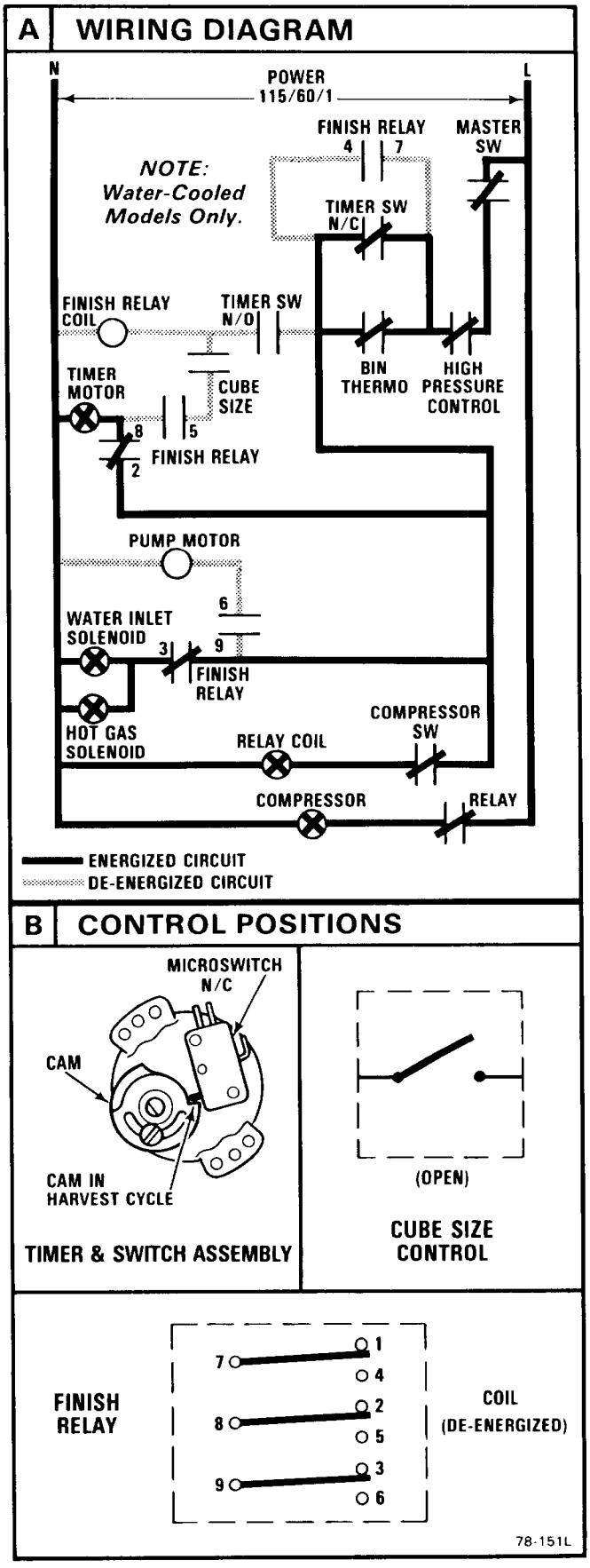

Figure 3-14. Harvest Cycle Mode

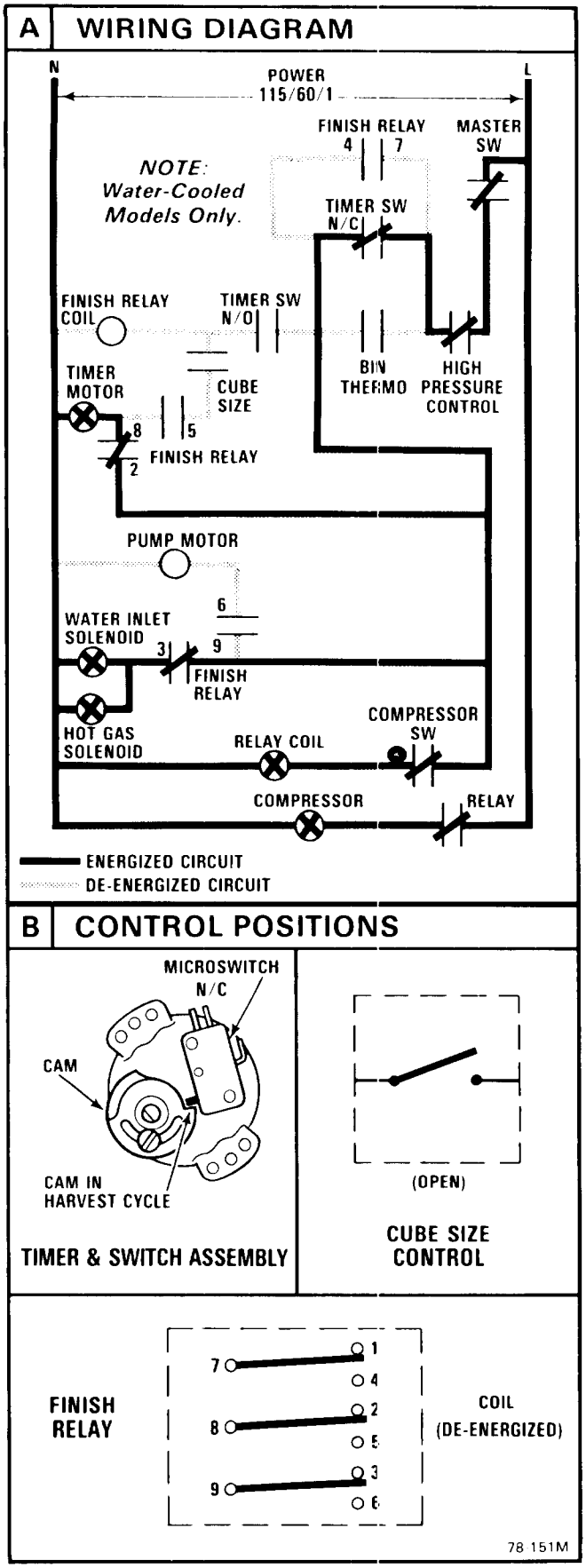

Figure 3-15. Harvest Cycle Mode - with Bin Thermo OPEN

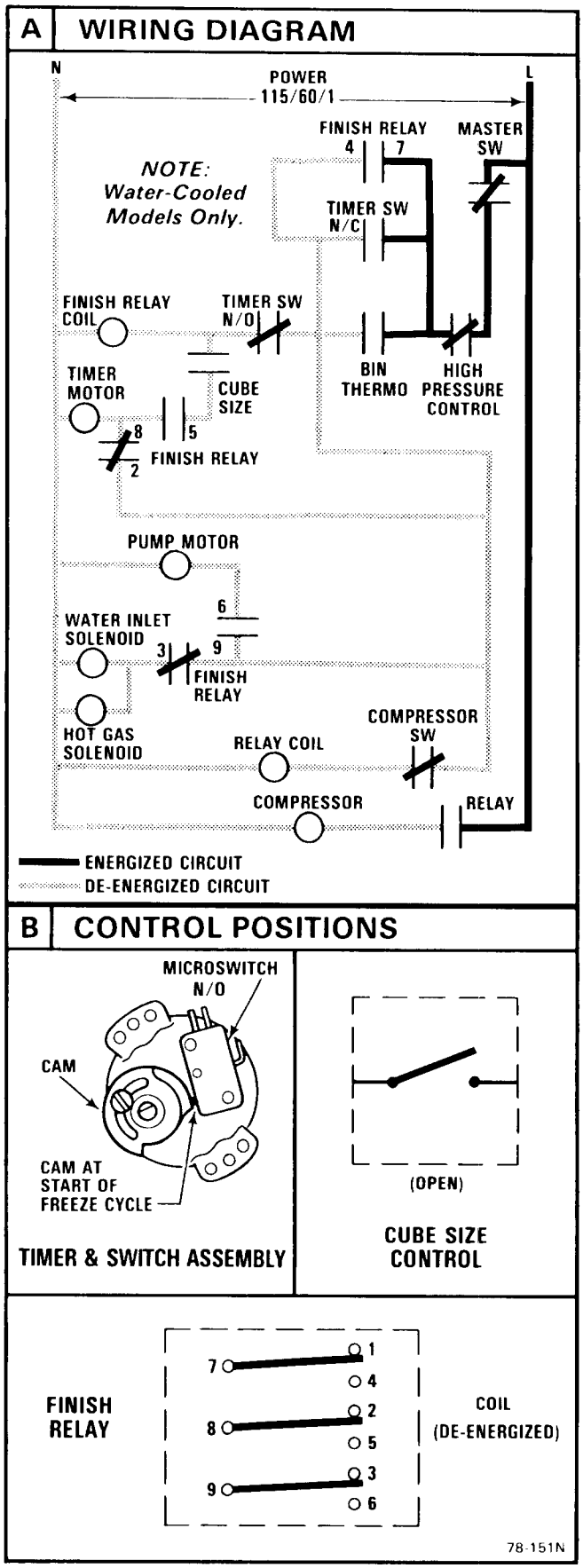

Figure 3-16. Cuber OFF - Bin Thermo OPEN, with Bin Filled with Ice

V. COMPONENT DESCRIPTIONS

A. BIN THERMOSTAT CONTROL

The Bin Thermostat Control is located in the right-hand section of the Control Box. The sensing capillary tube of the control, is routed out of the Control Box into the ice storage bin, and through tabs on the Front Cube Chute, located below the front opening of the Freezing Chamber. The Control functions to automatically SHUT OFF the Icemaker, when the ice storage bin is filled and ice contacts the capillary tube. It also signals the RESTART of the Icemaker when the capillary tube starts to warm up after ice has been removed from the bin. Factory settings are 35-degrees F. CUT-OUT and 40-degrees F. CUT-IN. ALWAYS CHECK a replacement Bin Thermostat Control BEFORE installing the Control in the Cuber. Prepare a container of ice and water and insert a thermometer. As temperature indications on the thermometer decrease to 35-degrees F., insert the capillary tube of the Bin Thermostat Control and determine temperature of CUT-OUT when an audible click is heard in the Control. Slowly add hot water to container and check audible click in the Control for CUT-IN while observing increase in temperature of water to 40-degrees F. Refer to procedure IV-I to adjust Bin Thermostat Control.

NOTE

The Bin Thermostat Control is wired through the holding relay and will not CUT-OUT the Icemaker until the end of the Harvest Cycle. Altitude adjustment should ONLY be performed on Icemakers installed at 2000-foot level locations and ABOVE, and adjust only in increments of one-fourth turn of screw at a time.

B. COMPRESSOR START RELAY

The current relay located on the Compressor, functions to carry the Compressor line current. The relay is wired so any control in the pilot circuit, such as the Bin Thermostat, Low Pressure and High Pressure Controls, etc. will cause the relay holding coil to be de-energized, when the control contact OPENS, thereby breaking the circuit to the Compressor through the relay points.

C. CUBE SIZE CONTROL

The temperature sensing Cube Size Control affects the length of the Freezing Cycle prior to initiating the Finishing Timer. The Cube Size Control closes its contacts when the Evaporator reaches a preset temperature, starting the Finishing Timer. A variation in either ambient air or incoming water temperature will affect the efficiency of the refrigeration system. This will vary the length of time it takes the Evaporator to reach the temperature at which the Cube Size Control is preset to CLOSE; which, in turn, will affect the overall cycle time.

NOTE

Be sure to refer to procedure IV-II, Adjustment of the Cube Size Control, BEFORE attempting to adjust the control.

D. FINISHING TIMER - Timer & Switch Assembly

The function of the Finishing Timer begins when activated by the Cube Size Control. The Timer controls an eight minute dual function: six minutes are programmed to finish freezing the ice cubes and the final two minute portion is for the defrost operation and harvest of the ice cubes. All electrical circuitry is connected through the printed circuit board and the Finishing Timer and shunted by the single-pole, double-throw microswitch to either the Freezing Cycle or the Harvest Cycle. The microswitch is actuated by a Cam Assembly directly connected to the Timer Motor. The Timer Cam can be adjusted to vary the defrost time, as required.

E. HIGH PRESSURE CONTROL - Water-Cooled Model

The High Pressure Control, a safety control, is factory set at 190 PSIG. The Control functions as a precautionary device, to shut OFF electrical power to the Icemaker, should a loss of water occur to the water-cooled Condenser. In addition to being a manual reset Control, there is an adjusting screw for raising or lowering the CUT-IN pressure.

F. HIGH PRESSURE FAN CONTROL - Air-Cooled Model

The High Pressure Fan Control functions only during the harvest cycle, to maintain head pressure. As an automatic reset device, the Control is mechanically connected to the refrigerant system high side; and, electrically has both the Water Pump and the Condenser Fan Motor wired into control contacts. The control settings CLOSE at 150 PSIG and OPEN at 130 PSIG. During defrost, the Control will usually cycle once, causing the Fan Motor and the Water Pump to briefly operate during this time.

G. HOT GAS SOLENOID VALVE

The Hot Gas Solenoid Valve functions only during the harvest cycle, to divert the hot discharge gas from the Compressor, by-passing the Condenser and capillary tube, for direct flow to the Evaporator Platen Assembly to release ice cubes from the inverted ice cube molds. The Hot Gas Solenoid Valve is comprised of two parts, the Body & Plunger and the Coil & Frame assemblies. Installed in the discharge line of the Compressor, the energized solenoid coil lifts the valve stem within the valve body to cause the hot discharge gas to be diverted when the Finishing Timer has advanced to the start of the harvest cycle.

H. FINISH RELAY

The multi-function, three-pole, double-throw, plug-in relay is installed directly into a receptacle on the printed circuit board in the Control Box. The relay functions, in part, to by-pass the Bin Thermostat, to prevent the Icemaker from shutting OFF, when a filled-bin condition occurs, during the Freezing Cycle. The, by-pass action serves to ensure full-sized ice cubes with each harvest cycle; and, to prevent short cycling on the Bin Thermostat. The relay also redirects the current flow through the High Pressure Fan Control to the Condenser Fan Motor and the Water Pump during the harvest cycle.

I. SPRAY BAR MANIFOLD

The Spray Bar Manifold is designed to channel recirculating water to twelve Jet Spinners, for uniformly spraying the water into the inverted ice cube cups. The Celcon material, used in fabricating the Spray Bar parts, is not subject to chemical attack by either acidic or alkaline materials at low temperatures or at high temperatures. Because of the smooth, non-porous surface of the Celcon material Spray Bar, foreign materials have difficulty trying to adhere to these surfaces, thereby, reducing the usual frequency of cleaning procedures.

NOTE

Refer to procedure V-III, CLEANING - Icemaker; and, for problems requiring removal of parts refer to procedure IV-XII-A for details for removing Spray Bars and Jet Spinners.

J. WATER INLET SOLENOID VALVE

The Water Inlet Solenoid Valve functions only during the Harvest Cycle, when it is energized to permit a metered, one-fourth gallon-per-minute rate of incoming water, to flow through the Defrost Tube onto the top of the plastic Platen Assembly, assisting in the harvest of ice cubes. The water drains through holes in the Platen Assembly into the Reservoir in the lower section of the Freezing Chamber; and there, the water is recirculated through the Water Pump for return to the Spray Bars.

K. WATER REGULATOR VALVE - Water-Cooled Models

The Water Regulator Valve functions to maintain a constant head pressure, by regulating the amount of incoming water flow through the Condenser, on water-cooled models. The valve operates through the refrigerant system high side pressure. Rotating the adjusting screw, located on top of the valve, can INCREASE or DECREASE the operating head pressure.

NOTE

When installing a replacement Water Regulator Valve, be sure the replacement valve is installed with the arrow positioned in the direction of the water flow.

REFRIGERANT CHARGE

MODEL	AC-20 Refrig. Chg.
Air-Cooled	11-1/2 R-12 (Approx.)
Water-Cooled	13 oz. R-12 (Approx.)

NOTE

Always CHECK NAMEPLATE on individual Icemaker for specific refrigerant charge, BEFORE charging the refrigeration system. The above listed refrigerant charges are approximate charges for the AC-20 Cubers, however it is important to CHECK NAMEPLATE for each Icemaker, especially when there are different Compressors.

SECTION IV

ADJUSTMENT AND REMOVAL AND REPLACEMENT PROCEDURES

The procedures provided in this Section are arranged in alphabetical order, to make specific Adjustment and Removal and Replacement information easy to locate.

Read the instructions thoroughly before performing any Adjustment or Removal and Replacement Procedures.

I. ADJUSTMENT OF THE BIN THERMOSTAT CONTROL

The control for the Bin Thermostat is the Temperature Control, located in the right end of the Control Box Assembly

WARNING

The adjusting screws on the Temperature Control device have very sensitive response to adjustment. DO NOT attempt to adjust the screw until after thoroughly reading and understanding the following instructions and illustrations. Over-adjusting or erratic guessing, can foul the instrument and cause ultimate delay and part replacement, WHICH COULD HAVE BEEN PREVENTED.

Adjustment for ALTITUDE CORRECTION should only be performed for installations at 2000-feet and ABOVE. Carefully adjust only in one-fourth turn of screw at a time. NO ALTITUDE CORRECTION adjustments should be performed BELOW the 2000-feet level.

See Figure 4-1 for location and direction of rotation, clockwise (CW) or counterclockwise (CCW), of the adjusting screw on the Temperature Control, in the particular Control Box the adjustment is to be performed.

II. ADJUSTMENT OF THE CUBE SIZE CONTROL

CAUTION

BEFORE performing actual adjustment to the Cube Size Control, check other possible causes for cube size problems, refer to Section VI, SERVICE DIAGNOSIS for problem review and analysis.

DO NOT perform adjustment when a new Cube Size Control is installed, until the control bulb has been properly installed in the tube well, on the refrigerant tube of the Platen Assembly and the Icemaker has progressed through several complete freezing and harvest cycles, to observe size and quality of ice cubes and whether or not a cube size problem exists.

As a reverse acting temperature control, adjustment on the Cube Size Control is performed to either cause larger sized ice cubes or smaller sized ice cubes to be produced.

A. To Produce LARGER Sized Ice Cubes:

1. Locate the Cube Size Control inside the opening in the underside of the right hand portion of the Control Box Assembly.
2. Rotate the adjusting screw one-eighth of a turn CLOCKWISE to COLDER.
3. Observe size of ice cubes in next two ice cube harvests and repeat step 2 above, in one-eighth turn increments, until desired ice cube size is achieved.

B. To Produce SMALLER Sized Ice Cubes:

1. Locate the Cube Size Control inside the opening in the underside of the right hand portion of the Control Box Assembly.

2. Rotate the adjusting screw one-eighth of a turn COUNTERCLOCKWISE to WARMER.
3. Observe size of ice cubes in next two ice cube harvests and repeat step 2 above, in one-eighth turn increments, until desired ice cube size is achieved.

III. ADJUSTMENT OF THE LEG LEVELERS

When the AC-20 Cuber is ordered with the optional Leg Levelers, the Cabinet must be leveled in the front-to-rear and side-to-side directions. This adjustment should be performed during initial installation of the Cabinet and anytime the Cabinet is moved from the original location to another site.

A. Using an open-end wrench and a carpenter's bubble level, rotate the threaded Leveler in each Leg to RAISE or LOWER the Cabinet until the Cabinet is level in the front-to-rear direction.

B. Repeat Step A, for leveling in the side-to-side direction.

C. Recheck both the front-to-rear and the side-to-side leveling the repeat adjustments, as necessary.

IV. ADJUSTMENT OF THE TIMER & SWITCH ASSEMBLY

The Timer & Switch Assembly is factory set, so that one complete revolution of the cam on the Timer represents eight minutes. Six minutes comprise the freezing cycle event during cam rotation, and the final two minutes program the defrost and harvest cycle. Rotating the shaft of the Timer Cam, CLOCKWISE will allow positioning the actuator arm of the microswitch on the cam at the selected start position for either the freezing cycle or harvest cycle, as required, during the START UP procedures and in the CLEANING instructions. Rotating the shaft COUNTERCLOCKWISE will unscrew the shaft from the threaded stud on the Timer Cam.

To Adjust the Timer Switch Assembly:

A. HARVEST CYCLE: Slowly rotate the shaft of the Timer & Switch Assembly, located in the hole in the front of the Control Box Cover, CLOCKWISE, until the actuator arm on the microswitch drops off of the outer cam into the cam slot. An audible click can be heard, but in a noisy area, look at the cam and switch to observe the event. See Figure 4-2.

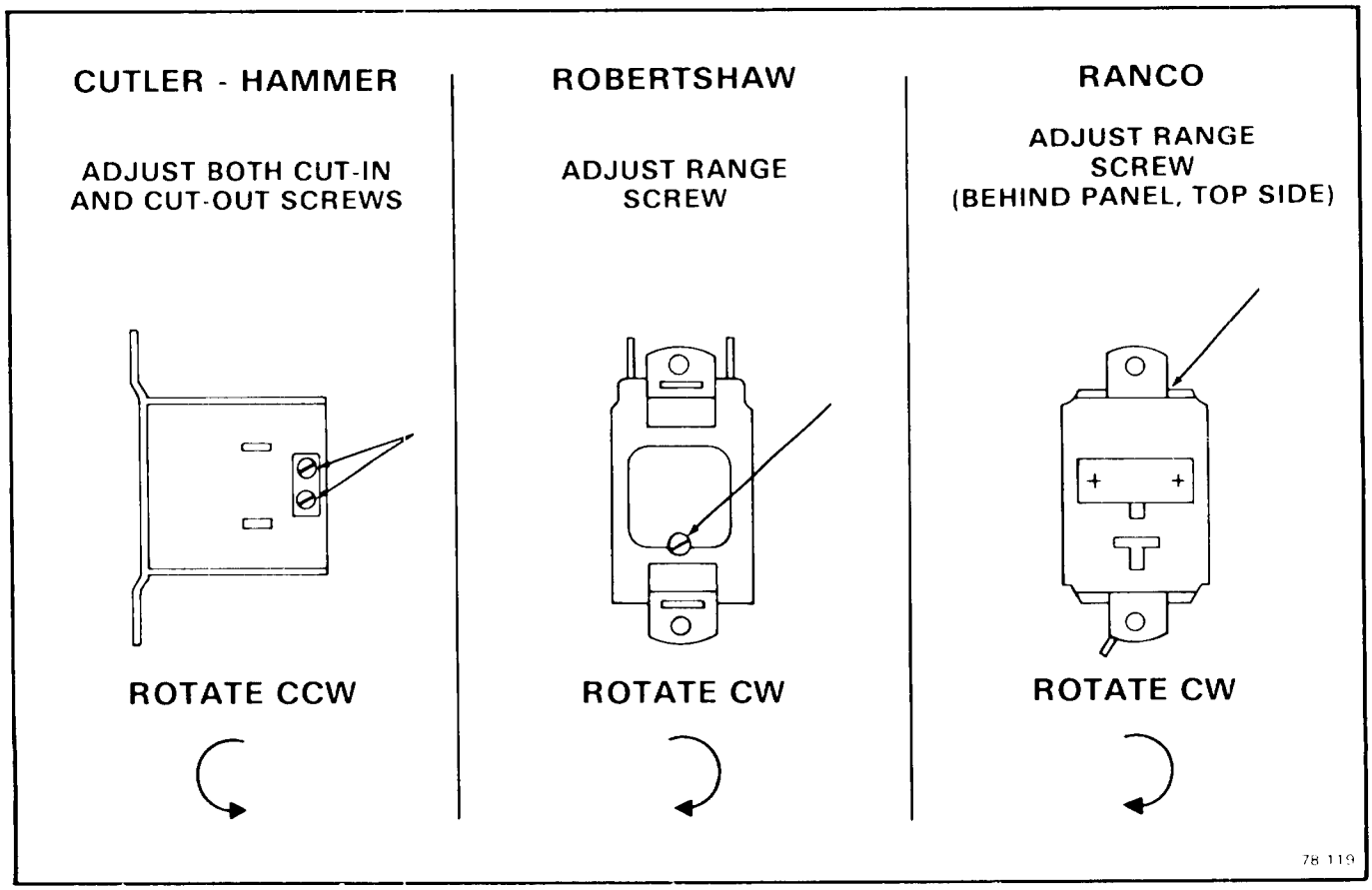

Figure 4-1. Adjustment of the Temperature Control.

B. FREEZING CYCLE: Slowly rotate the shaft of the Timer & Switch Assembly, located in the hole in the front of the Control Box Cover, CLOCKWISE, until the actuator arm on the microswitch rides up out of the cam slot to the start of the surface of the outer cam.

V. ADJUSTMENT OF THE WATER REGULATOR ASSEMBLY

The correct head pressure on Water-Cooled models is 135 PSIG. Adjustments can be performed on the Water Regulator Assembly to increase or decrease head pressure.

To Adjust the Water Regulator Assembly:

A. To INCREASE the Head Pressure: Rotate the adjusting Screw, on the Water Regulator Assembly COUNTERCLOCKWISE.

B. To DECREASE the Head Pressure: Rotate the adjusting Screw, on the Water Regulator Assembly CLOCKWISE.

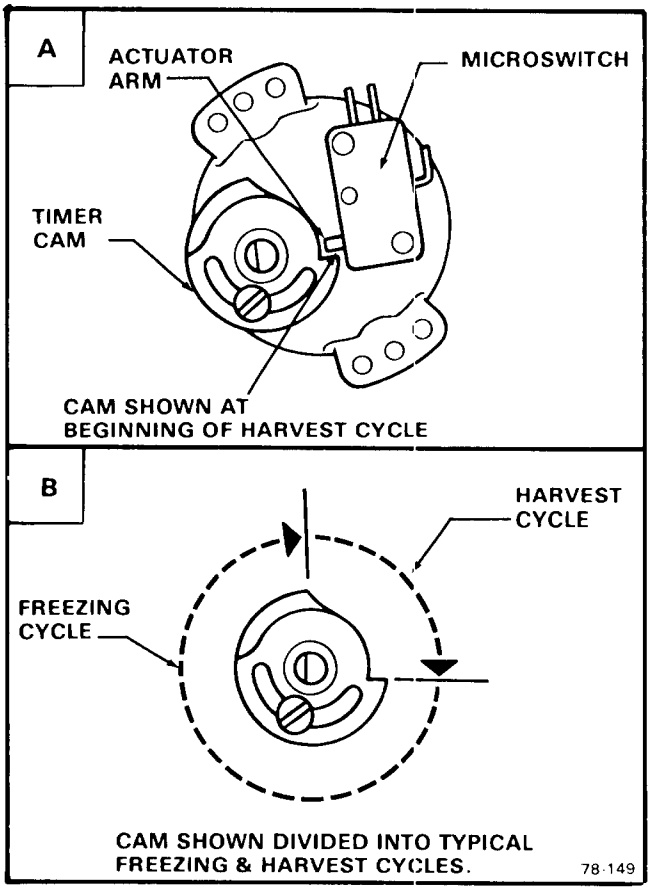

Figure 4-2. Adjustment of the Timer & Switch Assembly

WARNING

Be sure the electrical power supply and the water supply are OFF, BEFORE starting any of the following REMOVAL AND REPLACEMENT procedures as a precaution to prevent possible personal injury or damage to equipment.

VI. REMOVAL AND REPLACEMENT OF THE COMPRESSOR ASSEMBLY

NOTE

Always install a replacement Drier, any time the sealed refrigeration system is opened. Do not replace the Drier until all other repair or replacement has been completed.

A. To Remove the Compressor Assembly:

1. Remove screws and Kick Plate from bottom front of the Cabinet.
2. Remove two screws and partially slide the Lower Front Door Bin Assembly out of the Cabinet.

NOTE

The Door Bin can be pulled out, only as far as permitted by the connected plastic Drain Tube, which is attached to the copper Drain Tube on the Chassis Base.

3. Remove the Hose Clamp which attaches the lower end of the bin Drain Tube to the copper Drain Tube and lift away the Lower Front Door Bin Assembly.
4. Remove the snap clip and the Junction Box Cover from the Compressor.
5. Disconnect the electrical leads at the Compressor Junction Box, that originate from the Control Box.
6. Bleed off or blow the refrigerant charge through the Schrader valve.
7. Unsolder and disconnect both the suction line and the discharge line from the Compressor.
8. Unsolder the process header tube from the Compressor and retain for installation on the replacement Compressor.
9. Remove four bolts, washers, mounting sleeves and grommets attaching the Compressor to the Chassis Base.
10. Remove the Compressor from the Cabinet.

NOTE

Thoroughly evacuate the system to remove moisture and non-condensables.

B. To replace the Compressor Assembly, reverse the removal procedure.

CAUTION

Be sure the bin Drain Tube is properly installed on the copper Drain Tube, BEFORE aligning the slots in the left and right Base Hinges, to slide into place around studs in the Chassis Base and final attachment; thus, preventing bin draining onto Chassis Base and the floor, plus a second removal and replacement of Lower Front Door Bin Assembly.

VII. REMOVAL AND REPLACEMENT OF THE CONDENSER - AIR-COOLED MODELS

NOTE

Always install a replacement Drier, anytime the sealed refrigeration system is opened. Do not replace the Drier until all other repair or replacement has been completed.

A. To Remove the Condenser:

1. Remove screws and the Kick Plate, the Lower Front Door Bin Assembly and lower Hose Clamp on Bin Drain Tube and remove from bottom front of Cabinet.
2. Bleed off or blow the refrigerant charge through the Schrader valve.
3. Unsolder and disconnect both the inlet and outlet tubes at the Condenser.
4. Remove two screws attaching the Condenser to the Chassis Base.
5. Remove the Condenser from the Cabinet.

NOTE

Thoroughly evacuate the system to remove moisture and non-condensables.

B. To Replace the Condenser, reverse the removal procedure.

VIII. REMOVAL AND REPLACEMENT OF THE CONDENSER - WATER-COOLED MODELS

NOTE

Always install a replacement Drier, anytime the sealed refrigeration system is opened. Do not replace the Drier until all other repair or replacement has been completed.

A. To Remove the Condenser:

1. Remove screws and the Kick Plate, the Lower Front Door Bin Assembly and lower Hose Clamp on Bin Drain Tube and remove from bottom front of Cabinet.
2. Bleed off or blow the refrigerant charge through the Schrader valve.
3. Unsolder and disconnect both the inlet and outlet tubes at the Condenser.
4. Remove two screws attaching the Condenser to the Chassis Base.
5. Remove the Condenser from the Cabinet.

NOTE

Thoroughly evacuate the system to remove moisture and non-condensables.

B. To replace the Condenser, reverse the removal procedure.

IX. REMOVAL AND REPLACEMENT OF THE CURTAIN ASSEMBLY

A. To remove the Curtain Assembly:

1. Pull the Lower Front Door Bin Assembly out, to the OPEN position.
2. Remove two screws and the Upper Front Door Assembly, to gain access to the Curtain Assembly.
3. Remove four screws attaching the Curtain Assembly to the top of the front opening of the Freezing Chamber, and remove the Curtain Assembly.

NOTE

The four screws removed also secure the four Spray Tubes to the Freezing Chamber, held by a metal Spray Tube Support at the front end of each Tube.

At this time, it is recommended the Spray Bars be temporarily removed, for removal and inspection of all Jet Spinners for possible cleaning or replacement, as required.

B. To replace the Curtain Assembly, reverse the removal procedure.

NOTE

Be sure Jet Spinners and Spray Bars have been properly assembled and in place, if removed; and, that each screw attaching the Curtain Assembly also is aligned and attaching the associated Spray Bar to the Freezing Chamber. Check that Curtain hangs evenly.

X. REMOVAL AND REPLACEMENT OF THE DRIER

NOTE

Always install a replacement Drier, anytime the sealed refrigeration system is opened. Do not replace the Drier until all other repair or replacement has been completed.

A. To Remove the Drier:

1. Remove screws and the Kick Plate, the Lower Front Door Bin Assembly and lower Hose Clamp on Bin Drain Tube and remove from bottom front of Cabinet.

2. Remove screw and Drier Brace attaching the Drier to the Chassis Base.
3. Bleed off or blow the refrigerant charge through the Schrader valve.
4. Unsolder refrigerant lines at each end of Drier, remove the Drier and separate the Drier from the Drier Brace.

B. To replace the Drier:

CAUTION

1. If the factory seal is broken on the replacement Drier, exposing it to the atmosphere more than a few minutes, the Drier will absorb moisture from the atmosphere and lose substantial ability for moisture removal.

2. Be sure the replacement Drier is installed with the arrow positioned in the direction of the refrigerant flow.

1. Remove the factory seals from the replacement Drier and install the Drier in the refrigerant lines, with the arrow positioned in the direction of the refrigerant flow.
2. Install the Drier Brace on the Drier.
3. Solder the Drier into the lines, two places.
4. Purge the system and check for leaks.
5. Thoroughly evacuate the sytem to remove moisture and non-condensables.
6. Charge the system w th refrigerant, by weight. SEE NAMEPLATE.
7. Reconnect the Drain Tube and replace and secure the Lower Front Door Bin Assembly and Kick Plate on the Cabinet.

XI. REMOVAL AND REPLACEMENT OF FAN MOTOR ASSEMBLY-AIR-COOLED MODELS

NOTE

Before beginning this procedure, observe the Fan Blade position on the shaft of the Fan Motor and mark the Fan Blade, so it will be correctly positioned during reassembly. Direction of air flow should be toward the Fan Motor.

A. To Remove the Fan Motor Assembly:

1. Remove screws and the Kick Plate, the Lower Front Door Bin Assembly and lower Hose Clamp on Bin Drain Tube and remove from bottom front of Cabinet.
2. Disconnect the electrical lead from the Fan Motor.
3. Remove two screws and one toothed lockwasher securing the Motor Bracket to the Chassis Base and remove the Fan Motor and Bracket Assembly out of the Cabinet.
4. Remove the nut from the end of the Fan Motor shaft and remove the Fan Blade.
5. Remove four screws securing the Fan Motor to the Motor Bracket and separate the Motor from the Bracket.

B. To replace the Fan Motor Assembly, reverse the removal procedure.

XII. REMOVAL AND REPLACEMENT OF THE FREEZING CHAMBER, PLATEN ASSEMBLY AND WATER MANIFOLD SPRAY ASSEMBLY

NOTE

Always install a replacement Drier, anytime the sealed refrigeration system is opened. Do not replace the Drier until all other repair or replacement has been completed.

A. To Remove:

1. Remove screws and the Kick Plate, the Lower Front Door Bin Assembly, the lower Hose Clamp on the bin Drain Tube and remove from bottom front of Cabinet.
2. Remove two screws and the Upper Front Door Assembly
3. Remove four screws and the Top Panel.
4. Remove six screws and the stainless steel Air Baffle from the top left section of the Cabinet.
5. Remove single screw attaching the Defrost Tube to the top of the Freezing Chamber; then, remove the hose clamp from the tubing connected to the other end of the Defrost Tube and remove the Defrost Tube.
6. Carefully remove the coiled capillary bulb from the tube well on top of the Platen Assembly and position out of the remaining work area; then, remove the plastic Platen Cover.
7. Unsolder and disconnect both the inlet and outlet refrigerant lines at the Platen Assembly and lift the Platen Assembly out of the top of the Freezing Chamber. See Figure 4-3.
8. Lift to disengage the Front Cube Chute from the lower front opening of the Freezing Chamber and remove the chute from the Chamber, while carefully pulling the Bin Thermo capillary tube from the holding tabs on the Chute. Position the capillary tube out of work area.

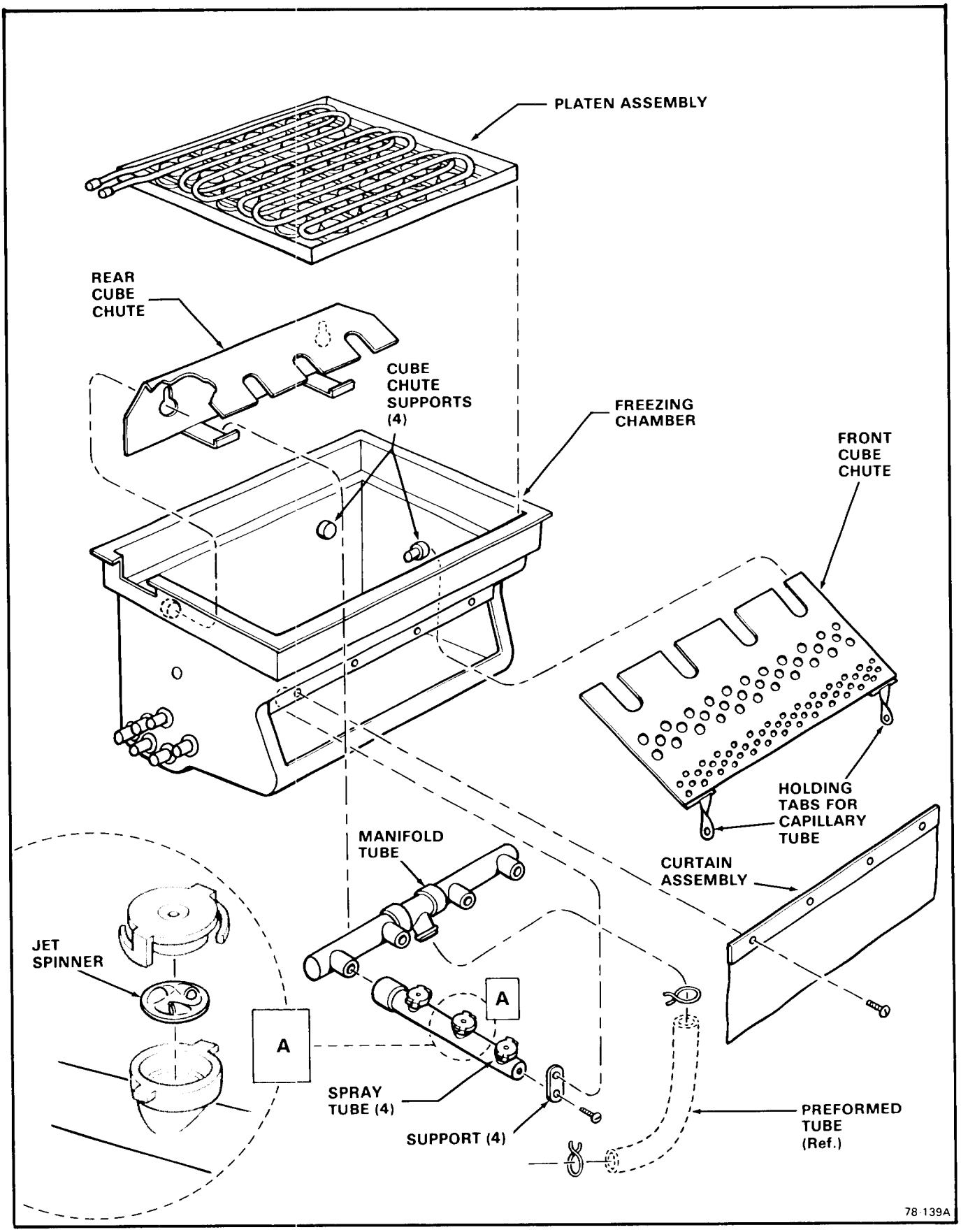

Figure 4-3. Removal of the Freezing Chamber, Platen Assembly, Water Manifold

9. Position container under left side of Freezing Chamber, remove Hose Clamp and Rubber Cap from center Female Tube and drain water from Reservoir. Any remaining sump water, soak up with cloths.
10. Remove five remaining screws securing the top of the Freezing Chamber to the top of the Cabinet and Control Box Assembly.
11. Remove four Hose Clamps connecting Tygon Tubes to four Female Tubes at bottom left of Freezing Chamber; then, work each tube loose and lift the Freezing Chamber out the top of the Cabinet.
12. Remove four screws and the Curtain Assembly.
13. Rotate each Spray Bar one-quarter turn to the left and remove from the Manifold Tube. See Figure 4-3.
14. Rotate the top of each individual spray, COUNTERCLOCKWISE to UNLOCK and lift off of Spray Tube. Three each Spray Tube.
15. Remove each Jet Spinner and inspect to determine requirement for cleaning or replacement. See Figure 4-3.
16. Remove Hose Clamp attaching preformed tube to TEE connection of Manifold Tube and remove Manifold Tube from Rear Cube Chute.
17. Push Rear Cube Chute up to disengage from two supports in rear wall of Freezing Chamber and remove Chute from Chamber. See Figure 4-3.
18. Unscrew to disassemble five Female Tubes and O-Rings, from the outside of the Freezing Chamber, connected to three Male Tubes, one Pump Pick-up Tube and one Stand Pipe installed from inside the Freezing Chamber.

NOTE

Inspect all parts to determine requirements for cleaning or replacement. If there is any doubt about an O-Ring, REPLACE THEM. Any worn, cut, torn or deformed O-Ring will quickly cause a leak, THAT COULD HAVE BEEN PREVENTED.

B. To replace, reverse the removal procedure.

XIII. REMOVAL AND REPLACEMENT OF THE LOWER FRONT DOOR BIN ASSEMBLY

A. To Remove the Lower Front Door Bin Assembly:
1. Remove two screws and the Kick Plate from bottom front of the Cabinet.
2. Remove two screws and partially slide the Lower Front Door Bin Assembly out of the Cabinet. See Figure 4-4.

NOTE

The Door Bin can be pulled out, only as far as permitted by the connected plastic Drain Tube, which is attached to the copper Drain tube on the Chassis Base.

3. Remove the Hose Clamp which attaches the lower end of the bin Drain tube to the copper Drain Tube and lift away the Lower Front Door Bin Assembly.

B. To replace the Lower Front Door Bin Assembly, reverse the removal procedure.

XIV. REMOVAL AND REPLACEMENT OF THE WATER PUMP ASSEMBLY

A. To Remove the Water Pump Assembly:
1. Remove screws and the Kick Plate, the Lower Front Door Bin Assembly and lower Hose Clamp on bin Drain Tube and remove from bottom front of Cabinet.
2. Remove two screws and the Upper Front Door Assembly, to gain access to the Water Pump Assembly.
3. Position container under Water Pump hose connections to catch water drained during disassembly.
4. Remove front Thumb Screw and loosen the rear Thumb Screw that attach the Water Pump Bracket to the left wall of the Cabinet Liner Assembly. See Figure 4-5.
5. Remove Hose Clamps and work loose tubing connected to Pump Intake Housing, three places.
6. Slide Water Pump Assembly and slotted Bracket off of rear Thumb Screw; then, tag or otherwise identify electrical leads connected to Water Pump Motor.

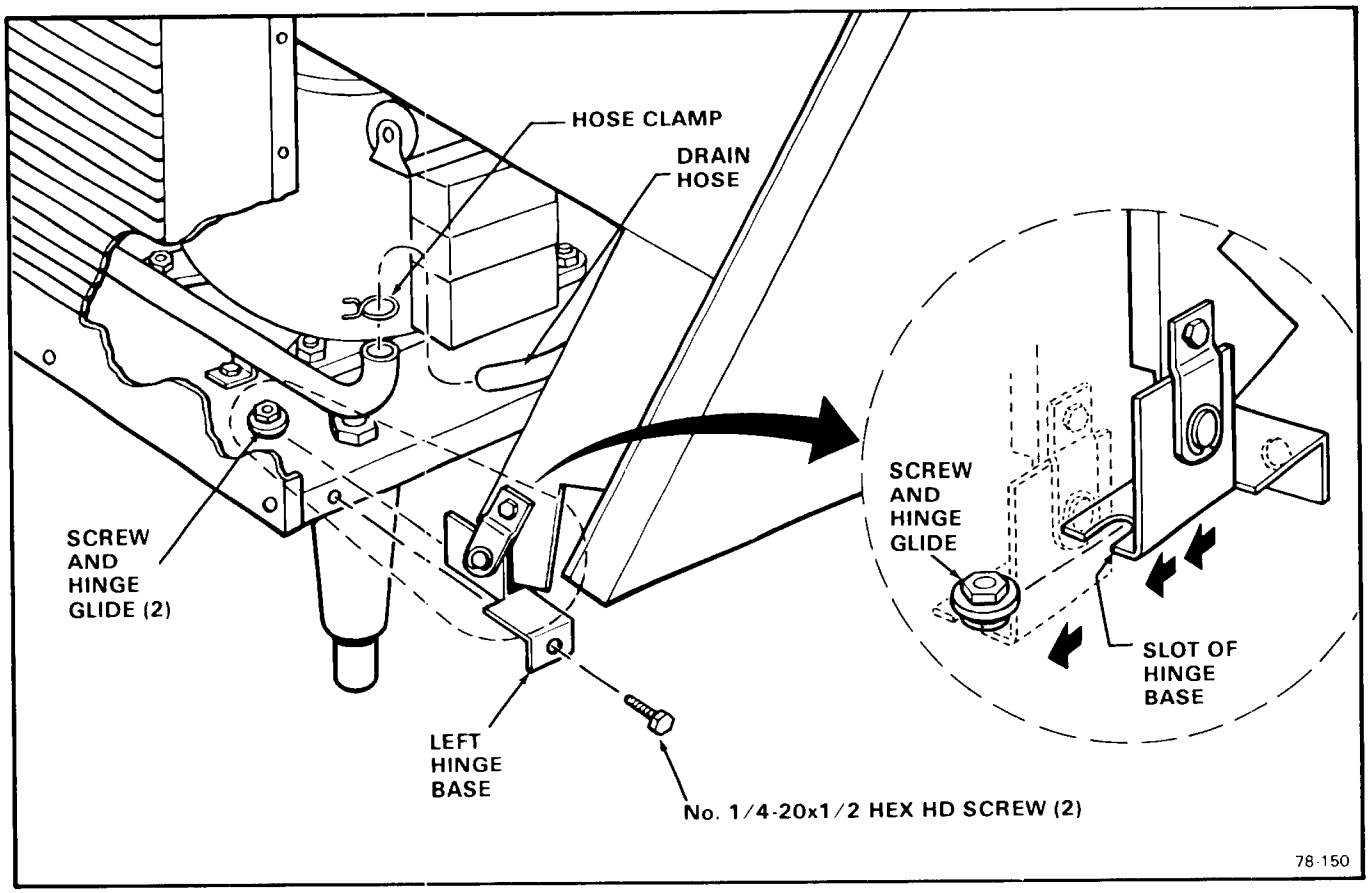

Figure 4-4. Removal of the Lower Front Door Bin Assembly

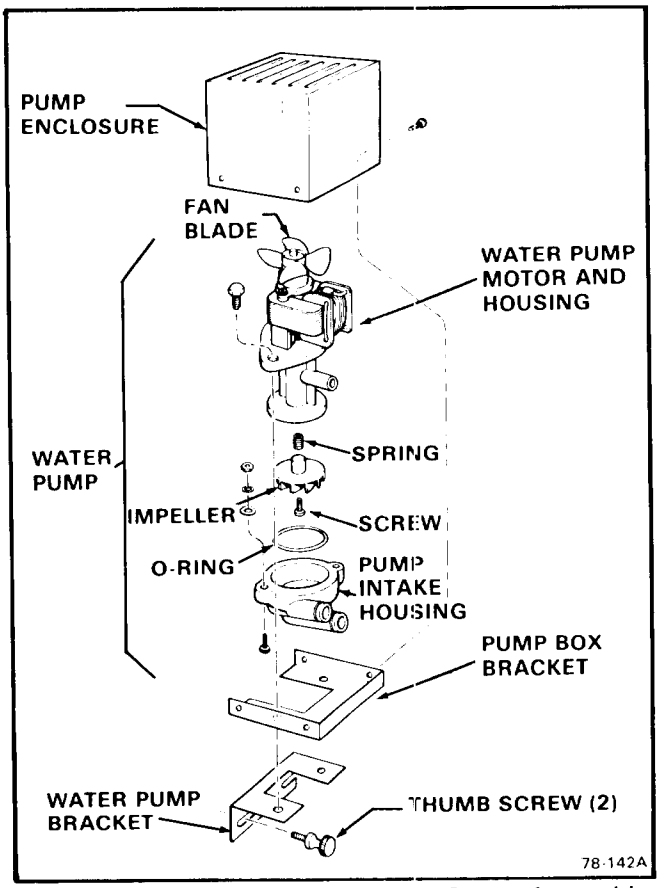

Figure 4-5. Removal of the Water Pump Assembly

7. Disconnect tagged leads from Motor and remove Water Pump Assembly from Cabinet.
8. Remove four screws and the Pump Enclosure from the Pump Box Bracket.
9. Remove two screws and separate the Water Pump Bracket and the Pump Box Bracket from the Flange of the Water Pump housing.
10. Remove two screws, washers, lockwashers and nuts and the Pump Intake Housing and O-Ring from the main body of the Water Pump. Inspect O-Ring for possible replacement.
11. Remove screw and the Impeller and Spring attached to the internal part of the main body of the Water Pump.
12. Check condition of the Fan Blade and Water Pump Motor and Housing.

B. To replace the Water Pump Assembly, reverse the removal procedure.

XV. REMOVAL AND REPLACEMENT OF THE WATER REGULATOR ASSEMBLY - WATER-COOLED MODELS

A. To Remove the Water Regulator Assembly:

NOTE

Always install a replacement Drier, anytime the sealed refrigeration system is opened. Do not replace the Drier until all other repair or replacement has been completed.

1. Remove screws and the Kick Plate, the Lower Front Door Bin Assembly and lower Hose Clamp on bin Drain Tube and remove from bottom front of Cabinet.
2. Bleed off or blow the refrigerant charge through the Schrader valve.
3. Unsolder the capillary line from the Water Regulator Assembly, where connected at the process header.
4. Disconnect the water inlet line at the rear of the Water Regulator.
5. Disconnect the Condenser water inlet tube at the front of the Water Regulator.
6. Remove two screws and lockwashers which attach the Water Regulator Assembly bracket to the Chassis Base and remove the Water Regulator and bracket.

NOTE

Thoroughly evacuate the system to remove moisture and non-condensables.

B. To replace the Water Regulator Assembly, reverse the removal procedures.

SECTION V
MAINTENANCE & CLEANING INSTRUCTIONS

I. GENERAL

The periods and procedures for maintenance and cleaning are given as guides and are not to be construed as absolute or invariable. Cleaning especially will vary, depending upon local water conditions and the ice volume produced; and, each Icemaker must be maintained individually, in accordance with its own particular location requirements.

II. ICEMAKER

THE FOLLOWING MAINTENANCE SHOULD BE SCHEDULED AT LEAST TWO TIMES PER YEAR ON THIS ICEMAKER. CALL YOUR AUTHORIZED SCOTSMAN SERVICE AGENCY.

1. Check and clean water line Strainers.
2. Check that the Icemaker cabinet is level, in side-to-side and front-to-rear directions.
3. Clean the water system Evaporator, Freezing Chamber Reservoir and Spray Bars, using a solution of SCOTSMAN Ice Machine Cleaner. Refer to procedure V-III, CLEANING-Icemaker.

NOTE

Cleaning requirements vary according to local water conditions and individual user operation. Continuous check of the clarity of ice cubes and visual inspection of the water manifold parts and jet spinners, before and after cleaning will indicate frequency and procedure to be followed in local areas.

4. Check that plastic curtain hangs down evenly outside the opening at the front of the Freezing Chamber.
5. Check and tighten all bolts.
6. Check and tighten all electrical connections.
7. Check Hot Gas Solenoid Valve for correct operation and high pressure controls for cut-in and cut-out pressures.
8. With Icemaker and Fan Motor OFF on Air-Cooled Models, clean Condenser, using vacuum cleaner, whisk broom or brush. Instruct customer to clean frequently.
9. Check that Fan Blades move freely, are not touching any surfaces and are not bent or out of balance.
10. Check for refrigerant leaks and tighten line connections.
11. Check for water leaks and tighten drain line connections. Pour water down Bin drain line to be sure that drain line is open and clear.
12. Check size, condition and texture of ice cubes. Perform adjustments as required. Refer to procedure IV-II.
13. Check Bin Thermostat Control Bulb to test shutoff. With the Icemaker in the harvest cycle, hold a handful of ice cubes on the Bulb, which should cause the Icemaker to shut OFF at the end of the harvest cycle.

NOTE

Within minutes after the ice is removed from the sensing bulb, the bulb will warm up and cause the Icemaker to restart. This control is factory set and should not be reset until testing is performed. Normal setting is about 35-degrees F. CUT-OUT and 40-degrees F. CUT-IN.

III. CLEANING - Icemaker

1. Remove two screws and the Upper Front Door Assembly.
2. Check underside of the Control Box and move both the Master ON-OFF toggle switch and the Compressor ON-OFF toggle switch to the OFF position.
3. Rotate the shaft of the Timer & Switch Assembly, located in the hole in the front of the Control Box Cover, CLOCKWISE, until the actuator arm on the microswitch rides up out of the cam slot, to the outer surface of the cam, then stop. This is the start position for the freezing cycle. See Figure 5-1.

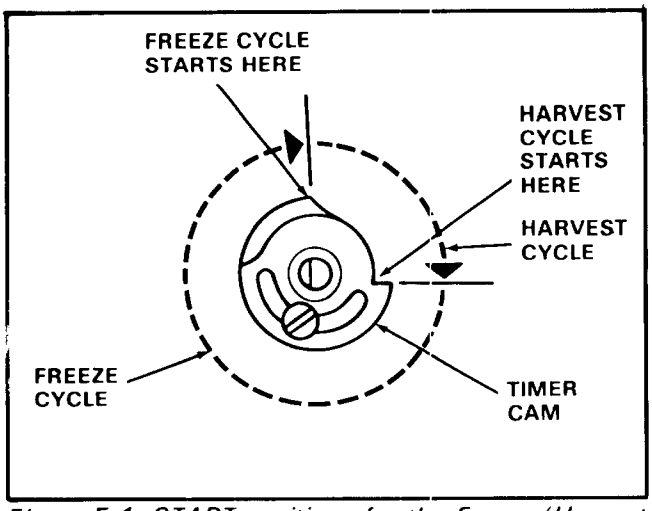

Figure 5-1. START positions for the Freeze/Harvest Cycles.

WARNING

SCOTSMAN Ice Machine Cleaner contains Phosphoric and Hydroxyacetic acids. These compounds are corrosive and may cause burns if swallowed, DO NOT induce vomiting. Give large amounts of water or milk. Call physician immediately. In case of external contact, flush with water. KEEP OUT OF THE REACH OF CHILDREN.

4. Position container under left side of Freezing Chamber, remove Hose Clamp and Rubber cap from center Female Tube and drain water from Reservoir. Replace Rubber Cap and Hose Clamp.
5. Prepare cleaning solution: Mix eight ounces of SCOTSMAN Ice Machine Cleaner with six pints of fresh, potable water.
6. Carefully pour the cleaning solution into the Freezing Chamber through the front opening.
7. Immediately move the Master ON-OFF toggle switch to the ON position.
8. Allow the system to operate for about twenty minutes.

NOTE

No ice cubes will be made, because the Compressor switch is OFF.

9. At end of twenty minutes, rotate the shaft of the Timer & Switch Assembly, CLOCKWISE, to start a second harvest cycle. Repeat procedure to effect four complete harvest cycles. See Figure 5-1.

NOTE

During each harvest cycle, fresh inlet water is introduced into the water system and acts to rinse all water-related parts and to wash away most mineral concentration through the Reservoir overflow drain.

10. Move the Compressor ON-OFF toggle switch to the ON position.
11. Check each ice cube harvest, until the ice cubes are clear and the acid taste eliminated.

CAUTION

DO NOT use ice cubes produced from the cleaning solution. Be sure none remains in the Bin.

12. Add hot water to the Bin to melt the ice cubes and thoroughly wash and rinse all surfaces within the Bin.
13. Temporarily remove the Lower Front Door Bin Assembly, refer to procedure IV-III for removal and replacement instructions.
14. Wash and wipe down all interior surfaces of the Cabinet Liner, exterior of Freezing Chamber, Pump Housing, etc., with a clean cloth or disposable paper wiper soaked in the cleaning solution.
15. Wipe all washed surfaces dry, including Bin, with clean cloths or clean dry disposable paper wipers.
16. Replace the Lower Front Door Bin Assembly.
17. Clean and sanitize the interior Bin surfaces each week.

SECTION VI
SERVICE DIAGNOSIS

The Service Diagnosis Section is for use in aiding the serviceman in diagnosing a particular problem for pin-pointing the area in which the problem lies, thus an ever available reference for proper corrective action.

The following charts list corrective actions for the causes of known symptoms of certain problems that can occur in the Icemaking-Refrigeration System.

I. ICEMAKING - REFRIGERATION SYSTEM

SYMPTOM	POSSIBLE CAUSE	CORRECTION
Irregular size cubes and some cloudy.	Some jets plugged.	Clean jets.
	Shortage of water.	See Shortage of water CORRECTION.
	Unit not level. Water overflowing vent holes on low side, burning cubes.	Level cabinet, as required.
Cubes too large.	Cube Size Control set too cold.	Rotate Cube Size Control dial toward WARMER.
Cubes too small.	Cube Size Control set too warm	Rotate Cube Size Control dial toward COLDER.
	Partially restricted capillary tube.	Blow refrigerant charge; replace drier; evacuate system; add refrigerant charge.
	Moisture in system.	Same as above CORRECTION.
	Shortage of water.	See Shortage of water CORRECTION.
	Loss of refrigerant.	Check for refrigerant leaks, correct leaks; recharge system.
Cloudy Cubes.	Shortage of water.	See Shortage of water SYMPTOM.
	Dirty water supply.	Install water filter or softener.
	Accumulated impurities.	Use SCOTSMAN Ice Machine Cleaner.
Shortage of water.	Water spraying out through curtain.	Hang curtain in proper position.
	Water solenoid not opening.	Repair or replace solenoid.
	Water leak in sump area.	Locate leak and repair or correct condition.

ICEMAKING - REFRIGERATION SYSTEM (Cont'd)

SYMPTOM	POSSIBLE CAUSE	CORRECTION
Decreased ice capacity.	Defective compressor.	Replace compressor.
	Leaky water valve.	Repair or replace valve.
	High head pressure, result of dirty condenser or faulty Fan Motor.	Clean condenser. Repair or replace Fan Motor.
	Non-condensable gas in the system.	Purge the system.
	Poor air circulation or extreme hot location.	Relocate the cabinet; or, provide ventilation by cutting openings.
	Overcharge of refrigerant.	Slowly purge off to correct charge.
	Hot gas solenoid valve leaking.	Replace valve.
	Partially restricted capillary tube.	See Cubes too small CORRECTION.
Poor harvests.	Too short defrost time.	Check and adjust harvest cycle. Check Timer two-minute setting.
	Restriction in water inlet line.	Check strainer and flow check valve. DO NOT remove flow control washers.
	Hot gas solenoid does not open.	Binds or burned out. Replace.
	Plugged air vent holes in upper part of cube cups.	Clean out air vent holes.
Icemaker does not harvest	Water pressure too low.	Check for 20 PSI flowing water.
Compressor cycles intermittently.	Low voltage.	Check for circuit overload. Check building supply voltage, if low, contact power company.
	Dirty condenser.	Clean condenser with vacuum cleaner or brush. NO WIRE BRUSH.
	Air circulation blocked.	Locate cabinet with adequate air space for proper air flow.
	Defective Fan Motor.	Replace Fan Motor.
	Non-condensable gases in system.	Purge the system.
Icemaker will not operate.	Blown fuse in line.	Replace fuse and check for cause.
	Master switch in OFF position.	Set switch to ON position.
	Faulty Master switch.	Replace switch.
	Timer contacts open.	Replace Timer microswitch.

SECTION VII
WIRING DIAGRAMS

This Section is provided as an aid in understanding the electrical circuitry of the Automatic Cuber:

WARNING

When conducting a continuity check of the Automatic Cuber:

1. **Disconnect the main power source.**
2. **DO NOT use an incandescent lamp or jumper wire, conduct all tests with a volt-ohm-meter.**

The Wiring Diagrams in this Section are:

Figure 7-1. Wiring Diagram AC-20A - Air-Cooled.

Figure 7-2. Wiring Diagram AC-20A - Water Cooled.

Figure 7-3. Wiring Diagram AC-20B - Air-Cooled.

Figure 7-4. Wiring Diagram AC-20B - Water Cooled.

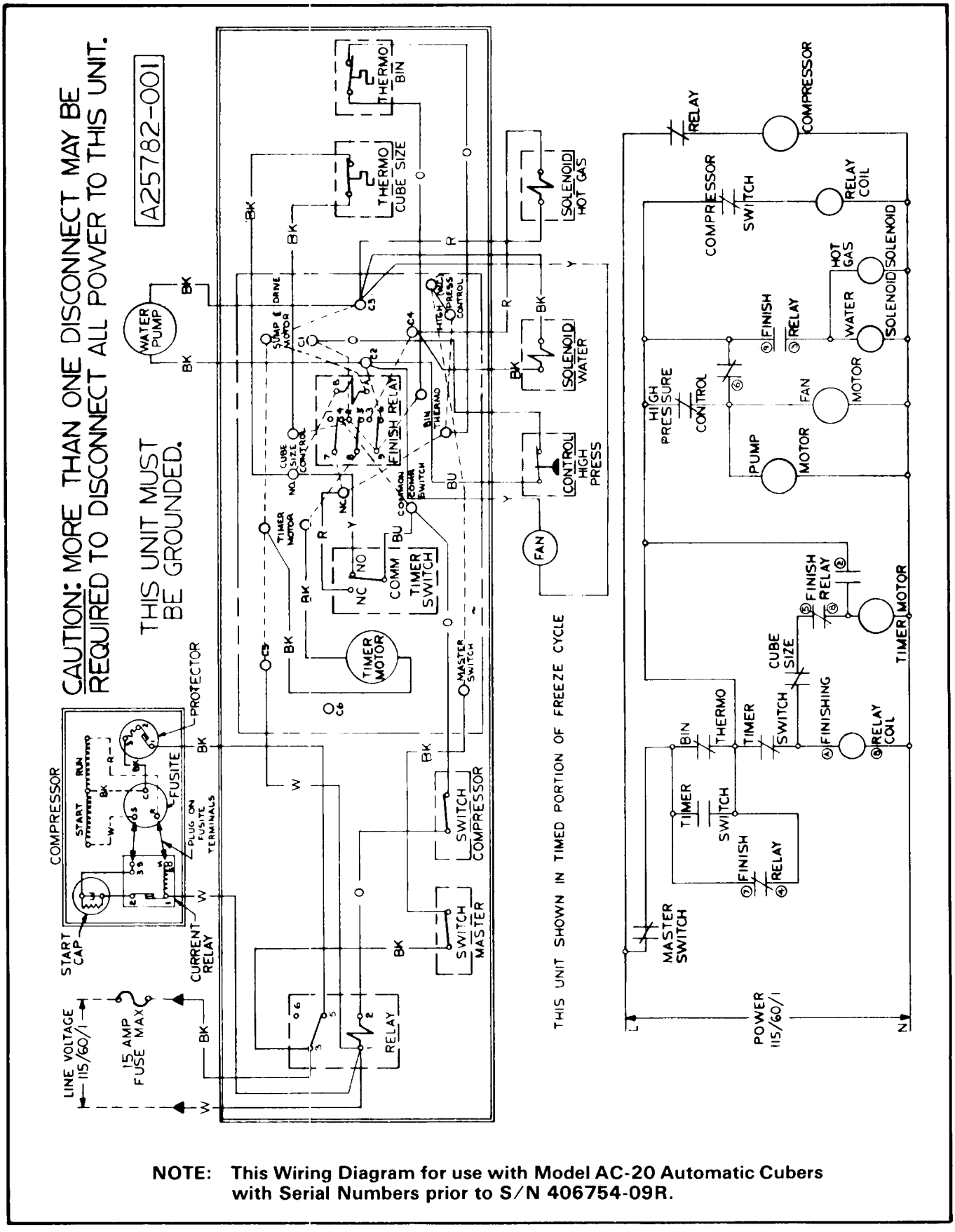

NOTE: This Wiring Diagram for use with Model AC-20 Automatic Cubers with Serial Numbers prior to S/N 406754-09R.

Figure 7-1. Wiring Diagram AC-20A - Air-Cooled.

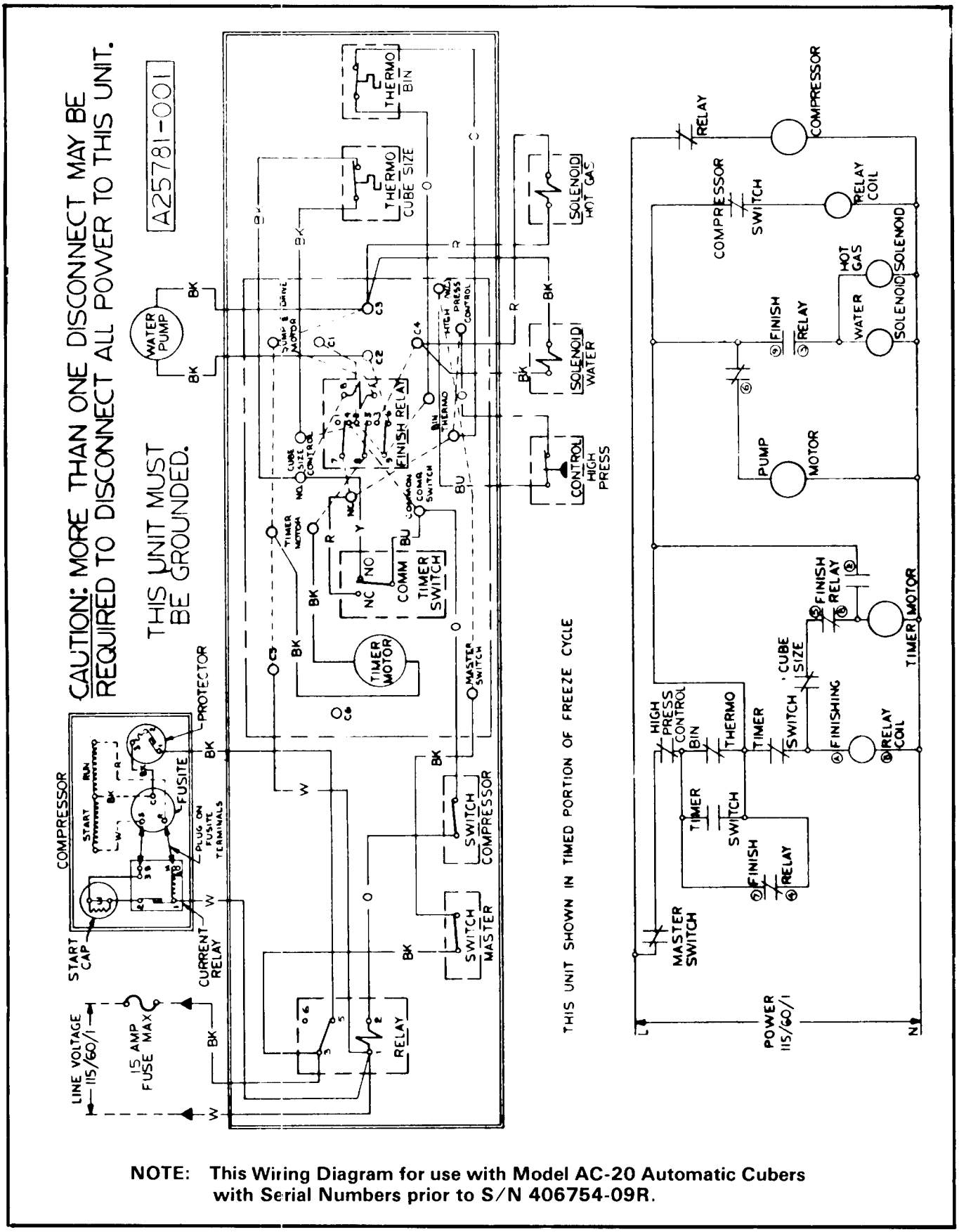

NOTE: This Wiring Diagram for use with Model AC-20 Automatic Cubers with Serial Numbers prior to S/N 406754-09R.

Figure 7-2. Wiring Diagram AC-20A - Water-Cooled.

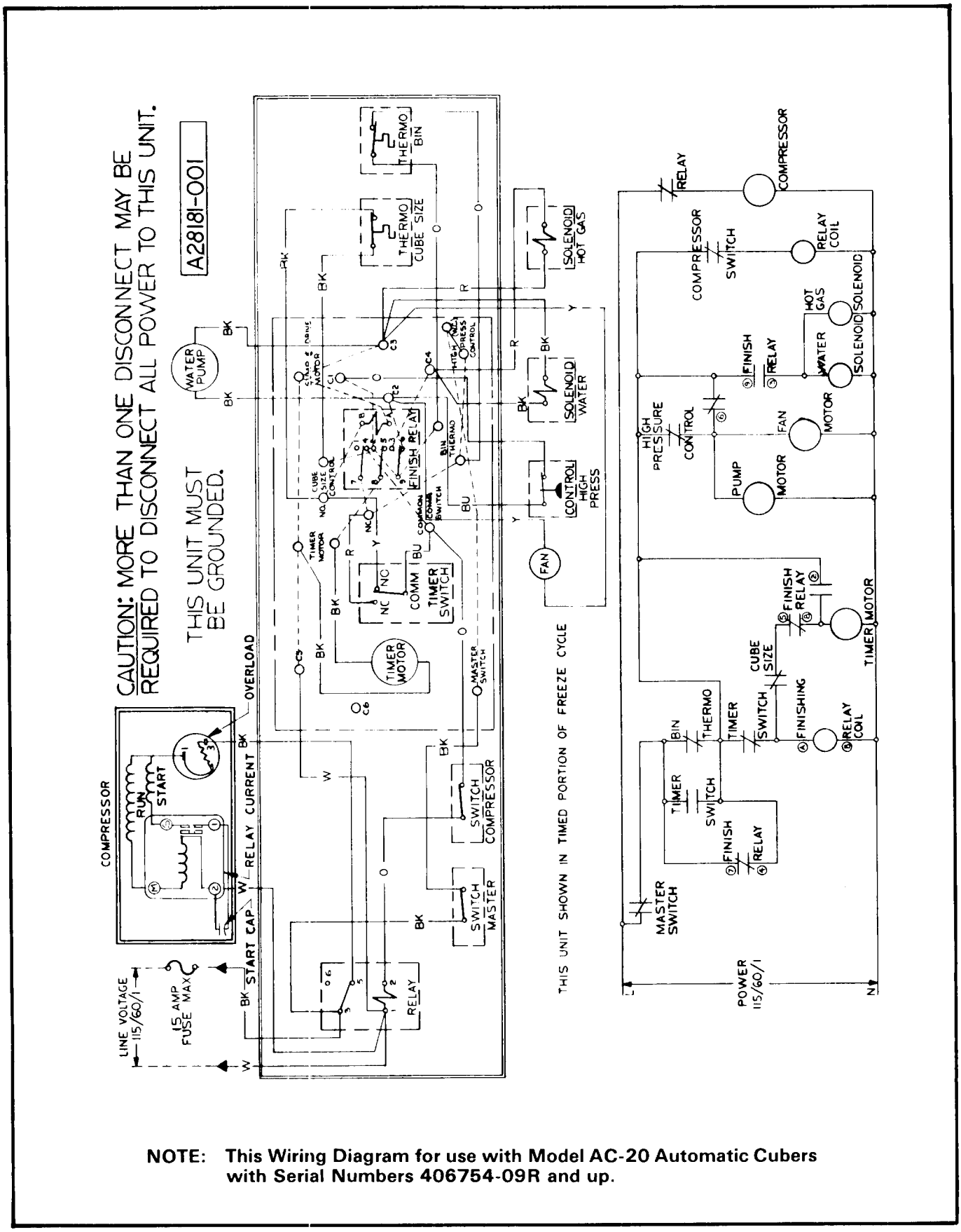

NOTE: This Wiring Diagram for use with Model AC-20 Automatic Cubers with Serial Numbers 406754-09R and up.

Figure 7-3. Wiring Diagram AC-20B - Air-Cooled.

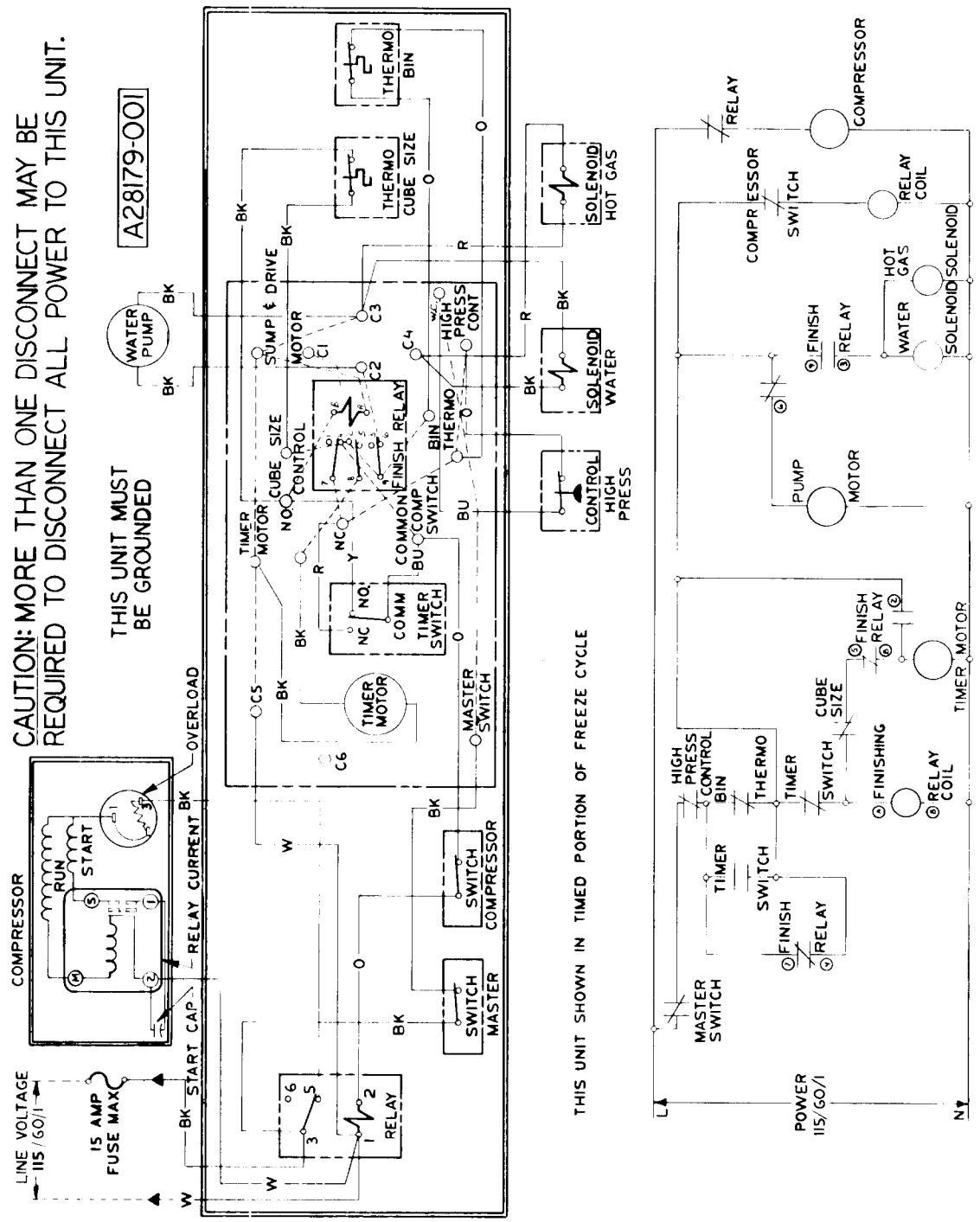

NOTE: This Wiring Diagram for use with Model AC-20 Automatic Cubers with Serial Numbers 406754-09R and up.

Figure 7-4. Wiring Diagram AC-20B - Water-Cooled.

SECTION VIII

THE PARTS ILLUSTRATIONS AND PARTS LIST

I. GENERAL

This section contains the Parts Illustrations and the Parts List for each of the major assemblies in the AC-20 Automatic Cuber.

Each Parts Illustration shows an assembly as an exploded view, with an Index Number for each part or sub-assembly, given in disassembly order. These Index Numbers key with the Parts List for the assembly and are found in the Parts List Column headed Index Number. The Description Column gives the identifying nomenclature for the item indexed. The Part Number Column gives the number of item. The Number Required Column gives the number of items required per assembly, but not necessarily the total number of parts required per Cuber.

All assemblies are cross-referenced both from the major assembly listing where they first appear in the Parts Listing to their break-down listing, and from the break-down listing, back to the major assembly (next higher assembly) listing.

A *No Number* designation, when used in the Part Number Column indicates the unit is not available from SCOTSMAN as an assembly. This designation is used only for the convenience and clarity of division in cataloging.

When an Index Number is followed by a letter (e.g. 1a, 1b), the letter indicates the part listed is part of the assembly indexed by the basic Index Number. The number required of the part indexed by the number and letter combination is for only one of the assemblies indexed by the basic Index Number and not necessarily the total number or parts used in the Cuber. Where the notation *Ref* occurs in the Number Required Column the number of the assemblies or parts required for use in the Cuber will be found under a previous Index Number or in the next higher assembly Parts Listing. The next higher listing Figure/Index number is shown in the Description Column immediately following the items description.

II. HOW TO USE THE ILLUSTRATIONS AND PARTS LIST

To find the part number of a required part or assembly, turn to the List of Illustrations and find the page number of the Parts Illustration of the major or sub-assembly containing the part. Turn to the indicated page and locate the part and its Index Number on the specific illustration. Find the Index Number on the required part in the Parts List to determine the complete description of the part.

III. HOW TO ORDER PARTS OR ASSEMBLIES

When ordering parts or assemblies, to avoid costly delays and errors in shipment, give the part number, the complete description shown in the list, and the quantities of each part or assembly required. Also include the Model name, the serial number of the Cuber for which the part is required, and for parts which require color matching, the color of the Cabinet.

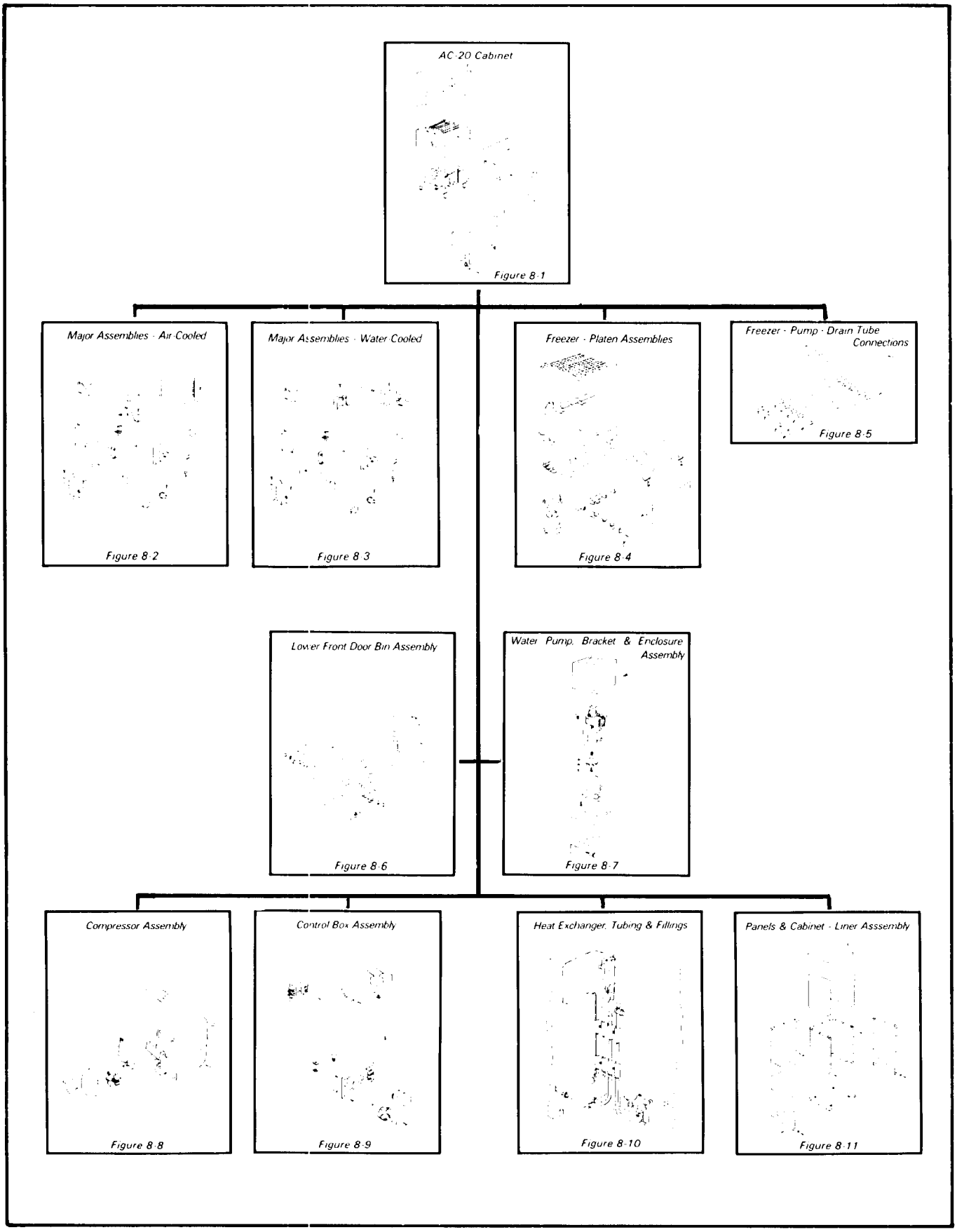

Figure 8-A. AC-20 Automatic Cuber Flow Chart.

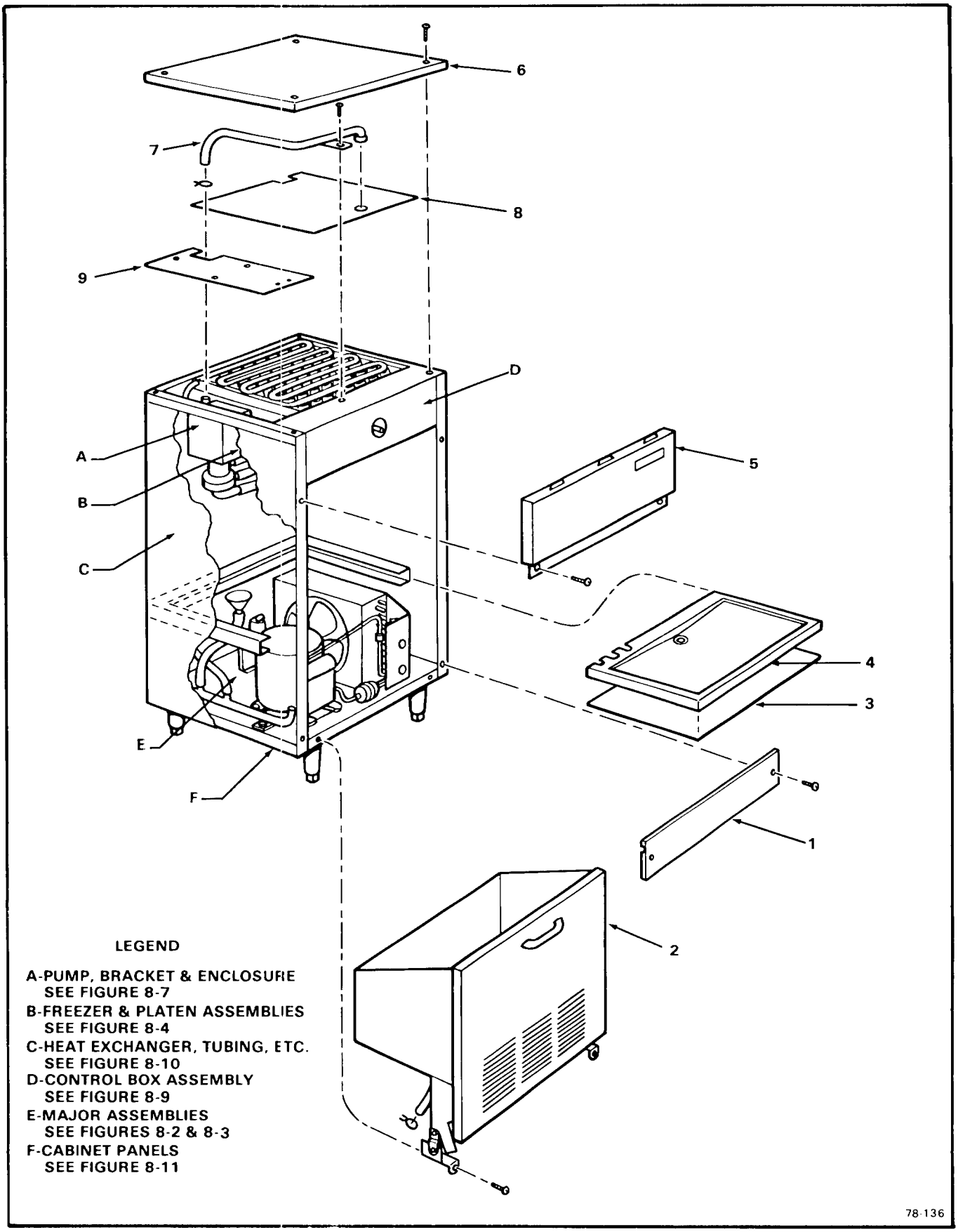

Figure 8-1. AC-20 Cabinet.

Figure 8-1. AC-20 Cabinet.

INDEX NO.	DESCRIPTION	PART NUMBER	REQ'D NUMBER
	AC-20 Cabinet	No Number	1
	* * *		
1	Plate, Kick (C.R.S. Painted)	A25708-001	1
	Plate, Kick (Stainless Steel)	A25708-002	1
	attaching parts, Index 1		
	Screw, No. 8 x 1/2 T/F Tap	03-1404-10	2
	* * *		
2	Door/Bin Assembly, Lower Front (C.R.S. Painted)	A25717-001	1
	Door/Bin Assembly, Lower Front (Stainless Steel)	A25717-002	1
	Attaching parts, Index 2		
	Clamp, Hose 13/16-inch O.D.	02-1338-00	1
	Screw, No. 1/4-20 x 1/2 T/C Hex Hd	03-0571-00	2
	* * *		
3	Retainer, Heat - Bottom	A25804-001	1
	* * *		
4	Retainer, Heat - Foamed	02-2237-01	1
	* * *		
5	Door Assembly, Upper Front (C.R.S Painted)	A25709-001	1
	Door Assembly, Upper Front (Stainless Steel)	A25709-002	1
	attaching parts, Index 5		
	Screw, No. 8 x 1/2 T/F Tap	03-1404-10	2
	* * *		
6	Panel, Top (C.R.S. Painted)	A25704-001	1
	Panel, Top (Stainless Steel)	A25704-002	1
	attaching parts, Index 6		
	Screw, No. 8 x 1-1/4 S/T Flat Hd	03-1419-09	4
	* * *		

Figure 8-1. AC-20 Cabinet. (Cont'd.)

INDEX NO.	DESCRIPTION	PART NUMBER	REQ'D NUMBER
7	Tube, Defrost	A25796-001	1
	attaching part, Index 7		
	Clamp, Hose	02-0535-00	1
	Screw, No. 8 x 1/2 T/F Tap	03-1404-10	1
	* * *		
8	Cover, Platen	A25799-001	1
	* * *		
9	Baffle, Air	A25789-001	1
	attaching part, Index 9		
	Screw, No. 8 x 1/2 T/F Tap	03-1404-10	3
	* * *		

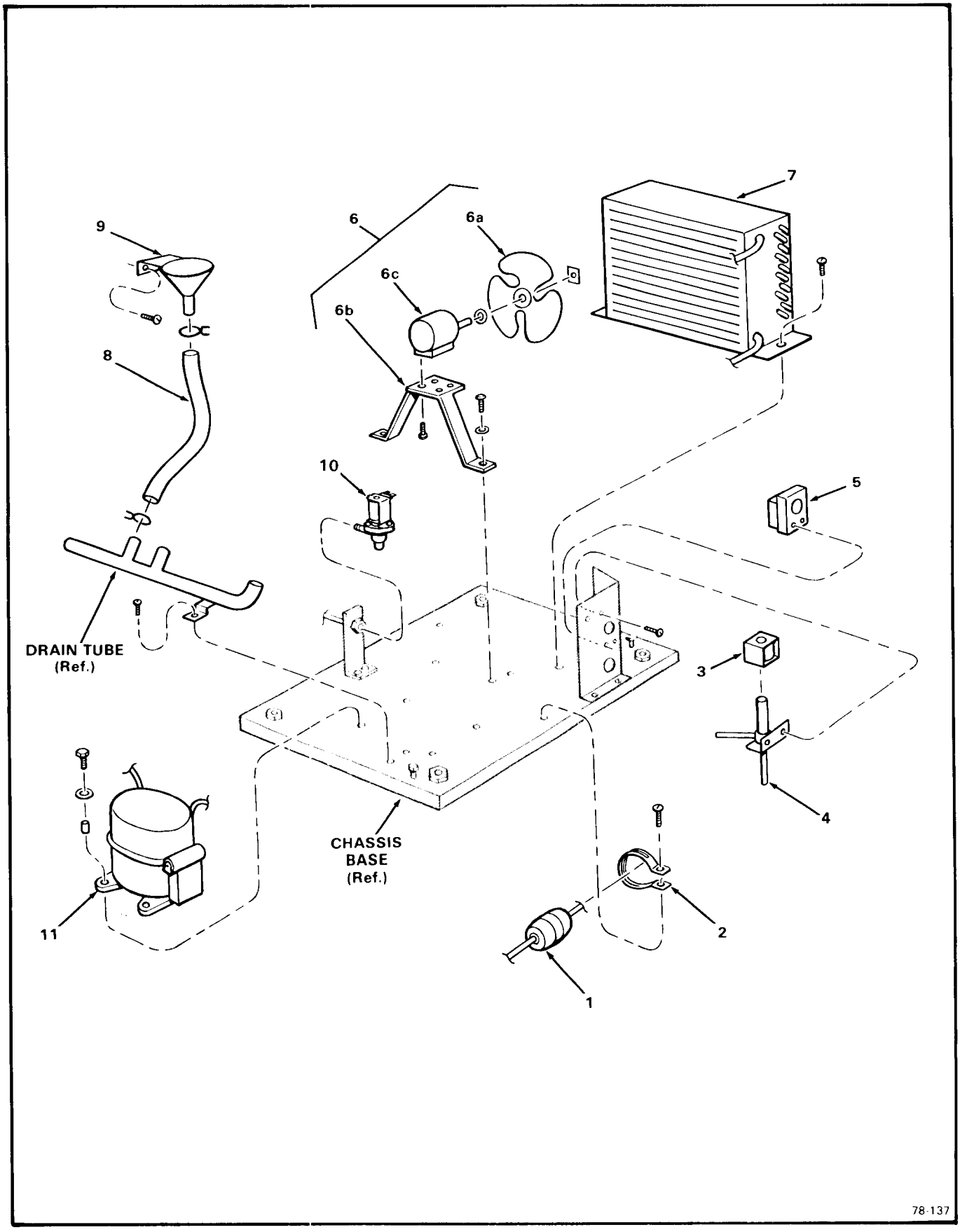

Figure 8-2. Major Assemblies - Air-Cooled.

Figure 8-2. Major Assemblies - Air-Cooled.

INDEX NO.	DESCRIPTION	PART NUMBER	REQ'D NUMBER
	Major Assemblies - Air-Cooled	No Number	Ref.
	* * *		
1	Drier	02-0831-00	1
2	Brace, Drier	A09386-000	1
	attaching parts, Index 1 & 2		
	Screw, No. 8 x 1/2 T/F Tap	03-1404-09	1
	* * *		
3	Coil & Frame Assembly, Hot Gas Valve	12-2008-01	1
4	Body & Plunger Assembly, Hot Gas Valve	12-2007-01	1
	attaching parts, Index 3 & 4		
	Screw, No. 8-32 x 3/8 Pan Hd	03-1403-17	2
	* * *		
5	Control, Hi Pressure	11-0394-01	1
	attaching part, Index 5		
	Screw, No. 8 x 1/2 T/F Tap	03-1404-09	2
	* * *		
6	Bracket Assembly, Fan Motor & Mounting	No Number	1
6a	Blade, Fan	18-0420-00	1
	Pad, Vibration (p/o Fan Motor)	No Number	1
	Nut, Fan Mounting (p/o Fan Blade)	No Number	1
6b	Bracket, Fan Mounting	18-3705-01	1
6c	Motor, Fan	12-1575-01	1
	attaching parts, Index 6c to 6b		
	Screw (p/o Fan Motor)	No Number	4
	attaching parts, Index 6b to Chassis Base		
	Lockwasher, No. 1/4 Internal Tooth - Carbon Steel Zinc Plated	03-1417-08	2
	Screw, No. 1/4-20 x 1/2 T/C Hex Hd	03-0571-00	2
	* * *		

Figure 8-2. Major Assemblies - Air-Cooled (Con't)

INDEX NO.	DESCRIPTION	PART NUMBER	REQ'D NUMBER
7	Condenser - Air Cooled	18-3706-01	1
	attaching parts, Index 7		
	Screw, No. 1/4-20 x 1/2 T/C Hex Hd	03-0571-00	2
	* * *		
8	Tube - 1/2-inch I.D. x 12-1/4 (order per foot)	13-0674-04	1
9	Cup Drain	02-2248-01	1
	attaching parts, Index 8 & 9		
	Screw, No. 6 x 3/8 T/F Tap	03-1404-23	2
	Clamp, Hose	02-0535-00	2
	* * *		
10	Valve, Water Inlet	12-1900-05	1
	* * *		
11	Compressor	No Number	1
	(See Figure 8-8)		
	attaching parts, Index 11		
	Grommet	18-2200-28	4
	Sleeve, Mounting	18-2200-27	4
	Washer, No. 5/16 Plain	03-1407-07	4
	Screw, No. 5/16-18 x 1-1/2 Hex Cap	03-1405-20	4
	* * *		

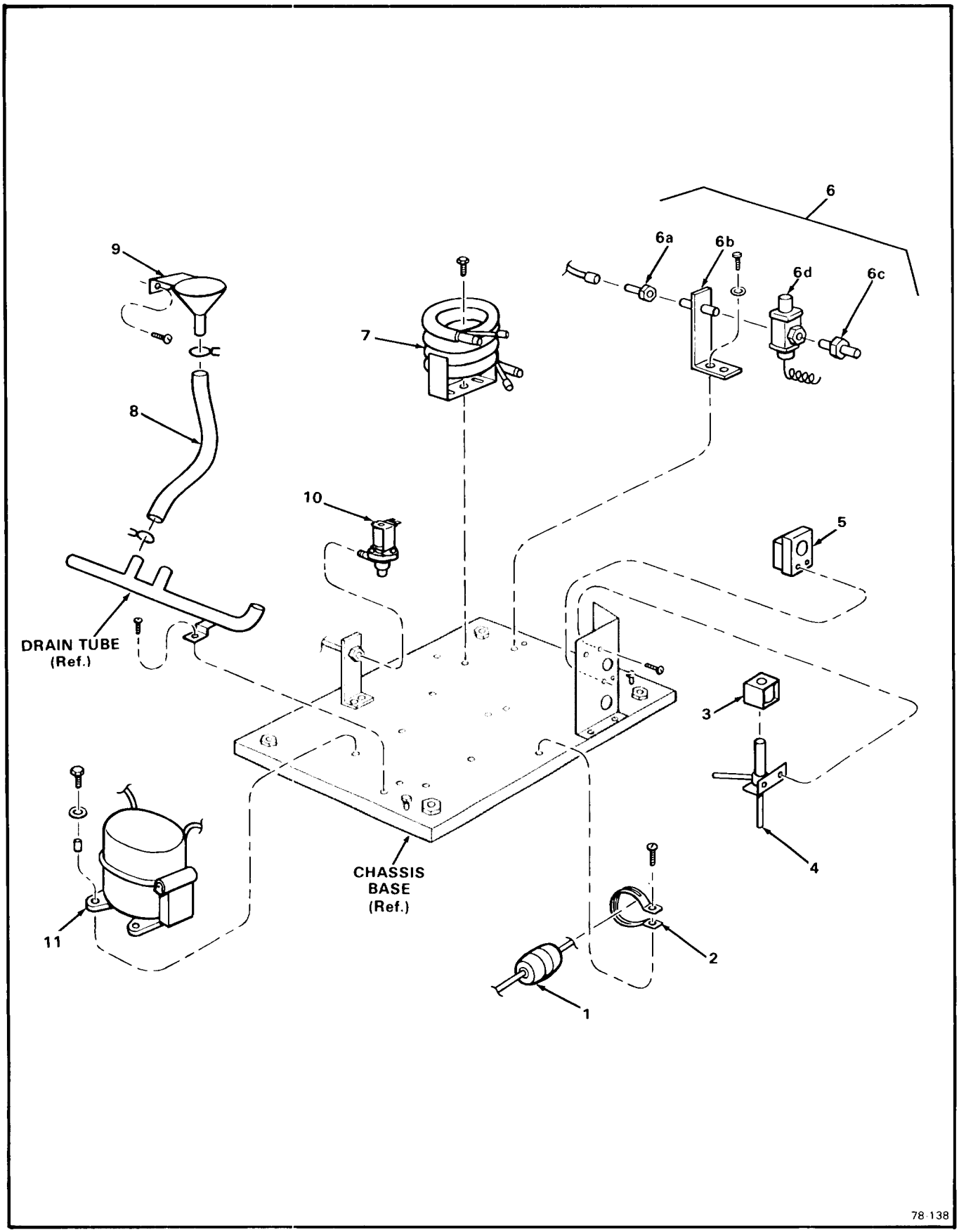

Figure 8-3. Major Assemblies - Water-Cooled.

Figure 8-3. Major Assemblies - Water-Cooled.

INDEX NO.	DESCRIPTION	PART NUMBER	REQ'D NUMBER
	Major Assemblies - Water-Cooled	No Number	Ref
	* * *		
1	Drier	02-0831-00	1
2	Brace, Drier	A09386-000	1
	attaching parts, Index 1 & 2		
	Screw, No. 8 x 1/2 T/F Tap	03-1404-09	1
	* * *		
3	Coil & Frame Assembly, Hot Gas Valve	12-2008-01	1
4	Body & Plunger Assembly, Hot Gas Valve	12-2007-01	1
	attaching parts, Index 3 & 4		
	Screw, No. 8-32 x 3/8 Pan Hd	03-1403-17	2
	* * *		
5	Control, Hi Pressure (Flare Nut Connector)	11-0388-01	1
	Control, Hi Pressure (Solder Connector)	11-0388-02	1
	attaching part, Index 5		
	Screw, No. 8 x 1/2 T/F Tap	03-1404-09	2
	* * *		
6	Regulator Assembly, Water	No Number	1
	attaching parts, Index 6		
	Lockwasher, No. 1/4 External Tooth - Carbon Steel Zinc Plated	03-1417-09	2
	Screw, No. 1/4-20 x 1/2 T/C Hex Hd	03-0571-00	2
6a	Union, Half - No. 5/8-18 x 3/8 Flare	16-0677-01	1
6b	Nipple Assembly, Pipe (w/Bracket)	A15924-000	1
6c	Coupling - 3/8 NPT x 3/8 Flare Brass	16-0355-00	1
6d	Valve, Water Regulator	11-0198-02	1
	* * *		
7	Condenser - Water-cooled	18-3707-01	1
	attaching parts, Index 7		
	Screw, No. 1/4-20 x 1/2 T/C Hex Hd	03-0571-00	2
	* * *		
8	Tube - 1/2-inch I.D. x 12-1/4 (Order per foot)	13-0674-04	1

Figure 8-3. Major Assemblies - Water-Cooled. (Cont'd.)

INDEX NO.	DESCRIPTION	PART NUMBER	REQ'D NUMBER
9	Cup, Drain	02-2248-01	1
	attaching parts, Index 8 & 9		
	Screw, No. 6 x 3/8 T/F Tap	03-1404-23	2
	Clamp, Hose	02-0535-00	2
	* * *		
10	Valve, Water Inlet	12-1900-05	1
	* * *		
11	Compressor	No Number	1
	(See Figure 8-8)		
	attaching parts, Index 11		
	Grommet	18-2200-28	4
	Sleeve, Mounting	18-2200-27	4
	Washer, No. 5/16 Plain	03-1407-07	4
	Screw, No. 5/16-18 x 1-1/2 Hex Cap	03-1405-20	4
	* * *		

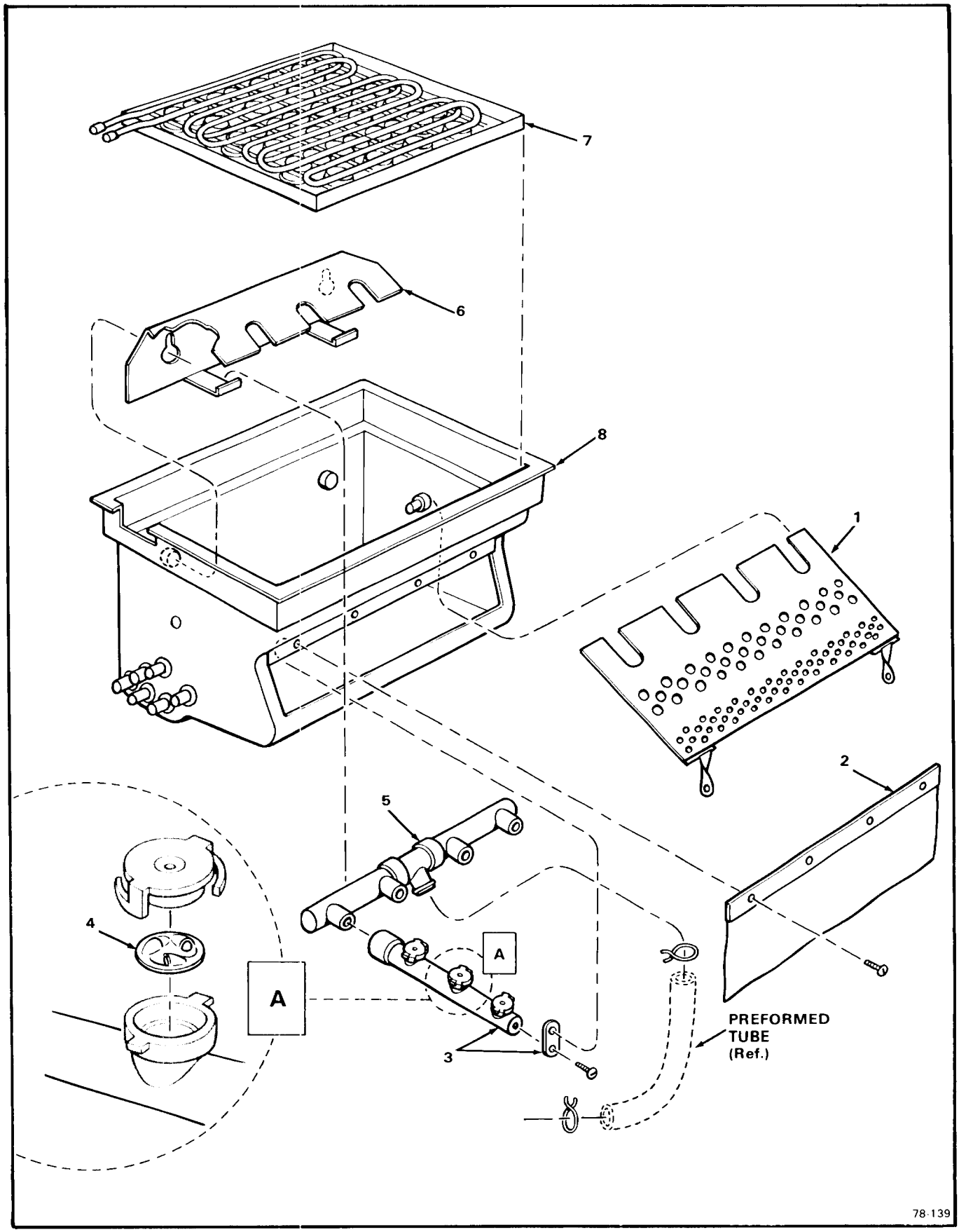

Figure 8-4. Freezer - Platen Assemblies.

Figure 8-4. Freezer - Platen Assemblies.

INDEX NO.	DESCRIPTION	PART NUMBER	REQ'D NUMBER
	Freezer - Platen Assemblies	No Number	Ref.
	(See Figure 8-1 for		
	next higher Assembly)		
	* * *		
1	Chute, Cube - Front	A26800-001	1
	* * *		
2	Curtain Assembly	02-2241-01	1
	attaching parts, Index 2		
	Screw, No. 8 x 1/2 T/F Tap S/S	03-1404-10	4
	* * *		
3	Tube, Spray	A25801-020	4
	attaching parts, Index 3		
	Screw, No. 8 x 1/2 T/F Tap S/S (Curtain screws)	03-1404-10	Ref.
	* * *		
4	Spinner, Jet (3 per spray tube)	A09543-000	3 (12)
	* * *		
5	Tube, Manifold	02-2193-01	1
	* * *		
6	Chute, Cube - Rear	A25747-001	1
	* * *		
7	Platen Assembly (medium size ice cubes)	A25748-020	1
	Platen Assembly (small size ice cubes)	A25753-020	1
	* * *		
8	Chamber, Freezing	02-2226-01	1
	* * *		

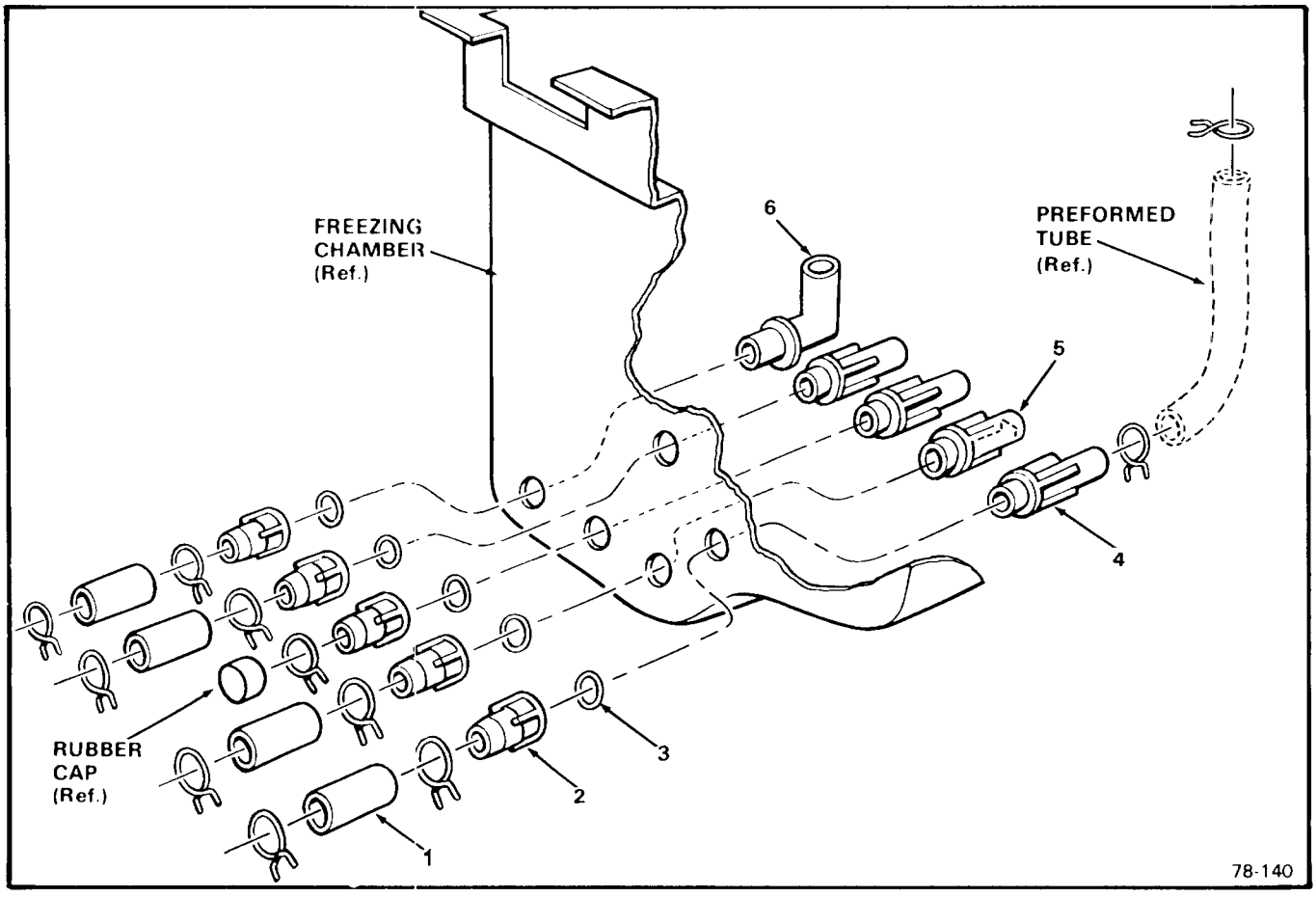

Figure 8-5. Freezer-Pump-Drain Tube Connections.

INDEX NO.	DESCRIPTION	PART NUMBER	REQ'D NUMBER
	Freezer-Pump-Drain Tube Connections	No Number	Ref.
	(See Figure 8-4 for		
	next higher Assembly)		
	* * *		
1	Tube - 3/4-inch I.D. x 2 (Order per foot)	13-0674-07	4
2	Tube, Female	A24379-001	5
	attaching parts, Index 1 & 2		
	Clamp, Hose	02-1358-01	8
	Clamp, Hose (Fits over Rubber Cap)	02-1530-01	1
	* * *		
3	O-Ring	13-0617-02	5
	* * *		
4	Tube, Male	02-2080-01	3
	* * *		
5	Tube, Pump Pick Up	02-2082-01	1
	* * *		
6	Pipe, Stand	02-2125-01	1
	* * *		

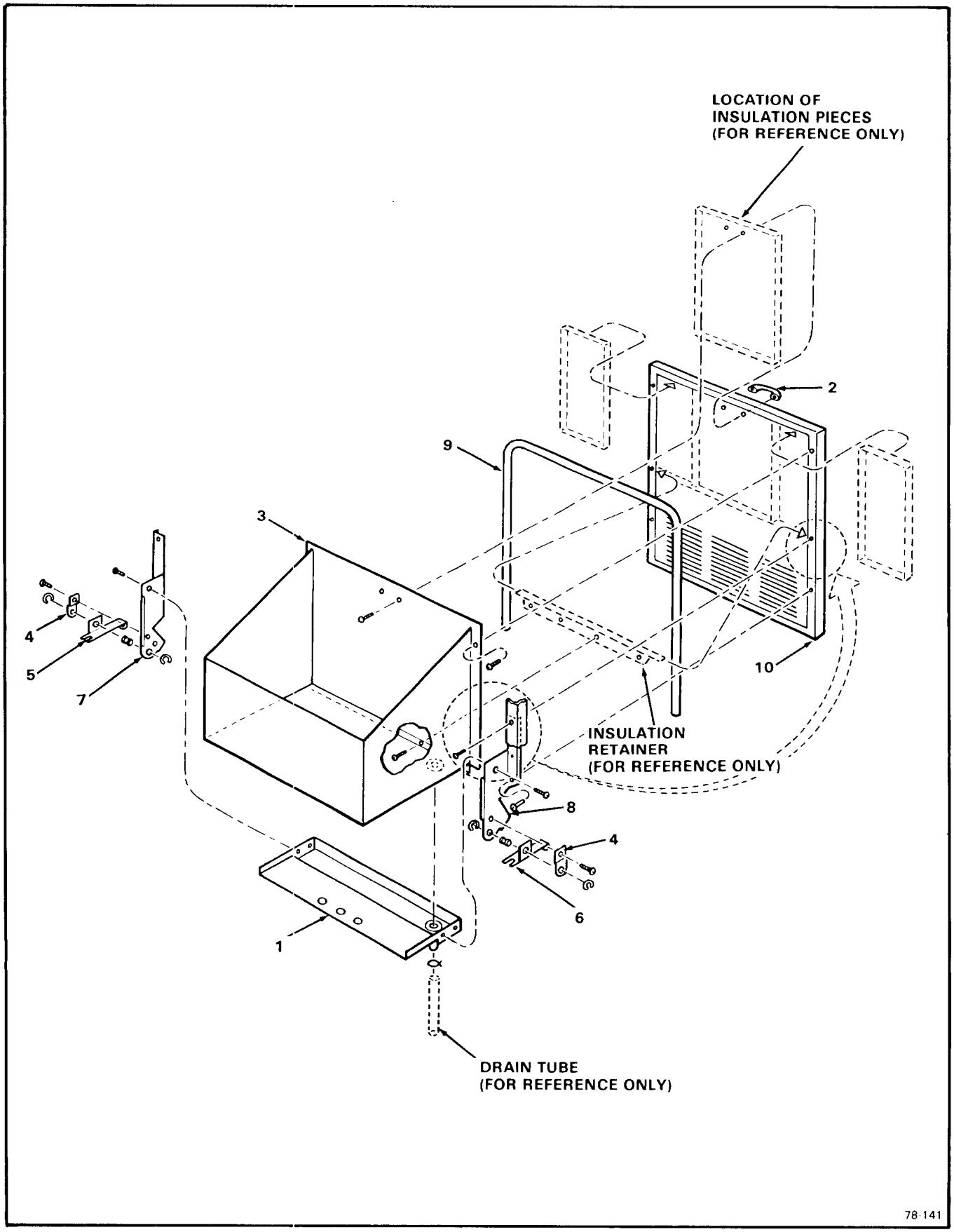

Figure 8-6. Lower Front Door Bin Assembly.

Figure 8-6. Lower Front Door Bin Assembly.

INDEX NO.	DESCRIPTION	PART NUMBER	REQ'D NUMBER
	Lower Front Door Bin Assembly (C.R.S Painted)	A25717-001	Ref.
	(See Figure/Index 8-1/2 (Stainless Steel)	A25717-002	Ref.
	for next higher Assembly)		
	* * *		
1	Pan Assembly, Drip	A25725-001	1
	attaching part, Index 2		
	Screw, No. 8 x 1/2 T/F Tap	03-1404-10	4
	* * *		
2	Handle, Door	15-0596-01	1
	attaching part, Index 2		
	Screw, No. 10-24 x 1-1/4 Phil Recess Pan Hd	03-1403-73	2
	* * *		
3	Bin Assembly	A25729-001	1
	attaching part, Index 3 (sides of Bin)		
	Screw, No. 8 x 1/2 T/F Tap	03-1404-10	16
	attaching part, (bottom Bin to Insulation Retainer)		
	Screw, No. 8 x 1/4 T/F Tap	03-1404-29	4
	* * *		
4	Bracket, hinge	A25720-001	2
	attaching part, Index 4 to 7 & 8		
	Screw, No. 1/4-20 x 1/2 T/C Hex Hd	03-0571-00	2
	* * *		
5	Hinge, Base - Right	A25719-002	1
6	Hinge, Base - Left	A25719-001	1
7	Hinge, Right Side	A25724-002	2
8	Hinge, Left Side	A25724-001	
	Attaching parts, Index 4, 5, 6 to 7 & 8		
	Pin Hinge	A25722-001	2
	Ring, Retaining	03-1539-08	4
	attaching parts, Index 7 & 8 to 1 & 10		

Figure 8-6. Lower Front Door Bin Assembly (Cont'd).

INDEX NO.	DESCRIPTION	PART NUMBER	REQ'D NUMBER
	Screw, No. 8 x 1/2 T/F Tap	03-1404-10	4 (ref.)
	* * *		
9	Gasket (67-inch) (Order per foot)	13-0595-00	1
	* * *		
10	Door, Lower Front (C.R.S. Painted)	A25718-001	1
	Door, Lower Front (Stainless Steel)	A25718-002	1
	* * *		

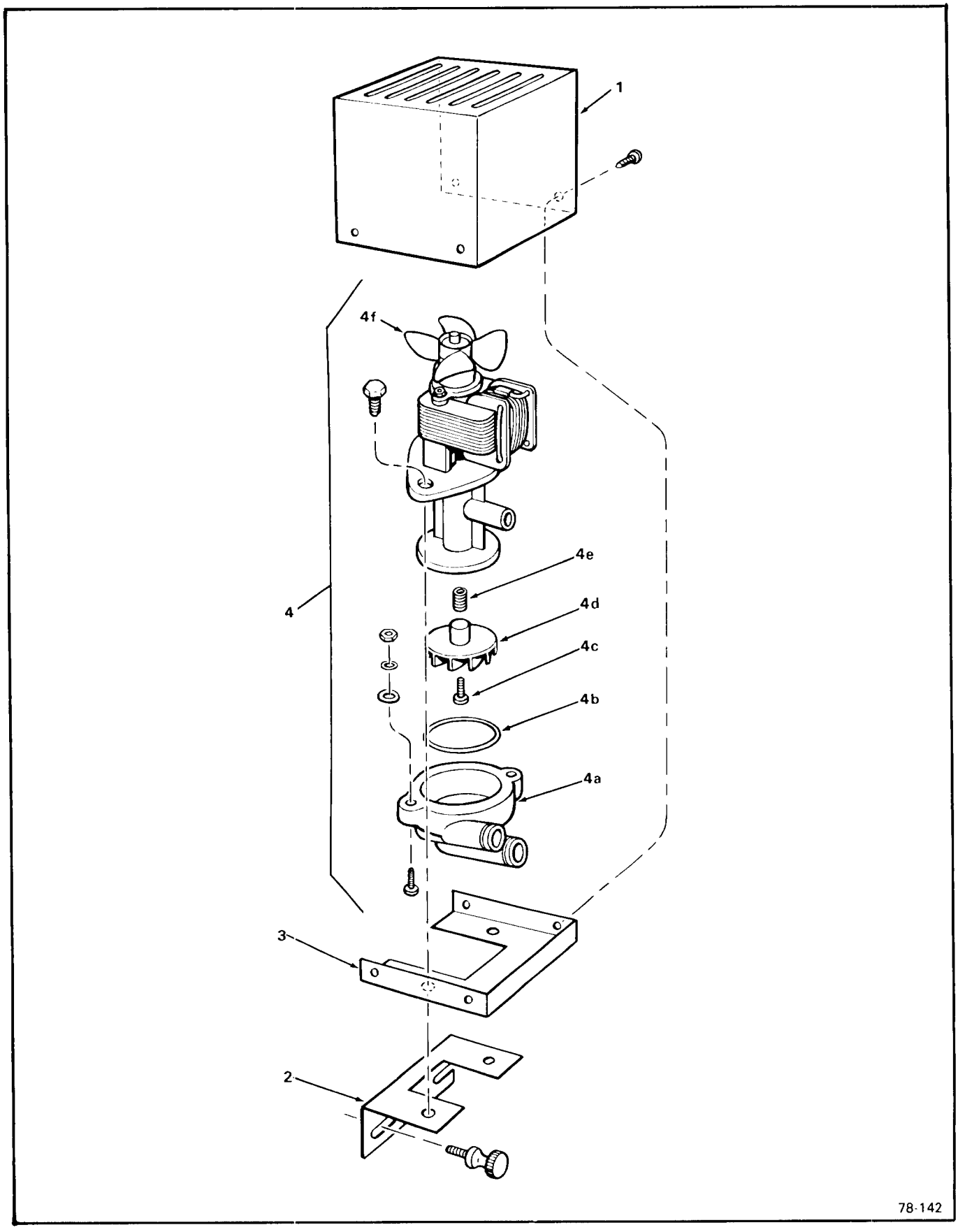

Figure 8-7. Water Pump, Bracket & Enclosure Assembly.

Figure 8-7. Water Pump, Bracket & Enclosure Assembly.

INDEX NO.	DESCRIPTION	PART NUMBER	REQ'D NUMBER
	Water Pump, Bracket & Enclosure Assembly	No Number	Ref.
	(See Figure 8-1 for		
	next higher Assembly)		
	* * *		
1	Enclosure, Pump	A25795-001	1
	attaching part, Index 1		
	Screw, No. 8 x 1/2 T/F Tap	03-1404-10	4
	* * *		
2	Bracket, Water Pump	No Number	Ref.
3	Bracket, Pump Box	A25794-001	1
	attaching parts, Index 2, 3 & 4		
	Screw, No. 1/4-20 x 1/2 T/X Hex Hd	03-0571-00	2
	attaching part, (Pump & Bracket to Cabinet Liner)		
	Screw, Thumb - No. 10-24 x 1/2 Knurled Hd	03-0727-00	2
	* * *		
4	Pump, Water	12-1975-01	1
	attaching part, Index 4 to 2 & 3		
	Screw, No. 1/4-20 x 1/2 T/C Hex Hd	03-0571-00	Ref.
4a	Housing, Pump Intake	12-1849-61	1
4b	O-Ring	12-1849-60	1
4c	Screw	12-2061-54	1
4d	Impeller	12-2061-53	1
4e	Spring	12-2061-55	1
	attaching parts, Index 4a thru 4e		
	Washer, No. 6 Plain S/S	03-1407-01	2
	Lockwasher, No. 6 External Tooth-Phosphor Bronze	03-1417-01	2
	Screw, No. 6-32 x 7/8 Phil Recess Pan Hd	03-1403-08	2
	Nut, No. 6-32	03-1406-01	2
4f	Blade, Fan	02-1719-00	1
	* * *		

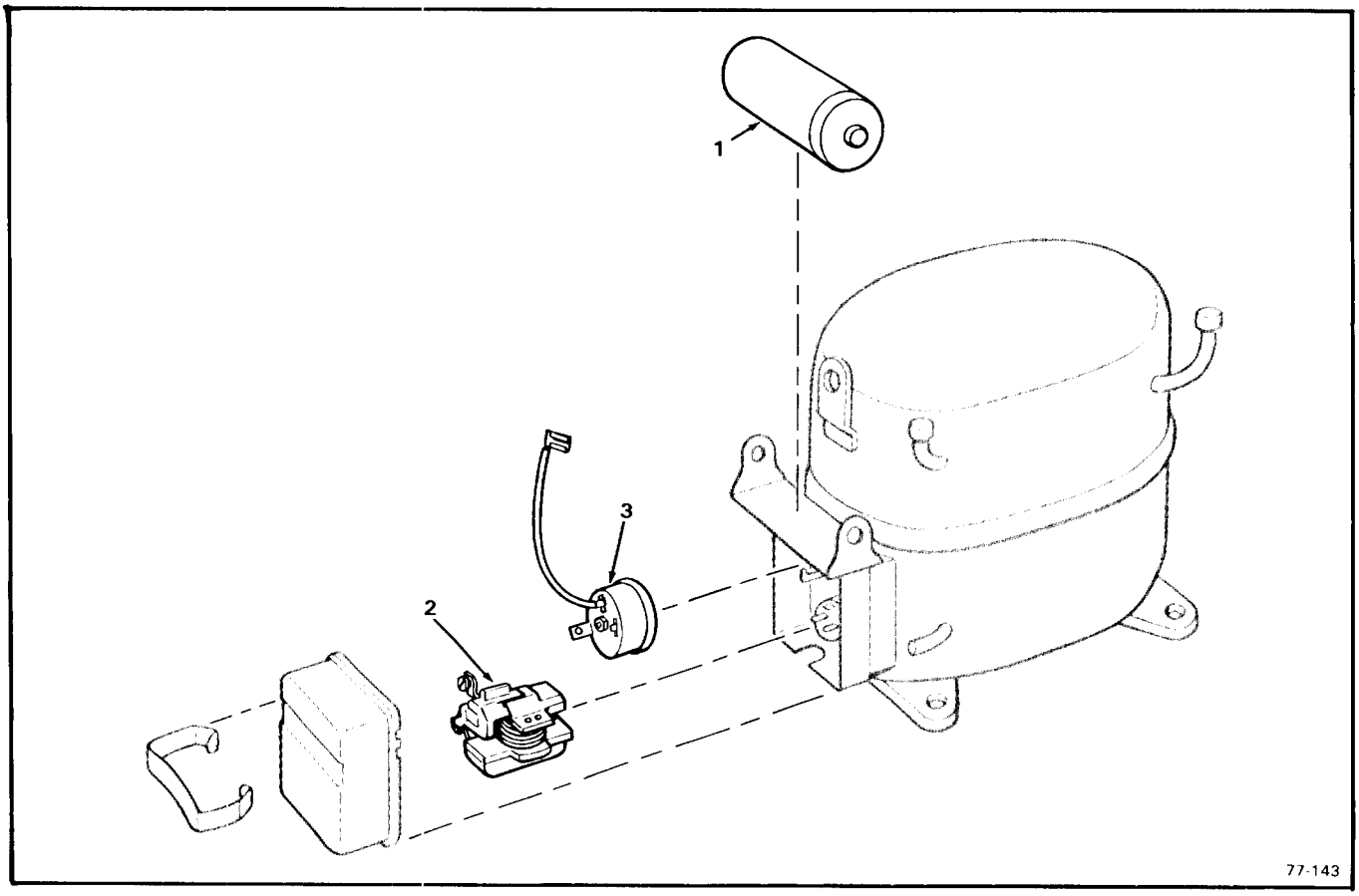

Figure 8-8. Compressor Assembly.

INDEX NO.	DESCRIPTION		PART NUMBER	REQ'D NUMBER
	Compressor Assembly	(Copeland)	18-4100-01	Ref.
	(See Figure 8-2/11 and 8-3/11	(Tecumseh)	18-3600-01	Ref.
	for next higher Assembly)			
	* * *			
1	Capacitor, Start	(Copeland)	18-4100-43	1
	Capacitor, Start	(Tecumseh)	18-3600-30	1
	* * *			
2	Relay	(Copeland)	18-4100-42	1
	Relay	(Tecumseh)	18-3600-34	1
	* * *			
3	Overload	(Copeland)	18-4100-41	1
	Protector	(Tecumseh)	18-3600-35	1
	* * *			

Figure 8-8. Compressor Assembly. (Cont'd.)

NOTE:

1. Early Model AC-20's used the COPELAND Compressor, except 400 units produced during 1976, when the TECUMSEH Compressor was installed, serial number usage for the 400 units include:

   6Q302269 through 302514 (256 units)
   6Q306164 through 306308 (144 units)
   400 units total

2. Complete Motor Compressors are interchangeable. However, for replacement of defective component parts, replace with like part. DO NOT MIX TECUMSEH with COPELAND parts.

3. Current production of the Model AC-20, beginning with Serial No. 406754-09R uses the TECUMSEH Compressor.

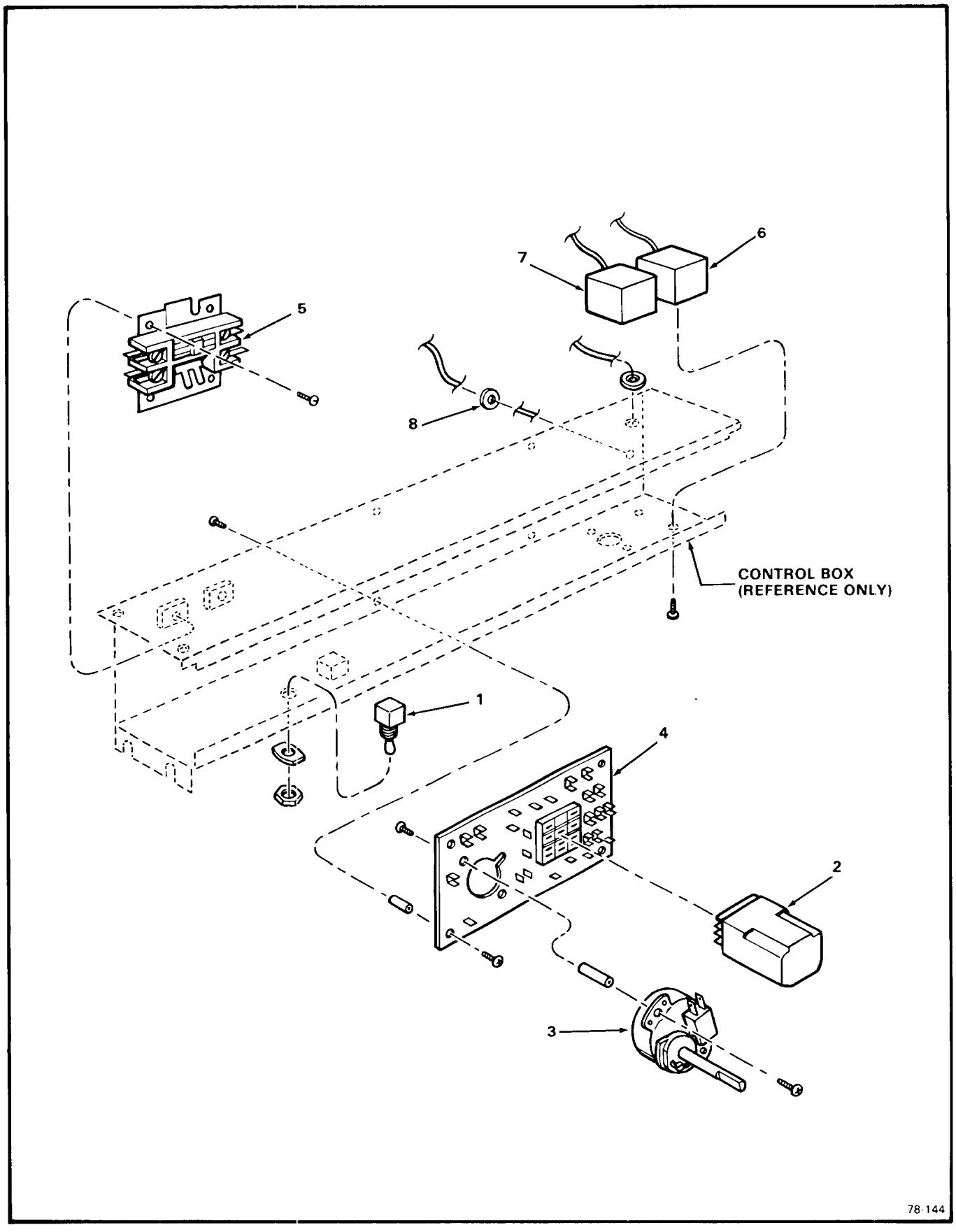

Figure 8-9. Control Box Assembly.

Figure 8-9. Control Box Assembly.

INDEX NO.	DESCRIPTION	PART NUMBER	REQ'D NUMBER
	Control Box Assembly	No Number	Ref.
	(See Figure 8-1 for		
	next higher Assembly)		
	* * *		
1	Switch, Toggle	12-0426-01	1
	* * *		
2	Relay 3PDT Covered (Air-Cooled Model)	12-1879-03	1
	Relay 3PDT Covered (Water-Cooled Model)	12-1879-02	1
	* * *		
3	Timer & Switch Assembly	12-1980-01	1
	attaching parts, Index 3		
	Stand - Off - (7/8 lg.)	02-2242-01	2
	Screw, No. 6-32 x 1/4 Phil Recess Pan Hd	03-1403-02	4
	* * *		
4	Board Assembly, Circuit	12-1912-01	1
	attaching parts, Index 4		
	Stand - Off - (5/8 lg)	02-2242-02	5
	Screw, No. 6-32 x 1/4 Phil Recess Pan Hd	03-1403-02	5
	* * *		
5	Contactor	12-2041-01	1
	attaching parts, Index 5		
	Screw, No. 8-32 x 3/16 Phil Recess Pan Hd	03-1403-14	2
	* * *		
6	Control, Temperature (Bin)	11-0353-02	1
7	Control, Cube Size	11-0345-02	1
	Screw, No. 8-32 x 1/4 Phil Recess Pan Hd	03-1403-15	4
	* * *		
8	Grommet	13-0557-00	2
	* * *		

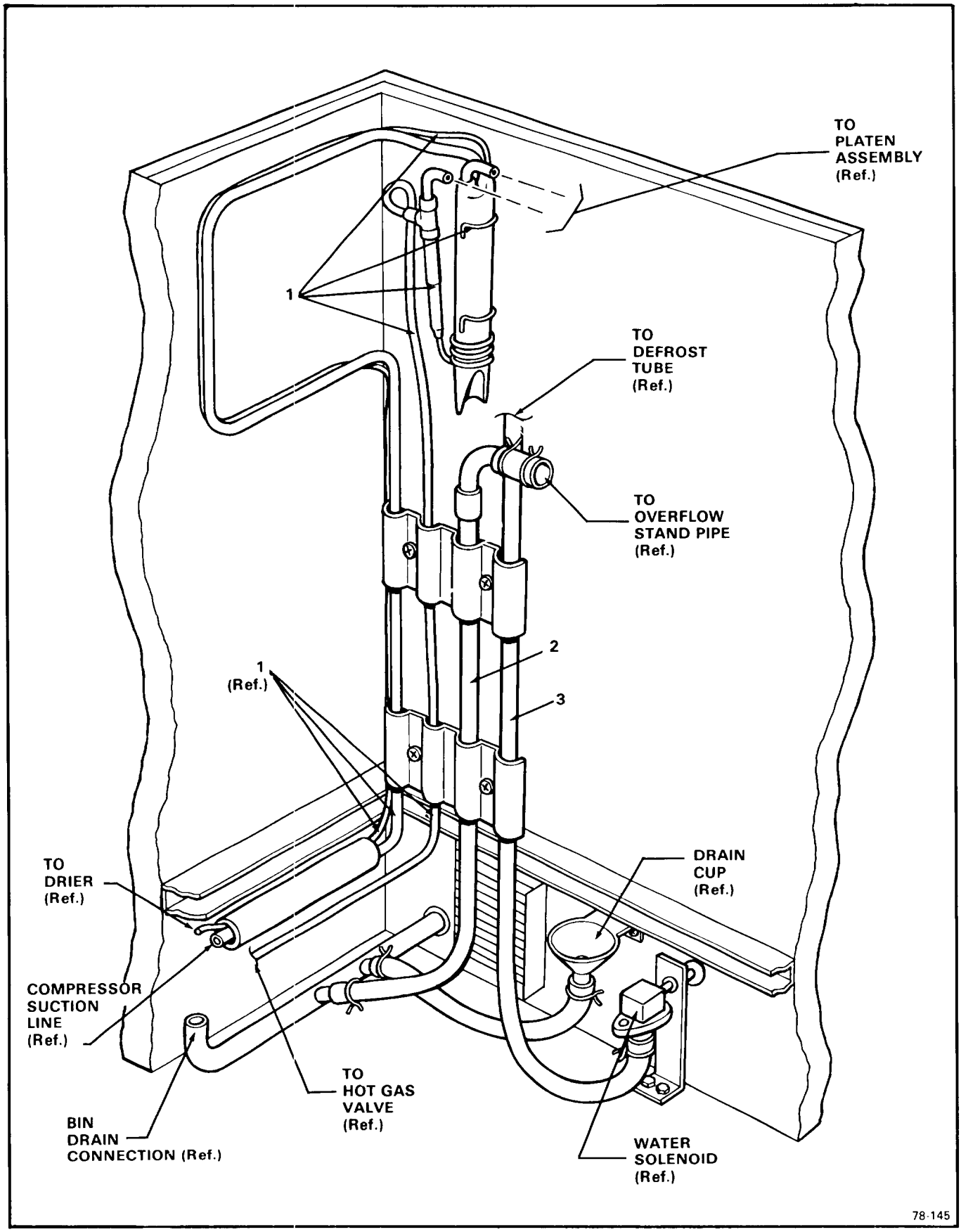

Figure 8-10. Heat Exchanger, Tubing & Fittings.

Figure 8-10. Heat Exchanger, Tubing & Fittings.

INDEX NO.	DESCRIPTION	PART NUMBER	REQ'D NUMBER
	Heat Exchanger, Tubing and Fittings	No Number	Ref.
	(See Figure 8-1 for		
	next higher Assembly)		
	* * *		
1	Exchanger Assembly, Heat	A25755-001	1
	* * *		
2	Tube, Tygon 1/2 inch I.D. x 23 (Order per foot)	13-0674-04	1
3	Tube, Tygon 1/2 inch I.D. x 40 (Order per foot)	13-0674-04	1
	attaching parts		
	Clamp, Hose 11/16 inch I.D. Index 2 & 3	02-0535-00	2
	Clamp, Hose 1 inch I.D. Index 2	02-1358-01	2
	* * *		

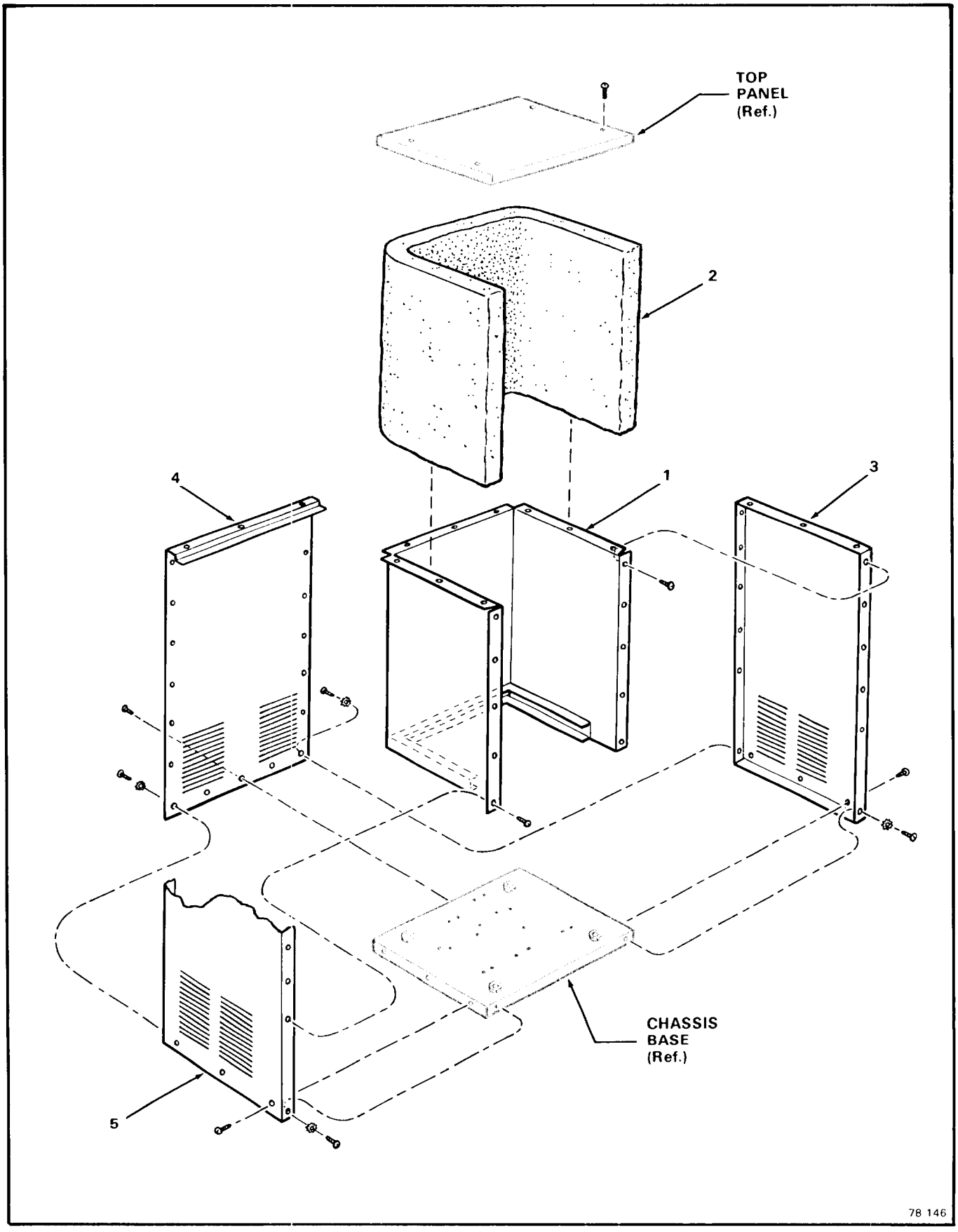

Figure 8-11. Panels and Cabinet Liner Assembly.

Figure 8-11. Panels and Cabinet Liner Assembly.

INDEX NO.	DESCRIPTION	PART NUMBER	REQ'D NUMBER
	Panels and Cabinet Liner Assembly	No Number	Ref.
	(See Figure 8-1 for		
	next higher Assembly)		
	* * *		
1	Liner Assembly, Cabinet	A25735-001	1
	attaching parts, Index 1		
	Screw, No. 8 x 1/2 T/F Tap	03-1404-10	6
	* * *		
2	Insulation, Fiberglass 1-1/4 Thk. x 24 Wide x 56 Lg.	No Number	1
	* * *		
3	Panel, Right Side (C.R.S. Painted)	A25703-001	1
	Panel, Right Side (Stainless Steel)	A25703-002	1
	attaching parts, Index 3		
	Lockwasher, No. 8 External Tooth-Carbon Steel Zinc Plated	03-1417-03	2
	Screw, No. 8 x 1/2 T/F Tap	03-1404-10	4
	* * *		
4	Panel, Back (C.R.S. Painted)	A25707-001	1
	Panel, Back (Stainless Steel)	A25707-002	1
	attaching parts, Index 4		
	Lockwasher, No. 8 External Tooth-Carbon Steel Zinc Plated	03-1417-03	Ref.
	Screw, No. 8 x 1/2 T/F Tap	03-1404-10	17
	* * *		
5	Panel, Left Side (C.R.S. Painted)	A25702-001	1
	Panel, Left Side (Stainless Steel)	A25702-002	1
	attaching parts, Index 5		
	Lockwasher, No. 8 External Tooth-Carbon Steel Zinc Plated	03-1417-03	2
	Screw, No. 8 x 1/2 T/F Tap	03-1404-10	4
	* * *		

AC25 TABLE OF CONTENTS

SECTION I ..... Page
Specifications 2
Installation 4

SECTION II
Start up 8

SECTION III
Freezing Cycle 10
Harvest Cycle 10
Component Description 11
Refrigerant Charge 13

SECTION IV
Adjustment of the bin thermostat 14
Adjustment of the cube size control 14
Adjustment of the timer 14
Adjustment of the water regulating valve 15
Replacement of the compressor 16
Replacement of the condenser 16
Replacement of the cube chute 17
Replacement of the fan motor 17
Replacement of the spray bar 17
Replacement of the water pump 19

SECTION V
Cleaning 20
Sanitizing 21

SECTION IV
Service Diagnosis 23

AC25 LIST OF ILLUSTRATIONS
Installation 7
Timer cam positions 8
Freezing cycle 10
Harvest cycle 11
Adjustment of the temp. control 15
Adjustment of the timer 16
Freezing chamber 17
Start position for the timer 18

SERVICE PARTS LIST
Parts lists and wiring digrams are in the center of this manual, printed on yellow paper.

THIS PAGE
INTENTIONALLY
LEFT BLANK

SPECIFICATIONS
AC25

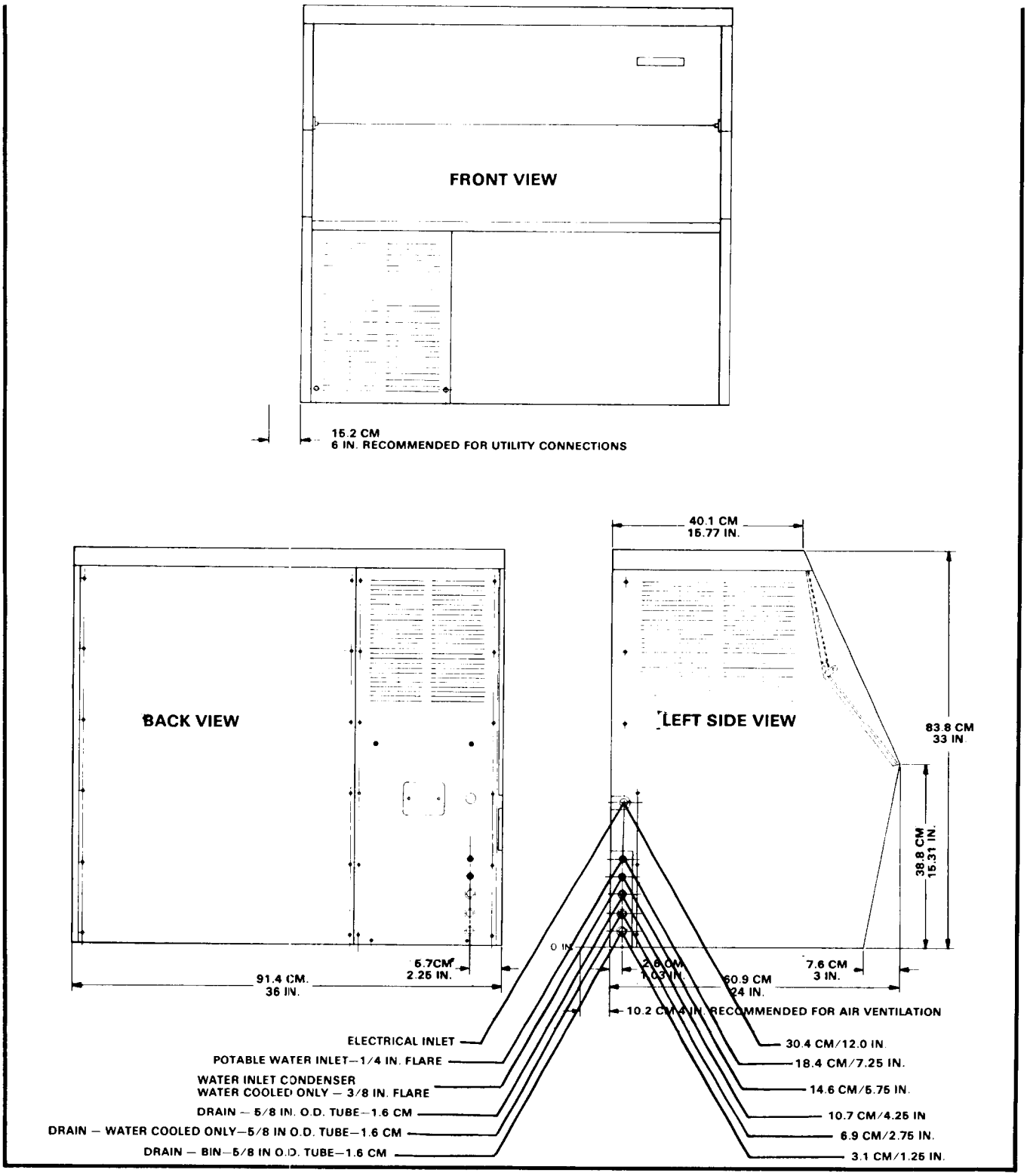

SPECIFICATIONS (Cont'd)

MODEL AC25

Bin Storage: 140 lbs.*

Air-Cooled: Model AC25A-1A

Water-Cooled: Model AC25W-1A

Electrical: 115/60/1

Est. Ship. Wt.: 350 lbs.

NAME PLATE

MODEL NUMBER
SERIAL NUMBER
A.C. SUPPLY VOLTAGE
MINIMUM CIRCUIT AMPACITY WIRES
MAXIMUM FUSE SIZE * HERTZ
HEATER WATTS PHASE
REFRIGERANT CHARGE OZ

MOTORS	VOLTS	R.L.A./F.L.A.	W/HP.	L.R.A.
COMPRESSOR				
FAN				
DRIVE				
OTHER				

DESIGN PRESSURE LOW HIGH
* OR HACR TYPE CIRCUIT BREAKER

SCOTSMAN

Scotsman Ice Systems are designed and manufactured wtih the highest regard for safety and performance. They meet ar exceed the standards of U.L., N.S.F., and C.S.A.

Scotsman assumes no liability of any kind for products manufactured by Scotsman that have been altered in any way, including the use of any parts and/or components not specifically approved by Scotsman.

Scotsman reserves the right to make design changes and/or improvements at any time. Specifications and designs are subject to change without notice.

FRONT SERVICE ACCESS PANEL

LEG KIT

KLP2E - 6-inch metal legs, Black Enamel
KLP2S - 6-inch metal legs, Nickel Plated

SEE NAMEPLATE, shown at left, for electrical and refrigeration specifications. NAMEPLATE located on rear service panel, near left rear corner of the cabinet.

Remove Lower Left Front Panel to locate the Model/Serial Number plate, shown below, on the front left corner of the Base Assembly.

SERIAL NUMBER PLATE

MODEL NUMBER
SERIAL NUMBER
VOLTS/HERTZ/PHASE
MAXIMUM FUSE SIZE
REFRIGERANT CHARGE OZ.

*Storage based on 90-percent of total volume x 34 lbs. average density of ice. A.R.I. Standard.

This icemaker has been engineered to our own rigid safety and performance standards. The National Sanitation Foundation (NSF) seal, signifies that it is listed with the NSF and that it complies with the materials and construction standards of the NSF. In addition, the Underwriters Laboratories, Inc., (UL) Listing Mark and the Canadian Standards Association (CSA) Monogram, both signify that its construction and design have been inspected and tested by them. NSF, UL and CSA inspectors also periodically examine production icemakers at the factory, to assure continued compliance.

To retain the safety and performance built into this icemaker, it is important that installation and maintenance be conducted in the manner outlined in this manual.

SECTION I
GENERAL INFORMATION & INSTALLATION

I. INTRODUCTION

This manual provides specifications and the step-by-step procedures for the installation start-up, operation, and the maintenance and cleaning for the SCOTSMAN Model AC25 Cuber.

The Model AC25 Cubers are quality designed, engineered, and constructed, and thoroughly tested icemaking and ice storage systems, providing the utmost in flexibility to fit the needs of a particular user. Separate sections detail more specifically: General Information & Installation; Start Up Operation; Principles of Operation; Adjustment and Removal and Replacement Procedures; Maintenance and Cleaning Instructions; Service Diagnosis; Wiring Diagrams; and, the Illustrated Assemblies and Parts Lists.

One of the outstanding features of this series of Cubers, is the easy access for service. With the Bin Door, the top Front Panel, and the Left Side Panel removed, access can be gained to the refrigeration systems for on-the-spot repair.

DESCRIPTION

An attractive compact cabinet of textured metal with a Sandelwood enamel finish, a woodgrain upper front panel and a bin access door. Also, an optional stainless steel cabinet finish is available. Both cabinets have up-to-date styling, and easily removable front panels for easy access to electrical and mechanical components.

SEALED REFRIGERATION SYSTEM

To provide quiet efficient operation of the Icemaker, the Compressor motor is internally spring-mounted. The Compressor motor is covered by a five year parts warranty.

SELF-CONTAINED STORAGE BIN

These Cubers store their own ice supply in an ice storage bin inside an insulated cabinet.

OVERALL DIMENSIONS

The overall dimensions of the Cuber depth, height, etc., allows the Cuber to be installed in harmony with the existing counter equipment.

II. UNPACKING AND INSPECTION

1. Call your authorized SCOTSMAN Distributor or Dealer, for proper installation. He's listed under ICE MAKING EQUIPMENT and MACHINERY in the yellow pages of the telephone book.
2. Visually inspect the exterior of the shipping container and skid and any severe damage noted, should be reported to the delivering carrier; and, a concealed damage claim filed subject to internal inspection, with carrier representative present.
3. BEFORE removal of any panels or packing, carefully lay the Cuber on its back and remove the shipping bolts and the shipping base or skid.
4. Remove screws and shipping tape, and the Bin Door and top Front Panel from the cabinet, and inspect for any concealed damage claims, as stated in step 2 above.
5. Remove all internal support packing, tape and wires in machinery compartment.
6. Check that refrigerant lines do not rub or touch lines or other surfaces, and that fan blades, if any, move freely.
7. Check that the Compressor is snug on all mounting pads.
8. Remove optional Water Strainer, when ordered, from shipping envelope, for installation in water supply line.
9. Use clean damp cloth or disposable paper wiper to wipe clean the interior surfaces of the ice storage Bin and the exterior surfaces of the cabinet.
10. See NAMEPLATE on the left section of the rear service panel of the cabinet and check that the location source voltage corresponds with the voltage specified on the nameplate.

CAUTION

Improper voltage supplied to the Icemaker will void your parts replacement program.

11. Fill in all spaces of the Manufacturer's Registration Card including: Model Number and Serial Number taken from the aluminium plate located at the front left corner of the Base Assembly. Forward the completed, self-addressed, registration card to the SCOTSMAN factory.

III. LOCATION AND LEVELING

CAUTION

This Cuber is NOT designed for outdoor installations where air temperatures are below 50-degrees F., or above 100-degrees F. and the water temperature is below 40-degrees F. or above 100-degrees F. Extended periods of

operation at temperatures exceeding these limitations will constitute misuse, under the terms of the SCOTSMAN Manufacturer's limited warranty, resulting in LOSS of warranty coverage.

1. Position the Cuber in the selected permanent location.

NOTE

Prior consideration for location site shall include:

1. *Minimum room temperature 50-degrees F. and maximum room temperature 100-degrees F.*
2. *Water inlet temperatures: Minimum 40-degrees F. and Maximum 100-degrees F.*
3. *Well ventilated location for Air-Cooled model, advising user to frequently clean Condenser.*
4. *SERVICE ACCESS: Adequate space for all service connections, through the left side or rear of the Cabinet. A six-inch minimum clearance at rear, side and front louvered panels, for routing cooling air drawn into and exhausted out of the compartment, to maintain proper condensing operation on Air-Cooled Models.*

2. Level the Cuber in both the left-to-right and front-to-rear directions. The optional leveling legs can be adjusted with an open-end wrench.

IV. ELECTRICAL CONNECTIONS

WARNING

This icemaker requires a SOLID EARTH GROUND that meets the national, state and local electrical code requirements. To prevent possible SEVERE ELECTRICAL SHOCK INJURY to individuals, or extensive damage to equipment, install an approved SOLID EARTH GROUND wire to the icemaker. SEE wiring diagram.

SEE NAMEPLATE for current requirements to determine wire size to be used for electrical hookup. The Cuber requires a solid earth ground wire. See wiring diagram.

Be certain the Cuber is connected to its own electrical circuit and individually fused. The maximum allowable voltage variation should not exceed ten percent of the nameplate rating, even under starting conditions. Low voltages can cause erratic operation and may be responsible for serious damage to the overload switch and motor windings.

All external wiring should conform to the National, State and local electrical code requirements. Usually an electrical permit and services of a licensed electrician will be required.

V. WATER SUPPLY AND DRAIN CONNECTIONS

A. AIR-COOLED MODELS: The recommended water supply line is a 1/4 inch O.D. copper tubing. Connect to cold water supply line with standard plumbing fittings, with a shutoff valve installed in an accessible place between the water supply and the Cuber.

The optional wire mesh strainer, when ordered, must be installed with the cleanout plug down. Locate the strainer in the water supply line, next to the Cuber with the arrow on the strainer, in the direction of the water flow. The strainer protects against large particles of rust, scale, etc., which may be loosened in the water supply pipe, at the time of installation.

CAUTION

To prevent damage to the freezer mechanism, DO NOT operate this unit when the water supply is OFF, or is below 20 PSI, the recommended water pressure. Position the master switch to the OFF position, until proper water supply is resumed.

The Icemaker in this Cuber will not operate properly when water supply temperatures are below 40-degrees F. or above 100-degrees F.

B. WATER-COOLED MODELS: On Water-cooled models a separate connection, to the Condenser is required. A 3/8-inch O.D. copper tubing is provided for a separate water inlet line to be connected and a separate drain line to be connected.

NOTE

The WARNING in the text above for the Air-cooled models equally applies for the Water-Cooled models. In both type installations, water supply must be installed to conform with local plumbing codes. In some cases, a plumbing permit and services of a licensed plumber will be required.

C. DRAIN CONNECTIONS: All drains are gravity type and must be 1/4-inch fall per foot on horizontal runs. The drains to be installed to conform with local code. The drain receptacle should be an open, trapped or vented construction.

Recommended Bin drain is 5/8-inch O.D. copper tubing, should be vented and run separately. Install a separate drain line to 3/8-inch O.D. drain tube from the Water-Cooled Condenser, on Water-Cooled models.

VI. FINAL CHECK LIST

1. Is the Cabinet level? (IMPORTANT)

2. Is the Cuber in a room where ambient temperatures are a minimum of 50-degrees F. all year around?
3. Is there at least a six-inch clearance behind and around the cabinet for all connections and for proper air circulation?
4. Have all electrical and piping connections been made?
5. Has the electrical power supply wiring been properly connected, and the voltage tested and checked against the nameplate rating? Has proper Chassis-to-earth ground been installed?
6. Is the water supply line shutoff valve installed and opened and has the inlet water supply pressure been checked to ensure a minimum of 20 PSIG?
7. Have the Compressor hold down bolts been checked to be sure the compressor is snug on the mounting pads?
8. Check all refrigerant lines and conduit lines to guard against vibration and possible failure.
9. Has the Cuber and the Bin been wiped clean with clean damp cloths?
10. Has the owner/user been given the User Manual and instructed on how to operate the icemaker and the importance of periodic maintenance?
11. Has the owner/user been given the name and telephone number of the Authorized SCOTSMAN Distributor or Service Agency serving him?
12. Has the Manufacturer's Registration Card been properly filled out? Check for correct Model and Serial Numbers from nameplate, then mail the completed card to the SCOTSMAN factory.

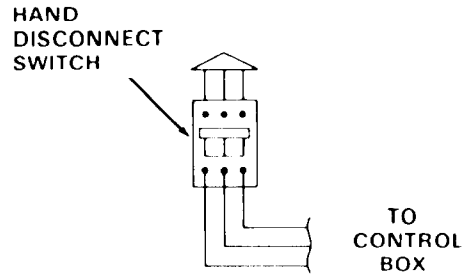

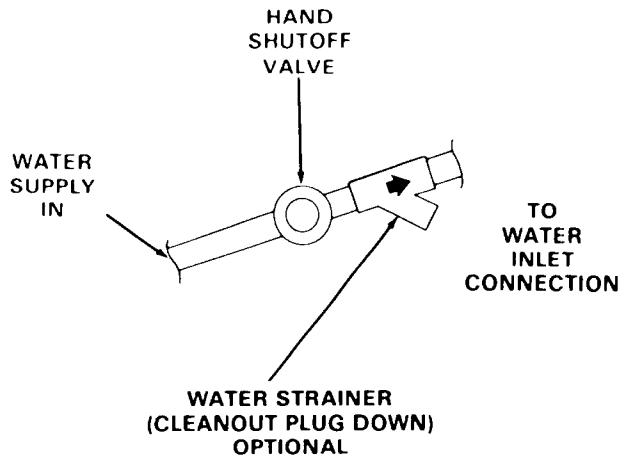

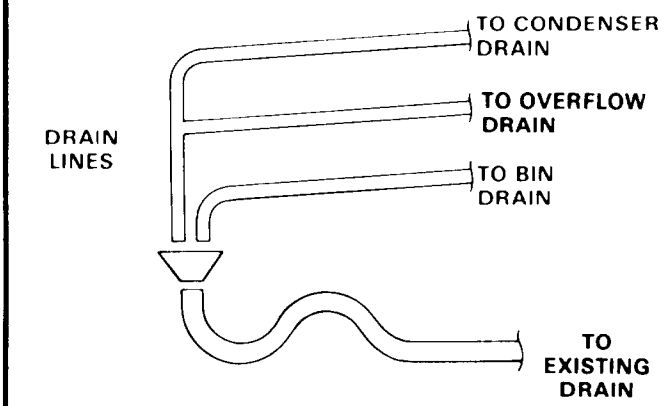

OPEN, TRAPPED OR VENTED DRAIN. RECOMMENDED 1/4-INCH FALL PER FOOT OF RUN ON DRAIN LINES.

CAUTION

THIS ICEMAKER IS NOT DESIGNED FOR OUTSIDE INSTALLATION AND WILL NOT OPERATE IN AMBIENT TEMPERATURES BELOW 50-DEGREES F., NOR ABOVE 100-DEGREES F.

THIS ICEMAKER WILL NOT OPERATE WHEN WATER TEMPERATURES ARE BELOW 40-DEGREES F., NOR ABOVE 100-DEGREES F.

Figure 1-1. Installation Practice.

SECTION II
OPERATING INSTRUCTIONS

I. START UP

1. Remove two screws, hinge bushings and the Ice Access Door.
2. Remove screws and the Upper Front Panel Assembly.
3. Remove the left Cover Moulding,three screws and the left Track Section, two screws and the Machine Compartment Baffle.
4. Check that the Master ON-OFF toggle switch and the Compressor ON-OFF toggle switch, on top of the Control Box are in the OFF position.
5. Rotate the shaft of the Timer & Switch Assembly, located in a hole in the Control Box Cover, CLOCKWISE, to start the Timer for filling the reservoir in the Freezing Chamber.

NOTE

Slowly rotate the shaft CLOCKWISE, until the actuator arm on the microswitch drops off the outer cam into the cam slot. An audible click can be heard, but in a noisy area, look at the cam and switch to observe the event. See A, Figure 2-1.

6. Move the Master ON-OFF toggle switch, to the ON position.

NOTE

Observe that the Water Inlet Solenoid Valve OPENS and inlet water flows from the valve through tubing to the top of the Freezing Chamber, where the water flows around the inverted ice cube cups and drains through holes in the Platen Assembly and into the Reservoir. Excess water in the Reservoir is overflowed through the stand pipe. This cycle will take about three minutes, when the Timer will CLOSE the Water Inlet Solenoid Valve.

7. Repeat step 5.

NOTE

During START UP, advancing two harvest cycles, with the Compressor OFF, allows a check that: the Water Inlet Solenoid Valve operates; the incoming water flows; the Reservoir is filled in the preparation for the freezing cycle, and; checks the function of the overflow and drain.

8. When the second cycle is completed, move the Compressor ON-OFF toggle switch to the ON position.
9. Check that the Left Cube Chute and the Right Cube Chute are properly positioned: with the rear edges resting on the rear shoulder of the Freezing Chamber; the Left Cube Chute fits snug around the left side part of the Freezing Chamber; the left edge of the Right Cube Chute aligns with the right edge of the Left Cube Chute, and; both Cube Chutes are fastened at the bottom of the opening at the front of the Freezing Chamber.
10. Check that the bottom of the thin, clear plastic sheet of the Curtain Assembly hangs down, contacting the front edges of the two Cube Chutes.
11. Check operation of the Freezing cycle:
    a. Compressor is in operation.
    b. Agitator Motor is operating and the Spray Bar continuously rotates.
    c. Water Pump is operating and water is being sprayed through the nozzles on the Spray Bar, into the inverted ice cups.
    d. Icemaking process begins: feeling inside ice cube cups reveals cold temperatures and very shortly ice begins to form.

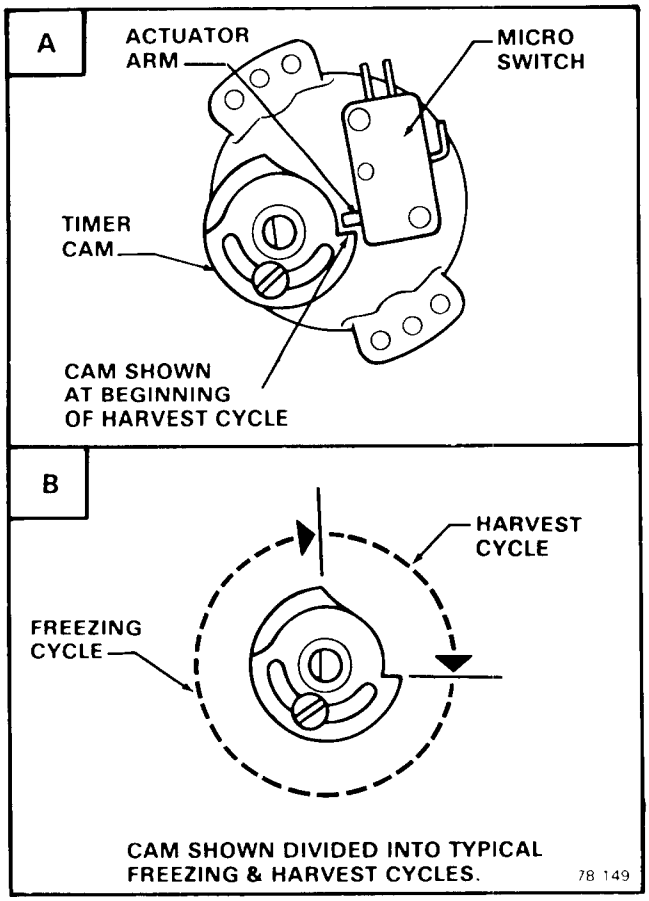

Figure 2-1. Timer Cam Positions.

NOTE

Freezing time, in a 70-degree F. ambient atmosphere, will range between 14 and 18 minutes for small size ice cubes and 16 to 20 minutes for medium size ice cubes. Longer times for temperatures above 70-degrees F. and shorter, when below. Average times for complete cycles, range between 17 to 25 minutes.

CAUTION

DO NOT operate this icemaker when the water supply is shut OFF, or is BELOW the recommended 20 PSI water pressure. Move the Master ON-OFF toggle switch, the front toggle switch on the left end of the Control Box, to the OFF position, immediately.

12. Observe first ice cube harvests:
    a. Check size of ice cubes:

NOTE

Normal cube size is with a one-quarter inch depression in the crown.

    b. IF ICE CUBES ARE SHALLOW SIZE (Indentation is too deep):
        (1)Locate the Cube Size Control, in the right front of the Control Box; then, rotate the adjusting screw one-eighth of a turn CLOCKWISE toward COLDER.
        (2)Observe size of ice cubes in next two ice cube harvests and repeat step (1) above, in one-eighth turn increments, until proper ice cube size is achieved.
    c. IF ICE CUBES ARE OVERSIZE (Indentation is too full):
        (1)Locate the Cube Size Control, in the right front of the Control Box; then, rotate the adjusting screw one-eighth of a turn COUNTERCLOCKWISE toward WARMER.
        (2)Observe size of ice cubes in next two ice cube harvests and repeat step (1) above, in one-eighth turn increments, until proper ice cube size is achieved.
    d. Check texture of ice cubes: When partially cloudy throughout, suggests unit operating short of water near end of freezing cycle, or possibly an extreme water condition, wherein filtering or purifying equipment is recommended. Contact SCOTSMAN - Queen Products Division, Service Department, Albert Lea, Minnesota, for further details.
13. With the Icemaker in the Harvest Cycle, make contact using ice cubes on the Bin Thermostat Control Bulb, to test shutoff.. The ice should cause the Icemaker to shut OFF, at the end of the Harvest Cycle.

NOTE

Within minutes after the ice is removed from the sensing bulb, the bulb will warm up and cause the icemaker to restart. This control is factory set and should not be reset until testing is performed. Normal setting is about 35-degrees F. CUT-OUT and 40-degrees F. CUT-IN.

14. Thoroughly explain to the owner/user the significant specifications of the Icemaker, the start up and operation, maintenance and cleaning procedures. Answer all questions about the Icemaker, by the owner; and inform the owner of the name and telephone number of the authorized SCOTSMAN Distributor or Service Agency serving him.

SECTION III
PRINCIPLES OF OPERATION - How It Works

I. FREEZING CYCLE

Water from the sump in the Reservoir is pumped through the rotating Spray Bar Assembly, which consists of a spray bar and jets, rotating a full 360-degrees and through which water is sprayed into the inverted cube molds of the Freezer Assembly Evaporator. See Figure 3-1. At the beginning of the Freeze Cycle the electrical circuit is completed to the Compressor, Water Pump, and the coil of the Finish Relay. The Water Pump operates continuously during the Freeze Cycle through contacts of the Finish Relay. In Water-Cooled models water also flows through the Condenser and out the drain. While in the Condenser water removes heat from the refrigerant and allows the refrigerant to condense from a gas to a liquid.

Refrigerant is compressed in the Compressor and discharged into the Condenser as a high pressure, high temperature gas. The refrigerant is cooled and condensed by either air or water and condenses to a high pressure, high temperature liquid. This liquid refrigerant then passes through a small capillary tube where the temperature and pressure of the liquid refrigerant are lowered. The low pressure, low temperature liquid refrigerant, then enters the Evaporator. The refrigerant is warmed by water being sprayed against the Evaporator and begins to boil off, to become a gas. The refrigerant next travels through the Accumulator where any remaining liquid refrigerant then returns to the Compressor as a low pressure, low temperature gas and the cycle starts again.

During the Freezing Cycle, both the Water Inlet Solenoid Valve and the Hot Gas Solenoid Valve are CLOSED.

When the ice cubes are about 3/4 formed, the Cube Size Control Bulb located on the suction line will sense the temperature at which it is preset to CLOSE. This will complete the electrical circuit to the Timer. The Timer then controls the remainder of the cycle.

The Timer will keep the Icemaker operating in the Freeze cycle for the next six minutes. This will give the cubes time to fully form. After six minutes, the Timer will switch the Icemaker into the Harvest Cycle, through the contacts of the Timer Assembly microswitch.

II. HARVEST CYCLE

When the Timer switches the Icemaker into the Harvest Cycle, hot gas being discharged from the Compressor is diverted through the Hot Gas Solenoid Valve into the Evaporator. During this

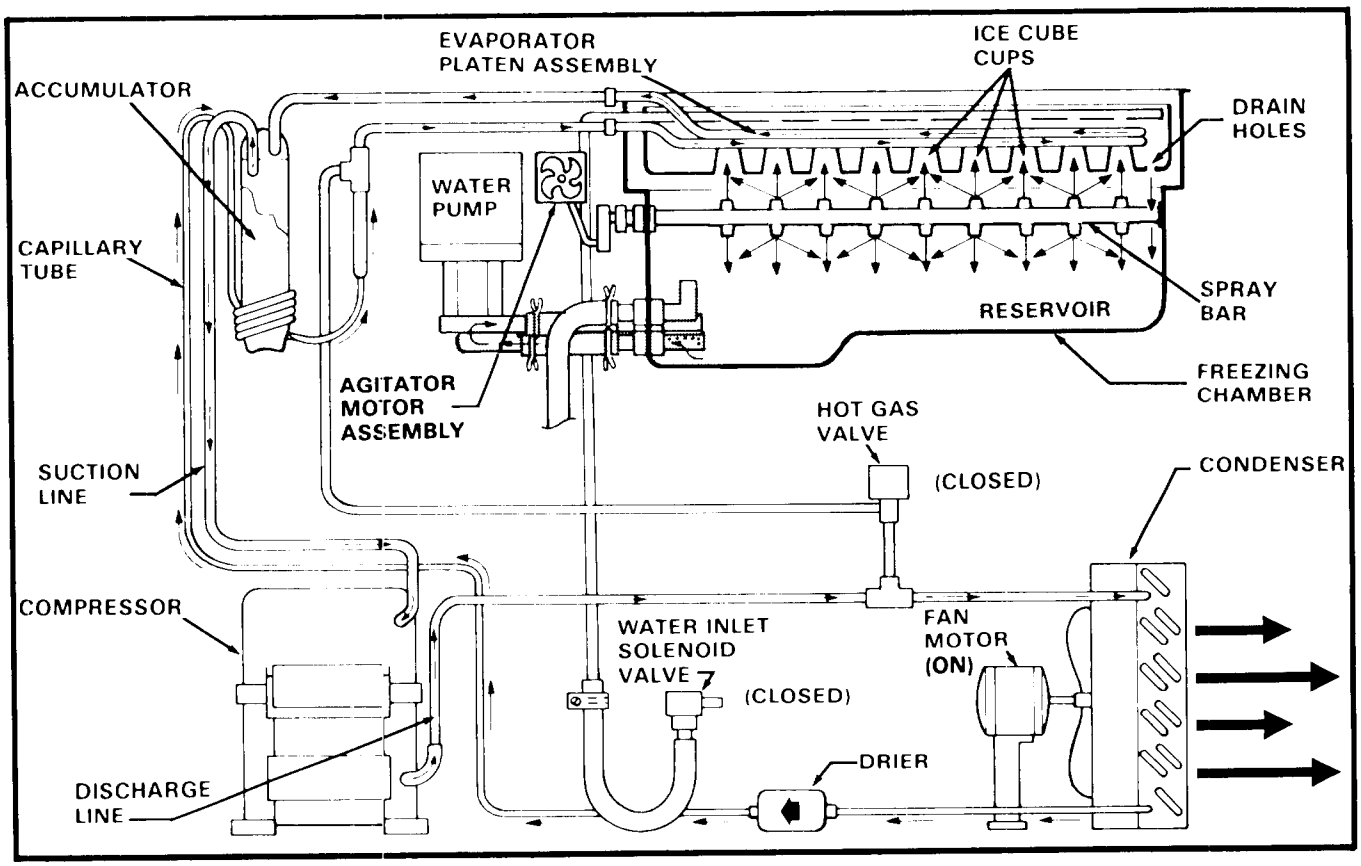

Figure 3-1. Freezing Cycle.

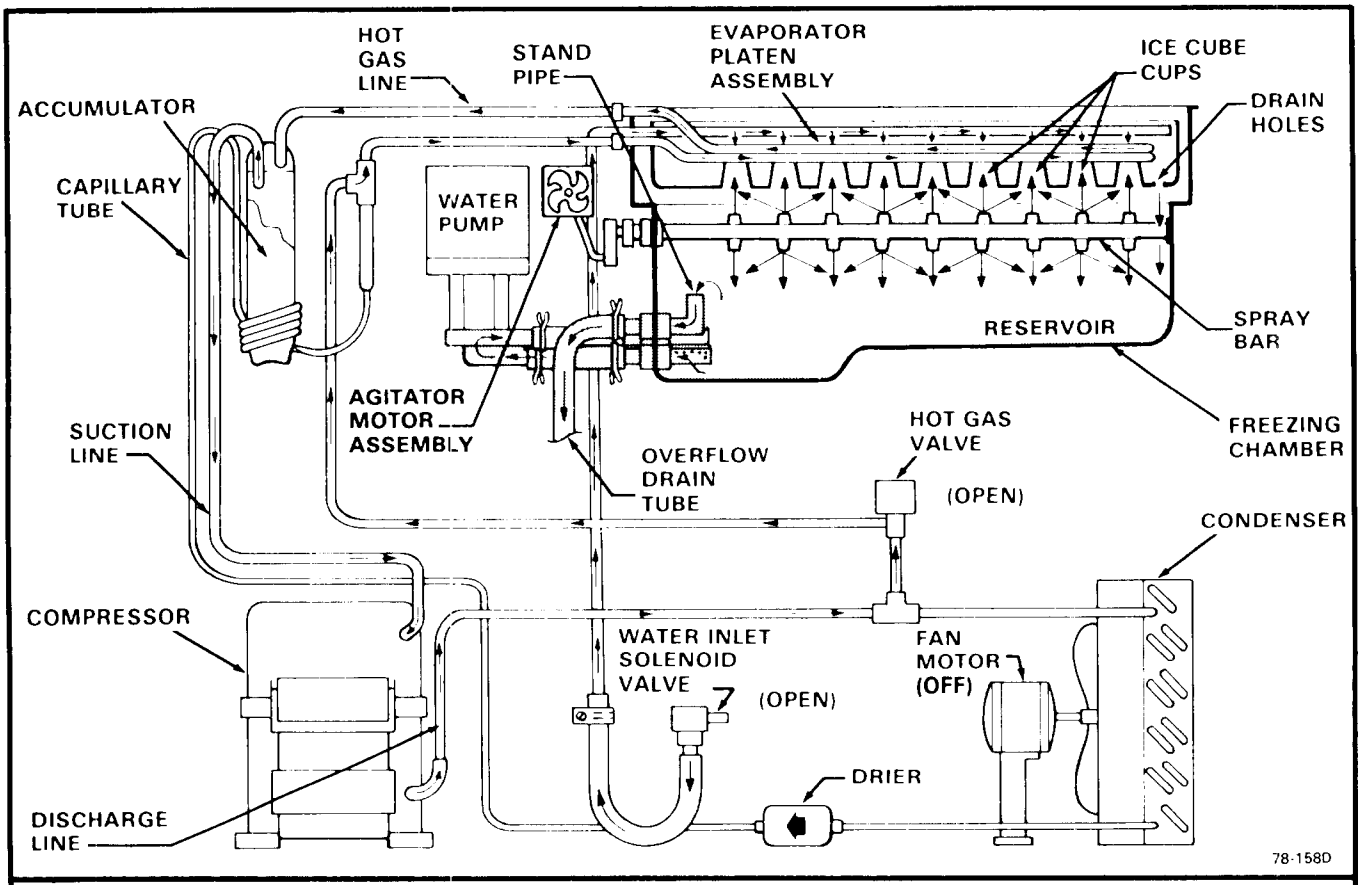

1. On Air-Cooled Models, the Water Pump Motor and Fan Motor may cycle intermittently during the Harvest Cycle.
2. On Water-Cooled Models, the Water Pump Motor is OFF during the Harvest Cycle.

Figure 3-2. Harvest Cycle.

cycle, the hot gas circulates from the Compressor to the Evaporator and back again, bypassing the Condenser and capillary tube. In the electrical circuit, the Compressor is operating and both the Water Inlet Solenoid Valve and the Hot Gas Solenoid Valve are energized.

See Figure 3-2. Opening the Water Inlet Solenoid Valve allows a fresh water supply to be discharged into the top of the Platen Assembly Evaporator. The finished ice cubes are released from the Evaporator by the warming effect of the hot gas flowing through the Evaporator tubes and the water flow around the ice molds. The released ice cubes drop onto the slanted Front Cube Chute and into the ice storage bin. At the end of the two minute Harvest Cycle, the Timer cam will push the actuator arm of the microswitch IN. If the Bin Thermostat is still CLOSED, a whole new cycle will begin. If the Bin Thermostat is OPEN, the Icemaker will shut OFF at this time.

III. COMPONENT DESCRIPTIONS

A. BIN THERMOSTAT CONTROL

The Bin Thermostat Control is located to the right of the Contactor in the upper rear section of the Control Box. The sensing capillary tube of the control is routed through the left wall of the Bin and clipped to the bottom of the front opening of the Freezing Chamber. The control functions to automatically SHUT OFF the Icemaker, when the ice storage bin is filled and ice contacts the capillary tube. It also signals the RESTART of the Icemaker when the capillary tube starts to warm up after ice has been removed from the bin. Factory settings are 35-degrees F. CUT-OUT and 40-degrees F. CUT-IN.

ALWAYS CHECK a replacement Bin thermostat Control BEFORE installing the control in the Cuber. Prepare a container of ice and water and insert a thermometer. As

temperature indications on the thermometer decrease to 35-degrees F., insert the capillary tube of the Bin Thermostat Control and determine temperature of CUT-OUT when an audible click is heard in the control. Slowly add hot water to container and check audible click in the control for CUT-IN while observing increase in temperature of water to 40-degrees F. Refer to procedure IV-I to adjust Bin Thermostat Control.

NOTE

The Bin Thermostat Control is wired through the holding relay and will not CUT-OUT the Icemaker until the end of the Harvest Cycle. Altitude adjustment should ONLY be performed on Icemakers installed at 2,000-foot level locations and ABOVE, and adjust only in increments of one-fourth turn of screw at a time.

B. COMPRESSOR CONTACTOR

A single-pole contactor is used to supply current to the Compressor; and, is wired so any control in the pilot circuit, such as the Bin Thermostat and High Pressure Control, etc., will cause the contactor coil to be de-energized, when the control contact OPENS, thereby breaking the circuit to the Compressor through the contactor points.

C. CUBE SIZE CONTROL

The temperature sensing Cube Size Control affects the length of the Freezing Cycle prior to initiating the Finishing Timer. The Cube Size Control closes its contacts when the Evaporator reaches a preset temperature, starting the Finishing Timer. A variation in either ambient air or inlet water temperature will affect the efficiency of the refrigeration system. This will vary the length of time it takes the Evaporator to reach the temperature at which the Cube Size Control is preset to CLOSE; which, in turn, will affect the overall cycle time.

NOTE

Be sure to refer to procedure IV-II, Adjustment of the Cube Size Control, BEFORE attempting to adjust the control.

D. FINISHING TIMER - Timer & Switch Assembly

The function of the Finishing Timer begins when activated by the Cube Size Control. The Timer controls an eight minute dual function: six minutes are programmed to finish freezing the ice cubes and the final two minute portion is for the defrost operation and harvest of the ice cubes. All electrical circuitry is connected through the printed circuit board and the Finishing Timer and shunted by the single-pole, double-throw microswitch to either the Freezing Cycle or the Harvest Cycle. The microswitch is actuated by a Cam Assembly directly connected to the Timer Motor. The Timer Cam can be adjusted to vary the defrost time, as required.

E. HIGH PRESSURE CONTROL - Water-Cooled Model

The High Pressure Control, a safety control, is factory set at 190 PSIG. The control functions as a precautionary device, to shut OFF electrical power to the Icemaker, should a loss of water occur to the water-cooled Condenser. In addition to being a manual reset control, there is an adjusting screw for raising or lowering the CUT-IN pressure.

F. HIGH PRESSURE FAN CONTROL - Air-Cooled Model

The High Pressure Fan Control functions only during the harvest cycle, to maintain head pressure. As an automatic reset device, the control is mechanically connected to the refrigerant system high side; and, electrically has both the Water Pump and the Condenser Fan Motor wired into control contacts. The control settings CLOSE at 150 PSIG and OPEN at 130 PSIG. During defrost, the control will usually cycle once, causing the Fan Motor and the Water Pump to briefly operate during this time.

G. HOT GAS SOLENOID VALVE

The Hot Gas Solenoid Valve functions only during the harvest cycle, to divert the hot discharge gas from the Compressor, by-passing the Condenser and capillary tube, for direct flow to the Evaporator Platen Assembly to release ice cubes from the inverted ice cube molds. The Hot Gas Solenoid Valve is comprised of two parts, the Body & Plunger and the Coil & Frame assemblies. Installed in the discharge line of the Compressor, the energized solenoid coil lifts the valve stem within the valve body to cause the hot discharge gas to be diverted when the Finishing Timer has advanced to the start of the harvest cycle.

H. FINISH RELAY

The multi-function, three-pole, double-throw, plug-in relay is installed directly into a receptacle on the printed circuit board in the Control box. The relay functions, in part, to by-pass the Bin Thermostat, to prevent the Icemaker from shutting OFF, when a filled-bin condition occurs, during the Freezing Cycle. The by-pass action serves to ensure full-sized ice cubes with each Harvest Cycle; and, to prevent short cycling on the Bin Thermostat. The relay also redirects the current flow through the High Pressure Fan Control to the Condenser Fan Motor and the Water Pump during the Harvest Cycle.

I. SPRAY BAR ASSEMBLY

The continuously rotating Spray Bar Assembly is designed to channel recirculating water to groups of attached water jets for uniformly spraying the water into the inverted ice cube cup molds.

NOTE

Refer to procedure V-III, CLEANING - Icemaker; and, for problems requiring removal of parts refer to procedure IV-XII-A for details for removing Spray Box Assembly and assorted parts.

J. WATER INLET SOLENOID VALVE

The Water Inlet Solenoid Valve functions only during the Harvest Cycle, when it is energized to permit continuous inlet water, to flow through the Defrost Tube onto the top of the plastic Platen Assembly, assisting in the harvest of ice cubes. The water drains through holes in the Platen Assembly into the Reservoir in the lower section of the Freezing Chamber; and there, the water is recirculated through the Water Pump for return to the Spray Bar Assembly.

K. WATER REGULATOR VALVE - Water-Cooled Models

The Water Regulator Valve functions to maintain a constant head pressure, by regulating the amount of inlet water flow through the Condenser, on water-cooled models. The valve operates through the refrigerant system high side pressure. Rotating the adjusting screw, located on top of the valve, can INCREASE or DECREASE the operating head pressure.

NOTE

When installing a replacement Water Regulator Valve, be sure the replacement valve is installed with the arrow positioned in the direction of the water flow.

REFRIGERANT CHARGE

MODEL	AC25 Refrig. Chg.
Air-Cooled	16.5 oz. R-12 (Approx.)
Water-Cooled	16.5 oz. R-12 (Approx.)

NOTE

Always CHECK NAMEPLATE on individual Icemaker for specific refrigerant charge, BEFORE charging the refrigeration system. The above listed refrigerant charges are approximate charges for the AC25 Cuber, however, it is important to CHECK NAMEPLATE for each Icemaker.

SECTION IV.
ADJUSTMENT AND REMOVAL AND REPLACEMENT PROCEDURES

The procedures provided in this Section are arranged in alphabetical order, to make specific Adjustment and Removal and Replacement information easy to locate.

Read the instructions thoroughly before performing any Adjustment or Removal and Replacement Procedures.

I. ADJUSTMENT OF THE BIN THERMOSTAT CONTROL

The control for the Bin Thermostat is the Temperature Control, located in the rear section of the Control Box.

CAUTION

The adjusting screws on the Temperature Control device have very sensitive response to adjustment. DO NOT atternpt to adjust the screw until after thoroughly reading and understanding the following instructions and illustrations. Over-adjusting or erratic guessing, can foul the instrument and cause ultimate delay and part replacement, WHICH COULD HAVE BEEN PREVENTED.

Adjustment for ALTITUDE CORRECTION should only be performed for installations at 2000-feet and ABOVE. Carefully adjust only in one-fourth turn of screw at a time. NO ALTITUDE CORRECTION adjustments should be performed BELOW the 2000-feet level.

See Figure 4-1 for location and direction of rotation, clockwise (CW) or counterclockwise (CCW), of the adjusting screw on the Temperature Control, in the particular Control Box the adjustment is to be performed.

II. ADJUSTMENT OF THE CUBE SIZE CONTROL

CAUTION

BEFORE performing actual adjustment to the Cube Size Control, check other possible causes for cube size problems, refer to Section VI, SERVICE DIAGNOSIS for problem review and analysis.

DO NOT perform adjustment when a new Cube Size Control is installed, until the control bulb has been properly installed, in the tube well, on the refrigerant tube of the Platen Assembly and the Icemaker has progressed through several complete freezing and harvest cycles, to observe size and quality of ice cubes and whether or not a cube size problem exists.

As a reverse acting temperature control, adjustment on the Cube Size Control is performed to either cause larger sized ice cubes or smaller sized ice cubes to be produced.

A. IF ICE CUBES ARE SHALLOW SIZE (Indentation is too deep):

1. Locate the Cube Size Control in the right front section of the Control Box.
2. Rotate the adjusting screw one-eighth of a turn CLOCKWISE toward COLDER.
3. Observe size of ice cubes in next two ice cube harvests and repeat step 2 above, in one-eighth turn increments, until proper ice cube size is achieved.

B. IF ICE CUBES ARE OVERSIZE (Indentation is too full):

1. Locate the Cube Size Control in the right front section of the Control Box.
2. Rotate the adjusting screw one-eighth of a turn COUNTERCLOCKWISE toward WARMER.
3. Observe size of ice cubes in next two ice cube harvests and repeat step 2 above, in one-eighth turn increments, until proper ice cube size is achieved.

III. ADJUSTMENT OF THE TIMER & SWITCH ASSEMBLY

The Timer & Switch Assembly is factory set, so that one complete revolution of the cam on the Timer represents eight minutes. Six minutes comprise the freezing cycle event during cam rotation, and the final two minutes program the defrost and harvest cycle. Rotating the shaft of the Timer Cam, CLOCKWISE will allow positioning the actuator arm of the microswitch on the cam at the selected start position for either the freezing cycle or harvest cycle, as required, during the START UP procedures and in the CLEANING instructions. Rotating the shaft COUNTERCLOCKWISE will unscrew the shaft from the threaded stud on the Timer Cam.

To Adjust the Timer Switch Assembly:

A. HARVEST CYCLE: Slowly rotate the shaft of the Timer & Switch Assembly, located in the hole in the front of the Control Box Cover CLOCKWISE, until the actuator arm on the microswitch drops off of the outer cam into the cam slot. An audible click can be heard, but in a noisy area, look at the cam and switch to observe the event. See Figure 4-2.

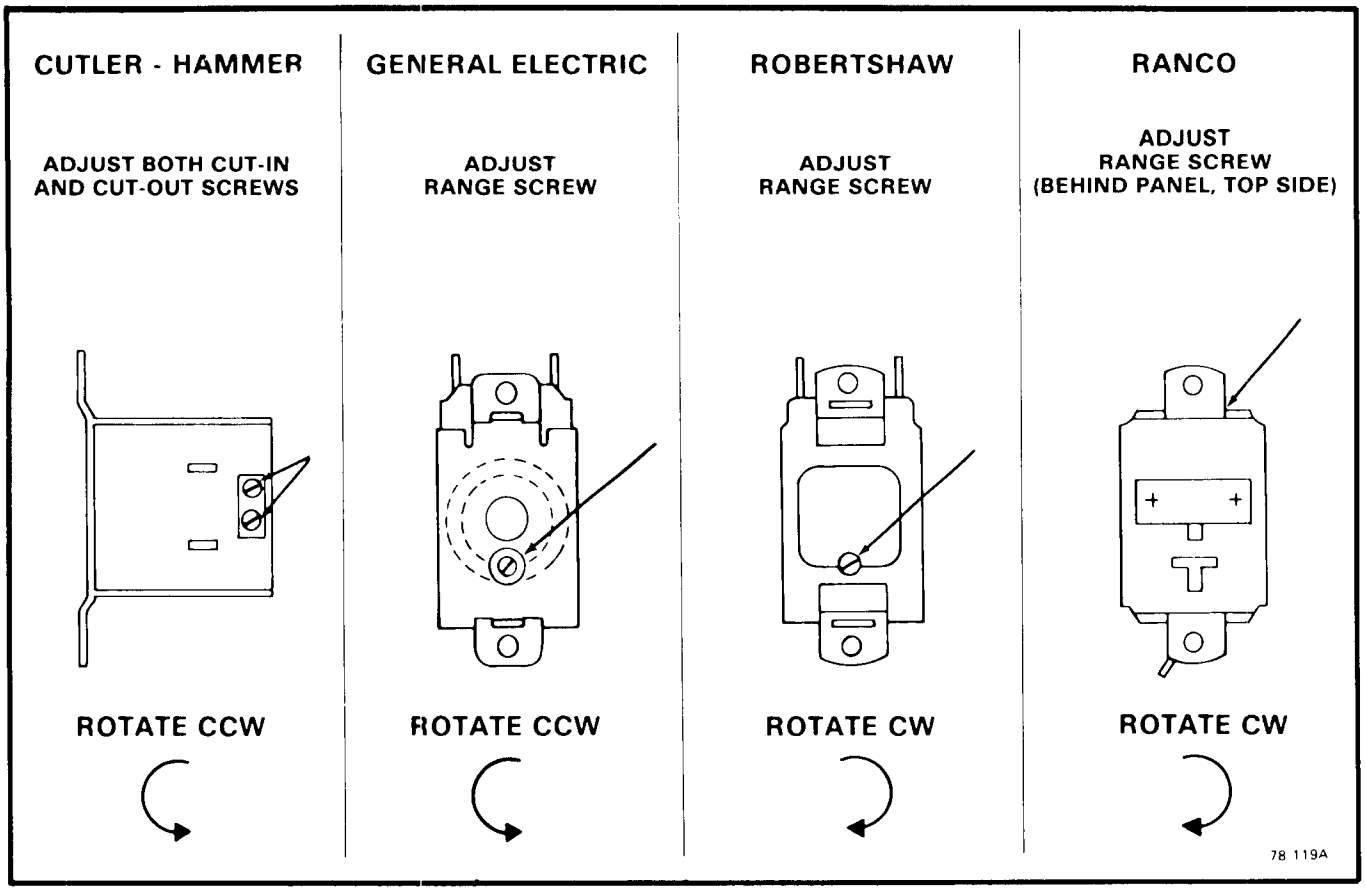

Figure 4-1. Adjustment of the Temperature Control.

B. FREEZING CYCLE: Slowly rotate the shaft of the Timer & Switch Assembly, located in the hole in the front of the Control Box Cover, CLOCKWISE, until the actuator arm on the microswitch rides up out of the cam slot to the start of the surface of the outer cam.

IV. ADJUSTMENT OF THE WATER REGULATOR ASSEMBLY - WATER-COOLED MODELS

The correct head pressure on Water-Cooled models is 135 PSIG. Adjustments can be performed on the Water Regulator Assembly to increase or decrease head pressure.

To Adjust Water Regulator Assembly:

A. To INCREASE the Head Pressure: Rotate the adjusting Screw, on the Water Regulator Assembly COUNTERCLOCKWISE.

B. To DECREASE the Head Pressure: Rotate the adjusting Screw, on the Water Regulator Assembly CLOCKWISE.

WARNING

Be sure the electrical power supply and the water supply are OFF, BEFORE starting any of the following REMOVAL AND REPLACEMENT procedures as a precaution to prevent possible personal injury or damage to equipment.

V. REMOVAL AND REPLACEMENT OF THE AGITATOR MOTOR ASSEMBLY

A. To Remove the Agitator Motor Assembly:

1. Remove screws and the Top Panel Assembly.
2. Remove two screws, hinge bushings and the Ice Access Door.
3. Remove screws and the Upper Front Panel Assembly.
4. Remove the left Cover Moulding.
5. Remove all screws that directly attach to the Left Side Panel, at the left end ONLY, of the Back Panel, Left Track Section, Machine Compartment Baffle, and the Lower Left Front Panel; then, carefully remove the Left Side Panel.
6. Remove screws and the Control Box Cover; then, disconnect the electrical leads of the Agitator Motor, from the terminals on the printed circuit board, in the Control Box.
7. Remove four screws attaching the Agitator Motor Assembly to the Bin wall and remove the Agitator Motor Assembly.

B. To replace the Agitator Motor Assembly, reverse the removal procedures.

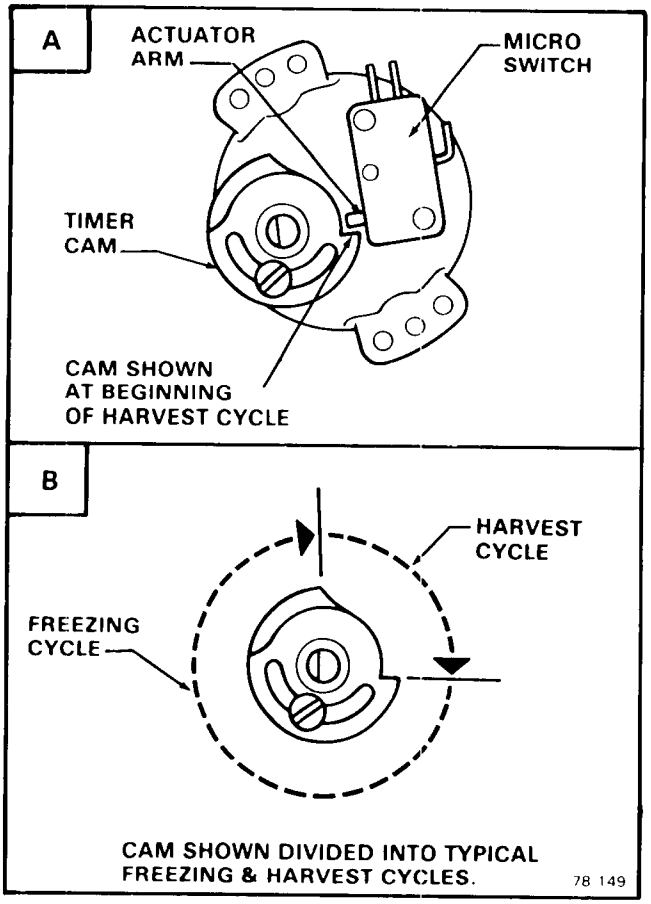

Figure 4-2. Adjustment of the Timer & Switch Assembly

VI. REMOVAL AND REPLACEMENT OF THE COMPRESSOR ASSEMBLY

NOTE

Always install a replacement Drier, anytime the sealed refrigeration system is opened. Do not replace the Drier until all other repair or replacement has been completed.

A. To remove the Compressor Assembly:

1. Perform steps 1 through 5, in procedure IV-V-A, to gain access to the Compressor Assembly.
2. Remove screws and the Cover from the Compressor Junction Box.
3. Disconnect the electrical leads in the Compressor Junction Box, that connect to the Control Box.
4. Bleed off or blow the refrigerant charge through the Schrader valve.
5. Unsolder and disconnect both the refrigerant suction line and the discharge line from the Compressor.
6. Remove four bolts, washers, mounting sleeves, and grommets which secure the Compressor to the Chassis mounting base.
7. Remove the Compressor Assembly from the base.

NOTE

Thoroughly evacuate the system to remove moisture and non-condensables.

B. To replace the Compressor Assembly, reverse the removal procedure.

VII. REMOVAL AND REPLACEMENT OF THE CONDENSER ASSEMBLY - AIR-COOLED MODELS

NOTE

Always install a replacement Drier, anytime the sealed refrigeration system is opened. Do not replace the Drier until all other repair or replacement has been completed.

A. To remove the Condenser:

1. Perform steps 1 through 5, of procedure IV-V-A, to gain access to the Condenser Assembly.
2. Disconnect the electrical leads of the Fan Motor.
3. Remove four screws and lift the Fan Motor Assembly and shroud from the Condenser Assembly.
4. Bleed off or blow the refrigerant charge through the Schrader valve.
5. Unsolder and disconnect the refrigerant lines from the Condenser.
6. Remove four hex screws, lift and remove the Condenser Assembly from the Condenser Mounting Brackets.

B. To replace the Condenser, reverse the removal procedure.

VIII. REMOVAL AND REPLACEMENT OF THE CONDENSER ASSEMBLY - WATER-COOLED MODELS.

NOTE

Always install a replacement Drier, anytime the sealed refrigeration system is opened. Do not replace the Drier until all other repair or replacement has been completed.

A. To remove the Condenser:

1. Perform steps 1 through 5, of procedure IV-V-A, to gain access to the Condenser Assembly.
2. Bleed off or blow the refrigerant charge through the Schrader Valve.
3. Unsolder and disconnect the refrigerant lines from the Condenser.
4. Remove two hex screws, lift and remove the Condenser Assembly from the Condenser Bracket.

B. To replace the Condenser, reverse the removal procedure.

IX. REMOVAL AND REPLACEMENT OF THE CUBE CHUTES AND CURTAIN ASSEMBLY

A. To remove the Cube Chutes and the Curtain Assembly:

1. Remove two screws, hinge bushings and the Ice Access Door.
2. Remove screws and the Upper Front Panel Assembly.
3. Remove screws at each end of the Cube Deflector and remove the Cube Deflector from the front of the Freezing Chamber.
4. Remove the two middle screws of the Curtain Assembly, and remove the Curtain Assembly from the front opening of the Freezing Chamber.
5. Lift the clips, on the front edge of the Left and Right Cube Chutes, up from the lower part of the front opening of the Freezing Chamber and remove the two Cube Chutes from the Freezing Chamber.

NOTE

Carefully observe the positions of the two Cube Chutes, for correct repositioning during the replacement procedures. The full straight sides of both Cube Chutes should fit together, when the ends of the Cube Chutes with the clips, are at the bottom.

B. To replace the Cube Chutes and the Curtain Assembly, reverse the removal procedure.

X. REMOVAL AND REPLACEMENT OF THE DRIER

NOTE

Always install a replacement drier, anytime the sealed refrigeration system is opened. Do not replace the Drier until all other repair or replacement has been completed.

A. To remove the Drier:

1. Lift the Ice Access Door and tape the Door in the fully open position.
2. Remove the left Cover Moulding, three screws and the left Track Section.
3. Remove screws and the Machine Compartment Baffle.
4. Remove screws and the left Lower Front Panel.
5. Remove screw and Drier Brace attaching the Drier to the Chassis base.
6. Bleed off or blow the refrigerant through the Schrader valve.
7. Unsolder refrigeration lines at each end of the Drier, remove the Drier and separate the Drier from the Drier Brace.

B. To replace the Drier:

CAUTION

1. **If the factory seal is broken on the replacement Drier, exposing it to the atmosphere more than a few minutes, the Drier will absorb moisture from the atmosphere and lose substantial ability for moisture removel.**
2. **Be sure the replacement Drier is installed with the arrow positioned in the direction of the refrigerant flow.**

1. Remove the factory seals from the replacement Drier and install the Drier in the refrigerant lines with the arrow positioned in the direction of the refrigerant flow.
2. Install the Drier Brace on the Drier.
3. Solder the Drier into the lines, two places.
4. Purge the system and check for leaks.
5. Thoroughly evacuate the system to remove moisture and non-condensables.
6. Charge the system with refrigerant, by weight. SEE NAMEPLATE.
7. Reverse the removal procedures to replace other parts and panels.

XI. REMOVAL AND REPLACEMENT OF THE FAN MOTOR ASSEMBLY

NOTE

Before beginning this procedure, observe the Fan Blade position on the shaft of the Fan Motor and mark the Fan Blade so it will be correctly positioned during reassembly. Direction of air flow should be toward the Fan Motor.

A. To remove the Fan Motor Assembly:

1. Perform steps 1 through 5, of procedure IV-V-A, to gain access to the Fan Motor Assembly.
2. Disconnect the electrical leads of the Fan Motor.
3. Remove four screws and lift the Fan Motor Assembly and Shroud from the Condenser Assembly.
4. Remove four screws and separate the Shroud from the Fan Motor Assembly.
5. Remove the nut from the end of the Fan Motor Shaft and remove the Fan Blade.
6. Remove four screws and separate the two wire Fan Motor Mounting Assemblies from the Fan Motor.

B. To replace the Fan Motor Assembly, reverse the removal procedures.

XII. REMOVAL AND REPLACEMENT OF THE FREEZING CHAMBER, PLATEN ASSEMBLY AND SPRAY BAR ASSEMBLY

NOTE

Always install a replacement Drier, anytime the sealed refrigeration system is opened. Do not replace the Drier until all other repair or replacement has been completed.

A. To remove the Freezing Chamber, Platen, Spray Bar: (See Figure 4-3)

1. Remove two screws, hinge bushings and the Ice Access Door.
2. Remove screws, the Top Panel Assembly and the Upper Front Panel Assembly.
3. Remove screws and the Top Brace and spacer.
4. Remove screws at each end of the Cube Deflector and remove the Cube Deflector from the front of the Freezing Chamber.
5. Remove the two middle screws of the Curtain Assembly and remove the Curtain Assembly from the front opening of the Freezing Chamber.
6. Lift the clips, on the front edge of the Left and Right Cube Chutes, up from the lower part of the front opening of the Freezing Chamber and remove the two Cube Chutes from the Freezing Chamber.

NOTE

Carefully observe the positions of the two Cube Chutes, for correct repositioning during the replacement procedures. The full straight sides of both Cube Chutes should fit together, when the ends of the Cube Chutes with the clips, are at the bottom.

7. Remove four screws attaching the Agitator Motor Assembly to the Bin wall and remove the Agitator Motor Assembly, to disengage from the Spray Bar Drive Housing Assembly.
8. Carefully withdraw the capillary tube, of the Bin Thermo Control, from the two clips on the bottom front opening of the Freezing Chamber, temporarily pulling it through the rubber grommet in the left wall of the Bin, out of the way.
9. Lift the Defrost Tube out of the top front of the Freezing Chamber.
10. Carefully remove the coiled capillary bulb from the Bulb Holder Clip (s) attached to

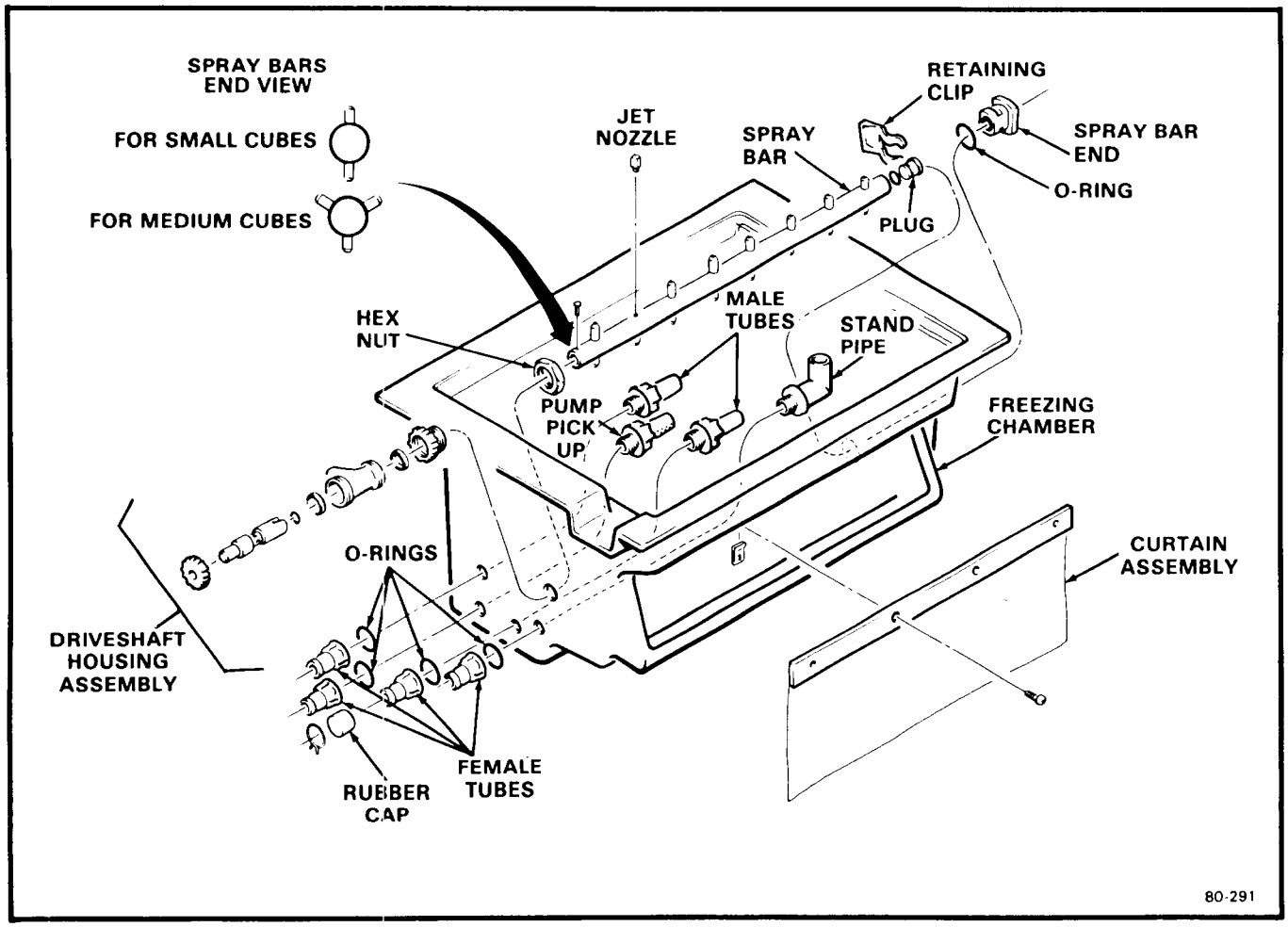

Figure 4-3. Freezing Chamber Disassembly.

the inlet line of the Platen Assembly; and position the capillary tube out of the work area.

11. Bleed off or blow the refrigerant charge through the Schrader valve.
12. Unsolder both the inlet and outlet refrigerant lines at the Platen Assembly and lift the Platen Assembly out of the top of the Freezing Chamber.

NOTE

For the next step, there is the option of removing hose clamps on the Tygon Tubes, inside the Bin, connected to the Freezing Chamber; or, outside the Bin wall, connected to the Water Pump Assembly. The removal of the Water Pump may be necessary, which also may require removal of the Back Panel, all depending upon individual decision for ease of access to those parts.

13. Remove hose clamps connecting Tygon Tubes to the left side of the Freezing Chamber.
14. Remove screws attaching the top flanges of the Freezing Chamber to the top of the rear and side walls of the Bin; then, lift the right side of the Freezing Chamber, working loose the Tygon Tubes from the left side, to free and remove the Freezing Chamber from the Bin, allowing any water to drain into the Bin.
15. Remove the Retaining Clip, Spray Bar End, O-Ring, and the Spray Bar from the Freezing Chamber; then, remove the Spray Bar Plug from the end of the Spray Bar. See Figure 4-3.
16. Unscrew four Female Tubes and O-Rings from the left outside of the Freezing Chamber, connected to two Male Tubes, one Pump Pick-up Tube and one Stand Pipe, installed from inside the Freezing Chamber.
17. Unscrew the Hex Nut, inside the Freezing Chamber, and remove the Driveshaft Housing Assembly.
18. Disassemble the Driveshaft Housing for inspection and possible replacement of any cut, torn, or badly worn O-Rings or Water Seals.
19. Inspect the Spray Bar and all nozzles for dirty or clogged condition, requiring cleaning or removal and replacement.

B. To replace, reverse the removal procedures.

XIII. REMOVAL AND REPLACEMENT OF THE WATER PUMP ASSEMBLY

A. To remove the Water Pump Assembly:

1. Remove two screws, hinge bushings and the Ice Access Door.
2. Remove screws, the Top Panel Assembly and the Upper Front Panel Assembly.

NOTE

For Water Pump removal, there is the option of removing hose clamps on the Tygon Tubes, inside the Bin wall, connected to the Water Pump Assembly. This also requires removal of the Back Panel, for easier access to parts; and, depending upon individual decision, removal of the Agitator Motor would give easier access to hose clamps at the Water Pump.

3. Remove hose clamps on Tygon Tubes of the Water Pump, inside or outside Bin Wall.
4. Disconnect electrical lead wires and ground wire from the Water Pump.
5. Remove two screws and the Water Pump Assembly from the Pump Bracket.

B. To replace the Water Pump Assembly, reverse the removal procedure.

XIV. REMOVAL AND REPLACEMENT OF THE WATER REGULATOR ASSEMBLY - WATER-COOLED MODELS

NOTE

Always install a replacement Drier, anytime the sealed refrigeration system is opened. Do not replace the Drier until all other repair or replacement has been completed.

A. To remove the Water Regulator Assembly:

1. Remove screws and the Top Panel Assembly.
2. Bleed off or blow the refrigerant charge through the Schrader valve.
3. Unsolder the capillary tube of the Water Regulator, at the Tee, leading to the process header.
4. Disconnect the water inlet line, two places, at the front and rear of the Water Regulator valve.
5. Remove two screws which attach the Water Regulator and mounting Bracket to the Condenser Bracket and remove the Water Regulator and Mounting Bracket.

NOTE

Thoroughly evacuate the system to remove moisture and non-condensables.

B. To replace the Water Regulator Assembly, reverse the removal procedures.

SECTION V
MAINTENANCE & CLEANING INSTRUCTIONS

I. GENERAL

The periods and procedures for maintenance and cleaning are given as guides and are not to be construed as absolute or invariable. Cleaning especially will vary, depending upon local water conditions and the ice volume produced; and, each Icemaker must be maintained individually, in accordance with its own particular location requirements.

II. ICEMAKER

THE FOLLOWING MAINTENANCE SHOULD BE SCHEDULED AT LEAST TWO TIMES PER YEAR ON THIS ICEMAKER. CALL YOUR AUTHORIZED SCOTSMAN SERVICE AGENCY.

1. Check and clean water line Strainer.
2. Check that the Cuber is level, in side-to-side and front-to-rear directions.
3. Clean the water system Evaporator, Freezing Chamber Reservoir and Spray Bar, using a solution of SCOTSMAN Ice Machine Cleaner. Refer to procedure V-III, CLEANING - Icemaker.

NOTE

Cleaning requirements vary according to local water conditions and individual user operation. Continuous check of the clarity of ice cubes and visual inspection of the water spray bar and jets, before and after cleaning will indicate frequency and procedure to be followed in local areas.

4. Check that the lower edge of the Curtain Assembly hangs down, contacting the front edges of the two Cube Chutes.
5. Check and tighten all bolts.
6. Check and tighten all electrical connections.
7. Check Hot Gas Solenoid Valve for correct operation and high pressure controls for cut-in and cut-out pressures.
8. With Icemaker and Fan Motor OFF on Air-Cooled Models, clean Condenser, using vacuum cleaner, whisk broom or brush. Instruct customer to clean frequently. DO NOT USE A WIRE BRUSH.
9. Check that Fan Blades move freely, are not touching any surfaces and are not bent or out of balance.
10. Check for refrigerant leaks and tighten line connections.
11. Check for water leaks and tighten drain line connections. Pour water down bin drain line to be sure that drain line is open and clear.
12. Check size, condition and texture of ice cubes. Perform adjustments as required. Refer to procedure II-I-12.
13. Check Bin Thermostat Control Bulb to test shutoff. With the Icemaker in the harvest cycle, hold ice cubes on the Bulb, which should cause the Icemaker to shut OFF at the end of the harvest cycle.

NOTE

Within minutes after the ice is removed from the sensing bulb, the bulb will warm up and cause the Icemaker to restart. This control is factory set and should not be reset until testing is performed. Normal setting is about 35-degrees F. CUT-OUT and 40-degress F. CUT-IN.

III. CLEANING - Icemaker

1. Remove screws, hinge bushings and the Ice Access Door, Upper Front Door, Left Cover Moulding, Left Track Section, Cube Deflector, and the Machine Compartment Baffle.
2. Move both the Master ON-OFF toggle switch and the Compressor ON-OFF toggle switch to the OFF position, on the Control Box.
3. Rotate the shaft of the Timer & Switch Assembly, located in the hole in the front of the Control Box Cover, CLOCKWISE, until the actuator arm on the microswitch rides up out of the cam slot, to the outer surface of the cam, then stop. This is the start position for the freezing cycle. See Figure 5-1.

WARNING

SCOTSMAN Ice Machine Cleaner contains Phosphoric and Hydroxyacetic acids. These compounds are corrosive and may cause burns if swallowed, DO NOT induce vomiting. Give large amounts of water or milk. Call physician immediately. In case of external contact, flush with water. KEEP OUT OF THE REACH OF CHILDREN.

4. Position container under left side of Freezing Chamber, remove Hose Clamp and Rubber Cap from center Female tube and drain water from Reservoir. Replace Rubber Cap and Hose Clamp.
5. Prepare cleaning solution: Mix eight ounces of SCOTSMAN Ice Machine Cleaner with six pints of fresh potable water.
6. Carefully pour the cleaning solution into the Freezing Chamber through the front opening.

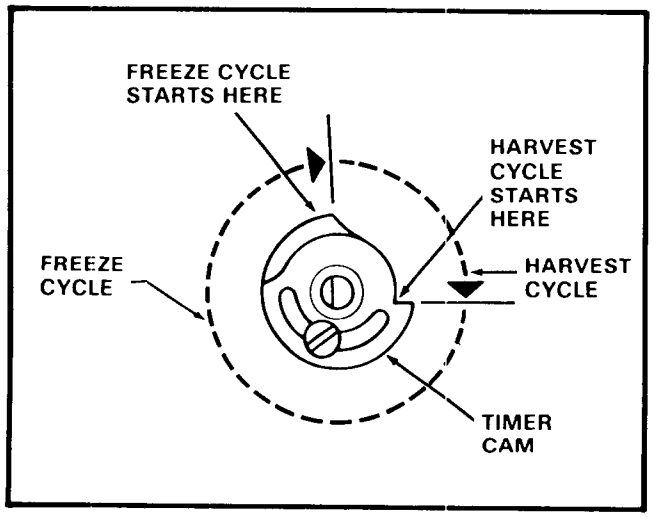

Figure 5-1. START Positions for the Freeze/Harvest Cycles.

7. Immediately move the Master ON-OFF toggle switch to the ON position.
8. Allow the system to operate for about twenty minutes.

NOTE

No ice cubes will be made, because the Compressor switch is OFF.

9. At end of twenty minutes, rotate the shaft of Timer & Switch Assembly, CLOCKWISE, to start a second harvest cycle. Repeat procedure to effect four complete harvest cycles. See Figure 5-1.

NOTE

During each harvest cycle, fresh inlet water is introduced into the water system and acts to rinse all water-related parts and to wash away most mineral concentration through the Reservoir overflow drain.

10. Move the Compressor ON-OFF toggle switch to the ON position.
11. Check each ice cube harvest, until the ice cubes are clear and the acid taste eliminated.

CAUTION

DO NOT use ice cubes produced from the cleaning solution. Be sure none remains in the Bin.

12. Add hot water to the Bin to melt the ice cubes; or, remove and discard all ice cubes.
13. Move both the Master ON-OFF toggle switch and the Compressor ON-OFF toggle switch to the ON position, to restart the Icemaker.
14. Replace Cube Deflector, Baffle, Track Section, Moulding, Doors in reverse order and secure with hinge bushings and screws removed earlier.

IV. SANITIZING

Sanitizing is an important phase of the ice-making operation. The following sanitizing procedure should be performed after every repair or replacement of parts in the Cuber, in or through which ice is formed, released and stored and water is drained Additional requirements for performing the sanitizing procedure should be followed in accordance with the requirements of the Local Health Authorities.

NOTE

Contact your Local Health Authorities and obtain their approval of the sanitizer you intend to use when sanitizing the Cuber.

Prior to performing the sanitizing procedure, it is assumed the Front Panel has been removed and the cleaning procedure performed.

WARNING

Read WARNING thoroughly BEFORE preparing sanitizing solution, in next step.

1. STERILEX 3-Q SANITIZING TABLETS

DANGER: KEEP OUT OF REACH OF CHILDREN. Tablets may be harmful or fatal if swallowed. May cause skin irritation or eye damage. Avoid prolonged skin contact. Do not get in eyes. In case of contact, flush with plenty of water. If irritation persists get medical attention. Avoid contamination of food.

FIRST AID: If tablets are swallowed, drink promptly a large quantity of milk, egg whites or gelatin solution. Avoid alcohol.

NOTE TO PHYSICIAN: Probable mucosal damage may contraindicate the use gastric lavage. Measures against circulatory shock, respiratory depression and convulsion may be needed. Rinse empty carton container thoroughly with water and discard. Always follow your health department regulations.

2. MIKRO-QUAT

DANGER: Causes high damage and skin irritation. Do not get in eyes, on skin, or on clothing. Protect eyes when handling concentrated product. Harmful if swallowed. Avoid contamination of food.

FIRST AID: In case of contact, immediately flush eyes or skin with plenty of water for at least 15 minutes. For eyes, call a physician. Remove and wash contaminated clothing before reuse. If swallowed, drink promptly a large quantity of milk, egg whites or gelatin solution or if these are not available, drink a large quantity of water. Call a physician immediately.

1. Prepare a sanitizing solution using a quaternary ammonium sanitizing compound.

NOTE

1. *Carefully follow directions and observe all precautions on the sanitizing compound container.*
2. *One *Sterilex 3-Q sanitizing tablet per three quarts of water yields 220 ppm active quaternary; or, one-third ounce of *Mikro-Quat to one gallon of water yields 235 ppm active quaternary.*
3. *The taste of ice and water will not be affected by the sanitizing of parts using the above mixed sanitizing solutions. Rinsing of parts is not required with this relatively mild solution, but air drying of the parts is suggested before reassembly.*

2. Pour some of the sanitizing solution into the Bin drain.
3. Move both ON-OFF switches on the Control Box, to the ON position.
4. Replace all panels, etc., if any, not replaced at the end of the Cleaning procedure.
5. Clean and sanitize the interior bin and surfaces each week.

**Sterilex 3-Q sanitizing tablets are distributed by Pittsburgh Chemical Laboratory, Inc., Pittsburgh, PA 15222, and may be obtained through most restaurant supply houses.*

**Mikro-Quat, is manufactured by Economics Laboratory, Inc., Osborn Building, St. Paul, MN 55102, and may be obtained from them through their Magnus Division, The Klenzade division, or from restaurant supply houses.*

SECTION VI
SERVICE DIAGNOSIS

The Service Diagnosis Section is for use in aiding the serviceman in diagnosing a particular problem for pin-pointing the area in which the problem lies, thus an ever available reference for proper corrective action.

The following charts list corrective actions for the causes of known symptoms of certain problems that can occur in the Icemaking-Refrigeration System.

I. ICEMAKING - REFRIGERATION SYSTEM

SYMPTOM	POSSIBLE CAUSE	CORRECTION
Irregular size cubes and some cloudy.	Some jets plugged.	Clean jets.
	Shortage of water.	See Shortage of water CORRECTION.
	Unit not level. Water overflowing vent holes on low side, burning cubes.	Level cabinet, as required.
Cubes too large.	Cube Size Control set too cold.	Rotate Cube Size Control dial toward WARMER.
Cubes too small.	Cube Size Control set too warm.	Rotate Cube Size Control dial toward COLDER.
	Partially restricted capillary tube.	Blow refrigerant charge; replace drier; evacuate system; add refrigerant charge.
	Moisture in system.	Same as above CORRECTION.
	Shortage of water.	See Shortage of water CORRECTION.
	Loss of refrigerant.	Check for refrigerant leaks, correct leaks; recharge system.
Cloudy Cubes.	Shortage of water.	See Shortage of water SYMPTOM.
	Dirty water supply.	Install water filter or softener.
	Accumulated impurities.	Use SCOTSMAN Ice Machine Cleaner.
Shortage of water.	Water spraying out through curtain.	Hang curtain in proper position.
	Water solenoid not opening.	Repair or replace solenoid.
	Water leak in sump area.	Locate leak and repair or correct condition.
	Partial restrictions in water strainer.	Clean or replace strainer.
Shortage of water in upper freezing chamber.	Defective lower seal in upper freezing chamber.	Replace lower seal.

SYMPTOM	POSSIBLE CAUSE	CORRECTION
Decreased ice capacity.	Defective compressor.	Replace compressor.
	Leaky water valve.	Repair or replace valve.
	High head pressure, result of dirty condenser or faulty Fan Motor.	Clean condenser. Repair or replace Fan Motor.
	Non-condensable gas in the system.	Purge the system.
	Poor circulation or extreme hot location.	Relocate the cabinet; or provide ventilation by cutting openings.
	Overcharge of refrigerant.	Slowly purge off to correct charge.
	Hot gas solenoid valve leaking.	Replace valve.
	Partially restricted capillary tube.	See Cubes too small CORRECTION.
Poor harvests.	Too short defrost time.	Check and adjust harvest cycle. Check Timer two-minute setting.
	Restriction in water inlet line.	Check strainer and flow check valve. DO NOT remove flow control washers.
	Hot gas solenoid does not open.	Binds or burned out. Replace.
	Plugged air vent holes in upper part of cube cups.	Clean out air vent holes.
Icemaker does not harvest.	Water pressure too low.	Check for 20 PSI flowing water.
Compressor cycles intermittently.	Low voltage.	Check for circuit overload. Check building supply voltage, if low, contact power company.
	Dirty condenser.	Clean condenser with vacuum cleaner or brush. DO NOT USE A WIRE BRUSH.
	Air circulation blocked.	Locate cabinet with adequate air space for proper air flow.
	Defective Fan Motor.	Replace Fan Motor.
	Non-condensable gases in system.	Purge the system.
Icemaker will not operate.	Blown fuse in line.	Replace fuse and check for cause.
	Master switch in OFF position.	Set switch to ON position.
	Faulty Master switch.	Replace switch.
	Timer contacts open.	Replace Timer microswitch.
Hole washed inside ice cube.	Water over the top of cube cups during harvest cycle.	Check and re-level the AC25 cabinet.

AC55

TABLE OF CONTENTS

Table of Contents 1
List of Illustrations 1
Specifications 3

GENERAL INFORMATION & INSTALLATION
Introduction 4
Unpacking and Inspection 4
Location and Leveling 4
Electrical Connections 5
Water Supply and Drain Connections 5
Final Check List 5

OPERATING INSTRUCTIONS
Start Up 8

PRINCIPLES OF OPERATION
A. Freezing Cycle 10
B. Harvest Cycle 11

ADJUSTMENT, REMOVAL AND REPLACEMENT
Adjustment of Cube Size 13
Adjustment of Bin Thermostat Control 14
Air-Cooled Condenser Replacement 14
Bin Thermostat Control Replacement 14
Compressor Replacement 14
Cube Size Control Replacement 14
Dryer Replacement 15
Fan Motor Replacement 15
Hot Gas Valve Body Replacement 15
Hot Gas Valve Coil Replacement 15
Spray Platform, Spray Jets and Chute Replacement 15
Water Inlet Valve Replacement 15
Water Pump Replacement 16

MAINTENANCE & CLEANING INSTRUCTIONS
General 17
Icemaker 17

SERVICE DIAGNOSIS 18

LIST OF ILLUSTRATIONS

Specifications 2
Installation Practice 5
Component Location 6
Freezing Cycle 9
Harvest Cycle 10

PARTS LIST AND WIRING DIAGRAMS 1
(Printed in yellow)

PARTS LIST
General 1
How to Use the Parts Listing 1
How to Order Parts 1
Cabinet Assembly 2
Control Box Assembly 3
Evaporator Assembly 6
Spray System and Chute 7

WIRING DIAGRAM
AC55 Wiring Diagram 115/60/1 8

THIS PAGE
INTENTIONALLY
LEFT BLANK

THIS PAGE
INTENTIONALLY
LEFT BLANK

AC55
SPECIFICATIONS

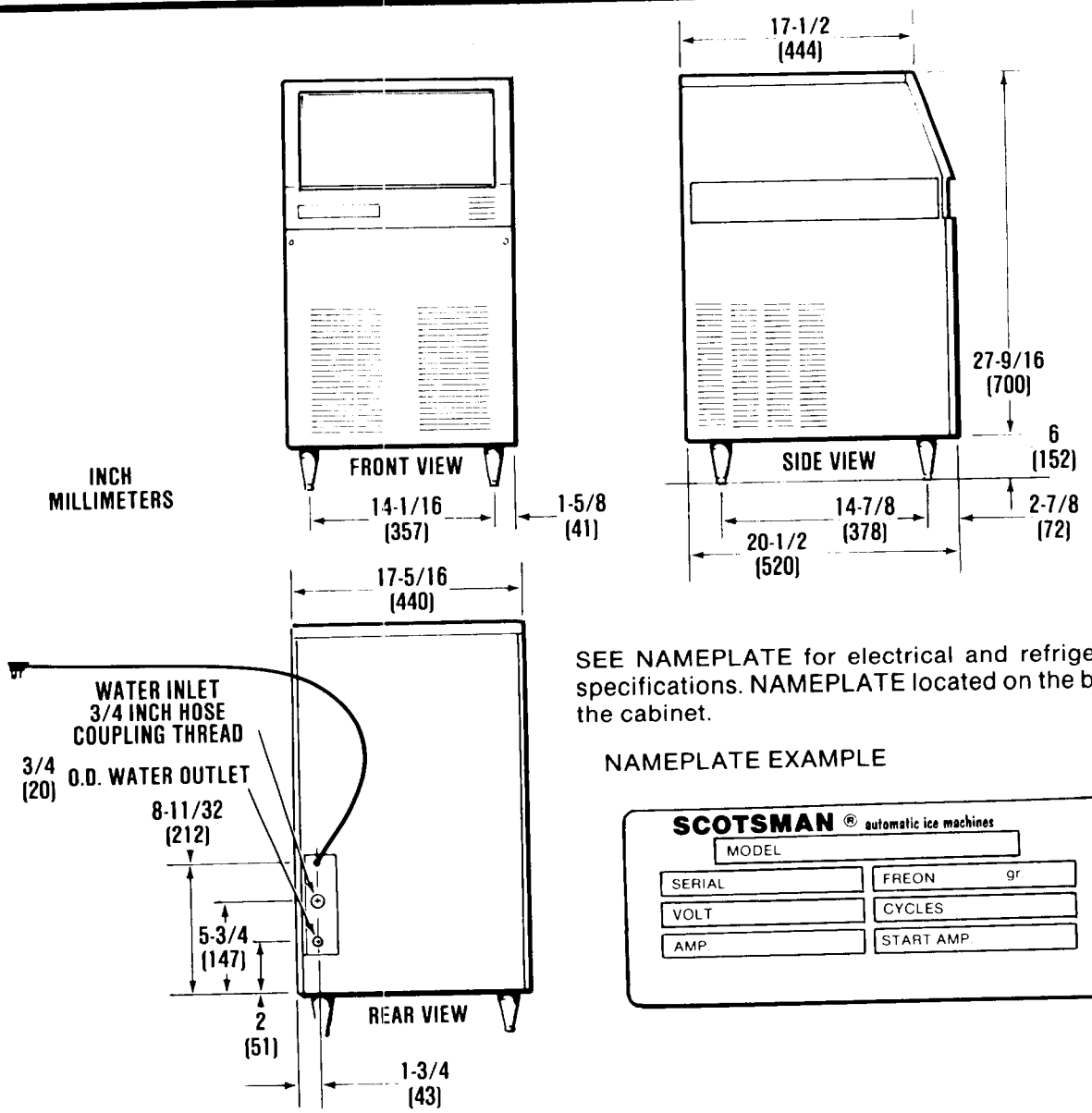

SEE NAMEPLATE for electrical and refrigeration specifications. NAMEPLATE located on the back of the cabinet.

NAMEPLATE EXAMPLE

MODEL AC55

Bin Storage:	28 lbs.
Electrical:	115/60/1

***Storage based on 90-percent of total volume x 34 lb. average density of ice. A.R.I. Standard.**

We reserve the right to make product improvements at any time. Specifications and design are subject to change without notice.

This icemaker has been engineered to our own rigid safety and performance standards. The National Sanitation Foundation (NSF) seal, signifies that it is listed with the NSF and that it complies with the materials and construction standards of the NSF. In addition, the Underwriters Laboratories, Inc., (UL) Listing Mark and the Canadian Standards Association (CSA) Monogram, both signify that its construction and design have been inspected and tested by them. NSF, UL and CSA inspectors also periodically examine production icemakers at the factory, to assure continued compliance.

To retain the safety and performance built into this icemaker, it is important that installation and maintenance be conducted in the manner outlined in this manual.

GENERAL INFORMATION & INSTALLATION

INTRODUCTION

This manual provides specifications and the step-by-step procedures for the installation, start-up, operation, maintenance and cleaning for the SCOTSMAN Model AC55 automatic cubers.

The Model AC55 automatic cubers are quality designed, engineered, constructed, and thoroughly tested icemaking and ice storage systems, providing the utmost in flexibility to fit the needs of a particular user.

One of the outstanding features of this series of cubers is the easy access for service. With the front panel removed, access can be gained to the refrigeration system for on-the-spot repair.

DESCRIPTION

This attractive automatic cuber has a compact cabinet with a high gloss baked enamel finish, up-to-date styling, and easily removable front, back and top panels for easy access to electrical and mechanical components.

SEALED REFRIGERATION SYSTEM

To provide quiet efficient operation of the Icemaker, the Compressor motor is internally spring-mounted. The Compressor motor is covered by a five year parts warranty.

SELF-CONTAINED STORAGE BIN

These automatic cubers store their own ice supply in a 28 pound capacity storage bin inside the insulated cabinet.

OVERALL DIMENSIONS

The overall dimensions of the cabinet depth, height, etc., allows the Cuber to be installed in harmony with the existing counter equipment.

UNPACKING AND INSPECTION

1. Call your authorized SCOTSMAN Distributor or Dealer, for proper installation. He's listed under ICE MAKING EQUIPMENT and MACHINERY in the yellow pages of the telephone book.
2. Visually inspect the exterior of the shipping container and skid, any severe damage should be reported to the delivering carrier and a concealed damage claim filed subject to internal inspection with carrier representative present.
3. Remove the shipping container, skid and packing materials.
4. Remove (3) screws and shipping tape, and the Lower Front Panel from the cabinet. Inspect for any concealed damage. Notify carrier of any concealed damage claims, as stated in Step 2.
5. Remove all internal support packing, tape and wires in machinery compartment.
6. Carefully lay the unit on its back, and attach the legs to the base by screwing them on. Return unit to upright position.
7. Check that refrigerant lines do not rub or touch lines or other surfaces, and that fan blades, if any, move freely.
8. Check that the Compressor is snug on all mounting pads.
9. Use clean damp cloth or disposable paper wiper to wipe clean the interior surfaces of the ice storage bin and the external surfaces of the cabinet.
10. See NAMEPLATE on the lower rear panel and check that the location source voltage corresponds with the voltage specified on the nameplate.

CAUTION

Improper voltage supplied to the Icemaker will void your parts replacement program.

11. Complete the Manufacturer's Registration Card by filling in all spaces including: Model Number and Serial Number taken from the serial plate located on the rear panel. Forward the completed, self addressed, registration card to the SCOTSMAN factory.

LOCATION AND LEVELING

WARNING

This Cuber is NOT designed for outdoor installation where air temperatures are below 50-degrees F., or above 100-degrees F., and the water temperature is below 40-degrees F. or above 100-degrees F. Extended periods of operation at temperatures exceeding these limitations will constitute misuse, under the terms of the SCOTSMAN Manufacturer's limited warranty resulting in LOSS of warranty coverage.

NOTE

Prior consideration for location site shall include:

Minimum room temperature 50-degrees F. and maximum room temperature 100-degrees F.

Water inlet temperatures: Minimum 40-degrees F. and Maximum 100-degrees F.

Well ventilated location, advising user to frequently clean the Air-Cooled Condenser.

SERVICE ACCESS: Adequate space for all utility connections, at the back of the Cabinet.

The front panel must remain unobstructed for air circulation and service access.

ELECTRICAL CONNECTIONS

Access to a standard 115 Volt, 15 Amp receptacle with ground.

Be certain the icemaker is connected to its own electrical circuit and individually fused. The maximum allowable voltage variation should not exceed ten percent of the nameplate rating even under starting conditions. Low voltages can cause erratic operation and may be responsible for serious damage to the overload switch and motor windings.

All external wiring should conform to the National, State and local electrical code requirements. Usually an electrical permit and services of a licensed electrician will be required to install the receptacle.

WATER SUPPLY AND DRAIN CONNECTIONS

AIR COOLED MODELS: The recommended water supply line is a 1/4 inch O.D. copper tubing, and must have a minimum incoming water pressure of 20 PSIG or above. Connect to cold water supply line with standard plumbing fittings, with a shutoff valve installed in an accessible place between the water supply and the cuber solenoid water inlet valve.

The Icemaker will not operate when water supply temperatures are below 40-degrees F. or above 100-degrees F.

NOTE

Water supply must be installed to conform with local plumbing codes. In some cases, a plumbing permit and services of a licensed plumber will be required.

DRAIN CONNECTIONS

All drains are gravity type and must be 1/4-inch per foot on horizontal runs. The drains are to be installed to conform with local code. The drain receptacle should be an open, trapped or vented construction.

FINAL CHECK LIST

1. Is the cabinet level? (IMPORTANT)
2. Have all electrical and piping connections been made?
3. Has the voltage been tested and checked against the nameplate rating?
4. Access to a standard 115 Volt, 115 Amp. receptacle with ground.
5. Is the water supply line shutoff valve installed and electrical wiring properly connected?
6. Have the Bin and Cabinet been wiped clean?
7. Have the Compressor hold-down nuts been checked, to be sure the Compressor is snug on the mounting pads?
8. Has the owner/user been given the User Manual and instructed on how to operate the Icemaker?
9. Has the Manufacturer's Registration Card been properly filled out? Check for correct Model and Serial numbers for Serial nameplate and then mail the completed card to the SCOTSMAN factory.
10. Check all refrigerant and conduit lines, to guard against vibration or rubbing and possible failure.
11. Has the spray platform been snapped into place?
12. Has the shipping tape been removed from the curtain assembly?
13. Is the cuber in a room where ambient temperatures are a minimum of 50-degrees F. all year around?
14. Has water supply pressure been checked to insure a minimum of 20 PSI?
15. Has the owner been given name and telephone number of the authorized SCOTSMAN Service Agency serving him?

See page 8 for start up and cube size adjustment.

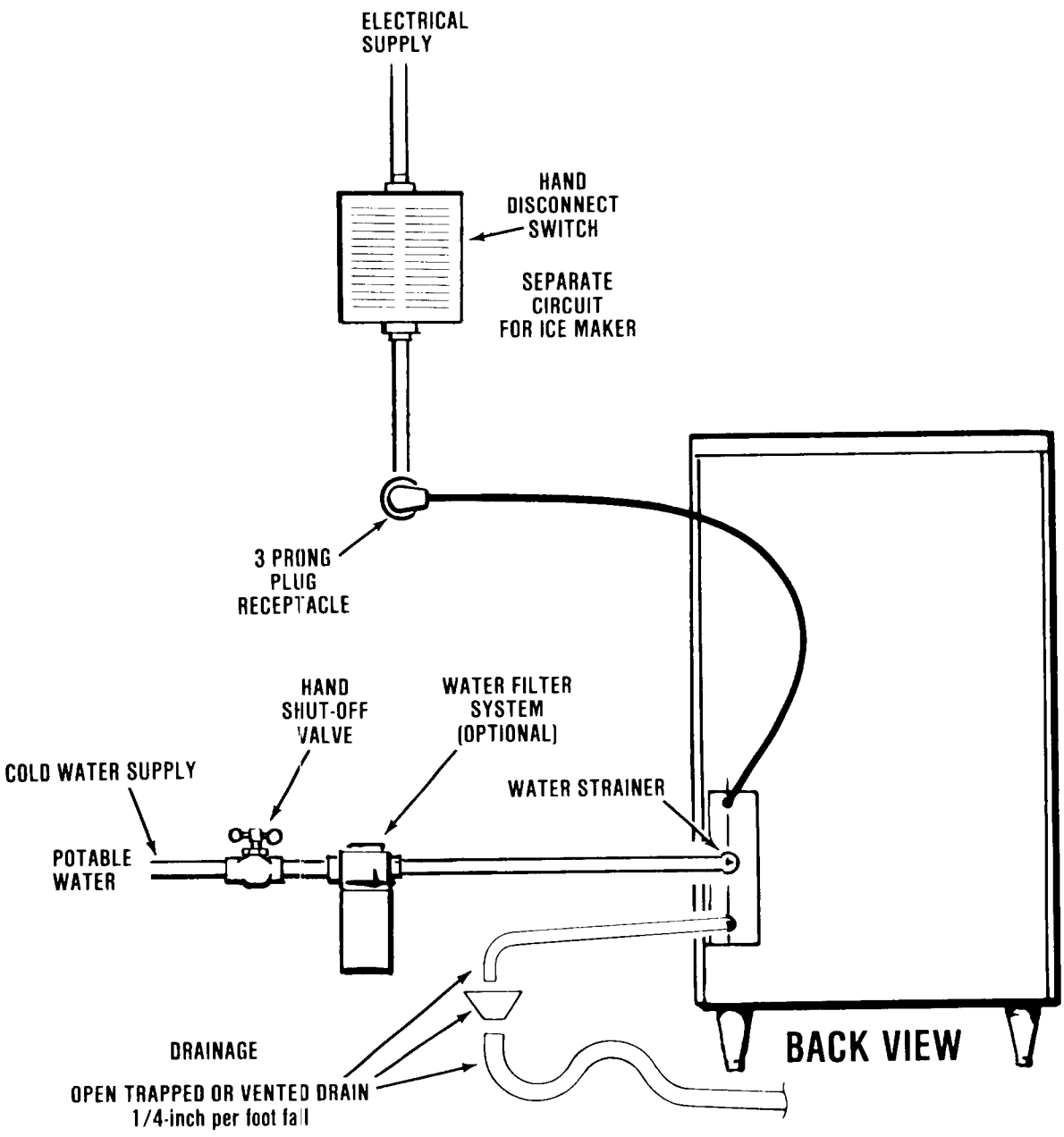

Figure 1-1. Installation Practice

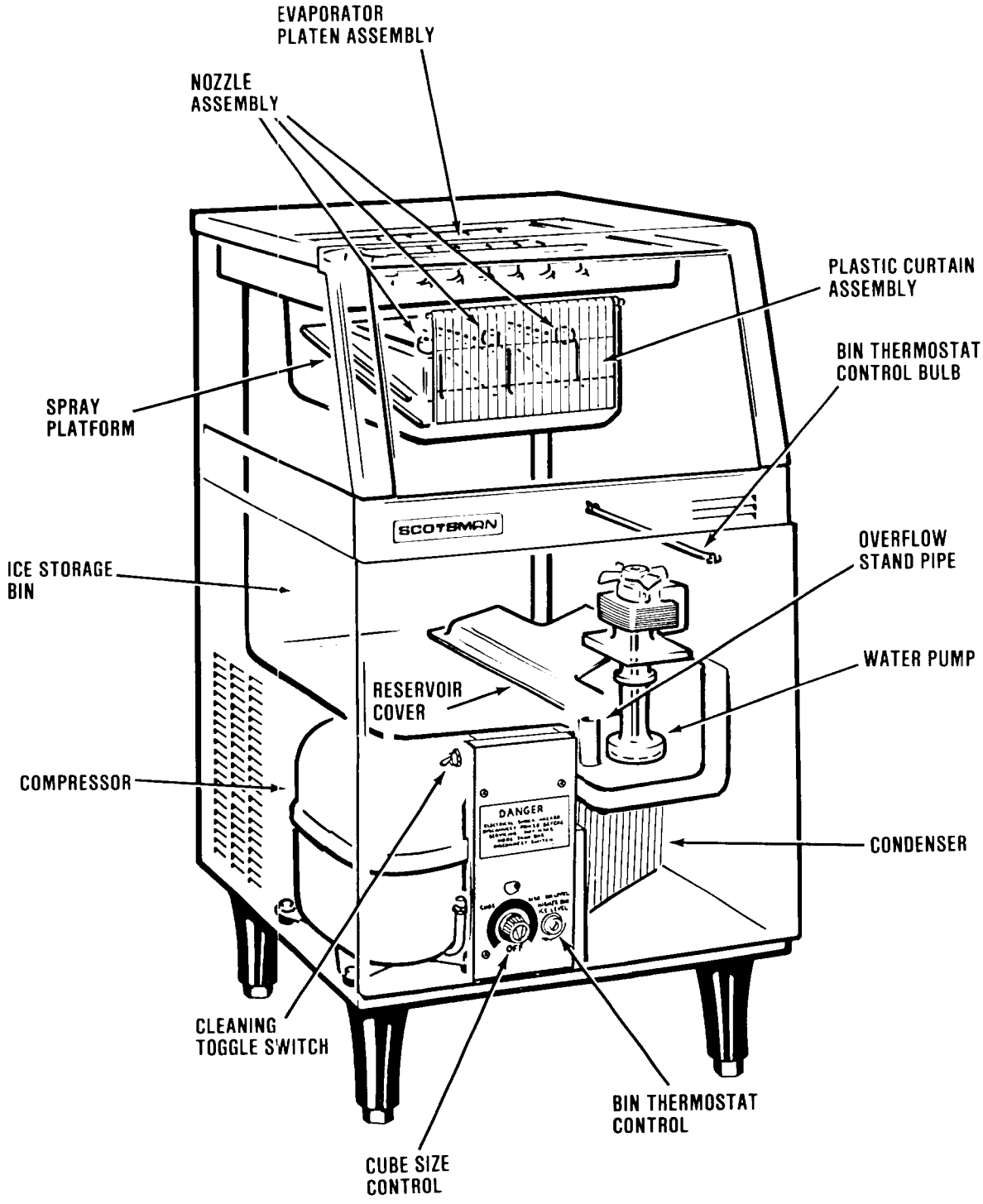

Figure 1-2. Component Location

OPERATING INSTRUCTIONS

START-UP

1. Open water supply valve.
2. Move Main Electrical power switch to the cuber to the ON position at the circuit breaker or fuse box.
3. Check the cube size control knob, it should be in a preset cube size position. If not, turn it clockwise till the unit comes on, cube size adjustments may be required - see below.
4. Move the cleaning toggle switch to the CLEANING position.
5. Observe water fill cycle: Water inlet solenoid valve OPENS, incoming water flows from valve through tubing to top of freezing chamber. Water flows around inverted ice cube cups and drains through holes into reservoir, reservoir fills. Excess water is overflowed through stand pipe. This cycle will take about three minutes.
6. Move cleaning toggle switch to the OPERATION position. This will START the automatic icemaking process.

RUN

1. Check operation of the freezing cycle:
   a. Compressor is operating.
   b. Water pump is operating and water is being sprayed through all nozzles into all inverted ice cube cups.
   c. Icemaking process begins: feeling inside ice cube cups reveals cold tempeatures and very shortly ice begins to form.
2. Check that plastic curtain assembly hangs down evenly in the opening and no excessive water is passing through.
3. Observe first ice cube harvests:
   a. Check size of ice cubes:

Proper size and shape of a Scotsman Round Cube:

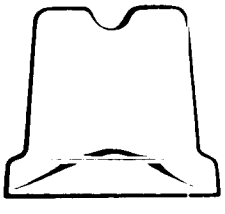

Normal cube size is with a one-quarter inch depression in the crown.

NOTE

Normal cube size is with a one-quarter inch depression in the crown.

IMPROPERLY FORMED CUBES

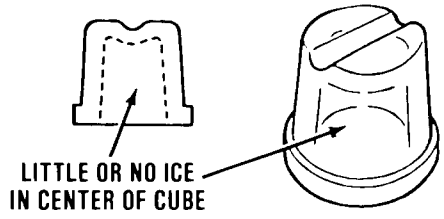

UNDERSIZED, TOO SHALLOW

b. To produce LARGER sized ice cubes:
   (1) Locate Cube Size Control on the front of the control box and rotate CLOCKWISE to larger.
   (2) Observe size of ice cubes in next two ice cube harvests and repeat step (1) above, in one-eighth turn increments, until desired ice cube size is achieved.

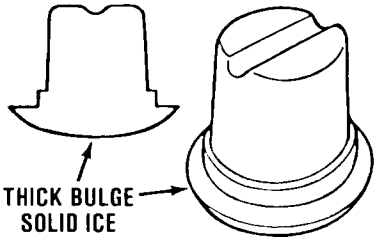

OVERSIZED

c. To produce SMALLER sized ice cubes:
   (1) Locate Cube Size Control on the front of the control box and rotate COUNTER-CLOCKWISE to a smaller cube setting.
   (2) Observe size of ice cubes in next two ice cube harvests and repeat step (2) above, in one eighth turn increments, until desired ice cube size is achieved.

d. Check texture of ice cubes: When partially cloudly through out, suggests unit operating short of water near end of freezing cycle, or possibly an extreme water condition exists and filtering or purifying equipment is recommended. Contact SCOTSMAN - Queen Products Division, Service Department, Albert Lea, Minnesota, for further details.

5. TEST BIN FULL ICEMAKER SHUT DOWN. To test bin full icemaker shut down, hold ice on the bin thermostat bracket. Icemaker will stop until ice is removed from the bin thermostat bracket.

6. Thoroughly explain to the owner/user the significant specifications of the Icemaker, the start up and operation, maintenance and cleaning procedures. Answer all questions about the icemaker, and inform the owner of the name and telephone number of the authorized SCOTSMAN Service Agency serving him.

OPERATING CHARACTERISTICS

The information shown below covers a wide range of air and water temperatures. It is intended as a guideline only, and is based on data compiled on NEW CLEAN units. Allow a variation from each end of the range given.

A. Refrigeration System Pressures:

High side (discharge)
End of freeze cycle ..... 100 - 130 PSIG
Harvest cycle (max) ..... 150 - 190 PSIG

Low side (suction)
End of freeze cycle ..... 3 - 5 PSIG
Harvest cycle (max) ..... 60 - 75 PSIG

B. Freeze cycle time ..... 15 - 30 minutes

C. Defrost cycle time ..... 2 - 3 minutes

D. Compressor amps

Freeze cycle ..... 3.3 - 3.5
Harvest cycle ..... 6.3 - 6.7

PRINCIPLES OF OPERATION

OPERATION (How It Works)

FREEZING CYCLE

The refrigeration process creates colo temperatures within the evaporator coils and removes heat from the water sprayed up into the inverted cube cups and the water turns into ice.

Sediment and other impurities will not freeze and are drained away. Only pure water will be frozen into crystal clear SCOTSMAN ice cubes.

During the freezing cycle, the Compressor and the fan motor operates, the water pump operates and water is continuously freezing or being sprayed and re-circulated. When evaporator temperature is lowered to the cold temperature setting of the cube size control, it opens the circuit to the fan motor and the water pump motor, ending the freezing cycle and starting the harvest cycle.

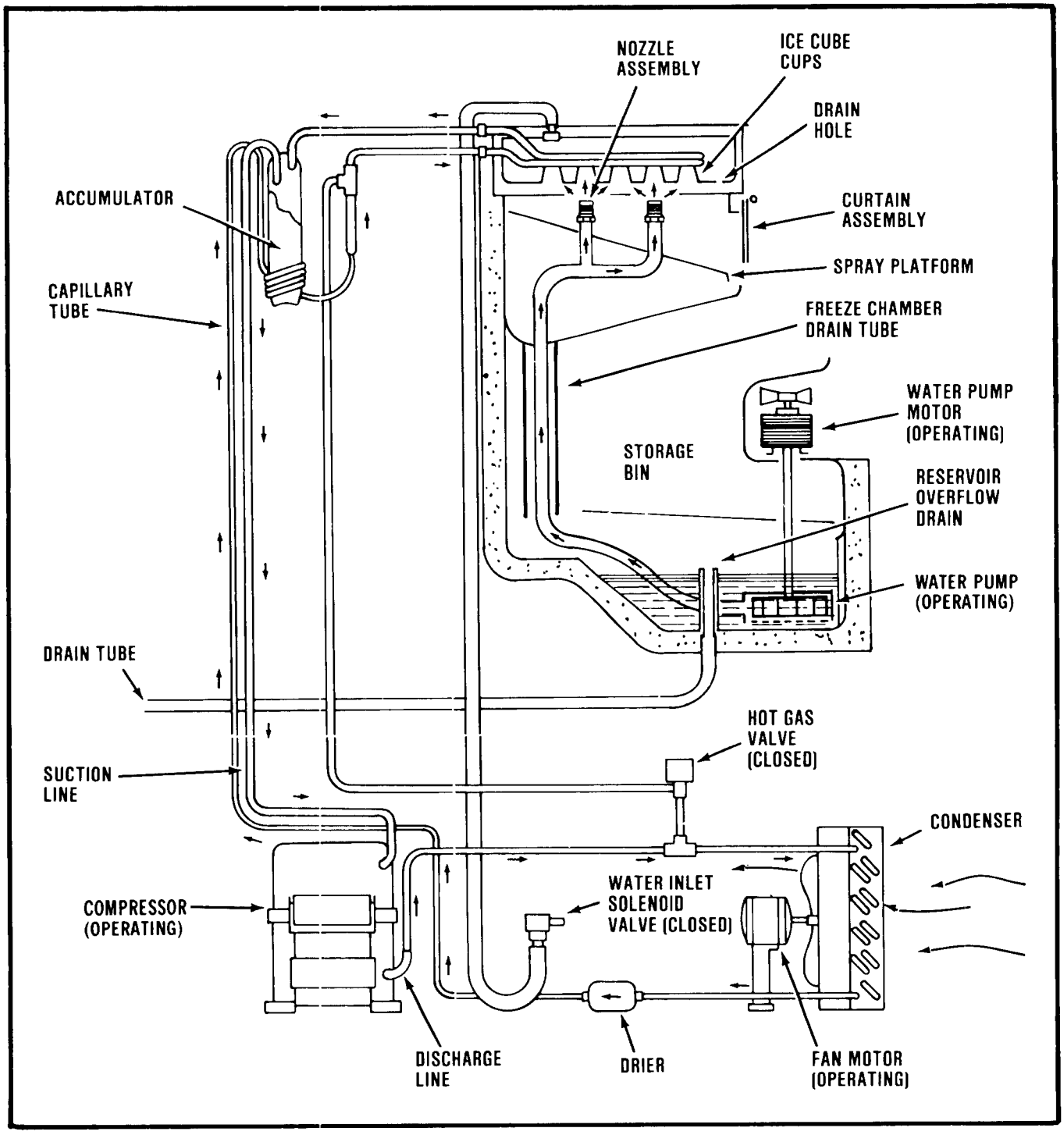

Figure 2-2. Freezing Cycle

HARVEST CYCLE

The cube size control thermostat also closes the circuit to the solenoid of the hot gas valve and the solenoid of the inlet water valve.

The hot gas valve opens and hot gas discharged from the compressor is diverted directly to the evaporator. The inlet water valve opens and a fresh supply of water is discharged into the top of the evaporator and the water drains into the sump of the evaporator assembly.

The ice cubes are released from the inverted cube cups in the evaporator by the warming effect of the hot gas flowing through the evaporator tubes and the incoming fresh water flowing around the inverted cups. Released ice cubes drop onto the spray platform and through the curtain assembly into the ice storage bin.

The cube size control thermstat senses the warmer temperature of the harvest cycle and opens the circuit to the solenoid of the hot gas valve and solenoid of the inlet water valve. Both valves close, incoming water stops and hot gas is diverted back to the condenser. The harvest cycle is complete.

The automatic icemaking process continues until the bin is full of cubes and the bin thermostat senses cold temperature, and opens the circuit to all components and the automatic icemaking process stops.

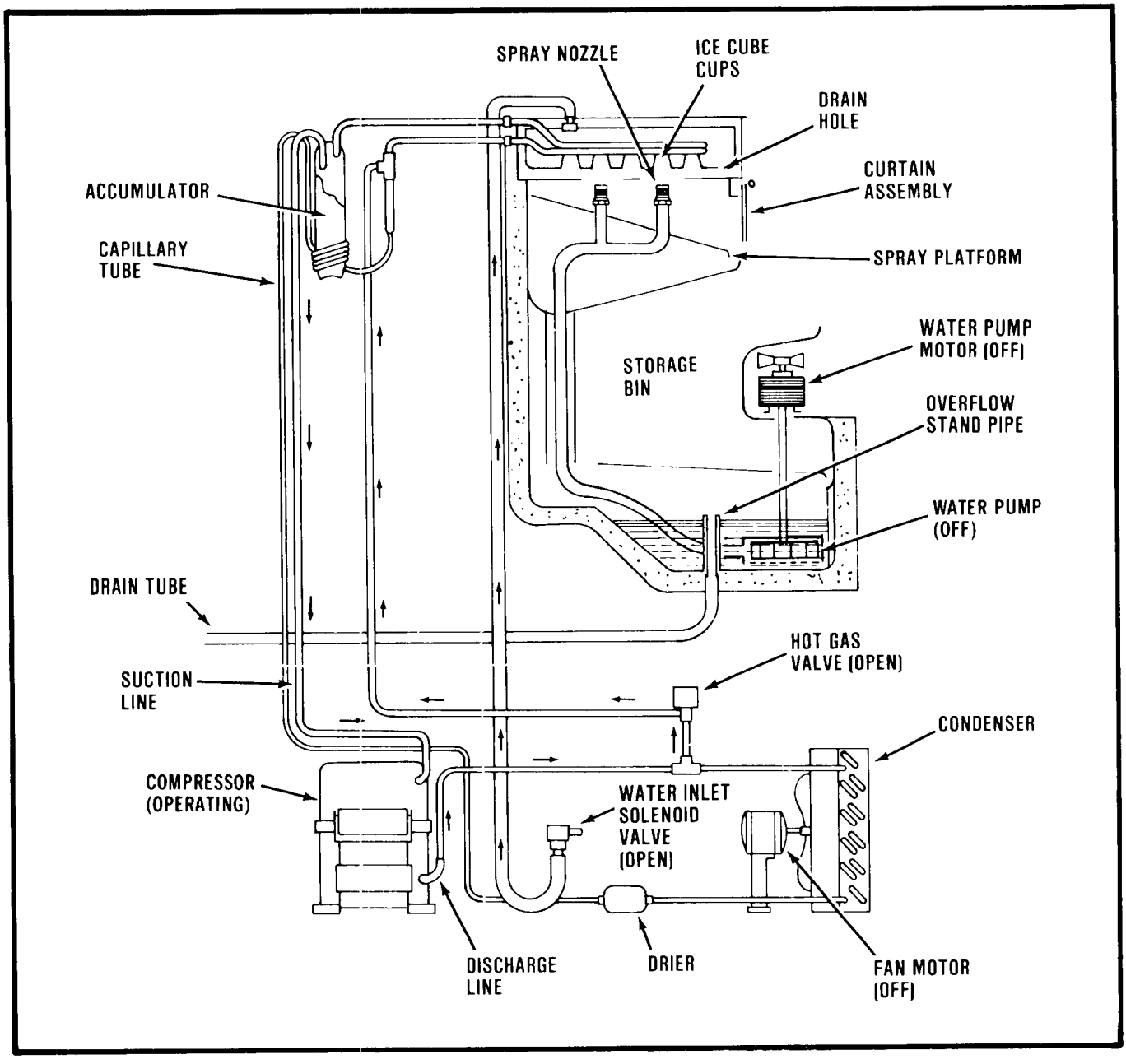

Figure 2-3. Harvest Cycle

COMPONENT DESCRIPTION

CUBE SIZE CONTROL

Cube size control is located in front of the control box, behind the front panel. The sensing capillary tube of the cube size control is routed out of the control box into its bulb holder on the evaporator coil. It is a reverse acting temperature control with double throw contact points; turning its knob all the way counterclockwise shuts off the icemaker. This control determines the length of freezing cycle and correspondingly the size of the cube. A lower setting will produce a larger cube while a higher setting produces a smaller cube. The cube size control changes its contacts when the evaporator reaches the low preset temperature value, starting the harvest cycle. After a few minutes, when the sensing tube of the cube size control reaches the high preset temperature valve, it contacts change, starting a new freezing cycle.

CLEANING TOGGLE SWITCH

The cleaning toggle switch is located on the side of the control box. When moved to the CLEANING position, it completes a circuit to the cokmpressor, hot gas valve, water solenoid valve, water pump motor and the fan motor and the icemaker operates to rinse the water system. Refer to Cleaning Icemaker. When the cleaning toggle switch is moved to the OPERATION position, the icemaker operates in the normal automatic icemaking process.

WATER PUMP

The water pump operates during the freezing cycle and the cleaning cycle to pump and circulate water from the sump through the six spray nozzles and into the inverted cube cups.

INLET WATER SOLENOID VALVE -3/4" MALE FITTING

The water solenoid valve, located in the rear side of the unit, is energized only during the harvest cycle. When energized it allows a metered rate of water to flow into the top of the evaporator, assisting in the hot gas cube-release operation. This water flows by gravity through the drain holes in the platen assembly to the reservoir located under the water pump where it is picked up by the pump and directed to the spray system.

BIN THERMOSTAT CONTROL

The thermostat control body is located in front of the control box just beside the cube size control. The thermostat sensing tube (capillary tube) is located in the ice storage bin on the right side wall, where it automatically shuts the icemaker off when the ice bin is full and re-starts the icemaker when ice is remove. Factory settings are 1° C (36° F) cut-out and 4° C (39° F) cut-in. When replacing control, check operation by placing ice on capillary tube before installation. An audible 'click' will be heard on cut-out.

HOT GAS SOLENOID VALVE ASSEMBLY

The hot gas solenoid valve assembly is comprised of two parts, the valve body and the solenoid coil. These components are located on the discharge line of the compressor and activated by the cube size control contacts during the harvest cycle. During the harvest cycle, the solenoid coil, located on top of the valve body, is energized, lifting the valve stem within the valve body. This allows the hot discharge gas from the compressor to by-pass the capillary tube and flow directly into the evaporator, releasing the cubes from the cube mold.

SPRAY PLATFORM AND CHUTE

The spray system used on this unit is of the stationary type. The water is forced by the water pump into the platform chamber and sprayed into the inverted cup molds through a set of six spray nozzles.

FAN MOTOR

The fan motor is electrically connected through the cube size control and runs only during the freezing cycle, maintaining proper head pressure by circulating air through the air-cooled condenser.

HERMETIC MOTOR COMPRESSOR U.H. AE59ZF9

The hermetic motor compressor circulates and retrieves refrigerant throughout the refrigeration system. It compresses the low pressure refrigerant vapor, causing its temperature to rise, and become high pressure high temperature vapor, which is then released through the discharge valve to the condenser.

ADJUSTMENT AND REMOVAL AND REPLACEMENT PROCEDURES

ADJUSTMENT OF THE CUBE SIZE CONTROL

The cube size control regulates the size and shape of the cubes. Normal size and shape can be seen in illustration 4-1 Cube Size, the NORMAL Size and Shape.

CAUTION

Before performing actual adjustment of the cube size control, check other possible causes for cube size problems, refer to section VI, Service Diagnosis for problem review and analysis.

ADJUSTMENT OF THE CUBE SIZE CONTROL IS PERFORMED:

If ice cubes are shallow in size (indentation is too deep): See Figure 4-1 Shallow Size.

1. Locate the cube size control knob on the front of the control box.
2. Rotate the adjusting knob one-eighth of a turn clock-wise toward colder.
3. Observe size of ice cubes in next two ice cube harvests and repeat step 2 above, in one-eighth turn increments, until proper ice cube size is achieved. See Figure 4-1, Normal Size-Shape.

If ice cubes are oversize (indentation is too full):

1. Locate the cube size control knob on front of the control box behind the lower front panel.
2. Rotate the adjusting knob one-eighth of a turn counterclockwise toward warmer.
3. Observe size of ice cubes in next two ice cube harvests and repeat step 2 above, in one-eighth turn increments, until proper ice cube size is achieved. See Figure 4-1 Normal Size-Shape.

Once the control knob is set to obtain ice cubes in the proper shape, the ice maker does not require any further immediate attention.

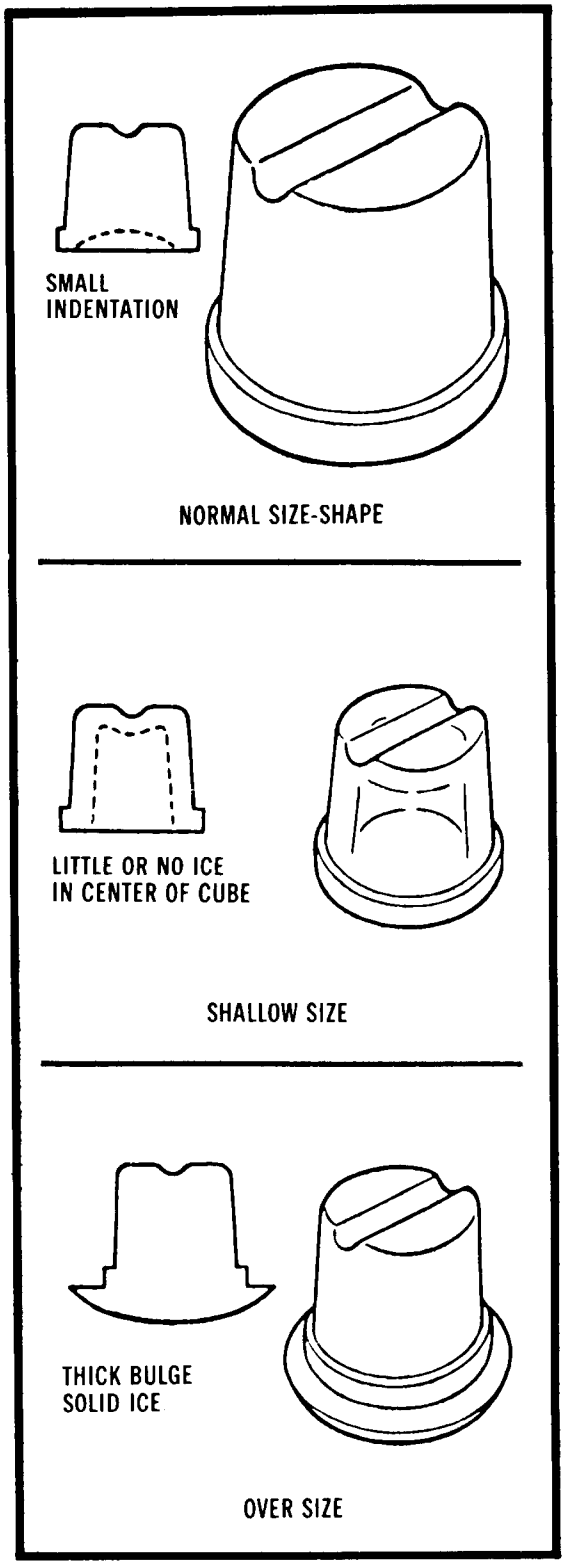

Figure 4-1. Cube Size

ADJUSTMENT AND REMOVAL AND REPLACEMENT PROCEDURES

ADJUSTMENT OF THE BIN THERMOSTAT CONTROL

Adjustment of the bin thermostat control should be performed if the ice level in the bin is too high or too low.

To INCREASE the ice level in the storage bin; Rotate the bin thermostat adjustment screw counter-clockwise in one-eighth turn increments until the desired ice level is obtained.

WARNING

Be sure the electrical power supply and the inlet water supply are off, before starting any of the following removal and replacement procedures as a precaution to prevent possible personal injury or damage to equipment.

AIR-COOLED CONDENSER REPLACEMENT

1. Unplug the icemaker to disconnect electrical power.
2. Remove screws and front and back cabinet panels.
3. Follow the steps in fan motor replacement to remove the fan motor.
4. Remove screws and remove the condenser shroud.
5. Bleed off or blow the refrigerant from the system through the Schrader valve.
6. Unsolder the refrigerant lines from the condenser and remove the bolts which attach the condenser to the base. Remove the condenser from the chassis.
7. To replace the air-cooled condenser, reverse the removal procedure.

NOTE

Always install a replacement dryer anytime the sealed refrigeration system is opened. Do not replace the dryer until all other repairs or replacements have been completed.

NOTE

Thoroughly evacuate the system to remove moisture and non-condensables after condenser replacement.

8. Recharge the refrigeration system per NAMEPLATE Specifications and check for leaks.

BIN THERMOSTAT CONTROL REPLACEMENT

1. Unplug the icemaker to disconnect electrical power.
2. Remove screws and cabinet front panel.
3. Remove screws and control box cover to gain access and disconnect electrical leads from the bin thermostat control.
4. Remove nut and separate bin thermostat control from the control box.
5. Remove capillary tube from bin thermostat bracket and remove bin thermostat control and capillary tube from the chassis.
6. To replace the bin thermostat control, reverse the removal procedure.

COMPRESSOR REPLACEMENT

1. Unplug the icemaker to disconnect electrical power.
2. Remove screws and rear and front cabinet panels.
3. Remove the cover and disconnect the electrical leads from the compressor junction box.
4. Bleed off or blow the refrigerant charge through the Schrader valves.
5. Unsolder and disconnect both the suction line and the discharge line from the compressor.
6. Remove the compressor mounting bolts and the compressor from the unit base.
7. To replace the compressor, reverse the removal procedures.

NOTE

Always install a replacement dryer any time the sealed refrigeration system is opened. Do not replace the dryer until all other repairs or replacements have been completed.

8. Thoroughly evacuate the system to remove moisture and non-condensables after compressor and dryer replacement.
9. Recharge the refrigeration system per NAMEPLATE Specifications and check for leaks.

CUBE SIZE CONTROL REPLACEMENT

1. Unplug the icemaker to disconnect electrical power.
2. Remove screws and cabinet front and top panels.
3. Remove screws and control box cover to gain access and disconnect electrical leads from the cube size control.
4. Remove nut and separate cube size control from the control box.
5. Remove capillary tube from the bulb holder located in the evaporator assembly and remove the cube size control and capillary tube from the chassis.
6. To replace the cube size control, reverse the removal procedure.

ADJUSTMENT AND REMOVAL AND REPLACEMENT PROCEDURES

DRYER REPLACEMENT

1. Unplug the icemaker to disconnect electrical power.
2. Remove screws and front and back panels.
3. Bleed off or blow the refrigeration charge through the Schrader valve.
4. Unsolder the capillary tube from one end of the dryer and the refrigerant line from the other end. Leave the service line on the dryer and remove the dryer from the unit.
5. Unsolder and remove the service line from the dryer and retain for use in the replacement dryer.
6. Remove factory seals and install and solder the service line into the same location as the previous dryer.
7. Re-position the dryer in the unit and install and solder the refrigerant line and the capillary tube into the replacement dryer.
8. Thoroughly evacuate the refrigeration system to remove moisture and non-condensables.
9. Recharge the refrigeration system per NAMEPLATE Specifications and check for leaks.
10. Replace front and back panels and screws.

FAN MOTOR REPLACEMENT

1. Unplug the icemaker to disconnect electrical power.
2. Remove screws and the cabinet back panel.
3. Locate and disconnect the yellow-green ground wire and the electrical wire leads connected to the fan motor.
4. Remove the bolts securing the fan motor assembly to the cabinet base and remove the fan motor assembly.
5. To replace the fan motor, reverse the removal procedure.

NOTE

Check that fan blades move freely and do not touch any surfaces.

HOT GAS VALVE BODY REPLACEMENT

1. Unplug the icemaker to disconnect electrical power.
2. Remove the hot gas valve coil. Follow the steps in Hot Gas Valve Coil replacement.
3. Bleed off or blow the refrigerant from the system.
4. Unsolder the refrigerant lines from the hot gas valve body and remove the hot gas valve from the unit.
5. To replace the hot gas valve body, reverse the removal procedure.
6. Always install a replacement dryer anytime the sealed refrigeration system is opened. Do not replace the dryer until all other repairs or replacements have been completed.
7. Thoroughly evacuate the system to remove moisture and non-condensables after hot gas valve body replacement.
8. Recharge the refrigeration system per NAMEPLATE Specifications and check for leaks.

HOT GAS VALVE COIL REPLACEMENT

1. Unplug the icemaker to disconnect electrical power.
2. Remove screws and front and back panels.
3. Remove the spring clip securing the hot gas valve coil to the hot gas valve body.
4. Locate the hot gas valve electrical terminals inside the control box and disconnect and remove.
5. To replace the hot gas valve coil, reverse the removal procedure.

SPRAY PLATFORM, SPRAY JETS AND CHUTE REPLACEMENT

1. Open ice access door to gain access and uncouple and remove the curtain assembly.
2. Lift the spray platform from the evaporator housing and remove the corbin clamp and the rubber hose from the bottom of the platform.
3. Unscrew the spray caps and remove the spinner jets. Inspect condition for cleaning or replacement.
4. To replace the spray platform, spray jets and chute, reverse the removal procedure.

WATER INLET VALVE REPLACEMENT

1. Unplug the icemaker to disconnect electrical power.
2. Close valve to shut off water supply to icemaker.
3. Remove screws and remove the cabinet back panel to gain access.
4. Disconnect electrical leads from water inlet valve.
5. Remove the two screws securing the water inlet valve to the chassis.
6. Remove Corbin Clamp and rubber hose from the inlet water valve.
7. Remove the water inlet valve from the cabinet.
8. To replace the water inlet valve, reverse the removal procedure.

WATER PUMP REPLACEMENT

To replace the water pump assembly:

1. Unplug the icemaker to disconnect electrical power.
2. Remove screws and cabinet front panel to gain access to the water pump assembly.
3. Remove reservoir cover tc gain access and disconnect rubber hose from discharge port of the water pump assembly.
4. Remove top panel and door frame.
5. Disconnect yellow-green ground wire and pump electrical wire leads.
6. Remove screws and lift water pump from sump.
7. Remove screw and separate water pump assembly from mounting bracket.
8. To install replacement pump, reverse the removal procedure.

TO SERVICE REFRIGERATION SYSTEM:
TORQUE REFRIGERATION ACCESS VALVE CAPS TO 60-75 INCH POUNDS.

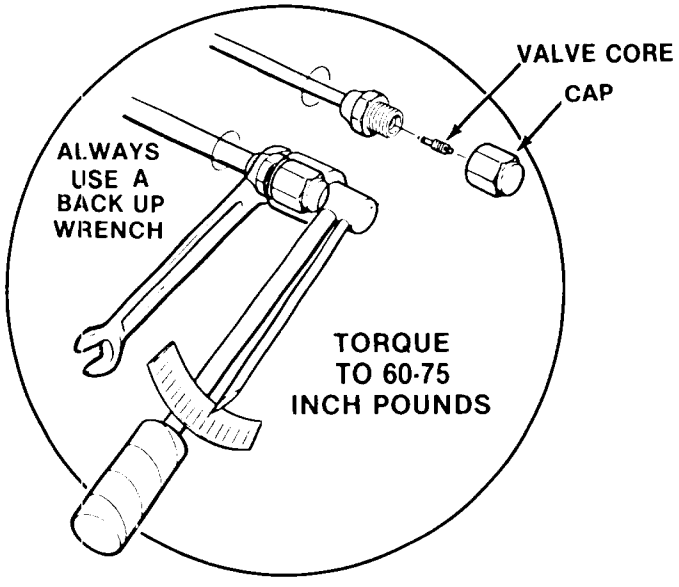

ALWAYS USE A BACK-UP WRENCH TO AVOID DAMAGE TO THE REFRIGERANT TUBING.

MAINTENANCE & CLEANING INSTRUCTIONS

GENERAL

The periods and procedures for maintenance and cleaning are given as a guide. Cleaning will vary depending upon local water conditions and the ice volume produced. Each icemaker must be maintained individually, in accordance with its own particular location requirements.

ICEMAKER

THE FOLLOWING MAINTENANCE SHOULD BE SCHEDULED AT LEAST TWO TIMES PER YEAR ON THIS ICEMAKER. CALL YOUR AUTHORIZED SCOTSMAN SERVICE AGENCY.

1. SHUT OFF water supply valve to the icemaker.
2. Disconnect the water inlet line and remove the strainer from its seat in the water inlet fitting. Remove the strainer, using a pliers and rinse the strainer clean under a stream of tap water. Replace the strainer into its original position. Replace filters or maintain other optional water purification equipment.
3. Open water supply valve.
4. Unplug the electrical power cord to disconnect power supply to the icemaker.
5. Remove screws and cabinet front panel.
6. Clean the air-cool condenser fins using a vacuum, whisk broom or brush. The icemaking performance and capacity is affected by the clean condition of the air-cooled condenser. Instruct the user to clean the air-cooled condenser as frequently as required to maintain proper air circulation.
7. Remove cubes from the bin and remove the water reservoir cover located in the bottom right side of the bin.
8. Locate the overflow stand pipe in the water reservoir and pull up to remove. Removal of the overflow stand pipe drains the water and mineral accumulation from the water reservoir. Replace the overflow stand pipe.
9. Prepare cleaning solution: Mix three ounces of SCOTSMAN Ice Machine Cleaner with three pints of fresh potable water.

WARNING

SCOTSMAN Ice Machine Cleaner contains Phosphoric and Hydroxyacetic acids. These compounds are corrosive and may cause burns if swallowed. DO NOT induce vomiting. Give large amounts of water or milk. Call physician immediately. In case of external contact, flush with water. KEEP OUT OF THE REACH OF CHILDREN.

10. Carefully pour the cleaning solution into the water reservoir and replace the water reservoir cover.
11. Plug the icemaker electrical power cord into the receptacle and allow the icemaker to operate for about 20 minutes; then turn the cleaning toggle switch to the CLEAN position for about three minutes to release all ice.

NOTE

With the cleaning toggle switch in the Clean position, the unit runs in the harvest cycle. During the harvest cycle, fresh water is introduced into the reservoir to rinse away most mineral concentration out through the reservoir overflow drain.

12. Rotate the cube size control knob counter clockwise to the OFF position to SHUT OFF the icemaker.
13. Remove the overflow stand pipe from the reservoir to drain all cleaning solution and mineral concentration through the drain tube. Replace the stand pipe and replace the water reservoir cover.
14. Unsnap the curtain assembly. The spray platform can be lifted out for easier removal. Reach inside the freezer assembly and unscrew and remove the spray caps. Clean the spray caps and the spinner jets under a stream of tap water. Replace the spinner jets and spray caps.
15. Rotate the cube size control knob to the normal operating position.
16. Move the cleaning toggle switch to the CLEAN position and operate the unit approximately 4 minutes, then alternate to the OPERATING position for 1-2 minutes and back to the CLEAN position for 1-2 minutes. Alternate the cleaning toggle switch between CLEAN and OPERATE position several times. This action will properly rinse the water system.
17. Move cleaning toggle switch to the OPERATION position to restart the automatic icemaking process.
18. Check each ice cube harvest until the ice cubes are clear and acid taste has been eliminated. Remove and discard all ice cubes from the bin.

CAUTION

Do not use acid tasting ice cubes produced during the cleaning procedures of the water system. Be sure no cubes made with the ice machine cleaner remain in the bin.

19. Clean the interior surfaces of the ice storage bin clean cloth.
20. Replace cabinet panels.

SERVICE DIAGNOSIS

SYMPTOM	POSSIBLE CAUSE	SUGGESTED CORRECTION
Unit will not run	Blown fuse or breaker.	Replace fuse & check for cause of blown fuse. Reset breaker.
	Bin thermostat set improperly	Adjust or replace if required.
	Cube Size Control Switch in Off position	Turn switch to On Position.
Compressor cycles intermittently	Low voltage	Check circuit for overloading. Check voltage at the supply to the building. If low, contact the power company.
	Dirty condenser	Clean with vacuum cleaner, air or stiff brush. (DO NOT use wire brush).
	Air circulation blocked.	Allow sufficient air space all around unit.
	Non-condensable gas in system	Evacuate and recharge system per nameplate specifications.
Cubes too small	Cube size control set improperly	Check and adjust for proper operation.
	Partially restricted capillary tube	Blow charge, add new gas & drier, after evacuating system with vacuum pump.
	Moisture in system	Save as above.
	Shortage of water	See remedies for shortage of water.
	Shortage of refrigerant	Check for leaks and recharge.
	Inoperative cube size control	Replace cube size control.
Cloudy cubes	Spray nozzles plugged	Clean.
	Shortage of water	See remedies for shortage of water.
	Dirty water supply	Use water softener or water filter.
Accumulated impurities	Use SCOTSMAN Ice Machine Cleaner.	Clean unit per instructions in Section V.
Shortage of water	Water solenoid not opening	Repair or replace.
	Water leaks in sump area	Locate and repair.
	Water flow control plugged	Remove and clean.
Irregular size cubes and some cloudy	Some jets plugged	Clean jets.
	Shortage of water	See Shortage of Water.
	Unit not level	Water overflowing air vent holes on low side burning cubes. Level as required.

AC55
SERVICE DIAGNOSIS

SYMPTOM	POSSIBLE CAUSE	SUGGESTED CORRECTION
Cubes too large	Cube size control set improperly	Check and adjust for proper operation.
Decreased ice capacity	Inefficient compressor	Replace.
	Leaky water inlet valve	Replace.
	High head pressure	Dirty condenser. Clean. Bad fan motor. Replace.
	Non-condensable gas in the system.	Purge the system.
	Poor air circulation or excessively hot location	Relocate the unit, or provide for ventilation by cutting openings.
	Overcharge of refrigerant	Correct the charge. Purge off slowly.
	Partially restricted cap tube	Purge & replace charge and drier.
Poor harvests	Too short defrost time	Check cube size control. Replace if necessary.
	Restriction in incoming water line	Check water feed line strainer and flow reducing valve. Do not remove flow control washers.
	Solenoid valve not opening the water valve	Solenoid binding or burned out. Replace.
	Air vent holes in upper cube cups plugged	Clean out holes.
	Ambient and water temp. too low	Change unit location.
	Solenoid not opening the hot gas valve	Solenoid binding or burned out. Replace.
Unit won't Harvest	Inoperative cube size control	Replace cube size control.
	Hot gas solenoid not opening.	Solenoid binding or burned out Replace.
	Water inlet valve not opening	Replace.
Excessive Water in Unit base	Water tubing leaking (Check during freeze & harvest cycle)	Check. Tighten or replace.

THE PARTS ILLUSTRATIONS AND PARTS LISTING

GENERAL

This section contains the Parts Illustrations and the Parts List for each of the major assemblies in the AC55 Icemaker.

Each illustration shows an assembly of parts with a position number for each part or sub-assembly shown. These position numbers key with the parts list for the assembly. All parts or assemblies listed by their position number, also have their part number and description.

HOW TO USE THE ILLUSTRATIONS AND PARTS LIST

To find the part number of a required part or assembly, turn to the table of contents and find the page number of the Parts Illustration of the major or sub-assembly containing the part. Turn to the indicate page and locate the part and its Index Number on the specific illustration. Find the Index Number on the required part in the Parts List to determine the complete description of the part.

HOW TO ORDER PARTS OR ASSEMBLES

When ordering parts or assemblies, to avoid costly delays and errors in shipment give the part number, the complete description shown in the list, and the quantities of each part or assembly required. Also include the Model name, the serial number of the Cuber for which the part is required.

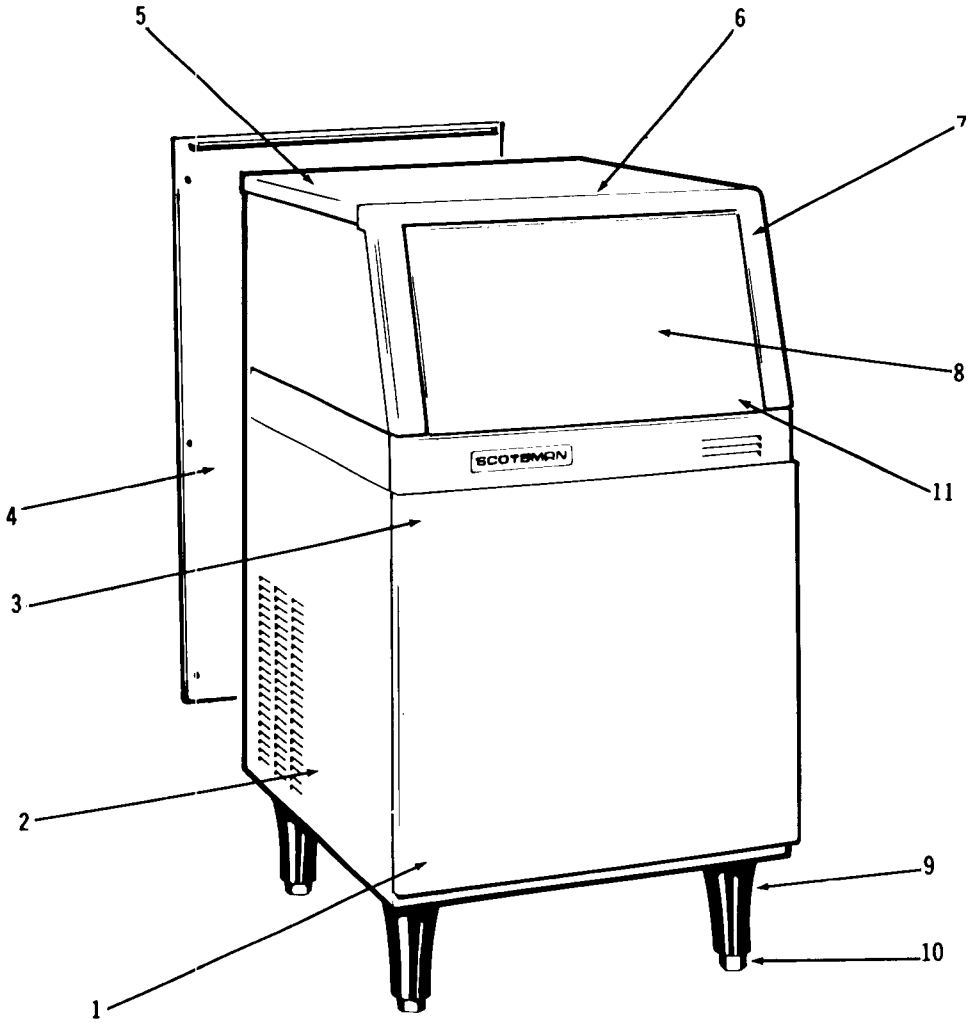

ITEM NO.	PART NO.	DESCRIPTION
1	0701793-00	FRONT PANEL
2	0781306-04	CASE ASSEMBLY
3	0470002-00	SCREW
4	0701790-00	REAR PANEL
5	0470002-01	SCREW
6	0701792-00	TOP PANEL
7	0782063-03	BIN DOOR FRAME
8	0792009-03	BIN DOOR
	0724186-00	BIN DOOR PIN
9	0660466-00	LEG
10	0660258-00	LEG LEVELLER
11	0782061-02	BIN LINER

Figure 8-1. Cabinet Assembly.

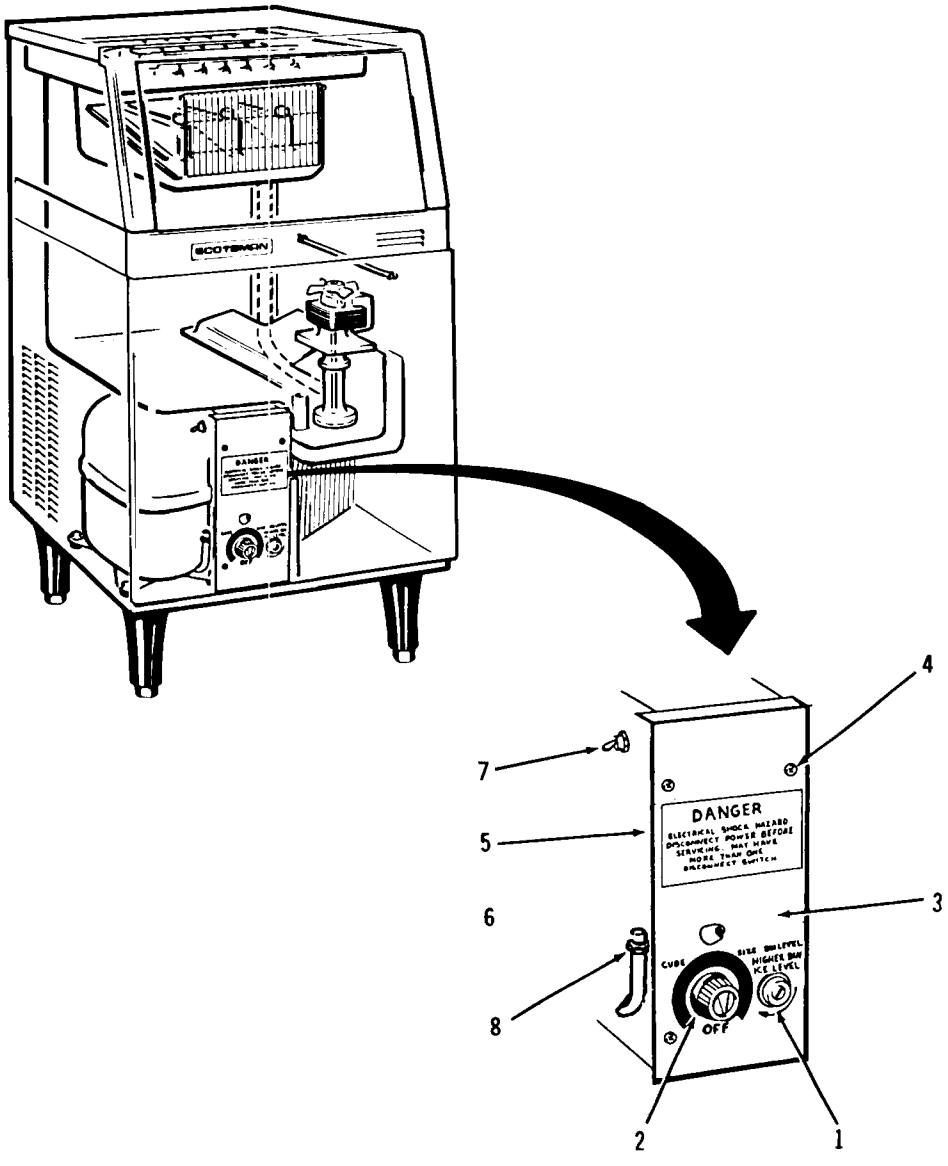

ITEM NO.	PART NO.	DESCRIPTION
1	0630005-00	BIN THERMOSTAT
2	0620264-02	EVAPORATOR THERMOSTAT (cube size control)
3	0630114-01	TERMINAL BOARD*
4	0420249-00	SCREW
	0430032-00	NUT
5	0705151-02	CONTROL BOX COVER
6	0470079-00	SCREW
7	0620033-01	CLEANING SWITCH
8	0650109-00	VALVE BODY
	0670012-00	VALVE PISTON*
	0650503-00	VALVE CAP

*NOT ILLUSTRATED

Figure 8-2. Control Box

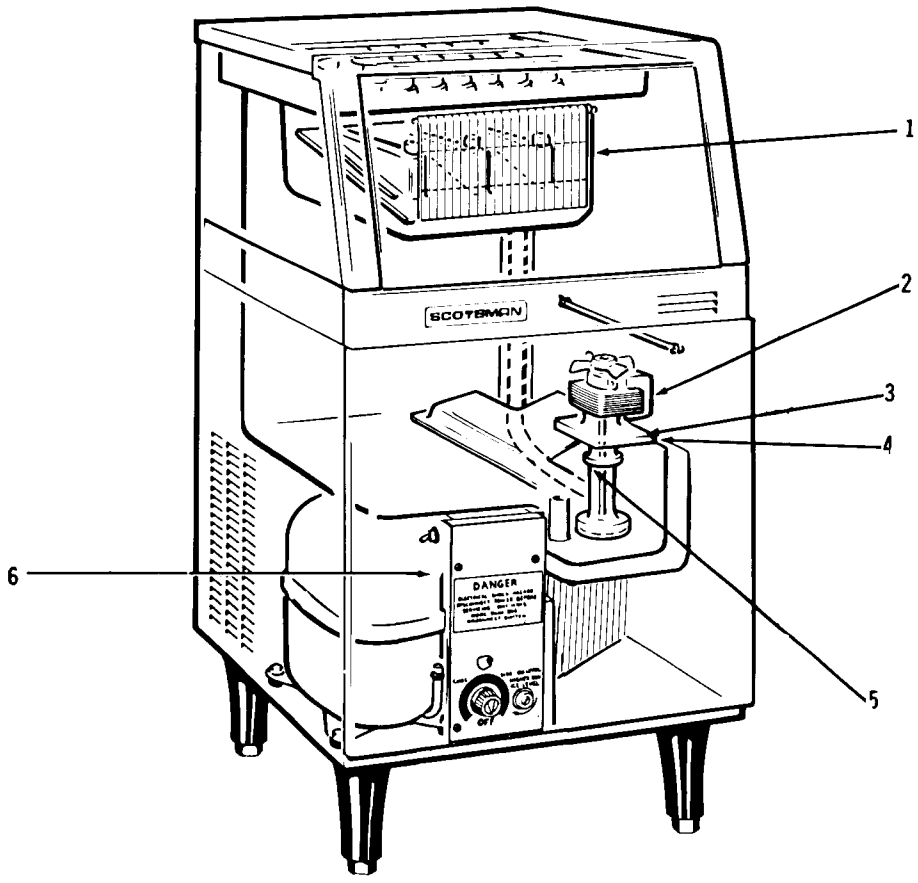

ITEM NO.	PART NO.	DESCRIPTION
1	0784169-08	CURTAIN ASSEMBLY
2	A32588-020	WATER PUMP ASSEMBLY
3	0420110-00	SCREW
	0430034-00	NUT
	0440015-05	WASHER
4	0784288-00	PUMP PLATE
5	0470019-00	SCREW
6	0610148-00	DRAIN TUBE*
		*NOT ILLUSTRATED

Figure 8-3. Front View

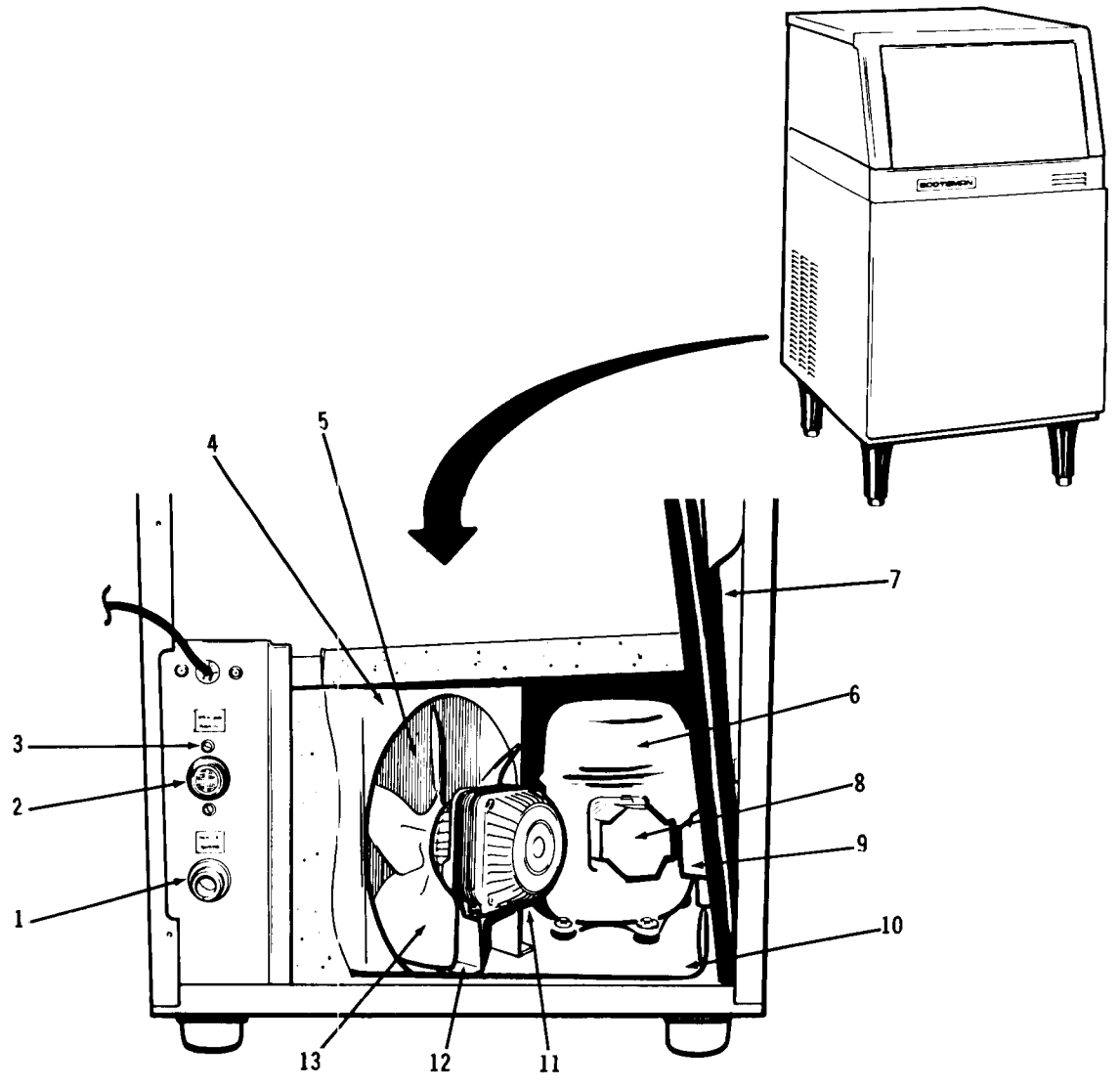

ITEM NO.	PART NO.	DESCRIPTION
1	0660224-00	WATER DRAIN
	0400070-00	NUT
	0400071-00	FIBER WASHER
2	A30405-001	WATER INLET VALVE
3	0420324-00	SCREW
4	0660381-01	SHROUD
5	0620276-02	CONDENSER
6	0670093-00	COMPRESSOR ASSEMBLY
7	0784278-01	SUCTION/ACCUMULATOR
8	0620057-26	RELAY
	0620058-26	PROTECTOR
9	12-2007-01	HOT GAS VALVE BODY
	12-2008-01	HOT GAS VALVE COIL
10	0630003-02	DRYER
11	0794255-00	FAN MOTOR
12	0420010-00	SCREW
	0440084-00	WASHER
13	0620346-00	FAN BLADE

Figure 8-4. Back View

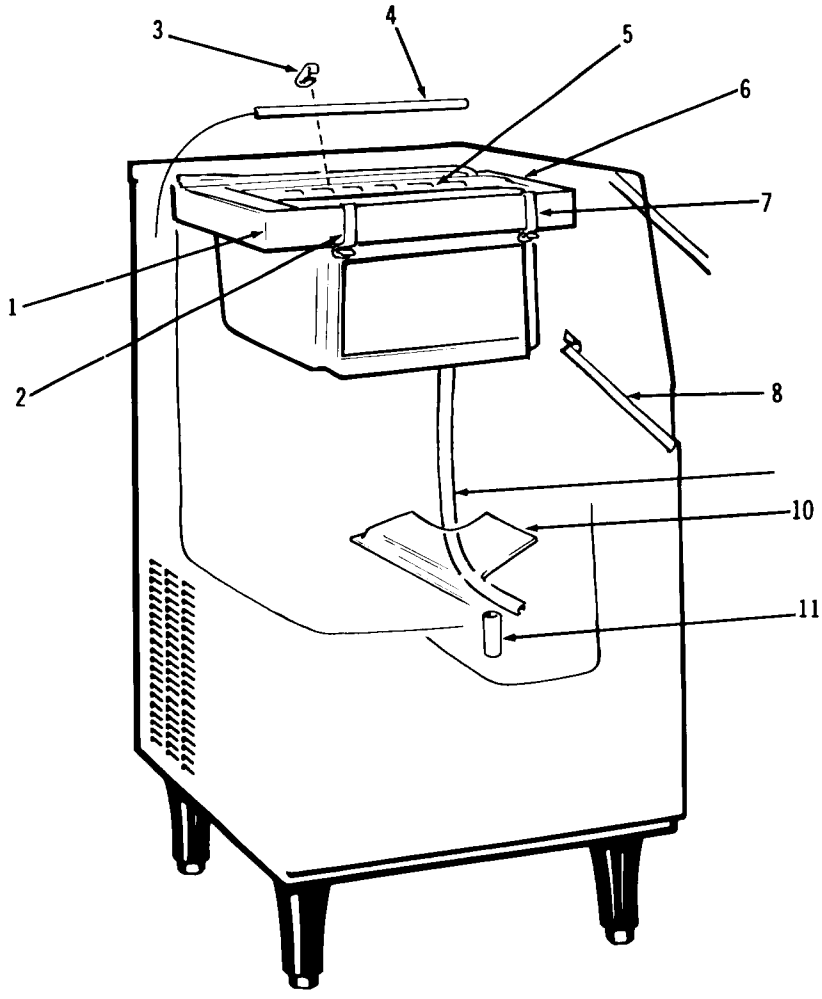

ITEM NO.	PART NO.	DESCRIPTION
1	0660395-01	FREEZING CHAMBER
2	0660388-00	CURTAIN BRACKET LEFT
3	0660386-00	CLIP
4	0660340-03	CUBE SIZE CONTROL BULB HOLDER
5	0784282-00	EVAPORATOR ASSEMBLY (small)
6	0741074-01	EVAPORATOR COVER
7	0660388-01	CURTAIN BRACKET RIGHT
8	0732017-00	BIN THERMOSTAT BULB HOLDER
9	0610150-00	RUBBER HOSE (pump to spray system)
10	0660433-00	RESERVOIR COVER
11	0660387-01	OVERFLOW DRAIN PIPE

Figure 8-5. Evaporator Assembly

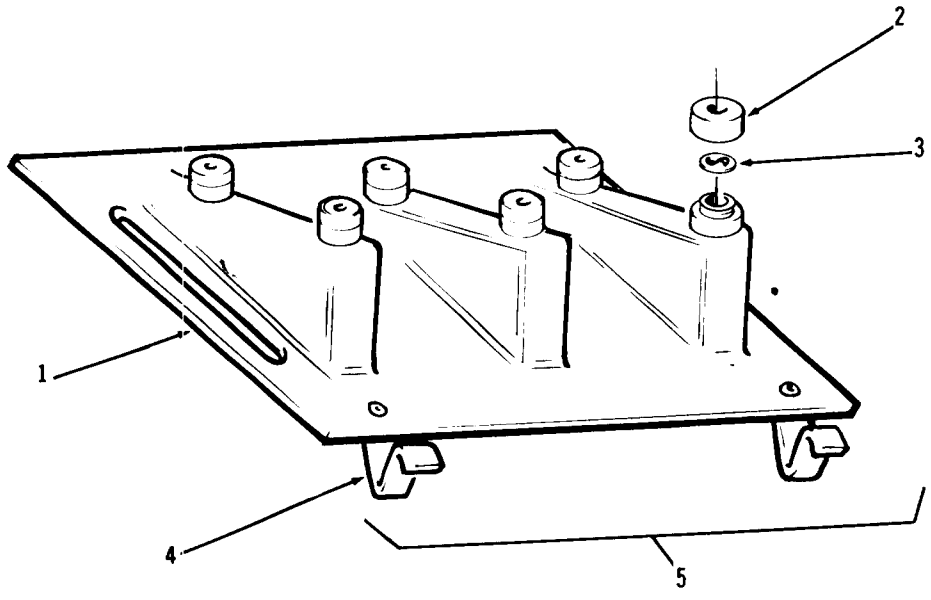

ITEM NO.	PART NO.	DESCRIPTION
1	0793117-01	SPRAY SYSTEM AND CHUTE
2	0660155-03	SPRAY JET CAP
3	0660296-01	SPINNER JET
4	0723073-00	CHUTE HOLDING HOOK
5	0793117-01	SPRAY SYSTEM ASSEMBLY

Figure 8-6. Spray System and Chute

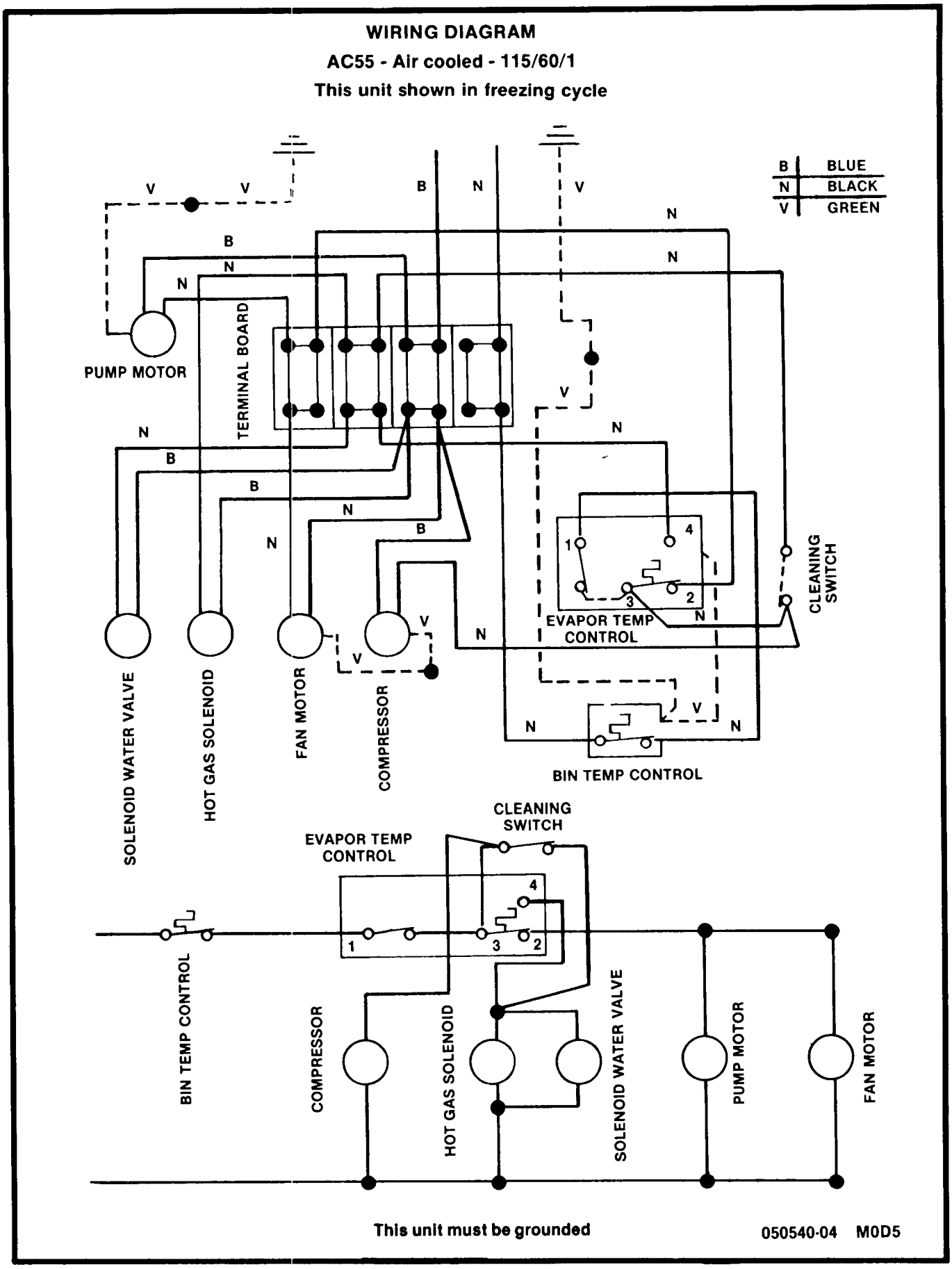

Figure 7-1. Wiring diagram 115/60/1

TABLE OF CONTENTS

Foreward	1
Table of Contents	2
Introduction to "J" Model	3
Photo and Ice Making Capacity	4
Specifications	5-6
General Description	7
General Information	8
Installation Instructions	9-11
Ice Dispenser Control System	12
Adjustment of Controls	13-15
Shutter and Bin Adjustment	16
Storage Bin and Dispensing Assy.	17
Bin Controls	18
Storage Bin Top Assy.	19
Dispenser Control System	20-21
Wiring Diagram	22
Reservoir Assy.	23
Cabinet Assembly	24
Cabinet Panels-Chassis	25
Chassis Assembly	26-27
Gear Motor Assembly	28
Freezer Assembly	29
Service Analysis (Icemaker)	30-31
Service Analysis (Dispensing Mechanism)	32
Maintenance Instructions (Flaker)	33
Cleaning Instructions	34
Accessory Kits	35-36

THIS PAGE
INTENTIONALLY
LEFT BLANK

THIS PAGE
INTENTIONALLY
LEFT BLANK

INTRODUCTION TO "J" MODELS

Models ACD-1 "J" series, incorporate a number of design improvements over former models, production started 1969. Starting serial number is LB-268215.

1. Overall cabinet height raised one inch, primarily in base to assure positive drainage.

2. External cabinetry consists of individual panels. Provides easier service access.

3. Differential paddle in bin cover now metal with nylon coating to eliminate breakage.

4. Die cast switch bracket on gear motor centrifugal switch - provides positive switch alignment & setting.

5. New type actuator arm, nylon coated, and vend switch araangement. Nylon actuator arm protrudes thru sink wall and actuates a leaf type micro switch mounted on cabinet frame.
   Eliminates former rubber bumper style actuator and plunger type switch. Minimum pressure will actuate vend switch - Switch out of splash area.

6. Fan motor changed to 9 watts power, fan blade reversed for better air flow, cooler cabinet temperatures.

7. Shaft on selector switch increased to 1/4" diameter holds knob securely.

8. Threaded shaft on dispensing bin "drive" motor eliminates former shaft pin.

9. Drain grille increased in thickness to eliminate breakage.

10. Vertical grooves in freezer tube to prevent squealing from "hard" ice.

SCOTSMAN®

SUPER FLAKER ACD-1 SERIES ICEMAKER-DISPENSERS

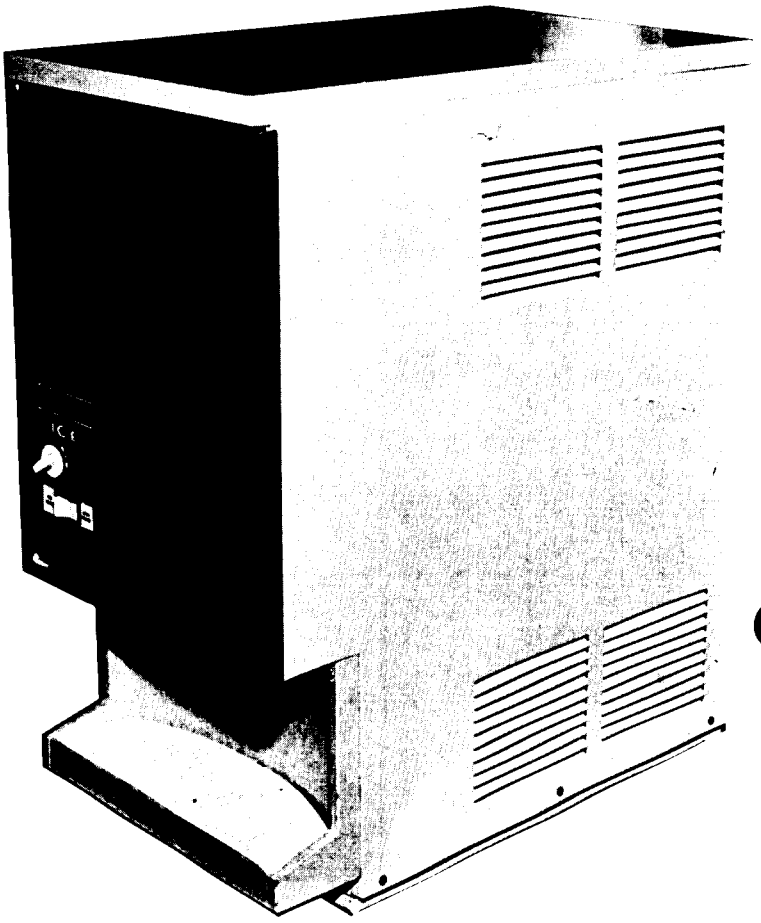

ice making capacity

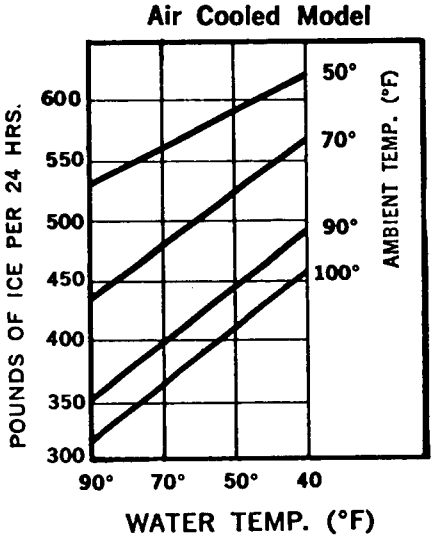

SPECIFICATIONS

ACD-1J SERIES ICEMAKER-DISPENSER

CABINET

Height	28.2 inches
Depth	23.8 inches
Width	14 inches
Weight	193 pounds
Finish	Baked-On Enamel or stainless steel
Trim	Aluminum, anodized
Sink & Drain	Plastic

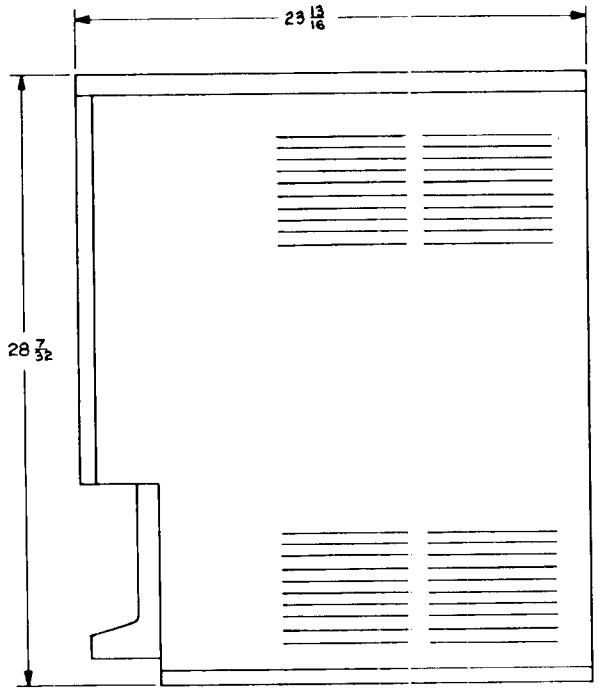

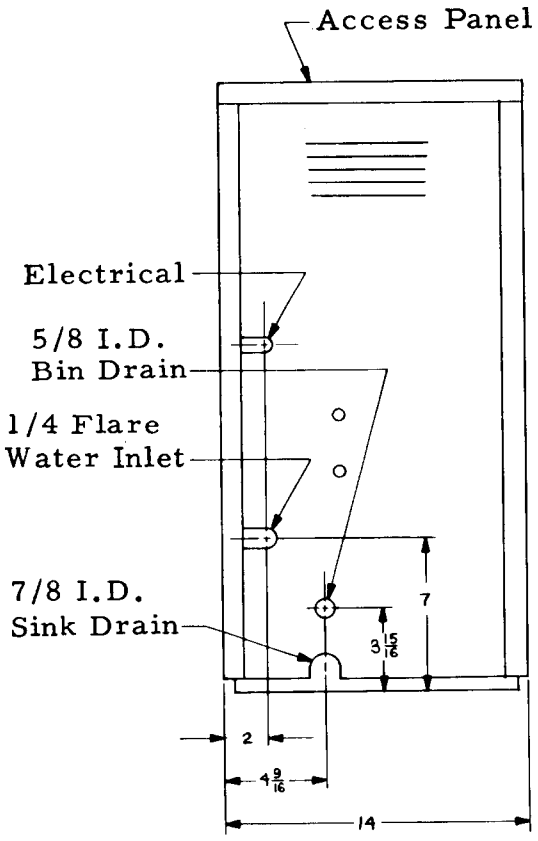

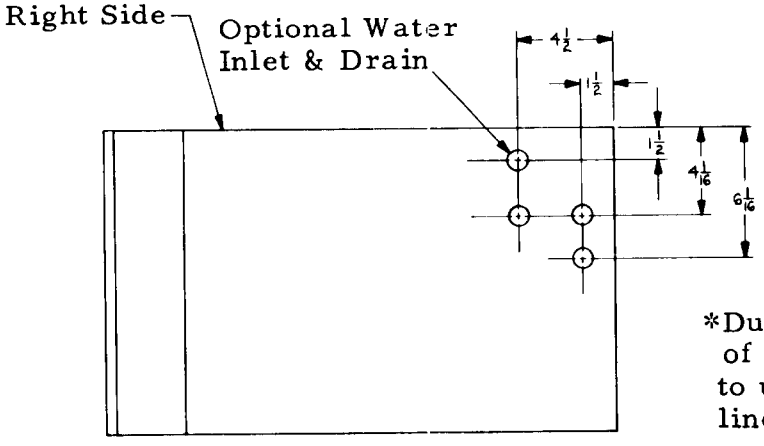

*Due to the high ice making capacity of this unit it is NOT ADVISABLE to use less than a 3/8" water supply line.

SPECIFICATIONS

REFRIGERATION UNIT

Compressor	Copelaweld 1/2 H.P. 2 pole 115 v. 60 cycle
Freezer	SF-1 Modified
Refrigerant	R - 12--16 oz. charge
Ice Produced (approximate)	.0775 oz. sec. (70° ambient 70° water)

DISPENSING UNIT

Bin & Dispensing Cylinder	Stainless Steel
Insulation	1 inch Urethane
Storage Capacity	8.19 pounds
Ice Spout	Composition (rubber)
Drive Motor	86.5 watt 115 v. 60 cycle R.P.M. 26.7
Dispensing Rate (approximate)	.8 oz. sec.

PERFORMANCE DATA

Metered Ice-per vend	1 or 2 oz.
Time per vend	1.5 sec.
1 vend /18 sec.	Recovery = Discharge
Water with minimum ice	1.0 oz. ice water
Water with maximum ice	2.0 oz. ice water
Dispensing time (ice & water for 10 oz. glass)	4.5 sec.
Continuous ice flow	1 pound in 20.8 sec.

GENERAL DESCRIPTION

This unit is a counter or table-top type of dispenser with a self-contained refrigeration unit, flaked ice freezer, storage bin and automatic dispensing mechanism.

The primary purpose of this machine is to fill water or drink glasses with water and ice or just ice by actuating a control arm with the glass.

Approximately one or two ounces or a continuous flow of ice can be obtained by properly adjusting a selector switch. By pushing a water switch to "on" water will be dispensed with the ice or as long as the glass actuator arm is energized.

The sink or area in which the ice is dispensed is constructed of plastic as is the drain grate in the sink. The cabinet is of steel with baked-on enamel or stainless steel. Water lines within the cabinet are of copper or nylon and drain lines are Tygon (Plastic) tubing.

The complete machine has been designed with sanitation and ease of cleaning emphasized. The storage bin is sealed and the ice spout is automatically closed when ice is not being dispensed. The complete dispensing unit can be dismantled for cleaning without the need of tools. By removing two winged screws the cabinet top can be removed. Three winged bolts on the storage bin cover may be loosened and the cover can be lifted off. This exposes the entire dispensing mechansim which can be lifted out of the storage bin.

The base of the machine contains a sealing gasket which will seal the machine tight against the table or counter top thereby eliminating the possibility of dirt or bugs lodging under the base.

The top, back, front, sink or either side of the cabinet can be removed in a matter of minutes.

To clean the condenser or for access to the control box, the left side panel is removed.

GENERAL INFORMATION

1. The machine comes to you ready to operate except for water, electrical power and drain connections.

2. The attached information on adjustments should not be needed except in rare instances.

3. An interlock switch, located on the top frame, is held in an "on" position when the cabinet top cover is in place. When the cover is removed the power to the machine is automatically disconnected for cleaning. For electrical service the main power supply should be disconnected.

4. The unit should not be connected to a heavily fused supply line. Maximum fusing should be not more than 20 amperes. It is advisable to use a fustat, fusetron or delay type of fuse.

5. All parts of the unit can be washed with mild soap and water. This includes the stainless steel and paint parts. Care must be exercised in handling the cleaning of the various stainless steel pieces as these parts have a tendency to be more sharp at the edges than painted parts.

6. Because of the various electrical controls and wiring care must be used in grounding this cabinet and frame work to a solid cold water line or similar ground.

7. The ACD1 and ACD-75 are identical in outward appearance with the case assembly on. For identification purposes a decal is placed on the back panel. When a screw head appears in the upper hole it identifys the ACD-75 and in the lower hole the ACD-1.

INSTALLATION INSTRUCTIONS

1. Remove the unit from the carton and install on a table or counter with a flat, level, rigid top. Mount at a convenient height for filling glasses.

2. Avoid sliding the unit on the rubber sealing base.

3. Remove the top of the cabinet and the rear panel. Remove packing from float chamber.

4. Pull the drain from the cabinet. They may be routed through the rear panel through the hole provided in the base. It is possible to route all lines through holes which have been provided in the base.

5. The lower drain from the sink area must never be installed higher than the base of the cabinet. Consideration should be made in regard to this drain in order to get proper flow from the sink drain.

6. Water should be supplied from a 3/8"copper or equivalent pipe. Too small a water supply line will only result in an increase in time for filling glasses with water.

7. Connect power to terminal strip in junction box, Item 16 on Page 26.

8. The interlock switch located at the top of the cabinet frame will be in an "ON" position when the cover is on the cabinet.

9. Replace the rear panel and the cabinet cover. The switch is used only when the machine is opened for cleaning. At such a time both the unit and dispenser are disconnected by removing the cover.

10. Thirty minutes after the unit has been started, ice can be dispensed.

NOTE: Should this unit be improperly installed with the drain favoring front of the machine, a condition would result in slushy, wet ice as the meltage water would remain in the bottom of the storage bin, and may run out the discharge spout.

INSTALLATION PRACTICE

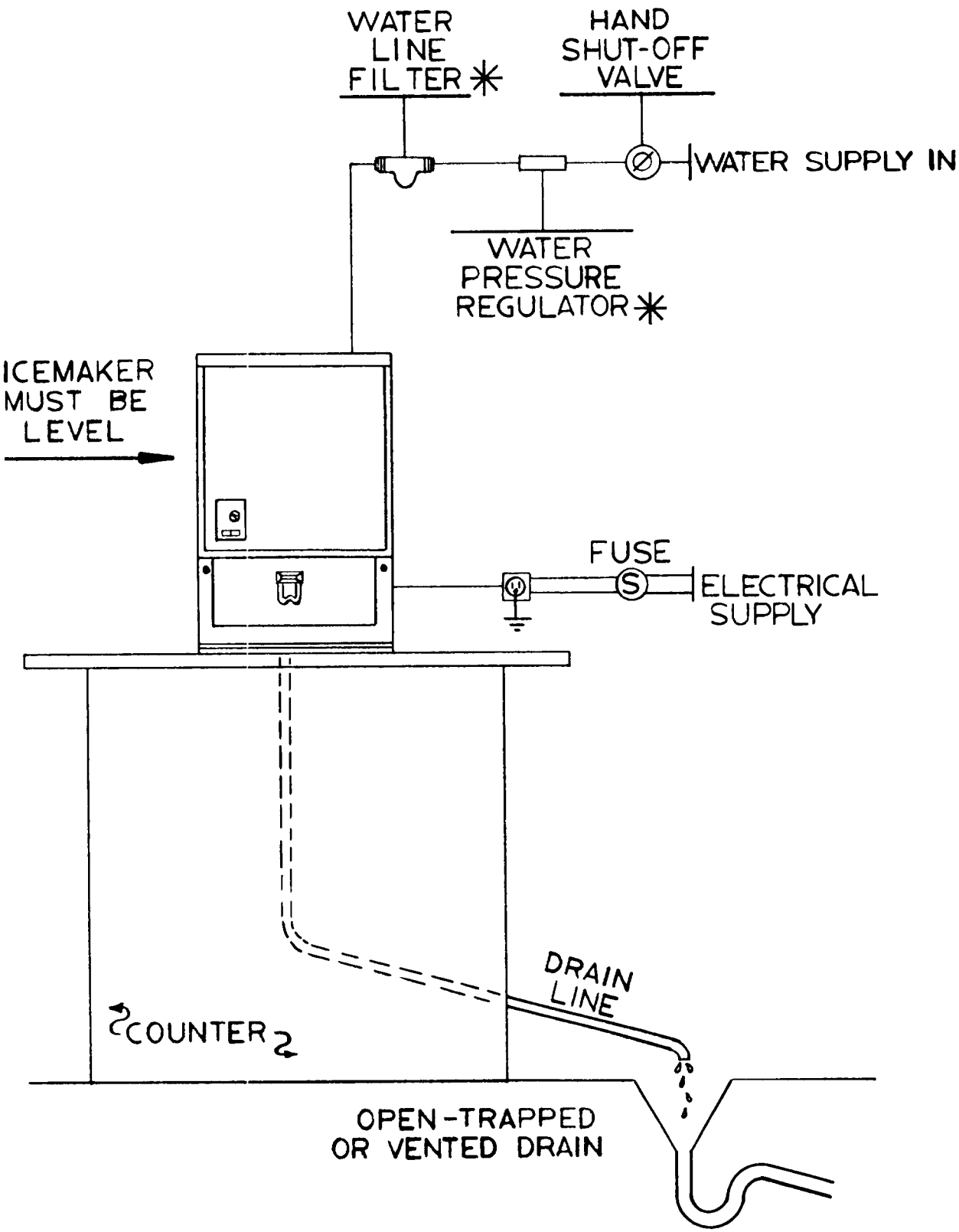

* REGULATOR AND FILTER ARE ACCESSORY ITEMS TO BE INSTALLED AS CONDITIONS WARRANT

Electrical:

Standard electricals are 115 volts, 60 cycle single phase current. Use #12 gauge wire, either in three wire cords rubber covered or thermoplastic types that incorporate ground wire as the third wire. This unit must have a solid ground wire.

Major electrical components	H.P. Size	Amps.
1. Refrigerant Compressor	1/2	11.0
2. Freezer Gearmotor	1/10	4.0
3. Dispensing Drum Motor	1/25	2.35
Total		17.35

20 amp fuse protection is required, preferable a delay type such as Fustat, Fusetron etc. All external wiring should conform to National Underwriters, as well as State and local codes. The maximum allowable voltage variation must not exceed 10 per cent of unit nameplate ratings, even under starting conditions.

Knockouts in cabinet are made for cord connectors, supply line ties into terminal board of control box. See item #16 on page 26. Use separate circuit for icemaker only.

Water Supply:

A single cold water supply line is required. Recommended tubing size 3/8" O.D. or larger, cabinet connection is to a 1/4" S.A.E. flare tee (item #10 on page 26) on internal cabinet bulkhead. A water strainer with clean out feature should be installed in supply line along with a hand shut off valve.

Minimum water pressure is 20 pounds gauge, maximum pressure over 50# pound gauge may cause chattering of float ball in reservoir tank. For pressures in excess of 50 pounds, use a water pressure regulator in line. Cabinet back is slotted for supply line entrance.

Water and Condensate Drains:

Two soft drains (plastic tubing) are provided, see page 26. The upper drain is 5/8" I.D. tubing, the lower drain is 7/8" I.D. tubing. Drain lines should be run to an open, trapped or vented drain in accordance with your State and local code regulations. These are gravity drains, therefore maintain at least a 1/4" pitch per foot away from unit drains. Knockouts are provided for either out the back or thru the base drain.

Refrigerant System:

The standard Scotsman Flaker system is used in slightly modified form. Refrigerant 12 is pumped by compressor into the air cooled condenser, into the liquid line, thru a filter-drier and then into the capillary refrigerant control line.

Liquid refrigerant is then carried down to the bottom end of the shell and tube type evaporator (freezing cylinder) where it expands and rises to the top of evaporator. Here the vapors and gases are returned thru an acummulator and suction line to the compressor.

Average operating head pressure is 135# gauge, operating back pressure is 14# gauge.

Factory charge is 16 ounces of Refrigerant 12.

Compressor is 1/2 horsepower, 2 pole, 3500 RPM by Copeland. Proper model number is Copelaweld: RSF2-0050-1AA-207.

ICE DISPENSER CONTROL SYSTEM

The inner storage bin rotates, carrying the ice over a cutting edge located at the ice discharge spout. The ice is thereby cut off the bottom of the stored mass and falls down the spout.

When the selector switch is set at 1 oz. of ice, the dispensing bin will rotate 1/2 turn for each vend. When the selector switch is set at 2 oz. of ice, the dispensing bin will rotate one full turn.

The action is controlled by two switches mounted together and their rollers riding on a cam. They are located on the bin cover and under the drive motor bracket, see page 19. The cam has one depression for the top switch roller to fall into and two for the bottom switch roller. The top switch controls the 2 oz. vend in which the bin rotates one full turn to actuate the switch. The lower switch controls the 1 oz. vend for 1/2 a turn of the bin.

At the end of each vend it is necessary that the dispensing bin stop in the correct position. It must stop at such a time as the spout shutter, item #6 page 17, which rotates with the bin, is directly over the spout. It is also at this time that one of the fins in the rotating bin is in the center and directly under the flaker freezer spout. When this timing is correct, ice that is filling the bin from the freezer will fall in both compartments of the bin; that is, on both sides of the fins. Also, by this timing the ice discharge spout is closed which not only tends to keep dirt from entering the bin, but also sheds meltage from the bin away from the discharge spout.

The selector switch also has a continuous flow position in which ice will continue to vend as long as the control arm is held in. When released the top switch on the cam will position the shutter over the spout.

When the water switch is in an "ON" position, water will be dispensed with the ice. Water will always continue to flow as long as the actuating arm is held "IN". See page 14 for a simplified circuitry showing the operation of these switches.

CONTROL SWITCHES & CAM

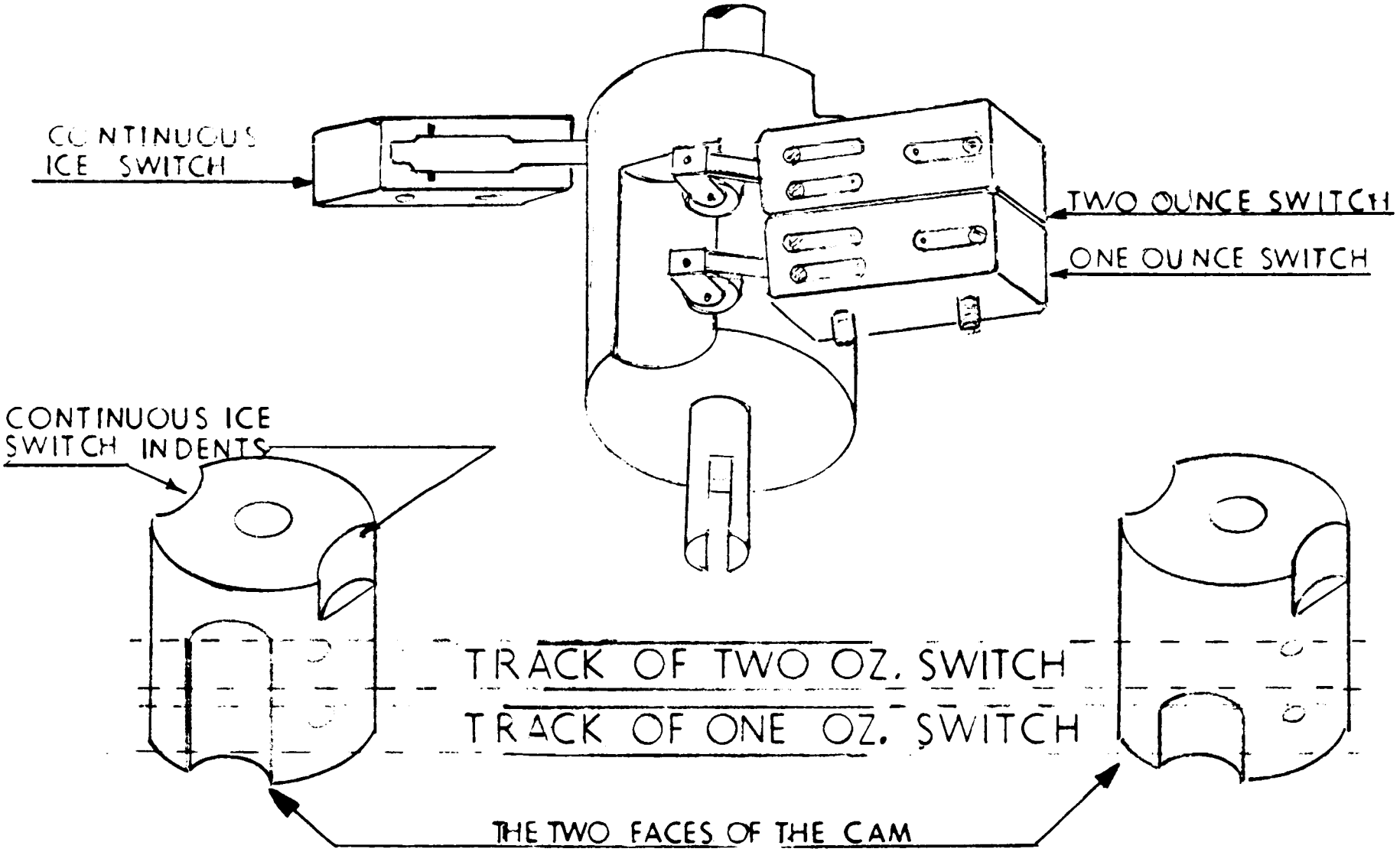

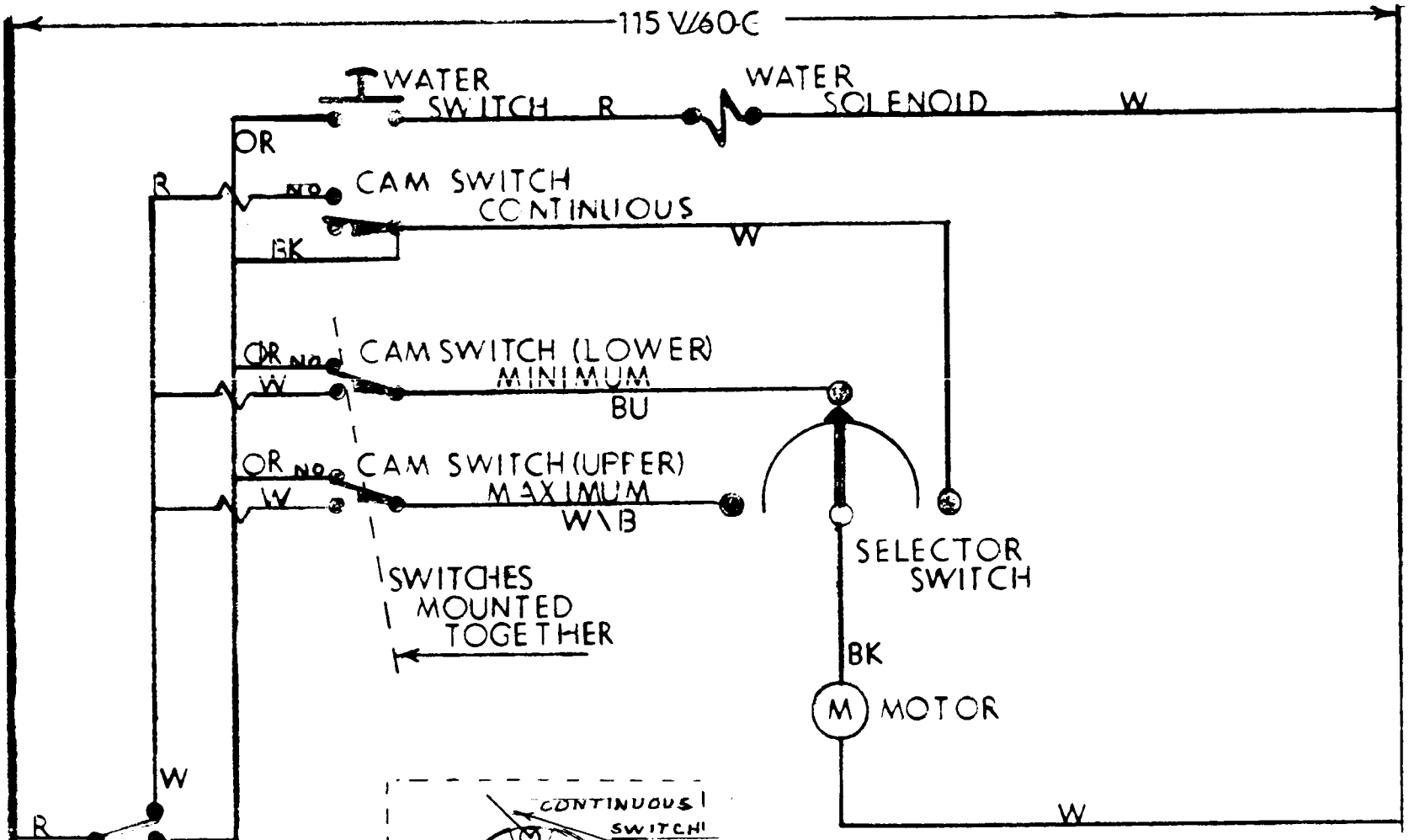

ACD DISPENSING CIRCUIT

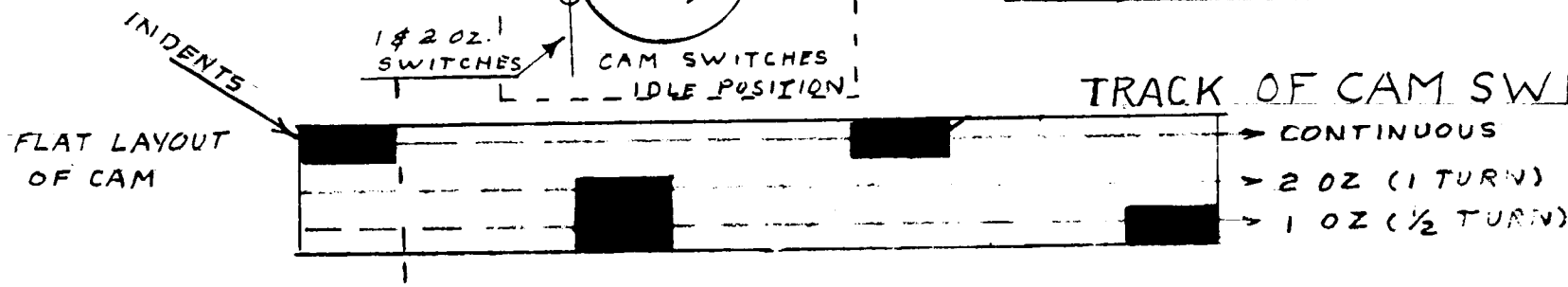

TRACK OF CAM SWITCHES

INSTRUCTIONS FOR SETTING CAM SWITCHES WHEN DISPENSER WILL NOT STOP OR WILL NOT DISPENSE PROPERLY. (DO NOT ADJUST CAM SWITCHES UNTIL YOU ARE SURE DISPENSER MECHANISM RUNS FREELY.

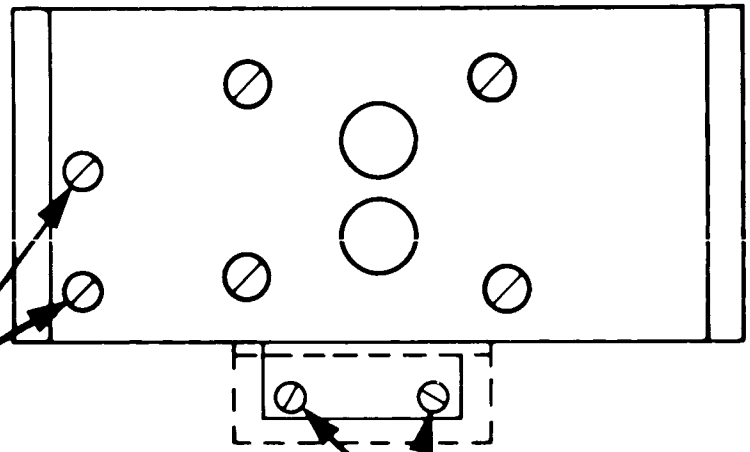

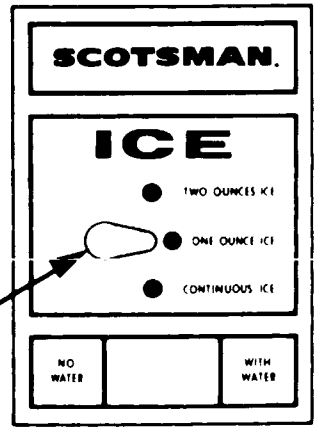

CONTINUOUS ICE SETTING INSTRUCTIONS:

1. Set selector switch to continuous ice.
2. Turn master switch on by pressing white button down.
3. Loosen two screws slightly.
4. Push screws forward slowly until dispenser motor runs continuously.
5. Pull screws back until motor stops.
6. Hold position and tighten screws snugly.

1 oz. & 2 oz. ICE SWITCH SETTING INSTRUCTIONS:

1. Set selector switch to 1 oz. or 2 oz. ice.
2. Remove cam switch cover.
3. Turn master switch on by pressing white button down.
4. Loosen two screws slightly.
5. Pull back on screws until dispenser motor runs continuously.
6. Push screws forward slowly until dispenser motor stops and then push 1/32 to 1/16 further.
7. Hold position and tighten screws snugly.

SHUTTER AND BIN ASSEMBLY AND ADJUSTMENT

1. Assemble the shutter in the bin and place the tapered bottom over the shutter. The opening in this bottom (see drawing page 17) is placed over the discharge spout area. Pins in the bottom of the outer bin protrude through slots in the side of this bottom which thereby locks and holds it in place. The rotating dispensing bin is then set over this bottom.

2. Mount the cover on the bin being careful that the slots in the drive shaft are over the pin in the shaft of the dispensing bin. Bolt the cover down lightly with the three winged nuts. (Never Tight).

3. The shutter must be directly over the rubber discharge spout when the dispenser stops. The dispensing bin is timed, by construction, with the shutter in that the fins of the bin are directly under the freezer spout when the shutter is in proper stopped position. Consequently both sides of the bin will fill with ice.

The Adjustment

1. If shutter does not close the ice spout opening when the dispenser motor stops be sure the cam switches are adjusted as per page 15.

2. To adjust shutter remove the bin cover and turn upside down.

3. Turn the motor until the roller of the continuous ice cam switch (the singularly mounted switch) is down in the slot of the cam. This is illustrated in the sketch of the cam and switches on page 14.

4. In this position the slot of the motor drive shaft should be in line with the plunger of the spout switch.

5. To adjust, loosen the two set screws #11 of cam (see section AA - page 19). Hold cam as described in above paragraph 3 and turn motor until drive shaft slot is correctly in line with spout switch plunger.

6. Tighten set screws in cam. (Do not over tighten or the plastic cam may split).

7. Rotate the motor - check the vertical position of the cam. Switch rollers must fall in the correct cam slots as indicated on page 14.

8. Hold master switch down and vend several times. Each time the dispensing motor stops the slot in the end of the drive shaft should line up with the plunger of the spout switch.

9. Place cover on storage bin. Press down on vend switch until slot in drive shaft falls over pin in rotating bin.

10. Turn down thumb screws on cover slightly (never tight).

11. Actuate the dispenser several times. Check the shutter through the rubber discharge spout. It must close discharge spout at the end of each dispense.

STORAGE BIN and DISPENSING ASSEMBLY

Item No.	Part No.	Name
1.	A16098	Bin Cover only
2.	A20912	Drive Pin
3.	A16005	Tie Bolt Bracket
4.	A16556	Outer Bin
5.	3-255	Wing Nut
6.	A15965	Shutter Assembly
7.	A16309	Storage Bin
8.	A16129	Bin Bottom

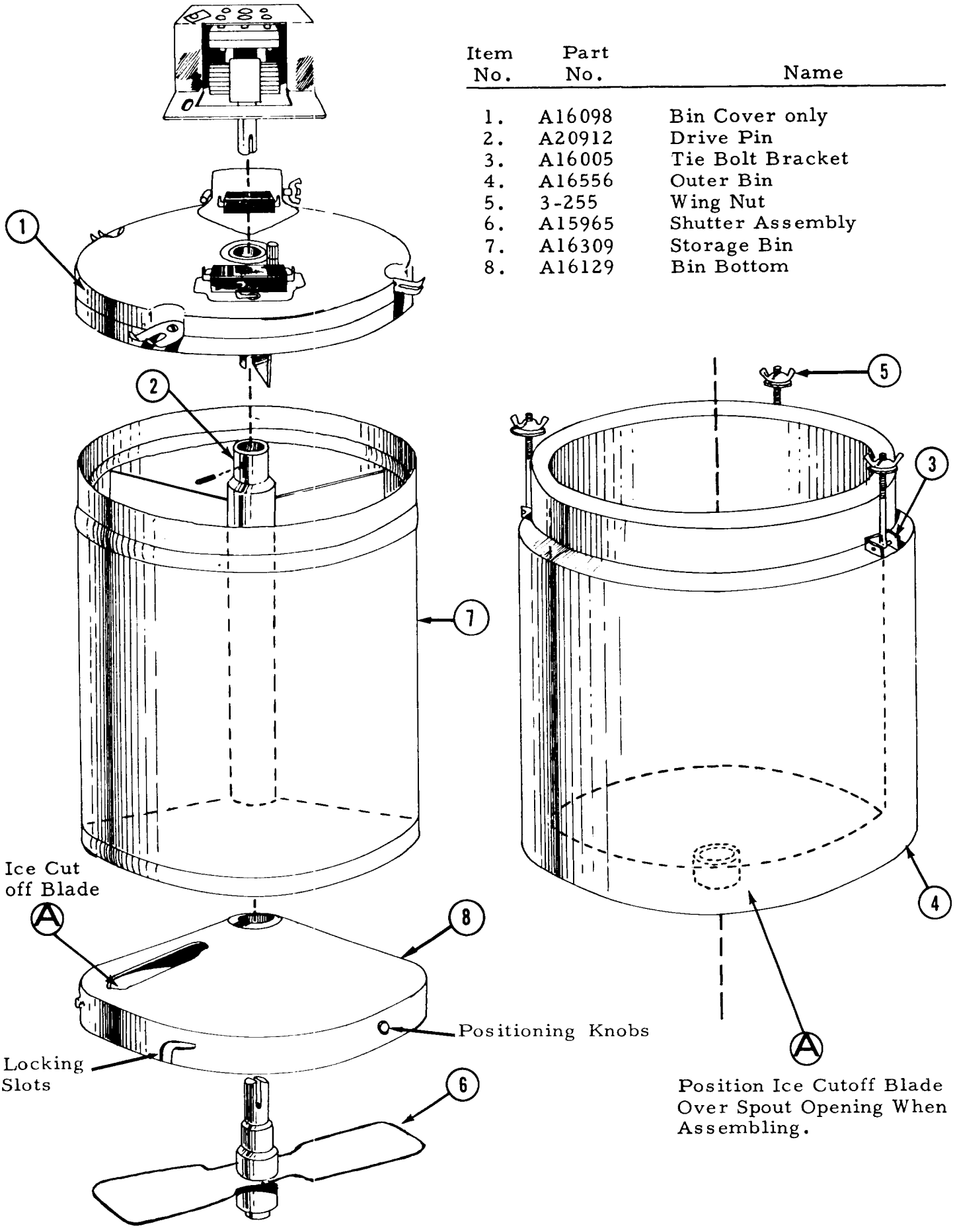

BIN CONTROLS

There are two controls located on the underside of the cover that govern the amount of ice that is in the bin. One control, that over the spout of the freezer, turns the freezer off when the bin is full of ice. This control must be in a position as illustrated in drawing page 19, Section B-B. The second control (see Section C-C page 19) hangs into the bin and holds the freezer off for a period of vends. This flipper slides upon the ice at the first ice vend and opens the switch contacts. It operates as a differential to keep the unit from starting and stopping at each vend and is a secondary means of stopping the unit should the spout switch fail.

Both of these controls can be easily removed for cleaning. The bin differential control has two fasteners securing it to the cover. They are tall round, knurled tubes which are unscrewed like a nut. Removeing these two fasteners will drop the differential control from the cover.

The spout of the freezer has an extension that slides over the fixed spout. This removable extension has two small ears on the side. It is necessary when replacing the cover on the bin to slide this extension as far back on the freezer spout as possible. Be sure the small ears of the extension are on the outside of the cover. When the cover has been fitted over the bin and before it is bolted down, this extension should be slid toward the cover until the ears rest against it.

Serious damage could result if the cover is not installed properly. The small flipper over the switch button in the ice spout of this cover must definitely be forward. Check section B-B, page 19 carefully before attempting to install the cover.

To further control the compressor and to avoid the freezing and stoppage of the auger in the freezer a control is incorporated on the gear motor drive for the freezer.

The bin controls do not energize the compressor but only the gear motor. In turn the gear motor operates the compressor.

A speed sensing switch mounted on top of the motor of the gear unit will stop the compressor when the RPM of the motor is less than 900. At 1200 RPM it will start the compressor.

Should the auger begin to freeze the speed of the gear motor is reduced due to excessive load. At 900 RPM it opens the circuit to the compressor and thereby stopping the freezing.. As the gear unit, only, continues to run it will clear the auger and when the motor speed reaches 1200 RPM, the compressor is turned on.

Any freeze ups are thereby automatically cleared by the unit.

If the water should be shut off when the unit is running the inlet water line will freeze shut. The control mentioned above will have no control over such a situation.

STORAGE BIN TOP ASSEMBLY
A-21215-2

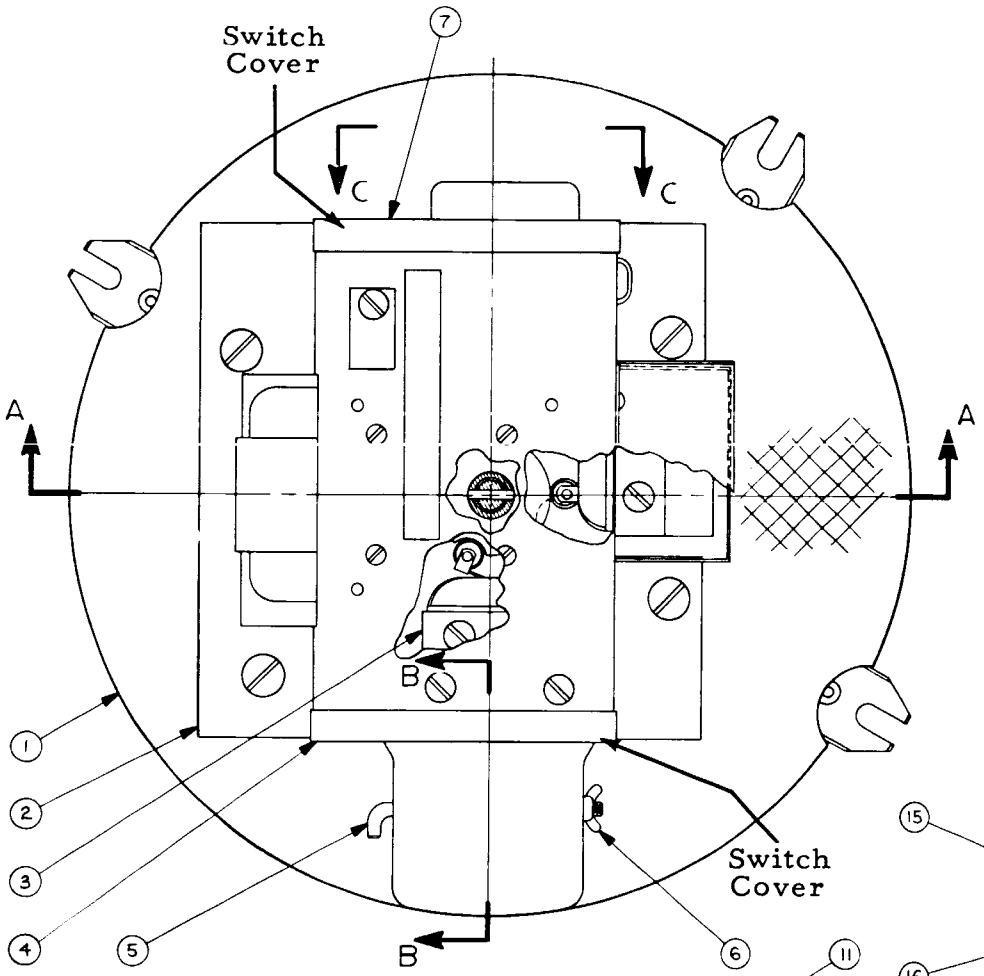

1.	A21215-2	Storage Bin Top Assembly
2.	A16084	Motor Mount
3.	12-876	Positioning Switch (Continuous ice)
4.	A16498	Switch Cover
5.	A16104	Hinge Pin
6.	3-1229	Wing Nut
7.	A16499	Switch Cover
8.	12-1610-1	Dispenser Drive Motor
9.	2-1576	Switch
10.	A21207	Drive Shaft
11.	3-387	Set Screws
12.	12-876	Cam Switch (two ounces ice)
13.	12-876	Cam Switch (one ounce ice)
14.	A16101	Cover Bushing
15.	12-1018-1	Spout Switch
16.	12-1643	Boot & Bushing
17.	A16010	Ice Control Lever
18.	A16495	Differential Bracket Nut
19.	12-1018-1	Differential Switch
20.	A12567	Differential Paddle

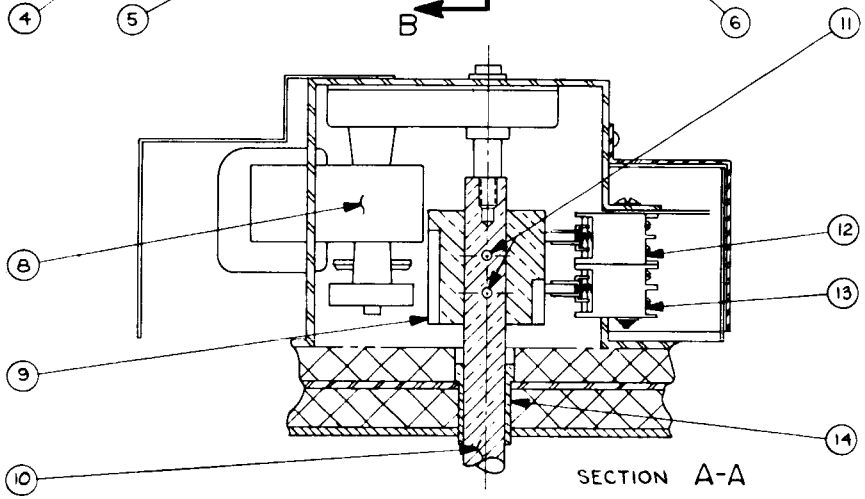

SECTION A-A

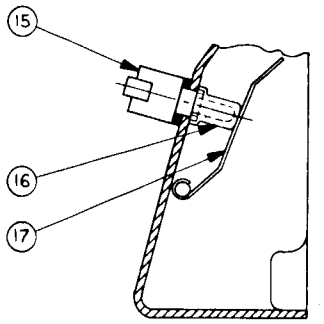

SECTION B-B

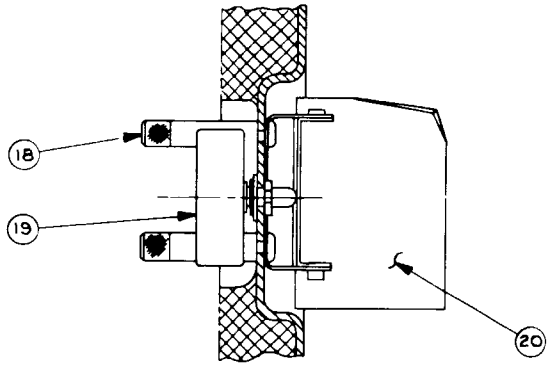

SECTION C-C

ACD-1 DISPENSER CONTROL SYSTEM

The control system, for the dispenser only, consists of six switches.

The terminalogy and function of these switches are as follows:

Dispensing Switch:

1. Located in the sink area on firewall back of the sink. It is accessable by removing the right side panel.

2. When depressed, usually by a water glass, it actuates the dispensing mechanism.

3. It is a double pole, double throw leaf type snap switch.

Selector Switch:

1. Located on the frame back of the front panel. It is accessable by removing the front panel.

2. By its setting it determines if one or two ounces of ice will be dispensed. Or in the continuous setting the dispenser is operated as long as the dispensing switch is held "IN".

3. This is a three position, 30 degree throw rotary switch.

Continuous Cam Switch:

1. This is the single top switch riding on the upper edge of the cam.

2. This is actually a locating switch that will always stop the dispensing mechanism when the shutter is covering the dispensing opening. When the selector switch is set for "continuous" ice, the dispenser operates as long as the dispensing switch is held in. When this dispensing switch is released, the continuous cam switch will hold the circuit on until the shutter is over the discharge spout or opening.

3. This switch is a single pole double throw roller type switch. Only two terminals, the common and normally open, are used.

Maximum 1 or 2 oz. Cam Switch:

1. This switch is the top switch of the two cam switches that are mounted together. It rides on the center of the cam.

2. When the selector switch is set at 2 oz. this will control the dispensing drum to one full turn.

3. It is a single pole double throw roller type micro switch.

Minimum or 1 oz. Cam Switch:

1. This is the lower switch of the two cam switches that are mounted together. It rides on the lower edge of the cam.

2. When the selector switch is set at one ounce it will control the dispensing drum to 1/2 turn.

3. This switch is a single pole double throw roller type micro switch.

Water Switch:

1. Located on the front panel.

2. When in an "ON" position, it energizes a water solenoid to dispense water with ice.

3. This is a rocker type single pole single throw switch.

Besides the two flaker control switches covered in the information on this unit, there is a master switch.

This switch is located on the top frame and is a plunger type single pole single throw switch. It is held in an "ON"position by the cabinet top. When top is removed the switch is in an open position.

WIRING DIAGRAM
ACD-1-J
115-60-1

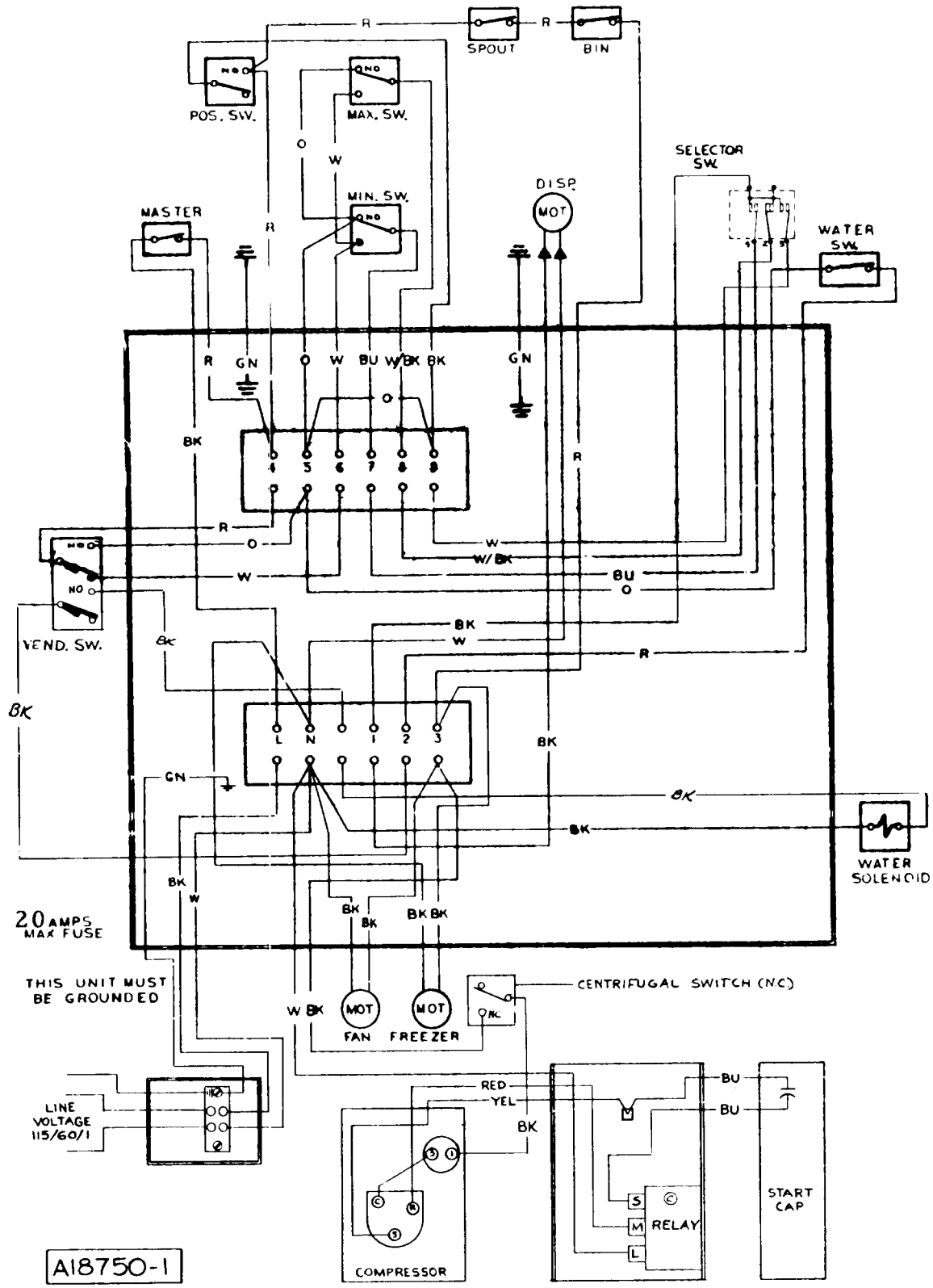

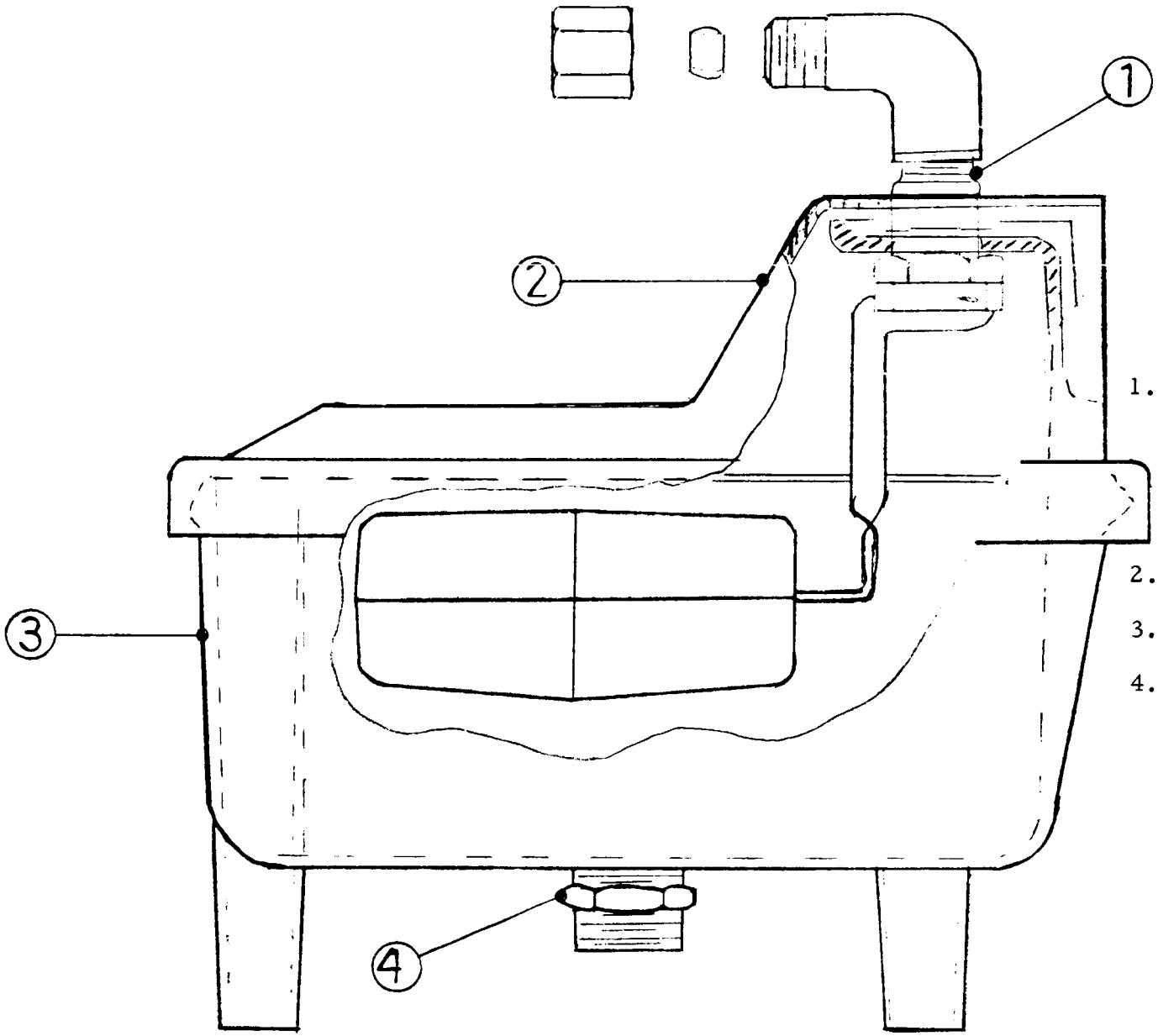

RESERVOIR ASSY. 2-1793-1

1.	2-1793-2	Valve Assembly consisting of: Inlet Ell Straight Compression nut Compression Sleeve Valve Assembly with Float
2.	2-1793-3	Reservoir Cover
3.	2-1793-4	Reservoir Body
4.	2-1793-5	Reservoir mounting nut 3/8-18

CABINET ASSEMBLY
ACD-1

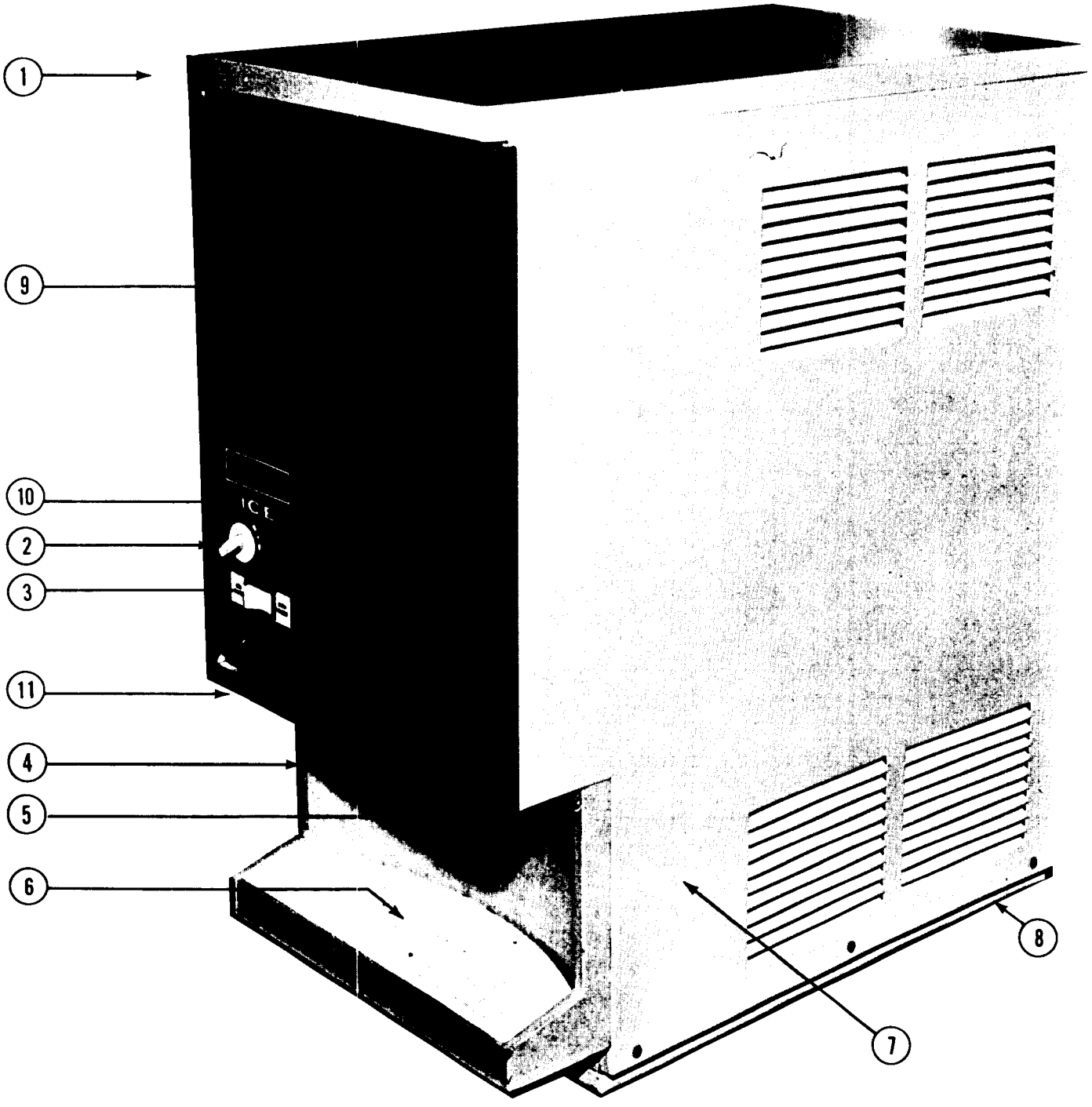

Item No.	Part No.	Name
* 1.	A-19104	Cabinet Top - Painted
	A-19104-1	Cabinet Top - Stainless Steel
2.	12-1540	Selector Switch
	12-1566	Selector Switch Knob
3.	12-1377	Water Switch
4.	2-1826	Sink
5.	A-21554	Glass Actuator Arm
	2-1833	Glass Actuator Arm Adapter (Holder)
6.	2-1473	Drain Grate
7.	A-21416	Right Side Panel - Painted
	A-21416-1	Right Side Panel - Stainless Steel
8.	13-566	Base Moulding (Gasket)
9.	A-21424	Cabinet Front - Painted
	A-21424-1	Cabinet Front - Stainless Steel
10.	15-461	Emblem
11.	15-507	Aluminum Moulding (Trim)

* Louvered cover - in extreme high ambient temperatures accessory louvered covers for improved ventilation are available - A-19104-2 Painted
A-19104-3 Stainless Steel

CABINET PANELS - CHASSIS
ACD-1-J Models

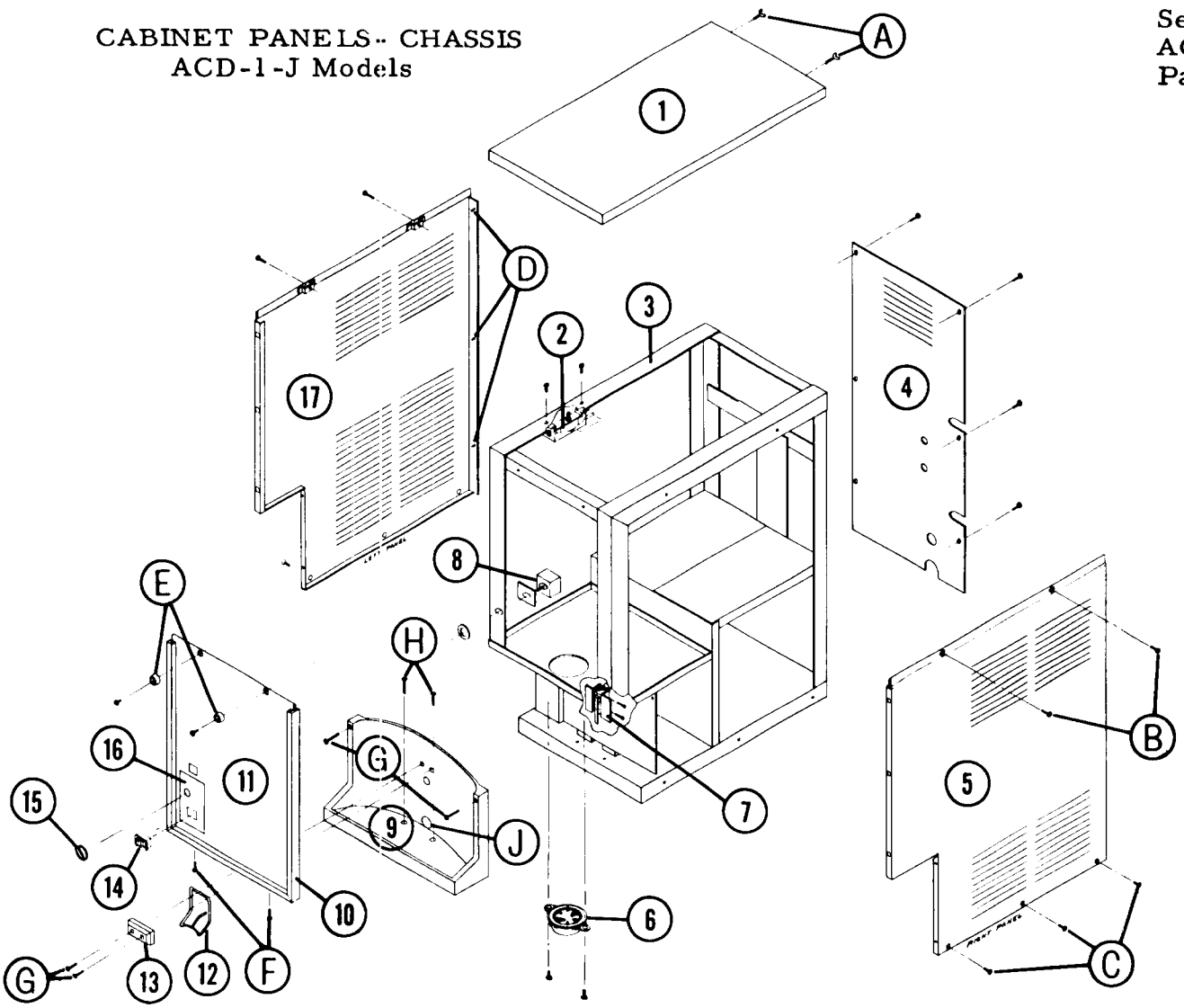

1.	A-19104	Cabinet Top	10.	15-507	Moulding Trim
2.	12-1570	Master (interlock) Switch	11.	A-21424	Cabinet Front
3.		Frame	12.	A-21554	Actuator Arm
4.	A-21405	Back Panel	13.	2-1833	Actuator Arm Adapter
5.	A-21416	Right Side Panel	14.	12-1377	Water Switch
6.	2-1804	Spout Extension	15.	12-1566	Switch Knob
7.	12-1641	Vend Switch	16.	15-461	Decal
8.	12-1540	Selector Switch	17.	A-21415	Left Side Panel
9.	2-1826	Sink			

REMOVING PANELS & SINK

1. To remove either side panel or front, first remove the two wing bolts in the back of cover #1, Item (A). Lift the back of the cover upward and push forward to release.

2. Either side panel can be taken off by removing two screws across the top (B) and three across the bottom of the panel. (C)
These are the only screws that hold the panel.
Pull the panel from in back of sink, then slide backward about 1/2 inch.
There are no screws in the back of the panel, only pins that slide into holes in the frame. (D)
The front edge of the panel merely fits under the aluminum trim.

3. The front panel is removed by unscrewing the two rubber bumpers at the top of the panel (E) and two screws under the sink top area. (F)
The water switch (14) will snap out and the quick connects can be removed from the switch.
The selector knob (15) just pulls off.

4. The sink (9) can be removed by removing four screws (G) on the front side of the switch and two screws in the bottom of the sink. (H)
These screws are sealed to eliminate water leaks.
The drain tube connection (J) is fastened to the sink rear by a hose clamp. To remove the clamp, it is necessary to remove the right side panel.

5. Remove top and left side panel to clean air cooled condenser.

CHASSIS ASSEMBLY
Right Side

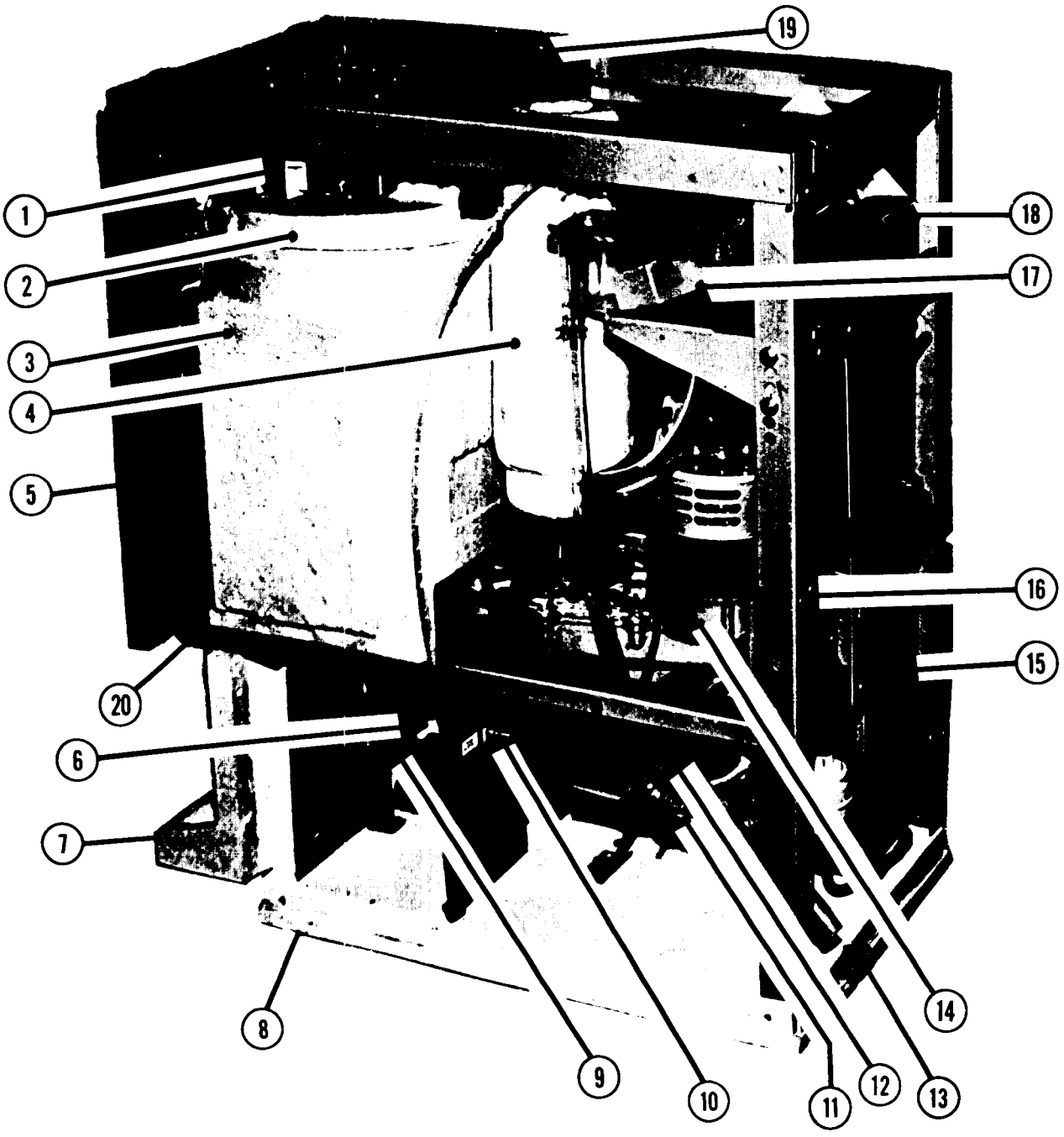

Item No.	Part No.	Name
1.	12-1610-1	Dispensing Drive Motor
2.	A-21215-2	Storage Bin Top
3.	A-16556	Storage Bin
4.	A-21430	Freezer Assembly Complete
5.	15-507	Front Trim
6.	12-1434-4	Water Valve with Solenoid
7.	2-1826	Sink
8.	13-566	Base Gasket
9.	12-1641	Vend Switch
10.		Inlet Water Connection
11.	2-1338	Hose Clamps - Bin - Reservoir Drain
12.	18-422	Fan Motor Bracket
	18-137-1	Fan Blade
	12-1573-1	Fan Motor Cord
	12-1576-1	Fan Motor
13.	5-278	7/8" I.D. Drain Tube/Foot
14.	A-18380-1	Gearmotor Complete
15.	18-1927	Air cooled condenser
16.		Junction Box - Electrical Supply
17.	2-1793-1	Water Reservoir Complete
18.	18-2210	Motor Compressor 115/60/1
	18-2200-25	Compressor Overload
	18-2200-26	Compressor Relay
	18-2200-29	Starting Capacitor
19.	12-1570	Interlock (master) Switch
20.	2-1804	Plastic Spout Extension

CHASSIS ASSEMBLY
Left Side

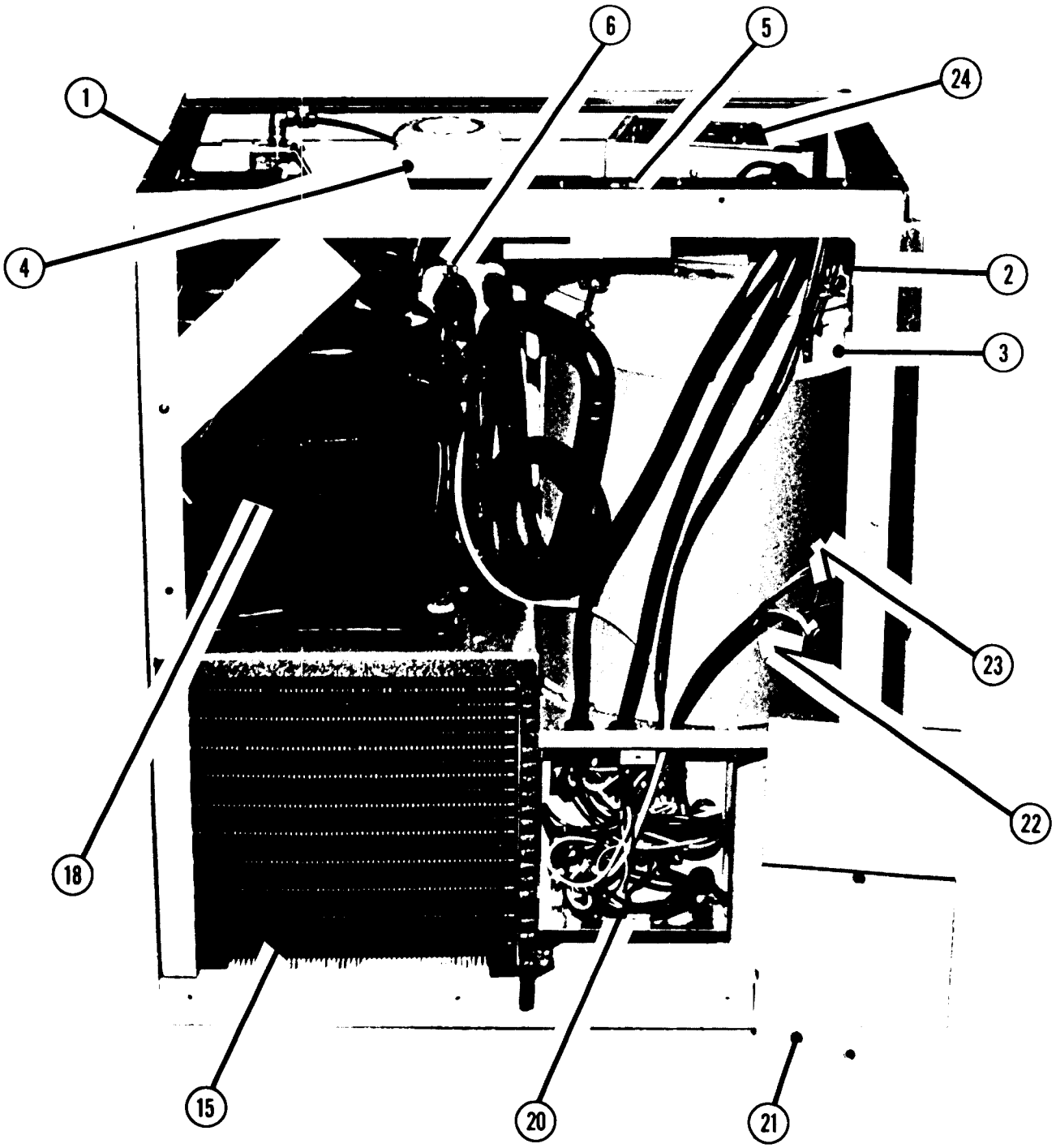

1. Model - Serial Number Plate
2. Cover Hold Down Bolts
3. Insulated Storage Bin
4. Freezer Assembly
5. Interlock (master) Switch
6. Tire Type Service Valve
15. Air Cooled Condensor
18. Motor Compressor
20. Wiring Panel
21. Panel Cover
22. Spade Type Water Switch Leads
23. Spade Type Selector Switch Leads
24. Dispensing Motor Mount

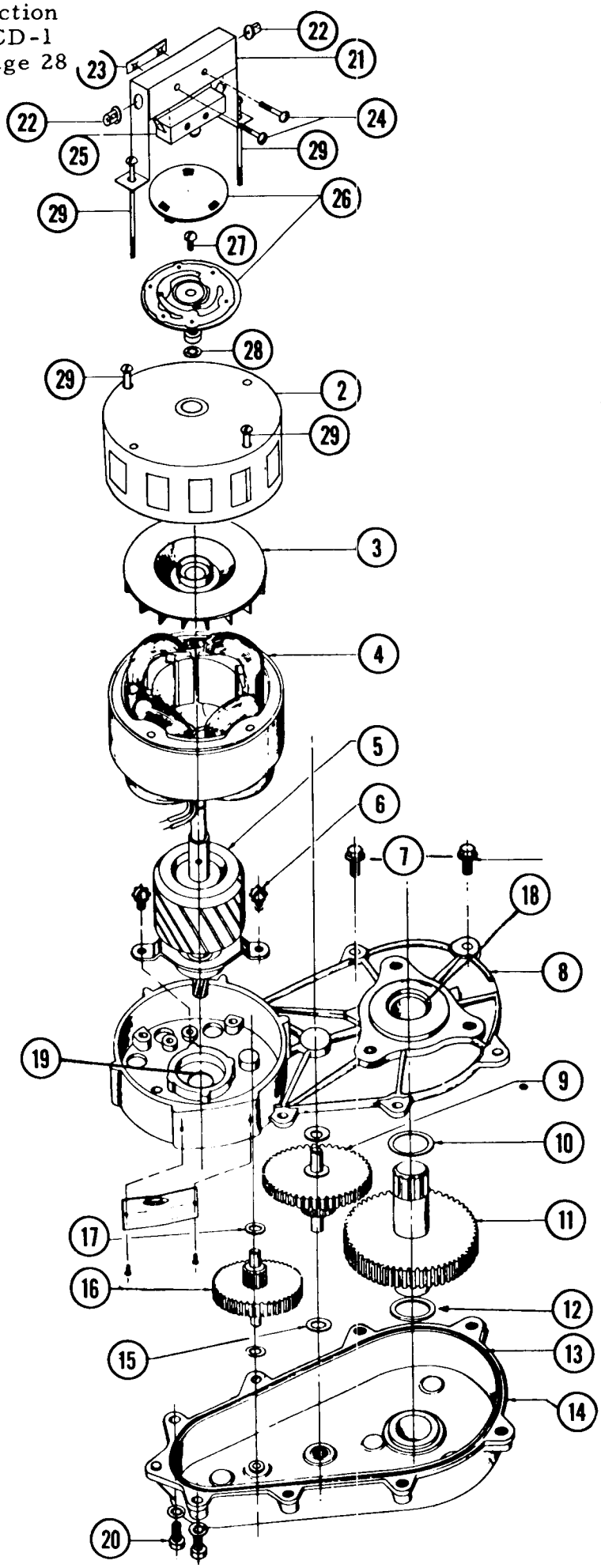

ACD-1 GEAR MOTOR ASSY.

ITEM NO.	PART NO.	NAME
2.	A-17047	Motor Housing
3.	A-16915	Cooling Fan
4.	12-1400-1	Stator Assy.
5.	A-19884-2	Rotor Assy.
6.	3-1245	Screws
7.	3-1251	Flange Screws
8.	A-16920	Gear Case Cover
9.	2-1521	Gear & Pinion
10.	3-1244	Washer
11.	2-1513	Gear & Output Shaft
12.	3-1240	Washer
13.	2-1505	"O" Ring
14.	A-16919	Gear Case Assy.
15.	3-1242	Washer
16.	2-1520	1st Gear & Pinion
17.	3-1241	Washer
18.	2-1503	Grease Seal
19.	2-1504	Grease Seal
20.	3-1252	Screw
21.	8-579	Switch Bracket
22.	12-1213-3	Snap Bushings
23.	3-886	Twin Speed Nut
24.	3-220	Screws
25.	12-1644	Switch
26.	A19898	Synchro Snap Assy.
27.	3-1248	Screw
28.	3-1247	Washer
29.	3-1249-1	Motor Bolts

A-18380 Gear Motor Assy. Complete

Output Shaft turns at 10 RPM.

ACD-1 FREEZER ASSY.

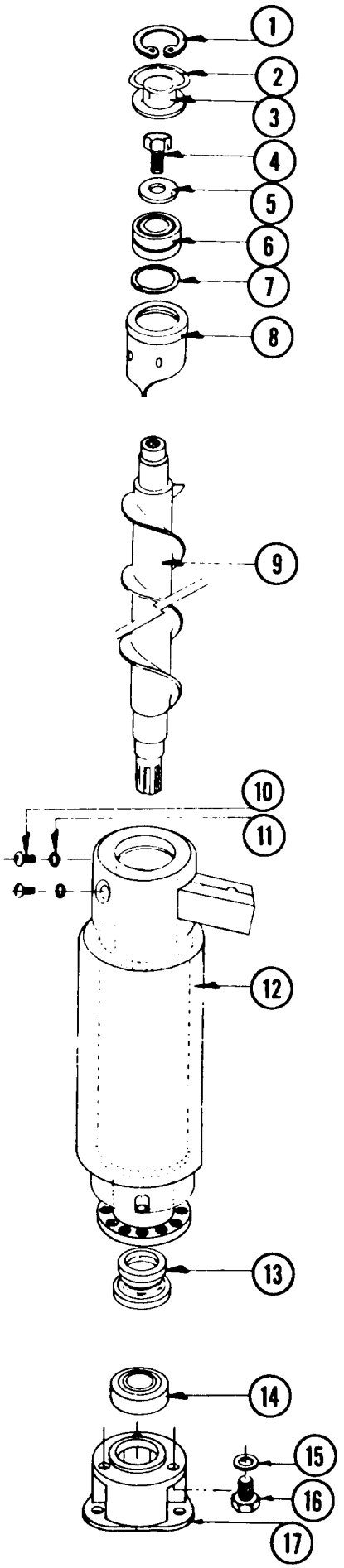

ITEM NO.	PART NO.	NAME
1.	3-553	Retainer Ring
2.	A-8162	Cap Hook
3.	A-7701	Cap
4.	3-758	Screw
5.	A-7699	Washer
6.	2-1412	Top Bearing-Matched set
7.	2-386	"O" Ring
8.	A-14591	Breaker
9.	2-1538	Auger
10.	3-1403-46	Screw
11.	3-1417-7	Washer
12.	A-21431	Evaporator Shell Includes Suction Line, Etc.
13.	2-1300	Water Seal
14.	2-417	Bearing, Lower
15.	3-1408-3	Washer (3 reqd)
16.	3-1405-14	Cap Screw (3 reqd)
17.	2-1311	Adapter-Plastic
	A-21430	Freezer Complete With Suction Line
18.	A-13635	Spline Drive Coupling
19.	2-1347	Shaft Drip Shield - rubber

SERVICE ANALYSIS

ICE MAKER SECTION ACD-1

SYMPTOM	POSSIBLE CAUSE	CORRECTION
Water Leaks	Defective water seal	Replace.
	Gravity feed line leaking	Check hose clamps.
	Water level in reservoir too high	Adjust to 1/4 inch below overflow pipe.
Excessive noise or chattering	Mineral or scale deposit on auger and inner freezing chamber walls.	Remove and manually polish auger, polish inner chamber walls of freezer barrel.
		For lighter concentration use Scotsman Ice Machine Cleaner periodically.
	Low suction	Add gas to raise suction pressure.
	Intermittent water supply	Check and clean water strainer. Check gravity feed line for air lock.
		Remove air lock.
	Water level in reservoir too low	Adjust to 1/4 inch below overflow pipe.
	Gear reducer loose on frame	Tighten bolts.
	Motor compressor not solid on rubber mounts	Repair or replace rubber mounts.
Gearmotor noise	Low on oil	Remove case cover to check for proper oil level. Top of gears should be covered. Use PenZoil Lub.-302-TTM or similar.

SYMPTOM	POSSIBLE CAUSE	CORRECTION
Unit will not run	Blown fuse	Replace fuse and check for cause of blown fuse.
	Loose electrical connection	Check wiring.
	Inoperative master switch	Replace switch.
Compressor cycles intermittently	Low voltage	Check for overloading.
	Dirty condenser	Clean.
	Air circulation blocked	Move unit to correct.
	Inoperative condenser motor	Replace.
	Non-condensable gases in system	Purge off.
Making wet ice	Surrounding air temperature	Correct or move unit
	Under or over-charge of refrigerant	Recharge with the proper amount.
	High water level in water reservoir	Lower to 1/2 inch below overflow pipe.
	Faulty compressor	Replace or repair.
Low ice production	Loss of refrigerant, under or over-charge of refrigerant.	Check and recharge with proper amount of refrigerant.
	Dirty or plugged condenser	Clean condenser
	Low water level in water reservoir	Adjust to 1/2 inch below overflow pipe.
	Partial restriction in capillary tube or drier	Moisture in system. Overcharge of oil in system. Remove charge and drier. Replace and recharge system.
	Inlet water strainer partially plugged.	Remove screen and clean.
	Corroded or stained worm shaft due to water condition	Remove worm shaft and clean.
Machine runs but makes no ice	Loss or under-charge of refrigerant	Check for leaks and recharge
	Water not entering freezing chamber	Plugged strainer or supply line. Check and clean. Air lock in gravity feed line. Check and remove air lock.
	Moisture in system	Check and remove charge and drier. Replace and recharge.
	Water seal leaking	Replace seal.
	Water turned off while unit was operating	Inlet water line froze shut. Unit must be turned off and defrosted.

SERVICE ANALYSIS

DISPENSING MECHANISM

SYMPTOM	POSSIBLE CAUSE	CORRECTION
Will not dispense	Power off	Check line fuses and plug.
	Motor overload open	See correction under motor overload.
	Cam switches improperly set	Adjust per manual
	Master switch open	Cabinet cover must be on tight to keep switch on.
	Spout jammed with ice. Unit not level or holding glasses against spout.	Remove ice and clear ice unde removable bottom. Check reservoir possibly too high.
	Wires off dispensing switch.	Check switch terminals.
Motor hot--Overload Open	Ice under removeable bottom.	Remove ice.
	Wing nuts on cover turned down too tight.	Keep wing nuts only slightly snug - never tight.
	Shutter or rotating bin does not turn free.	Check and repair any drag.
	Ice too hard.	Raise freezer water level and check refrigerant charge.
Dispenser does not stop.	Brake on drive motor not working properly.	Brake must be free and stop the motor before 5 revolution after the dispensing switch i released.
	Cam switches out of adjustment.	Check switches and set per manual.
Water will not dispense	Solenoid defective	Replace.
	Lines closed up.	Clean.
Water runs too slow	Water line too small	Increase size

MAINTENANCE INSTRUCTIONS - FLAKER SECTION

THE FOLLOWING MAINTENANCE SHOULD BE SCHEDULED THREE TIMES PER YEAR.

1. Check and clean water strainers and float valve. Depress float valve to insure full stream of water.

2. Check water level and machine level. Keep water level below overflow, but as high as possible and still not run out of spout opening with machine off. Water should come out of spout with ice at all times. Adjust as required.

3. Clean reservoir and interior of freezer assembly using SCOTSMAN ice Machine Cleaner. See cleaning instructions on next page.

   A. If machine has been cleaned regularly and no problems such as dry ice or chatter are noticed, clean by making ice from solution of 4 oz. of cleaner to 2 quarts of water.

   B. If heavy mineral deposits on auger and walls, or sediment at inlet to freezer are encountered, clean by pouring strong solution 1/2 acid - 1/2 water into reservoir and operate drive motor only for agition. Allow 1/2 hour or longer as required. Drain by disconnecting tygon at water inlet to freezer.

NOTE: Cleaning requirements vary according to local water conditions. Visual inspection of the auger before and after cleaning will indicate best procedure to be followed in local area.

4. Check top bearing of freezing tube. Remove retainer ring around edge of stamped brass cap, pull cap off. If moisture is around bearing, wipe up and remove grease. Add new grease. Use Beacon No. 325 or equal.

5. Clean air cooled condenser. Always shut off machine when cleaning.

6. Oil condenser fan motor when possible.

7. Check for refrigerant leaks and proper frost line. Should frost out of accumulator at least one-half way to compressor, and in some areas, back to service valve.

8. Check for water leaks. Tighten drain line connections. Run water down drain line to make sure it is open.

9. Check quality of ice. Ice should be wet when formed, but will cure rapidly to normal hardness in the bin.

CLEANING INSTRUCTIONS FOR SCOTSMAN ICE MACHINE MODEL ACD75J & ACD1J

1. Set selector switch to continuous ice and vend until bin is empty.
2. Remove top cabinet cover.
3. Remove storage bin cover and spout extension.
4. Remove both ice control flippers from storage bin cover. Note positions of these parts, if parts re-assembled incorrectly damage to the machine may result.
5. Remove inner bin and bin bottom.
6. Position shutter over rubber ice spout and replace bin cover.
7. Turn OFF water supply or block float. Drain reservoir by disconnecting tube between reservoir and freezer. After draining, reconnect tubing.
8. Block main switch ON and pour cleaning solution into reservoir. (Use 4 oz. of Scotsman cleaner and 1 qt. of hot water). Do not fill above overflow tube. Do not allow unit to operate with less than 1" of solution in reservoir.
9. While waiting for Step #8 and/or #11 to complete, remove drain grate and ice vend lever from sink. Wash and sanitize these parts and parts removed from storage bin in accordance with local health department regulations. (Step #8 may complete before Step #9). Finish washing parts during Step #11 if necessary.
10. Remove block from main switch. Wash and rinse reservoir, turn water on or remove float block.
11. Block main switch ON. Let unit run for at least 15 minutes to flush out any cleaning fluid. Check ice for acid taste- run until ice tastes sweet.
12. Remove block from main switch and remove bin cover. Add hot water to ice in bin, using this melt water thoroughly wash and rinse the underside of the storage bin top, shutter, rubber ice spout and all surfaces within the storage bin.
13. Using solution from Step #9, thoroughly wash and rinse sink.
14. Re-assemble storage bin and sink parts.
15. Replace cabinet cover. Unit is ready for normal operation.

THE KIT

1. Top Case Hanger Bracket
   Attach to inside of frame of the dispenser.

2. Top Wall Bracket
   Mounts to wall and engages top case hanger bracket to support dispenser.

3. Bottom Wall Bracket
   Mounts to wall and supports bottom of dispenser.

4. Bottom Fittings Cover
   Fastened to bottom wall bracket to conceal electrical and plumbing fittings from view.

A	ACD1 & ACD75	23 3/16
	ACD1J & ACD75J	24 3/16

WALL MOUNT KIT

Part # A-19092

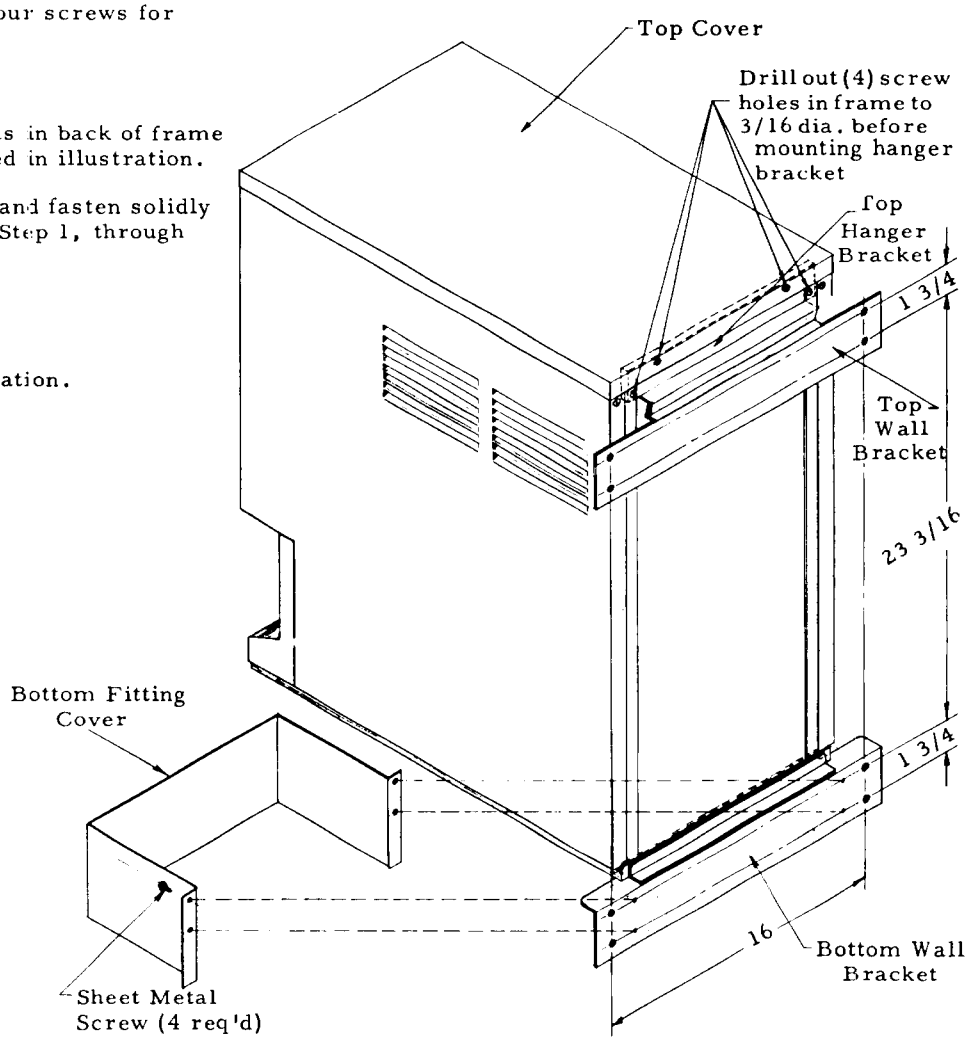

TOP HANGER BRACKET:

1. Remove back cover and save four screws for mounting bracket.

2. Remove top cover.

3. Drill out four holes of weld nuts in back of frame with 3/16 dia. drill as indicated in illustration.

4. Place bracket inside of frame and fasten solidly with four screws, saved from Step 1, through drilled out holes

TOP WALL BRACKET:

1. Position bracket in desired location.

2. Secure to wall with fasteners of any suitable type for that particular wall through the four holes in bracket. These fasteners or lag screws are not furnished. /Be sure to secure bracket rigidly to wall./

BOTTOM WALL BRACKET:

1. Hang the dispenser on top wall bracket.

2. Position bottom bracket so that molding on dispenser base bottoms in channel of the bracket.

3. Secure bracket to wall through the four large holes with suitable fasteners. /Fasteners not furnished./

BOTTOM FITTINGS COVER:

1. Connect water inlet, bin drain and sink drain of dispenser through bottom of case. Also run electrical cable in from bottom.

2. Secure fitting cover to bottom wall bracket with the four sheet metal screws provided in this kit.

GENERAL INFORMATION

1. The dispenser is provided with an interlock device.

2. The interlock must be closed before the dispenser will function.

3. The interlock is closed by the top cover of the dispenser. When the cover is tightly in place.

4. To place the cover in proper position, it may be necessary to bend out the back lip of the cover at the screw holes with pliers. Caution! There must be enough friction between the screw heads, (which secure the hanger bracket) and the top cover to hold the cover tightly down on the case and interlock.

A21537 SINK EXTENSION KIT

A conversion for ACD75J and ACD1J dispensers to increase the distance between the discharge spout and the sink to twelve inches and to provide a faster sink drainage.

KIT:

A19720	Sink and Drain Assembly
	(4) 3-1403-29 Screws
2-1828	Splash Plate
	(6) 3-1403-7 Screws
2-1701	Drain Grill
	(6) 3-1406-1 Nuts
A21538	Base
	(2) 3-1403-6 Screws

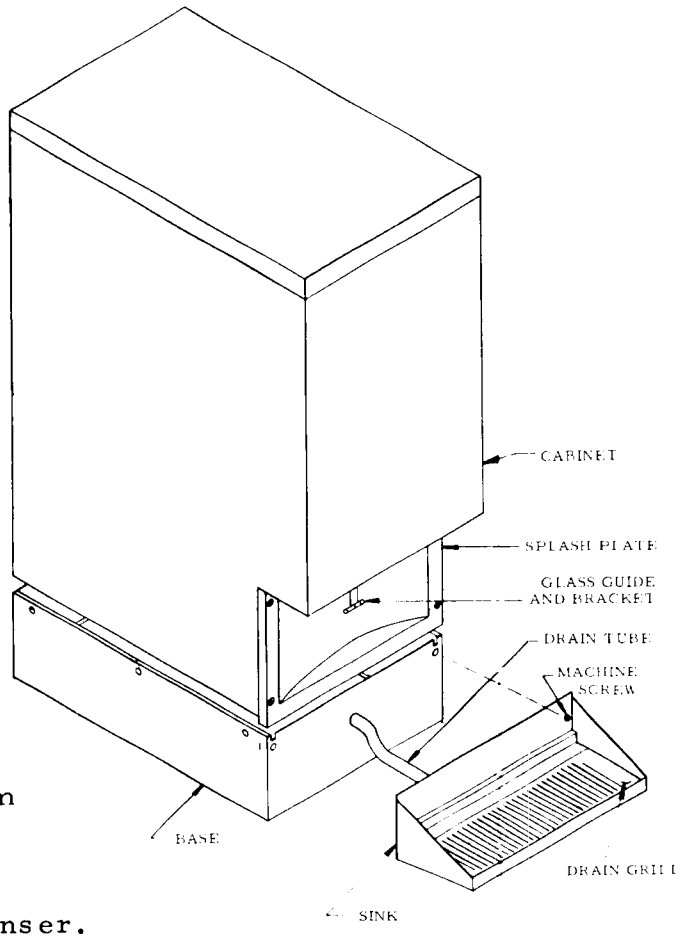

FEATURES:

By the use of the splash plate, only, and the wall bracket A19090 (another accessory), the ACD models can be mounted on a wall over an existing sink.

As a counter-top model, the dispenser is mounted on the six-inch base, A21538. The splash plate, sink and grill replace the conventional sink on the models.

INSTALLATION:

1. Remove conventional sink from cabinet.
2. Remove glass actuator arm and holder from sink.
3. Remove drain tube from original sink.
4. Install drain tube to replacement sink.
5. Remove rubber seal from base of the dispenser.
6. Mount the dispenser on base, A21538. The flange of the dispenser base is to fit in slots provided in the base extension. Secure with the 3 screws on each side of base.
7. Mount sink in place and secure with two machine screws.
8. Install splash plate to cabinet with four machine screws, furnished. The splash plate fits over top of sink
9. Install glass actuator arm and holder to splash plate. The plunger on the arm must operate freely through hole in splash plate.
10. Install grate.

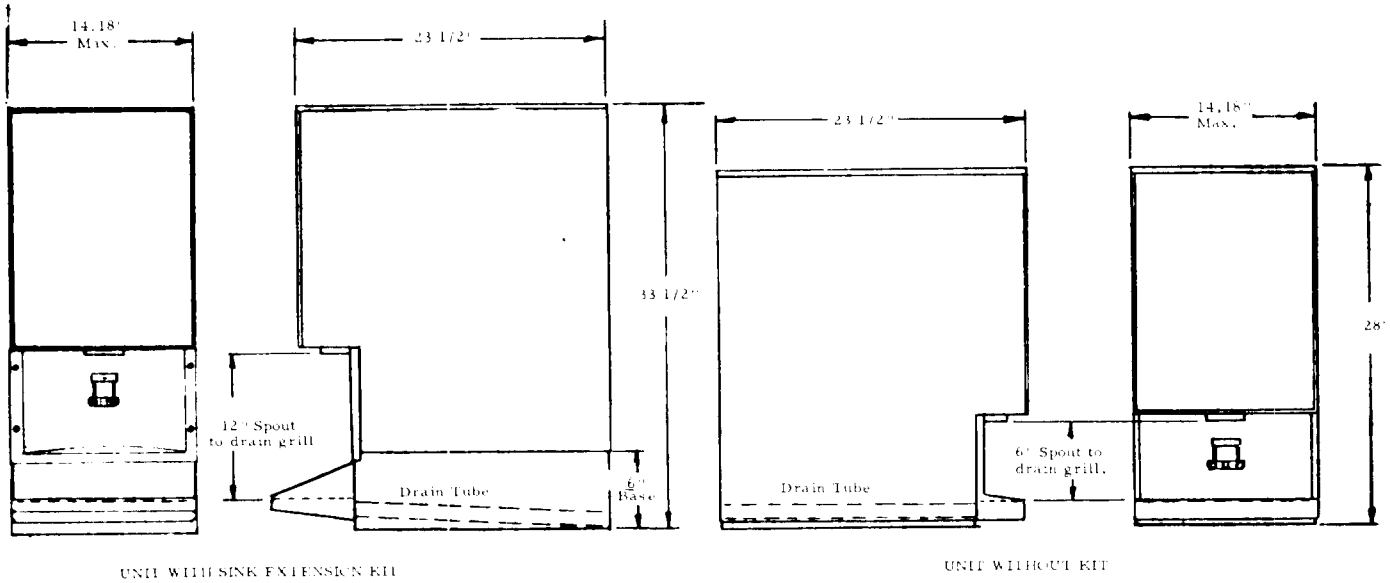

TABLE OF CONTENTS

Foreward	1
Table of Contents	2
Introduction to "J" Model	3
Photo and Ice Making Capacity	4
Specifications	5-6
General Description	7
General Information	8
Installation Instructions	9-11
Ice Dispenser Control System	12
Adjustment of Controls	13-15
Shutter and Bin Adjustment	16
Storage Bin and Dispensing Assy.	17
Bin Controls	18
Storage Bin Top Assy.	19
Dispenser Control System	20-21
Wiring Diagram	22
Reservoir Assy.	23
Cabinet Assembly	24
Cabinet Panels-Chassis	25
Chassis Assembly	26-27
Gear Motor Assembly	28
Freezer Assembly	29
Service Analysis (Icemaker)	30-31
Service Analysis (Dispensing Mechanism)	32
Maintenance Instructions (Flaker)	33
Cleaning Instructions	34
Accessory Kits	35-36

THIS PAGE
INTENTIONALLY
LEFT BLANK

THIS PAGE
INTENTIONALLY
LEFT BLANK

INTRODUCTION TO "J" MODELS

Models ACD-75"J" series, incorporate a number of design improvements over former models, production started 1969. Starting serial number is LB-268715.

1. Overall cabinet height raised one inch, primarily in base to assure positive drainage.

2. External cabinetry consists of individual panels. Provides easier service access.

3. Differential paddle in bin cover now metal with nylon coating to eliminate breakage.

4. Die cast switch bracket on gear motor centrifugal switch - provides positive switch alignment & setting.

5. New type actuator arm, nylon coated, and vend switch araangement. Nylon actuator arm protrudes thru sink wall and actuates a leaf type micro switch mounted on cabinet frame.
   Eliminates former rubber bumper style actuator and plunger type switch.
   Minimum pressure will actuate vend switch - Switch out of splash area.

6. Shaft on selector switch increased to 1/4" diameter holds knob securely.

7. Drain grille increased in thickness to eliminate breakage.

8. Vertical grooves in freezer tube to prevent squealing from "hard" ice.

SCOTSMAN®

SUPER FLAKER ACD-75 SERIES ICEMAKER-DISPENSERS

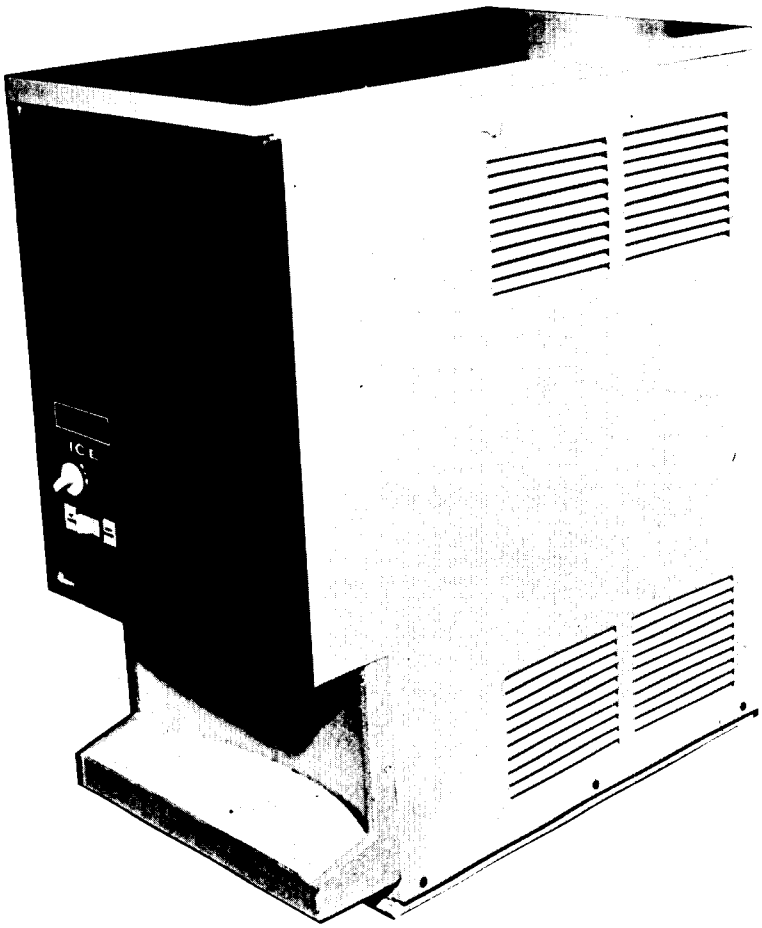

ice making capacity

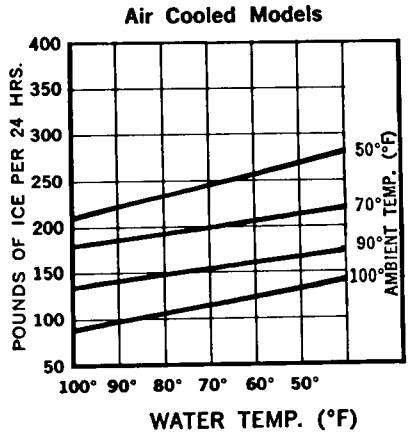

SPECIFICATIONS

ACD-75J SERIES ICEMAKER-DISPENSER

CABINET

Height----------28.2 inches
Depth----------23.8 inches
Width---------- 14 inches
Weight---------- 150 pounds
Finish----------Baked-On Enamel or stainless steel
Trim----------Aluminum, anodized
Sink & Drain---------- Plastic

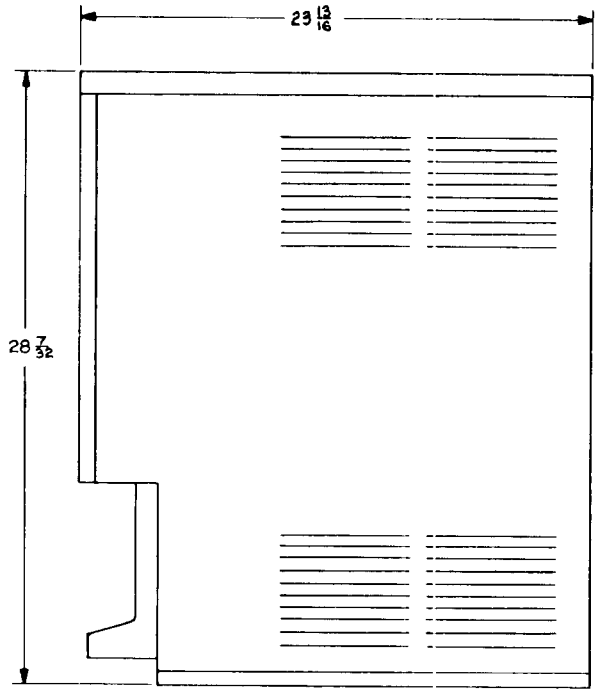

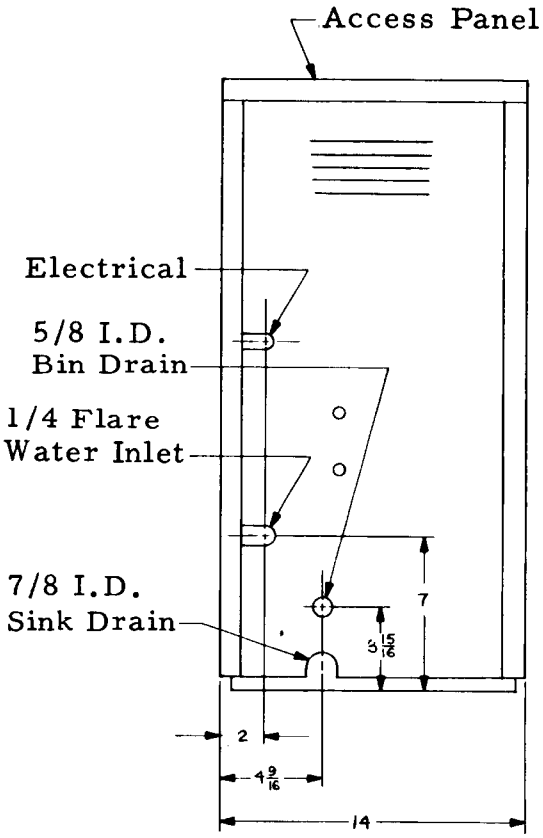

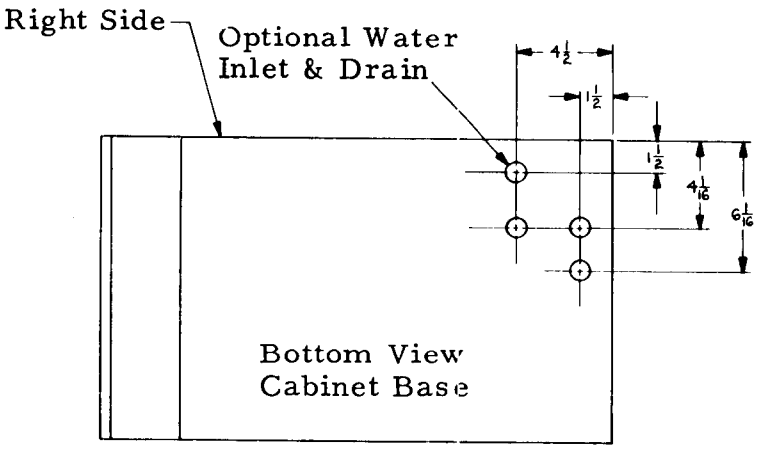

SPECIFICATIONS

REFRIGERATION UNIT

Compressor	Tecumseh 1/5 H.P. 2 pole 115 v. 60 cylce
Freezer	SF-75 Modified
Refrigerant	R-12--10 oz. charge
Ice Produced (approximate)	.04 oz. sec. (70° ambient 70° water)

DISPENSING UNIT

Bin & Dispensing Cylinder	Stainless Steel
Insulation	1 inch Urethane
Storage Capacity	8.19 pounds
Ice Spout	Composition (rubber)
Drive Motor	86.5 watt 115 v. 60 cycle R.P.M. 26.7
Dispensing Rate (approximate)	.8 oz. sec.

PERFORMANCE DATA

Metered Ice-per vend	1 or 2 oz.
Time per vend	1.5 sec.
1 vend /31 sec.	Recovery = Discharge
Water with minimum ice	1.0 oz. ice water
Water with maximum ice	2.0 oz. ice water
Dispensing time (ice & water for 10 oz. glass)	4.5 sec.
Continuous ice flow	1 pound in 20.8 sec.

GENERAL DESCRIPTION

This unit is a counter or table-top type of dispenser with a self-contained refrigeration unit, flaked ice freezer, storage bin and automatic dispensing mechanism.

The primary purpose of this machine is to fill water or drink glasses with water and ice or just ice by actuating a control arm with the glass.

Approximately one or two ounces or a continuous flow of ice can be obtained by properly adjusting a selector switch. By pushing a water switch to "on" water will be dispensed with the ice or as long as the glass actuator arm is energized.

The sink or area in which the ice is dispensed is constructed of plastic as is the drain grate in the sink. The cabinet is of steel with baked-on enamel or stainless steel. Water lines within the cabinet are of copper or nylon and drain lines are Tygon (Plastic) tubing.

The complete machine has been designed with sanitation and ease of cleaning emphasized. The storage bin is sealed and the ice spout is automatically closed when ice is not being dispensed. The complete dispensing unit can be dismantled for cleaning without the need of tools. By removing two winged screws the cabinet top can be removed. Three winged bolts on the storage bin cover may be loosened and the cover can be lifted off. This exposes the entire dispensing mechansim which can be lifted out of the storage bin.

The base of the machine contains a sealing gasket which will seal the machine tight against the table or counter top thereby eliminating the possibility of dirt or bugs lodging under the base.

The top, back, front, sink or either side of the cabinet can be removed in a matter of minutes.

To clean the condenser or for access to the control box, the left side panel is removed.

GENERAL INFORMATION

1. The machine comes to you ready to operate except for water, electrical power and drain connections.

2. The attached information on adjustments should not be needed except in rare instances.

3. An interlock switch, located on the top frame, is held in an "on" position when the cabinet top cover is in place. When the cover is removed the power to the machine is automatically disconnected for cleaning. For electrical service the main power supply should be disconnected.

4. The unit should not be connected to a heavily fused supply line. Maximum fusing should be not more than 15 amperes. It is advisable to use a fustat, fusetron or delay type of fuse.

5. All parts of the unit can be washed with mild soap and water. This includes the stainless steel and paint parts. Care must be exercised in handling the cleaning of the various stainless steel pieces as these parts have a tendency to be more sharp at the edges than painted parts.

6. Because of the various electrical controls and wiring care must be used in grounding this cabinet and frame work to a solid cold water line or similar ground.

7. The ACD1 and ACD-75 are identical in outward appearance with the case assembly on. For identification purposes a decal is placed on the back panel. When a screw head appears in the upper hole it identifys the ACD-75 and in the lower hole the ACD-1.

INSTALLATION INSTRUCTIONS

1. Remove the unit from the carton and install on a table or counter with a flat, level, rigid top. Mount at a convenient height for filling glasses.

2. Avoid sliding the unit on the rubber sealing base.

3. Remove the top of the cabinet and the rear panel. Remove packing from float chamber.

4. Pull the drain from the cabinet. They may be routed through the rear panel through the hole provided in the base. It is possible to route all lines through holes which have been provided in the base.

5. The lower drain from the sink area must never be installed higher than the base of the cabinet. Consideration should be made in regard to this drain in order to get proper flow from the sink drain.

6. Water should be supplied from a 3/8"copper or equivalent pipe. Too small a water supply line will only result in an increase in time for filling glasses with water.

7. Connect power to terminal strip in junction box, Item 12 on Page 26.

8. The interlock switch located at the top of the cabinet frame will be in an "ON" position when the cover is on the cabinet.

9. Replace the rear panel and the cabinet cover. The switch is used only when the machine is opened for cleaning. At such a time both the unit and dispenser are disconnected by removing the cover.

10. Thirty minutes after the unit has been started, ice can be dispensed.

NOTE: Should this unit be improperly installed with the drain favoring front of the machine, a condition would result in slushy, wet ice as the meltage water would remain in the bottom of the storage bin, and may run out the discharge spout.

INSTALLATION PRACTICE

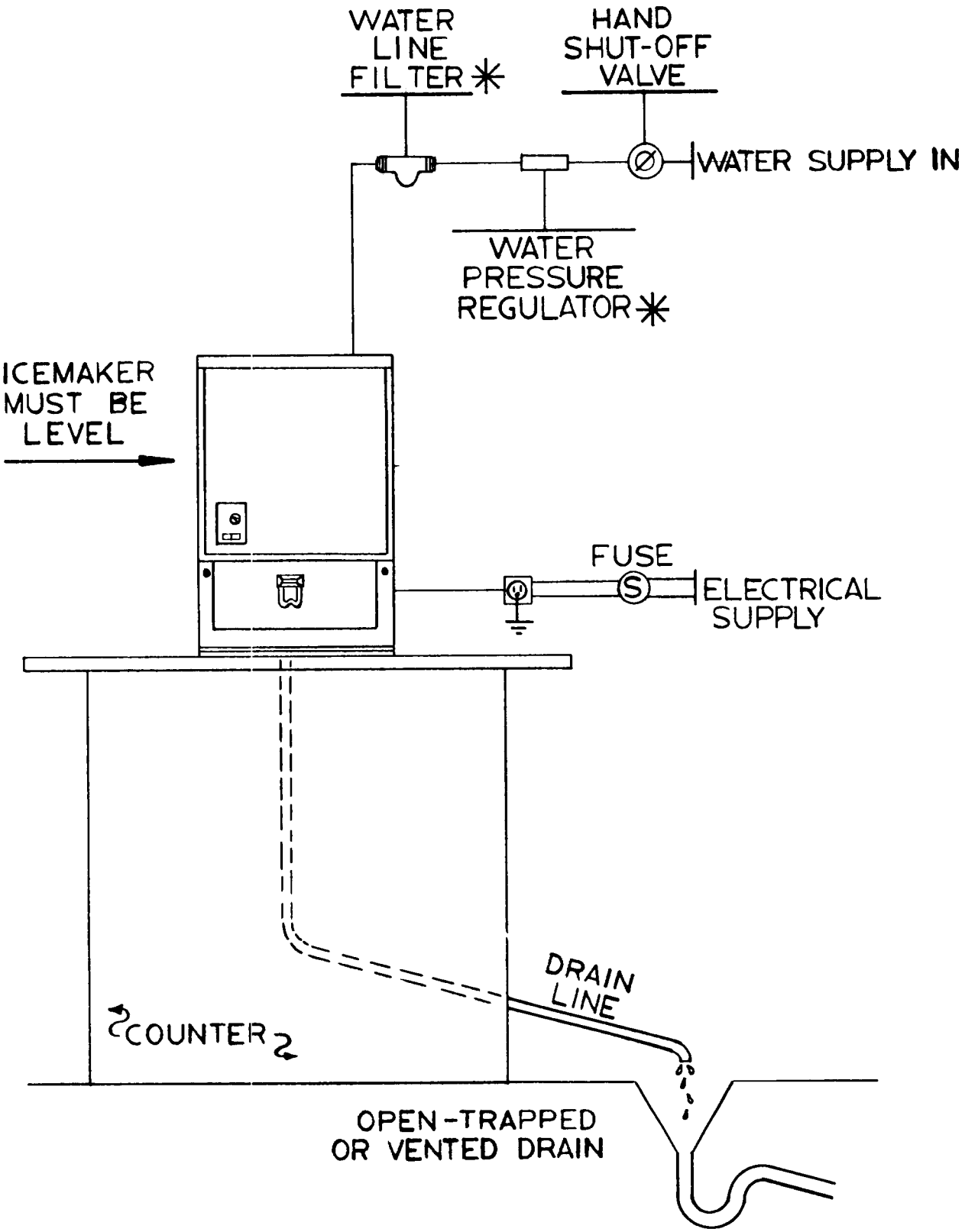

* REGULATOR AND FILTER ARE ACCESSORY ITEMS TO BE INSTALLED AS CONDITIONS WARRANT

Electrical:

Standard electricals are 115 volts, 60 cycle single phase current. Use #12 gauge wire, either in three wire cords rubber covered or thermoplastic types that incorporate ground wire as the third wire. This unit must have a solid ground wire.

Major electrical components	H.P. Size	Amps.
1. Refrigerant Compressor	1/5	3.6
2. Freezer Gearmotor	1/15	2.2
3. Dispensing Drum Motor	1/25	2.35
Total		10.15

15 amp fuse protection is required, preferable a delay type such as Fustat, Fusetron etc. All external wiring should conform to National Underwriters, as well as State and local codes. The maximum allowable voltage variation must not exceed 10 per cent of unit nameplate ratings, even under starting conditions.

Knockouts in cabinet are made for cord connectors, supply line ties into terminal board of control box. See item #12 on page 26. Use separate circuit for icemaker only.

Water Supply:

A single cold water supply line is required. Recommended tubing size 3/8" O.D. or larger, cabinet connection is to a 1/4" S.A.E. flare tee (item #13 on page 26) on internal cabinet bulkhead. A water strainer with clean out feature should be installed in supply line along with a hand shut off valve.

Minimum water pressure is 20 pounds gauge, maximum pressure over 50# pound gauge may cause chattering of float ball in reservoir tank. For pressures in excess of 50 pounds, use a water pressure regulator in line. Cabinet back is slotted for supply line entrance.

Water and Condensate Drains:

Two soft drains (plastic tubing) are provided, see page 26. The upper drain is 5/8" I.D. tubing, the lower drain is 7/8" I.D. tubing. Drain lines should be run to an open, trapped or vented drain in accordance with your State and local code regulations. These are gravity drains, therefore maintain at least a 1/4" pitch per foot away from unit drains. Knockouts are provided for either out the back or thru the base drain.

Refrigerant System:

The standard Scotsman Flaker system is used in slightly modified form. Refrigerant 12 is pumped by compressor into the air cooled condenser, into the liquid line, thru a filter-drier and then into the capillary refrigerant control line.

Liquid refrigerant is then carried down to the bottom end of the shell and tube type evaporator (freezing cylinder) where it expands and rises to the top of evaporator. Here the vapors and gases are returned thru an acummulator and suction line to the compressor.

Average operating head pressure is 135# gauge, operating back pressure is 14# gauge.

Factory charge is 10 ounces of Refrigerant 12.

Compressor is 1/5 horsepower, 2 pole, 3500 RPM by Tecumseh. Proper model number is Tecumseh AE59ZF9-46.

ICE DISPENSER CONTROL SYSTEM

The inner storage bin rotates, carrying the ice over a cutting edge located at the ice discharge spout. The ice is thereby cut off the bottom of the stored mass and falls down the spout.

When the selector switch is set at 1 oz. of ice, the dispensing bin will rotate 1/2 turn for each vend. When the selector switch is set at 2 oz. of ice, the dispensing bin will rotate one full turn.

The action is controlled by two switches mounted together and their rollers riding on a cam. They are located on the bin cover and under the drive motor bracket, see page 19. The cam has one depression for the top switch roller to fall into and two for the bottom switch roller. The top switch controls the 2 oz. vend in which the bin rotates one full turn to actuate the switch. The lower switch controls the 1 oz. vend for 1/2 a turn of the bin.

At the end of each vend it is necessary that the dispensing bin stop in the correct position. It must stop at such a time as the spout shutter, item #6 page 17, which rotates with the bin, is directly over the spout. It is also at this time that one of the fins in the rotating bin is in the center and directly under the flaker freezer spout. When this timing is correct, ice that is filling the bin from the freezer will fall in both compartments of the bin; that is, on both sides of the fins, Also, by this timing the ice discharge spout is closed which not only tends to keep dirt from entering the bin, but also sheds meltage from the bin away from the discharge spout.

The selector switch also has a continuous flow position in which ice will continue to vend as long as the control arm is held in. When released the top switch on the cam will position the shutter over the spout.

When the water switch is in an "ON" position, water will be dispensed with the ice. Water will always continue to flow as long as the actuating arm is held "IN". See page 14 for a simplified circuitry showing the operation of these switches.

CONTROL SWITCHES & CAM

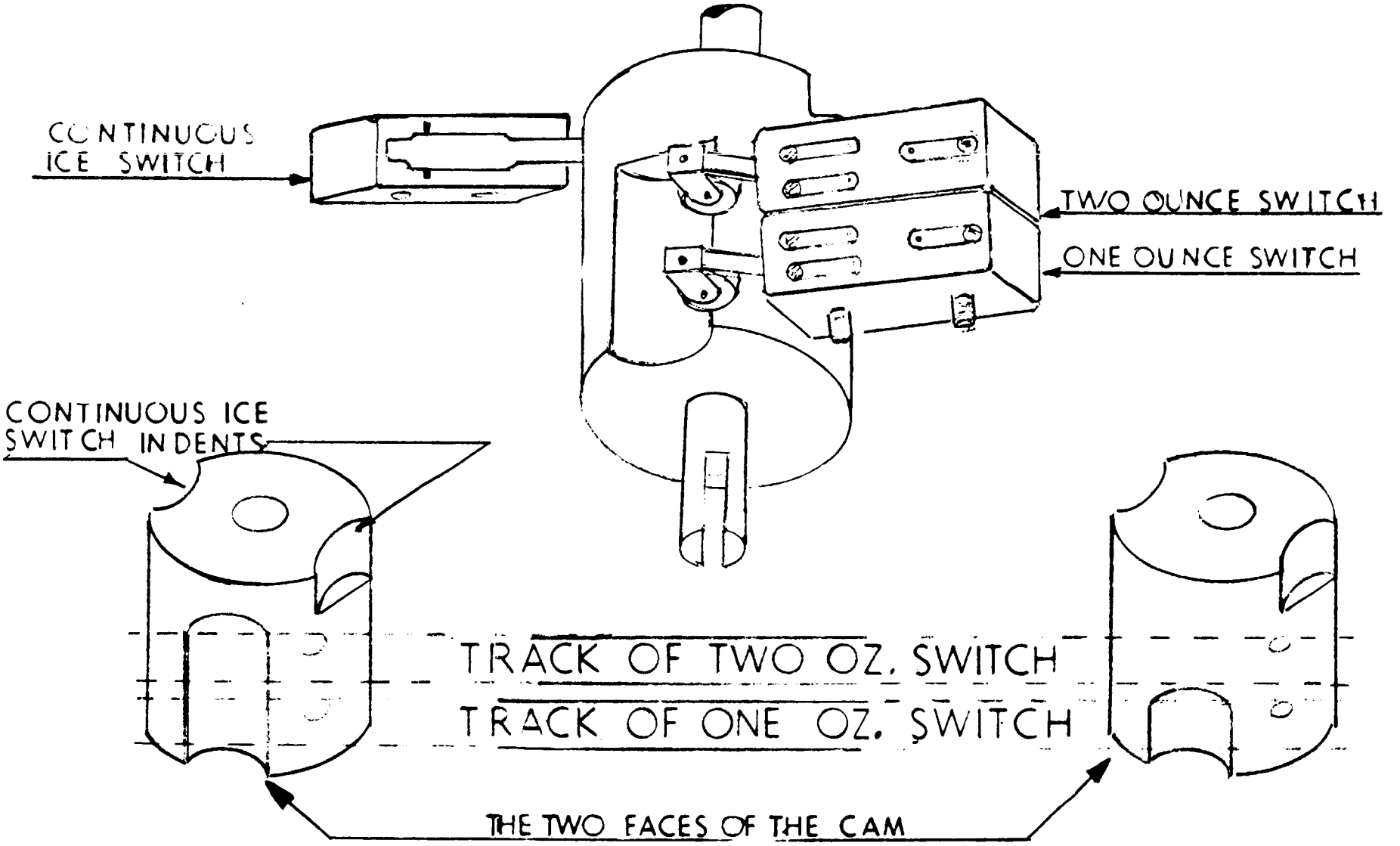

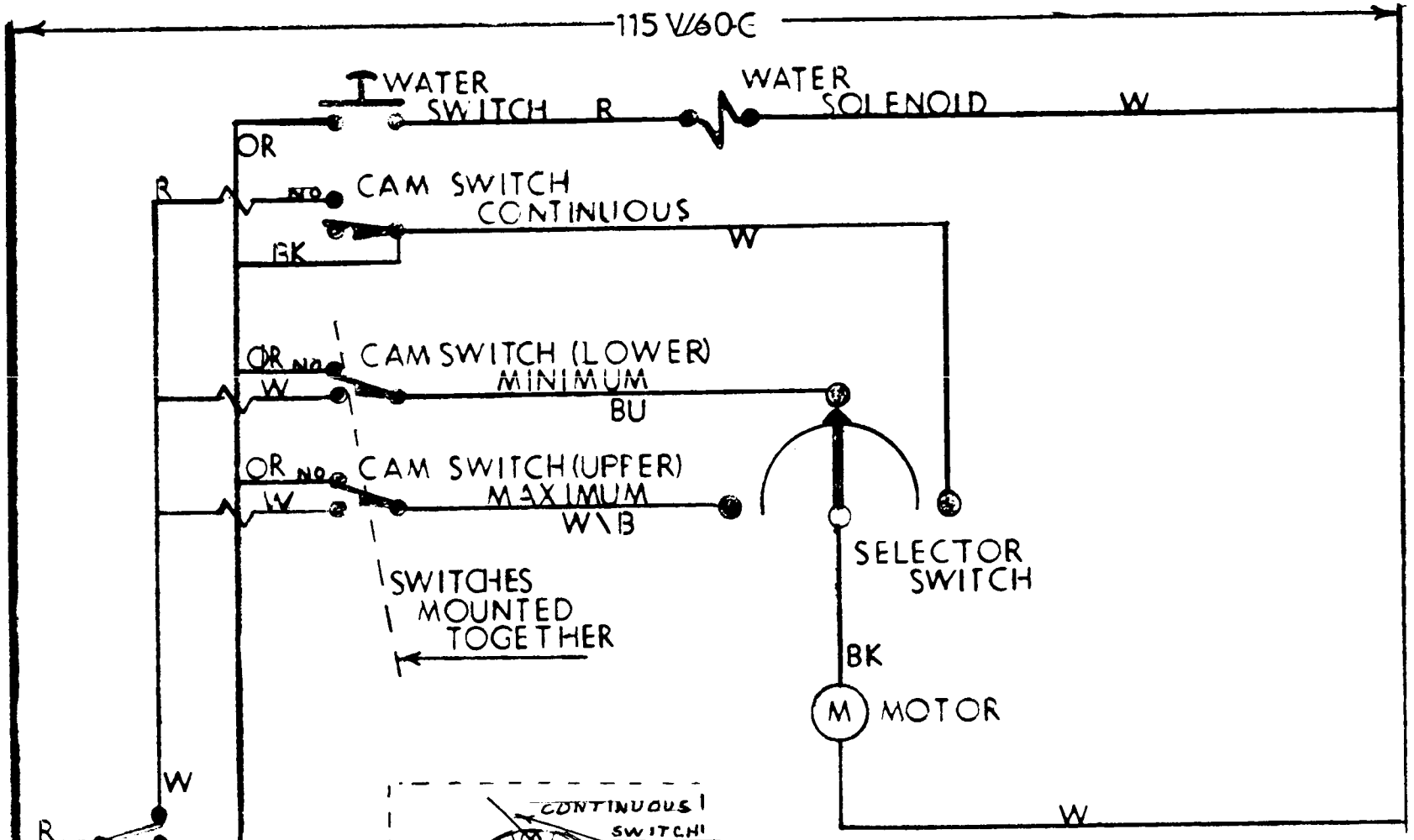

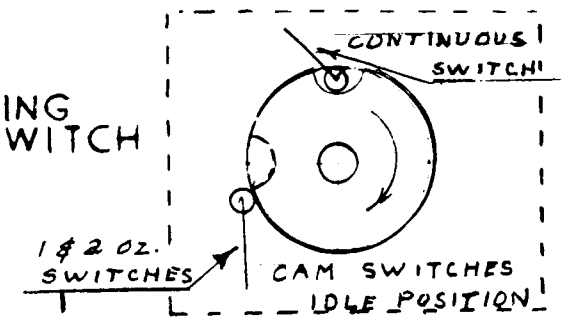

ACD DISPENSING CIRCUIT

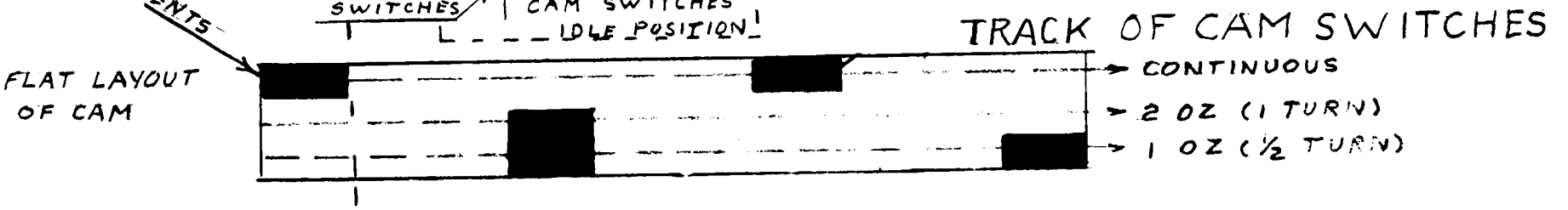

INSTRUCTIONS FOR SETTING CAM SWITCHES WHEN DISPENSER WILL NOT STOP OR WILL NOT DISPENSE PROPERLY. (DO NOT ADJUST CAM SWITCHES UNTIL YOU ARE SURE DISPENSER MECHANISM RUNS FREELY.

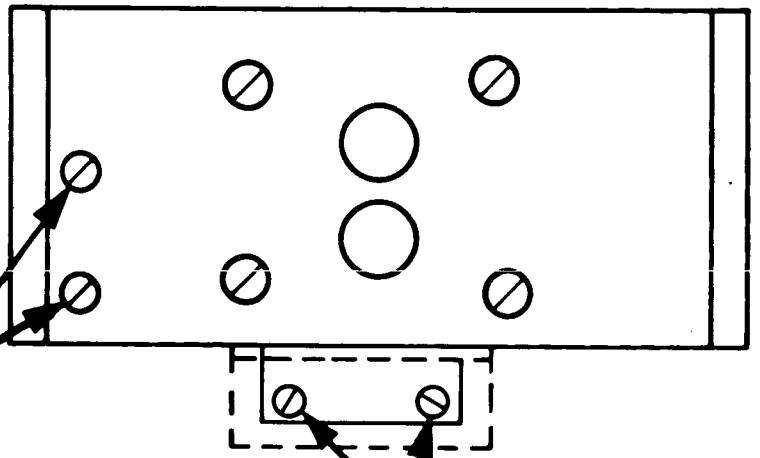

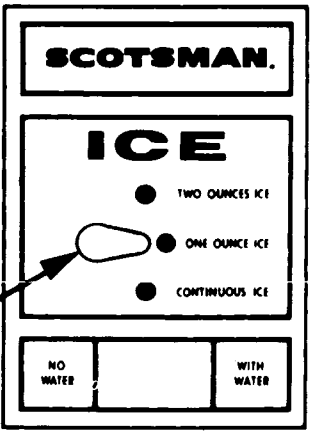

CONTINUOUS ICE SETTING INSTRUCTIONS:

1. Set selector switch to continuous ice.
2. Turn master switch on by pressing white button down.
3. Loosen two screws slightly.
4. Push screws forward slowly until dispenser motor runs continuously.
5. Pull screws back until motor stops.
6. Hold position and tighten screws snugly.

1 oz. & 2 oz. ICE SWITCH SETTING INSTRUCTIONS:

1. Set selector switch to 1 oz. or 2 oz. ice.
2. Remove cam switch cover.
3. Turn master switch on by pressing white button down.
4. Loosen two screws slightly.
5. Pull back on screws until dispenser motor runs continuously.
6. Push screws forward slowly until dispenser motor stops and then push 1/32 to 1/16 further.
7. Hold position and tighten screws snugly.

SHUTTER AND BIN ASSEMBLY AND ADJUSTMENT

1. Assemble the shutter in the bin and place the tapered bottom over the shutter. The opening in this bottom (see drawing page 17) is placed over the discharge spout area. Pins in the bottom of the outer bin protrude through slots in the side of this bottom which thereby locks and holds it in place. The rotating dispensing bin is then set over this bottom.

2. Mount the cover on the bin being careful that the slots in the drive shaft are over the pin in the shaft of the dispensing bin. Bolt the cover down lightly with the three winged nuts. (Never Tight).

3. The shutter must be directly over the rubber discharge spout when the dispenser stops. The dispensing bin is timed, by construction, with the shutter in that the fins of the bin are directly under the freezer spout when the shutter is in proper stopped position. Consequently both sides of the bin will fill with ice.

The Adjustment

1. If shutter does not close the ice spout opening when the dispenser motor stops be sure the cam switches are adjusted as per page 15.

2. To adjust shutter remove the bin cover and turn upside down.

3. Turn the motor until the roller of the continuous ice cam switch (the singularly mounted switch) is down in the slot of the cam. This is illustrated in the sketch of the cam and switches on page 14.

4. In this position the slot of the motor drive shaft should be in line with the plunger of the spout switch.

5. To adjust, loosen the two set screws #11 of cam (see section AA - page 19). Hold cam as described in above paragraph 3 and turn motor until drive shaft slot is correctly in line with spout switch plunger.

6. Tighten set screws in cam. (Do not over tighten or the plastic cam may split).

7. Rotate the motor - check the vertical position of the cam. Switch rollers must fall in the correct cam slots as indicated on page 14.

8. Hold master switch down and vend several times. Each time the dispensing motor stops the slot in the end of the drive shaft should line up with the plunger of the spout switch.

9. Place cover on storage bin. Press down on vend switch until slot in drive shaft falls over pin in rotating bin.

10. Turn down thumb screws on cover slightly (never tight).

11. Actuate the dispenser several times. Check the shutter through the rubber discharge spout. It must close discharge spout at the end of each dispense.

STORAGE BIN and DISPENSING ASSEMBLY

Item No.	Part No.	Name
1.	A16098	Bin Cover only
2.	A20912	Drive Pin - Top
3.	A16005	Tie Bolt Bracket
4.	A21485	Outer Bin
5.	3-255	Wing Nut
6.	A15965	Shutter Assembly
7.	A16309	Storage Bin
8.	A16129	Bin Bottom
9.	A-20912-1	Drive Pin - Bottom

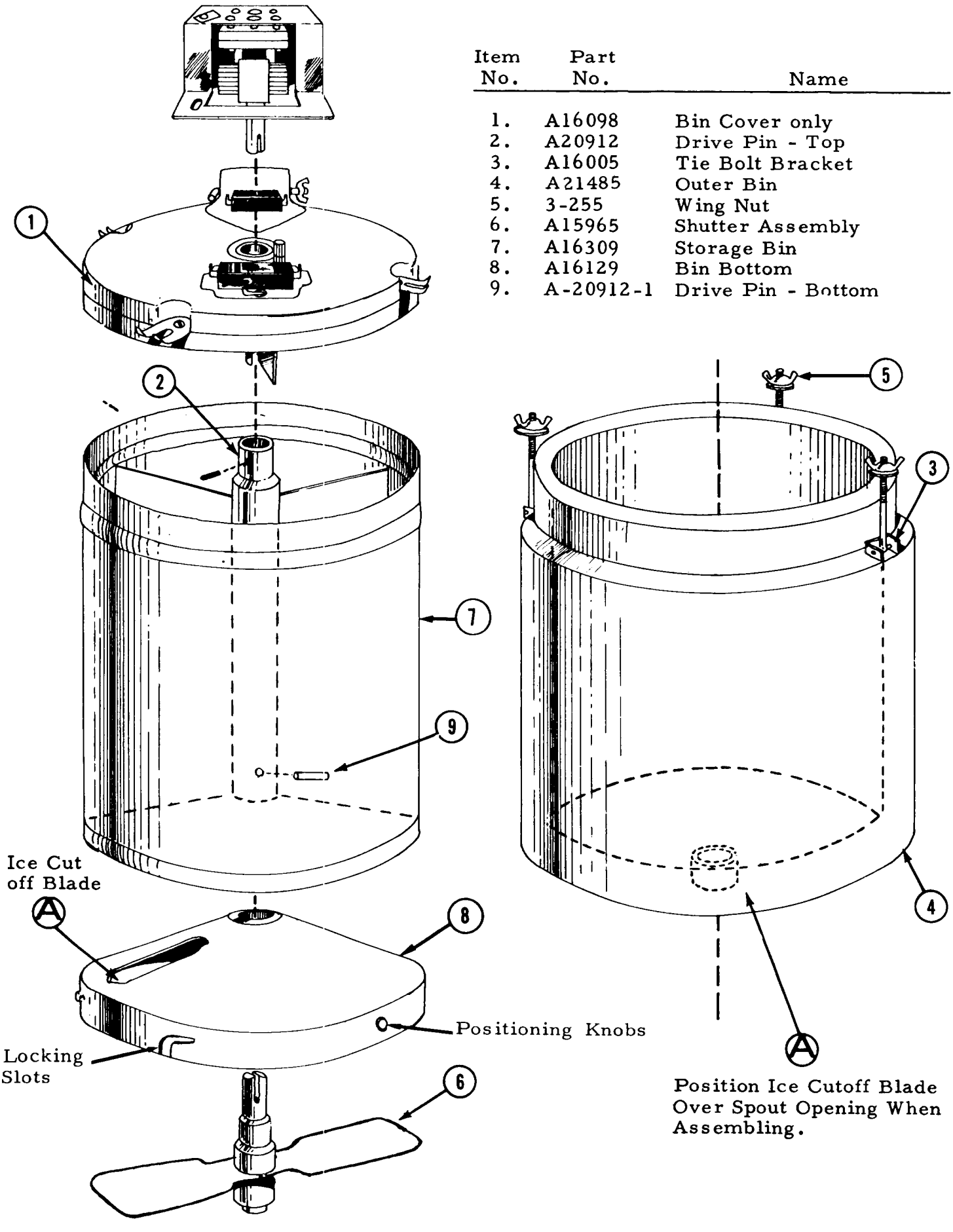

BIN CONTROLS

There are two controls located on the underside of the cover that govern the amount of ice that is in the bin. One control, that over the spout of the freezer, turns the freezer off when the bin is full of ice. This control must be in a position as illustrated in drawing page 19, Section B-B. The second control (see Section C-C page 19) hangs into the bin and holds the freezer off for a period of vends. This flipper slides upon the ice at the first ice vend and opens the switch contacts. It operates as a differential to keep the unit from starting and stopping at each vend and is a secondary means of stopping the unit should the spout switch fail.

Both of these controls can be easily removed for cleaning. The bin differential control has two fasteners securing it to the cover. They are tall round, knurled tubes which are unscrewed like a nut. Removeing these two fasteners will drop the differential control from the cover.

The spout of the freezer has an extension that slides over the fixed spout. This removable extension has two small ears on the side. It is necessary when replacing the cover on the bin to slide this extension as far back on the freezer spout as possible. Be sure the small ears of the extension are on the outside of the cover. When the cover has been fitted over the bin and before it is bolted down, this extension should be slid toward the cover until the ears rest against it.

Serious damage could result if the cover is not installed properly. The small flipper over the switch button in the ice spout of this cover must definitely be forward. Check section B-B, page 19 carefully before attempting to install the cover.

To further control the compressor and to avoid the freezing and stoppage of the auger in the freezer a control is incorporated on the gear motor drive for the freezer.

The bin controls do not energize the compressor but only the gear motor. In turn the gear motor operates the compressor.

A speed sensing switch mounted on top of the motor of the gear unit will stop the compressor when the RPM of the motor is less than 900. At 1200 RPM it will start the compressor.

Should the auger begin to freeze the speed of the gear motor is reduced due to excessive load. At 900 RPM it opens the circuit to the compressor and thereby stopping the freezing.. As the gear unit, only, continues to run it will clear the auger and when the motor speed reaches 1200 RPM, the compressor is turned on.

Any freeze ups are thereby automatically cleared by the unit.

If the water should be shut off when the unit is running the inlet water line will freeze shut. The control mentioned above will have no control over such a situation.

STORAGE BIN TOP ASSEMBLY

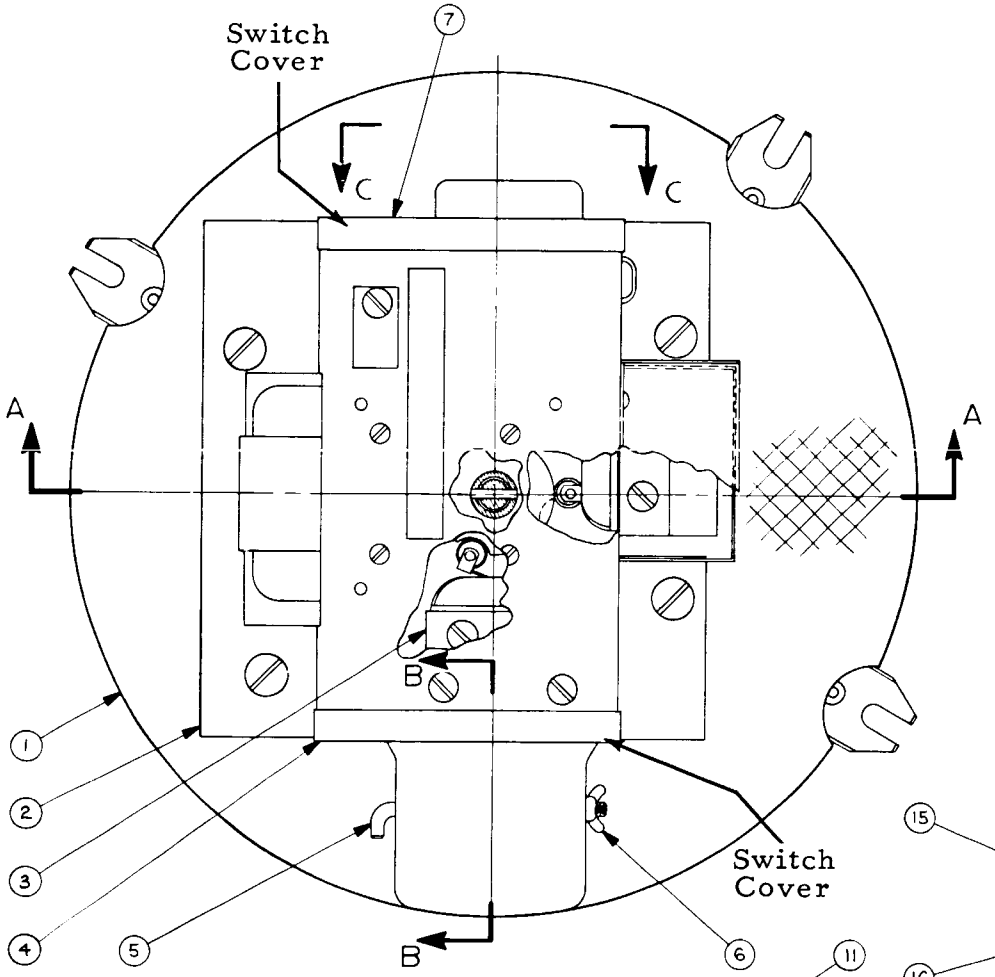

1.	A21215-2	Storage Bin Top Assembly
2.	A16084	Motor Mount
3.	12-876	Positioning Switch (Continuous ice)
4.	A16498	Switch Cover
5.	A16104	Hinge Pin
6.	3-1229	Wing Nut
7.	A16499	Switch Cover
8.	12-1610-1	Dispenser Drive Motor
9.	2-1576	Cam
10.	A21207	Drive Shaft
11.	3-387	Set Screws
12.	12-876	Cam Switch (two ounces ice)
13.	12-876	Cam Switch (one ounce ice)
14.	A16101	Cover Bushing
15.	12-1018-1	Spout Switch
16.	12-1643	Boot & Bushing
17.	A16010	Ice Control Lever
18.	A16495	Differential Bracket Nut
19.	12-1018-1	Differential Switch
20.	A-19269	Differential Paddle

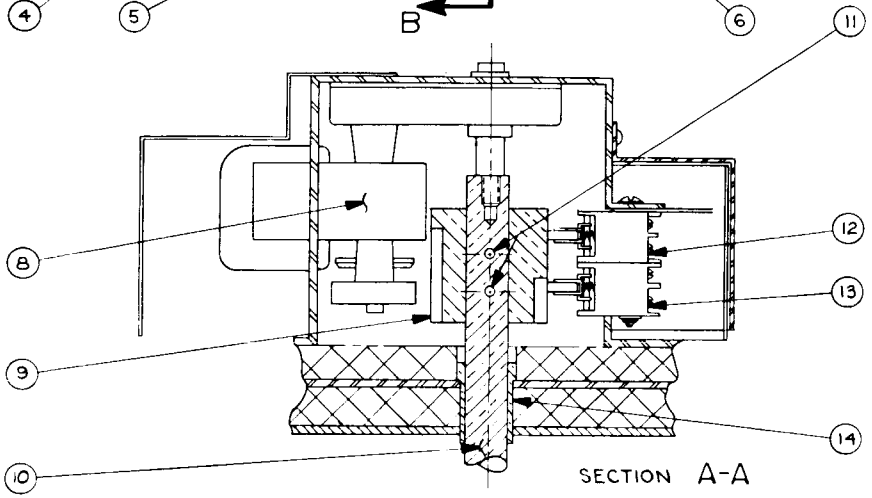

SECTION A-A

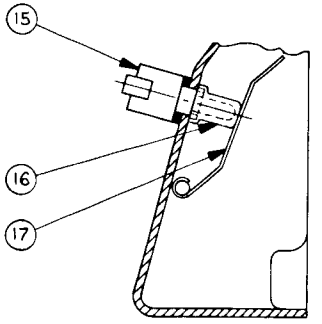

SECTION B-B

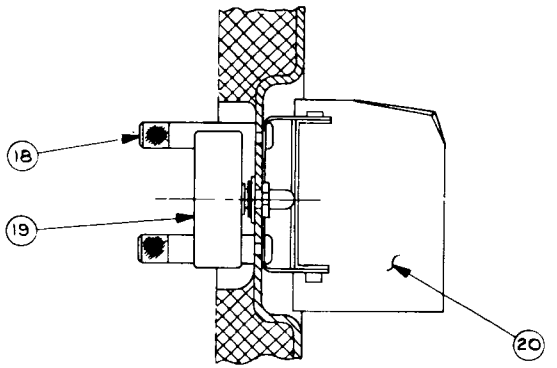

SECTION C-C

ACD-75 DISPENSER CONTROL SYSTEM

The control system, for the dispenser only, consists of six switches.

The terminalogy and function of these switches are as follows:

Dispensing Switch:

1. Located in the sink area on firewall back of the sink. It is accessable by removing the right side panel.

2. When depressed, usually by a water glass, it actuates the dispensing mechanism.

3. It is a double pole, double throw leaf type snap switch.

Selector Switch:

1. Located on the frame back of the front panel. It is accessable by removing the front panel.

2. By its setting it determines if one or two ounces of ice will be dispensed. Or in the continuous setting the dispenser is operated as long as the dispensing switch is held "IN".

3. This is a three position, 30 degree throw rotary switch.

Continuous Cam Switch:

1. This is the single top switch riding on the upper edge of the cam.

2. This is actually a locating switch that will always stop the dispensing mechanism when the shutter is covering the dispensing opening. When the selector switch is set for "continuous" ice, the dispenser operates as long as the dispensing switch is held in. When this dispensing switch is released, the continuous cam switch will hold the circuit on until the shutter is over the discharge spout or opening.

3. This switch is a single pole double throw roller type switch. Only two terminals, the common and normally open, are used.

Maximum 1 or 2 oz. Cam Switch:

1. This switch is the top switch of the two cam switches that are mounted together. It rides on the center of the cam.

2. When the selector switch is set at 2 oz. this will control the dispensing drum to one full turn.

3. It is a single pole double throw roller type micro switch.

Minimum or 1 oz. Cam Switch:

1. This is the lower switch of the two cam switches that are mounted together. It rides on the lower edge of the cam.

2. When the selector switch is set at one ounce it will control the dispensing drum to 1/2 turn.

3. This switch is a single pole double throw roller type micro switch.

Water Switch:

1. Located on the front panel.

2. When in an "ON" position, it energizes a water solenoid to dispense water with ice.

3. This is a rocker type single pole single throw switch.

Besides the two flaker control switches covered in the information on this unit, there is a master switch.

This switch is located on the top frame and is a plunger type single pole single throw switch. It is held in an "ON"position by the cabinet top. When top is removed the switch is in an open position.

WIRING DIAGRAM
ACD-75J
115-60-1

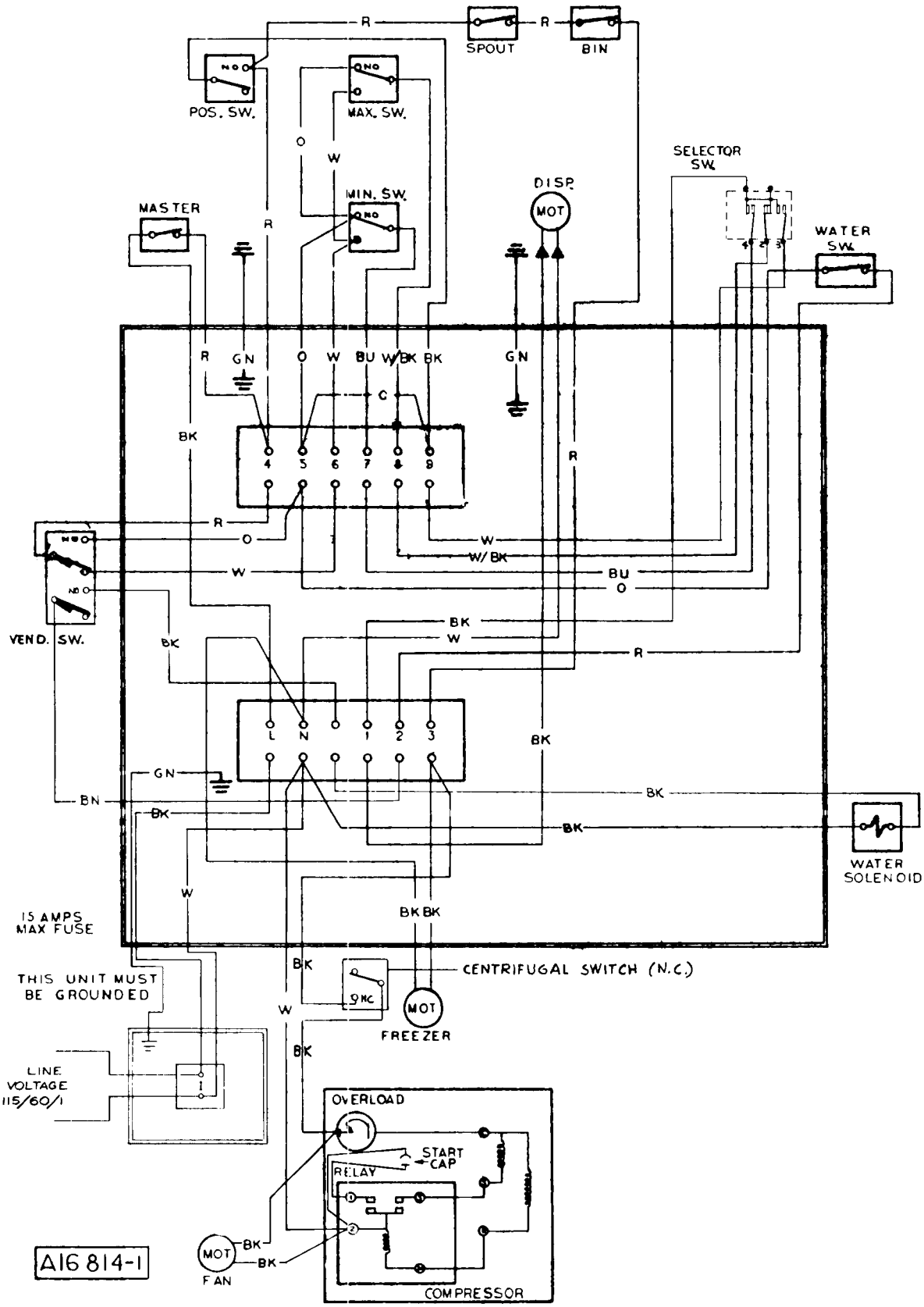

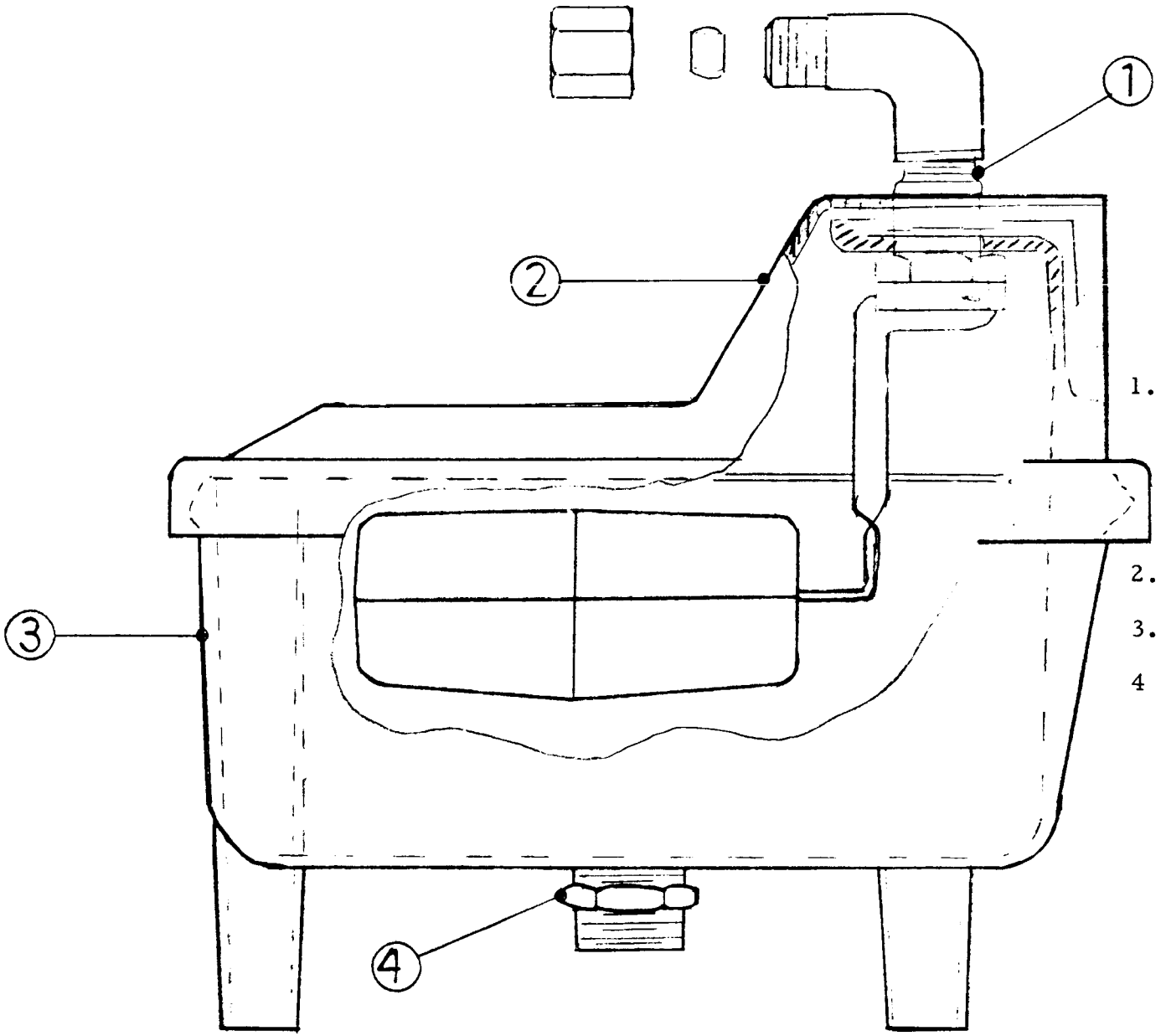

RESERVOIR ASSY. 2-1793-1

1.	2-1793-2	Valve Assembly consisting of: Inlet Ell Straight Compression nut Compression Sleeve Valve Assembly with Float
2.	2-1793-3	Reservoir Cover
3.	2-1793-4	Reservoir Body
4	2-1793-5	Reservoir mounting nut 3/8-18

CABINET ASSEMBLY
ACD-75J Models

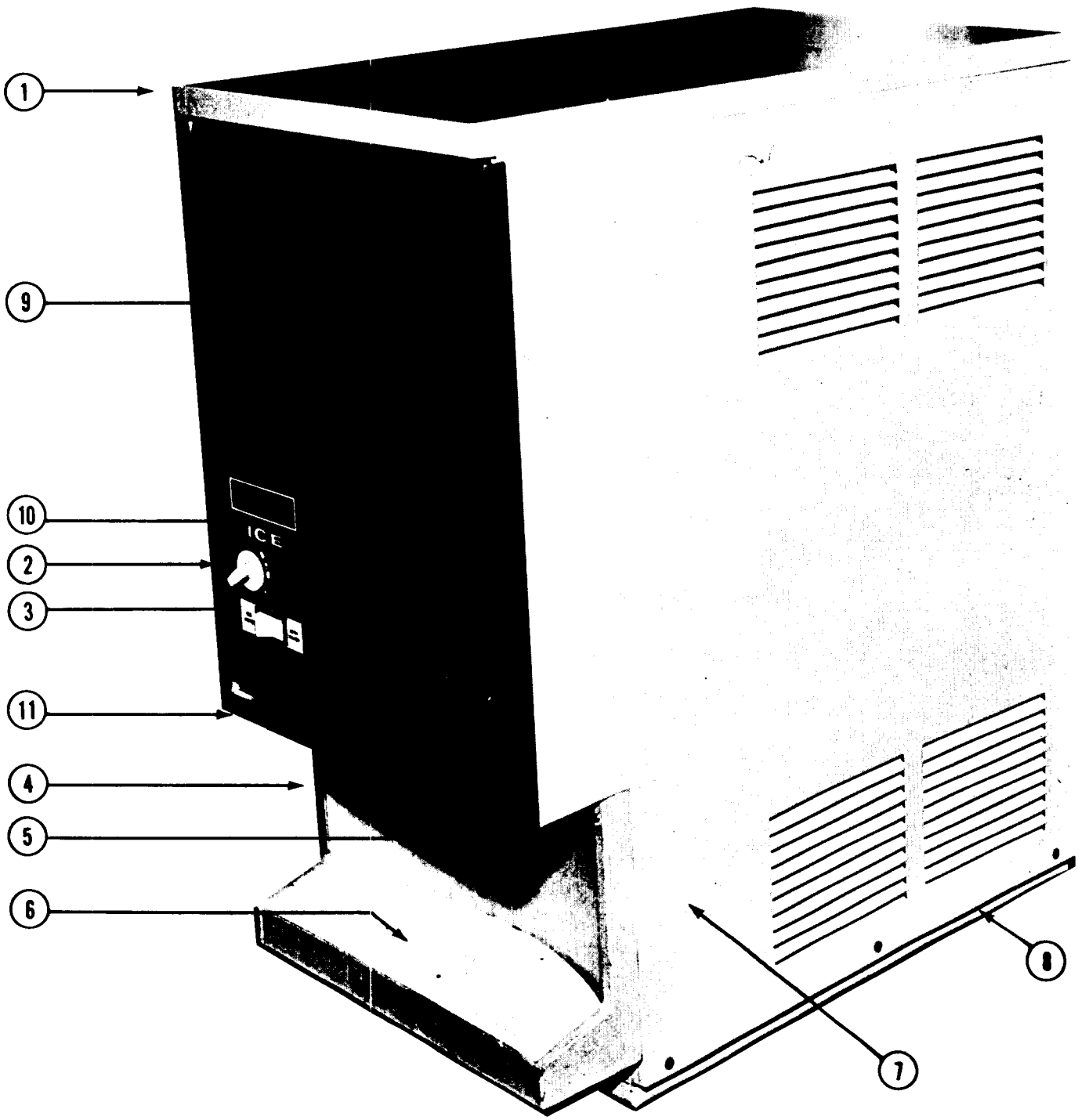

Item No.	Part No.	Name
* 1.	A-19104	Cabinet Top - Painted
	A-19104-1	Cabinet Top - Stainless Steel
2.	12-1540	Selector Switch
	12-1566	Selector Switch Knob
3.	12-1377	Water Switch
4.	2-1826	Sink
5.	A-21544	Glass Actuator Arm
	2-1833	Glass Actuator Arm Adapter (Holder)
6.	2-1473	Drain Grate
7.	A-21416	Right Side Panel - Painted
	A-21416-1	Right Side Panel - Stainless Steel
8.	13-566	Base Moulding (Gasket)
9.	A-21424	Cabinet Front - Painted
	A-21424-1	Cabinet Front - Stainless Steel
10.	15-461	Emblem
11.	15-507	Aluminum Moulding (Trim)

* Louvered cover - in extreme high ambient temperatures accessory louvered covers for improved ventilation are available - A-19104-2 Painted
A-19104-3 Stainless Steel

CABINET PANELS- CHASSIS
ACD-75J Models

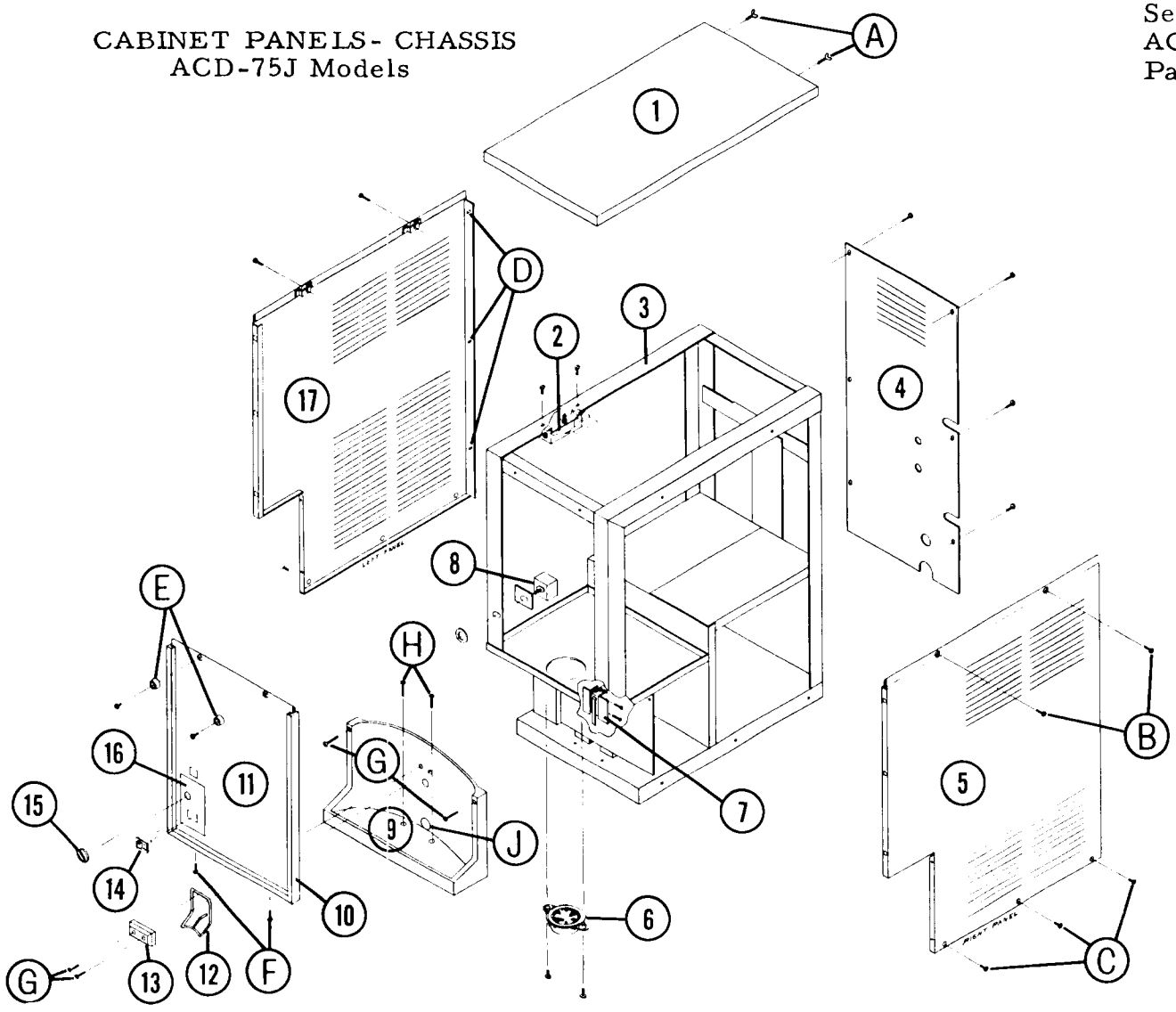

1.	A-19104	Cabinet Top	10.	15-507	Moulding Trim
2.	12-1570	Master (interlock) Switch	11.	A-21425	Cabinet Front
3.		Frame	12.	A-21544	Actuator Arm
4.	A-21405	Back Panel	13.	2-1833	Actuator Arm Adapter
5.	A-21416	Right Side Panel	14.	12-1377	Water Switch
6.	2-1804	Spout Extension	15.	12-1566	Switch Knob
7.	12-1641	Vend Switch	16.	15-461	Decal
8.	12-1540	Selector Switch	17.	A-21415	Left Side Panel
9.	2-1826	Sink			

REMOVING PANELS & SINK

1. To remove either side panel or front, first remove the two wing bolts in the back of cover #1, Item (A). Lift the back of the cover upward and push forward to release.

2. Either side panel can be taken off by removing two screws across the top (B) and three across the bottom of the panel. (C)
These are the only screws that hold the panel.
Pull the panel from in back of sink, then slide backward about 1/2 inch.
There are no screws in the back of the panel, only pins that slide into holes in the frame. (D)
The front edge of the panel merely fits under the aluminum trim.

3. The front panel is removed by unscrewing the two rubber bumpers at the top of the panel (E) and two screws under the sink top area. (F)
The water switch (14) will snap out and the quick connects can be removed from the switch.
The selector knob (15) just pulls off.

4. The sink (9) can be removed by removing four screws (G) on the front side of the switch and two screws in the bottom of the sink. (H)
These screws are sealed to eliminate water leaks.
The drain tube connection (J) is fastened to the sink rear by a hose clamp. To remove the clamp, it is necessary to remove the right side panel.

5. Remove top and left side panel to clean air cooled condenser.

CHASSIS ASSEMBLY
Right Side

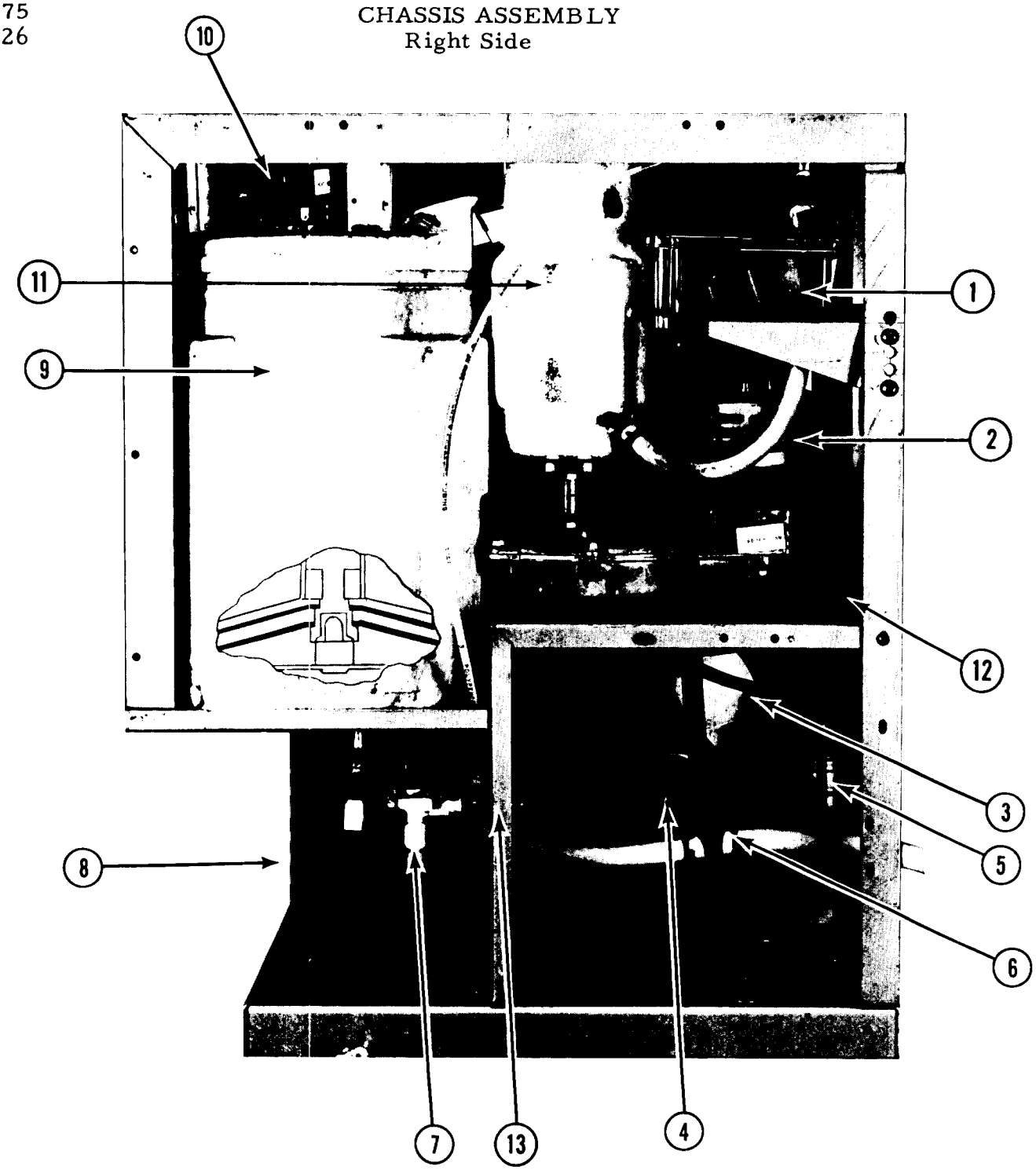

ITEM	PART NO.	DESCRIPTION	ITEM	PART NO.	DESCRIPTION
1.	2-1793-1	Reservoir Assembly	8.	12-1641	Vend Switch
2.	A-17905-1	Gear Motor Assembly	9.	A-21485	Outer Bin Assembly
3.	18-137	Fan Blade	10.	12-1292-1	Dispensing Drive Motor use with A-16066 Drive Shaft
4.	12-1575-1	Fan Motor			
5.	2-1752-1	Drier	11.	A-21435	Freezer Assembly
6.	2-1338	Hose Clamps	12.		Electrical Hook Up Box
7.	12-1434-4	Inlet Water Solenoid	13.		Water Supply Inlet

CHASSIS ASSEMBLY
Left Side

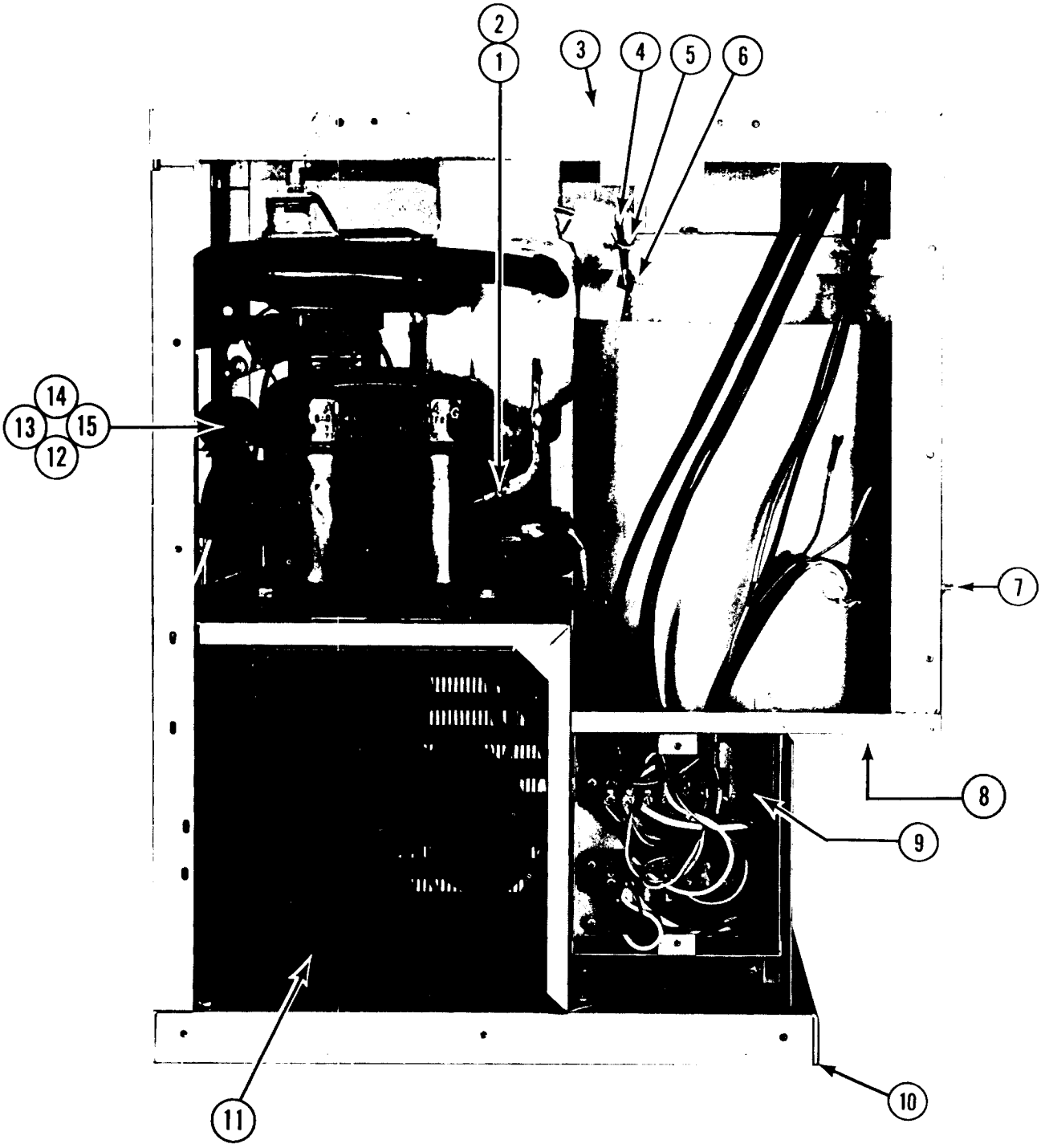

ITEM	PART NO.	DESCRIPTION
1.	16-563	Service Valve Cap
2.	16-560	Service Valve Core
3.	12-1570	Safety Switch
4.	A-16004	Tie Bolts
5.	3-255	Wing Nuts
6.	3-1069	Cotter Pins
7.	12-1540	Switch
8.	2-1804	Plastic Spout Extension
9.		Wiring Panel Box
10.	13-566	Base Gasket
11.	18-1916	Condenser
12.	18-161-1	Motor Compressor
13.	18-161-2	Compressor Overload
14.	18-161-3	Compressor Relay
15.	18-161-5	Starting Capacitor (189-220)

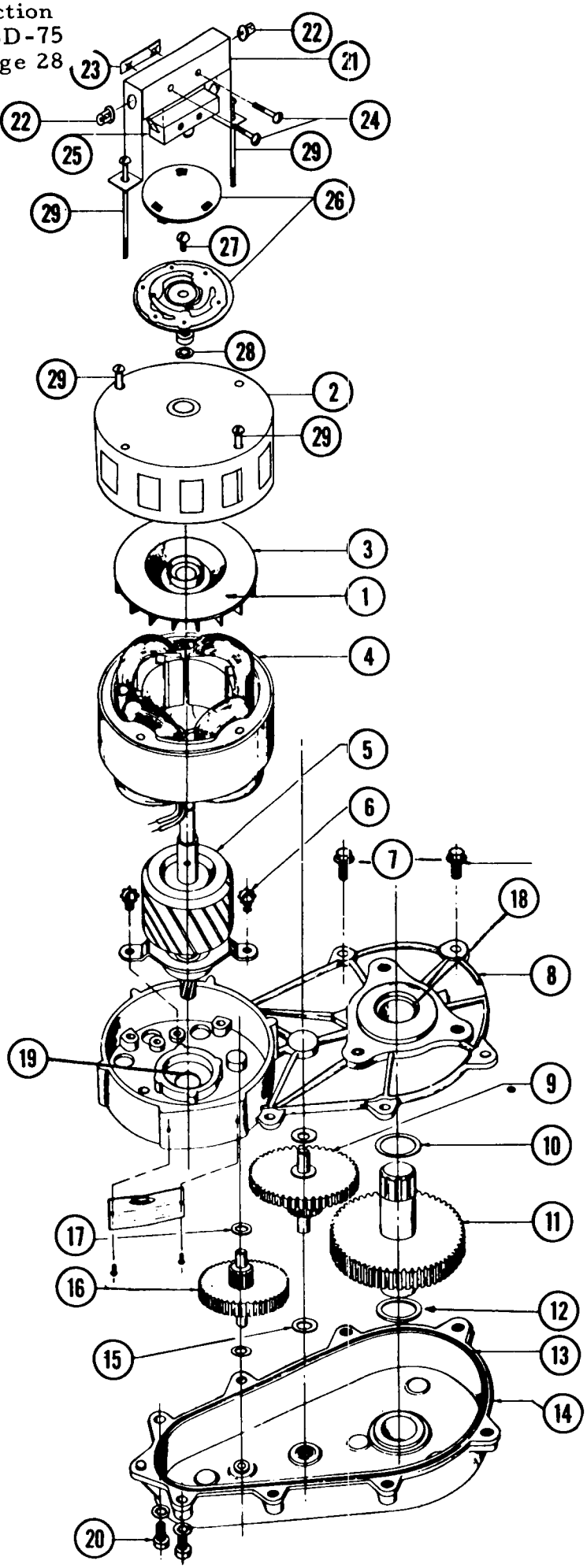

ACD-75 GEAR MOTOR ASSY.

ITEM NO.	PART NO.	NAME
1.	3-1246	Fan Set Screw
2.	A-17047	Motor Housing
3.	A-16915	Cooling Fan
4.	12-1343-1	Stator Assy.
5.	A-19884-1	Rotor Assy.
6.	3-1245	Screws
7.	3-1251	Flange Screws
8.	A-16920	Gear Case Cover
9.	2-1510	Gear & Pinion
10.	3-1408-5	Washer
11.	2-1513	Gear & Output Shaft
12.	3-1408-4	Washer
13.	2-1505	"O" Ring
14.	A-16919	Gear Case Assy.
15.	3-1408-6	Washer
16.	2-1511	1st Gear & Pinion
17.	3-1408-7	Washer
18.	2-1503	Grease Seal
19.	2-1504	Grease Seal
20.	3-1252	Screw
21.	8-579	Switch Bracket
22.	12-1213-3	Snap Bushings
23.	3-886	Twin Speed Nut
24.	3-1403-10	Screws
25.	12-1644	Switch
26.	A19898	Synchro Snap Assy.
27.	3-1248-1	Screw
28.	3-1407-6	Washer
29.	3-1403-42	Motor Bolts

A-17905-1 Gear Motor Assy. Complete

Output Shaft turns at 7 RPM.

ACD-75 FREEZER ASSY.

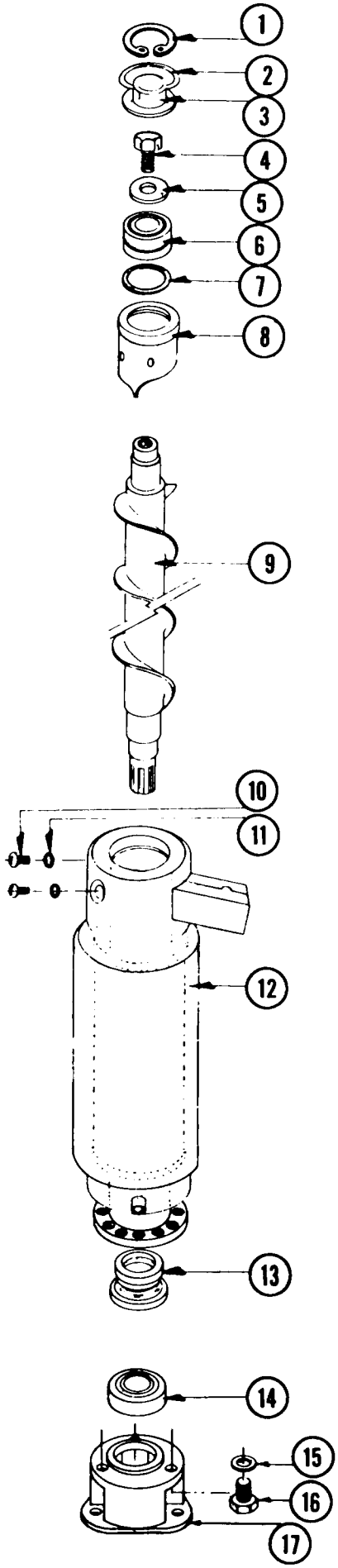

ITEM NO.	PART NO.	NAME
1.	3-553	Retainer Ring
2.	A-8162	Cap Hook
3.	A-7701	Cap
4.	3-758	Screw
5.	A-7699	Washer
6.	2-547	Top Bearing
7.	13-617-16	"O" Ring
8.	A-9413	Breaker
9.	2-1313	Auger
10.	3-1403-46	Screw
11.	3-1417-7	Washer
12.	A-21434	Evaporator Shell Includes Suction Line, Etc.
13.	2-1300	Water Seal
14.	2-417	Bearing, Lower
15.	3-1408-3	Washer (3 reqd)
16.	3-1405-14	Cap Screw (3 reqd)
17.	2-1311	Adapter-Plastic
	A-21435-20	Freezer Complete With Suction Line
18.	A-13635	Spline Drive Coupling
19.	13-709-1	Shaft Drip Shield - rubber

SERVICE ANALYSIS
ICE MAKER SECTION ACD-75

SYMPTOM	POSSIBLE CAUSE	CORRECTION
Water Leaks	Defective water seal	Replace.
	Gravity feed line leaking	Check hose clamps.
	Water level in reservoir too high	Adjust to 1/4 inch below overflow pipe.
Excessive noise or chattering	Mineral or scale deposit on auger and inner freezing chamber walls.	Remove and manually polish auger, polish inner chamber walls of freezer barrel. For lighter concentration use Scotsman Ice Machine Cleaner periodically.
	Low suction	Add gas to raise suction pressure.
	Intermittent water supply	Check and clean water strainer. Check gravity feed line for air lock. Remove air lock.
	Water level in reservoir too low	Adjust to 1/4 inch below overflow pipe.
	Gear reducer loose on frame	Tighten bolts.
	Motor compressor not solid on rubber mounts	Repair or replace rubber mounts.
Gearmotor noise	Low on oil	Remove case cover to check for proper oil level. Top of gears should be covered. Use Sun Oil Co. . Prestige 50 A.E.P.

SYMPTOM	POSSIBLE CAUSE	CORRECTION
Unit will not run	Blown fuse	Replace fuse and check for cause of blown fuse.
	Loose electrical connection	Check wiring.
	Inoperative master switch	Replace switch.
Compressor cycles intermittently	Low voltage	Check for overloading.
	Dirty condenser	Clean.
	Air circulation blocked	Move unit to correct.
	Inoperative condenser motor	Replace.
	Non-condensable gases in system	Purge off.
Making wet ice	Surrounding air temperature	Correct or move unit
	Under or over-charge of refrigerant	Recharge with the proper amount.
	High water level in water reservoir	Lower to 1/4 inch below overflow pipe.
	Faulty compressor	Replace or repair.
Low ice production	Loss of refrigerant, under or over-charge of refrigerant.	Check and recharge with proper amount of refrigerant.
	Dirty or plugged condenser	Clean condenser
	Low water level in water reservoir	Adjust to 1/4 inch below overflow pipe.
	Partial restriction in capillary tube or drier	Moisture in system. Overcharge of oil in system. Remove charge and drier. Replace and recharge system.
	Inlet water strainer partially plugged.	Remove screen and clean.
	Corroded or stained worm shaft due to water condition	Remove worm shaft and clean.
Machine runs but makes no ice	Loss or under-charge of refrigerant	Check for leaks and recharge
	Water not entering freezing chamber	Plugged strainer or supply line. Check and clean. Air lock in gravity feed line. Check and remove air lock.
	Moisture in system	Check and remove charge and drier. Replace and recharge.
	Water seal leaking	Replace seal.
	Water turned off while unit was operating	Inlet water line froze shut. Unit must be turned off and defrosted.

SERVICE ANALYSIS

DISPENSING MECHANISM

SYMPTOM	POSSIBLE CAUSE	CORRECTION
Will not dispense	Power off	Check line fuses and plug.
	Motor overload open	See correction under motor overload.
	Cam switches improperly set	Adjust per manual
	Master switch open	Cabinet cover must be on tight to keep switch on.
	Spout jammed with ice. Unit not level or holding glasses against spout.	Remove ice and clear ice unde removable bottom. Check reservoir possibly too high.
	Wires off dispensing switch.	Check switch terminals.
Motor hot--Overload Open	Ice under removeable bottom.	Remove ice.
	Wing nuts on cover turned down too tight.	Keep wing nuts only slightly snug - never tight.
	Shutter or rotating bin does not turn free.	Check and repair any drag.
	Ice too hard.	Raise freezer water level and check refrigerant charge.
Dispenser does not stop.	Brake on drive motor not working properly.	Brake must be free and stop the motor before 5 revolutio after the dispensing switch i released.
	Cam switches out of adjustment.	Check switches and set per manual.
Water will not dispense	Solenoid defective	Replace.
	Lines closed up.	Clean.
Water runs too slow	Water line too small	Increase size

MAINTENANCE INSTRUCTIONS - FLAKER SECTION

THE FOLLOWING MAINTENANCE SHOULD BE SCHEDULED THREE TIMES PER YEAR.

1. Check and clean water strainers and float valve. Depress float valve to insure full stream of water.

2. Check water level and machine level. Keep water level below overflow, but as high as possible and still not run out of spout opening with machine off. Water should come out of spout with ice at all times. Adjust as required.

3. Clean reservoir and interior of freezer assembly using SCOTSMAN ice Machine Cleaner. See cleaning instructions on next page.

   A. If machine has been cleaned regularly and no problems such as dry ice or chatter are noticed, clean by making ice from solution of 4 oz. of cleaner to 2 quarts of water.

   B. If heavy mineral deposits on auger and walls, or sediment at inlet to freezer are encountered, clean by pouring strong solution 1/2 acid - 1/2 water into reservoir and operate drive motor only for agition. Allow 1/2 hour or longer as required. Drain by disconnecting tygon at water inlet to freezer.

NOTE: Cleaning requirements vary according to local water conditions. Visual inspection of the auger before and after cleaning will indicate best procedure to be followed in local area.

4. Check top bearing of freezing tube. Remove retainer ring around edge of stamped brass cap, pull cap off. If moisture is around bearing, wipe up and remove grease. Add new grease. Use Beacon No. 325 or equal.

5. Clean air cooled condenser. Always shut off machine when cleaning.

6. Oil condenser fan motor when possible.

7. Check for refrigerant leaks and proper frost line. Should frost out of accumulator at least one-half way to compressor, and in some areas, back to service valve.

8. Check for water leaks. Tighten drain line connections. Run water down drain line to make sure it is open.

9. Check quality of ice. Ice should be wet when formed, but will cure rapidly to normal hardness in the bin.

CLEANING INSTRUCTIONS FOR SCOTSMAN ICE MACHINE MODEL ACD75J & ACD1J

1. Set selector switch to continuous ice and vend until bin is empty.
2. Remove top cabinet cover.
3. Remove storage bin cover and spout extension.
4. Remove both ice control flippers from storage bin cover. Note positions of these parts, if parts re-assembled incorrectly damage to the machine may result.
5. Remove inner bin and bin bottom.
6. Position shutter over rubber ice spout and replace bin cover.
7. Turn OFF water supply or block float. Drain reservoir by disconnecting tube between reservoir and freezer. After draining, reconnect tubing.
8. Block main switch ON and pour cleaning solution into reservoir. (Use 4 oz. of Scotsman cleaner and 1 qt. of hot water). Do not fill above overflow tube. Do not allow unit to operate with less than 1" of solution in reservoir.
9. While waiting for Step #8 and/or #11 to complete, remove drain grate and ice vend lever from sink. Wash and sanitize these parts and parts removed from storage bin in accordance with local health department regulations. (Step #8 may complete before Step #9). Finish washing parts during Step #11 if necessary.
10. Remove block from main switch. Wash and rinse reservoir, turn water on or remove float block.
11. Block main switch ON. Let unit run for at least 15 minutes to flush out any cleaning fluid. Check ice for acid taste- run until ice tastes sweet.
12. Remove block from main switch and remove bin cover. Add hot water to ice in bin, using this melt water thoroughly wash and rinse the underside of the storage bin top, shutter, rubber ice spout and all surfaces within the storage bin.
13. Using solution from Step #9, thoroughly wash and rinse sink.
14. Re-assemble storage bin and sink parts.
15. Replace cabinet cover. Unit is ready for normal operation.

THE KIT

1. Top Case Hanger Bracket
   Attach to inside of frame of the dispenser.

2. Top Wall Bracket
   Mounts to wall and engages top case hanger bracket to support dispenser.

3. Bottom Wall Bracket
   Mounts to wall and supports bottom of dispenser.

4. Bottom Fittings Cover
   Fastened to bottom wall bracket to conceal electrical and plumbing fittings from view.

A	ACD1 & ACD75	23 3/16
	ACD1J & ACD75J	24 3/16

WALL MOUNT KIT

Part # A-19092

TOP HANGER BRACKET:

1. Remove back cover and save four screws for mounting bracket.

2. Remove top cover.

3. Drill out four holes of weld nuts in back of frame with 3/16 dia. drill as indicated in illustration.

4. Place bracket inside of frame and fasten solidly with four screws, saved from Step 1, through drilled out holes

TOP WALL BRACKET:

1. Position bracket in desired location.

2. Secure to wall with fasteners of any suitable type for that particular wall through the four holes in bracket. These fasteners or lag screws are not furnished. /Be sure to secure bracket rigidly to wall./

BOTTOM WALL BRACKET:

1. Hang the dispenser on top wall bracket.

2. Position bottom bracket so that molding on dispenser base bottoms in channel of the bracket.

3. Secure bracket to wall through the four large holes with suitable fasteners. /Fasteners not furnished./

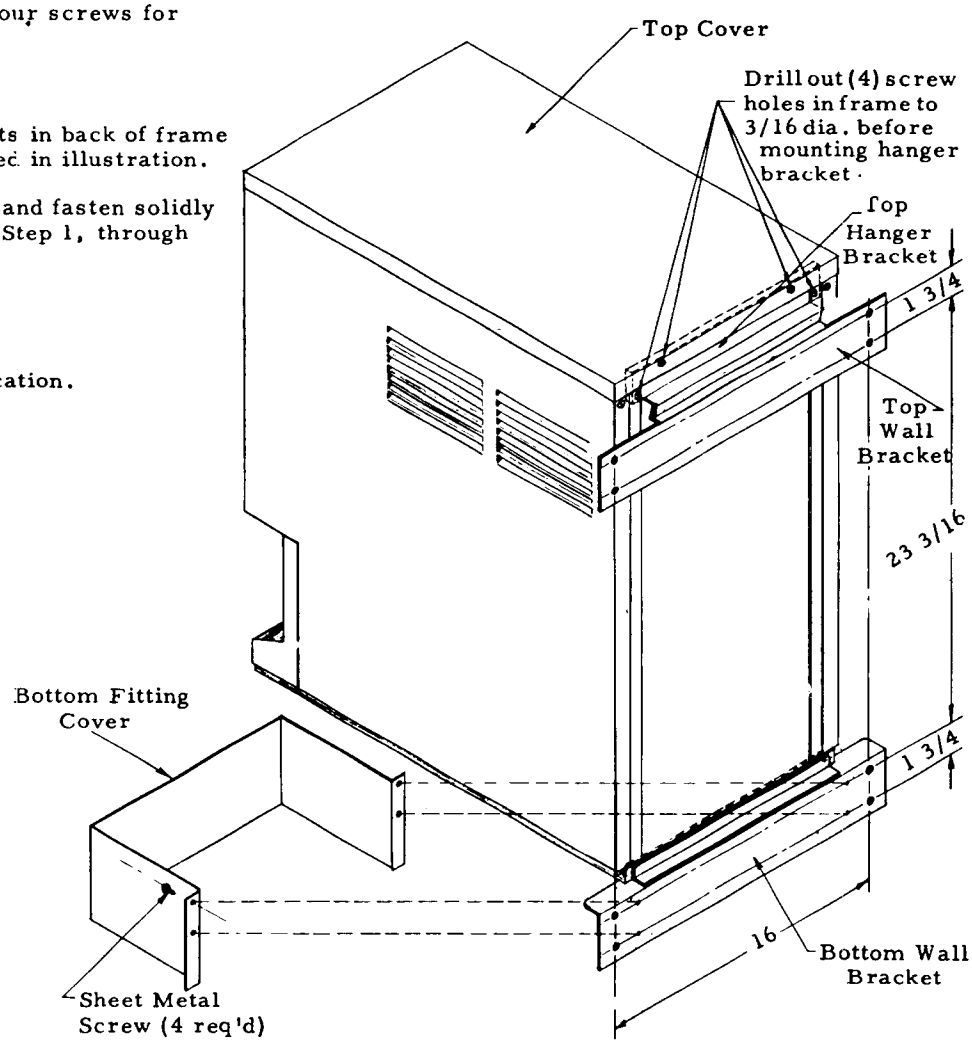

BOTTOM FITTINGS COVER:

1. Connect water inlet, bin drain and sink drain of dispenser through bottom of case. Also run electrical cable in from bottom.

2. Secure fitting cover to bottom wall bracket with the four sheet metal screws provided in this kit.

GENERAL INFORMATION

1. The dispenser is provided with an interlock device.

2. The interlock must be closed before the dispenser will function.

3. The interlock is closed by the top cover of the dispenser. When the cover is tightly in place.

4. To place the cover in proper position, it may be necessary to bend out the back lip of the cover at the screw holes with pliers. Caution! There must be enough friction between the screw heads, (which secure the hanger bracket) and the top cover to hold the cover tightly down on the case and interlock.

A21537 SINK EXTENSION KIT

A conversion for ACD75J and ACD1J dispensers to increase the distance between the discharge spout and the sink to twelve inches and to provide a faster sink drainage.

KIT:

A19720	Sink and Drain Assembly
	(4) 3-1403-29 Screws
2-1828	Splash Plate
	(6) 3-1403-7 Screws
2-1701	Drain Grill
	(6) 3-1406-1 Nuts
A21538	Base
	(2) 3-1403-6 Screws

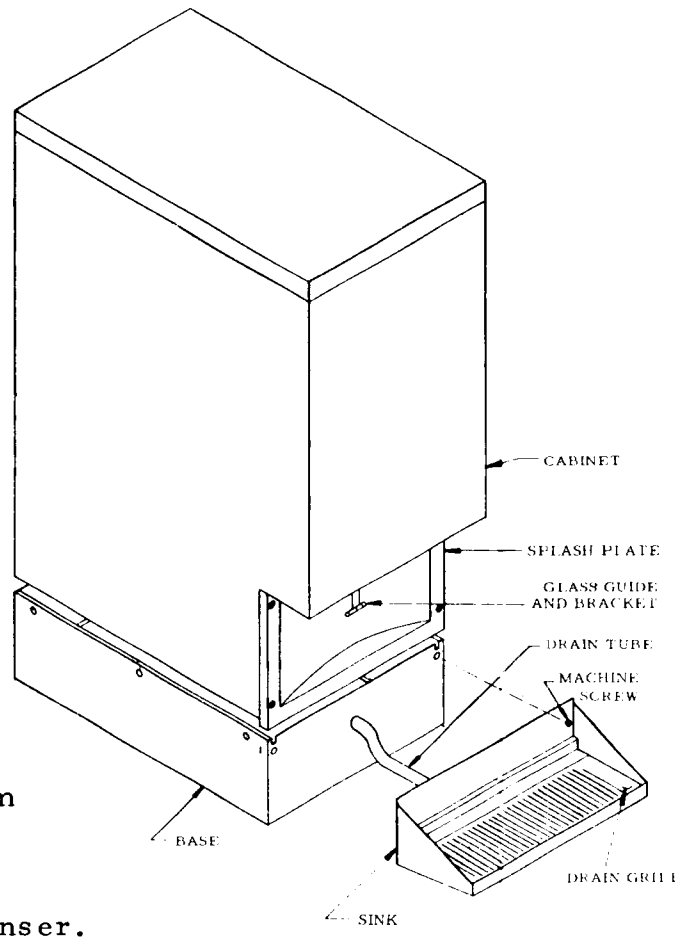

FEATURES:

By the use of the splash plate, only, and the wall bracket A19090 (another accessory), the ACD models can be mounted on a wall over an existing sink.

As a counter-top model, the dispenser is mounted on the six-inch base, A21538. The splash plate, sink and grill replace the conventional sink on the models.

INSTALLATION:

1. Remove conventional sink from cabinet.
2. Remove glass actuator arm and holder from sink.
3. Remove drain tube from original sink.
4. Install drain tube to replacement sink.
5. Remove rubber seal from base of the dispenser.
6. Mount the dispenser on base, A21538. The flange of the dispenser base is to fit in slots provided in the base extension. Secure with the 3 screws on each side of base.
7. Mount sink in place and secure with two machine screws.
8. Install splash plate to cabinet with four machine screws, furnished. The splash plate fits over top of sink
9. Install glass actuator arm and holder to splash plate. The plunger on the arm must operate freely through hole in splash plate.
10. Install grate.

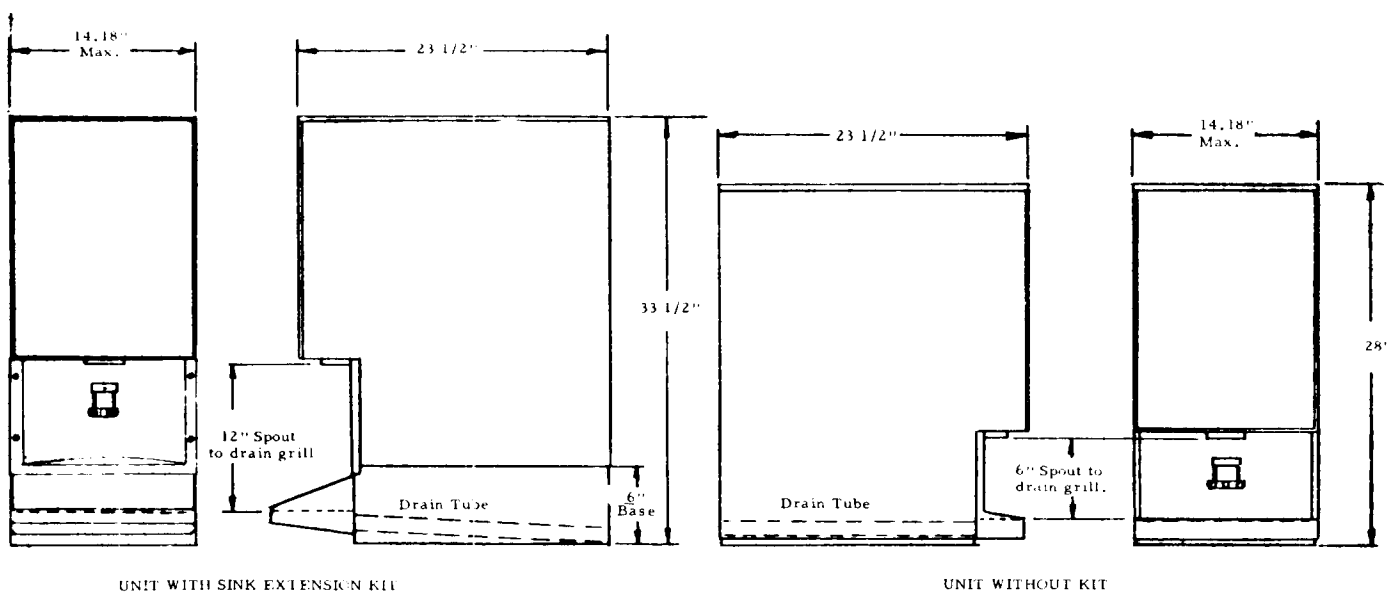

UNIT WITH SINK EXTENSION KIT

UNIT WITHOUT KIT

AD2HB - AD2WHB

TABLE OF CONTENTS

Photo & Capacity Charts	3
Cabinet Dimensions & Specifications	4
Operational Specifications	5
Operation of the ICE FLAKER	6
Operation of the ICE DISPENSER	7
Identification of Components (Left Side View)	8
Identification of Components (Front View)	9
Storage Compartment	10
Dispensing Bin Bottom & Auger	11
Main Control Box	12
Timing Module Control Box	13
Portion Control Box	14
Shutter Control (top view)	15
Shutter Control (bottom view)	16
Vend Actuator Assembly	17
Shutter Shaft Linkage	18
Lower Compartment (top view)	19
Flaker Discharge Spout	20
Reservoir	21
Gear Reducer - Flaker	22
Evaporator (Freezer) Assembly	23
Condensing Unit, water cooled	24
Condensing Unit, air cooled	25
Cabinet Panels	26
Wiring Diagram	27
Service Information	28
Service Analysis Chart	29

THIS PAGE
INTENTIONALLY
LEFT BLANK

THIS PAGE
INTENTIONALLY
LEFT BLANK

PRODUCT NAME:

SCOTSMAN®
ICEMAKER-DISPENSER
AD-2 SERIES

MANUFACTURER:

QUEEN PRODUCTS DIVISION
KING-SEELEY THERMOS CO.
ALBERT LEA, MINNESOTA 56007

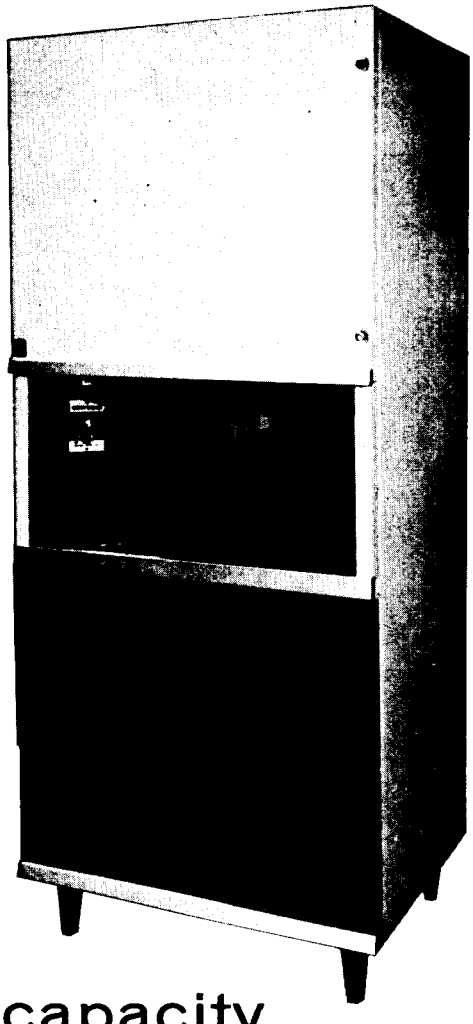

SCOTSMAN ICE MACHINES ARE APPROVED BY THE NATIONAL SANITATION FOUNDATION.

Underwriters' Laboratories, Inc. listed

CSA APPROVED

ice making capacity

Air Cooled Models

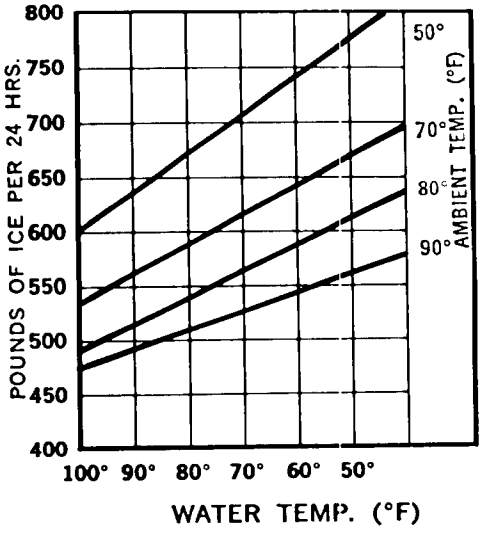

Water Cooled Models

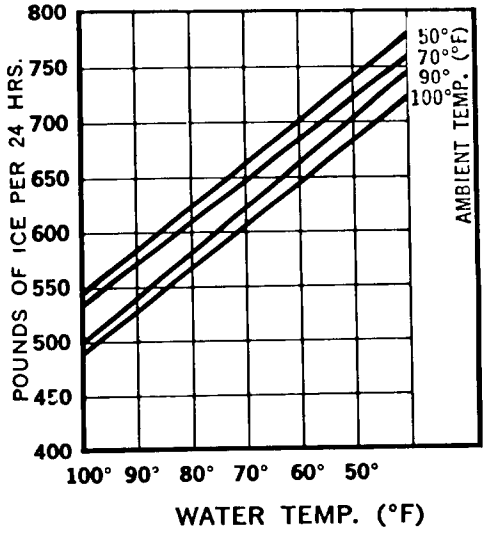

SPECIFICATIONS

SUPER FLAKER AD-2 SERIES ICEMAKER-DISPENSER	MODEL AD-2HB	MODEL AD-2WHB	MODEL AD-2HB-SS	MODEL AC-2WHB-SS
CONDENSER, Air Cooled	X		X	
CONDENSER, Water Cooled		X		X
CONDENSER WATER INLET 3/8" SAE Flare		X		X
CONDENSATE DRAIN 3/8" O.D.		X		X
FINISH, Baked enamel - Light Grey with Dark Grey lower panel	X	X		
FINISH, Stainless steel			X	X
SHIPPING WEIGHT	727	721	727	721

DAILY CAPACITY up to 650 lbs.
STORAGE COMPARTMENT CAPACITY 100 lb.
ILLUMINATED WORKING COMPARTMENT
COMPRESSOR 3/4 H.P.
ELECTRICAL 115 V, 60 CY, 1 PH
WATER INLET 3/8" IPT
OVERFLOW DRAIN 1/2" IPT
STORAGE BIN, Stainless steel
HEIGHT (With legs) 84" to 84 3/4"
HEIGHT (Without legs) 78"
WIDTH 35 1/2"
DEPTH 28 1/4"

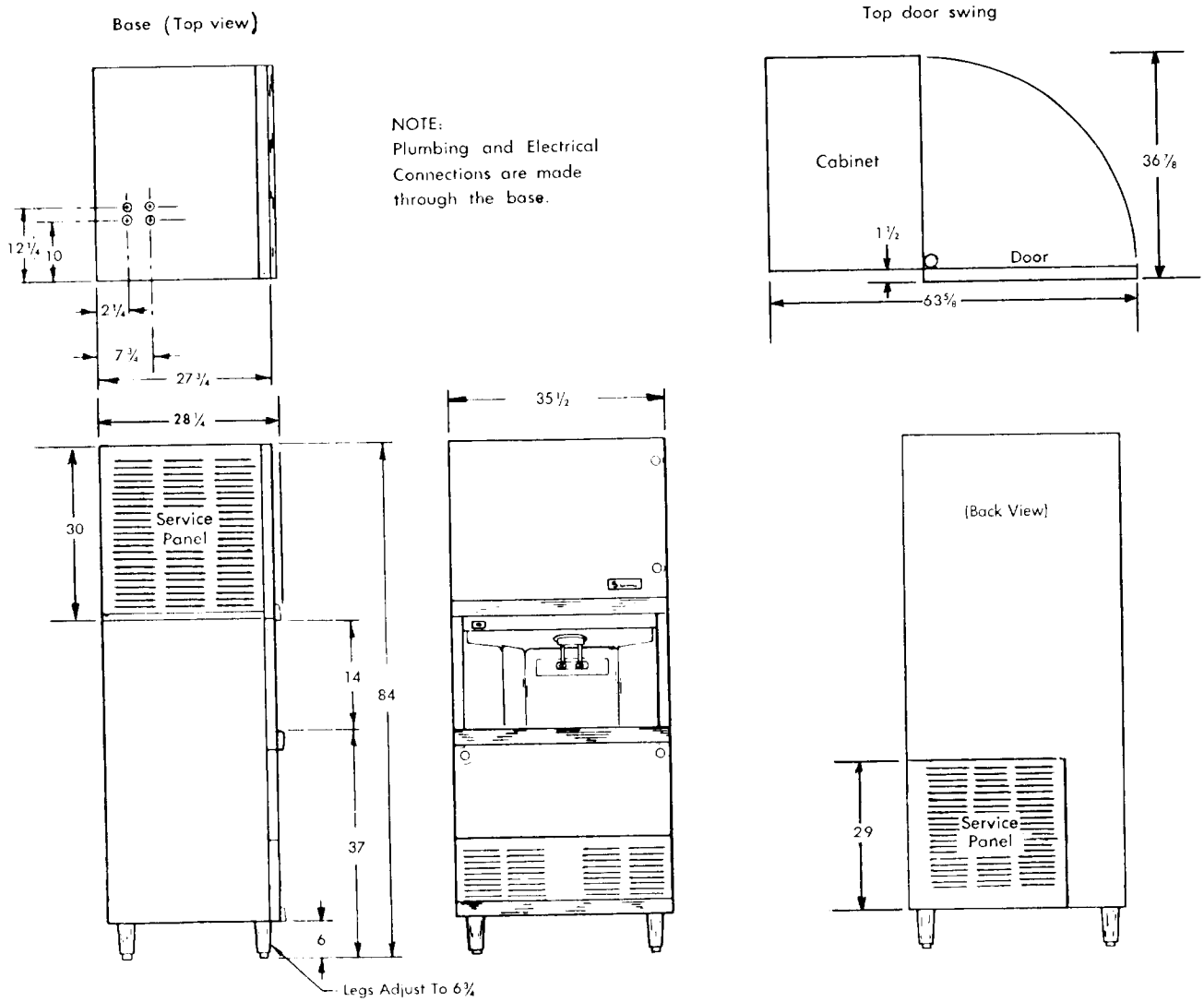

Specifications subject to change without notice.

OPERATIONAL SPECIFICATIONS

ICE MAKER

COMPRESSOR:
- Copeland #RSL2-0075-1AA-218
- Hermedically Sealed
- 2 Pole - 3500 R.P.M.
- 115 V - 60 Hz - 1 Ph *
- F.L.A. - 14.0
- L.R.A - 66.3

REFRIGERANT
- Freon R-12
- Charge 30 oz.

FAN MOTOR
- 115 V - 60 Hz - 1 Ph *
- 9 Watt .74 AMP.

FREEZER DRIVE MOTOR
- 1/4 HP 1725 R.P.M.
- 115 V - 60 Hz - 1Ph *
- F.L.A. 5.2
- L.R.A. 22.0
- Rotation CCW
- Capacitor Start

FREEZER GEAR REDUCER
- Windsmith # 3CT
- Input Speed 387 R.P.M.
- Output 8 R.P.M.

DISPENSER

DISPENSER DRIVE MOTOR
- 1/4 HP 1725 R.P.M.
- 115 V - 60 Hz - 1 Ph *
- F.L.A. - 5.2
- L.R.A. - 22.0
- Rotation CW
- Thermo Protected (internal)
- Capacitor Start.

SHUTTER MOTOR
- Fractional HP
- 115 V - 60 Hz - 1 Ph
- F.L.A. - 3.3
- Rotation CW

DISPENSER GEAR REDUCER
- Queen Products #2-1880
- Input Speed 600 R.P.M.
- Output - Dispensing Bin 1.934 R.P.M.
- Output - Auger Drive 55.7 R.P.M.

ELECTRONIC TIMER
- Potter Brumfield #CDZ 99-70036
- Min. Timing Rate .33 sec.
- Max. Timing Rate 2.20 sec.
- 115 V - 60 Hz - 1 Ph

TRANSFORMER
- Prim. 115 V - 60 Hz - 1 Ph *
- Sec. 24V - 60 Hz
- V.A. 40

LINEFUSE
- 35 AMP/115 V

POWER SUPPLY CONDUCTORS
- #10 AWG Copper

FLUORESCENT LAMP
- 115 V - 60 Hz
- 14 Watt

DISPENSING RATE
- 3.5 oz. per sec. (average)

PORTION CONTROL
- Setting #1 - 1.25 oz.
- Setting #5 - 4.00 oz.
- Setting #9 - 7.75 oz.
  (average)

* Special Voltages, Hertz & Phases Upon Request.

All information in this manual are for standard 115 V - 60 Hz - 1 Ph. operation.

For replacement parts having other ratings specify the volts, Hertz & Phase when ordering.

OPERATION OF THE ICE MAKER

1. Turn power on to the main control box. (#11 page 9)

2. Water must be on to the machine and the reservior (#1 page 8) filled.

3. Electrical cords from the ice spout (#2 page 20) and from the cabinet top must be plugged into recepticals (#14 page 8) of the 24 V Junction box.

4. The Top compartment door must be closed to depress interlock switch. (#50 page 9)

5. Turn master switch (#49 page 9) "ON".

6. The flaker is then in operating condition. Should it fail to operate the pressure control (#46 page 9) may be off.

7. To reset the pressure control push down on the reset arm located on the top back edge of the control.

8. Should there be a persistent cutting off of the pressure control a service man should be notified.

9. As the storage bin fills with ice the differential plate (#35 page 9) will be pushed back to stop the freezer unit.

10. It is possible that ice will fill in the flaker discharge spout (#30 page 9) which will also stop the unit.

OPERATION OF THE ICE DISPENSER

1. Master switch (#49 page 9) must be "ON".

2. Top compartment door must be closed to depress the interlock switch (#50 page 9)

3. Dispenser switch (51 page 9) must be "ON" (illuminated)

4. If water is to be dispensed with the ice the water switch (#54 page 9) must be "ON" (illuminated)

5. Adjust the portion control knob (#53 page 9) for the amount of ice required for each vend. See page 5 for quantities dispensed at various settings.

6. If knob is turned completely clock wise to continuous flow - ice will be dispensed as long as the actuator (#57 page 9) is depressed.

7. If the water switch is "ON" water will run as long as the actuator lever is depressed.

8. The dispensing cycle consists of a series of operations that can take place in less the 1/2 second.
   (a) The actuator lever (#57 page 9) is depressed.
   (b) The shutter (#7 page 10) is automatically opened.
   (c) An electronic timer starts the dispenser motor which dispenses ice for a time duration depending on the portion control setting.
   (d) When the electronic timer is energized, power is also applied to the water switch which energizes a water solinoid to dispense water with the ice.

9. It is sometimes desirable to have the portion control knob and the water switch located beyond the reach of unauthorized persons. This may be accomplished by the following procedure.
   (a) Turn master switch (#49 page 9) off.
   (b) Remove the back emblem plate (#13 page 8)
   (c) Remove only the two screws that hold the front plate (#52 page 9)
   (d) The front plate can be turned sidewise and pushed through the box without removing wires or components.
   (e) Replace screws - mounting portion control plate on back of the box and emblem plate on the front.
   (f) Turn master switch back "ON".
   (g) Readjustments on portion control and water switch can still be made by opening top compartment door and reaching over junction box (#15 page 9)

IDENTIFICATION OF COMPONENTS
LEFT SIDE VIEW

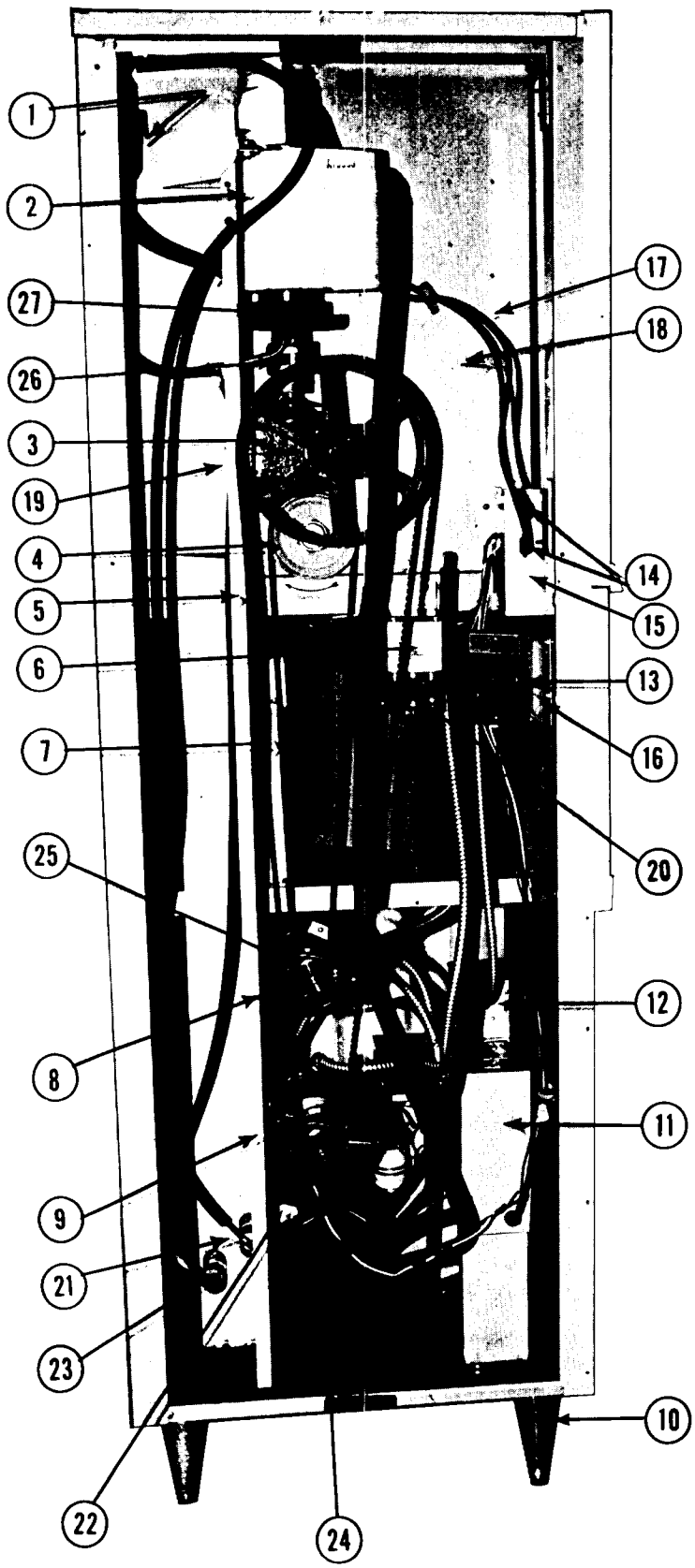

IDENTIFICATION NO.	PARTS NO.	COMPONENT
1.	2-1793-1	Reservoir
2.	A13953	Freezer Assy.
3.	2-580	Gear Reducer
4.	2-1917	Dispenser Pulley
5.	13-552	Freezer Belt
6.	A21229	Shutter Control Box
7.	13-553	Dispenser Belt
8.	12-643-1	Dispenser Drive Motor
9.	12-864-1	Freezer Drive Motor - 115
10.	A15803-1	Leg
11.	A21763-1	Main Control Box
12.	A22215	Timer Control Box Assy
13.	2-1813-1	Emblem Plate
14.	12-994	Cord Recepticals
15.	A18247	24 V Junction Box
16.	A22215	Potentiometer & Water Swt. Box Assy.
17.	12-1210-1	Cord to Spout Swt.
18.	12-1210-2	Cord to Differential Swt.
19.	2-378	Pulley - Gear Reducer
20.	12-1613	Shutter Control Motor
21.	A21679	Water Connection
22.	12-1434-7	Water Solenoid
23.	A21695	Drain Connection
24.	2-1441	Pulley - Freezer Motor
25.	2-1410	Pulley - Dispense Motor
26.	A6165	Coupling - Top Half
	S7716	Coupling - Bottom Half
	13-131	Coupling - Rubber Insert
27.	13-152	Drip Shield

IDENTIFICATION OF COMPONENTS
FRONT VIEW

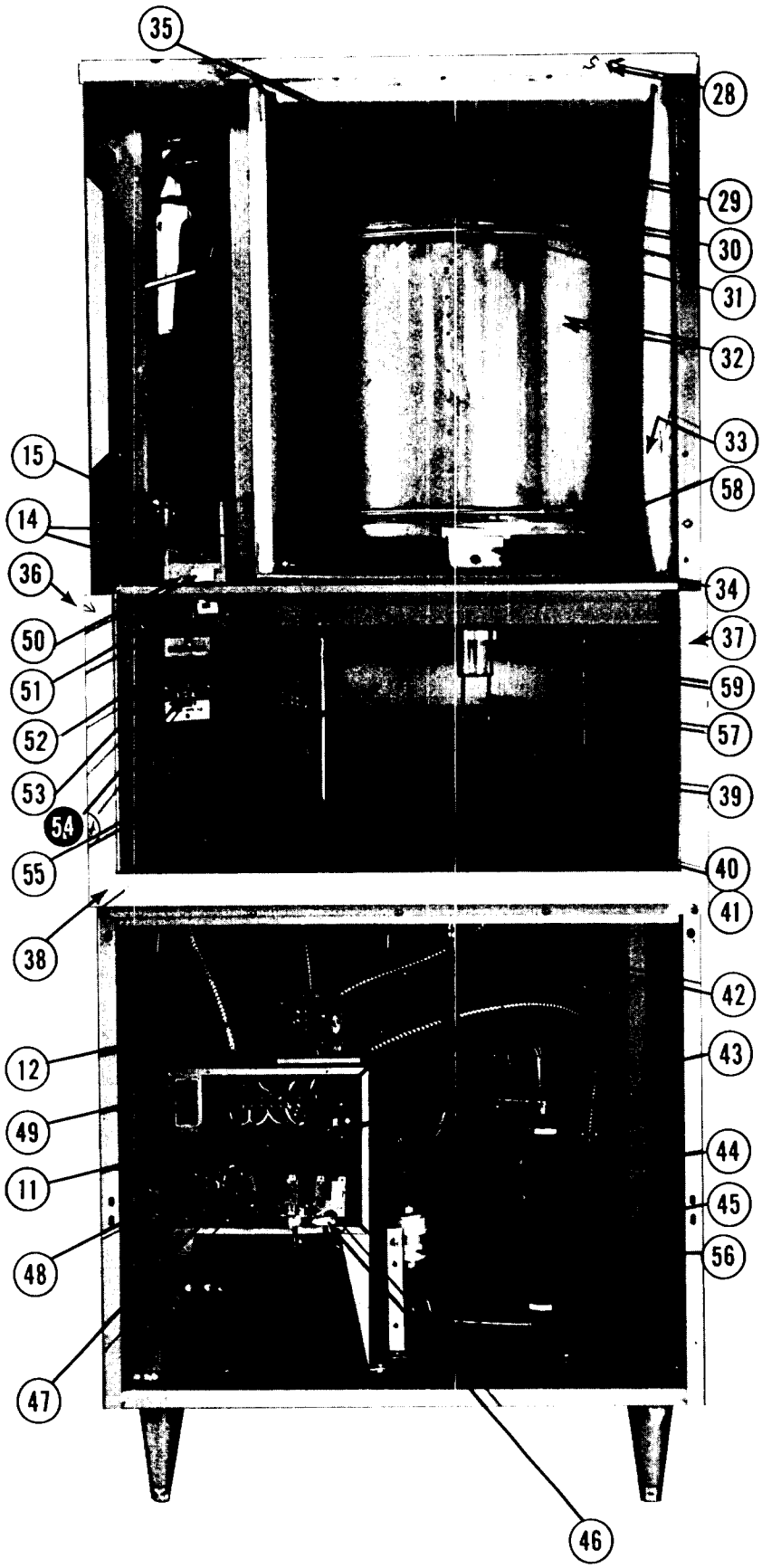

IDENTIFICATION NO.	PARTS NO.	COMPONENT
11.	A21763-1	Main Control Box Assy.
12.	A22215	Timer Control Box Assy
14.	12-995	Cord Recepticals
15.	A18247	24 V Junction Box
28.	A13581	Cabinet Top Assy.
29.	A16857	Locking Pin
30.	A21655	Flaker Spout
31.	A14926	Spout Locking Pin
32.	A14945	Dispensing Bin
33.	A13686	Upper Storage Compartment
34.	A14933	Auger End Plate
35.	A16772	Ice Control Diff. Plate
36.	15-444	Lift Side Trim
37.	14-445	Right Side Trim
38.	15-443	Front Trim
39.	2-1814	Lower Compartment
40.	2-1487	Drain Grate
41.	A6448	Drain Strainer
42.	A18150	Drain Fitting
43.	12-1615-1	Transformer
44.	18-2400-1	Compressor
45.	18-2420	Capacitor
46.	11-273-1	Pressure Control
47.	12-419-1	Dispensing Relay
48.	12-419-1	Flaker Relay
49.	12-1220A	Master Switch
50.	12-1225	Interlock Switch
51.	12-1211-1	Dispenser Switch
52.	2-1813	Control Panel Plate
53.	2-1810	Potentiometer Knob
54.	12-1616	Water Switch
55.	A18342-1	Florescent Light
56.	2-554	Drier
57.	A21682	Actuator for Vend Switch
58.	A14931	Stationary Bottom
59.	A21650	Spout

UPPER STORAGE COMPARTMENT
With Dispensing Auger & Bin Bottom

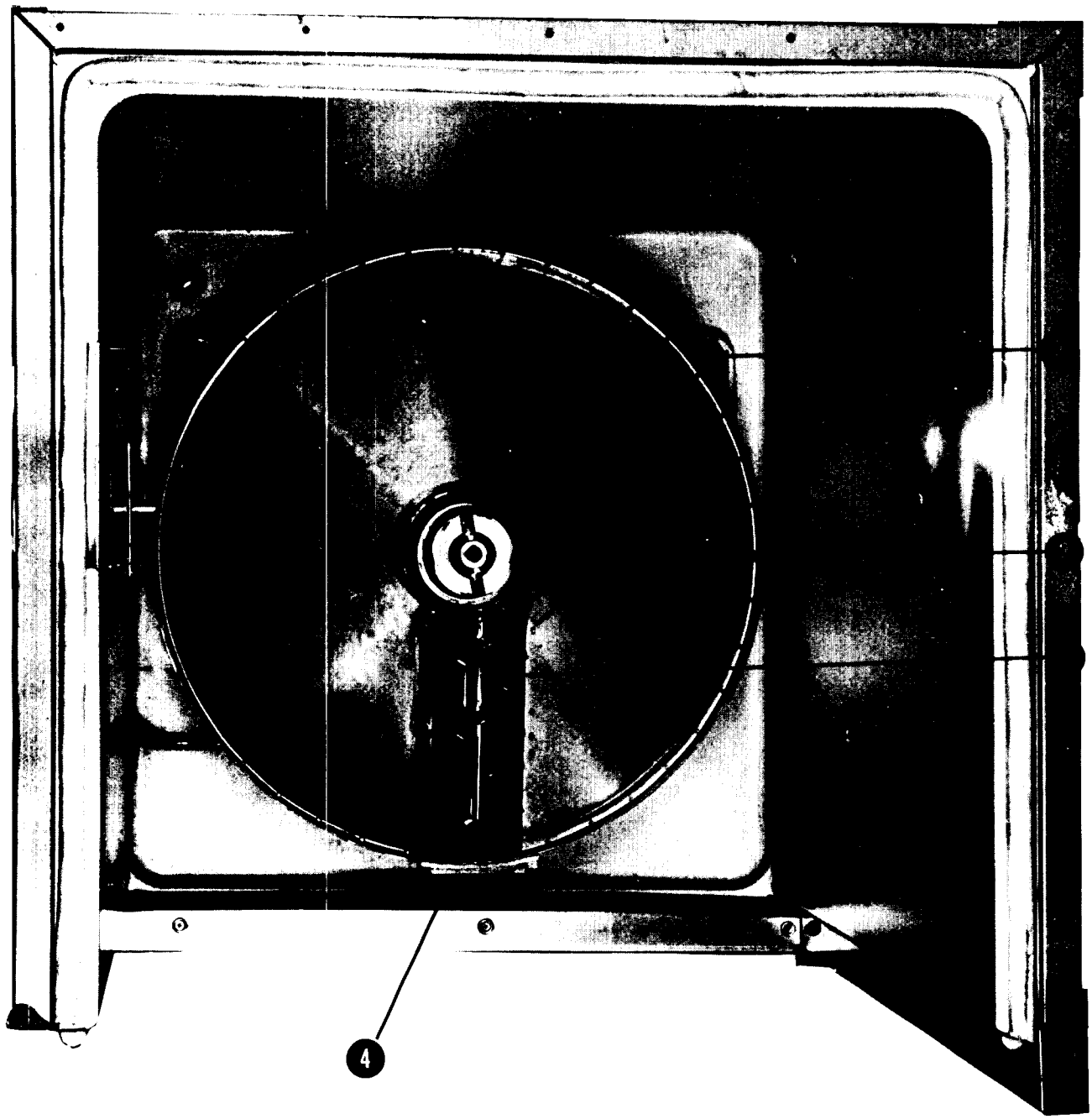

1	A16766	Dispensing Auger
2	A14931	Stationary Bin Bottom
3	3-1235	Wing Nuts
4	A14933	Auger End Plate

UPPER STORAGE COMPARTMENT
TOP VIEW

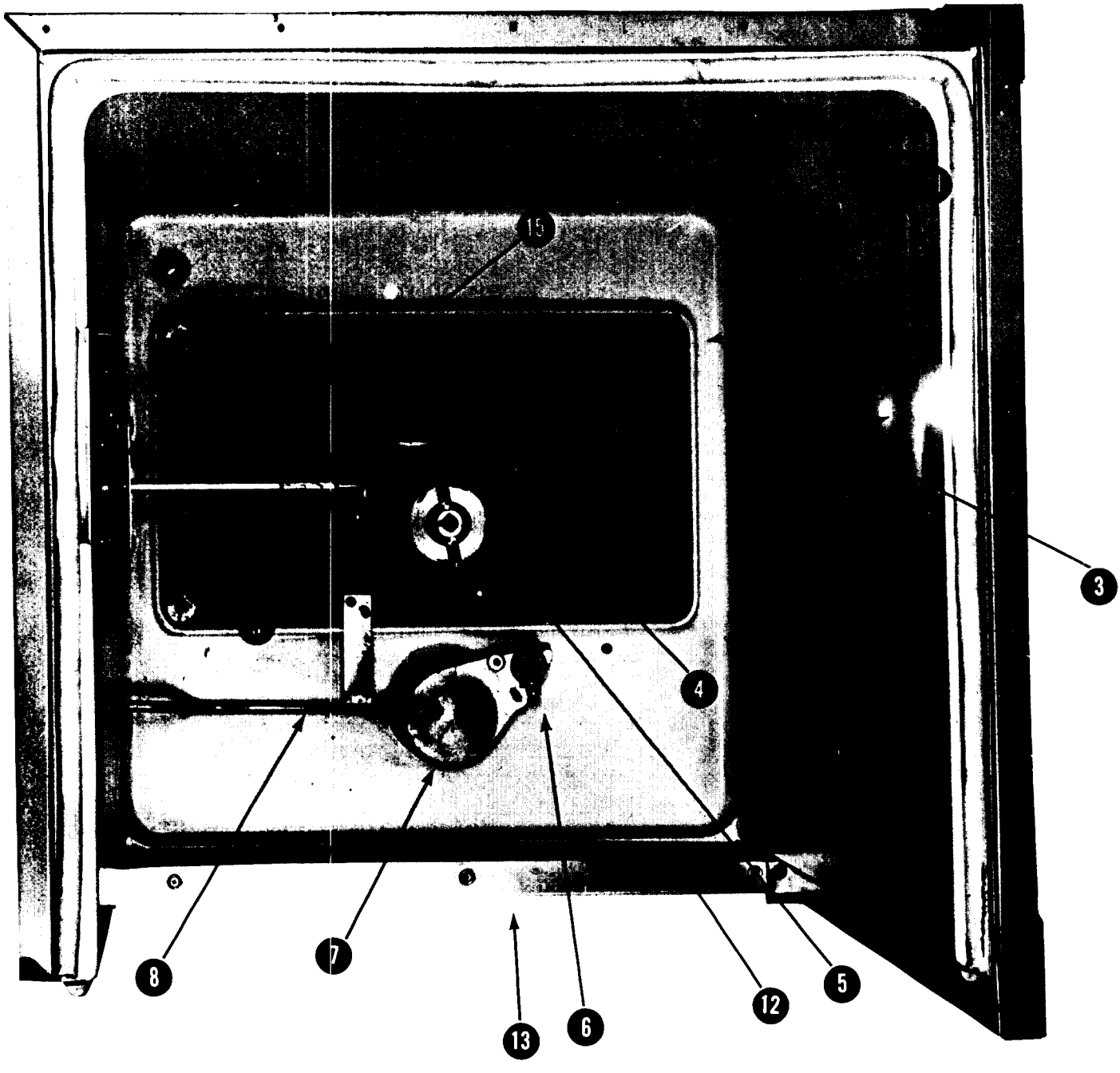

1	2-1404	Bearing
2	A22399	Gear Reducer Mounting Plate
3	A13686	Storage Bin Liner
4	2-1880	Gear Reducer
5	A16841	Mounting Plate Drive Nut
6	A16857	Knurled Pin for Shutter
7	A16772	Ice Spout Shutter
8	A21689	Waterline to Spout
9	A15448	Coupling
10	A22491	Drive Shaft
11	A18329	Top Bin Gasket
12	13-322	Front Bin Gasket
13	A13693	Front S. S. Trim Strip
14	A16841	Plate Nuts
15	A22399	Mounting Plate
	2-1402	Key For 2-1404 Bearing
	A16831	Key for A15448 Coupling
	A14949	Drive Pin for A16841 Mounting Nut

MAIN CONTROL BOX A21762-1

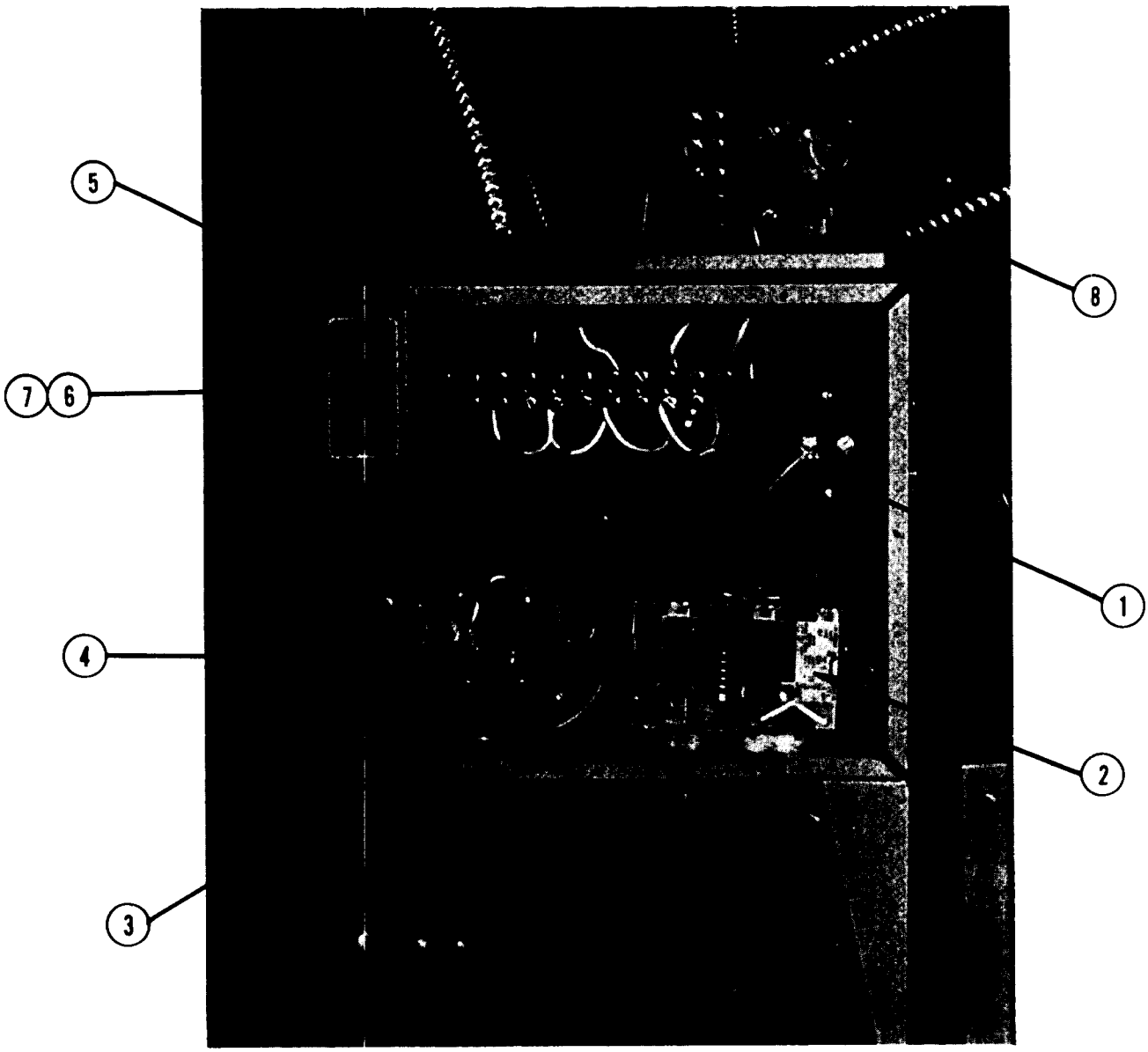

1	12-1615-1	Transformer 115 V to 24 V
2	11-286-1	Pressure Control - Water Cooled Units
2	11-273-1	Lo Pressure Control - Air Cooled Units
3	12-419-1	Dispenser Relay - 24V
4	12-419-1	Freezer Relay - 24V
5	12-813-6	Terminal Block
6	12-1220A	Master Switch
7	12-1221	Overload in Switch (Heaters) *
8	A21233	Timer Module Box - See Page 13

Flaker Drive Motor	*Heater to Use
General Electric	12-1221-27
Westinghouse	12-1221-29
Century	12-1221-25

TIMING CONTROL A21233

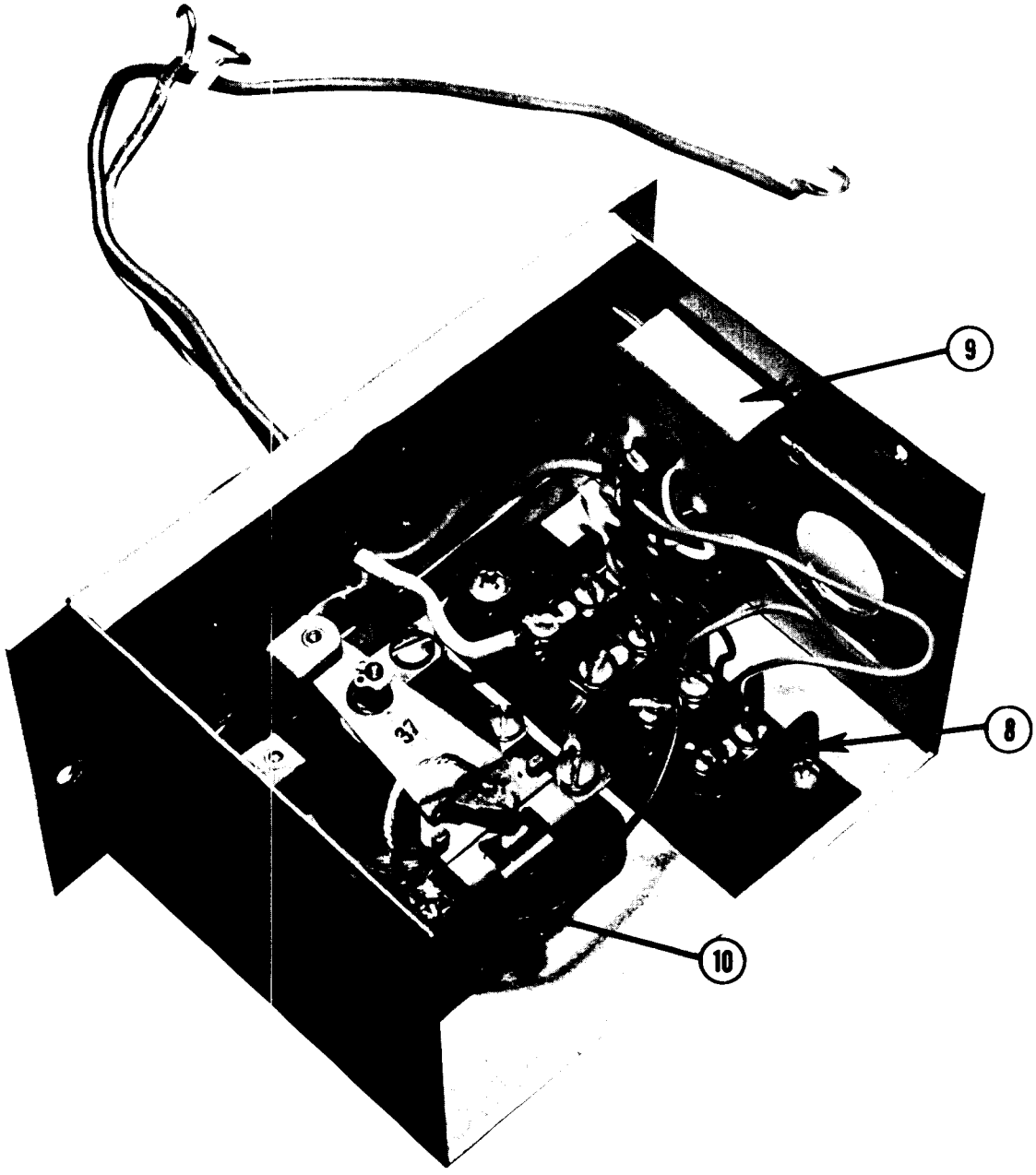

8	12-313-1	Terminal Block
9	12-1559	Timing Module
10	12-1558	Spec. Module Relay (1200 OHM Coil)

PORTION CONTROL BOX

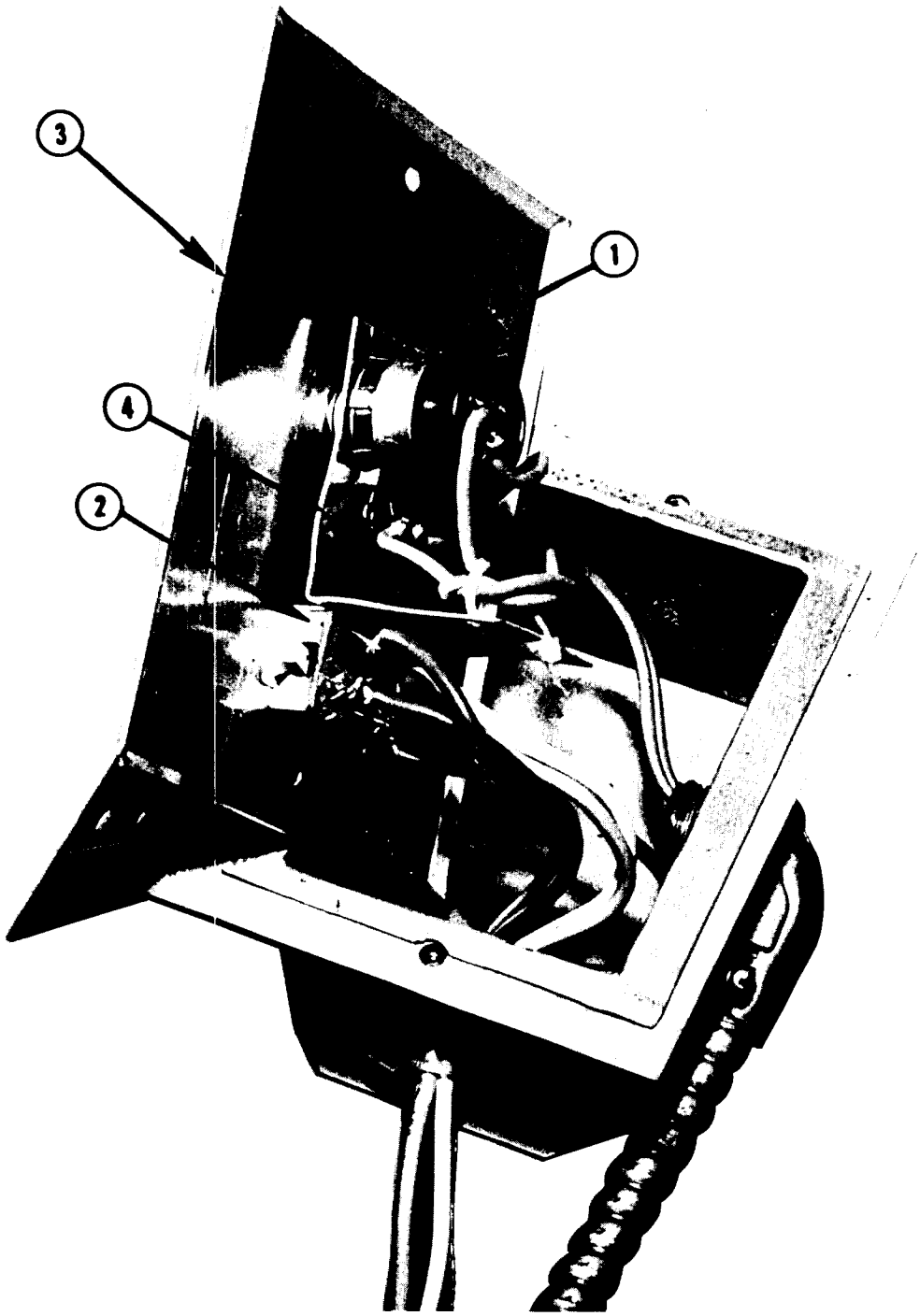

1	12-1557	Potentiometer & Switch
2	12-1616	Water (illuminated) Switch
3	2-1813	Front Plate
4	A21903	Stop Bracket
	2-1813-1	Emblem (Back Plate) Not Shown
	2-1810	Knob For Potentiometer

SHUTTER CONTROL ASSY. A21229

TOP VIEW

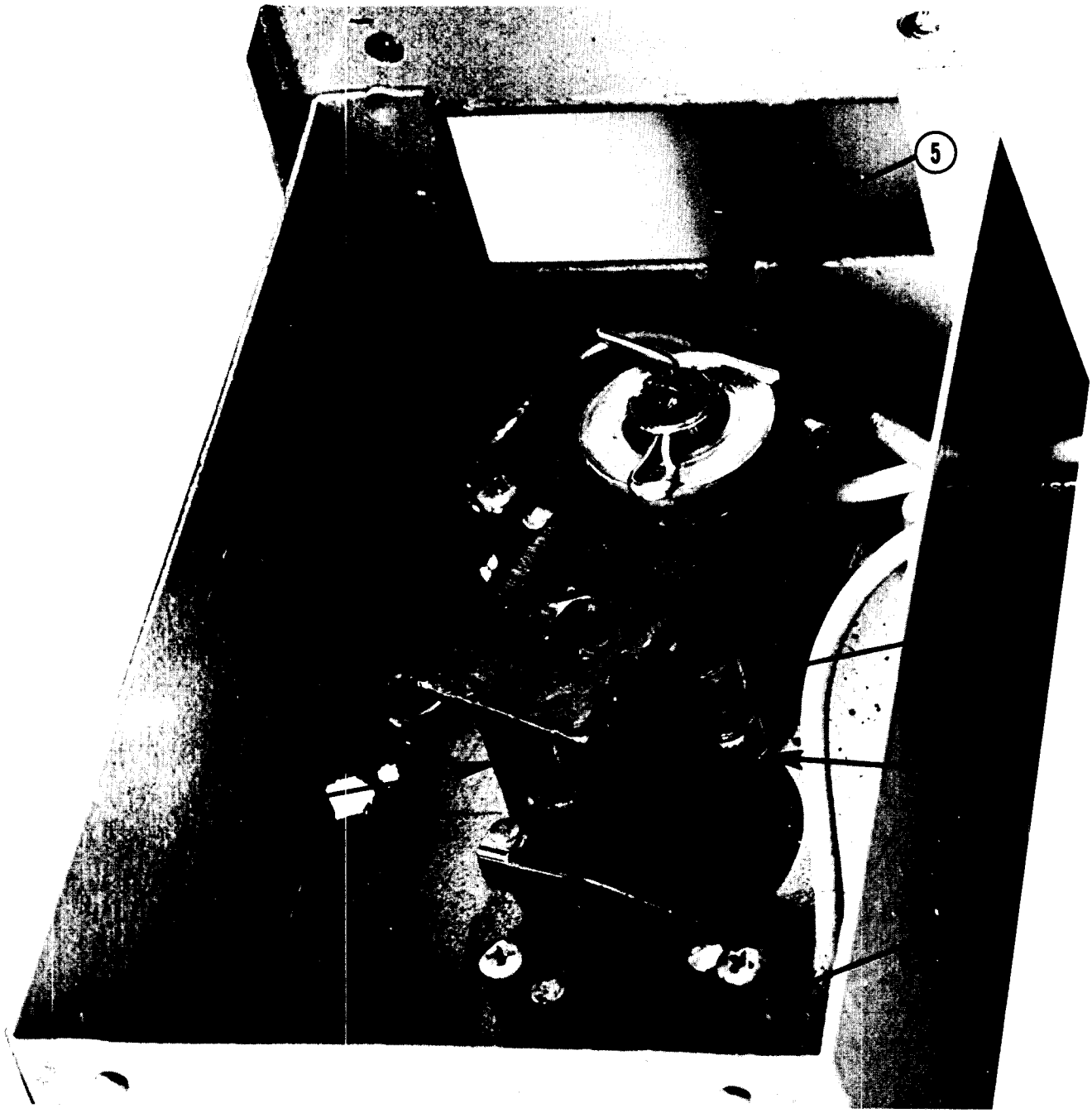

1	12-1614	Cam Switch (closing shutter)
2	12-1614	Cam Switch (opening shutter)
3	12-1614	Cam Switch (start vend)
4	A211227	Cam Assy.
5	A21234	Shutter Actuator Rod

SHUTTER CONTROL ASSY. A21229

BOTTOM VIEW

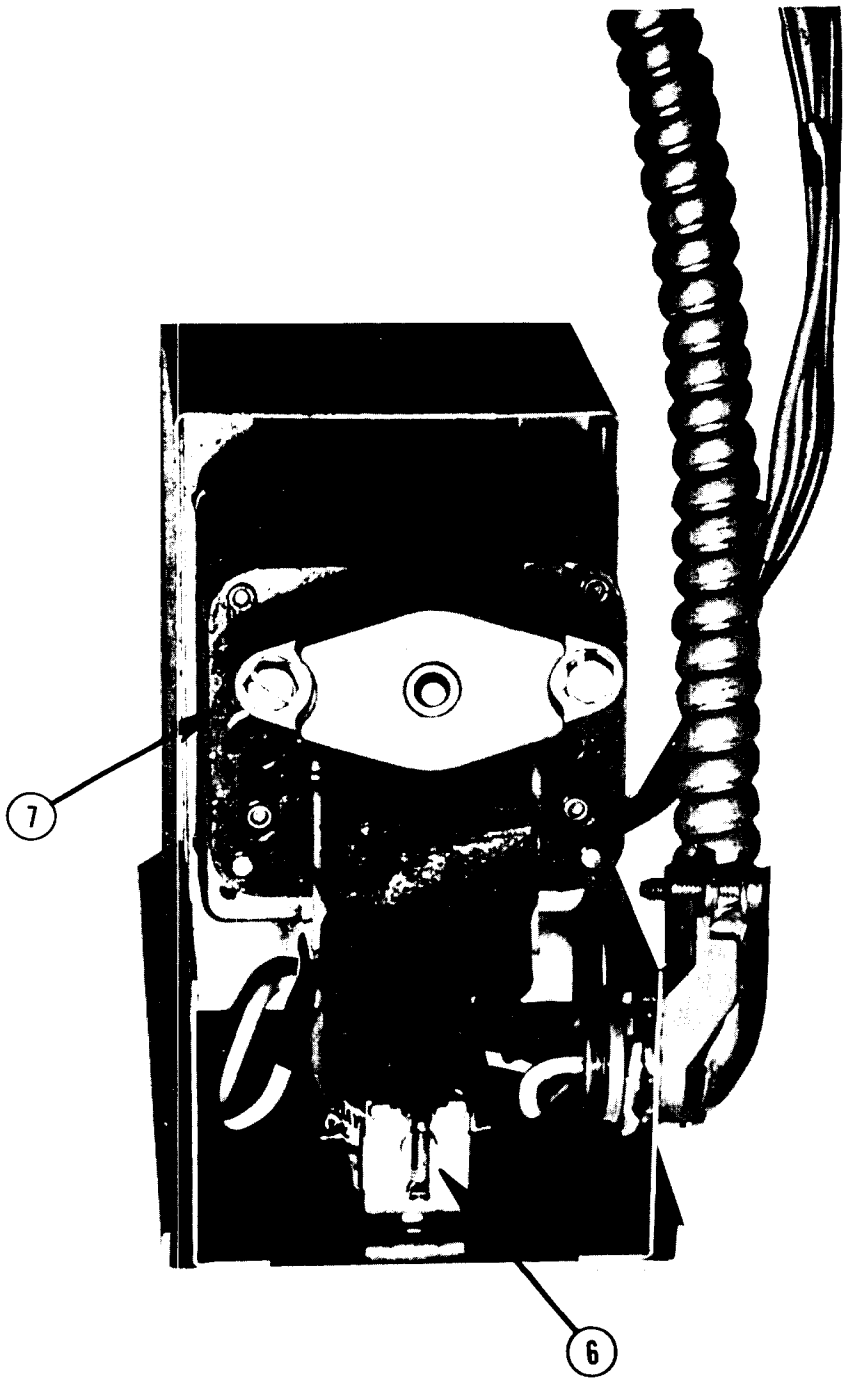

6	12-1467	24 Volt Relay S.P.D.T.
7	12-1613	115 Volt Motor

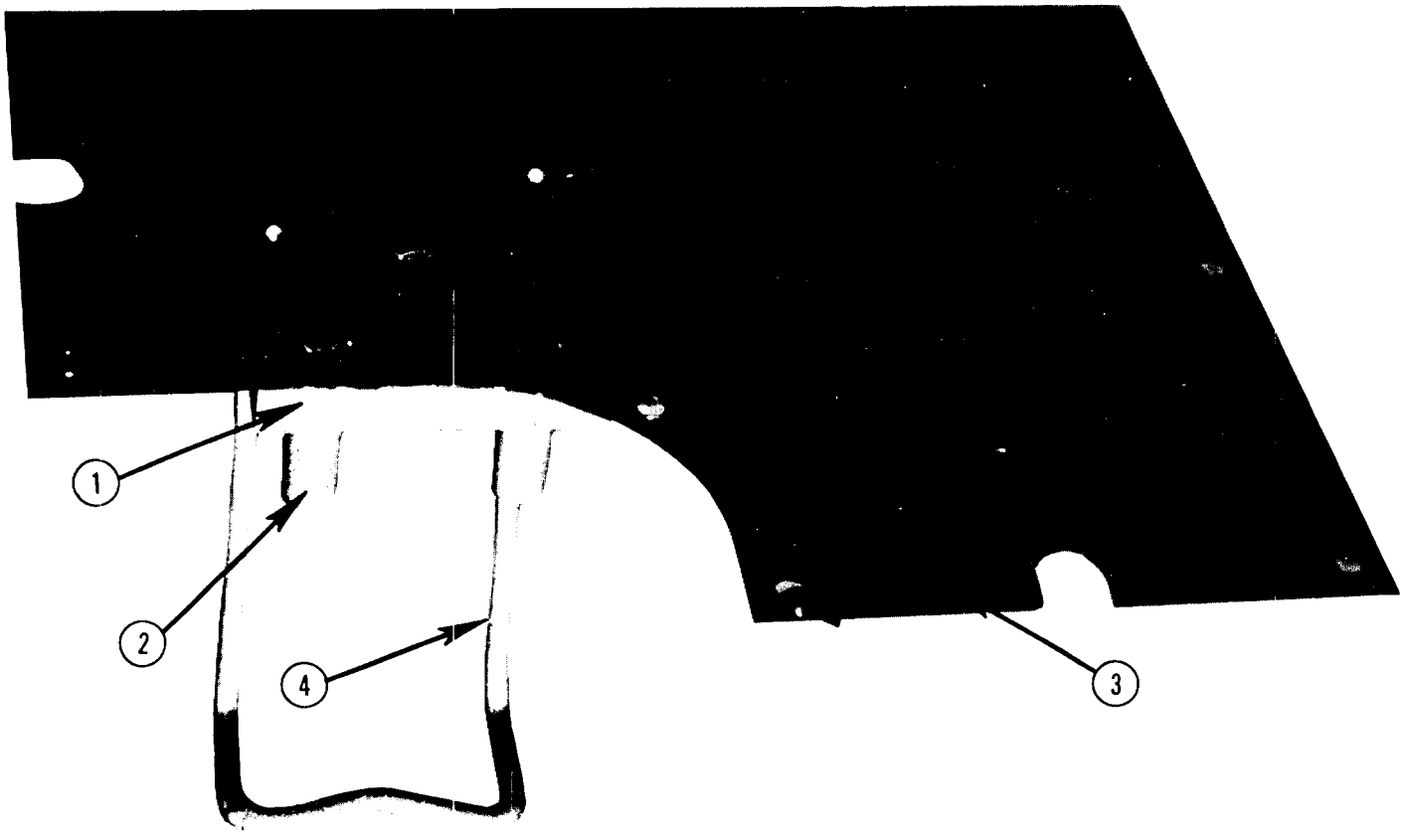

1	A22032	Adapter
2	A22031	Thumb Nuts
3	A21686	Mounting Plate
4	A21682	Actuator
5	12-1570	Switch

SHUTTER ACTUATOR

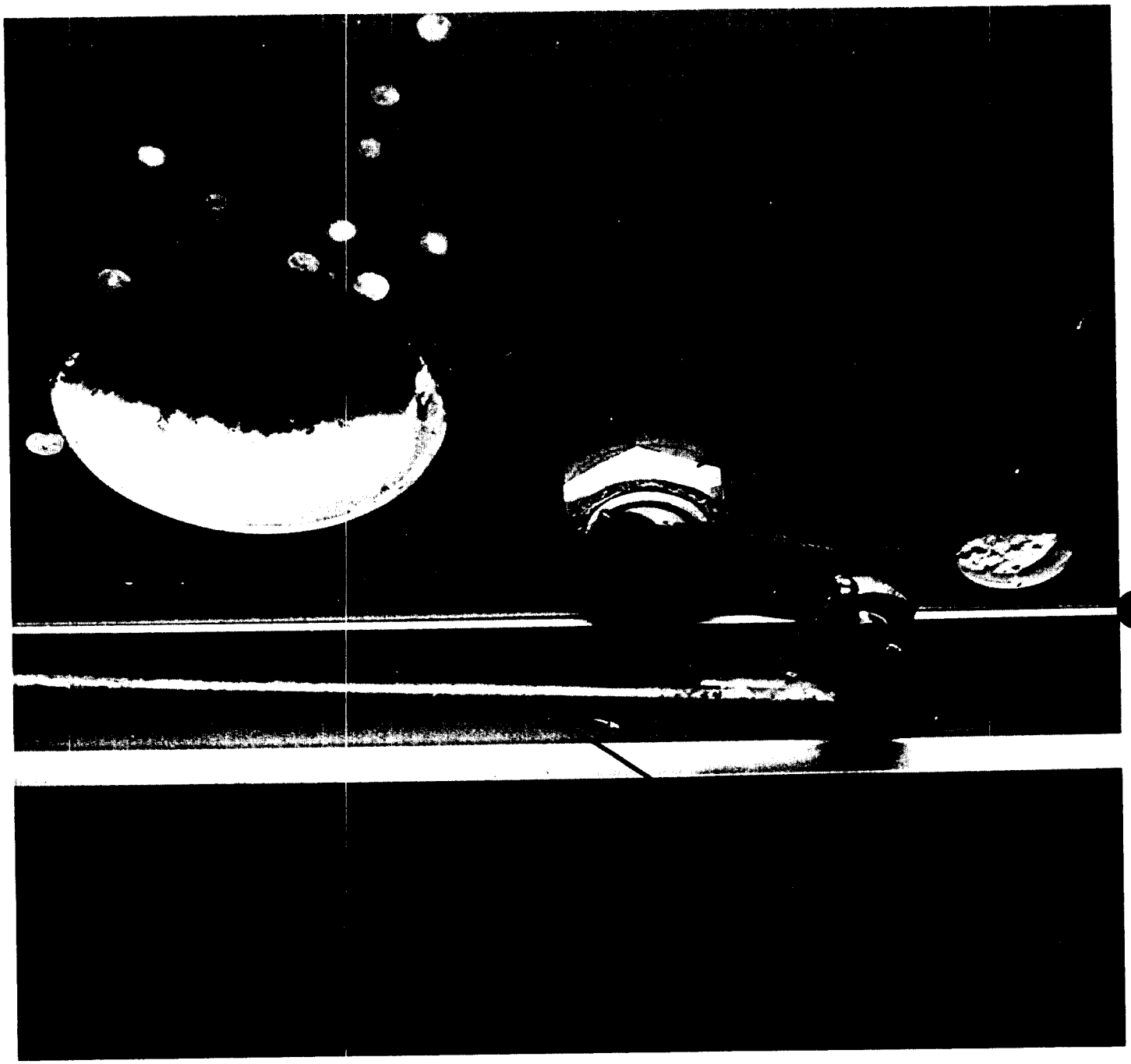

5	A21234	Shutter Actuator Rod
8	A21248	Shutter Actuator Arm
9	A16835	Bearing Nut

LOWER COMPARTMENT

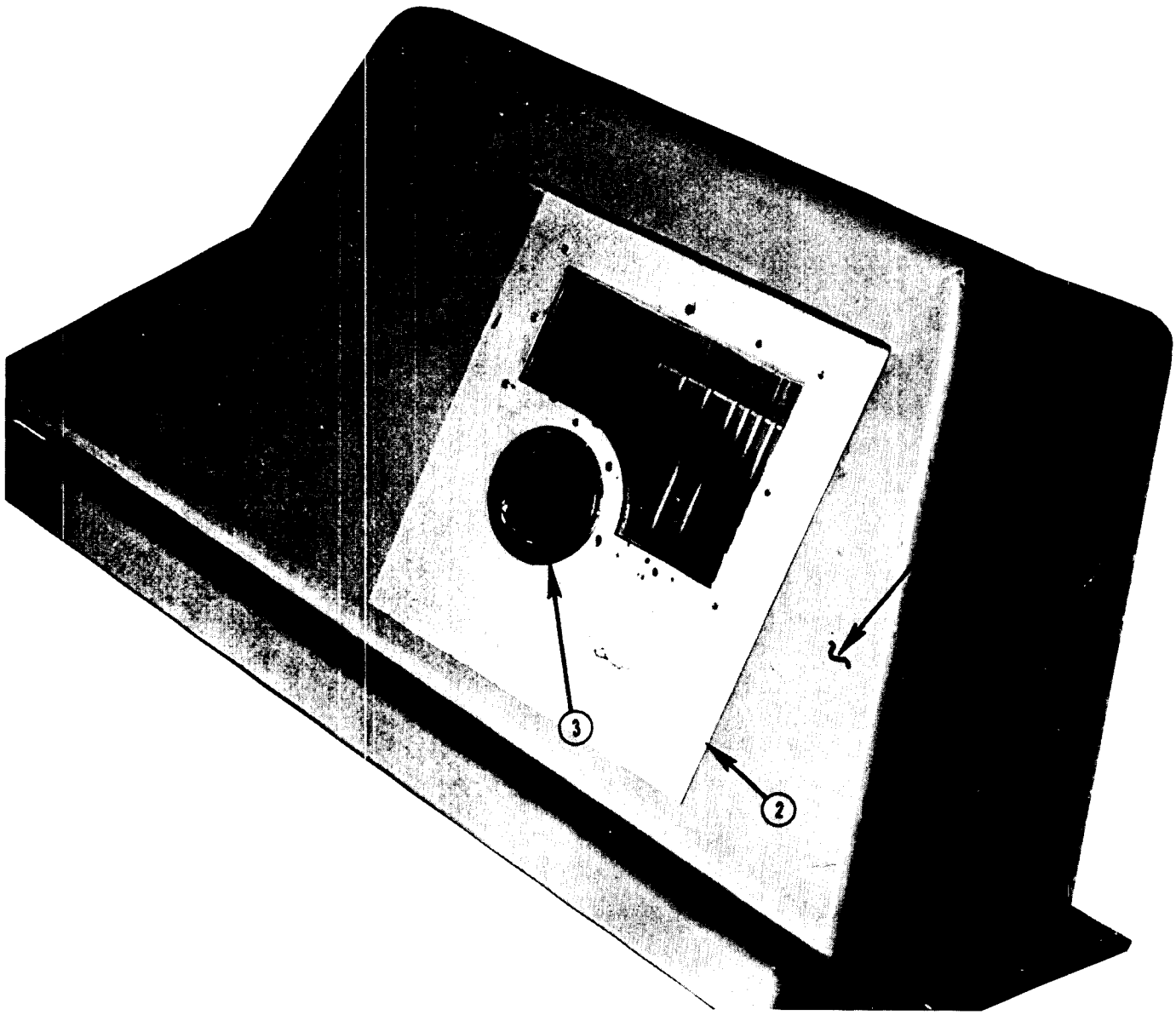

1	2-1814	Lower Compartment
2	A21691	Reinforcing Plate
3	13-703	Spout Grommet

FLAKER DISCHARGE SPOUT A21655

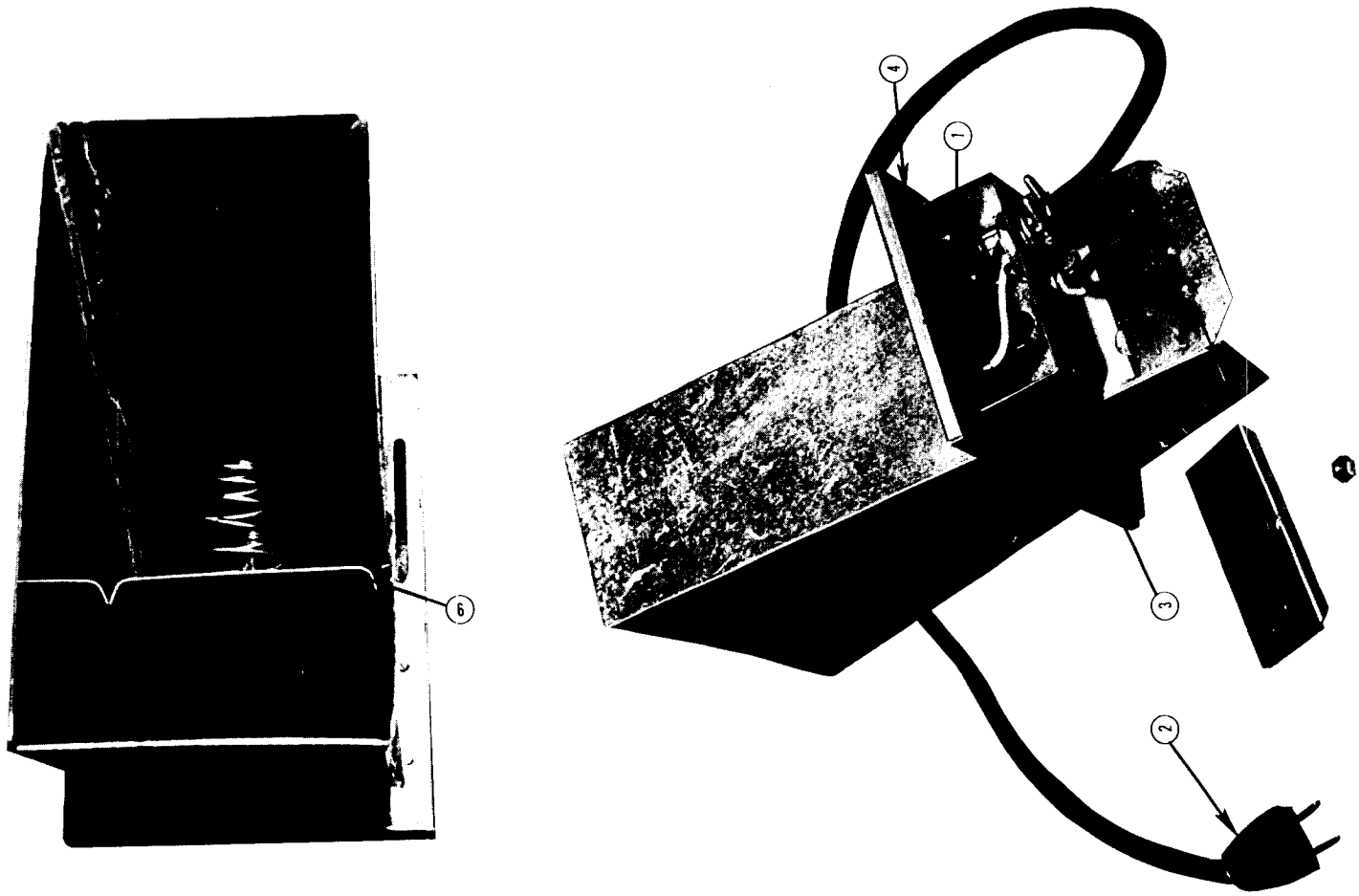

Inside view

1	12-1018	Switch
2	12-1210-1	Cord & Plug
3	13-624-1	Gasket - 2 Required
4	13-624-2	Gasket - 2 Required
5	2-1321	Spring
6	A16354	Pressure Plate

RESERVOIR 2-1793-1

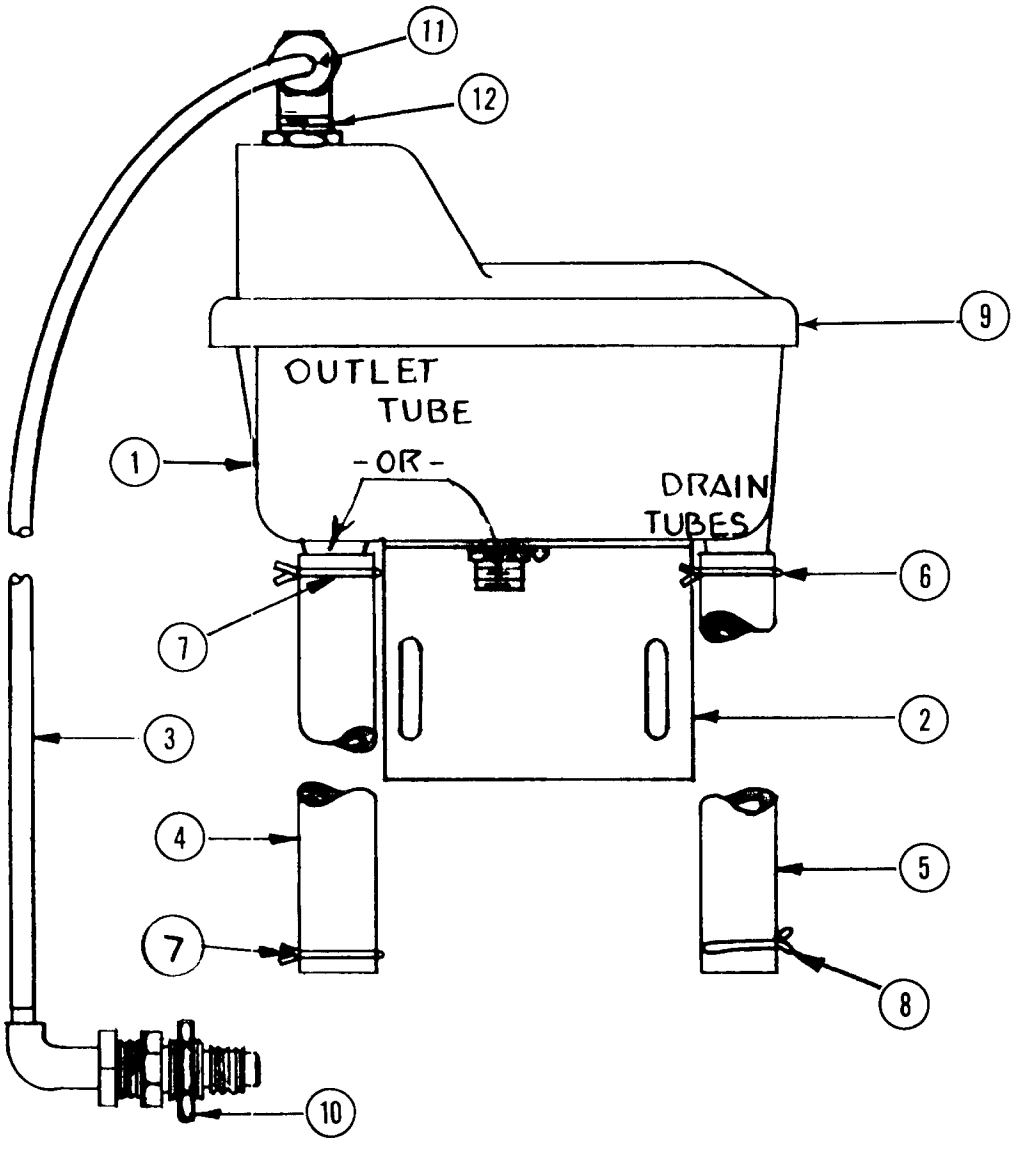

1	2-1793-4	Body
2	A20959	Bracket
3	A21604-26	Inlet Tube
4	A21574-4	Freezer Tube
5	A21002-8	Drain Tube
6	2-535	Clamp
7	2-694	Clamp
8	2-534	Clamp
9	2-1793-3	Cover
10	2-1793-6	"O" Ring
11	2-1793-5	Nut
12	2-1793-2	Valve Assy.

AD-2 ICE MAKER GEAR REDUCER

Thru HB Models

Scotsman Part No. 2-580

Winsmith Part No. (3CT)

ITEM NO.	PART NO.	NAME
1.	2-580-28	Slow-Speed Gasket (2 per unit)
2.	2-580-24	Slow-Speed Oil Seal
3.	2-580-26	Slow-Speed Bearing (2 per unit)
4.	2-580-20	Slow-Speed Gear & Shaft Assembly
5.	2-768-25	Gasket (high-speed) (2 per unit)
6.	2-768-24	High-Speed Bearing (2 per unit)
7.	2-768-20	High-Speed Oil Seal
8.	2-580-21	High-Speed Worm & Shaft (integral)
9.	2-580-27	Slow-Speed Spacer (2 per unit)
10.	2-580	Reducer Complete

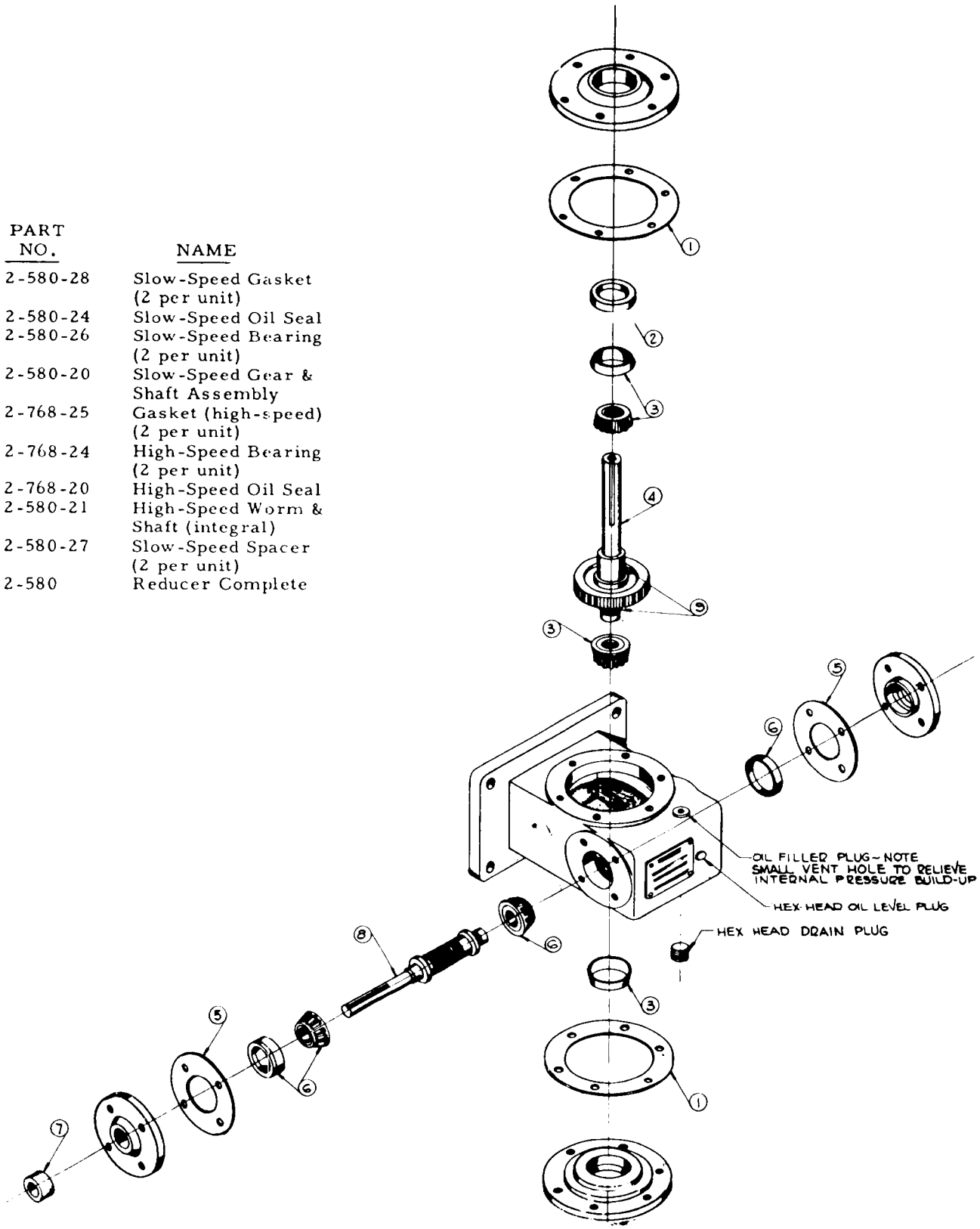

AD2WHB - AD-2HB Freezer

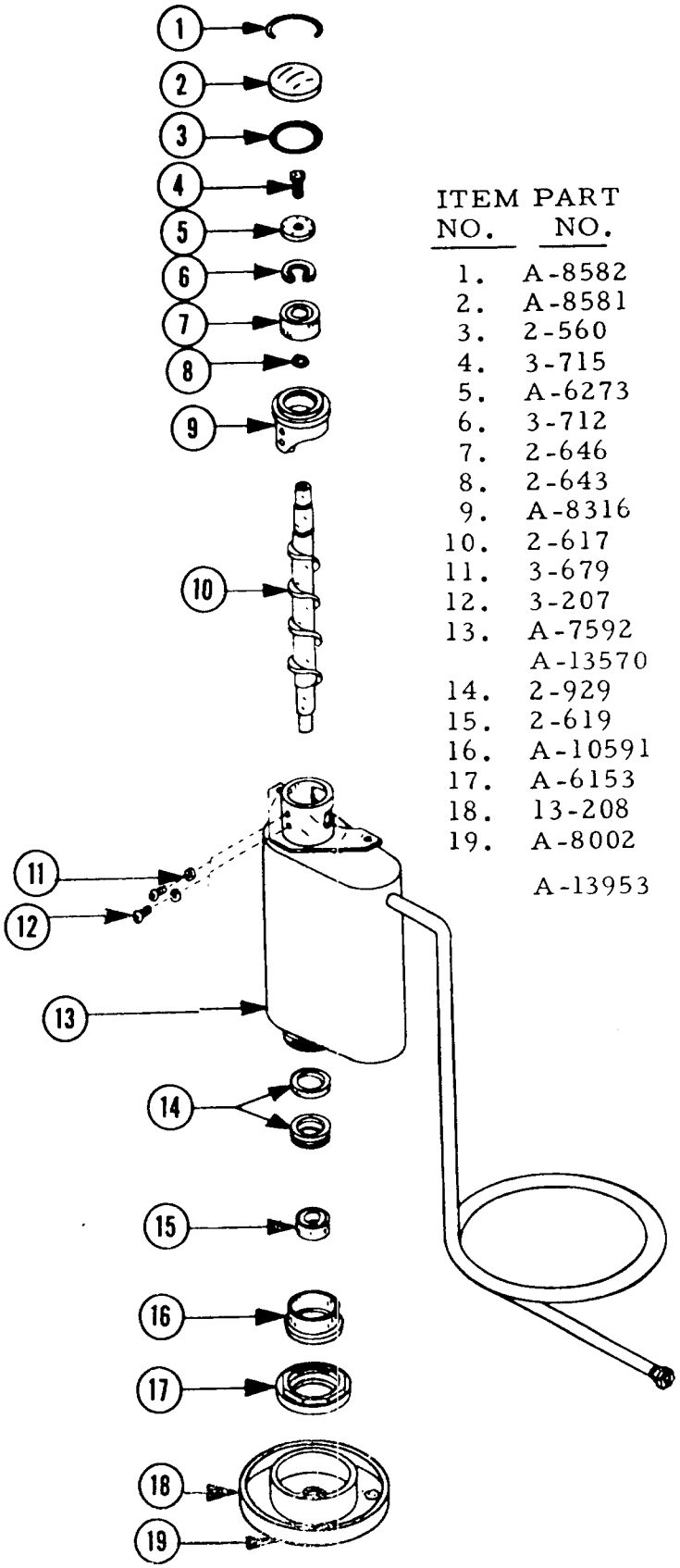

ITEM NO.	PART NO.	NAME
1.	A-8582	Cap Hook
2.	A-8581	Worm Tube Cap
3.	2-560	'O' Ring
4.	3-715	Cap Screw
5.	A-6273	Worm Tube Washer
6.	3-712	Retainer Ring
7.	2-646	Top Bearing
8.	2-643	'O' Ring
9.	A-8316	Ice Breaker
10.	2-617	Auger
11.	3-679	Lockwashers (2)
12.	3-207	Screws (2)
13.	A-7592	Freezing Chamber, Suction
	A-13570	Line, Cap Tube
14.	2-929	Water Seal
15.	2-619	Bottom Bearing
16.	A-10591	Bearing Retainer
17.	A-6153	Worm Tube Nut
18.	13-208	Drip Pan
19.	A-8002	Outlet Tube
	A-13953	Freezer Complete

CONDENSING UNIT
WATER COOLED

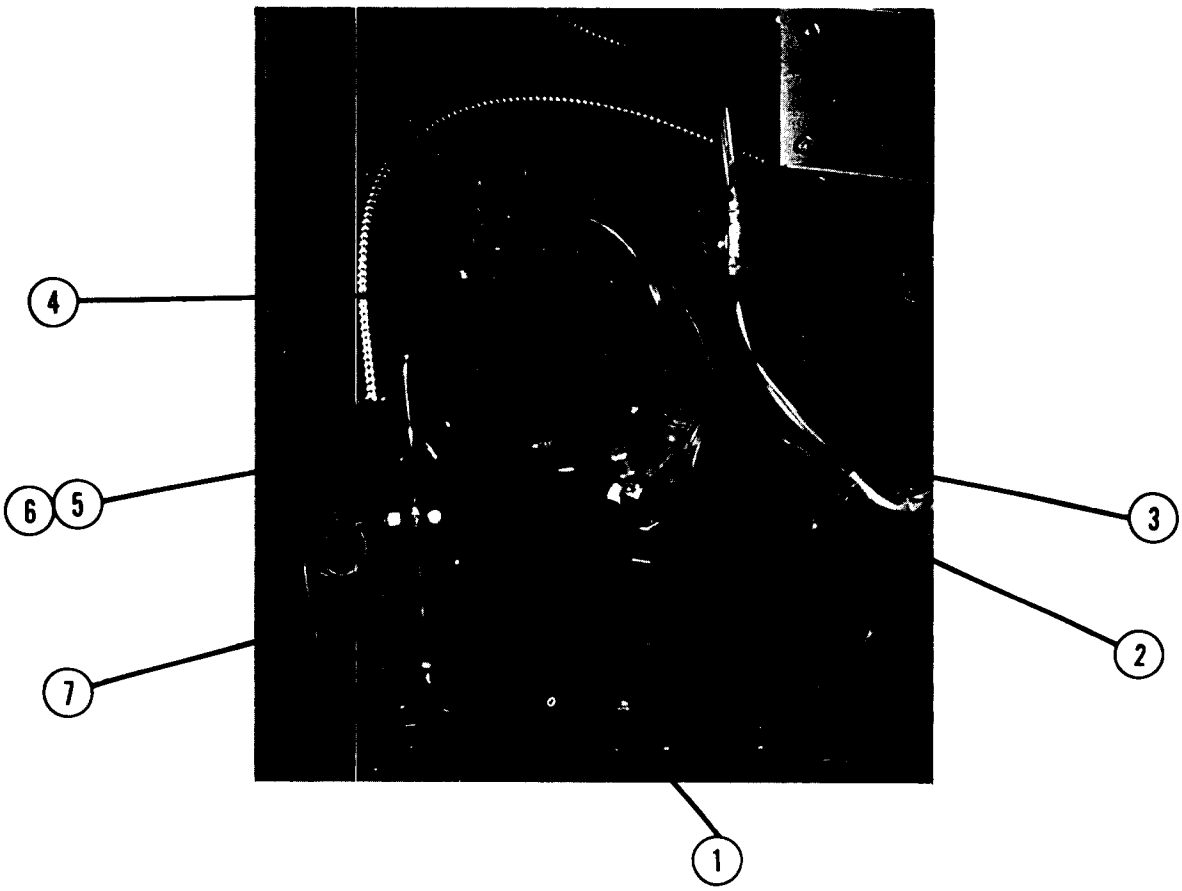

1	18-2400-1	Compressor - 115V - 60Hz - 1Ph*
2	2-1572-2	Drier
3	A21605	Water Regulator
4	18-699-5	Condenser
5	18-2400-25	Overload
6	18-2410	Relay
7	18-2420	Capacitor

* Other Voltage, Hertz & Phase Available

CONDENSING UNIT
AIR COOLED



1	18-2400-1	Compressor - 115V - 60Hz - 1Ph*
2	2-1572-2	Drier
3	12-1576-1	Fan Motor
4	18-363	Fan Blade
5	18-334	Condenser
6	18-2400-25	Overload
7	18-2410	Relay
8	18-2420	Capacitor

* Other Voltage, Hertz & Phase Available

CABINET PANELS AD-2HB

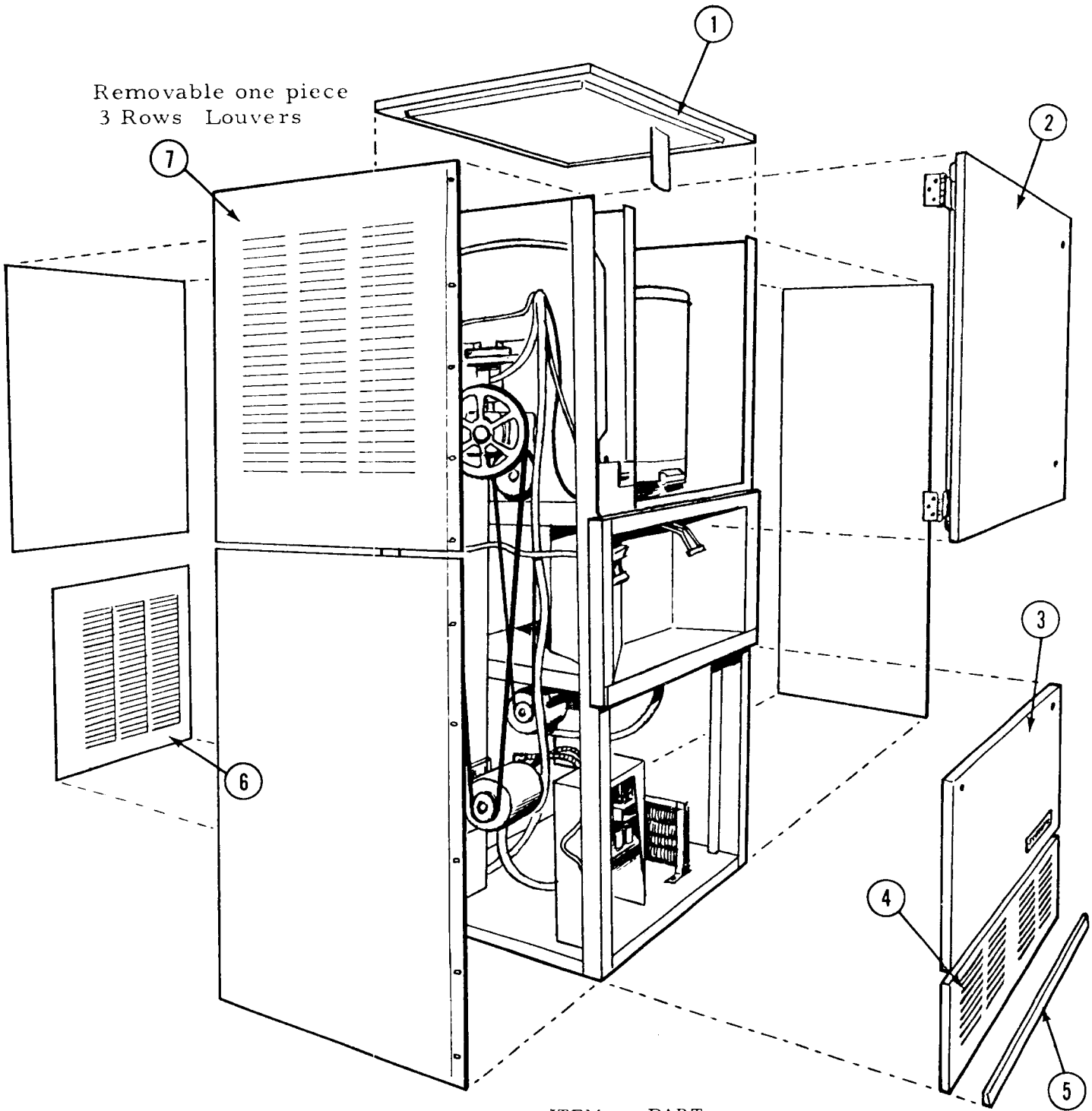

ITEM NO.	PART NO.	NAME
1.	A-13581	Top Assembly
2.	A-14910	Upper Door Assembly
3.	A-14913	Lower Door
4.	A-14992	Lower Louvered Panel
5.	15-448	Trim Strip
6.	A-18845	Rear Service Door
7.	A-18831	Left Side Louvered Panel

Add a Dash -1 to above numbers for stainless steel models

WIRING DIAGRAM

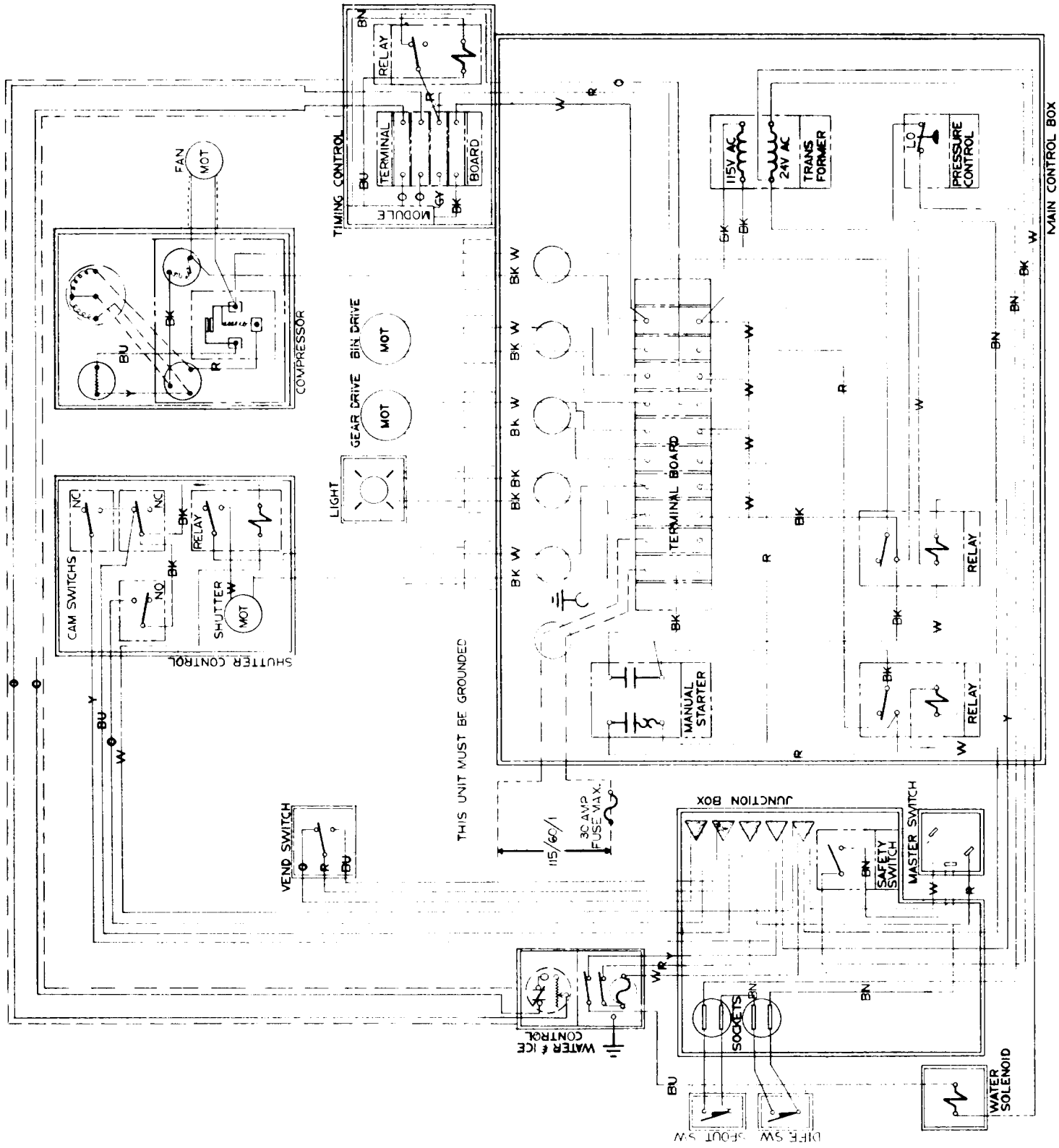

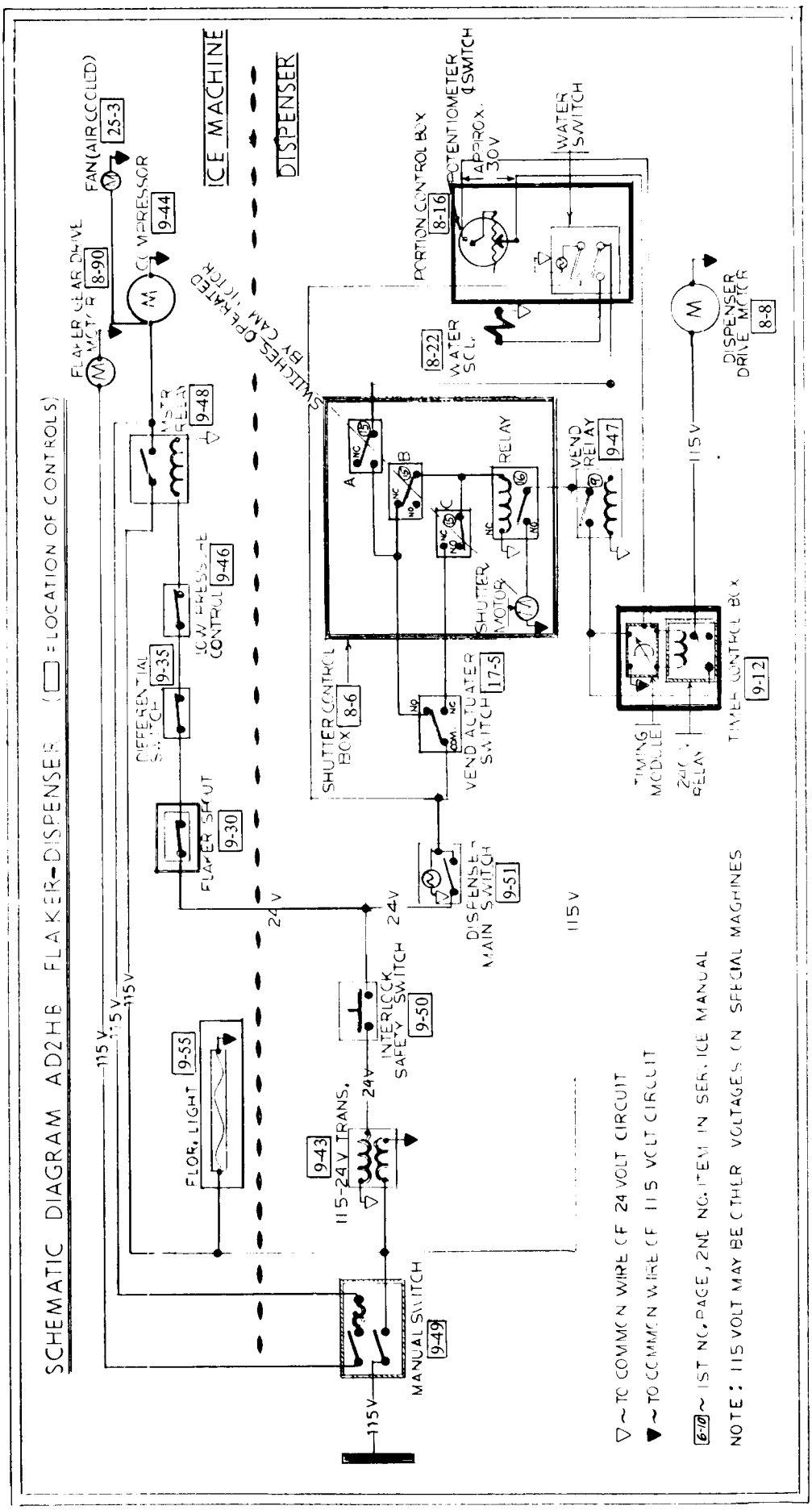
SCHEMATIC DIAGRAM AD2HB FLAKER-DISPENSER
(□ = LOCATION OF CONTROLS)
ICE MACHINE
DISPENSER
SWITCHES OPERATED BY CAM ACTION
FLAKER CLEAR DRIVE MOTOR 8-90
FAN (AIR COOLED) 25-3
COMPRESSOR 9-44
MASTER RELAY 9-48
LOW PRESSURE CONTROL 9-46
DIFFERENTIAL SWITCH 9-35
FLAKER SPOUT 9-30
FLOR. LIGHT 9-55
115-24 V TRANS. 9-43
INTERLOCK SAFETY SWITCH 9-50
MANUAL SWITCH 9-49
SHUTTER CONTROL BOX 8-6
VEND ACTUATOR SWITCH 17-5
SHUTTER MOTOR
RELAY
VEND RELAY 9-47
DISPENSE MAIN SWITCH 9-51
PORTION CONTROL BOX 8-16
POTENTIOMETER & SWITCH
APPROX. 30 V
WATER SWITCH
8-22 WATER SOL.
DISPENSER DRIVE MOTOR 8-8
TIMER CONTROL BOX 9-12
TIMING MODULE
24V RELAY
115 V
24 V
▽ ~ TO COMMON WIRE OF 24 VOLT CIRCUIT
▼ ~ TO COMMON WIRE OF 115 VOLT CIRCUIT
6-10 ~ 1ST NO. PAGE, 2ND NO. ITEM IN SERVICE MANUAL
NOTE: 115 VOLT MAY BE OTHER VOLTAGES ON SPECIAL MACHINES

SERVICE INFORMATION

General:

1. The operation of the ice maker is independent of the dispensing mechanism.

2. The voltage to all switches of the control circuit is 24 volts.

3. All high voltage (115V) conductors are in conduit.

4. Control boxes contain both 24 and 115 volt circuits.

5. The interlock switch (#50 Page 9) is held on by the top storage compartment door. When the door is opened neither the ice maker or dispenser will operate.

   CAUTION: This does not disconnect the power to the machine but merely opens the 24V control circuit.

6. Cleaning instructions are on the inside of the top compartment storage door.

7. The machine must be level.

8. Always maintain a good ground from the cabinet frame to a solid earth ground or metal cold water pipe.

INFORMATION FOR THE SERVICEMAN

ICE FLAKER:

Refer to Page 6 for operation

1. Sequence operation of controls page 28 will indicate that the Differential Plate switch (#35 page 9) located in the cabinet top and the Flaker ice spout switch (#30 page 9) are connected in series. Either switch will stop the machine and both must be on for the machine to operate.

2. Also in series with these two switches is the pressure control (#46 page 9). On the water cooled models this is a Hi-lo pressure control that will cut out the compressor on abnormally high head pressure or low back pressure.

   The low side comes set at 5 PSI and the high side at 180 PSI.

   The air cooled models contain only a low pressure control also set at 5 PSI:

   If either control cuts out they must be reset manually before the condensing unit will again operate.

3. The flaker control relay (#4 page 12) has a 24 volt coil with 115 volts through the contacts to operate both the condensing unit and the flaker gear drive motor.

4. The flaker drive motor is protected by a thermo protector (heater) located in the master switch (#7 page 12)

5. This drive motor is a capacitor start induction motor turning counter clockwise. Always check replacements for the proper rotation.

6. The reservoir water level should be .70 inches below the bottom of the cast metal freezer discharge spout. (This is the location on the freezer that the sheet metal spout fits around.)

7. If water level is too high the ice will be wet and mushy where as too low a water level usually causes the auger to squeel and attempt to freeze on the cylinder wall. Serious damage can be caused by operating the freezer with the water supply turned off.

8. The head pressure on the water cooled models should be set at 135 P.S.I. by adjusting the water regulator (#3 page 24). Air cooled models will operate at 130 and up to 180 P.S.I. with a high ambient of 105° F. and 80° F. water.

9. The frost line will extend 24 inches out of the accumulator when properly charged and the suction pressure will range from 12 to 17 P.S.I. with 50° inlet water.

10. The unit should be charged with 30 oz.of Freon R-12. The minimum charge would be 28 oz.and maximum 33.

SERVICEMAN'S INFORMATION

ICE DISPENSER:

(Refer to page 6 for the operation)

1. See page 28 for sequence of operation.

2. Ice cannot be dispensed until the spout shutter (#7 page 11) is open. Depressing the vend switch operates the shutter motor to pull the shutter open.

3. When the shutter motor (#7 page 16) opens the shutter the cam (#4 page 15) also closes switch (#3 page 15) to energize the vending relay to start the vend.

4. As shown on page 34, switches B & C control the motor to open and close the shutter. Switch A controls power to vend circuit.

5. Refer to page 28, when the vend (dispensing) relay is energized 115 volts power will be directed through the contacts for the timing module and to the timing module relay contacts which drive the dispensing motor (#8 page 8) to turn the dispensing bin.

6. The timing module will load up and fire in from .3 to 2 seconds depending on the setting of the potentiometer in the portion control box.

7. When the module fires it energizes the coil of the timing module relay to open the contacts and stop the dispensing motor.

8. The water solenoid will remain energized as long as cam switch A is closed and the water switch is in the illuminated position. Releasing the actuator lever opens switch A.

8. If the water switch is on (illuminated) the water solenoid will remain energized as long as cam switch A is closed. This of course closes to stop the vend as soon as the vend actvator (#4 page 17) is released.

9. When the portion control is set at extreme clockwise position to continuous flow of ice the timer circuit is opened by the switch on the potentiometer and the timing module has no control of the dispensing motor. It will continue to run as long as the glass actuator is held depressed.

SIMULATED ICE SHUTTER CONTROL

TO OPEN & CLOSE THE ICE DISCHARGE SPOUT

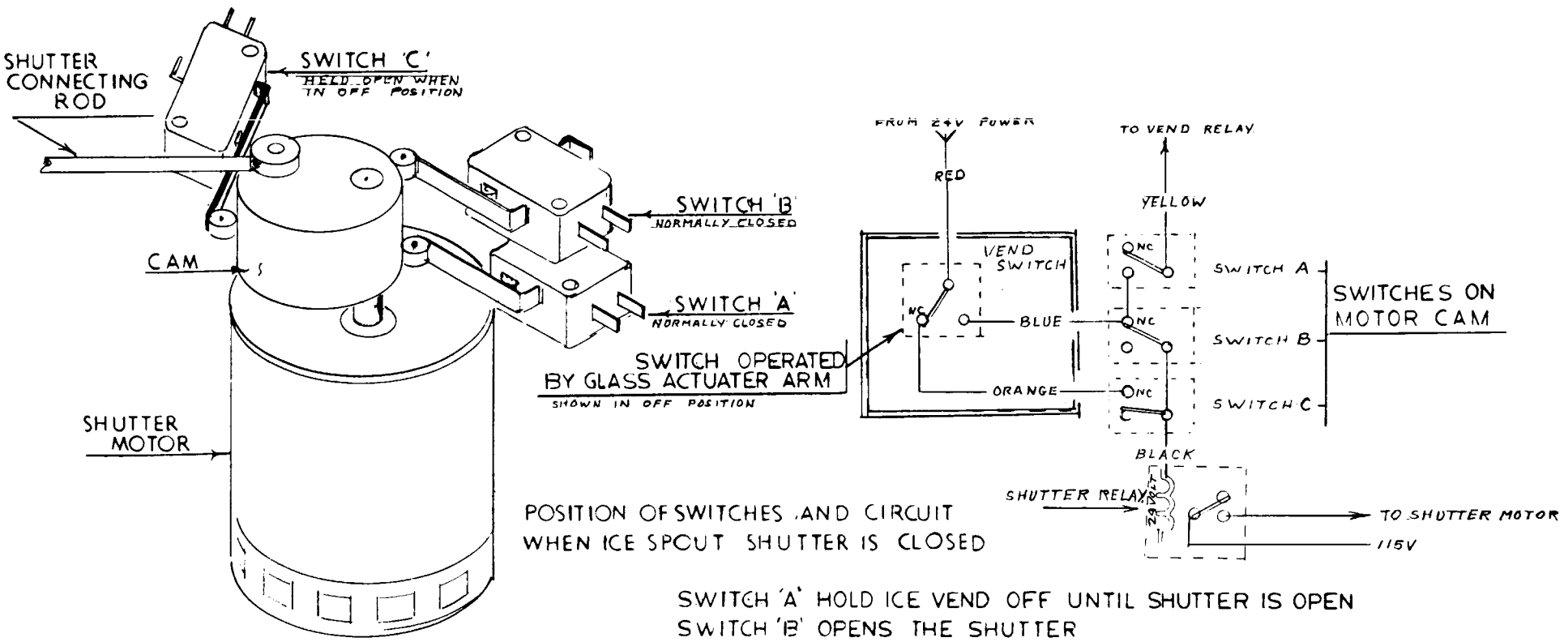

POSITION OF SWITCHES AND CIRCUIT
WHEN ICE SPOUT SHUTTER IS CLOSED

SWITCH 'A' HOLD ICE VEND OFF UNTIL SHUTTER IS OPEN
SWITCH 'B' OPENS THE SHUTTER
SWITCH 'C' CLOSES THE SHUTTER

SERVICE ANALYSIS CHART

ICE MAKER SECTION

COMPLAINT	POSSIBLE CAUSE	CORRECTION
Excessive noise or chattering (cont.)	Low ambient temperature.	Set head pressure and resultant back pressure higher, or move to heated space.
	Gear reducer low on oil charge.	Check oil level and refill to oil level plug.
	Gear reducer loose on frame.	Tighten.
	Pulleys worn or loose on shaft.	Repair or replace.
	Belt cracked or worn.	Replace belt.
	Drive motor end-play or worn bearings.	Repair or replace.
Machine continues to run with full storage bin.	Storage bin controls are defective	Replace.
Squeal in freezer	Too hard ice	Change pulley on motor to larger size 3 1/4" pulley Increase water level in reservoir

SERVICE ANALYSIS CHART
ICE MAKER SECTION

COMPLAINT	POSSIBLE CAUSE	CORRECTION
Low ice production	Loss of refrigerant. Under or over-charge of refrigerant.	Check and recharge with proper amount of refrigerant.
	Drive motor weak.	Replace.
	Dirty or plugged condenser	Clean condenser.
	Low water level in water reservoir.	See para. 6 page 30
	Overcharge of oil in system	Check at oil hole and lower to 1 1/2 inch from top of hole or 1/3 full on crankcase sight glass.
	Partial restriction in capillary tube or drier.	Moisture in system. Overcharge of oil in system. Remove charge by blowing back through cap tube. Replace and recharge.
	Inlet water strainer partially plugged.	Remove screen and clean.
	Corroded or strained worm shaft due to water condition.	Remove worm shaft and clean, or use Ice Machine Cleaner. See Maintenance Section.
	Slipping drive belt	Adjust belt tension or replace worn belt.
	Defective gear reducer.	Check reducer driven shaft to freezer shaft. Should rotate at 8 RPM. Replace if worn.
Machine runs but makes no ice	Loss or undercharge of refrigerant.	Check for leaks and recharge.
	Drive motor, belts, gear reducer on drive coupling inoperative.	Gear reducer and worm turn at 8 RPM. Check. Repair or replace.
	Pulleys loose on shafts	Tighten, repair or replace.
	Water inlet to freezer froze shut. Caused by stoppage of water supply to the machine	Remove side panel and leave freezer thaw - at least 2 hours

SERVICE ANALYSIS CHART
ICE MAKER SECTION

COMPLAINT	POSSIBLE CAUSE	CORRECTION
Machine runs but makes no ice (cont.)	Water not entering freezing chamber.	Plugged strainer or supply line. Check and clean. Air lock in gravity feed line. Check and remove air lock.
	Moisture in system.	Check and remove charge and drier. Replace and recharge.
	Water seal leaking.	Replace seal. See section on maintenance.
	Defective manual overload switch.	Replace switch.
Water leaks	Defective water seal	Replace. See section on maintenance.
	Gravity feed line leaking	Check hose clamps.
	'O' ring in spout casting leaking.	Remove spout casting and install new 'O' ring.
	Storage bin drain and connecting fitting.	Check and repair. Tighten fitting --replace 'O' ring.
	Water level in reservoir too high	Adjust - See para 6, page 30
Excessive noise or chattering.	Scale or mineral build-up on inside of freezer.	Clean with Ice Machine Cleaner. See section on maintenance.
	Mineral deposit or scale on auger and cylinder walls.	Ice sticking and jamming inside. Clean with Ice Machine Cleaner or remove auger and polish.
	Low suction pressure.	Raise suction pressure. Adjust head pressure control to recommended setting or balance refrigerant charge.
	Intermittent water supply.	Check and clean water strainer. Check gravity feed line for air lock. Remove air lock.
	Water level in reservoir too low.	Adjust - See para. 6, page 30
	Mis-aligned coupling or worn insert.	Repair or replace.

SERVICE ANALYSIS CHART
(DISPENSER SECTION)

COMPLAINT	POSSIBLE CAUSE	CORRECTION
When actuating arm is pushed shutter does not open.	Actuator not depressing switch plunger	Check switch (#5 page 17) must be adjusted down to activate with lever #4.
	Loose thumb screws	Tighten screws (#2 page 17)
	Defective switch	Replace switch (#5 page 17)
	Shutter (#7 page 11) rubbing on plastic bin liner.	Remove shutter and install washer on shaft to raise shutter.
	Shaft on actuator arm #8 page 18 to tight in bushing.	Remove and polish shaft. This can be removed by lowering mounting plate (#3 page 17)
	Actuator rod (#5 page 18) bent	Replace rod or check set screw on motor cam.
	Cam switch(#1 page 15) out of adustment	Adjust - see page 34
	Cam switch (#1 page 15) defective	Replace switch
	Contracts on relay (#6 page 16) bent or relay defective.	Replace relay
	Motor #7 page 16 defective	Replace motor.
When actuating arm is pushed shutter opens but machine will not vend.	Switch (#3 page 15) out of adjustment	Adjust - see page 34
	Switch (#3) defective will not energize vend rela relay (#3 page 12)	Replace switch.
Vends only continuous	If leads to potentiometer No.1 on Page 14 are grounded the module #9, page 13 will burn out.	Check Potentiometer leads for ground before replacing module.

COMPLAINT	POSSIBLE CAUSE	CORRECTION
Vend relay energized but machine will not dispense ice.	Contacts on relay bent or wires to relay loose.	Replace relay or tighten connections.
	Contacts on module relay (#10 page 13) defective	Replace relay
	Contacts on relay remain open.	Replace timing module (#9 page 13)
	Dispenser motor (#8 page 8) defective.	Repair or replace this motor has an internal thermo overload - automatic reset.
	Belt broken or slipping	Replace or tighten.
	Pulley loose on motor or gear unit shaft (#4 page 8)	
	Shaft coupling slipping (#9 page 11)	Replace Key.
	Pin in drive nut (#5 page 11) sheared	Replace pin.
	Rear unit (#4 page 11) defective	Replace gear unit.
Portion control will not work. Runs continuous when actuatoris held on	Module (#9 page 13) defective	Replace module
	Module relay (#10 page 13) defective	Replace relay
	Potentiometer switch or Potentiometer defective loose connect-tion or open wires to POT	Replace (#1 page 14) Potentiometer Check terminal wires
Will not dispense water when water switch is illuminated	Defective water switch (#2 page 14)	Replace 12-1616 switch
	Defective water solenoid (#22 page 8)	Replace 12-1434-7 solenoid
	Water line restricted	Clean
Shutter motor will not stop shutter opens and closes	Defective cork brake by lower end of motor rotor	Motor must stop instant-ly or cam switch will close again.

COMPLAINT	POSSIBLE CAUSE	CORRECTION
		clean cork disk. Check rotor for free operation. Increase spring tension on front of rotor shaft. Rotor can be removed by unscrewing 2 bolts on lower motor bracket.
	Switches out of adjustment.	Adjust - see page 34
Auger will not turn.	Drive on end of auger sheared.	Replace drive
	Gear unit auger drive shaft gear defective	Replace gear unit.
Flourescent light	Will not operate	The tube, ballacts and starter can be replaced by removing the lamp assy. from the machine. Remove 4 screws on the legs to the assemble location back of condensing unit in motor compartment.

TABLE OF CONTENTS

Table of Contents 2
Photograph and Ice Making Capacity 3
Specifications and Dimensions 4
Selecting Location 5-6
Preparation for Installation 7
Installation Practices 8
Installation 9
Starting the Machine 10
Final Check List 11
Wiring Diagram 12
Service Analysis Section 13-14
EXPLODED VIEWS — COMPONENT PARTS
- Freezer Assy 15
- Reservoir Assy 16
- Compressor 17
- Gear Motor Assy 18
- Control Box 22
- Cabinet Assy 21
- Chassis Assy — Back View 20
- Chassis Assy — Left Side 19
- AF1 Front View 23
- Maintenance Instructions 24
- Low Pressure Control 25

THIS PAGE
INTENTIONALLY
LEFT BLANK

THIS PAGE
INTENTIONALLY
LEFT BLANK

SCOTSMAN®
COMMERCIAL ICE SYSTEMS/HOME ICE MAKERS

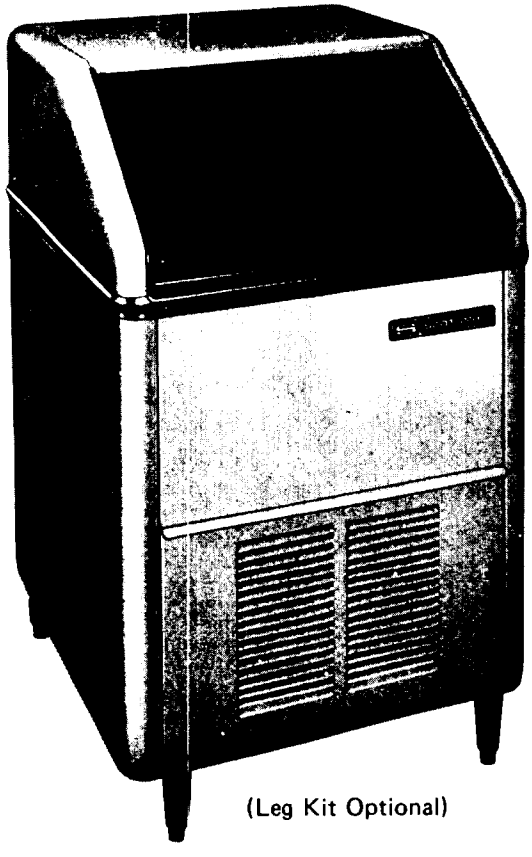

(Leg Kit Optional)

AF1 series
self-contained flaker

Where space is at a premium, the AF1 self-contained flaker is a perfect problem solver. This large capacity, compact unit takes up only four square feet of floor space. It has a storage capacity of 55 pounds. Because of its compact size, the AF1 flaker fits perfectly under a counter . . . that's convenience!

ice making capacity

Daily Ice Capacity is directly related to condenser air inlet temperature, water temperature, and age of machine.

NOTE: To keep your SCOTSMAN AUTOMATIC FLAKER performing at it's maximum capacity, it is necessary to perform periodic maintenance as outlined on page 24 of this manual.

AF1 series flaker with storage

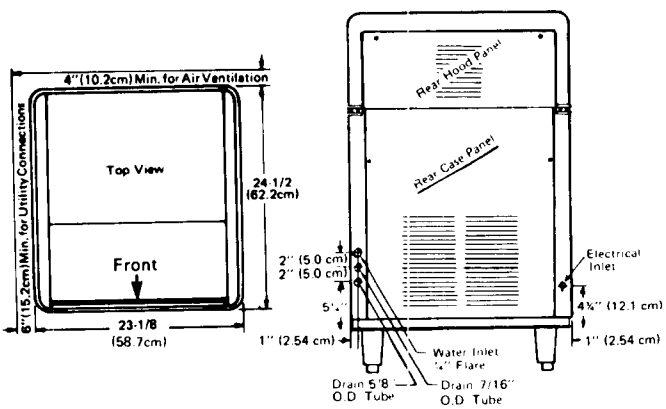

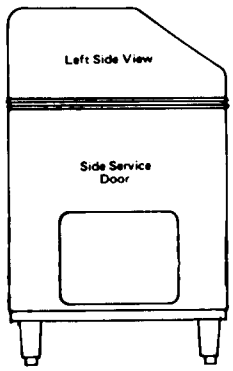

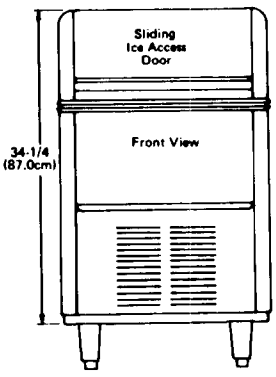

***Capacity:** Refer to Ice Making Capacity chart
Storage Bin: 55 lbs. (25 kg)
Height: 34-1/4" (87.0 cm)
Width: 23-1/8" (58.7 cm)
Depth: 24-1/2" (62.2 cm)
Weight: 208 lbs. (94 kg)

OPTIONAL LEG KITS
Four metal legs screw into mounting plates on cabinet base. Provide 6" minimum height including adjustable leveling foot. N.S.F. approved.
KLP2E: Black enamel finish. Recommended for enameled cabinets.
KLP2S: Nickel plated, brushed metal finish with stainless steel foot. Recommended for stainless steel cabinets.

IMPORTANT OPERATING REQUIREMENTS
Electrical Voltage: Machine requires voltage indicated on rating nameplate. Failures caused by improper voltage are not considered factory defects.
Ambient Temperature: Machine is not designed for outdoor installation. Machine will not operate when air temperature is below 50° F. or above 100° F.
Water Pressure & Temperature: Requires 20 lbs. flowing water pressure, without interruption. Machine will not operate when water supply temperature is below 40° F. or above 100° F.

AF1 MACHINE SPECIFICATIONS

Model	Condensing Unit	Compressor Horsepower	Finish*	Shipping Weight lbs.	kg.
AF1AE	Air	1/4	Enamel	208	94
AF1AS	Air	1/4	Stainless Steel	208	94

Basic Electricals	Max. Oper. Amps	No. of Wires	Max. Fuse Size
Air-Cooled: 115/60/1	8.3	2	15

** Use this value to determine minimum wire size required to meet National Electric Code Standards.

Scotsman Ice Systems include a full line of modular and self-storing cubers, flakers, drink dispensers, bins and accessories.

SCOTSMAN®
COMMERCIAL ICE SYSTEMS/HOME ICE MAKERS
QUEEN PRODUCTS DIVISION
KING-SEELEY THERMOS CO.
505 FRONT ST., ALBERT LEA, MN 56007

SELECTING LOCATION

UNDER BAR INSTALLATIONS: When selecting location for ice maker, consideration should be given to service. A minimum of 4" is required behind the machine for proper ventilation. A minimum of 6" should be allowed along left side of unit for access to utility connections. If possible, additional space is desirable along left side to facilitate service.

KITCHEN INSTALLATIONS: As a rule, the kitchen is not the most practical place to install and air-cooled condensing unit, as grease is almost always present and makes cleaning of the condensing unit difficult. Do not locate near range or steam table or other heating devices that may be used in the kitchen.

STOREROOM INSTALLATIONS: Be sure storeroom is of adequate size and properly ventilated. A small, poorly ventilated room will greatly impair the efficiency of the unit. The storeroom must be kept above 50 degrees in the winter months.

BASEMENT INSTALLATIONS: Locate machine in the coolest place. Locate machine in a dry place. Keep away from furnace and boiler room. Keep away from service chutes and runways; also coal or other dust of any kind. If the machine is set over a floor drain, block the machine up enough to level it. If there is any chance of basement flooding, block the machine up enough to eliminate any possible damage to the machine.

INSTALLATION INSTRUCTIONS

The following installation instructions were written for use by a authorized tradesman only, not the user or customer. We suggest you call your local authorized Scotsman Service Agency for hook-up, start-up, and check out. He's listed under "Ice Making Machinery & Equipment" in your telephone book, yellow pages.

* Standard Models AF1 do not include legs. Sales department carries leg package under accessory items.

INSTALLATION LIMITATIONS

ELECTRICAL

1. Scotsman, like most manufacturers, purchases electrical motors that are rated to operate within 10% variance above or below nameplate ratings.

   Improper voltages applied to Scotsman equipment can cause premature failures and burnouts. Failures of this type are not considered as factory fault or defect.

AMBIENT

2. **WARNING** — This machine is not designed for outdoor installations. This machine will not operate when air temperatures are below 50° F. or above 100° F.

   This unit was not fabricated nor intended to be installed outdoors.

WATER

3. Scotsman Ice Systems require 20 pounds flowing water pressure to operate satisfactorily. Pressures lower than 20 pounds or interruptions in the water supply can cause serious mechanical damage to this product.

   This machine will not operate when water supply temperatures are below 40° F. or above 100° F.

SCOTSMAN SUPER FLAKERS

PREPARATION FOR INSTALLATION

1. The entire unit comes in one carton. Upon delivery a visual inspection of the carton should be made and any severe damage noted should be reported to the delivering carrier and a concealed damage claim filed subject to internal inspection with carrier representative present. Remove carton by cutting on dotted line of crate into the bottom skid. Next remove (4) four bolts from underside of skid which connect to complete unit base. Lift carton up and off unit.

2. Remove all service doors and panels.

3. Thru cabinet upper rear service door, locate water reservoir, remove water reservoir cover and check free operation of float ball.

4. Remove water strainer from storage bin for installation on unit or in water supply line feeding unit.

5. Remove electrical control box cover and check unit nameplate voltage against building source voltage and make sure they correspond. Caution — improper voltage supplied to units will void your parts exchange program.

6. Select unit location prior to hook up of water drain and electricals in accordance with local and national codes. Minimum room temperatures is 50° Fahrenheit, maximum room temperatures 100° Fahrenheit. On air cooled models, select well ventilated location.

7. Use clean damp cloth to wipe out storage bin and cabinet exterior.

8. Fill out owners registration card including model and serial numbers as taken from aluminum plate found behind service panel and forward to Scotsman factory using self mailing card.

9. Call your authorized Scotsman Distributor or Dealer for proper installation, start-up and check out. He's listed under "Ice Making Equipment and Machinery" in the telephone book yellow pages.

INSTALLATION PRACTICES

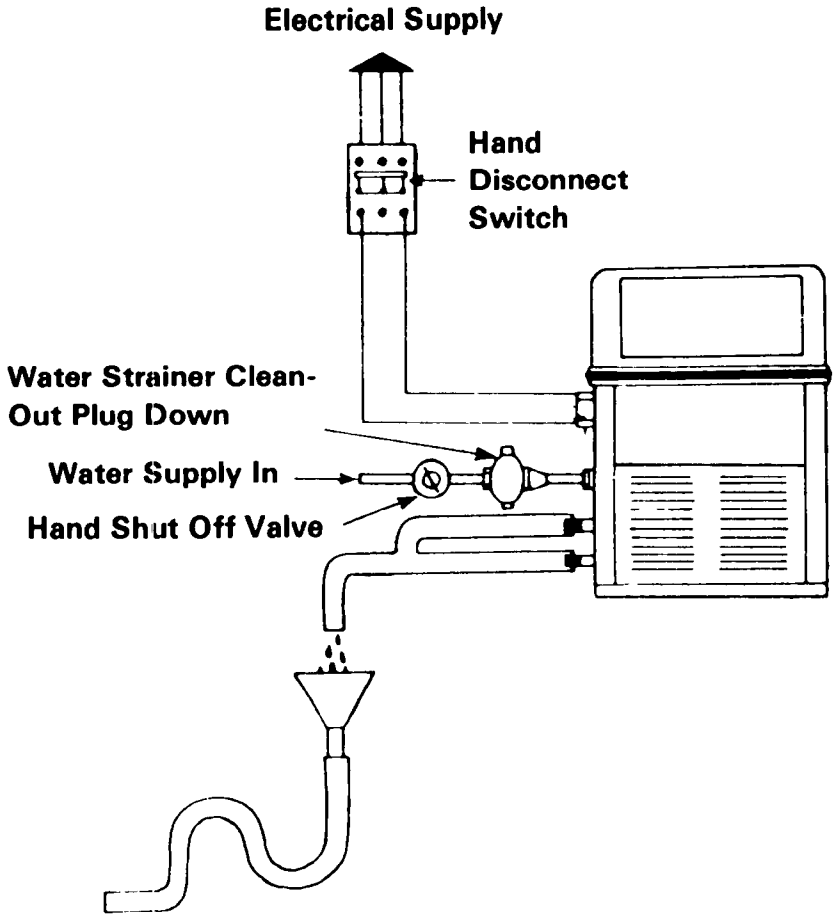

WATER SUPPLY. The recommended water supply line is 1/4 inch OD copper tubing. Connect to cold water supply line with regular plumbing fittings, with shut-off valve installed in an accessible place between supply line and machine. A water strainer must be installed with the unit and mounted with clean-out plug down. Locate the strainer next to the machine with an arrow in the direction of the flow. Most plumbing codes also call for double check valves in the supply water line. Minimum water pressure is 20 lb. gauge.

The water supply line connects to the 1/4 inch flare fitting on the machine. Water supply must be installed to conform with local code. In some cases a licensed plumber and/or a plumbing permit will be required.

DRAIN. The recommended drain from the bin is 5/8 inch OD copper tubing. Must be run to an open trapped and vented drain. If drain is a long run, allow a 1/4 inch pitch per foot. Drain must be installed to conform with local code.

INSTALLATION

ELECTRICAL CONNECTIONS

AF1C-1A
115 Volts, 60 Hertz, 1 Phase
15 Amp. Circuit

Be certain that the Flaker is on its own circuit and individually fused. The maximum allowable voltage variation should not exceed 10 per cent of the nameplate rating even under starting conditions. Low voltage can cause erratic operation and may be responsible for serious damage to the overload switch and motor windings.

All external wiring should conform to the National Underwriters and local Electrical Code requirements. Usually an electrical permit and the services of a licensed electrician will be required.

ELECTRICAL INSTALLATION:

AF1

Compressor	1/4 HP	Tecumseh
	Voltage	115
	Amp. rating F.L.A.	4.15
	Hertz	60
	Phase	Single
Gear Drive Motor	1/10 HP	Queen Products
	Voltage	115
	Amp. rating	4.0
	Hertz	60
	Phase	Single
		Thermally Protected

WARNING: THIS MACHINE MUST NOT BE ALLOWED TO OPERATE WHEN THE WATER SUPPLY IS SHUT OFF, OR AT BELOW RECOMMENDED WATER PRESSURE. TURN MASTER SWITCH TO "OFF" POSITION WHEN WATER SUPPLY IS OFF, OR WHEN WATER PRESSURE IS BELOW RECOMMENDED OPERATING PRESSURE.

SERVICE

STARTING THE MACHINE: When the machine is placed and inspected as per instructions and all plumbing and electrical connections are completed and tested, turn on the water supply. Be sure the float cover is removed to check on the float operation and water level in the water reservoir. Be sure the water reservoir is filled before starting the machine. Water level should be 1/4 inch below the reservoir overflow.

When this is completed, turn on the manual switch on the control box and the machine is in automatic operation. In two to three minutes ice will start dropping off the worm shaft and out the ice chute. Let the machine operate for at least 30 minutes and check for any excess noise other than the normal compressor noise. Test the ice storage control bulb by holding a handful of ice around the bulb until the machine shuts off. One minute should be normal for the control to function. Within minutes after the ice is removed, the bulb will warm up and the machine will automatically start up. The control is factory set and should not be reset until this test is made. Normal setting of this control should be approximately 35 degrees cut out, 45 degrees cut in.

Check low pressure setting at the time of start-up. The frost line should extend 8" out of the accumulator if properly charged with refrigerant and suction pressure will range between14 and 15 PSI with 50° F. inlet water.

Explain the machine to the owner, showing him how the machine works and go over the owner's instruction sheet with him. Answer all the owner's questions about the machine, and do not leave with any doubt in the owner's mind about the machine, how to operate it or where to reach you should he need service on the machine. Call back the next day to check the machine again and answer any other questions the owner may have.

Service gauge connection is available on low side service valve. Purge free of any non-condensable gases before starting any test operation.

REFRIGERANT CHARGE: The below refrigerant charge is approximate. Charge so that the frost line extends 8" out of the accumulator after fifteeen minutes of operation. Factory charge 15 oz. refrigerant 12.

FINAL CHECK LIST

1. Is the unit level? (IMPORTANT)
2. Have all electrical and piping connections been made?
3. Has the voltage been tested and checked against the nameplate rating?
4. Is the water supply valve open and the electric power on?
5. Is the water reservoir filled and shut off? All packing removed?
6. Have unit and bin been wiped clean?
7. Has owner been given the Operating Instruction Sheet, and has he been instructed on how to operate the machine?
8. Have the installation and warranty cards been filled out? This is the owner's protection.
9. Check all refrigerant and conduit lines to guard against vibration and possible failure.
10. Installed in a well ventilated room where ambient temperatures do not fall below 50° Fahrenheit.
11. Is unit installed with a minimum 4" air space around sides and back?

WIRING DIAGRAM
115/60/1
Air Cooled

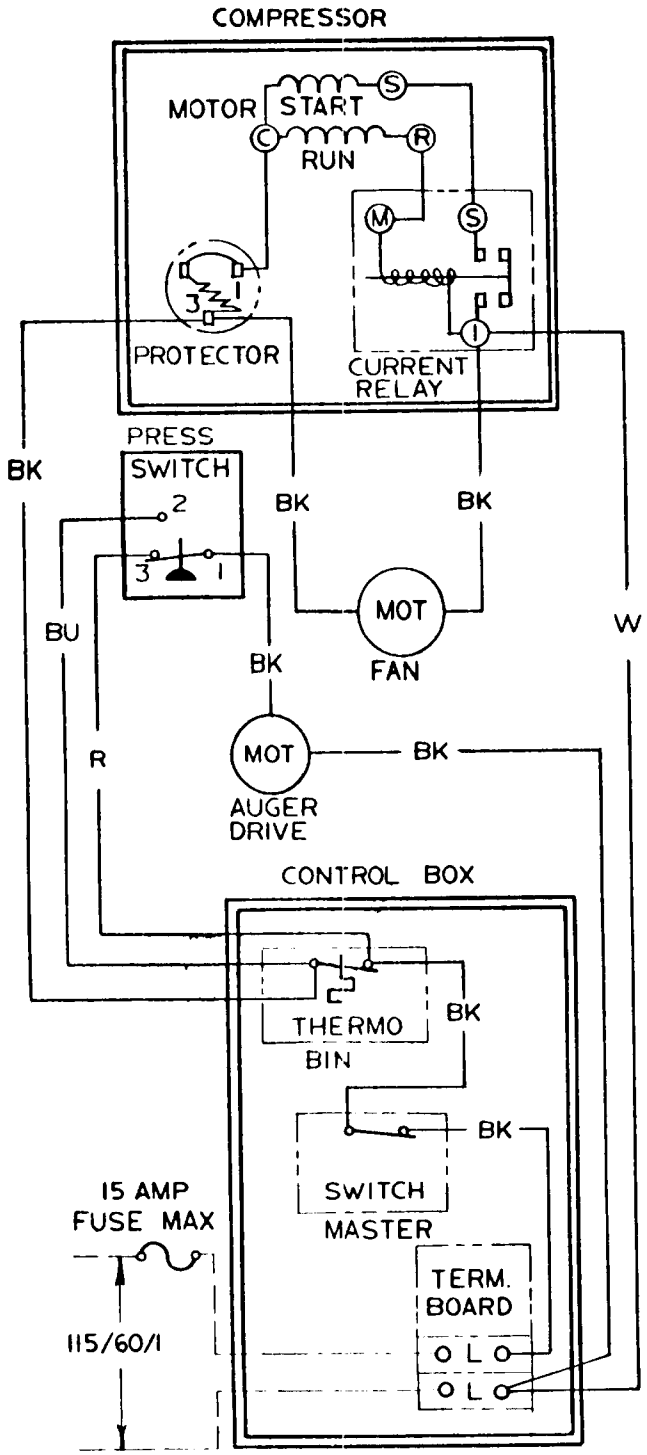

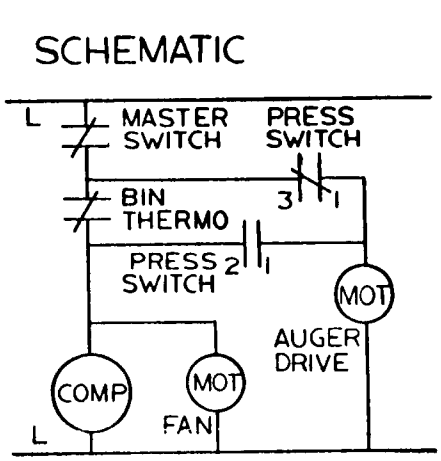

THIS UNIT MUST BE GROUNDED

CONTROLS SHOWN IN NORMAL ICE MAKING MODE

A27194-001

SERVICE ANALYSIS

SYMPTOM	POSSIBLE CAUSE	CORRECTION
Unit will not run	Blown Fuse	Replace fuse and check for cause of blown fuse.
	Thermostat set too high	Adjust thermostat. 35° cut-out and 45° cut-in.
	Loose electrical connection	Check wiring.
	Switch in OFF position	Turn switch to ON.
	Inoperative master switch	Replace switch.
Compressor cycles intermittently	Low voltage	Check for overloading.
	Dirty Condenser	Clean.
	Air circulation blocked	Move unit to correct.
	Inoperative condenser motor	Replace.
	Non-condensable gases in system	Purge off.
Making wet ice	Surrounding air temperature	Correct or move unit to cooler location.
	Under or over-charge of refrigerant	Recharge with the proper amount.
	High water level in water reservoir	Lower to 1/4 inch below overflow pipe.
	Faulty compressor	Repair or replace.
Low ice production	Loss of refrigerant, under or over-charge of refrigerant.	Check and recharge with proper amount of refrigerant.
	Dirty or plugged condenser	Clean condenser.
	Low water level in water reservoir	Adjust to 1/4 inch below overflow pipe.
	Partial restriction in capillary tube or drier	Moisture in system. Overcharge of oil in system. Remove charge and drier. Replace and recharge system.
	Inlet water strainer partially plugged.	Remove screen and clean.
	Corroded or stained worm shaft due to water condition	Remove worm shaft and clean.
Machine runs but makes no ice	Loss or under-charge of refrigerant	Check for leaks and recharge.
	Drive gearmotor or drive coupling stripped.	Check. Repair and/or replace.
	Water not entering freezing chamber.	Plugged strainer or supply line. Check and clean. Air lock in gravity feed line. Check and remove air lock.
	Moisture in system	Check and remove charge and drier. Replace and recharge.
	Water seal leaking	Replace seal.
	Defective manual overload switch.	Replace switch.

SERVICE ANALYSIS

SYMPTOM	POSSIBLE CAUSE	CORRECTION
Water Leaks	Defective water seal	Replace
	Gravity feed line leaking	Check hose clamps.
	'O' ring in spout casting leaking	Remove spout casting and install new 'O' ring.
	Storage bin drain & connecting fittings	Check and repair.
	Water level in reservoir too high	Adjust to 1/4 inch below overflow pipe.
Excessive noise or chattering	Mineral or scale deposits on auger and inner freezing chamber walls.	Remove and manually polish auger, polish inner chamber walls of freezer barrel.
		For lighter concentrations use Scotsman Ice Machine Cleaner periodically.
	Low suction	Add gas to raise suction pressure.
	Intermittent water supply	Check & clean water strainer. Check gravity feed line for air lock. Remove air lock.
	Water level in reservoir too low	Adjust to 1/4 inch below overflow pipe.
	Gear motor loose on frame	Tighten.
	Gear motor end-play or worn bearings.	Repair or replace.
Machine continues to run with full storage bin	Storage bin thermostat not properly set	Reset or replace. 35° cut-out, 45° cut-in Check operation with handful of ice.

FREEZER ASSEMBLY

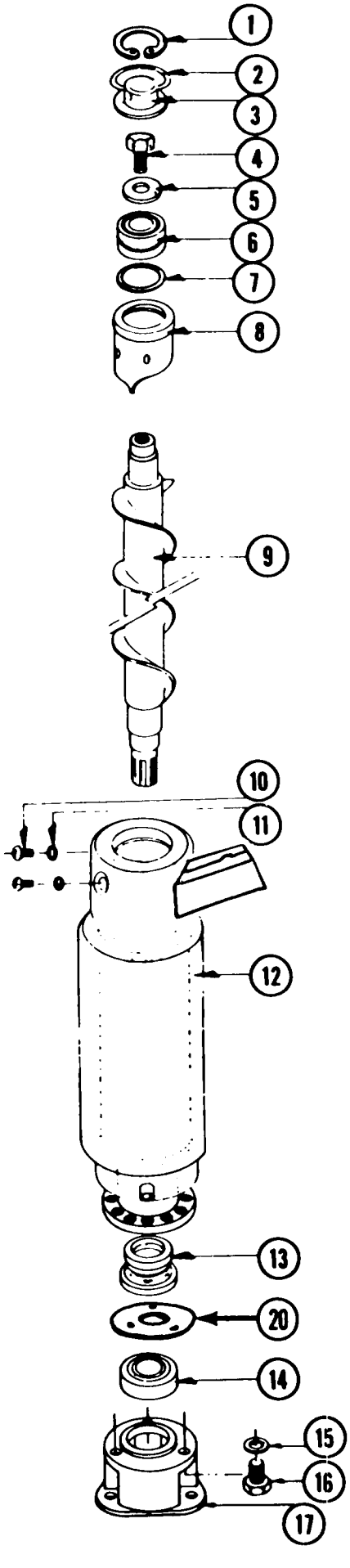

ITEM	PART NO.	*NAME*
1.	03-1558-03	Retainer Ring
2.	A08162-000	Cap Hook
3.	A07701-000	Cap
4.	03-0758-00	Screw
5.	A07699-000	Washer
6.	02-0547-00	Top Bearing
7.	13-0617-16	"O" Ring
8.	A26706-001	Breaker w/Bearing
9.	02-1313-00	Auger
10.	03-1403-46	Screw
11.	03-1417-07	Washer
12.	A27192-001	Evaporator Shell Includes Suction Line, Etc.
13.	A18945-000	Water Seal
14.	02-0417-00	Bearing, Lower
15.	03-1410-04	Washer (3 reqd)
16.	03-1405-42	Cap Screw (3 reqd)
17.	08-0595-01	Adapter
18.	15-0575-01	Spline Drive Coupling
19.	13-0709-01	Shaft Drip Shield - rubber
20.	03-1505-00	Gasket
21.	13-0628-00	Gasket
22.	A18153-000	Drip Pan Ass'y.

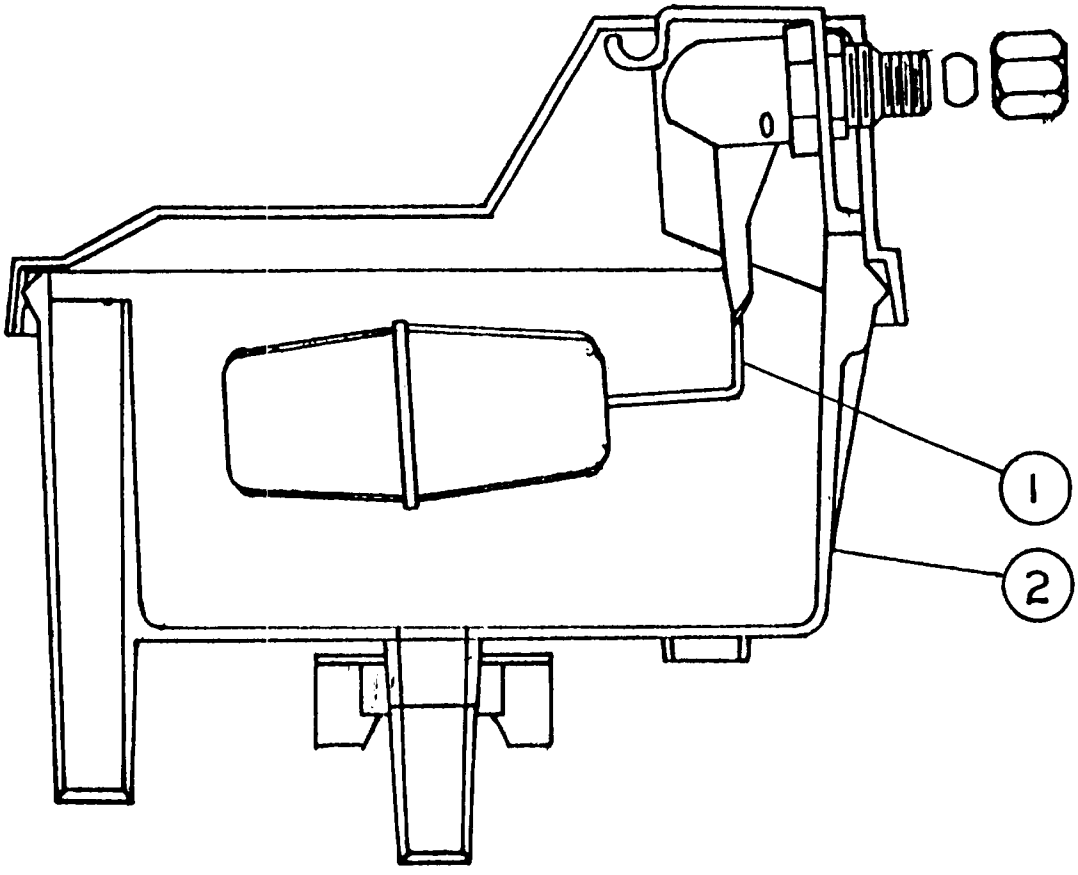

RESERVOIR ASSEMBLY

ITEM	PART NO.	DESCRIPTION
1.	02-2217-02	Valve Assy.
2.	02-2217-01	Reservoir Complete

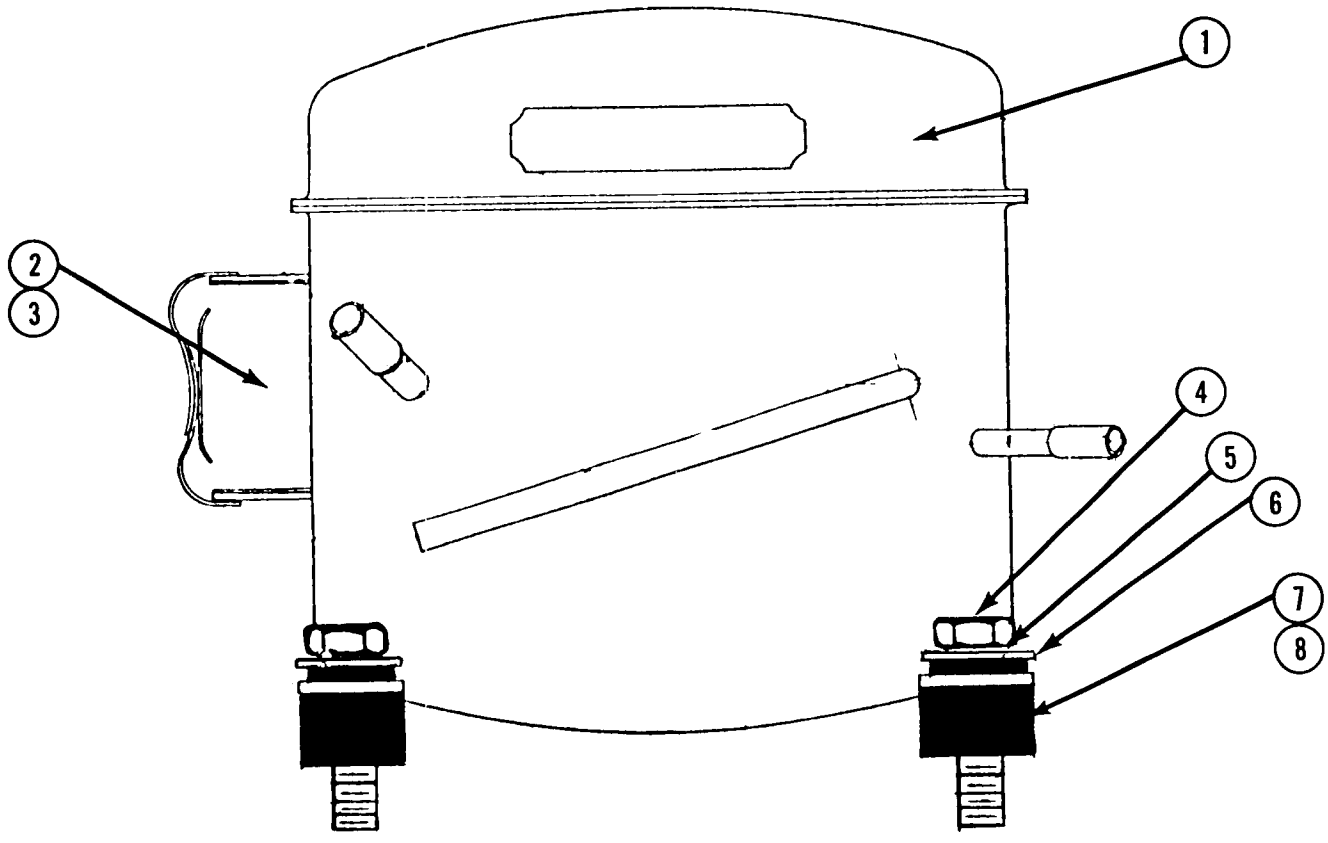

COMPRESSOR ASSEMBLY

115/60/1

ITEM	PART NO.	DESCRIPTION
1.	18-4700-01	Compressor
2.	18-4700-30	Relay — Tecumseh 820RR12B11 GE 3ARR12-WR17 Relay — Tecumseh 82003CRB15 TI 3CR211-179
3.	18-4700-29	Overload — Tecumseh 830MR5C21 TI MRT28AGK-296
4.	03-1405-20	Screw
5.	03-1410-04	Lockwasher
6.	03-1408-29	Flatwasher
7.	18-4700-28	Mounting Grommet
8.	18-0108-41	Mounting Sleeve

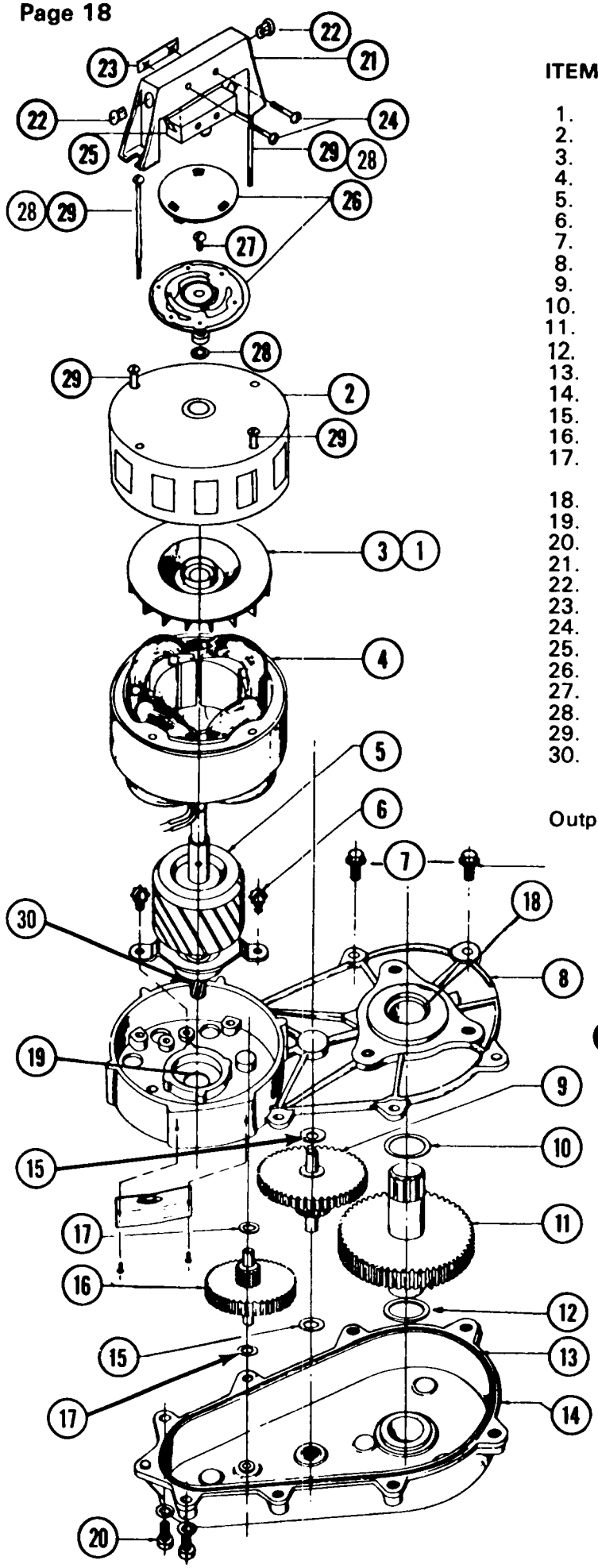

ITEM	PART NO.	DESCRIPTION
1.	03-1246-00	Set Screw (2)
2.	A17047-000	Motor Housing
3.	A16915-000	Cooling Fan
4.	12-1400-01	Stator Assy.
5.	A26454-001	Rotor Assy. and 1st Gear
6.	03-1245-00	Screws (6)
7.	03-1251-00	Flange Screws
8.	A24184-001	Gear Case Cover
9.	02-1521-00	Gear and Pinion
10.	03-1408-21	Washer
11.	A26650-001	Gear and Output Shaft
12.	03-1408-21	Washer
13.	02-1505-00	"O" Ring
14.	A16919-000	Gear Case Assy.
15.	03-1408-06	Washer
16.	02-2224-01	1st Gear and Pinion
17.	03-1408-20	Washer
	03-1407-19	Washer
18.	02-1503-00	Grease Seal
19.	02-1504-00	Grease Seal
20.	03-1252-00	Screw (2)
21.	03-0579-00	Switch Bracket
22.	12-1213-03	Snap Bushings
23.	03-0886-00	Twin Speed Nut
24.	03-1403-10	Screws
25.	12-1644-00	Switch
26.	A19898-000	Synchro Snap Assy.
27.	03-1248-01	Screw
28.	03-1417-06	Washer
29.	03-1403-43	Motor Bolts
30.	13-0617-04	Oil Slinger ring
	A25995-021	Gear Motor Assy. Complete

Output Shaft turns at 11.5 RPM.

GEAR MOTOR ASSEMBLY

1/10 H.P.

115/60/1

NOTE: Items 21 thru 28 are used on all model AF1's up to the middle of the B series then discontinued on the remainder of the B series and all of the C series. If your present machine has a synchro snap assembly on the gear motor continue to use it on the replacement motor. If your machine does not presently have snap assembly on do not use snap assembly on the replacement motor.

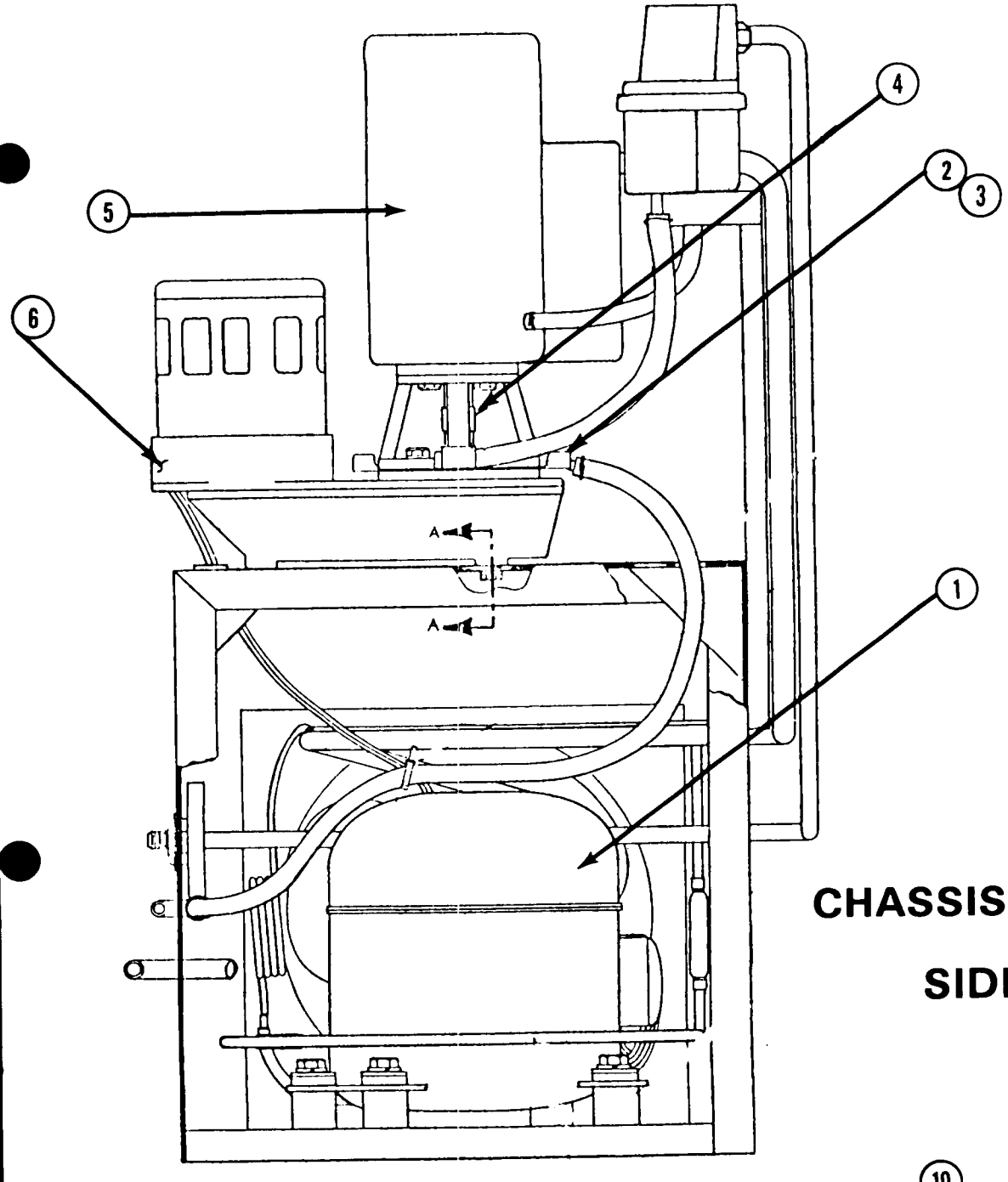

CHASSIS ASSEMBLY

SIDE VIEW

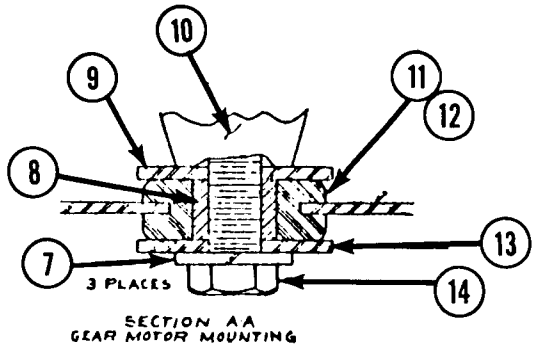

ITEM	PART NO.	DESCRIPTION
1.	18-4700-01	Compressor
2.	A18153-000	Drip Pan
3.	13-0628-00	Gasket
4.	15-0575-01	Spline Coupling
5.		See Exploded View
6.	A25995-021	Gear Motor
7.	03-1410-03	Washer
8.	A24925-001	Spacer
9.	03-1408-02	Washer
10.		Gear Motor Assy.
11.	13-0639-00	Grommet
12.		Chassis Assy.
13.	03-1408-02	Washer
14.	03-1405-45	Screw

CHASSIS ASSEMBLY
REAR VIEW

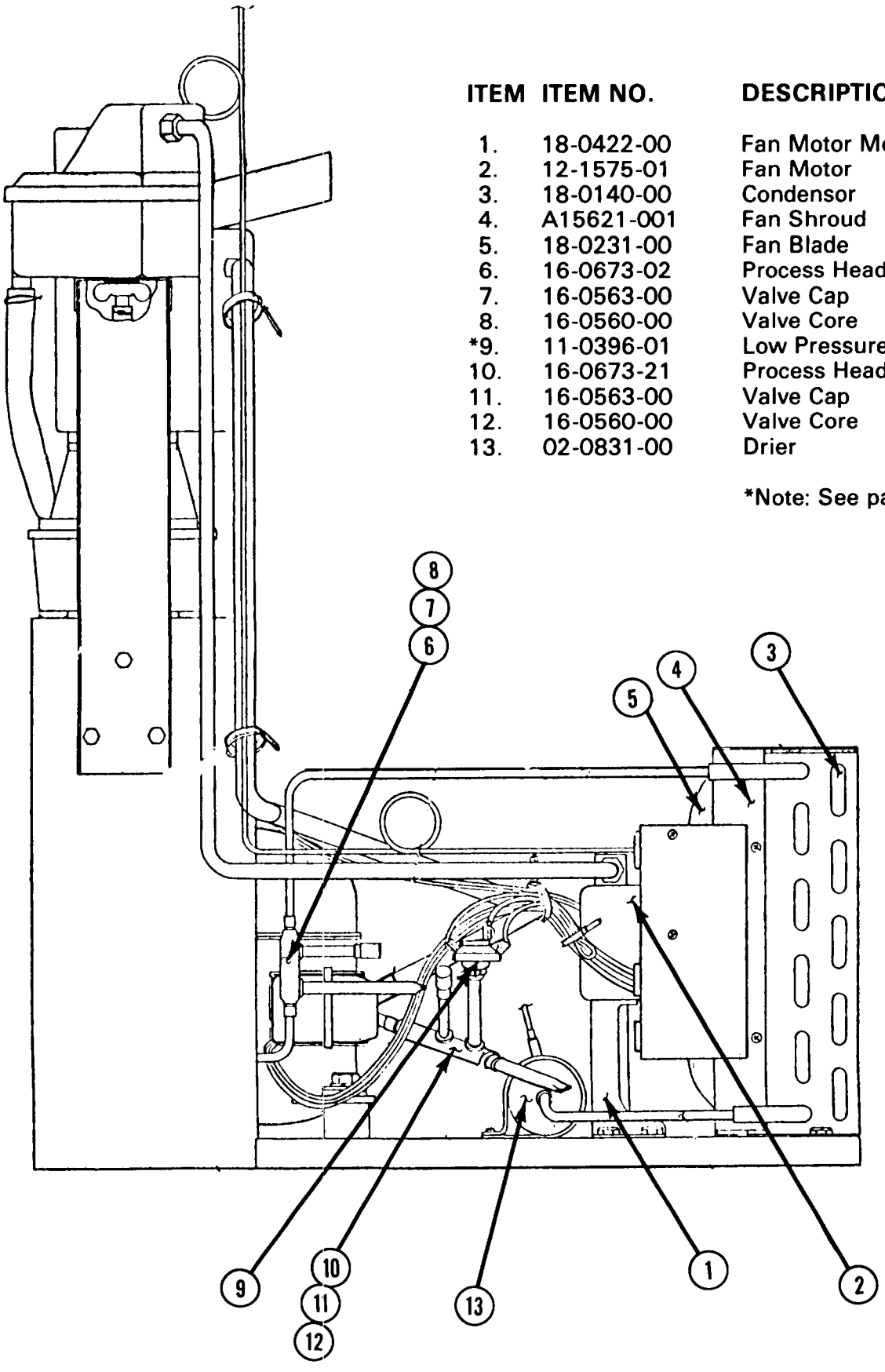

ITEM	ITEM NO.	DESCRIPTION
1.	18-0422-00	Fan Motor Mount
2.	12-1575-01	Fan Motor
3.	18-0140-00	Condensor
4.	A15621-001	Fan Shroud
5.	18-0231-00	Fan Blade
6.	16-0673-02	Process Header
7.	16-0563-00	Valve Cap
8.	16-0560-00	Valve Core
*9.	11-0396-01	Low Pressure Switch
10.	16-0673-21	Process Header
11.	16-0563-00	Valve Cap
12.	16-0560-00	Valve Core
13.	02-0831-00	Drier

*Note: See page 25 for description.

CABINET ASSEMBLY

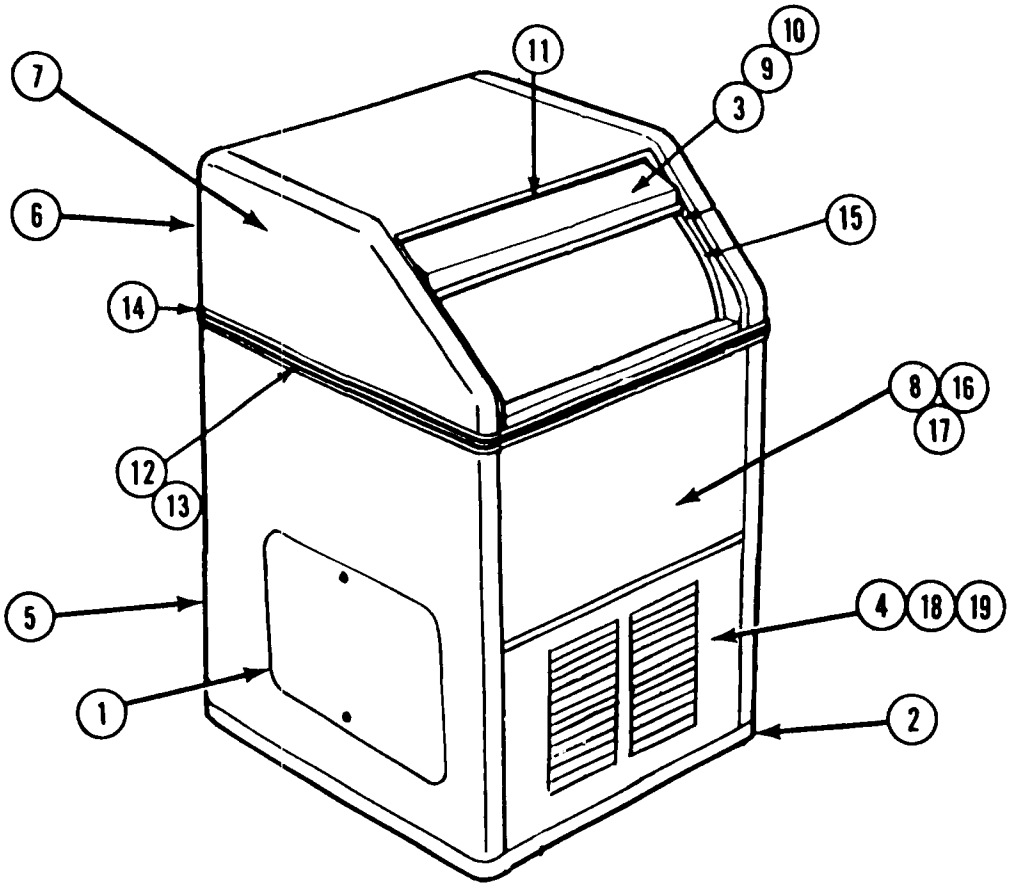

ENAMEL

ITEM	PART NO.	DESCRIPTION
1.	A07676-005	Service Door
2.		Not Req'd
3.	02-1735-01	Access Door
4.	A24427-001	Front Door Assy.
5.	A25326-001	Case Panel Rear
6.	A25325-001	Hood Panel Rear
7.	A24429-001	Hood Assy.
8.	A25847-001	Case Assy.
9.	03-1276-00	Wing Screw
10.	02-1736-00	Door Lanyard
11.	03-1195-00	Hood Guide (3)
12.	A25342-001	Moulding Strip
13.	15-0324-00	Plastic Insert Per Foot
14.	S08983-000	Clip (2)
15.	A16208-000	Door Track
16.	15-0156-00	Scotsman Emblem
17.	03-0271-00	Push Nut (2)
18.	03-0468-00	Door Catch (2)
19.	13-0113-00	Door Grommet (2)

STAINLESS STEEL

ITEM	PART NO.	DESCRIPTION
1.	A07676-00S	Service Door
2.	A08902-014	Molding Strip (2)
3.	A15559-000	Ice Access Door
4.	A24427-002	Front Door
5.	A25326-002	Case Panel Rear
6.	A25325-002	Hood Panel Rear
7.	A24429002	Hood Assy.
8.	A25847-002	Case Assy.
9.	03-1276-00	Wing Screw
10.	02-1736-00	Door Lanyard
11.	03-1195-00	Hood Guide (3)
12.	A25342-001	Moulding Strip
13.	15-0324-00	Plastic Insert per foot
14.	S08983-000	Clip (2)
15.	A16208-000	Door Track
16.	15-0156-00	Scotsman Emblem
17.	03-0271-00	Push Nut (2)
18.	03-0468-00	Door Catch (2)
19.	13-0113-00	Door Grommet (2)

CONTROL BOX ASSEMBLY

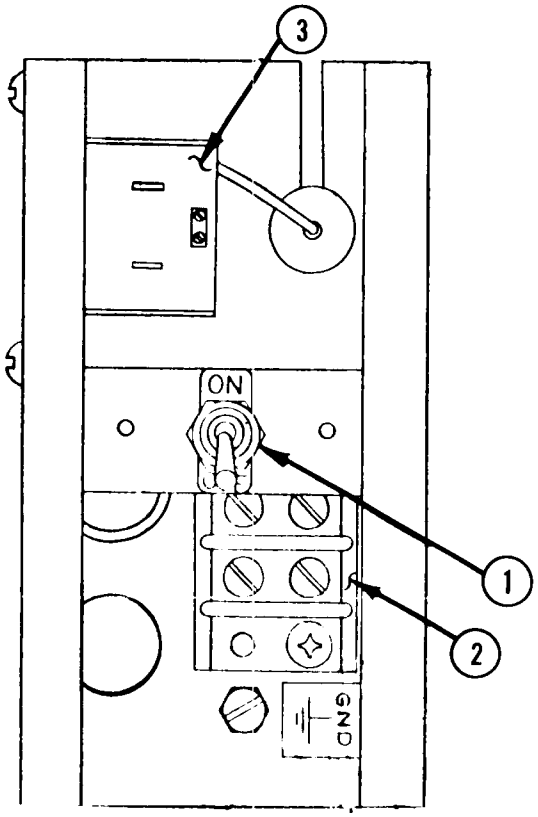

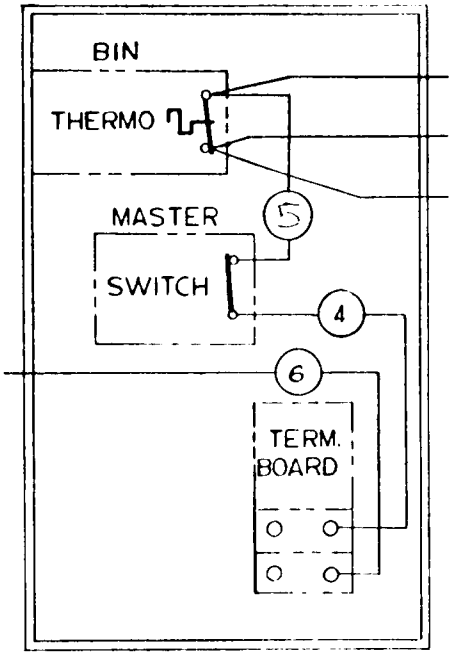

ITEM	PART NO.	DESCRIPTION
1.	12-0426-01	Switch
2.	12-0813-04	Terminal Block
3.	11-0354-00	Temp. Control

AF1 FRONT VIEW

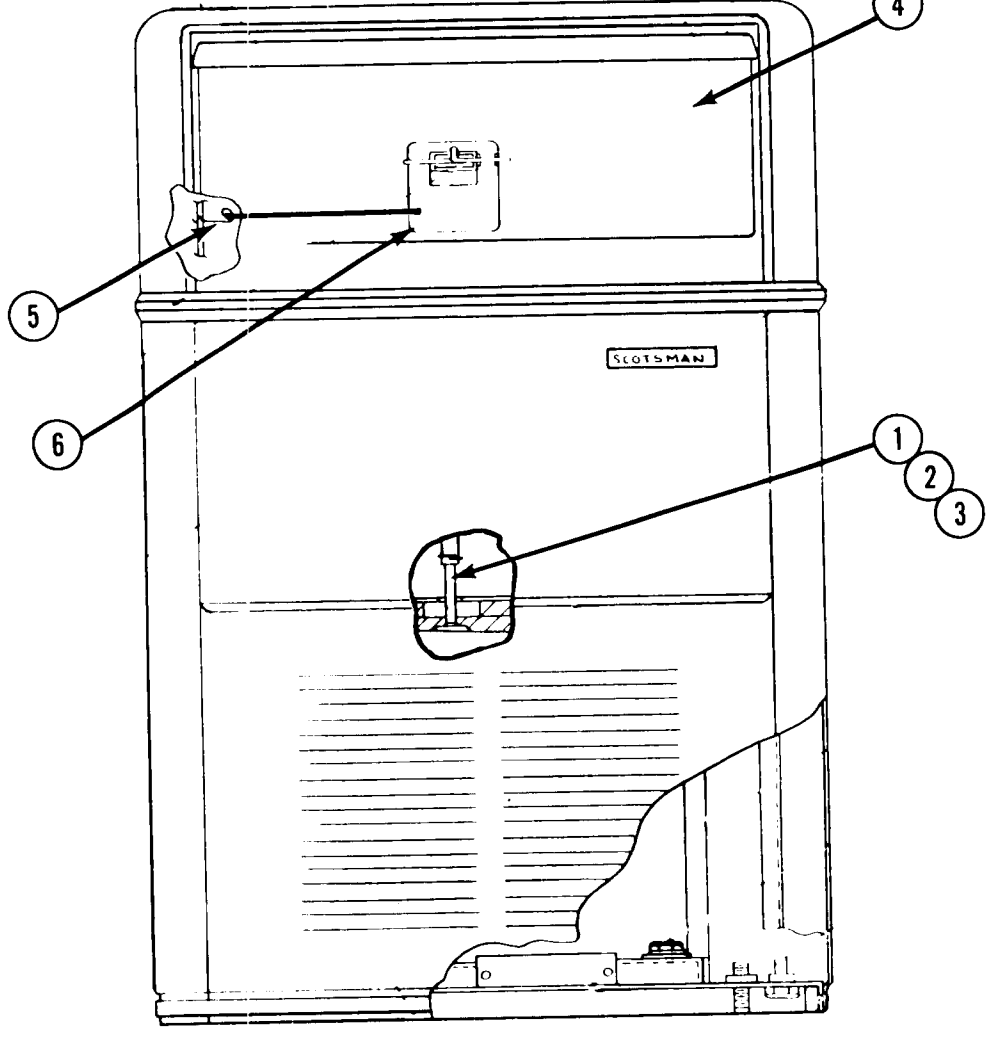

ITEM	PART NO.	DESCRIPTION
1.	02-1957-00	Drain Tube
2.	02-1751-00	Drain Fitting
3.	13-0617-36	O Ring
4.	02-2103-01	Storage Bin
5.	03-1415-00	Bulb Holder
6.	13-0779-01	Spout Grommet
7.	13-0780-01	Sealing Gasket

MAINTENANCE INSTRUCTION – FLAKERS

THE FOLLOWING MAINTENANCE MUST BE ACCOMPLISHED TWO TIMES PER YEAR ON ALL SCOTSMAN FLAKERS. CALL YOUR AUTHORIZED SCOTSMAN SERVICE DEPARTMENT.

1. Check and clean water strainers and float valve. Depress float valve to insure full stream of water.
2. Check water level and machine level, keep water level below overflow, but as high as possible and still not run out of spout opening with machine off. Water droplets come out of spout with ice at all times. Adjust as required.
3. Clean reservoir and interior of freezer using SCOTSMAN Ice Machine Cleaner.
   If machine has been cleaned regularly and no problems such as dry ice or chatter are noticed, clean as per the following instructions:
   a. Turn master switch OFF.
   b. Remove all ice from storage bin.
   c. Mix cleaning solution (4 oz. Scotsman Cleaner to one quart of hot water) in pan and clean inside and outside of spout with nylon brush.
   d. Remove upper rear panel.
   e. Turn off water supply or block float assembly in reservoir.
   f. Turn master switch ON. Pour one quart of cleaning solution slowly into reservoir. Do not fill above overflow tube.
   g. Continue to make ice with the cleaning solution until it is all used up and the reservoir is empty.
   h. Turn master switch OFF. Wash and rinse inside of reservoir with clean water. Turn water supply back on or remove block from float assembly.
   i. Turn master switch ON and let unit run for at least fifteen (15) minutes to flush out any remaining cleaning solution. Check ice for acid taste – run until ice tastes normal.
   j. Use clear water to rinse inside and outside of spout with nylon brush.
   k. Turn master switch OFF. Add hot water to ice now in storage bin. Using this solution, thoroughly wash and rinse all surfaces within the storage bin.
   l. Rinse inside of storage bin with clear water.
   m. Turn master switch ON. Replace all service panels and doors. Unit is now ready for normal operation.

NOTE: Cleaning requirements vary according to local water conditions. Visual inspection of the auger before and after cleaning will indicate best procedure to be followed in local areas.

4. Check high and low side pressures. On air-cooled models head pressures range between 130 and 145 PSI. Suction pressure should be above 12 PSI and will range up to 16 PSI depending upon water and ambient temperatures.
5. Check gearmotor operation. Normal running temperatures are in the area of 160° Fahrenheit, which is hot to the touch. Check operation of centrifugal switch and the micro switch it actuates. When micro switches actuated, compressor stops, gearmotor continues to run.
6. Check top bearing of freezing tube. Remove retainer ring around edge of stamped brass cap. If moisture is around bearing, wipe up and remove grease. Add new grease. Use Beacon No. 325. Replace cap and retainer ring.
7. Clean air-cooled condenser. Inform customer to clean frequently. Always shut off machine when cleaning.
8. Oil condenser fan motor when possible.
9. Check for refrigerant leaks and proper frost line. Should frost out of accumulator at least one-half way to compressor, and in some areas back to service valve.
10. Check for water leaks. Tighten drain line connections. Run water down bin drain line to make sure it is open.
11. Check quality of ice. Ice should be wet when formed, but will cure rapidly to normal hardness in bin.
12. Bin thermostat should be set at 10° differential and should keep entire machine off at least twenty minutes in high ambients (longer in low) during normal operation. Settings are 35° cut out, 45° cut in.

Description of the Function of the Texas Instruments Low Pressure Control Switch When Used on 1/15 and 1/10 H.P. Gear Motors

On all Scotsman units using a 1/15 or 1/10 H.P. gear motor, the centrifugal switch mechanism, mounted on top of the motor, was removed and replaced, in the system, with a low pressure control switch. This is a single pole double throw (SPDT) switch manufactured by Texas Instruments. (Queen Products Part No. 11-0396-01*).

*Refer to a typical wiring diagram, showing contacts, for description of switch function.

On all Queen Products wiring diagrams, the controls are shown in the ice making mode. Thus, the 1-3 contacts are shown as closed. On machine start up the 1-3 contacts are open and the 1-2 contacts are closed. As the unit begins to run, the low side pressure starts to fall from the stabilized or "at rest" pressure. As soon as the pressure drops to 21 Psig, the 1-2 contacts open and the 1-3 contacts close. This removes the operating controls, such as the bin thermostat, from the "gear motor circuit". If one of the operating controls opens, it will shut off the "compressor circuit". The gear motor will run until the low side pressure rises to 29 Psig. At this point the 1-3 contacts open and turns the gear motor off. This usually takes 1-3 minutes depending on ambient conditions. This length of time allows the auger to transport all the ice out of the freezing chamber. Consequently, when called on to start up again, there is no load to start up against. On start up, again, the 1-3 contacts are open and the 1-2 contacts closed.

*Function 11-0396-01 Low Pressure Control Switch

1-3 Contacts - Open on Pressure Rise
Opens at 32 Psig
Closes at 20 Psig

1-2 Contacts - Open on Pressure Fall
Opens at 20 Psig
Closes at at 32 Psig

See wiring diagram

AF1

TABLE OF CONTENTS

GENERAL INFORMATION & INSTALLATION
- Introduction 2
- For the Installer 3
- Location and Leveling 5
- For the Electrician 6
- For the Plumber 7
- Final Checklist 8

OPERATING INSTRUCTIONS
- Start-Up 10
- Icemaker Operation 12
- Electrical Operation 12

COMPONENT DESCRIPTION 14

MAINTENANCE AND CLEANING INSTRUCTIONS
- Maintenance Instructions 16
- Cleaning Instructions 17

SERVICE DIAGNOSIS 18

REMOVAL AND REPLACEMENT PROCEDURES
- Adjustment of Bin Thermostat Control 20
- Adjustment of Leg Levelers 20
- Adjustment of Water Reservoir Float 20
- Compressor Assembly 22
- Condenser - Air-Cooled Models 22
- Safety Controls, Low Pressure and Auger Delay 22
- Drier 23
- Water Pressure Switch Assembly 23
- Fan Motor Assembly - Air-Cooled Models .. 24
- Water Reservoir Assembly 24
- Auger, Water Seal, Bearings and Ice Breaker 25
- Freezer Assembly 25
- Water Seal Installation 25
- Drivemotor Assembly 27
- Rebuilding 1/10 Horsepower Drivemotor Gear Reducer Assembly 27

LIST OF ILLUSTRATIONS

- Specifications 3
- Component Location 4
- Location and Leveling 5
- Electrical Connections 6
- Water and Drain Connections 7
- Final Checklist 8
- Start-Up 10
- Operation 13
- Component Description 15
- Maintenance and Cleaning 17
- Removal and Replacement 21

PARTS LIST AND WIRING DIAGRAMS 1
(Printed in yellow)

PARTS LIST:
- Component Location 3
- Cabinet Assembly 4
- Refrigeration Assembly 5
- Water and Drainage System 6
- Freezer Assembly 7
- Drivemotor Assembly 8
- Control Box Assembly 9

WIRING DIAGRAMS:
- AF1A-1D (115/60/1) 11

THIS PAGE
INTENTIONALLY
LEFT BLANK

AF1 FOR THE INSTALLER

INTRODUCTION

This manual provides the specifications and the step-by-step procedures for the installation, start-up, operation, maintenance and cleaning of the SCOTSMAN Model AF1 Automatic Flaker Icemaker.

The Model AF1 icemaker is quality designed, engineered and constructed. It is a thoroughly tested icemaking system, providing the utmost in flexibility to fit the users needs.

An attractive sandalwood finish adapts to any decor. Large bin door rises and slides back into cabinet for easy ice access. The AF1 produces hard bits of flaked ice that are slow melting and pure, can be used for iced display purposes and is the ideal ice for health care use.

To provide quiet, efficient operation of the icemaker, the compressor motor is internally spring-mounted. The compressor motor is covered by a five-year parts warranty.

The Scotsman AF1 icemaker stores its own ice supply in a heavily insulated, polyethelene ice storage bin, with a handy ice access door opening at the front.

The standard overall dimensions of the cabinet depth allows the automatic icemaker to be installed in harmony with the existing counter equipment.

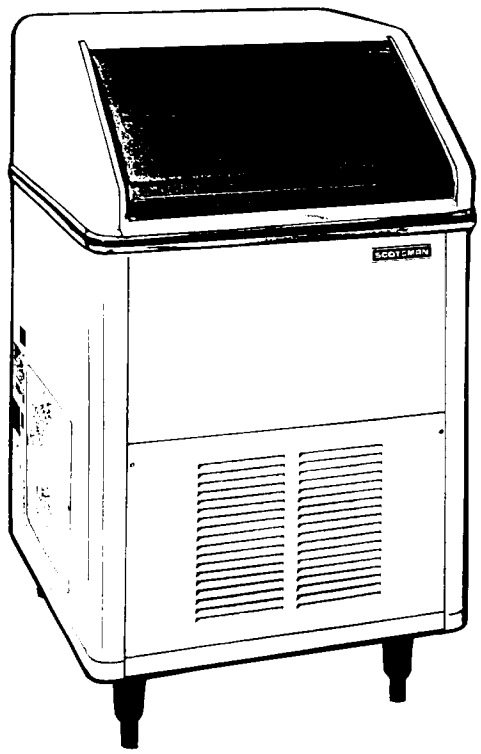

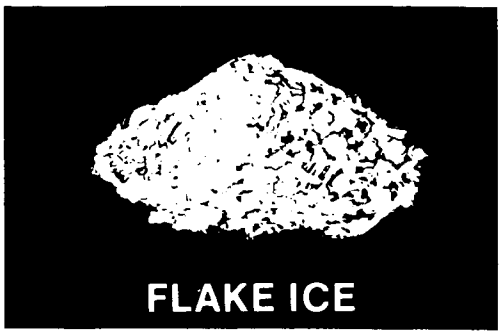

This icemaker has been engineered to our own rigid safety and performance standards. The National Sanitation Foundation (NSF) seal, signifies that it is listed with NSF and that it complies with the materials and construction standards of NSF. In addition, the Underwriters Laboratories, Inc., (UL) Listing Mark and the Canadian Standards Association (CSA) Monogram, both signify that its construction and design have been inspected and tested by them. NSF, UL and CSA inspectors also periodically examine production icemakers at the factory, to assure continued compliance.

To retain the safety and performance built into this icemaker, it is important that installation and maintenance be conducted in the manner outlined in this manual.

AF1 FOR THE INSTALLER

SPECIFICATIONS

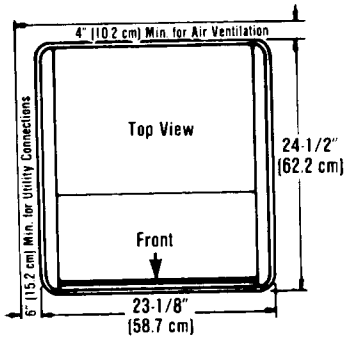

INSTALLATION NOTE:
Allow 6" minimum space at left side and 4" at back for ventilation and utility connections.

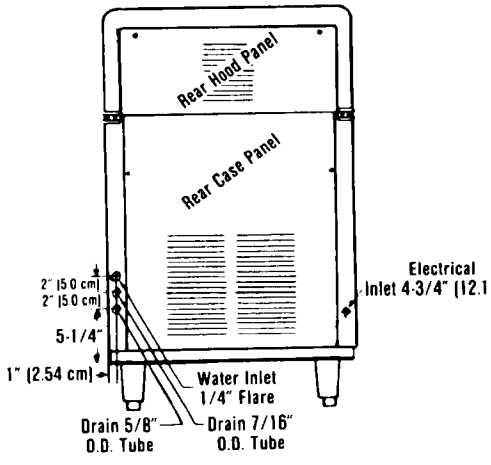

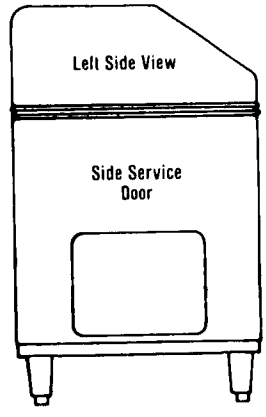

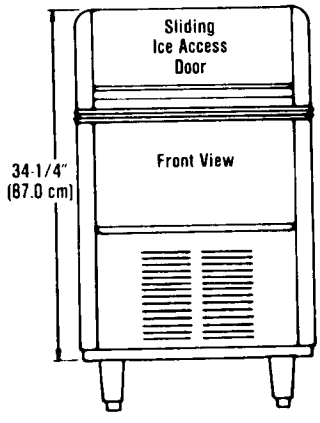

STANDARD LEGS NOW INCLUDED

SPECIFICATIONS

Model Number	(Height - w/o Legs) Dimensions H" x W" x D"	Bin Cap.	Cond. Unit	Finish **	Basic Electrical	Comp. H.P.	No. of Wires	Min. Circuit Ampacity †	Max. Fuse Size	Ship. Wt. lbs./kg.
AF1AE-1D	34¼ x 23⅛ x 24½	55 lbs.	Air	ES	115/60/1	1/4	2	10.7	15	190/86
AF1AS-1D	34¼ x 23⅛ x 24½	55 lbs.	Air	SS	115/60/1	1/4	2	10.7	15	190/86

** (SS) Stainless Steel, (ES) Sandalwood, Leathergrain embossed steel with high gloss baked enamel finish.
† Use this value to determine minimum wire size as per National Electric Code Standards.

IMPORTANT OPERATING REQUIREMENTS

	MINIMUM	MAXIMUM
Air Temperatures	50°F (10.0°C)	100°F (38°C)
Water Temperatures	40°F (4.4°C)	100°F (38°C)
Water Pressures	20 lbs. gauge	120 lbs. gauge
Electrical Voltage Variation Voltage rating specified on nameplate	-10%	+ 10%

Extended periods of operation exceeding these limitations constitutes misuse under the terms of Scotsman Manufacturer's Limited Warranty, resulting in a loss of warranty coverage.

Refrigerant.....R12

SEE NAMEPLATE, for electrical and refrigeration specifications.

NAMEPLATE is located on the left side of the cabinet.

AF1 FOR THE INSTALLER

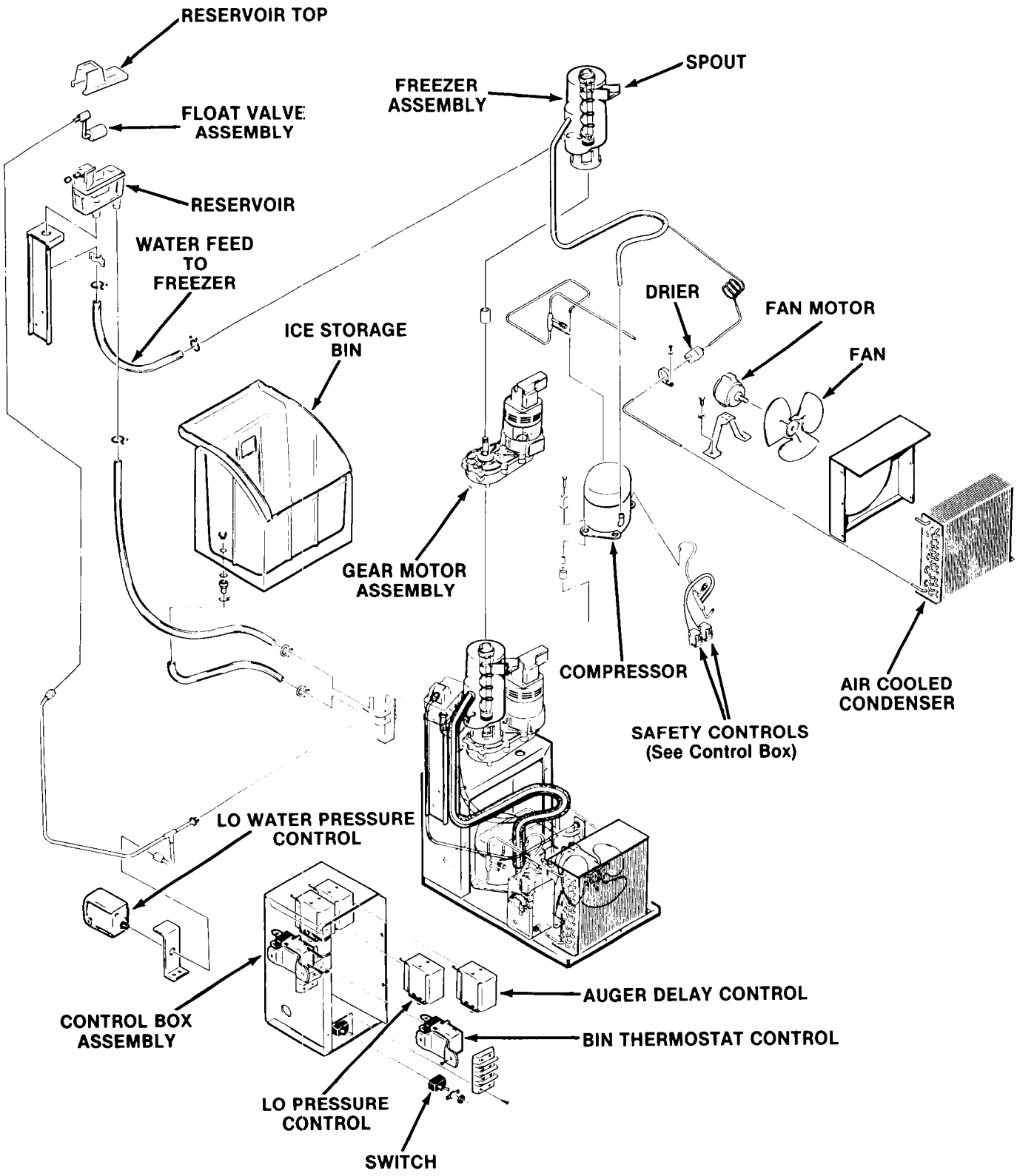

AF1 Flaked Icemaker
Component Location

AF1 FOR THE INSTALLER

LOCATION AND LEVELING

WARNING

This icemaker is designed for indoor installations ONLY where air temperatures are above 50-degrees F. and below 100-degrees F. and water temperatures are above 40-degrees F. or below 100-degrees F. Extended periods of operation at temperatures exceeding these limitations will constitute misuse, under the terms of the SCOTSMAN manufacturer's limited warranty, resulting in LOSS of warranty coverage.

NOTE

Regular maintenance will require access to the back of the machine. Any restrictions to the back will hamper routine maintenance efforts.

Well ventilated location, advising user to frequently clean air-cooled condenser, located directly behind the front service door.

CONVENIENCE: Placed for practical, efficient use and access of ice.

SERVICE ACCESS: Adequate space for all service connections, located at the rear of the cabinet. A six-inch minimum clearance at back and left side panel, for routing cooling air drawn into and exhausted out of the compartment to maintain proper condensing operation on air-cooled models, and for service access.

1. Position the cabinet in the selected location.
2. Level the cabinet in both the left-to-right and front-to-back directions. The leveling legs can be adjusted with an open end wrench.

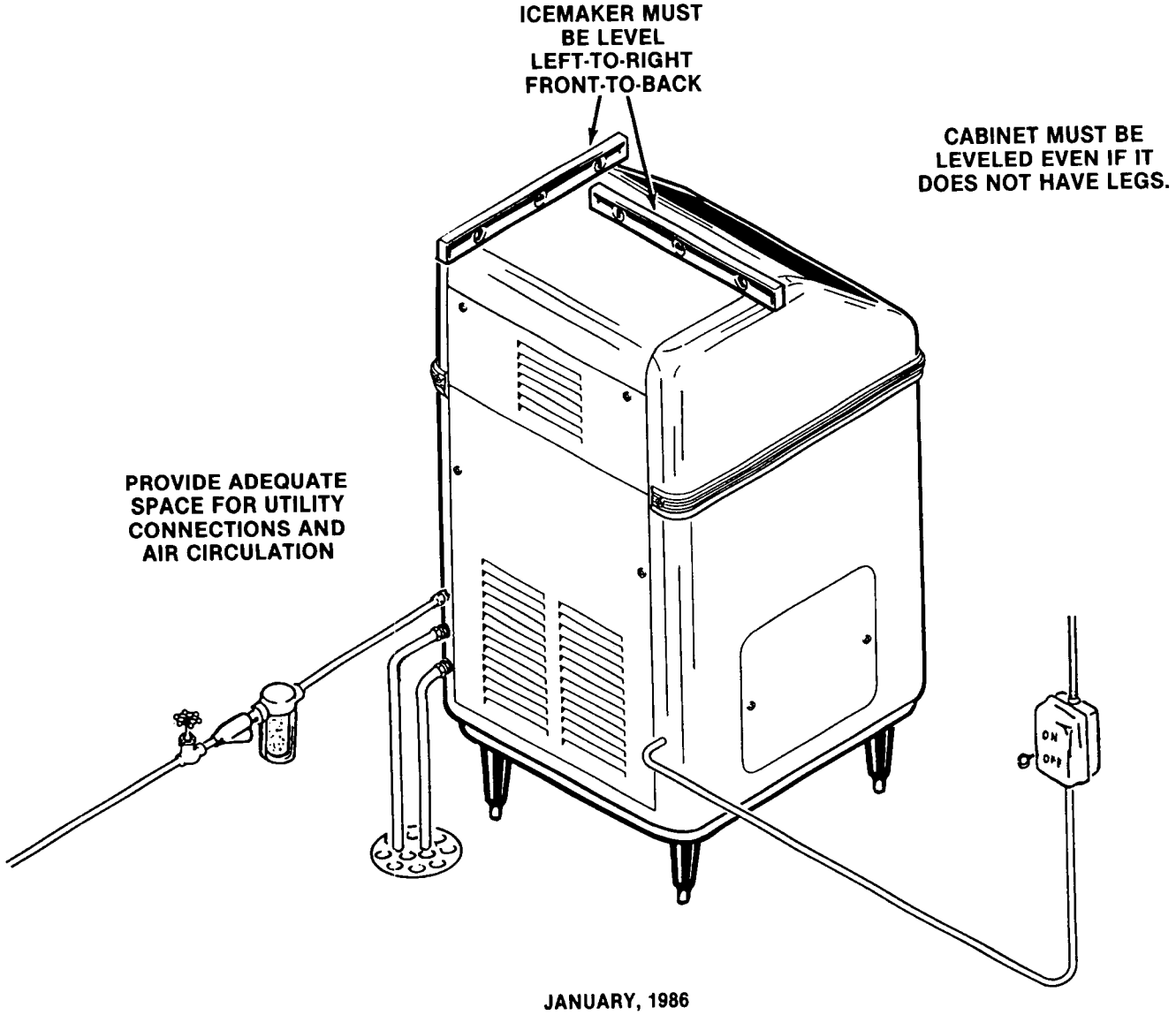

AF1 FOR THE ELECTRICIAN

ELECTRICAL CONNECTIONS

SEE NAMEPLATE for current requirements to determine wire size to be used for electrical hookup. The AF1 icemaker requires a solid earth ground wire.

All external wiring should conform to the national and state electrical codes. A local electrical permit and services of a licensed electrician may be required.

Be certain the icemaker is connected to its own electrical circuit and individually fused. The maximum allowable voltage variation should not exceed ten percent of the nameplate rating, even under starting conditions. Low voltages can cause erratic operation and may be responsible for serious damage to the over load switch and motor windings.

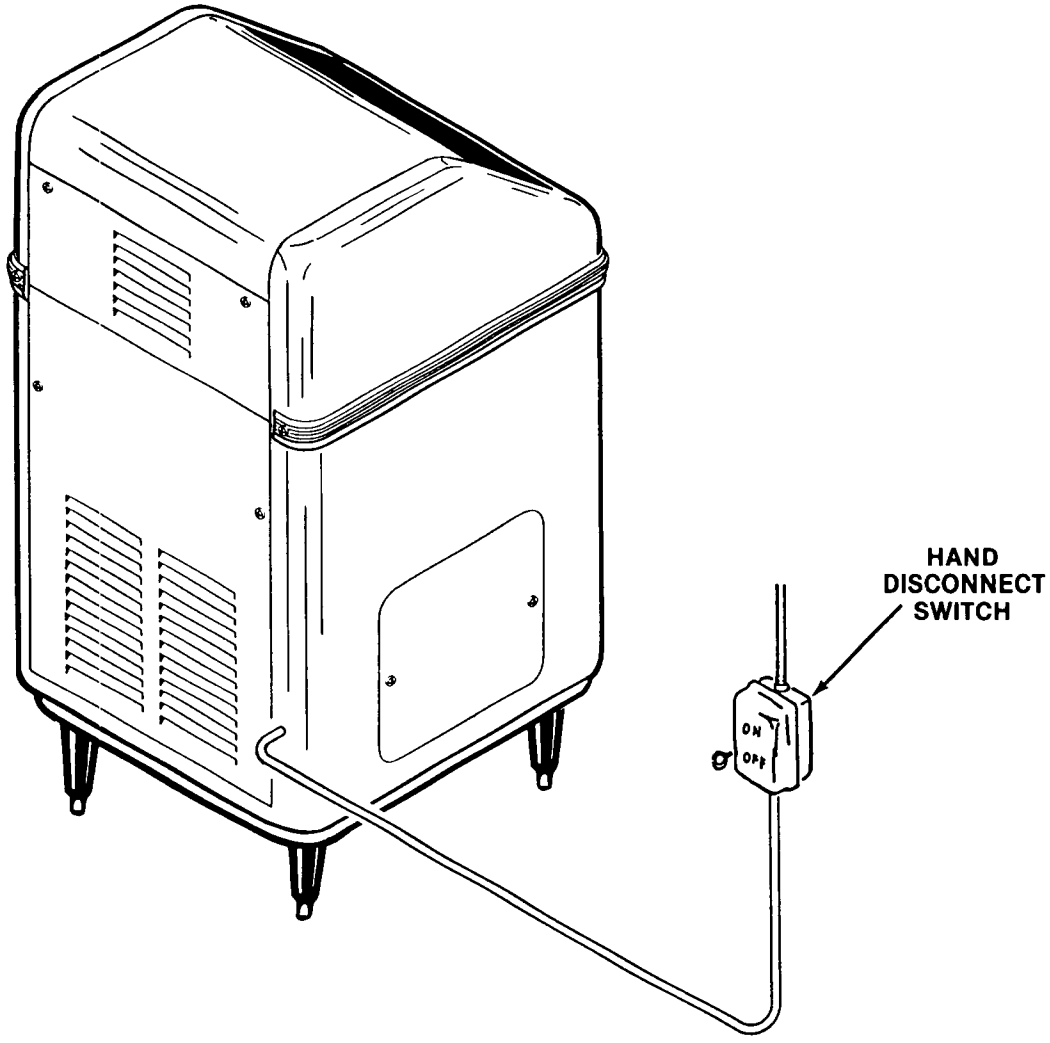

AF1 FOR THE PLUMBER

WATER SUPPLY AND DRAIN CONNECTIONS

The recommended water supply line is a 1/4-inch O.D. copper tubing with a minimum pressure of 20 PSIG. A 1/4-inch flare fitting is provided at the water inlet. Connect to cold water supply line with standard plumbing fittings, with a shut off valve installed in an accessible place between the water supply and the cabinet.

//////////////////// **CAUTION** ////////////////////

This icemaker is equipped with a low water pressure safety device, which in the event of interruptions or low water pressure, the icemaker will automatically stop to prevent damage. It will restart automatically when water pressure is restored.

//

The icemaker in this cabinet will not operate properly when water supply temperatures are below 40-degrees F. or above 100-degrees F.

Install to conform with the local plumbing codes. In some cases, a plumbing permit and services of a licensed plumber will be required.

Recommended bin drain is a 5/8-inch O.D. copper tubing and should be vented and run separately. Connect a 7/16-inch I.D. tube from the water-cooled condenser, on water-cooled models.

If drain is a long run, allow a 1/4-inch per foot fall.

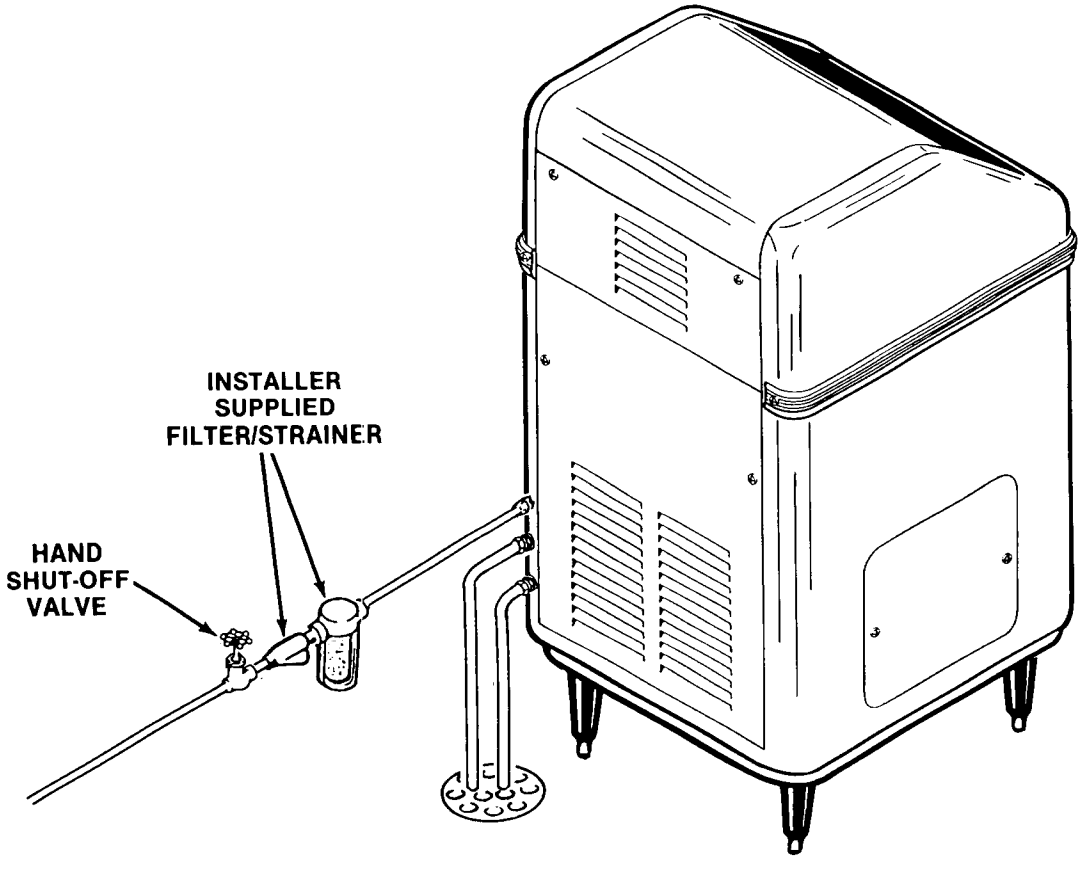

OPEN, TRAPPED OR VENTED DRAIN

AF1 FOR THE INSTALLER

FINAL CHECK LIST

1. Is the cabinet in the room where ambient temperatures are within the minimum and maximum temperatures specified?
2. Is there at least six inches clearance behind the cabinet for proper air circulation?
3. Has water supply pressure been checked to insure a minimum of 20 PSIG and a maximum of 120 PSIG operating pressure?
4. Is the cabinet level?
5. Have all electrical and piping connections been made?
6. Is the water supply line shut-off valve installed and electrical wiring properly connected?
7. Have the compressor hold-down nuts been checked to be sure the compressor is snug on the mounting pads?
8. Check all refrigerant lines and conduit lines, to guard against vibration or rubbing and possible failure.
9. Have the bin and cabinet been wiped clean?
10. Has the Manufacturer's Registration Card been properly filled out? Check for correct model and serial numbers from Serial nameplate, then mail the completed card to the SCOTSMAN factory.
11. Has the owner/user been given the User Manual and instructed on how to operate the icemaker.
12. Has the owner been given the name and telephone number of the authorized SCOTSMAN Service Agency serving him?

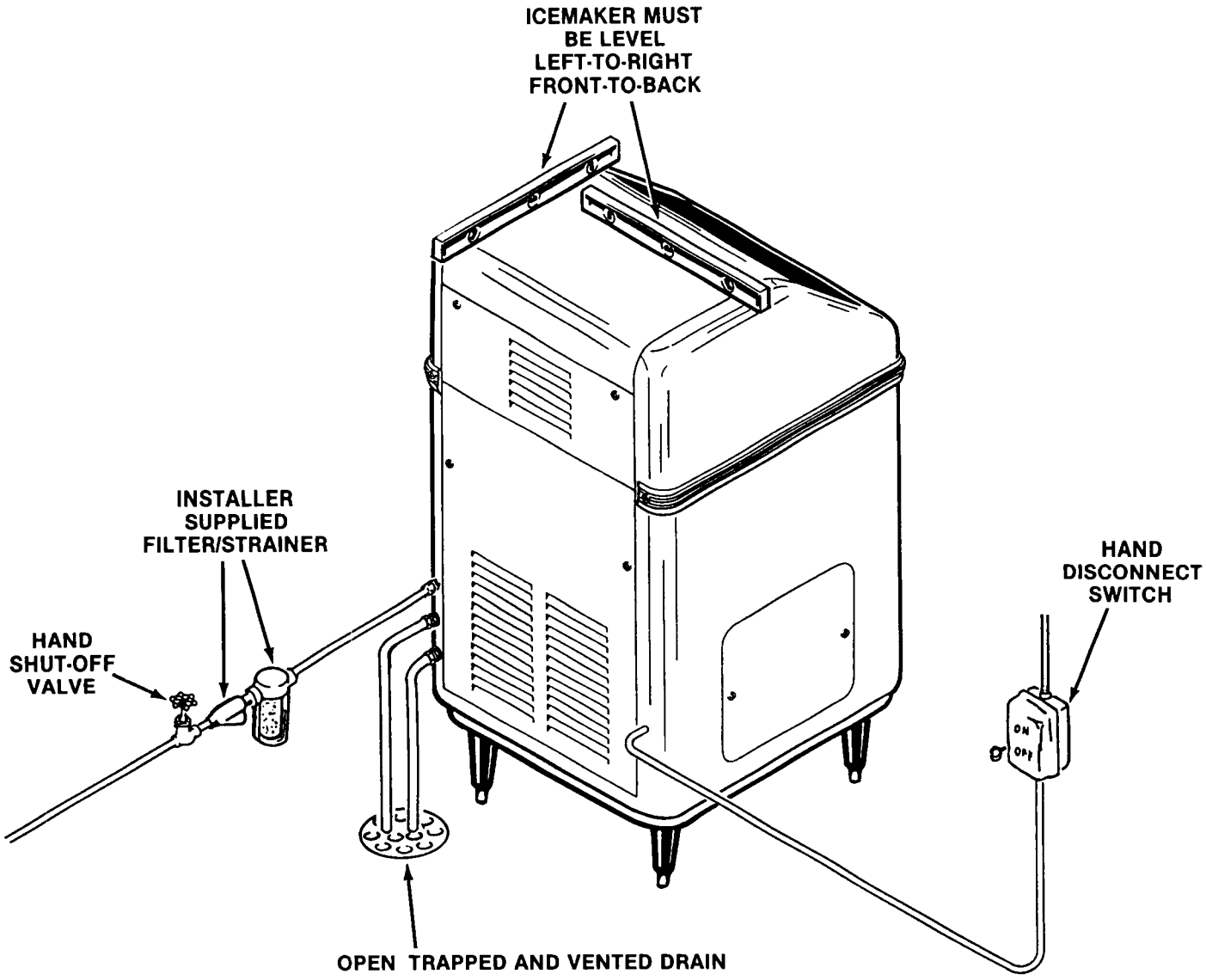

AF1 START-UP

OPERATING INSTRUCTIONS

START UP

1. Remove screws and the front and back panels.
2. OPEN the water supply line shutoff valve.
3. Observe the water filling operation.
   a. Water flows into water reservoir.
   b. Float moves up as water rises.
   c. Water flows through water feed line to bottom of freezer assembly.
   d. Float stops water flow, when water level reaches the molded horizontal line, on the body of the water reservoir.
4. Check all internal water connections for leaks.
5. Set the Master ON-OFF toggle switch to ON position to start the automatic icemaker operation.
6. Observe that ice begins dropping into the ice storage bin.
7. Let the system operate until ice covers the bottom of the bin. Check for any excess noises beyond normal compressor noise.
   a. Fan noises, when air-cooled: Blades touching other surfaces; blades bent or out-of-balance.
   b. Vibrating type, from touching lines.
   c. Chattering: Lack of water in freezer.
   d. Compressor loose at one or more holddown bolts.

////////////////////// **CAUTION** //////////////////////

This icemaker is equipped with a low water pressure safety device, which in the event of interruptions or low water pressure, the icemaker will automatically stop to prevent damage. It will restart automatically after the water pressure is restored.

//

8. Place ice on the ice storage bin thermostat control bulb, to test shut-off. Less than one minute is about normal for bulb shut off function to cause the compressor to stop.

NOTE

Within minutes after the ice is removed from the sensing bulb, the bulb will warm up and cause the icemaker to restart. This control is factory set and should not be reset until testing is performed. Normal setting is 35-degrees F. CUT-OUT and 45-degrees F. CUT-IN, to prevent short cycling.

9. Thoroughly explain to the owner/user the significant specifications of the icemaker, the start up and operation, going through the procedures for the operating instructions. Answer all questions about the icemaker, by the owner; and, inform the owner of the name and telephone number of the authorized SCOTSMAN Distributor or Service Agency serving him.

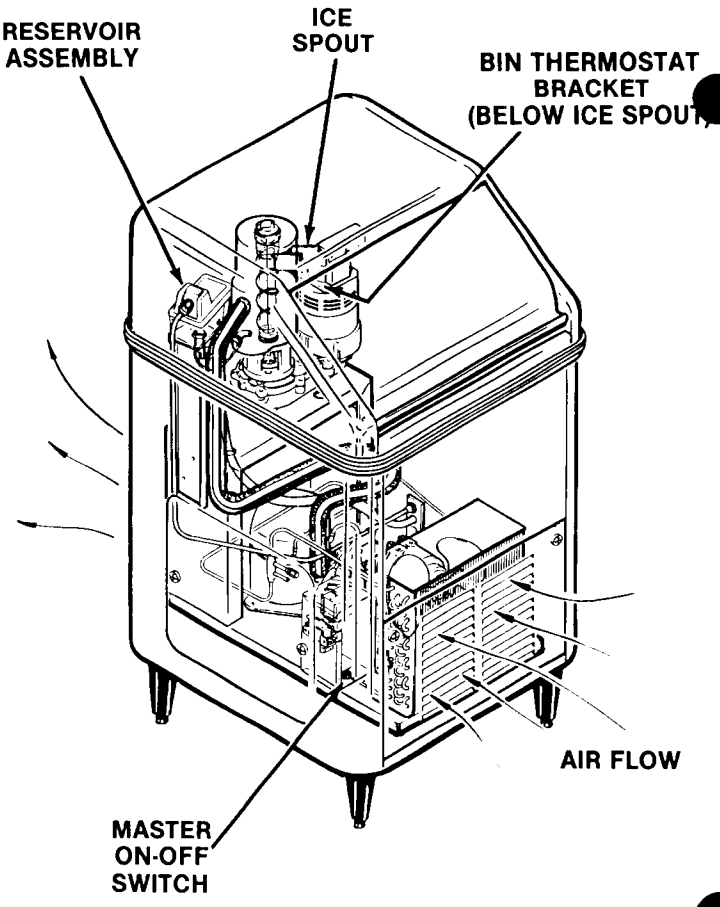

AF1 START-UP

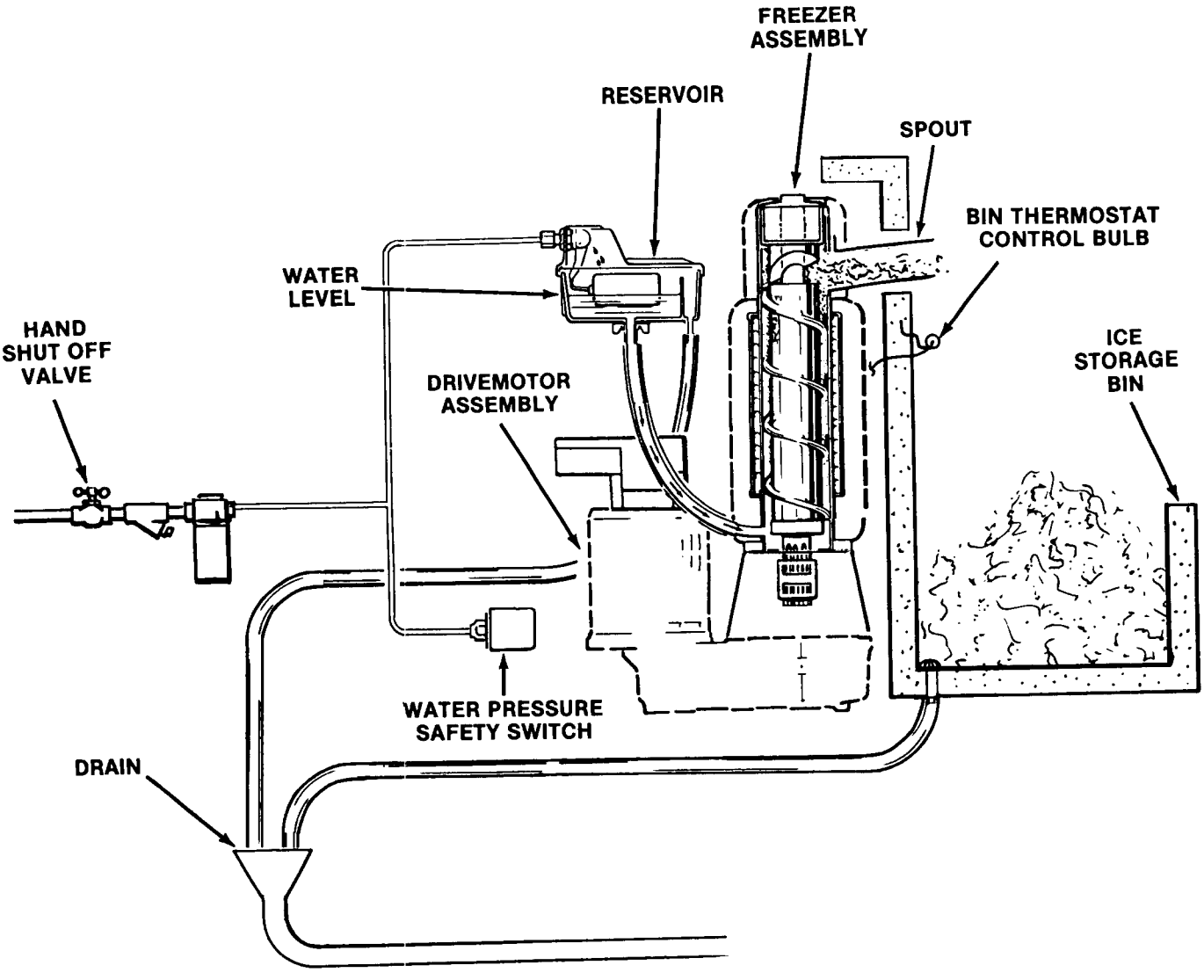
FREEZER ASSEMBLY
RESERVOIR
SPOUT
BIN THERMOSTAT CONTROL BULB
WATER LEVEL
HAND SHUT OFF VALVE
ICE STORAGE BIN
DRIVEMOTOR ASSEMBLY
WATER PRESSURE SAFETY SWITCH
DRAIN

AF1 OPERATION

ICEMAKER OPERATION

The water supply flows from the building source through the inline water strainer, enters at the inlet fitting and on to the water reservoir. The water reservoir functions to maintain a constant water level inside the freezer assembly. Water from the water reservoir enters at the bottom of the freezer assembly and is changed into ice by low temperatures inside the freezer.

A stainless steel auger within the freezer is powered by the drivemotor assembly, a direct-drive gearmotor, and the rotating auger carries the ice upward to the end of the auger.

Excess water is pressed out of the ice, as it is pushed out through the spout opening and into the ice storage bin.

Setting the Master ON-OFF toggle switch to ON starts the automatic and continuous icemaking process. When the ice storage bin has been filled with ice, up to the level of the bin thermostat control capillary bulb, the icemaking process shuts OFF.

As ice is removed from the ice storage bin, the bulb warms up, restarting the automatic icemaking process.

Factory settings are 35-degrees F. CUT-OUT and 45-degrees F. CUT-IN.

Altitude adjustment should ONLY be performed on icemakers installed at 2000-feet level locations and ABOVE and adjust only in increments of one-fourth turn of screw at a time.

ELECTRICAL/REFRIGERATION

The AF1 icemakers are designed to operate on standard electrical supply 115 volts, 60 Herts, single phase. Other voltage requirements are available on special order. Therefore, always CHECK NAMEPLATE for electrical information BEFORE proceeding with electrical wiring connection to the icemaker.

Cold ambient temperatures and interruptions in water supply are conditions that can cause excessively hard ice and overloads within the freezer assembly, which is directly transmitted to the drivemotor; and in turn, will cause speed reduction or ultimate freezeup.

When the drivemotor is slowed to a pre-determined RPM, a sensing switch mounted on top of the motor is designed to open the electrical circuit to the compressor. The compressor stops operating, no more ice is produced and the drivemotor continues to operate rotating the auger to clear the overload and gradually build up to full speed.

At a pre-determined higher RPM drivemotor speed, the speed sensing switch closes the electrical circuit to the compressor, causing the normal icemaking process to continue.

There are two safety controls in the control box. The low refrigerant pressure control, an automatic reset, non-adjustable control, is used to electrically open at zero to four PSIG to stop the entire icemaker. The auger delay switch, a single-pole double-throw (SPDT) switch, functions as a control device to allow the drivemotor to rotate the auger to clear the freezing chamber while the compressor circuit is OFF.

Refer to the appropriate wiring diagram and trace circuitry and control functions, as described in the following paragraph.

As shown on all SCOTSMAN wiring diagrams, the controls are in the ICEMAKING MODE. Thus, the auger delay 1-2 contacts are CLOSED. At STARTUP, the 1-2 contacts are OPEN and the 3-2 contacts are CLOSED. As the icemaker begins to operate, the low side pressure starts to decrease from the stabilized or at-rest pressure. As soon as the pressure is reduced to 20 PSIG, the 3-2 contacts OPEN and the 1-2 contacts CLOSE.

This removes the operating controls, such as the bin thermostat, from the drivemotor circuit. If one of the operating controls OPENS, it will SHUT OFF the compressor circuit. The drivemotor will operate until the low side pressure increases to 32 PSIG. Then, the 1-2 contacts OPEN and SHUTS OFF the drivemotor, usually within one to two minutes, depending upon ambient conditions. The brief period of time allows the auger to transport all the ice out of the freezing chamber. Consequently, when called on to STARTUP again, there is no ice load to start up against. Again, on STARTUP, the 1-2 contacts are OPEN and the 3-2 contacts are CLOSED.

AF1 OPERATION

On all models, a low-water pressure switch functions to discontinue the icemaking process whenever inlet water pressure is reduced to below 10 PSIG. The switch will automatically restart the icemaking process when the water pressure is increased to 20 PSIG.

The head pressure is normal about 130 PSIG, however it will vary depending upon ambient air temperature.

Suction pressure should be 13 PSIG with proper refrigerant charge. Suction pressure will vary about two PSIG plus or minus, depending upon ambient temperatures and inlet water supply temperatures to the freezer assembly.

When charging the system with refrigerant, always CHECK NAMEPLATE for specific refrigeration charge for individual icemaker.

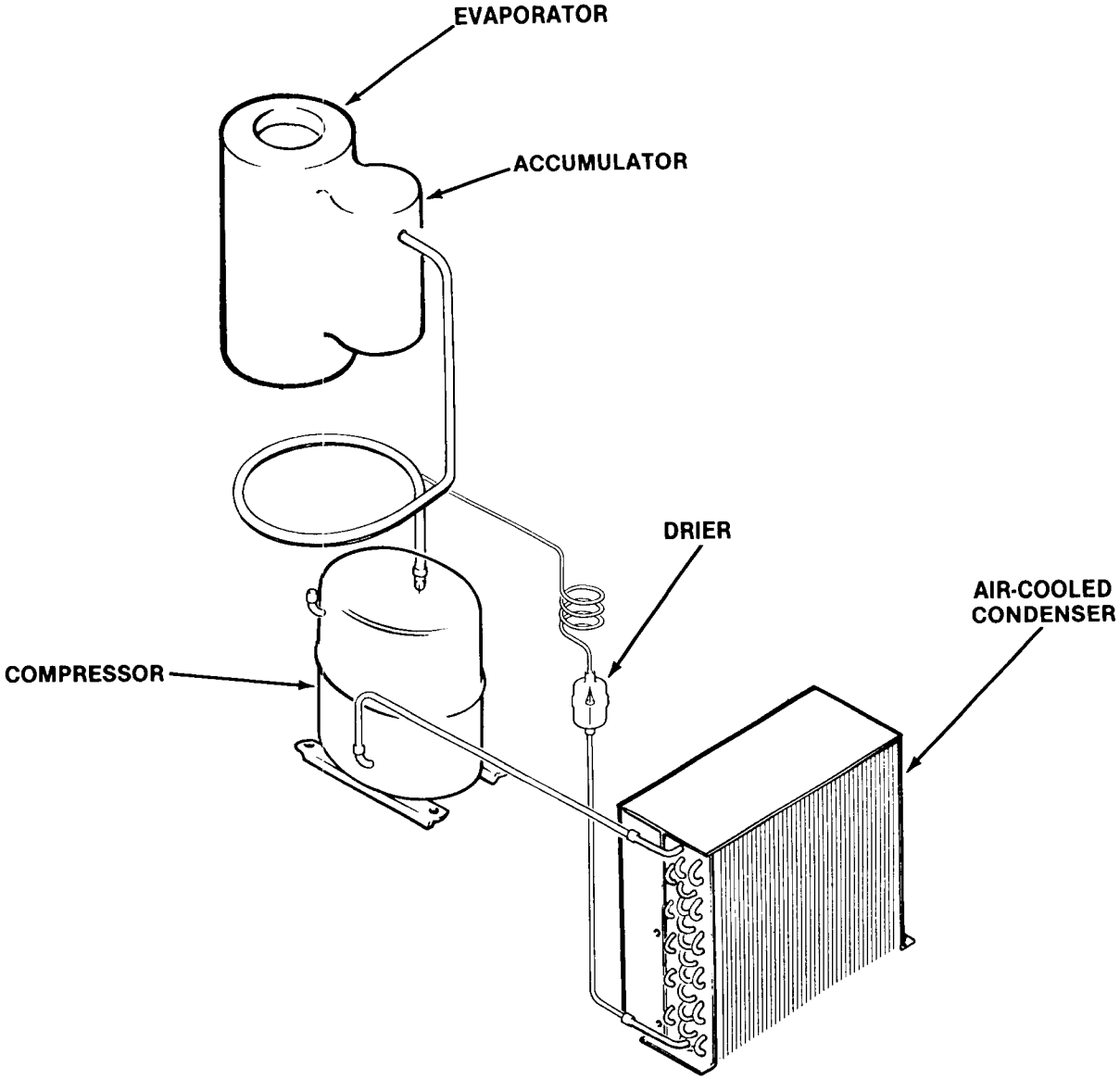

AF1 COMPONENT DESCRIPTION

BIN THERMOSTAT CONTROL

The bin thermostat is located on the left side of the control box. The sensing capillary tube is routed from the control out the side of the control box up and into the bin thermostat bracket. The bin thermostat control functions to automatically shut OFF the icemaker, when the ice storage bin is filled and ice contacts the capillary tube. It also signals the RESTART of the icemaker, when the capillary tube starts to warm up, after ice has been removed from the bin.

Bin thermostat control adjustment should ONLY be performed on icemakers installed in extreme warm or cold locations and adjust only in increments of one eighth turn at a time.

AUGER DELAY SWITCH, a single-pole double throw (SPDT) switch, allows the gearmotor to rotate the Auger and clear the freezing chamber after the bin ice level switch circuit to compressor is OFF. When the icemaker restarts, the gearmotor starts in a no load condition, preventing excessive loading of gearmotor and bearings.

COMPRESSOR START RELAY

The compressor start relay completes the circuit to the compressor from the start capacitor to provide enough energy to start the compressor. When the compressor motor has started, the compressor relay opens and removes the start capacitor from the circuit.

WATER RESERVOIR

The water reservoir, with a float valve assembly, maintains a constant water supply within the freezer assembly. The water level in the reservoir is the same water level as in the freezer. The correct water level in the freezer is level with the top of the auger flights. The water level in the freezer can be adjusted by raising or lowering the water reservoir with the bracket.

WATER PRESSURE SAFETY SWITCH installed in the potable water inlet line is set to electrically open at 10 PSIG and stop the entire icemaker. The AUTOMATIC RESET will restart the icemaking process when water pressure rises to 20 PSIG.

REFRIGERANT LO PRESSURE CONTROL is factory set to automatically SHUT DOWN the icemaker if the low-side pressure drops below 4 PSIG.

FREEZER ASSEMBLY

Evaporator coils surround a cylindrical tube which is filled with water. As ice forms on the interior wall, it is lifted by a rotating auger which moves the ice to the ice breaker at the top of the cylinder where it is forced through the ice delivery chute.

ICE BREAKER ASSEMBLY

The ice breaker assembly, bolted to the top of the freezer, contains the bearing and seal for the top of the auger. Flaked ice created by the freezer is carried by the auger to the ice breaker assembly and the flaked ice is pushed by the auger through the hole in the side of the freezer and falls into the bin.

AUGER

The highly-polished stainless steel auger inside the freezer assembly, is rotated by the gearmotor and pushes ice to the top of the freezer.

LOWER WATER SEAL

The highly precision two-part water seal located at the bottom of the freezer, seals the bottom of the freezer assembly to contain water. The rotating part of the lower water seal is attached to the bottom of the auger and the stationary part of the seal is pressure fit into the bottom of the freezer assembly tube. Anytime condition of the lower water seal is in question, replace the seal.

AF1 COMPONENT DESCRIPTION

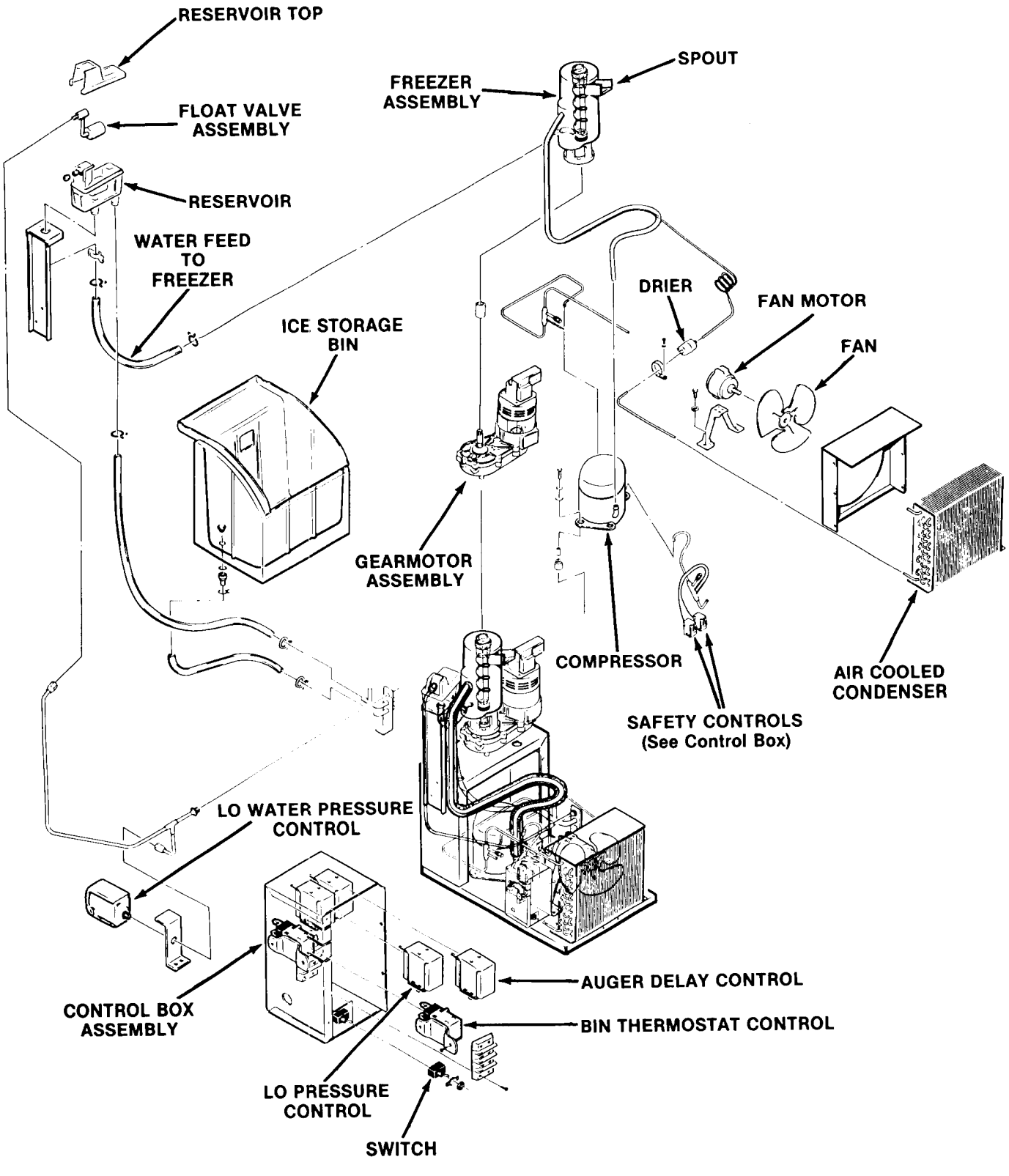

AF1 MAINTENANCE & CLEANING INSTRUCTIONS

A Scotsman Ice System represents a sizable investment of time and money in any company's business. In order to receive the best return for that investment, it MUST receive periodic maintenance.

It is the USERS RESPONSIBILITY to see that the unit is properly maintained. It is always preferable; and less costly in the long run, to avoid possible down time by keeping it clean, adjusting it as needed and by replacing worn parts before they can cause failure. The following is a list of recommended maintenance that will help keep your machine running with a minimum of problems.

Maintenance and Cleaning should be scheduled at a MINIMUM of twice per year.

GENERAL

The periods and procedures for maintenance and cleaning are given as guides and are not to be construed as absolute or invariable. Cleaning especially will vary, depending upon local water conditions and ice volume produced and each icemaker must be maintained individually, in accordance with its own particular location requirements.

ICEMAKER MAINTENANCE

THE FOLLOWING MAINTENANCE SHOULD BE SCHEDULED AT LEAST TWO TIMES PER YEAR ON THIS ICEMAKER. CALL YOUR AUTHORIZED SCOTSMAN SERVICE AGENCY.

1. Check and clean optional water line strainers or water purification equipment.
2. Remove screws and lower and upper panels from the cabinet to gain access.
3. Remove cover from water reservoir and depress the float to insure that a full stream of water enters the reservoir.
4. Check that the icemaker cabinet is level, in side-to-side and front-to-back directions.
5. Check that the water level in the water reservoir is below the overflow.

NOTE

It is not abnormal for some water to emerge out the spout with ice during normal ice production.

6. Clean the water reservoir and interior of the freezer assembly, using a solution of SCOTSMAN Ice Machine Cleaner. Refer to CLEANING — ICEMAKER.
7. Remove auger. See page 25. Check bearings for wear and auger for stains.

NOTE

Cleaning requirements vary according to local water conditions and individual user operation. Visual inspection of the auger before and after cleaning will indicate frequency and procedure to be followed in local areas.

8. Check drivemotor operation: Check amp draw, noise, oil leaks.
9. Check operation of the centrifugal sensing switch:

   Switch will OPEN between 850-950 RPM and the compressor STOPS, with the drivemotor operating. Switch will CLOSE between 1100-1250 RPM and the compressor will RESTART, with drivemotor building back up to normal operating speed.
10. Clean the air-cooled condenser, using vacuum cleaner, whisk broom or brush. Instruct customer to clean frequently and to be sure icemaker and fan motor are OFF.
11. Check that fan blades move freely, are not touching any surfaces and are not bent or out of balance.
12. Check for refrigerant leaks.
13. Check for water leaks. Tighten drain line connections. Pour water down bin drain to be sure that drain line is open and clear.
14. Check the quality of ice. Ice should be wet when formed, but will cure rapidly to normal hardness in the bin.
15. Check the bin thermostat control bulb.

NOTE

Place ice on the ice storage bin thermostat control bulb, to test shut-off. Less than one minute is about normal for bulb shut off function to cause the compressor to stop.

AF1 MAINTENANCE & CLEANING INSTRUCTIONS

ICEMAKER CLEANING

1. Remove screws and the front and top panels.
2. Set the master ON-OFF toggle switch to OFF.
3. Remove all ice from the ice storage bin.
4. Remove screws and lower and upper panels of the cabinet to gain access.
5. Remove the reservoir cover and block the float in the water reservoir up to stop water flow.
6. Disconnect the tube between the water reservoir and the bottom of the freezer assembly and drain water from the reservoir and tube. Reconnect the tube.

WARNING

SCOTSMAN Ice Machine Cleaner contains Phosphoric and Hydroxyacetic acids. These compounds are corrosive and may cause burns. If swallowed, DO NOT induce vomiting. Give large amounts of water or milk. Call Physician immediately. In case of external contact flush with water. KEEP OUT OF THE REACH OF CHILDREN.

7. Prepare cleaning solution: Mix 4 ounces of SCOTSMAN Ice Machine Cleaner with one quart of hot water.
8. Slowly pour the cleaning solution into the water reservoir.
9. Set the master ON-OFF toggle switch to ON.
10. Continue to slowly pour the cleaning solution into the water reservoir, maintain level just below the reservoir overflow.
11. Continue icemaking, using the cleaning solution, until all the solution is used up and the water reservoir is almost empty. DO NOT allow the icemaker to operate with empty reservoir.
12. Set the master ON-OFF toggle switch to OFF.
13. Wash and rinse the water reservoir.
14. Remove the block from the float in the water reservoir.
15. Set the master ON-OFF toggle switch to ON.
16. Continue icemaking for at least 15 minutes, to flush out any cleaning solution. Check ice for acid taste - continue icemaking until ice tastes sweet.
17. Set the master ON-OFF toggle switch to OFF.

CAUTION

DO NOT use ice produced from the cleaning solution. Be sure none remains in the bin.

18. Remove all ice from the ice storage bin.
19. Add HOT water to the ice storage bin and thoroughly wash and rinse all surfaces within the bin.
20. Clean and sanitize the ice storage bin each week.

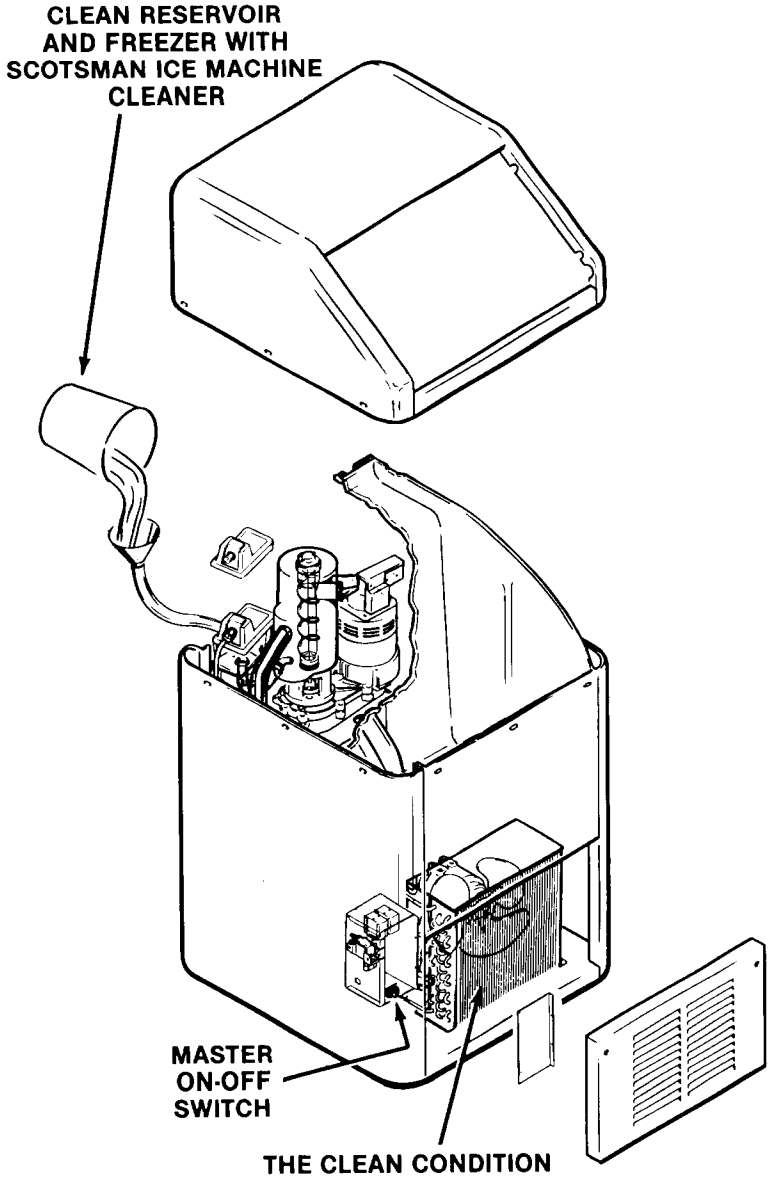

AF1 SERVICE DIAGNOSIS

SYMPTOM	POSSIBLE CAUSE	CORRECTION
Unit will not run	Blown Fuse	Replace fuse and check for cause of blown fuse
	Thermostat set too high	Adjust thermostat. Refer to Adjustment, Bin Thermostat page 20.
	Loose electrical connection	Check wiring
	Switch in OFF position	Turn switch to ON
	Inoperative master switch	Replace switch
	Low water pressure	Restore water pressure
	Low on refrigerant	Leak check, evacuate & recharge
Compressor cycles intermittently	Low voltage	Check for overloading
	Dirty condenser	Clean
	Air circulation blocked	Remove blockage
	Inoperative condenser motor	Replace
	Non-condensable gases in system	Purge off, evacuate & recharge
	Low on refrigerant	Leak test, evacuate, and charge
Making wet ice	Surrounding air temperature	Correct or move unit to cooler location
	Under or over-charge of refrigerant.	Recharge with proper amount
	High water level in water reservoir	Lower to horizontal molded line on the reservoir
	Inoperative master switch	Replace switch
	Low water pressure	Restore water pressure
Low ice production	Loss of refrigerant, under or over-charge of refrigerant	Check and recharge with proper amount of refrigerant
	Dirty or plugged condenser	Clean condenser
	Low water level in water reservoir	Adjust to horizontal molded line on the reservoir
	Partial restriction in capillary tube or drier	Moisture in system. Remove charge and drier. Replace and recharge system
	Inlet water strainer partially plugged	Remove screen and clean.
	Corroded or stained worm shaft due to water condition	Remove worm shaft and clean
Gear motor noise.	Low on oil, bad bearings or bad gears.	Remove case cover to check for proper oil level. See Removal & Replacement.

AF1 SERVICE DIAGNOSIS

SYMPTOM	POSSIBLE CAUSE	CORRECTION
Machine runs but makes no ice	Loss or under-charge of refrigerant	Check for leaks and recharge
	Drive gearmotor or drive coupling stripped	Check. Repair and/or replace
	Water not entering freezing chamber	Plugged strainer or supply line. Check and clean. Air lock in gravity feed line. Check and remove air lock.
	Moisture in system	Check and remove charge and drier. Replace and recharge.
	Water seal leaking	Replace seal
Water leaks	Defective water seal	Replace
	Gravity feed line leaking	Check hose clamps
	Storage bin drain & connecting fittings	Check and repair
	Water level in reservoir too high	Adjust to horizontal molded line on the reservoir
Excessive noise or chattering	Mineral or scale deposits on auger and inner freezing chamber walls	Remove and manually polish auger, polish inner chamber walls of freezer barrel
		For lighter concentrations use Scotsman Ice Machine Cleaner periodically
	Low suction	Add gas to raise suction pressure
	Intermittent water supply	Check & Clean strainer. Check gravity feed line for air lock. Remove air lock
	Water level in reservoir too low	Adjust to horizontal molded line on the reservoir
	Gear motor loose on frame	Tighten
	Gear motor end play or worn bearings	Repair or replace
Machine continues to run with full storage bin	Storage bin thermostat not properly set or defective.	Reset or replace. 35° cut-out, 45° cut-in. Check operation with handful of ice

AF1 ADJUSTMENT PROCEDURES

Read the instructions thoroughly before performing any adjustment or removal and replacement procedures.

ADJUSTMENT OF THE BIN THERMOSTAT CONTROL

The control for the bin thermostat is the temperature control, located on the upper part of the retainer wall.

Above 2000 ft. only.

To adjust the bin thermostat control:

1. Hold a handful of ice against the capillary bulb in the ice storage bin.
2. Slowly rotate in the appropriate direction, the adjusting screw on the temperature control device until the icemaker shuts OFF.
3. Remove ice from the capillary bulb; then, place warm hand on the capillary bulb to restart the icemaker.
4. Place handful of ice against the capillary bulb and observe that the icemaker should shut OFF.

////////////////////// **WARNING** //////////////////////

The adjusting screws on the temperature control device have very sensitive response to adjustment. DO NOT attempt to adjust the screw until after thoroughly reading and understanding the instructions and illustrations. Over-adjusting or erratic guessing, can foul the instrument and cause ultimate delay and part replacement, WHICH COULD HAVE BEEN PREVENTED.

//

ADJUSTMENT OF THE LEG LEVELERS

When the icemaker is equipped with legs, the cabinet must be leveled in the front-to-back and side-to-side directions. This adjustment should be performed during initial installation of the cabinet and anytime the cabinet is moved from the original location to another site.

1. Using a 1-1/8″ open-end wrench and a carpenter's bubble level, rotate the threaded leveler in each leg to RAISE or LOWER the cabinet until the cabinet is level in the front-to-back direction.
2. Repeat for leveling in the side-to-side direction.
3. Recheck both the front-to-back and the side-to-side leveling and repeat adjustments, as necessary.

ADJUSTMENT OF THE WATER RESERVOIR FLOAT

The correct water level in the water reservoir should be at the level of the raised molded line, on the side of the body of the water reservoir. When the water line level is above or below the raised molded line, adjustment can be performed to raise or lower the water level by bending the metal arm of the float, inside the water reservoir.

To adjust the water reservoir float:

1. To RAISE the water level:
   Hold one end of the metal arm of the float and slightly bend the float up.
2. To LOWER the water level:
   Hold one end of the metal arm of the float and slightly bend the float DOWN.
3. To perform MAJOR adjustment:
   When repair or replacement has been performed and the water level line between the water reservoir and the freezer assembly has been substantially altered:

   a. Loosen the three screws and lockwashers which attach the reservoir bracket and water reservoir to the freezer mount.

   Move the reservoir bracket UP or DOWN to properly position the water reservoir at the correct water line level within the freezer. The proper water level within the freezer is 1/2″ - 3/4″ below the top of the auger.

   When proper water level within the freezer is adjusted, re-tighten screws attaching the water reservoir bracket to the freezer mount.

AF1 REMOVAL AND REPLACEMENT PROCEDURES

REMOVAL AND REPLACEMENT OF THE SLIDE-OUT CHASSIS

WARNING

Be sure the electrical power supply and the water supply are OFF, BEFORE starting any of the following REMOVAL AND REPLACEMENT procedures as a precaution to prevent possible personal injury or damage to equipment.

1. Disconnect or shut OFF electrical power to the icemaker at the building source.
2. Shut OFF water supply to the icemaker.
3. Remove screws and remove front panel and back panels. Remove screws located at the back of the icemaker and remove trim, hood and ice access door assembly.
4. Remove screws and remove control box cover and disconnect electrical leads connected to the icemaker from the building source.
5. Disconnect potable water supply and drain tubes connected to the icemaker.
6. Remove corbin clamp and disconnect the bin drain tube from water service bracket.
7. Remove screws and remove brace from upper back of icemaker.
8. Unthread from bin thermostat bracket and feed bin thermostat capillary tube through grommet at the back wall of the bin.
9. Remove three cap screws extending through the slide-out chassis into the cabinet base.
10. Push slide-out chassis through the cabinet back opening to remove the slide-out chassis from the cabinet.

To replace the slide-out chassis, reverse the removal procedure.

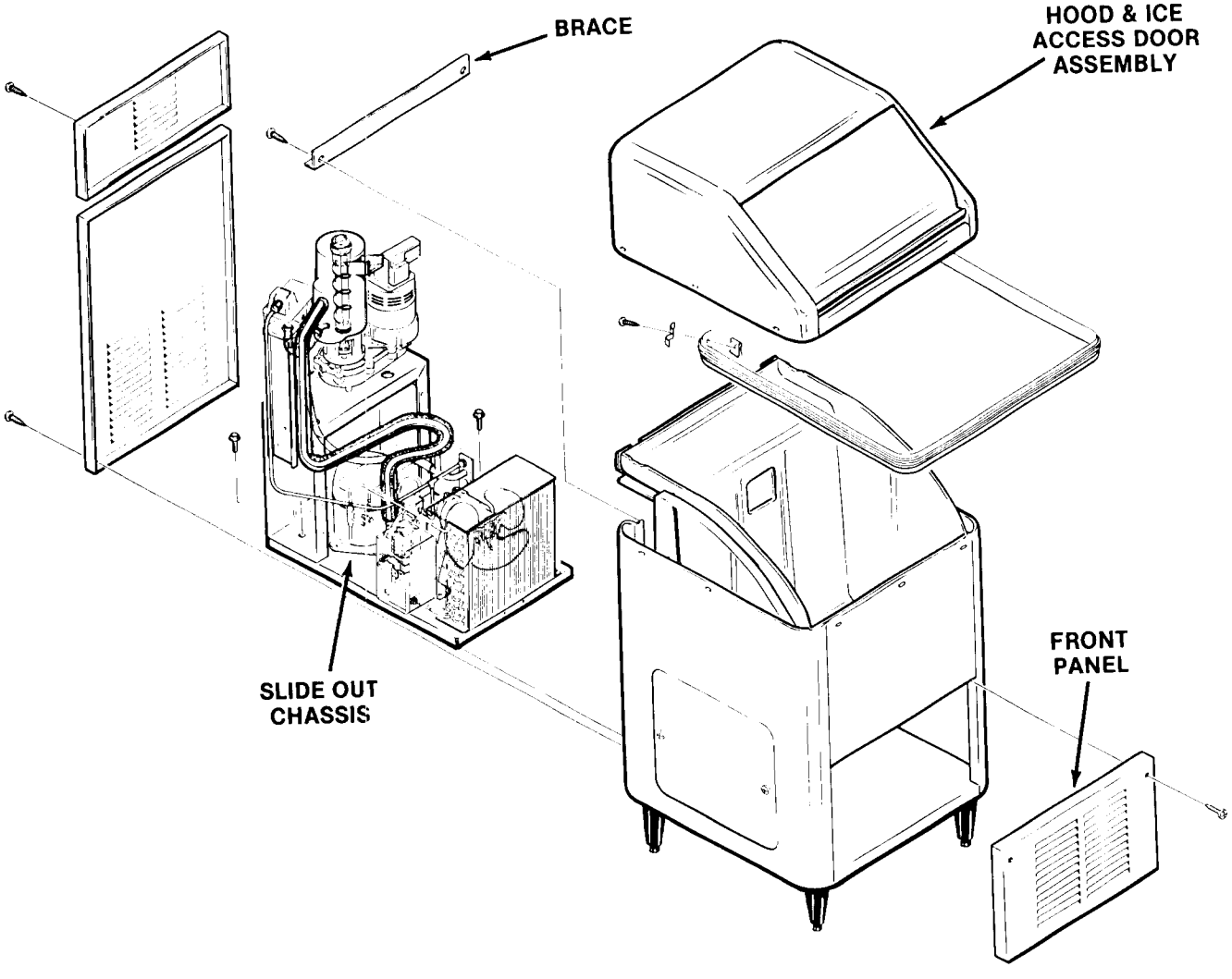

AF1 REMOVAL AND REPLACEMENT PROCEDURES

WARNING

Be sure the electrical power supply and the water supply are OFF, BEFORE starting any of the following REMOVAL AND REPLACEMENT procedures as a precaution to prevent possible personal injury or damage to equipment.

REMOVAL AND REPLACEMENT OF THE COMPRESSOR ASSEMBLY

To remove compressor refer to SLIDE-OUT CHASSIS PROCEDURE and remove chassis from cabinet.

1. Remove two screws and the cover from the compressor junction box.
2. Disconnect the electrical leads at the compressor junction box, that originate in the control box and fan motor.
3. Bleed off or blow the refrigerant charge through the Schrader valve.
4. Unsolder the suction line from the compressor.
5. Unsolder the discharge line from the compressor.
6. Unsolder the process header tube from the compressor and retain for installation on the replacement compressor.
7. Remove four bolts, lockwashers and washers which secure the compressor to the chassis mounting base.
8. To replace the compressor assembly, reverse the removal procedure.
9. To replace the compressor assembly, reverse the removal procedures.
10. When recharging the system with refrigerant, always check the nameplate for the specified refrigerant charge.

REMOVAL AND REPLACEMENT OF THE CONDENSER — AIR-COOLED MODELS

To remove the condenser refer to SLIDE OUT CHASSIS PROCEDURES and complete all steps.

1. Bleed off or blow the refrigerant charge through the Schrader valve.
2. Remove one screw and disconnect the drier brace and drier from the condenser shroud.
3. Unsolder and disconnect the condenser inlet tube at the condenser.
4. Unsolder and disconnect the condenser outlet tube at the condenser.
5. Remove three screws, lockwashers and washers securing the condenser to the chassis base.
6. Remove four screws that attach the control box to the condenser.
7. Remove the condenser from the chassis base.
8. To replace the condenser, reverse the removal procedure.
9. When recharging the system with refrigerant, always check nameplate for the specified refrigerant charge.

REMOVAL AND REPLACEMENT OF THE SAFETY CONTROLS, LOW PRESSURE, AND AUGER DELAY

To remove the controls, refer to the slide-out chassis procedure and complete all steps.

1. Bleed off or blow the refrigerant charge through the Schrader valve.
2. Unsolder the control capillary tube from its corresponding process header.
3. Replace the control and solder the capillary tube to its corresponding process header.
4. Follow the Removal and Replacement Procedure of the liquid line drier.

NOTE

Always install a replacement drier, anytime the sealed refrigeration system is opened. Do not replace the drier until all other repair or replacement has been completed.

Thoroughly evacuate the system to remove moisture and non-condensables.

AF1 REMOVAL AND REPLACEMENT PROCEDURES

WARNING

Be sure the electrical power supply and the water supply are OFF, BEFORE starting any of the following REMOVAL AND REPLACEMENT procedures as a precaution to prevent possible personal injury or damage to equipment.

REMOVAL AND REPLACEMENT OF THE DRIER

NOTE: Always install a replacement drier, anytime the sealed refrigeration system is opened. Do not replace the drier until all other repair or replacement has been completed.

To replace the drier:

1. Remove screws and remove back panel.
2. Bleed off or blow the refrigerant charge through the Schrader valve.
3. Remove attaching hardware and drier brace or strap from the drier.
4. Unsolder refrigeration lines at both ends of the drier.

To replace the drier:

CAUTION

1. **If the factory seal is broken on the replacement drier, exposing it to the atmosphere more than a few minutes, the drier will absorb moisture from the atmosphere and lose substantial ability for moisture removal.**
2. **Be sure the replacement drier is installed with the arrow positioned in the direction of the refrigerant flow.**

1. Remove the factory seals from the replacement drier and install the drier in the refrigerant lines with the arrow positioned in the direction of the refrigerant flow.
2. Solder the drier into the lines, two places.
3. Secure drier with the drier brace or strap.
4. Purge the system and check for leaks.
5. Thoroughly evacuate the system to remove moisture and non-condensables.
6. Charge the system with refrigerant, by weight. SEE NAMEPLATE.

REMOVAL AND REPLACEMENT OF THE WATER PRESSURE SWITCH ASSEMBLY

To remove the low water pressure switch assembly:

1. To remove the condenser refer to SLIDE OUT CHASSIS PROCEDURES and complete all steps.
2. Disconnect electrical leads in the control box from the low pressure switch.
3. Unscrew the flare nut fitting and disconnect the low pressure control and washer from the bracket.

To replace the low water pressure control assembly, reverse the removal procedure.

AF1 REMOVAL AND REPLACEMENT PROCEDURES

WARNING

Be sure the electrical power supply and the water supply are OFF, BEFORE starting any of the following REMOVAL AND REPLACEMENT procedures as a precaution to prevent possible personal injury or damage to equipment.

REMOVAL AND REPLACEMENT OF THE FAN MOTOR ASSEMBLY — AIR-COOLED MODELS

NOTE

Before beginning this procedure, observe the fan blade position on the shaft of the fan motor and mark the fan blade so it will be correctly positioned during reassembly. Direction of air flow should be toward the fan motor.

To remove the fan motor assembly:

1. Disconnect the electrical supply to the icemaker at the circuit breaker or fuse box.
2. Remove two screws and the lower left front panel.
3. Remove plastic trim, screws, and aluminum trim.
4. Remove screws and left front bracket. Remove upper front left panel.
5. Disconnect the electrical lead from the fan motor at the compressor control box.
6. Remove two screws securing the motor bracket to the chassis base and remove the fan motor and motor bracket from the chassis.
7. Remove the nut from the end of the fan motor shaft and remove the fan blade.
8. Remove four screws securing the fan motor to the motor bracket and separate the motor from the bracket.

To replace the fan motor assembly, reverse the removal procedure.

REMOVAL AND REPLACEMENT OF THE WATER RESERVOIR ASSEMBLY

Pull out icemaker or gain access to the back panel.

NOTE

Be prepared with container to catch water left in lines disconnected in next steps, to prevent draining water on parts, components, electrical lines, etc.

1. Disconnect the water inlet tube from the water reservoir assembly.
2. Remove two Corbin clamps and two tubes from the bottom of the water reservoir assembly.
3. Unscrew and remove the wing nut from the bottom of the water reservoir assembly.
4. Lift and remove the water reservoir assembly from the mounting bracket.

To replace the water reservoir assembly, reverse the removal procedure.

NOTE

Check that the installed replacement water reservoir assembly float moves freely. Bend metal arm of float to adjust, as necessary. The correct water level in the water reservoir is the point of the raised molded line, on the side of the body of the water reservoir.

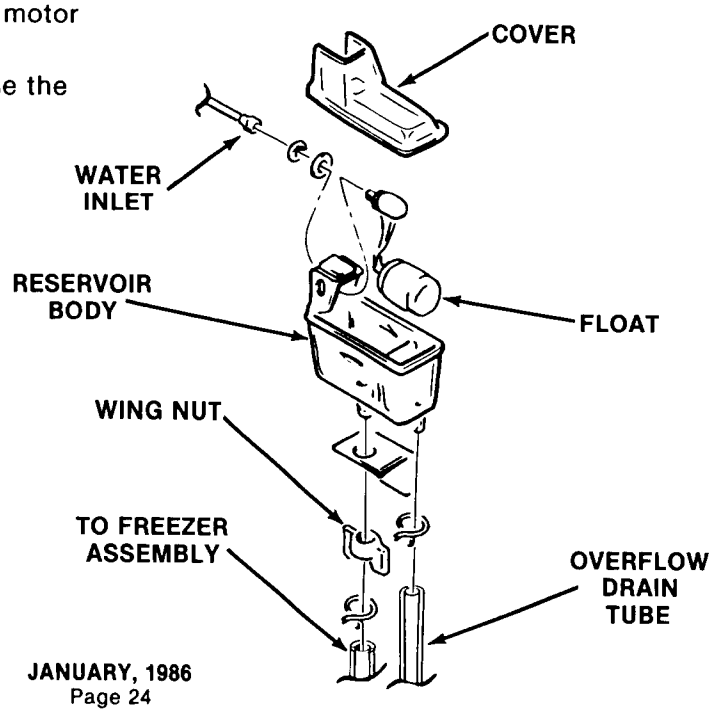

AF1 REMOVAL AND REPLACEMENT PROCEDURES

REMOVAL AND REPLACEMENT OF THE AUGER, WATER SEAL, BEARINGS AND ICE BREAKER

Auger, water seal, bearing and ice breaker are located in the freezer assembly. To gain access to the freezer assembly, refer to CHASSIS REMOVAL PROCEDURE.

ICE BREAKER AND AUGER REMOVAL

1. Remove permagum and two screws from the side of the freezer.
2. Pull up on cap hook located in the top of the freezer assembly to remove ice breaker with bearing set, auger and the top portion of the lower water seal.
3. Remove snap ring and cap and remove the bolt from the ice breaker and auger assembly to separate the ice breaker assembly from the auger. The bearings may be replaced or the ice breaker and bearings may be replaced as an assembly.

REMOVAL AND REPLACEMENT OF THE FREEZER ASSEMBLY

To remove the freezer assembly refer to SLIDE OUT CHASSIS and complete all steps.

1. Remove Corbin clamp and Tygon tube from the freezer assembly that connects to the water reservoir assembly.
2. Bleed off or blow the refrigerant charge through the Schrader valve.
3. Follow steps on removal and replacement of the auger, water seal, bearings and ice breaker.
4. Unsolder the suction line from the compressor.
5. Unsolder the capillary line at the drier.
6. Remove three screws, lockwashers and washers which attach the bottom of the freezer assembly to the drivemotor assembly.
7. Lift the freezer assembly up and off of the drivemotor assembly.

To replace the freezer assembly, reverse the removal procedure.

NOTE

Thoroughly evacuate the system to remove moisture and non-condensables.

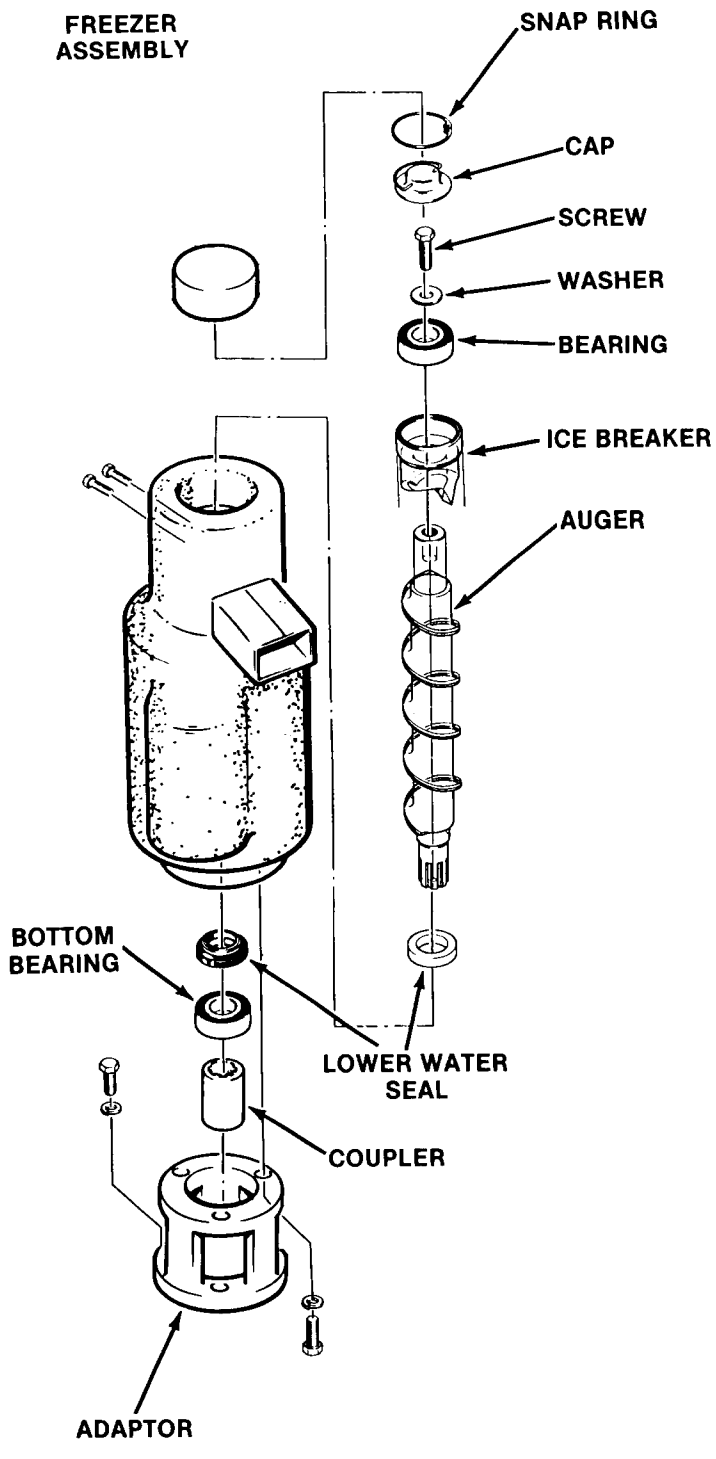

AF1 REMOVAL AND REPLACEMENT PROCEDURES

WATER SEAL INSTALLATION

Inspect the water seal in its package. Do not use if mating surfaces are scratched or cracked.

1. Remove auger, unbolt freezer from adaptor stand. Drive out old bottom bearing and water seal from the top down.
2. Remove old rotating half of water seal from auger and clean the auger at the seal mounting area.
3. Apply Scotsman part number 19-0529-01 RTV silicone rubber to the auger shoulder before pushing on the water seal. Place just enough silicone on to the auger, so that when the water seal is placed on the auger, the gap between the auger shoulder and water seal is completely filled with silicone.

   The silicone must be allowed to "set-up" or dry on the surface before any water can be added to the freezer.

////////////////////// WARNING //////////////////////

If any silicone gets onto the mating surfaces of the water seal, the seal is ruined, and cannot be used.

//

4. Clean the inside of the evaporator at the bottom bearing and water seal mounting area. Lubricate the outside edge of the stationary seal with food grade lubricant to aid installation.
5. Carefully push the stationary part of the water seal up into the bottom of the evaporator. It must go in straight and must not be pushed in beyond 1/4" past the bottom of the freezer.
6. Install new bottom bearing, push it into the freezer under the new water seal. It must be pushed in straight, but do not push it in past 1/8" from the bottom of the evaporator tube.
7. Mount the adaptor stand to the bottom of the freezer. Hand tighten the three cap screws until the stand flange is tight against the bottom bearing. Then, tighten the cap screws in a rotating pattern to insure proper alignment.
8. The top bearing should also be changed at this time. Be sure to mount the top bearing/bearing retainer assembly onto the auger **first** before installing the auger into the freezer tube.
9. Install the auger and test the unit.

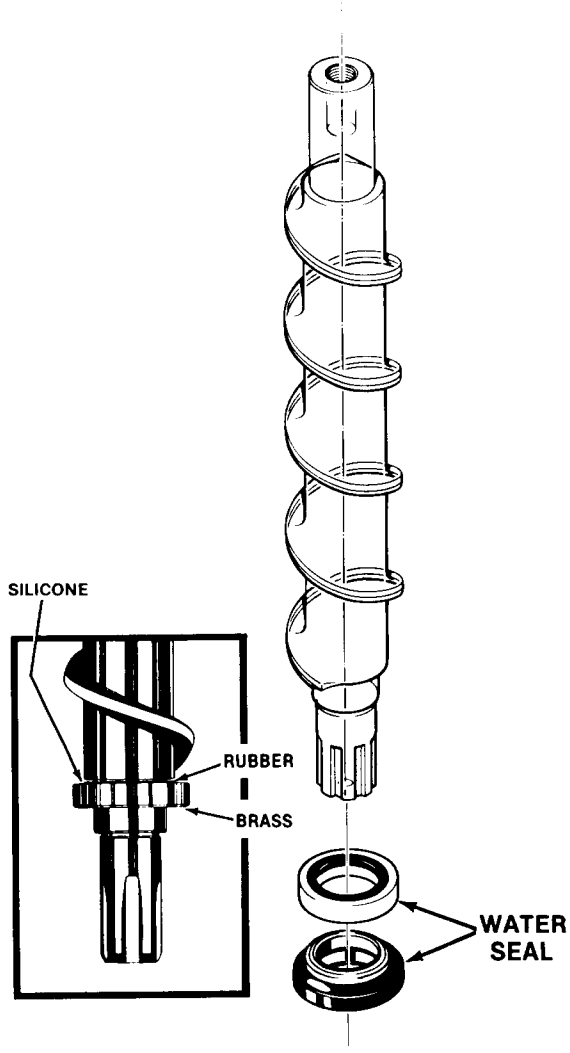

AF1 REMOVAL AND REPLACEMENT PROCEDURES

REMOVAL AND REPLACEMENT OF THE DRIVEMOTOR ASSEMBLY

To remove the drivemotor assembly:

1. Perform all steps in slide out chassis procedures to gain access for removal of the drivemotor assembly.
2. Remove the three screws, lock washers from bottom of freezer assembly which fasten the freezer to the drivemotor assembly.
3. Remove the drivemotor cover and disconnect the three electrical wire leads.
4. Remove three bolts, lockwashers and washers which attach the drivemotor to the freezer mount at the rear of the chassis.
5. Lift the drivemotor from the freezer mount.

To replace the drivemotor assembly, reverse the removal procedure.

REBUILDING THE 1/10 HORSEPOWER DRIVEMOTOR GEAR REDUCER ASSEMBLY

DRIVEMOTOR PARTS

To replace the centrifugal switch and mechanism or the motor winding or the motor rotor, removal of the gearbox assembly is not necessary.

////////////////////// **WARNING** //////////////////////

Be sure the electrical power supply and the water supply are OFF, BEFORE starting any of the following REMOVAL AND REPLACEMENT procedures as a precaution to prevent possible personal injury or damage to equipment.

//

1. Remove cover from the top of the centrifugal switch assembly and remove the electric wires from the microswitch. To replace just the centrifugal switch, remove two machine screws retaining the switch and remove the switch. To replace, reverse the procedure to this point.
2. If the motor is to be removed, the next step is to remove the four screws holding down the plastic switch assembly housing and lift the housing off of the motor top.
3. Remove the centrifugal switch mechanism from the rotor by unscrewing the machine screw at the top of the rotor.
4. The motor and housing may now be removed. Lift off the motor fan housing, and pull off the plastic fan. The next part to be removed is the motor winding. Disconnect the electrical leads of the motor from its control box location and lift off the winding.
6. The rotor is all that remains of the motor in the gear motor assembly. Use a pry bar to carefully pry up the rotor. (The only thing holding it in is the tight fit of the bottom rotor bearing into the top of the gear case.) To replace any of the above parts, reverse the disassembly procedure.

DRIVEMOTOR DIS-ASSEMBLY

After removal of the drivemotor gear reducer from the unit, inspect the internal parts of this gearmotor:

1. Place gearbox on a flat surface, covered with rags to absorb any spilled lubricant.
2. Using a punch, drive the roll pins out of the casing.
3. Remove the four capscrews on the top of the gear case and the two under the motor.
4. Pry the two cases apart.

When inspecting the internal parts, look for:

* Condition and quantity of lubricant. (The proper oil level is near the top of the output (biggest) gear.) 5 oz. capacity) Use Scotsman Gear Case Oil, P/N A25835-001.
* Bearing condition
* Gear and gear shaft condition
* Woodruff key between output gear and shaft.
* Grease seals, back to back
* Vent hole

Be sure to count and retain the spacer washers as they come out of the gearbox.

Replace the parts as required, using the part numbers found in the parts list section of this manual. Replace the gears into a CLEAN bottom gearcase, replacing the spacer washers in the same quantity as they were upon disassembly. If no count was kept, refer to the parts illustration.

NOTE

Some bearing grease should be placed in all bearings before assembly to insure proper lubrication upon start-up.

DRIVEMOTOR ASSEMBLY

To reassemble:

1. Set top gearcase on gears and spacers and oil. Be sure O-ring is in place.
2. Drive rollpins back into locating holes.
3. Replace capscrews into gearcase covers and torque (8 capscrews) at 80-90 inch pounds.
4. Bench test the gearmotor assembly.

Test for noise, amp draw (must not be in excess of icemaker nameplate for gearmotor) and oil leaks.

Return gearbox to the unit. Be certain all mounting surfaces are clean and reassemble gearbox to chassis and freezer assembly.

If the freezer water seal begins to leak, removal of the auger is required in order to replace the top and bottom bearing and water seal. AT THE SAME TIME, it would be recommended to remove the gearmotor assembly, open it up and inspect it.

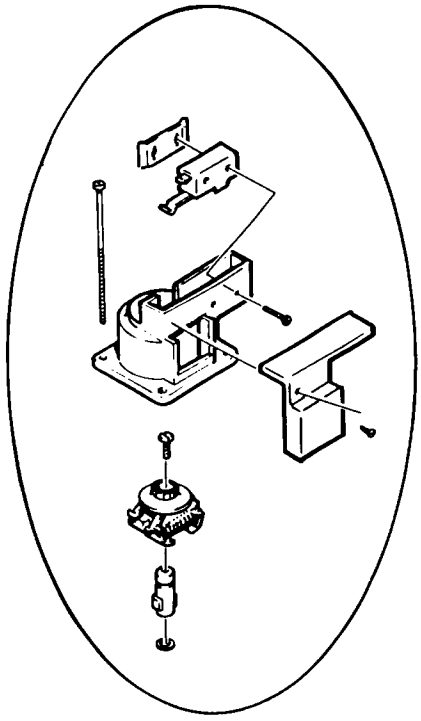

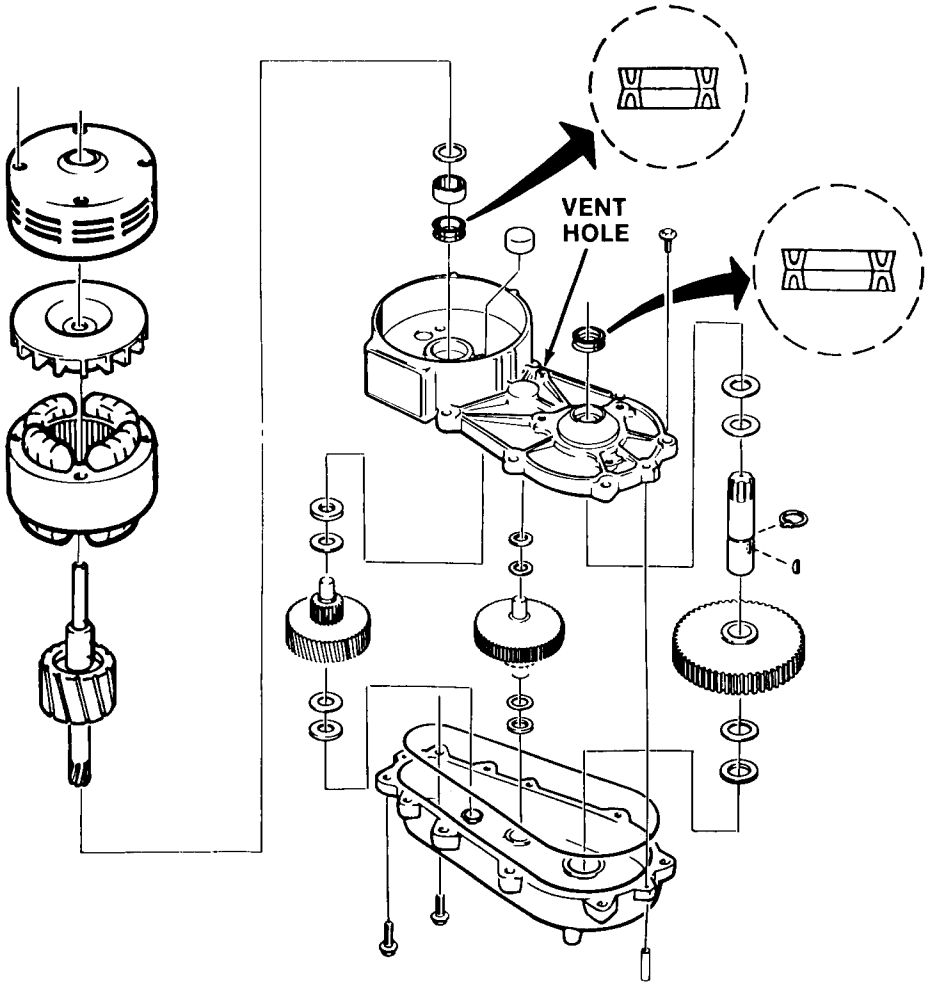

AF325

TABLE OF CONTENTS

GENERAL INFORMATION & INSTALLATION
- Introduction 4
- Unpacking and Inspection 4
- Location & Leveling 5
- Electrical Connections 5
- Water Supply and Drain Connections 5
- Final Check List 6

OPERATING INSTRUCTIONS
- Start Up 8

PRINCIPLES OF OPERATION
- Icemaker 10
- Electrical/Refrigeration 11

ADJUSTMENT AND REMOVAL AND REPLACEMENT PROCEDURES
- Adjustment of the Bin Thermostat Control 12
- Adjustment of the Leg Levelers 13
- Adjustment of the Water Reservoir Float ... 13
- Removal and Replacement of the Auger, Water Seal, Bearings and Coupling 13
- Removal and Replacement of the Chassis Assembly 14
- Removal and Replacement of the Compressor Assembly 15
- Removal and Replacement of the Condenser 15
- Removal and Replacement of the Drier 16
- Removal and Replacement of the Drivemotor Assembly 16
- Removal and Replacement of the Fan Motor Assembly 16
- Removal and Replacement of the Freezer Assembly 17
- Removal and Replacement of the Spout Assembly 17
- Removal and Replacement of the Water Pressure Control 18
- Removal and Replacement of the Water Reservoir Assembly 18

MAINTENANCE AND CLEANING INSTRUCTIONS
- General 20
- Icemaker 20
- Cleaning-Icemaker 21

SERVICE DIAGNOSIS
- Icemaking-Refrigeration System 22

LIST OF ILLUSTRATIONS

- Specifications 2
- Installation Practice 7
- Water Schematic 8
- Refrigeration Cycle 10
- Adjustment of the Temperature Control 12
- Removal of the Chassis Assembly 15
- Removal of the Freezer Assembly 17
- Removal of the Spout Assembly 18
- Removal of the Water Reservoir Assembly 18

PARTS LIST AND WIRING DIAGRAMS 1
(Printed in yellow)

PARTS LIST:
- Cabinet 2
- Major Assemblies 3
- Compressor Assembly 6
- Spout Assembly 7
- Freezer Assembly 8
- Drivemotor Assembly 10
- Control Box Assembly 11

WIRING DIAGRAMS
- AF-325-Air-Cooled Model 12

This icemaker has been engineered to our own rigid safety and performance standards. The National Sanitation Foundation (NSF) seal, signifies that it is listed with the NSF and that it complies with the materials and construction standards of the NSF. In addition, the Underwriters Laboratories, Inc., (UL) Listing Mark and the Canadian Standards Association (CSA) Monogram, both signify that its construction and design have been inspected and tested by them. NSF, UL and CSA inspectors also periodically examine production icemakers at the factory, to assure continued compliance.

To retain the safety and performance built into this icemaker, it is important that installation and maintenance be conducted in the manner outlined in this manual.

THIS PAGE
INTENTIONALLY
LEFT BLANK

SPECIFICATIONS
AF325

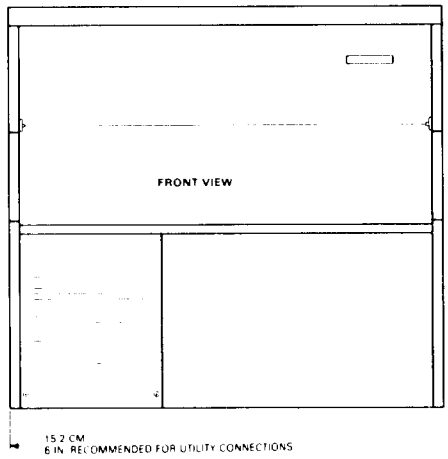

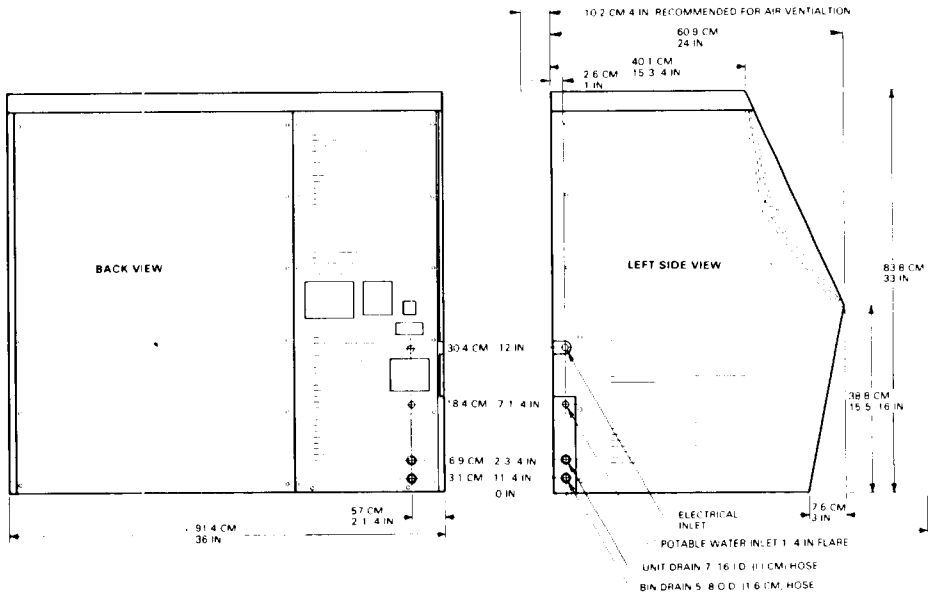

SPECIFICATIONS (Cont'd)

MODEL AF-325

Bin Storage: 255 lbs.*
Air-Cooled: Model **AF325A-1B**

Electrical: 115/60/1
Est. Ship. Wt.: 350 lbs.

FRONT SERVICE ACCESS PANEL

OPTIONAL LEG KIT

KLP2E - 6-inch metal legs, Black Enamel
KLP2S - 6-inch metal legs, Nickel Plated

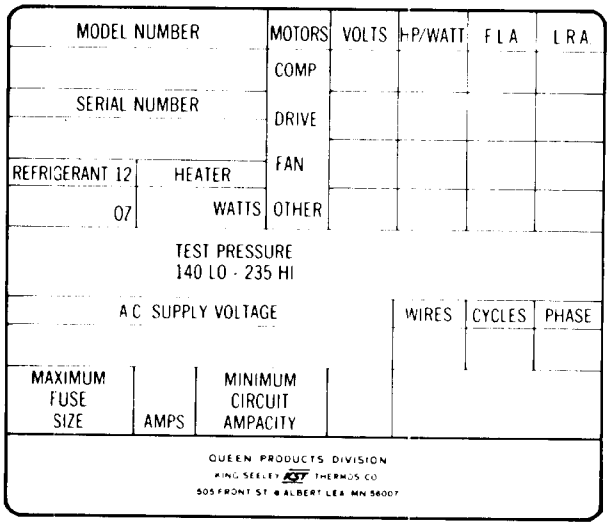

SEE NAMEPLATE for electrical and refrigeration specifications. NAMEPLATE located on rear service panel, near left rear corner of the cabinet. Shown in column at left.

Remove Lower Left Front Panel to locate the Model/Serial Number plate, shown below, on the Chassis frame under the Control Box Cover.

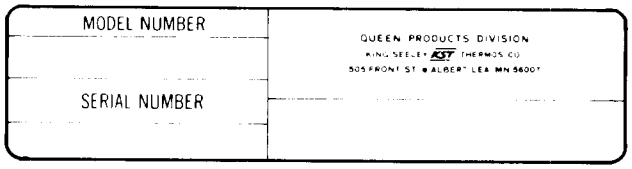

*Storage based on 90-percent of total volume x 34 lb. average density of ice. A.R.I Standard.

We reserve the right to make produc: improvements at any time. Specifications and design are subject to change without notice.

GENERAL INFORMATION & INSTALLATION

INTRODUCTION

This manual provides the specifications and the step-by-step procedures for the installation, start-up and operation, and the maintenance and cleaning for the SCOTSMAN Model AF-325 Automatic Flakers.

The Model AF-325 Automatic Flakers are quality designed, engineered and constructed, and thoroughly tested icemaking and ice storage systems, providing the utmost in flexibility to fit the needs of a particular user. Separate sections detail more specifically: General Information & Installation; Start Up Operation; Principles of Operation; Adjustment and Removal and Replacement Procedures; Maintenance and Cleaning Instructions; Service Diagnosis; Wiring Diagrams; and, the Illustrated Assemblies and Parts Lists.

One of the outstanding features of this series of Flakers, is the easy access for service. With the front of the cabinet removed, the entire refrigeration system can be removed from the cabinet for on-the-spot repair. When it might become necessary to return the system to the shop, a second unit may be installed in a very short time, so the customer is not without ice. The repaired unit can be re-installed in a matter of minutes.

DESCRIPTION

An attractive compact cabinet of textured metal with a Sandalwood enamel finish, a woodgrain upper front panel, and a bin access door. Also, an optional stainless steel cabinet finish is available. Both cabinets have up-to-date styling, and easily removable panels for easy access to electrical and mechanical components.

SEALED REFRIGERATION SYSTEM

To provide quiet efficient operation of the Icemaker, the Compressor motor is internally spring-mounted. The Compressor motor is covered by a five year parts warranty. The Freezer Assembly is powered by a direct-drive, gear motor, Drivemotor Assembly.

SELF-CONTAINED STORAGE BIN

These Automatic Flakers store their own ice supply in a heavily insulated ice storage bin, with a lift up Ice Access Door opening the front of the cabinet.

STANDARD OVERALL DIMENSIONS

The standard overall dimensions of the cabinet depth, counter top height, etc., allows the Automatic Flaker to be installed in harmony with the existing counter equipment.

UNPACKING AND INSPECTION

1. Call your authorized SCOTSMAN Distributor or Dealer, for proper installation. He's listed under ICE MAKING EQUIPMENT and MACHINERY in the yellow pages of the telephone book.
2. Visually inspect the exterior of the shipping container and skid and any severe damage noted, should be reported to the delivering carrier; and, a concealed damage claim filed subject to internal inspection, with carrier representative present.
3. BEFORE removal of any panels or packing, carefully lay the cabinet on its back and remove the shipping bolts and the shipping base or skid.
4. When ordered, install the optional leg levelers in the cabinet base sockets; then, raise the cabinet to the upright position.
5. Remove screws and shipping tape, and all doors and service panels form the cabinet, and inspect for any concealed damage. Notify carrier of any concealed damage claims, as stated in step 2 above.
6. Remove all internal support packing, tape and wires in machinery compartment.
7. Check that refrigerant lines do not rub or touch lines or other surfaces, and that fan blades, if any, move freely.
8. Check that the Compressor is snug on all mounting pads.

9. Remove Water Strainer from shipping envelope, for installation in water supply line.
10. Use clean damp cloth or disposable paper wiper to wipe clean the interior surfaces of the ice storage Bin and the exterior surfaces of the cabinet.
11. See NAMEPLATE on the rear service panel, near the left rear corner of the cabinet and check that the location source voltage corresponds with the voltage specified on the nameplate.

CAUTION

Improper voltage supplied to the Icemaker will void your parts replacement program.

12. Remove the Manufacturer's Registration Card from the front of the User's Manual and fill in all spaces including: Model Number and Serial Number taken from the aluminum plate located on the chassis frame, under the control Control Box Cover. Forward the completed, self addressed, registration card to the SCOTSMAN Factory.

LOCATION AND LEVELING

CAUTION

This Automatic Flaker is NOT designed for outdoor installations where air temperatures are below 50-degrees F., or above 100-degrees F., and the water temperature is below 40-degrees F. or above 100-degrees F. Extended periods of operation at temperatures exceeding these limitations will constitute misuse, under the terms of the SCOTSMAN Manufacturer's limited warranty, resulting in LOSS of warranty coverage.

1. Tilt the Cabinet forward from the rear and safely position support blocks in place, for work access to bottom of the Cabinet.
2. Locate and remove the single Hex-Hd Shipping Screw, Washer and Lockwasher, used to secure the rear of the Chassis base during shipment from the factory. Remove support blocks and lower rear of Cabinet.

NOTE

Retain shipping hardware removed in this step and be sure to re-install the Screw and Washers before transporting the Flaker to a different location.

NOTE

Prior consideration for location site shall include:

1. *Minimum room temperature 50-degrees F. and maximum room temperature 100-degrees F.*
2. *Water inlet temperatures: Minimum 40-degrees F. and Maximum 100-degrees F.*
3. *Well ventilated location for Air-Cooled model, advising user to frequently clean Condenser, located directly behind left front service door.*
4. *SERVICE ACCESS: Adequate space for all service connections, through the rear of the Cabinet. A six-inch minimum clearance at rear, left and front louvered panels, for routing cooling air drawn into and exhausted out of the compartment, to maintain proper condensing operation on Air-Cooled models.*

2. Level the Cabinet in both the left-to-right and front-to-rear directions. The optional leveling legs can be adjusted with an openend wrench.

ELECTRICAL CONNECTIONS

SEE NAMEPLATE for current requirements to determine wire size to be used for electrical hookup. The Automatic Flaker requires a solid earth ground wire. See wiring diagram.

Be certain the Automatic Flaker is connected to its own electrical circuit and individually fused. The maximum allowable voltage variation should not exceed ten percent of the nameplate rating, even under starting conditions. Low voltages can cause erratic operation and may be responsible for serious damage to the overload switch and motor windings.

All external wiring should conform to the National, State and local electrical code requirements. Usually an electrical permit and services of a licensed electrician will be required.

WATER SUPPLY AND DRAIN CONNECTIONS

A. WATER CONNECTIONS: The recommended water supply line is a 1/4-inch O.D.

copper tubing. Connect to cold water supply line with standard plumbing fittings, with a shutoff valve installed in an accessible place between the water supply and the Cabinet.

Locate the strainer in the water supply line, next to the Cabinet with the arrow on the strainer, in the direction of the water flow. The strainer protects against large particles of rust, scale, etc., which may be loosened in the water supply pipe, at the time of installation.

In some cases, a plumbing permit and services of a licensed plumber will be required.

CAUTION

To prevent damage to the freezer mechanism, DO NOT operate this unit when the water supply is OFF, or is below 20 PSI, the recommended water pressure. Position the master switch to the OFF position, until proper water supply is resumed.

The Icemaker in this Cabinet will not operate when water supply temperatures are below 40-degrees F. or above 100-degrees F.

B. DRAIN CONNECTIONS: All drains are gravity type and must be 1/4-inch per foot on horizontal runs. The drains to be installed to conform with local code. The drain receptacle should be an open, trapped or vented construction.

Recommended Bin drain is 5/8-inch O.D. copper tubing, should be vented and run separately. Connect a drain line to 7/16-inch I.D. tube from the Freezer Drip Pan.

CAUTION

This Automatic Flaker will NOT operate when water supply temperature is below 40-degrees F., or above 100-degrees F. Requires 20 PSI flowing water pressure, without interruption.

FINAL CHECK LIST

1. Has the single Hex-Hd Shipping Screw, for rear Chassis base, been removed?
2. Is the Cabinet level? (IMPORTANT)
3. Have all electrical and piping connections been made?
3. Has the voltage been tested and checked against the nameplate rating?
5. Is the water supply line shutoff valve installed and electrical wiring properly connected?
6. Have the Bin and Cabinet been wiped clean?
7. Have the Compressor hold down nuts been checked, to be sure the Compressor is snug on the mounting pads?
8. Has the owner/user been given the User Manual and instructed on how to operate the Icemaker?
9. Has the Manufacturer's Registration Card been properly filled out? Check for correct Model and Serial numbers from Serial nameplate, then mail the completed card to the SCOTSMAN factory.
10. Check all refrigerant lines and conduit lines, to guard against vibration or rubbing and possible failure.
11. Is there at least six inches clearance behind and around Cabinet for proper air circulation?
12. Is the Cabinet in a room where ambient temperatures are a minimum of 50-degrees F. all year around?
13. Has water supply pressure been checked to insure a minimum of 20 PSI?.
14. Has the owner been given name and telephone number of the authorized SCOTSMAN Service Agency serving him?

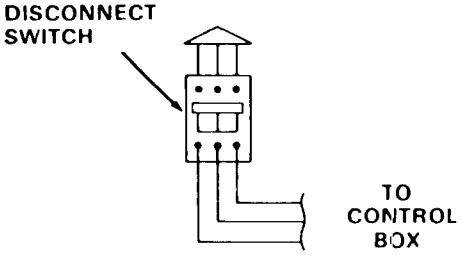

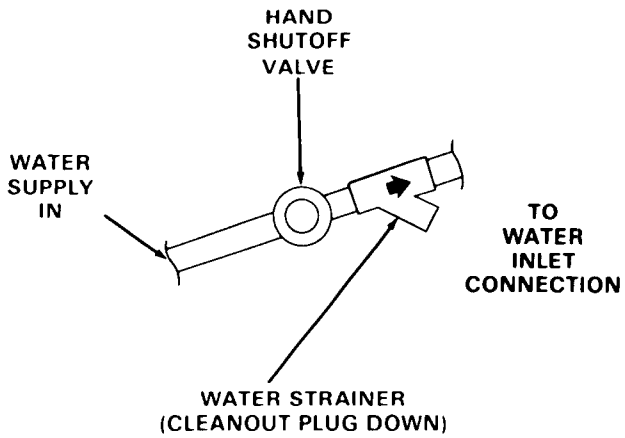

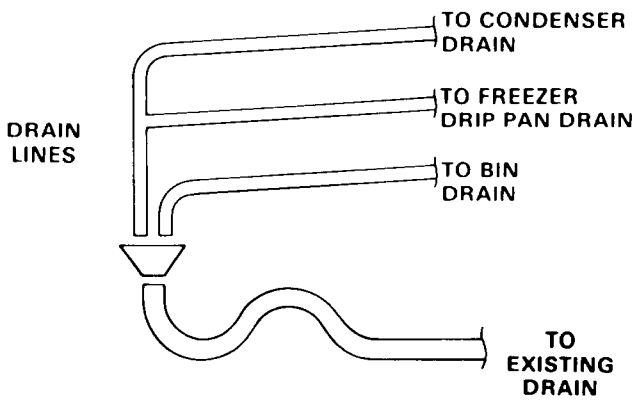

OPEN, TRAPPED OR VENTED DRAIN. RECOMMENDED 1/4-INCH FALL PER FOOT OF RUN ON DRAIN LINES.

CAUTION

THIS ICEMAKER IS NOT DESIGNED FOR OUTSIDE INSTALLATION AND WILL NOT OPERATE IN AMBIENT TEMPERATURES BELOW 50-DEGREES F., NOR ABOVE 100-DEGREES F.

THIS ICEMAKER WILL NOT OPERATE WHEN WATER TEMPERATURES ARE BELOW 40-DEGREES F., NOR ABOVE 100-DEGREES F.

77 116A

OPERATING INSTRUCTIONS

START UP

1. Lift the Ice Access Door to fully open position.
2. Remove screws and the Lower Left Front Panel and the Machine Compartment Baffle.
3. OPEN the water supply line shutoff valve.
4. Observe the water filling operation, see Figure 2-1:
   a. Water flows into Water Reservoir.
   b. Float moves up as water rises.
   c. Water flows through water feed line to bottom of Freezer Assembly.
   d. Float stops water flow, when water level reaches 3/8-inches below the molded horizontal line, on the body of the Water Reservoir.
5. Move the manual ON-OFF toggle switch, on top of the Control Box to the ON position, to start the automatic icemaker operation.
6. After two or three minutes of operation, observe that flaked ice begins dropping off the Auger and out the Ice Spout, through the Nylobraid tubing and into the Ice Storage Bin.
7. Let the system operate for about 30 minutes or until ice covers the bottom of the Bin. Check for any excess noises beyond normal Compressor noise:
   a. Fan noises, when Air-Cooled: Blades touch other surfaces; blades bent, out-of-balance.
   b. Vibrating type, from touching lines.
   c. Chattering: Lack of water in Freezer.
   c. Compressor loose at one or more holddown bolts.

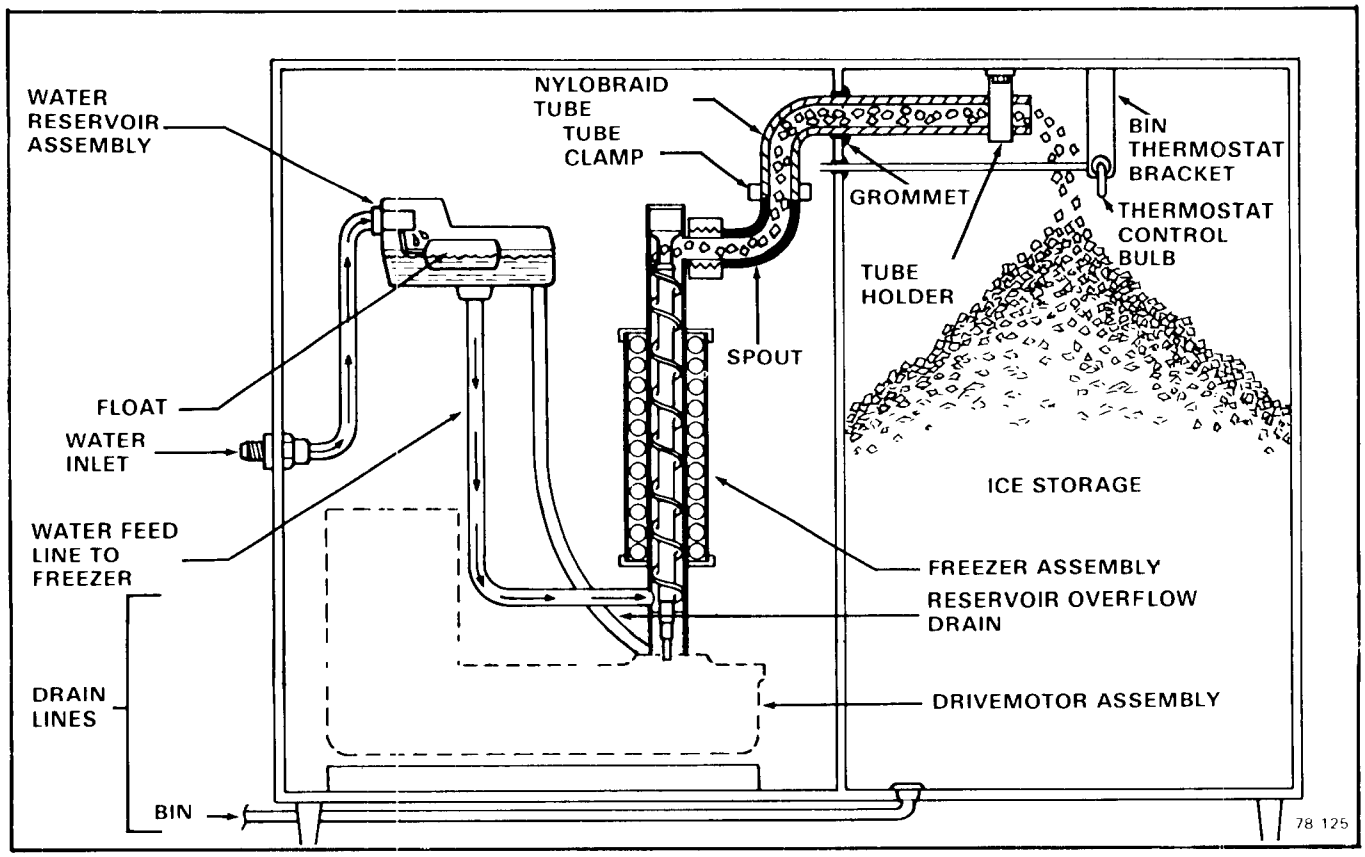

Figure 2-1. Water Schematic

CAUTION

DO NOT operate this Icemaker when the water supply is shut OFF, or is BELOW the recommended 20 PSI water pressure. Move the manual ON-OFF toggle switch on the front of the Control Box to the OFF position immediately.

8. Hold a handful of ice around the Ice Storage Bin Thermostat Control Bulb to test shut-off. Less than one minute is about normal for Bulb shutoff function to cause the Compressor to stop.

NOTE

Within minutes after the ice is removed from the sensing bulb, the bulb will warm up and cause the Icemaker to restart. This control is factory set and should not be reset until testing is performed. Normal setting: about 35-degrees. F. CUT-OUT and 45-degrees F. CUT-IN, to prevent short cycling.

9. Thoroughly explain to the owner/user the significant specifications of the Icemaker, the start up and operation, going through the procedures in the operating instructions. Answer all questions about the Icemaker, by the owner; and, inform the owner of the name and telephone number of the authorized SCOTSMAN Service Agency serving him.

PRINCIPLES OF OPERATION

How It Works

ICEMAKER

The water supply flows from the building source through the inline water strainer, enters at the Cabinet fitting and on to the Water Reservoir. The Water Reservoir functions to maintain a constant water level inside the Freezer Assembly. Water from the Water Reservoir enters at the bottom of the Freezer Assembly and is changed into ice by low temperatures inside the Freezer.

A stainless steel Auger within the Freezer is powered by the Drivemotor Assembly, a direct-drive gearmotor, and the rotating Auger carries the ice upward to the flared end of the Auger, see Figure 3-1, where excess water is pressed out of the ice, as it is extruded or flaked out through the Ice Spout, through the Nylobraid tubing and into the Ice Storage Bin.

Moving the manual ON-OFF toggle switch, on the top of the Control Box, to the ON position starts the automatic and continuous icemaking process. When the Ice Storage Bin has been filled with ice, up to the level of the Thermostat Control Bulb, the sensing bulb shuts off the icemaking process.

As the ice is removed from the Ice Storage Bin, the Thermostat Control Bulb warms up, restarting the automatic icemaking process.

Factory settings are 35-degrees F. CUT-OUT and 45-degrees F. CUT-IN.

Altitude adjustment should ONLY be performed on Icemakers installed at 2000-feet level locations and ABOVE, and adjust only in increments of one-fourth turn of screw at a time.

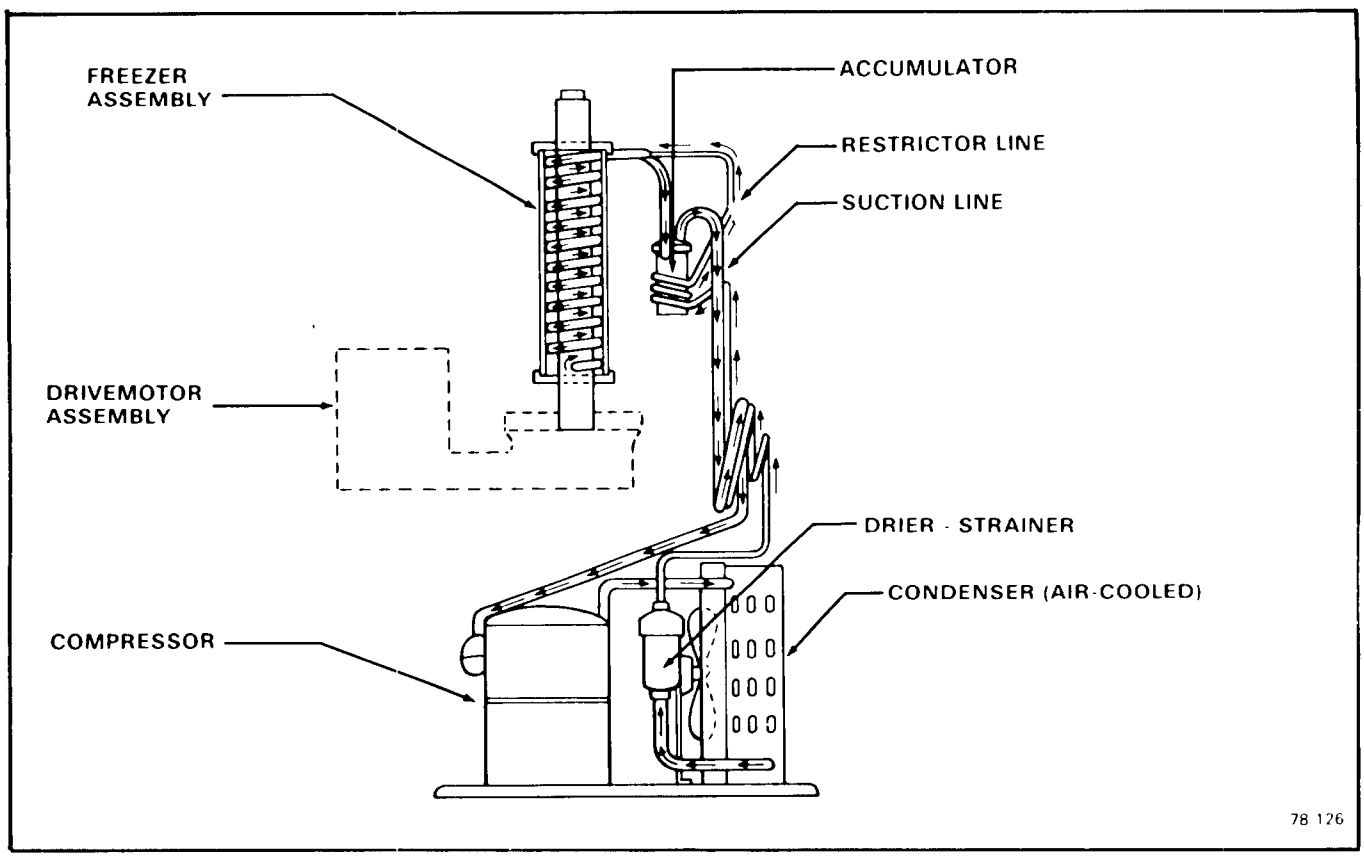

Figure 3-1, Refrigeration Cycle

The AF-325 Automatic Icemakers are designed to operate on standard electrical supply 115 volts, 60 Hertz, single phase. Other voltage requirements are available on special order. Therefore, always CHECK NAMEPLATE for electrical information BEFORE proceeding with electrical wiring connections to the Icemaker.

Cold ambient temperatures and interruptons in water supply are conditions that can cause excessively hard ice and overloads within the Freezer Assembly, which is directly transmitted to the Drivemotor; and in turn, will cause speed reduction or ultimate freezeup.

When the Drivemotor is slowed to a predetermined RPM, a sensing switch mounted on top of the motor is designed to open the electrical circuit to the Compressor. The Compressor stops operating, no more ice is produced, and the Drivemotor continues to operate rotating the Auger to clear the overload and gradually build up to full speed.

At a pre-determined higher RPM Drivemotor speed, the speed sensing switch closes the electrical circuit to the Compressor, causing the normal icemaking process to resume. Refer to specific details in paragraph V-II-9, on centrifugal sensing switch operation.

A Spout Switch is mounted on the side of the Ice Spout and is actuated by the movement of the spring retained spout tube against the switch actuator. The Spout Switch acts as a backup safety switch, should the Thermostat Control Bulb fail and cause ice to jam up in the Ice Spout. The switch will shut off the icemaker only when actuated. It is an immediate and complete shut down of the entire icemaker. The Spout Switch can be manually tested, by plugging the end of the Nylobraid Tube. The switch is also manually reset.

There are two safety controls in the Control Box. The Low Pressure Control, an automatic reset, non-adjustable control, is set to electrically open at zero to four PSIG to stop the entire icemaker. The Auger Delay Switch, a single-pole double-throw (SPDT) switch, functions as a control device to allow the gearmotor to rotate the Auger to clear the Freezing Chamber while the Compressor circuit is OFF.

Refer to the appropriate Wiring Diagram and trace circuitry and control functions, as described in the following paragraph.

As shown on all SCOTSMAN wiring diagrams, the controls are in the ICEMAKING MODE. Thus, the 1-2 contacts are CLOSED. At STARTUP, the 1-2 contacts are OPEN and the 3-2 contacts are CLOSED. As the icemaker begins to operate, the low side pressure starts to decrease from the stabilized or at-rest pressure. As soon as the pressure is reduced to 20 PSIG, the 3-2 contacts OPEN and the 1-2 contacts CLOSE.

This removes the operating controls, such as the Bin Thermostat, from the gearmotor circuit. If one of the operating controls OPENS, it will SHUT OFF the compressor circuit. The gearmotor will operate until the low side pressure increases to 32 PSIG. Then, the 1-2 contacts OPEN and SHUTS OFF the gearmotor, usually within one to two minutes, depending upon ambient conditions. This brief period of time allows the Auger to transport all the ice out of the Freezing Chamber. Consequently, when called on to STARTUP again, there is no ice load to start up against. Again, on STARTUP, the 1-2 contacts are OPEN and the 3-2 contacts are CLOSED.

On all models, a low-water pressure switch functions to discontinue the Icemaking process whenever incoming water pressure is reduced to below five PSIG. The Switch will automatically restart the Icemaking process when the water pressure is increased to 20 PSIG.

The head pressure is normal about 130 PSIG, however, it will vary depending upon ambient air temperature.

Suction pressure should be 13 PSIG with proper refrigerant charge and the frost line should extend out from the Accumulator to within no closer than eight to twelve inches of the Compressor. Suction pressure will vary about two PSIG plus or minus, depending upon ambient temperatures and incoming water supply temperatures to the Freezer Assembly.

When charging the system with refrigerant, always CHECK NAMEPLATE for specific refrigeration charge for individual Flaker, and charge with refrigerant so the frost line extends out of the Accumulator to within no closer than eight to twelve inches of the Compressor, after 15 minutes of operation, for best capacity and performance.

MODEL	AF325 Refrig. Chg.
Air-Cooled	14 oz. R-12 (Approx.)

ADJUSTMENT AND REMOVAL AND REPLACEMENT PROCEDURES

The procedures provided in this Section are arranged in alphabetical order, to make specific Adjustment and Removal and Replacement information easy to locate.

Read the instructions thoroughly before performing any Adjustment or Removal and Replacement Procedures.

CAUTION

The adjusting screws on the Temperature Control device have very sensitive response to adjustment. DO NOT attempt to adjust the screw until after thoroughly reading and understanding the following instructions and illustrations. Over-adjusting or erratic guessing, can foul the instrument and cause ultimate delay and part replacement, WHICH COULD HAVE BEEN PREVENTED.

ADJUSTMENT OF THE BIN THERMOSTAT CONTROL

The control for the Bin Thermostat is the Temperature Control, located in the Control Box Assembly.

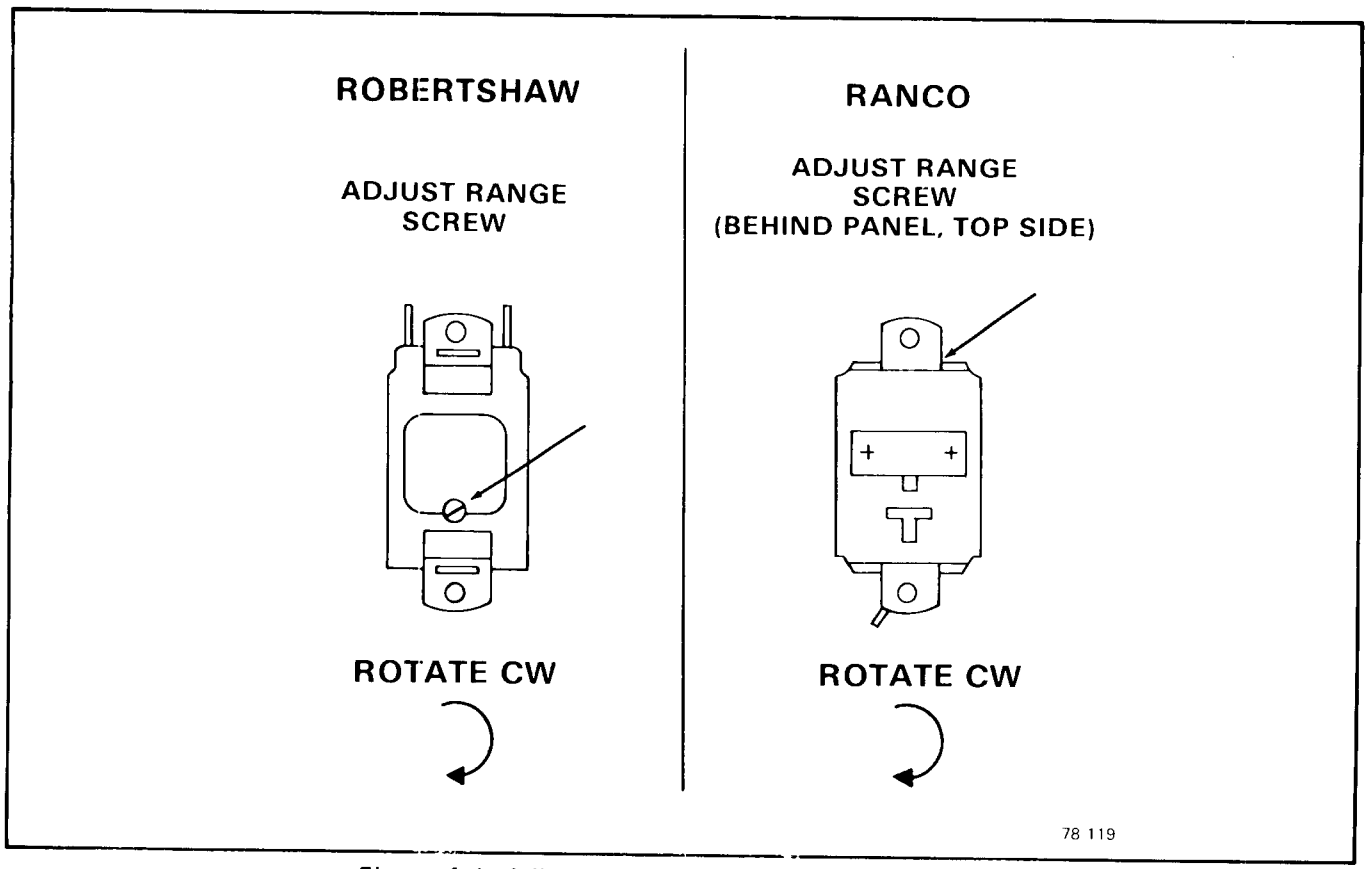

Figure 4-1. Adjustment of the Temperature Control

See Figure 4-1 for location and direction of rotation, clockwise (CW) or counterclockwise (CCW), of the adjusting screws on the Temperature Control, in the particular Control Box the adjustment is to be performed.

ADJUSTMENT OF THE LEG LEVELERS

When the AF-325 Flaker is ordered with the optional leg levelers, the Cabinet must be leveled in the front-to-rear and side-to-side directions. This adjustment should be performed during initial installation of the Cabinet and anytime the Cabinet is moved from the original location to another site.

A. Using an open-end wrench, and a carpenter's bubble level, rotate the threaded Leveler in each Leg to RAISE or LOWER the Cabinet until the Cabinet is level in the front-to-rear direction.

B. Repeat step A, for leveling in the side-to-side direction.

C. Recheck both the front-to-rear and the side-to-side leveling and repeat adjustments, as necessary.

ADJUSTMENT OF THE WATER RESERVOIR FLOAT

The correct water level in the Water Reservoir should be 3/8-inch below the raised molded line, on the side of the body of the Water Reservoir. When the water line level is above or below the raised molded line, adjustment can be performed to raise or lower the water level by raising or lowering the Water Reservoir in the slots on the Mounting Brackets, which in turn will adjust the action of the float.

A. To RAISE the Water Level: Loosen the two Screws which attach the Water Reservoir Assembly to the Mounting Bracket and RAISE the Water Reservoir Assembly, in the slots, the desired amount; then tighten the Screws.

B. To LOWER the Water Level: Loosen the two Screws which attach the Water Reservoir Assembly to the Mounting Bracket and LOWER the Water Reservoir Assembly, in the slots, the desired amount; then, tighten the Screws.

WARNING

Be sure the electrical power supply and the water supply are OFF, before starting any of the following REMOVAL AND REPLACEMENT procedures, as a precaution to prevent possible personal injury or damage to equipment.

REMOVAL AND REPLACEMENT OF THE AUGER, WATER SEAL, BEARINGS AND COUPLING

A. To Remove the Auger, Water Seal, Bearings, and Coupling:

1. Remove screws and the Top Panel.
2. Remove the Freezer Cap from the top of the Freezer Assembly.
3. Perform the steps in procedure IV-XII to remove the Spout Assembly.
4. Grasp the wire Cap Hook at the top of the Freezer Assembly and pull out the Auger and attached Cap, Bearing/Retainer, Bearing and O-Rings, at the top of the Auger; and, the top half of the Water Seal at the bottom of the Auger.

NOTE

When the Auger cannot be pulled out, proceed to steps 12 and 13, to gain access to the bottom of the Auger. Then, with a rawhide mallet or placing a piece of wood on the bottom end of the Auger, tap the bottom of the Auger to break it loose and pull the Auger out, as in the step 4 above.

5. Remove the Cap Hook from the Bearing/Retainer.
6. Remove the Retaining Ring and the Cap.
7. Remove the Cap Screw and Washer and remove the Bearing/Retainer from the Auger.
8. Clean away the old grease from the top of the Auger, the Bearing/Retainer, Cap, Cap Screw and Washer, and the O-Ring and Retaining Ring.
9. Inspect the O-Ring at the top of the Bearing/Retainer and the O-Ring at the bottom outside of the Bearing/Retainer, for cuts, tears and general worn condition to determine replacement.
10. Inspect the Bearing pressed into the top of the Bearing/Retainer and, if it is to be replaced, remove the Retaining Ring and press the Bearing out of the Bearing/Retainer.
11. Slide the upper half of the Water Seal off of the bottom of the auger.

NOTE

1. *Any time the Auger is removed for replacement, or, for the inspection and replacement of the Bearings or Coupling, use extra care in handling the Water Seal parts, so no dirt or foreign matter are deposited on the surfaces of the Seal.*

2. *If there is any doubt about the effectiveness of Water Seal or O-Ring, REPLACE THEM. A dirty, worn or faulty Water Seal or O-Ring will cause a leak and ultimately require a second, time consuming removal and replacement procedure to be performed, that COULD HAVE BEEN PREVENTED.*

12. Remove four screws and lockwashers which attach the Freezer Assembly to the Adaptor on the Drivemotor Assembly.
13. Raise the Freezer Assembly off of the Adaptor, to gain access to the Bearing and Retainer; then, temporarily secure the Freezer Assembly out of the way to allow room to work. Be careful not to damage the gasket.
14. Using a suitable length and size wooden dowel or stick inserted through the top of the open Freezer Assembly, tap the lower half of the Water Seal and the lower Bearing in the Retainer, out the bottom of the Freezer Assembly.
15. Inspect the lower half of the Water Seal. If reusable, use care to protect it from dirt, etc. prior to replacement procedure.
16. Inspect the lower Bearing in the Retainer; and, if the Bearing is to be replaced, press the Bearing out of the Retainer.
17. Reach through the Adaptor and remove the Coupling on the Drivemotor for inspection.
18. Check the coupling for cracks, chipping and excessive wear.

B. To replace the Auger, Water Seal, Bearings, and Coupling, reverse the removal procedure.

NOTE

1. *When installing the Retainer assembled with Bearing, in the bottom of the Freezer Assembly, some Retainers will insert as a slip fit, and some will have to be forced into place because of very tight fit. Carefully tap a piece of wood positioned across the bottom of the Retainer, to evenly seat the Retainer in the chamber of the Freezer.*
2. *After assembling the parts on the upper end of the Auger and BEFORE installing the Cap and Cap Hook, apply an ample coating of Shell Alvania 3 Grease, P/N 19-0309-01, to the upper part of the Bearing/Retainer to cover the Retaining Ring and the Cap Screw and Washer. Then install the Cap and Cap Hook in place.*

REMOVAL AND REPLACEMENT OF THE CHASSIS ASSEMBLY

NOTE

When the AF-325 Automatic Flaker is installed with the left end of the Cabinet having ample space available for a serviceman to perform complete maintenance with the Left Side Assembly removed, the Compressor, Condenser, Drier, Drivemotor, Fan Motor and the Freezer Assemblies can be removed and replaced. When the Flaker is installed under the counter or with space too limited for a leftend service access, the Chassis Assembly will have to be removed from the front of the Cabinet, for removal and replacement of the above listed assemblies.

A. To remove the Chassis Assembly:
(See Figure 4-2)

1. Remove two screws, hinge bushings and the Ice Access Door.
2. Remove screws and the Upper Front Panel Assembly.
3. Remove the left Cover Moulding.
4. Remove screws and the left Track Section, Machine Compartment Baffle and the Lower Left Front Panel.
5. Loosen Hose Clamp and disconnect the Nylobraid Tube from the Spout Ice Discharge Tube.
6. Disconnect the Water Inlet Assembly tubing from the inlet water line at the Inlet Fitting Bracket on the Rear Panel.
7. Remove two screws, the Control Box Cover and disconnect the electrical power line from the Control Box.
8. Disconnect drain lines from the Chassis.
9. Carefully remove the Capillary tube from the Bin Thermo Bracket and pull the tube through the bin wall; then, loosely coil the Capillary tube on the upper part of the Chassis.
10. Remove two screws, washers and lockwashers and carefully slide the entire Chassis Assembly out through the front opening of the Cabinet.

B. To replace the Chassis Assembly, reverse the removal procedure.

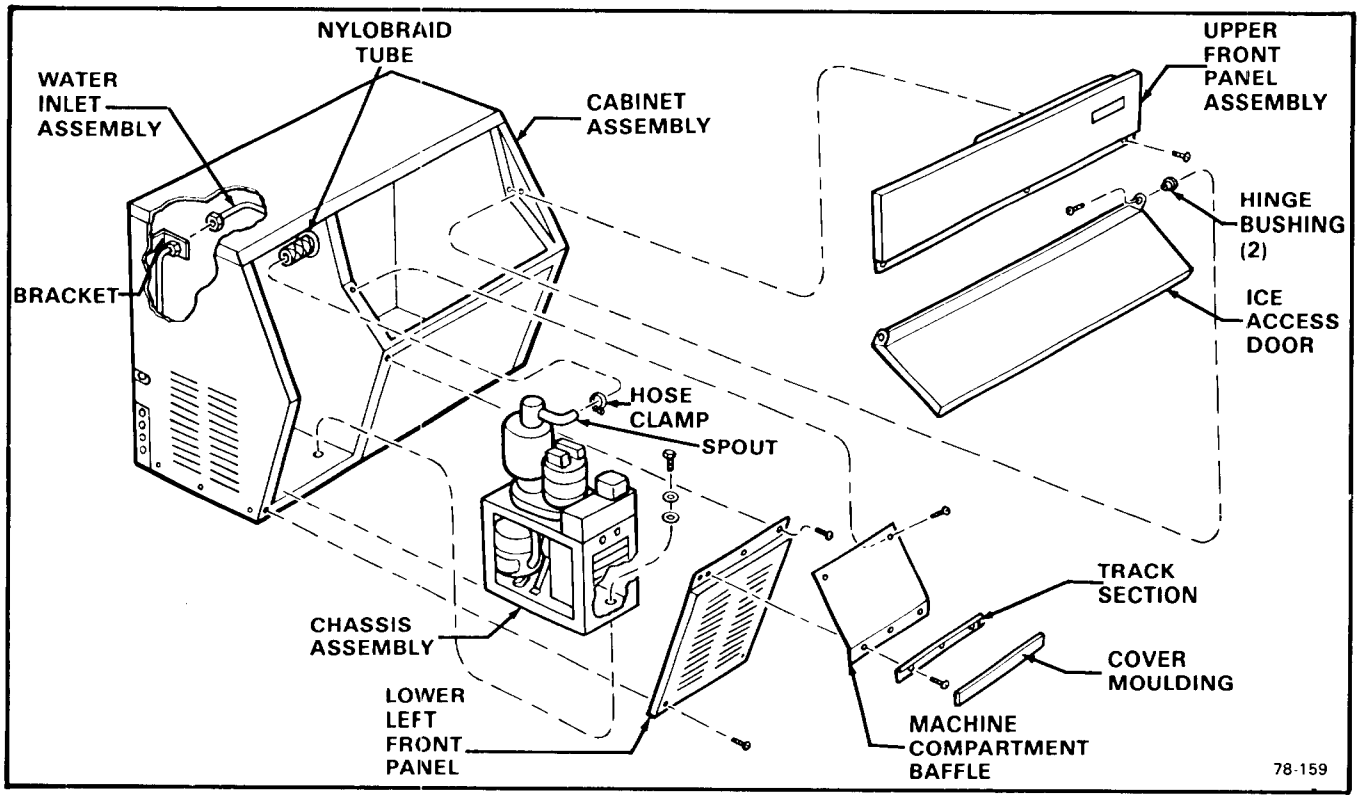

Figure 4-2. Removal of the Chassis Assembly

REMOVAL AND REPLACEMENT OF THE COMPRESSOR ASSEMBLY

NOTE

Always install a replacement Drier, anytime the sealed refrigeration system is opened. Do not replace the Drier until all other repair or replacement has been completed.

A. To remove the Compressor Assembly:

1. LEFT END ACCESS: Remove screws and the Left Side Assembly.

   FRONT ACCESS: Remove Chassis Assembly as described in procedure IV-V in this section.

2. Remove two screws and the Cover from the Compressor Junction Box.
3. Disconnect the electrical leads at the Compressor Junction Box, that originate in the Control Box.
4. Bleed off or blow the refrigerant charge through the Schrader valves.
5. Unsolder both the suction line and the discharge line from the Compressor.
6. Remove four bolts, lockwashers and washers which secure the Compressor to the Chassis mounting base.
7. Slide and remove the Compressor from the Chassis.

NOTE

Thoroughly evacuate the system to remove moisture and non-condensables.

B. To replace the Compressor Assembly, reverse the removal procedure.

REMOVAL AND REPLACEMENT OF THE CONDENSER

NOTE

Always install a replacement Drier, any time the sealed refrigeration system is opened. Do not replace the Drier until all other repair or replacement has been completed.

A. To Remove the Condenser:

1. LEFT END ACCESS: Remove screws and the Left Side Assembly.

   FRONT ACCESS: Remove Chassis Assembly as described in procedure IV-V in this section.

2. Bleed off or blow the refrigerant charge through the Schrader valve.
3. Unsolder and disconnect both the inlet tube and outlet tube at the Condenser.
4. Remove four screws, lockwashers and washers securing the Condenser to the Chassis Frame.
6. Remove the Condenser from the Chassis.

NOTE

Thoroughly evacuate the system to remove moisture and non-condensables.

B. To replace the Condenser, reverse the removal procedure.

REMOVAL AND REPLACEMENT OF THE DRIER

NOTE

Always install a replacement Drier, any time the sealed refrigeration system is opened. Do not replace the Drier until all other repair or replacement has been completed.

A. To Remove the Drier:

1. LEFT END ACCESS: Remove screws and the Left Side Assembly.

   FRONT ACCESS: Remove Chassis Assembly as described in procedure IV-V in this section.

2. Remove screw and Drier Brace attaching the Drier to the Chassis base.
3. Bleed off or blow the refrigerant charge through the Schrader valve.
4. Unsolder refrigeration lines at each end of Drier, remove the Drier and separate the Drier from the Drier Brace.

B. To Replace the Drier:

CAUTION

1. If the factory seal is broken on the replacement Drier, exposing it to the atmosphere more than a few minutes, the Drier will absorb moisture from the atmosphere and lose substantial ability for moisture removal.

2. Be sure the replacement Drier is installed with the arrow positioned in the direction of the refrigerant flow.

1. Remove the factory seals from the replacement Drier and install the Drier in the refrigerant lines with the arrow positioned in the direction of the refrigerant flow.
2. Install the Drier Brace on the Drier.
3. Solder the Drier into the lines, two places.
4. Purge the system and check for leaks.
5. Thoroughly evacuate the system to remove moisture and non-condensables.
6. Charge the system with refrigerant, by weight. SEE NAMEPLATE.

REMOVAL AND REPLACEMENT OF THE DRIVEMOTOR ASSEMBLY

A. To Remove the Drivemotor Assembly:

1. Perform all steps in procedure IV-XI to gain access for removal of the Drivemotor Assembly.
2. Remove bolts, lockwashers and washers which attach the Drivemotor to the Chassis.
3. Lift the Drivemotor from the Chassis.

B. To replace the Drivemotor Assembly, reverse the removal procedure.

REMOVAL AND REPLACEMENT OF THE FAN MOTOR ASSEMBLY

NOTE

Before beginning this procedure, observe the Fan Blade position on the shaft of the Fan Motor and mark the Fan Blade so it will be correctly positioned during reassembly. Direction of air flow should be toward the Fan Motor.

A. To Remove the Fan Motor Assembly:

1. LEFT END ACCESS: Remove screws and the Left Side Assembly.

   FRONT ACCESS: Remove Chassis Assembly as described in procedure IV-V in this section.

2. Disconnect the electrical lead from the Fan Motor.
3. Remove two screws securing the Motor Bracket to the Chassis Base and remove the Fan Motor and Motor Bracket out through the left side opening of the Chassis.
4. Remove the nut from the end of the Fan Motor shaft and remove the Fan Blade.
5. Remove four screws securing the Fan Motor to the Motor Bracket and separate the Motor from the Bracket.

B. To replace the Fan Motor Assembly, reverse the removal procedure.

REMOVAL AND REPLACEMENT OF THE FREEZER ASSEMBLY

NOTE

1. *The Cabinet may have to be removed from its permanent location, especially if located in a corner, in order to have access to the left side and rear of the Chassis.*
2. *In addition to shutting OFF electrical power and inlet water to the icemaker, be sure to disconnect the inlet water line at the rear of the Cabinet BEFORE moving the icemaker from the permanent location.*
3. *Always install a replacement Drier, anytime the sealed refrigeration system is opened. Do not replace the Drier until all other repair or replacement has been completed.*

A. To Remove the Freezer Assembly, see Figure 4-3:

1. LEFT END ACCESS: Remove screws and the Left Side Assembly.

   FRONT ACCESS: Remove Chassis Assembly as described in procedure IV-V in this section.

2. Refer to procedure IV-XII and remove the Spout Assembly.
3. Remove Corbin clamp and Tygon tube from the Freezer Assembly that connects to the Water Reservoir Assembly.

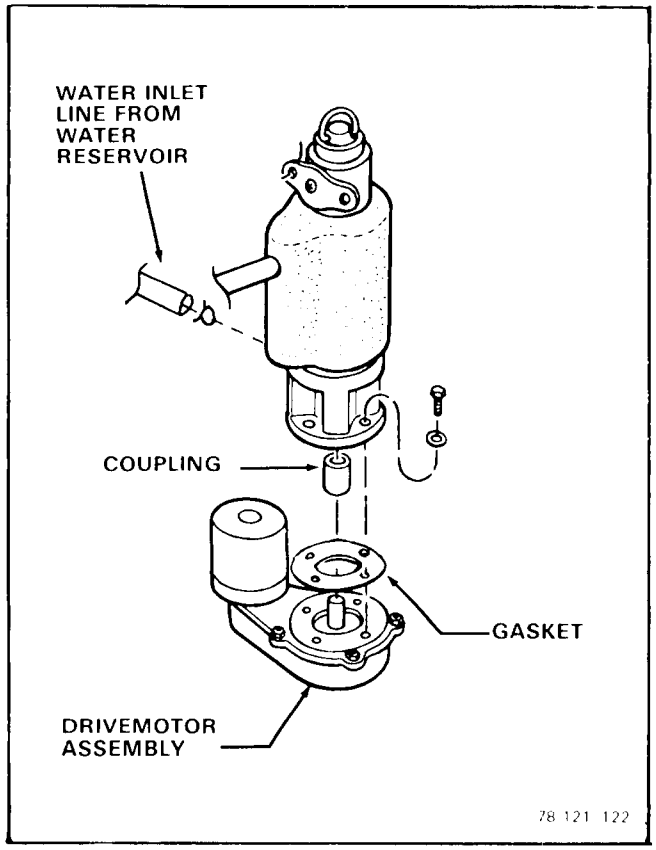

Figure 4-3. Removal of the Freezer Assembly.

4. Bleed off or blow the refrigerant charge through the Schrader valve.
5. Unsolder the suction line from the Compressor.
6. Unsolder the capillary line at the Drier.
7. Remove four screws, lockwashers and washers which attach the bottom of the Freezer Assembly to the Adaptor on the Drivemotor Assembly.
8. Lift the Freezer Assembly up and off of the Adaptor and Drivemotor Assembly.

NOTE

Thoroughly evacuate the system to remove moisture and non-condensables.

B. To replace the Freezer Assembly, reverse the removal procedure.

REMOVAL AND REPLACEMENT OF THE SPOUT ASSEMBLY

A. To Remove the Spout Assembly, See Figure 4-4:

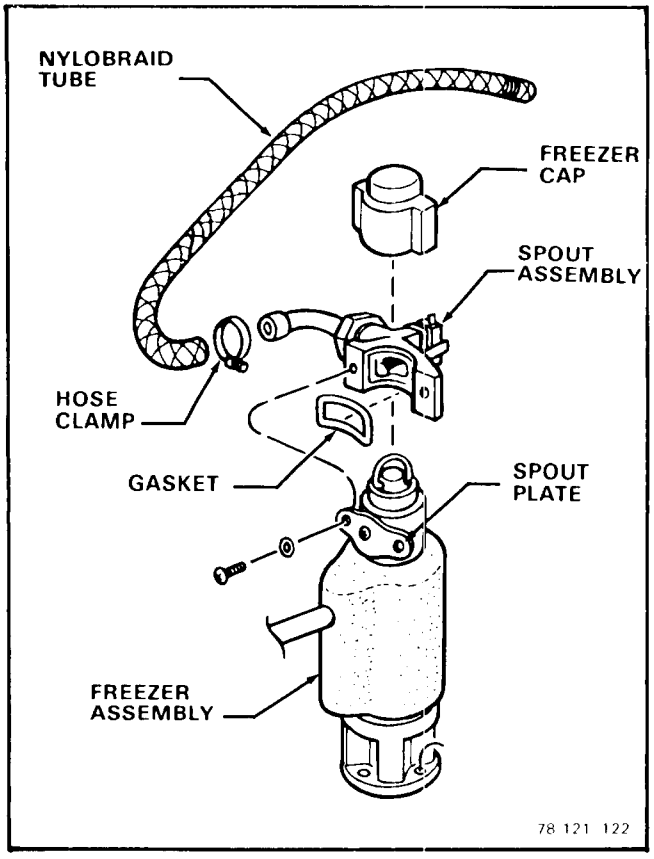

Figure 4-4. Removal of the Spout Assembly.

1. Remove screws and the Top Panel.
2. Remove the Hose Clamp and disconnect the Nylobraid tube from the end of the spout.
3. Remove the Freezer Cap from the top of the Freezer Assembly.
4. Disconnect the electrical leads from the Spout Switch.
5. Remove two screws and washers and separate the Spout Assembly from the Spout Plate on the Freezer Assembly.

NOTE

At this time, inspect the spout Gasket and retain for the replacement procedure. Replace a torn, cut or worn, defective gasket.

B. To replace the Spout Assembly, reverse the removal procedure.

REMOVAL AND REPLACEMENT OF THE WATER PRESSURE CONTROL

A. To Remove the Water Pressure Control:
1. Lift the Ice Access Door to the fully open position.
2. Remove screws and the Machine Compartment Baffle.
3. Remove screws and the Control Box cover.
4. Disconnect the two blue electrical leads of the Water Pressure Control from the terminals on the Auger Delay Control and the Bin Thermostat device in the Control Box Assembly.
5. Unscrew the flare nut fitting and disconnect the Water Pressure Control from the Utility Bracket and the Tee on the inlet water tubing.

NOTE

At this time, inspect the O-Ring and retain for the replacement procedure. Replace O-ring that is cut, torn or indicates excessive wear.

B. To replace the Water Pressure Control, reverse the removal procedure.

REMOVAL AND REPLACEMENT OF THE WATER RESERVOIR ASSEMBLY

A. To Remove the Water Reservoir Assembly, see Figure 4-5.
1. Remove screws and the Top Panel.

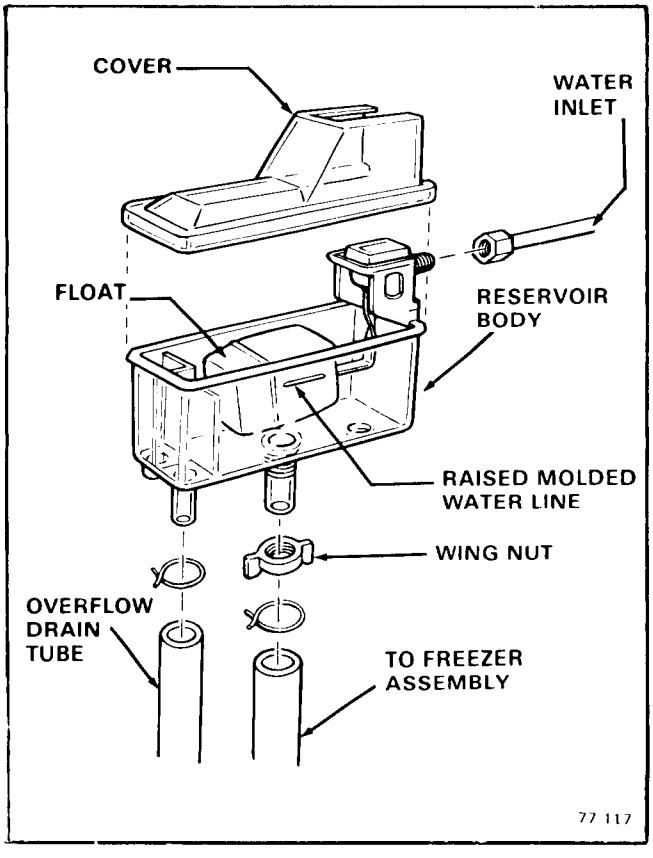

Figure 4-5. Removal of the Water Reservoir Assembly

NOTE

Be prepared with container or rags, to catch water left in lines, when lines are disconnected in next steps, to prevent draining water on parts, components, electrical lines.

2. Disconnect the water inlet tube from the Water Reservoir Assembly.
3. Remove two Corbin clamps and two tubes from the bottom of the Water Reservoir Assembly.
4. Unscrew and remove the wing nut from the bottom of the Water Reservoir Assembly.
5. Lift and remove the Water Reservoir Assembly from the mounting bracket.

B. To replace the Water Reservoir Assembly, reverse the removal procedure.

NOTE

Check that the installed replacement Water Reservoir Assembly float moves freely. The correct water level in the Water Reservoir is 3/8-inch below the raised molded line, on the side of the body of the Water Reservoir.

MAINTENANCE AND CLEANING INSTRUCTIONS

GENERAL

The periods and procedures for maintenance and cleaning are given as guides and are not to be construed as absolute or invariable. Cleaning especially will vary, depending upon local water conditions and the ice volume produced; and, each Icemaker must be maintained individually, in accordance with its own particular location requirements.

ICEMAKER

THE FOLLOWING MAINTENANCE SHOULD BE SCHEDULED AT LEAST TWO TIMES PER YEAR ON THIS ICEMAKER. CALL YOUR AUTHORIZED SCOTSMAN SERVICE AGENCY.

1. Check and clean water line Strainers.
2. Remove cover from Water Reservoir and depress the float to ensure that a full stream of water enters the Reservoir.
3. Check that the Icemaker cabinet is level, in side-to-side and front-to-rear directions.
4. Check that the water level in the Water Reservoir is below the overflow, but high enough that it does not run out of the spout opening.

NOTE

It is not abnormal for some water to emerge from the Ice Spout with flaked ice during normal ice production.

5. Clean the Water Reservoir and interior of the Freezer Assembly, using a solution of SCOTSMAN Ice Machine Cleaner. Refer to procedure V-III, CLEANING-Icemaker.

NOTE

Cleaning requirements vary according to local water conditions and individual user operation. Visual inspection of the Auger before and after cleaning will indicate frequency and procedure to be followed in local areas.

6. When doubtful about refrigerant charge, install refrigerant gauges on Schrader valves and perform steps 6 and 7. Check gauge for Compressor head pressure:

   AIR-COOLED MODELS: Varies between 130 and 145 PSIG.

7. Check gauge for Suction line pressure:

   Varies between 12 to 16 PSIG, depending upon inlet water temperature and ambient air temperature.

8. Check Drivemotor operation:

   Normal operating temperatures are about 160-degrees F., which is hot to touch.

9. Check operation of the centrifugal sensing switch:

   AF-325: 1/10 HP Motor.

   Switch will OPEN between 400-600 RPM and the Compressor STOPS, with the Drivemotor operating. Switch will CLOSE between 1300-1400 RPM and the Compressor will RESTART, with Drivemotor building back up to normal operating speed.

10. Remove the Freezer Cap, the Retaining Ring and the Hook and Cap from the top of the Freezer Assembly.

11. Inspect the Top Bearing. If moisture is around Bearing, wipe clean of all grease and apply a coating of Shell Alvania 3 Grease, Scotsman P/N 19-0309-01, 1 lb. can. Replace parts removed in step 10.

NOTE

BEFORE next step, move the manual ON-OFF toggle switch, on top of the Control Box, to the OFF position to stop the Fan Motor and Icemaker.

12. Clean the Air-Cooled Condenser, using vacuum cleaner, whisk broom or brush. Instruct customer to clean frequently and to be sure Icemaker and Fan Motor are OFF.
13. Check that Fan Blades move freely, are not touching any surfaces and are not bent or out of balance.

14. Check for refrigerant leaks and for proper frost line, which should frost out of accumulator at least half way to the Compressor and in some areas, back to service valve.
15. Check for water leaks. Tighten drain line connections. Pour water down Bin drain to be sure that drain line is open and clear.
16. Check the quality of ice. Ice flakes should be wet when formed, but will cure rapidly to normal hardness in the Bin.
17. Check the Bin Thermostat Ice Control Bulb.

NOTE

The Bin Thermostat is factory set at 10-degrees F. differential and should keep the entire Icemaker system shut off at least 10 minutes in high ambient temperatures, longer in low ambient temperatures during normal operation. Settings are 35-degrees F. CUT-OUT and 45-degrees F. CUT-IN.

18. Check the Spout Switch.

NOTE

The Spout Switch is manually reset and functions as a safety switch, to automatically stop the icemaking process if the Bin Thermostat Bulb were to fail and cause ice to jam up in the Ice Tube.

CLEANING - Icemaker

1. Remove screws and the Lower Left Front Panel.
2. Move the manual ON-OFF toggle switch, on top of the Control Box, to the OFF position.
3. Remove all ice from the Ice Storage Bin.
4. CLOSE the water supply shutoff valve; or block the float in the Water Reservoir.
5. Disconnect the tube between the Water Reservoir and the bottom of the Freezer Assembly and drain water from the Reservoir and tube. Reconnect the tube.

WARNING

SCOTSMAN Ice Machine Cleaner contains Phosphoric and Hydroxyacetic acids. These compounds are corrosive and may cause burns if swallowed, DO NOT induce vomiting. Give large amounts of water or milk. Call Physician immediately. In case of external contact flush with water. KEEP OUT OF THE REACH OF CHILDREN.

6. Prepare cleaning solution: Mix four ounces of SCOTSMAN Ice Machine Cleaner with one quart of hot water.
7. Remove the Cover to the Water Reservoir.
8. Slowly pour the cleaning solution into the Water Reservoir.
9. Move the manual ON-OFF toggle switch, on top of the Control Box, to the ON position.
10. Continue to slowly pour the cleaning solution into the Water Reservoir, maintain level just below the Reservoir overflow.
11. Continue icemaking, using the cleaning solution, until all the solution is used up and the Water Reservoir is almost empty. DO NOT allow the icemaker to operate with empty Reservoir.
12. Move the manual ON-OFF toggle switch, on top of the Control Box to the OFF position.
13. Wash and rinse the Water Reservoir.
14. OPEN the water supply shutoff valve; or remove the block from the float in the Water Reservoir.
15. Move the manual ON-OFF toggle switch, on top of the Control Box, to the ON position.
16. Continue icemaking for at least 15 minutes, to flush out any cleaning solution. Check ice for acid taste - continue icemaking until ice tastes sweet.
17. Move the manual ON-OFF toggle switch, on top of the Control Box to the OFF position.

CAUTION

DO NOT use ice produced from the cleaning solution. Be sure none remains in the bin.

18. Remove all ice from the Ice Storage Bin.
19. Add hot water to the Ice Storage Bin and thoroughly wash and rinse all surfaces within the Bin.
20. Clean and sanitize the Ice Storage Bin each week.

SERVICE DIAGNOSIS

The Service Diagnosis Section is for use in aiding the serviceman in diagnosing a particular problem for pin-pointing the area in which the problem lies, thus an ever available reference for proper corrective action.

The following charts lists corrective actions for the causes of known symptoms of certain problems that can occur in the Icemaking - Refrigeration System.

ICEMAKING - REFRIGERATION SYSTEM

SYMPTOM	POSSIBLE CAUSE	CORRECTION
Water Leaks.	Defective water seal.	Replace Seal.
	Gravity feed line leaking.	Check hose clamps.
	Water level in reservoir too high.	Adjust water level to 3/8-inch below reservoir overflow, then raise reservoir until water flows out freezer spout, then lower reservoir 3/4-inch.
	Storage bin drain and connecting fittings.	Check and repair.
Excessive noise or chattering.	Mineral or scale deposit on auger and inner freezing chamber walls.	For severe deposit, remove and manually polish auger, sand inner chamber walls of freezer barrel.
		For lighter concentration, use Scotsman Ice Machine Cleaner periodically.
	Intermittent water supply.	Check and clean water strainer.
		Check gravity feed line for air lock.
		Remove air lock.
	Water level in reservoir too low.	See CORRECTION for Water Leaks above.
	Gear Reducer loose on frame.	Tighten Gear Reducer.
	Motor compressor not solid on rubber mounts.	Repair or replace rubber mounts.
	Gearmotor end-play or worn bearing.	Repair or replace bearing.
Making wet ice. (Ice melts too quickly, is not cold enough to properly cure in the Bin.)	Surrounding air temperature too high.	Correct or move cabinet.
	Under or over-charge of refrigerant.	Recharge with proper amount. Should frost out of accumulator at least 8-inches. See nameplate for correct charge. See CORRECTION for Water Leaks above.

ICEMAKING - REFRIGERATION SYSTEM (Con't)

SYMPTOM	POSSIBLE CAUSE	CORRECTION
Making wet ice (cont'd)	Back pressure too high.	Overcharge of refrigerant, Faulty compressor or high head pressure. Lower pressure as indicated.
	Faulty compressor or valve plate.	Repair or replace compressor or valve plate.
Low ice production.	Loss of refrigerant. Under or over-charge of refrigerant.	Check and recharge. See NAMEPLATE for correct charge.
	Drivemotor weak.	Replace Drivemotor.
	Dirty or plugged condenser.	Clean condenser.
	Low water level in water reservoir.	See CORRECTION for Water leaks above.
	Partial restriction in capillary tube or drier.	Moisture in system. Overcharge of oil in system. Remove charge by blowing back through cap tube. Replace drier and recharge.
	Inlet water strainer partially plugged.	Remove screen and clean.
	Corroded or stained auger due to water condition.	Remove auger and clean, or use Scotsman Ice Machine Cleaner. See Maintenance Section
Gearmotor noise.	Low on oil.	Remove case cover to check for proper oil level, flush with top of largest gear, use P.N. A25835-001.
Icemaker will not operate.	Blown fuse in line.	Replace fuse and check for cause of blown fuse.
	Bin thermostat set too high.	Adjust thermostat. Set at 35-degrees cut-out, 45-degrees cut-in.
	Loose electrical connection.	Check wiring.
	Switch in OFF position.	Set switch to ON position.
	Inoperative master switch.	Replace switch or thermal overload.
	Off on manual-reset pressure control.	Reset.
Icemaker continues to operate with full storage bin.	Bin thermostat not properly set or is defective.	Re-set or replace bin thermostat re-set to 35-degrees cut-out, 45-degrees cut-in.
Compressor cycles intermittently.	Low voltage.	Check for overloading.
	Dirty condenser.	Clean condenser.
	Air circulation blocked.	Remove cause or move unit.
	Inoperative condenser fan motor.	Replace motor.

SYMPTOM	POSSIBLE CAUSE	CORRECTION
Compressor cycles intermittently (cont'd)	Non-condensable gases in system.	Check for gas leaks, evacuate and recharge.
	Bin thermostat differential too small causing short cycling.	Widen differential 35-degrees cut-out, 45-degrees cut in.
	Cycling on ice spout microswitch.	Set or replace Bin Thermostat.
Icemaker operates but makes no ice.	Loss or undercharge or refrigerant.	Check for leaks and recharge. See NAMEPLATE for correct charge.
	Water not entering freezing chamber.	Plugged strainer or supply line. Check and clean. Air lock in gravity feed line. Check and remove air lock.
	Moisture in system.	Check, evacuate, replace drier.
		Recharge. See NAMEPLATE for correct charge.
	Water seal leaking.	Replace seal.
	Water turned off while unit was operating.	Freezer inlet water line froze shut. Unit must be shut OFF and defrosted.
	Drivemotor or drive coupling stripped.	Repair or replace drivemotor or drive coupling.

TABLE OF CONTENTS

Table of Contents i

List of Illustrations iii

Specifications iv

SECTION I- GENERAL INFORMATION & INSTALLATION 1-1

I. Introduction 1-1

II. Unpacking and Inspection 1-1

III. Location and Leveling 1-2

IV. Electrical Connections 1-2

V. Water Supply and Drain Connections 1-2

VI. Final Check List 1-3

SECTION II- START UP OPERATION 2-1

I. Start Up 2-1

SECTION III- PRINCIPLES OF OPERATION - How it Works 3-1

I. Icemaker 3-1

II. Electrical/Refrigeration 3-2

SECTION IV- ADJUSTMENT AND REMOVAL AND REPLACEMENT PROCEDURES 4-1

I. Adjustment of the Bin Thermostat Control 4-1

II. Adjustment of the Leg Levelers 4-2

III. Adjustment of the Water Reservoir Float 4-2

IV. Removal & Replacement of the Auger, Water Seal, Bearings and Coupling 4-2

V. Removal & Replacement of the Compressor Assembly 4-3

VI. Removal & Replacement of the Condenser - Air Cooled Models 4-3

VII. Removal & Replacement of the Drier 4-4

VIII. Removal & Replacement of the Drivemotor Assembly 4-4

IX. Removal & Replacement of the Fan Motor Assembly - Air-Cooled Models 4-4

X. Removal & Replacement of the Freezer Assembly 4-4

TABLE OF CONTENTS (Cont'd)

XI. Removal & Replacement of the Spout Assembly 4-5

XII. Removal & Replacement of the Water Pressure Control 4-6

XIII. Removal & Replacement of the Water Reservoir Assembly 4-6

SECTION V- MAINTENANCE & CLEANING INSTRUCTIONS 5-1

I. General 5-1

II. Icemaker 5-1

III. CLEANING - Icemaker 5-2

SECTION VI- SERVICE DIAGNOSIS 6-1

I. Icemaking - Refrigeration System 6-1

SECTION VII- WIRING DIAGRAMS 7-1

Wiring Diagram AF-330 Air-Cooled Model 7-2

SECTION VIII - THE PARTS ILLUSTRATIONS AND PARTS LISTS 8-1

I. General 8-1

II. How to Use the Illustrations and Parts Lists 8-1

III. How to Order Parts or Assemblies 8-1

LIST OF ILLUSTRATIONS

	Specifications - Model AF-330	iv
Figure 1-1.	Installation Practice	1-4
Figure 2-1.	Water Schematic	2-1
Figure 3-1.	Refrigeration Cycle	3-1
Figure 4-1.	Adjustment of the Temperature Control	4-1
Figure 4-2.	Removal of the Freezer Assembly	4-6
Figure 4-3.	Removal of the Spout Assembly	4-6
Figure 4-4.	Removal of the Water Reservoir Assembly	4-7
Figure 7-1.	Wiring Diagram - AF-330 Air-Cooled	7-2
Figure 8-A.	Automatic Flaker AF-330 Flow Chart	8-2
Figure 8-1.	AF-330 Cabinet	8-3
Figure 8-2.	Major Assemblies - Air-Cooled	8-7
Figure 8-3.	Compressor Assembly	8-12
Figure 8-4.	Spout Assembly	8-13
Figure 8-5.	Freezer Assembly	8-15
Figure 8-6.	Drivemotor Assembly	8-18
Figure 8-7.	Control Box Assembly	8-22
Figure 8-00.	How to Use the Illustrated Parts List	8-24

This icemaker has been engineered to our own rigid safety and performance standards. The National Sanitation Foundation (NSF) seal, signifies that it is listed with the NSF and that it complies with the materials and construction standards of the NSF. In addition, the Underwriters Laboratories, Inc., (UL) Listing Mark and the Canadian Standards Association (CSA) Monogram, both signify that its construction and design have been inspected and tested by them. NSF, UL and CSA inspectors also periodically examine production icemakers at the factory, to assure continued compliance.

To retain the safety and performance built into this icemaker, it is important that installation and maintenance be conducted in the manner outlined in this manual.

SPECIFICATIONS
MODEL AF330

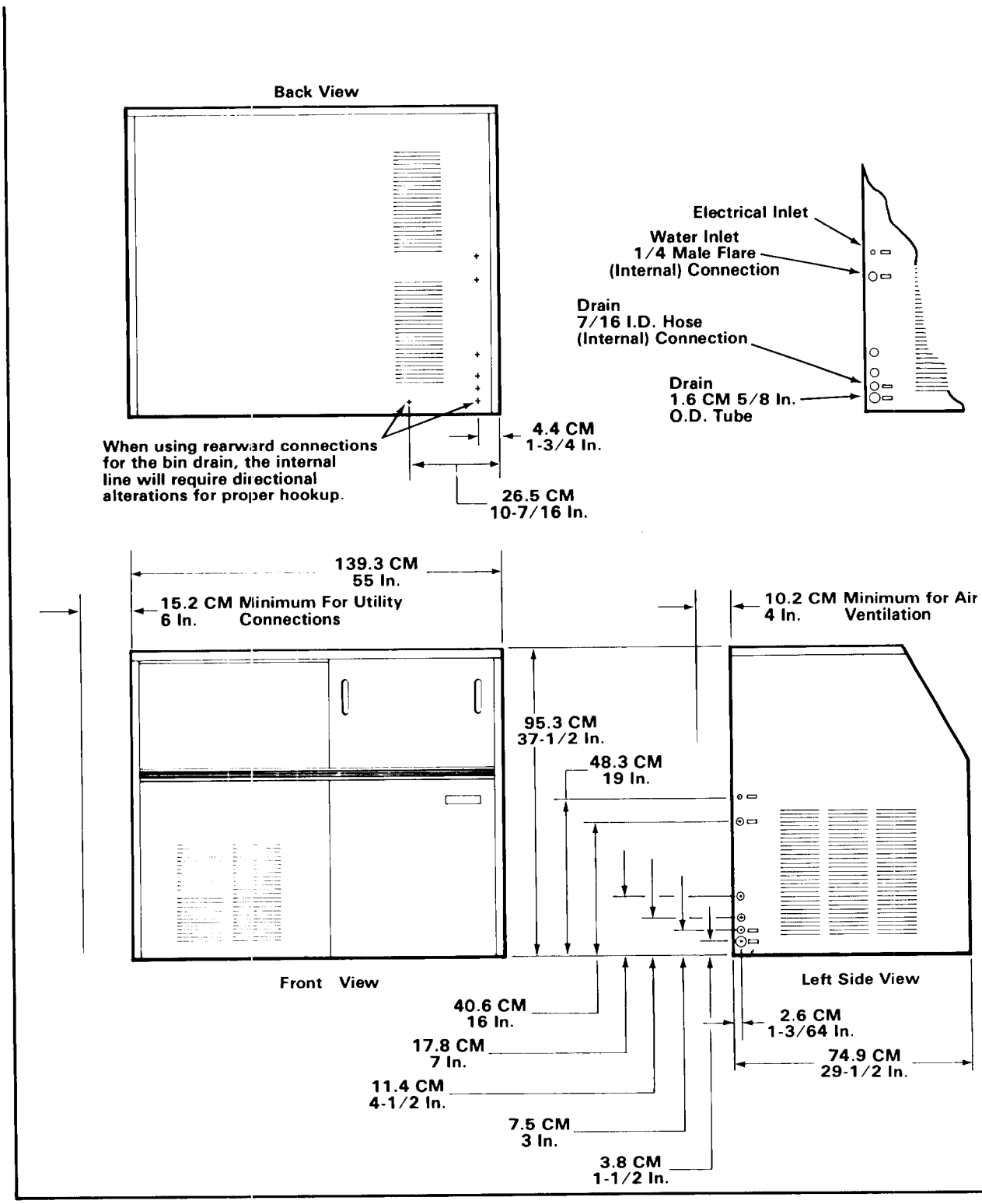

SPECIFICATIONS (Cont'd)

MODEL AF-330

Bin Storage: 377 lbs.*

Air-Cooled: Model AF-330 1A

Electrical: 115/60/1
Est. Ship. Wt.: 350 lbs.

TWO YEARS PARTS WARRANTY

FRONT SERVICE ACCESS PANEL

OPTIONAL LEG KIT

KLP2E - 6-inch metal legs, Black Enamel
KLP2S - 6-inch metal legs, Nickel Plated

OPTIONAL PANEL KIT

SPKAF30 - Stainless Panel Kit

SEE NAMEPLATE for electrical and refrigeration specifications. NAMEPLATE located on rear service panel, near left rear corner of the cabinet. Shown in column at left.

Remove Lower Left Front Panel to locate the Model/Serial Number plate, shown below, on the Chassis frame under the Control Box Cover.

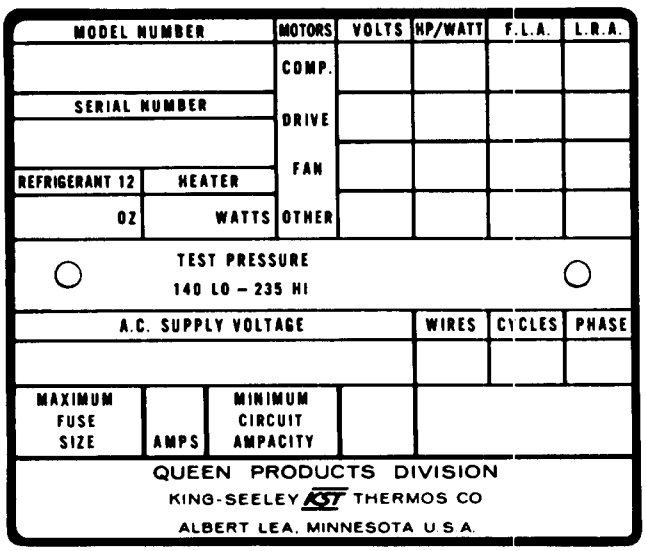

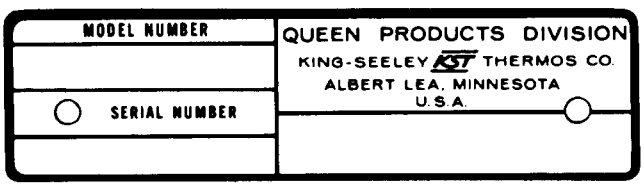

*Storage based on 90-percent of total volume x 34 lb. average density of ice. A.R.I. Standard.

We reserve the right to make product improvements at any time. Specifications and design are subject to change without notice.

SECTION I

GENERAL INFORMATION & INSTALLATION

I. INTRODUCTION

This manual provides the specifications and the step-by-step procedures for the installation, start-up and operation, and the maintenance and cleaning for the SCOTSMAN Model AF-330 Automatic Flakers.

The Model AF-330 Automatic Flakers are quality designed, engineered and constructed, and thoroughly tested icemaking and ice storage systems, providing the utmost in flexibility to fit the needs of a particular user. Separate sections detail more specifically: General Information & Installation; Start Up Operation; Principles of Operation; Adjustment and Removal and Replacement Procedures; Maintenance and Cleaning Instructions; Service Diagnosis: Wiring Diagrams; and, the Illustrated Assemblies and Parts Lists.

One of the outstanding features of this series of Flakers, is the easy access for service. With the front of the cabinet removed, the entire refrigeration system can be removed from the cabinet for on-the-spot repair. When it might become necessary to return the system to the shop, a second unit may be installed in a very short time, so the customer is not without ice. The repaired unit can be re-installed in a matter of minutes.

DESCRIPTION

An attractive compact cabinet of textured metal with a Sandalwood enamel finish, a woodgrain upper left front panel, and a bin access door. Also, an optional stainless steel cabinet finish is available. Both cabinets have up-to-date styling, and easily removable panels for easy access to electrical and mechanical components.

SEALED REFRIGERATION SYSTEM

To provide quiet efficient operation of the Icemaker, the Compressor motor is internally spring-mounted. The Compressor motor is covered by a five year parts warranty. The Freezer Assembly is powered by a direct-drive, gear motor, Drivemotor Assembly.

SELF-CONTAINED STORAGE BIN

These Automatic Flakers store their own ice supply in a heavily insulated ice storage bin, with a sliding Ice Access Door opening the front of the cabinet.

STANDARD OVERALL DIMENSIONS

The standard overall dimensions of the cabinet depth, counter top height, etc., allows the Automatic Flaker to be installed in harmony with the existing counter equipment.

II. UNPACKING AND INSPECTION

1. Call your authorized SCOTSMAN Distributor or Dealer, for proper installation. He's listed under ICE MAKING EQUIPMENT and MACHINERY in the yellow pages of the telephone book.

2. Visually inspect the exterior of the shipping container and skid and any severe damage noted, should be reported to the delivering carrier; and, a concealed damage claim filed subject to internal inspection, with carrier representative present.

3. BEFORE removal of any panels or packing, carefully lay the cabinet on its back and remove the shipping bolts and the shipping base or skid.

4. When ordered, install the optional leg levelers in the cabinet base sockets; then, raise the cabinet to the upright position.

5. Remove screws and shipping tape, and all doors and service panels from the cabinet, and inspect for any concealed damage. Notify carrier of any concealed damage claims, as stated in step 2 above.

6. Remove all internal support packing, tape and wires in machinery compartment.

7. Check that refrigerant lines do not rub or touch lines or other surfaces, and that fan blades, if any, move freely.

8. Check that the Compressor is snug on all mounting pads.

9. Remove Water Strainer from shipping envelope, for installation in water supply line.

10. Use clean damp cloth or disposable paper wiper to wipe clean the interior surfaces of the ice storage Bin and the exterior surfaces of the cabinet.

11. See NAMEPLATE on the rear service panel, near the left rear corner of the cabinet and

check that the location source voltage corresponds with the voltage specified on the nameplate.

CAUTION

Improper voltage supplied to the Icemaker will void your parts replacement program.

12. Remove the Manufacturer's Registration card from the front of the User's Manual and fill in all spaces including; Model Number and Serial Number taken from the aluminum plate located on the Chassis frame, under the Control Box Cover. Forward the completed, self addressed, registration card to the SCOTSMAN Factory.

III. LOCATION AND LEVELING

WARNING

This Automatic Flaker is NOT designed for outdoor installations where air temperatures are below 50-degrees F., or above 100-degrees F., and the water temperature is below 40-degrees F. or above 100-degrees F. Extended periods of operation at temperatures exceeding these limitations will constitute misuse, under the terms of the SCOTSMAN Manufacturer's limited warranty, resulting in LOSS of warranty coverage.

1. Tilt the Cabinet forward from the rear and safely position support blocks in place, for work access to bottom of the Cabinet.
2. Locate and remove the single Hex-Hd Shipping Screw, Washer and Lockwasher, used to secure the rear of the Chassis base during shipment from the factory. Remove support blocks and lower rear of Cabinet.

NOTE

Retain shipping hardware removed in this step and be sure to re-install the Screw and Washers before transporting the Flaker to a different location.

NOTE

Prior consideration for location site shall include:

1. *Minimum room temperature 50-degrees F. and maximum room temperature 100-degrees F.*
2. *Water inlet temperatures: Minimum 40-degrees F. and Maximum 100-degrees F.*
3. *Well ventilated location for Air-Cooled model, advising user to frequently clean Condenser, located directly behind left front service door.*
4. *SERVICE ACCESS: Adequate space for all service connections, through the rear of the Cabinet. A six-inch minimum clearance at rear, left and front louvered panels, for routing cooling air drawn into and exhausted out of the compartment, to maintain proper condensing operation on Air-Cooled models.*

3. Level the Cabinet in both the left-to-right and front-to-rear directions. The optional leveling legs can be adjusted with an open-end wrench.

IV. ELECTRICAL CONNECTIONS

SEE NAMEPLATE for current requirements to determine wire size to be used for electrical hookup. The Automatic Flaker requires a solid earth ground wire. See wiring diagram.

Be certain the Automatic Flaker is connected to its own electrical circuit and individually fused. The maximum allowable voltage variation should not exceed ten percent of the nameplate rating, even under starting conditions. Low voltages can cause erratic operation and may be responsible for serious damage to the overload switch and motor windings.

All external wiring should conform to the National, State and local electrical code requirements. Usually an electrical permit and service of a licensed electrician will be required.

V. WATER SUPPLY AND DRAIN CONNECTIONS

A. WATER CONNECTIONS: The recommended water supply line is a 1/4-inch O.D. copper tubing. Connect to cold water supply line with standard plumbing fittings, with a shutoff valve installed in an accessible place between the water supply and the Cabinet.

A wire mesh strainer is provided and must be installed with the cleanout plug down. Locate the strainer in the water supply line, next to the Cabinet with the arrow on the strainer, in the direction of the water flow. The strainer protects against large particles of rust, scale, etc., which may be loosened in the water supply pipe, at the time of installation.

In some cases, a plumbing permit and services of a licensed plumber will be required.

WARNING

To prevent damage to the freezer mechanism, DO NOT operate this unit when the water supply is OFF, or is below 20 PSI, the recommended water pressure. Position the master switch to the OFF position, until proper water supply is resumed.

The Icemaker in this Cabinet will not operate when water supply temperatures are below 40-degrees F. or above 100-degrees F.

B. DRAIN CONNECTIONS: All drains are gravity type and must be 1/4-inch per foot on horizontal run. The drains to be installed to conform with local code. The drain receptacle should be an open, trapped or vented construction. See Figure 1-1.

Recommended Bin Drain is 5/8-inch O.D. copper tubing, should be vented and run separately. Connect a drain line to 7/16-inch I.D. tube from the Reservoir Overflow.

WARNING

This Automatic Flaker will NOT operate when water supply temperature is below 40-degrees F., or above 100-degrees F. Requires 20 PSI flowing water pressure, without interruption.

VI. FINAL CHECK LIST

1. Has the single Hex-Hd Shipping Screw, for rear Chassis base, been removed.
2. Is the Cabinet level? (IMPORTANT)
3. Have all electrical and piping connections been made?
4. Has the voltage been tested and checked against the nameplate rating?
5. Is the water supply line shutoff valve installed and electrical wiring properly connected?
6. Have the Bin and Cabinet been wiped clean?
7. Have the Compressor hold down nuts been checked, to be sure the Compressor is snug on the mounting pads?
8. Has the owner/user been given the User Manual and instructed on how to operate the Icemaker?
9. Has the Manufacturer's Registration Card been properly filled out? Check for correct Model and Serial numbers from the Serial nameplate, then mail the completed card to the SCOTSMAN factory.
10. Check all refrigerant lines and conduit lines, to guard against vibration or rubbing and possible failure.
11. Is there at least six inches clearance behind and around Cabinet for proper air circulation?
12. Is the Cabinet in a room where ambient temperatures are a minimum of 50-degrees F. all year around?
13. Has water supply pressure been checked to insure a minimum of 20 PSI?
14. Has the owner been given name and telephone number of the authorized SCOTSMAN Service Agency serving him?

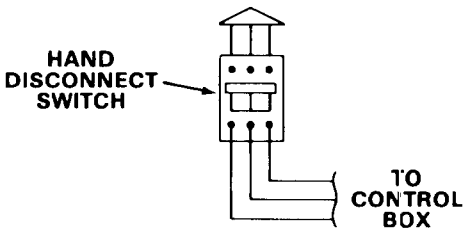

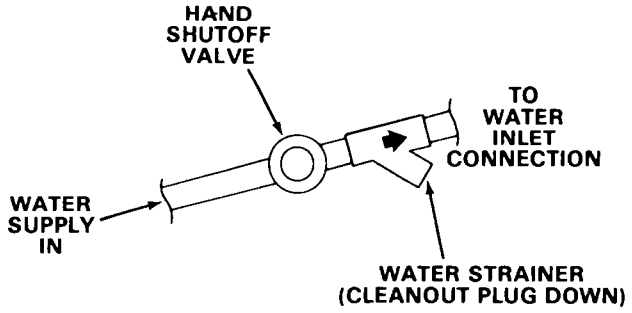

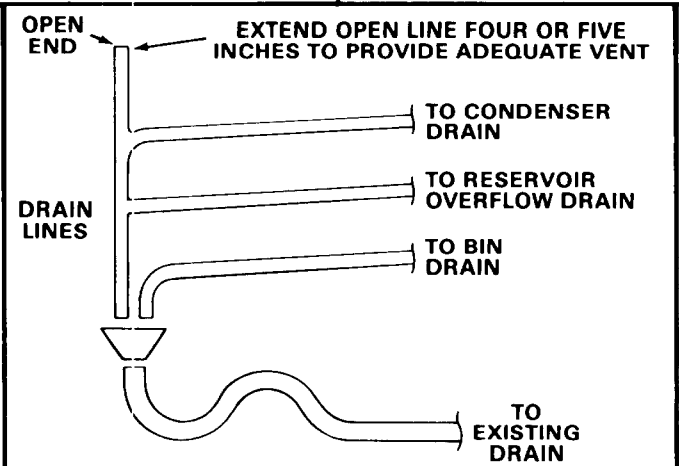

OPEN TRAPPED OR VENTED DRAIN. RECOMMENDED 1/4-INCH FALL PER FOOT OF RUN ON DRAIN LINES.

WARNING

THIS ICEMAKER IS NOT DESIGNED FOR OUTSIDE INSTALLATION AND WILL NOT OPERATE IN AMBIENT TEMPERATURES BELOW 50-DEGREES F., NOR ABOVE 100-DEGREES F.

THIS ICEMAKER WILL NOT OPERATE WHEN WATER TEMPERATURES ARE BELOW 40-DEGREES F., NOR ABOVE 100-DEGREES F.

77-116C

Figure 1-1. Installation Practice

SECTION II
OPERATING INSTRUCTIONS

I. START UP

1. Remove screws and the Lower Left Front Panel and the Left Side Panel.
2. OPEN the water supply line shutoff valve.
3. Observe the water filling operation, see Figure 2-1:
   a. Water flows into Water Reservoir.
   b. Float moves up as water rises.
   c. Water flows through water feed line to bottom of Freezer Assembly.
   d. Float stops water flow, when water level reaches 3/8-inches below the molded horizontal line, on the body of the Water Reservoir.
4. Move the manual ON-OFF toggle switch, on top of the Control Box to the ON position, to start the automatic icemaker operation.
5. After two or three minutes of operation, observe that flaked ice begins dropping off the Auger and out the Ice Spout, through the Nylobraid tubing and into the Ice Storage Bin.
6. Let the system operate for about 30 minutes or until ice covers the bottom of the Bin. Check for any excess noises beyond normal Compressor noise:
   a. Fan noises, when Air-Cooled: Blades touch other surfaces; blades bent, out-of-balance.
   b. Vibrating type from touching lines.
   c. Chattering: Lack of water in Freezer.
   d. Compressor loose at one or more hold-down bolts.

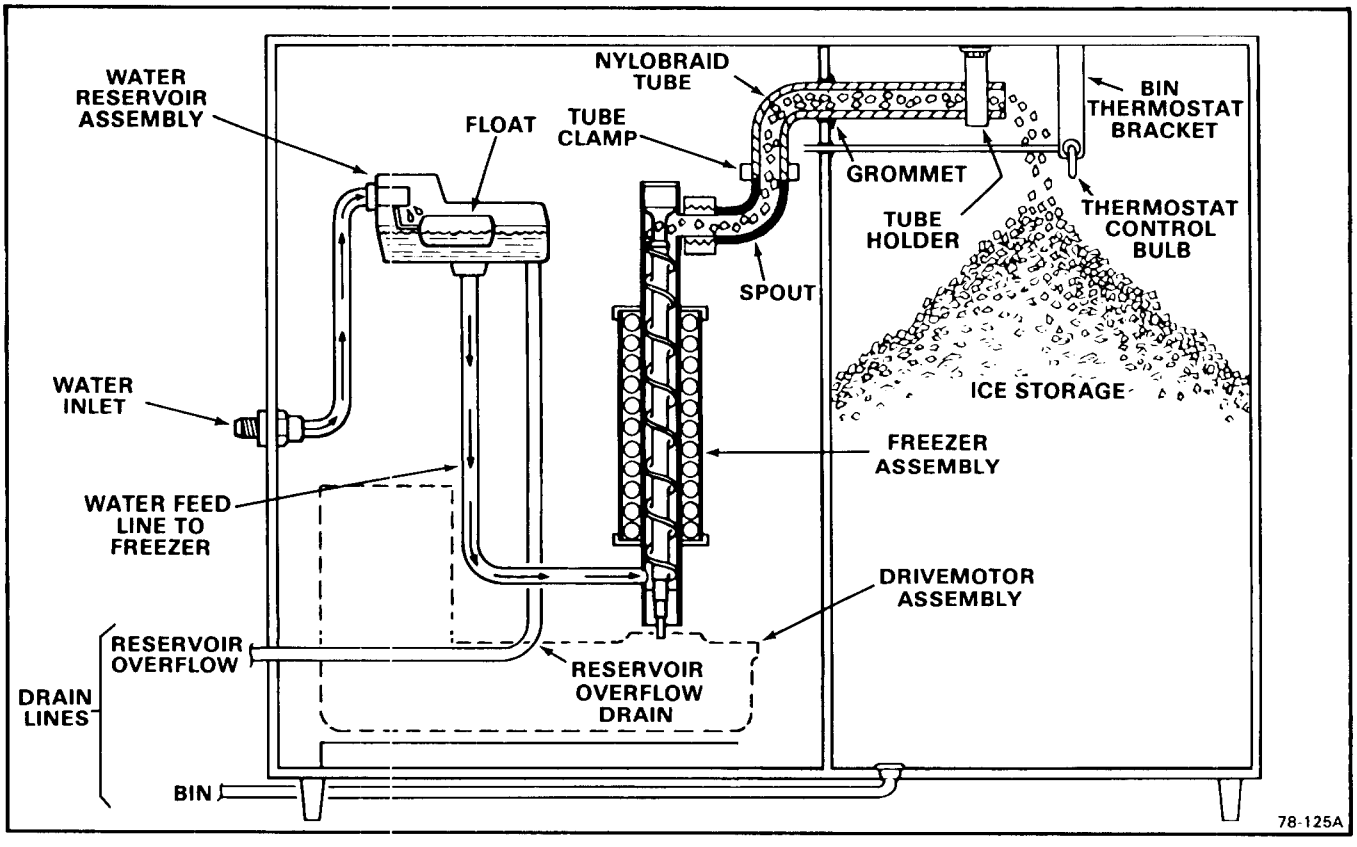

Figure 2-1. Water Schematic

WARNING

DO NOT operate this Icemaker when the water supply is shut OFF, or is BELOW the recommended 20 PSI water pressure. Move the manual ON-OFF toggle switch on the front of the Control Box to the OFF position immediately.

7. Hold a handful of ice around the Ice Storage Bin Thermostat Control Bulb to test shut-off. Less than one minute is about normal for Bulb shutoff function to cause the Compressor to stop.

NOTE

Within minutes after the ice is removed from the sensing bulb, the bulb will warm up and cause the Icemaker to restart. This control is factory set and should not be reset until testing is performed. Normal setting: about 35-degrees F. CUT-OUT and 45-degrees F. CUT-IN, to prevent short cycling.

8. Thoroughly explain to the owner/user the significant specifications of the Icemaker, the start up and operation, going through the procedures in the operating instructions. Answer all questions about the Icemaker, by the owner; and, inform the owner of the name and telephone number of the authorized SCOTSMAN Service Agency serving him.

SECTION III

PRINCIPLES OF OPERATION

How It Works

I. ICEMAKER

The water supply flows from the building source through the inline water strainer, enters at the Cabinet fitting and on to the Water Reservoir. The Water Reservoir functions to maintain a constant water level inside the Freezer Assembly. Water from the Water Reservoir enters at the bottom of the Freezer Assembly and is changed into ice by low temperatures inside the Freezer.

A stainless steel Auger within the Freezer is powered by the Drivemotor Assembly, a direct-drive gearmotor, and the rotating Auger carrier the ice upward to the flared end of the Auger, see Figure 3-1, where excess water is pressed out of the ice, as it is extruded or flaked out through the Ice Spout, through the Nylobraid tubing and into the Ice Storage Bin.

Moving the manual ON-OFF toggle switch, on the top of the Control Box, to the ON position starts the automatic and continuous icemaking process. When the Ice Storage Bin has been filled with ice, up to the level of the Thermostat Control Bulb, the sensing bulb shuts off the icemaking process.

As the ice is removed from the Ice Storage Bin, the Thermostat Control Bulb warms up, restarting the automatic icemaking process.

Factory settings are 35-degrees F. CUT-OUT and 45-degrees F. CUT-IN.

Altitude adjustment should ONLY be performed on Icemakers installed at 2000-feet level locations and ABOVE, and adjust only in increments of one-fourth turn of screw at a time.

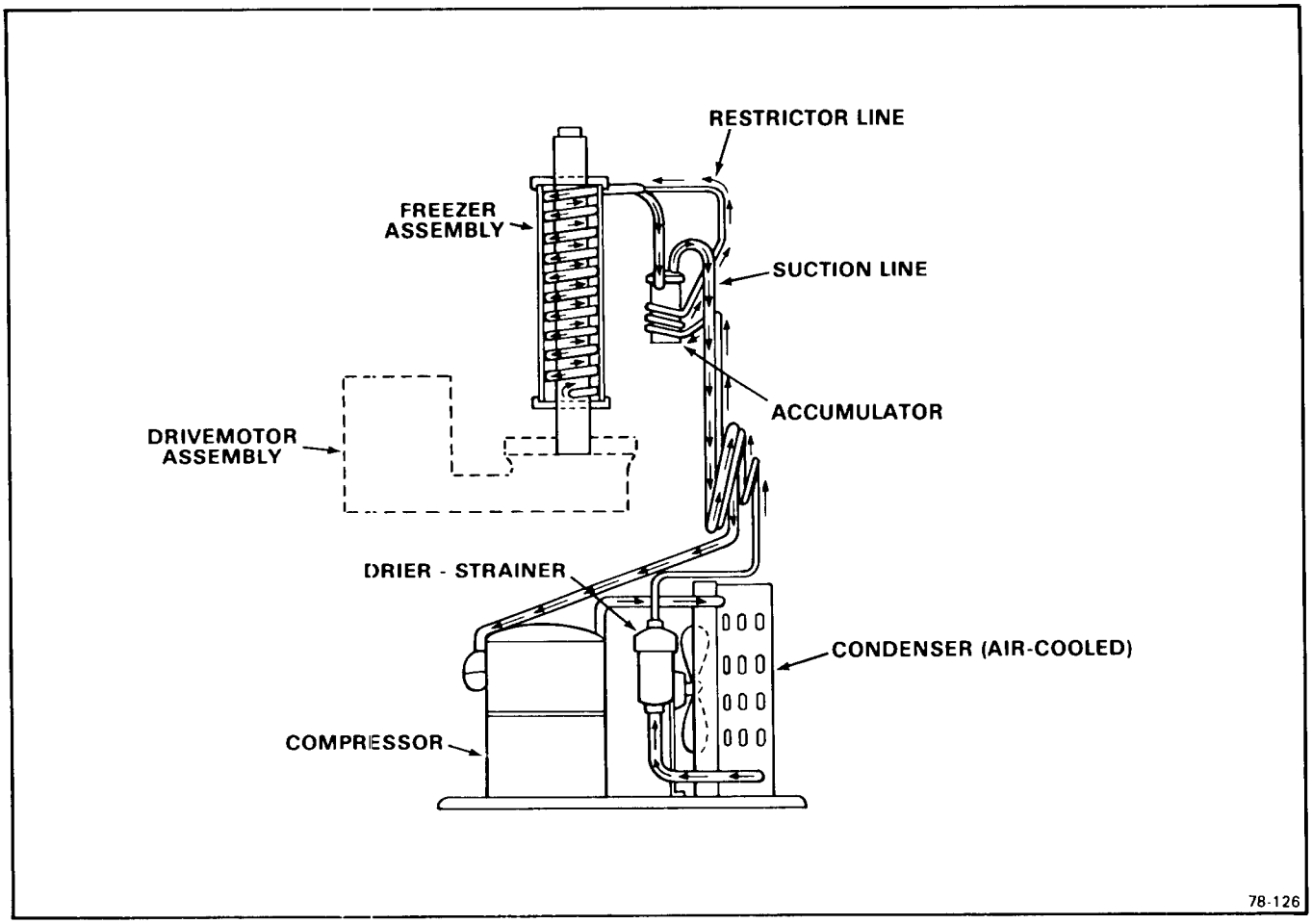

Figure 3-1. Refrigeration Cycle

II. ELECTRICAL/REFRIGERATION

The AF-330 Automatic Icemakers are designed to operate on standard electrical supply 115 volts, 60 Hertz, single phase. Other voltage requirements are available on special order. Therefore, always CHECK NAMEPLATE for electrical information BEFORE proceeding with electrical wiring connections to the Icemaker.

Cold ambient temperatures and interruptions in water supply are conditions that can cause excessively hard ice and overloads within the Freezer Assembly, which is directly transmitted to the Drivemotor; and in turn, will cause speed reduction or ultimate freezeup.

When the Drivemotor is slowed to a pre-determined RPM, a sensing switch mounted on top of the motor is designed to open the electrical circuit to the Compressor. The Compressor stops operating, no more ice is produced, and the Drivemotor continues to operate rotating the Auger to clear the overload and gradually build up to full speed.

At a pre-determined higher RPM Drivemotor speed, the speed sensing switch closes the electrical circuit to the Compressor, causing the normal icemaking process to resume. Refer to specific details in paragraph V-II-9, on centrifugal sensing switch operation.

A Spout Switch is mounted on the side of the Ice Spout and is actuated by the movement of the spring retained spout tube against the switch actuator. The Spout Switch acts as a backup safety switch, should the Thermostat Control Bulb fail and cause ice to jam up in the Ice Spout. The switch will shut off the icemaker only when actuated. It is an immediate and complete shut down of the entire icemaker. The Spout Switch can be manually tested, by plugging the end of the Nylobraid Tube. The switch is also manually reset.

There are two safety controls in the Control Box. The Low Pressure Control, a manual reset, non-adjustable control, is set to electrically open at zero to four PSIG to stop the entire icemaker. The Auger Delay Switch, a single-pole double-throw (SPDT) switch, functions as a control device to allow the gearmotor to rotate the Auger to clear the Freezing Chamber while the compressor circuit is OFF.

Refer to the appropriate Wiring Diagram and trace circuitry and control functions, as described in the following paragraph.

As shown on all SCOTSMAN wiring diagrams, the controls are the ICEMAKING MODE. Thus, the 1-2 contacts are CLOSED. At STARTUP, the 1-2 contacts are OPEN and the 3-2 contacts are CLOSED. As the icemaker begins to operate, the low side pressure starts to decrease from the stabilized or at-rest pressure. As soon as the pressure is reduced to 20 PSIG, the 3-2 contacts OPEN and the 1-2 contacts CLOSE.

This removes the operating controls, such as the Bin Thermostat, from the gearmotor circuit. If one of the operating controls OPENS, it will SHUT OFF the compressor circuit. The gearmotor will operate until the low side pressure increases to 32 PSIG. Then, the 1-2 contacts OPEN and SHUTS OFF the gearmotor, usually within one to two minutes, depending upon ambient conditions. This brief period of time allows the Auger to transport all the ice out of the Freezing Chamber. Consequently, when called on to STARTUP again, there is no ice load to start up against. Again, on STARTUP, the 1-2 contacts are OPEN and the 3-2 contacts are CLOSED.

On all models, a low-water pressure switch functions to discontinue the Icemaking process whenever incoming water pressure is reduced to below five PSIG. The Switch will automatically restart the Icemaking process when the water pressure is increased to 20 PSIG.

The head pressure is normal about 130 PSIG, however, it will vary depending upon ambient air temperature.

Suction pressure should be 15 PSIG with proper refrigerant charge and the frost line should extend out from the Accumulator to within no closer than eight to twelve inches of the Compressor. Suction pressure will vary about two PSIG plus or minus, depending upon ambient temperatures and incoming water supply temperatures to the Freezer Assembly.

When charging the system with refrigerant, always CHECK NAMEPLATE for specific refrigeration charge for individual Flaker, and charge with refrigerant so the frost line extends out of the Accumulator to within no closer than eight to twelve inches of the Compressor, after 15 minutes of operation, for best capacity and performance.

MODEL	AF330 Refrig. Chg.
Air-Cooled	22 oz. R-12 (Approx.)

SECTION IV

ADJUSTMENT AND REMOVAL AND REPLACEMENT

The procedures provided in this Section are arranged in alphabetical order, to make specific Adjustment and Removal and Replacement information easy to locate.

Read the instructions thoroughly before performing any Adjustment or Removal and Replacement Procedures.

I. ADJUSTMENT OF THE BIN THERMOSTAT CONTROL

The control for the Bin Thermostat is the Temperature Control, located on the upper part of the Control Box Assembly.

See Figure 4-1 for location and direction of rotation, clockwise (CW) or counterclockwise (CCW), of the adjusting screws on the Temperature Control, in the particular Control Box the adjustment is to be performed.

WARNING

The adjusting screws on the Temperature Control device have very sensitive response to adjustment. DO NOT attempt to adjust the screw until after thoroughly reading and understanding the following instructions and illustrations. Over-adjusting or erratic guessing, can foul the instrument and cause ultimate delay and part replacement, WHICH COULD HAVE BEEN PREVENTED.

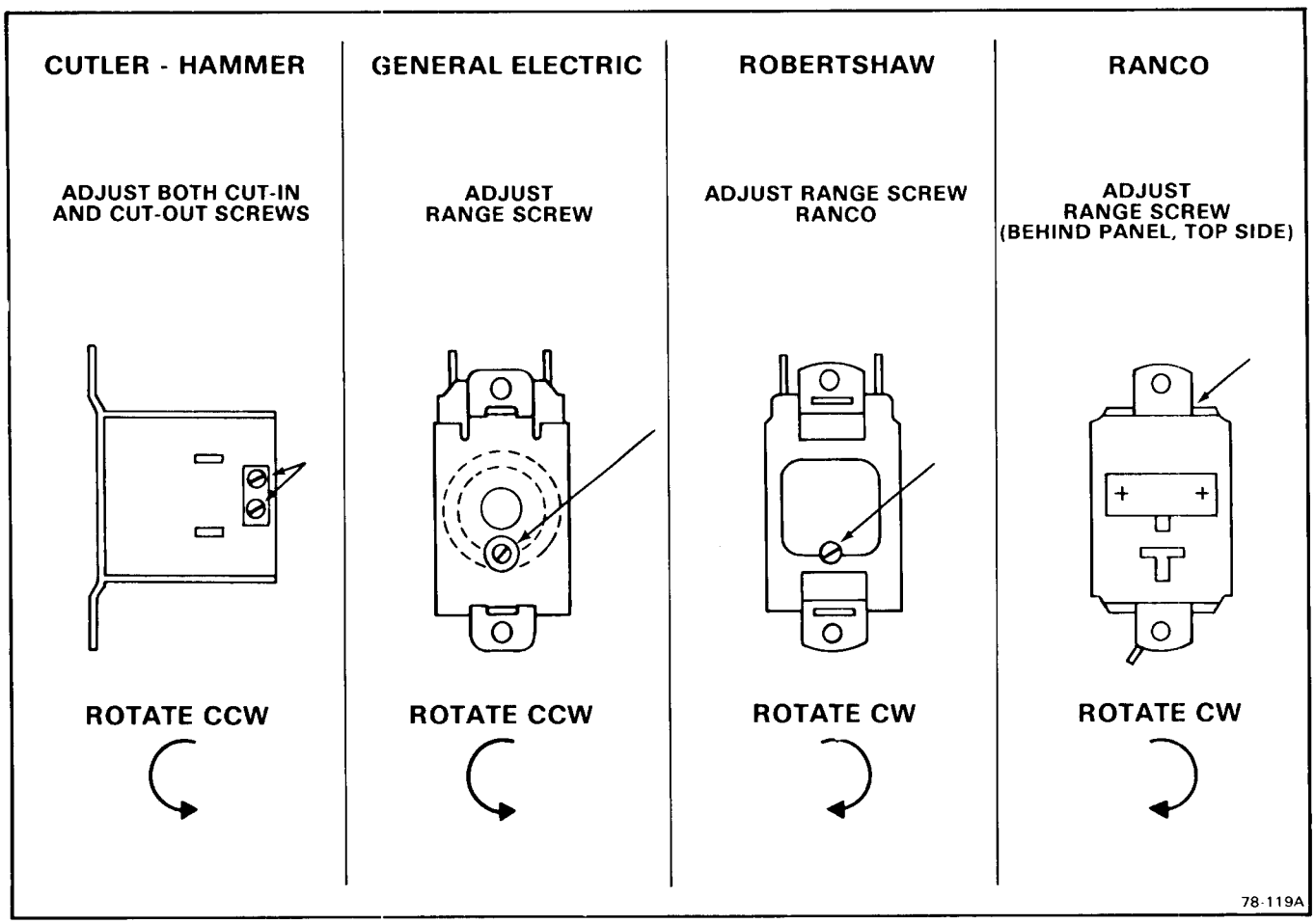

Figure 4-1. Adjustment of the Temperature Control.

II. ADJUSTMENT OF THE LEG LEVELERS

When the AF-330 Icemaker is ordered with the optional Leg Levelers, the Cabinet must be leveled in the front-to-rear and side-to-side directions. This adjustment should be performed during initial installation of the Cabinet and anytime the Cabinet is moved from the original location to another site.

A. Using an open-end wrench, and a carpenter's bubble level, rotate the threaded Leveler in each Leg to RAISE or LOWER the Cabinet until the Cabinet is level in the front-to-rear direction.

B. Repeat step A, for leveling in the side-to-side direction.

C. Recheck both the front-to-rear and the side-to-side leveling and repeat adjustments, as necessary.

III. ADJUSTMENT OF THE WATER RESERVOIR FLOAT

The correct water level in the Water Reservoir should be 3/8-inch below the raised molded line, on the side of the body of the Water Reservoir. When the water line level is above or below the raised molded line, adjustment can be performed to raise or lower the water level by raising or lowering the Water Reservoir in the slots on the Mounting Brackets, which in turn will adjust the action of the float.

A. To RAISE the Water Level: Loosen the two Screws which attach the Water Reservoir Assembly to the Mounting Bracket and RAISE the Water Reservoir Assembly, in the slots, the desired amount; then, tighten the Screws.

B. To LOWER the Water Level: Loosen the two Screws which attach the Water Reservoir Assembly to the Mounting Bracket and LOWER the Water Reservoir Assembly, in the slots, the desired amount; then, tighten the Screws.

WARNING

Be sure the electrical power supply and the water supply are OFF, before starting any of the following REMOVAL AND REPLACEMENT procedures, as a precaution to prevent possible personal injury or damage to equipment.

IV. REMOVAL AND REPLACEMENT OF THE AUGER, WATER SEAL, BEARINGS AND COUPLINGS

A. To Remove the Auger, Water Seal, Bearings, and Coupling:

1. Remove screws and the Left Front Lower Panel and the Left Side Panel.
2. Remove the Freezer Cap from the top of the Freezer Assembly.
3. Perform the steps in procedure IV-XI to remove the Spout Assembly.
4. Grasp the wire Cap Hook at the top of the Freezer Assembly and pull out the Auger and attached Cap, Bearing/Retainer, Bearing and O-Rings, at the top of the Auger; and, the top half of the Water Seal at the bottom of the Auger.

NOTE

When the Auger cannot be pulled out, proceed to steps 12 and 13, to gain access to the bottom of the Auger. Then, with a rawhide mallet or placing a piece of wood on the bottom end of the Auger, tap the bottom of the Auger to break it loose and pull the Auger out, as in step 4 above.

5. Remove the Cap Hook from the Bearing/Retainer.
6. Remove the Retaining Ring and the Cap.
7. Remove the Cap Screw and Washer and remove the Bearing/Retainer from the Auger.
8. Clean away the old grease from the top of the Auger, the Bearing/Retainer, Cap, Cap Screw and Washer, and the O-Ring and Retaining Ring.
9. Inspect the O-Ring at the top of the Bearing/Retainer and the O-Ring at the bottom outside of the Bearing/Retainer, for cuts, tears and general worn condition to determine replacement.
10. Inspect the Bearing pressed into the top of the Bearing/Retainer and, if it is to be replaced, remove the Retaining Ring and press the Bearing out of the Bearing/Retainer.
11. Slide the upper half of the Water Seal off of the bottom of the Auger.

NOTE

1. *Any time the Auger is removed for replacement, or, for the inspection and replacement of the Beariouplíng, use extra care in handling the Water Seal parts, so no dirt or foreign matter are deposited on the surfaces of the Seal.*
2. *If there is any doubt about the effectiveness of Water Seal of O-Ring, REPLACE THEM. A dirty, worn or faulty Water Seal of O-Ring will cause a leak and ultimately require a second, time consuming removal and replacement procedure to be performed, that COULD HAVE BEEN PREVENTED.*

12. Remove four screws and lockwashers which attach the Freezer Assembly to the Adaptor on the Drivemotor Assembly.

13. Raise the Freezer Assembly off of the Adaptor, to gain access to the Bearing and Retainer; then, temporarily secure the Freezer Assembly out of the way to allow room to work. Be careful not to damage the gasket.

14. Using a suitable length and size wooden dowel or stick inserted through the top of the open Freezer Assembly, tap the lower half of the Water Seal and the lower Bearing in the Retainer, out of the bottom of the Freezer Assembly.

15. Inspect the lower half of the Water Seal. If reusable, use care to protect it from dirt, etc. prior to replacement procedure.

16. Inspect the lower Bearing in the Retainer; and, if the Bearing is to be replaced, press the Bearing out of the Retainer.

17. Reach through the Adaptor and remove the coupling on the Drivemotor for inspection.

18. Check the Coupling for cracks, chipping and excessive wear.

B. To replace the Auger, Water Seal, Bearings, and coupling, reverse the removal procedure.

NOTE

1. *When installing the Retainer assembled with Bearing, in the bottom of the Freezer Assembly, some Retainers will insert as a slip fit, and some will have to be forced into place because of very tight fit. Carefully tap a piece of wood positioned across the bottom of the Retainer, to evenly seat the Retainer in the chamber of the Freezer.*
2. *After assembling the parts on the upper end of the Auger and BEFORE installing the Cap and Cap Hook, apply an ample coating of shell Alvania 3 Grease, P/N 19-0309-01, to the upper part of the Bearing/Retainer to cover the Retaining Ring and the Cap Screw and Washer. Then, install the Cap and Cap Hook in place.*

V. REMOVAL AND REPLACEMENT OF THE COMPRESSOR ASSEMBLY.

NOTE

Always install a replacement Drier, any time the sealed refrigeration system is opened. Do not replace the Drier until all other repair or replacement has been completed.

A. Remove the Compressor Assembly:

1. Remove screws and the Left Side Panel and the Left Front Lower Panel.
2. Remove two screws and the Cover from the Compressor Junction Box.
3. Disconnect the electrical leads at the Compressor Junction Box, that originate in the Control Box.
4. Bleed off or blow the refrigerant charge through the Schrader valves.
5. Unsolder the suction line and the discharge line from the Compressor.
6. Unsolder the process header tube from the Compressor and retain for installation on the replacement Compressor.
7. Remove four bolts, lockwashers and washers which secure the Compressor to the Chassis mounting base.
8. Slide the Compressor and remove through the left side opening of the Cabinet.

NOTE

Thoroughly evacuate the system to remove moisture and non-condensables.

B. To replace the Compressor Assembly, reverse the removal procedure.

VI. REMOVAL AND REPLACEMENT OF THE CONDENSER — AIR-COOLED MODELS

NOTE

Always install a replacement Drier, any time the sealed refrigeration system is opened. Do not replace the Drier until all other repair or replacement has been completed.

A. To Remove the Condenser:

1. Remove screws and the Left Front Lower Panel and the Left Side Panel.
2. Bleed off or blow the refrigerant charge through the Schrader valve.
3. Unsolder and disconnect the Condenser inlet tube and the outlet tube at the Condenser.
4. Remove three screws, lockwashers and washers securing the Condenser to the Chassis Base.
5. Remove the Condenser out through the front opening of the cabinet.

NOTE

Thoroughly evacuate the system to remove moisture and non-condensables.

B. To replace the Condenser, reverse the removal procedure.

VII. REMOVAL AND REPLACEMENT OF THE DRIER

NOTE

Always install a replacement Drier, any time the sealed refrigeration system is opened. Do not replace the Drier until all other repair or replacement has been completed.

A. To Remove the Drier:

1. Remove screws and the Left Front Lower Panel and the Left Side Panel.
2. Remove screw and Drier Brace attaching the Drier to the Chassis base.
3. Bleed off or blow the refrigerant charge through the Schrader valve.
4. Unsolder refrigeration lines at each end of Drier, remove the Drier and separate the Drier from the Drier Brace.

B. To Replace the Drier:

CAUTION

1. **If the factory seal is broken on the replacement Drier, exposing it to the atmosphere more than a few minutes, the Drier will absorb moisture from the atmosphere and lose substantial ability for moisture removal.**
2. **Be sure the replacement Drier is installed with the arrow positioned in the direction of the refrigerant flow.**

1. Remove the factory seals from the replacement Drier and install the Drier in the refrigerant lines with the arrow positioned in the direction of the refrigerant flow.
2. Install the Drier Brace on the Drier.
3. Solder the Drier into the lines, two places.
4. Purge the system and check for leaks.
5. Thoroughly evacuate the system to remove moisture and non-condensables.
6. Charge the system with refrigerant, by weight. SEE NAMEPLATE.
7. Replace the Left Front Lower Panel and the Left Side Panel and attach both with screws removed earlier.

VIII. REMOVAL AND REPLACEMENT OF THE DRIVEMOTOR ASSEMBLY

A. To Remove the Drivemotor Assembly:

1. Perform all steps in procedure IV-X to gain access for removal of the Drivemotor Assembly.
2. Remove bolts, lockwashers and washers which attach the Drivemotor to the Chassis base.
3. Lift the Drivemotor from the Chassis base and out of the Cabinet.

B. To replace the Drivemotor Assembly, reverse the removal procedure.

IX. REMOVAL AND REPLACEMENT OF THE FAN MOTOR ASSEMBLY — AIR-COOLED MODELS

NOTE

Before beginning this procedure, observe the Fan Blade position on the shaft of the Fan Motor and mark the Fan Blade so it will be correctly positioned during reassembly. Direction of air flow should be toward the Fan Motor.

A. To Remove the Fan Motor Assembly:

1. Remove screws and the Left Front Lower Door and the Left Side Panel.
2. Disconnect the electrical lead from the Fan Motor.
3. Remove two screws securing the Motor Bracket to the Chassis Base and remove the Fan Motor and Motor Bracket out through the left side opening of the Chassis.
4. Remove the nut from the end of the Fan Motor shaft and remove the Fan Blade.
5. Remove four screws securing the Fan Motor to the Motor Bracket and separate the Motor from the Bracket.

B. To replace the Fan Motor Assembly, reverse the removal procedure.

X. REMOVAL AND REPLACEMENT OF THE FREEZER ASSEMBLY

NOTE

1. *The Cabinet may have to be removed from its permanent location, especially if located in a corner, in order to have access to the left side and rear of the Chassis.*
2. *In addition to shutting OFF electrical power and inlet water to the icemaker, be sure to disconnect the inlet water line at the rear of the Cabinet BEFORE moving the icemaker from the permanent location.*
3. *Always install a replacement Drier, anytime the sealed refrigeration system is opened. Do not replace the Drier until all other repair or replacement has been completed.*

A. To Remove the Freezer Assembly, see Figure 4-2:

1. Remove screws and left side, front and rear panels.
2. Refer to procedure IV-XI and remove the Spout Assembly.

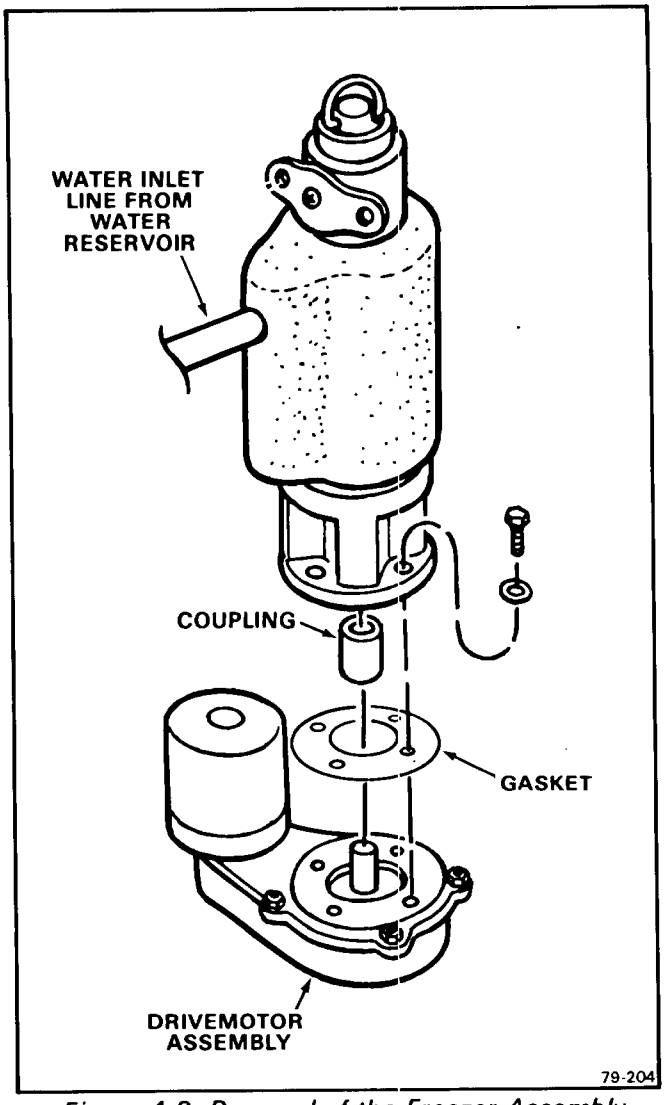

Figure 4-2. Removal of the Freezer Assembly.

3. Remove Corbin clamp and Tygon tube from the Freezer Assembly that connects to the Water Reservoir Assembly.
4. Bleed off or blow the refrigerant charge through the Schrader valve.
5. Unsolder the suction line from the Compressor.
6. Unsolder the capillary line at the Drier.
7. Remove four screws, lockwashers and washers which attach the bottom of the Freezer Assembly to the Adaptor on the Drivemotor Assembly.
8. Lift the Freezer Assembly up and off of the Adaptor and Drivemotor Assembly.

NOTE

Thoroughly evacuate the system to remove moisture and non-condensables.

B. To replace the Freezer Assembly, reverse the removal procedure.

XI. REMOVAL AND REPLACEMENT OF THE SPOUT ASSEMBLY.

A. To Remove the Spout Assembly, See Figure 4-3:

1. Remove screws and the Left Front Lower Panel and Left Side Panel.
2. Remove the Hose Clamp and disconnect the Nylobraid tube from the end of the spout.
3. Remove the Freezer Cap from the top of the Freezer Assembly.
4. Disconnect the electrical leads from the Spout Switch.
5. Remove two screws and washers and separate the Spout Assembly from the Spout Plate on the Freezer Assembly.

NOTE

At this time, inspect the Spout Gasket and retain for the replacement procedure. Replace a torn, cut or worn, defective gasket.

B. To replace the Spout Assembly, reverse the removal procedure.

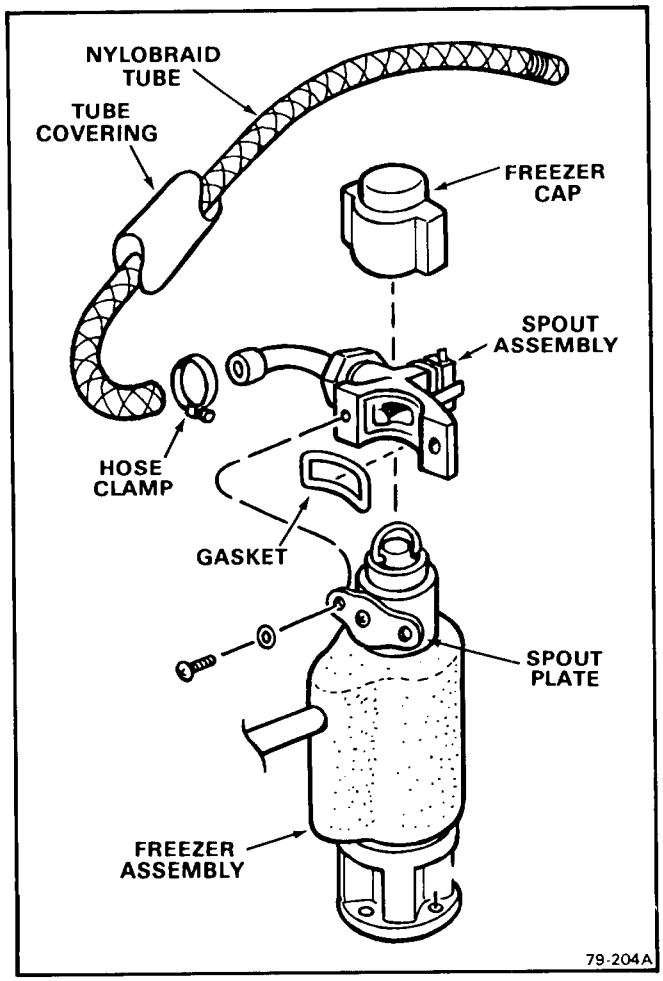

Figure 4-3. Removal of the Spout Assembly.

XII. REMOVAL AND REPLACEMENT OF THE WATER PRESSURE CONTROL

A. To Remove the Water Pressure Control:

1. Remove screws and the Left Front Lower Panel and the Left side Panel.
2. Remove screws and the Control Box Cover.
3. Disconnect the two blue electrical leads of the Water Pressure Control, from the terminals on the Auger Delay Control and the Bin Thermostat device in the Control Box Assembly.
4. Unscrew the flare nut fitting and disconnect the Water Pressure Control from the Utility Bracket and the Tee on the inlet water tubing.

NOTE

At this time, inspect the O-Ring and retain for the replacement procedure. Replace O-ring that is cut, torn or indicates excessive wear.

B. To replace the Water Pressure Control, reverse the removal procedure.

XIII. REMOVAL AND REPLACEMENT OF THE WATER RESERVOIR ASSEMBLY

A. To Remove the Water Reservoir Assembly, see Figure 4-4:

1. Remove screws and the Left Front Lower Panel and the Left Side Panel.

NOTE

Be prepared with container or rags, to catch water left in lines, when lines are disconnected in next steps, to prevent draining water on parts, components, electrical lines, etc.

2. Disconnect the water inlet tube from the Water Reservoir Assembly.
3. Remove two Corbin clamps and two tubes from the bottom of the Water Reservoir Assembly.
4. Unscrew and remove the wing nut from the bottom of the Water Reservoir Assembly.

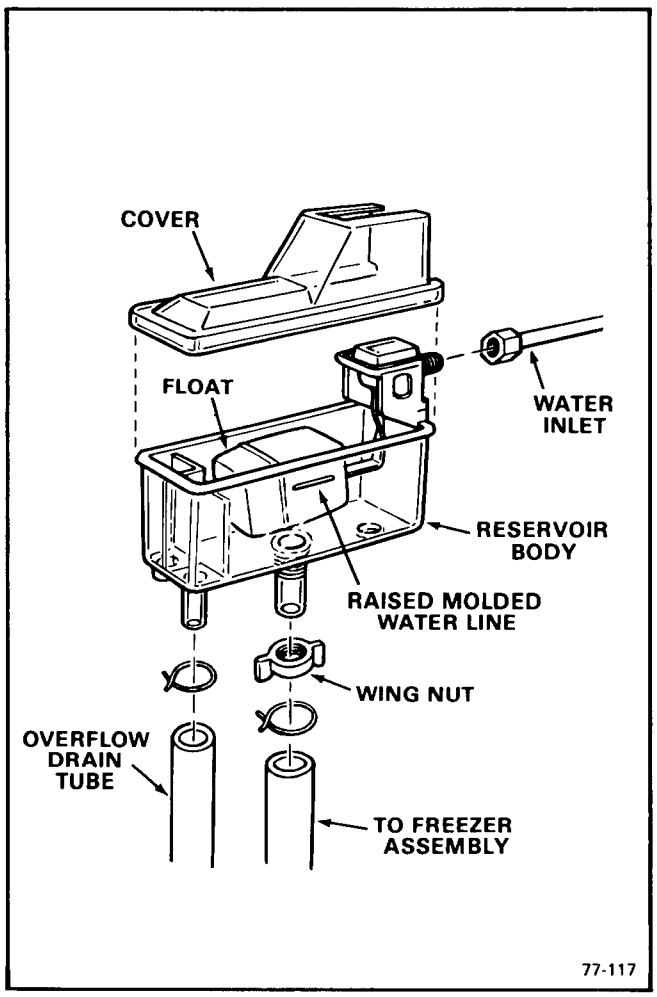

Figure 4-4. Removal of the Water Reservoir Assembly

5. Lift and remove the Water Reservoir Assembly from the mounting bracket.

B. To replace the Water Reservoir Assembly, reverse the removal procedure.

NOTE

Check that the installed replacement Water Reservoir Assembly float moves freely. Bend metal arm of float to adjust, as necessary. The correct water level in the Water Reservoir is 3/8-inch below the raised molded line, on the side of the body of the Water Reservoir.

SECTION V

MAINTENANCE AND CLEANING INSTRUCTIONS

I. GENERAL

The periods and procedures for maintenance and cleaning are given as guides and are not to be construed as absolute or invariable. Cleaning especially will vary, depending upon local water conditions and the ice volume produced; and, each Icemaker must be maintained individually, in accordance with its own particular location requirements.

II. ICEMAKER

THE FOLLOWING MAINTENANCE SHOULD BE SCHEDULED AT LEAST TWO TIMES PER YEAR ON THIS ICE-MAKER. CALL YOUR AUTHORIZED SCOTSMAN SERVICE AGENCY.

1. Check and clean water line Strainers.
2. Remove cover from Water Reservoir and depress the float to ensure that a full stream of water enters the Reservoir.
3. Check that the Icemaker cabinet is level, in side-to-side and front-to-rear directions.
4. Check that the water level in the Water Reservoir is below the overflow, but high enough that it does not run out of the spout opening.

NOTE

It is not abnormal for some water to emerge from the Ice Spout with flaked ice during normal ice production.

5. Clean the Water Reservoir and interior of the Freezer Assembly, using a solution of SCOTSMAN Ice Machine Cleaner. Refer to procedure V-III, CLEANING-Icemaker.

NOTE

Cleaning requirements vary according to local water conditions and individual user operation. Visual inspection of the Auger before and after cleaning will indicate frequency and procedure to be followed in local areas.

6. When doubtful about refrigerant charge, install refrigerant gauges on Schrader valves and perform steps 6 and 7. Check gauge for Compressor head pressure:

   AIR-COOLED MODELS: Varies between 130 and 145 PSIG.

7. Check gauge for Suction line pressure:

   Varies between 12 to 16 PSIG, depending upon inlet water temperature and ambient air temperature.

8. Check Drivemotor operation:

   Normal operating temperatures are about 160-degrees F., which is hot to touch.

9. Check operation of the centrifugal sensing switch:

   AF-330: 1/10 HP Motor.

   Switch will OPEN between 400-600 RPM and the Compressor STOPS, with the Drivemotor operating. Switch will CLOSE between 1300-1400 RPM and the Compressor will RESTART, with Drivemotor building back up to normal operating speed.

10. Remove the Freezer Cap, the Retaining Ring and the Hook and Cap from the top of the Freezer Assembly.
11. Inspect the Top Bearing. If moisture is around Bearing, wipe clean of all grease and apply a coating of Shell Alvania 3 Grease, Scotsman P/N 19-0309-01. Replace parts removed in step 10.

NOTE

BEFORE next step, move the manual ON-OFF toggle switch, on top of the Control Box, to the OFF position to stop the Fan Motor and Icemaker.

12. Clean the Air-Cooled Condenser, using vacuum cleaner, whisk broom or brush. Instruct customer to clean frequently and to be sure Icemaker and Fan Motor are OFF.
13. Check that Fan Blades move freely, are not touching any surfaces and are not bent or out of balance.
14. Check for refrigerant leaks and for proper frost line, which should frost out of accumulator to within no closer than eight to twelve inches of the Compressor.
15. Check for water leaks, Tighten drain line connections. Pour water down Bin drain to be sure that drain line is open and clear.

16. Check the quality of ice. Ice flakes should be wet when formed, but will cure rapidly to normal hardness in the Bin.
17. Check the Bin Thermostat Ice Control Bulb.

NOTE

The Bin Thermostat is factory set at 10-degrees F. differential and should keep the entire Icemaker system shut off at least 10 minutes in high ambient temperatures, longer in low ambient temperatures during normal operation. Settings are 35-degrees F. CUT-OUT and 45-degrees F. CUT-IN.

18. Check the Spout Switch.

NOTE

The Spout Switch is manually reset and functions as a safety switch, to automatically stop the icemaking process if the Bin Thermostat Bulb were to fail and cause ice to jam up in the Ice Tube.

III. CLEANING - Icemaker

1. Remove screws and the Lower Left Front Panel.
2. Move the manual ON-OFF toggle switch, on top of the Control Box, to the OFF position.
3. Remove all ice from the Ice Storage Bin.
4. CLOSE the water supply shutoff valve; or block the float in the Water Reservoir.
5. Disconnect the tube between the Water Reservoir and the bottom of the Freezer Assembly and drain water from the Reservoir and tube. Reconnect the tube.

WARNING

SCOTSMAN Ice Machine Cleaner contains Phosphoric and Hydroxycetic acids. These compounds are corrosive and may cause burns if swallowed. DO NOT induce vomiting. Give large amounts of water or milk. Call physician immediately. In case of external contact flush with water. KEEP OUT OF THE REACH OF CHILDREN.

6. Prepare cleaning solution: Mix four ounces of SCOTSMAN Ice Machine Cleaner with one quart of hot water.
7. Remove the Cover to the Water Reservoir.
8. Slowly pour the cleaning solution into the Water Reservoir.
9. Move the manual ON-OFF toggle switch, on top of the Control Box, to the ON position.
10. Continue to slowly pour the cleaning solution into the Water Reservir, maintain level just below the Reservoir overflow.
11. Continue icemaking, using the cleaning solution, until all the solution is used up and the Water Reservoir is almost empty. DO NOT allow the icemaker to operate with empty Reservoir.
12. Move the manual ON-OFF toggle switch, on top of the Control Box to the OFF position.
13. Wash and rinse the Water Reservoir.
14. OPEN the water supply shutoff valve; or remove the block from the float in the Water Reservoir.
15. Move the manual ON-OFF toggle switch, on top of the Control Box, to the ON position.
16. Continue icemaking for at least 15 minutes, to flush out any cleaning solution. Check ice for acid taste - continue icemaking until ice tastes sweet.
17. Move the manual ON-OFF toggle switch, on top of the Control Box to the OFF position.

CAUTION

DO NOT use ice produced from the cleaning solution. Be sure none remains in the bin.

18. Remove all ice from the Ice Storage Bin.
19. Add hot water to the Ice Storage Bin and thoroughly wash and rinse all surfaces within the Bin.
20. Clean and sanitize the Ice Storage Bin each week.

SECTION VI

SERVICE DIAGNOSIS

The Service Diagnosis Section is for use in aiding the serviceman in diagnosing a particular problem for pin-pointing the area in which the problem lies, thus an ever available reference for proper corrective action.

The following charts list corrective actions for the causes of known symptoms of certain problems that can occur in the Icemaking - Refrigeration System.

I. ICEMAKING - REFRIGERATION SYSTEM

SYMPTOM	POSSIBLE CAUSE	CORRECTION
Water Leaks.	Defective water seal.	Replace Seal.
	Gravity feed line leaking.	Check hose clamps.
	Water level in reservoir too high.	Adjust water level to 3/8-inch below reservoir overflow, then raise reservoir until water flows out freezer spout, then lower reservoir 3/4-inch.
	Storage bin drain and connecting fittings.	Check and repair.
Excessive noise or chattering.	Mineral or scale deposit on auger and inner freezing chamber walls.	For severe deposit, remove and manually polish auger, sand inner chamber walls of freezer barrel.
		For lighter concentration, use Scotsman Ice Machine Cleaner periodically.
	Intermittent water supply.	Check and clean water strainer.
		Check gravity feed line for air lock.
		Remove air lock.
	Water level in reservoir too low.	See CORRECTION for Water Leaks above.
	Gear Reducer loose on frame.	Tighten Gear Reducer.
	Motor compressor not solid on rubber mounts.	Repair or replace rubber mounts.
	Gearmotor end-play or worn bearing.	Repair or replace bearing.
Making wet ice. (Ice melts too quickly, is not cold enough to properly cure in the Bin.)	Surrounding air temperature too high.	Correct or move cabinet.
	Under or over-charge of refrigerant.	Recharge with proper amount. Should frost out of accumulator at least 8-inches. See nameplate for correct charge. See CORRECTION for Water Leaks above.

ICEMAKING - REFRIGERATION SYSTEM (Con't)

SYMPTOM	POSSIBLE CAUSE	CORRECTION
Making wet ice (cont'd)	Back pressure too high.	Overcharge of refrigerant, Faulty compressor or high head pressure. Lower pressure as indicated.
	Faulty compressor or valve plate.	Repair or replace compressor or valve plate.
Low ice production.	Loss of refrigerant. Under or over-charge of refrigerant.	Check and recharge. See NAMEPLATE for correct charge
	Drivemotor weak.	Replace Drivemotor.
	Dirty or plugged condenser.	Clean condenser.
	Low water level in water reservoir.	See CORRECTION for Water leaks above.
	Partial restriction in capillary tube or drier.	Moisture in system. Overcharge of oil in system. Remove charge by blowing back through cap tube. Replace drier and recharge.
	Inlet water strainer partially plugged.	Remove screen and clean.
	Corroded or stained auger due to water condition.	Remove auger and clean, or use Scotsman Ice Machine Cleaner. See Maintenance Section
Gearmotor noise.	Low on oil.	Remove case cover to check for proper oil level. Top of gears should be covered. Use: Sun Oil Company Prestige 50-EP
Icemaker will not operate	Blown fuse in line.	Replace fuse and check for cause of blown fuse.
	Bin thermostat set too high.	Adjust thermostat. Set at 35-degrees cut-out, 45-degrees cut-in.
	Loose electrical connection.	Check wiring.
	Switch in OFF position.	Set switch to ON position.
	Inoperative master switch.	Replace switch or thermal overload.
	Off on manual-reset pressure control.	Reset.
Icemaker continues to operate with full storage bin.	Bin thermostat not properly set or is defective.	Re-set or replace bin thermostat re-set to 35-degrees cut-out, 45-degrees cut-in.
Compressor cycles intermittently.	Low voltage.	Check for overloading.
	Dirty condenser.	Clean condenser.
	Air circulation blocked.	Remove cause or move unit.
	Inoperative condenser fan motor.	Replace motor.

ICEMAKING - REFRIGERATION SYSTEM (Cont'd)

SYMPTOM	POSSIBLE CAUSE	CORRECTION
Compressor cycles intermittently (cont'd)	Non-condensable gases in system.	Check for gas leaks, evacuate and recharge.
	Bin thermostat differential too small causing short cycling.	Widen differential 35-degrees cut-out, 45-degrees cut in.
	Cycling on ice spout microswitch.	Set or replace Bin Thermostat.
Icemaker operates but makes no ice.	Loss or undercharge of refrigerant.	Check for leaks and recharge See NAMEPLATE for correct charge.
	Water not entering freezing chamber.	Plugged strainer or supply line. Check and clean.
	Air lock in gravity feed line.	Check and remove air lock.
	Moisture in system.	Check, evacuate, replace drier.
		Recharge. See NAMEPLATE for correct charge.
	Water seal leaking.	Replace seal.
	Water turned off while unit was operating.	Freezer inlet water line froze shut. Unit must be shut OFF and defrosted.
	Drivemotor or drive coupling stripped.	Repair or replace drivemotor or drive coupling.

SECTION VII

WIRING DIAGRAMS

This Section is provided as an aid in understanding the electrical circuitry of the Automatic Flaker.

The Wiring Diagram in this Section is:
Figure 7-1. Wiring Diagram AF-330 - Air-Cooled.

WARNING

When conducting a continity check of the Automatic Flaker:

1. **Disconnect the main power source.**
2. **DO NOT use an incandescent lamp or jumper wire, conduct all tests with a volt-ohm-meter.**

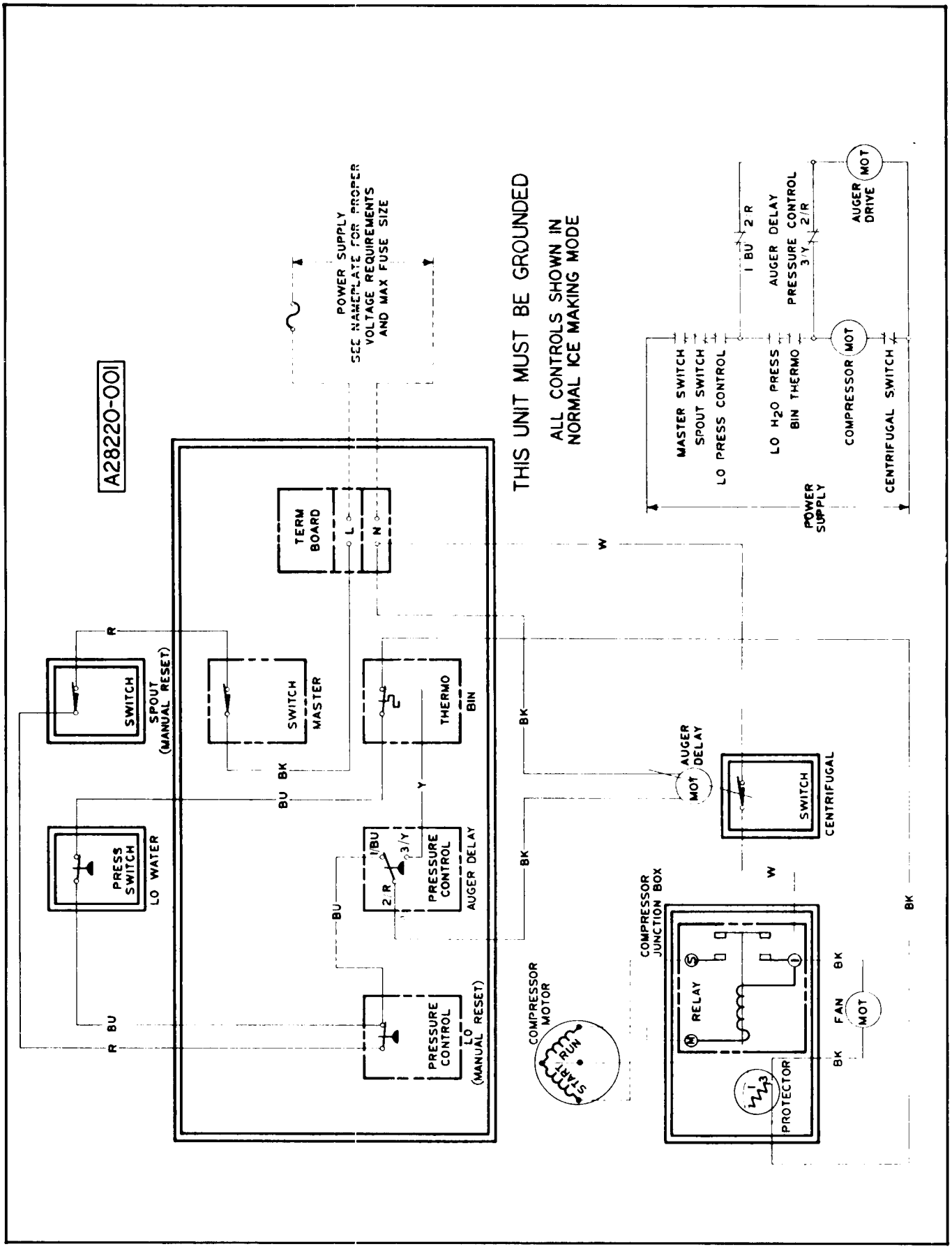

Figure 7-1. Wiring Diagram AF-330 - Air-Cooled.

SECTION VIII

THE PARTS ILLUSTRATIONS AND PARTS LISTS

I. GENERAL

This section contains the Parts Illustrations and the Parts List for each of the major assemblies in the AF-330 Automatic Flaker.

Each Parts Illustration shows an assembly as an exploded view, with an Index Number for each part or sub-assembly, given in disassembly order. These Index Numbers key with the Parts List for the assembly and are found in the Parts List Column headed Index Number. The Description Column gives the identifying nomenclature for the item indexed. The Part Number Column gives the number of item. The Number Required Column gives the number of items required per assembly, but not necessarily the total number of parts required per Flaker.

All assemblies are cross-referenced both from the major assembly listing where they first appear in the parts Listing to their break-down listing, and from the break-down listing, back to the major assembly (next higher assembly) listing.

A *No Number* designation, when used in the Part Number Column indicates the unit is not available from SCOTSMAN as an assembly. This designation is used only for the convenience and clarity of division in cataloging.

When an Index Number is followed by a letter (e.g. la. lb.), the letter indicates the part listed is part of the assembly indexed by the basic Index Number. The number required of the part indexed by the number and letter combination is for only one of the assemblies indexed by the basic Index Number and not necessarily the total number or parts used in the Flaker. Where the notation *Ref* occurs in the Number Required Column the number of the assemblies or parts required for use in the Flaker will be found under previous Index Number or in the next higher assembly Parts Listing. The next higher listing Figure/Index number is shown in the Description Column immediately following the items description.

II. HOW TO USE THE ILLUSTRATIONS AND PARTS LIST

To find the part number of a required part or assemby, turn to the List of Illustrations and find the page number of the Parts Illustration of the major or sub-assembly containing the part. Turn to the indicated page and locate the part and its Index Number on the specific illustration. Find the Index Number on the required part in the Parts List to determine the complete description of the part.

III. HOW TO ORDER PARTS OR ASSEMBLIES

When ordering parts or assemblies, to avoid costly delays and errors in shipment, give the part number, the complete description shown in the list, and the quantities of each part or assembly required. Also include the Model name, the serial number of the Flaker for which the part is required, and for parts which require color matching, the color of the Cabinet. See Figure 8-00, at the end of this section for detailed ordering instructions.

AF 330 Cabinet

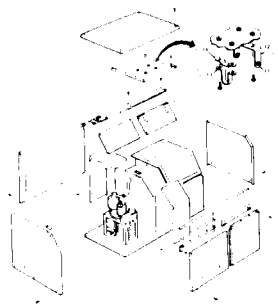

Figure 8-1.

AF 330 - Major Assemblies

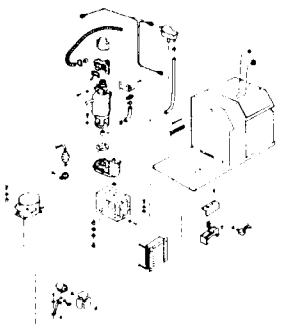

Figure 8-2.

Compressor Assembly

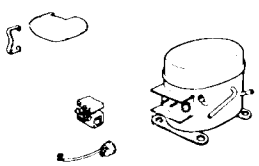

Figure 8-3.

Spout Assembly

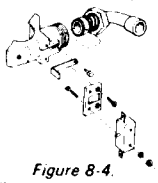

Figure 8-4.

Freezer Assembly

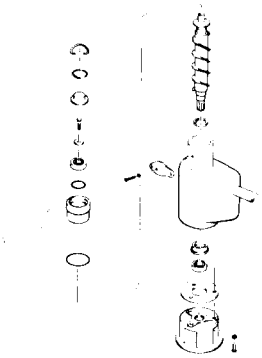

Figure 8-5.

Drivemotor Assembly

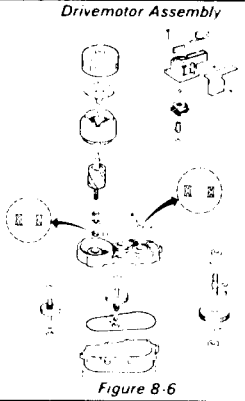

Figure 8-6.

Control Box Assembly

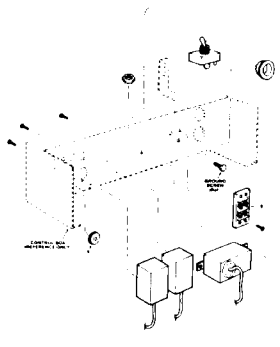

Figure 8-7.

Figure 8-A. Automatic Flaker AF-330 Flow Chart

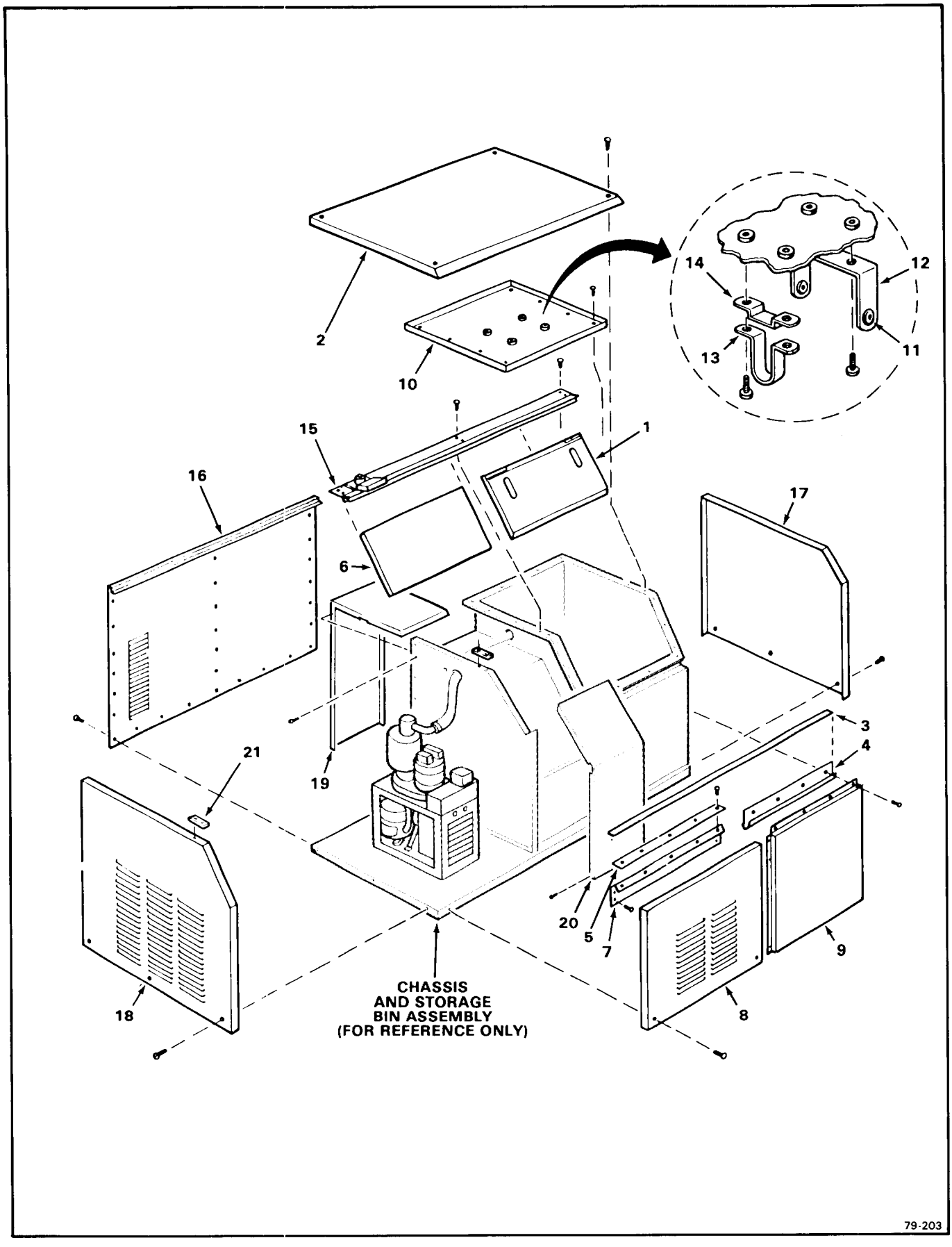

Figure 8-1. AF-330 Cabinet

Figure 8-1. AF-330 Cabinet.

INDEX NO.	DESCRIPTION	PART NUMBER	REQ'D NUMBER
	AF-330 Cabinet	No Number	1
	* * *		
1	Door, Ice Access (Orange w/C.R.S. Painted Cabinet)	02-2130-01	1
	Door, Ice Access (Gray w/Stainless Steel Cabinet)	02-2130-02	1
	* * *		
2	Panel, Top (C.R.S. Painted)	A24799-003	1
	Panel, Top (Stainless Steel)	A24799-002	1
	attaching parts, Index 2		
	Screw, No. 8 x 1-3/4 S/T Flat Hd	03-1419-19	4
	* * *		
3	Insert, Plastic	15-0324-00	1
	* * *		
4	Strip, Moulding — Right Side	15-0620-01	1
	attaching parts, Index 4 & 9		
	Screw, No. 8 x 3/8 S/T Flat Hd	03-1419-05	4
	* * *		
5	Strip, Moulding — Left Side	15-0578-01	1
	attaching parts, Index 5 to 8		
	Screw, No. 8 x 3/8 S/T Flat Hd	03-1419-05	5
	* * *		
6	Panel, Upper — Left Front (C.R.S. Painted)	A24795-003	1
	Panel, Upper — Left Front (Stainless Steel)	A24795-002	1
	* * *		
7	Bracket, Left Front	A28825-001	1
	attaching parts, Index 5 & 7		
	Screw, No. 8 x 1/2 T/F Tap	03-1404-09	4
	* * *		
8	Panel, Lower — Left Front (C.R.S. Painted)	A24796-003	1
	Panel, Lower — Left Front (Stainless Steel)	A24796-004	1
	attaching parts, Index 8		
	Screw, No. 8 x 1-1/2 S/T Flat Hd	03-1419-16	2

Figure 8-1. AF-330 Cabinet. (cont'd)

INDEX NO.	DESCRIPTION	PART NUMBER	REQ'D NUMBER
9	Panel, Right Front (C.R.S. Painted)	A24794-003	1
	Panel, Right Front (Stainless Steel)	A24794-002	1
	attaching parts, Index 4 & 9		
	Screw, No. 8 x 3/8 S/T Flat Hd	03-1419-05	Ref.
	* * *		
10	Cover, Storage Bin	A27980-001	1
	attaching parts, Index 10		
	Screw, No. 8 x 1/2 T/F Tap	03-1404-09	10
	* * *		
11	Grommet	13-0557-00	2
	* * *		
12	Bracket, Bin Thermo	A27924-001	1
	* * *		
13	Holder, Tube	A27922-001	1
	* * *		
14	Retainer, Tube	A27923-001	1
	attaching parts, Index 12, 13, 14 to 10		
	Screw, Thumb — No. 10-24 x 1/2 Knurled Hd	03-0727-00	4
	* * *		
15	Track Assembly, Door	A28823-001	1
	attaching parts, Index 15		
	Screw, No. 8 x 1/2 T/F Tap	03-1404-09	6
	* * *		
16	Panel, Back (Galvanized Steel)	A28828-001	1
	attaching parts, Index 16		
	Lockwasher, No. 8 External Tooth — Carbon Steel Zinc Plated	03-1417-03	4
	Screw, No. 8 x 1/2 T/F Tap	03-1404-09	27
	* * *		
17	Panel, Right Side (C.R.S. Painted)	A24800-003	1
	Panel, Right Side (Stainless Steel)	A24800-002	1
	attaching parts, Index 17		

Figure 8-1. AF-330 Cabinet. (cont'd)

INDEX NO.	DESCRIPTION	PART NUMBER	REQ'D NUMBER
	Screw, No. 8 x 1/2 T/F Tap (SS)	03-1404-10	5
	* * *		
18	Panel, Left Side (C.R.S. Painted)	A27034-003	1
	Panel, Left Side (Stainless Steel)	A27034-002	1
	attaching parts, Index 18		
	Lockwasher, No. 8 External Tooth — Carbon Steel Zinc Plated	03-1417-03	2
	Screw, No. 8 x 1/2 T/F Tap (SS)	03-1404-10	3
	* * *		
19	Retainer, Ext. Rear	A28141-001	1
	* * *		
20	Retainer, Ext. Front	A28144-001	1
	* * *		
21	Spacer, Door Track	A24955-001	2
	attaching parts, Index 19, 20, 21		
	Screw, No. 8 x 1/2 T/F Tap (SS)	03-1404-10	A/R
	* * *		

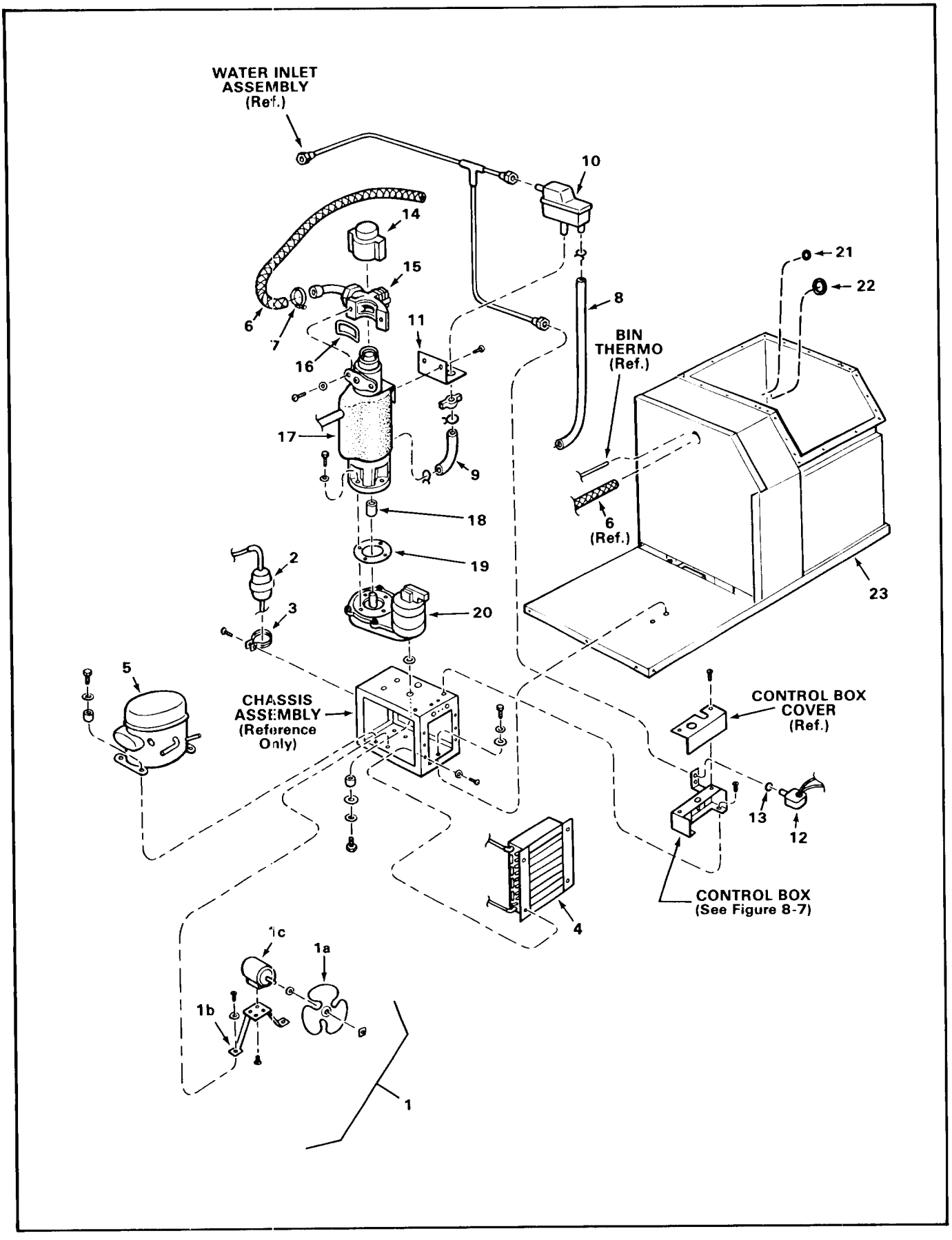

Figure 8-2. AF-330 - Major Assemblies

Figure 8-2. AF-330 - Major Assemblies

INDEX NO.	DESCRIPTION	PART NUMBER	REQ'D NUMBER
	Major Assemblies - AF-330	No Number	Ref.
	* * *		
1	Bracket Assembly, Fan Motor & Mounting	No Number	1
1a	Blade, Fan	18-3728-01	1
	Pad, Vibration (p/o Fan Motor)	No Number	1
	Nut, Fan Mounting (p/o Fan Motor)	No Number	1
1b	Bracket, Fan Mounting	A25548-001	1
1c	Motor, Fan	12-1575-01	1
	attaching parts, Index 1c to 1b		
	Screw, No. 8-36 (p/o Fan Motor)	No Number	4
	attaching parts, Index 1 to Chassis Base		
	Lockwasher, No. 1/4 External Tooth - Carbon Steel Zinc Plated	03-1417-09	2
	Screw, No. 1/4-20 x 1/2 T/C Hex Hd	03-0571-00	2
	* * *		
2	Drier	02-2426-01	1
	* * *		
3	Brace, Drier	A09386-000	1
	attaching parts, Index 2 and 3		
	Lockwasher, No. 10 External Tooth - Carbon Steel Zinc Plated	03-1417-05	1
	Screw, No. 10 x 3/4 T/F Tap	03-1404-32	1
	* * *		
4	Condenser - Air-Cooled	18-3727-01	1
	attaching part, Index 2		
	Lockwasher, No. 10 External Tooth - Carbon Steel Zinc Plated	03-1417-05	4
	Screw, No. 10 x 3/8 T/F Tap	03-1404-15	4
	* * *		
5	Compressor	18-4700-01	1
	(See Figure 8-3)		
	attaching parts, Index 3		
	Grommet	18-4700-28	4
	Sleeve	18-0108-41	4

Figure 8-2. AF-330 - Major Assemblies (cont-d)

INDEX NO.	DESCRIPTION	PART NUMBER	REQ'D NUMBER
	Lockwasher, No. 5/16 Helical Spring	03-1410-04	4
	Washer, Special	03-1408-29	4
	Screw, No. 5/16 x 1-1/2 Hex Cap	03-1405-20	4
	* * *		
6	Tube, Ice	A248042-004	1
	attaching part, Index 6		
	* * *		
7	Clamp, Hose	02-0179-02	1
	* * *		
8	Tube (Reservoir overflow to Drain)	13-0079-03	1
	* * *		
9	Tube (2-1/2-inch lg.) (Reservoir to Freezer Inlet)	13-0674-09	1
	(Order tubing by the foot)		
	attaching parts, Index 8 and 9		
	Clamp (use with Index 8)	02-0535-00	1
	Clamp (use with Index 9)	02-0694-00	2
	* * *		
10	Reservoir	02-2217-01	1
	Valve Assembly, Float (Not shown)	02-2217-02	1
	attaching part, Index 10		
	Wing Nut (plastic - p/o Reservoir)	No Number	1
	* * *		
11	Bracket, Reservoir	A28240-001	1
	attaching part, Index 11		
	Screw, No. 10-24 x 3/8 Pan Hd	03-1403-26	2
	* * *		
12	Control, Water Low Pressure	11-0296-00	1
	* * *		
13	O-Ring	03-1409-21	1
	* * *		
14	Cap, Freezer	13-0815-01	1

Figure 8-2. AF-330 - Major Assemblies (cont'd)

INDEX NO.	DESCRIPTION	PART NUMBER	REQ'D NUMBER
15	Spout Assembly	No Number	1
	(See Figure 8-4).		
	* * *		
16	Gasket, Spout	13-0628-00	1
	attaching parts, Index 15 and 16		
	Lockwasher, No. 1/4 Internal Tooth - Phosphor Bronze	03-1417-07	2
	Screw, No. 1/4-20 x 1 Soc-Hd Cap S/S	03-1544-03	2
	* * *		
17	Freezer Assembly	No Number	1
	(See Figure 8-5)		
	attaching parts, Index 17		
	Lockwasher, No. 5/16 External Tooth - Carbon Steel Zinc Plated	03-1417-12	3
	Screw, No. 5/16 x 3/4 Hex Cap	03-1420-04	3
	* * *		
18	Coupling	15-0575-01	1
	* * *		
19	Gasket	13-0679-00	1
	* * *		
20	Drivemotor Assembly	A28151-021	1
	(See Figure 8-6)		
	attaching parts, Index 20		
	Grommet	13-0639-00	3
	Spacer	A24925-001	3
	Washer, Special	03-1408-02	6
	Lockwasher, No. 1/4 Helical Spring	03-1410-03	3
	Screw, No. 1/4-20 x 7/8 Hex Cap	03-1405-45	3
	* * *		
21	Grommet	13-0768-01	1
	* * *		
22	Pad, Sealing	13-0806-01	1
	* * *		

Figure 8-2. AF-330 - Major Assemblies (cont'd)

INDEX NO.	DESCRIPTION	PART NUMBER	REQ'D NUMBER
23	Storage Bin NOTE: See Figure 8-7 for replacement parts within the Control Box Assembly.	A28057-001	1

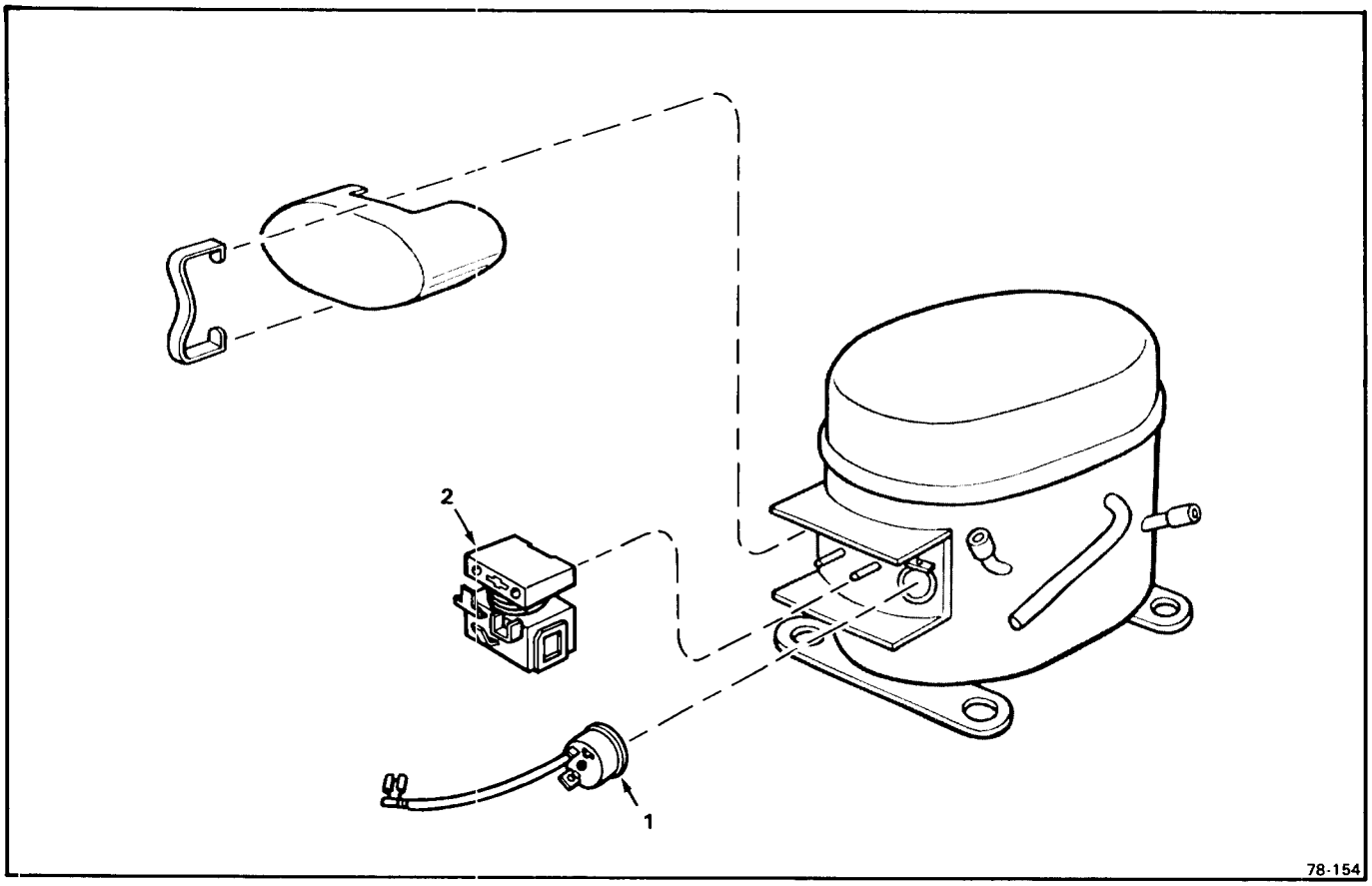

Figure 8-3. Compressor Assembly

INDEX NO.	DESCRIPTION	PART NUMBER	REQ'D NUMBER
	Compressor Assembly (Tecumseh) (See Figure 8-2/5 for next higher Assembly) * * *	18-4700-01	Ref.
1	Overload * * *	18-4700-20	1
2	Relay * * *	18-4700-30	1

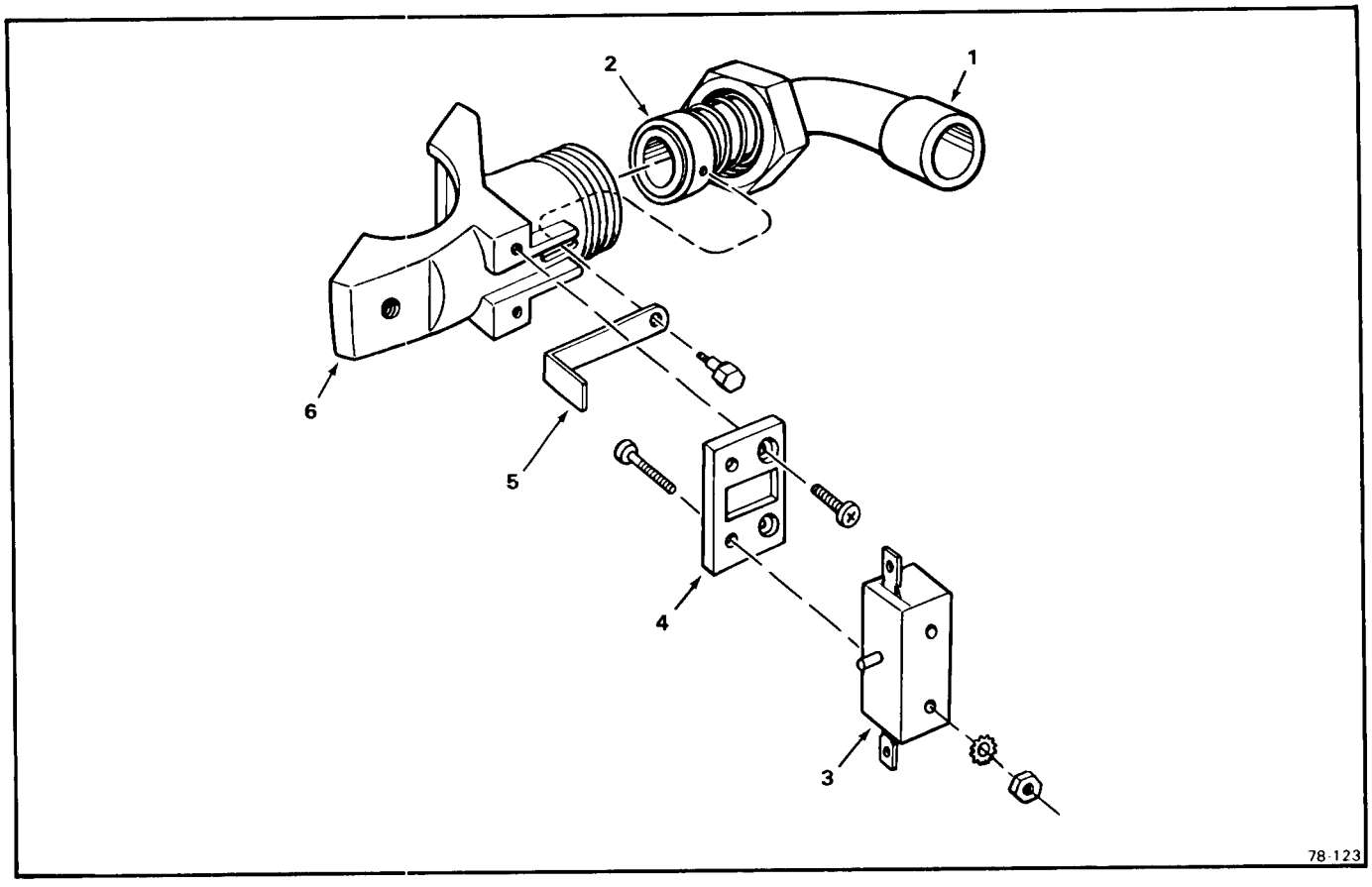

Figure 8-4. Spout Assembly.

INDEX NO.	DESCRIPTION	PART NUMBER	REQ'D NUMBER
	Spout Assembly	No Number	Ref.
	(See Figure/Index 8-2/15		
	for next higher Assembly)		
	* * *		
1	Tube, Ice Discharge	A26542-001	1
	* * *		
2	O-Ring	13-0617-41	1
	* * *		
3	Switch	12-1664-00	1
	attaching parts, Index 3 to 4		
	Screw, No. 6-32 x 1 Flat Hd. Mach - Phil Recess	03-1418-38	2
	Lockwasher, No. 6 External Tooth - Phosphor Bronze	03-1417-01	2
	Nut, No. 6-32 Hex Mach Screw	03-1406-01	2
	* * *		

Figure 8-4. Spout Assembly (cont'd)

INDEX NO.	DESCRIPTION	PART NUMBER	REQ'D NUMBER
4	Barrier, Thermal	02-2377-01	1
	attaching parts, Index 4 to 6		
	Screw, No. 6-32 x 3/8 Flat Hd Mach - Phil Recess	03-1418-01	2
	* * *		
5	Actuator, Switch	A27511-001	1
	attaching parts, Index 5 to 6		
	Screw, Shoulder	A25305-001	1
	* * *		
6	Spout	A24934-001	1
	* * *		

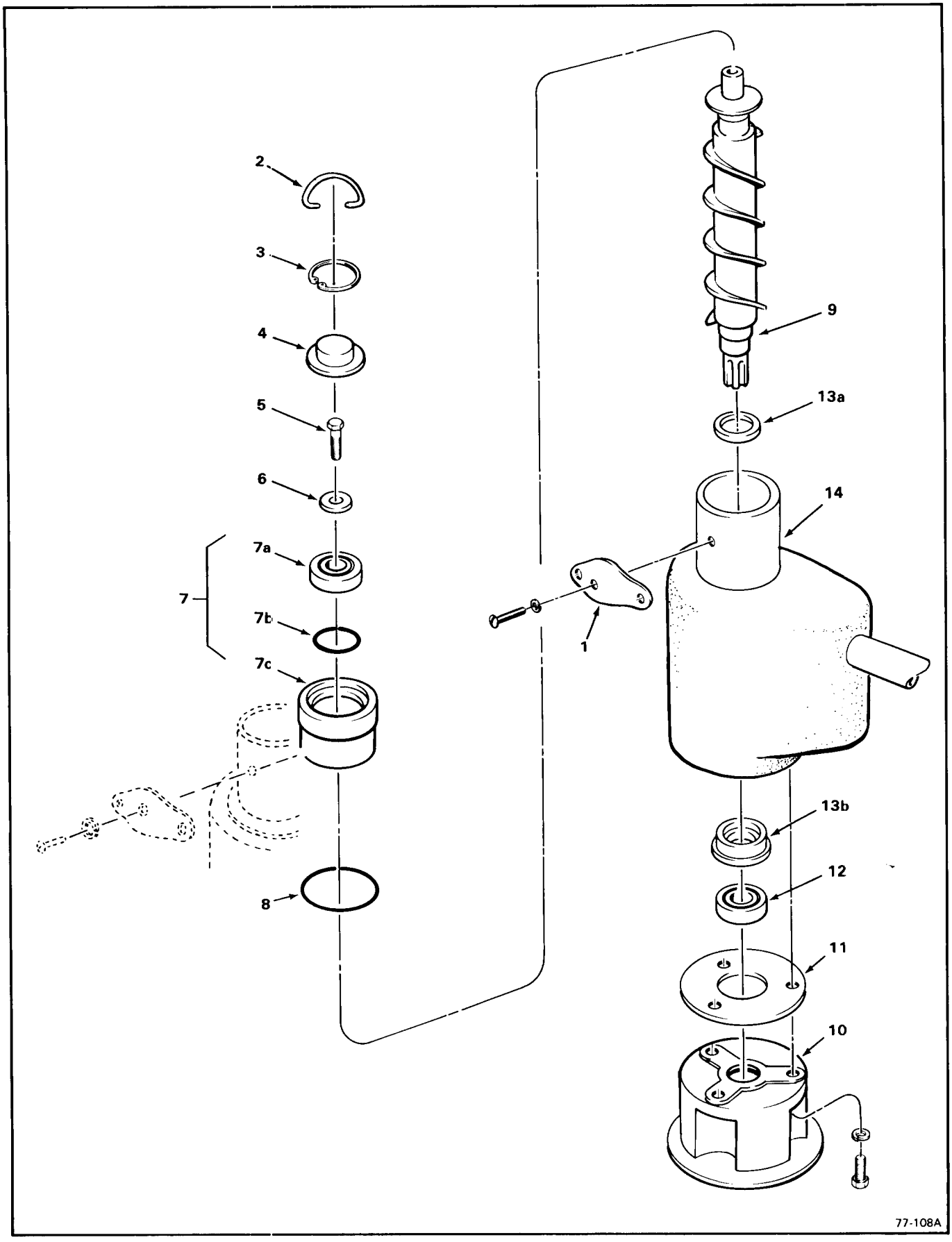

Figure 8-5. Freezer Assembly

Figure 8-5. Freezer Assembly

INDEX NO.	DESCRIPTION	PART NUMBER	REQ'D NUMBER
	Freezer Assembly	No Number	Ref.
	(See Figure/Index 8-2/17		
	for next higher Assembly)		
	* * *		
1	Plate, Spout	A18430-002	1
	attaching parts, Index 1		
	Washer, No. 3/16 Non-Metallic	03-1409-14	1
	Screw, No. 10-24 x 3/8 Phil Recessed Hd Sealing	03-1506-01	1
	* * *		
2	Hook, Cap	A08162-000	1
	* * *		
3	Ring, Retaining	03-1558-03	1
	* * *		
4	Cap	A07701-000	1
	* * *		
5	Screw, Cap	03-0758-00	1
	* * *		
6	Washer	A07699-000	1
	* * *		
7	Bearing/Retainer - w/Bearing	A26707-001	1
7a	Bearing	03-0695-00	1
7b	O-Ring	13-0617-16	1
7c	Retainer, Bearing (Order P/N A26707-001)	No Number	Ref.
	* * *		
8	O-Ring	13-0617-29	1
	* * *		
9	Auger	02-2451-01	1
	* * *		
10	Adaptor	03-0595-01	1
	attaching parts, Index 10		
	Lockwasher, No. 5/16 Helical Spring	03-1410-04	3

Figure 8-5. Freezer Assembly (cont'd)

INDEX NO.	DESCRIPTION	PART NUMBER	REQ'D NUMBER
	Screw, No. 5/16-18 x 7/8 Hex Cap	03-1405-42	3
	* * *		
11	Gasket	03-1505-00	1
	* * *		
12	Bearing	03-0417-00	1
	* * *		
13	Seal, Water	A18945-000	1
13a	Seal, Upper (Fits on Index 9)	No Number	Ref.
13b	Seal, Lower (Fits on top of Index 12)	No Number	Ref.
	* * *		
14	Freezer - (Repair Assembly)	A28209-020	1
	* * *		

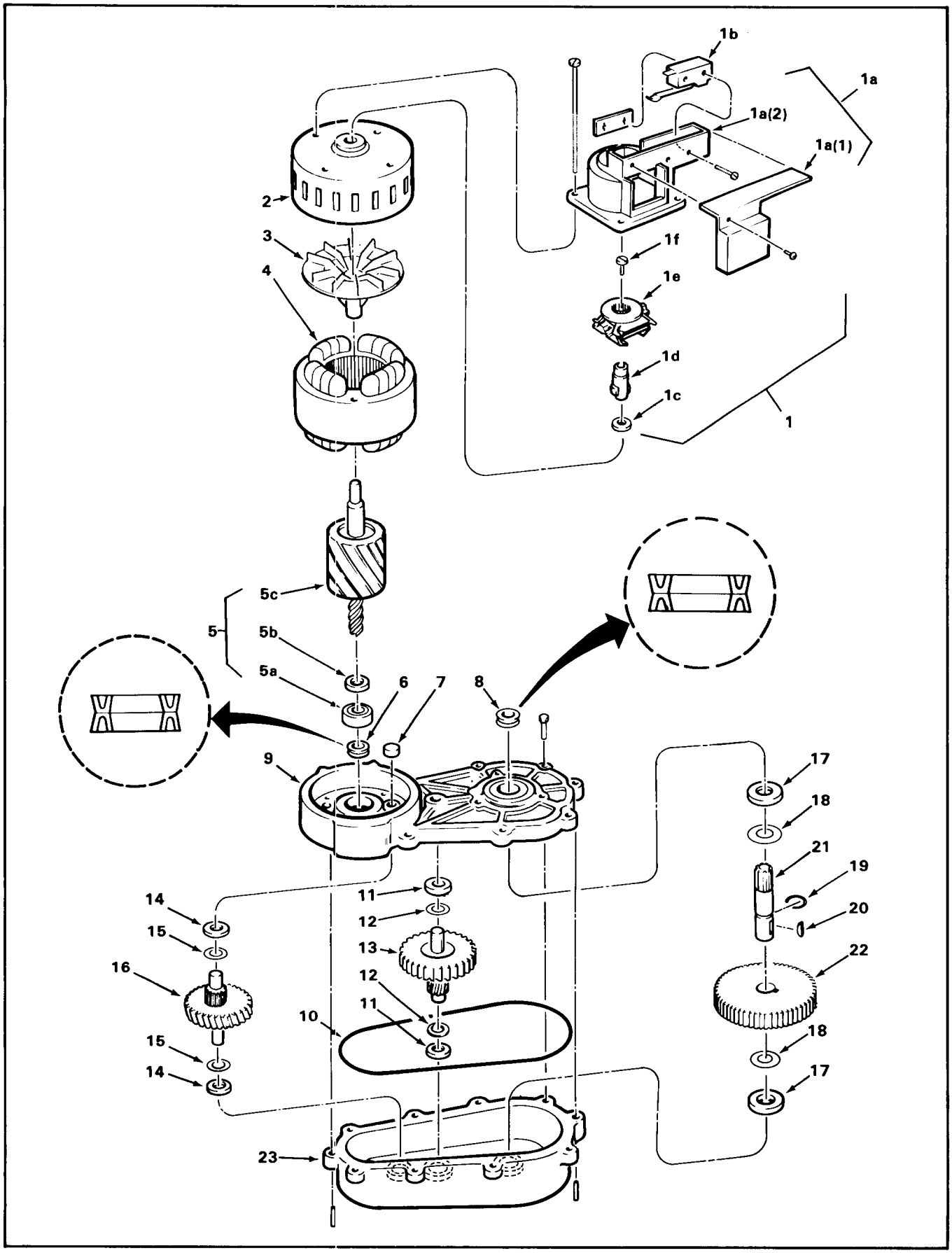

Figure 8-6. Drivemotor Assembly

Figure 8-6. Drivemotor Assembly

INDEX NO.	DESCRIPTION	PART NUMBER	REQ'D NUMBER
	Drivemotor Assembly (1/10 H.P.) (11.53 RPM)	A28151-021	Ref.
	(See Figure/Index 8-2/20 for		
	next higher Assembly)		
	* * *		
1	Kit, Centrifugal Switch	A27494-001	1
	attaching parts, Index 1, 2, 4 to 11		
	Screw, Motor - No. 10-32 x 5-1/4 Phil Recess Pan Hd	03-1403-82	4
	* * *		
1a	Kit, Centrifugal Switch Housing	A27895-001	1
1a(1)	Cover, Switch Case	No Number	1
1a(2)	Case, Switch Mounting	No Number	1
	attaching parts, Index 1a(1) to 1a(2)		
	Screw, No. 6-32 x 1 Pan Hd	03-1403-09	2
	* * *		
1b	Switch	12-2059-01	1
	attaching parts, Index 1b to 1a(2)		
	Screw, No. 6-32 x 1 Pan Hd	03-1403-09	2
	Nut, Speed	03-0886-00	2
	* * *		
1c	Washer, Special	03-1408-36	1
	* * *		
1d	Extension, Shaft	02-2371-00	1
	* * *		
1e	Actuator, Centrifugal	12-2060-01	1
	attaching parts, Index 1d to 1e		
	* * *		
1f	Screw, No. 10-32 x 1-5/8 Pan Hd	03-1403-77	1
	* * *		
2	Housing Assembly - Motor	A17047-001	1
	* * *		

Figure 8-6. Drivemotor Assembly (cont'd)

INDEX NO.	DESCRIPTION	PART NUMBER	REQ'D NUMBER
3	Fan, Boring	A28168-001	1
	attaching parts, Index 3 to 4		
	Setscrew	03-1246-00	2
	* * *		
4	Stator Assembly (115/60/1)	12-1400-01	1
	* * *		
5	Rotor Assembly	A28160-001	1
5a	Bearing	02-1501-00	1
5b	Washer, Special	03-1408-08	1
5c	Rotor (Order P/N A28160-001)	No Number	1
	* * *		
6	Seal, Grease (Install back-to-back)	02-1504-00	2
	* * *		
7	Cap, Insulating	02-2459-01	1
	* * *		
8	Seal, Grease (Install back-to-back)	02-1503-00	2
	* * *		
9	Cover Assembly, Gear Case	A28165-001	1
	attaching parts, Index 9 to 23		
	Pin, Roll	03-0774-11	2
	Screw, No. 1/4-20 x 3/4 Flange	03-1252-00	2
	Screw, No. 1/4-20 x 5/8 Flange	03-1251-00	6
	* * *		
10	O-Ring	02-1505-00	1
	* * *		
11	Washer, Special (Thick)	03-1408-39	2
	* * *		
12	Washer, Special (Thin/Shim)	03-1408-40	A/R
	* * *		
13	Third Pinion Assembly, Second Gear and	02-2439-01	1
	* * *		

Figure 8-6. Drivemotor Assembly (cont'd)

INDEX NO.	DESCRIPTION	PART NUMBER	REQ'D NUMBER
14	Washer, Special (Thick)	03-1408-41	2
	* * *		
15	Washer, Special (Thin/Shim)	03-1408-38	A/R
	* * *		
16	Second Pinion Assembly, First Gear and	02-2438-01	1
	* * *		
17	Washer, Special (Thick)	03-1408-21	2
	* * *		
18	Washer, Special (Thin/Shim)	03-1408-04	A/R
	* * *		
19	Ring, Retaining	03-1515-03	1
	* * *		
20	Key, Woodruff	03-1602-01	1
	* * *		
21	Shaft, Output	02-2445-01	1
	* * *		
22	Gear, Output	02-2444-01	1
	* * *		
23	Case Assembly, Gear	A28166-001	1
	* * *		

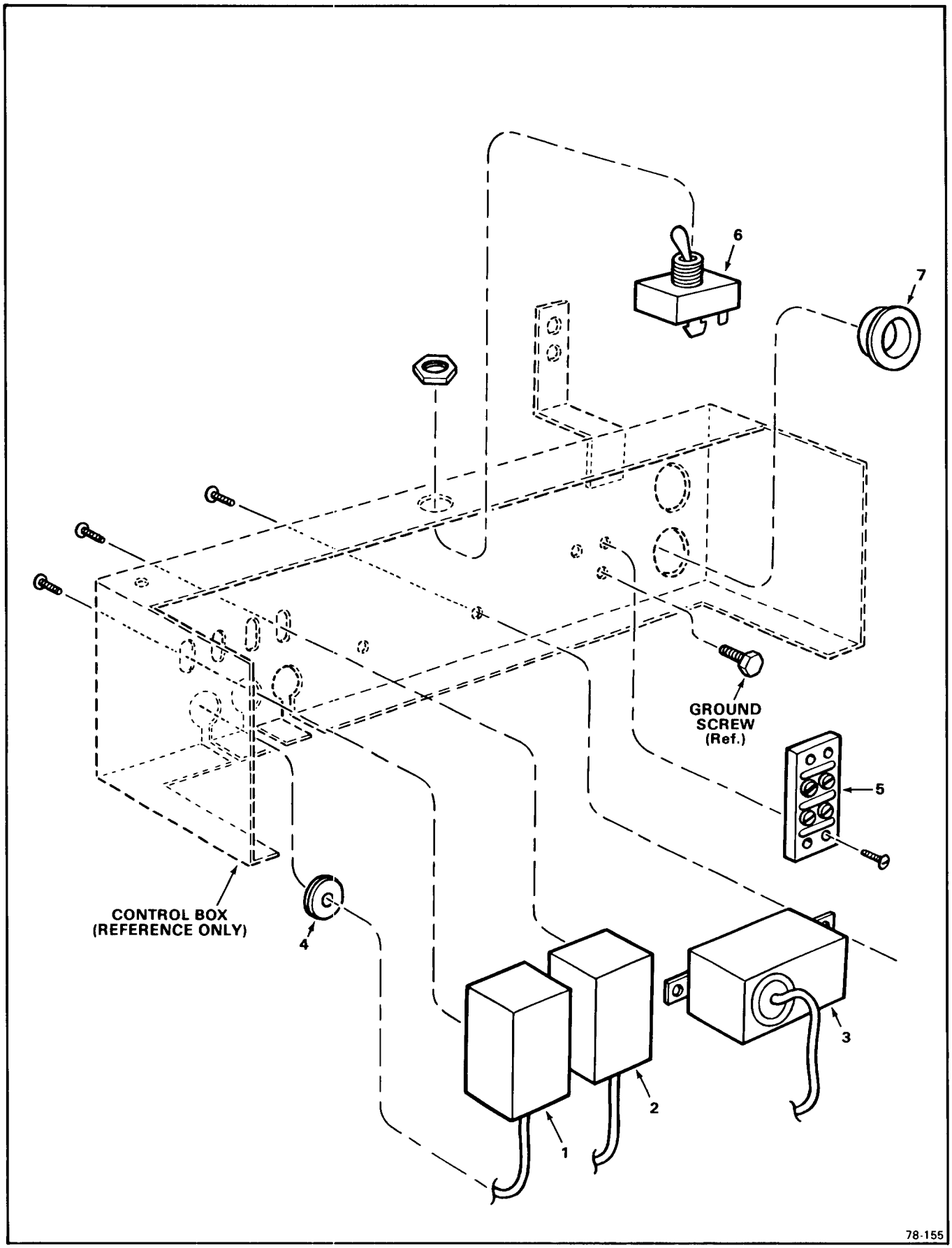

Figure 8-7. Control Box Assembly

Figure 8-7. Control Box Assembly

INDEX NO.	DESCRIPTION	PART NUMBER	REQ'D NUMBER
	Control Box Assembly	No Number	Ref.
	(See Figure 8-2		
	for next higher Assembly)		
	* * *		
1	Control, Low-Pressure	11-0358-01	1
	attaching parts, Index 1		
	Screw, No. 6-32 x 1/4 Pan Hd	03-1403-02	2
	* * *		
2	Control, Pressure	11-0402-01	1
	attaching parts, Index 2		
	Screw, No. 6-32 x 1/4 Pan Hd	03-1403-02	2
	* * *		
3	Control, Bin Thermo	11-0354-00	1
	attaching parts, Index 3		
	Screw, No. 8-32 x 3/16 Pan Hd	03-1403-14	2
	* * *		
4	Grommet	13-0557-00	3
	* * *		
5	Board, Terminal	12-0813-04	1
	attaching part, Index 5		
	Screw, No. 8-32 x 3/4 Pan Hd	03-1403-21	2
	* * *		
6	Switch, Toggle	12-0426-01	1
	* * *		
7	Bushing, Snap	12-1213-10	1
	* * *		

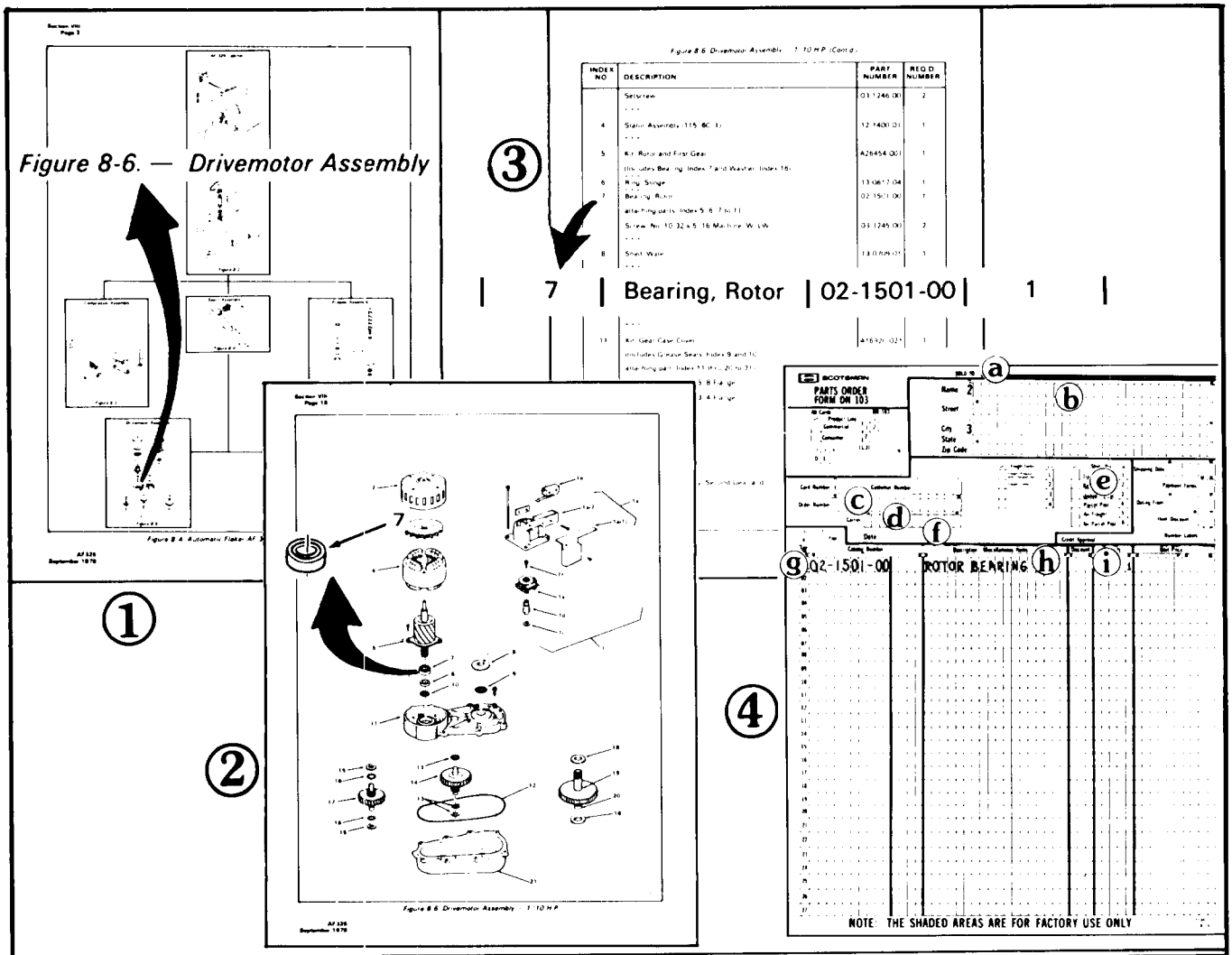

HOW TO USE A SCOTSMAN PARTS MANUAL WHEN ORDERING PARTS FOR ICE SYSTEMS PRODUCTS

IMPORTANT A. All Part Numbers have TEN DIGITS (spaces), required for use in the Computer System. BE SURE to fill in **ALL SPACES** in the CATALOG NUMBER column, on the Parts Order form as shown above.

B. Enter the QUANTITY of the Parts ordered, in the last digit column under the QUANTITY column heading, the one under the small 55 number, for parts from 1 thru 9. For 10 or more parts use two columns.

To be sure you receive the proper parts in the proper quantities, ALWAYS use the PART NUMBERS and DESCRIPTIONS given in the Parts Manuals.

The figures above illustrate the way a Parts Manual would be used, if the Part being ordered were the ROTOR BEARING that is used in the DRIVEMOTOR ASSEMBLY of an AF325 Automatic Flaker, for example.

PROCEDURE:

1. At the beginning of Section VIII, THE PARTS ILLUSTRATIONS AND PARTS LISTS, in each Parts and Service Manual, is Figure 8-A; which, is a flow chart prepared from exploded views in Section VIII. Use the flow chart to quickly determine which Figure contains the Assembly, Component or Part.

FIGURE 1: Since the Part required in the above example is in the DRIVEMOTOR ASSEMBLY, shown as FIGURE 8-6.

2. Open the Manual to page showing FIGURE 8-6.

3. Locate the PART and its INDEX NUMBER on the exploded view illustration.

FIGURE 2: The INDEX NUMBER for the PART is 7.

4. Check the numerical sequence in the associated Parts List following the illustration.

5. LOCATE the INDEX NUMBER 7, in the INDEX NO. column, the first column on the left side of the Parts List page.

FIGURE 3: INDEX NO. 7 is listed as a BEARING, ROTOR in the DESCRIPTION column. The Part Number for the Rotor Bearing is 02-1501-00 as listed in the PART NUMBER column on the right side of the Parts List page. And, one Rotor Bearing is listed in the REQ'D NUMBER column, or that ONLY one of those parts is required for one Drivemotor Assembly.

6. Write an order for the Part. (Use SCOTSMAN Parts Order Form DN103)

FIGURE 4: a. Distributor Name.
b. (Use for DROP-SHIP order ONLY).
c. Distributor Purchase Order Number.
d. Carrier
e. How shipped (Truck, Rail, UPS, etc.)
f. Date ordered
g. Part Catalog Number
(use full TEN digits (spaces) listed in Parts Manual, including dashes between numbers.
h. Description - as listed in Parts Manual.
i. Quantity - number of parts ordered.
(use far right column)

Figure 8-00. How To Use The Illustrated Parts List.

TABLE OF CONTENTS

Table of Contents i

List of Illustrations iii

Specifications iv

SECTION I- GENERAL INFORMATION & INSTALLATION 1-1

I. Introduction 1-1

II. Unpacking and Inspection 1-1

III. Location and Leveling 1-2

IV. Electrical Connections 1-2

V. Water Supply and Drain Connections 1-2

VI. Final Check List 1-3

SECTION II.- START UP OPERATION 2-1

I. Start Up 2-1

SECTION III.- PRINCIPLES OF OPERATION - How it Works 3-1

I. Icemaker 3-1

II. Electrical/Refrigeration 3-2

SECTION IV.- ADJUSTMENT AND REMOVAL AND REPLACEMENT PROCEDURES 4-1

I. Adjustment of the Bin Thermostat Control 4-1

II. Adjustment of the Leg Levelers 4-2

III. Adjustment of the Water Regulator Assembly 4-2

IV. Adjustment of the Water Reservoir Float 4-2

V. Removal & Replacement of the Auger, Water Seal, Bearings and Coupling 4-2

VI. Removal & Replacement of the Compressor Assembly 4-3

VII. Removal & Replacement of the Condenser - Air Cooled Models 4-4

VIII. Removal & Replacement of the Condenser - Water-Cooled Models 4-4

TABLE OF CONTENTS (Cont'd)

IX. Removal & Replacement of the Drier 4-4

X. Removal & Replacement of the Drivemotor Assembly 4-5

XI. Removal & Replacement of the Fan Motor Assembly - Air-Cooled Models 4-5

XII. Removal & Replacement of the Freezer Assembly 4-5

XIII. Removal and Replacement of the Spout Assembly 4-6

XIV. Removal and Replacement of the Water Pressure Control 4-7

XV. Removal & Replacement of the Water Regulator Assembly - Water-Cooled Models 4-7

XVI. Removal & Replacement of the Water Reservoir Assembly 4-7

SECTION V.- MAINTENANCE & CLEANING INSTRUCTIONS 5-1

I. General 5-1

II. Icemaker 5-1

III. CLEANING - Icemaker 5-2

SECTION VI. SERVICE DIAGNOSIS 6-1

I. Icemaking - Refrigeration System 6-1

SECTION VII. WIRING DIAGRAMS 7-1

Wiring Diagram AF-430 Air-Cooled Model 7-2

Wiring Diagram AF-430 Water-Cooled Model 7-3

SECTION VIII.- THE PARTS ILLUSTRATIONS AND PARTS LISTS 8-1

I. General 8-1

II. How to Use the Illustrations and Parts Lists 8-1

III. How to Order Parts or Assemblies 8-1

LIST OF ILLUSTRATIONS

	Specifications - Model AF-430	iv
Figure 1-1.	Installation Practice	1-4
Figure 2-1.	Water Schematic	2-1
Figure 3-1.	Refrigeration Cycle	3-1
Figure 4-1.	Adjustment of the Temperature Control	4-1
Figure 4-2.	Removal of the Freezer Assembly	4-6
Figure 4-3.	Removal of the Spout Assembly	4-6
Figure 4-4.	Removal of the Water Reservoir Assembly	4-7
Figure 7-1.	Wiring Diagram - AF-430 Air-Cooled	7-2
Figure 7-2.	Wiring Diagram - AF-430 Water-Cooled	7-3
Figure 8-A.	Automatic Flaker AF-430 Flow Chart	8-2
Figure 8-1.	AF-430 Cabinet	8-3
Figure 8-2.	Major Assemblies - Air-Cooled	8-7
Figure 8-3.	Major Assemblies - Water-Cooled	8-12
Figure 8-4.	Compressor Assembly	8-17
Figure 8-5.	Spout Assembly	8-18
Figure 8-6.	Freezer Assembly	8-20
Figure 8-7.	Drivemotor Assembly	8-23
Figure 8-8.	Control Box Assembly	8-27

This icemaker has been engineered to our own rigid safety and performance standards. The National Sanitation Foundation (NSF) seal, signifies that it is listed with the NSF and that is complies with the materials and construction standards of the NSF. In addition, the Underwriters Laboratories, Inc., (UL) Listing Mark and the Canadian Standards Association (CSA) Monogram, both signify that its construction and design have been inspected and tested by them. NSF, UL and CSA inspectors also periodically examine production icemakers at the factory, to assure continued compliance.

To retain the safety and performance built into this icemaker, it is important that installation and maintenance be conducted in the manner outlined in this manual.

SPECIFICATIONS
MODEL AF-430

REAR VIEW

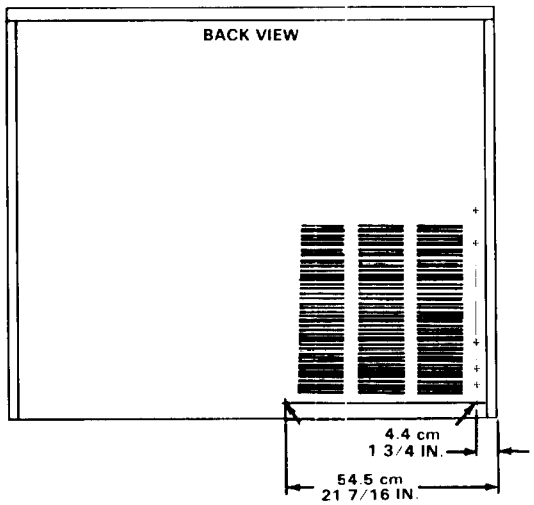

TOP VIEW

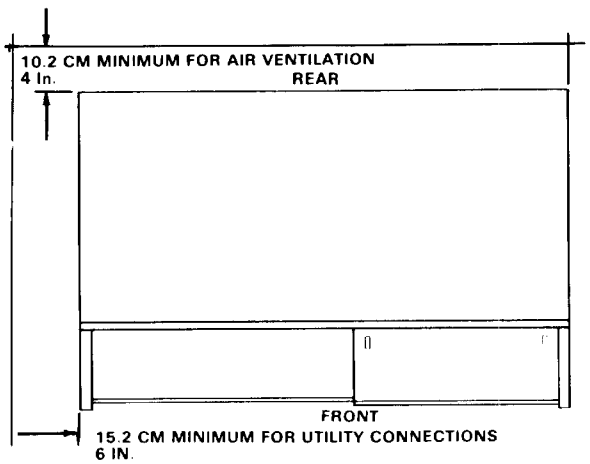

FRONT VIEW

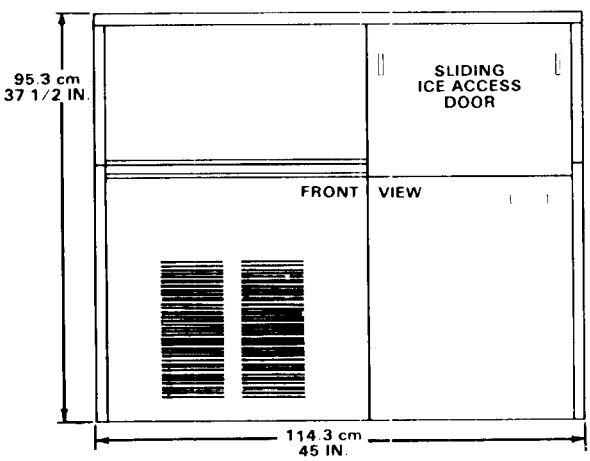

LEFT SIDE VIEW

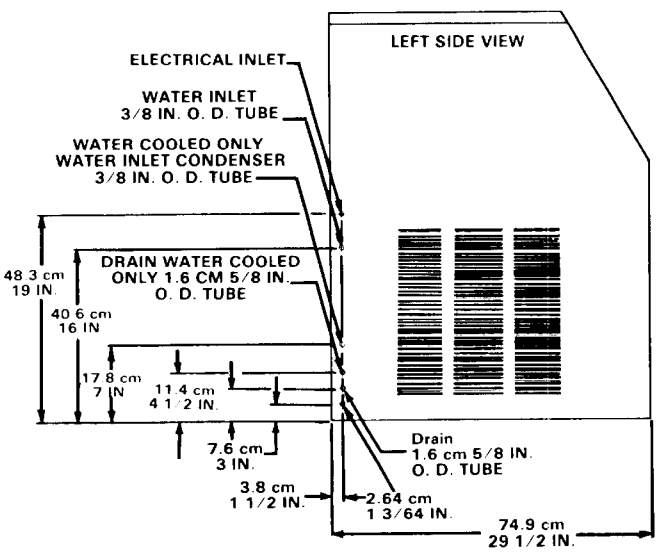

SPECIFICATIONS (Cont'd)

MODEL AF-430

Bin Storage: 255 lbs.*
Air-Cooled: Model AF430A-1A

Water-Cooled: Model AF430W-1A

Electrical: 115/60/1

Est. Ship. Wt.: 350 lbs.

TWO YEARS PARTS WARRANTY

FRONT SERVICE ACCESS PANEL

OPTIONAL LEG KIT

KLP2E - 6-inch metal legs, Black Enamel
KLP2S - 6-inch metal legs, Nickel Plated

OPTIONAL PANEL KIT

SPKAF30 - Stainless Panel Kit

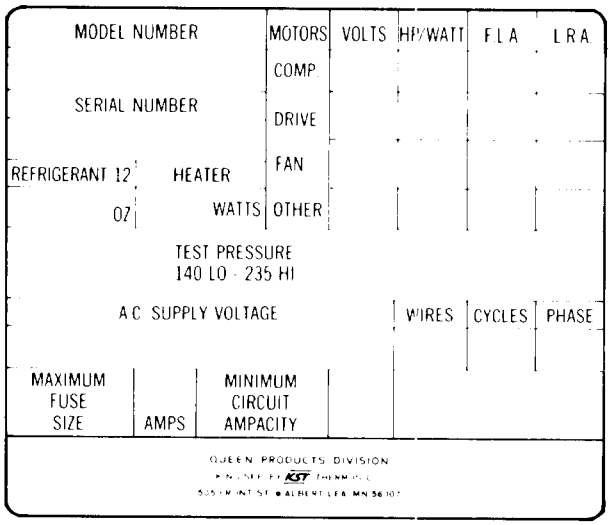

SEE NAMEPLATE for electrical and refrigeration specifications. NAMEPLATE located on rear service panel, near left rear corner of the cabinet. Shown in column at left.

Remove Left Front Lower Panel to locate the Model/Serial Number plate, shown below, on the front center of the chassis base.

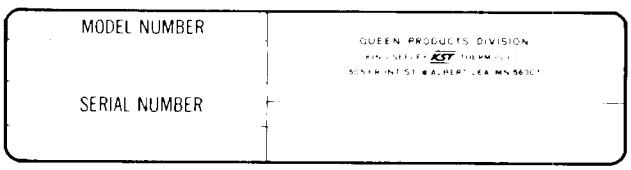

* Storage based on 90-percent of total volumke x 34 lb. average density of ice A.R.I. Standard.

We reserve the right to make product improvements at any time. Specifications and design are subject to change without notice.

SECTION I
GENERAL INFORMATION & INSTALLATION

I. INTRODUCTION

This manual provides the specifications and the step-by-step procedures for the installation, start-up and operation, and the maintenance and cleaning for the SCOTSMAN Model AF-430 Automatic Flakers.

The Model AF-430 Automatic Flakers are quality designed, engineered and constructed, and thoroughly tested ice-making and ice storage systems, providing the utmost in flexibility to fit the needs of a particular user. Separate sections detail more specifically: General Information & Installation; Start Up Operation; Principles of Operation; Adjustment and Removal and Replacement Procedures; Maintenance and Cleaning Instructions; Service Diagnosis; Wiring Diagrams; and, the Illustrated Assemblies and Parts Lists.

One of the outstanding features of this series of Flakers, is the easy access for service. With the front of the cabinet removed, the entire refrigeration systems can be removed from the cabinet for on-the-spot repair. When it might become necessary to return the system to the shop, a second unit may be installed in a very short time, so the customer is not without ice. The repaired unit can be re-installed in a matter of minutes.

DESCRIPTION

An attractive compact cabinet of textured metal with a Sandalwood enamel finish, a dark brown textured upper left front panel, and an orange bin access sliding door. Also, an optional stainless steel cabinet finish is available. Both cabinets have up-to-date styling, and easily removable panels for easy access to electrical and mechanical components.

SEALED REFRIGERATION SYSTEM

To provide quiet efficient operation of the Icemaker, the Compressor motor is internally spring-mounted. The Compressor motor is covered by a five year parts warranty. The Freezer Assembly is powered by a direct-drive, gear motor, Drivemotor Assembly.

SELF-CONTAINED STORAGE BIN

These Automatic Flakers store their own ice supply in a heavily insulated ice storage bin, with a sliding Ice Access Door opening the upper front of the cabinet.

STANDARD OVERALL DIMENSIONS

The standard overall dimensions of the cabinet depth, counter top height, etc., allows the Automatic Flaker to be installed in harmony with the existing counter equipment.

II. UNPACKING AND INSPECTION

1. Call your authorized SCOTSMAN Distributor or Dealer, for proper installation. He's listed under ICE MAKING EQUIPMENT and MACHINERY in the yellow pages of the telephone book.
2. Visually inspect the exterior of the shipping container and skid and any severe damage noted, should be reported to the delivering carrier; and, a concealed damage claim filed subject to internal inspection, with carrier representative present.
3. BEFORE removal of any panels or packing, carefully lay the cabinet on its back and remove the shipping bolts and the shipping base or skid.
4. When ordered, install the optional leg levelers in the cabinet base sockets; then, raise the cabinet to the upright position.
5. Remove screws and shipping tape, and all doors and service panels from the cabinet, and inspect for any concealed damage. Notify carrier of any concealed damage claims, as stated in step 2 above.
6. Remove all internal support packing, tape and wires in machinery compartment.
7. Check that refrigerant lines do not rub or touch lines or other surfaces, and that fan blades, if any, move freely.
8. Check that the Compressor is snug on all mounting pads.

9. Remove Water Strainer from shipping envelope, for installation in water supply line.
10. Use clean damp cloth or disposable paper wiper to wipe clean the interior surfaces of the ice storage Bin and the exterior surfaces of the cabinet.
11. See NAMEPLATE on the rear service panel, near the left rear corner of the cabinet and check that the location source voltage corresponds with the voltage specified on the nameplate.

CAUTION

Improper voltage supplied to the Icemaker will void your parts replacement program.

12. Remove the Manufacturer's Registration Card from the front of the User's Manual and fill in all spaces including: Model Number and Serial Number taken from the aluminum plate located at the front center of the Chassis base, with Left Front Lower Panel removed. Forward the completed, self addressed, registration card to the SCOTSMAN Factory, for your personal registration certificate.

III. LOCATION AND LEVELING

WARNING

This Automatic Flaker is NOT designed for outdoor installations where air temperatures are below 50-degrees F., or above 100-degrees F., and the water temperature is below 40-degrees F. or above 100-degrees F. Extended periods of operation at temperatures exceeding these limitations will constitute misuse, under the terms of the SCOTSMAN Manufacturer's limited warranty, resulting in LOSS of warranty coverage.

1. Position the Cabinet in the selected permanent location.

NOTE

Prior consideration for location site shall include:

1. *Minimum room temperature 50-degrees F. and maximum room temperature 100-degrees F.*
2. *Water inlet temperatures: Minimum 40-degrees F. and Maximum 100-degrees F.*
3. *Well ventilated location for Air-Cooled model, advising user to frequently clean Condenser, located directly behind left front service door.*
4. *SERVICE ACCESS: Adequate space for all service connections, through the rear of the Cabinet. A six-inch minimum clearance at rear, left and front louvered panels, for routing cooling air drawn into and exhausted out of the compartment, to maintain proper condensing operation on Air-Cooled models.*

2. Level the Cabinet in both the left-to-right and front-to-rear directions. The optional leveling legs can be adjusted with an open-end wrench.

IV. ELECTRICAL CONNECTIONS

SEE NAMEPLATE for current requirements to determine wire size to be used for electrical hookup. The Automatic Flaker requires a solid earth ground wire. See wiring diagram.

Be certain the Automatic Flaker is connected to its own electrical circuit and individually fused. The maximum allowable voltage variation should not exceed ten percent of the nameplate rating, even under starting conditions. Low voltages can cause erratic operation and may be responsible for serious damage to the overload switch and motor windings.

All external wiring should conform to the National, State and local electrical code requirements. Usually an electrical permit and services of a licensed electrician will be required.

V. WATER SUPPLY AND DRAIN CONNECTIONS

A. AIR-COOLED MODELS: The recommended water supply line is a 1/4-inch O.D. copper tubing. Connect to cold water supply line with standard plumbing fittings, with a shutoff valve installed in an accessible place between the water supply and the Cabinet.

A wire mesh strainer is provided and must be installed with the cleanout plug down. Locate the strainer in the water supply line, next to the Cabinet with the arrow on the strainer, in the direction of the water flow. The strainer protects against large particles of rust, scale, etc., which may be loosened in the water supply pipe, at the time of installation.

In some cases, a plumbing permit and services of a licensed plumber will be required.

WARNING

To prevent damage to the freezer mechanism, DO NOT operate this unit when the water supply is OFF, or is below 20 PSI, the recommended water pressure. Position the master switch to the OFF position, until proper water supply is resumed.

The Icemaker in this Cabinet will not operate when water supply temperatures are below 40-degrees F. or above 100-degrees F.

B. WATER-COOLED MODELS: On Water-Cooled models a separate connection, to the Condenser is required. A 3/8-inch O.D. copper tubing is provided for a separate water inlet line to be connected and a separate drain line to be connected.

NOTE

The WARNING, in the text above for the Air-Cooled models equally applies for the Water-Cooled models. In both type installations, water supply must be installed to conform with local plumbing codes. In some cases, a plumbing permit and services of a licensed plumber will be required.

C. DRAIN CONNECTIONS: All drains are gravity type and must be 1/4-inch per foot on horizontal runs. The drains to be installed to conform with local code. The drain receptacle should be an open, trapped or vented construction.

Recommended Bin drain is 5/8-inch O.D. copper tubing, should be vented and run separately. Connect a drain line to 7/16-inch I.D. tube from the freezer drip pan and a separate drain line to 3/8-inch O.D. drain tube from the Water-Cooled Condenser, on Water-Cooled models.

WARNING

This Automatic Flaker will NOT operate when water supply temperature is below 40-degrees F., or above 100-degrees F. Requires 20 PSI flowing water pressure, without interruption.

VI. FINAL CHECK LIST

1. Is the Cabinet level? (IMPORTANT)
2. Have all electrical and piping connections been made?
3. Has the voltage been tested and checked against the nameplate rating?
4. Is the water supply line shutoff valve installed and electrical wiring properly connected?
5. Have the Bin and Cabinet been wiped clean?
6. Have the Compressor hold down nuts been checked, to be sure the Compressor is snug on the mounting pads?
7. Has the owner/user been given the User Manual and instructed on how to operate the Icemaker.
8. Has the Manufacturer's Registration Card been properly filled out? Check for correct Model and Serial numbers from Serial nameplate, then mail the completed card to the SCOTSMAN factory.
9. Check all refrigerant lines and conduit lines, to guard against vibration or rubbing and possible failure.
10. Is there at least six inches clearance behind and around Cabinet for proper air circulation?
11. Is the Cabinet in a room where ambient temperatures are a minimum of 50-degrees F. all year around?
12. Has water supply pressure been checked to insure a minimum of 20 PSI?
13. Has the owner been given name and telephone number of the authorized SCOTSMAN Service Agency serving him?

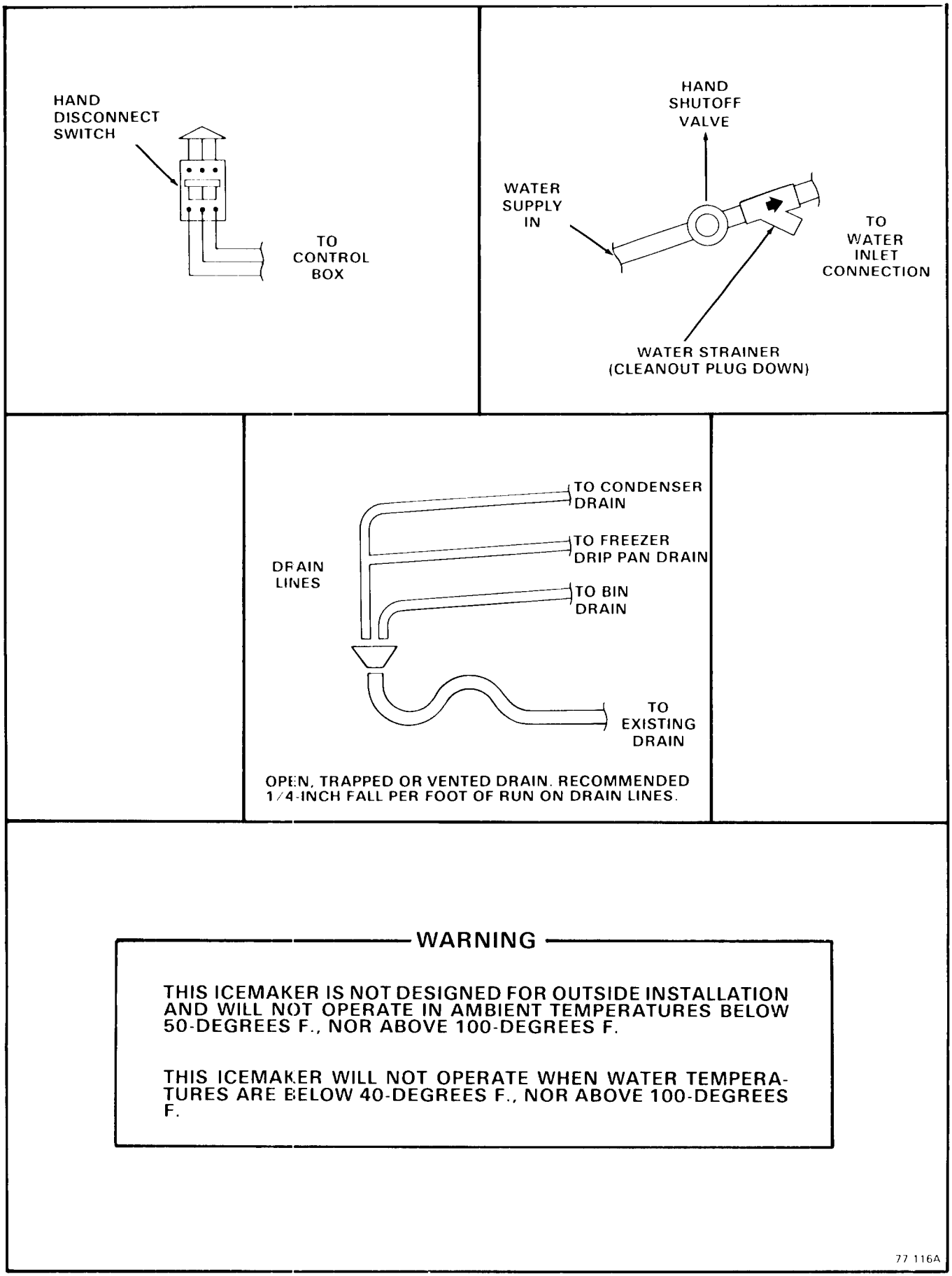

Figure 1-1. Installation Practice

SECTION II
OPERATING INSTRUCTIONS

I. START UP

1. Remove screws and the Left Front Lower Panel and the Left Side Panel.
2. OPEN the water supply line shutoff valve.
3. Observe the water filling operation, see Figure 2 - 1:
   a. Water flows into Water Reservoir.
   b. Float moves up as water rises.
   c. Water flows through water feed line to bottom of Freezer Assembly.
   d. Float stops water flow, when water level reaches 3/8-inches below the molded horizontal line, on the body of the Water Reservoir.
4. Move the manual ON-OFF toggle switch, on the front of the Control Box to the ON position, to start the automatic icemaker operation.
5. After two or three minutes of operation, observe that flaked ice begins dropping off the Auger and out the Ice Spout, through the Nylobraid tubing and into the Ice Storage Bin.
6. Let the system operate for about 30 minutes or until ice covers the bottom of the Bin. Check for any excess noises beyond normal Compressor noise:
   a. Fan noises, when Air-Cooled: Blades touch other surfaces; blades bent, out-of-balance.
   b. Vibrating type, from touching lines.
   c. Chattering: Lack of water in Freezer.
   d. Compressor loose at one or more holddown bolts.

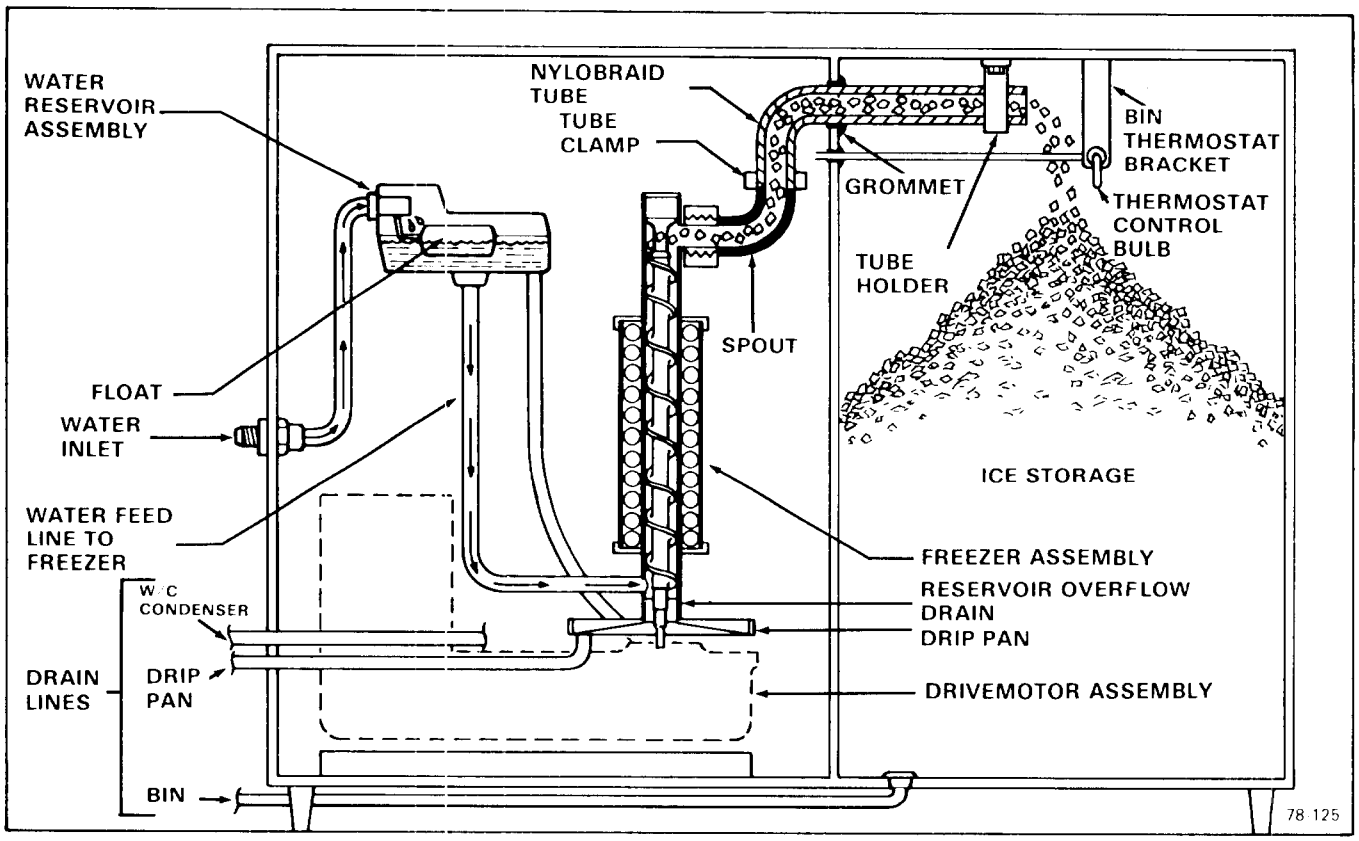

Figure 2 - 1. Water Schematic

WARNING

DO NOT operate this Icemaker when the water supply is shut OFF, or is BELOW the recommended 20 PSI water pressure. Move the manual ON-OFF toggle switch on the front of the Control Box to the OFF position immediately.

7. Hold a handful of ice around the Ice storage Bin Thermostatic Control Bulb to test shutoff. Less than one minute is about normal for Bulb shutoff function to cause the Compressor to stop.

NOTE

Within minutes after the ice is removed from the sensing bulb, the bulb will warm up and cause the Icemaker to restart. This control is factory set and should not be reset until testing is performed. Normal setting: about 35-degrees F. CUT-OUT and 45-degrees F. CUT-IN, to prevent short cycling.

8. Throughly explain to the owner/user the significant specifications of the Icemaker, the start up and operation, going through the procedures in the operating instructions. Answer all questions about the Icemaker, by the owner; and, inform the owner of the name and telephone number of the authorized SCOTSMAN Service Agency serving him.

SECTION III

PRINCIPLES OF OPERATION
How It Works

I. ICEMAKER

The water supply flows from the building source through the inline water strainer, enters at the Cabinet fitting and on to the Water Reservoir. The Water Reservoir functions to maintain a constant water level inside the Freezer Assembly. Water from the Water Reservoir enters at the bottom of the Freezer Assembly and is changed into ice by low temperatures inside the Freezer.

A stainless steel Auger within the Freezer is powered by the Drivemotor Assembly, a direct-drive gearmotor, and the rotating Auger carries the ice upward to the flared end of the Auger. See Figure 3-1, where excess water is pressed out of the ice, as it is extruded or flaked out through the Ice Spout, through the Nylobraid tubing and into the Ice Storage Bin.

Moving the manual ON-OFF toggle switch, on the front of the Control Box, to the ON position starts the automatic and continuous icemaking process. When the Ice Storage Bin has been filled with ice, up to the level of the Thermostatic Control Bulb, the sensing bulb shuts off the icemaking process.

As the ice is removed from the Ice Storage Bin, the Thermostatic Control Bulb warms up, restarting the automatic icemaking process.

Factory settings are 35-degrees F. CUT-OUT and 45-degrees CUT-IN.

Altitude correction begins at 2000 feet, CUT-IN and CUT-OUT screws should be adjusted equally, not more than one-fourth turn at a time.

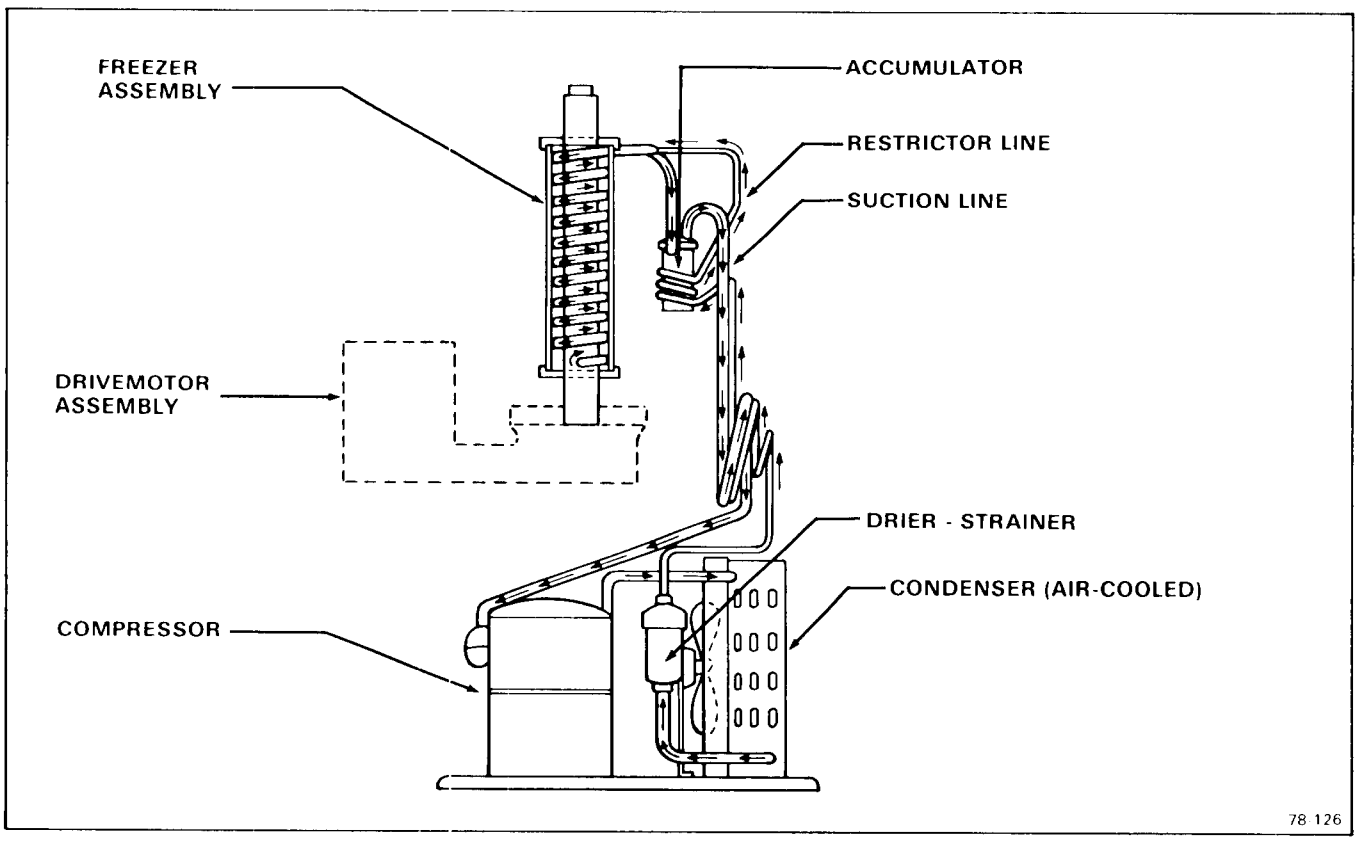

Figure 3-1, Refrigeration Cycle

II. ELECTRICAL/REFRIGERATION

The AF-430 Automatic Icemakers are designed to operate on standard electrical supply 115 volts, 60 Hertz, single phase. Special voltage requirements are available on special order. Therefore, always CHECK NAMEPLATE for electrical information BEFORE proceeding with electrical wiring connections to the Icemaker.

Cold ambient temperatures and interruptions in water supply are conditions that can cause excessively hard ice and overloads within the Freezer Assembly, which is directly transmitted to the Drivemotor; and in turn, will cause speed reduction or ultimate freezeup.

When the Drivemotor is slowed to a predetermined RPM, a sensing switch mounted on top of the motor is designed to open the electrical circuit to the Compressor. The Compressor stops operating, no more ice is produced, and the Drivemotor continues to operate rotating the Auger to clear the overload and gradually build up to full speed.

At a pre-determined higher RPM Drivemotor speed, the speed sensing switch closes the electrical circuit to the Compressor, causing the normal icemaking process to resume. Refer to specific details in paragraph V-II-9, on centrifugal sensing switch operation.

A Spout Switch is mounted on the side of the Ice Spout and is actuated by the movement of the spring retained spout tube against the switch actuator. The Spout Switch acts as a backup safety switch, should the Thermostatic Control Bulb fail and cause ice to jam up in the Ice Spout. The switch will shut off the icemaker only when actuated. It is an immediate and complete shut down of the entire icemaker. The Spout Switch can be manually tested, by plugging the end of the Nylobraid Tube. The switch is also manually reset.

There are three safety controls in the Control Box on the Water-Cooled models and two safety controls in the Control Box for the Air-Cooled Models. The Low Pressure Control, a manual reset, non-adjustable control, is used on both models and is set to electrically open at zero to four PSIG to stop the entire icemaker. The Auger Delay Switch, a single-pole double-throw (SPDT) switch, used on all models, functions as a control device to allow the gearmotor to rotate the auger to clear the Freezing Chamber while the compressor circuit is OFF.

Refer to the appropriate Wiring Diagram and trace circuitry and control functions, as described in the following paragraph.

As shown on all SCOTSMAN wiring diagrams, the controls are in the ICEMAKING MODE. Thus, the 1-2 contacts are CLOSED. At STARTUP, the 1-2 contacts are OPEN and the 3-2 contacts are CLOSED. As the icemaker begins to operate, the low side pressure starts to decrease from the stabilized or at-rest pressure. As soon as the pressure is reduced to 20 PSIG, the 3-2 contacts OPEN and the 1-2 contacts CLOSE.

This removes the operating controls, such as the Bin Thermostat, from the gearmotor circuit. If one of the operating controls OPENS, it will SHUT OFF the compressor circuit. The gearmotor will operate until the low side pressure increases to 32 PSIG. Then, the 1-2 contacts OPEN and SHUTS OFF the gearmotor, usually within one to two minutes, depending upon ambient conditions. This brief period of time allows the Auger to transport all the ice out of the freezing chamber. Consequently, when called on to STARTUP again, there is no ice load to start up against. Again, on STARTUP, the 1-2 contacts are OPEN and the 3-2 contacts are CLOSED.

On all models, a low-water pressure switch functions to discontinue the Icemaking process whenever incoming water pressure is reduced to below five PSIG. The Switch will automatically restart the Icemaking process when the water pressure is increased to 20 PSIG.

On the Water-Cooled models only, a manual reset, high head pressure control is factory set to stop the entire icemaker should the head pressure reach 250 PSIG.

On Water-Cooled models, correct head pressure is 135 PSIG. Adjustments can be made on the Water Regulator Assembly valve. On Air-Cooled models, the head pressure is normal about 130 PSIG, however, it will vary depending upon ambient air temperature.

Suction pressure should be 15 PSIG with proper refrigerant charge and the frost line should extend out from the accumulator about eight inches. Suction pressure will vary about two PSIG plus or minus, depending upon ambient temperatures and incoming water supply temperatures to the Freezer Assembly.

When charging the system with refrigerant, on Water-Cooled Models, set the Compressor head pressure at 135 PSIG, and charge with refrigerant so the frost line extends out of the Compressor at least eight inches, after 15 minutes of operation, for best capacity and performance.

MODEL	AF-430 Refrig. Chg.
Air-Cooled	22 oz. R-12 (Approx.)
Water-Cooled	18 oz. R-12 (Approx.)

SECTION IV

ADJUSTMENT AND REMOVAL AND REPLACEMENT PROCEDURES

The procedures provided in this Section are arranged in alphabetical order, to make specific Adjustment and Removal and Replacement information easy to locate.

Read the instructions thoroughly before performing any Adjustment or Removal and Replacement Procedures.

WARNING

The adjusting screws on the Temperature Control device have very sensitive response to adjustment. DO NOT attempt to adjust the screw until after thoroughly reading and understanding the following instructions and illustrations. Over-adjusting or erratic guessing, can foul the instrument and cause ultimate delay and part replacement, WHICH COULD HAVE BEEN PREVENTED.

I. ADJUSTMENT OF THE BIN THERMOSTAT CONTROL

The control for the Bin Thermostat is the Temperature Control, located in the upper part of the Control Box Assembly.

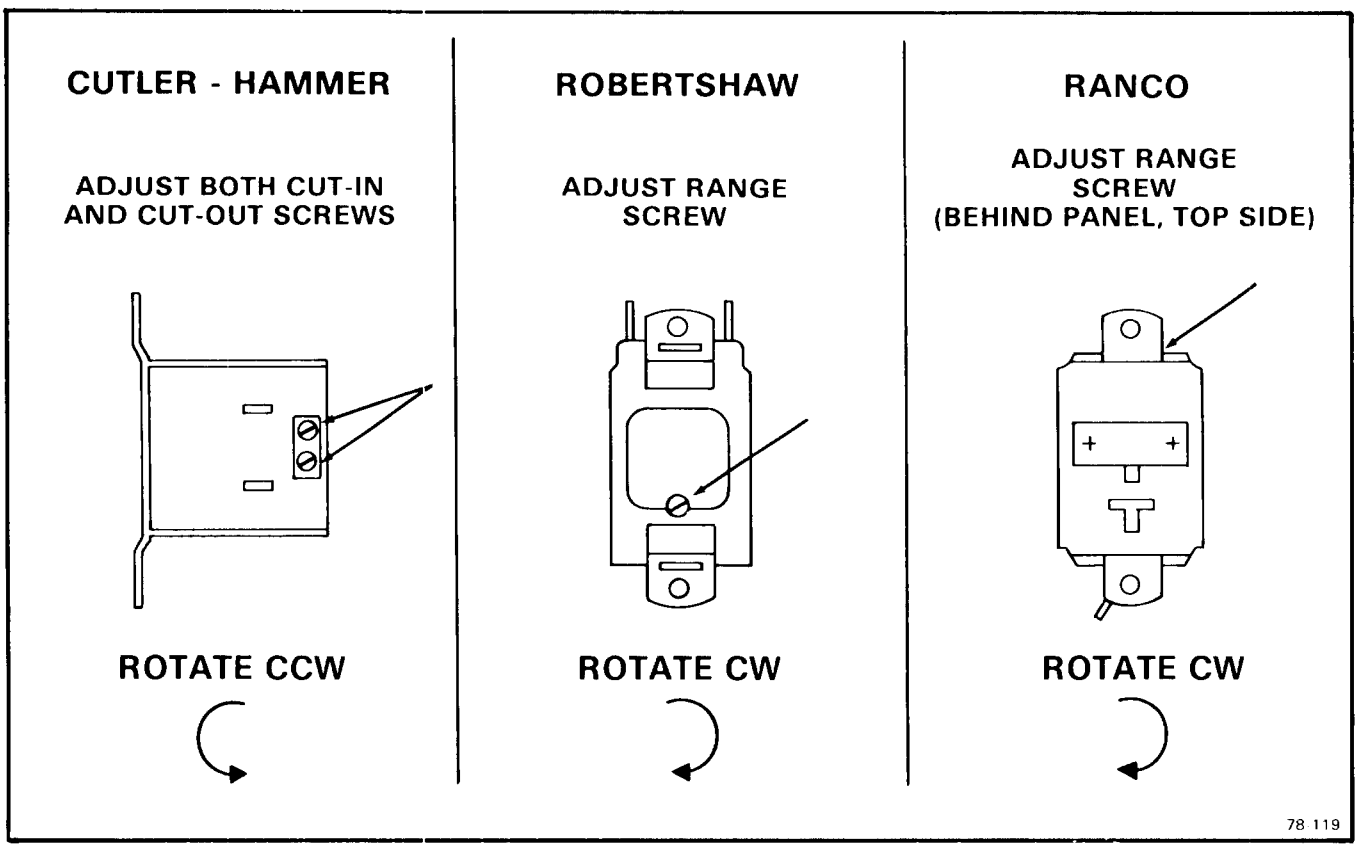

Figure 4-1. Adjustment of the Temperature Control

See Figure 4-1 for location and direction of rotation, clockwise (CW) or counterclockwise (CCW), of the adjusting screws on the Temperature Control, in the particular Control Box the adjustment is to be performed.

II. ADJUSTMENT OF THE LEG LEVELERS

When the AF-430 Icemaker is ordered with the optional Leg Levelers, the Cabinet must be leveled in the front-to-rear and side-to-side directions. This adjustment should be performed during initial installation of the Cabinet and anytime the Cabinet is moved from the original location to another site.

A. Using an open-end wrench, and a carpenter's bubble level, rotate the threaded Leveler in each Leg to RAISE or LOWER the Cabinet until the Cabinet is level in the front-to-rear direction.

B. Repeat step A, for leveling in the side-to-side direction.

C. Recheck both the front-to-rear and the side-to-side leveling and repeat adjustments, as necessary.

III. ADJUSTMENT OF THE WATER REGULATOR ASSEMBLY

The correct head pressure on Water-Cooled models is 135 PSIG. Adjustments can be performed on the Water Regulator Assembly to increase or decrease the head pressure.

To Adjust the Water Regulator Assembly:

A. To INCREASE the Head Pressure: Rotate the adjusting Screw, on the Water Regulator Assembly IN or CLOCKWISE.

B. To DECREASE the Head Pressure: Rotate the adjusting Screw, on the Water Regulator Assembly OUT or COUNTERCLOCKWISE.

IV. ADJUSTMENT OF THE WATER RESERVOIR FLOAT

The correct water level in the Water Reservoir should be 3/8-inch below the raised molded line, on the side of the body of the Water Reservoir. When the water line level is above or below the raised molded line, adjustment can be performed to raise or lower the water level by raising or lowering the Water Reservoir in the slots on the Mounting Brackets, which in turn will adjust the action of the float.

A. To RAISE the Water Level: Loosen the two Screws which attach the Water Reservoir Assembly to the Mounting Bracket and RAISE the Water Reservoir Assembly, in the slots, the desired amount; then, tighten the Screws.

B. To LOWER the Water Level: Loosen the two Screws which attach the Water Reservoir Assembly to the Mounting Bracket and LOWER the Water Reservoir Assembly, in the slots, the desired amount; then, tighten the Screws.

WARNING

Be sure the electrical power supply and the water supply are OFF, before starting any of the following REMOVAL AND REPLACEMENT procedures, as a precaution to prevent possible personal injury or damage to equipment.

V. REMOVAL AND REPLACEMENT OF THE AUGER, WATER SEAL, BEARINGS AND COUPLING

A. To Remove the Auger, Water Seal, Bearings, and Coupling:

1. Remove screws and the Left Front Lower Panel and the Left Side Panel.
2. Remove the Freezer Cap from the top of the Freezer Assembly.
3. Perform the steps in procedure IV-XIII to remove the Spout Assembly.
4. Grasp the wire Cap Hook at the top of the Freezer Assembly and pull out the Auger and attached Cap, Bearing/Retainer, Bearing and O-Rings, at the top of the Auger; and, the top half of the Water Seal at the bottom of the Auger.

NOTE

When the Auger cannot be pulled out, proceed to steps 12 and 13, to gain access to the bottom of the Auger. Then, with a rawhide mallet or placing a piece of wood on the bottom end of the Auger, tap the bottom of the Auger to break it loose and pull the Auger out, as in the step 4 above.

5. Remove the Cap Hook from the Bearing/Retainer.
6. Remove the Retaining Ring and the Cap.

7. Remove the Cap Screw and Washer and remove the Bearing/Retainer from the Auger.
8. Clean away the old grease from the top of the Auger, the Bearing/Retainer, Cap, Cap Screw and Washer, and the O-Ring and Retaining Ring.
9. Inspect the O-Ring at the top of the Bearing/Retainer and the O-Ring at the bottom outside of the Bearing/Retainer, for cuts, tears and general worn condition to determine replacement.
10. Inspect the Bearing pressed into the top of the Bearing/Retainer and, if it is to be replaced, remove the Retaining Ring and press the Bearing out of the Bearing/Retainer.
11. Slide the upper half of the Water Seal off of the bottom of the Auger.

NOTE

1. *Any time the Auger is removed for replacement, or, for the inspection and replacement of the Bearings or Coupling, use extra care in handling the Water Seal parts, so no dirt or foreign matter are deposited on the surfaces of the Seal.*
2. *If there is any doubt about the effectiveness of Water Seal or O-Ring, REPLACE THEM. A dirty, worn or faulty Water Seal or O-Ring will cause a leak and ultimately require a second, time consuming removal and replacement procedure to be performed, that COULD HAVE BEEN PREVENTED.*

12. Remove four screws and lockwashers which attach the Freezer Assembly to the Adaptor on the Drivemotor Assembly.
13. Raise the Freezer Assembly off of the Adaptor, to gain access to the Bearing and Retainer; then, temporarily secure the Freezer Assembly out of the way to allow room to work. Be careful not to damage the gasket.
14. Using a suitable length and size wooden dowel or stick inserted through the top of the open Freezer Assembly, tap the lower half of the Water Seal and the lower Bearing in the Retainer, out the bottom of the Freezer Assembly
15. Inspect the lower half of the Water Seal. If reusable, use care to protect it from dirt, etc. prior to replacement procedure.
16. Inspect the lower Bearing in the Retainer; and, if the Bearing is to be replaced, press the Bearing out of the Retainer.
17. Reach through the Adaptor and remove the Coupling on the Drivemotor for inspection.
18. Check the Coupling for cracks, chipping and excessive wear.

B. To replace the Auger, Water Seal, Bearings, and Coupling, reverse the removal procedure.

NOTE

1. *When installing the Retainer assembled with Bearing, in the bottom of the Freezer Assembly, some Retainers will insert as a slip fit, and some will have to be forced into place because of very tight fit. Carefully tap a piece of wood positioned across the bottom of the Retainer, to evenly seat the Retainer in the chamber of the Freezer.*
2. *After assembling the parts on the upper end of the Auger and BEFORE installing the Cap and Cap Hook, apply an ample coating of Shell Alvania 3 Grease, P/N 19-0309-01, to the upper part of the Bearing/Retainer to cover the Retaining Ring and the Cap Screw and Washer. Then, install the Cap and Cap Hook in place.*

VI. REMOVAL AND REPLACMENT OF THE COMPRESSOR ASSEMBLY

NOTE

Always install a replacement Drier, any time the sealed refrigeration system is opened. Do not replace the Drier until all other repair or replacement has been completed.

A. To Remove the Compressor Assembly:

1. Remove screws and the Left Side Panel and the Left Front Lower Panel.
2. Remove two screws and the Cover from the Compressor Junction Box.
3. Disconnect the electrical leads at the Compressor Junction Box, that originate in the Control Box.
4. Bleed off or blow the refrigerant charge through the Schrader valves.
5. Unsolder the suction line from the Compressor.
6. Unsolder the discharge line from the Compressor.

7. Unsolder the process header tube from the Compressor and retain for installation on the Replacement Compressor.
8. Remove four bolts, lockwashers and washers which secure the Compressor to the Chassis mounting base.
9. Slide the Compressor and remove through the left side opening of the Cabinet.

NOTE

Thoroughly evacuate the system to remove moisture and non-condensables.

B. To replace the Compressor Assembly, reverse the removal procedure.

VII. REMOVAL AND REPLACEMENT OF THE CONDENSER — AIR-COOLED MODELS

NOTE

Always install a replacement Drier, any time the sealed refrigeration system is opened. Do not replace the Drier until all other repair or replacement has been completed.

A. To Remove the Condenser:

1. Remove screws and the Left Front Lower Panel and the Left Side Panel.
2. Bleed off or blow the refrigerant charge through the Schrader valve.
3. Unsolder and disconnect the Condenser inlet tube at the Condenser.
4. Unsolder and disconnect the Condenser outlet tube at the Condenser.
5. Remove three screws, lockwashers and washers securing the Condenser to the Chassis Base.
6. Remove the Condenser out through the front opening of the cabinet.

NOTE

Thoroughly evacuate the system to remove moisture and non-condensables.

B. To replace the Condenser, reverse the removal procedure.

VIII. REMOVAL AND REPLACEMENT OF THE CONDENSER — WATER-COOLED MODELS

NOTE

Always install a replacement Drier, any time the sealed refrigeration system is opened. Do not replace the Drier until all other repair or replacement has been completed.

A. To Remove the Condenser:

1. Remove screws and the Left Front Lower Panel and the Left Side Panel.
2. Bleed off or blow the refrigerant charge through the Schrader valve.
3. Unsolder the refrigerant inlet and outlet lines from the Condenser.
4. Disconnect the water inlet and outlet lines from the Condenser.
5. Remove two bolts, lockwashers and washers which secure the Condenser to the Chassis mounting base.
6. Remove the Condenser from the Cabinet.

NOTE

Thoroughly evacuate the system to remove moisture and non-condensables.

B. To replace the Condenser, reverse the removal procedure.

IX. REMOVAL AND REPLACEMENT OF THE DRIER

NOTE

Always install a replacement Drier, any time the sealed refrigeration system is opened. Do not replace the Drier until all other repair or replacement has been completed.

A. To Remove the Drier:

1. Remove screws and the Left Front Lower Panel and the Left Side Panel.
2. Remove screw and Drier Brace attaching the Drier to the Chassis base.
3. Bleed off or blow the refrigerant charge through the Schrader valve.
4. Unsolder refrigeration lines at each end of Drier, remove the Drier and separate the Drier from the Drier Brace.

B. To Replace the Drier:

CAUTION

1. If the factory seal is broken on the replacement Drier, exposing it to the atmosphere more than a few minutes, the Drier will absorb moisture from the atmosphere and lose substantial ability for moisture removal.

2. Be sure the replacement Drier is installed with the arrow positioned in the direction of the refrigerant flow.

1. Remove the factory seals from the replacement Drier and install the Drier in the refrigerant lines with the arrow positioned in the direction of the refrigerant flow.
2. Install the Drier Brace on the Drier.
3. Solder the Drier into the lines, two places.
4. Purge the system and check for leaks.
5. Thoroughly evacuate the system to remove moisture and non-condensables.
6. Charge the system with refrigerant, by weight. SEE NAMEPLATE.
7. Replace the Left Front Lower Panel and the Left Side Panel and attach both with screws removed earlier.

X. REMOVAL AND REPLACEMENT OF THE DRIVEMOTOR ASSEMBLY

A. To Remove the Drivemotor Assembly:

1. Perform all steps in procedure IV-XII to gain access for removal of the Drivemotor Assembly.
2. Remove bolts, lockwashers and washers which attach the Drivemotor to the Chassis base.
3. Lift the Drivemotor from the Chassis base and out of the Cabinet.

B. To replace the Drivemotor Assembly, reverse the removal procedure.

XI. REMOVAL AND REPLACEMENT OF THE FAN MOTOR ASSEMBLY — AIR-COOLED MODELS

NOTE

Before beginning this procedure, observe the Fan Blade position on the shaft of the Fan Motor and mark the Fan Blade so it will be correctly positioned during reassembly. Direction of air flow should be toward the Fan Motor.

A. To Remove the Fan Motor Assembly:

1. Remove screws and the Left Front Lower Door and the Left Side Panel.
2. Disconnect the electrical lead from the Fan Motor.
3. Remove two screws securing the Motor Bracket to the Chassis Base and remove the Fan Motor and Motor Bracket out through the left side opening of the Chassis.
4. Remove the nut from the end of the Fan Motor shaft and remove the Fan Blade.
5. Remove four screws securing the Fan Motor to the Motor Bracket and separate the Motor from the Bracket.

B. To replace the Fan Motor Assembly, reverse the removal procedure.

XII. REMOVAL AND REPLACEMENT OF THE FREEZER ASSEMBLY

NOTE

1. *The Cabinet may have to be removed from its permanent location, especially if located in a corner, in order to have access to the left side and rear of the Chassis.*
2. *In addition to shutting OFF electrical power and inlet water to the icemaker, be sure to disconnect the inlet water line at the rear of the Cabinet BEFORE moving the icemaker from the permanent location.*
3. *Always install a replacement Drier, any time the sealed refrigeration system is opened. Do not replace the Drier until all other repair or replacement has been completed.*

A. To Remove the Freezer Assembly, see Figure 4-2:

1. Remove screws and left side, front and rear panels.

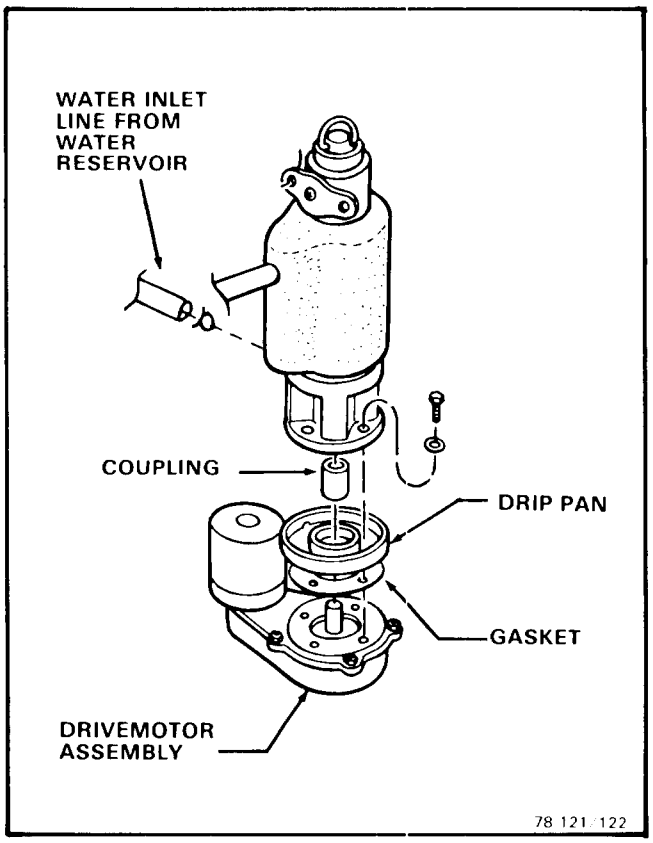

Figure 4-2. Removal of the Freezer Assembly.

2. Refer to procedure IV-XIII and remove the Spout Assembly.
3. Remove Corbin clamp and Tygon tube from the Freezer Assembly that connects to the Water Reservoir Assembly.
4. Bleed off or blow the refrigerant charge through the Schrader valve.
5. Unsolder the suction line from the Compressor.
6. Unsolder the capillary line at the Drier.
7. Remove four screws, lockwashers and washers which attach the bottom of the Freezer Assembly to the Adaptor on the Drivemotor Assembly.
8. Lift the Freezer Assembly up and off of the Adaptor and Drivemotor Assembly.

NOTE

Thoroughly evacuate the system to remove moisture and non-condensables.

B. To replace the Freezer Assembly, reverse the removal procedure.

XIII. REMOVAL AND REPLACEMENT OF THE SPOUT ASSEMBLY

A. To Remove the Spout Assembly, See Figure 4-3:

1. Remove screws and the Left Front Lower Panel and Left Side Panel.
2. Remove the Hose Clamp and disconnect the Nylobraid tube from the end of the spout.
3. Remove the Freezer Cap from the top of the Freezer Assembly.
4. Disconnect the electrical leads from the Spout Switch.
5. Remove two screws and washers and separate the Spout Assembly from the Spout Plate on the Freezer Assembly.

NOTE

At this time, inspect the spout Gasket and retain for the replacement procedure. Replace a torn, cut or worn, defective gasket.

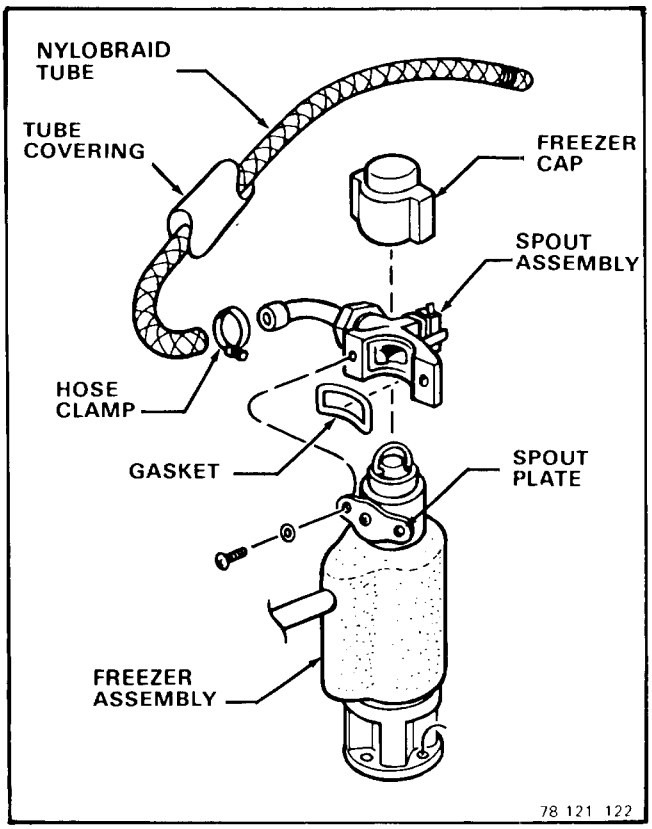

Figure 4-3. Removal of the Spout Assembly.

B. To replace the Spout Assembly, reverse the removal procedure.

XIV. REMOVAL AND REPLACEMENT OF THE WATER PRESSURE CONTROL

A. To Remove the Water Pressure Control:

1. Remove screws and the Left Front Lower Panel and the Left Side Panel.
2. Remove screws and the Control Box Cover.
3. Disconnect the two blue electrical leads of the Water Pressure Control, from the terminals on the Auger Delay Control and the Bin Thermostat device in the Control Box Assembly
4. Unscrew the flare nut fitting and disconnect the Water Pressure Control from the Utility Bracket and the Tee on the inlet water tubing.

NOTE

At this time, inspect the O-Ring and retain for the replacement procedure. Replace O-Ring that is cut, torn or indicates excessive wear.

B. To replace the Water Pressure Control, reverse the removal procedure.

XV. REMOVAL AND REPLACEMENT OF THE WATER REGULATOR ASSEMBLY — WATER-COOLED MODELS

A. To Remove the Water Regulator Assembly:

NOTE

Always install a replacement Drier, any time the sealed refrigeration system is opened. Do not replace the Drier until all other repair or replacement has been completed.

1. Remove screws and the Left Front Lower Panel.
2. Bleed off or blow the refrigerant charge through the Schrader valve.
3. Unsolder the Capillary line from the Water Regulator Assembly, where connected at the process header.
4. Disconnect the water inlet line at the rear of the Water Regulator.
5. Disconnect the Condenser water inlet tube at the front of the Water Regulator.
6. Remove two screws, lockwashers and washers which attach the Water Regulator Assembly bracket to the Chassis base and remove the Water Regulator Assembly and bracket.

NOTE

Thoroughly evacuate the system to remove moisture and non-condensables.

B. To replace the Water Regulator Assembly reverse the removal procedure.

XVI. REMOVAL AND REPLACEMENT OF THE WATER RESERVOIR ASSEMBLY

A. To Remove the Water Reservoir Assembly, see Figure 4-4:

1. Remove screws and the Left Front Lower Panel and the Left Side Panel.

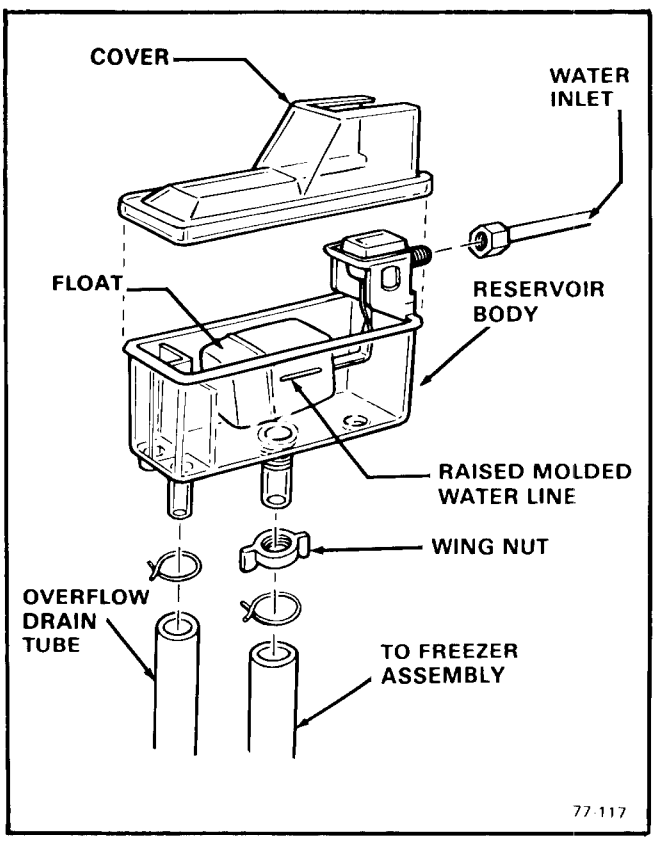

Figure 4-4. Removal of the Water Reservoir Assembly

NOTE

Be prepared with container or rags, to catch water left in lines, when lines are disconnected in next steps, to prevent draining water on parts, components, electrical lines, etc.

2. Disconnect the water inlet tube from the Water Reservoir Assembly.
3. Remove two Corbin clamps and two tubes from the bottom of the Water Reservoir Assembly.
4. Unscrew and remove the wing nut from the bottom of the Water Reservoir Assembly.
5. Lift and remove the Water Reservoir Assembly from the mounting bracket.

B. To replace the Water Reservoir Assembly, reverse the removal procedure.

NOTE

Check that the installed replacement Water Reservoir Assembly float moves freely. Bend metal arm of float to adjust, as necessary. The correct water level in the Water Reservoir is 3/8-inch below the raised molded line, on the side of the body of the Water Reservoir.

SECTION V

MAINTENANCE & CLEANING INSTRUCTIONS

I. GENERAL

The periods and procedures for maintenance and cleaning are given as guides and are not to be construed as absolute or invariable. Cleaning especially will vary, depending upon local water conditions and the ice volume produced; and, each Icemaker must be maintained individually, in accordance with its own particular location requirements.

II. ICEMAKER

THE FOLLOWING MAINTENANCE SHOULD BE SCHEDULED AT LEAST TWO TIMES PER YEAR ON THIS ICEMAKER. CALL YOUR AUTHORIZED SCOTSMAN SERVICE AGENCY.

1. Check and clean water line Strainers.
2. Remove cover from Water Reservoir and depress the float to ensure that a full stream of water enters the Reservoir.
3. Check that the Icemaker cabinet is level, in side-to-side and front-to-rear directions.
4. Check that the water level in the Water Reservoir is below the overflow, but high enough that it does not run out of the spout opening.

NOTE

It is not abnormal for some water to emerge from the Ice Spout with flaked ice during normal ice production.

5. Clean the Water Reservoir and interior of the Freezer Assembly, using a solution of SCOTSMAN Ice Machine Cleaner. Refer to procedure V-III, CLEANING-Icemaker.

NOTE

Cleaning requirements vary according to local water conditions and individual user operation. Visual inspection of the Auger before and after cleaning will indicate frequency and procedure to be followed in local areas.

6. When doubtful about refrigerant charge, install refrigerant gauges on Schrader valves and perform steps 6 and 7. Check gauge for Compressor head pressure:

   AIR-COOLED MODELS: Varies between 130 to 145 PSIG.

   WATER-COOLED MODELS: Set at 135 PSIG. Adjust screw on top of Water Regulator Valve to raise or lower head pressure.
7. Check gauge for Suction line pressure:

   Varies between 12 to 16 PSIG, depending upon inlet water temperature and ambient air temperature.
8. Check Drivemotor operation:

   Normal operating temperatures are about 160-degrees F., which is hot to touch.
9. Check operation of the centrifugal sensing switch:

   AF-430: 1/10 HP Motor.

   Switch will OPEN between 400-600 RPM and the Compressor STOPS, with the Drivemotor operating. Switch will CLOSE between 1300-1400 RPM and the Compressor will RESTART, with Drivemotor building back up to normal operating speed.
10. Remove the Insulation Strap and Clip, the Right and Left Spout Insulation pieces, the Retaining Ring and the Hook and Cap from the top of the Freezer Assembly.
11. Inspect the Top Bearing. If moisture is around Bearing, wipe clean of all grease and apply a coating of Shell Alvania 3 Grease, Scotsman P/N 19-0309-01, 1 lb. can. Replace parts removed in step 10.

NOTE

BEFORE next step, move the manual ON-OFF toggle switch, on the front of the Control Box, to the OFF position to stop the Fan Motor and Icemaker.

12. Clean the Air-Cooled Condenser, using vacuum cleaner, whisk broom or brush. Instruct customer to clean frequently and to be sure Icemaker and Fan Motor are OFF.
13. Check that Fan Blades move freely, are not touching any surfaces and are not bent or out of balance.

14. Check for refrigerant leaks and for proper frost line, which should frost out of accumulator at least half way to the Compressor and in some areas, back to service valve.
15. Check for water leaks. Tighten drain line connections. Pour water down Bin drain to be sure that drain line is open and clear.
16. Check the quality of ice. Ice flakes should be wet when formed, but will cure rapidly to normal hardness in the Bin.
17. Check the Bin Thermostatic Ice Control Bulb.

NOTE

The Bin Thermostat is factory set at 10-degrees F. differential and should keep the entire Icemaker system shut off at least 10 minutes in high ambient temperatures, longer in low ambient temperatures during normal operation. Settings are 35-degrees F. CUT-OUT and 45-degrees F. CUT-IN.

18. Check the Spout Switch.

NOTE

The Spout Switch is manually reset and functions as a safety switch, to automatically stop the icemaking process if the Bin Thermostat Bulb were to fall and cause ice to jam up in the Ice Tube.

III. CLEANING - Icemaker

1. Remove screws and the Left Front Lower Panel.
2. Move the manual ON-OFF toggle switch, on the front of the Control Box, to the OFF position.
3. Remove all ice from the Ice Storage Bin.
4. CLOSE the water supply shutoff valve; or block the float in the Water Reservoir.
5. Disconnect the tube between the Water Reservoir and the bottom of the Freezer Assembly and drain water from the Reservoir and tube. Reconnect the tube.

WARNING

SCOTSMAN Ice Machine Cleaner contains Phosphoric and Hydroxyacetic acids. These compounds are corrosive and may cause burns if swallowed, DO NOT induce vomiting. Give large amounts of water or milk. Call Physician immediately. In case of external contact flush with water. KEEP OUT OF THE REACH OF CHILDREN.

6. Prepare cleaning solution: Mix four ounces of SCOTSMAN Ice Machine Cleaner with one quart of hot water.
7. Remove the Cover to the Water Reservoir.
8. Slowly pour the cleaning solution into the Water Reservoir.
9. Move the manual ON-OFF toggle switch, on the front of the Control Box, to the ON position.
10. Continue to slowly pour the cleaning solution into the Water Reservoir, maintain level just below the Reservoir overflow.
11. Continue icemaking, using the cleaning solution, until all the solution is used up and the Water Reservoir is almost empty. DO NOT allow the icemaker to operate with empty Reservoir.
12. Move the manual ON-OFF toggle switch, on the front of the Control Box to the OFF position.
13. Wash and rinse the Water Reservoir.
14. OPEN the water supply shutoff valve; or remove the block from the float in the Water Reservoir.
15. Move the manual ON-OFF toggle switch, on the front of the Control Box, to the ON position.
16. Continue icemaking for at least 15 minutes, to flush out any cleaning solution. Check ice for acid taste - continue icemaking until ice tastes sweet.
17. Move the manual ON-OFF toggle switch, on the front of the Control Box, to the OFF position.

CAUTION

DO NOT use ice produced from the cleaning solution. Be sure none remains in the bin.

18. Remove all ice from the Ice Storage Bin.
19. Add hot water to the Ice Storage Bin and thoroughly wash and rinse all surfaces within the Bin.
20. Clean and sanitize the Ice Storage Bin each week.

SECTION VI
SERVICE DIAGNOSIS

The Service Diagnosis Section is for use in aiding the serviceman in diagnosing a particular problem for pin-pointing the area in which the problem lies, thus an ever available reference for proper corrective action.

The following charts lists corrective actions for the causes of known symptoms of certain problems that can occur in the Icemaking - Refrigeration System.

I. ICEMAKING - REFRIGERATION SYSTEM

SYMPTOM	POSSIBLE CAUSE	CORRECTION
Water Leaks.	Defective water seal.	Replace Seal.
	Gravity feed line leaking.	Check hose clamps.
	Water level in reservoir too high.	Adjust water level to 3/8-inch below reservoir overflow, then raise reservoir until water flows out freezer spout, then lower reservoir 3/4-inch.
	Storage bin drain and connecting fittings.	Check and repair.
Excessive noise or chattering.	Mineral or scale deposit on auger and inner freezing chamber walls.	For severe deposit, remove and manually polish auger, sand inner chamber walls of freezer barrel.
		For lighter concentration, use Scotsman Ice Machine Cleaner periodically.
	Intermittent water supply.	Check and clean water strainer.
		Check gravity feed line for air lock.
		Remove air lock.
	Water level in reservoir too low.	See CORRECTION for Water Leaks above.
	Gear Reducer loose on frame.	Tighten Gear Reducer.
	Motor compressor not solid on rubber mounts.	Repair or replace rubber mounts.
	Gearmotor end-play or worn bearing.	Repair or replace bearing.
Making wet ice. (Ice melts too quickly, is not cold enough to properly cure in the Bin.)	Surrounding air temperature too high.	Correct or move cabinet.
	Under or over-charge of refrigerant.	Recharge with proper amount. Should frost out of accumulator at least 8-inches. See nameplate for correct charge. See CORRECTION for Water Leaks above.

ICEMAKING - REFRIGERATION SYSTEM (Con't)

SYMPTOM	POSSIBLE CAUSE	CORRECTION
Making wet ice (cont'd)	Back pressure too high.	Overcharge of refrigerant, Faulty compressor or high head pressure. Lower pressure as indicated.
	Faulty compressor or valve plate.	Repair or replace compressor or valve plate.
Low ice production.	Loss of refrigerant. Under or over-charge of refrigerant.	Check and recharge. See NAMEPLATE for correct charge.
	Drivemotor weak.	Replace Drivemotor.
	Dirty or plugged condenser.	Clean condenser.
	Low water level in water reservoir.	See CORRECTION for Water leaks above.
	Partial restriction in capillary tube or drier.	Moisture in system. Overcharge of oil in system. Remove charge by blowing back through cap tube. Replace drier and recharge.
	Inlet water strainer partially plugged.	Remove screen and clean.
	Corroded or stained auger due to water condition.	Remove auger and clean, or use Scotsman Ice Machine Cleaner. See Maintenance Section
Gearmotor noise.	Low on oil.	Remove case cover to check for proper oil level. Top of gears should be covered. Use: Sun Oil Company Prestige 50-EP
Icemaker will not operate.	Blown fuse in line.	Replace fuse and check for cause of blown fuse.
	Bin thermostat set too high.	Adjust thermostat. Set at 35-degrees cut-out, 45-degrees cut-in.
	Loose electrical connection.	Check wiring.
	Switch in OFF position.	Set switch to ON position.
	Inoperative master switch.	Replace switch or thermal overload.
	Off on manual-reset pressure control.	Reset.
Icemaker continues to operate with full storage bin.	Bin thermostat not properly set or is defective.	Re-set or replace bin thermostat Re-set to 35-degrees cut-out, 45-degrees cut-in.
Compressor cycles intermittently.	Low voltage.	Check for overloading.
	Dirty condenser.	Clean condenser.
	Air circulation blocked. Inoperative condenser fan motor.	Remove cause or move unit. Replace motor.

ICEMAKING - REFRIGERATION SYSTEM (Cont'd)

SYMPTOM	POSSIBLE CAUSE	CORRECTION
Compressor Cycles intermittently (cont'd)	Non-condensable gases in system.	Check for gas leaks, evacuate and recharge.
	Bin thermostat differential too small causing short cycling.	Widen differential 35-degrees cut-out, 45-degrees cut in.
	Cycling on ice spout microswitch.	Set or replace Bin thermostat.
Icemaker operates but makes no ice.	Loss or undercharge of refrigerant.	Check for leaks and recharge. See NAMEPLATE for correct charge.
	Water not entering freezing chamber.	Plugged strainer or supply line. Check and clean. Air lock in gravity feed line. Check and remove air lock.
	Moisture in system.	Check, evacuate, replace drier.
		Recharge. See NAMEPLATE for correct charge.
	Water seal leaking.	Replace seal.
	Water turned off while unit was operating.	Freezer inlet water line froze shut. Unit must be turned off and defrosted.
	Drivemotor or drive coupling. stripped.	Repair or replace drivemotor or drive coupling.

SECTION VII

WIRING DIAGRAMS

This Section is provided as an aid in understanding the electrical circuitry of the Automatic Flaker.

The Wiring Diagrams in this Section are:
Figure 7-1. Wiring Diagram AF-430 - Air-Cooled.
Figure 7-2. Wiring Diagram AF-430 - Water-Cooled.

WARNING

When conducting a continuity check of the Automatic Flaker:

1. **Disconnect the main power source.**
2. **DO NOT use an incandescent lamp or jumper wire, conduct all tests with a volt-ohm-meter.**

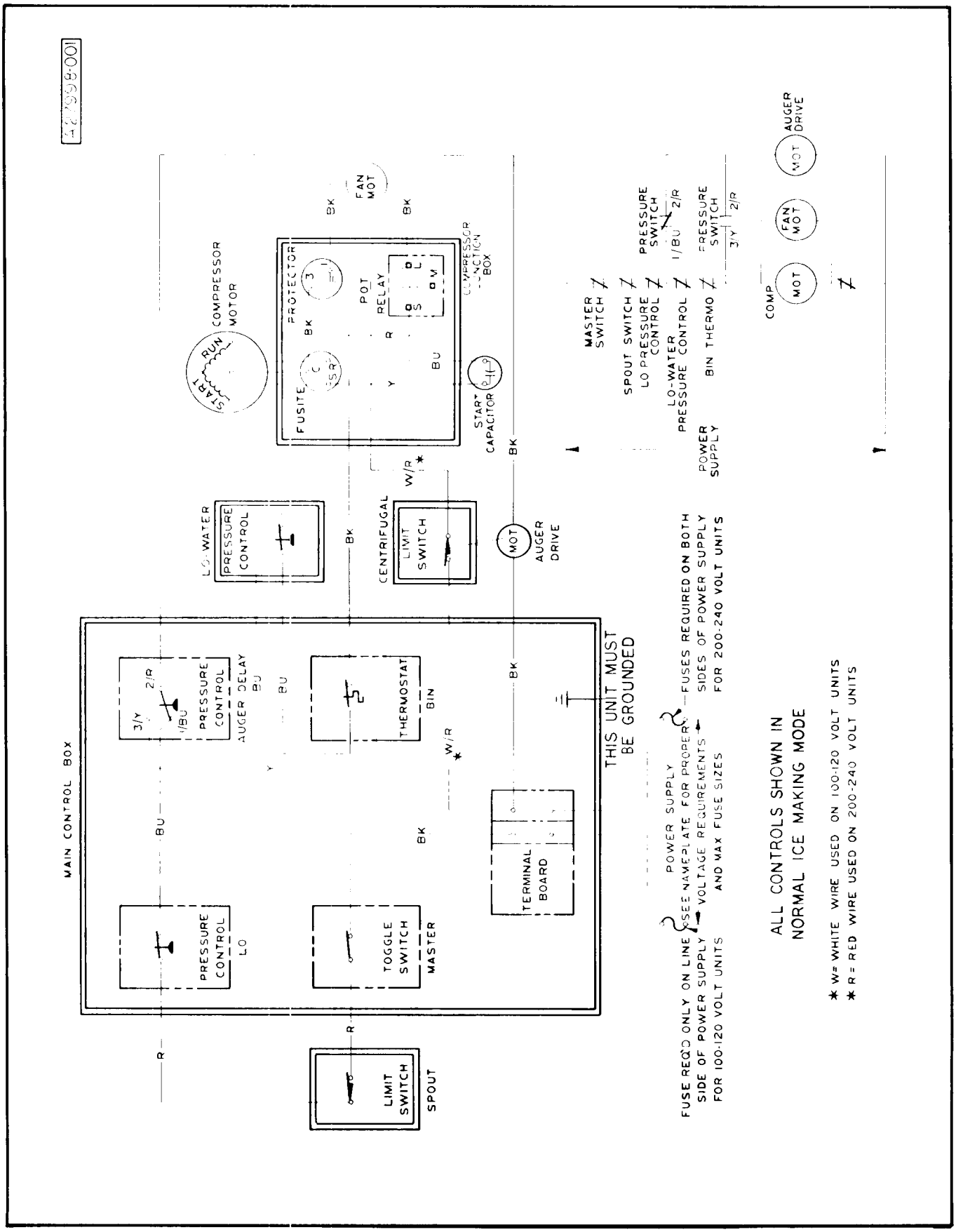

Figure 7-1. Wiring Diagram AF-430 - Air-Cooled.

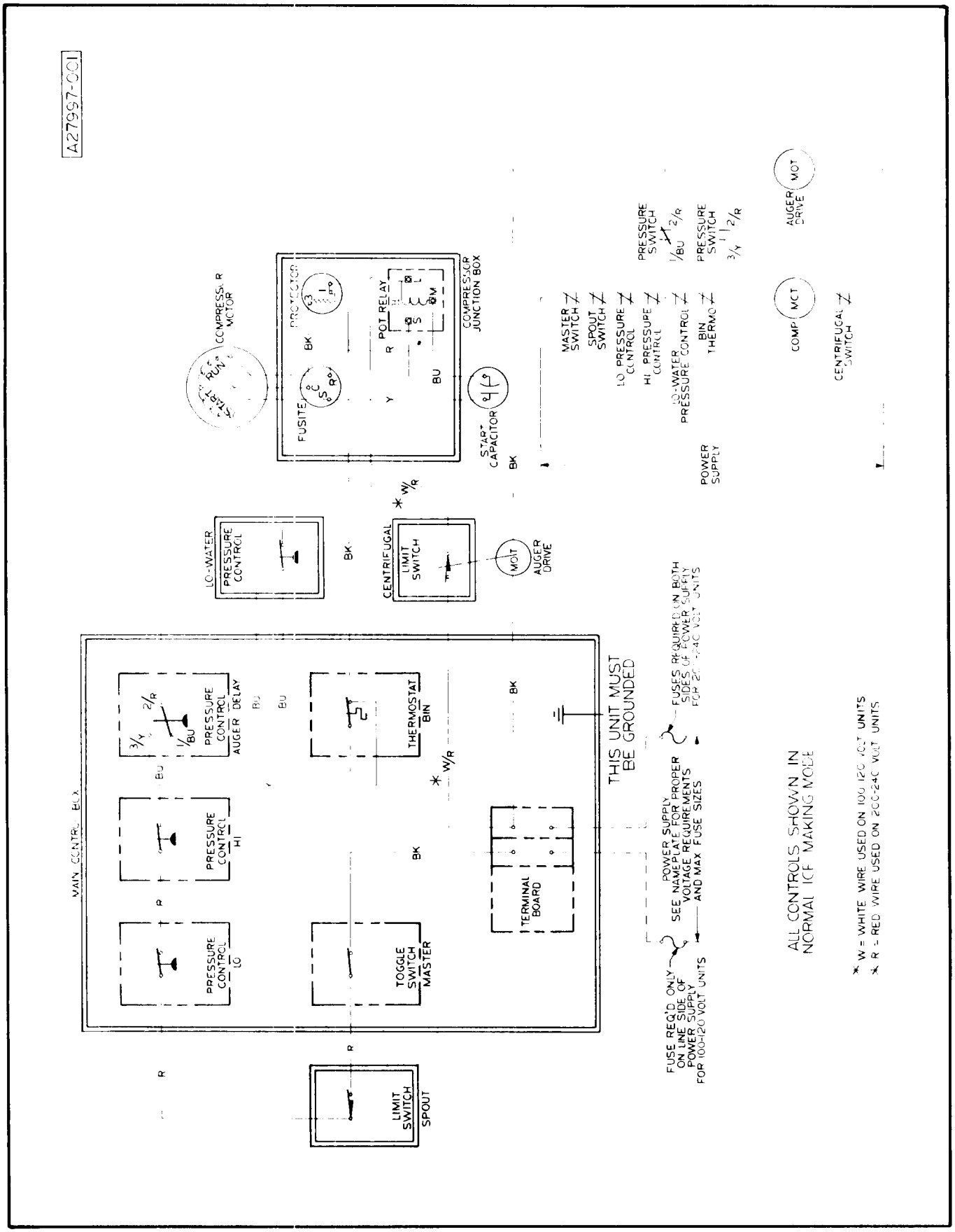

Figure 7-2. Wiring Diagram AF-430 - Water-Cooled.

SECTION VIII

THE PARTS ILLUSTRATIONS AND PARTS LIST

I. GENERAL

This section contains the Parts Illustrations and the Parts List for each of the major assemblies in the AF-430 Automatic Flaker.

Each Parts Illustration shows an assembly as an exploded view, with an Index Number for each part or sub-assembly, given in disassembly order. These Index Numbers key with the Parts List for the assembly and are found in the Parts List Column headed Index Number. The Description Column gives the identifying nomenclature for the item indexed. The Part Number Column gives the number of item. The Number Required Column gives the number of items required per assembly, but not necessarily the total number of parts required per Flaker.

All assemblies are cross-referenced both from the major assembly listing where they first appear in the Parts Listing to their break-down listing, and from the break-down listing, back to the major assembly (next higher assembly) listing.

A *No Number* designation, when used in the Part Number Column indicates the unit is not available from SCOTSMAN as an assembly. This designation is used only for the convenience and clarity of division in cataloging.

When an Index Number is followed by a letter (e.g. 1a, 1b), the letter indicates the part listed is part of the assembly indexed by the basic Index Number. The number required of the part indexed by the number and letter combination is for only one of the assemblies indexed by the basic Index Number and not necessarily the total number or parts used in the Flaker. Where the notation *Ref* occurs in the Number Required Column the number of the assemblies or parts required for use in the Flaker will be found under a previous Index Number or in the next higher assembly Parts Listing. The next higher listing Figure/Index number is shown in the Description Column immediately following the items description.

II. HOW TO USE THE ILLUSTRATIONS AND PARTS LIST

To find the part number of a required part or assembly, turn to the List of Illustrations and find the page number of the Parts Illustration of the major or sub-assembly containing the part. Turn to the indicated page and locate the part and its Index Number on the specific illustration. Find the Index Number on the required part in the Parts List to determine the complete description of the part.

III. HOW TO ORDER PARTS OR ASSEMBLIES

When ordering parts or assemblies, to avoid costly delays and errors in shipment, give the part number, the complete description shown in the list, and the quantities of each part or assembly required. Also include the Model name, the serial number of the Flaker for which the part is required, and for parts which require color matching, the color of the Cabinet.

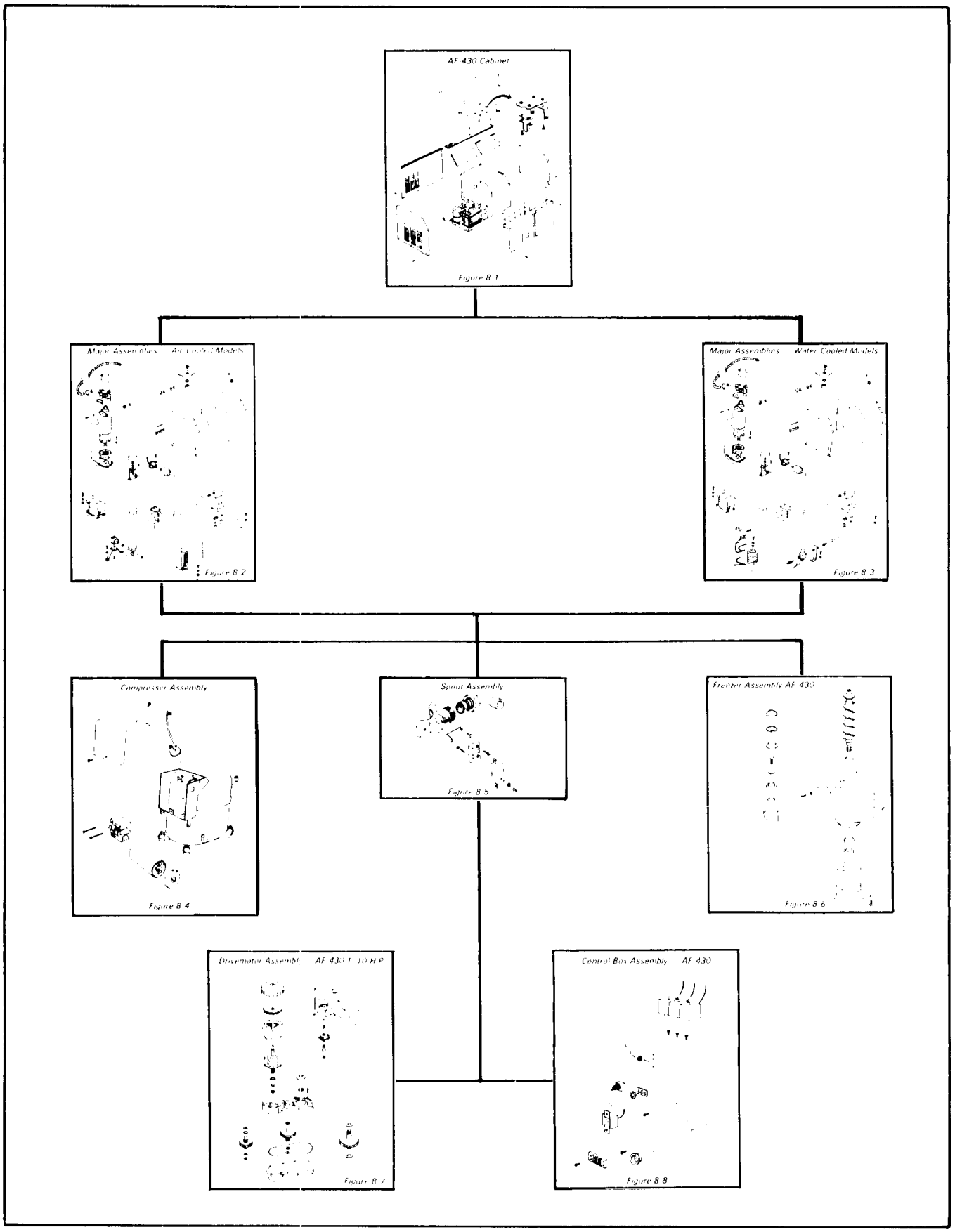

Figure 8-A. Automatic Flaker AF-430 Flow Chart

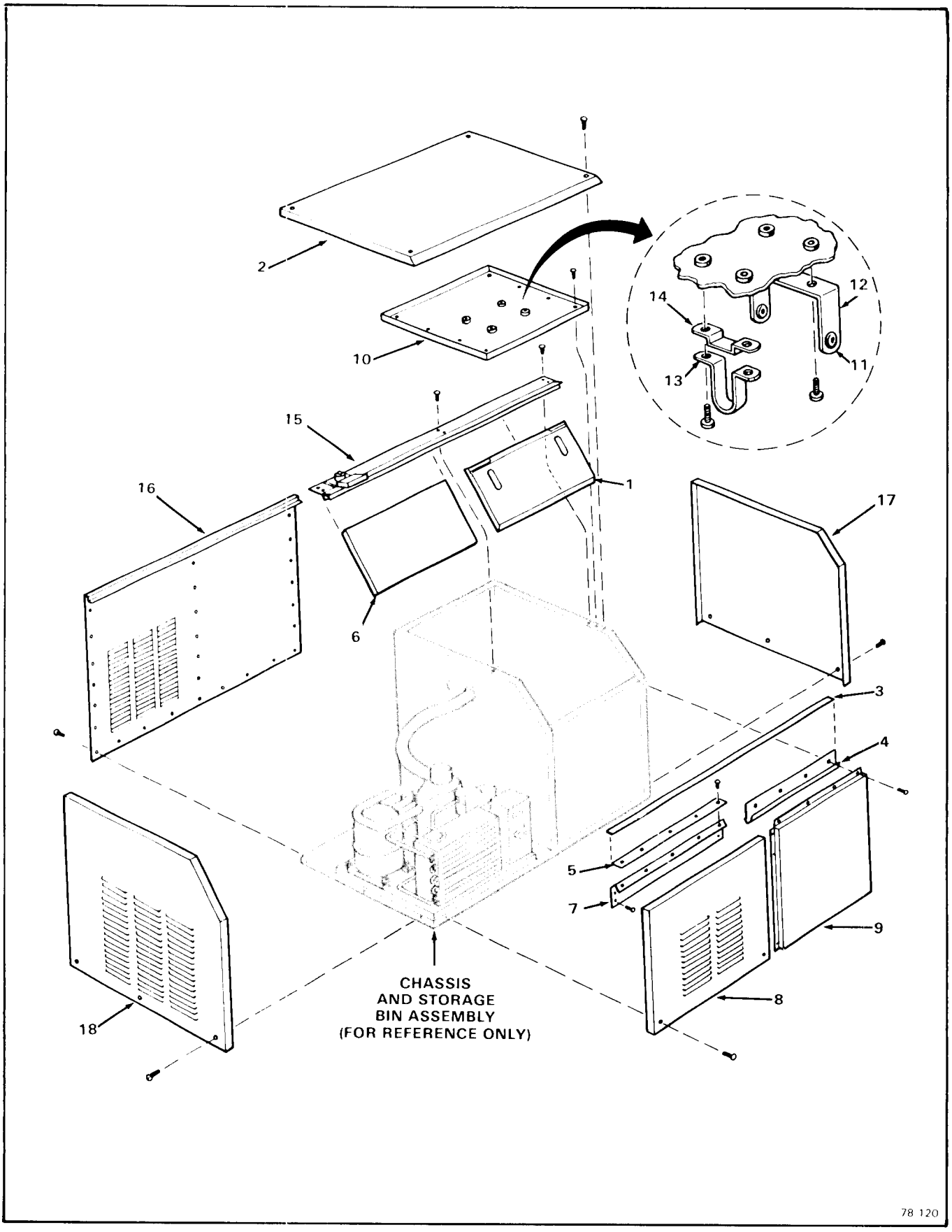

Figure 8-1. AF-430 Cabinet.

Figure 8-1. AF-430 Cabinet.

INDEX NO.	DESCRIPTION	PART NUMBER	REQ'D NUMBER
	AF-430 Cabinet	No Number	1
	* * *		
1	Door, Ice Access (Orange w/C.R.S. Painted Cabinet)	02-2130-01	1
	Door, Ice Access (Gray w/Stainless Steel Cabinet)	02-2130-02	1
	* * *		
2	Panel, Top (C.R.S.) Painted)	A24799-004	1
	Panel, Top (Stainless Steel)	A24799-005	1
	attaching parts, Index 2		
	Screw, No. 8 x 1-3/4 S/T Flat Hd	03-1419-19	4
	* * *		
3	Insert, Plastic (43.44 in. lg.)	15-0324-00	1
	* * *		
4	Strip, Moulding — Right Side	15-0620-01	1
	attaching parts, Index 4 & 9		
	Screw, No. 8 x 3/8 S/T Flat Hd	03-1419-05	4
	* * *		
5	Strip, Moulding — Left Side	15-0578-01	1
	attaching parts, Index 5 to 8		
	Screw, No. 8 x 3/8 S/T Flat Hd	03-1419-05	5
	* * *		
6	Panel, Upper — Left Front (C.R.S. Painted)	A24795-003	1
	Panel, Upper — Left Front (Stainless Steel)	A24795-002	1
	* * *		
7	Bracket, Left Front	A24787-001	1
	attaching parts, Index 5 & 7		
	Screw, No. 8 x 1/2 T/F Tap	03-1404-09	4
	* * *		
8	Panel, Lower —Left Front (C.R.S. Painted)	A24796-003	1
	Panel, Lower —Left Front (Stainless Steel)	A24796-004	1

Figure 8-1. AF-430 Cabinet. (cont'd)

INDEX NO.	DESCRIPTION	PART NUMBER	REQ'D NUMBER
	attaching parts, Index 8		
	Screw, No. 8 x 1-1/2 S/T Flat Hd	03-1419-16	2
	* * *		
9	Panel, Right Front (C.R.S. Painted)	A24794-003	1
	Panel, Right Front (Stainless Steel)	A24794-002	1
	attaching parts, Index 4 & 9		
	Screw, No. 8 x 3/8 S/T Flat Hd	03-1419-05	Ref.
	* * *		
10	Cover, Storage Bin	A27980-001	1
	attaching parts, Index 10		
	Screw, No. 8 x 1/2 T/F Tap	03-1404-09	10
	* * *		
11	Grommet	13-0557-00	2
12	Bracket, Bin Thermo	A27924-001	1
13	Holder, Tube	A27922-001	1
14	Retainer, Tube	A27923-001	1
	attaching parts, Index 12, 13, 14 to 10		
	Screw, Thumb — No. 10-24 x 1/2 Knurled Hd	03-0727-00	4
	* * *		
15	Track Assembly, Door	A28823-001	1
	attaching parts, Index 15		
	Screw, No. 8 x 1/2 T/F Tap	03-1404-09	6
	* * *		
16	Panel, Back (Galvanized Steel)	A27033-003	1
	attaching parts, Index 16		
	Lockwasher, No. 8 External Tooth — Carbon Steel Zinc Plated	03-1417-03	4
	Screw, No. 8 x 1/2 T/F Tap	03-1404-09	27
	* * *		
17	Panel, Right Side (C.R.S. Painted)	A24800-003	1
	Panel, Right Side (Stainless Steel)	A24800-002	1

Figure 8-1. AF-430 Cabinet. (cont'd)

INDEX NO.	DESCRIPTION	PART NUMBER	REQ'D NUMBER
	attaching parts, Index 17		
	Screw, No. 8 x 1/2 T/F Tap (SS)	03-1404-10	5
	* * *		
18	Panel, Left Side (C.R.S. Painted)	A27034-003	1
	Panel, Left Side (Stainless Steel)	A27034-002	1
	attaching parts, Index 18		
	Lockwasher, No. 8 External Tooth — Carbon Steel Zinc Plated	03-1417-03	2
	Screw, No. 8 x 1/2 T/F Tap (SS)	03-1404-10	3

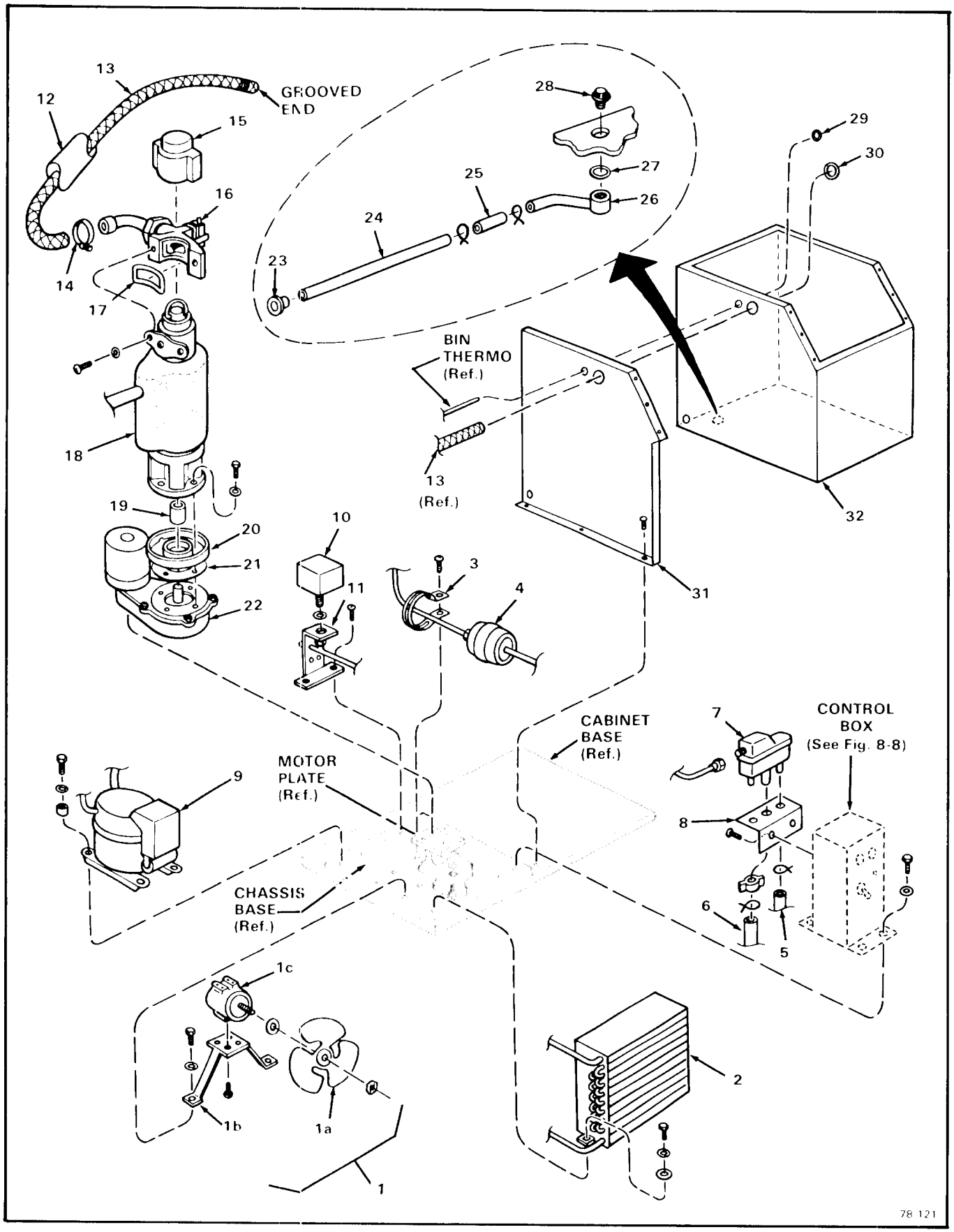

Figure 8-2. Major Assemblies - Air-Cooled Models.

Figure 8-2. Major Assemblies — Air-Cooled Models

INDEX NO.	DESCRIPTION	PART NUMBER	REQ'D NUMBER
	Major Assemblies - Air-Cooled Models	No. Number	Ref.
	* * *		
1	Bracket Assembly, Fan Motor and Mounting	No Number	1
1a	Blade, Fan	18-3309-01	1
	Pad, Vibration (p/o Fan Motor)	No Number	1
	Nut, Fan Mounting (p/o Fan Blade)	No Number	1
1b	Bracket, Fan Mounting	18-0422-00	1
1c	Motor, Fan	12-1576-01	1
	attaching parts, Index 1c to 1b		
	Screw (p/o Fan Motor)	No Number	4
	attaching parts, Index 1 to Chassis base		
	Lockwasher, No. 1/4 External Tooth - Carbon Steel Zinc Plated	03-1417-09	2
	Screw, No. 1/4-20 x 1/2 T/C Hex Hd	03-0571-00	2
	* * *		
2	Condenser - Air-Cooled	18-3717-01	1
	attaching parts, Index 2		
	Lockwasher, No. 1/4 External Tooth - Carbon Steel Zinc Plated	03-1417-09	2
	Screw, No. 1/4-20 x 1/2 T/C Hex Hd	03-0571-00	2
	* * *		
3	Brace, Drier	A09386-000	1
4	Drier	02-2426-01	1
	attaching parts, Index 3 and 4		
	Screw, No. 10-16 x 3/4 S/T	03-1360-01	1
	* * *		
5	Tube (Reservoir Overflow to Drip Pan)	13-0079-03	1
6	Tube (Reservoir to Freezer Inlet)	13-0674-09	1
	attaching parts, Index 5 and 6		
	Clamp (Index 5)	02-0535-00	1
	Clamp (Index 6)	02-0694-00	2
	* * *		

Figure 8-2. Major Assemblies — Air-Cooled Models (Cont'd)

INDEX NO.	DESCRIPTION	PART NUMBER	REQ'D NUMBER
7	Reservoir	02-2217-01	1
	Valve Assembly, Float (Not Shown)	02-2217-02	1
	attaching parts, Index 7		
	Wing Nut (p/o Reservoir)	No Number	1
	* * *		
8	Bracket, Mounting	A20959-000	1
	attaching parts, Index 8		
	Screw, No. 8-18 x 1/2 Phil Pan Hd	03-1572-01	2
	* * *		
9	Compressor (See Figure 8-4)	18-4500-01	1
	attaching parts, Index 9		
	Grommet	18-2200-28	4
	Sleeve, Mounting	18-2200-27	4
	Lockwasher, No. 5/16 External Tooth - Carbon Steel Zinc Plated	03-1417-12	4
	Washer, Special	03-1408-24	4
	Screw, No. 5/16-18 x 1-3/4 Hex Cap	03-1405-40	4
	* * *		
10	Control, Pressure - H^2O	11-0296-00	1
11	Bracket, Utility	A27993-001	1
	O-Ring	13-0617-26	1
	attaching parts, Index 10 and 11		
	Nut, Pal	03-1394-00	1
	Screw, No. 10-16 x 3/4 S/T	03-1360-01	2
	* * *		
12	Covering, Tube	13-0279-00	1
13	Tube, Ice	A28042-006	1
	attaching parts, Index 12 and 13		
14	Clamp, Hose	02-0179-02	1
	* * *		

Figure 8-2. Major Assemblies — Air-Cooled Models (Cont'd)

INDEX NO.	DESCRIPTION	PART NUMBER	REQ'D NUMBER
15	Cap, Freezer	13-0815-01	1
	* * *		
16	Spout Assembly	No Number	1
	(See Figure 8-5)		
17	Gasket, Spout	13-0679-00	1
	attaching parts, Index 16 and 17		
	Washer, No. 1/4 Internal Tooth - Phosphor Bronze	03-1417-07	2
	Screw, No. 1/4-20 x 1 Soc-Hd Cap (SS)	03-1544-03	2
	* * *		
18	Freezer Assembly	No Number	1
	(See Figure 8-6)		
	attaching parts, Index 18		
	Lockwasher, No. 5/16 External Tooth - Carbon Steel Zinc Plated	03-1417-12	3
	Screw, No. 5/16-18 x 3/4 Hex Cap	03-1420-04	3
	* * *		
19	Coupling	15-0575-01	1
	* * *		
20	Pan, Drip	A18153-000	1
	* * *		
21	Gasket	13-0628-00	1
	* * *		
22	Drivemotor Assembly	A31977-021	1
	(See Figure 8-7)		
	attaching parts, Index 22		
	Lockwasher, No. 1/4 External Tooth - Carbon Steel Zinc Plated	03-1417-09	4
	Screw, No. 1/4-20 x 1/2 Hex Cap	03-1405-03	4
	* * *		
23	Bushing, Snap	12-1213-10	1
	* * *		
24	Tube, Bin Drain	No Number	1

Figure 8-2. Major Assemblies — Air-Cooled Models (Cont'd)

INDEX NO.	DESCRIPTION	PART NUMBER	REQ'D NUMBER
25	Tube, Tygon	13-0674-06	1
	attaching parts, Index 24, 25, 26		
	Clamp, Hose	02-1338-00	2
	* * *		
26	Drain Bin	A27018-001	1
27	O-Ring	13-0617-11	1
	attaching parts, Index 26, 27, 28 to 32		
28	Top, Drain (screws into Index 26)	02-1741-00	1
	* * *		
29	Grommet	13-0557-01	1
	* * *		
30	Pad, Sealing	13-0806-01	1
	* * *		
31	Retainer, Insulation	No Number	1
	attaching parts, Index 31		
	Screw, No. 8 x 1/2 T/F Tap	03-1404-09	3
	* * *		
32	Bin, Storage	02-2762-02	1
	* * *		
	NOTE: See Figure 8-8 for replacement parts within the Control Box Assembly.		

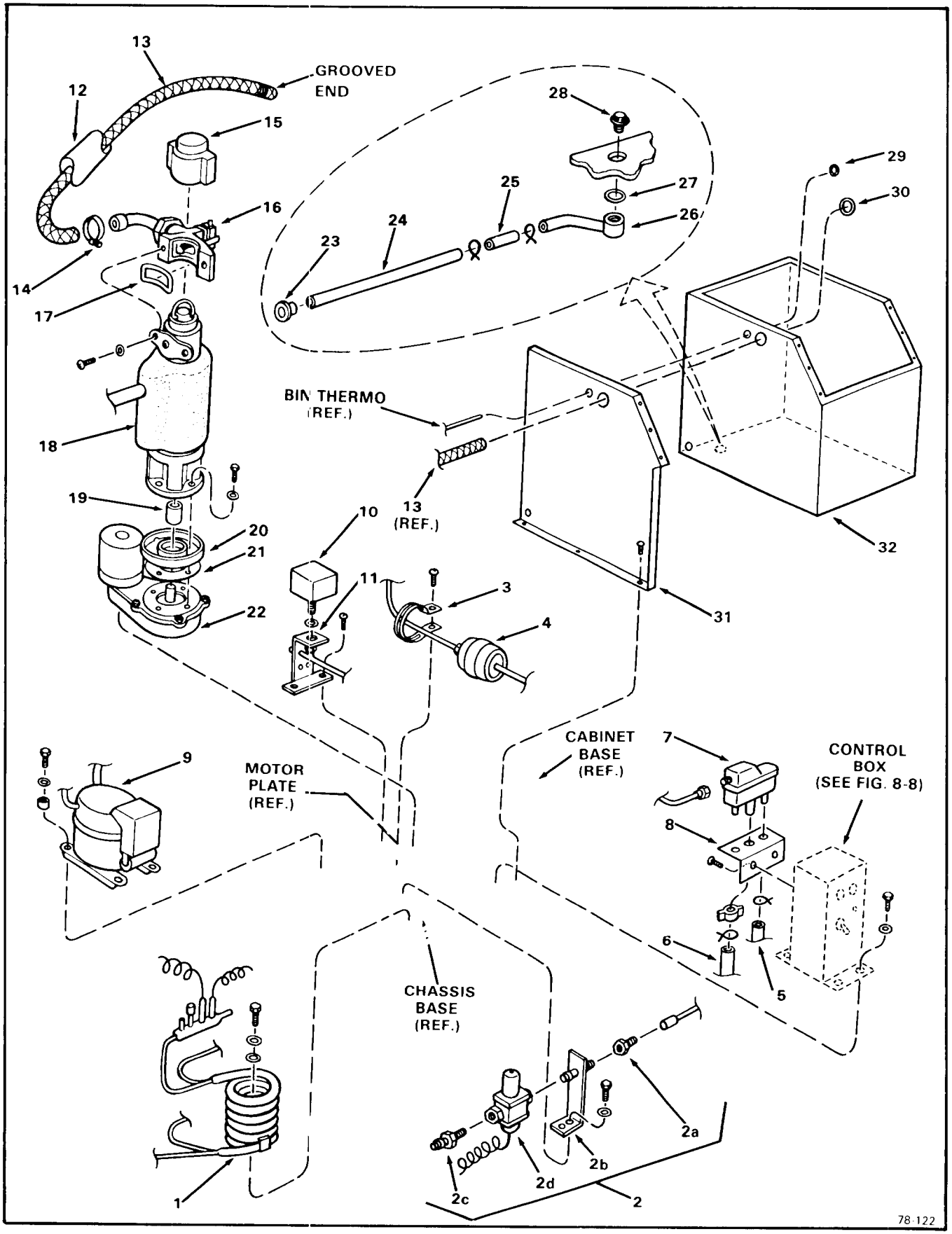

Figure 8-3. Major Assemblies - Water-Cooled

Figure 8-3. Major Assemblies — Water-Cooled Models

INDEX NO.	DESCRIPTION	PART NUMBER	REQ'D NUMBER
	Major Assemblies - Water-Cooled Model	No Number	Ref.
	* * *		
1	Condenser - Water-Cooled	18-3303-02	1
	attaching parts, Index 1		
	Lockwasher, No. 1/4 External Tooth - Carbon Steel Zinc Plated	03-1417-09	2
	Screw, No. 1/4-20 x 1/2 T/C Hex Hd	03-0571-00	2
	* * *		
2	Regulator Assembly, Water	No Number	1
	attaching parts, Index 2		
	Lockwasher, No. 1/4 External Tooth - Carbon Steel Zinc Plated	03-1417-09	2
	Screw, No. 1/4-20 x 1/2 T/C Hex Hd	03-0571-00	2
2a	Union, Half - No. 5/8-18 x 3/8 Flare	16-0677-01	1
2b	Nipple Assembly, Pipe (w/Bracket)	A15924-000	1
2c	Coupling - 3/8 NPT x 3/8 Flare Brass	16-0355-00	1
2d	Valve, Water Regulator	11-0198-02	1
	* * *		
3	Brace, Drier	A09386-000	1
4	Drier	02-2426-01	1
	attaching parts, Index 3 and 4		
	Screw, No. 10-16 x 3/4 S/T	03-1360-01	1
	* * *		
5	Tube (Reservoir Overflow to Drip Pan)	13-0079-03	1
6	Tube (Reservoir to Freezer Inlet)	13-0674-09	1
	attaching parts, Index 5 and 6		
	Clamp (Index 5)	02-0535-00	1
	Clamp (Index 6)	02-0694-00	2
	* * *		
7	Reservoir	02-2217-01	1
	Valve Assembly, Float (Not shown)	02-2217-02	1

Figure 8-3. Major Assemblies — Water-Cooled Models (Cont'd)

INDEX NO.	DESCRIPTION	PART NUMBER	REQ'D NUMBER
	attaching parts, Index 7		
	Wing Nut (p/o Reservoir)	No Number	1
	* * *		
8	Bracket, Mounting	A20959-000	1
	attaching parts, Index 8		
	Screw, No. 8-18 x 1/2 S/T Phil Pan Hd	03-1572-01	2
	* * *		
9	Compressor (See Figure 8-4)	18-4500-01	1
	attaching parts, Index 9		
	Grommet	18-2200-28	4
	Sleeve, Mounting	18-2200-27	4
	Lockwasher, No. 5/16 External Tooth - Carbon Steel Zinc Plated	03-1417-12	4
	Washer, Special	03-1408-24	4
	Screw, No. 5/16-18 x 1-3/4 Hex Cap	03-1405-40	4
	* * *		
10	Control, Pressure - H^2O	11-0296-00	1
11	Bracket, Utility	A27993-001	1
	O-Ring	13-0617-26	1
	Bushing, Snap	12-1213-06	2
	attaching parts, Index 10 and 11		
	Nut, Pal	03-1394-00	1
	Screw, No. 10-16 x 3/4 S/T	03-1360-01	2
	* * *		
12	Covering, Tube	13-0279-00	1
13	Tube, Ice	A28042-001	1
	attaching parts, Index 12 and 13		
14	Clamp, Hose	02-0179-02	1
	* * *		
15	Cap, Freezer	13-0815-01	1
	* * *		

Figure 8-3. Major Assemblies — Water-Cooled Models (Cont'd)

INDEX NO.	DESCRIPTION	PART NUMBER	REQ'D NUMBER
16	Spout Assembly	No Number	1
	(See Figure 8-5)		
	attaching parts, Index 16 and 17		
17	Gasket, Spout	13-0679-00	1
	Washer, No. 1/4 Internal Tooth - Phosphor Bronze	03-1417-07	2
	Screw, No. 1/4-20 x 1 Soc-Hd Cap	03-1544-03	2
	* * *		
18	Freezer Assembly	No Number	1
	(See Figure 8-6)		
	attaching parts, Index 18		
	Lockwasher, No. 5/16 External Tooth - Carbon Steel Zinc Plated	03-1417-12	3
	Screw, No. 5/16-18 x 3/4 Hex Cap	03-1420-04	3
	* * *		
19	Coupling	15-0575-01	1
	* * *		
20	Pan, Drip	A18153-000	1
	* * *		
21	Gasket	13-0628-00	1
	* * *		
22	Drivemotor Assembly	A31977-021	1
	(See Figure 8-7)		
	attaching parts, Index 22		
	Lockwasher, No. 1/4 External Toth - Carbon Steel Zinc Plated	03-1417-09	4
	Screw, No. 1/4-20 x 1/2 Hex Cap	03-1405-03	4
	* * *		
23	Bushing, Snap	12-1213-10	1
	* * *		
24	Tube, Bin Drain	No Number	1
	* * *		

Figure 8-3. Major Assemblies — Water-Cooled Models (Cont'd)

INDEX NO.	DESCRIPTION	PART NUMBER	REQ'D NUMBER
25	Tube, Tygon	13-0674-06	1
	attaching parts, Index 24, 25, 26		
	Clamp Hose	02-1338-00	2
	* * *		
26	Drain, Bin	A27018-001	1
27	O-Ring	13-0617-11	1
	attaching parts, Index 26, 27, 28 to 32		
28	Top, Drain (Screws into Index 26)	02-1741-00	1
	* * *		
29	Grommet	13-0557-01	1
	* * *		
30	Pad, Sealing	13-0806-01	1
	* * *		
31	Retainer, Insulation	No Number	1
	attaching parts, Index 31		
	Screw, No. 8 x 1/2 T/F Tap	03-1404-09	3
	* * *		
32	Bin Storage	02-2762-02	1
	* * *		
	NOTE: See Figure 8-8 for replacement parts within the Control Box Assembly.		

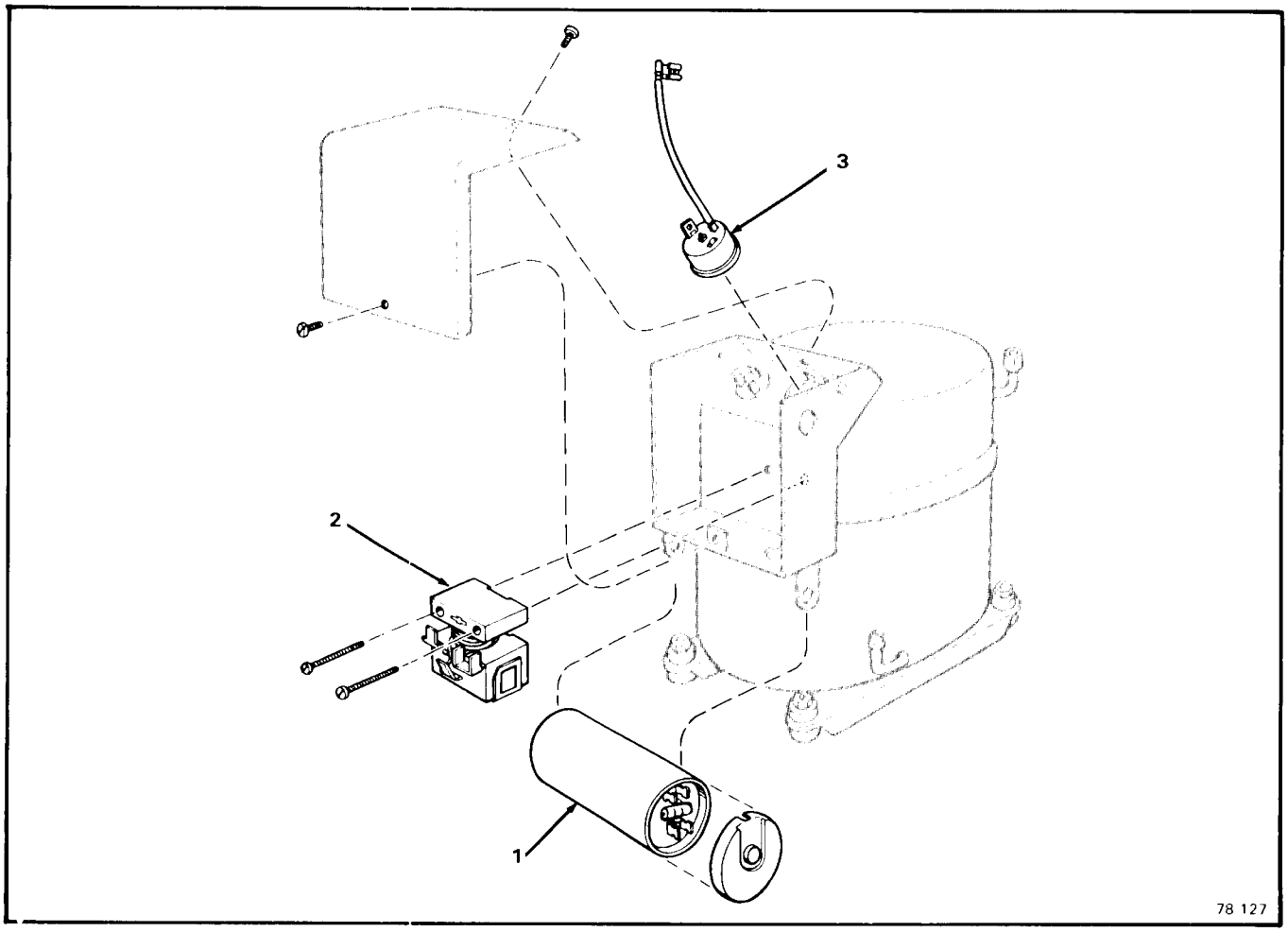

Figure 8-4. Compressor Assembly

Figure 8-4. Compressor Assembly

INDEX NO.	DESCRIPTION	PART NUMBER	REQ'D NUMBER
	Compressor Assembly (See Figure/Index 8-2/9 and 8-3/9 for next higher Assembly) * * *	18-4500-01	Ref.
1	Capacitor - w/cap * * *	18-1901-33	1
2	Relay * * *	18-2200-26	1
3	Overload * * *	18-2200-25	1

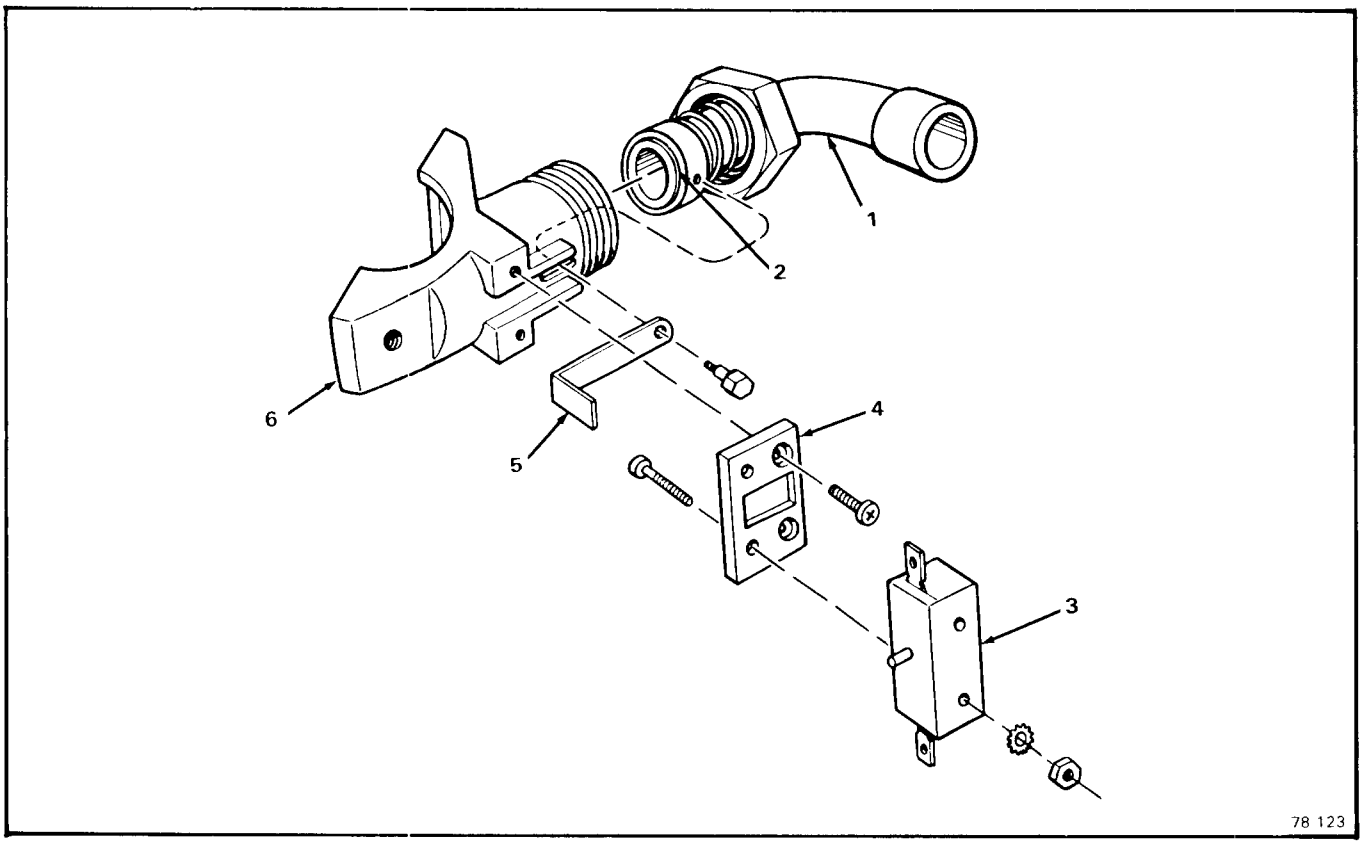

Figure 8-5. Spout Assembly.

Figure 8-5. Spout Assembly.

INDEX NO.	DESCRIPTION	PART NUMBER	REQ'D NUMBER
	Spout Assembly (See Figure/Index 8-2/16 and 8-3/16 for next higher Assembly) * * *	No Number	Ref.
1	Tube, Ice Discharge * * *	A26542-001	1
2	O-Ring * * *	13-0617-41	1
3	Switch attaching parts, Index 3 to 4 Screw, No. 6-32 x 1 Flat Hd. Mach - Phil Recess	12-1664-00 03-1418-38	1 2

Figure 8-5. Spout Assembly (Cont'd.)

INDEX NO.	DESCRIPTION	PART NUMBER	REQ'D NUMBER
	Lockwasher No. 6 External Tooth - Phosphor Bronze	03-1417-01	2
	Nut, No. 6-32 Hex Mach Screw	03-1406-01	2
	* * *		
4	Barrier, Thermal	02-2377-01	1
	attaching parts, Index 4 to 6		
	Screw, No. 6-32 x 3/8 Flat Hd Mach - Phil Recess	03-1418-01	2
	* * *		
5	Actuator, Switch	A27511-001	1
	attaching parts, Index 5 to 6		
	Screw, Shoulder	A25305-001	1
	* * *		
6	Spout	A24934-001	1
	* * *		

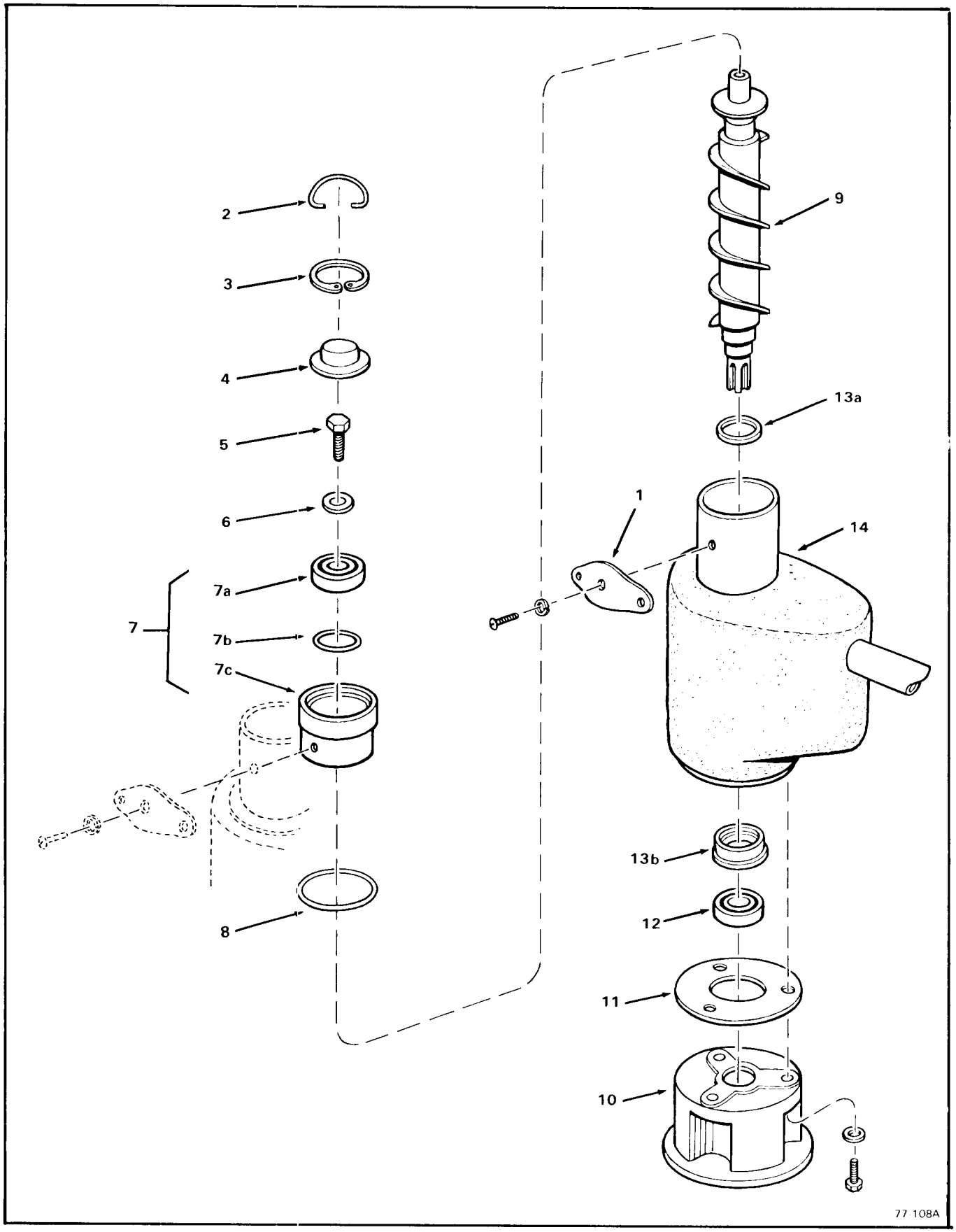

Figure 8-6. Freezer Assembly — AF-430.

Figure 8-6. Freezer Assembly

INDEX NO.	DESCRIPTION	PART NUMBER	REQ'D NUMBER
	Freezer Assembly	No Number	Ref.
	(See Figure/Index 8-2/18 and 8-3/18		
	for next higher Assembly)		
	* * *		
1	Plate, Spout	A18430-002	1
	attaching parts, Index 1		
	Washer, No. 3 16 Non-Metallic	03-1409-14	1
	Screw, No. 10-24 x 3/8 Phil Recessed Hd Sealing	03-1506-01	1
	* * *		
2	Hook, Cap	A08162-000	1
	* * *		
3	Ring, Retaining	03-1558-03	1
	* * *		
4	Cap	A07701-000	1
	* * *		
5	Screw, Cap	03-0758-00	1
6	Washer	A07699-000	1
	* * *		
7	Bearing/Retainer - w/Bearing	A26707-001	1
7a	Bearing	02-0695-00	1
7b	O-Ring	13-0617-16	1
7c	Retainer, Bearing (Order P/N A26707-001)	No Number	Ref.
	* * *		
8	O-Ring	13-0617-29	1
	* * *		
9	Auger	A29622-001	1
10	Adaptor	08-0595-01	1
	attaching parts, Index 10		

Figure 8-6. Freezer Assembly (Cont'd.)

INDEX NO.	DESCRIPTION	PART NUMBER	REQ'D NUMBER
	Lockwasher, No. 5/16 Helical Spring	03-1410-04	3
	Screw, No. 5/16-18 x 7/8 Hex Cap	03-1405-42	3
	* * *		
11	Gasket	03-1505-00	1
	* * *		
12	Bearing	02-0417-00	1
	* * *		
13	Seal, Water	A18945-000	1
13a	Seal, Upper (Fits on Index 9)	No Number	Ref.
13b	Seal, Lower (Fits on top of Index 12)	No Number	Ref.
	* * *		
14	Freezer - (Repair Assembly)	A29344-020	1
	* * *		

AF430 SERVICE PARTS

GEARMOTOR

ITEM NUMBER	PART NUMBER	DESCRIPTION
1.	12-2059-01	Switch
2.	A27895-001	Housing
3.	A27494-001	Centrifugal Sw. Kit
4.	03-1403-77	Screw
5.	A30579-001	Shaft and Actuator
6.	03-1408-36	Washer
7.	02-1503-00	Grease seal
8.	03-1408-21	Washer
9.	03-1408-04	Washer
10.	02-2445-01	Output shaft
11.	03-1515-03	Retaining ring
12.	03-1602-01	Woodruff Key
13.	02-2444-01	Output gear
14.	02-1505-00	O-ring
15.	03-0774-11	Roll pin
16.	A28166-001	Gear Case
17.	03-1408-39	Washer
18.	03-1408-40	Washer shim
19.	02-2439-01	Second gear and third pinion
20.	03-1408-41	Washer
21.	03-1408-38	Washer
22.	02-2438-01	First gear and second pinion
23.	A28165-021	Gear box cover
24.	02-1504-00	Grease seal
25.	02-1501-00	Bearing
26.	03-1408-08	Washer
27.	A31978-001	Rotor for A31977
	A28160-001	Rotor for A28151
28.	12-2302-01	Stator for A31977
	12-1400-01	Stator for A28151
29.	A28168-001	Fan
30.	A17047-002	Motor Housing with bearing
31.	A25835-001	Oil
32.	A31977-021	Complete Gear Mot Assembly

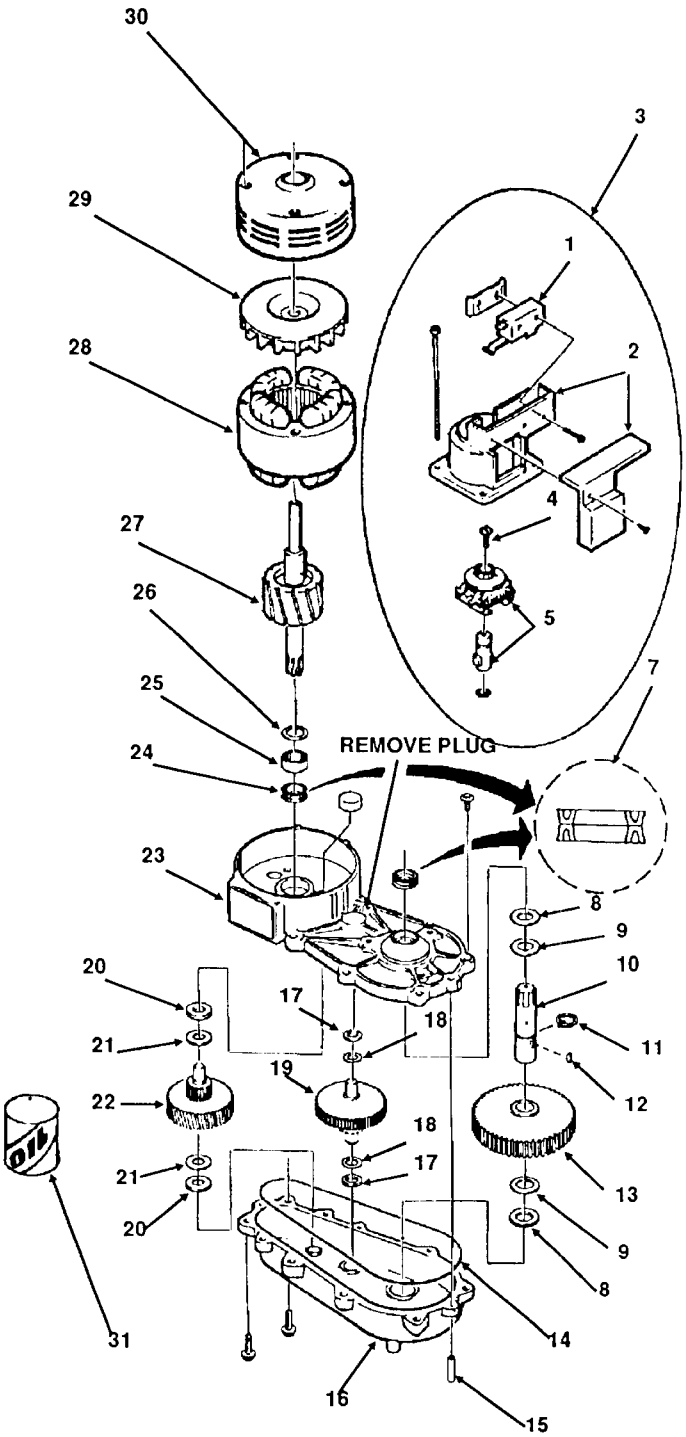

THERE IS NO DOCUMENT
FOR THESE NUMBERS

Pages 24 thru 26

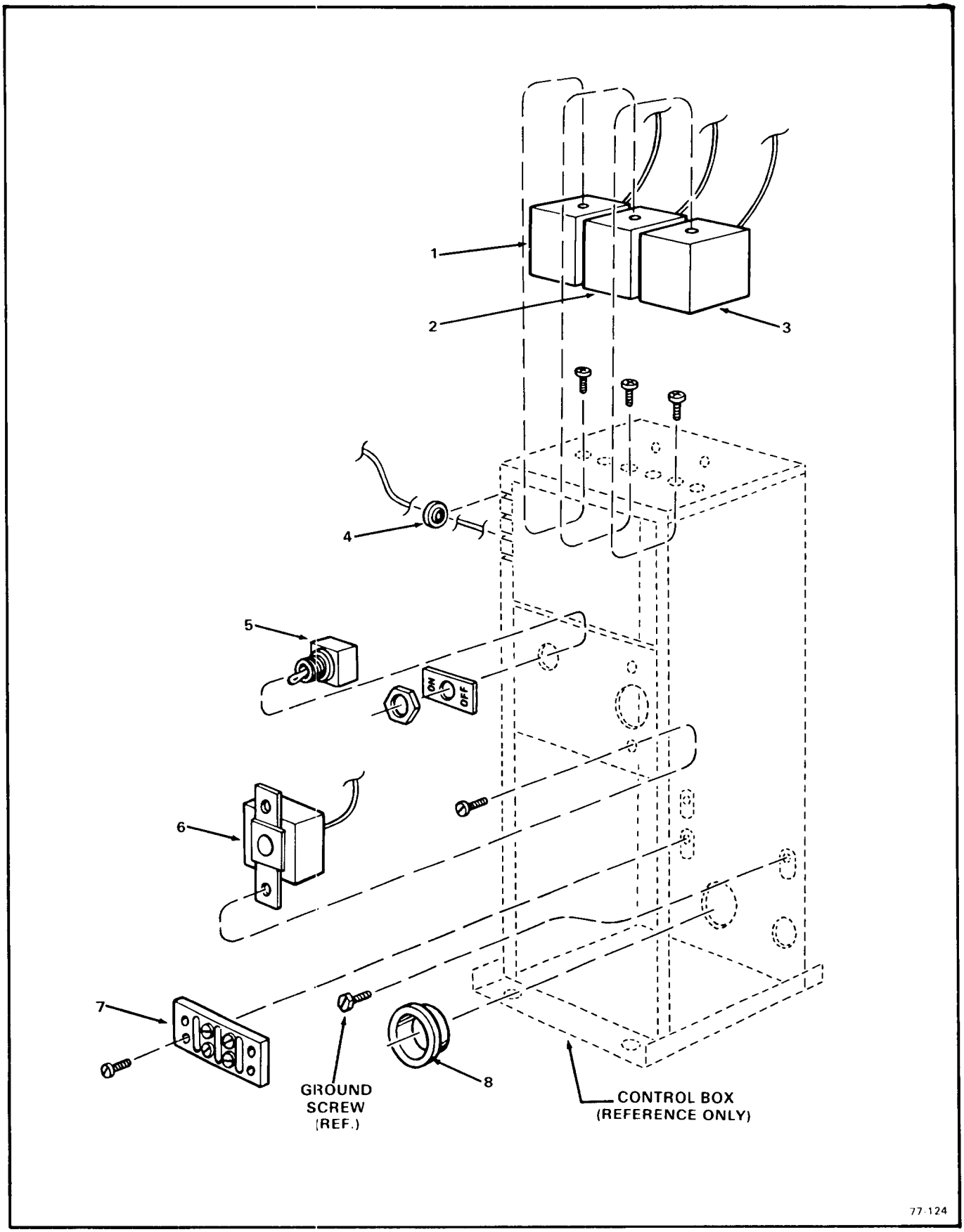

Figure 8-8. Control Box Assembly.

Figure 8-8. Control Box Assembly — AF-430.

INDEX NO.	DESCRIPTION	PART NUMBER	REQ'D NUMBER
	Control Box Assembly - AF-430	No Number	Ref.
	(See Figure 8-2/8-3		
	for next higher Assembly)		
	* * *		
1	Control, Low-Pressure	11-0420-01	1
	attaching parts, Index 1		
	Screw, No. 6-32 x 1/4 Pan Hd	03-1403-02	2
	* * *		
2	Control, Hi-Pressure (Water-Cooled Model)	11-0388-02	1
	attaching parts, Index 2		
	Screw, No. 6-32 x 1/4 Pan Hd	03-1403-02	2
	* * *		
3	Control, Auger Delay	11-0402-01	1
	attachig parts, Index 3		
	Screw, No. 6-32 x 1/4 Pan Hd	03-1403-02	2
	* * *		
4	Grommet	13-0557-00	4
	* * *		
5	Switch, Toggle	12-0426-01	1
	* * *		
6	Thermostat, Bin	11-0354-00	1
	attaching parts, Index 6		
	Screw, No. 8-32 x 3/8 Phil Recess Pan Hd	03-1403-17	2
	* * *		
7	Board, Terminal	12-0813-04	1
	attaching parts, Index 7		
	Screw, No. 8-32 x 3/4 Phil Recess Pan Hd	03-1403-21	2
	* * *		
8	Bushing, Snap	12-1213-12	1
	* * *		

TABLE OF CONTENTS

Table of Contents i

List of Illustrations iii

Specifications iv

SECTION I- GENERAL INFORMATION & INSTALLATION 1-1

I. Introduction 1-1

II. Unpacking and Inspection 1-1

III. Location and Leveling 1-2

IV. Electrical Connections 1-2

V. Water Supply and Drain Connections 1-2

VI. Final Check List 1-3

SECTION II.- START UP OPERATION 2-1

I. Start Up 2-1

SECTION III.- PRINCIPLES OF OPERATION - How it Works 3-1

I. Icemaker 3-1

II. Electrical/Refrigeration 3-2

SECTION IV.- ADJUSTMENT AND REMOVAL AND REPLACEMENT PROCEDURES 4-1

I. Adjustment of the Bin Thermostat Control 4-1

II. Adjustment of the Leg Levelers 4-2

III. Adjustment of the Water Regulator Assembly 4-2

IV. Adjustment of the Water Reservoir Float 4-2

V. Removal & Replacement of the Auger, Water Seal, Bearings and Coupling 4-2

VI. Removal & Replacement of the Compressor Assembly 4-3

VII. Removal & Replacement of the Condenser - Air Cooled Models 4-4

VIII. Removal & Replacement of the Condenser - Water-Cooled Models 4-4

TABLE OF CONTENTS (Cont'd)

IX. Removal & Replacement of the Drier 4-4

X. Removal & Replacement of the Drivemotor Assembly 4-5

XI. Removal & Replacement of the Fan Motor Assembly - Air-Cooled Models 4-5

XII. Removal & Replacement of the Freezer Assembly 4-5

XIII. Removal and Replacement of the Spout Assembly 4-6

XIV. Removal and Replacement of the Water Pressure Control 4-7

XV. Removal & Replacement of the Water Regulator Assembly - Water-Cooled Models 4-7

XVI. Removal & Replacement of the Water Reservoir Assembly 4-7

SECTION V.- MAINTENANCE & CLEANING INSTRUCTIONS 5-1

I. General 5-1

II. Icemaker 5-1

III. CLEANING - Icemaker 5-2

SECTION VI. SERVICE DIAGNOSIS 6-1

I. Icemaking - Refrigeration System 6-1

SECTION VII. WIRING DIAGRAMS 7-1

Wiring Diagram AF-730 Air-Cooled Model 7-2

Wiring Diagram AF-730 Water-Cooled Model 7-3

SECTION VIII.- THE PARTS ILLUSTRATIONS AND PARTS LISTS 8-1

I. General 8-1

II. How to Use the Illustrations and Parts Lists 8-1

III. How to Order Parts or Assemblies 8-1

LIST OF ILLUSTRATIONS

	Specifications - Model AF-730	iv
Figure 1-1.	Installation Practice	1-4
Figure 2-1.	Water Schematic	2-1
Figure 3-1.	Refrigeration Cycle	3-1
Figure 4-1.	Adjustment of the Temperature Control	4-1
Figure 4-2.	Removal of the Freezer Assembly	4-6
Figure 4-3.	Removal of the Spout Assembly	4-6
Figure 4-4.	Removal of the Water Reservoir Assembly	4-7
Figure 7-1.	Wiring Diagram - AF-730 Air-Cooled	7-2
Figure 7-2.	Wiring Diagram - AF-730 Water-Cooled	7-3
Figure 8-A.	Automatic Flaker AF-730 Flow Chart	8-2
Figure 8-1.	AF-730 Cabinet	8-3
Figure 8-2.	Major Assemblies - Air-Cooled	8-7
Figure 8-3.	Major Assemblies - Water-Cooled	8-12
Figure 8-4.	Compressor Assembly	8-17
Figure 8-5.	Spout Assembly	8-18
Figure 8-6.	Freezer Assembly	8-20
Figure 8-7.	Drivemotor Assembly	8-23
Figure 8-8.	Control Box Assembly	8-27

This icemaker has been engineered to our own rigid safety and performance standards. The National Sanitation Foundation (NSF) seal, signifies that it is listed with the NSF and that it complies with the materials and construction standards of the NSF. In addition, the Underwriters Laboratories, Inc., (UL) Listing Mark and the Canadian Standards Association (CSA) Monogram, both signify that its construction and design have been inspected and tested by them. NSF, UL and CSA inspectors also periodically examine production icemakers at the factory, to assure continued compliance.

To retain the safety and performance built into this icemaker, it is important that installation and maintenance be conducted in the manner outlined in this manual.

SPECIFICATIONS
MODEL AF-730

REAR VIEW

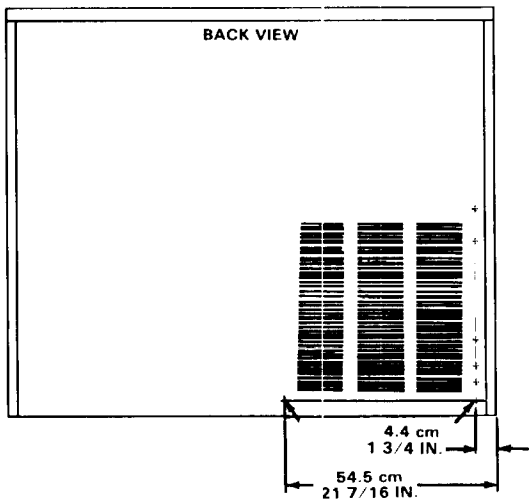

TOP VIEW

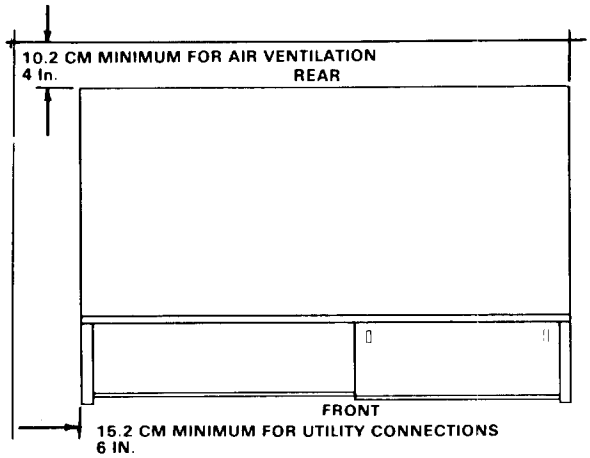

FRONT VIEW

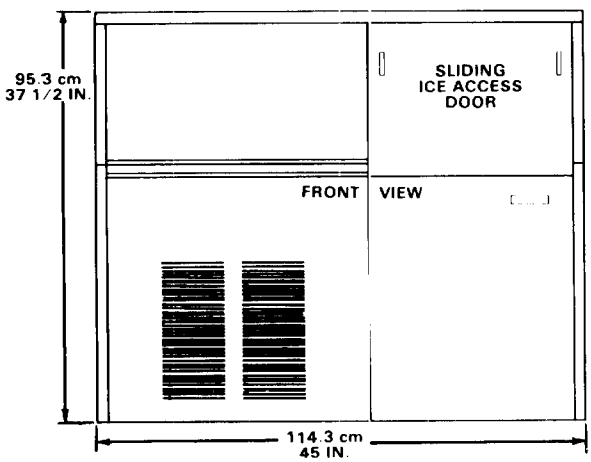

LEFT SIDE VIEW

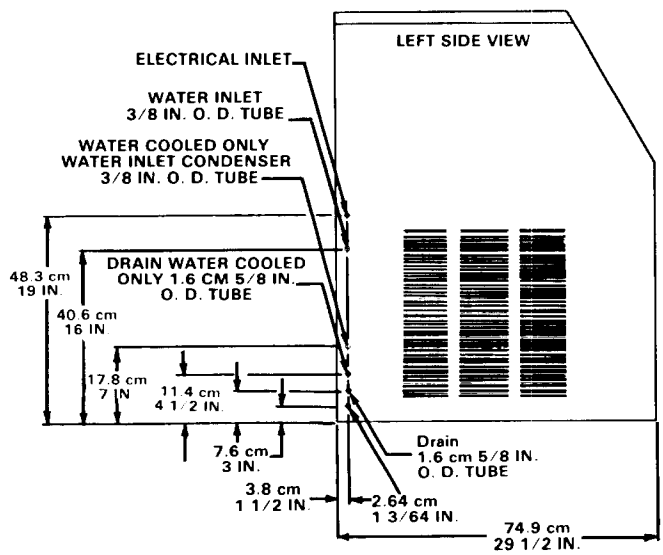

SPECIFICATIONS (Cont'd)

MODEL AF-730

Bin Storage: 255 lbs.*
Air-Cooled: Model AF730A-1A

Water-Cooled: Model AF730W-1A

Electrical: 115/60/1

Est. Ship. Wt.: 350 lbs.

TWO YEARS PARTS WARRANTY

FRONT SERVICE ACCESS PANEL

OPTIONAL LEG KIT

KLP2E - 6-inch metal legs, Black Enamel
KLP2S - 6-inch metal legs, Nickel Plated

OPTIONAL PANEL KIT

SPKAF30 - Stainless Panel Kit

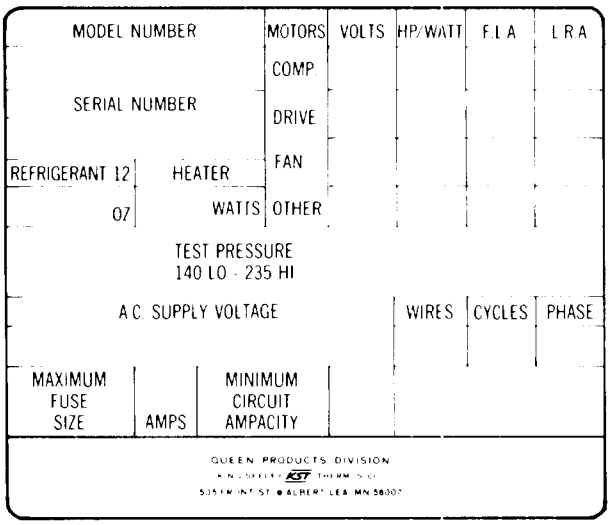

SEE NAMEPLATE for electrical and refrigeration specifications. NAMEPLATE located on rear service panel, near left rear corner of the cabinet. Shown in column at left.

Remove Left Front Lower Panel to locate the Model/Serial Number plate, shown below, on the front center of the chassis base.

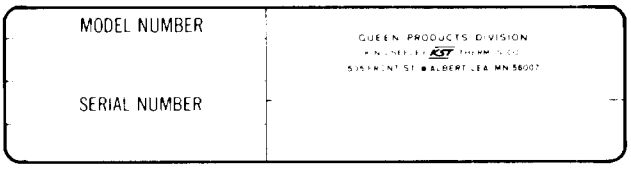

* Storage based on 90-percent of total volume x 34 lb. average density of ice. A.R.I. Standard.

We reserve the right to make product improvements at any time. Specifications and design are subject to change without notice.

SECTION I
GENERAL INFORMATION & INSTALLATION

I. INTRODUCTION

This manual provides specifications and the step-by-step procedures for the installation, start-up and operation, and the maintenance and cleaning for the SCOTSMAN Model AF-730 Automatic Flakers.

The Model AF-730 Automatic Flakers are quality designed, engineered and constructed, and thoroughly tested ice-making and ice storage systems, providing the utmost in flexibility to fit the needs of a particular user. Separate sections detail more specifically: General Information & Installation; Start Up Operation; Principles of Operation; Adjustment and Removal and Replacement Procedures; Maintenance and cleaning Instructions; Service Diagnosis; Wiring Diagrams; and, the Illustrated Assemblies and Parts Lists.

One of the outstanding features of this series of Flakers, is the easy access for service. With the front of the cabinet removed, the entire refrigeration systems can be removed from the cabinet for on-the-spot repair. When it might become necessary to return the system to the shop, a second unit may be installed in a very short time, so the customer is not without ice. The repaired unit can be re-installed in a matter of minutes.

DESCRIPTION

An attractive compact cabinet of textured metal with a Sandalwood enamel finish, a dark brown textured upper left front panel, and an orange bin access sliding door. Also, an optional stainless steel cabinet finish is available. Both cabinets have up-to-date styling, and easily removable panels for easy access to electrical and mechanical components.

SEALED REFRIGERATION SYSTEM

To provide quiet efficient operation of the Icemaker, the Compressor motor is internally spring-mounted. The Compressor motor is covered by a five year parts warranty. The Freezer Assembly is powered by a direct-drive, gear motor, Drivemotor Assembly.

SELF-CONTAINED STORAGE BIN

These Automatic Flakers store their own ice supply in a heavily insulated ice storage bin, with a sliding Ice Access Door opening the upper front of the cabinet.

STANDARD OVERALL DIMENSIONS

The standard overall dimensions of the cabinet depth, counter top height, etc., allows the Automatic Flaker to be installed in harmony with the existing counter equipment.

II. UNPACKING AND INSPECTION

1. Call your authorized SCOTSMAN Distributor or Dealer, for proper installation. He's listed under ICE MAKING EQUIPMENT and MACHINERY in the yellow pages of the telephone book.
2. Visually inspect the exterior of the shipping container and skid and any severe damage noted, should be reported to the delivering carrier; and, a concealed damage claim filed subject to internal inspection, with carrier representative present.
3. BEFORE removal of any panels or packing, carefully lay the cabinet on its back and remove the shipping bolts and the shipping base or skid.
4. When ordered, install the optional leg levelers in the cabinet base sockets; then, raise the cabinet to the upright position.
5. Remove screws and shipping tape, and all doors and service panels from the cabinet, and inspect for any concealed damage. Notify carrier of any concealed damage claims, as stated in step 2 above.
6. Remove all internal support packing, tape and wires in machinery compartment.
7. Check that refrigerant lines do not rub or touch lines or other surfaces, and that fan blades, if any, move freely.
8. Check that the Compressor is snug on all mounting pads.

9. Remove Water Strainer from shipping envelope, for installation in water supply line.
10. Use clean damp cloth or disposable paper wiper to wipe clean the interior surfaces of the ice storage Bin and the exterior surfaces of the cabinet.
11. See NAMEPLATE on the rear service panel, near the left rear corner of the cabinet and check that the location source voltage corresponds with the voltage specified on the nameplate.

CAUTION

Improper voltage supplied to the Icemaker will void your parts replacement program.

12. Remove the Manufacturer's Registration Card from the front of the User's Manual and fill in all spaces including: Model Number and Serial Number taken from the aluminum plate located at the front center of the Chassis base, with Left Front Lower Panel removed. Forward the completed, self addressed, registration card to the SCOTSMAN Factory.

III. LOCATION AND LEVELING

WARNING

This Automatic Flaker is NOT designed for outdoor installations where air temperatures are below 50-degrees F., or above 100-degrees F., and the water temperature is below 40-degrees F. or above 100-degrees F. Extended periods of operation at temperatures exceeding these limitations will constitute misuse, under the terms of the SCOTSMAN Manufacturer's limited warranty, resulting in LOSS of warranty coverage.

1. Position the Cabinet in the selected permanent location.

NOTE

Prior consideration for location site shall include:

1. *Minimum room temperature 50-degrees F. and maximum room temperature 100-degrees F.*
2. *Water inlet temperatures: Minimum 40-degrees F. and Maximum 100-degrees F.*
3. *Well ventilated location for Air-Cooled model, advising user to frequently clean Condenser, located directly behind left front service door.*
4. *SERVICE ACCESS: Adequate space for all service connections, through the rear of the Cabinet. A six-inch minimum clearance at rear, left and front louvered panels, for routing cooling air drawn into and exhausted out of the compartment, to maintain proper condensing operation on Air-Cooled models.*

2. Level the Cabinet in both the left-to-right and front-to-rear directions. The optional leveling legs can be adjusted with an open-end wrench.

IV. ELECTRICAL CONNECTIONS

SEE NAMEPLATE for current requirements to determine wire size to be used for electrical hookup. The Automatic Flaker requires a solid earth ground wire. See wiring diagram.

Be certain the Automatic Flaker is connected to its own electrical circuit and individually fused. The maximum allowable voltage variation should not exceed ten percent of the nameplate rating, even under starting conditions. Low voltages can cause erratic operation and may be responsible for serious damage to the overload switch and motor windings.

All external wiring should conform to the National, State and local electrical code requirements. Usually an electrical permit and services of a licensed electrician will be required.

V. WATER SUPPLY AND DRAIN CONNECTIONS

A. AIR-COOLED MODELS: The recommended water supply line is a 1/4-inch O.D. copper tubing. Connect to cold water supply line with standard plumbing fittings, with a shutoff valve installed in an accessible place between the water supply and the Cabinet.

A wire mesh strainer is provided and must be installed with the cleanout plug down. Locate the strainer in the water supply line, next to the Cabinet with the arrow on the strainer, in the direction of the water flow. The strainer protects against large particles of rust, scale, etc., which may be loosened in the water supply pipe, at the time of installation.

WARNING

To prevent damage to the freezer mechanism, DO NOT operate this unit when the water supply is OFF, or is below 20 PSI, the recommended water pressure. Position the master switch to the OFF position, until proper water supply is resumed.

The Icemaker in this Cabinet will not operate when water supply temperatures are below 40-degrees F. or above 100-degrees F.

B. WATER-COOLED MODELS: On Water-Cooled models a separate connection, to the Condenser is required. A 3/8-inch O.D. copper tubing is provided for a separate water inlet line to be connected and a separate drain line to be connected.

NOTE

The WARNING, in the text above for the Air-Cooled models equally applies for the Water-Cooled models. In both type installations, water supply must be installed to conform with local plumbing codes. In some cases, a plumbing permit and services of a licensed plumber will be required.

C. DRAIN CONNECTIONS: All drains are gravity type and must be 1/4-inch per foot on horizontal runs. The drains to be installed to conform with local code. The drain receptacle should be an open, trapped or vented construction.

Recommended Bin drain is 5/8-inch O.D. copper tubing, should be vented and run separately. Connect a drain line to 7/16-inch I.D. tube from the freezer drip pan and a separate drain line to 3/8-inch O.D. drain tube from the Water-Cooled Condenser, on Water-Cooled models.

WARNING

This Automatic Flaker will NOT operate when water supply temperature is below 40-degrees F., or above 100-degrees F. Requires 20 PSI flowing water pressure, without interruption.

VI. FINAL CHECK LIST

1. Is the Cabinet level? (IMPORTANT)
2. Have all electrical and piping connections been made?
3. Has the voltage been tested and checked against the nameplate rating?
4. Is the water supply line shutoff valve installed and electrical wiring properly connected?
5. Have the Bin and Cabinet been wiped clean?
6. Have the Compressor hold down nuts been checked, to be sure the Compressor is snug on the mounting pads?
7. Has the owner/user been given the User Manual and instructed on how to operate the Icemaker.
8. Has the Manufacturer's Registration Card been properly filled out? Check for correct Model and Serial numbers from Serial nameplate, then mail the completed card to the SCOTSMAN factory.
9. Check all refrigerant lines and conduit lines, to guard against vibration or rubbing and possible failure.
10. Is there at least six inches clearance behind and around Cabinet for proper air circulation?
11. Is the Cabinet in a room where ambient temperatures are a minimum of 50-degrees F. all year around?
12. Has water supply pressure been checked to insure a minimum of 20 PSI?
13. Has the owner been given name and telephone number of the authorized SCOTSMAN Service Agency serving him?

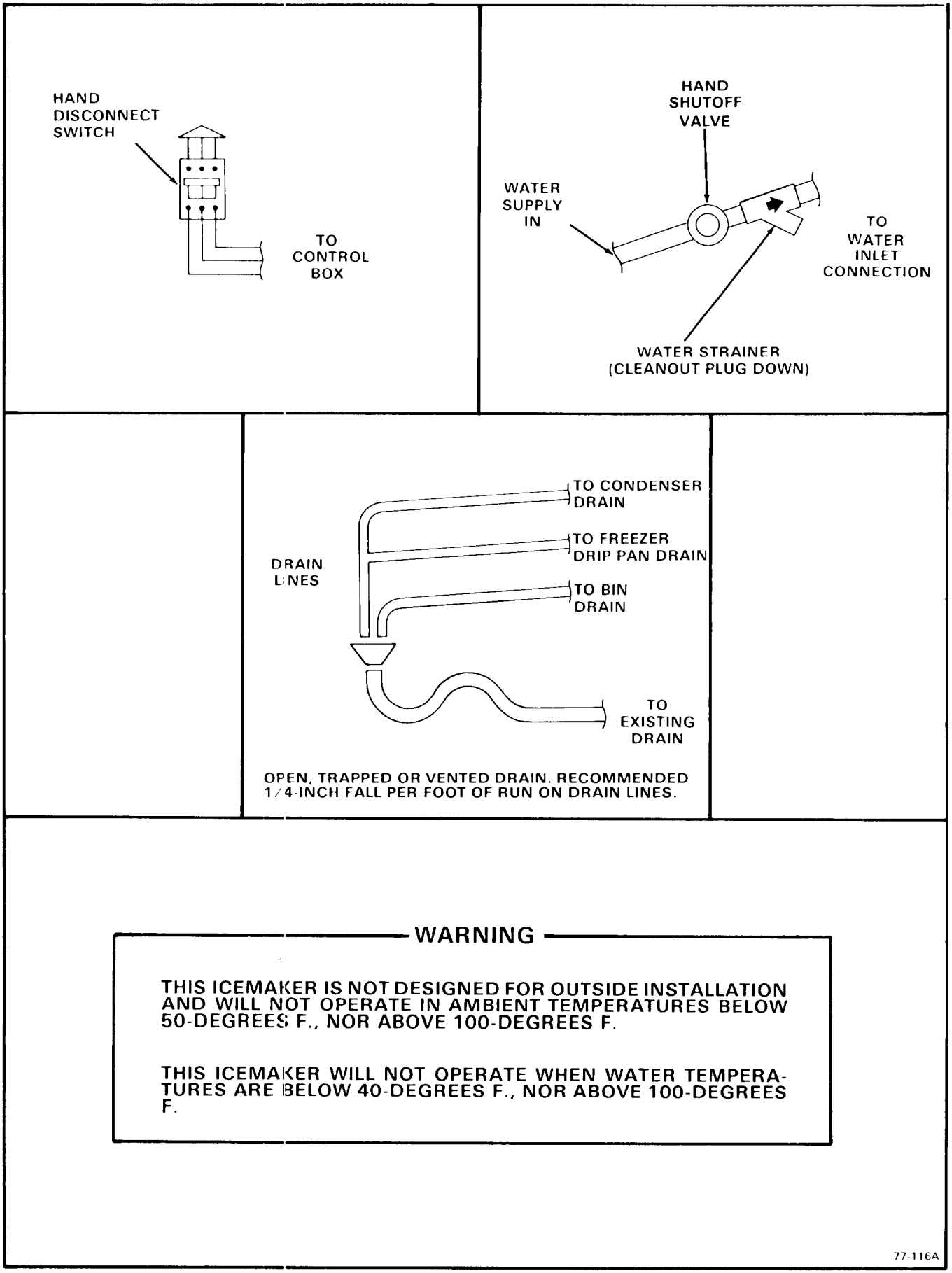

Figure 1-1. Installation Practice

SECTION II
OPERATING INSTRUCTIONS

I. START UP

1. Remove screws and the Left Front Lower Panel and the Left Side Panel.
2. OPEN the water supply line shutoff valve.
3. Observe the water filling operation, see Figure 2 - 1:
   a. Water flows into Water Reservoir.
   b. Float moves up as water rises.
   c. Water flows through water feed line to bottom of Freezer Assembly.
   d. Float stops water flow, when water level reaches 3/8-inches below the molded horizontal line, on the body of the Water Reservoir.
4. Move the manual ON-OFF toggle switch, on the front of the Control Box to the ON position, to start the automatic icemaker operation.
5. After two or three minutes of operation, observe that flaked ice begins dropping off the Auger and out the Ice Spout, through the Nylobraid tubing and into the Ice Storage Bin.
6. Let the system operate for about 30 minutes or until ice covers the bottom of the Bin. Check for any excess noises beyond normal Compressor noise:
   a. Fan noises, when Air-Cooled: Blades touch other surfaces; blades bent, out-of-balance.
   b. Vibrating type, from touching lines.
   c. Chattering: Lack of water in Freezer.
   d. Compressor loose at one or more holddown bolts.

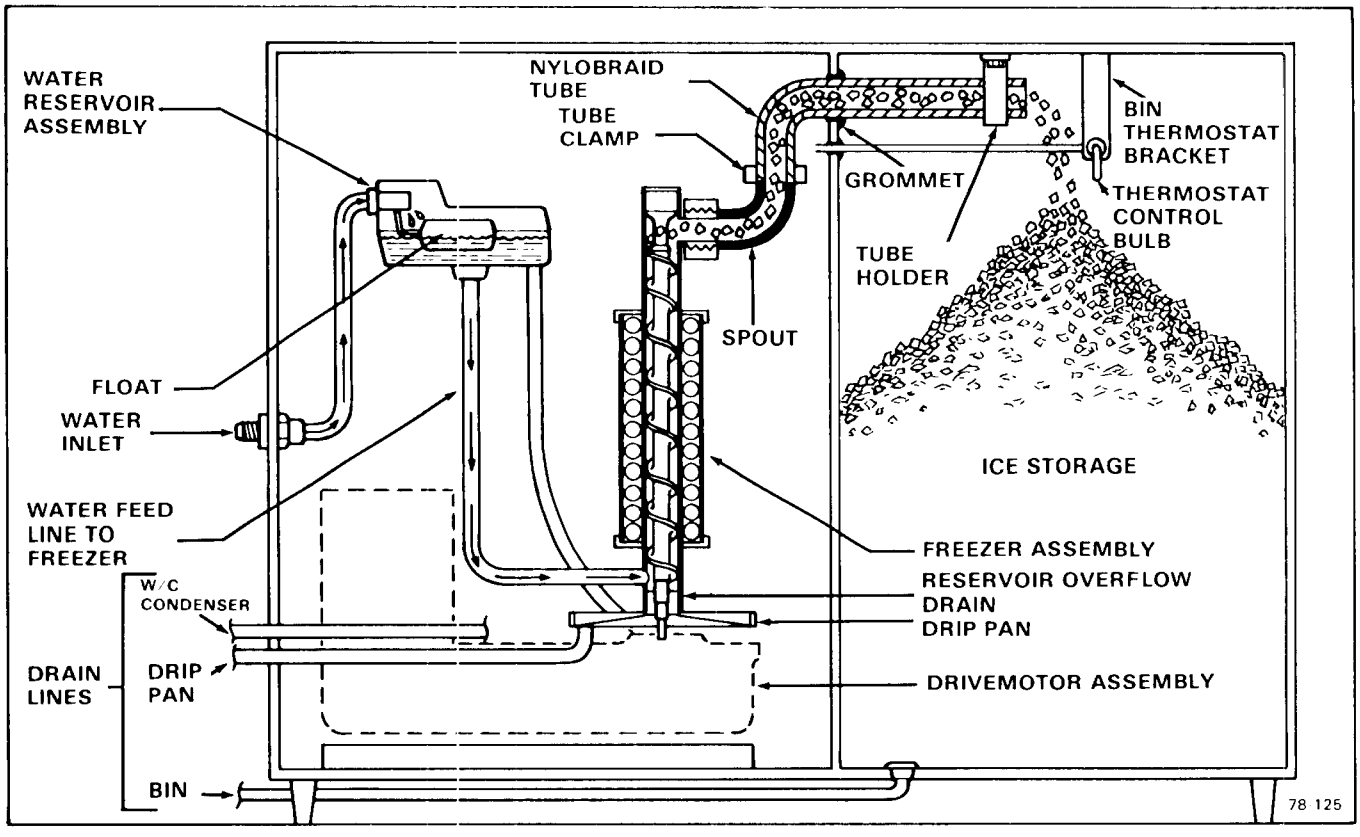

Figure 2 - 1. Water Schematic

WARNING

DO NOT operate this Icemaker when the water supply is shut OFF, or is BELOW the recommended 20 PSI water pressure. Move the manual ON-OFF toggle switch on the front of the Control Box to the OFF position immediately.

7. Hold a handful of ice around the Ice storage Bin Thermostatic Control Bulb to test shutoff. Less than one minute is about normal for Bulb shutoff function to cause the Compressor to stop.

NOTE

Within minutes after the ice is removed from the sensing bulb, the bulb will warm up and cause the Icemaker to restart. This control is factory set and should not be reset until testing is performed. Normal setting: about 35-degrees F. CUT-OUT and 45-degrees F. CUT-IN, to prevent short cycling.

8. Throughly explain to the owner/user the significant specifications of the Icemaker, the start up and operation, going through the procedures in the operating instructions. Answer all questions about the Icemaker, by the owner; and, inform the owner of the name and telephone number of the authorized SCOTSMAN Service Agency serving him.

SECTION III

PRINCIPLES OF OPERATION
How It Works

I. ICEMAKER

The water supply flows from the building source through the inline water strainer, enters at the Cabinet fitting and on to the Water Reservoir. The Water Reservoir functions to maintain a constant water level inside the Freezer Assembly. Water from the Water Reservoir enters at the bottom of the Freezer Assembly and is changed into ice by low temperatures inside the Freezer.

A stainless steel Auger within the Freezer is powered by the Drivemotor Assembly, a direct-drive gearmotor, and the rotating Auger carries the ice upward to the flared end of the Auger, See Figure 3-1, where excess water is pressed out of the ice, as it is extruded or flaked out through the Ice Spout, through the Nylobraid tubing and into the Ice Storage Bin.

Moving the manual ON-OFF toggle switch, on the front of the Control Box, to the ON position starts the automatic and continuous icemaking process. When the Ice Storage Bin has been filled with ice, up to the level of the Thermostatic Control Bulb, the sensing bulb shuts off the icemaking process.

As the ice is removed from the Ice Storage Bin, the Thermostatic Control Bulb warms up, restarting the automatic icemaking process.

Factory settings are 35-degrees F. CUT-OUT and 45-degrees CUT-IN.

Altitude correction begins at 2000 feet, CUT-IN and CUT-OUT screws should be adjusted equally, not more than one-fourth turn at a time.

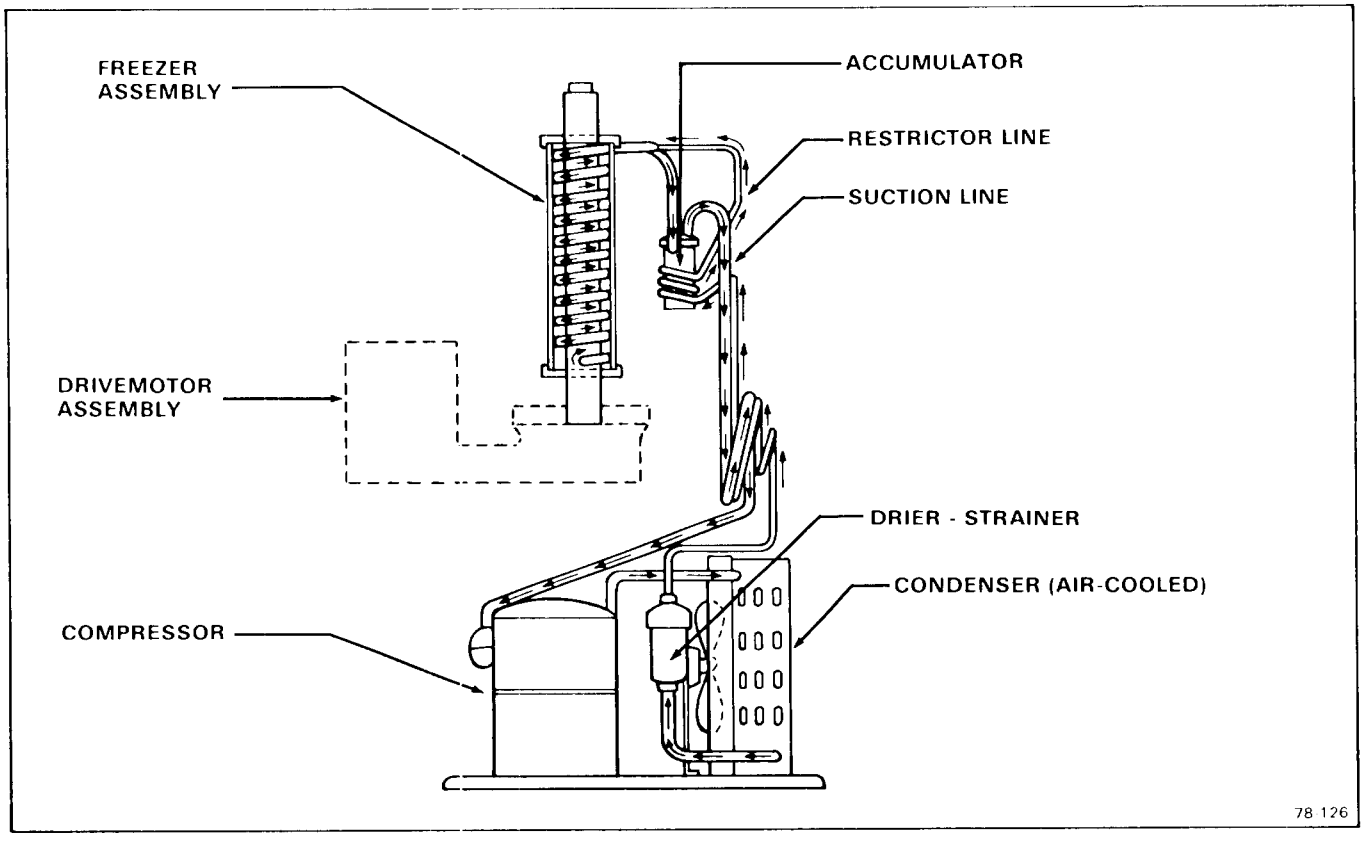

Figure 3-1, Refrigeration Cycle

II. ELECTRICAL/REFRIGERATION

The AF-730 Automatic Icemakers are designed to operate on standard electrical supply 115 volts, 60 Hertz, single phase. Special voltage requirements are available on special order. Therefore, always CHECK NAMEPLATE for electrical information BEFORE proceeding with electrical wiring connection to the Icemaker.

Cold ambient temperatures and interruptions in water supply are conditions that can cause excessively hard ice and overloads within the Freezer Assembly, which is directly transmitted to the Drivemotor; and in turn, will cause speed reduction or ultimate freezeup.

When the Drivemotor is slowed to a predetermined RPM, a sensing switch mounted on top of the motor is designed to open the electrical circuit to the Compressor. The Compressor stops operating, no more ice is produced, and the Drivemotor continues to operate rotating the Auger to clear the overload and gradually build up to full speed.

At a pre-determined higher RPM Drivemotor speed, the speed sensing switch closes the electrical circuit to the Compressor, causing the normal icemaking process to resume. Refer to specific details in paragraph V-II-9, on centrifugal sensing switch operation.

A Spout Switch is mounted on the side of the Ice Spout and is actuated by the movement of the spring retained spout tube against the switch actuator. The Spout Switch acts as a backup safety switch, should the Thermostatic Control Bulb fail and cause ice to jam up in the Ice Spout. The switch will shut off the icemaker only when actuated. It is an immediate and complete shut down of the entire icemaker. The Spout Switch can be manually tested, by plugging the end of the Nylobraid Tube. The switch is also manually reset.

There are three safety controls in the Control Box on the Water-Cooled models and two safety controls in the Control Box for the Air-Cooled Models. The Low Pressure Control, a manual reset, non-adjustable control, is used on both models and is set to electrically open at zero to four PSIG to stop the entire icemaker. The Auger Delay Switch, a single-pole double-throw (SPDT) switch, used on all models, functions as a control device to allow the gearmotor to rotate the auger to clear the Freezing Chamber while the compressor circuit is OFF.

Refer to the appropriate Wiring Diagram and trace circuitry and control functions, as described in the following paragraph.

As shown on all SCOTSMAN wiring diagrams, the controls are in the ICEMAKING MODE. Thus, the 1-2 contacts are CLOSED. At STARTUP, the 1-2 contacts are OPEN and the 3-2 contacts are CLOSED. As the icemaker begins to operate, the low side pressure starts to decrease from the stabilized or at-rest pressure. As soon as the pressure is reduced to 20 PSIG, the 3-2 contacts OPEN and the 1-2 contacts CLOSE.

This removes the operating controls, such as the Bin Thermostat, from the gearmotor circuit. If one of the operating controls OPENS, it will SHUT OFF the compressor circuit. The gearmotor will operate until the low side pressure increases to 32 PSIG. Then, the 1-2 contacts OPEN and SHUTS OFF the gearmotor, usually within one to two minutes, depending upon ambient conditions. This brief period of time allows the Auger to transport all the ice out of the freezing chamber. Consequently, when called on to STARTUP again, there is no ice load to start up against. Again, on STARTUP, the 1-2 contacts are OPEN and the 3-2 contacts are CLOSED.

On all models, a low-water pressure switch functions to discontinue the Icemaking process whenever incoming water pressure is reduced to below five PSIG. The Switch will automatically restart the Icemaking process when the water pressure is increased to 20 PSIG.

On the Water-Cooled models only, a manual reset, high head pressure control is factory set to stop the entire icemaker should the head pressure reach 250 PSIG.

On Water-Cooled models, correct head pressure is 135 PSIG. Adjustments can be made on the Water Regulator Assembly valve. On Air-Cooled models, the head pressure is normal about 130 PSIG, however, it will vary depending upon ambient air temperature.

Suction pressure should be 15 PSIG with proper refrigerant charge and the frost line should extend out from the accumulator about eight inches. Suction pressure will vary about two PSIG plus or minus, depending upon ambient temperatures and incoming water supply temperatures to the Freezer Assembly.

When charging the system with refrigerant, on Water-Cooled Models, set the Compressor head pressure at 135 PSIG, and charge with refrigerant so the frost line extends out of the Compressor at least eight inches, after 15 minutes of operation, for best capacity and performance.

MODEL	AF-730 Refrig. Chg.
Air-Cooled	26 oz. R-12 (Approx.)
Water-Cooled	23 oz. R-12 (Approx.)

SECTION IV

ADJUSTMENT AND REMOVAL AND REPLACEMENT PROCEDURES

The procedures provided in this Section are arranged in alphabetical order, to make specific Adjustment and Removal and Replacement information easy to locate.

Read the instructions thoroughly before performing any Adjustment or Removal and Replacement Procedures.

WARNING

The adjusting screws on the Temperature Control device have very sensitive response to adjustment. DO NOT attempt to adjust the screw until after thoroughly reading and understanding the following instructions and illustrations. Over-adjusting or erratic guessing, can foul the instrument and cause ultimate delay and part replacement, WHICH COULD HAVE BEEN PREVENTED.

I. ADJUSTMENT OF THE BIN THERMOSTAT CONTROL

The control for the Bin Thermostat is the Temperature Control, located in the upper part of the Control Box Assembly.

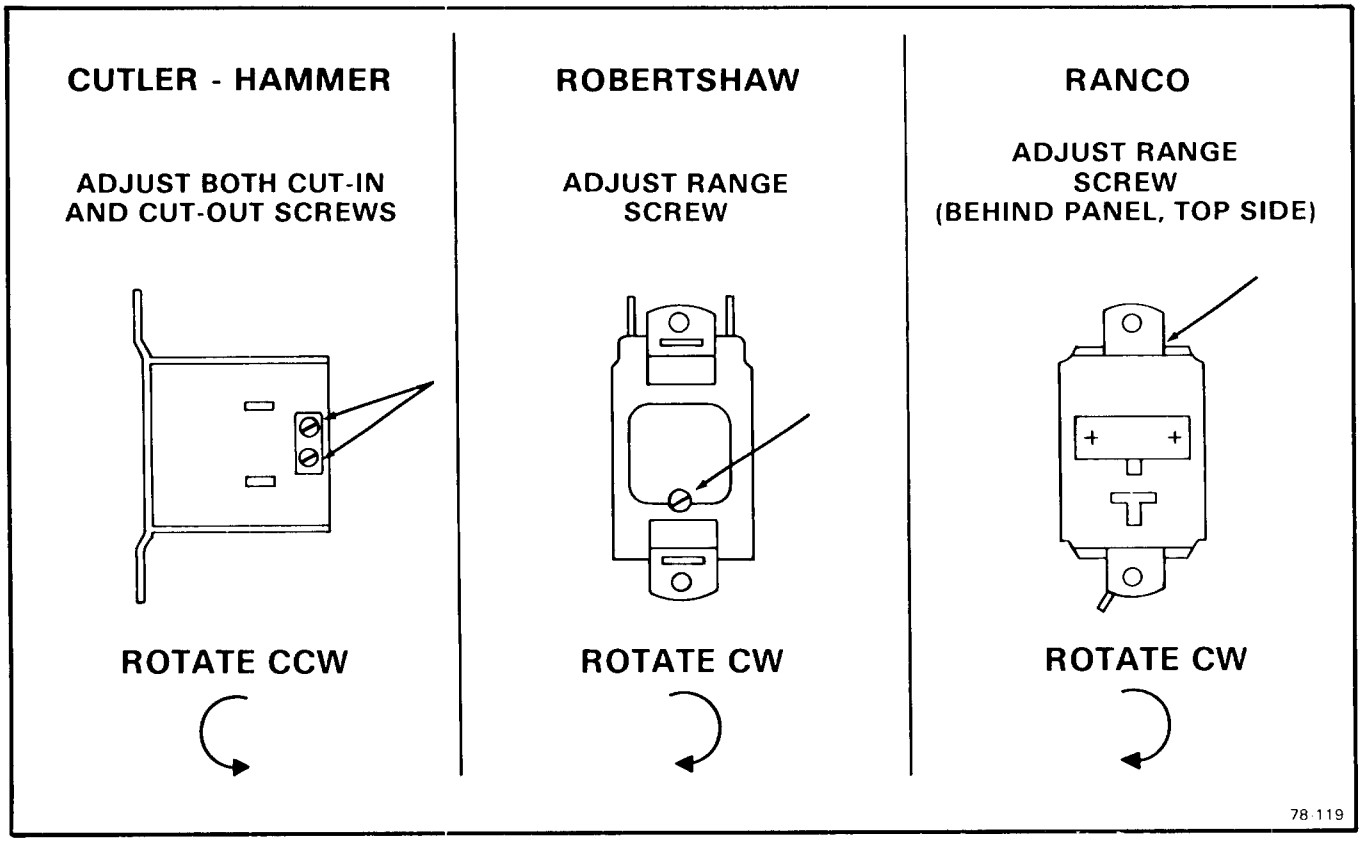

Figure 4-1. Adjustment of the Temperature Control

See Figure 4-1 for location and direction of rotation, clockwise (CW) or counterclockwise (CCW), of the adjusting screws on the Temperature Control, in the particular Control Box the adjustment is to be performed.

II. ADJUSTMENT OF THE LEG LEVELERS

When the AF-730 Icemaker is ordered with the optional Leg Levelers, the Cabinet must be leveled in the front-to-rear and side-to-side directions. This adjustment should be performed during initial installation of the Cabinet and anytime the Cabinet is moved from the original location to another site.

A. Using an open-end wrench, and a carpenter's bubble level, rotate the threaded Leveler in each Leg to RAISE or LOWER the Cabinet until the Cabinet is level in the front-to-rear direction.

B. Repeat step A, for leveling in the side-to-side direction.

C. Recheck both the front-to-rear and the side-to-side leveling and repeat adjustments, as necessary.

III. ADJUSTMENT OF THE WATER REGULATOR ASSEMBLY

The correct head pressure on Water-Cooled models is 135 PSIG. Adjustments can be performed on the Water Regulator Assembly to increase or decrease the head pressure.

To Adjust the Water Regulator Assembly:

A. To INCREASE the Head Pressure: Rotate the adjusting Screw, on the Water Regulator Assembly IN or CLOCKWISE.

B. To DECREASE the Head Pressure: Rotate the adjusting Screw, on the Water Regulator Assembly OUT or COUNTERCLOCKWISE.

IV. ADJUSTMENT OF THE WATER RESERVOIR FLOAT

The correct water level in the Water Reservoir should be 3/8-inch below the raised molded line, on the side of the body of the Water Reservoir. When the water line level is above or below the raised molded line, adjustment can be performed to raise or lower the water level by raising or lowering the Water Reservoir in the slots on the Mounting Brackets, which in turn will adjust the action of the float.

A. To RAISE the Water Level: Loosen the two Screws which attach the Water Reservoir Assembly to the Mounting Bracket and RAISE the Water Reservoir Assembly, in the slots, the desired amount; then, tighten the Screws.

B. To LOWER the Water Level: Loosen the two Screws which attach the Water Reservoir Assembly to the Mounting Bracket and LOWER the Water Reservoir Assembly, in the slots, the desired amount; then, tighten the Screws.

WARNING

Be sure the electrical power supply and the water supply are OFF, before starting any of the following REMOVAL AND REPLACEMENT procedures, as a precaution to prevent possible personal injury or damage to equipment.

V. REMOVAL AND REPLACEMENT OF THE AUGER, WATER SEAL, BEARINGS AND COUPLING

A. To Remove the Auger, Water Seal, Bearings, and Coupling:

1. Remove screws and the Left Front Lower Panel and the Left Side Panel.
2. Remove the Freezer Cap from the top of the Freezer Assembly.
3. Perform the steps in procedure IV-XIII to remove the Spout Assembly.
4. Grasp the wire Cap Hook at the top of the Freezer Assembly and pull out the Auger and attached Cap, Bearing/Retainer, Bearing and O-Rings, at the top of the Auger; and, the top half of the Water Seal at the bottom of the Auger.

NOTE

When the Auger cannot be pulled out, proceed to steps 12 and 13, to gain access to the bottom of the Auger. Then, with a rawhide mallet or placing a piece of wood on the bottom end of the Auger, tap the bottom of the Auger to break it loose and pull the Auger out, as in the step 4 above.

5. Remove the Cap Hook from the Bearing/Retainer.
6. Remove the Retaining Ring and the Cap.

7. Remove the Cap Screw and Washer and remove the Bearing/Retainer from the Auger.
8. Clean away the old grease from the top of the Auger, the Bearing/Retainer, Cap, Cap Screw and Washer, and the O-Ring and Retaining Ring.
9. Inspect the O-Ring at the top of the Bearing/Retainer and the O-Ring at the bottom outside of the Bearing/Retainer, for cuts, tears and general worn condition to determine replacement.
10. Inspect the Bearing pressed into the top of the Bearing/Retainer and, if it is to be replaced, remove the Retaining Ring and press the Bearing out of the Bearing/Retainer.
11. Slide the upper half of the Water Seal off of the bottom of the Auger.

NOTE

1. Any time the Auger is removed for replacement, or, for the inspection and replacement of the Bearings or Coupling, use extra care in handling the Water Seal parts, so no dirt or foreign matter are deposited on the surfaces of the Seal.

2. If there is any doubt about the effectiveness of Water Seal or O-Ring, REPLACE THEM. A dirty, worn or faulty Water Seal or O-Ring will cause a leak and ultimately require a second, time consuming removal and replacement procedure to be performed, that COULD HAVE BEEN PREVENTED.

12. Remove four screws and lockwashers which attach the Freezer Assembly to the Adaptor on the Drivemotor Assembly.
13. Raise the Freezer Assembly off of the Adaptor, to gain access to the Bearing and Retainer; then, temporarily secure the Freezer Assembly out of the way to allow room to work. Be careful not to damage the gasket.
14. Using a suitable length and size wooden dowel or stick inserted through the top of the open Freezer Assembly, tap the lower half of the Water Seal and the lower Bearing in the Retainer, out the bottom of the Freezer Assembly
15. Inspect the lower half of the Water Seal. If reusable, use care to protect it from dirt, etc. prior to replacement procedure.
16. Inspect the lower Bearing in the Retainer; and, if the Bearing is to be replaced, press the Bearing out of the Retainer.
17. Reach through the Adaptor and remove the Coupling on the Drivemotor for inspection.
18. Check the Coupling for cracks, chipping and excessive wear.

B. To replace the Auger, Water Seal, Bearings, and Coupling, reverse the removal procedure.

NOTE

1. When installing the Retainer assembled with Bearing, in the bottom of the Freezer Assembly, some Retainers will insert as a slip fit, and some will have to be forced into place because of very tight fit. Carefully tap a piece of wood positioned across the bottom of the Retainer, to evenly seat the Retainer in the chamber of the Freezer.

2. After assembling the parts on the upper end of the Auger and BEFORE installing the Cap and Cap Hook, apply an ample coating of Shell Alvania 3 Grease, P/N 19-0309-01, to the upper part of the Bearing/Retainer to cover the Retaining Ring and the Cap Screw and Washer. Then, install the Cap and Cap Hook in place.

VI. REMOVAL AND REPLACMENT OF THE COMPRESSOR ASSEMBLY

NOTE

Always install a replacement Drier, any time the sealed refrigeration system is opened. Do not replace the Drier until all other repair or replacement has been completed.

A. To Remove the Compressor Assembly:

1. Remove screws and the Left Side Panel and the Left Front Lower Panel.
2. Remove two screws and the Cover from the Compressor Junction Box.
3. Disconnect the electrical leads at the Compressor Junction Box, that originate in the Control Box.
4. Bleed off or blow the refrigerant charge through the Schrader valves.
5. Unsolder the suction line from the Compressor.
6. Unsolder the discharge line from the Compressor.

7. Unsolder the process header tube from the Compressor and retain for installation on the Replacement Compressor.
8. Remove four bolts, lockwashers and washers which secure the Compressor to the Chassis mounting base.
9. Slide the Compressor and remove through the left side opening of the Cabinet.

NOTE

Thoroughly evacuate the system to remove moisture and non-condensables.

B. To replace the Compressor Assembly, reverse the removal procedure.

VII. REMOVAL AND REPLACEMENT OF THE CONDENSER — AIR-COOLED MODELS

NOTE

Always install a replacement Drier, any time the sealed refrigeration system is opened. Do not replace the Drier until all other repair or replacement has been completed.

A. To Remove the Condenser:

1. Remove screws and the Left Front Lower Panel and the Left Side Panel.
2. Bleed off or blow the refrigerant charge through the Schrader valve.
3. Unsolder and disconnect the Condenser inlet tube at the Condenser.
4. Unsolder and disconnect the Condenser outlet tube at the Condenser.
5. Remove three screws, lockwashers and washers securing the Condenser to the Chassis Base.
6. Remove the Condenser out through the front opening of the cabinet.

NOTE

Thoroughly evacuate the system to remove moisture and non-condensables.

B. To replace the Condenser, reverse the removal procedure.

VIII. REMOVAL AND REPLACEMENT OF THE CONDENSER — WATER-COOLED MODELS

NOTE

Always install a replacement Drier, any time the sealed refrigeration system is opened. Do not replace the Drier until all other repair or replacement has been completed.

A. To Remove the Condenser:

1. Remove screws and the Left Front Lower Panel and the Left Side Panel.
2. Bleed off or blow the refrigerant charge through the Schrader valve.
3. Unsolder the refrigerant inlet and outlet lines from the Condenser.
4. Disconnect the water inlet and outlet lines from the Condenser.
5. Remove two bolts, lockwashers and washers which secure the Condenser to the Chassis mounting base.
6. Remove the Condenser from the Cabinet.

NOTE

Thoroughly evacuate the system to remove moisture and non-condensables.

B. To replace the Condenser, reverse the removal procedure.

IX. REMOVAL AND REPLACEMENT OF THE DRIER

NOTE

Always install a replacement Drier, any time the sealed refrigeration system is opened. Do not replace the Drier until all other repair or replacement has been completed.

A. To Remove the Drier:

1. Remove screws and the Left Front Lower Panel and the Left Side Panel.
2. Remove screw and Drier Brace attaching the Drier to the Chassis base.
3. Bleed off or blow the refrigerant charge through the Schrader valve.
4. Unsolder refrigeration lines at each end of Drier, remove the Drier and separate the Drier from the Drier Brace.

B. To Replace the Drier:

CAUTION

1. If the factory seal is broken on the replacement Drier, exposing it to the atmosphere more than a few minutes, the Drier will absorb moisture from the atmosphere and lose substantial ability for moisture removal.

2. Be sure the replacement Drier is installed with the arrow positioned in the direction of the refrigerant flow.

1. Remove the factory seals from the replacement Drier and install the Drier in the refrigerant lines with the arrow positioned in the direction of the refrigerant flow.
2. Install the Drier Brace on the Drier.
3. Solder the Drier into the lines, two places.
4. Purge the system and check for leaks.
5. Thoroughly evacuate the system to remove moisture and non-condensables.
6. Charge the system with refrigerant, by weight. SEE NAMEPLATE.
7. Replace the Left Front Lower Panel and the Left Side Panel and attach both with screws removed earlier.

X. REMOVAL AND REPLACEMENT OF THE DRIVEMOTOR ASSEMBLY

A. To Remove the Drivemotor Assembly:

1. Perform all steps in procedure IV-XII to gain access for removal of the Drivemotor Assembly.
2. Remove bolts, lockwashers and washers which attach the Drivemotor to the Chassis base.
3. Lift the Drivemotor from the Chassis base and out of the Cabinet.

B. To replace the Drivemotor Assembly, reverse the removal procedure.

XI. REMOVAL AND REPLACEMENT OF THE FAN MOTOR ASSEMBLY — AIR-COOLED MODELS

NOTE

Before beginning this procedure, observe the Fan Blade position on the shaft of the Fan Motor and mark the Fan Blade so it will be correctly positioned during reassembly. Direction of air flow should be toward the Fan Motor.

A. To Remove the Fan Motor Assembly:

1. Remove screws and the Left Front Lower Door and the Left Side Panel.
2. Disconnect the electrical lead from the Fan Motor.
3. Remove two screws securing the Motor Bracket to the Chassis Base and remove the Fan Motor and Motor Bracket out through the left side opening of the Chassis.
4. Remove the nut from the end of the Fan Motor shaft and remove the Fan Blade.
5. Remove four screws securing the Fan Motor to the Motor Bracket and separate the Motor from the Bracket.

B. To replace the Fan Motor Assembly, reverse the removal procedure.

XII. REMOVAL AND REPLACEMENT OF THE FREEZER ASSEMBLY

NOTE

1. *The Cabinet may have to be removed from its permanent location, especially if located in a corner, in order to have access to the left side and rear of the Chassis.*
2. *In addition to shutting OFF electrical power and inlet water to the icemaker, be sure to disconnect the inlet water line at the rear of the Cabinet BEFORE moving the icemaker from the permanent location.*
3. *Always install a replacement Drier, anytime the sealed refrigeration system is opened. Do not replace the Drier until all other repair or replacement has been completed.*

A. To Remove the Freezer Assembly, see Figure 4-2:

1. Remove screws and left side, front and rear panels.

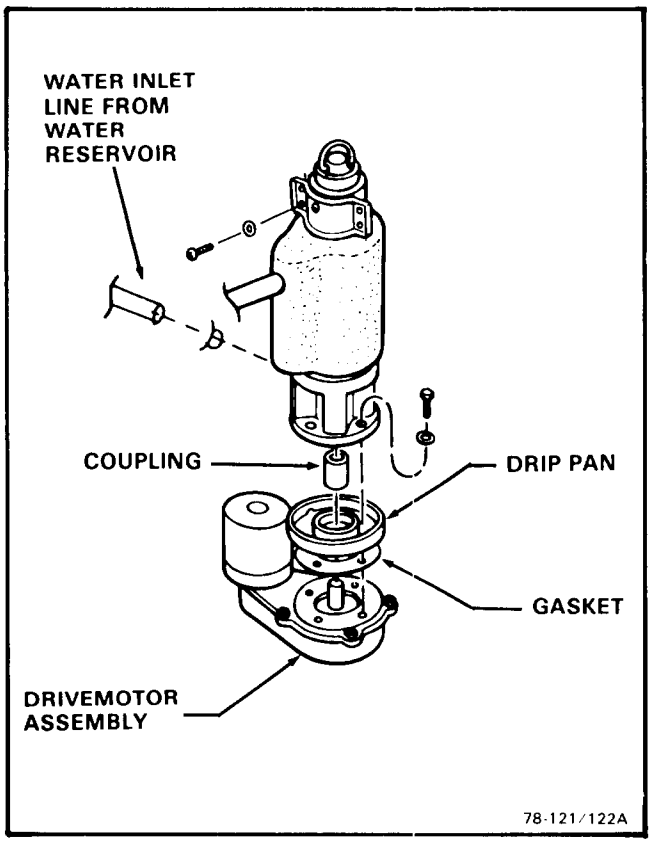

Figure 4-2. Removal of the Freezer Assembly.

2. Refer to procedure IV-XIII and remove the Spout Assembly.
3. Remove Corbin clamp and Tygon tube from the Freezer Assembly that connects to the Water Reservoir Assembly.
4. Bleed off or blow the refrigerant charge through the Schrader valve.
5. Unsolder the suction line from the Compressor.
6. Unsolder the capillary line at the Drier.
7. Remove four screws, lockwashers and washers which attach the bottom of the Freezer Assembly to the Adaptor on the Drivemotor Assembly.
8. Lift the Freezer Assembly up and off of the Adaptor and Drivemotor Assembly.

NOTE

Thoroughly evacuate the system to remove moisture and non-condensables.

B. To replace the Freezer Assembly, reverse the removal procedure.

XIII. REMOVAL AND REPLACEMENT OF THE SPOUT ASSEMBLY

A. To Remove the Spout Assembly, see Figure 4-3:

1. Remove screws and the Left Front Lower Panel and Left Side Panel.
2. Remove the Hose Clamp and disconnect the Nylobraid tube from the end of the spout.
3. Remove the Freezer Cap from the top of the Freezer Assembly.
4. Disconnect the electrical leads from the Spout Switch.
5. Remove four screws and washers and separate the Spout Assembly from the Spout Plate on the Freezer Assembly.

NOTE

At this time, inspect the spout Gasket and retain for the replacement procedure. Replace a torn, cut or worn, defective gasket.

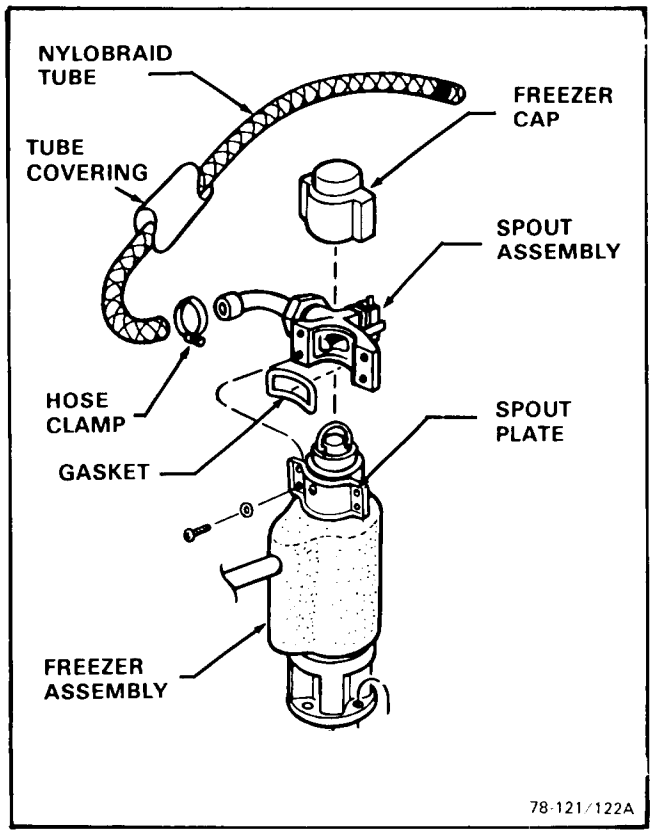

Figure 4-3. Removal of the Spout Assembly.

B. To replace the Spout Assembly, reverse the removal procedure.

XIV. REMOVAL AND REPLACEMENT OF THE WATER PRESSURE CONTROL

A. To Remove the Water Pressure Control:

1. Remove screws and the Left Front Lower Panel and the Left Side Panel.
2. Remove screws and the Control Box Cover.
3. Disconnect the two blue electrical leads of the Water Pressure Control, from the terminals on the Auger Delay Control and the Bin Thermostat device in the Control Box Assembly
4. Unscrew the flare nut fitting and disconnect the Water Pressure Control from the Utility Bracket and the Tee on the inlet water tubing.

NOTE

At this time, inspect the O-Ring and retain for the replacement procedure. Replace O-Ring that is cut, torn or indicates excessive wear.

B. To replace the Water Pressure Control, reverse the removal procedure.

XV. REMOVAL AND REPLACEMENT OF THE WATER REGULATOR ASSEMBLY — WATER-COOLED MODELS

A. To Remove the Water Regulator Assembly:

NOTE

Always install a replacement Drier, any time the sealed refrigeration system is opened. Do not replace the Drier until all other repair or replacement has been completed.

1. Remove screws and the Left Front Lower Panel.
2. Bleed off or blow the refrigerant charge through the Schrader valve.
3. Unsolder the Capillary line from the Water Regulator Assembly, where connected at the process header.
4. Disconnect the water inlet line at the rear of the Water Regulator.
5. Disconnect the Condenser water inlet tube at the front of the Water Regulator.
6. Remove two screws, lockwashers and washers which attach the Water Regulator Assembly bracket to the Chassis base and remove the Water Regulator Assembly and bracket.

NOTE

Thoroughly evacuate the system to remove moisture and non-condensables.

B. To replace the Water Regulator Assembly reverse the removal procedure.

XVI. REMOVAL AND REPLACEMENT OF THE WATER RESERVOIR ASSEMBLY

A. To Remove the Water Reservoir Assembly, see Figure 4-4:

1. Remove screws and the Left Front Lower Panel and the Left Side Panel.

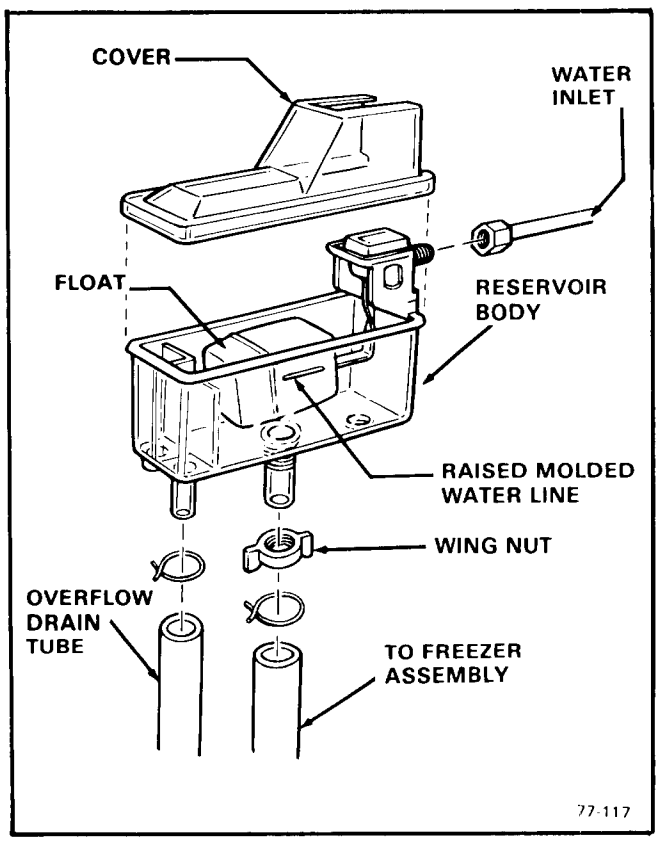

Figure 4-4. Removal of the Water Reservoir Assembly

NOTE

Be prepared with container or rags, to catch water left in lines, when lines are disconnected in next steps, to prevent draining water on parts, components, electrical lines, etc.

2. Disconnect the water inlet tube from the Water Reservoir Assembly.
3. Remove two Corbin clamps and two tubes from the bottom of the Water Reservoir Assembly.
4. Unscrew and remove the wing nut from the bottom of the Water Reservoir Assembly.
5. Lift and remove the Water Reservoir Assembly from the mounting bracket.

B. To replace the Water Reservoir Assembly, reverse the removal procedure.

NOTE

Check that the installed replacement Water Reservoir Assembly float moves freely. Bend metal arm of float to adjust, as necessary. The correct water level in the Water Reservoir is 3/8-inch below the raised molded line, on the side of the body of the Water Reservoir.

SECTION V

MAINTENANCE & CLEANING INSTRUCTIONS

I. GENERAL

The periods and procedures for maintenance and cleaning are given as guides and are not to be construed as absolute or invariable. Cleaning especially will vary, depending upon local water conditions and the ice volume produced; and, each Icemaker must be maintained individually, in accordance with its own particular location requirements.

II. ICEMAKER

THE FOLLOWING MAINTENANCE SHOULD BE SCHEDULED AT LEAST TWO TIMES PER YEAR ON THIS ICEMAKER. CALL YOUR AUTHORIZED SCOTSMAN SERVICE AGENCY.

1. Check and clean water line Strainers.
2. Remove cover from Water Reservoir and depress the float to ensure that a full stream of water enters the Reservoir.
3. Check that the Icemaker cabinet is level, in side-to-side and front-to-rear directions.
4. Check that the water level in the Water Reservoir is below the overflow, but high enough that it does not run out of the spout opening.

NOTE

It is not abnormal for some water to emerge from the Ice Spout with flaked ice during normal ice production.

5. Clean the Water Reservoir and interior of the Freezer Assembly, using a solution of SCOTSMAN Ice Machine Cleaner. Refer to procedure V-III, CLEANING-Icemaker.

NOTE

Cleaning requirements vary according to local water conditions and individual user operation. Visual inspection of the Auger before and after cleaning will indicate frequency and procedure to be followed in local areas.

6. When doubtful about refrigerant charge, install refrigerant gauges on Schrader valves and perform steps 6 and 7. Check gauge for Compressor head pressure:

   AIR-COOLED MODELS: Varies between 130 to 145 PSIG.

   WATER-COOLED MODELS: Set at 135 PSIG. Adjust screw on top of Water Regulator Valve to raise or lower head pressure.
7. Check gauge for Suction line pressure:

   Varies between 12 to 16 PSIG, depending upon inlet water temperature and ambient air temperature.
8. Check Drivemotor operation:

   Normal operating temperatures are about 160-degrees F., which is hot to touch.
9. Check operation of the centrifugal sensing switch:

   AF-730: 1/4 HP Motor.

   Switch will OPEN between 850-900 RPM and the Compressor STOPS, with the Drivemotor operating. Switch will CLOSE between 1110-1250 RPM and the Compressor will RESTART, with Drivemotor building back up to normal operating speed.
10. Remove the Insulation Strap and Clip, the Right and Left Spout Insulation pieces, the Retaining Ring and the Hook and Cap from the top of the Freezer Assembly.
11. Inspect the Top Bearing. If moisture is around Bearing, wipe clean of all grease and apply a coating of Shell Alvania 3 Grease, Scotsman P/N 19-0309-01, 1 lb. can. Replace parts removed in step 10.

NOTE

BEFORE next step, move the manual ON-OFF toggle switch, on the front of the Control Box, to the OFF position to stop the Fan Motor and Icemaker.

12. Clean the Air-Cooled Condenser, using vacuum cleaner, whisk broom or brush. Instruct customer to clean frequently and to be sure Icemaker and Fan Motor are OFF.
13. Check that Fan Blades move freely, are not touching any surfaces and are not bent or out of balance.

14. Check for refrigerant leaks and for proper frost line, which should frost out of accumulator at least half way to the Compressor and in some areas, back to service valve.
15. Check for water leaks. Tighten drain line connections. Pour water down Bin drain to be sure that drain line is open and clear.
16. Check the quality of ice. Ice flakes should be wet when formed, but will cure rapidly to normal hardness in the Bin.
17. Check the Bin Thermostatic Ice Control Bulb.

NOTE

The Bin Thermostat is factory set at 10-degrees F. differential and should keep the entire Icemaker system shut off at least 10 minutes in high ambient temperatures, longer in low ambient temperatures during normal operation. Settings are 35-degrees F. CUT-OUT and 45-degrees F. CUT-IN.

18. Check the Spout Switch.

NOTE

The Spout Switch is manually reset and functions as a safety switch, to automatically stop the icemaking process if the Bin Thermostat Bulb were to fail and cause ice to jam up in the Ice Tube.

III. CLEANING - Icemaker

1. Remove screws and the Left Front Lower Panel.
2. Move the manual ON-OFF toggle switch, on the front of the Control Box, to the OFF position.
3. Remove all ice from the Ice Storage Bin.
4. CLOSE the water supply shutoff valve; or block the float in the Water Reservoir.
5. Disconnect the tube between the Water Reservoir and the bottom of the Freezer Assembly and drain water from the Reservoir and tube. Reconnect the tube.

WARNING

SCOTSMAN Ice Machine Cleaner contains Phosphoric and Hydroxyacetic acids. These compounds are corrosive and may cause burns if swallowed, DO NOT induce vomiting. Give large amounts of water or milk. Call Physician immediately. In case of external contact flush with water. KEEP OUT OF THE REACH OF CHILDREN.

6. Prepare cleaning solution: Mix six ounces of SCOTSMAN Ice Machine Cleaner with one and one-half quarts of hot water.
7. Remove the Cover to the Water Reservoir.
8. Slowly pour the cleaning solution into the Water Reservoir.
9. Move the manual ON-OFF toggle switch, on the front of the Control Box, to the ON position.
10. Continue to slowly pour the cleaning solution into the Water Reservoir, maintain level just below the Reservoir overflow.
11. Continue icemaking, using the cleaning solution, until all the solution is used up and the Water Reservoir is almost empty. DO NOT allow the icemaker to operate with empty Reservoir.
12. Move the manual ON-OFF toggle switch, on the front of the Control Box to the OFF position.
13. Wash and rinse the Water Reservoir.
14. OPEN the water supply shutoff valve; or remove the block from the float in the Water Reservoir.
15. Move the manual ON-OFF toggle switch, on the front of the Control Box, to the ON position.
16. Continue icemaking for at least 15 minutes, to flush out any cleaning solution. Check ice for acid taste - continue icemaking until ice tastes sweet.
17. Move the manual ON-OFF toggle switch, on the front of the Control Box, to the OFF position.

CAUTION

DO NOT use ice produced from the cleaning solution. Be sure none remains in the bin.

18. Remove all ice from the Ice Storage Bin.
19. Add hot water to the Ice Storage Bin and thoroughly wash and rinse all surfaces within the Bin.
20. Clean and sanitize the Ice Storage Bin each week.

SECTION VI
SERVICE DIAGNOSIS

The Service Diagnosis Section is for use in aiding the serviceman in diagnosing a particular problem for pin-pointing the area in which the problem lies, thus an ever available reference for proper corrective action.

The following charts lists corrective actions for the causes of known symptoms of certain problems that can occur in the Icemaking - Refrigeration System.

I. ICEMAKING - REFRIGERATION SYSTEM

SYMPTOM	POSSIBLE CAUSE	CORRECTION
Water Leaks.	Defective water seal.	Replace Seal.
	Gravity feed line leaking.	Check hose clamps.
	Water level in reservoir too high.	Adjust water level to 3/8-inch below reservoir overflow, then raise reservoir until water flows out freezer spout, then lower reservoir 3/4-inch.
	Storage bin drain and connecting fittings.	Check and repair.
Excessive noise or chattering.	Mineral or scale deposit on auger and inner freezing chamber walls.	For severe deposit, remove and manually polish auger, sand inner chamber walls of freezer barrel.
		For lighter concentration, use Scotsman Ice Machine Cleaner periodically.
	Intermittent water supply.	Check and clean water strainer.
		Check gravity feed line for air lock.
		Remove air lock.
	Water level in reservoir too low.	See CORRECTION for Water Leaks above.
	Gear Reducer loose on frame.	Tighten Gear Reducer.
	Motor compressor not solid on rubber mounts.	Repair or replace rubber mounts.
	Gearmotor end-play or worn bearing.	Repair or replace bearing.
Making wet ice. (Ice melts too quickly, is not cold enough to properly cure in the Bin.)	Surrounding air temperature too high.	Correct or move cabinet.
	Under or over-charge of refrigerant.	Recharge with proper amount. Should frost out of accumulator at least 8-inches. See nameplate for correct charge. See CORRECTION for Water Leaks above.

ICEMAKING - REFRIGERATION SYSTEM (Con't)

SYMPTOM	POSSIBLE CAUSE	CORRECTION
Making wet ice (cont'd)	Back pressure too high.	Overcharge of refrigerant, Faulty compressor or high head pressure. Lower pressure as indicated.
	Faulty compressor or valve plate.	Repair or replace compressor or valve plate.
Low ice production.	Loss of refrigerant. Under or over-charge of refrigerant.	Check and recharge. See NAMEPLATE for correct charge.
	Drivemotor weak.	Replace Drivemotor.
	Dirty or plugged condenser.	Clean condenser.
	Low water level in water reservoir.	See CORRECTION for Water leaks above.
	Partial restriction in capillary tube or drier.	Moisture in system. Overcharge of oil in system. Remove charge by blowing back through cap tube. Replace drier and recharge.
	Inlet water strainer partially plugged.	Remove screen and clean.
	Corroded or stained auger due to water condition.	Remove auger and clean, or use Scotsman Ice Machine Cleaner. See Maintenance Section
Gearmotor noise.	Low on oil.	Remove case cover to check for proper oil level. Top of gears should be covered. Use: Sun Oil Company Prestige 50-EP
Icemaker will not operate.	Blown fuse in line.	Replace fuse and check for cause of blown fuse.
	Bin thermostat set too high.	Adjust thermostat. Set at 35-degrees cut-out, 45-degrees cut-in.
	Loose electrical connection.	Check wiring.
	Switch in OFF position.	Set switch to ON position.
	Inoperative master switch.	Replace switch or thermal overload.
	Off on manual-reset pressure control.	Reset.
Icemaker continues to operate with full storage bin.	Bin thermostat not properly set or is defective.	Re-set or replace bin thermostat Re-set to 35-degrees cut-out, 45-degrees cut-in.
Compressor cycles intermittently.	Low voltage.	Check for overloading.
	Dirty condenser.	Clean condenser.
	Air circulation blocked. Inoperative condenser fan motor.	Remove cause or move unit. Replace motor.

ICEMAKING - REFRIGERATION SYSTEM (Cont'd)

SYMPTOM	POSSIBLE CAUSE	CORRECTION
Compressor Cycles intermittently (cont'd)	Non-condensable gases in system.	Check for gas leaks, evacuate and recharge.
	Bin thermostat differential too small causing short cycling.	Widen differential 35-degrees cut-out, 45-degrees cut in.
	Cycling on ice spout microswitch.	Set or replace Bin thermostat.
Icemaker operates but makes no ice.	Loss or undercharge of refrigerant.	Check for leaks and recharge. See NAMEPLATE for correct charge.
	Water not entering freezing chamber.	Plugged strainer or supply line. Check and clean. Air lock in gravity feed line. Check and remove air lock.
	Moisture in system.	Check, evacuate, replace drier.
		Recharge. See NAMEPLATE for correct charge.
	Water seal leaking.	Replace seal.
	Water turned off while unit was operating.	Freezer inlet water line froze shut. Unit must be turned off and defrosted.
	Drivemotor or drive coupling. stripped.	Repair or replace drivemotor or drive coupling.

SECTION VII
WIRING DIAGRAMS

This Section is provided as an aid in understanding the electrical circuitry of the Automatic Flaker.

The Wiring Diagrams in this Section are:
Figure 7-1. Wiring Diagram AF-730 - Air-Cooled.
Figure 7-2. Wiring Diagram AF-730 - Water-Cooled.

WARNING

When conducting a continuity check of the Automatic Flaker:

1. Disconnect the main power source.
2. DO NOT use an incandescent lamp or jumper wire, conduct all tests with a volt-ohm-meter.

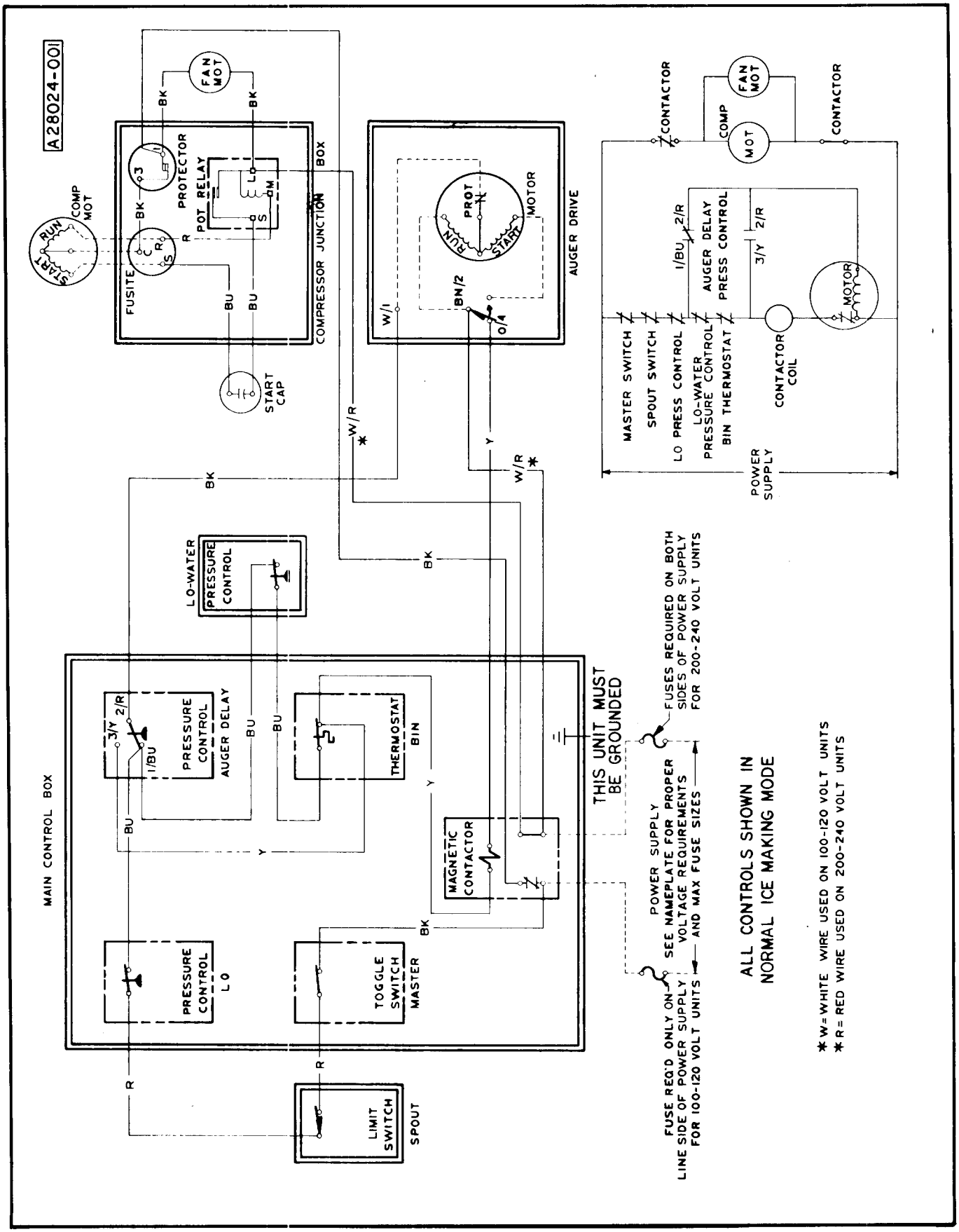

Figure 7-1. Wiring Diagram AF-730 - Air-Cooled.

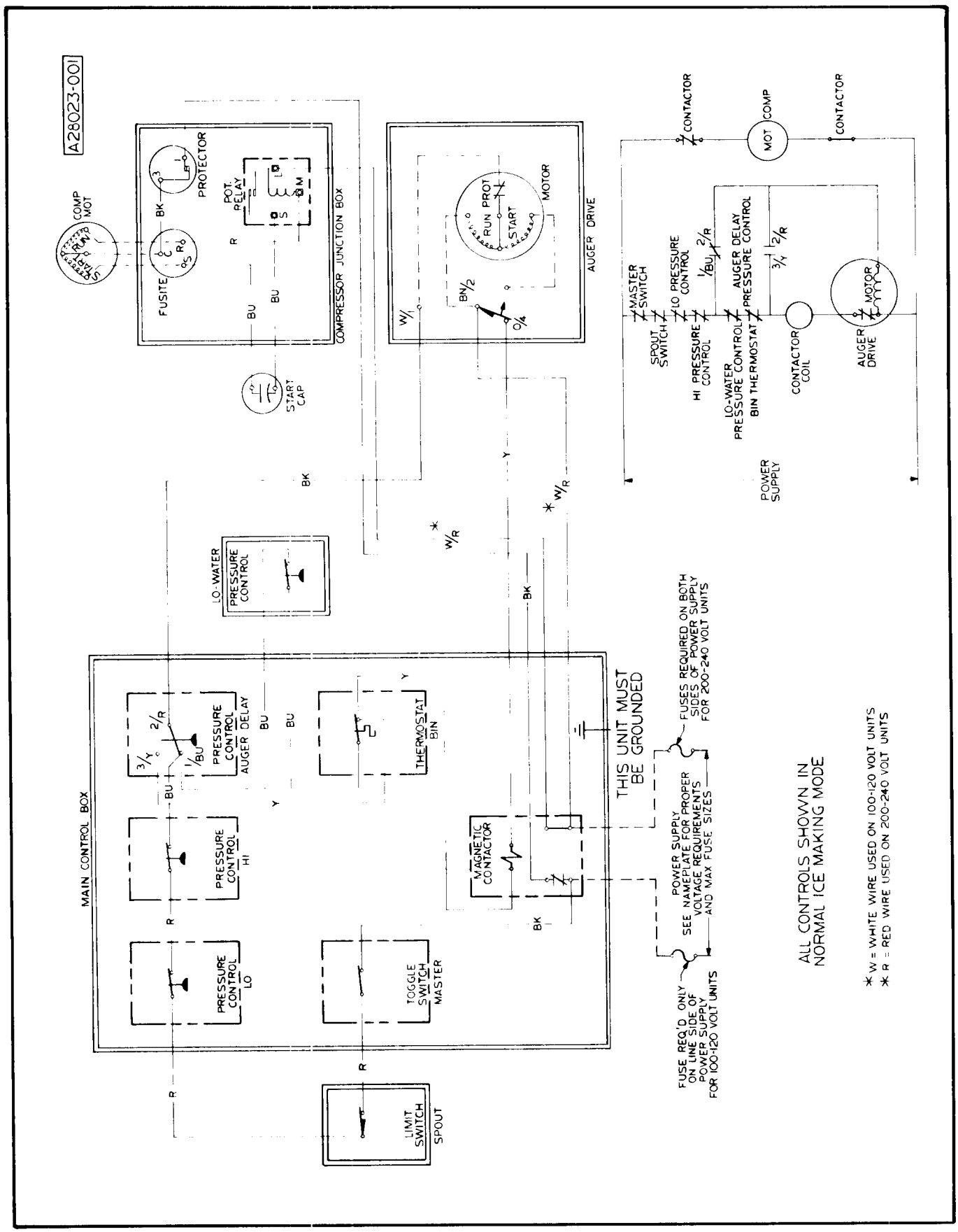

Figure 7-2. Wiring Diagram AF-730 - Water-Cooled.

SECTION VIII

THE PARTS ILLUSTRATIONS AND PARTS LIST

I. GENERAL

This section contains the Parts Illustrations and the Parts List for each of the major assemblies in the AF-730 Automatic Flaker.

Each Parts Illustration shows an assembly as an exploded view, with an Index Number for each part or sub-assembly, given in disassembly order. These Index Numbers key with the Parts List for the assembly and are found in the Parts List Column headed Index Number. The Description Column gives the identifying nomenclature for the item indexed. The Part Number Column gives the number of item. The Number Required Column gives the number of items required per assembly, but not necessarily the total number of parts required per Flaker.

All assemblies are cross-referenced both from the major assembly listing where they first appear in the Parts Listing to their break-down listing, and from the break-down listing, back to the major assembly (next higher assembly) listing.

A *No Number* designation, when used in the Part Number Column indicates the unit is not available from SCOTSMAN as an assembly. This designation is used only for the convenience and clarity of division in cataloging.

When an Index Number is followed by a letter (e.g. 1a, 1b), the letter indicates the part listed is part of the assembly indexed by the basic Index Number. The number required of the part indexed by the number and letter combination is for only one of the assemblies indexed by the basic Index Number and not necessarily the total number or parts used in the Flaker. Where the notation *Ref* occurs in the Number Required Column the number of the assemblies or parts required for use in the Flaker will be found under a previous Index Number or in the next higher assembly Parts Listing. The next higher listing Figure/Index number is shown in the Description Column immediately following the items description.

II. HOW TO USE THE ILLUSTRATIONS AND PARTS LIST

To find the part number of a required part or assembly, turn to the List of Illustrations and find the page number of the Parts Illustration of the major or sub-assembly containing the part. Turn to the indicated page and locate the part and its Index Number on the specific illustration. Find the Index Number on the required part in the Parts List to determine the complete description of the part.

III. HOW TO ORDER PARTS OR ASSEMBLIES

When ordering parts or assemblies, to avoid costly delays and errors in shipment, give the part number, the complete description shown in the list, and the quantities of each part or assembly required. Also include the Model name, the serial number of the Flaker for which the part is required, and for parts which require color matching, the color of the Cabinet.

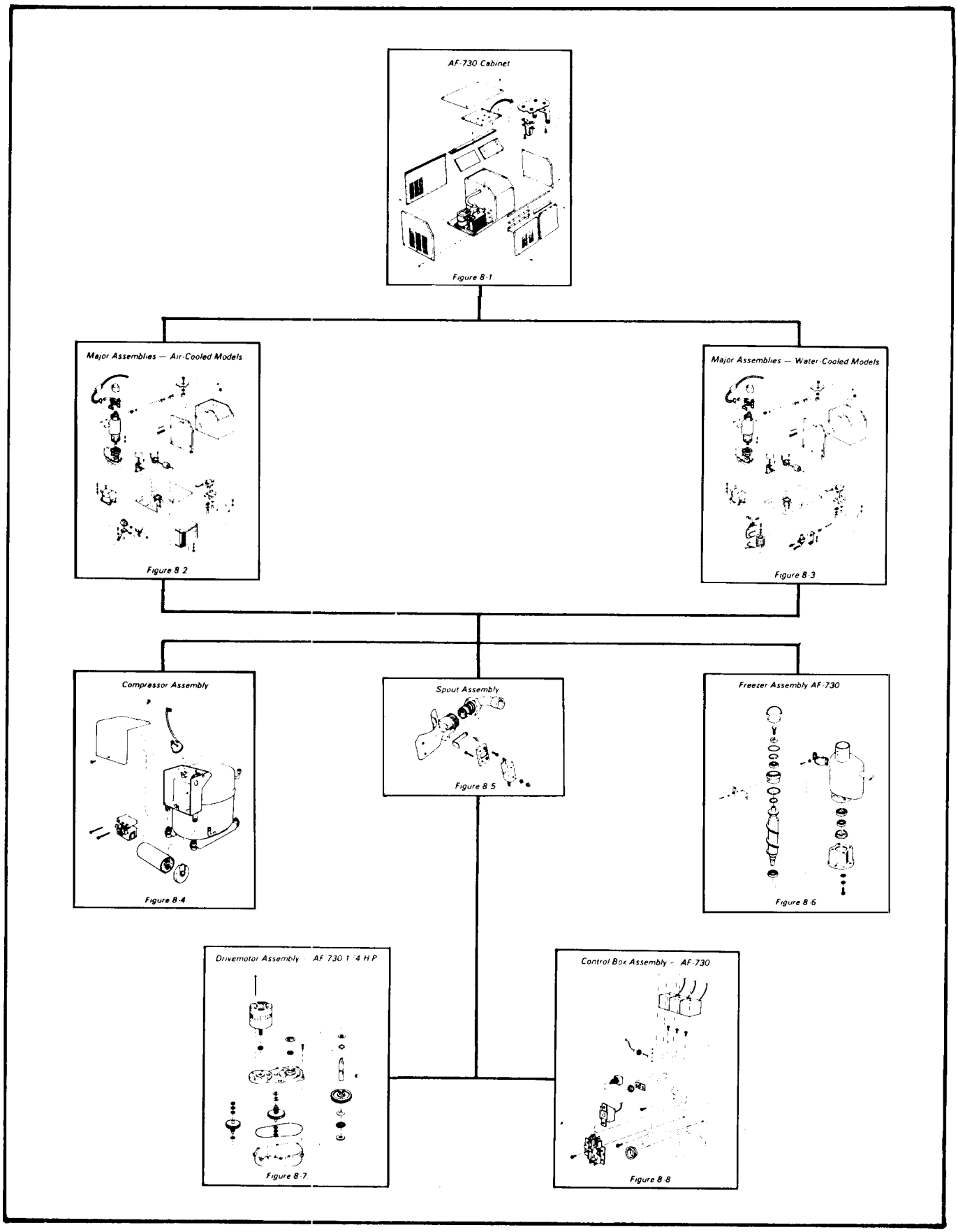

Figure 8-A. Automatic Flaker AF-730 Flow Chart.

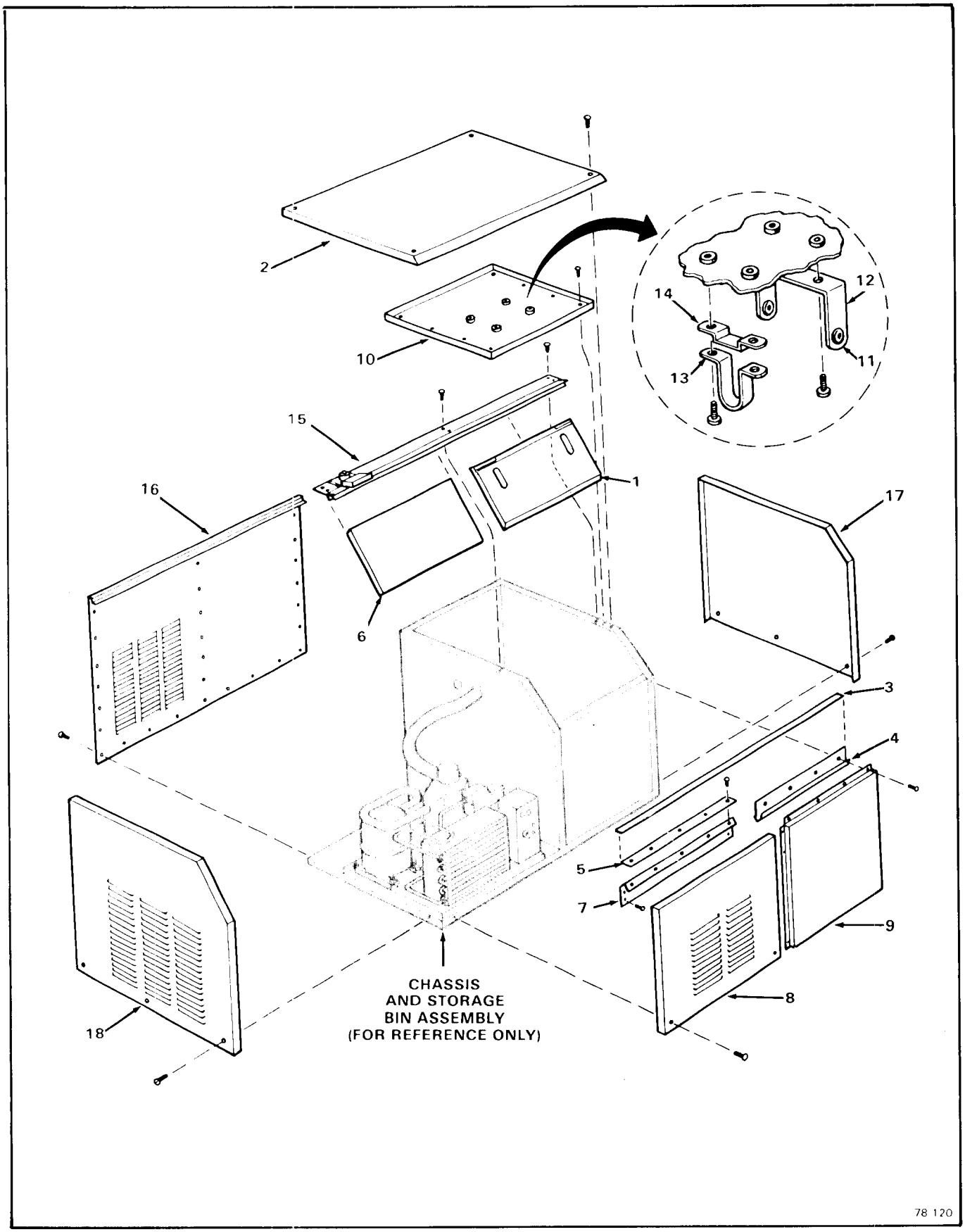

Figure 8-1. AF-730 Cabinet

Figure 8-1. AF-730 Cabinet.

INDEX NO.	DESCRIPTION	PART NUMBER	REQ'D NUMBER
	AF-730 Cabinet	No Number	1
	* * *		
1	Door, Ice Access (Orange w/C.R.S. Painted Cabinet)	02-2130-01	1
	Door, Ice Access (Gray w/Stainless Steel Cabinet)	02-2130-02	1
	* * *		
2	Panel, Top (C.R.S.) Painted)	A24799-003	1
	Panel, Top (Stainless Steel)	A24799-002	1
	attaching parts, Index 2		
	Screw, No. 8 x 1-3/4 S/T Flat Hd	03-1419-19	4
	* * *		
3	Insert, Plastic (43.44 in. lg.)	15-0324-00	1
	* * *		
4	Strip, Moulding — Right Side	15-0620-01	1
	attaching parts, Index 4 & 9		
	Screw, No. 8 x 3/8 S/T Flat Hd	03-1419-05	4
	* * *		
5	Strip, Moulding — Left Side	15-0578-01	1
	attaching parts, Index 5 to 8		
	Screw, No. 8 x 3/8 S/T Flat Hd	03-1419-05	5
	* * *		
6	Panel, Upper — Left Front (C.R.S. Painted)	A24795-003	1
	Panel, Upper — Left Front (Stainless Steel)	A24795-002	1
	* * *		
7	Bracket, Left Front	A24787-001	1
	attaching parts, Index 5 & 7		
	Screw, No. 8 x 1/2 T/F Tap	03-1404-09	4
	* * *		
8	Panel, Lower —Left Front (C.R.S. Painted)	A24796-003	1
	Panel, Lower —Left Front (Stainless Steel)	A24796-004	1

Figure 8-1. AF-730 Cabinet (cont'd)

INDEX NO.	DESCRIPTION	PART NUMBER	REQ'D NUMBER
	attaching parts, Index 8		
	Screw, No. 8 x 1-1/2 S/T Flat Hd	03-1419-16	2
	* * *		
9	Panel, Right Front (C.R.S. Painted)	A24794-003	1
	Panel, Right Front (Stainless Steel)	A24794-002	1
	attaching parts, Index 4 & 9		
	Screw, No. 8 x 3/8 S/T Flat Hd	03-1419-05	Ref.
	* * *		
10	Cover, Storage Bin	A27980-001	1
	attaching parts, Index 10		
	Screw, No. 8 x 1/2 T/F Tap	03-1404-09	10
	* * *		
11	Grommet	13-0557-00	2
12	Bracket, Bin Thermo	A27924-001	1
13	Holder, Tube	A27922-001	1
14	Retainer, Tube	A27923-001	1
	attaching parts, Index 12, 13, 14 to 10		
	Screw, Thumb — No. 10-24 x 1/2 Knurled Hd	03-0727-00	4
	* * *		
15	Track Assembly, Door	A24790-001	1
	attaching parts, Index 15		
	Screw, No. 8 x 1/2 T/F Tap	03-1404-09	6
	* * *		
16	Panel, Back (Galvanized Steel)	A27033-003	1
	attaching parts, Index 16		
	Lockwasher, No. 8 External Tooth — Carbon Steel Zinc Plated	03-1417-03	4
	Screw, No. 8 x 1/2 T/F Tap	03-1404-09	27
	* * *		
17	Panel, Right Side (C.R.S. Painted)	A24800-003	1
	Panel, Right Side (Stainless Steel)	A24800-002	1

Figure 8-1. AF-730 Cabinet (cont'd).

INDEX NO.	DESCRIPTION	PART NUMBER	REQ'D NUMBER
	attaching parts, Index 17		
	Screw, No. 8 x 1/2 T/F Tap (SS)	03-1404-10	5
	* * *		
18	Panel, Left Side (C.R.S. Painted)	A27034-003	1
	Panel, Left Side (Stainless Steel)	A27034-002	1
	attaching parts, Index 18		
	Lockwasher, No. 8 External Tooth — Carbon Steel Zinc Plated	03-1417-03	2
	Screw, No. 8 x 1/2 T/F Tap (SS)	03-1404-10	3

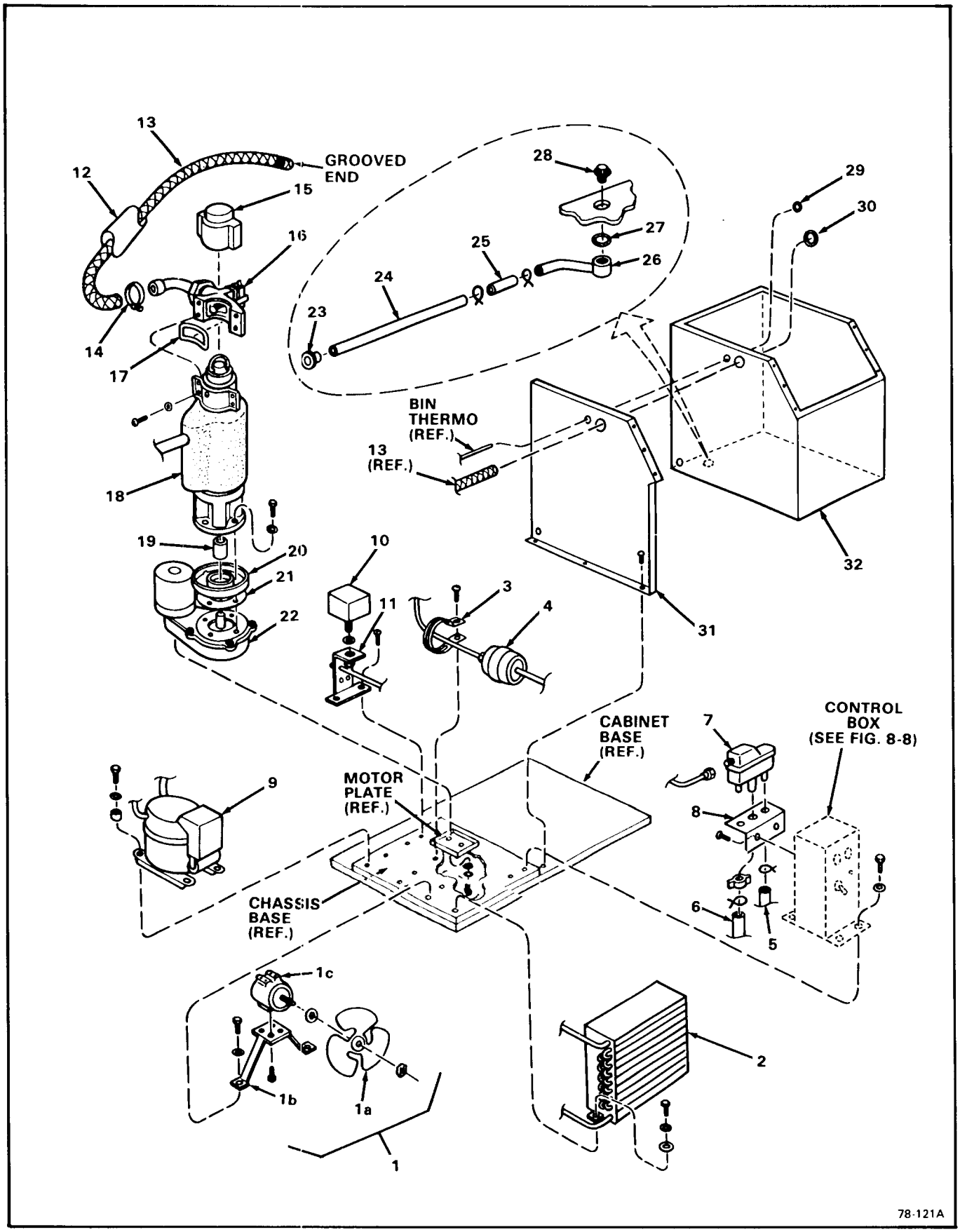

Figure 8-2. Major Assemblies - Air-Cooled Models.

Figure 8-2. Major Assemblies — Air-Cooled Models

INDEX NO.	DESCRIPTION	PART NUMBER	REQ'D NUMBER
	Major Assemblies - Air-Cooled Models	No. Number	Ref.
	* * *		
1	Bracket Assembly, Fan Motor and Mounting	No Number	1
1a	Blade, Fan	18-3309-01	1
	Pad, Vibration (p/o Fan Motor)	No Number	1
	Nut, Fan Mounting (p/o Fan Blade)	No Number	1
1b	Bracket, Fan Mounting	18-0422-00	1
1c	Motor, Fan	12-1576-01	1
	attaching parts, Index 1c to 1b		
	Screw (p/o Fan Motor)	No Number	4
	attaching parts, Index 1 to Chassis base		
	Lockwasher, No. 1/4 External Tooth - Carbon Steel Zinc Plated	03-1417-09	2
	Screw, No. 1/4-20 x 1/2 T/C Hex Hd	03-0571-00	2
	* * *		
2	Condenser - Air-Cooled	18-0396-01	1
	attaching parts, Index 2		
	Lockwasher, No. 1/4 External Tooth - Carbon Steel Zinc Plated	03-1417-09	2
	Screw, No. 1/4-20 x 1/2 T/C Hex Hd	03-0571-00	2
	* * *		
3	Brace, Drier	A09388-000	1
4	Drier	02-0544-01	1
	attaching parts, Index 3 and 4		
	Screw, No. 10-16 x 3/4 S/T	03-1360-01	1
	* * *		
5	Tube (Reservoir Overflow to Drip Pan)	13-0079-03	1
6	Tube (Reservoir to Freezer Inlet)	13-0674-09	1
	attaching parts, Index 5 and 6		
	Clamp (Index 5)	02-0535-00	1
	Clamp (Index 6)	02-0694-00	2
	* * *		

Figure 8-2. Major Assemblies — Air-Cooled Models (Cont'd)

INDEX NO.	DESCRIPTION	PART NUMBER	REQ'D NUMBER
7	Reservoir	02-2217-01	1
	Valve Assembly, Float (Not Shown)	02-2217-02	1
	attaching parts, Index 7		
	Wing Nut (p/o Reservoir)	No Number	1
	* * *		
8	Bracket, Mounting	A20959-000	1
	attaching parts, Index 8		
	Screw, No. 8-18 x 1/2 Phil Pan Hd	03-1572-01	2
	* * *		
9	Compressor (See Figure 8-4)	18-3900-01	1
	attaching parts, Index 9		
	Grommet	18-2200-28	4
	Sleeve, Mounting	18-2200-27	4
	Lockwasher, No. 5/16 External Tooth - Carbon Steel Zinc Plated	03-1417-12	4
	Washer, Special	03-1408-24	4
	Screw, No. 5/16-18 x 1-3/4 Hex Cap	03-1405-40	4
	* * *		
10	Control, Pressure - H^2O	11-0296-00	1
11	Bracket, Utility	A27993-001	1
	O-Ring	13-0617-26	1
	attaching parts, Index 10 and 11		
	Nut, Pal	03-1394-00	1
	Screw, No. 10-16 x 3/4 S/T	03-1360-01	2
	* * *		
12	Covering, Tube	13-0279-00	1
13	Tube, Ice	A28042-001	1
	attaching parts, Index 12 and 13		
14	Clamp, Hose	02-0179-02	1
	* * *		

Figure 8-2. Major Assemblies — Air-Cooled Models (Cont'd)

INDEX NO.	DESCRIPTION	PART NUMBER	REQ'D NUMBER
15	Cap, Freezer	13-0809-01	1
	* * *		
16	Spout Assembly	No Number	1
	(See Figure 8-5)		
17	Gasket, Spout	02-1437-00	1
	attaching parts, Index 16 and 17		
	Washer, No. 1/4 Internal Tooth - Phosphor Bronze	03-1417-07	4
	Screw, No. 1/4-20 x 1 Soc-Hd Cap (SS)	03-1544-03	4
	* * *		
18	Freezer Assembly	No Number	1
	(See Figure 8-6)		
	attaching parts, Index 18		
	Washer, Special	03-1408-03	4
	Screw, No. 5/16-18 x 1-1/4 Hex Cap	03-1420-03	4
	* * *		
19	Coupling	15-0573-01	1
	* * *		
20	Pan, Drip	A24156-002	1
	* * *		
21	Gasket	13-0704-00	1
	* * *		
22	Drivemotor Assembly	A24317-021	1
	(See Figure 8-7)		
	attaching parts, Index 22		
	Lockwasher, No. 5/16 Carbon Steel Zinc Plated Helical Spring	03-1410-04	3
	Washer, Special	03-1408-35	3
	Screw, No. 5/16-18 x 7/8 Hex Cap	03-1420-01	3
	* * *		
23	Bushing Snap	12-1213-10	1
	* * *		
24	Tube, Bin Drain	No Number	1
	* * *		

Figure 8-2. Major Assemblies — Air-Cooled Models (Cont'd)

INDEX NO.	DESCRIPTION	PART NUMBER	REQ'D NUMBER
25	Tube, Tygon	13-0674-06	1
	attaching parts, Index 24, 25, 26		
	Clamp, Hose	02-1338-00	2
	* * *		
26	Drain Bin	A27018-001	1
27	O-Ring	13-0617-11	1
	attaching parts, Index 26, 27, 28 to 32		
28	Top, Drain (screws into Index 26)	02-1741-00	1
	* * *		
29	Grommet	13-0557-01	1
	* * *		
30	Pad, Sealing	13-0806-01	1
	* * *		
31	Retainer, Insulation	No Number	1
	attaching parts, Index 31		
	Screw, No. 8 x 1/2 T/F Tap	03-1404-09	3
	* * *		
32	Bin, Storage	A27464-002	1
	* * *		
	NOTE: See Figure 8-3 for replacement parts within the Control Box Assembly.		

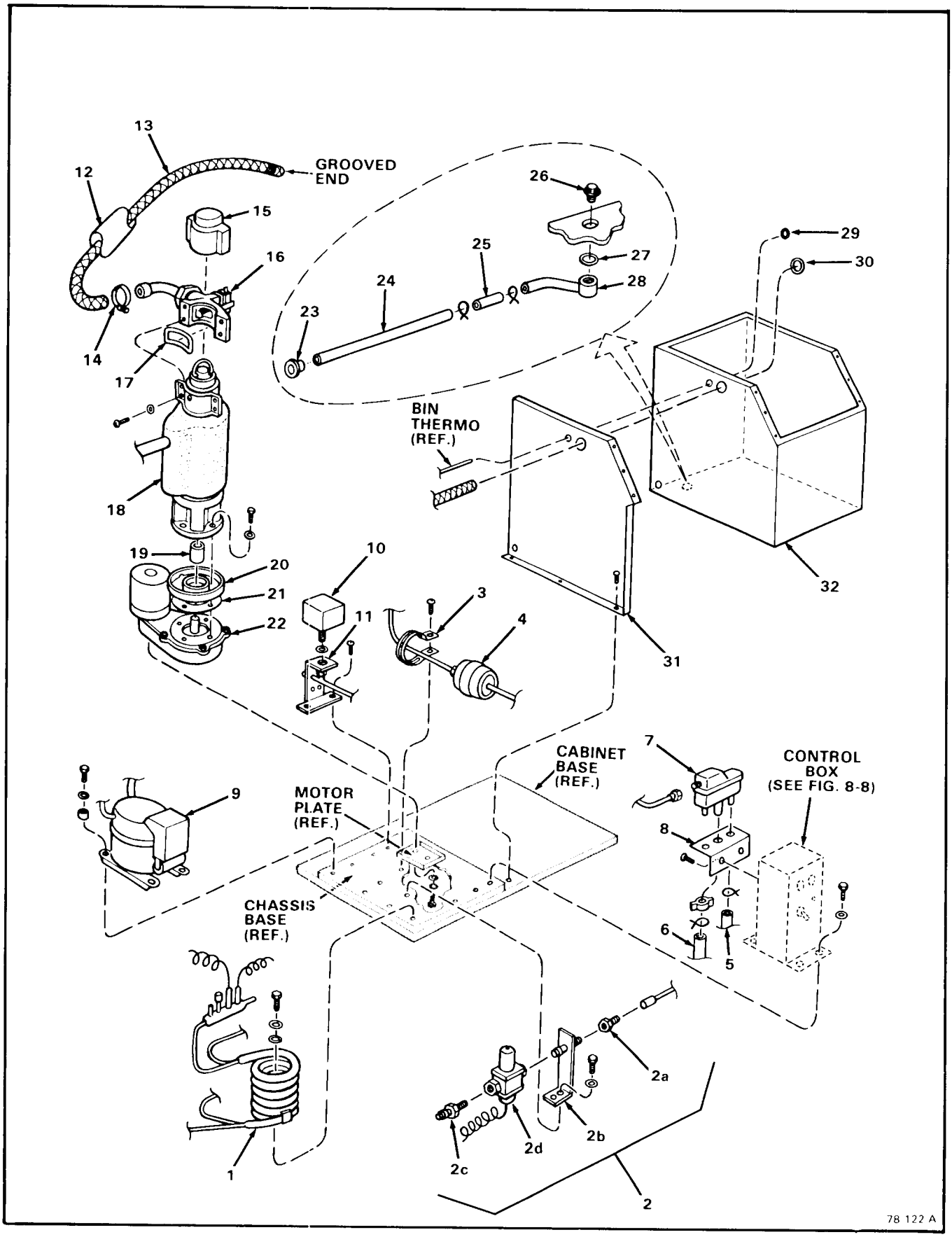

Figure 8-3. Major Assemblies - Water-Cooled

Figure 8-3. Major Assemblies — Water-Cooled Models

INDEX NO.	DESCRIPTION	PART NUMBER	REQ'D NUMBER
	Major Assemblies - Water-Cooled Model	No Number	Ref.
	* * *		
1	Condenser - Water-Cooled	18-3305-02	1
	attaching parts, Index 1		
	Lockwasher, No. 1/4 External Tooth - Carbon Steel Zinc Plated	03-1417-09	2
	Screw, No. 1/4-20 x 1/2 T/C Hex Hd	03-0571-00	2
	* * *		
2	Regulator Assembly, Water	No Number	1
	attaching parts, Index 2		
	Lockwasher, No. 1/4 External Tooth - Carbon Steel Zinc Plated	03-1417-09	2
	Screw, No. 1/4-20 x 1/2 T/C Hex Hd	03-0571-00	2
2a	Union, Half - No. 5/8-18 x 3/8 Flare	16-0677-01	1
2b	Nipple Assembly, Pipe (w/Bracket)	A15924-000	1
2c	Coupling - 3/8 NPT x 3/8 Flare Brass	16-0355-00	1
2d	Valve, Water Regulator	11-0198-02	1
	* * *		
3	Brace, Drier	A09388-000	1
4	Drier	02-0544-01	1
	attaching parts, Index 3 and 4		
	Screw, No. 10-16 x 3/4 S/T	03-1360-01	1
	* * *		
5	Tube (Reservoir Overflow to Drip Pan)	13-0079-03	1
6	Tube (Reservoir to Freezer Inlet)	13-0674-09	1
	attaching parts, Index 5 and 6		
	Clamp (Index 5)	02-0535-00	1
	Clamp (Index 6)	02-0694-00	2
	* * *		
7	Reservoir	02-2217-01	1
	Valve Assembly, Float (Not shown)	02-2217-02	1

Figure 8-3. Major Assemblies — Water-Cooled Models (Cont'd)

INDEX NO.	DESCRIPTION	PART NUMBER	REQ'D NUMBER
	attaching parts, Index 7		
	Wing Nut (p/o Reservoir)	No Number	1
	* * *		
8	Bracket, Mounting	A20959-000	1
	attaching parts, Index 8		
	Screw, No. 8-18 x 1/2 S/T Phil Pan Hd	03-1572-01	2
	* * *		
9	Compressor (See Figure 8-4)	18-3900-01	1
	attaching parts, Index 9		
	Grommet	18-2200-28	4
	Sleeve, Mounting	18-2200-27	4
	Lockwasher, No. 5/16 External Tooth - Carbon Steel Zinc Plated	03-1417-12	4
	Washer, Special	03-1408-24	4
	Screw, No. 5/16-18 x 1-3/4 Hex Cap	03-1405-40	4
	* * *		
10	Control, Pressure - H^2O	11-0296-00	1
11	Bracket, Utility	A27993-001	1
	O-Ring	13-0617-26	1
	Bushing, Snap	12-1213-06	2
	attaching parts, Index 10 and 11		
	Nut, Pal	03-1394-00	1
	Screw, No. 10-16 x 3/4 S/T	03-1360-01	2
	* * *		
12	Covering, Tube	13-0279-00	1
13	Tube, Ice	A28042-001	1
	attaching parts, Index 12 and 13		
14	Clamp, Hose	02-0179-02	1
	* * *		
15	Cap, Freezer	13-0815-01	1
	* * *		

Figure 8-3. Major Assemblies — Water-Cooled Models (Cont'd)

INDEX NO.	DESCRIPTION	PART NUMBER	REQ'D NUMBER
16	Spout Assembly	No Number	1
	(See Figure 8-5)		
	attaching parts, Index 16 and 17		
17	Gasket, Spout	02-1437-00	1
	Washer, No. 1/4 Internal Tooth - Phosphor Bronze	03-1417-07	4
	Screw, No. 1/4-20 x 1 Soc-Hd Cap	03-1544-03	4
	* * *		
18	Freezer Assembly	No Number	1
	(See Figure 8-6)		
	attaching parts, Index 18		
	Washer, Special	03-1408-03	4
	Screw, No. 5/16-18 x 1-1/4 Hex Cap	03-1420-03	4
	* * *		
19	Coupling	15-0573-01	1
	* * *		
20	Pan, Drip	A24156-002	1
	* * *		
21	Gasket	13-0704-00	1
	* * *		
22	Drivemotor Assembly	A24317-021	1
	(See Figure 8-7)		
	attaching parts, Index 22		
	Lockwasher, No. 5/16 Carbon Steel Zinc Plated Helical Spring	03-1410-04	3
	Washer, Special	03-1408-35	3
	Screw, No. 5/16-18 x 7/8 Hex Cap	03-1420-01	3
	* * *		
23	Bushing, Snap	12-1213-08	1
	* * *		
24	Tube, Bin Drain	No Number	1
	* * *		

Figure 8-3. Major Assemblies — Water-Cooled Models (Cont'd)

INDEX NO.	DESCRIPTION	PART NUMBER	REQ'D NUMBER
25	Tube, Tygon	13-0674-06	1
	attaching parts, Index 24, 25, 26		
	Clamp Hose	02-1338-00	2
	* * *		
26	Drain, Bin	A27018-001	1
27	O-Ring	13-0617-11	1
	attaching parts, Index 26, 27, 28 to 32		
28	Top, Drain (Screws into Index 26)	02-1741-00	1
	* * *		
29	Grommet	13-0557-01	1
	* * *		
30	Pad, Sealing	13-0806-01	1
	* * *		
31	Retainer, Insulation	No Number	1
	attaching parts, Index 31		
	Screw, No. 8 x 1/2 T/F Tap	03-1404-09	3
	* * *		
32	Bin Storage	A27464-002	1
	* * *		
	NOTE: See Figure 8-8 for replacement parts within the Control Box Assembly.		

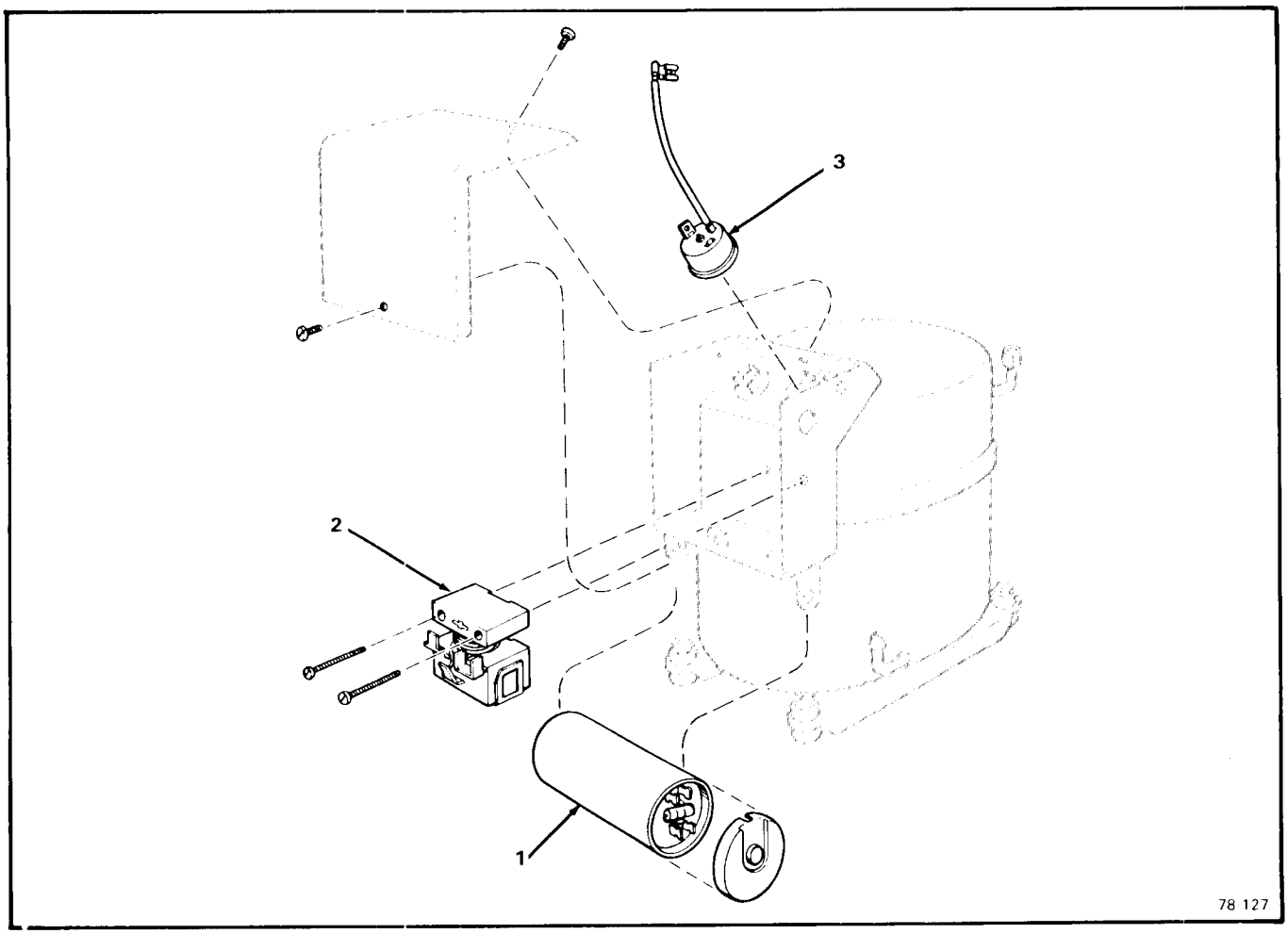

Figure 8-4. Compressor Assembly

Figure 8-4. Compressor Assembly

INDEX NO.	DESCRIPTION	PART NUMBER	REQ'D NUMBER
	Compressor Assembly (See Figure/Index 8-2/9 and 8-3/9 for next higher Assembly) * * *	18-3900-01	Ref.
1	Capacitor - w/cap * * *	18-1901-33	1
2	Relay * * *	18-2200-26	1
3	Overload * * *	18-2200-25	1

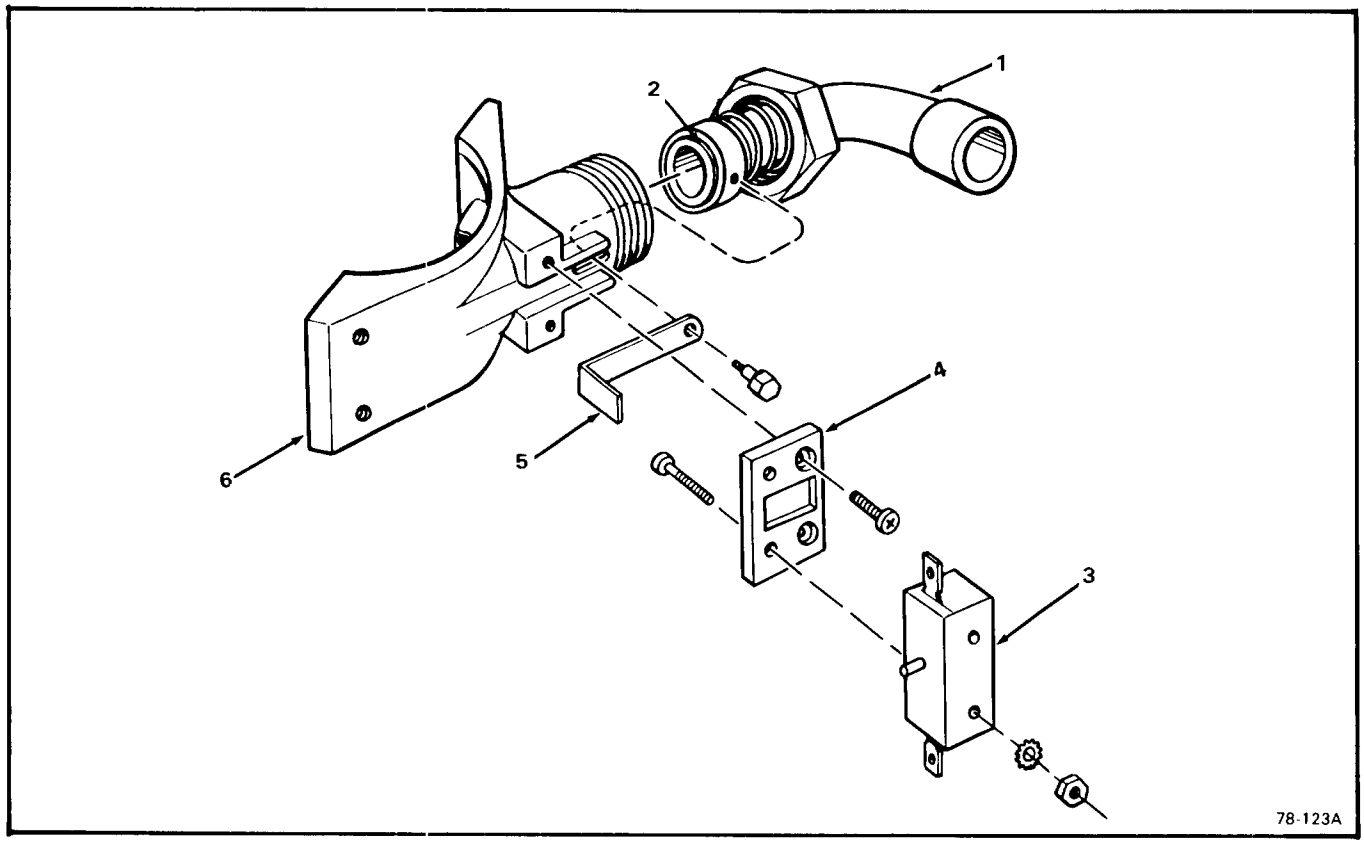

Figure 8-5. Spout Assembly.

Figure 8-5. Spout Assembly.

INDEX NO.	DESCRIPTION	PART NUMBER	REQ'D NUMBER
	Spout Assembly (See Figure/Index 8-2/16 and 8-3/16 for next higher Assembly) * * *	No Number	Ref.
1	Tube, Ice Discharge * * *	A26542-001	1
2	O-Ring * * *	13-0617-41	1
3	Switch attaching parts, Index 3 to 4 Screw, No. 6-32 x 1 Flat Hd. Mach - Phil Recess	12-1664-00 03-1418-38	1 2

Figure 8-5. Spout Assembly (Cont'd.)

INDEX NO.	DESCRIPTION	PART NUMBER	REQ'D NUMBER
	Lockwasher No. 6 External Tooth - Phosphor Bronze	03-1417-01	2
	Nut, No. 6-32 Hex Mach Screw	03-1406-01	2
	* * *		
4	Barrier, Thermal	02-2377-01	1
	attaching parts, Index 4 to 6		
	Screw, No. 6-32 x 3/8 Flat Hd Mach - Phil Recess	03-1418-01	2
	* * *		
5	Actuator, Switch	A27511-001	1
	attaching parts, Index 5 to 6		
	Screw, Shoulder	A25305-001	1
	* * *		
6	Spout	A26441-001	1
	* * *		

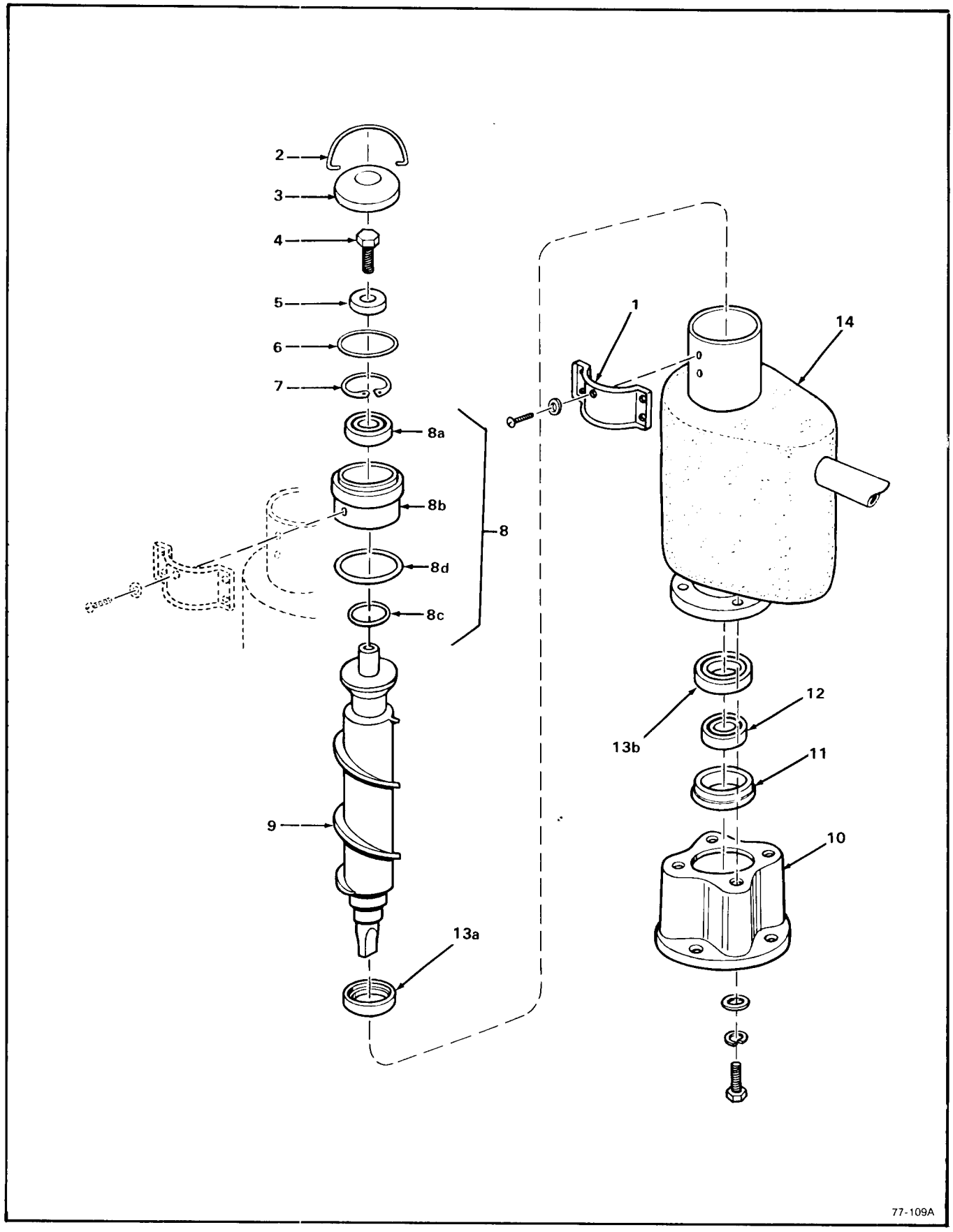

Figure 8-6. Freezer Assembly - AF-730.

Figure 8-6. Freezer Assembly.

INDEX NO.	DESCRIPTION	PART NUMBER	REQ'D NUMBER
	Freezer Assembly	No Number	Ref.
	(See Figure/Index 8-2/18 and 8-3/18		
	for next higher Assembly)		
	* * *		
1	Plate, Spout	A18430-002	1
	attaching parts, Index 1		
	Washer, Non-Metallic .250 I.D.	03-1409-20	1
	Screw, No. 1/4-20 x 3/8 Phil Recessed Hd Sealing	03-1506-03	1
	* * *		
2	Hook	A08582-000	1
	* * *		
3	Cap	A08581-000	1
	* * *		
4	Screw, No. 1/2-20 x 1 Hex Cap	03-1405-36	1
	* * *		
5	Washer, Brass 17/32 I.D. x 1-5/8 O.D. x 5/16	A06273-000	1
	* * *		
6	O-Ring (fits into outside groove, Index 8)	13-0617-20	1
	* * *		
7	Ring, Internal Retaining	02-1558-04	1
	* * *		
8	Retainer, Top Bearing — w/Bearing	A26708-001	1
8a	Bearing (Top)	02-0646-00	1
8b	Retainer (Order P/N A26708-001)	No Number	Ref.
8c	O-Ring - (Internal)	13-0617-15	1
8d	O-Ring - (External)	13-0617-40	1
	* * *		
9	Auger	02-2047-01	1
	* * *		

Figure 8-6. Freezer Assembly (Cont'd.)

INDEX NO.	DESCRIPTION	PART NUMBER	REQ'D NUMBER
10	Adaptor	02-1629-00	1
	attaching parts, Index 10, 11, 12, 13 to 14		
	Washer, Special	03-1408-03	4
	Lockwasher, No. 5/16 Helical Spring	03-1410-04	4
	Screw, No. 5/16-18 x 1-1/4 Hex Cap	03-1405-41	4
	* * *		
	Gasket (not shown)	13-0704-00	Ref.
	* * *		
11	Retainer, Bearing	A10591-000	1
	* * *		
12	Bearing (Lower)	02-0619-00	1
	* * *		
13	Seal, Water	A22569-000	1
13a	Seal, Upper (Fits on Index 9)	No Number	Ref.
13b	Seal, Lower (Fits on top of Index 12)	No Number	Ref.
	* * *		
14	Freezer - (Repair Assembly)	A26600-020	1
	* * *		

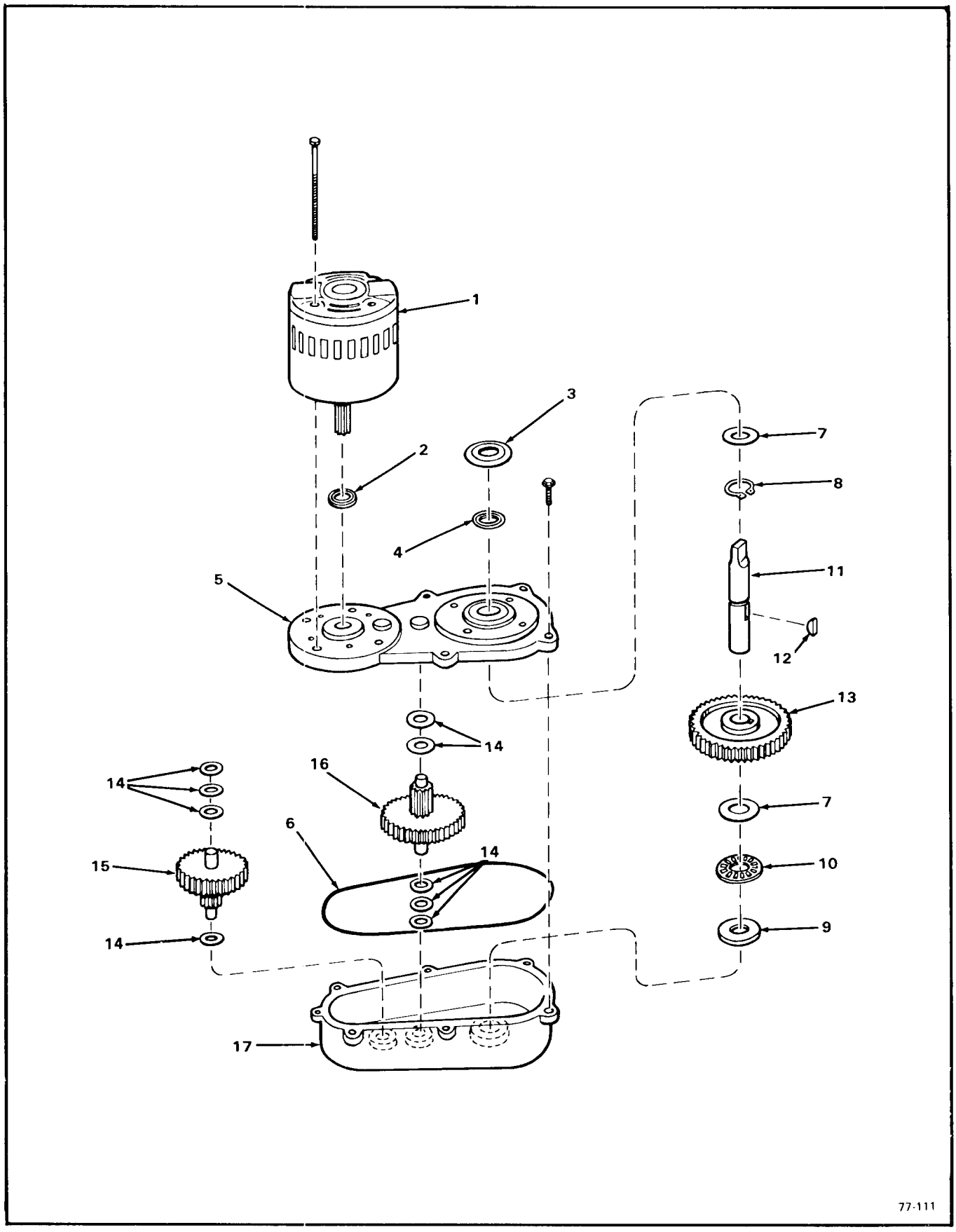

Figure 8-7. Drivemotor Assembly

Figure 8-7. Drivemotor Assembly.

INDEX NO.	DESCRIPTION	PART NUMBER	REQ'D NUMBER
	Drivemotor Assembly - AF-730 (1/4 H.P.) (12.2 R.P.M.)	A24317-021	Ref
	(See Figure/Index 8-2/22 and 8-3/22		
	for next higher Assembly)		
	* * *		
1	Motor, Drive 115/60/1 (1/4 H.P. Split Phase)	A26455-001	1
	attaching part, Index 1 to 5		
	Screw, Motor (p/o Index 1)	No Number	4
	* * *		
2.	Seal, Oil	02-1606-00	1
	* * *		
3	Shed, Water	13-0709-02	1
	* * *		
4	Seal, Oil	02-1607-00	1
	* * *		
5	Cover Assembly, Gear Case	A22200-000	1
	attaching parts, Index 5 to 17		
	Screw, No 5/16 x 1 Flange	03-1252-01	6
	* * *		
6	O-Ring	A26103-001	1
	* * *		
7	Race, Thrust	02-1681-00	2
	* * *		
8	Ring, Retaining	03-1363-00	1
	* * *		
9	Race, Thrust	02-1679-00	1
	* * *		
10	Bearing	02-1680-00	1
	* * *		
11	Shaft, Output	02-1652-00	1

Figure 8-7. Drivemotor Assembly AF-730 (cont'd).

INDEX NO.	DESCRIPTION	PART NUMBER	REQ'D NUMBER
	attaching part, Index 11 to 13		
	* * *		
12	Key (No. 91 Woodruff, Nickel Steel)	03-1364-00	1
	* * *		
13	Gear, Output	02-1653-00	1
	* * *		
14	Washer, Special (.515 I.D. x 875 O.D. x .028 Steel)	03-1408-24	9
	* * *		
15	Second Pinion Assembly, First Gear and	02-2072-00	1
	* * *		
16	Third Pinion Assembly, Second Gear and	02-2071-00	1
	* * *		
17	Case Assembly, Gear	A22199-000	1
	* * *		

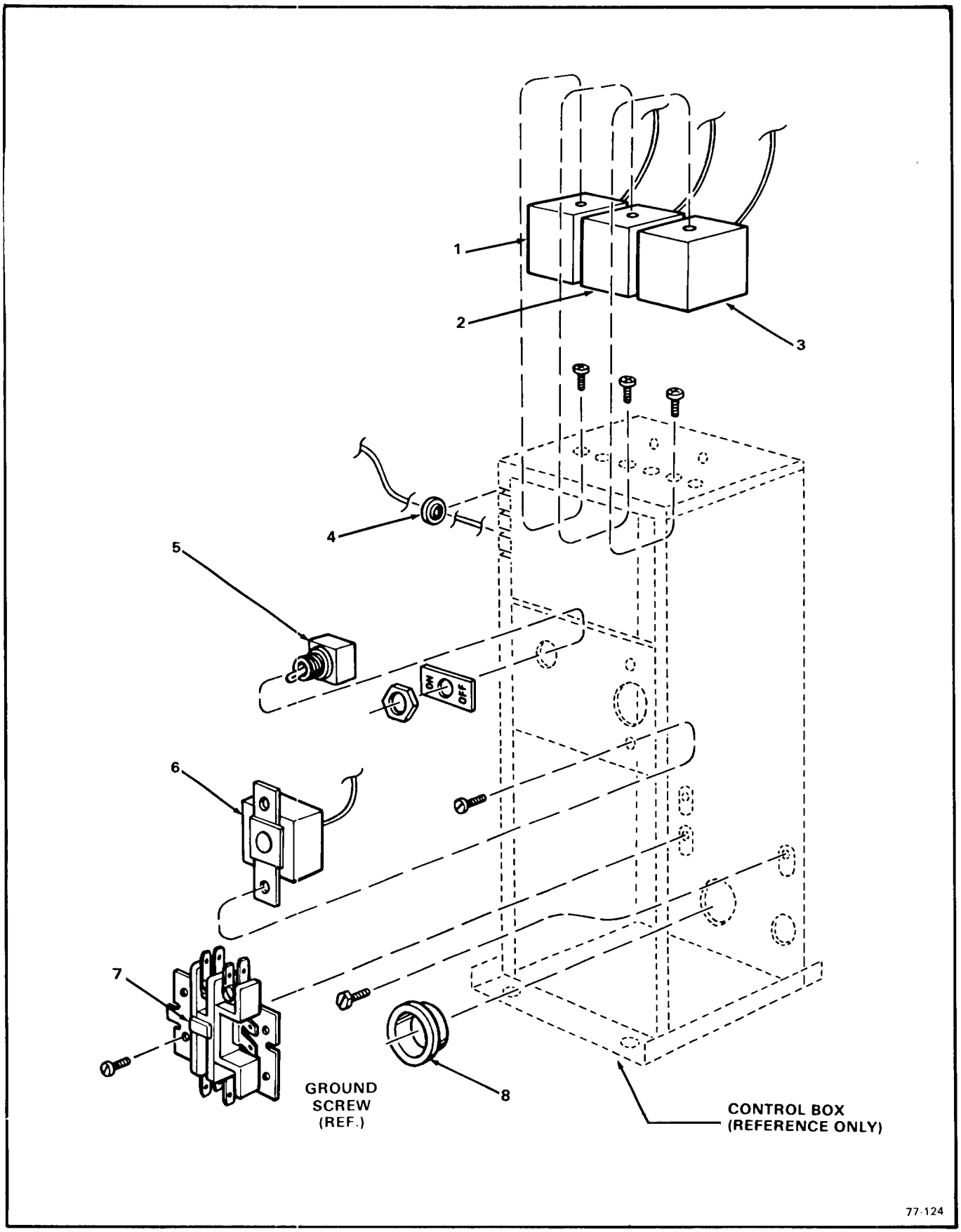

Figure 8-8. Control Box Assembly.

Figure 8-8. Control Box Assembly — AF-730.

INDEX NO.	DESCRIPTION	PART NUMBER	REQ'D NUMBER
	Control Box Assembly - AF-730	No Number	Ref.
	(See Figure 8-2/8-3		
	for next higher Assembly)		
	* * *		
1	Control, Low-Pressure	11-0358-01	1
	attaching parts, Index 1		
	Screw, No. 6-32 x 1/4 Pan Hd	03-1403-02	2
	* * *		
2	Control, Hi-Pressure (Water-Cooled Model)	11-0388-02	1
	attaching parts, Index 2		
	Screw, No. 6-32 x 1/4 Pan Hd	03-1403-02	2
	* * *		
3	Control, Auger Delay	11-0402-01	1
	attachig parts, Index 3		
	Screw, No. 6-32 x 1/4 Pan Hd	03-1403-02	2
	* * *		
4	Grommet	13-0557-00	4
	* * *		
5	Switch, Toggle	12-0426-01	1
	* * *		
6	Thermostat, Bin	11-0354-00	1
	attaching parts, Index 6		
	Screw, No. 8-32 x 3/8 Phil Recess Pan Hd	03-1403-17	2
	* * *		
7	Contactor	12-2037-01	1
	attaching parts, Index 7		
	Screw, No. 8-32 x 3/4 Phil Recess Pan Hd	03-1403-21	2
	* * *		
8	Bushing, Snap	12-1213-12	1
	* * *		

TABLE OF CONTENTS

Table of Contents i

List of Illustrations iii

Specifications iv

SECTION I- GENERAL INFORMATION & INSTALLATION ..... 1 - 1

I. Introduction ..... 1 - 1

II. Unpacking and Inspection ..... 1 - 1

III. Location and Leveling ..... 1 - 2

IV. Electrical Connections ..... 1 - 2

V. Water Supply and Drain Connections ..... 1 - 2

VI. Final Check List ..... 1 - 3

SECTION II- START UP OPERATION ..... 2 - 1

I. Start Up ..... 2 - 1

SECTION III- PRINCIPLES OF OPERATION - How it Works ..... 3 - 1

I. Icemaker ..... 3 - 1

II. Electrical/Refrigeration ..... 3 - 2

SECTION IV- ADJUSTMENT AND REMOVAL AND REPLACEMENT PROCEDURES ..... 4 - 1

I. Adjustment of the Bin Thermostat Control ..... 4 - 1

II. Adjustment of the Leg Levelers ..... 4 - 2

III. Adjustment of the Water Regulator Assembly ..... 4 - 2

IV. Adjustment of the Water Reservoir Float ..... 4 - 2

V. Removal & Replacement of the Auger, Water Seal, Bearings and Coupling ..... 4 - 2

VI. Removal & Replacement of the Compressor Assembly ..... 4 - 3

VII. Removal & Replacement of the Condenser - Air Cooled Models ..... 4 - 4

VIII. Removal & Replacement of the Condenser - Water-Cooled Models ..... 4 - 4

TABLE OF CONTENTS (cont'd)

IX. Removal & Replacement of the Drier ..... 4 - 4

X. Removal & Replacement of the Drivemotor Assembly ..... 4 - 4

XI. Removal & Replacement of the Fan Motor Assembly - Air-Cooled Models ..... 4 - 4

XII. Removal & Replacement of the Freezer Assembly ..... 4 - 5

XIII. Removal and Replacement of the Spout Assembly ..... 4 - 5

XIV. Removal and Replacement of the Water Pressure Control ..... 4 - 6

XV. Removal & Replacement of the Water Regulator Assembly - Water-Cooled Models 4 - 6

XVI. Removal & Replacement of the Water Reservoir Assembly ..... 4 - 6

SECTION V- MAINTENANCE & CLEANING INSTRUCTIONS ..... 5 - 1

I. General ..... 5 - 1

II. Icemaker ..... 5 - 1

III. CLEANING - Icemaker ..... 5 - 2

SECTION VI- SERVICE DIAGNOSIS ..... 6 - 1

I. Icemaking - Refrigeration System ..... 6 - 1

SECTION VII- WIRING DIAGRAMS ..... 7 - 1

Wiring Diagram AF-840 Air-Cooled Model ..... 7 - 2

Wiring Diagram AF-840 Water-Cooled Model ..... 7 - 3

SECTION VIII- THE PARTS ILLUSTRATIONS AND PARTS LISTS ..... 8 - 1

I. General ..... 8 - 1

II. How to Use the Illustrations and Parts List ..... 8 - 1

III. How to Order Parts or Assemblies ..... 8 - 1

LIST OF ILLUSTRATIONS

	Specifications - Model AF-840	iv
Figure 1-1.	Installation Practice	1-4
Figure 2-1.	Water Schematic	2-1
Figure 3-1.	Refrigeration Cycle	3-1
Figure 4-1.	Adjustment of the Temperature Control	4-1
Figure 4-2.	Removal of the Freezer Assembly	4-5
Figure 4-3.	Removal of the Spout Assembly	4-6
Figure 4-4.	Removal of the Water Reservoir Assembly	4-7
Figure 7-1.	Wiring Diagram - AF-840 Air-Cooled	7-2
Figure 7-2.	Wiring Diagram - AF-840 Water-Cooled	7-3
Figure 8-A.	Automatic Flaker AF-840 Flow Chart	8-2
Figure 8-1.	AF-840 Cabinet	8-3
Figure 8-2.	Major Assemblies - Air-Cooled	8-7
Figure 8-3.	Major Assemblies - Water-Cooled	8-13
Figure 8-4.	Compressor Assembly	8-19
Figure 8-5.	Spout Assembly	8-20
Figure 8-6.	Freezer Assembly	8-22
Figure 8-7.	Drivemotor Assembly	8-25
Figure 8-8.	Control Box Assembly	8-28
Figure 8-00.	How to Use the Illustrated Parts List	8-30

This icemaker has been engineered to own own rigid safety and performance standards. The National Sanitation Foundation (NSF) seal, signifies that it is listed with the NSF and that it complies with the materials and construction standards of the NSF. In addition, the Underwriters Laboratories, Inc., (UL) Listing Mark and the Canadian Standards Association (CSA) Monogram, both signify that its construction and design have been inspected and tested by them. NSF, UL and CSA inspectors also periodically examine production icemakers at the factory, to assure continued compliance.

To retain the safety and performance built into this icemaker, it is important that installation and maintenance be conducted in the manner outlined in this manual.

SPECIFICATIONS
MODEL AF-840

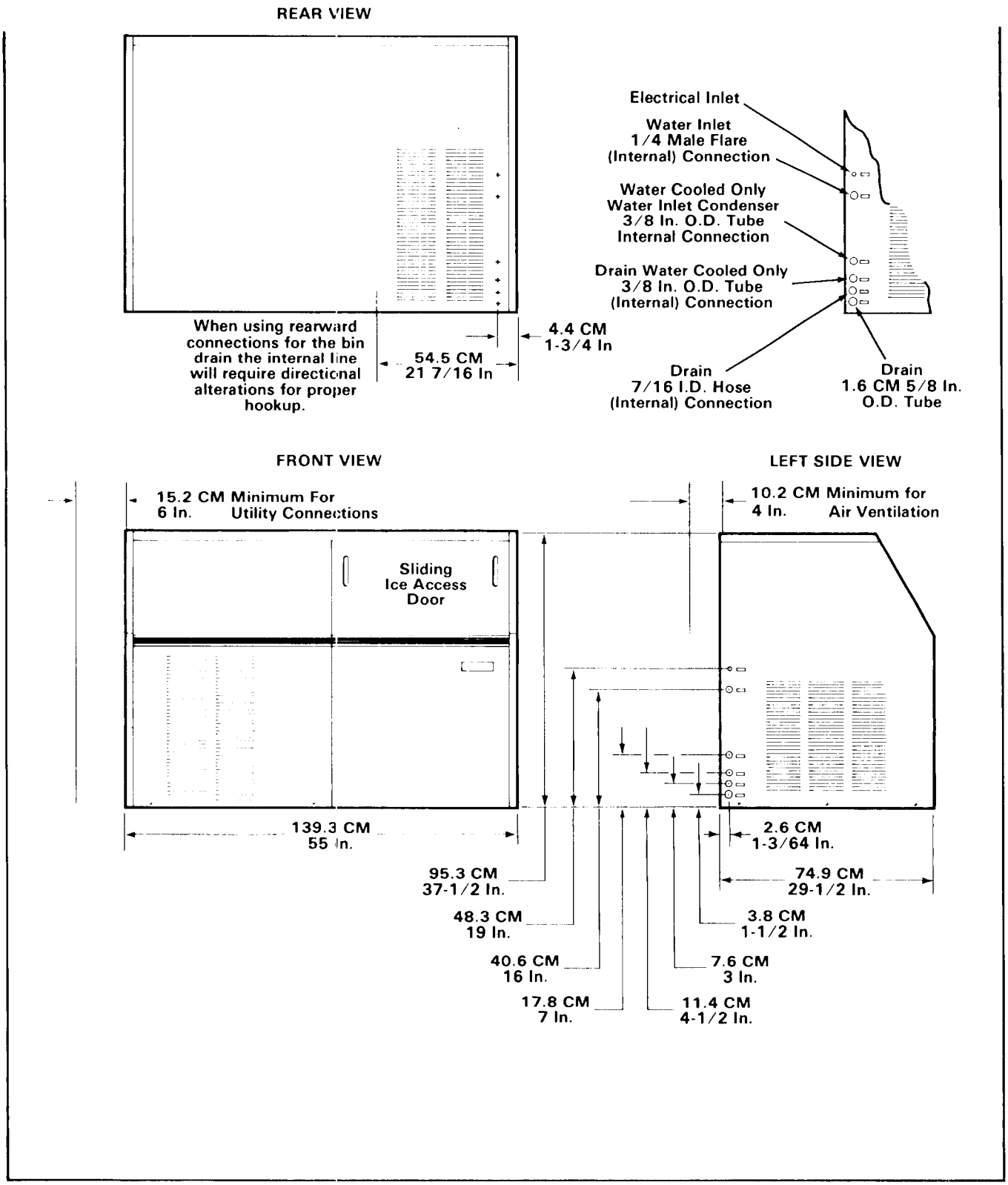

SPECIFICATIONS (cont'd)

MODEL AF-840

Bin Storage: 377 lbs.*

Air-Cooled: Model AF-840A-1A
Model AF-840A-32A

Water-Cooled: Model AF-840W-1A
Model AF-840W-32A

Electrical: 115/60/1 (-1A)
208-230/60/1 (-32A)

Est. Ship. Wt.: 410 lbs.

TWO YEARS PARTS WARRANTY

FRONT SERVICE ACCESS PANEL

OPTIONAL LEG KIT

KLP2E - 6-inch metal legs, Black Enamel

KLP2S - 6-inch metal legs, Nickel Plated

MODEL NUMBER	MOTORS	VOLTS	HP/WATT	F.L.A.	L.R.A.
	COMP.				
SERIAL NUMBER	DRIVE				
	FAN				
REFRIGERANT 12 / HEATER					
OZ / WATTS	OTHER				
TEST PRESSURE 140 LO – 235 HI					
A.C. SUPPLY VOLTAGE		WIRES	CYCLES	PHASE	
MAXIMUM FUSE SIZE / AMPS	MINIMUM CIRCUIT AMPACITY				
QUEEN PRODUCTS DIVISION KING-SEELEY KST THERMOS CO ALBERT LEA, MINNESOTA U S A					

SEE NAMEPLATE for electrical and refrigeration specifications. NAMEPLATE located on rear service panel, near left rear corner of the cabinet. Shown in column at left.

Remove Lower Left Front Panel to locate the Model/Serial Number plate, shown below, on the front center of the Chassis base.

MODEL NUMBER	QUEEN PRODUCTS DIVISION KING-SEELEY KST THERMOS CO ALBERT LEA, MINNESOTA U S A.
SERIAL NUMBER	

*Storage based on 90-percent of total volume x 34 lb. average density of ice. A.R.I. Standard.

We reserve the right to make product improvements at any time. Specifications and design are subject to change without notice.

SECTION I
GENERAL INFORMATION & INSTALLATION

I. INTRODUCTION

This manual provides the specifications and the step-by-step procedures for the installation, start-up and operation, and the maintenance and cleaning for the SCOTSMAN Model AF-840 Automatic Flakers.

The Model AF-840 Automatic Flakers are quality designed, engineered and constructed, and thoroughly tested icemaking and ice storage systems, providing the utmost in flexibility to fit the needs of a particular user. Separate sections detail more specifically: General Information & Installation; Start Up Operation; Principles of Operation; Adjustment and Removal and Replacement Procedures; Maintenance and Cleaning Instructions; Service Diagnosis; Wiring Diagrams; and, the Illustrated Assemblies and Parts Lists.

One of the outstanding features of this series of Flakers, is the easy access for service. With the front of the cabinet removed, the entire refrigeration system can be removed from the cabinet for on-the-spot repair. When it might become necessary to return the system to the shop, a second unit may be installed in a very short time, so the customer is not without ice. The repaired unit can be re-installed in a matter of minutes.

DESCRIPTION

An attractive compact cabinet of textured metal with a Sandalwood enamel finish, a Charcoal Brown upper left front panel, and an Orange bin sliding access door. Also, an optional stainless steel cabinet finish is available. Both cabinets have up-to-date styling, and easily removable panel for easy access to electrical and mechanical components.

SEALED REFRIGERATION SYSTEM

To provide quiet efficient operation of the Icemaker, the Compressor motor is internally spring-mounted. The Compressor motor is covered by a five year parts warranty. The Freezer Assembly is powered by a direct-drive, gearmotor, Drivemotor Assembly.

SELF-CONTAINED STORAGE BIN

These Automatic Flakers store their own ice supply in a heavily insulated ice storage bin, with a sliding Ice Access Door opening the front of the cabinet.

STANDARD OVERALL DIMENSIONS

The standard overall dimensions of the cabinet depth, counter top height, etc., allows the Automatic Flaker to be installed in harmony with the existing counter equipment.

II. UNPACKING AND INSPECTION

1. Call your authorized SCOTSMAN Distributor or Dealer, for proper installation. He's listed under ICE MAKING EQUIPMENT and MACHINERY in the yellow pages of the telephone book.
2. Visually inspect the exterior of the shipping container and skid and any severe damage noted, should be reported to the delivering carrier; and, a concealed damage claim filed subject to internal inspection, with carrier representative present.
3. BEFORE removal of any panels or packing, carefully lay the cabinet on its back and remove the shipping bolts and the shipping base or skid.
4. When ordered, install the optional leg levelers in the cabinet base sockets; then, raise the cabinet to the upright position.
5. Remove the screws and shipping tape, and all doors and service panels from the cabinet, and inspect for any concealed damage. Notify carrier of any concealed damage claims, as stated in step 2 above.
6. Remove all internal support packing, tape and wires in machinery compartment.
7. Check that refrigerant lines do not rub or touch lines or other surfaces, and that fan blades, if any, move freely.
8. Check that the Compressor is snug on all mounting pads.
9. Remove Water Strainer from shipping envelope, for installation in water supply line.
10. Use clean damp cloth or disposable paper wiper to wipe clean the interior surfaces of the ice storage Bin and the exterior surfaces of the cabinet.

11. See NAMEPLATE on the rear service panel, near the left rear corner of the cabinet and check that the location source voltage corresponds with the voltage specified on the nameplate.

CAUTION

Improper voltage supplied to the Icemaker will void your parts replacement program.

12. Remove the Manufacturer's Registration card from the front of the User's Manual and fill in all spaces including: Model Number and Serial Number taken from the aluminum plate located at the front center of the Chassis base, with the Lower Left Front Panel removed. Forward the completed, self addressed, registration card to the SCOTSMAN Factory.

III. LOCATION AND LEVELING

WARNING

This Automatic Flaker is NOT designed for outdoor installations where air temperatures are below 50-degrees F., or above 100-degrees F., and the water temperature is below 40-degrees F. or above 100-degrees F. Extended periods of operation at temperatures exceeding these limitations will constitute misuse, under the terms of the SCOTSMAN Manufacturer's limited warranty, resulting in LOSS of warranty coverage.

1. Position the Cabinet in the selected permanent location.

NOTE

Prior consideration for location site shall include:

1. *Minimum room temperature 50-degrees F. and maximum room temperature 100-degrees F.*
2. *Water inlet temperatures: Minimum 40-degrees F. and Maximum 100-degrees F.*
3. *Well ventilated location for Air-Cooled Model, advising user to frequently clean Condenser, located directly behind left front service door.*
4. *SERVICE ACCESS: Adequate space for all service connections, through the rear of the Cabinet. A six-inch minimum clearance at rear, left and front louvered panels, for routing cooling air drawn into and exhausted out of the compartment, to maintain proper condensing operation on Air-Cooled models.*

2. Level the Cabinet in both the left-to-right and front-to-rear directions. The optional leveling legs can be adjusted with an open end wrench.

IV. ELECTRICAL CONNECTIONS

SEE NAMEPLATE for current requirements to determine wire size to be used for electrical hookup. The Automatic Flaker requires a solid earth ground wire. See wiring diagram.

Be certain the Automatic Flaker is connected to its own electrical circuit and individually fused. The maximum allowable voltage variation should not exceed ten percent of the nameplate rating, even under starting conditions. Low voltages can cause erratic operation and may be responsible for serious damage to the overload switch and motor windings.

All external wiring should conform to the National, State and local electrical permit and service of a licensed electrician will be required.

V. WATER SUPPLY AND DRAIN CONNECTIONS

A. AIR-COOLED MODELS: The recommended water supply line is a 1/4-inch O.D. copper tubing. Connect to cold water supply line with standard plumbing fittings, with a shutoff valve installed in an accessible place between the water supply and the Cabinet.

A wire mesh strainer is provided and must be installed with the cleanout plug down. Locate the strainer in the water supply line, next to the Cabinet with the arrow on the strainer, in the direction of the water flow. The strainer protects against large particles of rust, scale, etc., which may be loosened in the water supply pipe at the time of installation.

In some cases, a plumbing permit and services of a licensed plumber will be required.

WARNING

To prevent damage to the freezer mechanism, DO NOT operate this unit when the water supply is OFF, or is below 20 PSI, the recommended water pressure. Position the master switch to the OFF position, until proper water supply is resumed.

The Icemaker in this Cabinet will not operate when water supply temperatures are below 40-degrees F. or above 100-degrees F.

B. WATER-COOLED MODELS: On Water-Cooled models a separate connection, to the Condenser is required. A 3/8-inch O.D. copper tubing is provided for a separate water inlet line to connected and a separate drain line to be connected.

NOTE

The WARNING, in the text above for the Air-Cooled models equally applies for the Water-Cooled models. In both type installations, water supply must be installed to conform with local plumbing codes. In some cases, a plumbing permit and services of a licensed plumber will be required.

C. DRAIN CONNECTIONS: All drains are gravity type and must be 1/4-inch per foot on horizontal runs. The drains to be installed to conform with local code. The drain receptacle should be an open, trapped or vented construction. See Figure 1 - 1.

Recommended Bin drain is 5/8-inch O.D. copper tubing, should be vented and run separately. Connect a drain line to 7/16-inch I.D. tube from the Reservoir Overflow and a separate drain line to 3/8-inch O.D. drain tube from the Water-Cooled Condenser, on Water-Cooled models.

WARNING

This Automatic Flaker will NOT operate when water supply temperature is below 40-degrees F., or above 100-degrees F. Requires 20 PSI flowing water pressure, without interruption.

VI. FINAL CHECK LIST

1. Is the Cabinet level? (IMPORTANT).
2. Have all electrical and piping connections been made?
3. Has the voltage been tested and checked against the nameplate rating?
4. Is the water supply line shutoff valve installed and electrical wiring properly connected?
5. Have the Bin and Cabinet been wiped clean?
6. Have the Compressor hold down nuts been checked, to be sure the Compressor is snug on the mounting pads?
7. Has the owner/user been given the User Manual and instructed on how to operate the Icemaker.
8. Has the Manufacturer's Registration Card been properly filled out? Check for correct Model and Serial numbers from Serial nameplate, then mail the completed card to the SCOTSMAN factory.
9. Check all refrigerant lines and conduit lines, to guard against vibration or rubbing and possible failure.
10. Is there at least six inches clearance behind and around the Cabinet for proper air circulation?
11. Is the Cabinet in a room where ambient temperatures are a minimum of 50-degrees F. all year around?
12. Has water supply pressure been checked to insure a minimum of 20 PSI?
13. Has the owner been given name and telephone number of the authorized SCOTSMAN Service Agency serving him?

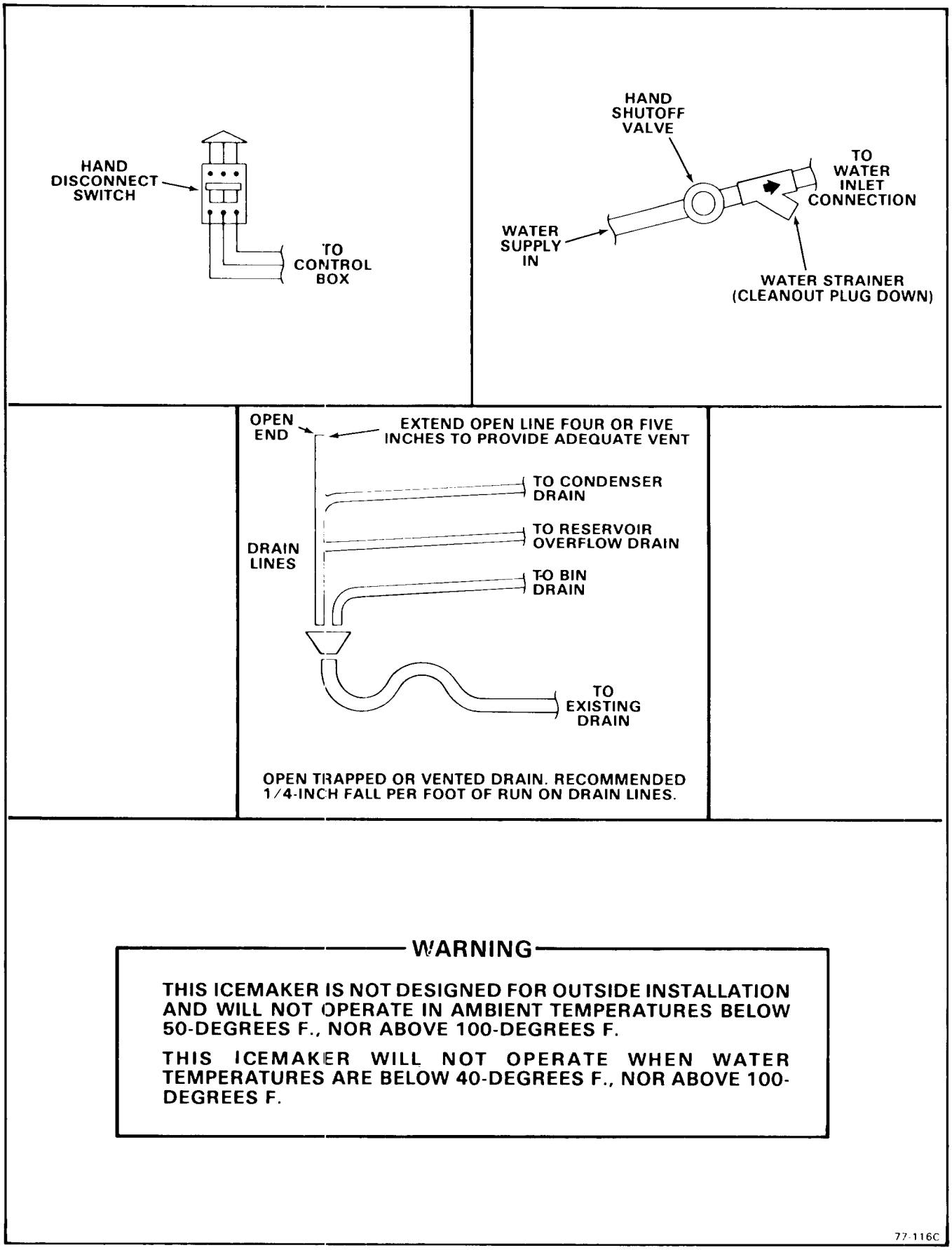

WARNING

THIS ICEMAKER IS NOT DESIGNED FOR OUTSIDE INSTALLATION AND WILL NOT OPERATE IN AMBIENT TEMPERATURES BELOW 50-DEGREES F., NOR ABOVE 100-DEGREES F.

THIS ICEMAKER WILL NOT OPERATE WHEN WATER TEMPERATURES ARE BELOW 40-DEGREES F., NOR ABOVE 100-DEGREES F.

Figure 1-1. Installation Practice

SECTION II
OPERATING INSTRUCTIONS

I. START UP

1. Remove screws and the Lower Left Front Panel and the Left Side Panel.
2. OPEN the water supply line shutoff valve.
3. Observe the water filling operation, see Figure 2-1:
   a. Water flows into Water Reservoir.
   b. Float moves up as water rises.
   c. Water flows through water feed line to bottom of Freezer Assembly.
   d. Float stops water flow, when water level reaches 3/8-inches below the molded horizontal line, on the body of the Water Reservoir.
4. Move the manual ON-OFF toggle switch, on the front of the Control Box to the ON position, to start the automatic icemaker operation.
5. After two or three minutes of operation, observe that flaked ice begins dropping off the Auger and out the Ice Spout, through the Nylobraid tubing and into the Ice Storage Bin.
6. Let the system operate for about 30 minutes or until ice covers the bottom of the Bin. Check for any excess noises beyond normal Compressor noise:
   a. Fan noises, when Air-Cooled: Blades touch other surfaces; blades bent, out-of-balance.
   b. Vibrating type from touching lines.
   c. Chattering: Lack of water in Freezer.
   d. Compressor loose at one or more hold-down bolts.

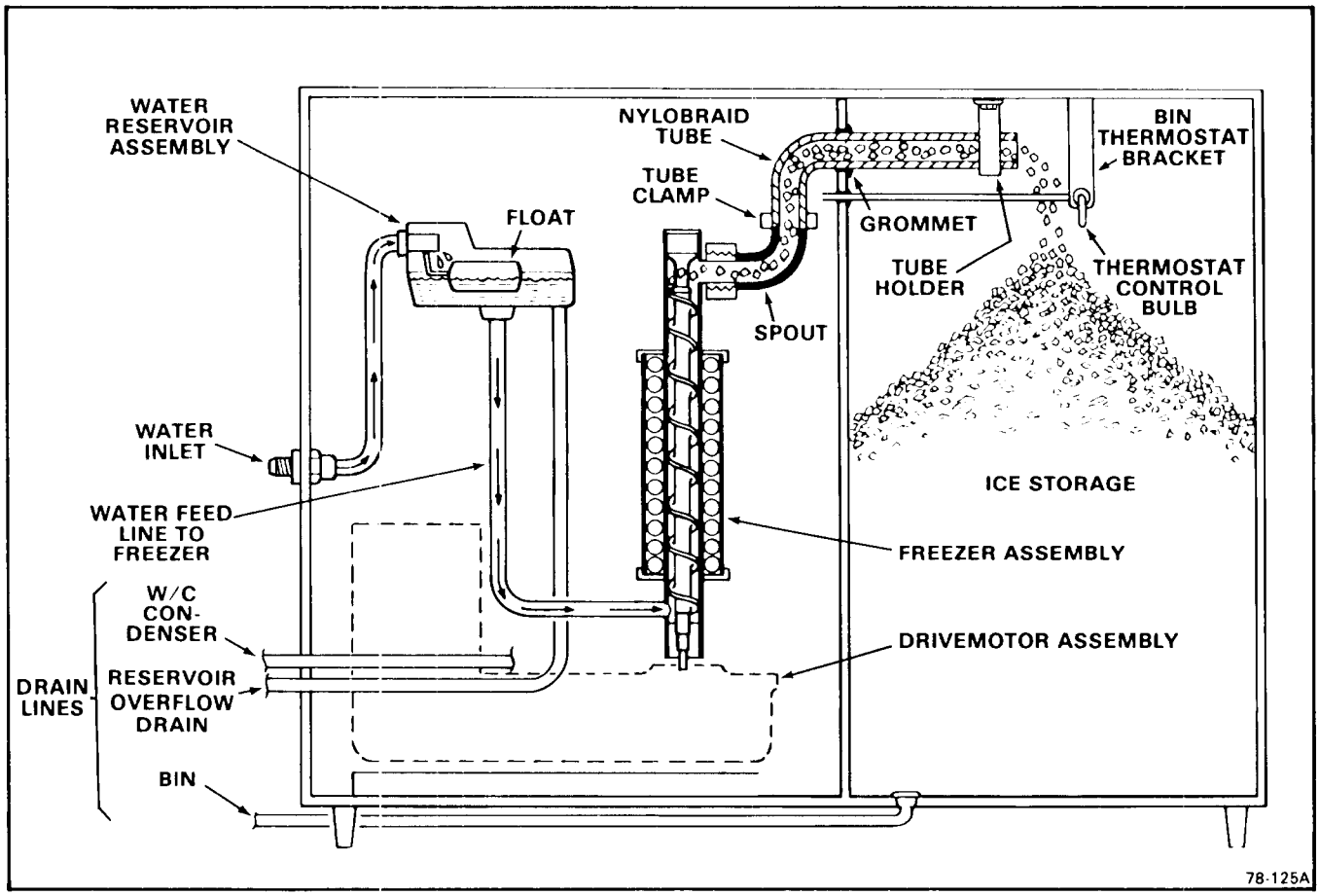

Figure 2-1. Water Schematic

WARNING

DO NOT operate this Icemaker when the water supply is shut OFF, or is BELOW the recommended 20 PSI water pressure. Move the manual ON-OFF toggle switch on the front of the Control Box to the OFF position immediately.

7. Hold a handful of ice around the Ice Storage Bin Thermostat Control Bulb to test shut-off. Less than one minute is about normal for Bulb shutoff function to cause the Compressor to stop.

NOTE

Within minutes after the ice is removed from the sensing bulb, the bulb will warm up and cause the Icemaker to restart. This control is factory set and should not be reset until testing is performed. Normal setting: about 35-degrees. F. CUT-OUT and 45-degrees F. CUT-IN, to prevent short cycling.

8. Thoroughly explain to the owner/user the significant specifications of the Icemaker, the start up and operation, going through the procedures in the operating instructions. Answer all questions about the Icemaker, by the owner; and, inform the owner of the name and telephone number of the authorized SCOTSMAN Service Agency serving him.

SECTION III
PRINCIPLES OF OPERATION
How It Works

I. ICEMAKER

The water supply flows from the building source through the inline water strainer, enters at the Cabinet fitting and on to the Water Reservoir. The Water Reservoir functions to maintain a constant water level inside the Freezer Assembly. Water from the Water Reservoir enters at the bottom of the Freezer Assembly and is changed into ice by low temperatures inside the Freezer.

A stainless steel Auger within the Freezer is powered by the Drivemotor Assembly, a direct-drive gearmotor, and the rotating Auger carries the ice upward to the flared end of the Auger, see Figure 3-1, where excess water is pressed out of the ice, as it is extruded or flaked out through the Ice Spout, through the Nylo-braid tubing and into the Ice Storage Bin.

Moving the manual ON-OFF toggle switch, on the top of the Control Box, to the ON position starts the automatic and continuous icemaking process. When the Ice Storage Bin has been filled with ice, up to the level of the Thermostat Control Bulb, the sensing bulb shuts off the icemaking process.

As the ice is removed from the Ice Storage Bin, the Thermostat Control Bulb warms up, restarting the automatic icemaking process.

Factory settings are 35-degrees F. CUT-OUT and 45-degrees F. CUT-IN.

Altitude adjustment should ONLY be performed on Icemakers installed at 2000-feet level locations and ABOVE, and adjust only in increments of one-fourth turn of screw at a time.

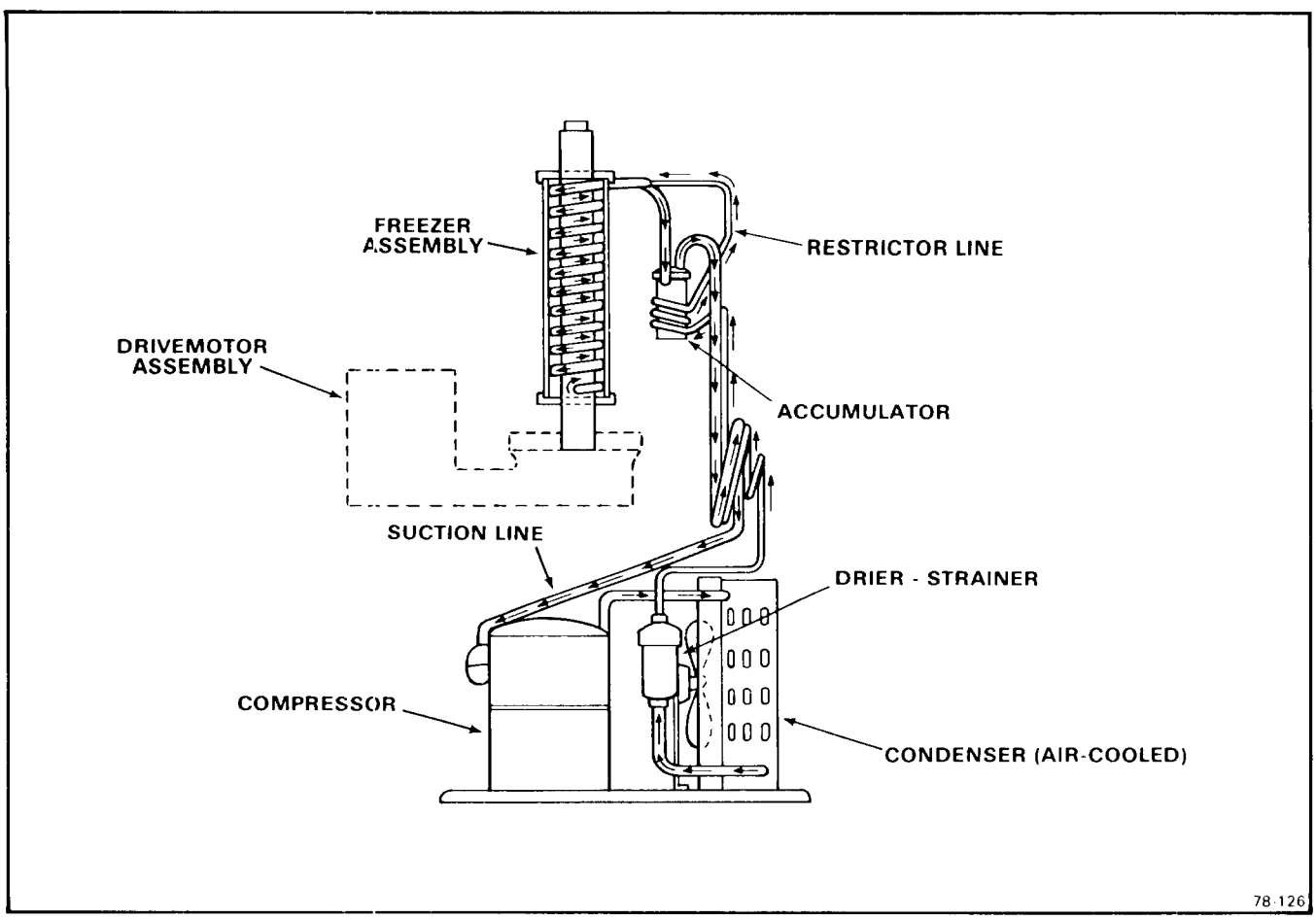

Figure 3-1, Refrigeration Cycle

II. ELECTRICAL/REFRIGERATION

The AF-840 Automatic Icemakers are designed to operate on standard electrical supply 115 volts, 60 Hertz, single phase. Other voltage requirements are available on special order. Therefore, always CHECK NAMEPLATE for electrical information BEFORE proceeding with electrical wiring connections to the Icemaker.

Cold ambient temperatures and interruptions in water supply are conditions that can cause excessively hard ice and overloads within the Freezer Assembly, which is directly transmitted to the Drivemotor; and in turn, will cause speed reduction or ultimate freezup.

When the Drivemotor is slowed to a pre-determined RPM, a sensing switch mounted on top of the motor is designed to open the electrical circuit to the Compressor. The Compressor stops operating, no more ice is produced, and the Drivemotor continues to operate rotating the Auger to clear the overload and gradually build up to full speed.

At a pre-determined higher RPM Drivemotor speed, the speed sensing switch closes the electrical circuit to the Compressor, causing the normal icemaking process to resume. Refer to specific details in paragraph V-II-9, on centrifugal sensing switch operation.

A Spout Switch is mounted on the side of the Ice Spout and is actuated by the movement of the spring retained spout tube against the switch actuator. The Spout Switch acts as a backup safety switch, should the Thermostat Control Bulb fail and cause ice to jam up in the Ice Spout. The switch will shut off the icemaker only when actuated. It is an immediate and complete shut down of the entire icemaker. The Spout Switch can be manually tested, by plugging the end of the Nylobraid Tube. The switch is also manually reset.

There are two safety controls in the Control Box. The Low Pressure Control, a manual reset, non-adjustable control, is set to electrically open at zero to four PSIG to stop the entire icemaker. The Auger Delay Switch, a single-pole double-throw (SPDT) switch, functions as a control device to allow the gearmotor to rotate the Auger to clear the Freezing Chamber while the Compressor circuit is OFF.

Refer to the appropriate Wiring Diagram and trace circuitry and control functions, as described in the following paragraph.

As shown on all SCOTSMAN wiring diagrams, the controls are in the ICEMAKING MODE. Thus, the 1-2 contacts are CLOSED. At STARTUP, the 1-2 contacts are OPEN and the 3-2 contacts are CLOSED. As the icemaker begins to operate, the low side pressure starts to decrease from the stabilized or at-rest pressure. As soon as the pressure is reduced to 20 PSIG, the 3-2 contacts OPEN and the 1-2 contacts CLOSE.

This removes the operating controls, such as the Bin Thermostat, from the gearmotor circuit. If one of the operating controls OPENS, it will SHUT OFF the compressor circuit. The gearmotor will operate until the low side pressure increases to 32 PSIG. Then, the 1-2 contacts OPEN and SHUTS OFF the gearmotor, usually within one to two minutes, depending upon ambient conditions. This brief period of time allows the Auger to transport all the ice out of the Freezing Chamber. Consequently, when called on to STARTUP again, there is no ice load to start up against. Again, on STARTUP, the 1-2 contacts are OPEN and the 3-2 contacts are CLOSED.

On all models, a low-water pressure switch functions to discontinue the Icemaking process whenever incoming water pressure is reduced to below five PSIG. The Switch will automatically restart the Icemaking process when the water pressure is increased to 20 PSIG.

The head pressure is normal about 130 PSIG, however, it will vary depending upon ambient air temperature.

Suction pressure should be 15 PSIG with proper refrigerant charge and the frost line should extend out from the Accumulator to within no closer than eight to twelve inches of the Compressor. Suction pressure will vary about two PSIG plus or minus, depending upon ambient temperatures and incoming water supply temperatures to the Freezer Assembly.

When charging the system with refrigerant, always CHECK NAMEPLATE for specific refrigeration charge for individual Flaker, and charge with refrigerant so the frost line extends out of the Accumulator to within no closer than eight to twelve inches of the Compressor, after 15 minutes of operation, for best capacity and performance.

MODEL	AF840 Refrig. Chg.
Air-Cooled	27 oz. R-12 (Approx.)
Water-Cooled	22 oz. R-12 (Approx.)

SECTION IV
ADJUSTMENT AND REMOVAL AND REPLACEMENT

The procedures provided in this Section are arranged in alphabetical order, to make specific Adjustment and Removal and Replacement information easy to locate.

Read the instructions thoroughly before performing any Adjustment or Removal and Replacement Procedures.

WARNING

The adjusting screws on the Temperature Control device have very sensitive response to adjustment. DO NOT attempt to adjust the screw until after thoroughly reading and understanding the following instructions and illustrations. Over-adjusting or erratic guessing, can foul the instrument and cause ultimate delay and part replacement, WHICH COULD HAVE BEEN PREVENTED.

I. ADJUSTMENT OF THE BIN THERMOSTAT CONTROL

The control for the Bin Thermostat is the Temperature Control, located on the upper part of the Control Box Assembly.

See Figure 4-1 for location and direction of rotation, clockwise (CW) or counterclockwise (CCW), of the adjusting screws on the Temperature Control, in the particular Control Box the adjustment is to be performed.

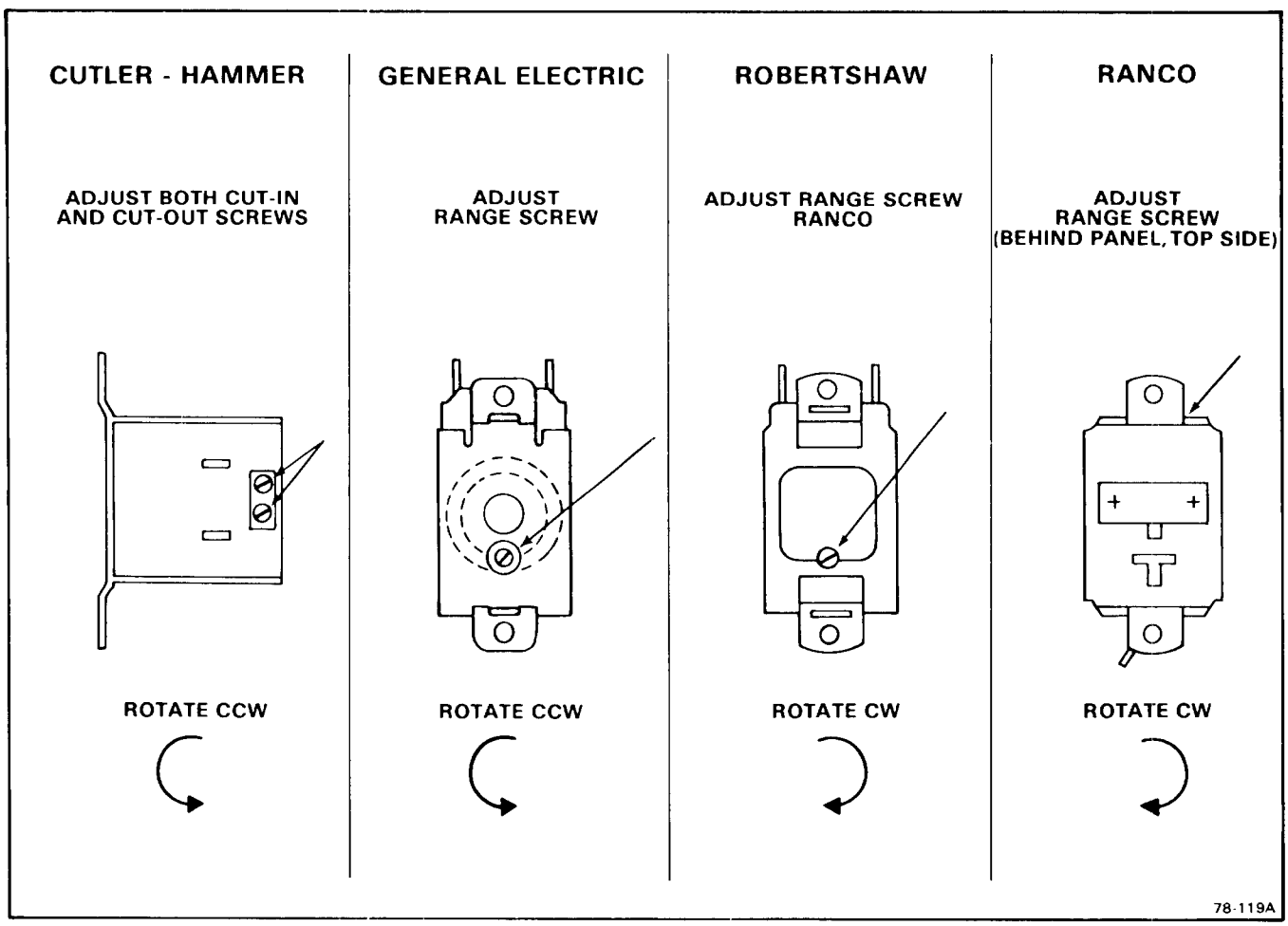

Figure 4-1. Adjustment of the Temperature Control.

II. ADJUSTMENT OF THE LEG LEVELERS

When the AF-840 Icemaker is ordered with the optional Leg Levelers, the Cabinet must be leveled in the front-to-rear and side-to-side directions. This adjustment should be performed during initial installation of the Cabinet and anytime the Cabinet is moved from the original location to another site.

A. Using an open-end wrench, and a carpenter's bubble level, rotate the threaded Leveler in each Leg to RAISE or LOWER the Cabinet until the Cabinet is level in the front-to-rear direction.

B. Repeat step A, for leveling in the side-to-side direction.

C. Recheck both the front-to-rear and the side-to-side leveling and repeat adjustments, as necessary.

III. ADJUSTMENT OF THE WATER REGULATOR ASSEMBLY

The correct head pressure on Water-Cooled models is 135 PSIG. Adjustments can be performed on the Water Regulator Assembly to increase or decrease the head pressure.

To Adjust the Water Regulator Assembly:

A. To INCREASE the Head Pressure: Rotate the adjusting Screw, on the Water Regulator Assembly IN or CLOCKWISE.

B. To DECREASE the Head Pressure: Rotate the adjusting Screw, on the Water Regulator Assembly OUT or COUNTER-CLOCKWISE.

IV. ADJUSTMENT OF THE WATER RESERVOIR FLOAT

The correct water level in the Water Reservoir should be 3/8-inch below the raised molded line, on the side of the body of the Water Reservoir. When the water line level is above or below the raised molded line, adjustment can be performed to raise or lower the water level by raising or lowering the Water Reservoir in the slots on the Mounting Brackets, which in turn will adjust the action of the float.

A. To RAISE the Water Level: Loosen the two Screws which attach the Water Reservoir Assembly to the Mounting Bracket and RAISE the Water Reservoir Assembly, in the slots, the desired amount; then, tighten the Screws.

B. To LOWER the Water level: Loosen the two Screws which attach the Water Reservoir Assembly to the Mounting Bracket and LOWER the Water Reservoir Assembly, in the slots, the desired amount; then, tighten the Screws.

WARNING

Be sure the electrical power supply and the water supply are OFF, before starting any of the following REMOVAL AND REPLACEMENT procedures, as a precaution to prevent possible personal injury or damage to equipment.

V. REMOVAL AND REPLACEMENT OF THE AUGER, WATER SEAL, BEARINGS AND COUPLING

A. To Remove the Auger, Water Seal, Bearings, and Coupling:

1. Remove screws and the Left Front Lower Panel and the Left Side Panel.
2. Remove the Freezer Cap from the top of the Freezer Assembly.
3. Perform the steps in procedure IV-XIII to remove the Spout Assembly.
4. Grasp the wire Cap Hook at the top of the Freezer Assembly and pull out the Auger and attached Cap, Bearing/Retainer, Bearing and O-Rings, at the top of the Auger; and, the top half of the Water Seal at the bottom of the Auger.

NOTE

When the Auger cannot be pulled out, proceed to steps 12 and 13, to gain access to the bottom of the Auger. Then, with a rawhide mallet or placing a piece of wood on the bottom end of the Auger, tap the bottom of the Auger to break it loose and pull the Auger out, as in step 4 above.

5. Remove the Cap Hook from the Bearing/Retainer.
6. Remove the Retaining Ring and the Cap.
7. Remove the Cap Screw and Washer and remove the Bearing/Retainer from the Auger.
8. Clean away the old grease from to top of the Auger, the Bearing/Retainer, Cap, Cap Screw and Washer, and the O-ring and Retaining Ring.
9. Inspect the O-Ring at the top of the Bearing/Retainer and the O-Ring at the bottom outside of the Bearing/ Retainer, for cuts, tears and general worn condition to determine replacement.
10. Inspect the Bearing pressed into the top of the Bearing/Retainer and, if it is to be replaced, remove the Retaining Ring and press the Bearing out of the Bearing/ Retainer.
11. Slide the upper half of the Water Seal off of the bottom of the Auger.

NOTE

1. *Any time the Auger is removed for replacement, or, for the inspection and replacement of the Bearings or Coupling, use extra care in handling the Water Seal parts, so no dirt or foreign matter are deposited on the surfaces of the Seal.*
2. *If there is any doubt about the effectiveness of Water Seal or O-Ring, REPLACE THEM. A dirty, worn or faulty Water Seal or O-Ring will cause a leak and ultimately require a second, time consuming removal and replacement procedure to be performed, that COULD HAVE BEEN PREVENTED.*

12. Remove four screws and lockwashers which attach the Freezer Assembly to the Adaptor on the Drivemotor Assembly.
13. Raise the Freezer Assembly off of the Adaptor, to gain access to the Bearing and Retainer; then, temporarily secure the Freezer Assembly out of the way to allow room to work. Be careful not to damage the gasket.
14. Using a suitable length and size wooden dowel or stick inserted through the top of the open Freezer Assembly, tap the lower half of the Water Seal and the lower Bearing in the Retainer, out the bottom of the Freezer Assembly.
15. Inspect the lower half of the Water Seal. If reusable, use care to protect it from dirt, etc. prior to replacement procedure.
16. Inspect the lower Bearing in the Retainer; and, if the Bearing is to be replaced, press the Bearing out of the Retainer.
17. Reach through the Adaptor and remove the coupling on the Drivemotor for inspection.
18. Check the Coupling for cracks, chipping and excessive wear.

B. To replace the Auger, Water Seal, Bearings, and Coupling, reverse the removal procedure.

NOTE

1. *When installing the Retainer assembled with Bearing, in the bottom of the Freezer Assembly, some Retainers will insert as a slip fit, and some will have to be forced into place because of very tight fit. Carefully tap a piece of wood positioned across the bottom of the Retainer, to evenly seat the Retainer in the chamber of the Freezer.*
2. *After assembling the parts on the upper end of the Auger and BEFORE installing the Cap and Cap Hook, apply an ample coating of Shell Alvania 3 Grease, P/N 19-0309-01, to the upper part of the Bearing/Retainer to cover the Retainer Ring and the Cap Screw and Washer. Then, install the Cap and Cap Hook in place.*

VI. REMOVAL AND REPLACEMENT OF THE COMPRESSOR ASSEMBLY

NOTE

Always install a replacement Drier, any time the sealed refrigeration system is opened. Do not replace the Drier until all other repair or replacement has been completed.

A. To Remove the Compressor Assembly:

1. Remove screws and the Left Side Panel and the Left Front Lower Panel.
2. Remove two screws and the Cover from the Compressor Junction Box.
3. Disconnect the electrical leads at the Compressor Junction Box, that originate in the Control Box.
4. Bleed off or blow the refrigerant charge through the Schrader valves.
5. Unsolder the suction line from the Compressor.
6. Unsolder the discharge line from the Compressor.
7. Unsolder the process header tube from the Compressor and retain for installation on the Replacement Compressor.
8. Remove four bolts, lockwashers and washers which secure the Compressor to the Chassis mounting base.
9. Slide the Compressor and remove through the left side opening of the Cabinet.

NOTE

Thoroughly evacuate the system to remove moisture and non-condensables.

B. To replace the Compressor Assembly, reverse the removal procedure.

VII. REMOVAL AND REPLACEMENT OF THE CONDENSER — AIR-COOLED MODELS

NOTE

Always install a replacement Drier, any time the sealed refrigeration system is opened. Do not replace the Drier until all other repair or replacement has been completed.

A. To Remove the Condenser:

1. Remove screws and the Left Front Lower Panel and the Left Side Panel.
2. Bleed off or blow the refrigerant charge through the Schrader valve.
3. Unsolder and disconnect the Condenser inlet tube at the Condenser.
4. Unsolder and disconnect the Condenser outlet tube at the Condenser.

5. Remove three screws, lockwashers and washers securing the Condenser to the Chassis Base.
6. Remove the Condenser out through the front opening of the cabinet.

NOTE

Thoroughly evacuate the system to remove moisture and non-condensables.

B. To replace the Condenser, reverse the removal procedure.

VIII. REMOVAL AND REPLACEMENT OF THE CONDENSER — WATER-COOLED MODELS

NOTE

Always install a replacement Drier, any time the sealed refrigeration system is opened. Do not replace the Drier until all other repair or replacement has been completed.

A. To Remove the Condenser:

1. Remove screws and the Left Front Lower Panel and the Left Side Panel.
2. Bleed off or blow the refrigerant charge through the Schrader valve.
3. Unsolder the refrigerant inlet and outlet lines from the Condenser.
4. Disconnect the water inlet and outlet lines from the Condenser.
5. Remove two bolts, lockwashers and washers which secure the Condenser to the Chassis mounting base.
6. Remove the Condenser from the Cabinet.

NOTE

Thoroughly evacuate the system to remove moisture and non-condensables.

B. To replace the Condenser, reverse the removal procedure.

IX. REMOVAL AND REPLACEMENT OF THE DRIER

NOTE

Always install a replacement Drier, any time the sealed refrigeration system is opened. Do not replace the Drier until all other repair or replacement has been completed.

A. To Remove the Drier:

1. Remove screws and the Left Front Lower Panel and the Left Side Panel.
2. Remove screw and Drier Brace attaching the Drier to the Chassis base.
3. Bleed off or blow the refrigerant charge through the Schrader valve.
4. Unsolder refrigeration lines at each end of Drier, remove the Drier and separate the Drier from the Drier Brace.

B. To replace the Drier:

CAUTION

1. **If the factory seal is broken on the replacement Drier, exposing it to the atmosphere more than a few minutes, the Drier will absorb moisture from the atmosphere and lose substantial ability for moisture removal.**
2. **Be sure the replacement Drier is installed with the arrow positioned in the direction of the refrigerant flow.**

1. Remove the factory seals from the replacement Drier and install the Drier in the refrigerant lines with the arrow positioned in the direction of the refrigerant flow.
2. Install the Drier Brace on the Drier.
3. Solder the Drier into the lines, two places.
4. Purge the system and check for leaks.
5. Thoroughly evacuate the system to remove moisture and non-condensables.
6. Charge the system with refrigerant, by weight. SEE NAMEPLATE.
7. Replace the Left Front Lower Panel and the Left Side Panel and attach both with screws removed earlier.

X. REMOVAL AND REPLACEMENT OF THE DRIVEMOTOR ASSEMBLY

A. To Remove the Drivemotor Assembly:

1. Perform all steps in procedure IV-XII to gain access for removal of the Drivemotor Assembly.
2. Remove bolts, lockwashers and washers which attach the Drivemotor to the Chassis base.
3. Lift the Drivemotor from the Chassis base and out of the Cabinet.

B. To replace the Drivemotor Assembly, reverse the removal procedure.

XI. REMOVAL AND REPLACEMENT OF THE FAN MOTOR ASSEMBLY — AIR-COOLED MODELS

NOTE

Before beginning this procedure, observe the Fan Blade position on the shaft of the Fan Motor and mark the Fan Blade so it will be correctly positioned during reassembly. Direction of air flow should be toward the Fan Motor.

A. To Remove the Fan Motor Assembly:

1. Remove screws and the Left Front Lower Door and the Left Side Panel.
2. Disconnect the electrical lead from the Fan Motor.
3. Remove two screws securing the Motor Bracket to the Chassis Base and remove the Fan Motor and Motor Bracket out through the left side opening of the Chassis.
4. Remove the nut from the end of the Fan Motor shaft and remove the Fan Blade.
5. Remove four screws securing the Fan Motor to the Motor Bracket and separate the Motor from the Bracket.

B. To replace the Fan Motor Assembly, reverse the removal procedure.

XII. REMOVAL AND REPLACEMENT OF THE FREEZER ASSEMBLY

NOTE

1. *The Cabinet may have to be removed from its permanent location, especially if located in a corner, in order to have access to the left side and rear of the Chassis.*
2. *In addition to shutting OFF electrical power and inlet water to the icemaker, be sure to disconnect the inlet water line at the rear of the Cabinet BEFORE moving the icemaker from the permanent location.*
3. *Always install a replacement Drier, any time the sealed refrigeration system is opened. Do not replace the Drier until all other repair or replacement has been completed.*

A. To Remove the Freezer Assembly, see Figure 4-2:

1. Remove screws and left side, front and rear panels.
2. Refer to procedure IV-XIII and remove the Spout Assembly.
3. Remove Corbin clamp and Tygon tube from the Freezer Assembly that connects to the Water Reservoir Assembly.
4. Bleed off or blow the refrigerant charge through the Schrader valve.
5. Unsolder the suction line from the Compressor.
6. Unsolder the capillary line at the Drier.
7. Remove four screws, lockwashers and washers which attach the bottom of the Freezer Assembly to the Adaptor on the Drivemotor Assembly.
8. Lift the Freezer Assembly up and off of the Adaptor and Drivemotor Assembly.

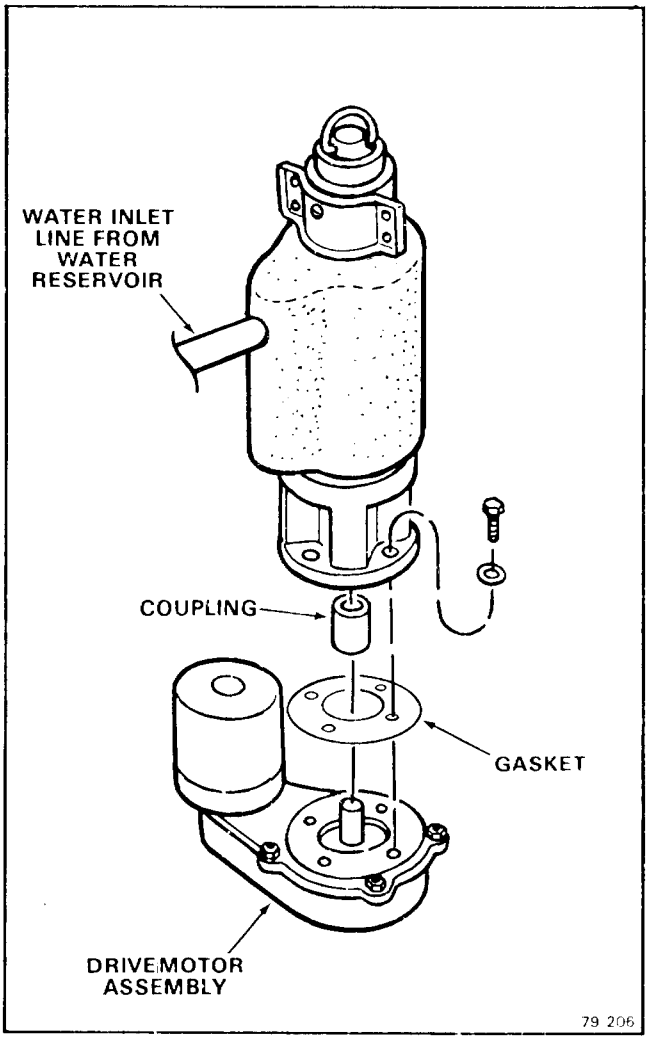

Figure 4-2. Removal of the Freezer Assembly.

NOTE

Thoroughly evacuate the system to remove moisture and non-condensables.

B. To replace the Freezer Assembly, reverse the removal procedure.

XIII. REMOVAL AND REPLACEMENT OF THE SPOUT ASSEMBLY

A. To Remove the Spout Assembly, See Figure 4-3:

1. Remove screws and the Left Front Lower Panel and Left Side Panel.
2. Remove the Hose Clamp and disconnect the Nylobraid tube from the end of the Spout.
3. Remove the Freezer Cap from the top of the Freezer Assembly.
4. Disconnect the electrical leads from the Spout Switch.

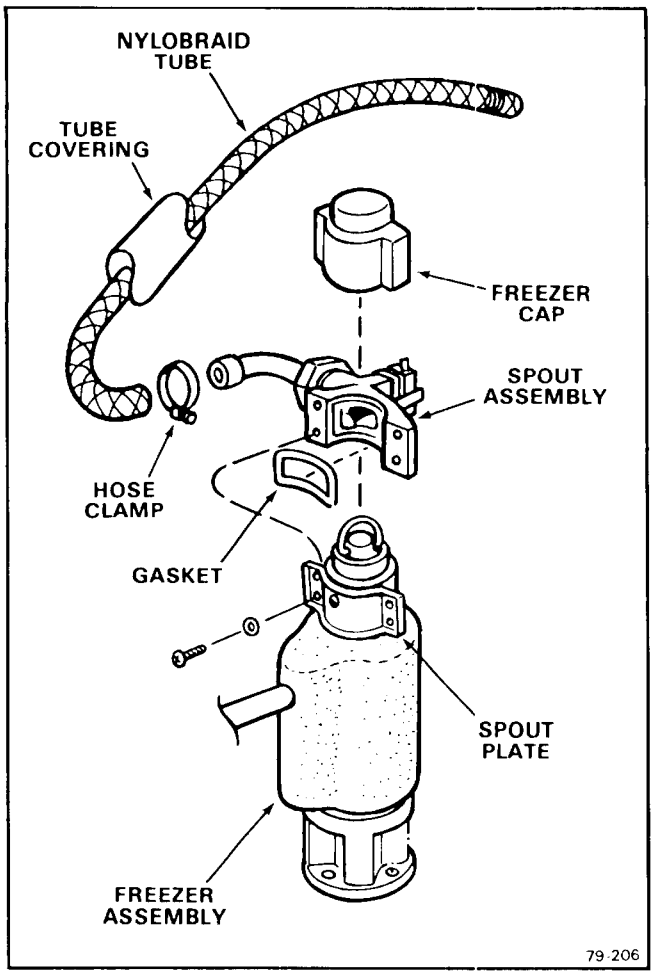

Figure 4-3. Removal of the Spout Assembly

5. Remove two screws and washers and separate the Spout Assembly from the Spout Plate on the Freezer Assembly.

NOTE

At this time, inspect the spout Gasket and retain for the replacement procedure. Replace a torn, cut or worn, defective gasket.

B. To replace the Spout Assembly, reverse the removal procedure.

XIV. REMOVAL AND REPLACEMENT OF THE WATER PRESSURE CONTROL

A. To Remove the Water Pressure Control:

1. Remove screws and the Left Front Lower Panel and the Left Side Panel.
2. Remove screws and the Control Box Cover.
3. Disconnect the two blue electrical leads of the Water Pressure Control from the terminals on the Auger Delay Control and the Bin Thermostat device in the Control Box Assembly.
4. Unscrew the flare nut fitting and disconnect the Water Pressure Control from the Utility Bracket and the Tee on the inlet water tubing.

NOTE

At this time, inspect the O-Ring and retain for the replacement procedure. Replace O-Ring that is cut, torn or indicates excessive wear.

B. To replace the Water Pressure Control, reverse the removal procedure.

XV. REMOVAL AND REPLACEMENT OF THE WATER REGULATOR ASSEMBLY—WATER-COOLED MODELS

A. To Remove the Water Regulator Assembly:

NOTE

Always install a replacement Drier, any time the sealed refrigeration system is opened. Do not replace the Drier until all other repair or replacement has been completed.

1. Remove screws and the Left Front Lower Panel.
2. Bleed off or blow the refrigerant charge through the Schrader valve.
3. Unsolder the Capillary line from the Water Regulator Assembly, where connected at the process header.
4. Disconnect the water inlet line at the rear of the Water Regulator.
5. Disconnect the Condenser water inlet tube at the front of the Water Regulator.
6. Remove two screws, lockwashers and washers which attach the Water Regulator Assembly bracket to the Chassis base and remove the Water Regulator Assembly and bracket.

NOTE

Thoroughly evacuate the system to remove moisture and non-condensables.

B. To replace the Water Regulator Assembly reverse the removal procedure.

XVI. REMOVAL AND REPLACEMENT OF THE WATER RESERVOIR ASSEMBLY

A. To Remove the Water Reservoir Assembly, see Figure 4-4:

1. Remove screws and the Left Front Lower Panel and the Left Side Panel.

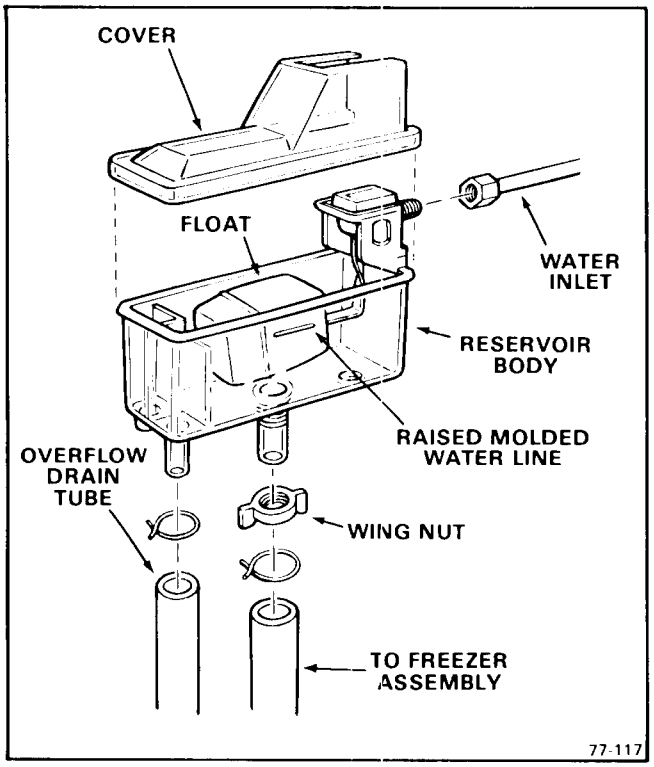

Figure 4-4. Removal of the Water Reservoir Assembly

NOTE

Be prepared with container or rags, to catch water left in lines, when lines are disconnected in next steps, to prevent draining water on parts, components, electrical lines, etc.

2. Disconnect the water inlet tube from the Water Reservoir Assembly.
3. Remove two Corbin clamps and two tubes from the bottom of the Water Reservoir Assembly.
4. Unscrew and remove the wing nut from the bottom of the Water Reservoir Assembly.
5. Lift and remove the Water Reservoir Assembly from the mounting bracket.

B. To replace the Water Reservoir Assembly, reverse the removal procedure.

NOTE

Check that the installed replacement Water Reservoir Assembly float moves freely. Bend metal arm of float to adjust, as necessary. The correct water level in the Water Reservoir is 3/8-inch below the raised molded line, on the side of the body of the Water Reservoir.

SECTION V
MAINTENANCE & CLEANING INSTRUCTIONS

I. GENERAL

The periods and procedures for maintenance and cleaning are given as guides and are not to be construed as absolute or invariable. Cleaning especially will vary, depending upon local water conditions and the ice volume produced and, each Icemaker must be maintained individually, in accordance with its own particular location requirements.

II. ICEMAKER

THE FOLLOWING MAINTENANCE SHOULD BE SCHEDULED AT LEAST TWO TIMES PER YEAR ON THIS ICEMAKER. CALL YOUR AUTHORIZED SCOTSMAN SERVICE AGENCY.

1. Check and clean water line Strainers.
2. Remove cover from Water Reservoir and depress the float to ensure that a full stream of water enters the Reservoir.
3. Check that the Icemaker cabinet is level, in side-to-side and front-to-rear directions.
4. Check that the water level in the Water Reservoir is below the overflow, but high enough that it does not run out of the spout opening.

NOTE

It is not abnormal for some water to emerge from the Ice Spout with flaked ice during normal ice production.

5. Clean the Water Reservoir and interior of the Freezer Assembly, using a solution of SCOTSMAN Ice Machine Cleaner. Refer to procedure V-III, CLEANING — Icemaker.

NOTE

Cleaning requirements vary according to local water conditions and individual user operation. Visual inspection of the Auger before and after cleaning will indicate frequency and procedure to be followed in local areas.

6. When doubtful about refrigerant charge, install refrigerant gauges on Schrader valves and perform steps 6 and 7. Check gauge for Compressor head pressure:

   AIR-COOLED MODELS: Varies between 130 to 145 PSIG.

   WATER-COOLED MODELS: Set at 135 PSIG. Adjust screw on top of Water Regulator Valve to raise or lower head pressure.

7. Check gauge for Suction line pressure:

   Varies between 12 to 16 PSIG, depending upon inlet water temperature and ambient air temperature.

8. Check Drivemotor operation:

   Normal operating temperatures are about 160-degrees F., which is hot to touch.

9. Check operation of the centrifugal sensing switch:

   AF-840: 1/4 HP Motor.

   Switch will OPEN between 850-950 RPM and the Compressor STOPS, with the Drivemotor operating. Switch will CLOSE between 1100-1250 RPM and the Compressor will RESTART, with Drivemotor building back up to normal operating speed.

10. Remove the Insulation Strap and Clip, the Right and Left Spout Insulation pieces, the Retaining Ring and the Hook and Cap from the top of the Freezer Assembly.
11. Inspect the Top Bearing. If moisture is around Bearing, wipe clean of all grease and apply a coating of Shell Alvania 3 Grease, Scotsman P/N 19-0309-01. Replace parts removed in step 10.

NOTE

BEFORE next step, move the manual ON-OFF toggle switch, on the front of the Control Box, to the OFF position to stop the Fan Motor and Icemaker.

12. Clean the Air-Cooled Condenser, using vacuum cleaner, whisk broom or brush. Instruct customer to clean frequently and to be sure Icemaker and Fan Motor are OFF.
13. Check that Fan Blades move freely, are not touching any surfaces and are not bent or out of balance.
14. Check for refrigerant leaks and for proper frost line, which should frost out of accumulator at least half way to the compressor and in some areas, back to service valve.
15. Check for water leaks. Tighten drain line connections. Pour water down Bin drain to be sure that drain line is open and clear.

16. Check the quality of ice. Ice flakes should be wet when formed, but will cure rapidly to normal hardness in the Bin.
17. Check the Bin Thermostat Ice Control Bulb.

NOTE

The Bin Thermostat is factory set at 10-degrees F. differential and should keep the entire Icemaker system shut off at least 10 minutes in high ambient temperatures, longer in low ambient temperatures during normal operation. Settings are 35-degrees F. CUT-OUT and 45-degrees F. CUT-IN.

18. Check the Spout Switch.

NOTE

The Spout Switch is manually reset and functions as a safety switch, to automatically stop the icemaking process if the Bin Thermostat Bulb were to fail and cause ice to jam up in the Ice Tube.

III. CLEANING - Icemaker

1. Remove screws and the Front Panel.
2. Move the manual ON-OFF toggle switch, on the front of the Control Box, to the OFF position.
3. Remove all ice from the Ice Storage Bin.
4. CLOSE the water supply shutoff valve; or block the float in the Water Reservoir.
5. Disconnect the tube between the Water Reservoir and the bottom of the Freezer Assembly and drain water from the Reservoir and tube. Reconnect the tube.

WARNING

SCOTSMAN Ice Machine Cleaner contains Phosphoric and Hydroxyacetic acids. These compounds are corrosive and rnay cause burns if swallowed. DO NOT induce vomiting. Give large amounts of water or milk. Call Physician immediately. In case of external contact flush with water. KEEP OUT OF THE REACH OF CHILDREN.

6. Prepare cleaning solution: Mix six ounces of SCOTSMAN Ice Machine Cleaner with one and one-half quarts of hot water.
7. Remove the Cover to the Water Reservoir.
8. Slowly pour the cleaning solution into the Water Reservoir.
9. Move the manual ON-OFF toggle switch, on the front of the Control Box, to the ON position.
10. Continue to slowly pour the cleaning solution into the Water Reservoir, maintain level just below the Reservoir overflow.
11. Continue icemaking, using the cleaning solution, until all the solution is used up and the Water Reservoir is almost empty. DO NOT allow the icemaker to operate with empty Reservoir.
12. Move the manual ON-OFF toggle switch on the front of the Control Box to the OFF postion.
13. Wash and rinse the Water Reservoir.
14. OPEN the water supply shutoff valve; or remove the block from the float in the Water Reservoir.
15. Move the manual ON-OFF toggle switch, on the front of the Control Box, to the ON position.
16. Continue icemaking for at least 15 minutes, to flush out any cleaning solution. Check ice for acid taste — continue icemaking until ice tastes sweet.
17. Move the manual ON-OFF toggle switch, on the front of the Control Box, to the OFF position.

CAUTION

DO NOT use ice produced from the cleaning solution. Be sure none remains in the bin.

18. Remove all ice from the Ice Storage Bin.
19. Add hot water to the Ice Storage Bin and thoroughly wash and rinse all surfaces within the Bin.
20. Clean and sanitize the Ice Storage Bin each week.

SECTION VI
SERVICE DIAGNOSIS

The Service Diagnosis Section is for use in aiding the serviceman in diagnosing a particular problem for pin-pointing the area in which the problem lies, thus an ever available reference for proper corrective action.

The following charts lists corrective actions for the causes of known symptoms of certain problems that can occur in the Icemaking - Refrigeration System.

I. ICEMAKING - REFRIGERATION SYSTEM

SYMPTOM	POSSIBLE CAUSE	CORRECTION
Water Leaks.	Defective water seal.	Replace Seal.
	Gravity feed line leaking.	Check hose clamps.
	Water level in reservoir too high.	Adjust water level to 3/8-inch below reservoir overflow, then raise reservoir until water flows out freezer spout, then lower reservoir 3/4-inch.
	Storage bin drain and connecting fittings.	Check and repair.
Excessive noise or chattering.	Mineral or scale deposit on auger and inner freezing chamber walls.	For severe deposit, remove and manually polish auger, sand inner chamber walls of freezer barrel.
		For lighter concentration, use Scotsman Ice Machine Cleaner periodically.
	Intermittent water supply.	Check and clean water strainer.
		Check gravity feed line for air lock.
		Remove air lock.
	Water level in reservoir too low.	See CORRECTION for Water Leaks above.
	Gear Reducer loose on frame.	Tighten Gear Reducer.
	Motor compressor not solid on rubber mounts.	Repair or replace rubber mounts.
	Gearmotor end-play or worn bearing.	Repair or replace bearing.
Making wet ice. (Ice melts too quickly, is not cold enough to properly cure in the Bin.)	Surrounding air temperature too high.	Correct or move cabinet.
	Under or over-charge of refrigerant.	Recharge with proper amount. Should frost out of accumulator at least 8-inches. See nameplate for correct charge. See CORRECTION for Water Leaks above.

ICEMAKING - REFRIGERATION SYSTEM (Con't)

SYMPTOM	POSSIBLE CAUSE	CORRECTION
Making wet ice (cont'd)	Back pressure too high.	Overcharge of refrigerant, Faulty compressor or high head pressure. Lower pressure as indicated.
	Faulty compressor or valve plate.	Repair or replace compressor or valve plate.
Low ice production.	Loss of refrigerant. Under or over-charge of refrigerant.	Check and recharge. See NAMEPLATE for correct charge.
	Drivemotor weak.	Replace Drivemotor.
	Dirty or plugged condenser.	Clean condenser.
	Low water level in water reservoir.	See CORRECTION for Water leaks above.
	Partial restriction in capillary tube or drier.	Moisture in system. Overcharge of oil in system. Remove charge by blowing back through cap tube. Replace drier and recharge.
	Inlet water strainer partially plugged.	Remove screen and clean.
	Corroded or stained auger due to water condition.	Remove auger and clean, or use Scotsman Ice Machine Cleaner. See Maintenance Section.
Gearmotor noise.	Low on oil.	Remove case cover to check for proper oil level. Top of gears should be covered. Use: Sun Oil Company Prestige 50-EP
Icemaker will not operate.	Blown fuse in line.	Replace fuse and check for cause of blown fuse.
	Bin thermostat set too high.	Adjust thermostat. Set at 35-degrees cut-out, 45-degrees cut-in.
	Loose electrical connection.	Check wiring.
	Switch is OFF position.	Set switch to ON position.
	Inoperative master switch.	Replace switch or thermal overload.
	Off on manual-reset pressure control	Reset.
Icemaker continues to operate with full storage bin.	Bin thermostat not properly set or is defective.	Re-set or replace bin thermostat re-set to 35-degrees cut-out, 45-degrees cut-in.
Compressor cycles intermittently.	Low voltage.	Check for overloading.
	Dirty condenser.	Clean condenser.
	Air circulation blocked.	Remove cause or move unit.
	Inoperative condenser fan motor.	Replace motor.

ICEMAKING - REFRIGERATION SYSTEM (Cont'd)

SYMPTOM	POSSIBLE CAUSE	CORRECTION
Compressor cycles intermittently (cont'd)	Non-condensable gases in system.	Check for gas leaks, evacuate and recharge.
	Bin thermostat differential too small causing short cycling.	Widen differential 35-degrees cut-out, 45-degrees cut in.
	Cycling on ice spout microswitch.	Set or replace Bin Thermostat.
Icemaker operates but makes no ice.	Loss or undercharge of refrigerant.	Check for leaks and recharge. See NAMEPLATE for correct charge.
	Water not entering freezing chamber.	Plugged strainer or supply line. Check and clean.
	Air lock in gravity feed line.	Check and remove air lock.
	Moisture in system.	Check, evacuate, replace drier.
		Recharge. See NAMEPLATE for correct charge.
	Water seal leaking.	Replace seal.
	Water turned off while unit was operating.	Freezer inlet water line froze shut. Unit must be shut OFF and defrosted.
	Drivemotor or drive coupling stripped.	Repair or replace drivemotor or drive coupling.

SECTION VII
WIRING DIAGRAMS

This Section is provided as an aid in understanding the electrical circuitry of the Automatic Flaker.

The Wiring Diagrams in this Section are:
Figure 7-1. Wiring Diagram AF-840 - Air-Cooled.
Figure 7-2. Wiring Diagram AF-840 - Water-Cooled.

WARNING

When conducting a continuity check of the Automatic Flaker:

1. **Disconnect the main power source.**
2. **DO NOT use an incandescent lamp or jumper wire, conduct all tests with a volt-ohm-meter.**

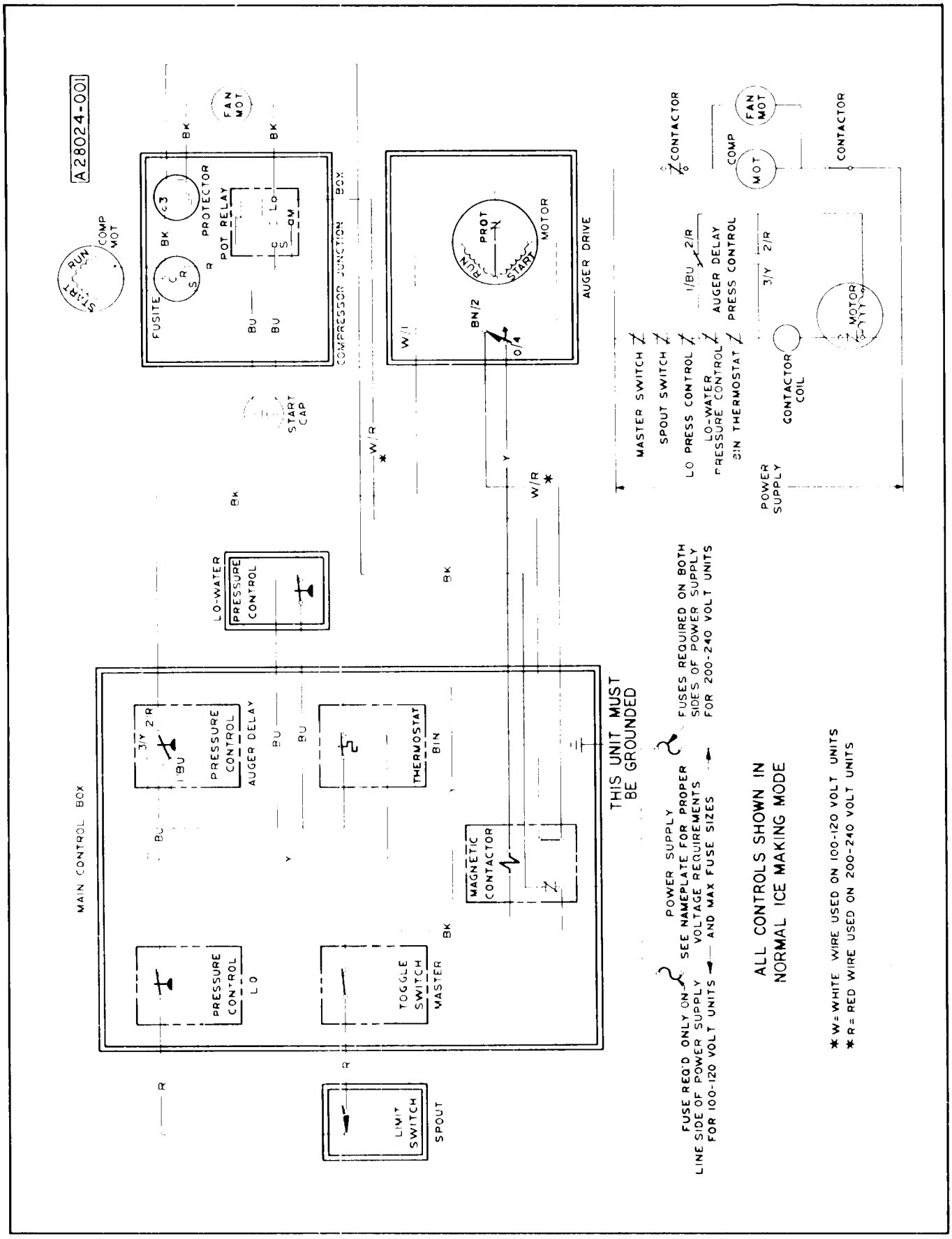

Figure 7-1. Wiring Diagram AF-840 - Air-Cooled.

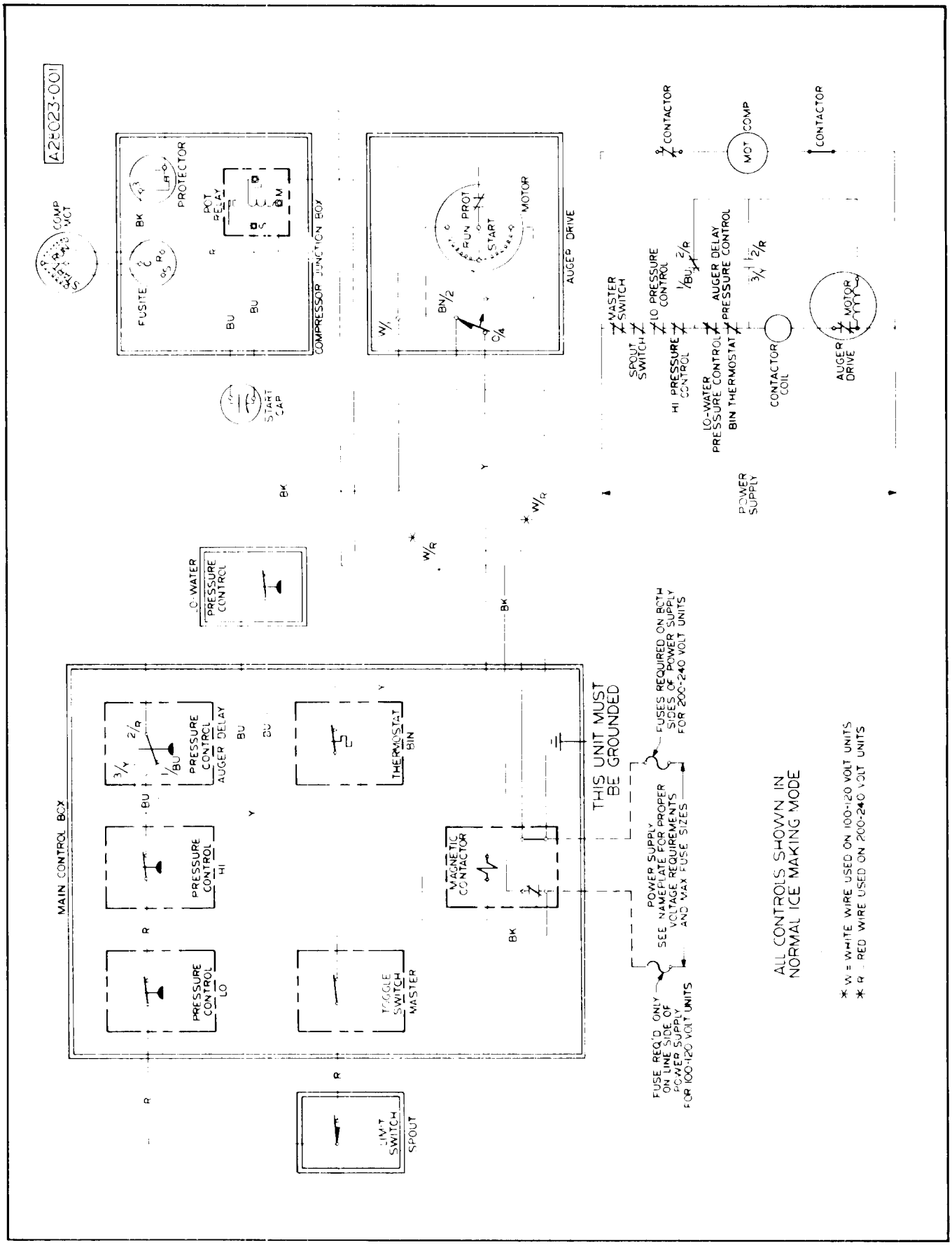

Figure 7-2. Wiring Diagram AF-480 - Water-Cooled.

SECTION VIII
THE PARTS ILLUSTRATIONS AND PARTS LISTS

I. GENERAL

This section contains the Parts Illustrations and the Parts List for each of the major assemblies in the AF-840 Automatic Flaker.

Each Parts Illustration shows an assembly as an exploded view, with an Index Number for each part or sub-assembly, given in disassembly order. These Index Numbers key with the Parts List for the assembly and are found in the Parts List Column headed Index Number. The Description Column gives the identifying nomenclature for the item indexed. The Part Number Column gives the number of item. The Number Required Column gives the number of items required per assembly, but not necessarily the total number of parts required per Flaker.

All assemblies are cross-referenced both from the major assembly listing where they first appear in the Parts Listing to their break-down listing, and from the break-down listing, back to the major assembly (next higher assembly) listing.

A *No Number* designation, when used in the Part Number Column indicates the unit is not available from SCOTSMAN as an assembly. This designation is used only for the convenience and clarity of division in cataloging.

When an Index Number is followed by a letter (e.g. 1a. 1b.), the letter indicates the part listed is part of the assembly indexed by the basic Index Number. The number required of the part indexed by the number and letter combination is for only one of the assemblies indexed by the basic Index Number and not necessarily the total number or parts used in the Flaker. Where the notation *Ref* occurs in the Number Required Column the number of the assemblies or parts required for use in the Flaker will be found under previous Index Number or in the next higher assembly Parts Listing. The next higher listing Figure/Index number is shown in the Description Column immediately following the items description.

II. HOW TO USE THE ILLUSTRATIONS AND PARTS LIST

To find the part number of a required part or assembly, turn to the List of Illustrations and find the page number of the Parts Illustration of the major or sub-assembly containing the part. Turn to the indicated page and locate the part and its Index Number on the specific illustration. Find the Index Number on the required part in the Parts List to determine the complete description of the part.

III. HOW TO ORDER PARTS OR ASSEMBLIES

When ordering parts or assemblies, to avoid costly delays and errors in shipment, give the part number, the complete description shown in the list, and the quantities of each part or assembly required. Also include the Model name, the serial number of the Flaker for which the part is required, and for parts which require color matching, the color of the Cabinet. See Figure 8-00, at the end of this section for detailed ordering instructions.

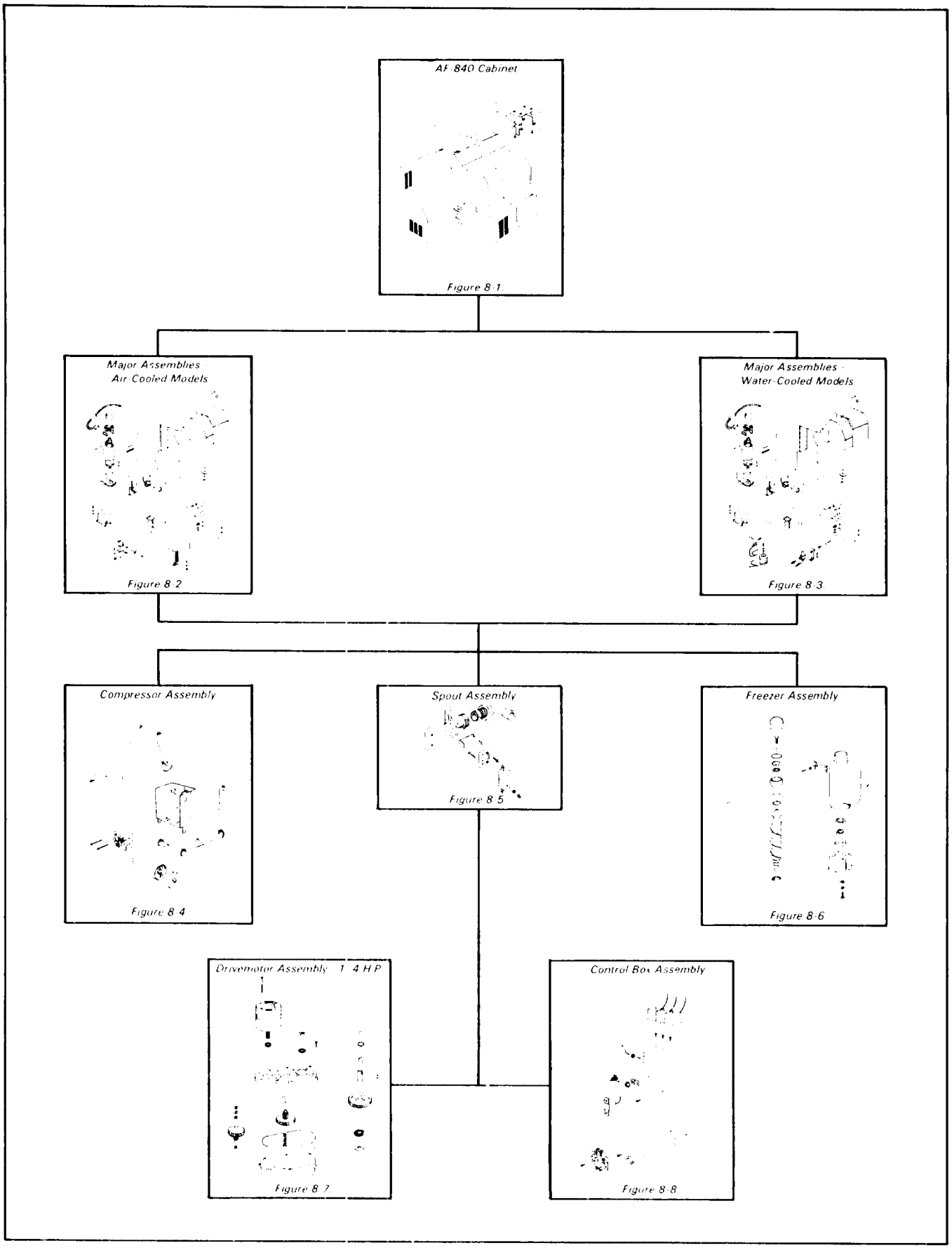

Figure 8-A. Automatic Flaker AF-840 Flow Chart.

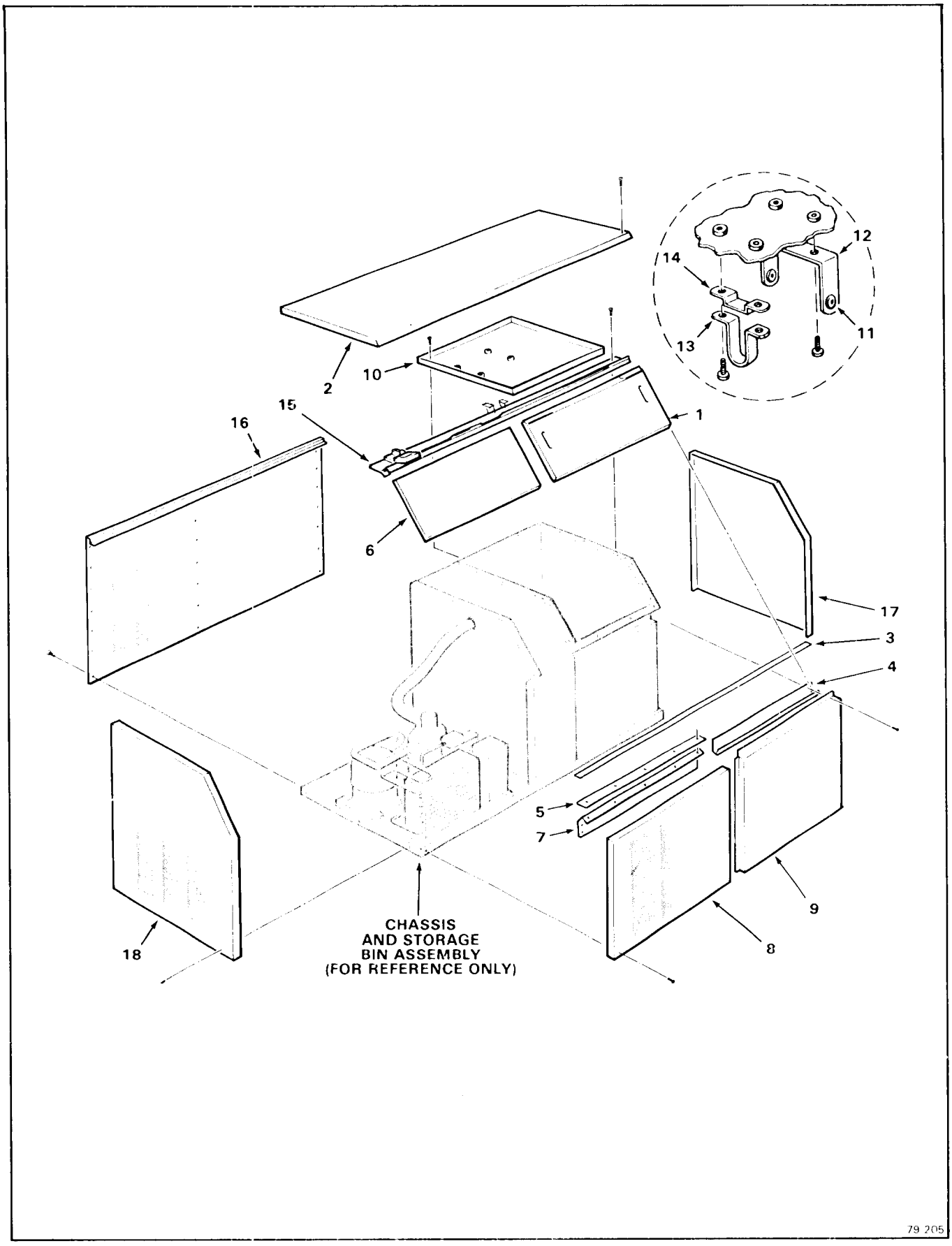

Figure 8-1. AF-840 Cabinet.

Figure 8-1. AF-840 Cabinet.

INDEX NO.	DESCRIPTION	PART NUMBER	REQ'D NUMBER
	AF-840 Cabinet	No Number 1	
	* * *		
1	Door, Ice Access (Orange w/C.R.S. Painted Cabinet)	02-2434-01	1
	Door, Ice Access (Gray w/Stainless Steel Cabinet)	02-2434-02	
	* * *		
2	Panel, Top (C.R.S. Painted)	A28138-001	1
	Panel, Top (Stainless Steel)	A28138-002	1
	attaching parts, Index 2		
	Screw, No. 8 x 1-3/4 S/T Flat Hd	03-1419-19	4
	* * *		
3	Insert, Plastic	15-0324-00	1
	* * *		
4	Strip, Moulding -- Right Side	15-0633-01	1
	attaching parts, Index 4 & 9		
	Screw, No. 8 x 3/8 S/T Flat Hd	03-1419-05	4
	* * *		
5	Strip, Moulding -- Left Side	15-0638-01	1
	attaching parts, Index 5 to 8		
	Screw, No. 8 x 3/8 S/T Flat Hd	03-1419-05	5
	* * *		
6	Panel, Upper -- Left Front (C.R.S. Painted)	A28127-001	1
	Panel, Upper -- Left Front (Stainless Steel)	A28127-002	1
	* * *		
7	Bracket, Left Front	A28135-001	1
	attaching parts, Index 5 & 7		
	Screw, No. 8 x 1/2 T/F Tap	03-1404-09	4
	* * *		
8	Panel, Lower -- Left Front (C.R.S. Painted)	A28126-001	1
	Panel, Lower -- Left Front (Stainless Steel)	A28126-002	1
	attaching parts, Index 8		

Figure 8-1. AF-840 Cabinet (cont'd)

INDEX NO.	DESCRIPTION	PART NUMBER	REQ'D NUMBER
	Screw, No. 8 x 1-' /2 S/T Flat Hd	03-1419-16	2
	* * *		
9	Panel, Right Front (C.R.S. Painted)	A28089-001	1
	Panel, Right Front (Stainless Steel)	A28089-002	1
	attaching parts, Index 4 & 9		
	Screw, No. 8 x 3/8 S/T Flat Hd	03-1419-05	Ref.
	* * *		
10	Cover, Storage Bin	A27980-002	1
	attaching parts, Index 10		
	Screw, No. 8 x 1/2 T/F Tap	03-1404-09	10
	* * *		
11	Grommet	13-0557-00	2
	* * *		
12	Bracket, Bin Thermo	A27924-001	1
	* * *		
13	Holder, Tube	A27922-001	1
	* * *		
14	Retainer, Tube	A27923-001	1
	attaching parts, Index 12, 13, 14 to 10		
	Screw, Thumb -- No. 10-24 x 1/2 Knurled Hd	03-0727-00	4
	* * *		
15	Track Assembly, Door	A28093-001	1
	attaching parts, Index 15		
	Screw, No. 8 x 1/2 T/F Tap	03-1404-09	6
	* * *		
16	Panel, Back (Galvanized Steel)	A28090-001	1
	attaching parts, Index 16		
	Lockwasher, No. 8 External Tooth — Carbon Steel Zinc Plated	03-1417-03	4
	Screw, No. 8 x 1/2 T/F Tap	03-1404-09	27
	* * *		

Figure 8-1. AF-840 Cabinet (cont'd)

INDEX NO.	DESCRIPTION	PART NUMBER	REQ'D NUMBER
17	Panel, Right Side (C.R.S. Painted)	A24800-003	1
	Panel, Right Side (Stainless Steel)	A24800-002	1
	attaching parts, Index 17		
	Screw, No. 8 x 1/2 T/F Tap (SS)	03-1404-10	5
	* * *		
18	Panel, Left Side (C.R.S. Painted)	A27034-003	1
	Panel, Left Side (Stainless Steel)	A27034-002	1
	attaching parts, Index 18		
	Lockwasher, No. 8 External Tooth — Carbon Steel Zinc Plated	03-1417-03	2
	Screw, No. 8 x 1/2 T/F Tap (SS)	03-1404-10	3
	* * *		

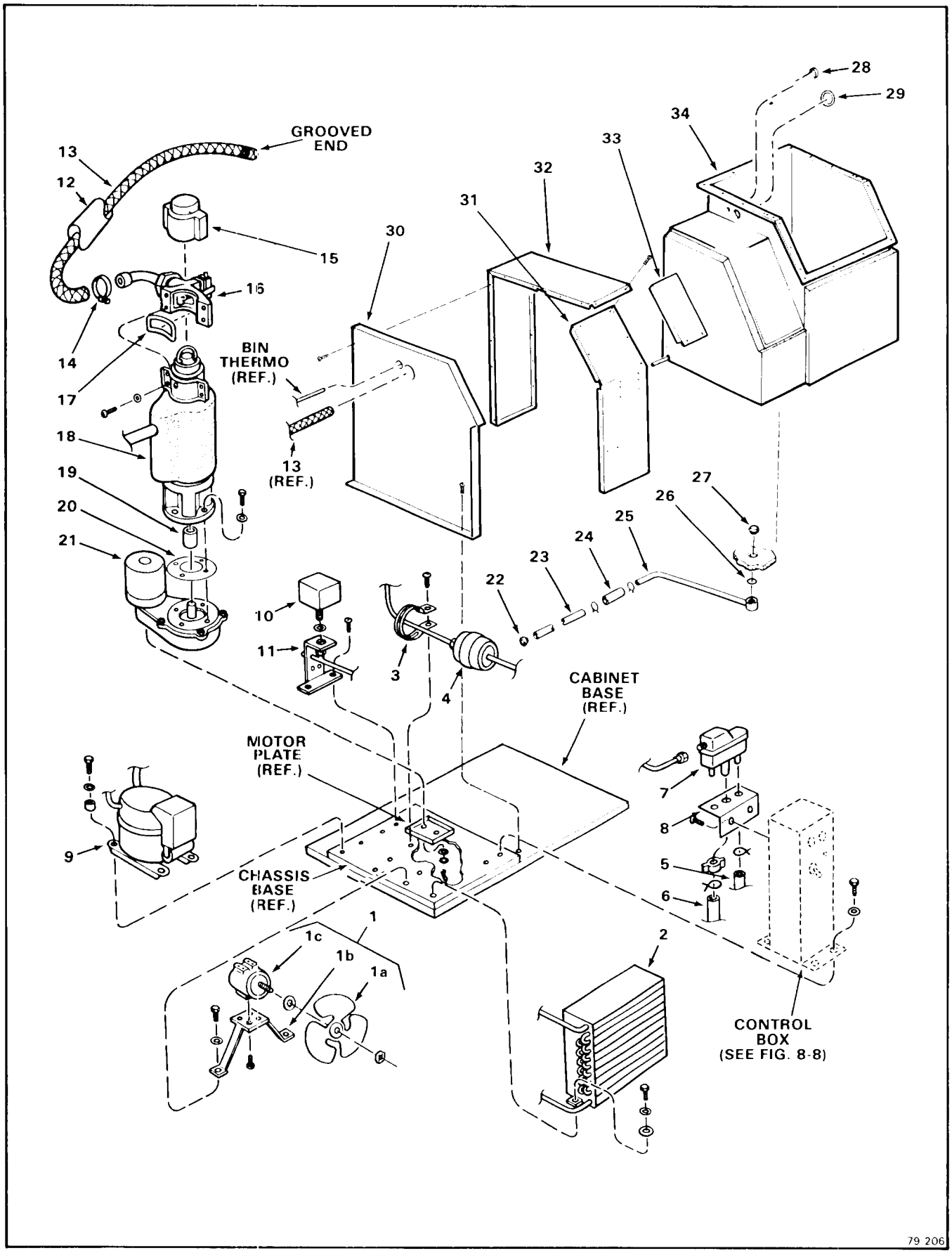

Figure 8-2. Major Assemblies - Air-Cooled Models.

Figure 8-2. Major Assemblies — Air-Cooled Models

INDEX NO.	DESCRIPTION	PART NUMBER	REQ'D NUMBER
	Major Assemblies - Air-Cooled Models	No. Number	Ref.
	* * *		
1	Bracket Assembly, Fan Motor and Mounting	No Number	1
1a	Blade, Fan	18-0625-00	1
	Pad, Vibration (p/o Fan Motor)	No Number	1
	Nut, Fan Mounting (p/o Fan Blade)	No Number	1
1b	Bracket, Fan Mounting	A25548-001	1
1c	Motor, Fan	18-0559-01	1
	attaching parts, Index 1c to 1b		
	Screw (p/o Fan Motor)	No Number	4
	attaching parts, Index 1 to Chassis base		
	Lockwasher, No. 1/4 External Tooth - Carbon Steel Zinc Plated	03-1417-09	2
	Screw, No. 1/4-20 x 1/2 T/C Hex Hd	03-0571-00	2
	* * *		
2	Condenser - Air-Cooled	18-0396-01	1
	attaching parts, Index 2		
	Lockwasher, No. 1/4 External Tooth - Carbon Steel Zinc Plated	03-1417-09	2
	Screw, No. 1/4-20 x 1/2 T/C Hex Hd	03-0571-00	2
	* * *		
3	Brace, Drier	A09388-001	1
	* * *		
4	Drier	02-0544-01	1
	attaching parts, Index 3 and 4		
	Screw, No. 10-16 x 3/4 S/T	03-1360-01	1
	* * *		
5	Tube (Reservoir Overflow to Drain)	13-0079-03	1
	* * *		
6	Tube (Reservoir to Freezer Inlet)	13-0674-09	
	attaching parts, Index 5 and 6		
	Clamp (Index 5)	02-0535-00	2
	Clamp (Index 6)	02-0694-00	2

Figure 8-2. Major Assemblies — Air Cooled Models (Cont'd)

INDEX NO.	DESCRIPTION	PART NUMBER	REQ'D NUMBER
7	Reservoir	02-2217-01	1
	Valve Assembly, Float (Not Shown)	02-2217-02	1
	attaching parts, Index 7		
	Wing Nut (p/o Reservoir)	No Number	1
	* * *		
8	Bracket, Mounting	A20959-000	1
	attaching parts, Index 8		
	Screw, No. 8-18 x 1/2 Phil Pan Hd	03-1572-02	2
	* * *		
9	Compressor (See Figure 8-4)	18-3900-01	1
	attaching parts, Index 9		
	Grommet	18-2200-28	4
	Sleeve, Mounting	18-2200-27	4
	Lockwasher, No. 5/16 /External Tooth - Carbon Steel Zinc Plated	03-1417-12	4
	Washer, Special	03-1408-24	4
	Screw, No. 5/16-18 x 1-3/4 Hex Cap	03-1405-40	4
	* * *		
10	Control, Pressure - H^2O	11-0296-00	1
	* * *		
11	Bracket, Utility	A27993-001	1
	O-Ring	13-0617-26	1
	attaching parts, Index 10 and 11		
	Nut, Pal	03-1394-00	1
	Screw, No. 10-16 x 3/4 S/T	03-1360-01	2
	* * *		
12	Covering, Tube	13-0279-00	
	* * *		
13	Tube, Ice	A28042-005	1
	attaching parts, Index 12 and 13		
	* * *		

Figure 8-2. Major Assemblies -- Air Cooled Models (cont'd)

INDEX NO.	DESCRIPTION	PART NUMBER	REQ'D NUMBER
14	Clamp, Hose	02-0179-02	1
	* * *		
15	Cap, Freezer	13-0809-01	1
	* * *		
16	Spout Assembly	No Number	1
	(See Figure 8-5)		
	* * *		
17	Gasket, Spout	02-1437-00	1
	attaching parts, Index 16 and 17		
	Washer, No. 1/4 Internal Tooth - Phosphor Bronze	03-1417-07	4
	Screw, No. 1/4-20 x 1 Soc-Hd Cap (SS)	03-1544-03	4
	* * *		
18	Freezer Assembly	No Number	1
	(See Figure 8-6)		
	attaching parts, Index 18		
	Washer, Special	03-1408-05	4
	Screw, No. 5/16-18 x 1-1/4 Hex Cap	03-1420-03	4
	* * *		
19	Coupling	15-0573-01	1
	* * *		
20	Gasket	13-0704-00	1
	* * *		
21	Drivemotor Assembly	A24317-021	1
	(See Figure 8-7)		
	attaching parts, Index 21		
	Lockwasher, No. 5/16 Carbon Steel Zinc Plated Helical Spring	03-1410-04	3
	Washer, Special	03-1408-35	3
	Screw, No. 5/16-18 x 7/8 Hex Cap	03-1420-01	3
	* * *		
22	Bushing Snap	12-1213-10	1
	* * *		

Figure 8-2. Major Assemblies — Air-Cooled Models (cont'd)

INDEX NO.	DESCRIPTION	PART NUMBER	REQ'D NUMBER
23	Tube, Bin Drain	No Number	1
	* * *		
24	Tube, Tygon	13-0674-06	1
	attaching parts, Index 23, 24, 25		
	Clamp, Hose	02-1338-00	2
	* * *		
25	Drain, Bin	A28203-001	1
	* * *		
26	O-Ring	13-0617-11	1
	attaching parts, Index 25, 26, 27 to 34		
	* * *		
27	Top, Drain (screws into Index 25)	02-1741-00	1
	* * *		
28	Grommet	13-0557-01	1
	* * *		
29	Pad, Sealing	13-0806-01	1
	* * *		
30	Retainer, Insulation	No Number	1
	attaching parts, Index 30		
	Screw, No. 8 x 1/2 T/F Tap	03-1404-09	3
	* * *		
31	Retainer Ext. Front	A28144-001	1
	attaching parts, Index 31		
	Screw No. 8 x 1/2 T/F Tap	03-1404-09	Ref.
	* * *		
32	Retainer Ext. Rear	A28141-001	1
	attaching parts, Index 32		
	Screw, No. 8 x 1/2 T/F Tap	03-1404-09	Ref.
	* * *		

Figure 8-2. Major Assemblies—Air-Cooled Models (cont'd)

INDEX NO.	DESCRIPTION	PART NUMBER	REQ'D NUMBER
33	Extension Panel	A28097-001	
	attaching parts, Index 33		
	Screw, No. 8 x 1/2 T/F Tap	03-1404-09	Ref.
	* * *		
34	Bin, Storage	A28057-001	1
	* * *		
	NOTE: See Figure 8-8 for replacement parts within the Control Box Assembly.		

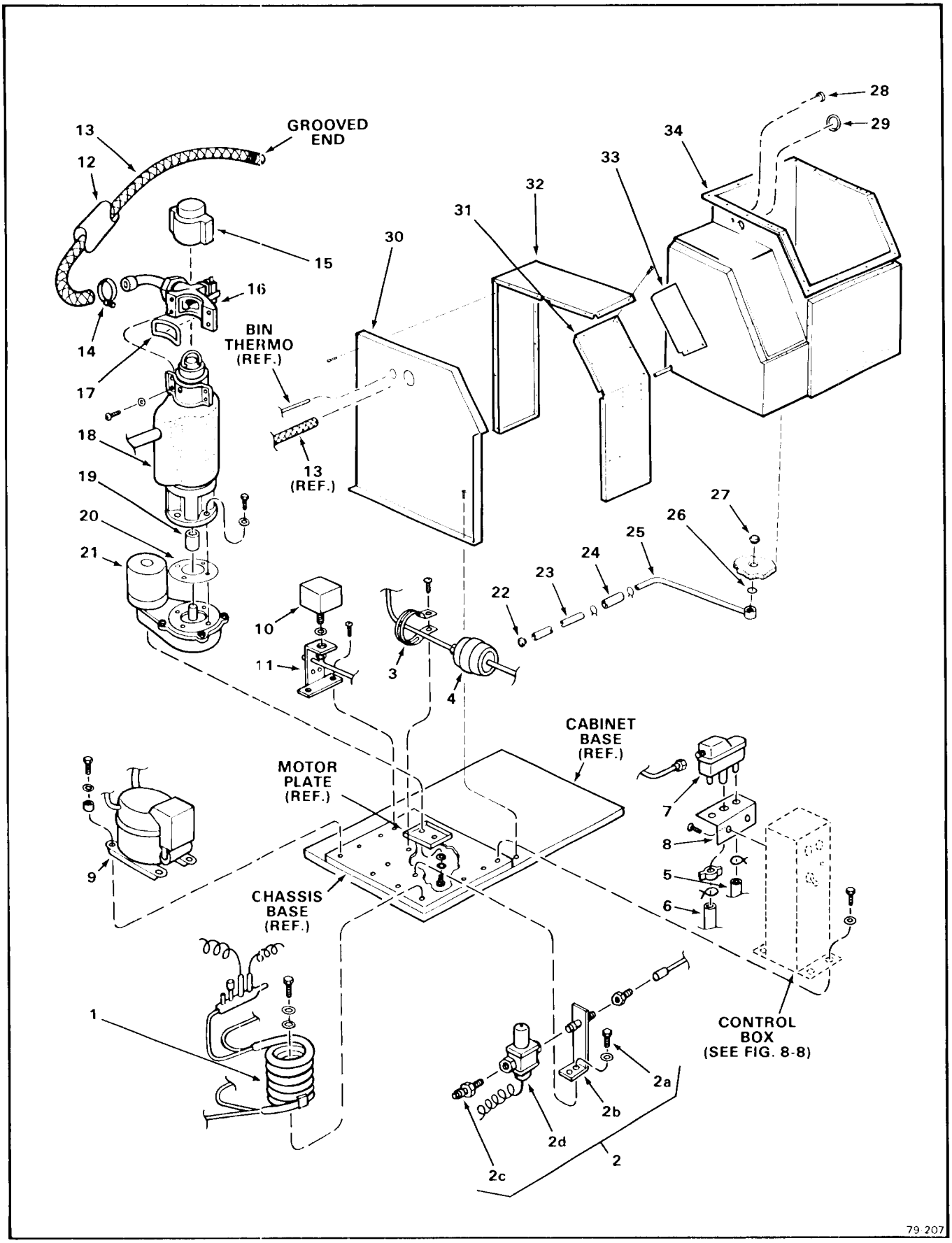

Figure 8-3. Major Assemblies - Water Cooled

Figure 8-3. Major Assemblies — Water-Cooled Models

INDEX NO.	DESCRIPTION	PART NUMBER	REQ'D NUMBER
	Major Assemblies - Water-Cooled Model	No Number	Ref.
	* * *		
1	Condenser - Water-Cooled	18-3305-02	1
	attaching parts, Index 1		
	Lockwasher, No. 1/4 External Tooth - Carbon Steel Zinc Plated	03-1417-09	2
	Screw, No. 1/4-20 x 1/2 T/C Hex Hd	03-0571-00	2
	* * *		
2	Regulator Assembly, Water	No Number	1
	attaching parts, Index 2		
	Lockwasher, No. 1/4 External Tooth - Carbon Steel Zinc Plated	03-1417-09	2
	Screw, No. 1/4-20 x 1/2 T/C Hex Hd	03-0571-00	2
2a	Union, Half - No. 5/8-18 x 3/8 Flare	16-0677-01	1
2b	Nipple Assembly, Pipe (w/Bracket)	A15924-000	1
2c	Coupling - 3/8 NPT x 3/8 Flare Brass	16-0355-00	1
2d	Valve, Water Regulator	11-0198-02	1
	* * *		
3	Brace, Drier	A09388-001	1
	* * *		
4	Drier	02-0544-01	1
	attaching parts, Index 3 and 4		
	Screw, No. 10-16 x 3/4 S/T	03-1360-01	1
	* * *		
5	Tube (Reservoir Overflow to Drain)	13-0079-03	1
	* * *		
6	Tube (Reservoir to Freezer Inlet)	13-0674-09	1
	attaching parts, Index 5 and 6		
	Clamp (Index 5)	02-0535-00	2
	Clamp (Index 6)	02-0694-00	2
	* * *		
7	Reservoir	02-2217-01	1

Figure 8-3. Major Assemblies — Water-Cooled Models (cont'd)

INDEX NO.	DESCRIPTION	PART NUMBER	REQ'D NUMBER
	Valve Assembly, Float (Not shown)	02-2217-02	1
	attaching parts, Index 7		
	Wing Nut (p/o Reservoir)	No Number	1
	* * *		
8	Bracket, Mounting	A20959-000	1
	attaching parts, Index 8		
	Screw, No. 8-18 x 1/2 S/T Phil Pan Hd	03-1572-01	2
	* * *		
9	Compressor (See Figure 8-4)	18-3900-01	1
	attaching parts, Index 9		
	Grommet	18-2200-28	4
	Sleeve, Mounting	18-2200-27	4
	Lockwasher, No. 5/16 External Tooth - Carbon Steel Zinc Plated	03-1417-12	4
	Washer, Special	03-1408-24	4
	Screw, No. 5/16-18 x 1-3/4 Hex Cap	03-1405-40	4
	* * *		
10	Control, Pressure - H^2O	11-0296-00	1
	* * *		
11	Bracket, Utility	A27993-001	1
	O-Ring	13-0617-26	1
	Rubber Washer	03-1409-21	1
	attaching parts, Index 10 and 11		
	Nut, Pal	03-1394-00	1
	Screw, No. 10-16 x 3/4 S/T	03-1360-01	2
	* * *		
12	Covering, Tube	13-0279-00	1
	* * *		
13	Tube, Ice	A28042-005	1
	attaching parts, Index 12 and 13		
	* * *		

Figure 8-3. Major Assemblies — Water-Cooled Models (cont'd)

INDEX NO.	DESCRIPTION	PART NUMBER	REQ'D NUMBER
14	Clamp, Hose	02-0179-02	1
	* * *		
15	Cap, Freezer	13-0809-01	1
	* * *		
16	Spout Assembly	No Number	1
	(See Figure 8-5)		
	attaching parts, Index 16 and 17		
	* * *		
17	Gasket, Spout	02-1437-00	1
	Washer, No. 1/4 Internal Tooth - Phosphor Bronze	03-1417-07	4
	Screw, No. 1/4-20 x 1 Soc-Hd Cap	03-1544-03	4
	* * *		
18	Freezer Assembly	No Number	1
	(See Figure 8-6)		
	attaching parts, Index 18		
	Washer, Special	03-1408-03	4
	Screw, No. 5/16-18 x 1-1/4 Hex Cap	03-1420-03	4
	* * *		
19	Coupling	15-0573-01	1
	* * *		
20	Gasket	13-0704-00	1
	* * *		
21	Drivemotor Assembly	A24317-021	1
	(See Figure 8-7)		
	attaching parts, Index 21		
	Lockwasher, No. 5/16 Carbon Steel Zinc Plated Helical Spring	03-1410-04	3
	Washer, Special	03-1408-35	3
	Screw, No. 5/16-18 x 7/8 Hex Cap	03-1420-01	3
	* * *		
22	Bushing, Snap	12-1213-08	1
	* * *		

Figure 8-3. Major Assemblies — Water-Cooled Models (cont'd)

INDEX NO.	DESCRIPTION	PART NUMBER	REQ'D NUMBER
23	Tube, Bin Drain	No Number	1
24	Tube, Tygon	13-0674-06	1
	attaching parts, Index 23, 24, 25		
	Clamp, Hose	02-1338-00	2
	* * *		
25	Drain, Bin	A28203-001	1
	* * *		
26	O-Ring	13-0617-11	1
	attaching parts, Index 25, 26, 27 to 34		
	* * *		
27	Top, Drain (screws into Index 25)	02-1741-00	1
	* * *		
28	Grommet	13-0557-01	1
	* * *		
29	Pad, Sealing	13-0806-01	1
	* * *		
30	Retainer, Insulation	No Number	1
	attaching parts, Index 30		
	Screw, No. 8 x 1/2 T/F Tap	03-1404-09	3
	* * *		
31	Retainer Ext. Front	A28144-001	1
	attaching parts, Index 31		
	Screw No. 8x 1/2 T/F Tap	03-1404-09	Ref.
	* * *		
32	Retainer Ext, Rear	A28141-001	1
	attaching parts, Index 32		
	Screw, No. 8 x 1/2 T/F Tap	03-1409-09	Ref.
	* * *		
33	Extension Panel	A28097-001	1

Figure 8-3. Major Assemblies—Water-Cooled Models (cont'd)

INDEX NO.	DESCRIPTION	PART NUMBER	REQ'D NUMBER
	attaching parts, Index 33		
	Screw No. 8 x 1/2 T/F Tap	03-1404-09	Ref.
	* * *		
34	Bin, Storage	A28057-001	1
	* * *		
	NOTE: See Figure 8-8 for replacement parts within the Control Box Assembly.		

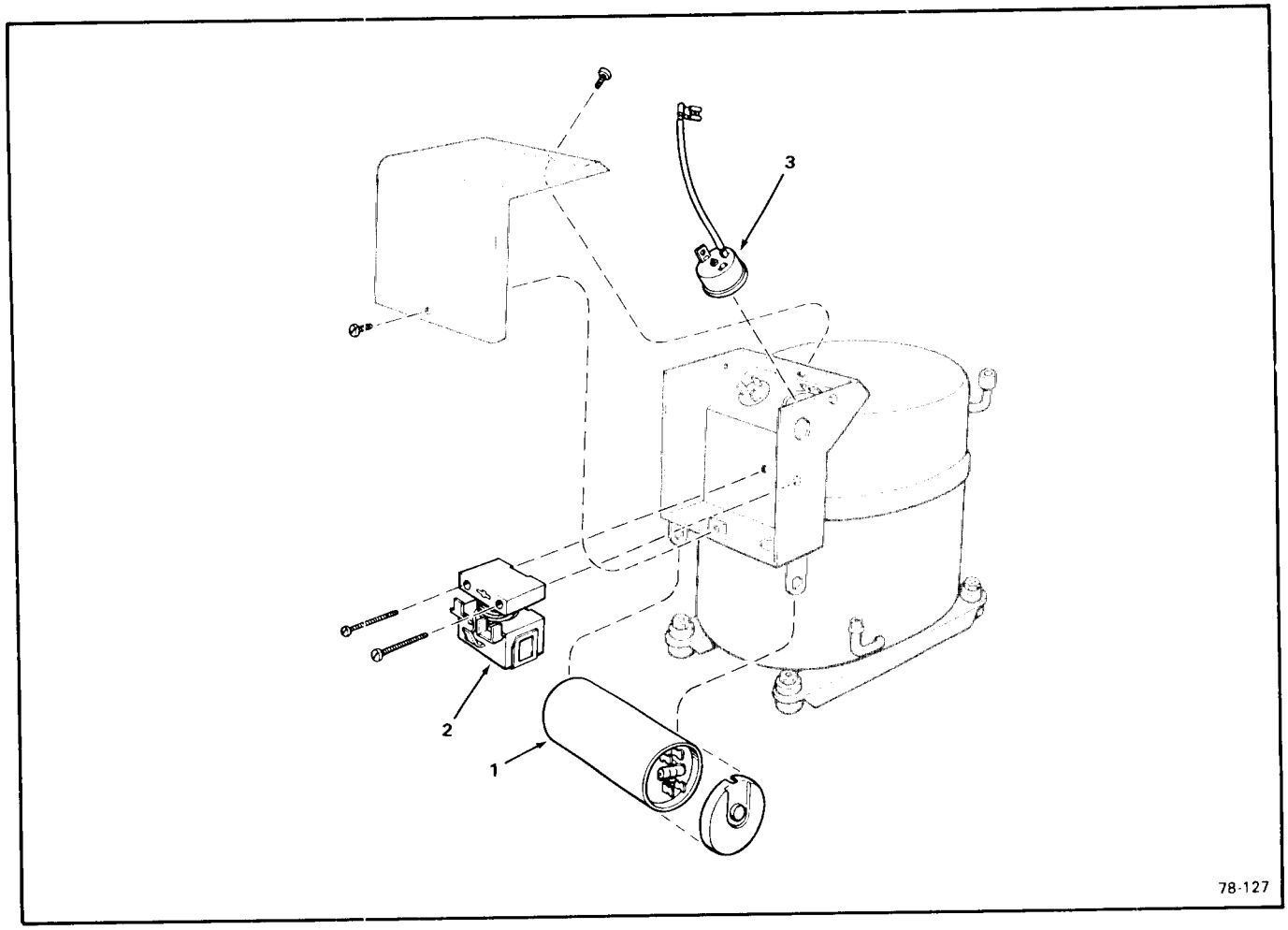

Figure 8-4. Compressor Assembly

INDEX NO.	DESCRIPTION	PART REQ'D NUMBER	NUMBER
	Compressor Assembly - 115/60/1	18-3900-01	Ref.
	Compressor Assembly - 208-230/60/1	18-3900-02	Ref.
	(See Figure/Index 8-2/9 and 8-3/9 for next higher Assembly)		
	* * *		
1	Capacitor - High Torque - 115/60/1	18-2420-00	1
	Capacitor - High Torque - 208-230/60/1	18-2421-00	1
	* * *		
2	Relay - 115/60/1	18-2410-00	1
	Relay - 208-230/60/1	18-2200-34	1
	* * *		
3	Overload - 115/60/1	18-2400-25	1
	Overload - 208-230/60/1	18-2400-26	1
	* * *		

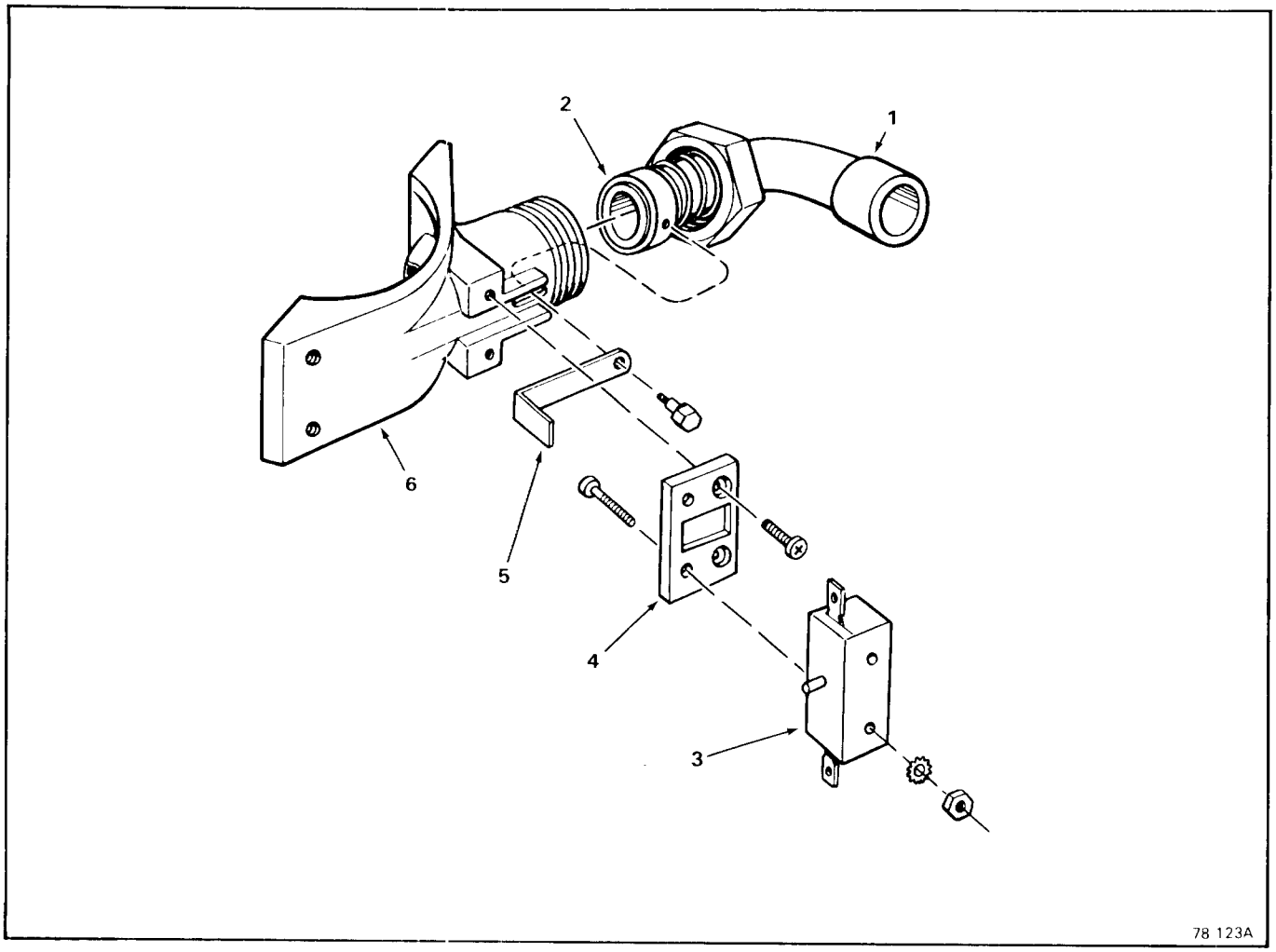

Figure 8-5. Spout Assembly.

INDEX NO.	DESCRIPTION	PART NUMBER	REQ'D NUMBER
	Spout Assembly (See Figure/Index 8-2/16 and 8-3/16 for next higher Assembly) * * *	No Number	Ref.
1	Tube, Ice Discharge * * *	A26542-001	1
2	O-Ring * * *	13-0617-41	1
3	Switch attaching parts, Index 3 tc 4 Screw, No. 6-32 x 1 Flat Hd. Mach - Phil Recess	12-1664-00 03-1418-38	1 2

Figure 8-5. Spout Assembly (cont'd)

INDEX NO.	DESCRIPTION	PART NUMBER	REQ'D NUMBER
	Lockwasher No. 6 External Tooth - Phosphor Bronze	03-1417-01	2
	Nut, No. 6-32 Hex Mach Screw	03-1406-01	2
	* * *		
4	Barrier, Thermal	02-2377-01	1
	attaching parts, Index 4 to 6		
	Screw, No. 6-32 x 3/8 Flat Hd Mach - Phil Recess	03-1418-01	2
	* * *		
5	Actuator, Switch	A27511-001	1
	attaching parts, Index 5 to 6		
	Screw, Shoulder	A25305-001	1
	* * *		
6	Spout	A26441-001	1
	* * *		

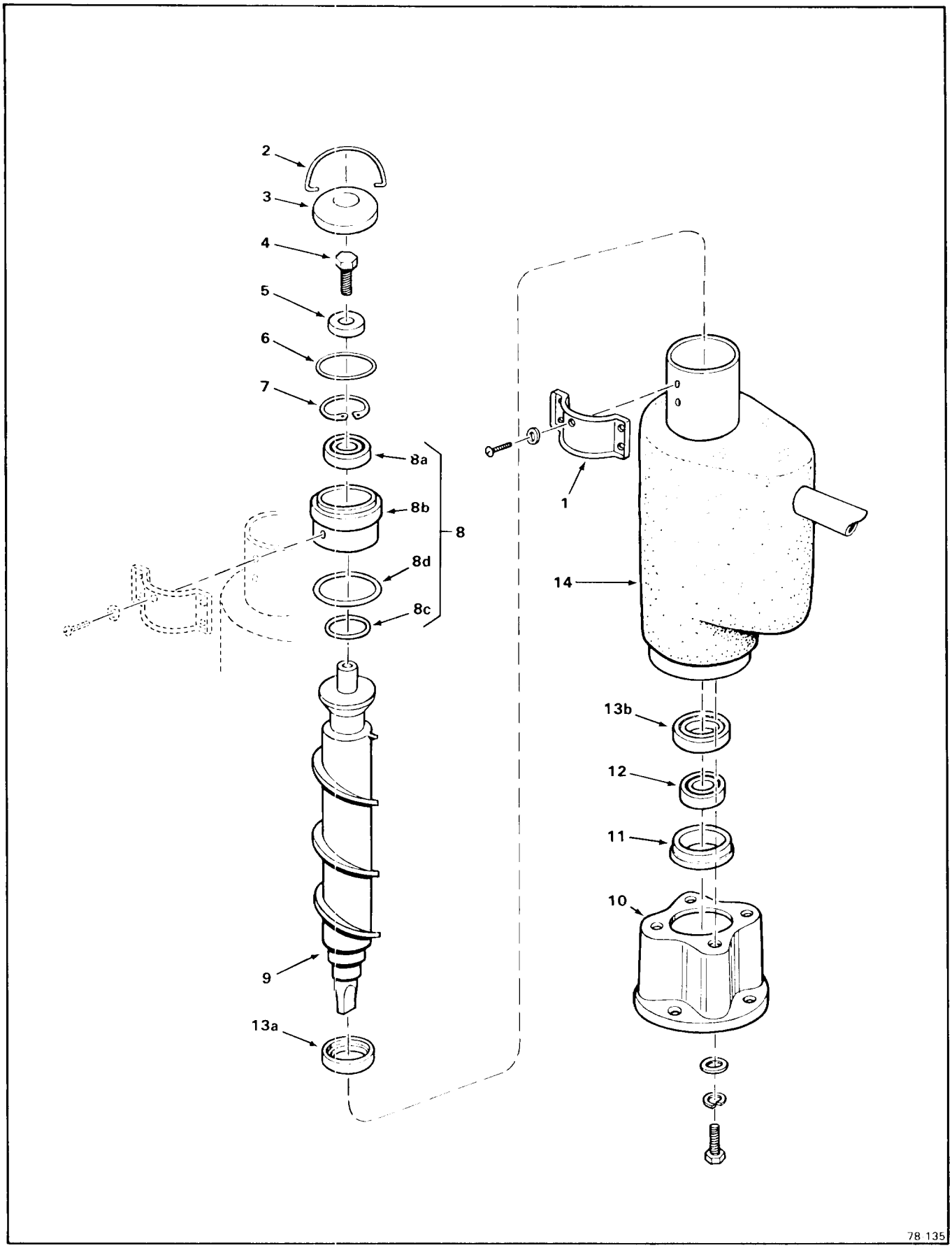

Figure 8-6. Freezer Assembly.

Figure 8-6. Freezer Assembly.

INDEX NO.	DESCRIPTION	PART NUMBER	REQ'D NUMBER
	Freezer Assembly	No Number	Ref.
	(See Figure/Index 8-2/19 and 8-3/19		
	for next higher Assembly)		
	* * *		
1	Plate, Spout	A24928-001	1
	attaching parts, Index 1		
	Washer, Non-Metallic .250 I.D.	03-1409-20	1
	Screw, No. 1/4-20 x 3/8 Phil Recessed Hd Sealing	03-1506-03	1
	* * *		
2	Hook	A08582-000	1
	* * *		
3	Cap	A08581-000	1
	* * *		
4	Screw, No. 1/2-20 x 1 Hex Cap	03-1405-36	1
	* * *		
5	Washer, Brass 17/32 I.D. x 1-5/8 O.D. x 5/16	A06273-000	1
	* * *		
6	O-Ring (Fits into outside groove, Index 8)	13-0617-20	1
	* * *		
7	Ring, Internal Retaining	02-1558-04	1
	* * *		
8	Retainer, Top Bearing — w/Bearing	A26708-001	1
8a	Bearing (Top)	02-0646-00	1
8b	Retainer (Order P/N A26708-001)	No Number	1
8c	O-Ring - (Internal)	13-0617-15	1
8d	O-Ring - (External)	13-0617-40	1
	* * *		
9	Auger	02-2048-01	1
	* * *		

Figure 8-6. Freezer Assembly (cont'd).

INDEX NO.	DESCRIPTION	PART NUMBER	REQ'D NUMBER
10	Adaptor	02-1629-00	1
	attaching parts, Index 10, 11, 12, 13 to 14		
	Washer, Special	03-1408-03	4
	Lockwasher, No. 5/16 Helical Spring	03-141-04	4
	Screw, No. 5/16-18 x 1-1/4 Hex Cap	03-1405-41	4
	* * *		
	Gasket (Not Shown)	13-1704-00	1
	* * *		
11	Retainer, Bearing	A10591-000	1
	* * *		
12	Bearing	02-0619-00	1
	* * *		
13	Seal, Water	A22569-000	1
13a	Seal, Upper (Fits on Index 9)	No Number	Ref.
13b	Seal, Lower (Fits on top of Index 12)	No Number	Ref.
	* * *		
14	Freezer - (Repair Assembly)	A26869-020	1
	* * *		

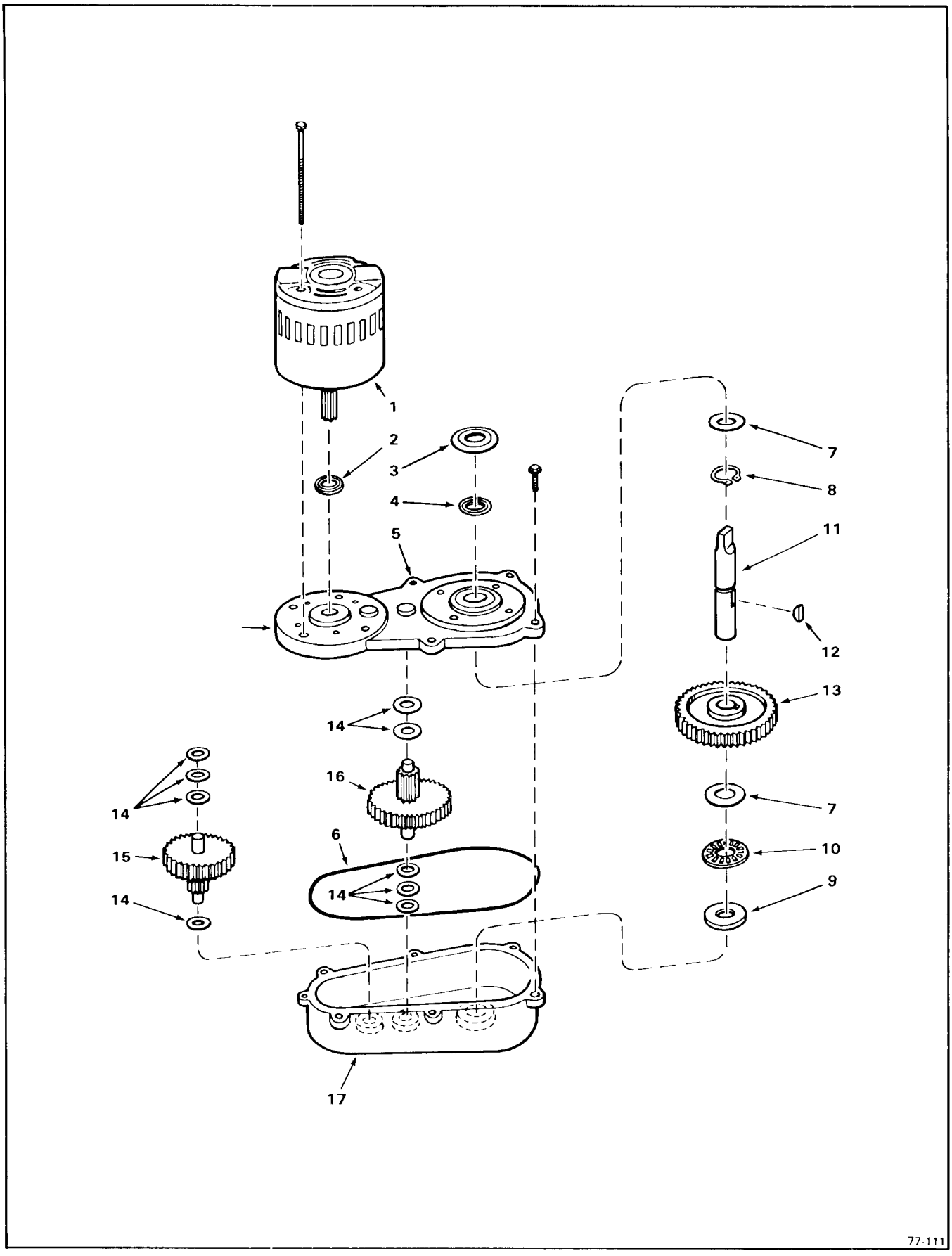

Figure 8-7. Drivemotor Assembly.

Figure 8-7. Drivemotor Assembly.

INDEX NO.	DESCRIPTION	PART NUMBER	REQ'D NUMBER
	Drivemotor Assembly (1/4 H.P.) (12.2 R.P.M.)	A24317-021	Ref.
	(See Figure/Index 8-2/21 and 8-3/21		
	for next higher Assembly)		
	* * *		
1	Motor, Drive 115/60/1 (1/4 H.P. Split Phase)	A26455-001	1
	attaching part, Index 1 to 5		
	Screw, Motor (p/o Index 1)	No Number	4
	* * *		
2	Seal, Oil	02-1606-00	1
	* * *		
3	Shed, Water	13-0709-02	1
	* * *		
4	Seal, Oil	02-1607-00	1
	* * *		
5	Cover Assembly, Gear Case	A22200-000	1
	attaching parts, Index 5 to 17		
	Screw, No. 5/16 x 1 Flange	03-1252-01	6
	* * *		
6	O-Ring	A26103-001	1
	* * *		
7	Race, Thrust	02-1681-00	2
	* * *		
8	Ring, Retaining	03-1363-00	1
	* * *		
9	Race, Thrust	02-1679-00	1
	* * *		
10	Bearing	02-1680-00	1
11	Shaft, Output	02-1652-00	1
	attaching part, Index 11 to 13		
	* * *		

Figure 8-7. Drivemotor Assembly (cont'd)

INDEX NO.	DESCRIPTION	PART NUMBER	REQ'D NUMBER
12	Key (No. 91 Woodruff, Nickel Steel)	03-1364-00	1
	* * *		
13	Gear, Output	02-1653-00	1
	* * *		
14	Washer, Special (.515 I.D. x 875 O.D. x .028 Steel)	03-1408-24	9
	* * *		
15	Second Pinion Assembly, First Gear and	02-2072-00	1
	* * *		
16	Third Pinion Assembly, Second Gear and	02-2071-00	1
	* * *		
17	Case Assembly, Gear	A22199-000	1
	* * *		

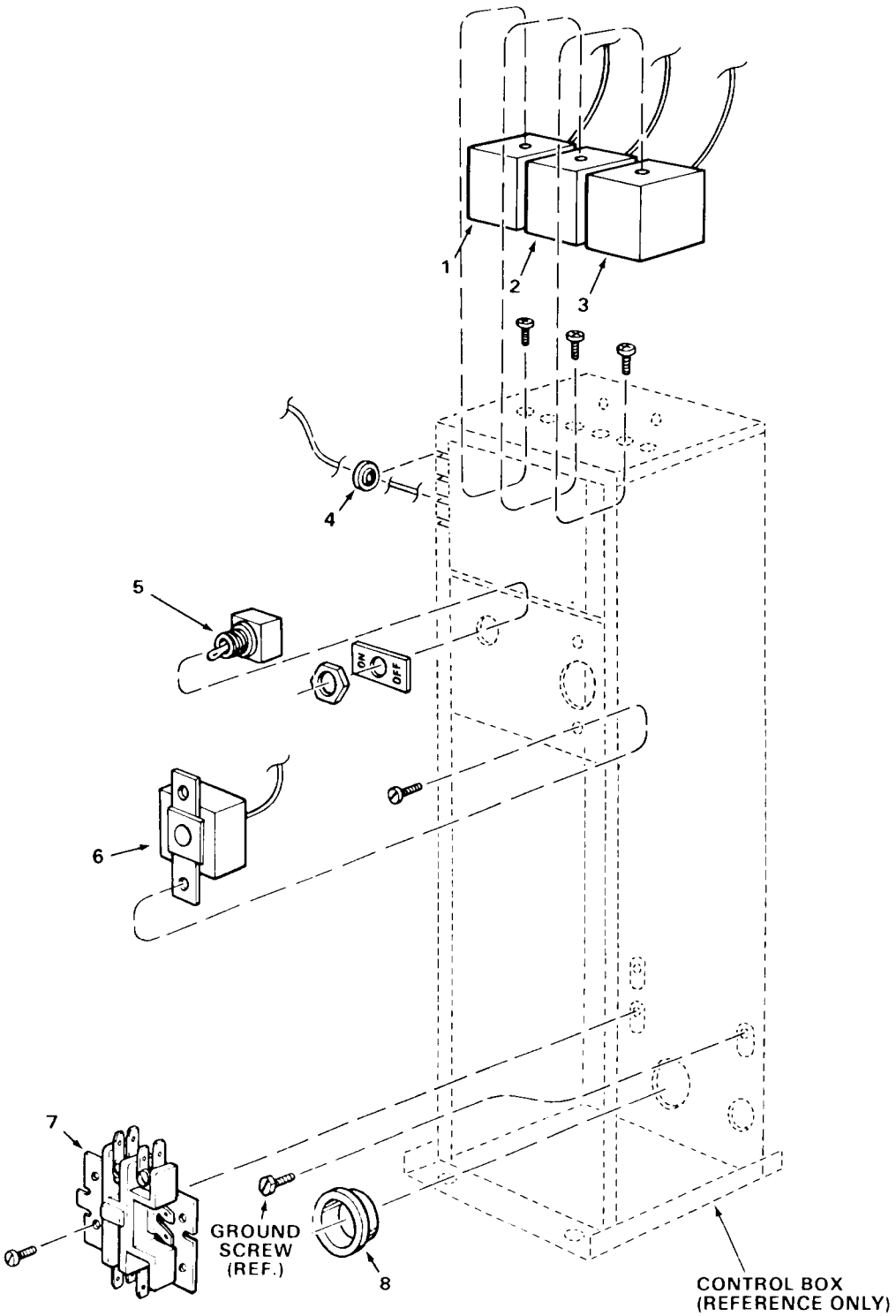

Figure 8-8. Control Box Assembly.

Figure 8-8. Control Box Assembly

INDEX NO.	DESCRIPTION	PART NUMBER	REQ'D NUMBER
	Control Box Assembly - AF-840	No Number	Ref.
	(See Figure 8-2/8-3		
	for next higher Assembly)		
	* * *		
1	Control, Low-Pressure	11-0358-01	1
	attaching parts, Index 1		
	Screw, No. 6-32 x 1/4 Pan Hd	03-1403-02	2
	* * *		
2	Control, Hi-Pressure (Water-Cooled Model)	11-0388-02	1
	attaching parts, Index 2		
	Screw, No. 6-32 x 1/4 Pan Hd	03-1403-02	2
	* * *		
3	Control, Auger Delay	11-0402-01	1
	attaching parts, Index 3		
	Screw, No. 3-32 x 1/4 Pan Hd	03-1403-02	2
	* * *		
4	Grommet	13-0557-00	4
	* * *		
5	Switch, Toggle	12-0426-01	1
	* * *		
6	Thermostat, Bin	11-0354-00	1
	attaching parts, Index 6		
	Screw, No. 8-32 x 3/8 Phil Recess Pan Hd	03-1403-17	2
	* * *		
7	Contactor	12-2037-01	1
	attaching parts, Index 7		
	Screw, No. 8-32 x 3/4 Phil Recess Pan Hd	03-1403-21	2
	* * *		
8	Bushing, Snap	12-1213-12	1
	* * *		

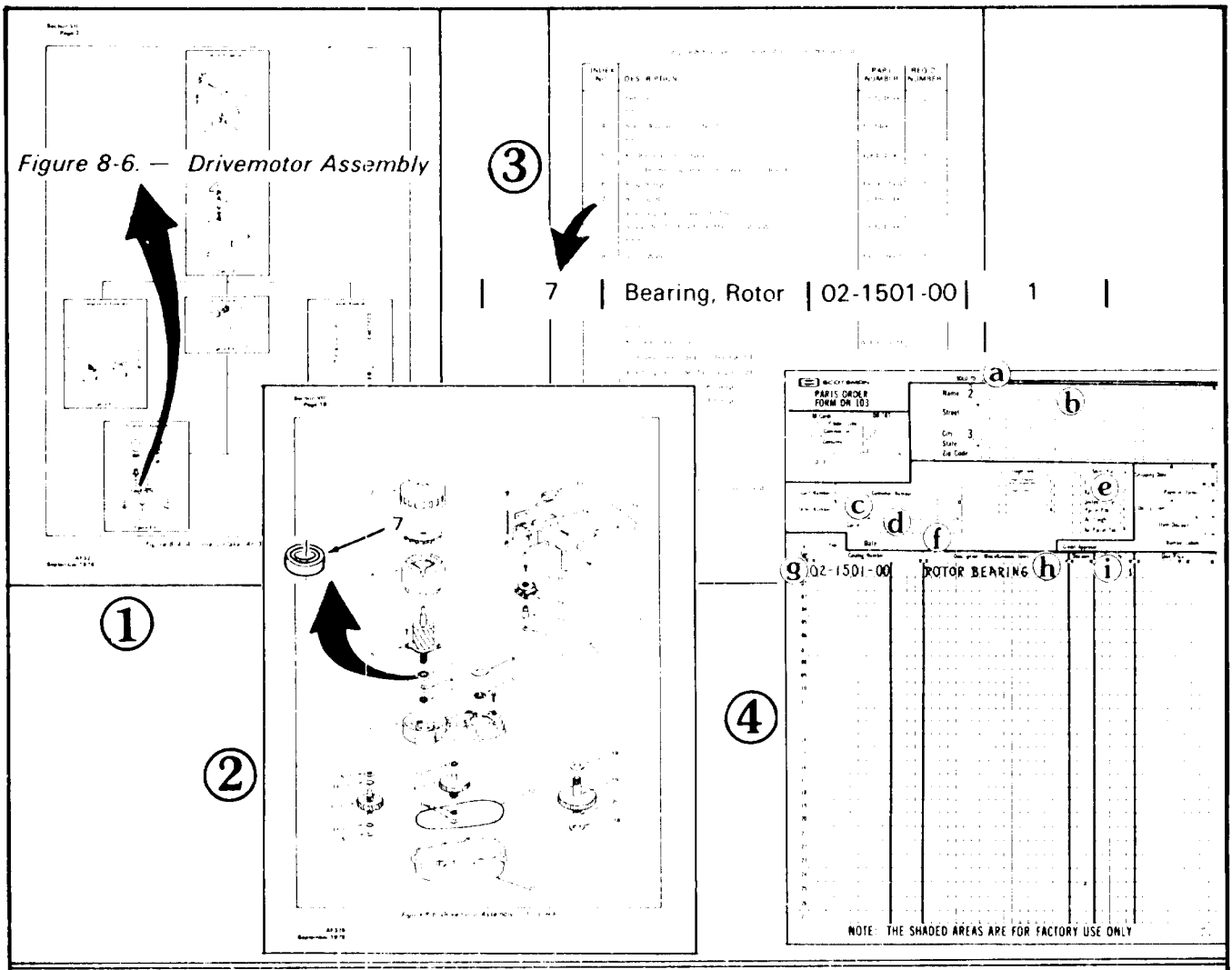

HOW TO USE A SCOTSMAN PARTS MANUAL WHEN ORDERING PARTS FOR ICE SYSTEMS PRODUCTS

IMPORTANT A. All Part Numbers have TEN DIGITS (spaces), required for use in the Computer System. BE SURE to fill in ALL SPACES in the CATALOG NUMBER column, on the Parts Order form as shown above.

B. Enter the QUANTITY of the Parts ordered, in the last digit column under the QUANTITY column heading, the one under the small 55 number, for parts from 1 thru 9. For 10 or more parts use two columns.

To be sure you receive the proper parts in the proper quantities, ALWAYS use the PART NUMBERS and DESCRIPTIONS given in the Parts Manuals.

The figures above illustrate the way a Parts Manual would be used, if the Part being ordered were the ROTOR BEARING that is used in the DRIVEMOTOR ASSEMBLY of an AF325 Automatic Flaker, for example.

PROCEDURE:

1. At the beginning of Section VIII, 'THE PARTS ILLUSTRATIONS AND PARTS LISTS, in each Parts and Service Manual, is Figure 8-A; which, is a flow chart prepared from exploded views in Section VIII. Use the flow chart to quickly determine which Figure contains the Assembly, Component or Part.

FIGURE 1: Since the Part required in the above example is in the DRIVEMOTOR ASSEMBLY, shown as FIGURE 8-6.

2. Open the Manual to page showing FIGURE 8-6.

3. Locate the PART and its INDEX NUMBER on the exploded view illustration.

FIGURE 2: The INDEX NUMBER for the PART is 7.

4. Check the numerical sequence in the associated Parts List following the illustration.

5. LOCATE the INDEX NUMBER 7, in the INDEX NO. column, the first column on the left side of the Parts List page.

FIGURE 3: INDEX NO. 7 is listed as a BEARING, ROTOR in the DESCRIPTION column. The Part Number for the Rotor Bearing is 02-1501-00 as listed in the PART NUMBER column on the right side of the Parts List page. And, one Rotor Bearing is listed in the REQ'D NUMBER column, or that ONLY one of those parts is required for one Drivemotor Assembly.

6. Write an order for the Part. (Use SCOTSMAN Parts Order Form DN103)

FIGURE 4: a. Distributor Name.
b. (Use for DROP-SHIP order ONLY).
c. Distributor Purchase Order Number.
d. Carrier
e. How shipped (Truck, Rail, UPS, etc.)
f. Date ordered
g. Part Catalog Number
(use full TEN digits (spaces) listed in Parts Manual, including dashes between numbers.
h. Description - as listed in Parts Manual.
i. Quantity - number of parts ordered.
(use far right column)

Figure 8-00. How To Use The Illustrated Parts List.

AN760

TABLE OF CONTENTS

GENERAL INFORMATION AND INSTALLATION
- Introduction 2
- For the Installer 3
- Location and Leveling 5
- For the Electrician 6
- For the Plumber 7
- Final Checklist 8

OPERATING INSTRUCTIONS
- Start-Up 10
- Operation/Icemaker 12
- Electrical/Refrigeration 12

COMPONENT LOCATION 15

MAINTENANCE AND CLEANING INSTRUCTIONS
- Maintenance Instructions 18
- Cleaning Instructions 21

SERVICE DIAGNOSIS 22

ADJUSTMENT PROCEDURES
- Bin Thermostat Control 26
- Leg Levelers 26
- Water Regulator Assembly 26
- Water Reservoir Float 26

REMOVAL AND REPLACEMENT PROCEDURES
- Slide-Out Chassis 27
- Auger, Water Seal, O-ring, Ice Breaker Assembly and Freezer Assembly (A & C Models) 28
- Elbow and Switch Assembly 32
- Compressor Assembly 33
- Condenser, Air-Cooled Models 33
- Condenser, Water-Cooled Models 33
- Liquid Line Drier 34
- Gear Motor 36
- Gear Motor Assembly 36
- Fan Motor Assembly, Air-Cooled Models 38
- Water Regulator Valve Assembly, Water-Cooled Models 38
- Safety Controls, High Pressure, Low Pressure and Auger Delay 38
- Water Reservoir Assembly 39

LIST OF ILLUSTRATIONS

- Specifications 3
- AN760 - Component Location 4
- Location and Leveling 5
- Electrical Connections 6
- Water and Drain Connections 7
- Final Checklist 8
- Water Schematic 11
- Operation 13
- Component Description 16
- Maintenance and Cleaning 20
- Removal and Replacement 27-37

PARTS LIST AND WIRING DIAGRAMS 1
(Printed in Yellow)

PARTS LIST:
- Cabinet Assembly (Part I) 4
- Cabinet Assembly (Part II) 5
- Air-Cooled Assembly 6
- Water-Cooled Assembly 7
- Water and Drainage System 8
- Freezer Assembly (A & C Models) 9
- Freezer Assembly (A Models) 9
- Elbow and Switch Assembly 10
- Drive Motor Assembly 11
- Compressor Assembly 12
- Control Box Assembly, Air-Cooled 13
- Control Box Assembly, Water-Cooled 14

WIRING DIAGRAMS:
- AN760AE-1A (115/60/1) 16
- AN760WE-1A (115/60/1) 17
- AN760AE-1C (115/60/1) 18
- AN760WE-1C (115/60/1) 19

THIS PAGE
INTENTIONALLY
LEFT BLANK

AN760 FOR THE INSTALLER

INTRODUCTION

This manual provides the specifications and the step-by-step procedures for the installation, start-up, operation, maintenance and cleaning of the SCOTSMAN Model AN760 Automatic Nugget Icemaker.

The Scotsman AN760 icemakers store their own ice supply in a heavily insulated, polyethylene storage bin, with a handy ice access door opening at the front.

Another feature is the slide-out chassis, allowing the icemaking components to be slid out as an assembly for maintenance or service.

NAME PLATE

MODEL NUMBER
SERIAL NUMBER
A.C. SUPPLY VOLTAGE
MINIMUM CIRCUIT AMPACITY — WIRES
MAXIMUM FUSE SIZE * — HERTZ
HEATER WATTS — PHASE
REFRIGERANT — CHARGE — OZ.

MOTORS	VOLTS	R.L.A./F.L.A.	W/HP.	L.R.A.
COMPRESSOR				
FAN				
DRIVE				
OTHER				

DESIGN PRESSURE — LOW — HIGH

* OR HACR TYPE CIRCUIT BREAKER

SCOTSMAN A HOUSEHOLD INTERNATIONAL COMPANY

ALBERT LEA, MINNESOTA U.S.A.

SERIAL NUMBER PLATE

MODEL NUMBER
SERIAL NUMBER
VOLTS/HERTZ/PHASE
MAXIMUM FUSE SIZE
REFRIGERANT — CHARGE — OZ.

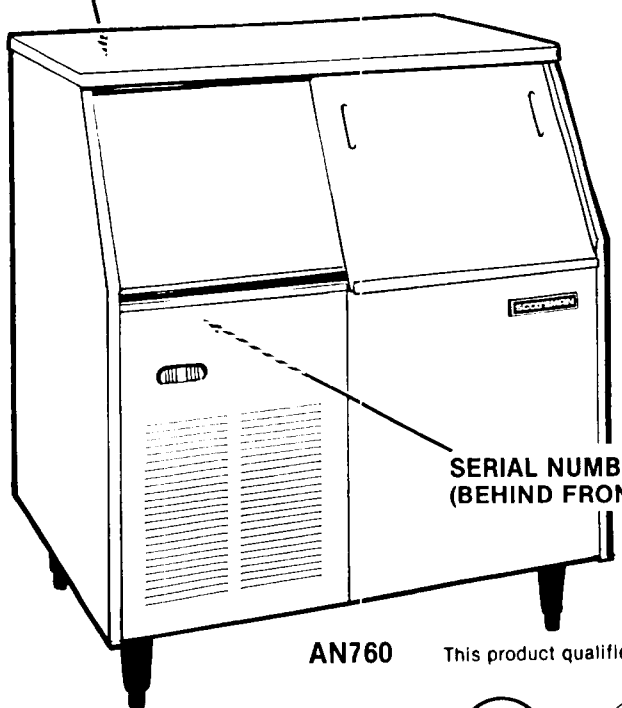

AN760

This product qualifies for the following listings:

This icemaker has been engineered to our own rigid safety and performance standards. The National Sanitation Foundation (NSF) seal, signifies that it is listed with NSF and that it complies with the materials and construction standards of NSF. In addition, the Underwriters Laboratories, Inc., (UL) Listing Mark and the Canadian Standards Association (CSA) Monogram, both signify that its construction and design have been inspected and tested by them. NSF, UL and CSA inspectors also periodically examine production icemakers at the factory, to assure continued compliance.

To retain the safety and performance built into this icemaker, it is important that installation and maintenance be conducted in the manner outlined in this manual.

AN760 FOR THE INSTALLER

AN760(A or W)E-1C utility connection location and cabinet size.

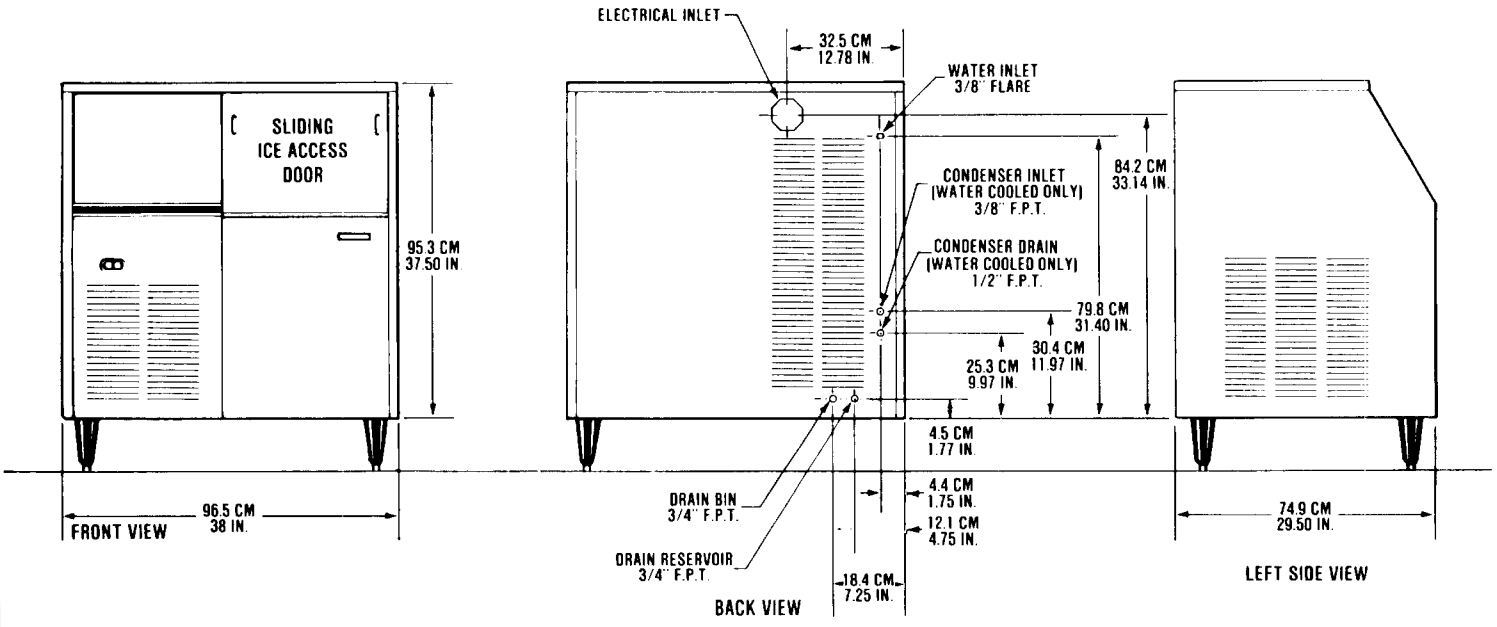

We reserve the right to make product improvements at any time. Specifications and design are subject to change without notice.

SPECIFICATIONS

Model Number	(Height - w/o Legs) Dimensions H" x W" x D"	Bin Cap.	Cube Size	Cond. Unit	Finish **	Basic Electrical	Comp. H.P.	No. of Wires	Min. Circuit Ampacity †	★ Max. Fuse Size	Ship. Wt. lbs./kg.
AN760AE-1C	37½ x 38 x 29½	255 lbs	Nugget	Air	ES	115/60/1	3/4	2	19.3	30	304/138
AN760WE-1C	37½ x 38 x 29½	255 lbs	Nugget	Water	ES	115/60/1	3/4	2	16.0	25	304/138

**ES Sandalwood high-gloss, baked enamel finish on leathergrain embossed steel.

†Use this value to determine minimum wire size as per National Electric Code Standards.

★ Or HACR type circuit breakers.

IMPORTANT OPERATING REQUIREMENTS

	MINIMUM	MAXIMUM
Air Temperatures	50°F (10.0°C)	100°F (38°C)
Water Temperatures	40°F (4.4°C)	100°F (38°C)
Water Pressures	20 lbs. gauge	120 lbs. gauge
Electrical Voltage Variations Voltage rating specified on nameplate	-10%	10%

Extended periods of operation exceeding these limitations constitutes misuse under the terms of Scotsman Manufacturer's Limited Warranty, resulting in a loss of warranty coverage.

OPTIONAL PANEL KITS

SPKAN760 stainless steel panel kit for use with AN760.

SEE NAMEPLATE, for electrical and refrigeration specifications.

NAMEPLATE is located on the rear panel.

Remove left panel to locate Model/Serial Number plate, on the top of the control box.

Legs are included with the machine. (Enamel only). If SPKAN760 is used KLP2S (Nickel-plated legs) should also be ordered.

AN760 FOR THE INSTALLER

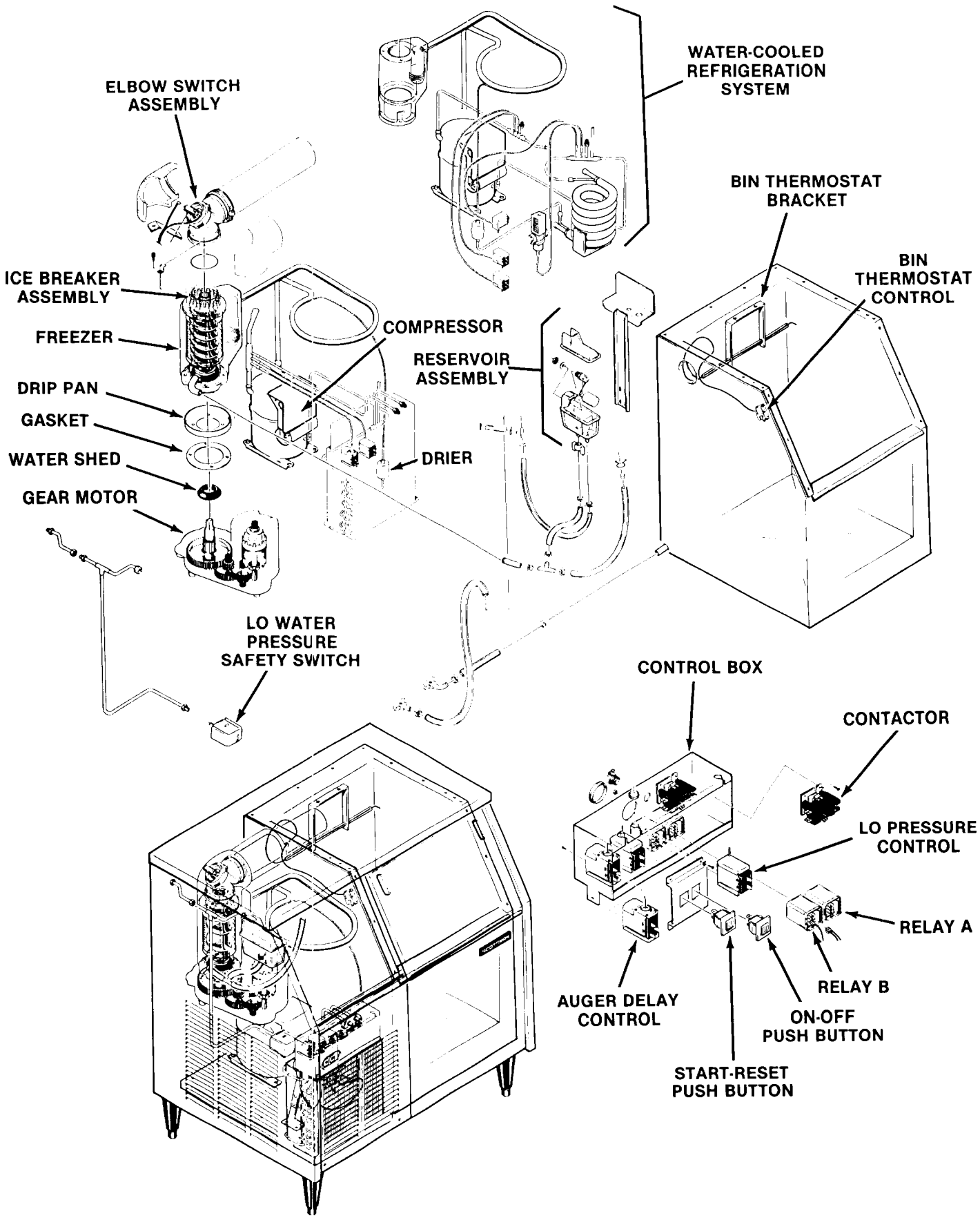

AN760(A or W)E-1C COMPONENT LOCATION

AN760 FOR THE INSTALLER

LOCATION AND LEVELING

CAUTION

This icemaker is NOT designed for outdoor installations or where air temperatures are below 50-degrees F. or above 100-degrees F. and water temperature is below 40-degrees F. or above 100-degrees F. Extended periods of operation at temperatures exceeding these limitations will constitute misuse, under the terms of the SCOTSMAN manufacturer's limited warranty, resulting in LOSS of warranty coverage.

CAUTION

Any soda lines and/or drains should be routed AWAY from the ice machine control box. Syrup in the control box can cause SEVERE DAMAGE and will result in a LOSS of warranty coverage.

1. Position the cabinet in the selected permanent location and install legs.

Select a well-ventilated location for the air-cooled model, advising the user to frequently clean the air-cooled condenser, located directly behind the lower front service panel.

SERVICE ACCESS: Adequate space is required for all service connections, located at the back of the cabinet. A six-inch minimum clearance at back and left side panels, for routing cooling air drawn into and exhausted out of the compartment to maintain proper condensing operating on air-cooled models.

2. Level the cabinet in both the left-to-right and front-to-back directions. The leveling legs can be adjusted with an open end wrench. (See adjustment of leg levelers, #1 Page 26)

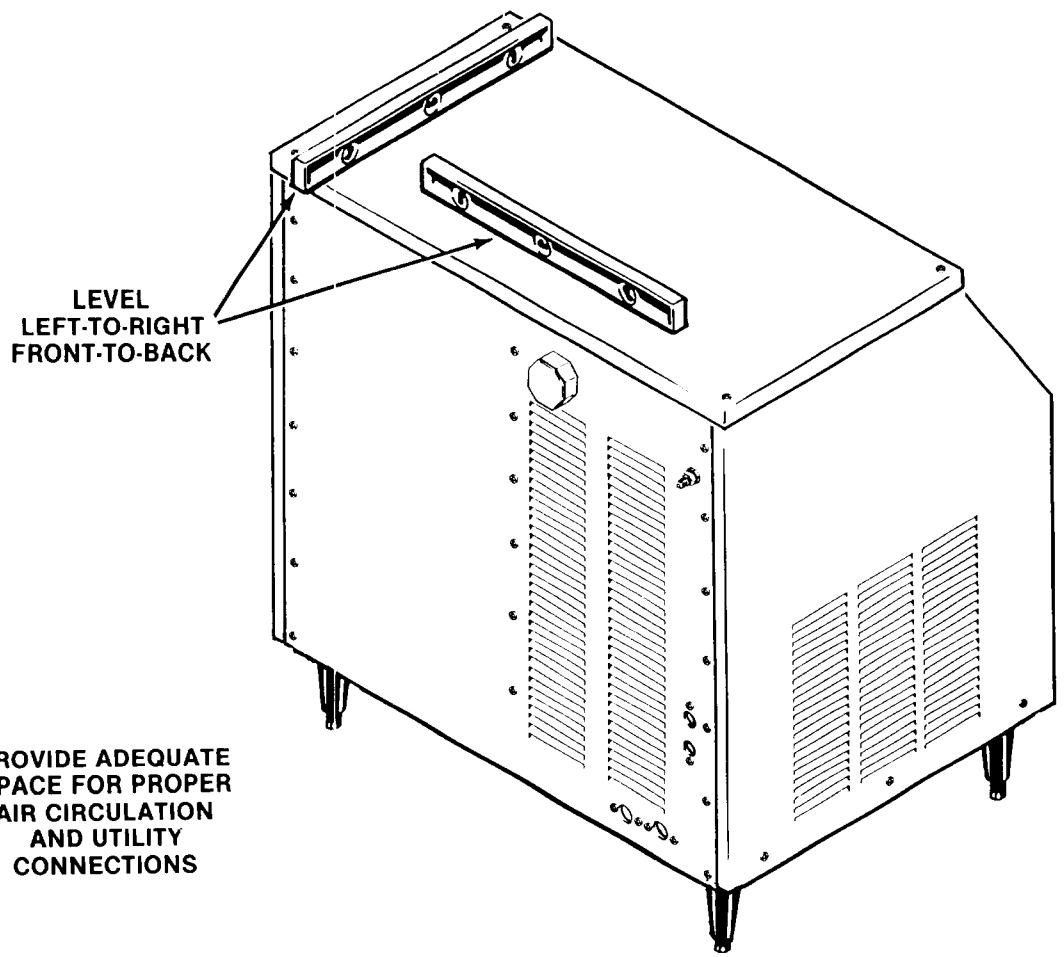

AN760 FOR THE ELECTRICIAN

ELECTRICAL CONNECTIONS

SEE NAMEPLATE for current requirements to determine wire size to be used for electrical hookup. The AN760 Icemaker requires a solid earth ground wire. See wiring diagram.

Be certain the icemaker is connected to its own electrical circuit and individually fused. The maximum allowable voltage variation should not exceed ten percent of the nameplate rating, even under starting conditions. Low voltages can cause erratic operation and may be responsible for serious damage to the overload switch and motor windings.

All external wiring should conform to the national, state and local electrical codes. A permit and services of a licensed electrician will be required.

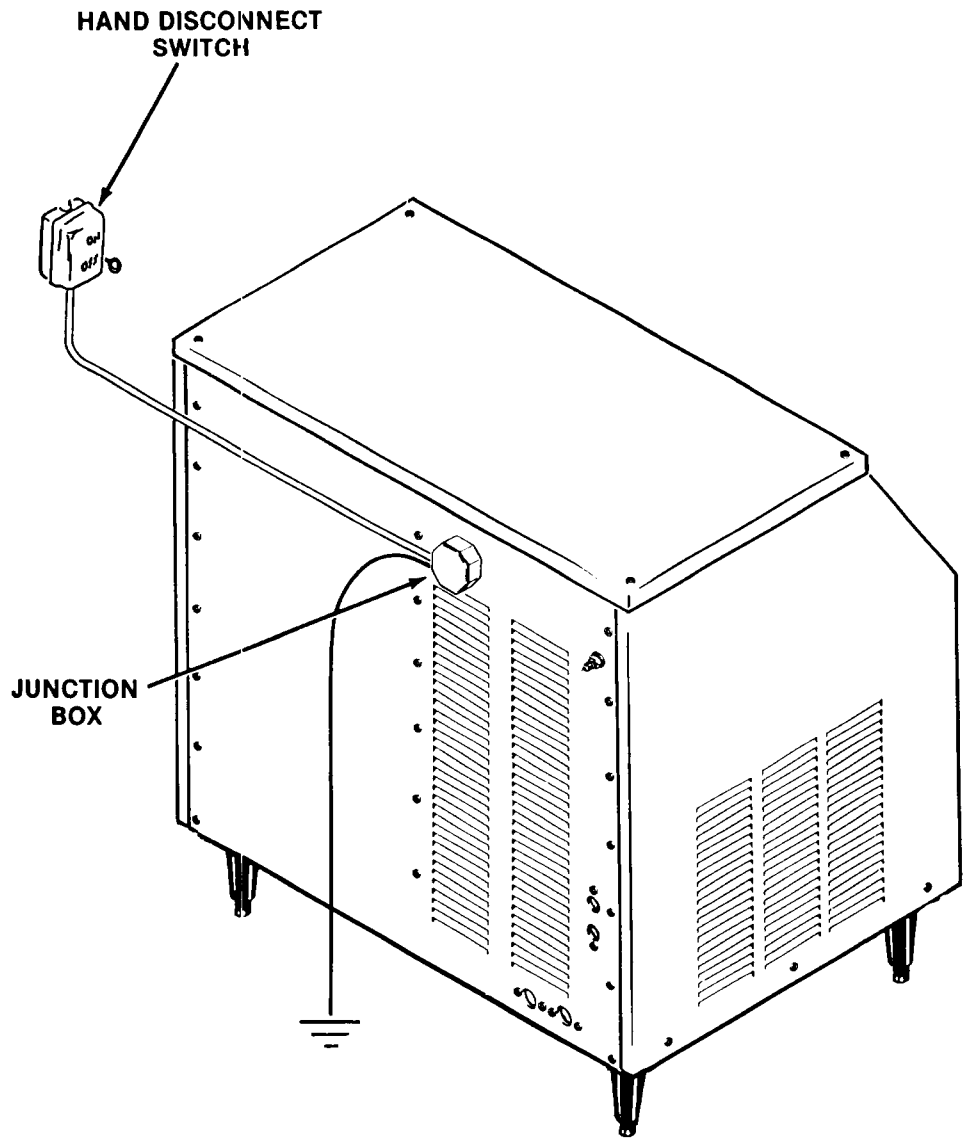

AN760 FOR THE PLUMBER

WATER SUPPLY AND DRAIN CONNECTIONS

AIR-COOLED MODELS: The recommended water supply line is a 3/8-inch O.D. copper tubing with a minimum pressure of 20 PSIG. A 3/8-inch flare fitting is provided at the water inlet. Connect to cold water supply line with standard plumbing fittings, with a shut off valve installed in an accessible place between the water supply and the cabinet.

In come cases, a plumbing permit and services of a licensed plumber will be required.

CAUTION

This icemaker is equipped with a low water pressure safety device, which in the event of interruptions or low water pressure, the icemaker will automatically stop to prevent damage. It will restart automatically after water pressure is restored.

The icemaker in this cabinet will not operate properly when water supply temperatures are below 40-degrees F. or above 100-degrees F.

WATER-COOLED MODELS: On water-cooled models a separate connection to the condenser is required. 3/8-inch O.D. copper tubing is recommended for the separate water inlet line and a separate drain line must be connected.

NOTE

The CAUTION in the text for the air-cooled models equally applies for the water-cooled models. In both type installations, water supply must be installed to conform with the local plumbing codes. In some cases a plumbing permit and services of a licensed plumber will be required.

Local water conditions may require the use of water filtration and/or water treatment equipment. Consult your local SCOTSMAN Distributor for advice. Untreated or unfiltered water may adversely affect the operation of any icemaker.

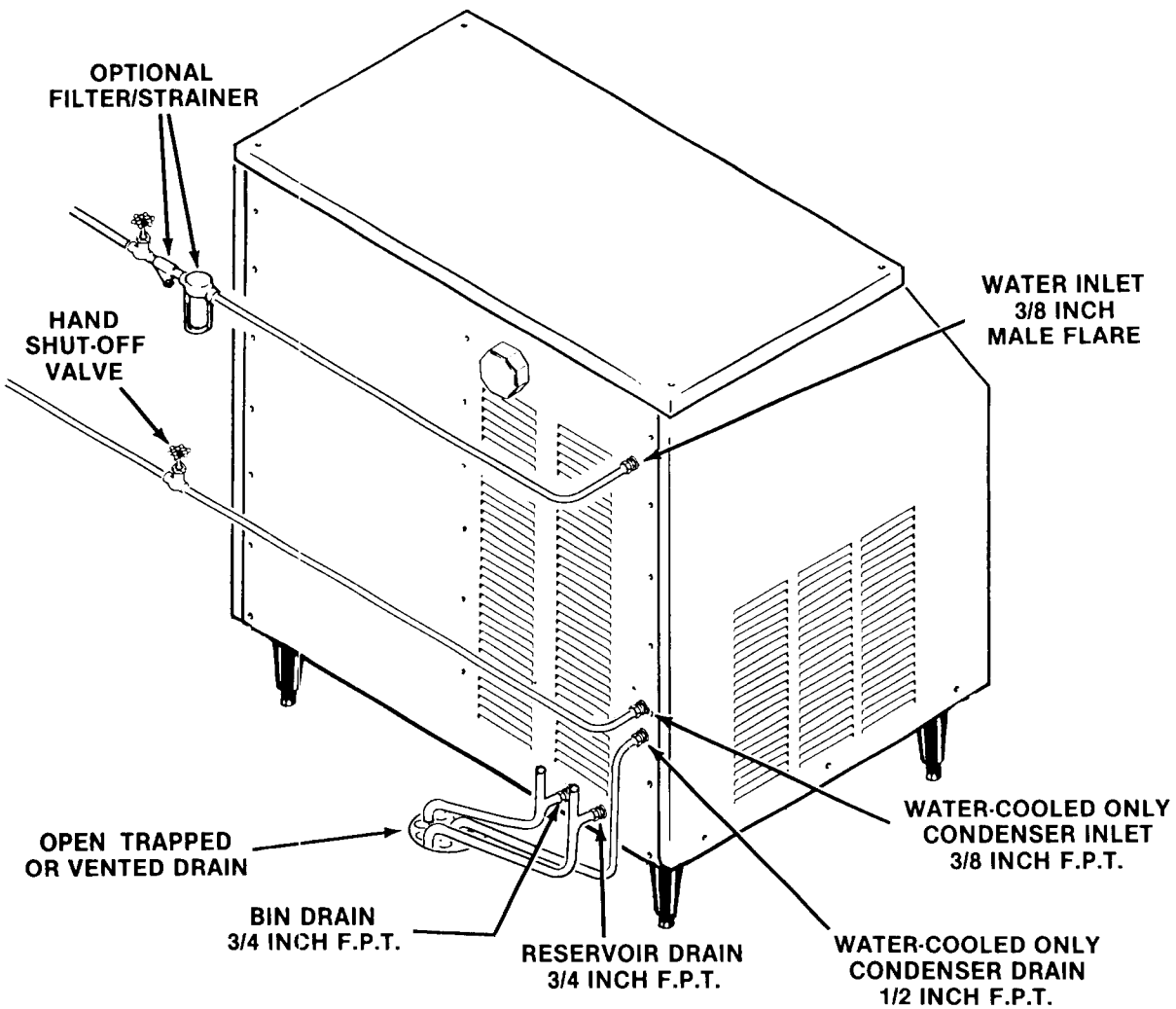

AN760 FOR THE INSTALLER

FINAL CHECK LIST

1. Is the cabinet in a room where ambient temperatures are within the minimum and maximum temperatures specified?
2. Is there at least six inches clearance at the left side and rear of the cabinets for proper air circulation?
3. Has water supply pressure been checked to insure a minimum of 20 PSIG and a maximum of 120 PSIG operating pressure?
4. Is the cabinet level?
5. Have all electrical and piping connections been made and the water supply line shut-off valve installed and electrical wiring properly connected?
6. Have the compressor hold-down nuts been checked to be sure the compressor is snug on the mounting pads?
7. Check all refrigerant lines and conduit lines, to guard against vibration or rubbing and possible failure.
8. Have the bin and cabinet been wiped clean?
9. Has the Manufacturer's Registration Card been properly filled out? Check for correct model and serial numbers from Serial nameplate, then mail the completed card to the SCOTSMAN factory.
10. Has the owner/user been given the Service Manual and instructed how to operate and maintain the icemaker?
11. Has the owner been given the name and telephone number of the authorized SCOTSMAN Service Agency serving him?

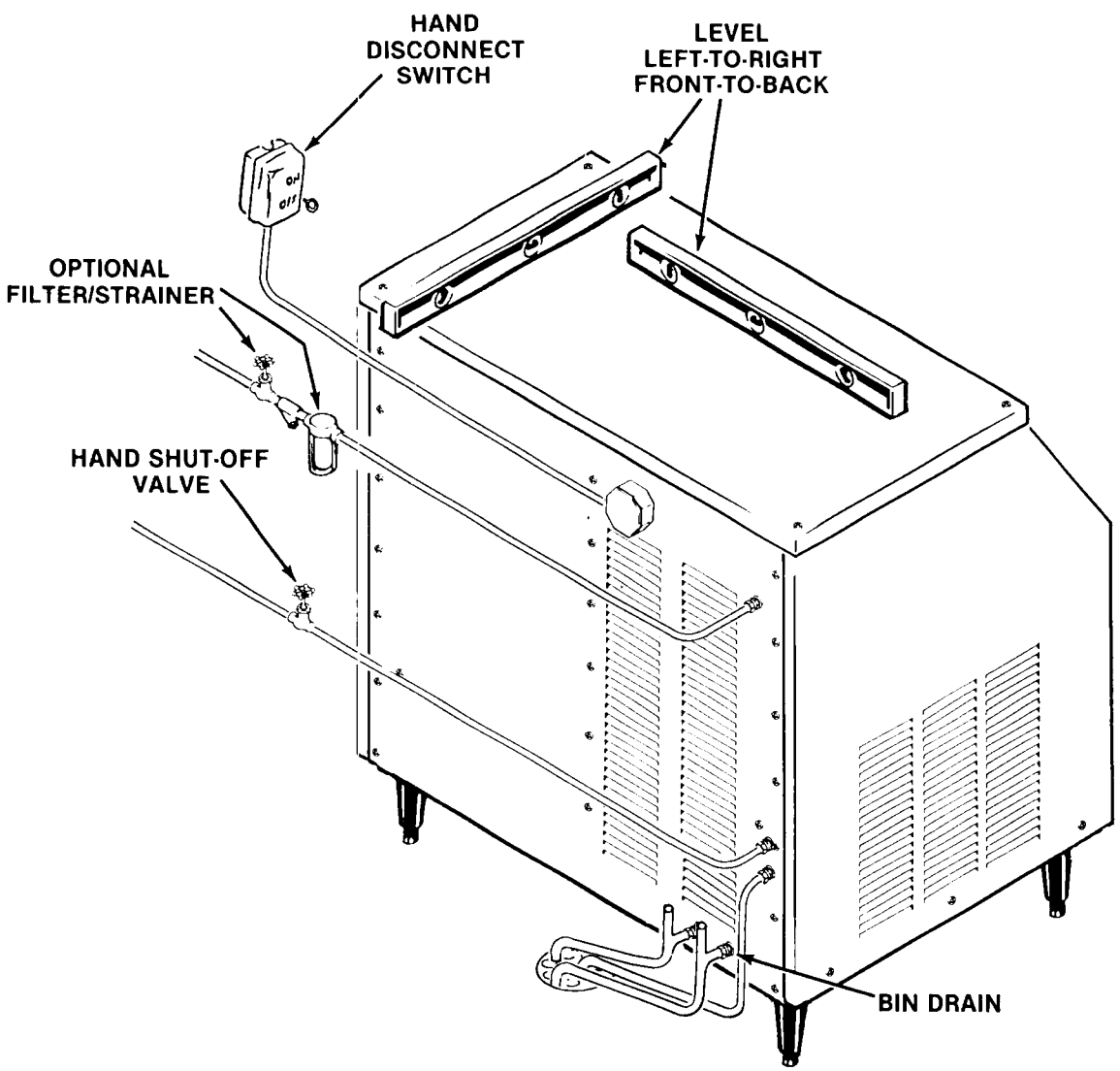

AN760 START-UP

START UP

1. Remove screws and remove trim strip. Remove screws and the upper left front panel.
2. OPEN the water supply line shutoff valve.
3. Observe the water filling operation, see water schematic.
   a. Water flows into water reservoir.
   b. Water flows through water feed line to bottom of freezer assembly.
   c. Float moves up as water rises.
   d. Float stops water flow, when water level reaches the molded horizontal line, on the body of the water reservoir.
4. Check all internal water connections for leaks.
5. Connect electrical power from the building source to the icemaker and check voltage.
6. Press the Master ON-OFF pushbutton and the START—RESET to ON position to start the automatic icemaker operation.

////////////////////// **CAUTION** //////////////////////

BE ALERT that momentary LOSS OF POWER, such as a brief power outage, will cause the RED light of the START-RESET pushbutton to turn ON. It must be PRESSED, to reset and restart the Icemaker.

Repeated need to PRESS the START-RESET pushbutton, requires checking for:

1. **Faulty bin thermostat control.**
2. **Need to clear jammed ice tube.**
3. **Loose wiring connections.**

//

7. Observe that ice begins dropping into the ice storage bin.
8. Let the system operate until ice covers the bottom of the bin. Check for any excess noises beyond normal compressor noise:
   a. Fan noises, when air-cooled: blades touch other surfaces; blades bent, out-of-balance, or loose on shaft.
   b. Vibrating type, from touching lines.
   c. Chattering: Lack of water in freezer.
   d. Compressor loose at one or more hold-down bolts.

////////////////////// **CAUTION** //////////////////////

This Icemaker is equipped with a low water pressure safety device, which in the event of interruptions or low water pressure, the Icemaker will automatically stop to prevent damage. It will restart automatically after the water pressure in restored.

//

9. Check Lo side pressure. Should be 10 ± 2 PSIG.
10. Check on Water-Cooled only, High side pressure - adjust if necessary to 135 PSIG.
11. Shut off water to test water safety switch. Compressor should stop. Turn water back on, compressor should start.
12. Check amp draw, compare to Nameplate.
13. Place ice on the ice storage bin thermostat control bulb, to test shut-off.

NOTE

Within minutes after the ice is removed from the sensing bulb, the bulb will warm up and cause the icemaker to restart. This control is factory set and should not be reset until testing is performed. Normal setting is 35-degrees F. CUT-OUT and 45-degrees F. CUT-IN, to prevent short cycling.

14. Thoroughly explain to the owner/user the significant specifications of the icemaker, the start up and operation, going through the procedures for the operating instructions. Answer all questions about the icemaker, by the owner; and, inform the owner of the name and telephone number of the authorized SCOTSMAN Distributor or Service Agency serving him.

AN760 START-UP

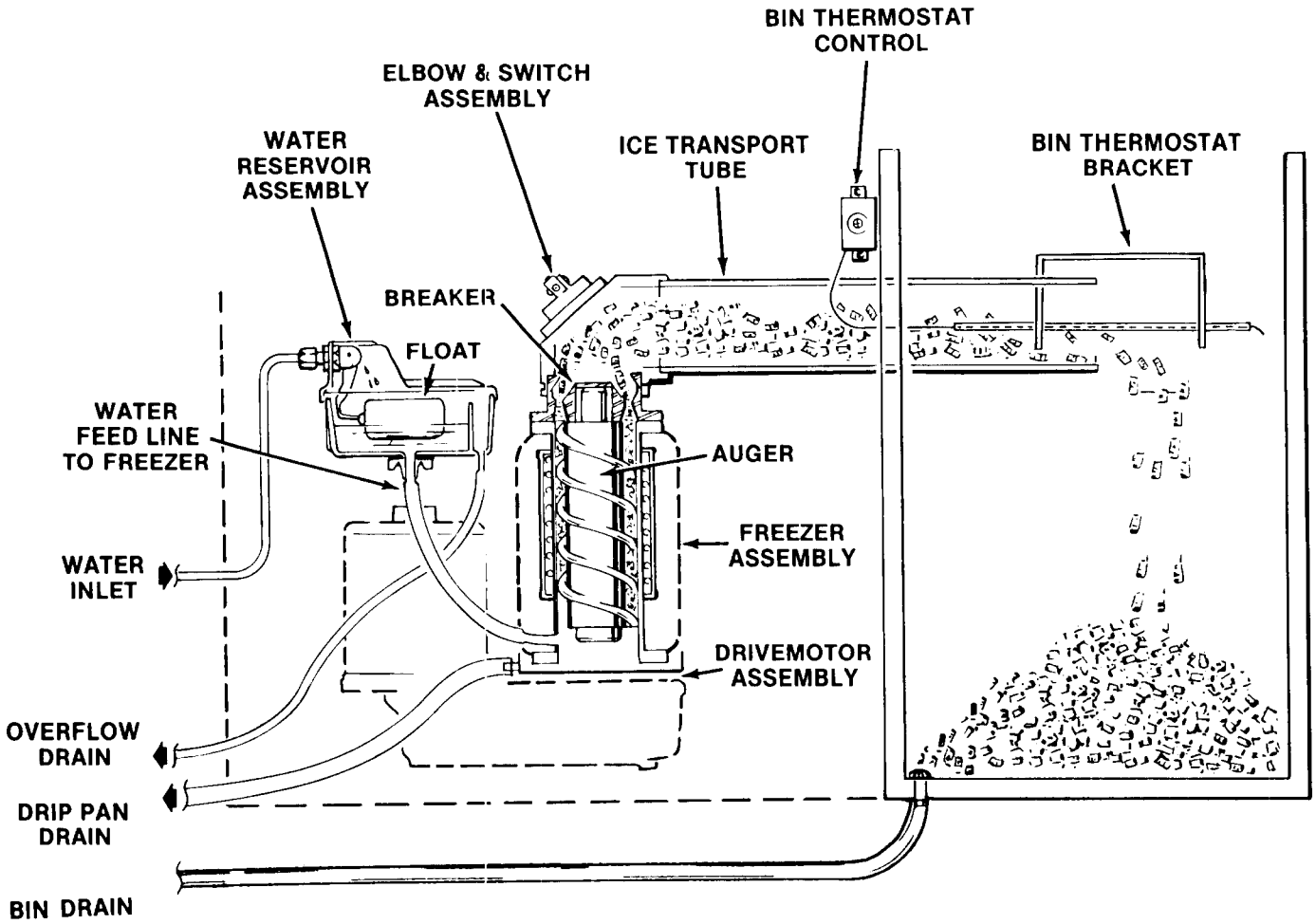

Water Schematic

AN760 OPERATION

OPERATION

ICEMAKER

The water supply flows from the building source through the inline water strainer, enters at the unit fitting and on to the water reservoir. The water reservoir functions to maintain a constant water level inside the freezer assembly. Water from the water reservoir enters at the bottom of the freezer assembly and is changed into ice by low temperatures inside the freezer.

A stainless steel auger within the freezer is powered by the drivemotor assembly, a direct-drive gear-motor, and the rotating auger carries the ice upward to the end of the auger. See Water Schematic, where excess water is pressed out of the ice, as it is extruded and broken into random length chunks of ice and pushed out through the ice transport tube and into the ice storage bin.

Pressing the Master ON-OFF pushbutton to ON, starts the automatic and continuous icemaking process. When the ice storage bin has been filled with ice, up to the level of the bin thermostat control capillary bulb, the icemaking process shuts OFF.

As ice is removed from the ice storage bin, the bulb warms up, restarting the automatic icemaking process.

Factory settings for the bin thermostat are 35-degrees F. CUT-OUT and 45-degrees F. CUT-IN.

Altitude adjustment should ONLY be performed on icemakers installed at 2000-feet level locations and ABOVE, and adjust only in increments of one-fourth turn of screw at a time.

ELECTRICAL/REFRIGERATION

The Model AN760 icemakers are designed to operate on standard electrical supply 115 volts, 60 Hertz, single phase. Other voltage requirements are available on special order. Therefore, always CHECK NAMEPLATE for electrical information BEFORE proceeding with electrical wiring connections to the icemaker.

Cold ambient temperatures and interruptions in water supply are conditions that can cause excessively hard ice and overloads within the freezer assembly, which is directly transmitted to the drivemotor; and in turn, will cause speed reduction or ultimate freezeup.

When the drivemotor is slowed to a pre-determined RPM, a sensing switch mounted on top of the motor is designed to open the electrical circuit to the compressor. The compressor stops operating, no more ice is produced, and the drivemotor continues to operate rotating the auger to clear the overload and gradually build up to full speed.

At a pre-determined higher RPM drivemotor speed, the speed sensing switch closes the electrical circuit to the compressor, causing the normal icemaking process to resume.

The elbow & switch assembly is mounted on top of the freezer assembly and movement of ice against the rubber diaphragm inside the elbow, actuates the switch. The switch acts as a backup safety switch, should the bin thermostat control fail, and cause ice to jam up the ice transport tube. This safety switch will shut off the icemaker when actuated; or, as stated earlier, when there may occur a momentary loss of power, such as a brief power outage, there will be an immediate and complete shutdown of the icemaker. Pressing the START-RESET pushbutton will of course reset the circuit for RESTART, when the Master ON-OFF pushbutton is ON.

There are three safety controls in the control box on the water-cooled models and two safety controls in the control box for the air-cooled models. The low pressure control, an automatic reset, nonadjustable control, is used on both models and is set to open at zero to four PSIG to stop the compressor. The auger delay switch, a single-pole double-throw (SPDT) switch, functions as a control device to allow the drivemotor to rotate the auger to clear the freezing chamber while the compressor circuit is OFF.

Refer to the appropriate wiring diagram and trace circuitry and control functions, as described in the following paragraph.

As shown on all SCOTSMAN wiring diagrams, the controls are in the ICEMAKING MODE. Thus, the 1-2 contacts are CLOSED. At START-UP, the 1-2 contacts are OPEN and the 3-2 contacts are CLOSED. As the icemaker begins to operate, the low side pressure starts to decrease from the stabilized or at-rest pressure. As soon as the pressure is reduced to 20 PSIG, the 3-2 contacts OPEN and the 1-2 contacts CLOSE.

AN760 OPERATION

This removes the operating controls, such as the bin thermostat, from the drivemotor circuit. If one of the operating controls OPENS, it will SHUT OFF the compressor circuit. The drivemotor will operate until the low side pressure increases to 32 PSIG. Then, the 1-2 contacts OPEN and SHUTS OFF the drivemotor, usually within one to two minutes, depending upon ambient conditions. This brief period of time allows the auger to transport all the ice out of the freezing chamber. Consequently, when called on to START-UP again, there is no ice load to start up against. Again, on START-UP, the 1-2 contacts are OPEN and the 3-2 contacts are CLOSED.

On the water-cooled models only, a manual reset, high head pressure control is factory set to stop the entire icemaker should the head pressure reach 250 PSIG.

On the water-cooled models, correct head pressure is 135 PSIG. Adjustments can be made on the water regulator assembly valve. On air-cooled models, the head pressure is normal about 130 PSIG, however it will vary depending upon ambient air temperature.

Suction pressure should be 10 PSIG with proper refrigerant charge. Suction pressure will vary about two PSIG plus or minus, depending upon ambient temperatures and inlet water supply temperatures to the freezer assembly.

When charging the system with refrigerant, always CHECK NAMEPLATE for specific refrigeration charge for individual icemaker.

Read the instructions thoroughly before performing any adjustment or removal and replacement procedures.

Average gear motor amps (115V) are 2.9 - A Model
2.0 - C Model

Average compressor amps (115V) are 9.5. Amp draw will vary depending upon voltage, installation, ambients and the mechanical condition of the unit.

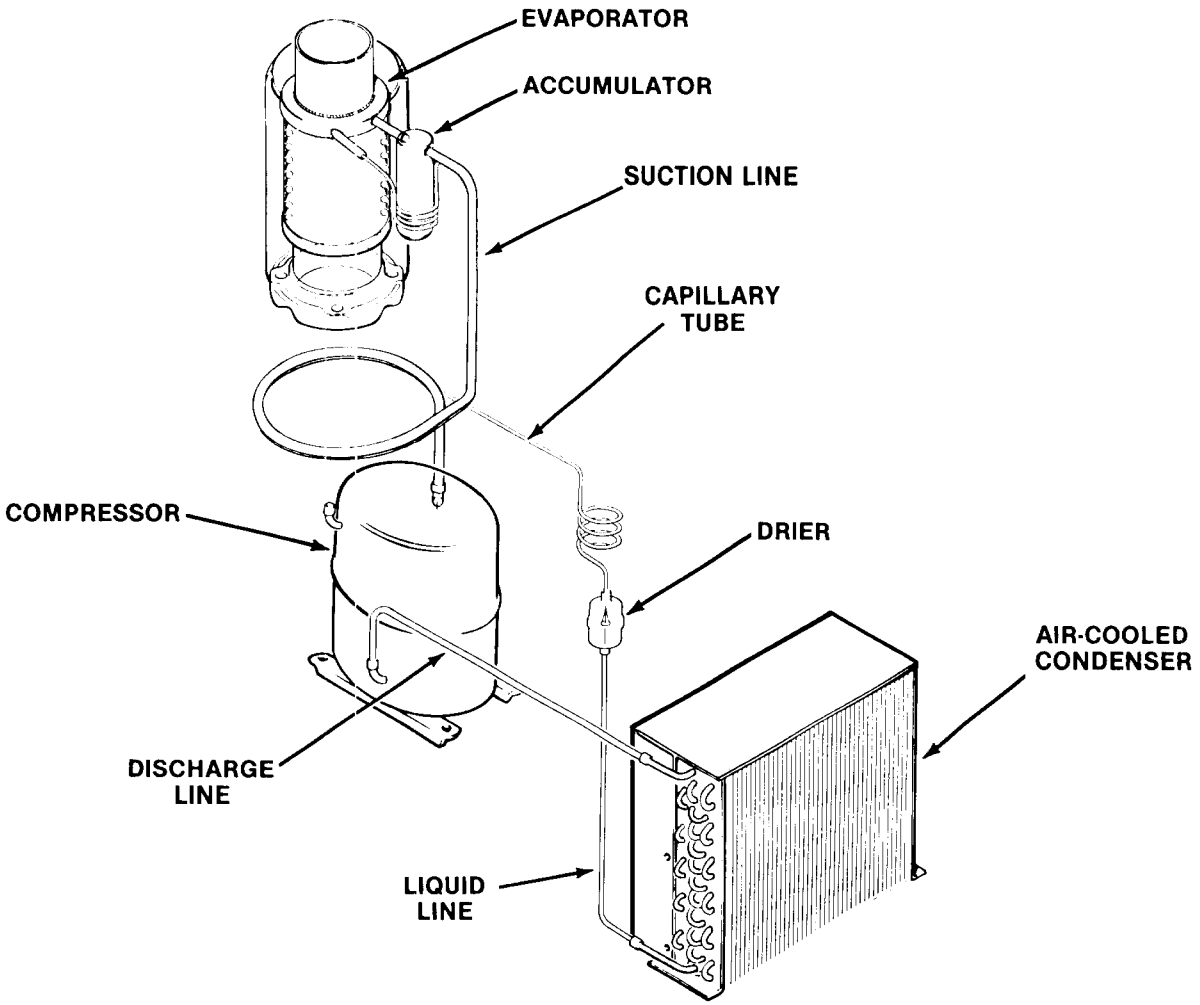

AN760 COMPONENT DESCRIPTION

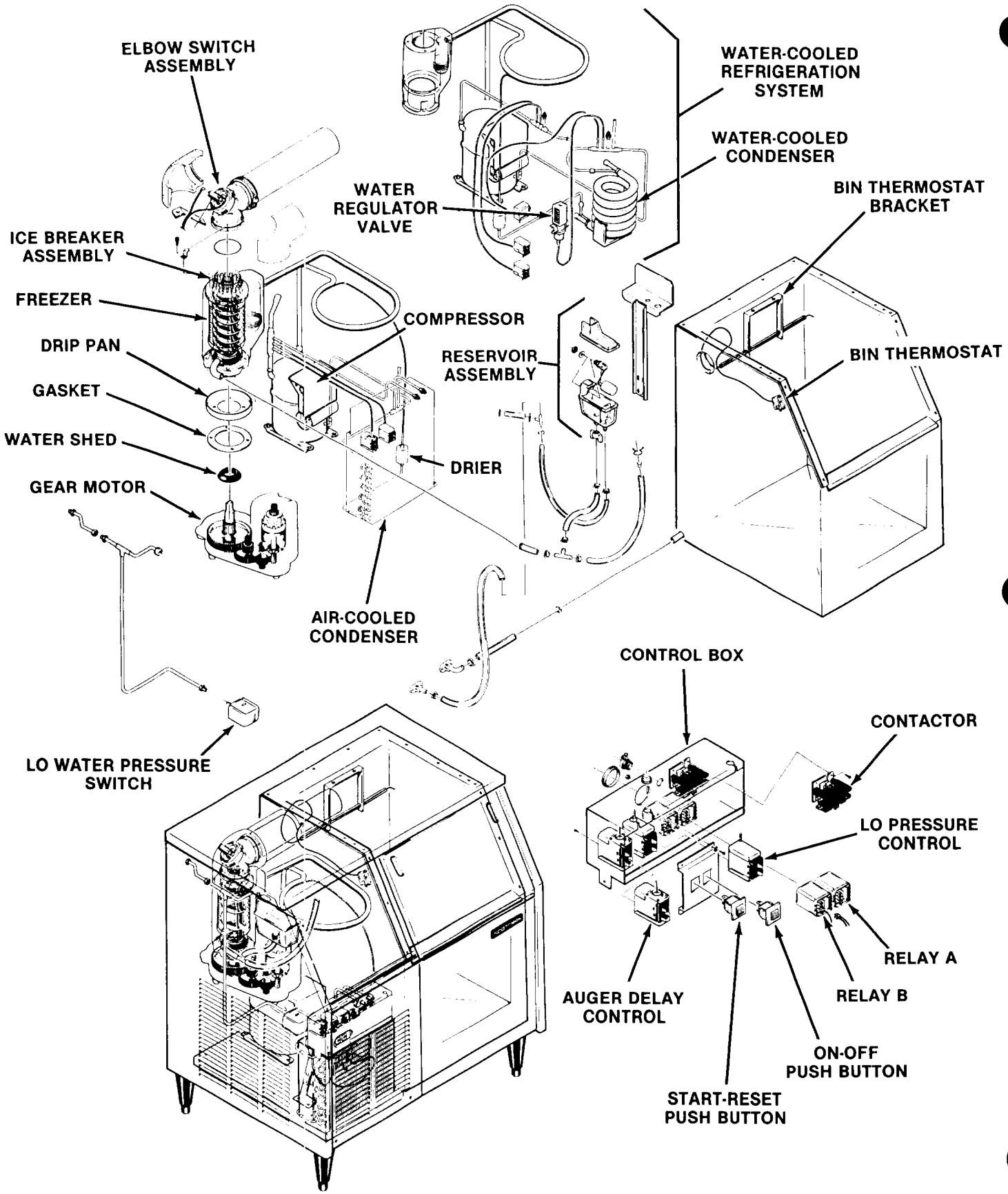

AN760 COMPONENT DESCRIPTION

ELBOW SAFETY SWITCH

The elbow safety switch is an ON-OFF switch that shuts off the compressor when an ice jam presses against the rubber diaphragm depressing the switch and opening the circuit. Melting action relieves pressure closing the circuit, lighting the start-reset pushbutton. The start-reset switch must then be pressed to start the automatic icemaking process.

ICE BREAKER ASSEMBLY

The ice breaker assembly, bolted to the top of the freezer, contains the bearing and seal for the top of the auger. Flaked ice created by the freezer is carried by the auger to the ice breaker assembly and the flaked ice is pushed by the auger through the tapered holes in the ice breaker. Flaked ice is compressed by auger pressure as it is pushed through the ice breaker assembly and the shafts of compressed ice are broken into random lengths of Ice Nuggets by the taper on the top of the ice breaker.

DRIVEMOTOR

The drivemotor assembly rotates the auger through a series of reduction gears from the electric motor to the freezer assembly. Cold ambient temperatures and interruptions in water supply are conditions that can cause excessively hard ice and overloads within the freezer assembly which is directly transmitted to the drivemotor; and in turn, will cause speed reduction or ultimate freezup.

When the drivemotor is slowed to a pre-determined RPM, a sensing switch in the motor is designed to open the electrical circuit to the compressor. The compressor stops operating, no more ice is produced and the drivemotor continues to operate rotating the auger to clear the overload and gradually build up to full speed.

At a pre-determined higher RPM drivemotor speed, the speed sensing switch closes the electrical circuit to the compressor causing the normal icemaking process to resume.

WATER PRESSURE SAFETY SWITCH installed in the potable water inlet line is set to electrically open at 10 PSIG and stop the compressor. This AUTOMATIC RESET switch will restart the icemaking process when water pressure rises to 20 PSIG.

WATER REGULATOR VALVE
WATER-COOLED MODELS

The water regulator valve functions to maintain a constant head pressure, by regulating the amount of incoming water flow through the condenser, on water-cooled models. The valve operates through the refrigerant system high side pressure. Rotating the adjusting screw, located on top of the valve, can INCREASE or DECREASE the operating head pressure. 135 PSIG is the normal discharge pressure.

WATER RESERVOIR

The water reservoir, with a float valve assembly, maintains a consistant water supply within the freezer assembly. The water level in the reservoir is the same water level as in the freezer and the correct water level in the freezer is level with the top of the auger flights. The water level in the freezer can be adjusted by raising or lowering the water reservoir with the bracket.

BIN THERMOSTAT BRACKET

The bin thermostat bracket is the bin full ice contact point of the bin thermostat capillary tube.

AN760 COMPONENT DESCRIPTION

AIR-COOLED CONTROL BOX ASSEMBLY

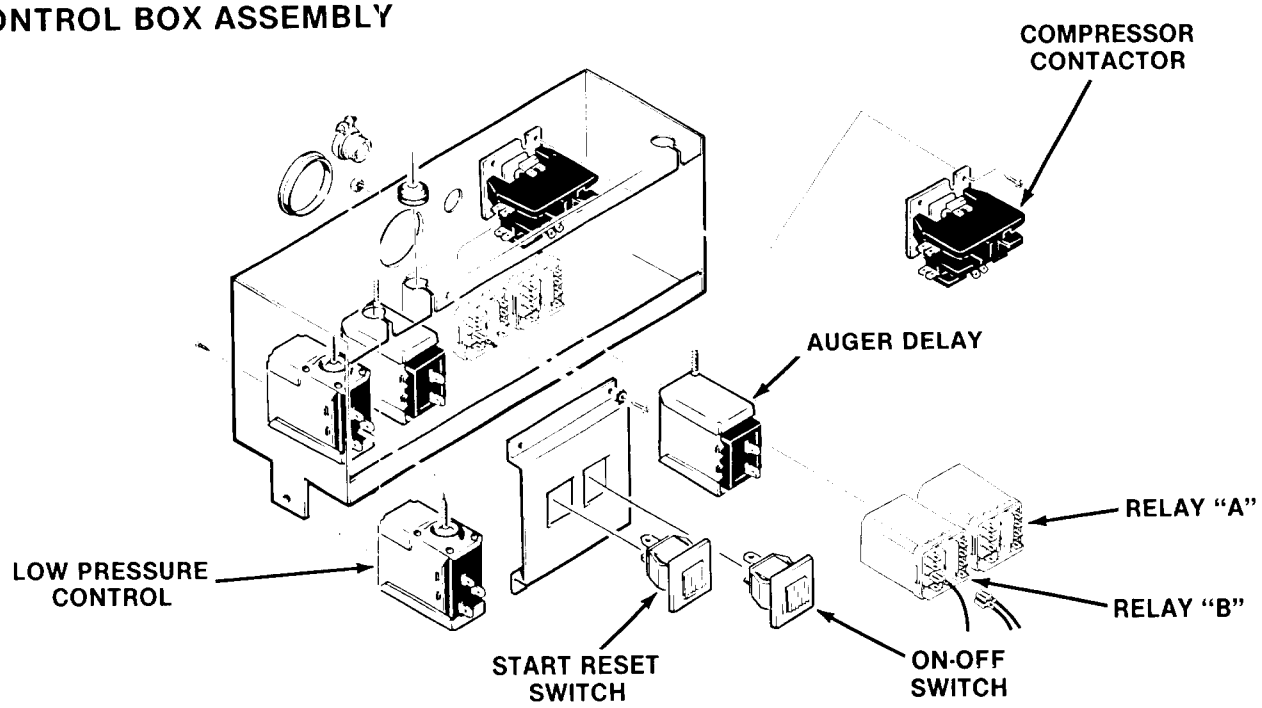

WATER-COOLED CONTROL BOX ASSEMBLY

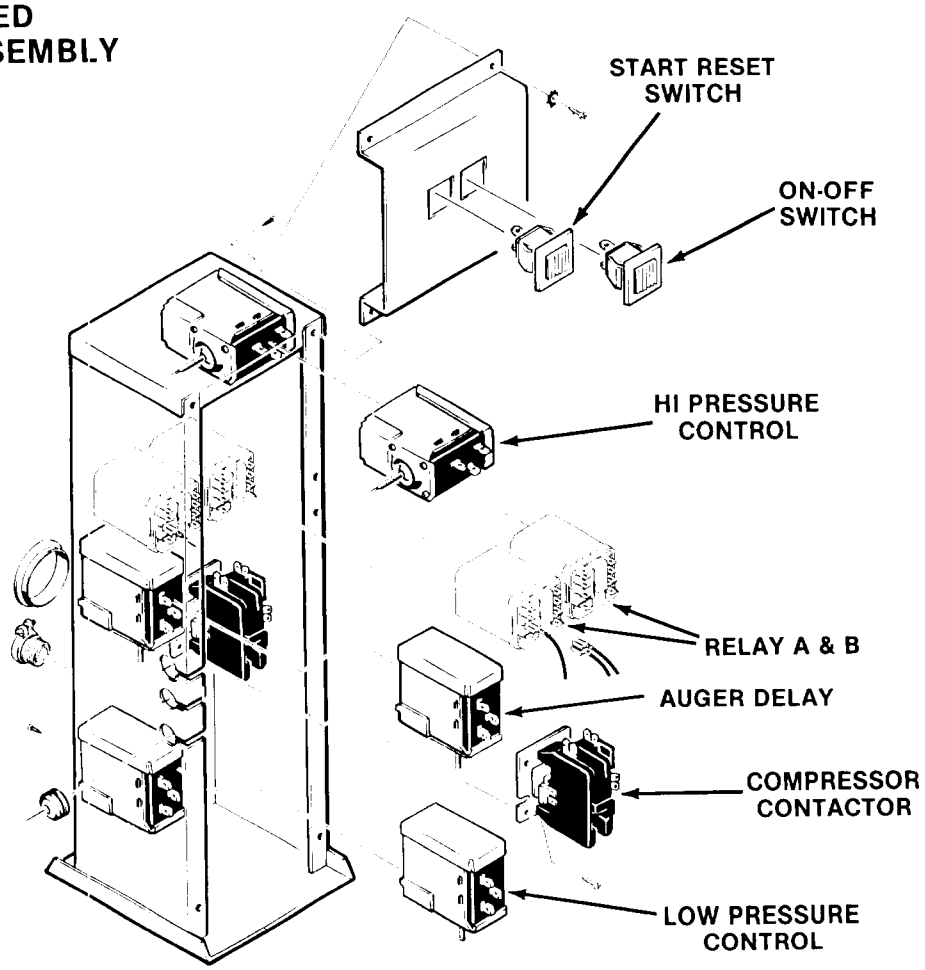

AN760 COMPONENT DESCRIPTION

ON-OFF PUSHBUTTON (AMBER)

When pushed completes the electrical circuit through the icemaker electrical components. The ON-OFF PUSHBUTTON is illuminated whenever it is ON (and electrical power is ON).

START-RESET SWITCH (RED)

Must be pushed to initially start unit. Also it's illuminated when bin overfills and spout switch opens to stop the machine, or in the event of a power interruption to the unit.

REFRIGERANT LO PRESSURE CONTROL is factory set to automatically SHUT DOWN the icemaker if the low-side pressure drops below 4 PSIG. This is an AUTOMATIC RESET control.

AUGER DELAY SWITCH, a single-pole double throw (SPDT) switch, allows the gearmotor to rotate the Auger and clear the freezing chamber after the bin ice level switch circuit to compressor is OFF. When the icemaker restarts, the gearmotor starts in a no load condition, preventing excessive loading of gearmotor and bearings.

HI PRESSURE CONTROL (WATER-COOLED ONLY)

This manual reset control shuts off the ice machine should the high side refrigeration pressure exceed 250 PSIG. This may happen when the cooling water to the condenser is interrupted.

COMPRESSOR CONTACTOR (IN CONTROL BOX)

A single-pole contactor is used to supply current to the compressor; and, is wired so any control in the pilot circuit, such as the bin thermostat and high pressure control, ect., will cause the contactor coil to be de-energized, when the control contact OPENS, thereby breaking the circuit to the compressor through the contactor points.

COMPRESSOR START RELAY (ON COMPRESSOR)

The compressor start relay completes the circuit to the compressor from the start capacitor to provide enough energy to start the compressor. When the compressor motor has reached the proper RPM's, the compressor relay opens and removes the start capacitor from the circuit.

ELBOW SAFETY SWITCH RELAY "A"

The elbow safety switch relay "A" maintains a circuit through the elbow safety switch until the elbow safety switch opens and switches the current through the lamp of the start reset pushbutton, which must be pushed and reset to restart the automatic icemaking process.

RELAY "B"

Relay "B" protects the compressor contactor from chattering during operation of the icemaking system.

AN760 MAINTENANCE & CLEANING INSTRUCTIONS

A Scotsman Ice System represents a sizable investment of time and money in any company's business. In order to receive the best return for that investment, it MUST receive periodic maintenance.

It is the USER'S RESPONSIBILITY to see that the unit is properly maintained. It is always preferable; and less costly in the long run, to avoid possible down time by keeping it clean, adjusting it as needed and by replacing worn parts before they can cause failure. The following is a list of recommended maintenance that will help keep your machine running with a minimum of problems.

Maintenance and Cleaning should be scheduled at a MINIMUM of twice per year.

ICEMAKER

THE FOLLOWING MAINTENANCE SHOULD BE SCHEDULED AT LEAST TWO TIMES PER YEAR ON THIS ICEMAKER. CALL YOUR AUTHORIZED SCOTSMAN SERVICE AGENCY.

1. Check and clean water line strainers.
2. Check that the water level in the water reservoir is at the water level on the side of the float.
3. Remove cover from water reservoir and depress the float to insure that a full stream of water enters the reservoir.
4. Check that the icemaker cabinet is level, in side-to-side and front-to-back directions.
5. Clean the water reservoir and interior of the freezer assembly, using a solution of SCOTSMAN Ice Machine Cleaner. Refer to CLEANING-Icemaker.
6. When doubtful about refrigerant charge, install refrigerant gauges on Schrader valves and perform steps 6 and 7. Check gauge for compressor head pressure:

   AIR-COOLED MODELS: Varies between 130 and 145 PSIG.

   WATER-COOLED MODELS: Set at 135 PSIG. Adjust screw on top of water regulator valve to raise or lower head pressure.
7. Check gauge for suction line pressure:

   Varies between 8 and 12 PSIG, depending upon inlet water temperature and ambient air temperature.

AFTER SERVICING REFRIGERATION SYSTEM:

TORQUE REFRIGERATION ACCESS VALVE CAPS TO 60-75 INCH POUNDS.

8. Check drivemotor operation:

   Normal operating temperatures are about 160-degrees F., which is hot to touch. Oil motor once per year. Compressor should not start until this motor is up to full speed.

WARNING

Disconnect electrical power supply before removal procedures.

9. Check the elbow safety switch by removing the insulation halves, twisting the locking ring 90° and pulling out the switch assembly. The switch action can then be tested.

NOTE

The elbow safety switch is an ON-OFF switch that shuts off the compressor when an ice jam presses against the rubber diaphragm depressing the switch and opening the circuit. Melting action relieves pressure closing the circuit, lighting the start-reset pushbutton. The start-reset switch must then be pressed to start the automatic icemaking process.

10. Clean the air-cooled condenser, using vacuum cleaner, whisk broom or brush. Instruct customer to clean frequently and to be sure icemaker and fan motor are OFF.
11. Check that fan blades move freely, are not touching any surfaces and are not bent or out of balance.
12. Check for water leaks. Pour water down bin drain to be sure that drain line is open and clear.
13. Check the bin thermostat control bulb for position and function.

NOTE

The bin thermostat is factory set at 10-degrees F. differential and should keep the entire icemaker shut off at least 20 minutes in high ambient temperatures, longer in low ambient temperature during normal operation. Settings are 35-degrees F. CUT-OUT and 45-degrees F. CUT-IN.

AN760 MAINTENANCE AND CLEANING

NOTE: *If the unit being serviced is equipped with a steel needle bearing, the breaker assembly should be replaced. Breakers with a "water friendly", self lubricating bearing need to be cleaned and inspected twice per year with the rest of the icemaker.*

1. Remove the elbow insulation, three allen head screws, and spout retaining brackets from the freezer assembly end of the elbow and switch assembly.

NOTE: *To accomplish the removal of the elbow and switch assembly in the next step, it may be necessary to further remove panels and disassemble the ice transport tube.*

2. Lift up the elbow and switch assembly and set aside to gain access to the top of the freezer assembly.

3. Remove four cap screws, lockwashers and the ice breaker from the top of the freezer for inspection.

////////////////////////CAUTION////////////////////////

DO NOT force the auger and breaker together without having the vent hole open because pushing the ice breaker on with no air relief will cause the internal air pressure to force the seal away from the breaker.

//

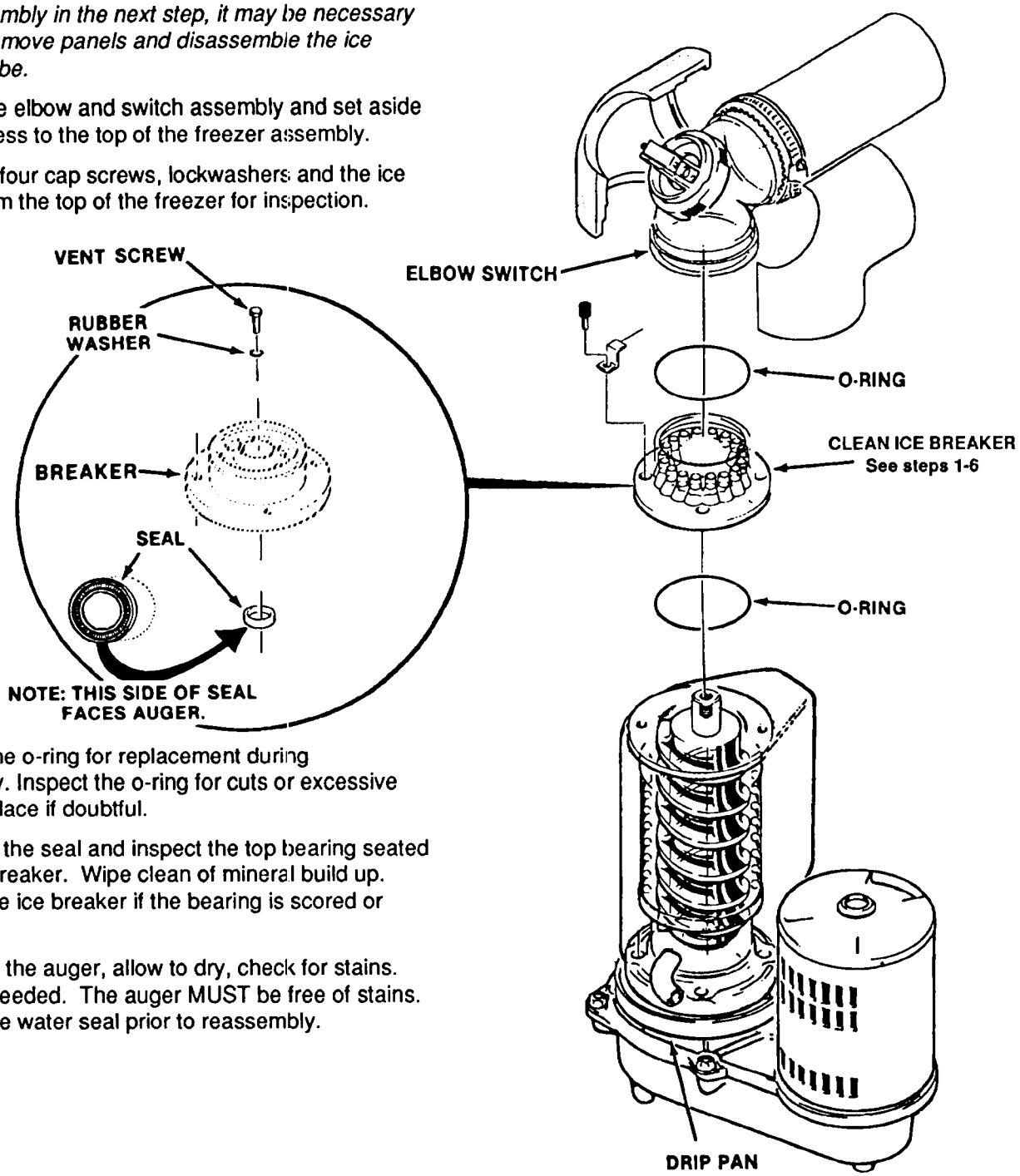

4. Retain the o-ring for replacement during reassembly. Inspect the o-ring for cuts or excessive wear. Replace if doubtful.

5. Replace the seal and inspect the top bearing seated in the ice breaker. Wipe clean of mineral build up. Replace the ice breaker if the bearing is scored or worn.

6. Remove the auger, allow to dry, check for stains. Clean as needed. The auger MUST be free of stains. Replace the water seal prior to reassembly.

AN760 MAINTENANCE & CLEANING INSTRUCTIONS

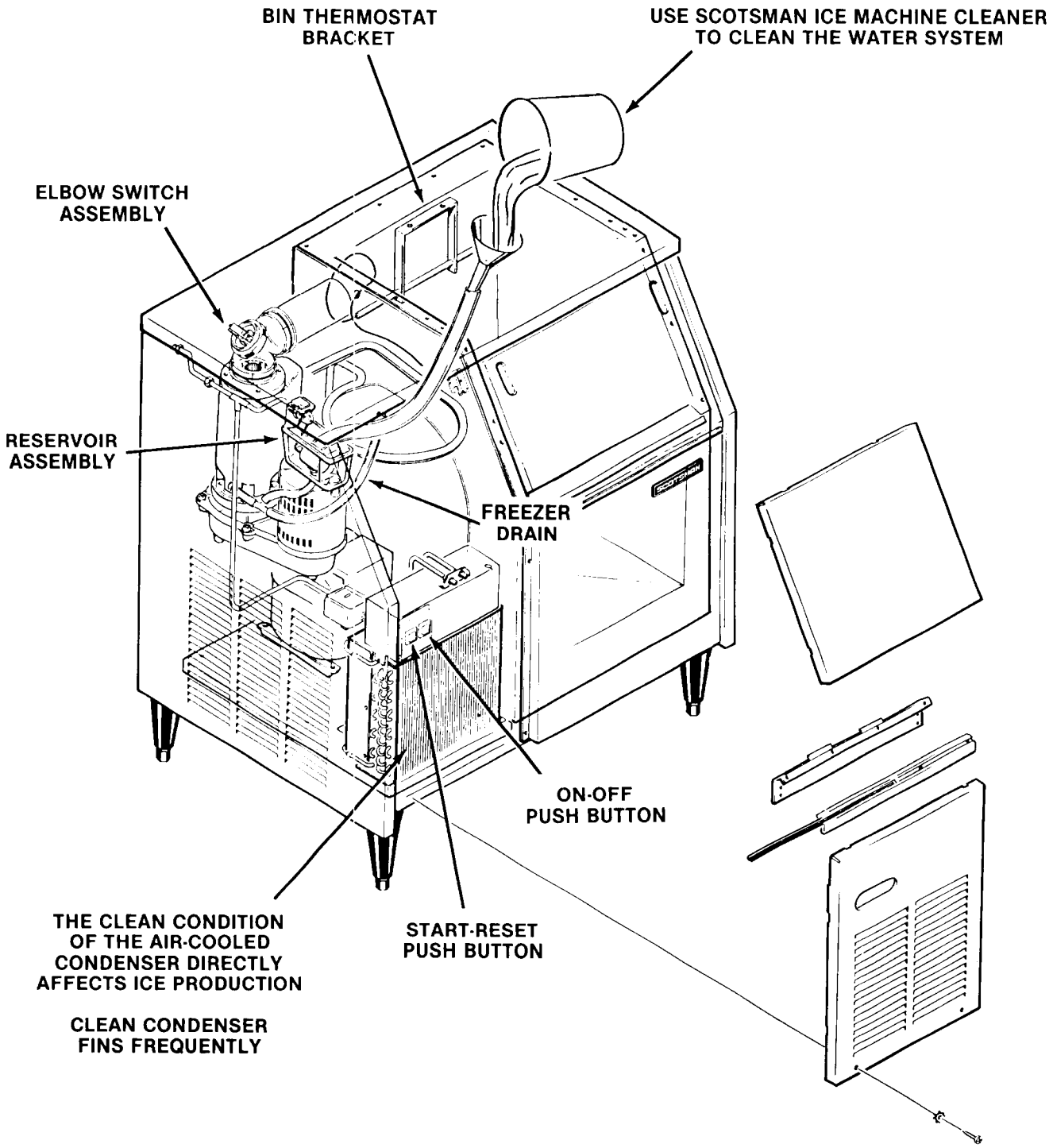

CLEANING INSTRUCTIONS
Continued on page 21

AN760 MAINTENANCE & CLEANING INSTRUCTIONS

CLEANING-ICEMAKER

1. Press the master on-off switch to off.
2. Remove screws, top, and front panel.
3. Remove all ice from the ice storage bin.
4. Close the water supply shut off valve or remove the reservoir cover and block the float in the water reservoir up to stop water flow.
5. Drain the reservoir using the drain provided between the water reservoir and the bottom of the freezer assembly. Replace the drain tube.

////////////////////WARNING////////////////////////////

Scotsman Ice Machine Cleaner contains phosphoric and hydoxyacetic acids. These compounds are corrosive and may cause burns. If swallowed, DO NOT induce vomiting. Give large amounts of water or milk. Call Physician immediately. In case of external contact flush with water. KEEP OUT OF THE REACH OF CHILDREN.

//

6. Prepare cleaning solution: Mix 8 ounces of Scotsman ice machine cleaner with three quarts of hot (95^0F.-115^0F.) water.
7. Slowly pour the cleaning solution into the water reservoir. Allow to stand for 15 minutes.
8. Press the master switch to on.
9. Continue to slowly pour the cleaning solution into the water reservoir. Maintain the level just below the reservoir overflow.
10. Continue icemaking using the cleaning solution, until all the solution is used up and the water reservoir is almost empty. Do not allow the icemaker to operate with an empty reservoir.
11. Press the master switch to off.
12. Wash and rinse the water reservoir.
13. Remove the block from the float in the water reservoir.
14. Press the master switch to on.
15. Continue icemaking for at least 15 minutes to flush out any cleaning solution. Check ice for acid taste. Continue icemaking until ice tastes normal.

////////////////////////CAUTION////////////////////////////

Do Not use ice produced from the cleaning solution.

//

16. Press the master on/off switch to OFF.
17. Remove all ice from the storage bin.
18. Add warm water to the ice storage bin and thoroughly wash and rinse all surfaces within the bin.
19. Clean and sanitize the ice storage bin once per week.

AN760 SERVICE DIAGNOSIS

The Service Diagnosis is for use in aiding the serviceman in diagnosing a particular problem for pin-pointing the area in which the problem lies, thus an ever available reference for proper corrective action.

The following charts list corrective actions for the causes of known symptoms of certain problems that can occur.

INTRODUCTION

SYMPTOM	POSSIBLE CAUSE	CORRECTION
Water Leaks.	Defective water seal.	Replace seal.
	Gravity feed line leaking.	Check hose clamp.
	Water level in reservoir too high.	Adjust water level to molded line on the float assembly.
	Storage bin drain and connecting fittings.	Check and repair.
Excessive noise or chattering.	Mineral or scale deposit on auger and inner freezing chamber walls.	For severe deposit, remove and manually polish auger, sand inner chamber walls of freezer barrel.
		For lighter concentration, use Scotsman Ice Machine Cleaner periodically.
	Intermittent water supply.	Check and clean water strainer.
		Check gravity feed line for air lock.
		Check to be sure float orifice is not restricted
		Check incoming water supply.
		Remove air lock.
	Water level in reservoir too low.	See CORRECTION for Water Leaks above.
	Gear reducer loose on frame.	Tighten gear reducer.
	Motor compressor not solid on rubber mounts.	Repair or replace rubber mounts.
	Gearmotor thrust bearing worn.	Check/replace bearing.
	Top bearing worn.	Check/replace breaker.
	Water interruption.	Check for frozen water inlet to freezer.
Drivemotor makes high pitched noise.	Rotor bearing dry or worn.	Replace motor or bearing.
	Dry grease seal under rotor bearing.	Grease seal.

AN760 SERVICE DIAGNOSIS

SYMPTOM	POSSIBLE CAUSE	CORRECTION
Making wet ice	Back pressure too high.	Overcharge of refrigerant, faulty compressor or high head pressure. Lower pressure as indicated.
	Faulty compressor.	Replace compressor.
Low ice production.	Loss of refrigerant. Under or over-charge of refrigerant.	Check and recharge. See NAMEPLATE for charge correction.
	Dirty or plugged condenser.	Clean condenser.
	Low water level in water reservoir.	See CORRECTION for water leaks above.
	Partial restriction in capillary tube or drier.	Moisture in system. Overcharge of oil in system. Remove charge by blowing back through cap tube.
		Replace drier evacuate and recharge.
	Inlet water strainer partially plugged.	Remove screen and clean.
	Corroded or stained auger due to water condition.	Remove auger and clean, or use Scotsman Ice Machine Cleaner. See Maintenance Section.
Gearmotor noise.	Low on oil.	Remove case cover to check for proper oil level.
		See Removal and Replacement Section for gear motor.
Icemaker will not operate.	Blown fuse in line.	Replace fuse and check for cause of blown fuse.
	Bin thermostat set too high.	Replace thermostat.
	Loose electrical connection.	Check wiring.
	Switch in OFF position.	Set switch to ON position.
	Inoperative master switch.	Replace switch.
	Off on manual-reset pressure control. (Water-Cooled)	Reset. Check for water interruption.
	Low supply water pressure.	Restore water pressure.

AN760 SERVICE DIAGNOSIS

SYMPTOM	POSSIBLE CAUSE	CORRECTION
Icemaker continues to operate with full storage bin.	Bin thermostat not properly set or is defective.	Re-set or replace bin thermostat. Re-set to 35-degrees cut-out, 45-degrees cut-in.
Compressor cycles intermittently.	Low voltage.	Check for overloading.
	Dirty condenser.	Clean condenser.
	Air circulation blocked.	Remove cause or move unit.
	Inoperative condenser fan motor.	Replace motor.
	Non-condensable gases in system.	Check for gas leaks, evacuate and recharge.
	Bin thermostat differential too small causing short cycling.	Replace bin thermostat.
	Low on refrigerant causing low pressure control to cycle.	Check for leaks.
Icemaker operates but makes no ice.	Loss of undercharge of refrigerant.	Check for leaks and recharge. See NAMEPLATE for correct charge.
	Water not entering freezing chamber.	Plugged strainer or supply line. Check and clean. Air lock in gravity feed line. Check and remove air lock. Water interruption, freezer inlet frozen shut.
	Moisture in system.	Check, evacuate, replace drier. Recharge, See NAMEPLATE for correct charge.
	Water seal leaking.	Replace seal.
	Drivemotor stripped.	Repair or replace drivemotor

AN760 ADJUSTMENT PROCEDURES

ADJUSTMENT OF THE BIN THERMOSTAT CONTROL

(Installations 2,000 feet above sea level only)

The control for the bin thermostat is the temperature control, located on the upper part of the retainer wall.

ALTITUDE CORRECTION
(ROBERTSHAW ONLY)

ALTITUDE	TURNS C.W.
2,000	40°
4,000	78°
6,000	115°
8,000	148°
10,000	180°

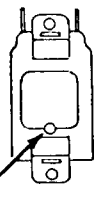

TURN RANGE SCREW

CAUTION

The adjusting screw on the temperature control device has a very sensitive response to adjustment. DO NOT attempt to adjust the screw until after thoroughly reading and understanding the instructions and illustrations. Over-adjusting or erratic guessing, can foul the instrument and cause ultimate delay and part replacement, WHICH COULD HAVE BEEN PREVENTED.

ADJUSTMENT OF THE LEG LEVELERS

When the Icemaker is installed with legs, the legs must be adjusted to level the cabinet. The cabinet must be leveled in the front-to-back and side-to-side directions. This adjustment should be performed during initial installation of the cabinet and anytime the cabinet is moved from the original location to another site.

1. Using a 1-1/8″ open-end wrench, and a carpenter's bubble level, rotate the threaded leveler in each leg to RAISE or LOWER the cabinet until the cabinet is level in the front-to-back direction.
2. Repeat step A, for leveling in the side-to-side direction.
3. Recheck both the front-to-back and the side-to-side leveling and repeat adjustments, as necessary.

ADJUSTMENT OF THE WATER REGULATOR ASSEMBLY

The correct head pressure on water-cooled models is 135 PSIG. Adjustments can be performed on the water regulator assembly to increase or decrease the head pressure.

To adjust the water regulator assembly:

1. To INCREASE the head pressures: Rotate the adjusting screw, on the water regulator assembly COUNTER-CLOCKWISE.
2. To DECREASE the head pressure: Rotate the adjusting screw, on the water regulator assembly CLOCKWISE.

ADJUSTMENT OF THE WATER RESERVOIR FLOAT

The correct water level in the water reservoir should be at the level of the raised molded line, on the side of the body of the water reservoir. When the water line level is above or below the raised molded line, adjustment can be performed to raise or lower the water level by bending the metal arm of the float inside the water reservoir.

To adjust the water reservoir float:

1. To RAISE the water level:
   Hold one end of the metal arm of the float and slightly bend the float up.
2. To LOWER the water level:
   Hold one end of the metal arm of the float and slightly bend the float DOWN.
3. To perform MAJOR adjustment:
   When repair or replacement has been performed and the water level line betweeen the water reservoir and the freezer assembly has been substantially altered:
   a. Loosen the three screws and lockwashers which attach the reservoir bracket and water reservoir to the freezer mount.
   b. Move the reservoir bracket UP or DOWN to properly position the water line level within the freezer. The proper water level within the freezer is 1/2″ - 3/4″ below the top of the auger.
   c. When proper water level within the freezer is adjusted, re-tighten screws attaching the water reservoir bracket to the freezer mount.

AN760 REMOVAL AND REPLACEMENT PROCEDURES

SLIDE OUT CHASSIS PROCEDURE

1. Disconnect the electrical supply to the icemaker at the circuit breaker or fuse box.

////////////////////// WARNING //////////////////////

Be sure the electrical power supply to the icemaker is OFF before proceeding with removal procedures.

//

2. Close the inlet water valve to the icemaker.
3. Remove two screws and the lower left front panel.
4. Remove plastic trim, screws, aluminum trim.
5. Remove screws and left front bracket. Remove upper front left panel. Disconnect the water inlet line. Point A.
6. Remove screws and control box cover to gain access and disconnect and remove from the control box the building source electrical connections.
7. Loosen the screw on the screw clamp and U-channel securing the ice transport tube to the elbow and safety switch and separate the ice transport tube from the elbow.
8. Remove wire leads from the bin thermostat. Point B.
9. Water-cooled models must be disconnected at the water-cooled condenser inlet and outlet connections. (Inside cabinet).
10. Remove Corbin clamp and remove reservoir overflow drain tubing from the reservoir and drip pan. Point C.
11. For partial chassis removal, remove two screws and remove base to base bracket located on the lower chassis front and pull chassis out to service. For complete removal, remove chassis stop. Point D.

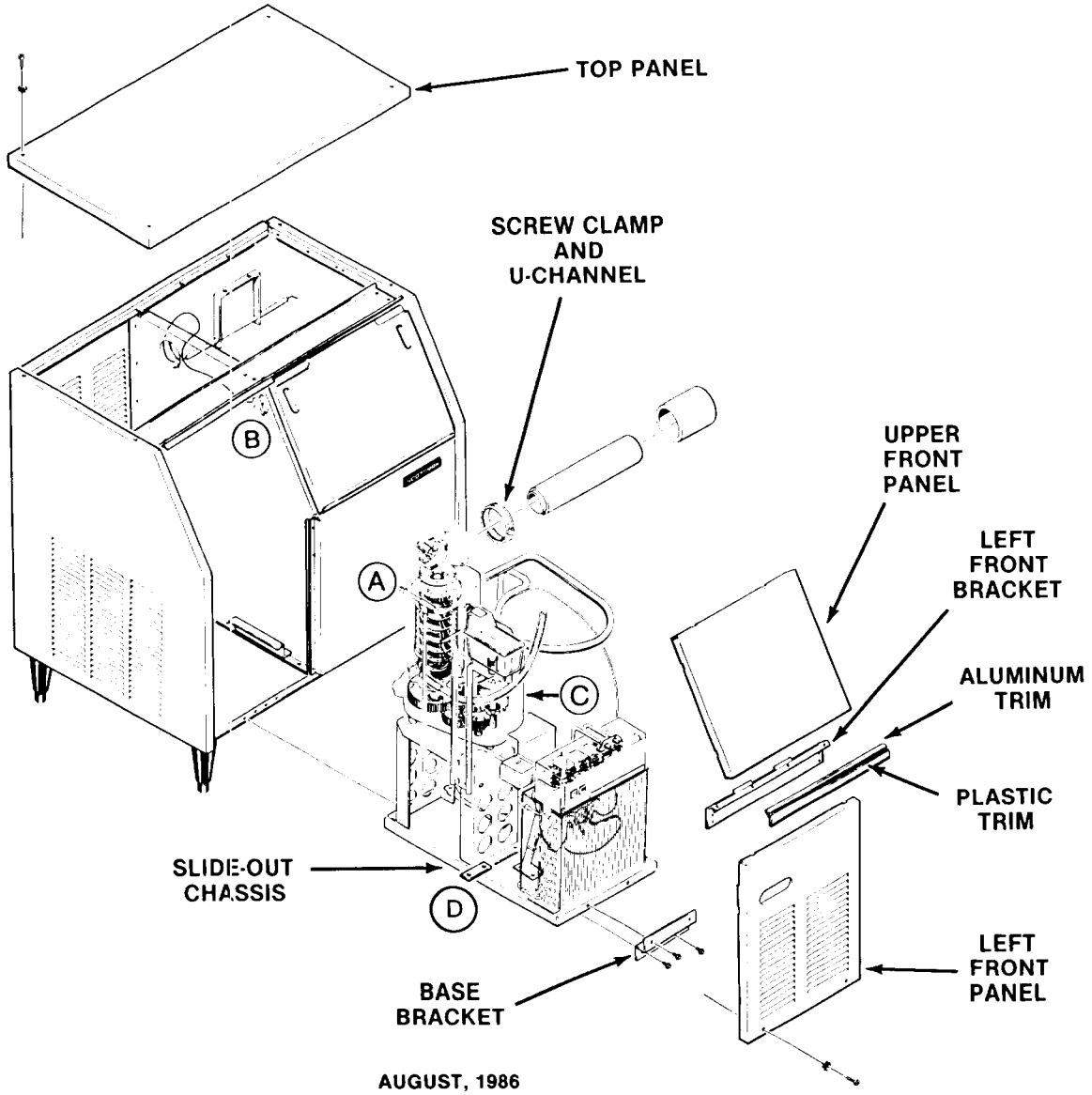

AN760 REMOVAL AND REPLACEMENT PROCEDURES

AN760's have been manufactured in "A" and "C" Models (as in model AN760AE-1A vs. AN760AE-1C.) The following instructions are designated for either "A" or "C" models. (There was NO "B" model.) Be certain to check your model number and refer to the appropriate steps.

Read the instructions thoroughly before performing any Adjustment or Removal and Replacement Procedures.

////////////////////// **WARNING** //////////////////////

Be sure the electrical power supply and the water supply are OFF, BEFORE starting any of the following REMOVAL AND REPLACEMENT procedures as a precaution to prevent possible personal injury or damage to equipment.

//

REMOVAL AND REPLACEMENT OF THE AUGER, WATER SEAL, O-RING, ICE BREAKER ASSEMBLY AND FREEZER ASSEMBLY (A, B and C MODELS)

To remove the auger, water seal, o-ring and ice breaker assembly:

1. Shut off water supply to the icemaker/dispenser at the building source.
2. Disconnect or shut-off electrical power to the icemaker at the building source.
3. Perform steps from slide-out chassis procedure page and pull the chassis out for servicing.
4. Remove three socket head screws and spout retaining brackets from the end of the spout assembly at the top of the freezer assembly.
5. Lift the elbow safety switch and spout UP, off of the freezer assembly.
6. Retain the o-ring for replacement during reassembly. Inspect for cuts, tears or excessive wear, causes for replacement.
7. Remove four capscrews, lockwashers and the ice breaker assembly from the top of the freezer assembly.

NOTE: *To service icebreaker only, go to steps 21-24.*

8. Retain the o-ring for replacement during reassembly. Inspect for cuts, tears or excessive wear, causes for replacement.
9. Remove hose clamp and disconnect the water feeder tube from the reservoir, at the freezer to drain the reservoir and freezer of water.
10. Remove the auger. If necessary a bolt can be threaded into the top end of the auger from the freezer and a hand tool used to pull on the bolt to remove the auger.

To remove Water Seal only, omit steps 12, 13, and 14.

TO REMOVE FREEZER ASSEMBLY:

11. Pull back permagum around freezer base mounting bolts and remove four screws and flatwashers. Separate the freeezer assembly, gasket and adapters, from the drivemotor assembly.
12. Bleed off or blow the refrigerant charge through the Schrader valve.
13. Unsolder and disconnect the refrigerant suction line at the compressor, and the associated capillary line at the drier.
14. Remove the freezer assembly from the chassis.

A and B MODELS

15. Using a suitable length and size wooden dowel or stick inserted through the top of the open freezer assembly, tap the stationary piece water seal out the bottom of the freezer assembly.

C MODEL

15. Remove snap ring from inside bottom of evaporator assembly. Using a suitable length and size of wooden dowel or punch inserted through the top of the open freezer assembly, tap the stationary portion of the water seal out the bottom of the freezer assembly.

16. Replace the water seal any time it has been removed.

////////////////////// **CAUTION** //////////////////////

The lower two-part water seal is a precise seal and fitting. Any damage or wear will cause a failure. It is recommended that the lower two-part water seal be replaced any time there is a question of condition.

//

AN760 REMOVAL AND REPLACEMENT PROCEDURES

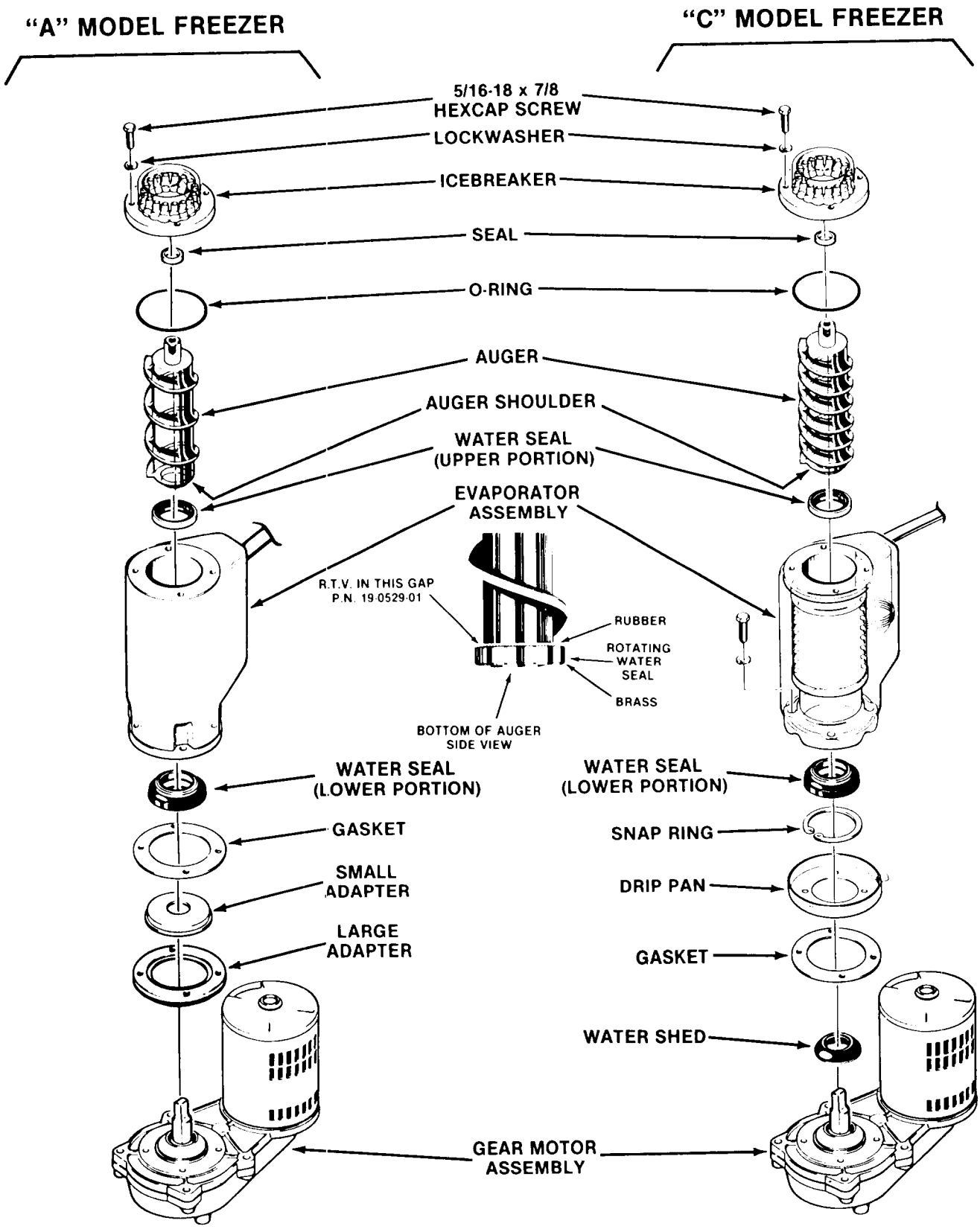

A and B MODELS

17. Replace the parts starting with the stationary part of the water seal. Carefully inspect it prior to assembly. Insert this half of the water seal into the bottom of the freezer. Then insert the brass freezer adapter into the bottom of the freezer tube and push it in as far as it will go.

C MODEL - OR REPLACEMENT FREEZER

17. Replace the new stationary portion of the two-part water seal in the bottom of the freezer assembly and press in far enough to install the snap ring. **IMPORTANT:** pull water seal back down against snap ring all the way around the freezer.

A and B MODELS

18. Mount the freezer and gasket to the gear motor case. Be certain that the gearmotor is in good working condition and that the large plastic adapter is in place on the gearbox.

C MODEL - OR REPLACEMENT FREEZER

18. Mount the freezer, drip pan and gasket to the gearmotor case. Check to be sure the gearmotor is in good condition and the water shed is in place around the output shaft.
19. Apply Scotsman part number 19-0529-01 RTV silicone rubber to the auger shoulder before pushing on the water seal. Place just enough silicone on to the auger, so that when the water seal is placed on the auger, the gap between the auger shoulder and water seal is completely filled with silicone.

    The silicone must be allowed to "set-up" or dry on the surface before any water can be added to the freezer.

////////////////////// **CAUTION** //////////////////////

If any silicone gets onto the mating surfaces of the water seal, the seal is ruined, and cannot be used.

//

20. Install auger.
21. Remove vent screw from brass plug to provide pressure relief during assembly and carefully place the breaker bearing assembly onto the auger. This new seal fits the auger shaft very tightly and it will go onto the auger with some resistance. Be very careful to push it straight onto the auger as tipping or angling of the breaker could damage the seal lip.
22. Install the vent screw with rubber washer into the breaker plug. Use a small drop of Loctite 680 on the screw threads.
23. Bolt the breaker back onto the freezer assembly and test the unit.
24. Reassemble ice transport tube, insulation, and bin top assembly in reverse order of disassembly.

////////////////////// **CAUTION** //////////////////////

DO NOT force the auger and breaker together without having the vent hole open because pushing the breaker on with no air relief will cause the internal air pressure to force the grease seal away from the breaker.

//

CAUTION

DO NOT force the auger and breaker together without having the vent hole open because pushing the breaker on with no air relief will cause the internal air pressure to force the grease seal away from the breaker.

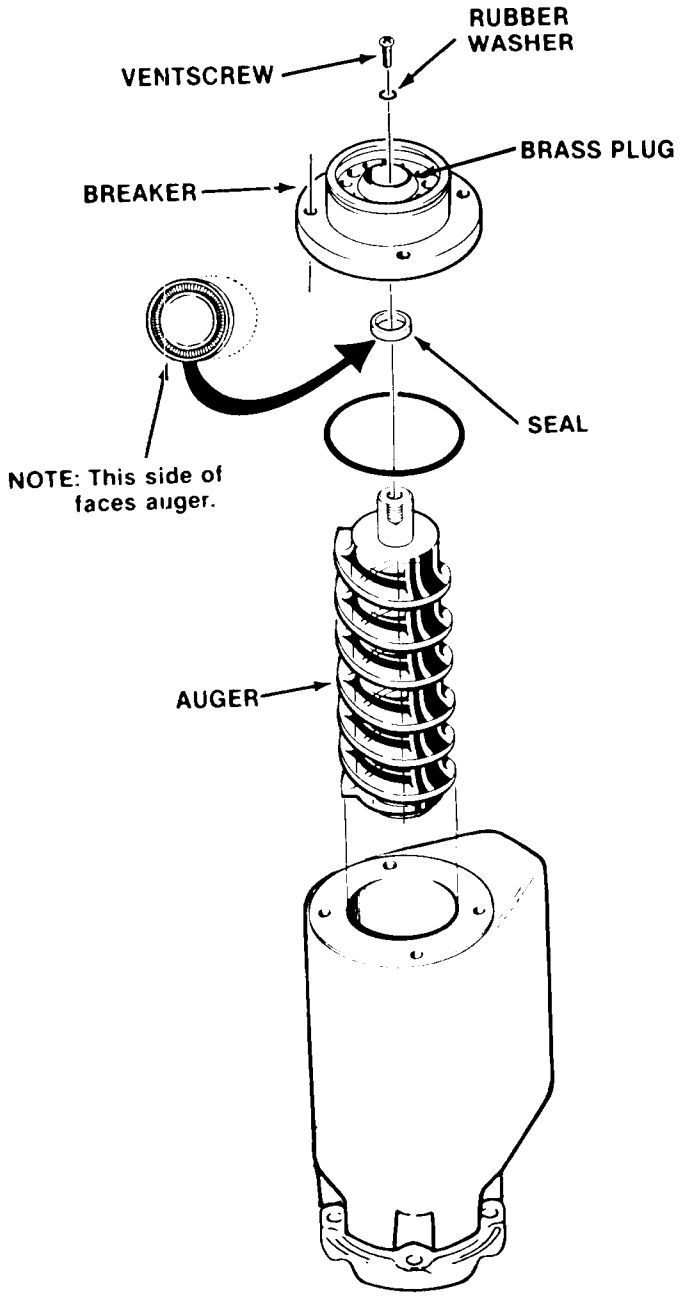

AN760 REMOVAL AND REPLACEMENT PROCEDURES

REMOVAL AND REPLACEMENT OF THE ELBOW AND SWITCH ASSEMBLY

To remove the elbow and switch assembly:

1. Disconnect the electrical supply to the icemaker at the circuit breaker or fuse box.

////////////////////// WARNING //////////////////////

Be sure the electrical power supply to the icemaker is OFF before proceeding with removal procedures.

//

2. Remove screws and remove top panel.
3. Remove insulation halves from the elbow switch assembly.
4. Loosen the screw on the screw clamp and U-channel securing the ice transport tube to the elbow and safety switch.
5. Separate the ice transport tube from the elbow.
6. Remove bolt and washer and remove switch support from the ice breaker.
7. Remove three Allen head screws and spout retaining brackets from the freezer assembly and elbow and switch assembly.
8. Lift the elbow and switch assembly UP to clear the top of the freezer assembly.
9. Remove screws and the switch from the switch actuator housing.
10. Rotate the retainer ring 90-degrees to unlock the retainer ring and the switch actuator housing from the elbow assembly and separate the parts from the elbow.
11. Inspect the rubber diaphragm for cuts, tearing or excessive wear.

To replace the elbow and switch assembly, reverse the removal procedure.

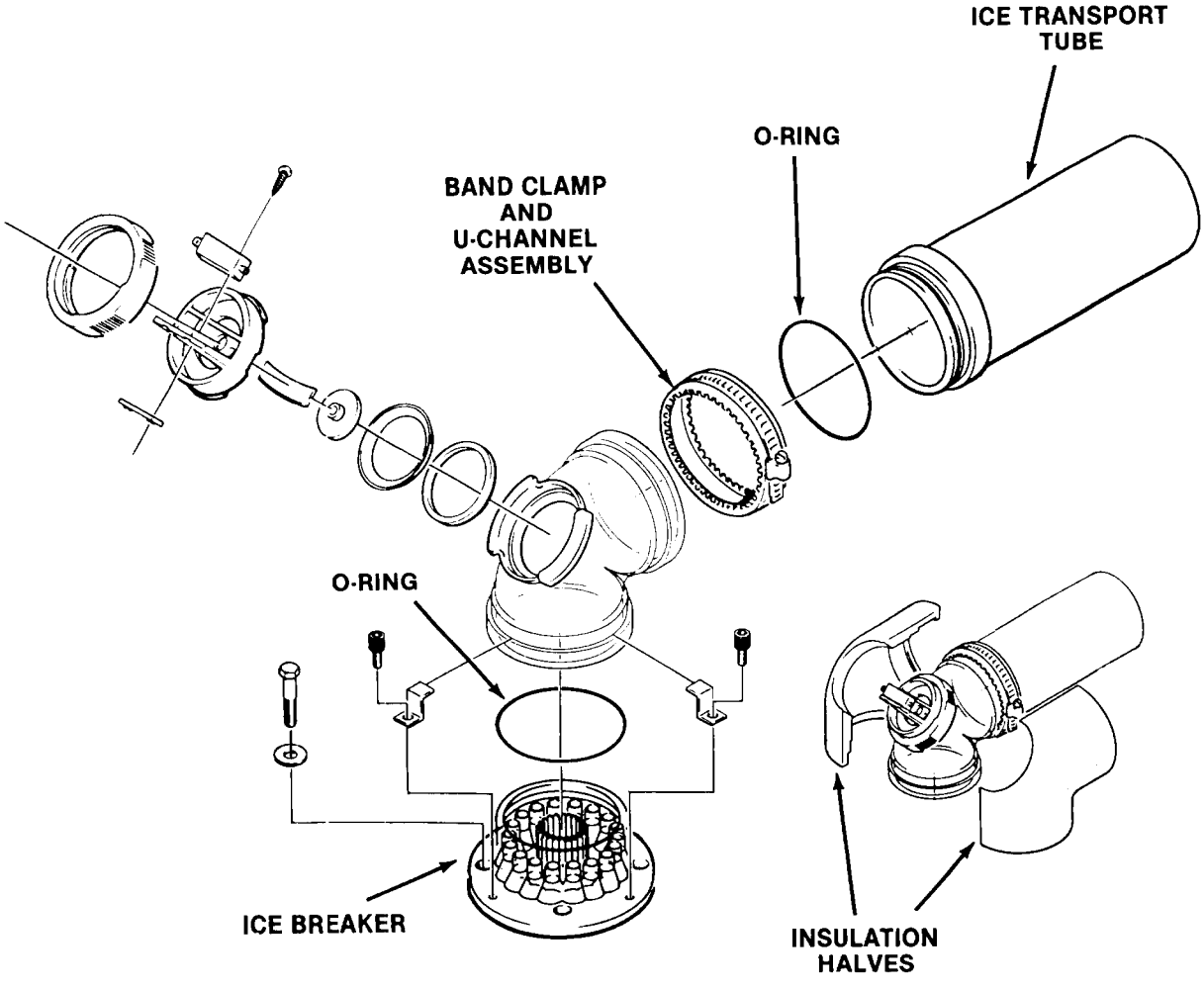

AN760 REMOVAL AND REPLACEMENT PROCEDURES

WARNING

Be sure the electrical power supply to the icemaker is OFF before proceeding with removal procedures.

REMOVAL AND REPLACEMENT OF THE COMPRESSOR ASSEMBLY

To remove compressor refer to SLIDE-OUT CHASSIS PROCEDURE and remove chassis from cabinet.

1. Remove two screws and the cover from the compressor junction box.
2. Disconnect the electrical leads at the compressor junction box, that originate in the control box and fan motor.
3. Bleed off or blow the refrigerant charge through the Schrader valve.
4. Unsolder the suction line from the compressor.
5. Unsolder the discharge line from the compressor.
6. Unsolder the process header tube from the compressor and retain for installation on the replacement compressor.
7. Remove four bolts, lockwashers and washers which secure the compressor to the chassis mounting base.
8. Remove the compressor from the chassis.
9. To replace the compressor assembly, reverse the removal procedures.
10. When recharging the system with refrigerant, always check the nameplate for the specified refrigerant charge.

REMOVAL AND REPLACEMENT OF THE CONDENSER — AIR-COOLED MODELS

To remove the condenser refer to SLIDE OUT CHASSIS PROCEDURES and complete all steps.

1. Bleed off or blow the refrigerant charge through the Schrader valve.
2. Remove one screw and disconnect the drier brace and drier from the condenser shroud.
3. Unsolder and disconnect the condenser inlet tube at the condenser.
4. Unsolder and disconnect the condenser outlet tube at the condenser.
5. Remove three screws, lockwashers and washers securing the condenser to the chassis base.
6. Remove four screws and attach the control box to the condenser.
7. Remove the condenser from the chassis base.
8. To replace the condenser, reverse the removal procedure.
9. When recharging the system with refrigerant always check nameplate for the specified refrigerant charge.

REMOVAL AND REPLACEMENT OF THE CONDENSER — WATER-COOLED MODELS

To remove the water-cooled condenser:

1. Remove two screws and cabinet left front panel.
2. Bleed or blow the refrigerant charge through the Schrader valve.
3. Unsolder the refrigerant inlet and outlet lines from the condenser.
4. Disconnect the water inlet and outlet lines from the condenser.
5. Remove two bolts, lockwashers and washers which secure the condenser to the chassis mounting base.
6. Remove the condenser from the cabinet.
7. To replace the condenser, reverse the removal procedure.
8. When recharging the system with refrigerant always check nameplate for the specified refrigerant charge.

NOTE

Always install a replacement drier, anytime the sealed refrigeration system is opened. Do not replace the drier until all other repair or replacement has been completed.

Thoroughly evacuate the system to remove moisture and non-condensables.

REMOVAL AND REPLACEMENT OF THE LIQUID LINE DRIER

To remove the drier refer to SLIDE OUT CHASSIS PROCEDURES and complete all steps.

1. Remove screw and drier brace attaching the drier to the condenser shroud on air-cooled models; and, the chassis base on water-cooled models.
2. Bleed off or blow the refrigerant charge through the Schrader valve.
3. Unsolder refrigerant lines at top and bottom of drier, remove the drier and separate the drier from the drier brace.

To replace the drier:

1. Remove the factory seals from the replacement drier and install the drier in the refrigerant lines with the arrow positioned in the direction of the refrigerant flow.

////////////////////// CAUTION //////////////////////

If the factory seal is broken on the replacement drier, exposing it to the atmosphere more than a few minutes, the drier will absorb moisture from atmosphere and lose substantial ability for moisture removal.

Be sure the replacement drier is installed with the arrow positioned in the direction of the refrigerant flow.

//

2. install the drier brace on the drier.
3. Solder the drier into the lines, two places.
4. Purge the system and check for leaks.
5. Thoroughly evacuate the system to remove moisture and non-condensables.
6. Charge the system with refrigerant by weight SEE NAMEPLATE for specifications.
7. Leak test the system.

AN760 REMOVAL AND REPLACEMENT
BREAKER/BEARING/WATER SEAL ASSEMBLY

INSPECTION:

If, when the breaker is removed from the evaporator, the yellow water seal stays on the auger, replace the breaker. If the auger shaft is rough or scored, it and the ice breaker must be replaced. If the auger shaft can be cleaned up, do NOT use an abrasive material; a nylon scouring pad used for cleaning dishes will do a very good job.

The bearing in the breaker is not replaceable. The breaker must be replaced when the bearing is worn past 1.009"ID.

The method of retaining the water seal in the nugget ice breaker was changed in early 1988.

The newest breakers have, at the water seal mounting location, a "lip" protruding into the inner diameter of the breaker.

This "lip" is at the bottom of the seal, retaining the seal in the breaker. The seal is retained so positively, that it cannot be removed without ruining it.

TO REPLACE THE SEAL IN THE BREAKER:

1. Pull old seal out with a pliers.
2. Place new seal on auger shaft, open side down.
3. Push breaker onto auger and seal as far as it will go.
4. Remove breaker and seal from auger, use your thumbs to push the seal all the way into the breaker.

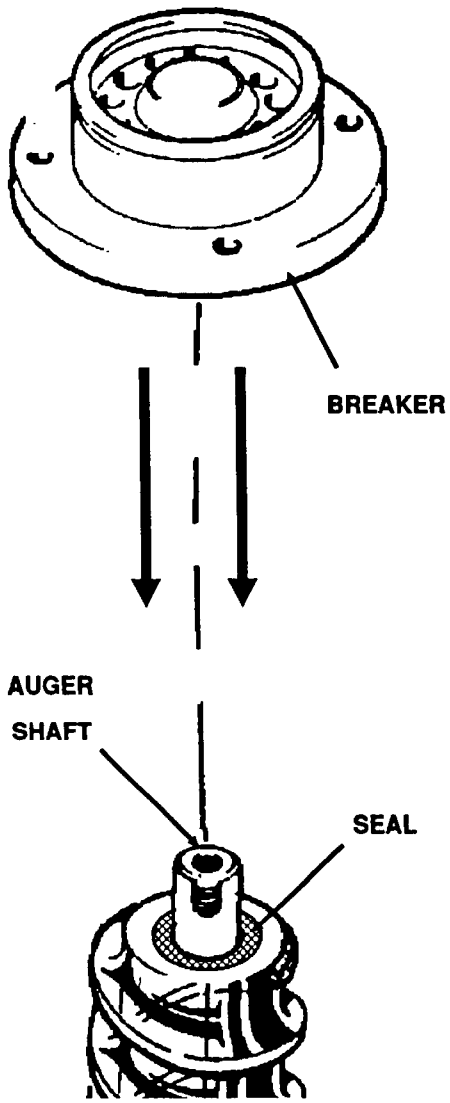

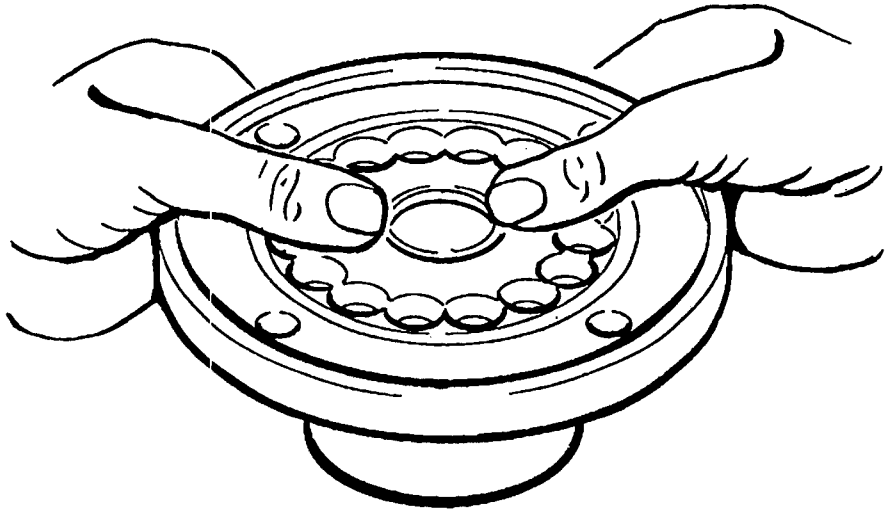

AN760 REMOVAL AND REPLACEMENT PROCEDURES

REMOVAL AND REPLACEMENT OF THE GEAR MOTOR

WARNING

Be sure the electrical power supply to the icemaker is OFF before proceeding with removal procedures.

To remove the gear motor refer to SLIDE OUT CHASSIS PROCEDURES and complete all steps.

To remove the auger drivemotor:

1. Disconnect electrical power leads from the motor.
2. Unscrew four capscrews securing motor to gearcase.
3. Lift off motor winding from the gear reducer.
4. Use a pry bar to remove rotor and rotor bearing from the gearcase.
5. Examine grease seal in gearcase. Replace if worn. Add grease to seal and bearing housing before re-assembly.

To replace, reverse the removal procedures.

NOTE

Motors must be exchanged complete. DO NOT mix rotors, housings or windings.

REMOVAL AND REPLACEMENT OF THE GEAR MOTOR ASSEMBLY

WARNING

Be sure the electrical power supply to the icemaker is OFF before proceeding with removal procedures.

CAUTION

SHUT OFF water supply to icemaker.

To remove the gear motor assembly:

1. Refer to Removal and Replacement of the Elbow & Switch Assembly and perform steps to gain access to the freezer assembly.
2. Thread suitable length bolts, having No. 5/16-18 UNC-2B threads, into thread hold in the top of the auger. Grasp bolt head with hand tool and pull auger out.
3. Unbolt freezer from gear motor assembly, lift up and off gear motor.
4. Remove the drivemotor cover and disconnect the three electrical wire leads.
5. Remove bolts holding gear motor plate to the machine base.
6. Lift the gear motor from the machine base.

To replace the gear motor assembly, reverse the removal procedure.

*Torque bolts to 250-300 inch pounds.

REPAIR OF THE GEAR MOTOR ASSEMBLY

1. Remove (6) cap screws to prepare to open gearcase.
2. Pry the two cases apart. Inspect the internal parts, look for:
   -Condition and quality of lubricant. (The proper oil level is flush with the top of the output (biggest) gear.)
   -Gear and gear shaft condition Woodruff key between output gear and shaft
   -Grease seals, back to back
   -Vent hole open
   -Thrust bearing intact.

   Be sure to count and retain the spacer washers as they come out of the gearbox.

   Replace the parts as required, using the part numbers found in the parts list section of this manual. Replace the gears into a CLEAN bottom gearcase, replacing the spacer washers in the same quantity as they were upon disassembly. If no count was kept, refer to the parts illustration.

NOTE: Some bearing grease should be placed in all bearings before assembly to insure proper lubrication upon start-up.

To reassemble:

1. Set top gearcase on gears and spacers and oil. Output gear when installed must be assembled with the flush, machined side DOWN and the protruding bossed center UP. Be sure O-ring is in place.
2. Replace gearcase cover. Drive in alignment pins before tightening cap screws and torque at 250-300 inch pounds.
3. Bench test the gearmotor assembly.

   Test for noise, amp draw (must not be in excess of icemaker nameplate for gearmotor) and oil leaks.

   Return gearbox to the unit. Be certain all mounting surfaces are clean and reassemble gearbox to chassis and freezer assembly.

   If the freezer water seal begins to leak, removal of the auger is required in order to replace the top bearing and water seal. AT THE SAME TIME, it would be recommended to remove the gearmotor assembly, open it up and inspect it.

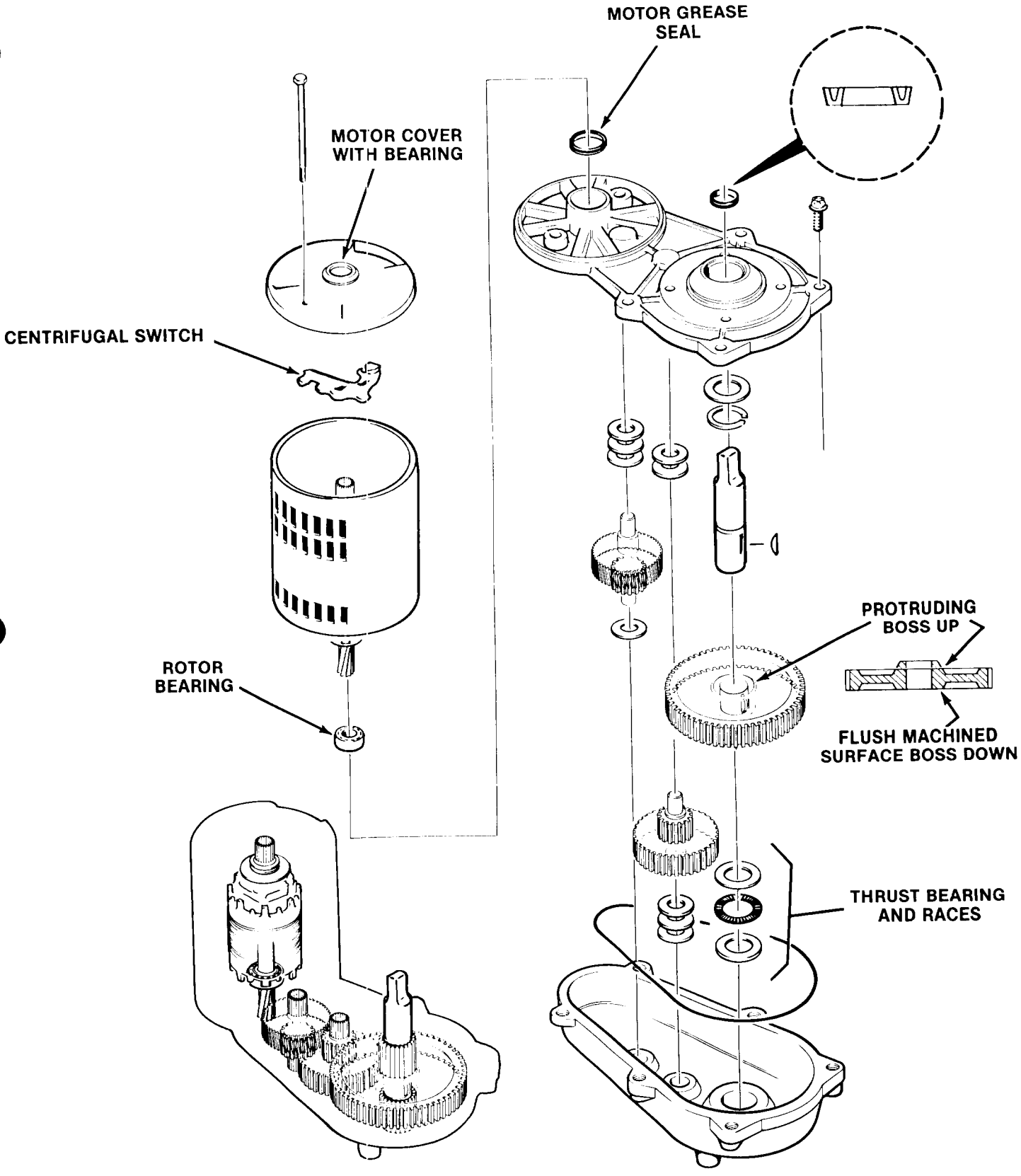
MOTOR GREASE SEAL
MOTOR COVER WITH BEARING
CENTRIFUGAL SWITCH
ROTOR BEARING
PROTRUDING BOSS UP
FLUSH MACHINED SURFACE BOSS DOWN
THRUST BEARING AND RACES

AN760 REMOVAL AND REPLACEMENT PROCEDURES

WARNING

Be sure the electrical power supply to the icemaker is OFF before proceeding with removal procedures.

REMOVAL AND REPLACEMENT OF THE FAN MOTOR ASSEMBLY — AIR-COOLED MODELS

NOTE

Before beginning this procedure, observe the fan blade position on the shaft of the fan motor and mark the fan blades so it will be correctly positioned during reassembly. Direction of air flow should be toward the fan motor.

To remove the fan motor assembly:

1. Disconnect the electrical supply to the icemaker at the circuit breaker or fuse box.
2. Remove two screws and the lower left front panel.
3. Remove plastic trim, screws, and aluminum trim.
4. Remove screws and left front bracket. Remove upper front left panel.
5. Disconnect the electrical lead from the fan motor at the compressor control box.
6. Remove two screws securing the motor bracket to the chassis base and remove the fan motor and motor bracket from the chassis.
7. Remove the nut from the end of the fan motor shaft and remove the fan blade.
8. Remove four screws securing the fan motor to the motor bracket and separate the motor from the bracket.

To replace the fan motor assembly, reverse the removal procedure.

REMOVAL AND REPLACEMENT OF THE WATER REGULATOR VALVE ASSEMBLY — WATER-COOLED MODELS

To remove the water regulator assembly refer to slide out chassis procedure and complete all steps.

1. Close the inlet water valve to the icemaker.
2. Bleed off or blow the refrigerant charge through the Schrader valve.
3. Unsolder capillary tube from the discharge line process header.
4. Disconnect the water inlet and outlet lines from the water regulator valve.
5. Remove the two screws from the valve bracket to the machine base and remove the water regulator valve.
6. To replace the water regulator assembly, reverse the removal procedure.

REMOVAL AND REPLACEMENT OF THE SAFETY CONTROLS, HIGH PRESSURE, LOW PRESSURE, AND AUGER DELAY

To remove the controls, refer to the slide-out chassis procedure and complete all steps.

1. Bleed off or blow the refrigerant charge through the Schrader valve.
2. Unsolder the control capillary tube from its corresponding process header.
3. Replace the control and solder the capillary tube to its corresponding process header.
4. Follow the Removal and Replacement Procedure of the liquid line drier.

NOTE

Always install a replacement drier, anytime the sealed refrigeration system is opened. Do not replace the drier until all other repair or replacement has been completed.

Thoroughly evacuate the system to remove moisture and non-condensables.

AN760 REMOVAL AND REPLACEMENT PROCEDURES

WARNING

Be sure the electrical power supply to the icemaker is OFF before proceeding with removal procedures.

NOTE

Be prepared with container to catch water left in lines disconnected in next steps, to prevent draining water on parts, components, electrical lines, etc.

REMOVAL AND REPLACEMENT OF THE WATER RESERVOIR ASSEMBLY

To remove the water reservoir assembly refer to slide out chassis procedure and complete all steps.

1. Close the inlet water valve to the icemaker.
2. Disconnect the water inlet tube from the water reservoir assembly.
3. Remove two Corbin clamps and two tubes from the bottom of the water reservoir assembly.
4. Unscrew and remove the wing nut from the bottom of the water reservoir assembly.
5. Lift and remove the water reservoir assembly from the mounting bracket.

To replace the water reservoir assembly, reverse the removal procedure.

NOTE

Check that the installed replacement water reservoir assembly float moves freely. Bend metal arm of float to adjust, as necessary. The correct water level in the water reservoir is the point of the raised molded line, on the side of the body of the water reservoir.

TABLE OF CONTENTS

Introduction 1
Dispensing System (How it Works) 2
Table of Contents 3
Specifications and Dimensions 4
Specifications 5
Electrical Requirements 6
Installation — Selecting Location 7
Location 8
Installation Limitations 9
Uncrating — Set Up 10, 11
Inlet Water Supply and Drain 12
Final Check List 13
Installation — Start Up 14
Cabinet Chassis Rear View 15
Chassis — Water Cooled 16
Chassis — Air Cooled 17
Storage Bin Rotor 18
Lower Front Door — Front and Side Views 19
Lower Front Door — Rear and Side Views 20
Gear Rotor Drive 21
Bearing Housing Assy 22
Gear Motor — Drive 23, 24
Dispensing Cycle 25
Harvest Cycle 26
Freezing Cycle 27
Control Box — Water Cooled 28
Wiring Diagram — Water Cooled 29
Control Box Air Cooled 30
Wiring Diagram — Air Cooled 31
Service Analysis 32
Water Pump 33
Compressor 115/60/1 33
Graphics Plates 34
Instructions: Coin Key Hookup 35, 36
Functional Parts and Maintenance 37, 38, 39
Cleaning Instructions 40, 41
Ice Machine 40
Bin Rotor Areas 41
Cuber Section 41

THIS PAGE
INTENTIONALLY
LEFT BLANK

THIS PAGE
INTENTIONALLY
LEFT BLANK

THIS PAGE
INTENTIONALLY
LEFT BLANK

SCOTSMAN

CD20 SERIES

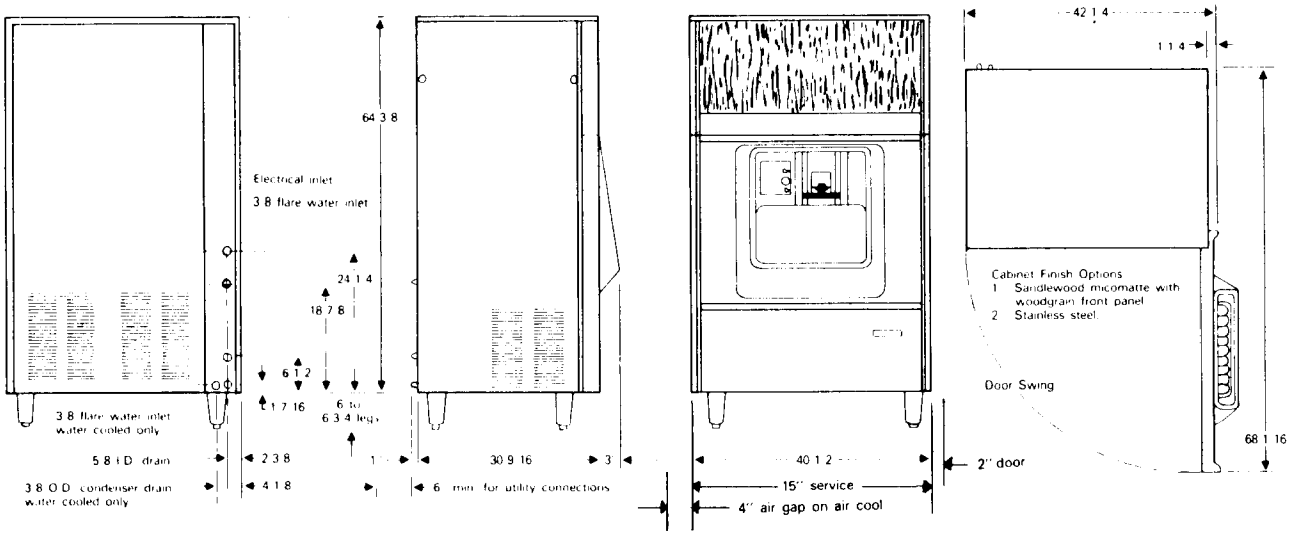

SPECIFICATIONS:

Cubes	Model	Condensing Unit	Compressor Horsepower	Finish (P-Painted) (SS-Stainless steel)	Shipping Weight (lbs.)
Medium	CD20AE-1A	Air	3/4	P*	600
Medium	CD20AS-1A	Air	3/4	SS**	600
Medium	CD20WE-1A	Water	3/4	P*	600
Medium	CD20WS-1A	Water	3/4	SS**	600

*Painted Models have sandlewood micomatte finish with woodgrain front panel.
**Stainless Steel panels also available.

Basic Electricals	Minimum Wire Sizes (w-wire) (g-gauge)	Total Amperages
Air Cooled 115/60/1	2-W 10-g	17.0
Water Cooled 115/60/1	2-W 10-g	16.2

Specifications subject to change without notice.

SPECIFICATIONS

Water Pressure ..... (Minimum 20 pounds) Maximum 70 pounds

Refrigerant Control ..... Twin Capillary Tube

Compressor 3/4 H.P. ..... Copelaweld — 115/60/1

Condenser ..... Water or Air Cooled

Refrigerant ..... Refrigerant 12

Refrigerant Charge ..... Air — 27 ounces
Water — 28 ounces

Power Consumption ..... 17.0 Amperes-Total

Cubes per Harvest ..... 120 medium sized cubes

Water Consumption to Produce Ice ..... 3 Gal. per hour

Ice storage capacity at normal shut off — 150 pounds.

DIMENSION

*Height — with 6" legs ..... 71"
Height — less 6" legs ..... 65"
Width ..... 40-1/2"
Depth (includes sink protrusion) ..... 33-3/4"

WEIGHTS

Uncrated ..... 570 lbs.
Crated ..... 600 lbs.

* Standard Models CD-20 do not include legs. Sales department carries leg package under accessory items.

ELECTRICAL REQUIREMENTS

This unit requires 115 volts, 60 Hertz, 1 phase current.

Total operating draw is 17.0 AMPS.

Recommended wiring is 10 gauge wire with solid ground wire and a separate 30 AMP circuit.

An electrical junction box with three wire cord and 6'' stubs is located inside the cabinet left rear corner. Remove left side panel for hook-up. Green wire is ground wire, balance of the unit is pre-wired, this is the only connection required.

Component	Rating	Full Load AMPS.
Refrigerant Compressor	3/4 H.P.	12.6
Condenser Fan Motor		.80
Bin Gear Motor Drive	1/5 H.P.	2.0
Water Pump		1.3
Spray Bar Drive Motor		.3
	Total Amperage	17.0

All external wiring should conform with National, State and local code requirements.

Maximum allowable voltage variation should not exceed +10% of the nameplate rating. Low voltage will cause erratic operation and may be responsible for serious damage to the overload switches and motor windings.

INSTALLATION

SELECTING LOCATION

Shipping weight with crate is 600 pounds.

For installation purposes, the CD20 will rest on 4 legs covering an area approximately 40 inches wide, 32 inches deep, therefore the floor area should be capable of supporting:

CD20 - Net Weight	570 pounds
CD20 - Ice Storage Capacity	150 pounds
Total Net Weight	720 pounds

Physical dimensions

*Height with 6" legs	71 inches
Depth including front sink protrusion	33.75 inches
Depth including Max Door Swing	68.06 inches
Width - Left to Right	40.50 inches

INSTALLATION INSTRUCTIONS

The following installation instructions were written for use by a authorized tradesman only, not the user or customer. We suggest you call your local authorized Scotsman Service Agency for hook-up, start-up, and check out. He's listed under "Ice Making Machinery & Equipment" in your telephone book, yellow pages.

* Standard Models CD-20 do not include legs. Sales department carries leg package under accessory items.

LOCATION

All utilities, plumbing, electric and drain are provided on the back lower left support panel.

The entire left side panel is removable for service and maintenance. The machine must be positioned to provide a minimum clearance of 15" at the left side for service access (or provision must be made to pull the machine out of a restrictive alcove location).

Both the top walnut colored panel and the entire lower front section are hinged panels allowing access to the internal components. These panels are hinged on the right side, opening left to right. These two door panels, when open extend approximately one and three quarters inches beyond cabinet right side dimension.

In order to open these doors, provide 2" clearance on right side.

Since the refrigeration unit in some models is air cooled, a minimum 4" air gap must be maintained on left side and back to provide sufficient quantities of circulating air.

INSTALLATION LIMITATIONS

ELECTRICAL

1. Scotsman, like most manufacturers, purchases electrical motors that are rated to operate within 10% variance above or below nameplate ratings.

   Improper voltages applied to Scotsman equipment can cause premature failures and burnouts. Failures of this type are not considered as factory fault or defect.

AMBIENT

2. **WARNING** — This machine is not designed for outdoor installations. This machine will not operate when air temperatures are below 50° F. or above 100° F.

   NOTE: This unit incorporates a "hot gas" defrost system.

   Air cooled units require a minimum 50° fahrenheit ambient air, otherwise, the hot gas system will not defrost the formed ice cubes, resulting in a freeze up that will ruin the freezer section, necessitating a costly repair.

   Water cooled models pose no problem since pressure can be regulated by adjustment to the water regulating valve.

   This unit was not fabricated nor intended to be installed outdoors.

WATER

3. Scotsman Ice Systems require 20 pounds flowing water pressure to operate satisfactorily. Pressures lower than 20 pounds or interruptions in the water supply can cause serious mechanical damage to this product.

   This machine will not operate when water supply temperatures are below 40°F. or above 100° F.

UNCRATING — SET-UP

ITEM NO.	PART NO.	DESCRIPTION
1.	A23368-001	Top Panel
2.	A2335-001	Back Panel
3.	A25997-001	Upper Door
4.	A26001-001	Lower Door
5.	A23349-001	Left Side Panel
6.	02-2094-01	Lock Plug
7.	03-1544-01	Hex Socket Screw
8.	A233349-001	Right Side Panel
9.	03-1512-02	Top Hinge Pin

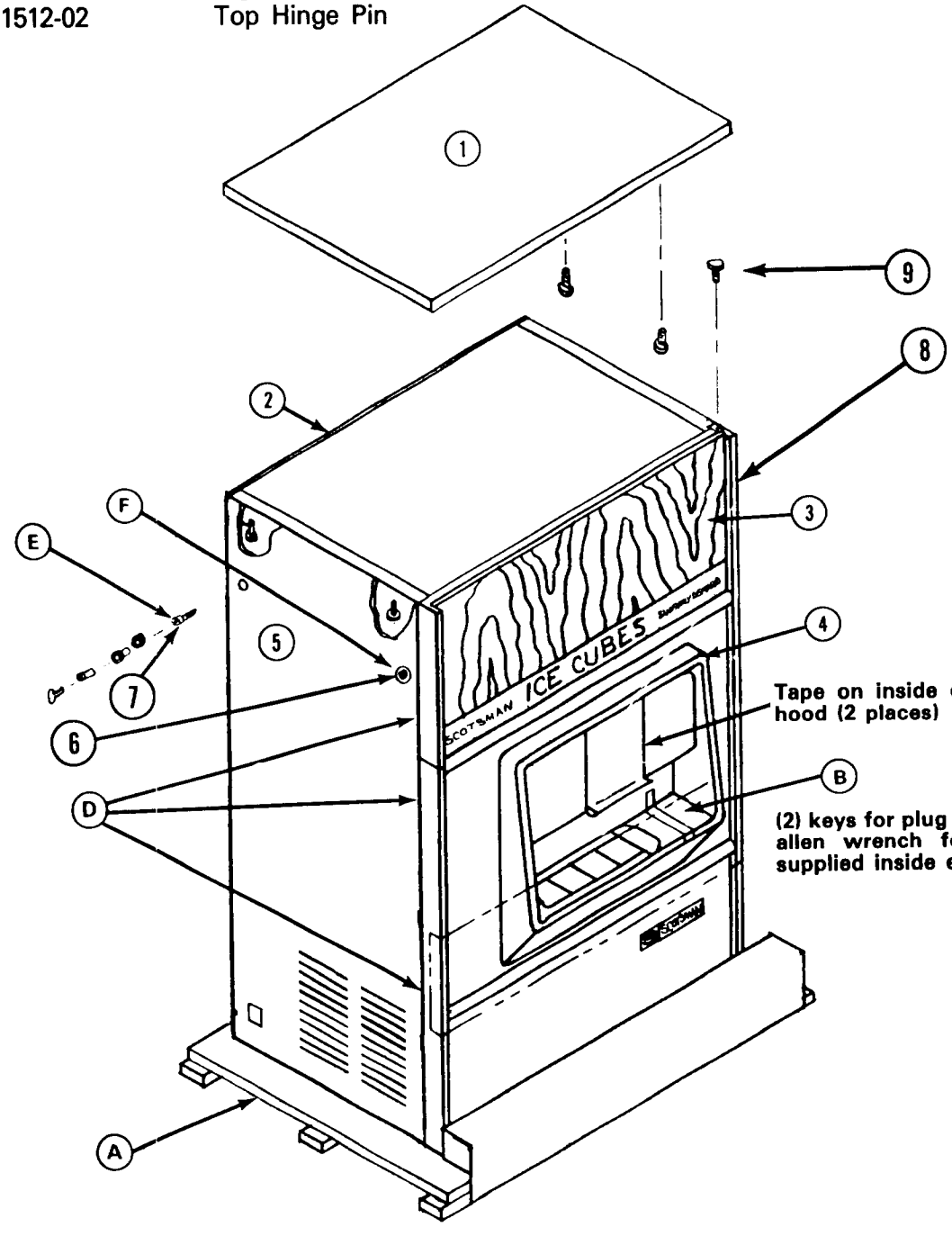

UNCRATING — SET UP

The complete unit comes in one plywood crate, nailed together. Remove crating in normal manner, being careful not to scratch cabinetry with nails that protrude through crating.

Tip unit back far enough to remove four bolts holding crate bottom to unit base (A). Install legs in base and set unit upright.

Now remove envelope taped to front door grill, containing lock keys and allen wrench (b). Using key, remove the two locking tumblers from the top of the left side panel (E) (F). Now insert allen wrench thru key lock blank (E) and unscrew the socket head bolt holding panel. Next insert allen wrench into socket (F) and turn up or counter clockwise 1/2 turn. This releases a dual lock clutch that hold tight, also after releasing this lock, open top front door one inch to clear positioning pin from left side panel. Pull top side panel out far enough to clear top panel, then lift bottom of panel from two bottom positioning pins.

Remove all visible, external masking tape around panels, drain grill, etc. (2) fast-lead thumbscrews hold the lower panel securely to cabinet. Note: These fast-lead thumbscrews are found inside the left side panel area, facing the front of the cabinet.

After releasing 2 fasteners, pull doors open to expose inner front of machine. Remove masking tape from freezer curtains, splash guards, etc. Also from inside the back of the clear plastic delivery chute in front door.

Door panels can be closed and complete unit moved to final location for installation.

NOTE: Standard models CD-20 do not include legs. Sales department carries leg package under acessory items.

INLET WATER SUPPLY

Only one supply line is required. A 3/8" SAE male flare fitting extends thru the left rear cabinet corner.

Two (2) 3/8" SAE male flare fittings are required for Water Cooled models. The second is for the condenser.

A minimum 3/8" copper supply line should be used. Connect to a cold water supply line with regular plumbing fittings with a shut off valve installed in an accessible place between supply line and machine.

IMPORTANT: Minimum 20# flowing water pressure is required.

When choosing the water supply for this cuber, consideration should be given to:

A. Length of run
B. Water clarity and purity.
C. Adequate supply pressures

Since water is the most important single ingredient in producing ice, you cannot over emphasize the three items mentioned above. Low water pressure (below 20 pounds) may cause system malfunction. Water containing excessive minerals will tend to produce cloudy colored cubes and scale build up on parts in the water system.

Heavily clorinated water can be controlled using charcoal or carbon filters.

In areas where water pressures exceed 70 pounds, install a pressure regulator, set at 40 pounds. NOTE: If a positive stop device such as a solenoid is in the same water line as cuber, install a water hammer arrestor.

WARNING: THIS MACHINE MUST NOT BE ALLOWED TO OPERATE WHEN THE WATER SUPPLY IS SHUT OFF, OR AT BELOW RECOMMENDED WATER PRESSURE. TURN MASTER SWITCH TO "OFF" POSITION WHEN WATER SUPPLY IS OFF, OR WHEN WATER PRESSURE IS BELOW RECOMMENDED OPERATING PRESSURE.

DRAIN

This unit comes with all internal plumbing completed.

One 5/8" ID clear plastic tube carries all drain water out of cabinet at lower left rear corner. See page 4 .

Item 2 — Page 15 is an open drain pan which collects melted water from the ice storage bin and ice cubes or meltage from the serving area, drain grille.

For alcove installations, leave space to unhook drain for necessary service.

Use open, trapped or vented drains to avoid back-up, provide 1/4" fall per running foot of drain line.

FINAL CHECK LIST

1. Is the unit level? (IMPORTANT)
2. Have all electrical and piping connections been made?
3. Has the voltage been tested and checked against the nameplate rating?
4. Have the compressor hold-down bolts been checked to insure the compressor is snug to its mounting pads?
5. Is the water supply valve open and the electric power properly hooked up?
6. All masking tape removed from doors, panels and inner freezer curtain?
7. Is the unit clean? Has storage bin been wiped clean with cold water cloth?
8. Check all refrigerant and conduit lines to guard against vibrations and possible failure.
9. Is there 4" clearance behind unit for proper air circulation?
10. Is unit in a room where ambient temperatures are minimum 50° F. even in winter months?
11. Has water supply pressure been checked to insure at least a minimum pressure of 20 pounds?
12. Is there 15" clearance on left side for service accessability?

INSTALLATION — START UP

1. Open top and bottom front doors to facilitate start up and check out.

2. Make sure water supply is turned on, then check timer finishing clock in main control box making sure the micro switch roller is resting down in offset slot in the cam (harvest position). If adjustment is necessary, turn timer knob clockwise into harvest position.

3. Inspect components in electrical control box, check for loose or frayed wire, then turn both manual switches to "on" position. All cubers have two manual on-off switches. One is for motor compressor only during cleaning operation, one is master switch for complete unit.

4. When both switches are thrown "on", water inlet solenoid will be energized allowing water to enter freezer cup section. This will "fill" icemaker for the freezing cycle. Check operation of spray bar drive motor. Spray bar motor should be running during harvest cycle.

5. Allow clock to carry unit through harvest cycle. This will be approximately two minutes. Dial pointer should be set on Number 2-1/2. After the compressor starts, turn the dial completely around and send it through another harvest cycle. Do this several times. This will completely flush out machine of any dust that may have accumulated in shipment.

6. After machine has been properly flushed, allow it to go into a freezing cycle. Check for possible water leaks, check water pump operation, should be running freely. Also note if jet tube operation is correct, and that none of the jets are plugged.

7. Time clock dial does not rotate at the start of a freeze cycle; it is started later by the cube size thermostat control located above the power on/off switches.

8. Freezing time will be approximately 20 to 30 minutes in a 70 degree ambient. (Longer if above, and shorter if below). Average complete cycle time is 25 to 35 minutes.

9. Watch first cube harvest and check to make sure that plastic curtain sections have not been damaged in shipment. Also that curtains do not swing back into freezer and catch on spray bar.

10. Check size of Cubes made: If too small, after a second cycle, adjust cube size control to lower or colder setting — until desired cube size is reached. Normal cube size is with a 1/4" depression in crown.

11. Check texture of cubes made: Partially cloudy cubes throughout suggest unit running short of water near end of freezing, or possibly an extremely bad water condition, which would indicate use of filtering or purifying equipment. Contact SCOTSMAN-Queen Products Division, Ice Machine Service Department, Albert Lea, Minnesota, for further details.

CABINET CHASSIS

Rear View

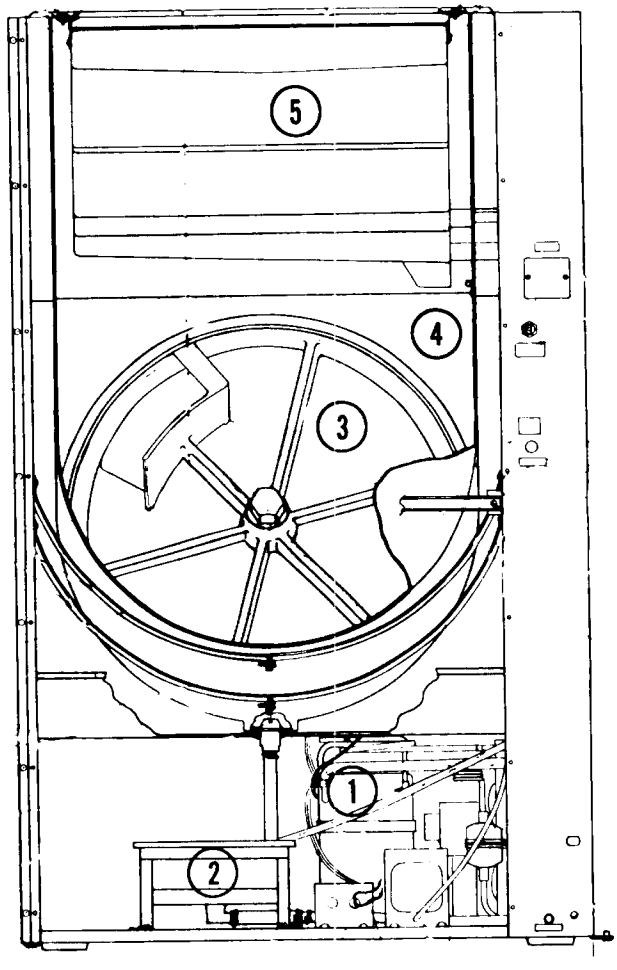

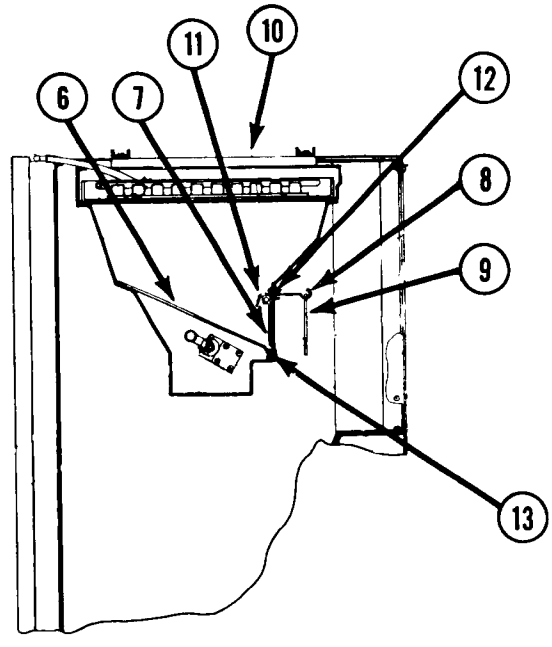

ITEM NO.	PART NO.	DESCRIPTION
1.	See Seperate P.L.	Compressor
2.	02-2309-02	Drip Pan
3.	A25368-001	Rotor Assy.
4.	11-0399-01	Bin Thermostat
5.	02-2309-01	Freezing Chamber
6.	02-1982-01	Cube Chute
7.	A24541-001	Curtain Assy.
8.	02-2136-01	Deflector Hanger
9.	02-2207-02	Cube Deflector
10.	A27274-001	Rubber Platen Assy.
	13-0638-00	Rubber Cup Holder (2)
11.	A24544-001	Hanger - Drip Lip
12.	A26661-001	Chamber Stiffener
13.	02-2137-01	Chip - Chute (2)

CHASSIS
Water Cooled

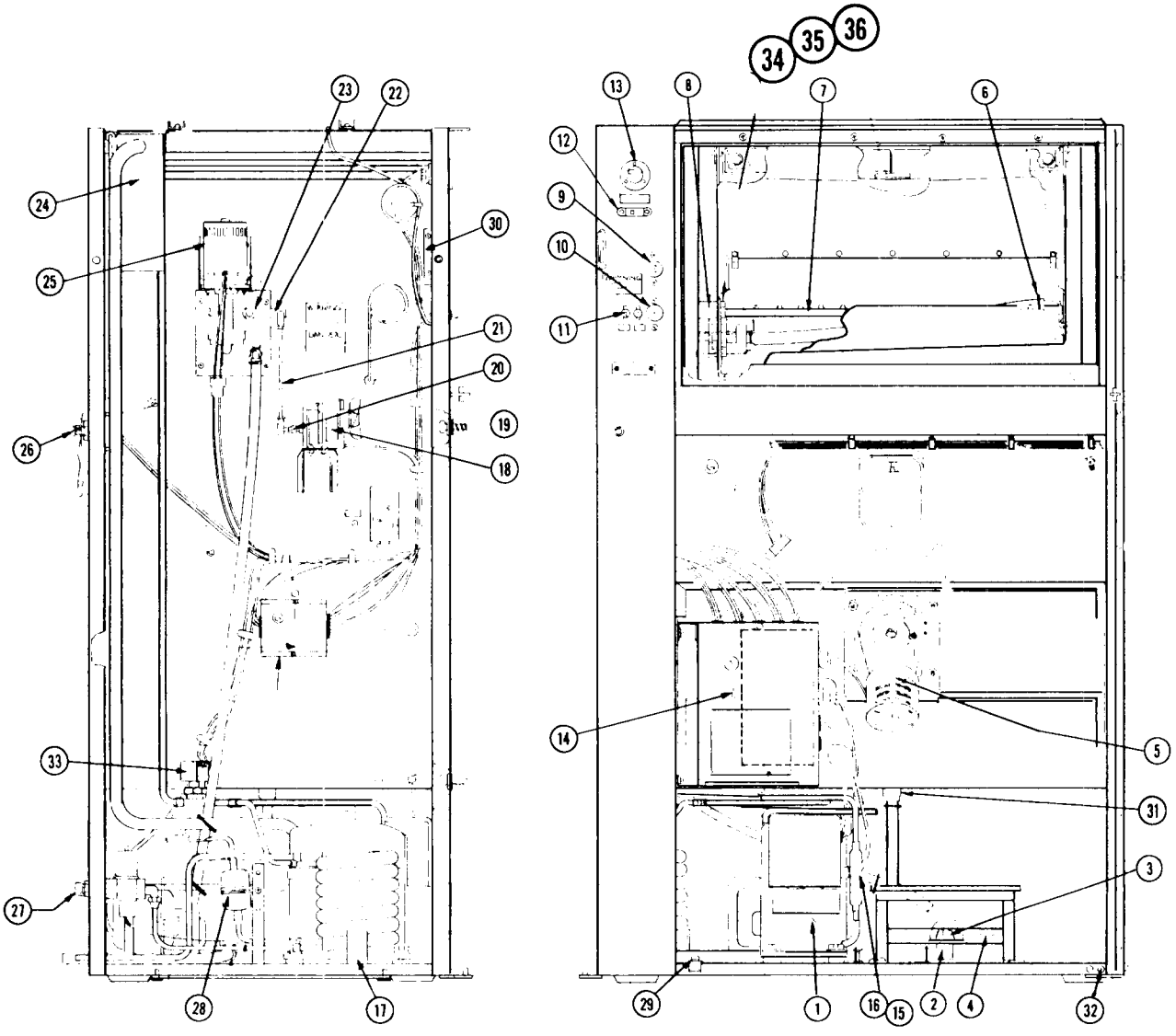

ITEM NO.	PART NO.	DESCRIPTION
1.	See Separate P.L.	Compressor
2.	02-1742-00	Drain Bottom
3.	02-1741-00	Drain Strainer Nut
4.	02-2309-02	Drain Pan
5.	See Separate P.L.	Gear Motor
6.	A16963-000	End Bearing
7.	A27288-001	Spray Bar
8.	A24512-001	Drive Bearing Support
9.	11-0399-01	Bin Thermostat
10.	11-0345-01	Cube Size Control
11.	12-0426-01	Toggle Switches (2)
12.	12-2054-01	Switch
13.	12-1993-01	Elapse Time Indicator
14.	See Separate P.L.	Control Box Assy.
15.	16-0560-00	Valve Core
16.	16-0563-00	Brass Cap
17.	18-3305-02	Water Cooled Condenser

ITEM NO.	PART NO.	DESCRIPTION
18.	A24743-001	Agitator Motor
19.	03-1541-02	Wing Screw
20.	A23694-001	Linkage Arm
21.	A23163-002	Linkage Rod
22.	A23884-001	Linkage Arm Spray Bar
23.	A27286-001	Drive Journal
24.	A26193-001	Suction Accum. Assy.
25.	See Seperate P.L.	Water Pump
26.	12-1434-01	Inlet Water Solenoid
27.	11-0198-02	Water Regulating Valve
28.	02-0544-01	Refrigerant Drier
29.	A25549-001	Door Support
30.	02-2092-01	Dual Lock
31.	A24584-001	Bin Drain
32.	A25959-001	Bracket—Door
33.	12-2023-03	Hot Gas Valve
34.	03-1408-34	Washer
35.	03-1539-11	Retaining Ring
36.	03-1580-01	Pin

CHASSIS Air Cooled

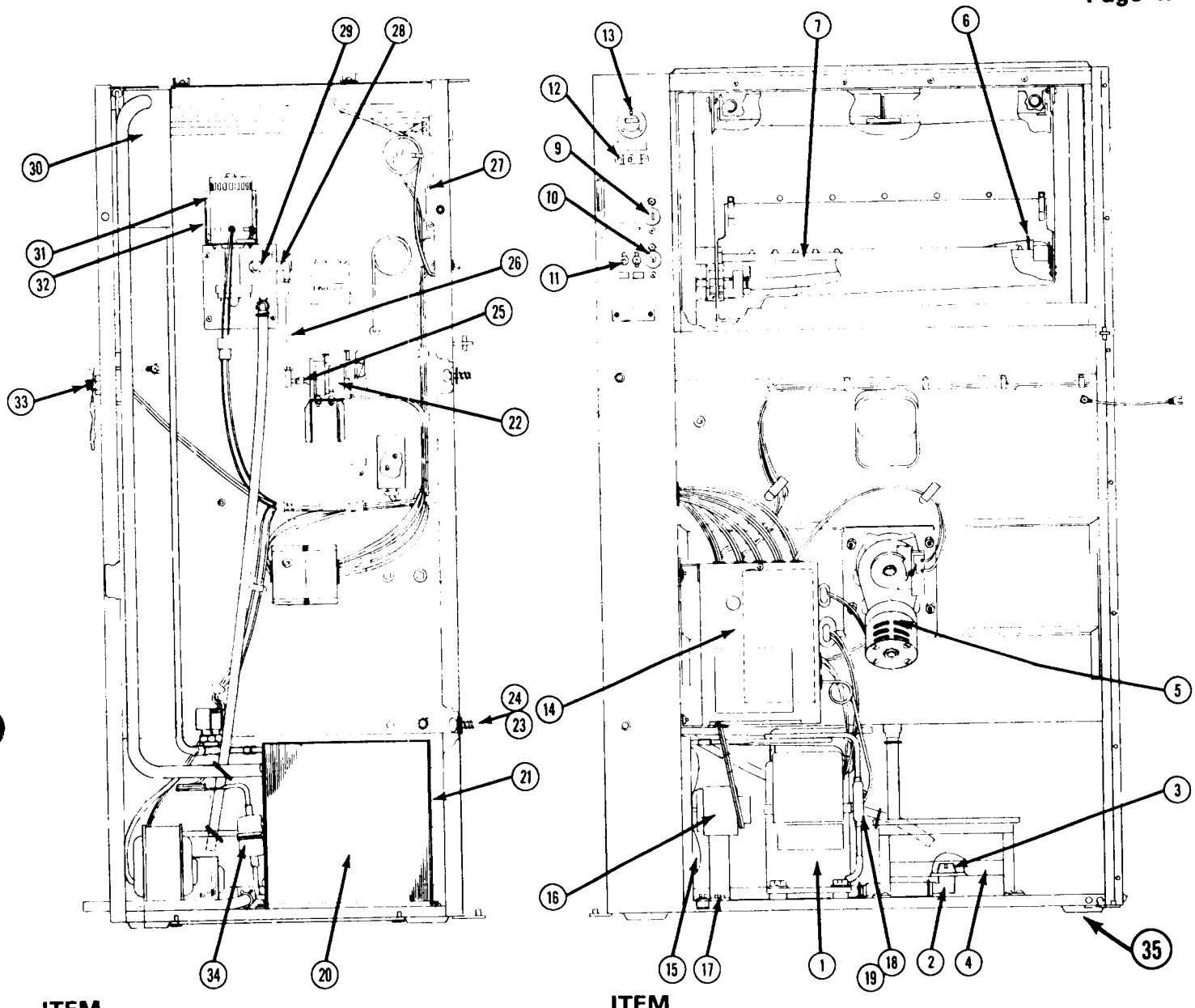

ITEM NO.	PART NO.	DESCRIPTION
1.	See Separate P.L.	Compressor
2.	02-1742-00	Drain Bottom
3.	02-1741-00	Drain Strainer Nut
4.	02-2309-02	Drain Pan
5.	See Separate P.L.	Gear Motor
6.	A16963-000	End Bearing
7.	A27288-001	Spray Bar
8.	A24512-001	Drive Bearing Support
9.	11-0399-01	Bin Thermostat
10.	11-0345-01	Cube Size Control
11.	12-0426-01	Toggle Switch
12.	12-2054-01	Switch
13.	12-1993-01	Elapse Time Indicator
14.	See Separate P.L.	Control Box
15.	18-0625-00	Fan Blade
16.	12-1681-01	Fan Motor
17.	A25548-001	Fan Motor Mount

ITEM NO.	PART NO.	DESCRIPTION
18.	16-0560-00	Core — Service Port
19.	16-0563-00	Cap — Service Port
20.	18-3703-01	Air Cooled Condenser
21.	A23825-001	Shroud
22.	A24743-001	Agitator Motor
23.	03-1541-02	Wing Screw
24.	03-1543-01	Retaining Washer
25.	A23694-001	Linkage Arm
26.	A23163-002	Linkage Rod
27.	02-2092-01	Dual Lock
28.	A23884-001	Linkage Arm Spray Bar
29.	A27286-001	Drive Journal
30.	A26193-001	Suction - Accum. Assy.
31.	See Separaty P.L.	Water Pump
32.	A26218-001	Pump Bracket
33.	12-1434-01	Inlet Water solenoid
34.	02-0544-01	Refrigerant Drier
35.	A25959-001	Door Hinge

STORAGE BIN ROTOR

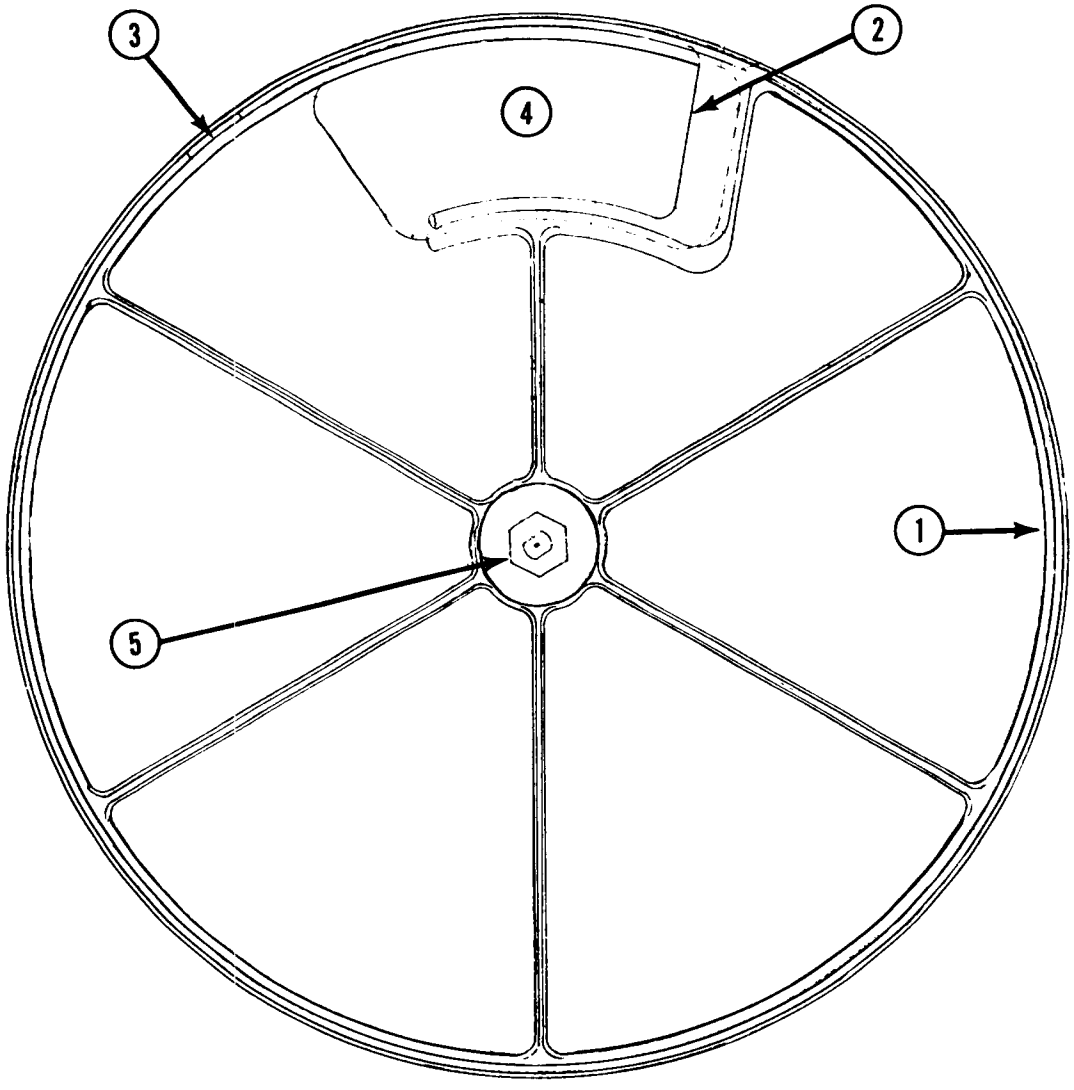

ITEM NO.	PART NO.	DESCRIPTION
1.	A25368-001	Rotor Assembly (Drum)
2.		Scoop Retainer
3.		Pick Up Shoe
4.		Ice Scoop
5.		Center Hub

4 Ice Scoop — The at rest drum position, inside storage bin, would have scoop in the 2:00 o'clock position, viewing machine from the front. As a vend is requested, the gear motor drive starts turning the drum clockwise through ice cubes in storage area. Scoop fills with ice and as it passes ice delivery opening at 12:00 o'clock, cubes fall by gravity into delivery chute. Drum continues thru to 2:00 o'clock, closing ice opening and stopping.

LOWER FRONT DOOR

Front & Side Views

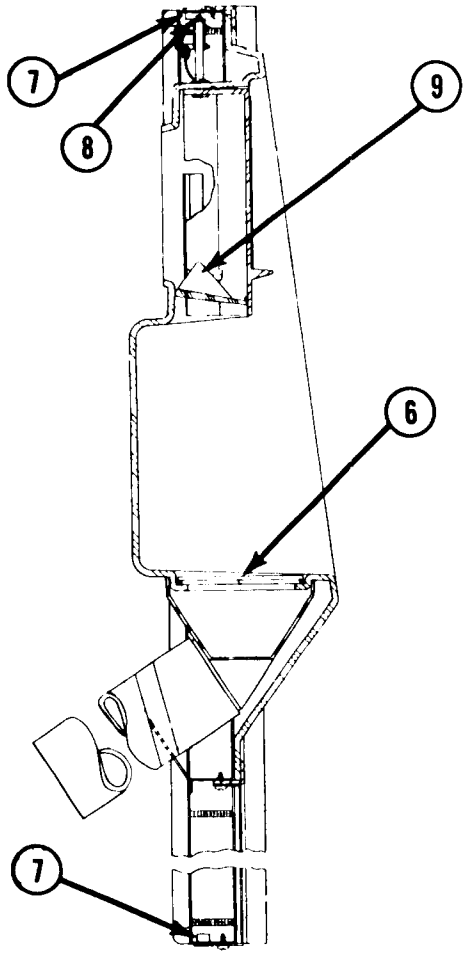

A. Clear plastic delivery chute. Fills with cubes during a vend. Customer pulls down, bottom of chute opens, dropping cubes into ice bucket. Chute is spring loaded and at its uppermost position, engages a safety micro switch in back of panel. This switch when open or disengaged, will not permit a dispensing operation. Chute must be entirely closed (uppermost position) before dispensing section will operate.

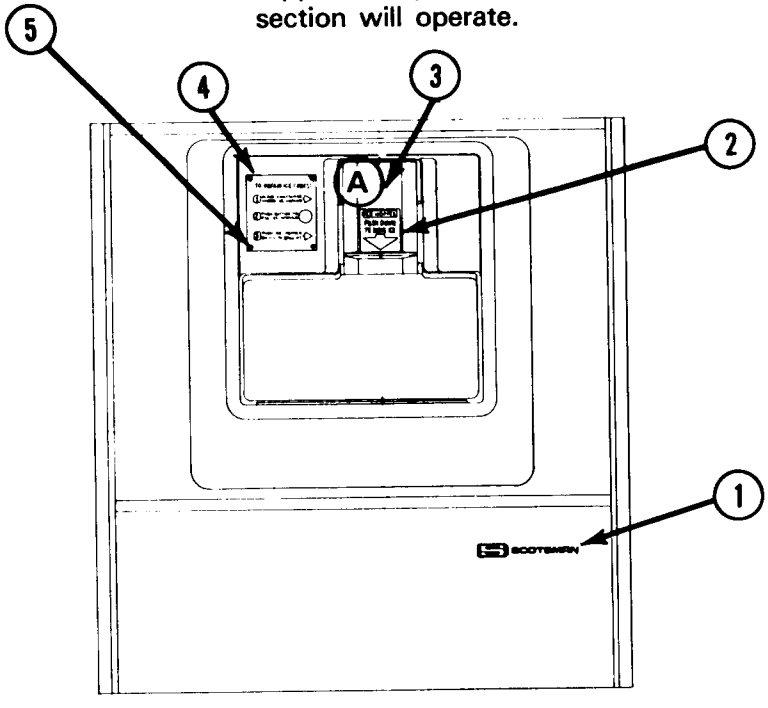

ITEM NO.	PART NO.	DESCRIPTION
1.	15-0156-00	Emblem
2.	15-0583-01	Decal — Ice Chute
3.	02-1994-01	Hood For Ice Chute
4.	See Separate P.L.	Instruction Plate
5.	03-1581-01	Screw 4/Unit
6.	02-1998-01	Grille
7.	02-2012-01	Bushings 2/Door
8.	03-1539-03	Retainer Ring
9.	02-1995-01	Ice Chute

LOWER FRONT DOOR
Rear & Side Views

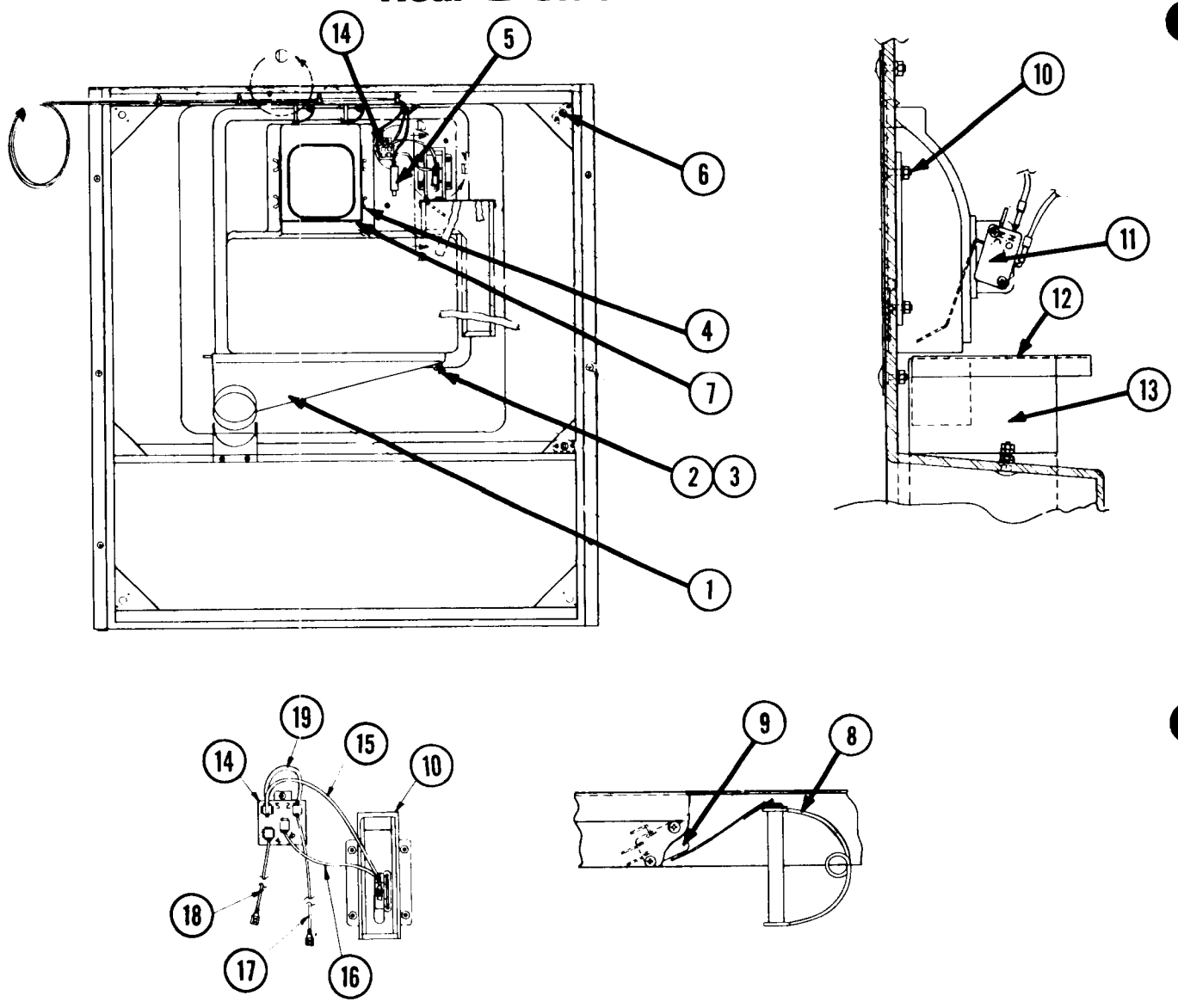

ITEM NO.	PART NO.	DESCRIPTION
1.	A24523-001	Drain Tray Ass'y.
2.	03-0255-02	Wing Nuts
3.	A24655-001	Spacers
4.	03-1279-01	Thumb
5.	12-1878-01	Push Button Switch
6.	03-1542-01	Retainer Nut
7.	A25377-001	Shield
8.	02-2097-01	Torsion Spring
9.	A25545-001	Safety Switch
10.	A27101-001	Body Coin Mech.
11.	12-2046-01	Switch Lever
12.	A26838-001	Coin Box Cover
13.	A26826-001	Coin Box Assy.
14.	12-1873-01	Relay
15.	Red Wire	
16.	Orange Wire	
17.	Yellow Wire	
19.	Orange Wire	

GEAR ROTOR DRIVE

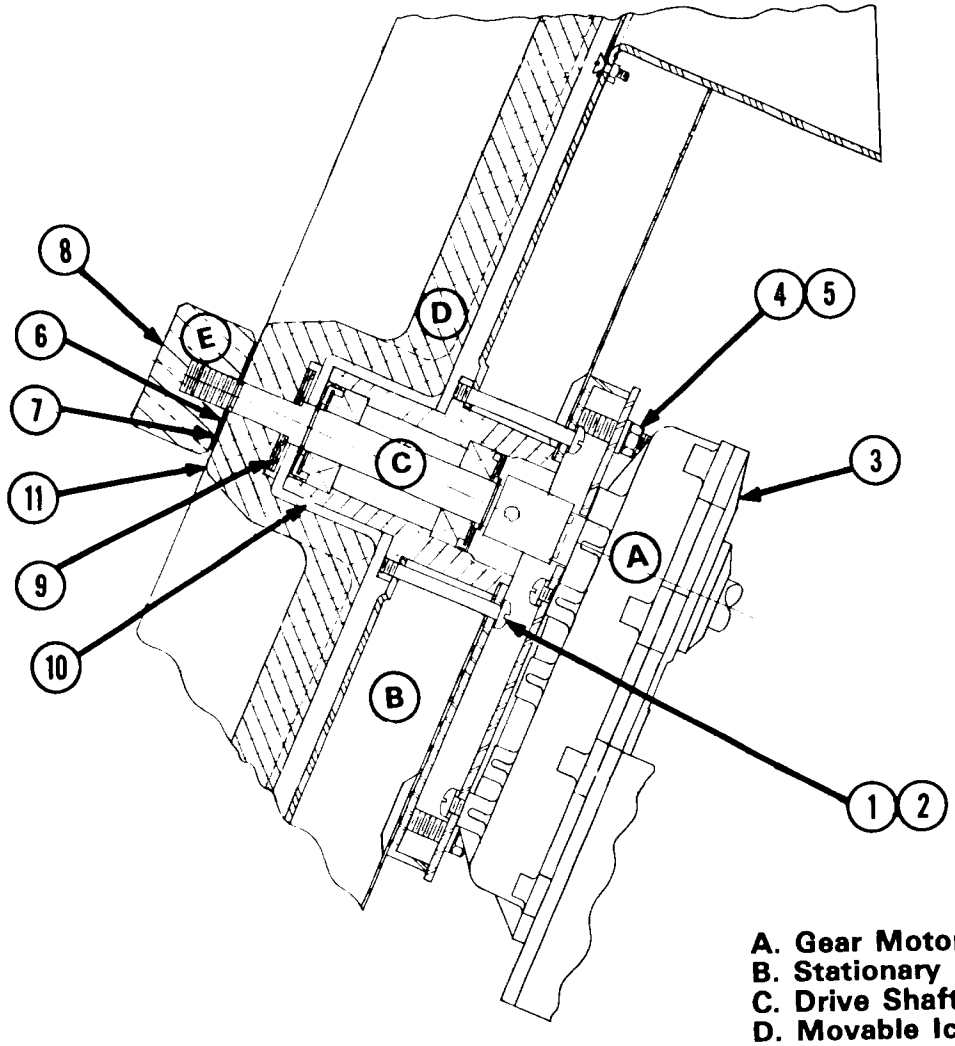

A. Gear Motor Drive
B. Stationary Front Panel
C. Drive Shaft
D. Movable Ice Rotor
E. rotor Lock Nut

ITEM NO.	PART NO.	DESCRIPTION
1.	03-1403-72	Screws 6/Unit
2.	03-1417-08	Lockwasher 6/Unit
3.	See Separate P.L.	Gear Motor
4.	03-1410-05	Lockwasher
5.	03-1406-12	Nuts
6.	03-1408-26	Special Washer
7.	03-1409-16	Non-Metalic Washer
8.	A23408-001	Cap Nut
9.	A23685-001	Support Washer
10.	A26108-001	Bearing Housing Assy.
11.	A25363-001	Bin Rotor

BEARING HOUSING ASSY.

A26108-001

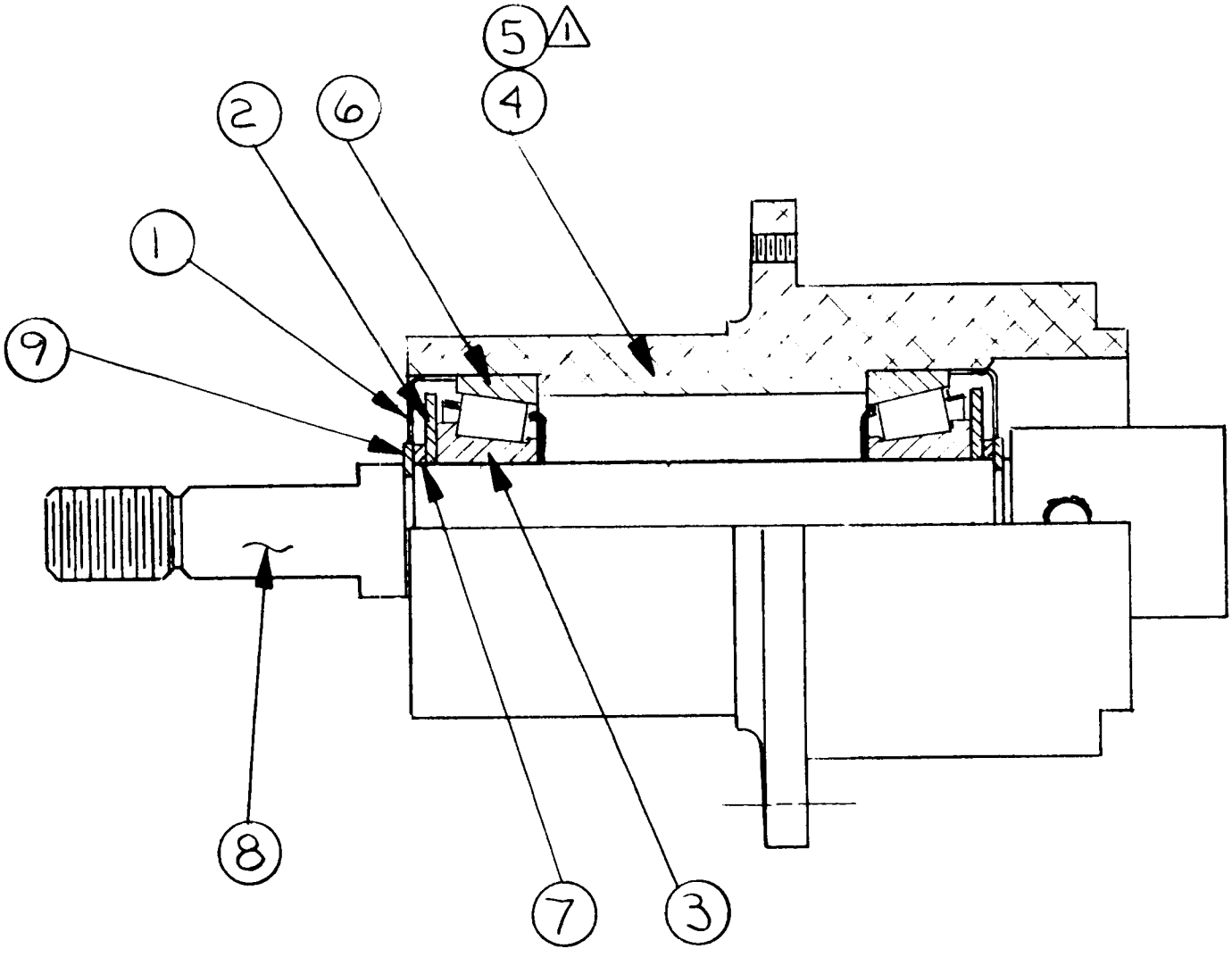

ITEM NO.	PART NO.	DESCRIPTION
1.	02-2026-01	Cup Closure
2.	02-2027-01	Flinger
3.	02-2186-02	Cone
4.	A26108-001	Bearing Housing Complete
5.	19-0309-01	Grease
6.	02-2186-01	Cup
7.	03-1408-27	Washer
8.	A26105-001	Bin Shaft Assy.
9.	03-1516-01	Retaining Ring

A26398-021

GEAR MOTOR — DRIVE

115/60/1

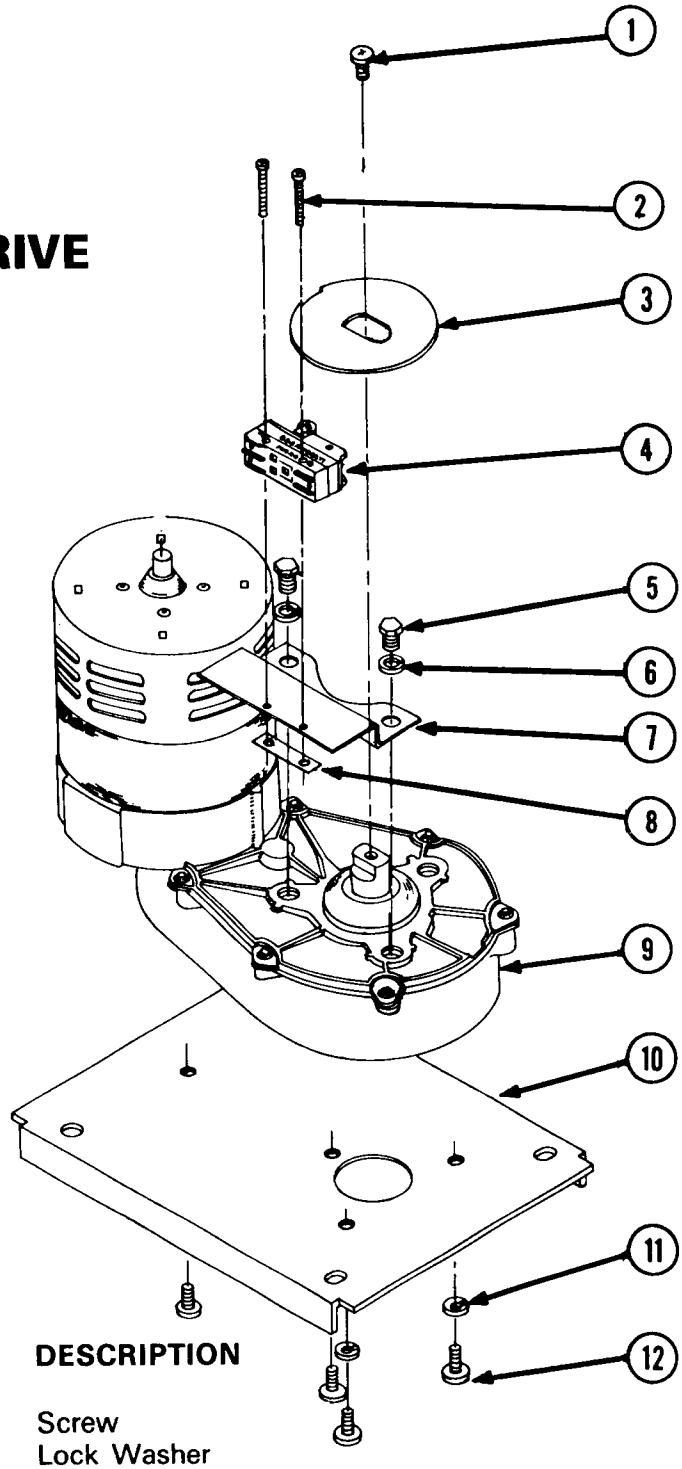

*Items 2,4,5,6,7 & 8
are not included
with Gear Motor Assy.
A26398-021

ITEM NO.	PART NO.	DESCRIPTION
1.	03-1405-03	Screw
1.	03-1410-03	Lock Washer
2.	03-1403-09	Screw
3.	A26686-001	Cam
4.	12-0876-00	Cam Switch
5.	03-1405-15	Screws
6.	03-1410-04	Lock Washer
7.	A24459-001	Bracket Cam Switch
8.	03-0886-00	Twin Speed Nut
9.	See Separate P.L.	Gear Motor (Less Switch Assy.)
10.	A23336-001	Motor Mount
11.	03-1410-03	Lock Washer
12.	03-1405-03	Screw

Gear Motor Parts Breakdown

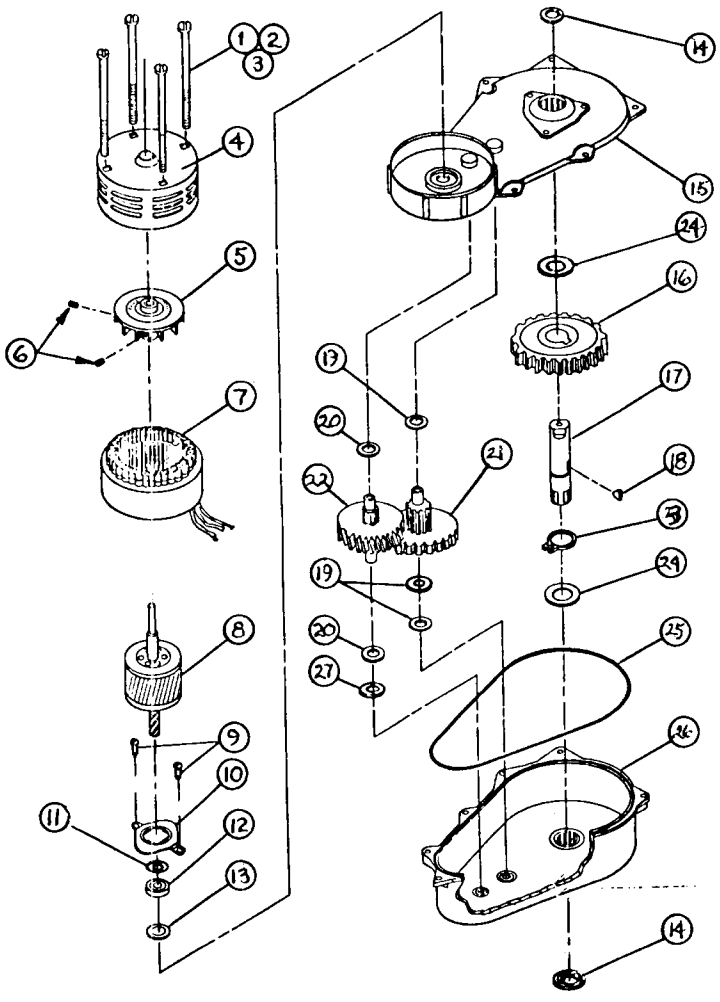

ITEM NO.	PART NO.	DESCRIPTION
1.	03-1403-74	Screw (4)
2.	03-1417-04	Star Washer (1)
3.	03-1410-02	Lockwasher (3)
4.	A17047-000	Housing w/bearing
5.	A16915-000	Cooling Fan
6.	03-1246-00	Set Screws (2)
7.	12-2036-01	Stator
8.	A19884-003	Rotor w/bearing & retainer
9.	03-1245-00	Sem Screw (2)
10.	A19871-000	Bearing Retainer
11.	03-1408-08	Washer
12.	02-1501-00	Bearing Only
13.	02-1504-00	Oil Seal-imput Shaft
14.	02-1503-00	Oil Seal - Out Put Shaft
15.	A16920-021	Gear Case Top w/bearings & seals
16.	02-2098-01	Output gear
17.	02-2311-01	Output Shaft
18.	03-1475-01	Key
19.	03-1408-06	Washer (3)
20.	03-1408-19	Washer (2)
21.	02-1510-00	2nd Gear & 3rd Pinion
22.	02-1511-00	1st Gear & 2nd Pinion
23.	03-1515-03	Snap Ring
24.	03-1408-21	Washer (2)
25.	02-1505-00	'O' Ring
26.	A23418-001	Gear Case Bottom w/bearings & seals
27.	03-1408-20	Washer

DISPENSING CYCLE

Gear Motor Drive — Control

Dispense cycle cam is attached to outboard end of gear motor shaft, turning clockwise at 6 revolutions per minute during the dispensing cycle. Inboard end of gear motor shaft is driving the dispensing bin rotor, on the inside of ice storage bin at the same time. The cam indent makes at one full revolution, stopping when micro switch roller drops in slot.

Micro Switch No. 12-0876-00. Starts - Stops after one full revolution.

A26398-021 Gear Motor — 1/5 HP motor-thermal reset. 6 RPM clockwise rotation on output shaft.

The operation of the dispensing circuit consists of a push button switch which when pushed energizes the coil of the 24 V. dispensing relay. This closes the contacts to furnish 115 VAC to the gear motor.

The motor turns the rotor and cam which lifts the arm of the cam switch to shut the leads to the dispensing switch. So the dispensing switch can be released and the machine will continue through the dispensing cycle until the cam switch travels down in the slot of the cam to open the shunting circuits.

The spout switch is connected in series with the 24 V. power to the relay coil. Should the spout be opened, power to the relay circuit is interrupted and the dispensing will stop.

HARVEST CYCLE

When the finishing timer reaches the last 3 minutes of its cycle, the machine defrosts with hot gas from the compressor. Electrically, the components in circuit are the compressor, fan motor, water pump, pressure control and both the water and hot gas solenoids.

The water flows from the solenoid valve, through the top of the freezing chamber, into the reservoir. The level in the reservoir is controlled by a stand pipe which directs the excess water to drain. This overflow "washes" the mineral concentration out of the reservoir area.

The refrigerant is now following the path of least resistance. The capillary tube restricts the normal route enough to force hot, uncondensed gas from the compressor to flow through the hot gas solenoid valve. From there it passes directly into the evaporator inlet, through the coils and down the suction line to the compressor.

The cubes, which are released by the hot gas, drop onto the inclined chute and into the bin. After the two minute defrost, the finishing timer switches the electrical circuit back through the cube size control and a new freezing cycle begins.

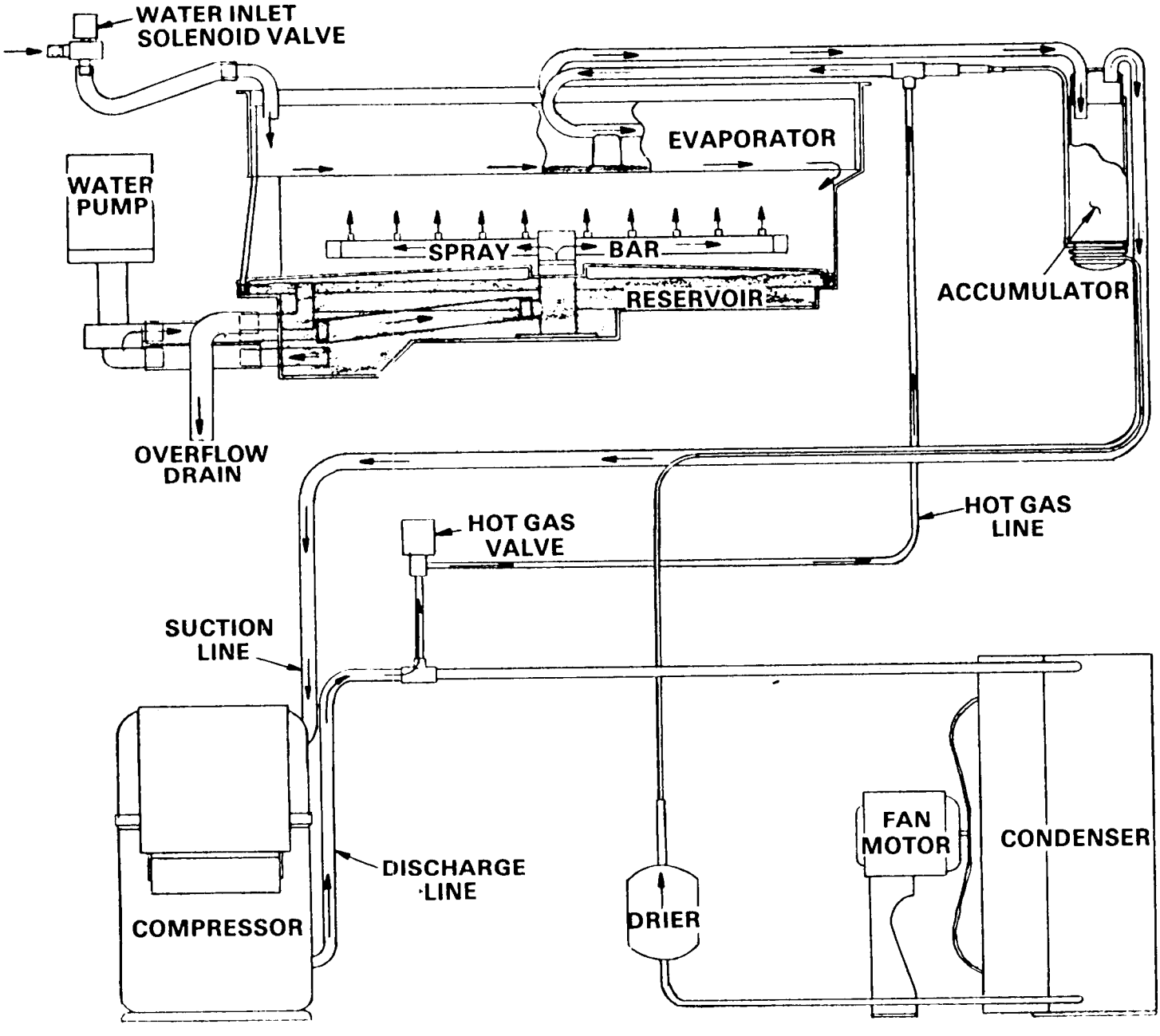

FREEZING CYCLE

As the freezing cycle starts, the electrical circuit is completed to the compressor, fan motor, recirculating water pump and sprayer tube.

The refrigerant is moving from the compressor into the condenser. Then it passes through the capillary tube to the evaporator. From there, it goes back to the compressor to complete a normal refrigeration circuit. Both the water and the hot gas solenoid are closed.

When the ice cubes are about 3/4 formed, the cube size thermostat switches the electrical circuit to the finishing timer. This timer has a 15 minute cycle of which 12 minutes are used to complete the cubes and the last 3 minutes for defrost.

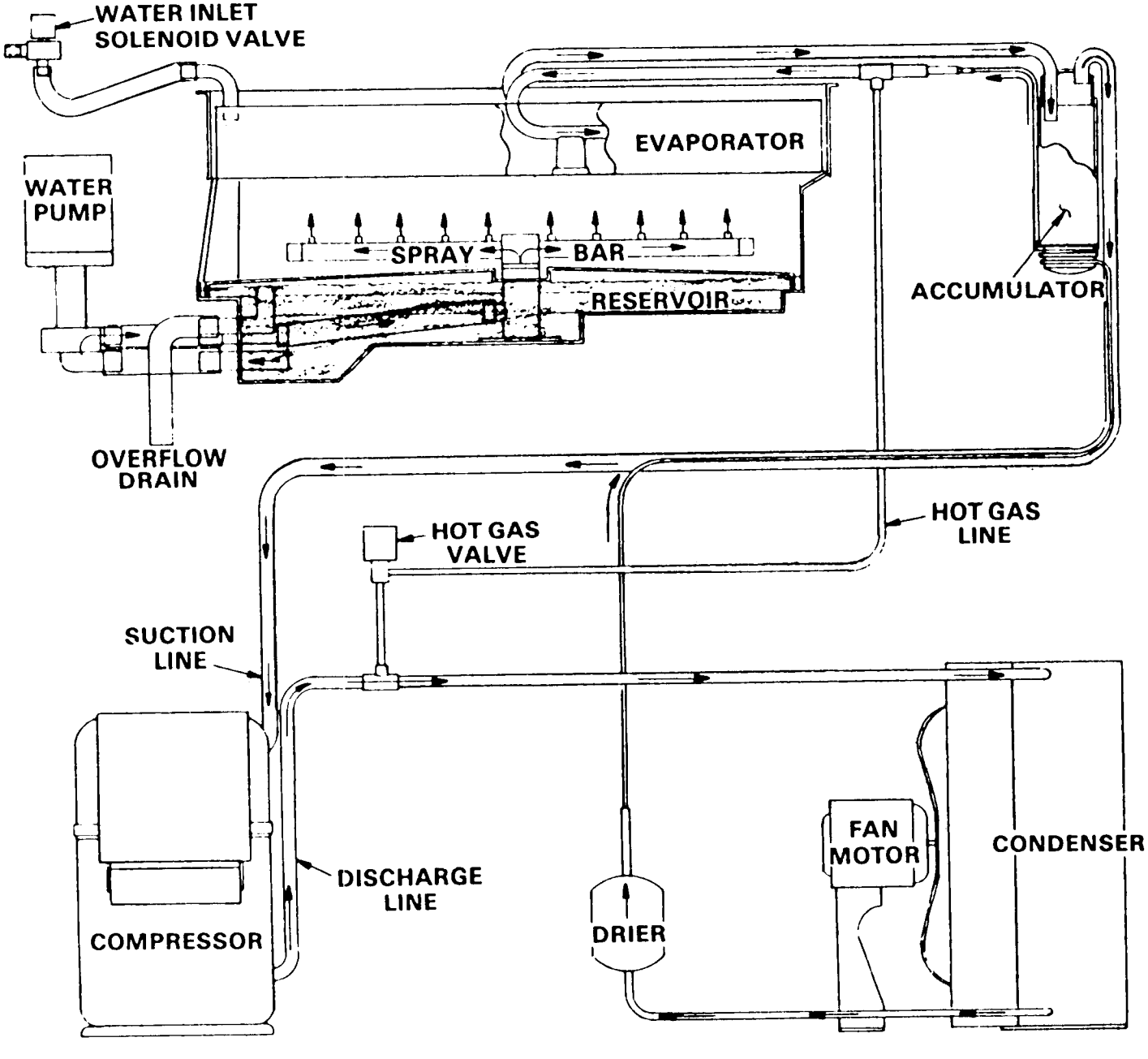

CONTROL BOX ASSY.

Water Cooled

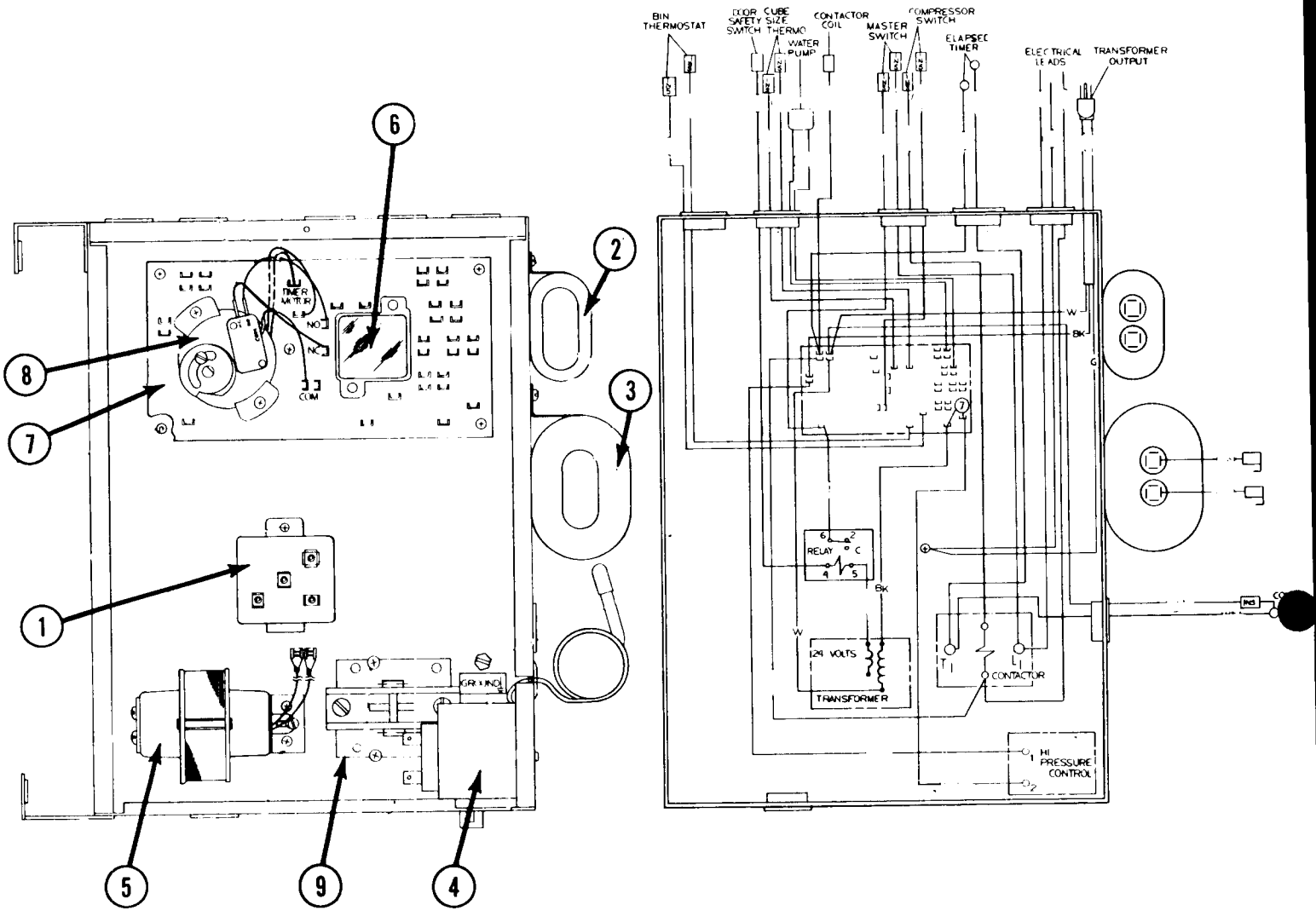

ITEM NO.	PART NO.	DESCRIPTION
1.	12-1873-01	Relay
2.	18-3701-01	Capacitor
3.	18-1902-17	Capacitor
4.	11-0357-03	Pressure Control
5.	12-1809-00	Transformer
6.	12-1879-02	Relay 3 PDT
7.	12-1912-01	Circuit Board
8.	12-1979-31	Timer
9.	12-2041-01	Contactor

WIRING DIAGRAM 115/60/1

Water Cooled Models

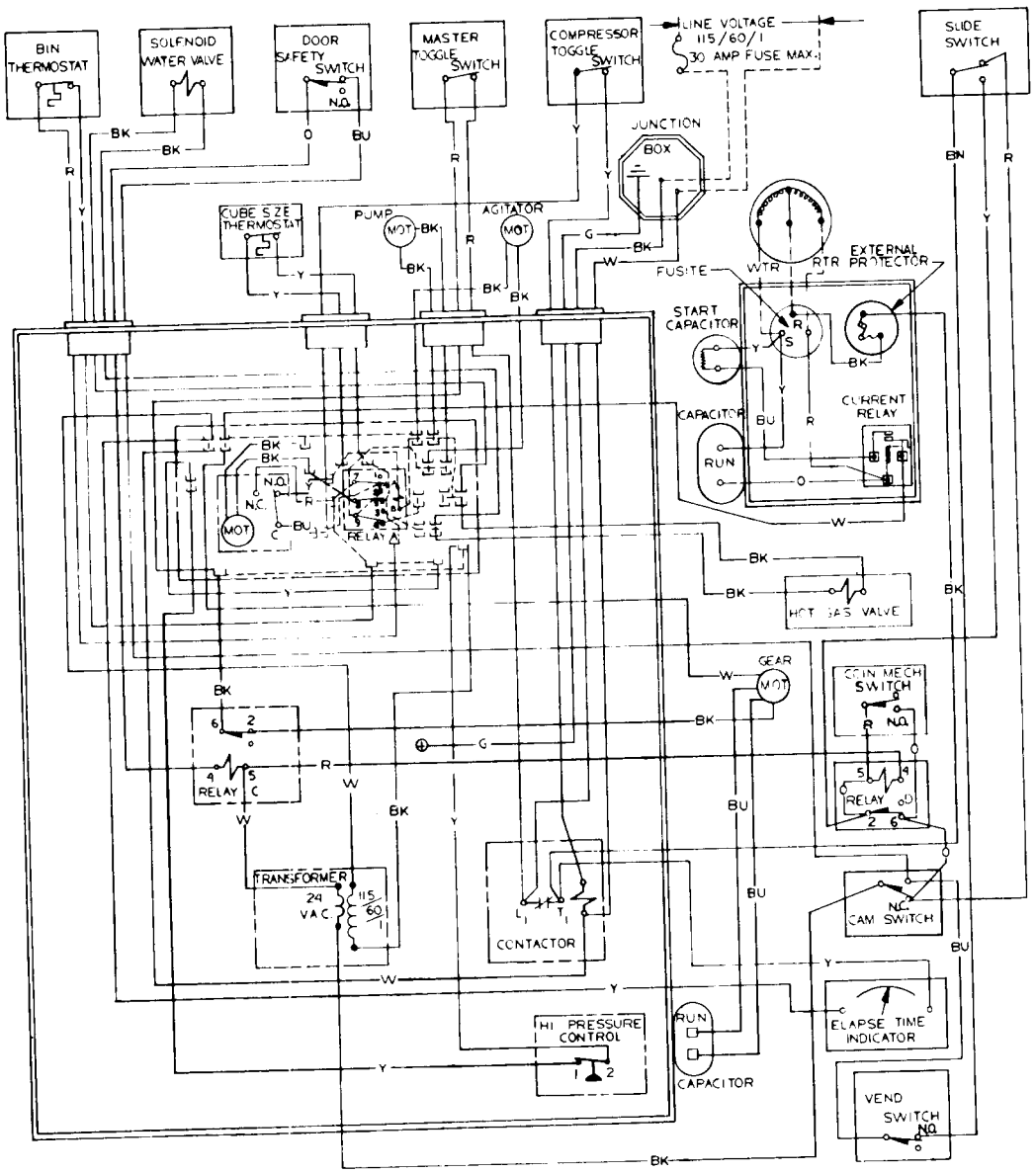

WIRING DIAGRAM / NOTE: SEE INSTRUCTION SHEET #17-1296-01 FOR WIRING DIAGRAM USED WITH KEY MECHANISM

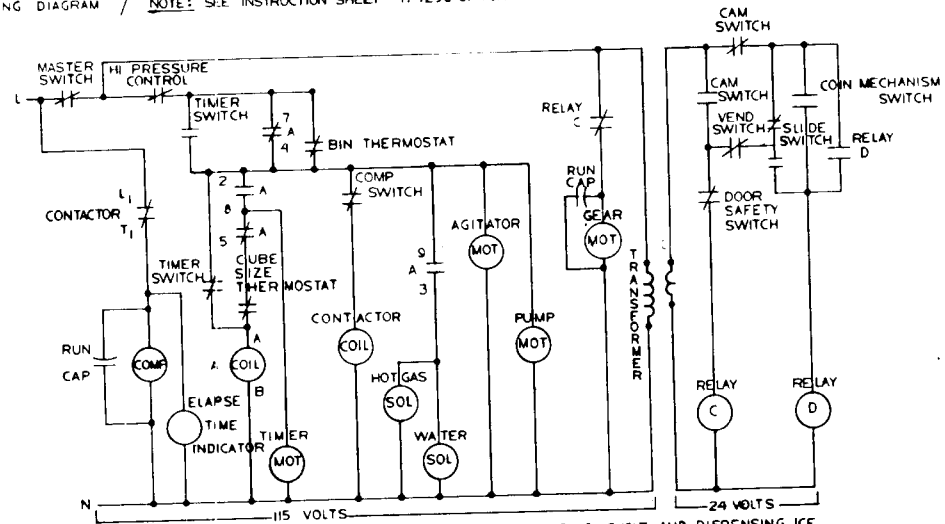

SCHEMATIC DIAGRAM WITH UNIT IN TIMED PORTION OF FREEZING CYCLE AND DISPENSING ICE

THIS UNIT MUST BE GROUNDED

A27046-001

CONTROL BOX ASSY.

Air Cooled

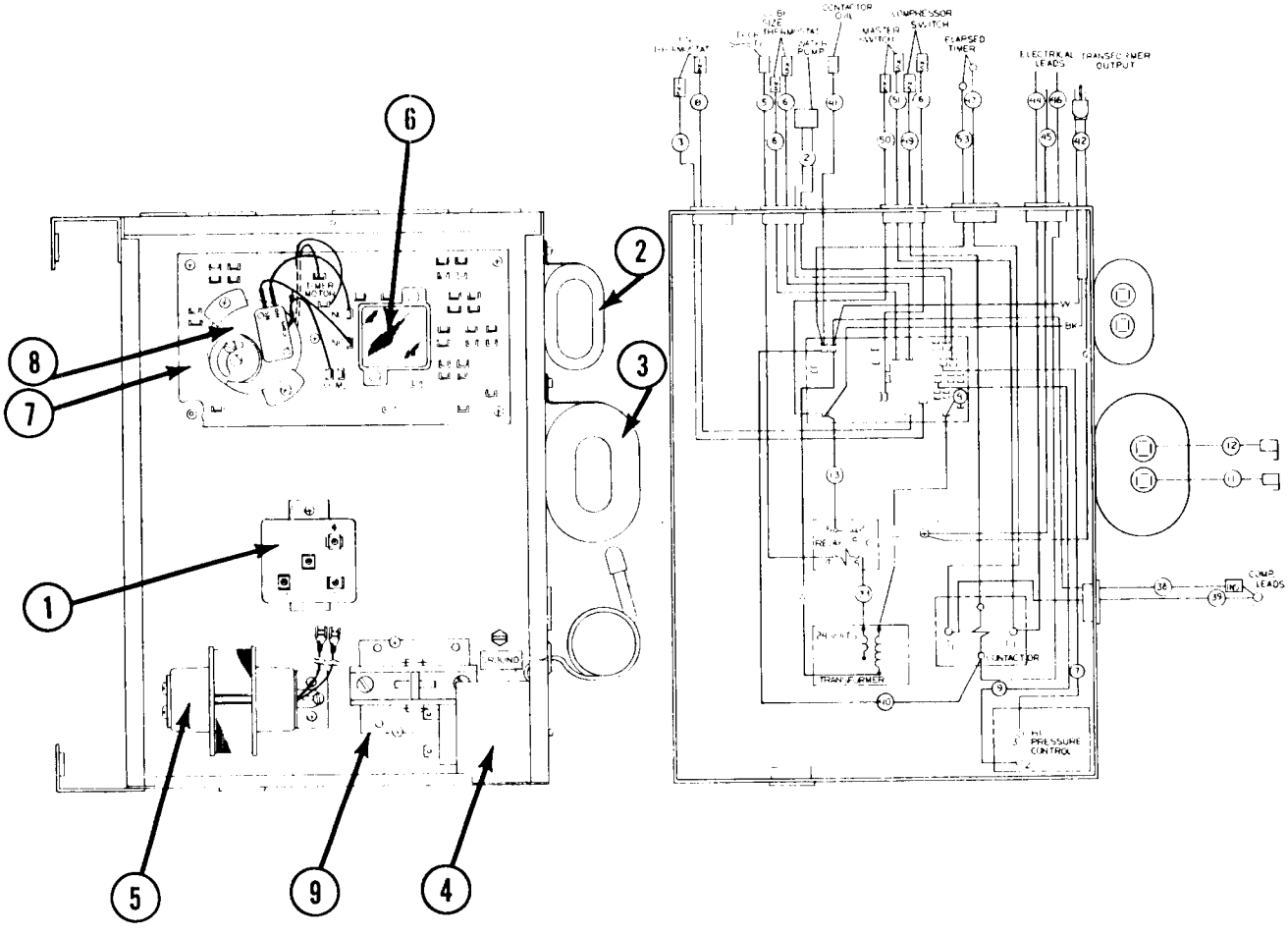

ITEM NO.	PART NO.	DESCRIPTION
1.	12-1873-01	Relay
2.	18-3701-01	Capacitor
3.	18-1902-17	Capacitor
4.	11-0352-01	Pressure Control
5.	12-1809-00	Transformer
6.	12-1879-02	Relay 3 P.D.T.
7.	12-1912-01	Circuit Board
8.	12-1979-31	Timer
9.	12-2041-01	Contactor

WIRING DIAGRAM
Air Cooled Models

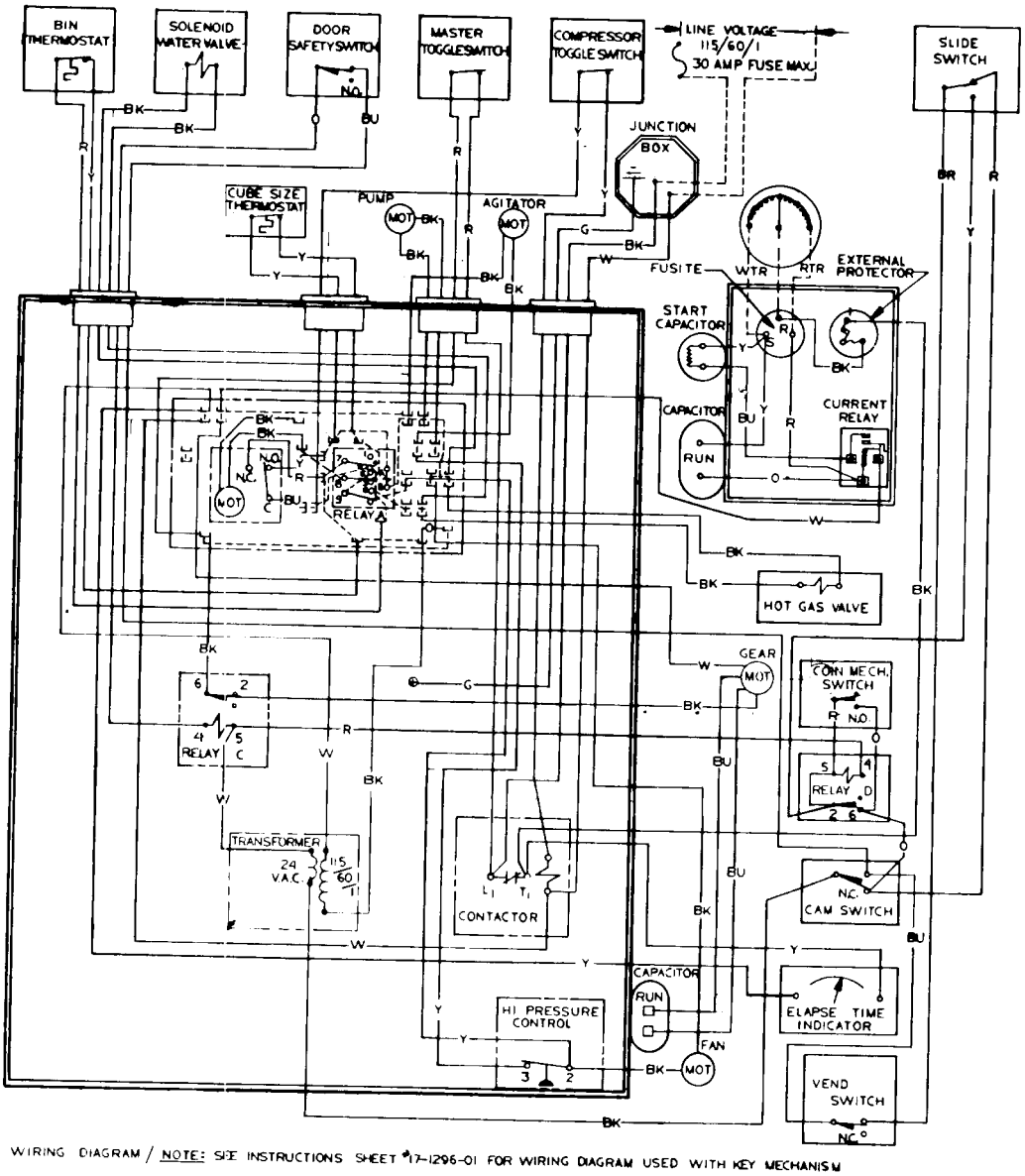

WIRING DIAGRAM / NOTE: SEE INSTRUCTIONS SHEET #17-1296-01 FOR WIRING DIAGRAM USED WITH KEY MECHANISM

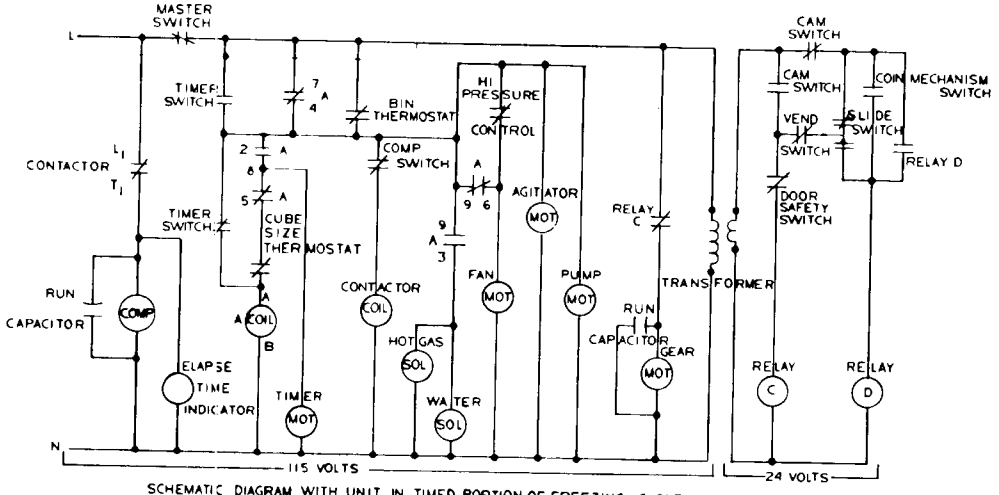

SCHEMATIC DIAGRAM WITH UNIT IN TIMED PORTION OF FREEZING CYCLE AND DISPENSING ICE

THIS UNIT MUST BE GROUNDED

A27040-001

POSSIBLE CAUSE	SUGGESTED CORRECTION
CUBES TOO LARGE	
Cube size control turned too cold	Turn setting on cube size control dial towards warmer
DECREASED ICE CAPACITY	
Inefficient compressor	Replace
High head pressure	Dirty condenser. Clean. Bad fan motor. Replace
Non-condensable gas in the system	Purge the system
Poor Air circulation or excessively hot location	Relocate the unit, or provide for ventilation by cutting openings
Overcharge of refrigerant	Correct the charge. Purge off slowly
Partially restricted cap tube	Purge & replace charge and drier
HOLE WASHED INSIDE CUBE	
Water over the top of the cube cups during harvest	Level unit
POOR HARVESTS	
Too short defrost time	Check and adjust harvest cycle Timer should be set at number 3
Restriction in incoming water	Check water feed line strainer and flow reducing valve. Do not remove flow control washers.
UNIT WILL NOT RUN	
Blown fuse in building supply	Replace fuse & check for cause of blown fuse
Switch in Off position	Turn switch to On Position
Inoperative master switch	Replace switch
Timer contacts open	Replace timer micro-switch
COMPRESSER CYCLES INTERMITTENTLY	
Low voltage	Check circuit for overloading. Check voltage at the supply to the building. If low, contact the power company.
Dirty condenser	Clean with vacuum cleaner, air or stiff brush. (Do NOT use wire brush.)
Air circulation blocked	All sufficient air space all around unit.
Inoperative condenser fan motor	Check to see if defective, if defective, replace
Non-condensable gases in system	Purge the system
CUBES TOO SMALL	
Cube size control set too high	Lower the setting. Turn towards colder
Partially restricted capillary tube	Blow charge, add new gas & drier, after evacuating system with suction pump
Moisture in system	Same as above
Shortage of water	See remedies for shortage of water
Shortage of refrigerant	Check for leaks and recharge
CLOUDY CUBES	
Shortage of water	See remedies for shortage of water
Dirty water supply	Use water softener or water filter
Accumulated impurities	Use SCOTSMAN Ice Machine Cleaner
SHORTAGE OF WATER	
Water spraying out through curtains	Hang curtain in proper position
Partial restrictions in water strainer	Clean Strainer
Water pump not opening	Check pump for proper operation
IRREGULAR SIZE CUBES AND SOME CLOUDY	
Some jets plugged	Clean jets
Shortage of Water	See Shortage of Water
Unit not level	Water overflowing air vent holes on low side burning cubes. Level as required
EVAPORATOR FREEZE UP	
Several spray jets plugged	Clean jets
Shortage of water	See shortage of water

PARTS LIST

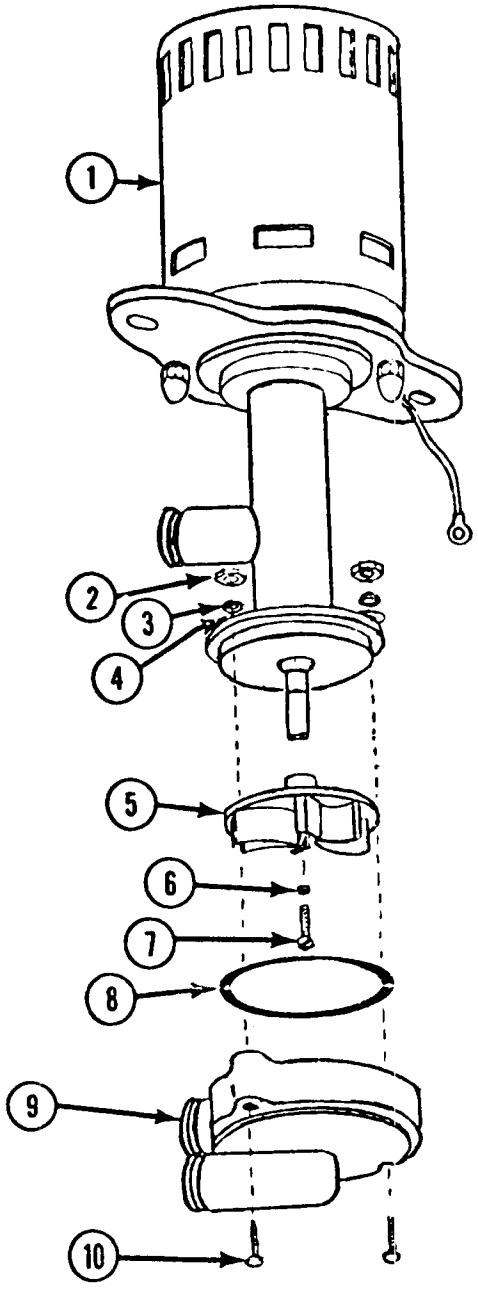

PUMP ASSY.

ITEM NO.	PART NO.	DESCRIPTION
1.	12-1930-01	Pump Assy. Complete
2.	12-1849-54	Nut (Hex)
3.	12-1849-55	Lock Washer
4.	12-1849-56	Washer
5.	12-1849-57	Impeller
6.	12-1849-58	Lock Washer
7.	12-1849-59	Screw
8.	12-1849-60	"O" Ring Seal
9.	12-1849-61	Pump Housing
10.	12-1849-62	Screw

MOTOR COMPRESSOR
Air and Water
3500 RPM — 115/60/1

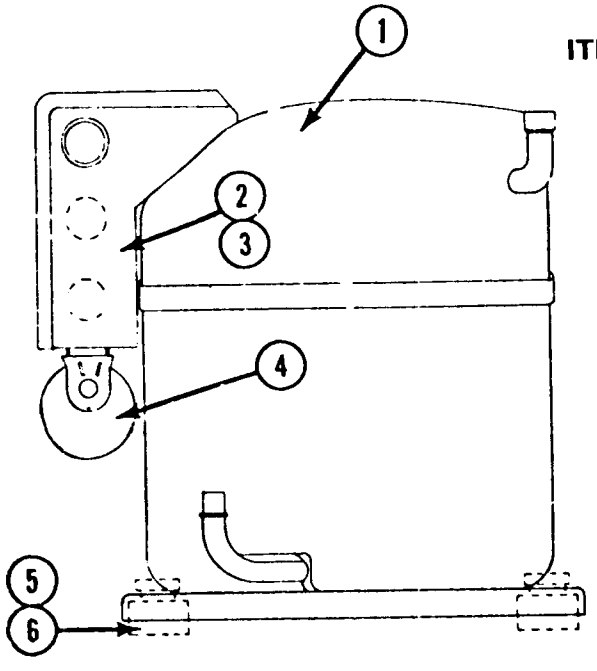

ITEM NO.	PART NO.	DESCRIPTION
1.	18-3900-01	Compressor Complete Cope. No. RSL2-0075-1AA-233
2.	18-2400-25	Overload Cope. No. 071-0127-06
3.	18-2410-00	Relay — Start Cope. No. 040-0098-01
4.	18-2420-00	Capacitor — Start Cope. No. 014-0008-69
5.	18-2200-27	Metal Sleeve Cope No. 027-0072-02
6.	18-2200-28	Rubber Mount Cope. No. 027-0073-00

15-0609-01

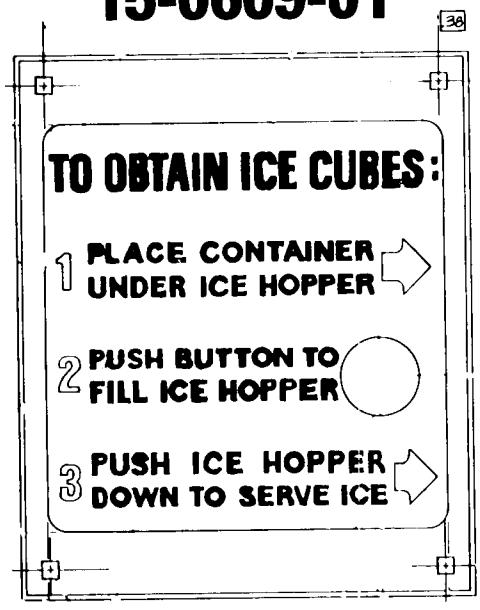

PUSH BUTTON OPERATION

15-0609-02

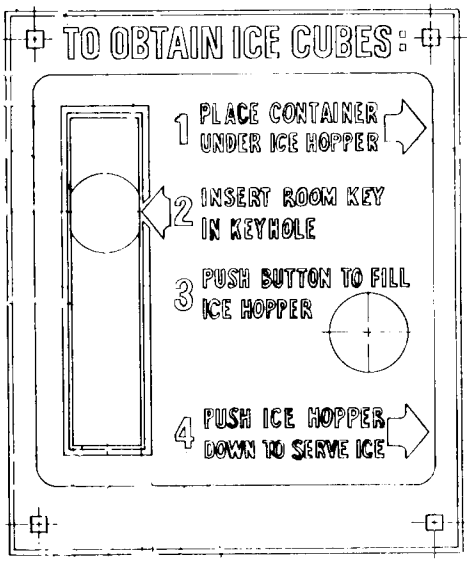

FOR KEY OPERATION

15-0609-03

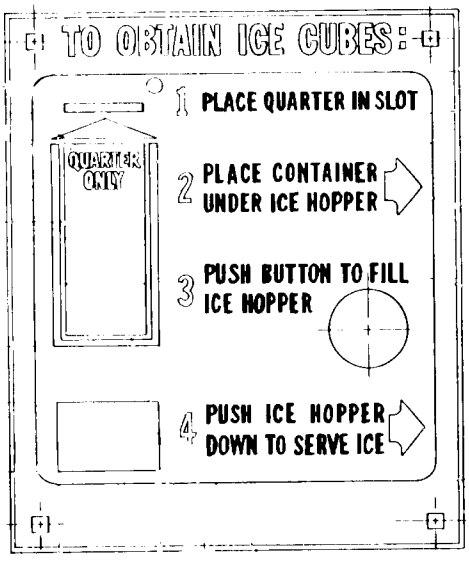

FOR COIN OPERATION

INSTRUCTIONS FOR CHANGING TO COIN MECHANISM OPERATION

Items Furnished: Items necessary for changing to coin operation are in the envelope inside the lower door.

Step 1 — Disconnect machine from power source.
Step 2 — Remove existing graphics plate and mount new graphics plate with square opening, using carriage bolts provided.
Step 3 — Move slide switch, located behind door, to "Coin Operation".

This completes the conversion.

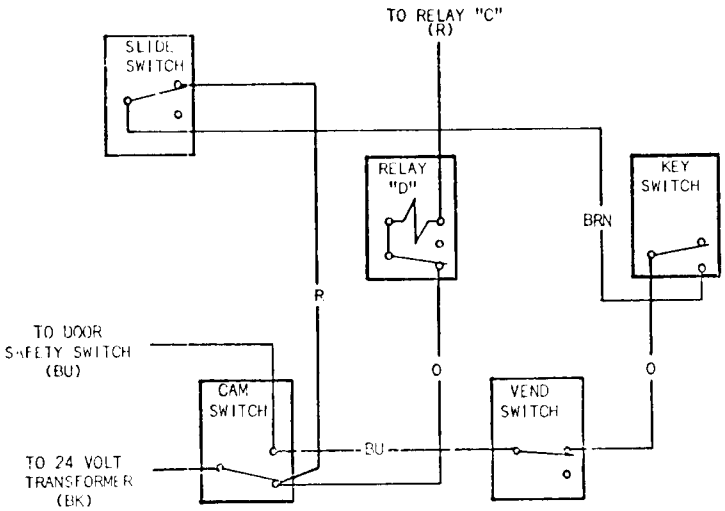

CD20 ICE DISPENSER WIRING DIAGRAM AND SCHEMATIC

FOR INSTALLATION OF DOOR KEY MECHANISM

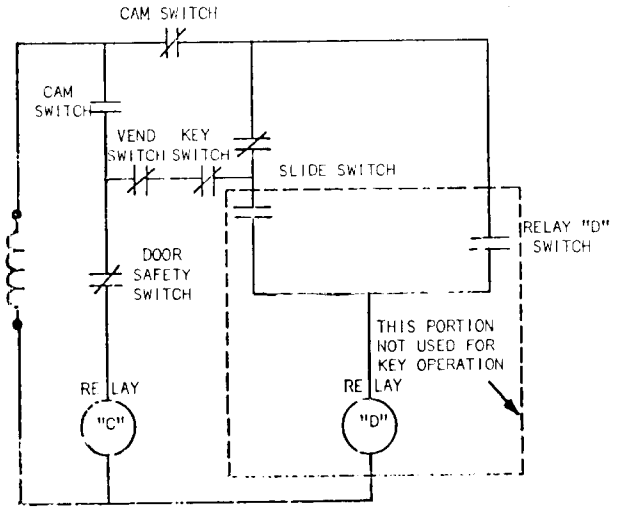

INSTRUCTIONS FOR INSTALLATION OF THE DOOR KEY MECHANISM ON CDM20 ICE DISPENSERS

Items Furnished: Items necessary for hook-up of these mechanisms are packed inside coin box on lower door assembly — graphics plates, wiring diagram and instructions are also inside lower door in envelope.

Step 1— Disconnect machine from power source.
Step 2 — Remove existing graphics plate and coin mechanism.
Step 3 — Mount new graphics plate with double "D" opening using new carriage bolts supplied.
Step 4 — Insert cylinder mount through double "D" from front of machine, add switch bracket and nut on inside of machine.
Step 5 — Remove switch, bolts and nut strap from coin mechanism. Bolt switch to switch bracket with electrical insulation between switch and bracket.
Step 6 — Move brown wire from vend switch to N.O. contacts on key switch.
Step 7 — Remove yellow wire that is connected to the slide switch and relay "D".
Step 8 — Remove the red wire that is connected to the coin switch and relay "D".
Step 9 — Remove the orange wire that is connected to the coin switch and relay "D". Use this wire from N.O. on the vend switch to common on the key switch.
Step 10 — Install key barrel, cut per attached sketch, in cylinder mount and secure with set screw.
Step 11 — See additional pages for sketches and wiring diagrams.
This completes the conversion.

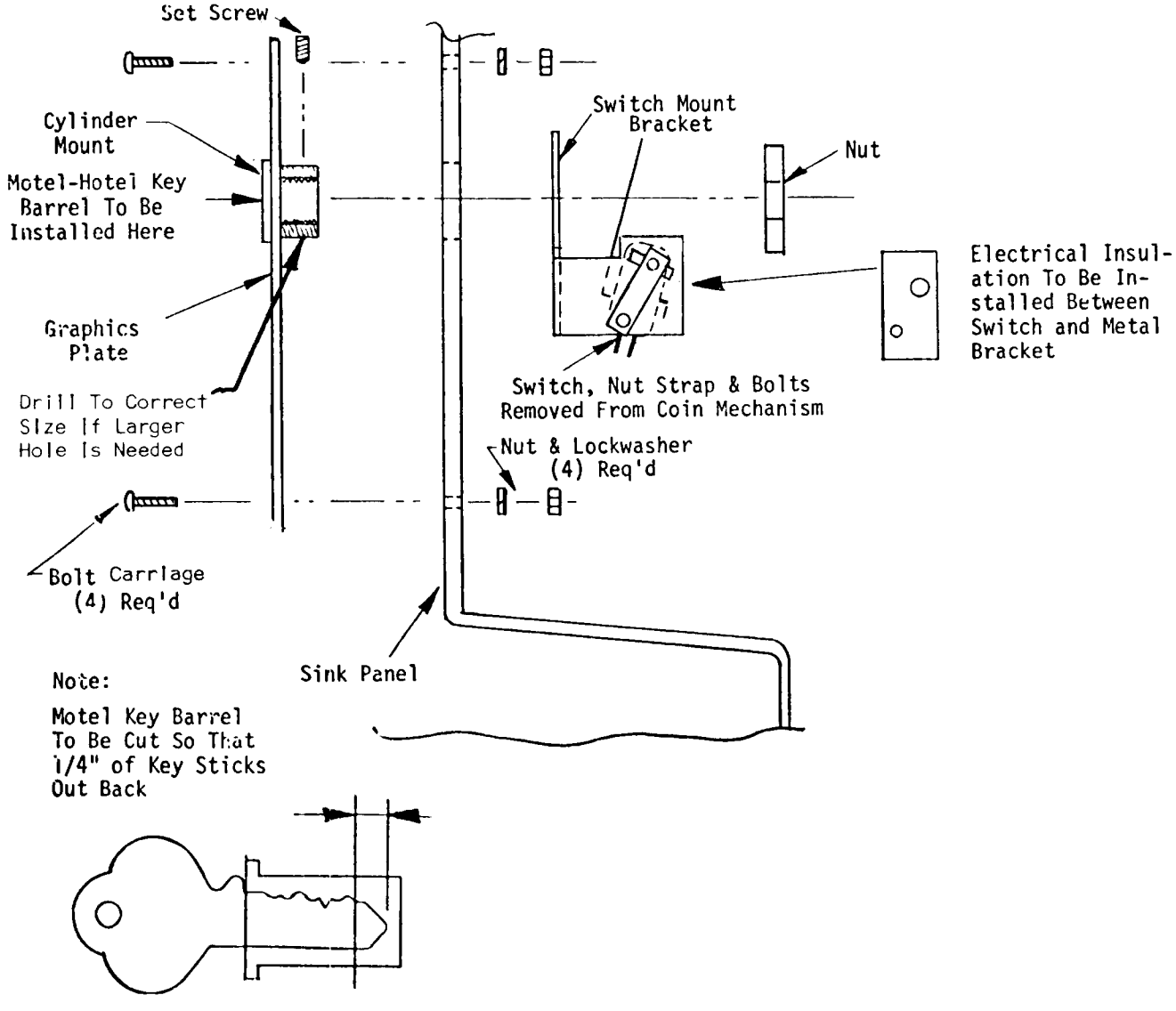

FUNCTIONAL PARTS AND MAINTENANCE

PART NAME: Agitator Drive Motor — Merkle Korff — 40 RPM.
NUMBER: A24743-001
FUNCTION: This motor thru drive linkage member, rocks spray bar (jet tube) assembly during freezing cycle causing a continuous washing action across ice cup molds. Correction to spray bar travel is made by unhooking threaded friction catch linkage arm on either end and adjusting accordingly.
SETTING: No settings on motor.
REPAIRABLE: Yes -to some extent. Not recommended although front bearings and windings could possibly be replaced by electric motor shop. Normally replace motors.
MAINTENANCE: Oil every six months or less as use indicates. Use SAE 20 oil. There is a gear case slotted screw which has to be removed to add or change oil in gear case proper. Drive linkage should be inspected to insure free movement with no bindings or drag on drive motor.

PART NAME: Time-Finishing Clock — Manufactured by Queen Products Div.
NUMBER: 12-1979-31
FUNCTION: Heart of cyclematic control system is the reverse acting cube size control, No. 11-345, and the time clock it actuates. All electrical components are connected to the time clock terminal board and are shunted by means of a double pole single throw micro-switch to either the freezing cycle or harvest cycle. Micro-switch is in turn actuated by a brass cam that is directly connected to the electric timer clock motor. Timer has 15 minute cycle, 12 minutes on freezing cycle after being cut on by low temperature control and 3 minutes on defrost cycle.

The cam assembly on the timer consists of two discs which can be adjusted to lengthen or shorten the defrost cycle.
SETTING: Normal setting from defrost is on No. 3 which is 3 minutes.
REPAIRABLE: No. Replace when inoperative.
MAINTENANCE: Check all electrical connections, blow contact points free of dust, dirt, etc.

PART NAME: Cube Size Thermostat
NUMBER: 11-345-01
FUNCTION: Reverse acting temperature control, closes on temperature decrease, opens on temperature rise. Control determines length of freezing cycle and by the same token, the cube size. A lower setting on control will produce larger cubes, a higher setting, smaller cubes. This control actuates time clock motor, Part No. 12-1979-31, which then takes over balance of freezing cycle (12 minutes) and also defrost period 3 minutes.
SETTING: Adjustable by screw driver slot.
REPAIRABLE: No. Replace when inoperative.
MAINTENANCE: Check electrical connections. Blow points free of dust, dirt, lint, etc.

PART NAME: Contactor
NUMBER: 12-2041-01
FUNCTION: Across the line contactor used to provide protection for hi voltage compressor only. Contactor is wired so any of the controls in pilot circuit such as bin thermostat will cause contactor holding coil to drop contact points when actuated. There are no overloads or resets on this control.
SETTINGS: Factory set, no adjustments necessary.
REPAIRABLE: No. Replace.
MAINTENANCE: Check control for loose electrical connections and blow free any dust, dirt, etc.

PART NAME: Hot Gas Solenoid Valve
NUMBER: 12-2023-03
FUNCTION: The hot gas solenoid valve assembly is comprised of two parts, the valve body and solenoid coil. These components are located on the discharge line of the compressor and activated by the finishing timer during the harvest cycle. As the finishing timer advances into Harvest, the solenoid coil, located on top of the valve body, is energized, thereby, lifting the valve stem within the valve body. This allows for the hot discharge gas from the compressor to by-pass the capillary tube and flow directly into the evaporator, releasing the cubes from the cube molds.
REPAIRABLE: No. Replace.
MAINTENANCE: Check electrical connections.

PART NAME: Water Pump — 3000 RPM
NUMBER: 12-1930-01
FUNCTION: Recirculating pump used to pump supply water in reservoir to jet tubes during freezing cycle, and harvest cycle.
SETTING: None.
REPAIRABLE: Yes, see parts breakdown.
MAINTENANCE: Flush out reservoir and pump intake with Scotsman ice machine cleaner.

PART NAME: Inlet Water Solenoid
NUMBER: 12-1434-01
FUNCTION: During freezing cycle this valve is closed.
During harvest or defrost cycle this valve opens and allows inlet water to pass thru flow control orfice into back of cup molds, performing the defrost.
SETTING: Factory set. Flow control rated at .75 GPM.
REPAIRABLE: Yes
MAINTENANCE: Flush control each six months.

PART NAME: Fan Motor
NUMBER: 12-1681-01
FUNCTION: Maintain proper head pressures by circulating air across air cooled condenser.
REPAIRABLE: No.
MAINTENANCE: None.

PART NAME: Water Regulating Valve (Water cooled models only)
NUMBER: 11-0198-02
FUNCTION: To maintain constant head pressures by regulating amount of incoming water thru water cooled condenser.
REPAIRABLE: No. However, valve can be flushed out.
MAINTENANCE: None.

PART NAME: Hermetic Motor Compressor.
NUMBER: 18-3900-01
FUNCTION: Circulates and retrives refrigerant throughout entire system.
MAINTENANCE: Keep clean and free of dust, grease, etc.

PART NAME: Spray Bar Assembly
NUMBER: A27288-001
FUNCTION: This tube acts as a water distributor for the ice cube cups. The tube has jets over its length. Supply water is forced into the jet tubes by the water pump and is directed upward in a continuous stream. Drive motor thru drive shaft moves the spray bar to get a full coverage spray.
REPAIRABLE: Yes, jets replaceable.
MAINTENANCE: All jets should be cleaned by running Scotsman Ice Machine Cleaner through unit. This step will eliminate hand cleaning. Partially plugged jets will produce cloudy or partial cubes. Wholly plugged jet will not produce a cube in cube cups it normally covers.

PART NAME: Spray Tube Drive Linkage.
NUMBER: Parts listed in parts section.
FUNCTION: Drives spray tube during freezing cycle to produce clear cubes and also drives spray tube during harvest cycle to assist defrost by agitating the ice cubes with water.
REPAIRABLE: No. Replace defective parts.
MAINTENANCE: None.

PART NAME: Relay.
NUMBER: 12-1879-02
FUNCTION: Relay is used as a by-pass on the bin thermostat when it tries to cut unit off on a full bin of cubes during a freezing cycle. This insures full cubes every time a harvest occurs and prevents short cycling on ice level control.
SETTING: Factory set.
REPAIRABLE: No. Replace when inoperative.
MAINTENANCE: Check electrical connections.

PART NAME: Bin Overfill Thermostat
NUMBER: 11-0399-01
FUNCTION: To automatically cut machine off when ice level in storage bin reaches thermobulb. Automatically starts machine when ice level in bin falls below bulb location.
SETTING: Factory set.
REPAIRABLE: No. Replace when inoperative or out of adjustment.
MAINTENANCE: Check capillary for cracks or worn spots due to vibration.
NOTE: Hold an ice cube against thermostat capillary tube to check operation of the control.

CLEANING INSTRUCTIONS FOR SCOTSMAN ICE MACHINE MODEL CD20

1. Open both front access doors.

2. Locate control box with time clock knob protruding through cover.

3. Put unit through a harvest cycle manually. This may be done by slowly turning time clock knob clockwise until you hear the micro-switch actuator arm click into cam slot.

4. Let unit finish cube harvest cycle and start into freezing cycle. This will be approximately 5 minutes after Step No. 3 has been carried out. At this time turn the compressor switch off.

5. The ice discharge opening is covered by a series of white plastic curtains which are free to swing out into the storage bin. Locate the water reservoir which is in the lower left corner directly behind the ice discharge opening. Pour 8 ounces (one bottle) of "Scotsman Ice Machine Cleaner" into the water reservoir.

6. Let unit operate normally for 10-15 minutes into the freezing cycle. No ice will be made because the motor compressor is not in operation.

7. At the end of this time, rotate the timer knob until the defrost cycle starts. Allow machine to run normally through this part of the cycle in the timer. When the defrost cycle has been completed, then rotate the knob manually through the freeze cycle until the defrost cycle starts again. Do this 3 times. Note that during freeze cycle, water is being sprayed into the cube forming cups.

8. Turn the compressor switch back on.

9. Check each new batch of cubes until they are clear and until acid taste has been removed from cubes

10. Put hot water in storage bin to melt the cubes. This cleans the drains with the same solution that has just cleaned the unit.

11. Clean storage bin with a long handled nylon bristle brush.

12. Damp wipe curtains and inside of storage bin.

13. Close all access doors.

14. Unit is now ready for continued automatic operation.

CLEANING INSTRUCTION

BIN-ROTOR AREAS

1. Vend all ice from CD20.

2. Remove left side panel, open front top and lower hinged panels (Refer to pages 10-11 of uncrating — set up instructions).

3. Rotor Removal.
Remove rotor by removing large nut located in the center of the rotor. Care must be taken in noting position of the ice discharge opening on the rotor in relation to cam notch on the gear motor when removing rotor.

4. Cleaning storage bin and rotor.
Scrub all areas of bin and rotor with ordinary cleaning powder, such as Bon-Ami and water. (Do not use cleaners that contain bleaching agents, as most of these are compounds of chlorine.) After cleaning, rinse thoroughly with clear water.

5. Rotor replacement.
Replace rotor in unit with ice discharge opening on the rotor positioned with cam notch on gear motor. Failure to retain same position as when removed will cause abnormal vend operations. Hand tighten large nut in the center of the rotor.

6. Close top and bottom front doors, lock in place with wing screws provided, replace left side panel.

CD20 CUBER SECTION

MAINTENANCE INSTRUCTION FOR SCOTSMAN CUBERS

THE FOLLOWING MAINTENANCE SHOULD BE SCHEDULED EACH (6) SIX MONTHS ON ALL SCOTSMAN CUBERS. CALL YOUR AUTHORIZED SCOTSMAN SERVICE DEPARTMENT.

1. Clean air-cooled condenser. This is to be done frequently with the machine shut off.
2. Clean water system and evaporator, water tank and screen, using Scotsman Ice
2. Machine Cleaner or equivalent.
3. Remove jet tube and manually clean jets.
4. Check curtain assembly.
5. Tighten all electrical connections.
6. Tighten all bolts.
7. Check water supply. Check water pressure. Clean water strainer.
8. Oil jet tubes drive motor. Use SAE 20 oil - 1 oil cup.
9. Oil Condenser fan motor. Punch sealed cap or remove screws where possible.
10. Check for refrigeration leaks.
11. Check for water leaks. Tighten drain line connections.
12. Check size and condition of cubes. Adjust as required.
13. Check bin thermostat setting by holding ice on bulb.
14. Check through two complete dispense cycles to insure all components are functioning
14. properly.

CD450

TABLE OF CONTENTS

GENERAL INFORMATION & INSTALLATION

Introduction 5
Unpacking 5
Location and Leveling 6
Electrical Connections 6
Water Supply and Drain Connections 6
Optionals — Kit Installation 7
Final Check List 7

OPERATING INSTRUCTIONS

Start Up 9

PRINCIPLES OF OPERATION

Freezing Cycle 11
Harvest Cycle 12
Dispensing System 12
Component Description 13

ADJUSTMENT AND REMOVAL AND REPLACEMENT PROCEDURES

Adjustment of the Bin Thermostat Control 15
Adjustment of the Cube Size Control 15
Adjustment of the Timer & Switch Assembly .. 16
Adjustment of the Water Regulator Assembly — Water-Cooled Models 16
Removal and Replacement of the Agitator Drivemotor Assembly 17
Removal and Replacement of the Compressor Assembly 17
Removal and Replacement of the Condenser Assembly — Air-Cooled Models 17
Removal and Replacement of the Condenser Assembly — Water-Cooled Models 18
Removal and Replacement of the Dryer 18
Removal and Replacement of the Drivemotor Assembly 18
Removal and Replacement of the Fan Motor Assembly — Air-Cooled Models 19
Removal and Replacement of the Freezing Chamber Assembly 19
Removal and Replacement of the Grill and Drain Tray Assembly 21
Removal and Replacement of the Water Pump Assembly 21
Removal and Replacement of the Water Regulator Assembly — Water-Cooled Models 21

TABLE OF CONTENTS (Continued)

MAINTENANCE & CLEANING INSTRUCTIONS

General 22
Icemaker 22
CLEANING — Icemaker 22
Sanitizing 23

SERVICE DIAGNOSIS

Icemaking — Refrigeration 25

LIST OF ILLUSTRATIONS

Specifications 3
Installation Practice 8
Timer Cam Positions 9
Freezing Cycle 11
Harvest Cycle 12
Adjustment of the Temperature Control 16
Adjustment of the Timer & Switch Assembly .. 17
Freezing Chamber 20
START Positions for the Freeze/Harvest Cycles 23

THIS PAGE
INTENTIONALLY
LEFT BLANK

This icemaker has been engineered to our own rigid safety and performance standards. The National Sanitation Foundation (NSF) seal, signifies that it is listed with the NSF and that it complies with the materials and construction standards of the NSF. In addition, the Underwriters Laboratories, Inc., (UL) Listing Mark signifies that its construction and design have been inspected and tested by them. NSF and UL inspectors also periodically examine production icemakers at the factory, to assure continued compliance.

To retain the safety and performance built into this icemaker, it is important that installation and maintenance be constructed in the manner outlined in this manual.

SPECIFICATIONS
MODEL CD450

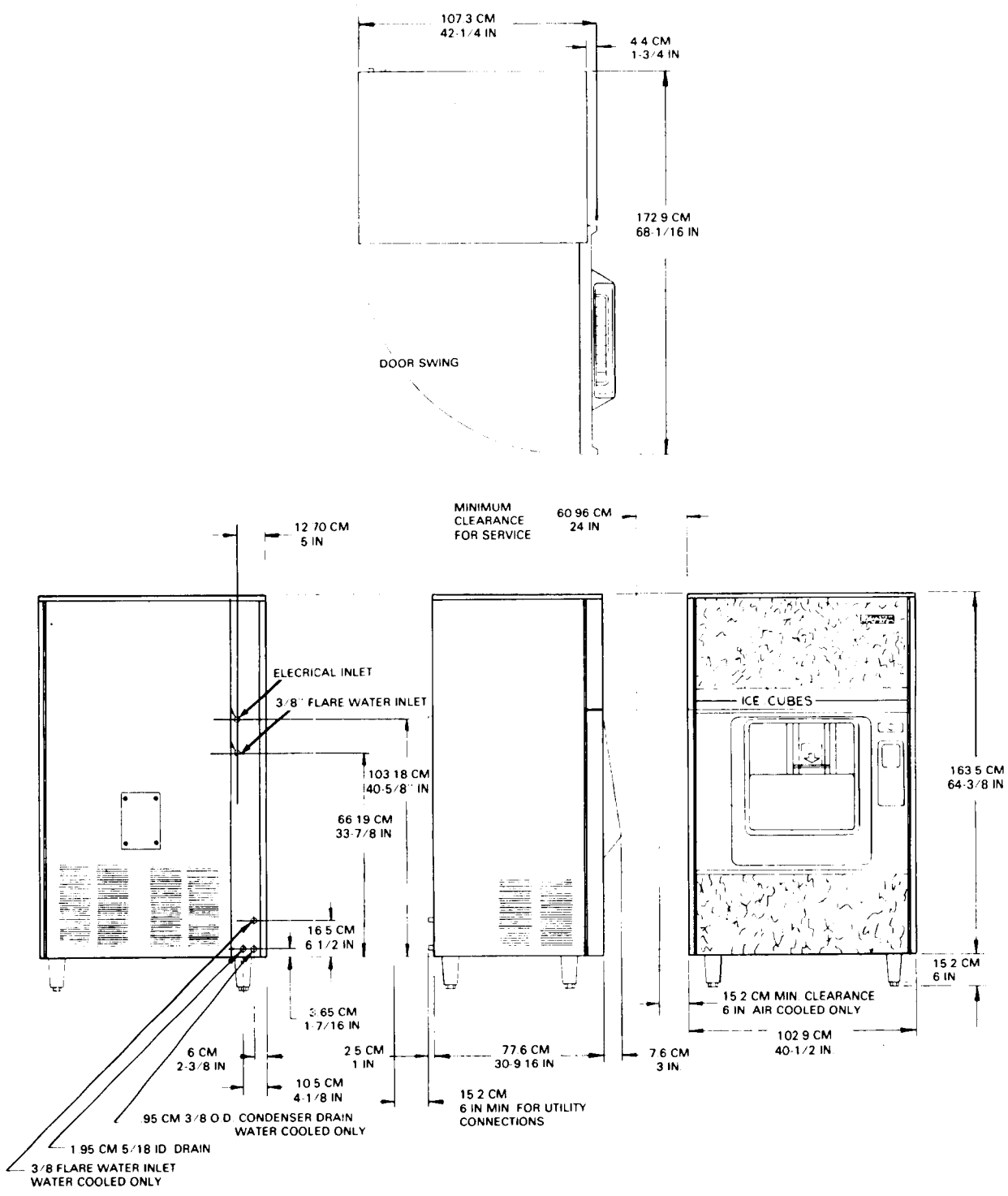

SPECIFICATIONS (Cont'd)
MODEL CD450

MODEL CD450

Bin Storage: 150 lbs.
Air-Cooled Model: CD450MA-1A
Water-Cooled Model: CD450WA-1A
Electrical: 115/60/1
Est. Ship. Wt.: 600 lbs.

OPTIONAL LEG KIT

KLP2E: 6-inch metal legs, Black Enamel.

KLP2S: 6-inch metal legs, Nickel Plated.

OPTIONAL KITS

KLACD20: Low ambient heater.

A27654-001: Portion plate kit, converts ice portion dispensed from 1-3/4 lbs. to 1-1/8 or 7/8 lbs.

EASY ACCESS SERVICE PANELS

OPTIONAL KITS

KCM4: Includes SCOTSMAN coin mechanism, front access security lock, coin box, faceplate and SOLD OUT indicator light. Single quarter dispense.

KCM5: Adapter Kit only, to mount COIN MECHANISM, Inc. 25¢, 50¢, 75¢ accumulator Model 2022-30-C3, or non-accumulator Model 2022-30-C4. Includes faceplate, relay box, electrical circuit for coin block solenoid, labels. Coin mechanisms purchased from COIN MECHANISMS, Inc., not from SCOTSMAN.

KKM1: Key operated kit: includes faceplate, cylinder holder and SOLD OUT indicator light.

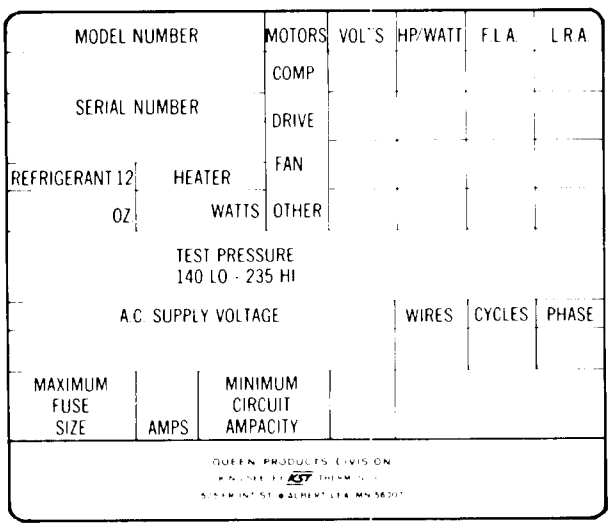

SEE NAMEPLATE shown at left, located on upper left part of rear panel, for electrical and refrigeration specifications.

Open Upper Door Assembly to locate the Model Serial Number plate, shown below, on the chassis front left vertical upright panel, just below the ON-OFF toggle switches.

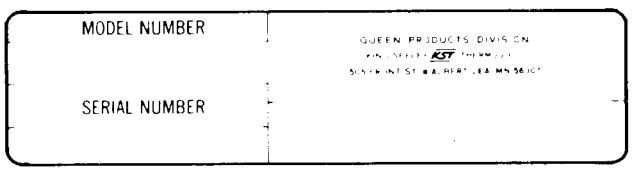

We reserve the right to make product improvements at any time. Specifications and design are subject to change without notice.

SECTION I

GENERAL INFORMATION & INSTALLATION

I. INTRODUCTION

This manual provides the specifications and the step-by-step procedures for the installation, start-up, operation, and the maintenance and cleaning for the SCOTSMAN Model CD450 Cube Ice Dispenser.

The Model CD450 Cube Ice Dispensers are quality designed, engineered and constructed, and thoroughly tested icemaking and dispensing systems, providing the utmost in flexibility to fit the needs of a particular user. Separate sections detail more specifically: General Information & Installation; Start Up Operation; Principles of Operation; Adjustment and Removal and Replacement Procedures; Maintenance and Cleaning Instructions; Service Diagnosis; Wiring Diagrams; and, the Illustrated Assemblies and Parts Lists.

All Model CD450 Cube Ice Dispensers are shipped from the factory with a Push Button Switch installed and a full Cover Plate covering the opening in the Sink and Dispenser panel, to the right of the Ice Chute. Three optional kits are available and any kit(s) ordered will be shipped with the Dispenser, to be installed at the time selected by the user and location service personnel, in accordance with kit installation instructions.

DESCRIPTION

An attractive cabinet of Sandalwood enamel finish, cork pattern vinyl upper Door and lower Door bottom panel and a Sienna Accent strip on the upper Door. Also, an optional stainless steel cabinet finish is available. Both cabinets have up-to-date styling and easily removable panels for easy access to electrical and mechanical components.

SEALED REFRIGERATION SYSTEM

To provide quiet efficient operation of the icemaker, Compressor motor is internally spring-mounted. The Compressor motor is covered by a five year warranty.

SELF-CONTAINED STORAGE BIN

These Dispensers store their own ice supply in a specially designed rotor bin and automatically dispenses a controlled portion of SCOTSMAN ice cubes through a transparent sealed ice delivery chute by gravity, upon demand by push button, key or coin operation.

OVERALL DIMENSIONS

The standard overall dimensions of the Dispenser depth, height, etc., allows the Dispenser to be installed in harmony with the existing counter equipment.

II. UNPACKING AND INSPECTION

1. Call your authorized SCOTSMAN Distributor or Dealer, for proper installation. He's listed under ICE MAKING EQUIPMENT AND MACHINERY in the Yellow Pages of the telephone book.
2. Visually inspect the exterior of the shipping container and skid and any severe damage noted should be reported to the delivery carrier; and a concealed damage claim filed subject to internal inspection, with the carrier representative present.
3. Remove shipping tape from doors, panels and grill, removing plug lock keys and 5/16-inch Allen hex key for unlocking and removing Left Side Panel.
4. Unlock and remove both plug locks from upper part of the Left Side Panel; then, insert the 5/16-inch Allen hex key in the front hex socket screw and rotate the hex key 1/2-turn COUNTERCLOCKWISE, to UNLOCK position.
5. Use the Allen hex key to remove the rear hex socket screw; then, pull open the left end of the Upper Door and next pull top of the Left Side Panel out slightly and LIFT the Panel UP and OFF of the alignment pins, at the bottom of the Cabinet and remove the Panel.
6. Unscrew two Wing Screws located behind the vertical front panel part of the Chassis, which attach the left end of the Upper Door and Lower Door assemblies to the Chassis. Rotate both doors to OPEN, left to right.
7. Remove all internal support packing and shipping tape and inspect for any concealed damage. Notify carrier of any concealed damage claims, as stated in step 2, above.
8. Check that refrigerant lines do not rub or touch lines or other surfaces, and that fan blades, if any, move freely.
9. Check that the Compressor is snug on all mounting pads.
10. Use clean damp cloth or disposable paper wiper to wipe clean all interior surfaces of the Dispenser and the exterior surfaces of the Cabinet.
11. SEE NAMEPLATE located on the upper left rear vertical panel part of the Chassis, just above the inlet water tube fitting and check that the location source voltage corresponds with the voltage specified on the nameplate.

CAUTION

Improper voltage supplied to the icemaker will void your parts replacement program.

12. Fill in all spaces in the Manufacturer's Registration Card including: Model Number and Serial Number taken from Model-Serial Nameplate located on the upper part of the vertical front panel part of the Chassis. Forward the completed, self addressed, registration card to the SCOTSMAN factory.

III. LOCATION AND LEVELING

CAUTION

This Cuber Dispenser is NOT designed for outdoor installations where air temperatures are below 50-degrees F., or above 100-degrees F. and the water temperature is below 40-degrees F. or above 100-degrees F. Extended periods of operation at temperatures exceeding these limitations will constitute misuse, under the terms of the SCOTSMAN Manufacturer's limited warranty, resulting in LOSS of warranty coverage.

1. Position the Dispenser in the selected permanent location.

NOTE

Prior consideration for location site shall include:

1. *Minimum room temperature 50-degrees F. and maximum room temperature 100-degrees F.*
2. *Water inlet temperatures: Minimum 40-degrees F. and Maximum 100-degrees F.*
3. *Well ventilated location for Air-Cooled model, advising user to frequently clean Condenser, located directly behind the Sink Assembly.*
4. *SERVICE ACCESS: Adequate space for all service connections, through the rear of the Cabinet. A six-inch minimum clearance at rear, side and front louvered panels, for routing cooling air drawn into and exhausted out of the compartment, to maintain proper condensing operation on Air-Cooled Models. A 15-inch clearance at the LEFT side for service access.*

2. Level the Dispenser in both the left-to-right and front-to-rear directions.

IV. ELECTRICAL CONNECTIONS

WARNING

This icemaker-dispenser requires a SOLID EARTH GROUND that meets the national, state and local electrical code requirements. To prevent possible SEVERE ELECTRICAL SHOCK INJURY to individuals, or extensive damage to equipment, install an approved SOLID EARTH GROUND wire to the icemaker-dispenser. SEE wiring diagram.

SEE NAMEPLATE for current requirements to determine wire size to be used for electrical hookup.

Be certain the Dispenser is connected to its own electrical circuit and individually fused. The maximum allowable voltage variation should not exceed ten percent of the nameplate rating, even under starting conditions. Low voltages can cause erratic operation and may be responsible for serious damage to the overload switch and motor windings.

All external wiring should conform to the national, state and local electrical code requirements. Usually an electrical permit and services of a licensed electrician will be required.

V. WATER SUPPLY AND DRAIN CONNECTIONS

A. AIR-COOLED MODELS: The recommended supply line is 3/8-inch O.D. copper tubing. Connect to cold water supply line with standard plumbing fittings, with a shutoff valve installed in an accessible place between the water supply and the Dispenser.

Install the optional mesh strainer with the cleanout plug down. Locate the strainer in the water supply line, between the shutoff valve and the Dispenser with the arrow on the strainer, in the direction of the water flow. The strainer protects against large particles of rust, scale, etc., which may be loosened in the water supply pipe, at the time of installation.

CAUTION

DO NOT operate this unit when the water supply is OFF, or is below 20 PSI, the recommended water pressure. Position the Master Switch to the OFF position, until proper water supply is resumed.

The Icemaker in this Dispenser will not operate properly when water supply temperatures are below 40-degrees F. or above 100-degrees F.

B. WATER-COOLED MODELS: On Water-Cooled models a separate connection, to the Condenser is required. A 3/8 inch O.D. copper tubing is provided for a separate water inlet line to be connected and a separate drain line to be connected.

NOTE

The WARNING in the text above for the Air-Cooled models equally applies for the Water-Cooled models. In both type installations, water supply must be installed to conform with local plumbing codes. In some cases, a plumbing permit and services of a licensed plumber will be required.

C. DRAIN CONNECTIONS: All drains are gravity type and must be 1/4-inch fall per foot on horizontal runs. The drains to be installed to conform with local code. The drain receptacle should be an open, trapped or vented construction.

Recommended Bin drain is 5/8-inch O.D. copper tubing, should be vented and run separately. Run a separate drain line to 3/8-inch O.D. drain tube from the Water-Cooled Condenser, on Water-Cooled models.

VI. OPTIONALS — KIT INSTALLATION

Install kits ordered with the Model CD450:

1. KCM5 — When installed, converts CD450 into a coin-operated ice dispenser. All parts included in Kit except the Coin Mechanism, order from:

   COIN MECHANISM, INC.
   817 Industrial Drive
   Elmhurst, Ill. 60126
   (312) 279-9150

   Select one of two Coin Mechanisms listed below:

   P/N 2022-30-C4: A 24-volt Coin Mechanism WITHOUT ACCUMULATOR. Single quarter dispense.

   P/N 2022-30-C3: A 24-volt Coin Mechanism WITH ACCUMULATOR. Multiple quarter dispense.

2. KCM4 — When installed, converts CD450 into a coin-operated ice dispenser, requiring a single quarter. All parts included in the Kit, including coin mechanism.
3. KKM1 — When installed, converts CD450 into a key-operated ice dispenser, such as a motel key. All parts included in the kit, except the Key Cylinder and Key, furnished by motel.
4. KLACD20: Low ambient heater.
5. A27654-001: Portion plate kit, converts ice portion dispensed from 1-3/4 lbs. to 1-1/8 or 7/8 lbs.

VII. FINAL CHECK LIST

1. Is the Dispenser level? (IMPORTANT)
2. Is the Dispenser in a room where ambient temperatures are a minimum of 50-degrees F. all year around?
3. Is there at least six inches clearance behind and around the cabinet for proper air circulation? And 15 inches clearance on LEFT side for service access?
4. All shipping tape, support packing, etc., been removed?
5. Have all kits, if any, been installed and tested?
6. Have all electrical and piping connections been made?
7. Has the electrical power supply wiring been properly connected and the voltage tested and checked against the nameplate rating? Has proper Chassis-to-earth ground been installed?
8. Is the water supply line shutoff valve installed and opened and has the inlet water supply pressure been checked to ensure a minimum of 20 PSIG?
9. Have the Compressor hold down bolts been checked to be sure the Compressor is snug on the mounting pads?
10. Check all refrigerant lines and conduit lines to guard against vibration and possible failure?
11. Has the Dispenser been wiped clean, with clean damp cloth or disposable paper wipers, including the storage bin?
12. Has the owner/user been given the User Manual and instructed on how to operate the icemaker-dispenser and the importance of periodic maintenance?
13. Has the owner/user been given the name and telephone number of the Authorized SCOTSMAN Distributor or Service Agency serving him?
14. Has the Manufacturer's Registration Card been properly filled out? Check for correct Model and Serial Numbers from nameplate; then, mail the completed card to the SCOTSMAN factory.

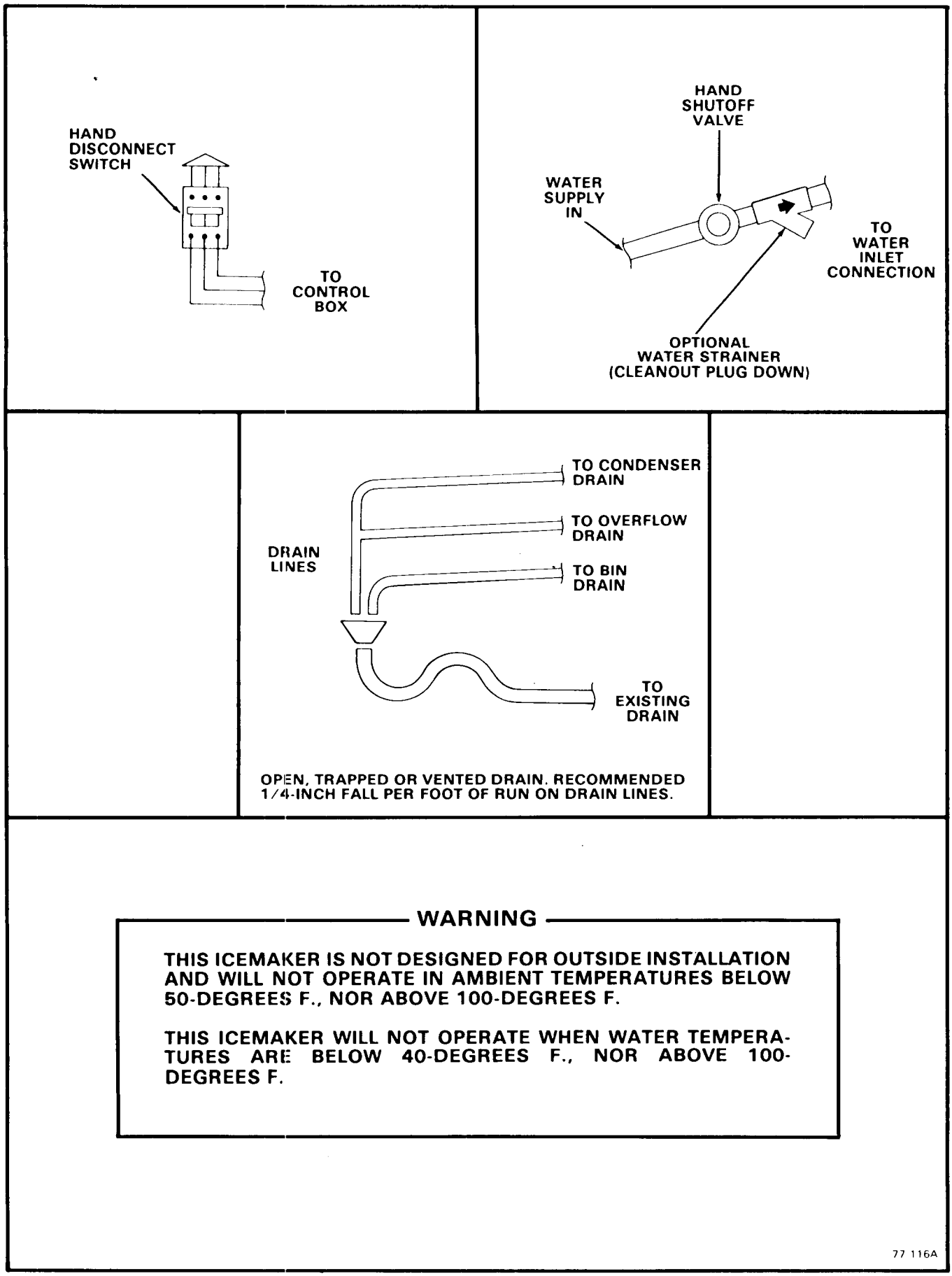

Figure 1-1. Installation Practice.

SECTION II
OPERATING INSTRUCTIONS

I. START UP

1. Unlock and remove Lock Plugs, two places, at the top of the Left Side Panel.
2. Using Allen wrench provided, remove the Hex Socket Screw inside the top left hole, in the top of the Left Side Panel. The Screw will remain inside after it is unscrewed.
3. Rotate Allen wrench provided, 1/4-turn COUNTERCLOCKWISE, to unlock the right top part of the Left Side Panel.
4. Pull the top of the Left Side Panel OUT slightly, away from the Cabinet, then lift the Panel UP and OFF of the two alignment pins in the Cabinet, at the bottom.
5. Pull out the left end of the Upper Door Assembly, and rotate the Door to OPEN, left to right.
6. Unscrew two Wing Screws located behind the vertical front panel part of the Chassis, attaching the Lower Door Assembly to the left side of the Cabinet; then, rotate the Door to OPEN, left to right.
7. OPEN the water inlet line shutoff valve.
8. Check that the Master ON-OFF toggle switch and the Compressor ON-OFF toggle switch are OFF, on the front, upper left panel strip of the Chassis.
9. Rotate the shaft of the Timer & Switch Assembly, protruding through the hole in the front Cover of the Control Box, CLOCKWISE, to start the Timer for filling the reservoir sump, in the Freezing Chamber, with water. The control Box is located in the front, left lower section of the Chassis, to the left of the Drivemotor.

NOTE

Slowly rotate the shaft CLOCKWISE, until the actuator arm on the microswitch drops off of the outer cam, into the cam slot. An audible click can be heard, but in a noisy area, look at the cam and switch to observe the event. See A, Figure 2-1.

10. Move the Master ON-OFF toggle switch, to the ON position.

NOTE

Observe that the Water Inlet Solenoid Valve OPENS and inlet water flows from the valve through tubing to the top of the Freezing Chamber, where the water flows around the inverted ice cube cups and drains through holes in the Platen Assembly and into the Reservoir. Excess water in the Reservoir is overflowed through the stand pipe. This cycle will take about three minutes, then the Timer will CLOSE the Water Inlet Solenoid Valve.

11. Repeat step 9.

NOTE

During START UP, advancing two harvest cycles, with the Compressor OFF, allows a check that: the Water Inlet Solenoid Valve operates; the inlet water can be observed flowing; the Reservoir is filled in the preparation for the freezing cycle, and; checks the function of the overflow and drain.

12. When the second harvest cycle is completed, move the COMPRESSOR ON-OFF toggle switch to the ON position.
13. Check that the ends of all the plastic parts of the Curtain Assembly hang down and do not swing back inside the freezer, blocking ice cubes or catching and stopping spray bar.
14. Check operation of the Freezing Cycle:
    a. Compressor is in operation.
    b. Agitator Drive Motor Assembly is operating and the Spray Bar oscillates back and forth.

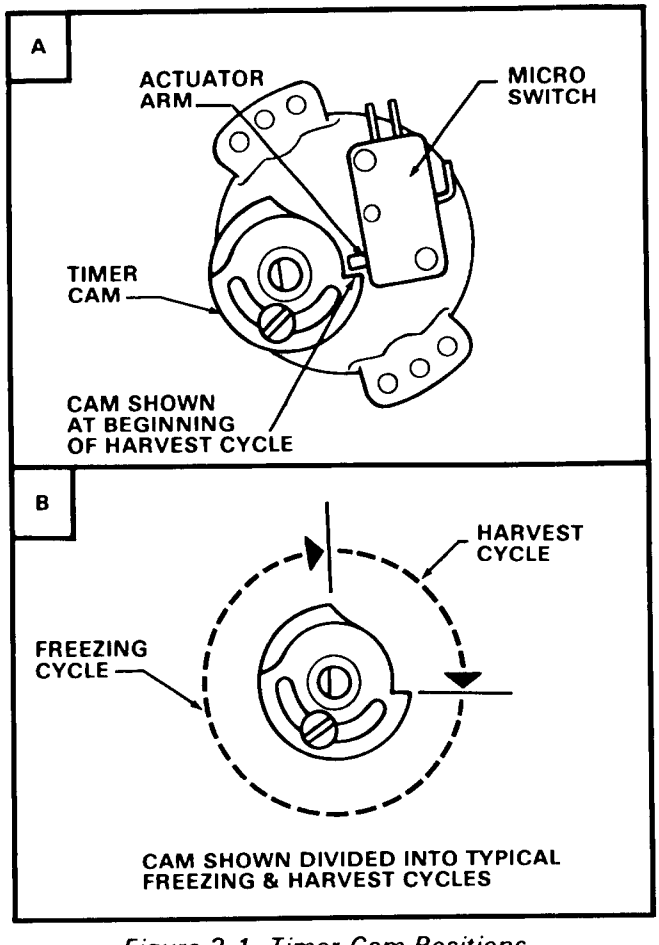

Figure 2-1. Timer Cam Positions.

c. Water Pump is operating and water is being sprayed through the nozzles on the oscillating Spray Bar, into the inverted ice cube cups. Check that there are no plugged nozzles.

d. Icemaking process begins: feeling inside ice cube cups reveals cold temperatures and very shortly ice begins to form.

NOTE

Freezing time, in a 70-degree F. ambient atmosphere, will range between 16 to 22 minutes. Longer time, for temperatures above 70-degrees F. and shorter time required when temperatures are below 70-degrees F. Average complete cycle range is about 18 to 24 minutes.

WARNING

DO NOT operate this Icemaker when the water supply is shut OFF, or is BELOW the recommended 20 PSIG water pressure. Move the Master ON-OFF toggle switch to OFF, immediately.

15. Observe first ice cube harvest:

NOTE

Normal cube size is with a one-quarter inch depression in the crown.

Check texture of ice cubes: when partially cloudy throughout, suggests icemaker operating short of water, near end of freezing cycle, or possibly an extreme problem water condition, wherein filtering or purifying equipment is recommended. Contact SCOTSMAN — Queen Products Division, Service Department, Albert Lea, Minnesota, for further details.

16. With the icemaker in the Harvest Cycle, hold ice against the Bin Thermostat Control bulb to test shutoff, which should cause the icemaker to shut OFF at the end of the Harvest Cycle.

NOTE

Within minutes after the ice is removed from the sensing bulb, the bulb will warm up and cause the icemaker to restart. This control is factory set and should not be reset until testing is performed. Normal setting is about 35-degrees F. CUT-OUT and 39-degrees F. CUT-IN.

17. Install refrigerant service gauges on the high side and low side Schrader valve fittings and check the Compressor head pressure and back pressure.

NOTE

Compressor head pressure after 20 minutes of Freezing Cycle, at 70-degrees F. ambient temperature, will be about 135 PSIG. The back pressure equalizes during hot gas defrost and gradually pulls down to about four PSIG, just before Harvest cycle. Higher ambient temperatures and dirty Condenser will cause higher pressure.

18. Remove refrigerant service gauges; then, replace panels and close all doors.

19. Thoroughly explain to the owner/user the significant specifications of the Icemaker, the start up and operation, going through the procedures in the operating instructions. Answer all questions about the Icemaker, by the owner; and, inform the owner of the name and telephone number of the authorized SCOTSMAN Distributor, or Service Agency serving him.

SECTION III
PRINCIPLES OF OPERATION — How It Works

I. FREEZING CYCLE

Water from the sump in the Reservoir is pumped through the oscillating Spray Bar Assembly, which consists of a spray bar and 12 jets, through which water is sprayed into the inverted cube molds of the Freezer Assembly Evaporator. See Figure 3-1. At the beginning of the Freeze Cycle the electrical circuit is completed to the Compressor, Water Pump, and the coil of the Finish Relay. The Water Pump operates continuously during the Freeze cycle through contacts of the Finish Relay. In Water-Cooled models water also flows through the Condenser and out the drain. While in the Condenser water removes heat from the refrigerant and allows the refrigerant to condense from a gas to a liquid.

Refrigerant is compressed in the Compressor and discharged into the Condenser as a high pressure, high temperature gas. The refrigerant is cooled and condensed by either air or water and condenses to a high pressure, high temperature liquid. This liquid refrigerant then passes through a small capillary tube where the temperature and pressure of the liquid refrigerant are lowered. The low pressure, low temperature liquid refrigerant, then enters the Evaporator. The refrigerant is warmed by water being sprayed against the Evaporator and begins to boil off, to become a gas. The refrigerant next travels through the Accumulator where any remaining liquid refrigerant then returns to the Compressor as a low pressure, low temperature gas and the cycle starts again.

During the Freezing Cycle, both the Water Inlet Solenoid Valve and the Hot Gas Solenoid Valve are CLOSED.

When the ice cubes are about 3/4 formed, the Cube Size Control Bulb located on the suction line will sense the temperature at which it is preset to CLOSE. This will complete the electrical circuit to the Timer. The Timer then controls the remainder of the cycle.

The Timer will keep the Icemaker operating in the Freeze Cycle for the next six minutes. This will give the cubes time to fully form. After six minutes, the timer will switch the Icemaker into the Harvest Cycle, through the contacts of the Timer Assembly microswitch.

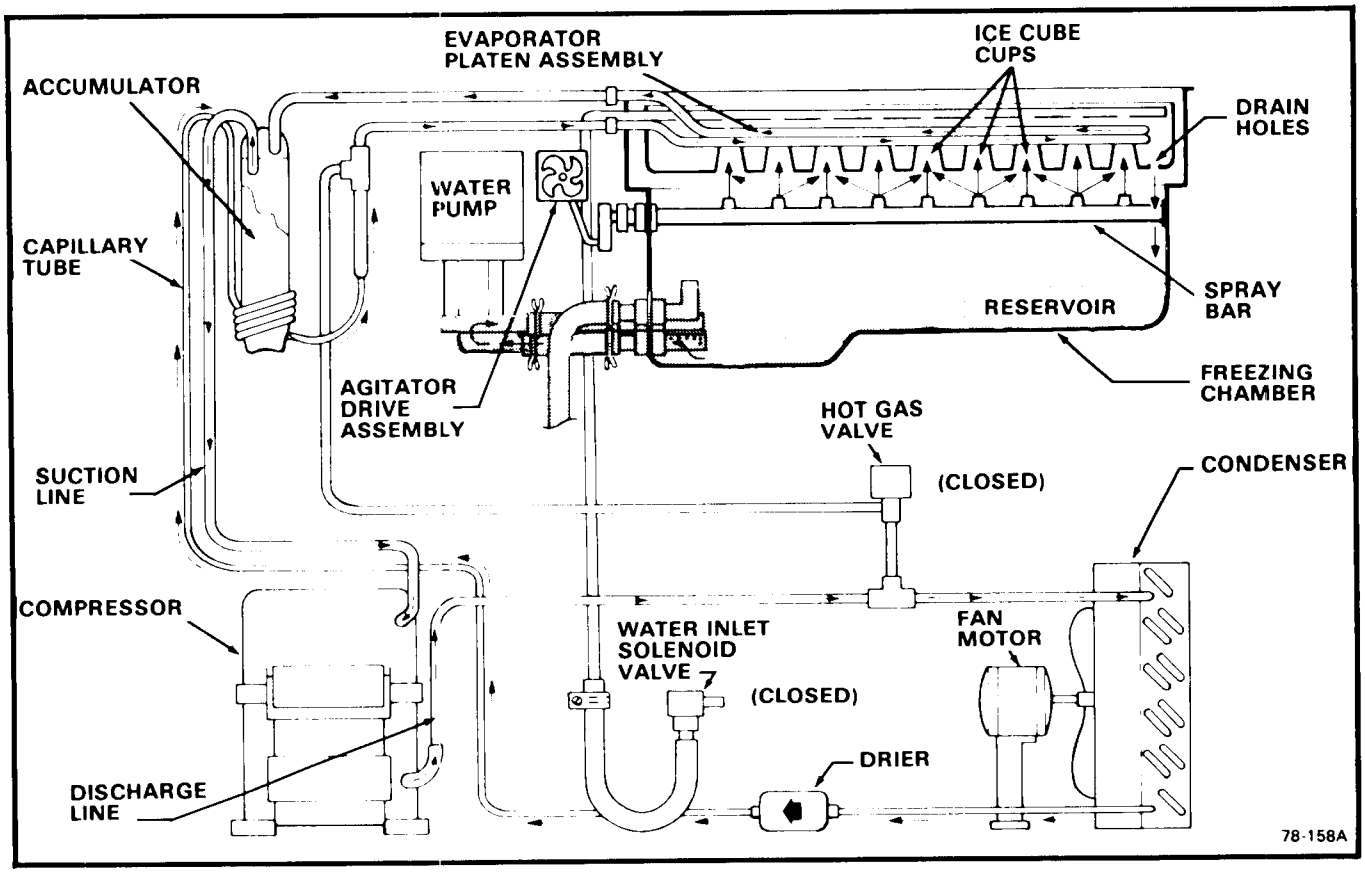

Figure 3-1. Freezing Cycle

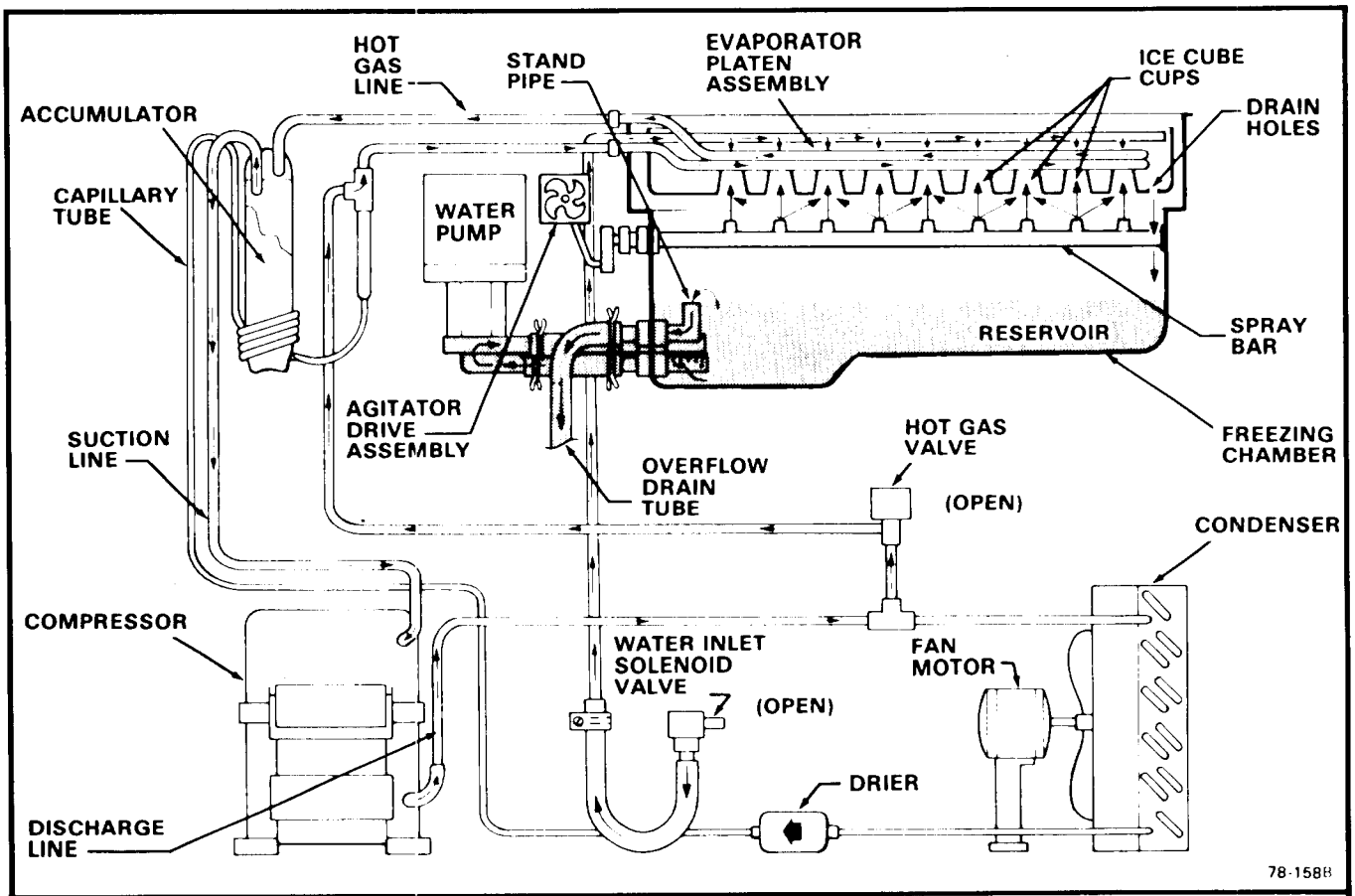

1. On Air-Cooled Models, the Water Pump Motor and Fan Motor may cycle intermittently during the Harvest Cycle.
2. On Water-Cooled Models, the Water Pump Motor is OFF during the Harvest Cycle.

Figure 3-2. Harvest Cycle.

II. HARVEST CYCLE

When the Timer switches the Icemaker into the Harvest Cycle, hot gas being discharged from the Compressor is diverted through the Hot Gas Solenoid Valve into the Evaporator. During this cycle, the hot gas circulates from the Compressor to the Evaporator and back again, bypassing the Condenser and capillary tube. In the electrical circuit, the Compressor is operating and both the Water Inlet Solenoid Valve and the Hot Gas Solenoid Valve are energized.

See Figure 3-2. Opening the Water Inlet Solenoid Valve allows a fresh water supply to be discharged into the top of the Platen Assembly Evaporator. The finished ice cubes are released from the Evaporator by the warming effect of the hot gas flowing through the Evaporator tubes and the water flow around the ice molds. The released ice cubes drop onto the slanted Front Cube Chute and into the ice storage bin. At the end of the two minute Harvest Cycle, the Timer cam will push the actuator arm of the microswitch IN. IF the Bin Thermostat is still CLOSED, a whole new cycle will begin. If the Bin Thermostat is OPEN, the Icemaker will shut OFF at this time.

III. DISPENSING SYSTEM

A. STANDBY — In the STANDBY mode the refrigeration system is in automatic operation, ice is being made and deposited in the ice storage Bin; or, the bin is filled with ice and the icemaking system is shutdown. The electrical circuit in the 24-volt dispensing control circuit has Cam-1 switch OPEN. Relay-C is not energized and the Door safety switch is CLOSED, which makes 24-volts available to the Vend Circuit.

B. ICE DISPENSE — Pushbutton: when the pushbutton is pushed IN, CLOSING the contacts of the VEND Switch, contacts 6-2 of Relay-C are energized and CLOSE, which starts the Bin Rotor Drivemotor. As the Rotor turns, Cam-1 switch CLOSES providing a carryover cycle for the Drivemotor so it is no longer necessary to keep the VEND pushbutton pushed IN.

Ice is deposited in the Ice Delivery Chute. If the Ice Delivery Chute is not immediately pushed down, to dispense the ice, the Bin Rotor will continue to turn past the ice chute opening, then STOP, in the STANDBY mode.

If, at any time during the Dispense Cycle, the Ice Delivery Chute is OPENED, thereby OPENING the Door Safety Switch, the rotating of the Bin Rotor will be STOPPED and remain STOPPED until the Ice Delivery Chute is returned to the CLOSED position.

C. ICE DISPENSE — Coin Operated/KCM5 Kit: With the KMC5 Kit installed, the Coin Mechanism is equipped with a 24-volt Coin Block solenoid.

The FREE VEND toggle switch, on the Relay Box included in the Kit, must be in the COIN OPERATION position.

When a coin is inserted into the Coin Mechanism the Coin switch is momentarily actuated, causing Relay-D to be pulsed, CLOSING Contacts 4-7, holding Relay-7 in the energized position through Cam-2 switch on the Drivemotor. This also CLOSES Contacts 3-9 of the Relay-D, which energizes and CLOSES 2-6 of Relay-D energizing the Drivemotor, rotating the Bin Rotor, and as Cam-1 switch CLOSES it provides a carryover cycle for the Drivemotor, after which Cam-2 switch OPENS dropping out Relay-D, removing the coin credit.

As the Bin Rotor continues to rotate, ice is deposited in the Ice Delivery Chute, the Rotor turns until Cam-1 switch is OPENED, ending the Dispense Cycle.

NOTE

1. *If, in the very short period of time after the coin is inserted into the Coin Mechanism, and before Cam-1 switch CLOSES, the Ice Delivery Chute door is OPENED, thereby removing electrical power from the Vend circuit, credit will be lost and NO ICE will be dispensed.*
2. *If electrical power is removed from the CD450, the Coin Block solenoid is DE-ENERGIZED, thereby preventing the Coin Mechanism from accepting coins.*
3. *When the FREE VEND switch is in the COIN OPERATION position, the Vend switch is electrically removed from the Vend circuit. With the FREE VEND switch in the FREE VEND position, the Vend switch will be functional, without the use of coins or key.*

D. ICE DISPENSE — Coin Operated/KCM4 Kit: The principles of operation are the same as for the KCM5 Kit installation, EXCEPT, NO COIN BLOCK solenoid is provided with the KCM4 Kit.

E. ICE DISPENSE — Key Operated/KKM1 Kit: The Principles of operation are the same as for the KCM5 Kit installation, EXCEPT, the Key switch, provided in the kit, replaces the Coin switch and this kit does NOT have a COIN BLOCK solenoid.

IV. COMPONENT DESCRIPTIONS

A. BIN THERMOSTAT CONTROL. The Bin Thermostat Control is located just below the Elapsed Time indicator on the front, upper left panel strip of the Chassis. The sensing capillary tube of the control is coiled in the Bulb Holder, located on the left wall of the ice storage bin. The Control functions to automatically SHUT OFF the Icemaker, when the ice storage bin is filled and ice contacts the capillary tube. It also signals the RESTART of the Icemaker when the capillary tube starts to warm up after ice has been removed from the bin. Factory settings are 35-degrees F. CUT-OUT and 40-degrees F. CUT-IN. ALWAYS CHECK a replacement Bin Thermostat Control BEFORE installing the Control in the Cuber. Prepare a container of ice and water and insert a thermometer. As temperature indications on the thermometer decrease to 35-degrees F., insert the capillary tube of the Bin Thermostat Control and determine temperature of CUT-OUT when an audible click is heard in the Control. Slowly add hot water to container and check audible click in the Control for CUT-IN while observing increase in temperature of water to 40-degrees F. Refer to procedure IV-I to adjust Bin Thermostat Control.

NOTE

The Bin Thermostat Control is wired through the holding relay and will not CUT-OUT the Icemaker until the end of the Harvest Cycle. Altitude adjustment should ONLY be performed on Icemakers installed at 2,000-foot level locations and ABOVE, and adjust only in increments of one-fourth turn of screw at a time.

B. COMPRESSOR CONTACTOR

A single-pole contactor is used to supply current to the Compressor; and, is wired so any control in the pilot circuit, such as the Bin Thermostat and High Pressure Control, etc., will cause the contactor coil to be de-energized, when the control contact OPENS, thereby breaking the circuit to the Compressor through the contactor points.

C. CUBE SIZE CONTROL

The temperature sensing Cube Size Control affects the length of the Freezing Cycle prior to initiating the Finishing Timer. The Cube Size Control closes its contacts when the Evaporator reaches a preset temperature, starting the Finishing Timer. A variation in either ambient air or incoming water temperature will affect the efficiency of the refrigeration system. This will vary the length of time it takes the Evaporator to reach the temperature at which the Cube Size Control is preset to CLOSE; which, in turn, will affect the overal cycle time.

NOTE

Be sure to refer to procedure IV-II, Adjustment of the Cube Size Control, BEFORE attempting to adjust the control.

D. FINISHING TIMER - Timer & Switch Assembly

The function of the Finishing Timer begins when activated by the Cube Size Control. The Timer controls an eight minute dual function: six minutes are programmed to finish freezing the ice cubes and the final two minute portion is for the defrost operation and harvest of the ice cubes. All electrical circuitry is connected through the printed circuit board and the Finishing Timer and shunted by the single-pole, double-throw microswitch to either the Freezing Cycle or the Harvest Cycle. The microswitch is actuated by a Cam Assembly directly connected to the Timer Motor. The Timer Cam can be adjusted to vary the defrost time, as required.

E. HIGH PRESSURE CONTROL - Water-Cooled Model

The High Pressure Control, a safety control, is factory set at 190 PSIG. The Control functions as a precautionary device, to shut OFF electrical power to the Icemaker, should a loss of water occur to the water-cooled Condenser. In addition to being a manual reset Control, there is an adjusting screw for raising or lowering the CUT-IN pressure.

F. HIGH PRESSURE FAN CONTROL - Air-Cooled Model

The High Pressure Fan Control functions only during the harvest cycle, to maintain head pressure. As an automatic reset device, the Control is mechanically connected to the refrigerant system high side; and, electrically has the Condenser Fan Motor wired into control contacts. The control settings CLOSE at 150 PSIG and OPEN at 130 PSIG. During defrost, the Control will usually cycle once, causing the Fan Motor to briefly operate during this time.

G. HOT GAS SOLENOID VALVE

The Hot Gas Solenoid Valve functions only during the harvest cycle, to divert the hot discharge gas from the Compressor, by-passing the Condenser and capillary tube, for direct flow to the Evaporator Platen Assembly to release ice cubes from the inverted ice cube molds. The Hot Gas Solenoid Valve is comprised of two parts, the Body & Plunger and the Coil & Frame assemblies. Installed in the discharge line of the Compressor, the energized solenoid coil lifts the valve stem within the valve body to cause the hot discharge gas to be diverted when the Finishng Timer has advanced to the start of the harvest cycle.

H. FINISH RELAY

The multi-function, three-pole, double-throw, plug-in relay is installed directly into a receptacle on the printed circuit board in the Control Box. The relay functions, in part, to by-pass the Bin Thermostat, to prevent the Icemaker from shutting OFF, when a filled-bin condition occurs, during the Freezing Cycle. The by-pass action serves to ensure full-sized ice cubes with each harvest cycle; and, to prevent short cycling on the Bin Thermostat. The relay also redirects the current flow through the High Pressure Fan Control to the Condenser Fan Motor during the harvest cycle.

I. SPRAY BAR ASSEMBLY

The oscillating Spray Bar Assembly is designed to channel recirculating water to twelve water jets for uniformly spraying the water into the inverted ice cube cup molds.

NOTE

Refer to procedure V-III, CLEANING - Icemaker; and, for problems requiring removal of parts refer to procedure IV-XII-A for details for removing Spray Bar Assembly and associated parts.

J. WATER INLET SOLENOID VALVE

The Water Inlet Solenoid Valve functions only during the Harvest Cycle, when it is energized to permit incoming water, to flow through a dual Flow Control tee at a total one gallon-per-minute rate through the Defrost Tubes onto the top of the plastic Platen Assembly, assisting in the harvest of ice cubes. The water drains through holes in the Platen Assembly into the Reservoir in the

lower section of the Freezing Chamber; and there, the water is recirculated through the Water Pump for return to the Spray Bar Assembly.

K. WATER REGULATOR VALVE - Water-Cooled Models

The Water Regulator Valve functions to maintain a constant head pressure, by regulating the amount of incoming water flow through the Condenser, on water-cooled models. The valve operates through the refrigerant system high side pressure. Rotating the adjusting screw, located on top of the valve, can INCREASE or DECREASE the operating head pressure.

NOTE

When installing a replacement Water Regulator Valve, be sure the replacement valve is installed with the arrow positioned in the direction of the water flow.

REFRIGERANT CHARGE

MODEL	CD450 Refig. Chg.
Air-Cooled	27 oz. R-12 (Approx.)
Water-Cooled	27 oz. R-12 (Approx.)

NOTE

Always CHECK NAMEPLATE on individual Icemaker for specific refrigerant charge, BEFORE charging the refrigeration system. The above listed refrigerant charges are approximate charges for the CD450 Cuber Dispenser, however it is important to CHECK NAMEPLATE for each Icemaker, especially when there are different Compressors.

SECTION IV

ADJUSTMENT AND REMOVAL AND REPLACEMENT PROCEDURES

The procedures provided in this Section are arranged in alphabetical order to make specific Adjustment and Removal and Replacement information easy to locate.

Read the instructions thoroughly be fore performing any Adjustment or Removal and Replacement Procedures.

I. ADJUSTMENT OF THE BIN THERMOSTAT CONTROL

The control for the Bin Thermostat is the Temperature Control, located just below the Elapsed Time Indicator on the front, upper left panel strip of the Chassis.

WARNING

The adjusting screws on the Temperature Control device have very sensitive response to adjustment. DO NOT attempt to adjust the screw until after thoroughly reading and understanding the following instructions and illustrations. Over-adjusting or erratic guessing, can foul the instrument and cause ultimate delay and part replacement, WHICH COULD HAVE BEEN PREVENTED.

Adjustment for ALTITUDE CORRECTION should only be performed for installations at 2000-feet and ABOVE. Carefully adjust only in one-fourth turn of screw at a time. NO ALTITUDE CORRECTION adjustments should be performed BELOW the 2000-feet level.

See Figure 4-1 for location and direction of rotation, clockwise (CW) or counterclockwise (CCW), of the adjusting screw on the Temperature Control, in the particular Control Box the adjustment is to be performed.

II. ADJUSTMENT OF THE CUBE SIZE CONTROL

CAUTION

BEFORE performing actual adjustment to the Cube Size Control, check other possible causes for cube size problems, refer to Section VI, SERVICE DIAGNOSIS for problem review and analysis.

DO NOT perform adjustment when a new Cube Size Control is installed, until the control bulb has been properly installed in the tube well, on the refrigerant tube of the Platen Assembly and the Icemaker has progressed through several complete freezing and harvest cycles, to observe size and quality of ice cubes and whether or not a cube size problem exists.

Adjustment on the Cube Size Control is performed to either cause larger sized ice cubes or smaller sized ice cubes to be produced.

A. IF ICE CUBES ARE SHALLOW SIZE (Indentation is too deep):

1. Locate the Cube Size Control just below the Bin Thermostat Control.

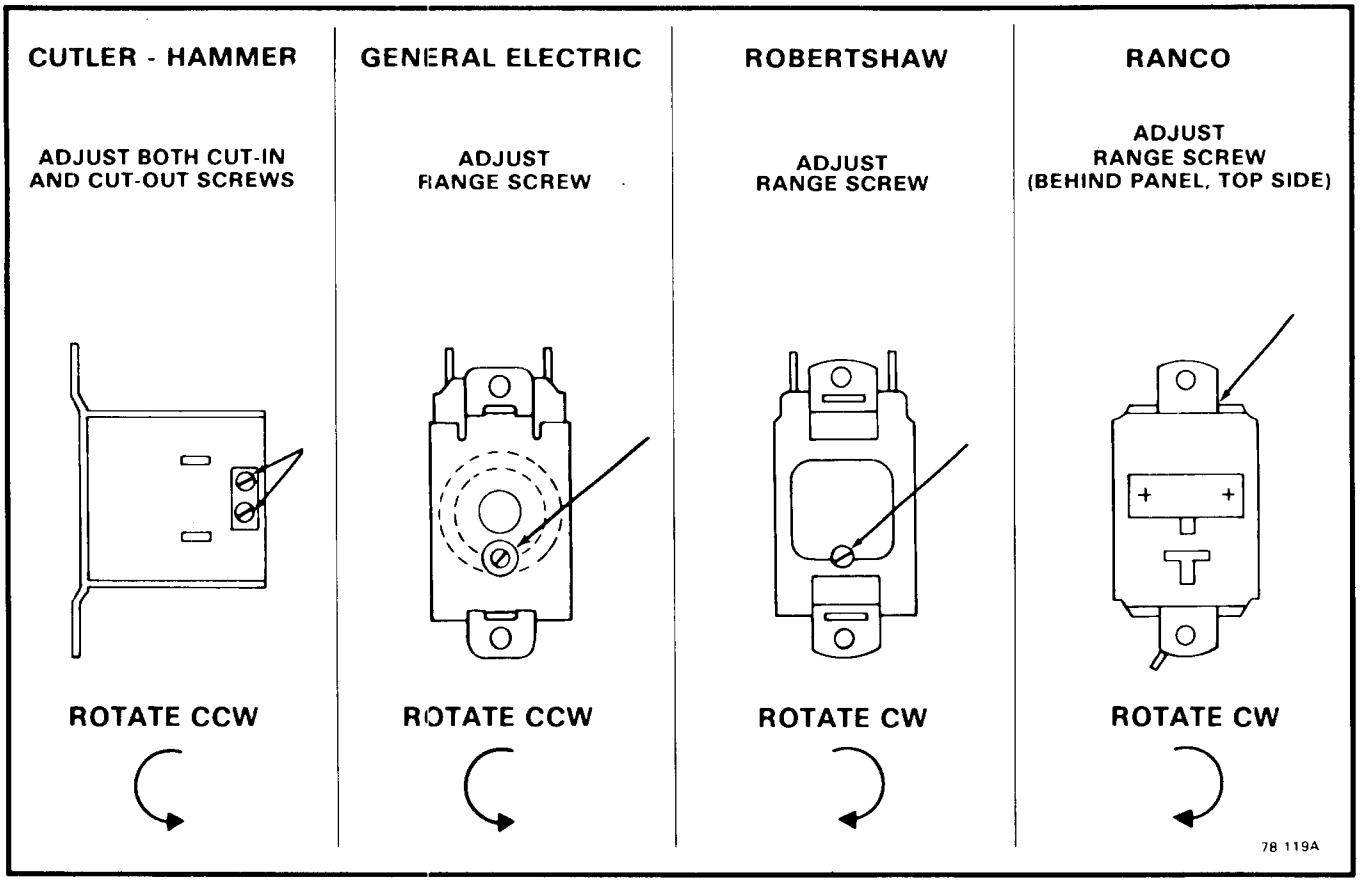

Figure 4-1. Adjustment of the Temperature Control.

2. Rotate the adjusting screw one-eighth of a turn CLOCKWISE toward COLDER.
3. Observe size of ice cubes in next two ice cube harvests and repeat step 2 above, in one-eighth turn increments, until proper ice cube size is achieved.

B. IF ICE CUBES ARE OVERSIZE (Indentation is too full):

1. Locate the Cube Size Control under the left Section of the Gasket Support bracket above the front opening of the Freezing Chamber.
2. Rotate the adjusting screw one-eighth of a turn COUNTERCLOCKWISE toward WARMER.
3. Observe size of ice cubes in next two ice cube harvets and repeat step 2 above, in one-eighth turn increments, until proper ice cube size is achieved.

III. ADJUSTMENT OF THE TIMER & SWITCH ASSEMBLY

The Timer & Switch Assembly is factory set, so that one complete revolution of the cam on the Timer represents eight minutes. Six minutes comprise the freezing cycle event during cam rotation, and the final two minutes program the defrost and harvest cycle. Rotating the shaft of the Timer Cam, CLOCKWISE will allow positioning the actuator arm of the microswitch on the cam at the selected start position for either the freezing cycle or harvest cycle, as required, during the START UP procedures and in the CLEANING instructions. Rotating the shaft COUNTERCLOCKWISE will unscrew the shaft from the threaded stud on the Timer Cam.

To Adjust the Timer Switch Assembly:

A. HARVEST CYCLE: Slowly rotate the shaft of the Timer & Switch Assembly, located in the hole in the front of the Control Box Cover, CLOCKWISE, until the actuator arm on the microswitch drops off of the outer cam into the cam slot. An audible click can be heard, but in a noisy area, look at the cam and switch to observe the event. See Figure 4-2.

B. FREEZING CYCLE: Slowly rotate the shaft of the Timer & Switch Assembly, located in the hole in the front of the Control Box Cover, CLOCKWISE, until the actuator arm on the microswitch rides up out of the cam slot to the start of the surface of the outer cam.

IV. ADJUSTMENT OF THE WATER REGULATOR ASSEMBLY — WATER-COOLED MODELS

The correct Compressor head pressure on Water-Cooled Models is 135 PSIG. Adjusting the Water Regulator Valve increases or decreases the rate of flow of water, through the

Water-Cooled Condenser; which increases or decreases the affected temperature/pressure of the Compressor head pressure. INCREASED water flow, results in DECREASED or LOWER head pressure; while, DECREASED water flow, results in INCREASED or HIGHER head pressure.

To adjust the Water Regulator Assembly:

A. To INCREASE the Head Pressure: Rotate the adjusting Screw, on the Water Regulator Assembly COUNTERCLOCKWISE.

B. To DECREASE the Head Pressure: Rotate the adjusting Screw, on the Water Regulator Assembly CLOCKWISE.

WARNING

Be sure the electrical power supply and the water supply are OFF, BEFORE starting any of the following REMOVAL AND REPLACEMENT procedures as a precaution to prevent possible personal injury or damage to equipment.

V. REMOVAL AND REPLACEMENT OF THE AGITATOR DRIVEMOTOR ASSEMBLY

A. To remove the Agitator Drivemotor Assembly:

1. Remove the Left Side Panel.

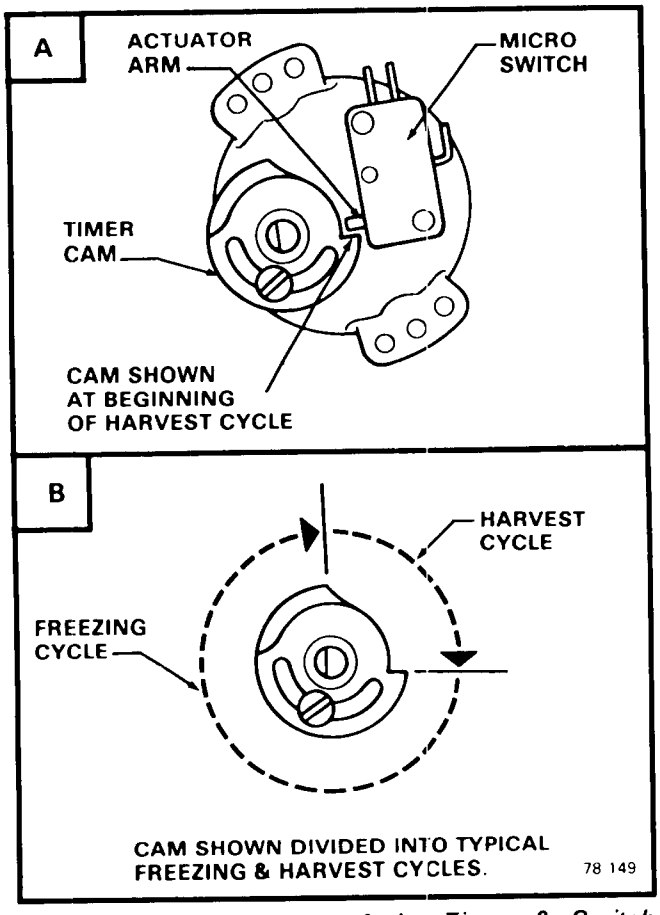

Figure 4-2. Adjustment of the Timer & Switch Assembly.

2. Unsnap one end of the Linkage Assembly; then, remove four screws, lockwashers and the Agitator Drivemotor Assembly from the mounting bracket on the wall of the Cabinet.

B. To replace the Agitator Drivemotor Assembly, reverse the removal procedure.

VI. REMOVAL AND REPLACEMENT OF THE COMPRESSOR ASSEMBLY

NOTE

Always install a replacement Drier, any time the sealed refrigeration system is opened. Do not replace the Drier until all other repair or replacement has been completed.

A. To remove the Compressor Assembly:

1. Remove the Left Side Panel.
2. Loosen two Wing Screws to unlock the Lower Door Assembly and rotate the Door to OPEN, left to right.
3. Disconnect the electrical leads in the Compressor Junction Box, from the Control Box.
4. Bleed off or blow the refrigerant charge through the Schrader valve.
5. Unsolder and disconnect both the suction line and the discharge line from the Compressor.
6. Unsolder the process header tube from the Compressor and retain for installation on the replacement Compressor.
7. Remove four bolts, washers, mounting sleeves and grommets attaching the Compressor to the Chassis base.

NOTE

Thoroughly evacuate the system to remove moisture and non-condensables.

B. To replace the Compressor Assembly, reverse the removal procedure.

VII. REMOVAL AND REPLACEMENT OF THE CONDENSER ASSEMBLY — AIR-COOLED MODELS

NOTE

Always install a replacement Drier, any time the sealed refrigeration system is opened. Do not replace the Drier until all other repair or replacement has been completed.

A. To remove the Condenser:

1. Remove the Left Side Panel.
2. Bleed off or blow the refrigerant charge through the Schrader valve.
3. Unsolder and disconnect both the refrigerant inlet and outlet tubes at the Condenser.

4. Remove two screws and lockwashers attaching the Condenser to the Chassis base; then, remove the Condenser from the CD450.

NOTE

Thoroughly evacuate the system to remove moisture and non-condensables.

B. To replace the Condenser, reverse the removal procedure.

VIII. REMOVAL AND REPLACEMENT OF THE CONDENSER — WATER-COOLED MODELS

NOTE

Always install a replacement Drier, any time the sealed refrigeration system is opened. Do not replace the Drier until all other repair or replacement has been completed.

A. To remove the Condenser:

1. Remove the Left Side Panel.
2. Bleed off or blow the refrigerant charge through the Schrader valve.
3. Disconnect both the water inlet and outlet lines at the Condenser.
4. Unsolder and disconnect both the refrigerant inlet and outlet tubes at the Condenser.
5. Remove three screws and lockwashers attaching the Condenser to the Chassis base; then, remove the Condenser from the CD450.

NOTE

Thoroughly evacuate the system to remove moisture and non-condensables.

B. To replace the Condenser, reverse the removal procedure.

IX. REMOVAL AND REPLACEMENT OF THE DRIER

NOTE

Always install a replacement Drier, any time the sealed refrigeration system is opened. Do not replace the Drier until all other repair or replacement has been completed.

A. To remove the Drier:

1. Remove the Left Side Panel.
2. Remove screw and Drier Brace attaching the Drier to the Condenser, or Drier Strap.
3. Bleed off or blow the refrigerant charge through the Schrader valve.
4. Unsolder the refrigerant lines at each end of the Drier, remove the Drier and separate the Drier from the Drier Brace.

B. To replace the Drier:

CAUTION

1. If the factory seal is broken on the replacement Drier, exposing it to the atmosphere more than a few minutes, the Drier will absorb moisture from the atmosphere and lose substantial ability for moisture removal.

2. Be sure the replacement Drier is installed with the arrow positioned in the direction of the refrigerant flow.

1. Remove the factory seals from the replacement Drier and install the Drier in the refrigerant lines, with the arrow positioned in the direction of the refrigerant flow.
2. Install the Drier Brace on the Drier.
3. Solder the Drier into the refrigerant lines, two places.
4. Purge the system and check for leaks.
5. Thoroughly evacuate the system to remove moisture and non-condensables.
6. Charge the system with refrigerant, by weight. SEE NAMEPLATE.
7. Replace the Left Side Panel and locks.

X. REMOVAL AND REPLACEMENT OF THE DRIVEMOTOR ASSEMBLY

A. To remove the Drivemotor Assembly:

1. Remove the Left Side Panel.
2. Loosen two Wing Screws to unlock the Lower Door Assembly and rotate the Door to OPEN, left to right.
3. Disconnect electrical leads to the Drivemotor Assembly, including Cam Switches.
4. Remove four nuts and lockwashers attaching the Drivemotor Assembly and Motor Mount to the sloped, front wall of the Cabinet and remove the Drivemotor Assembly, including the Motor Mount.

B. To replace the Drivemotor Assembly, reverse the removal procedure.

CAUTION

BEFORE installing the replacement Drivemotor Assembly, rotate the Bin Rotor so the ice discharge opening in the Bin rotor is fully past the ice chute opening, looking from the front of the cabinet and rotating CLOCKWISE.

The ice chute opening should be CLOSED. Check that the Cam Switch on the Drivemotor was made to click, just as the actuator arm moved off of the outer rim, into the beginning of the slot of the Cam. This should cause both the ice discharge opening in the Bin Rotor and the Cam slot position, to appear in the area of between one and two o'clock, as viewed from the front of the Cabinet. Then, install and secure the Drivemotor Assembly in the Cabinet.

XI. REMOVAL AND REPLACEMENT OF THE FAN MOTOR ASSEMBLY -- AIR-COOLED MODELS

A. To remove the Fan Motor Assembly:

1. Remove the Left Side Panel.
2. Disconnect the two electrical leads of the Fan Motor from inside the Control Box Assembly.
3. Remove the screws and lockwashers from each leg of the Fan Motor Mount and remove the Fan Motor and Mount from the Chassis base.
4. Remove the nut from the end of the Fan Motor shaft and remove the Fan Blade.
5. Remove four screws securing the Fan Motor to the Fan Motor Mount and separate the Fan Motor from the Mount.

B. To replace the Fan Motor Assembly, reverse the removal procedure.

XII. REMOVAL AND REPLACEMENT OF THE FREEZING CHAMBER ASSEMBLY

NOTE

Always install a replacement Drier any time the sealed refrigeration system is opened. Do not replace the Drier until all other repair or replacement has been completed.

A. To remove the Freezing Chamber Assembly: (See Figure 4-3)

1. Remove the Left Side Panel.
2. Remove the Top Panel.
3. Rotate the Upper Door Assembly to OPEN, left to right.
4. Slide the Styrene Sheet off the top of the Platen Assembly; then, remove the Defrost Tubes from the Platen area.
5. Carefully remove the coiled capillary bulb from the Bulb Holder Clips attached to the inlet line of the Platen Assembly; and position out of the work area.
6. Bleed off or blow the refrigerant charge through the Schrader valve.
7. Unsolder both the inlet and outlet refrigerant lines at the Platen Assembly and lift the Platen Assembly out of the top of the Freezing Chamber.
8. Remove the Cube Deflector from the front of the Freezing Chamber.
9. Unsnap the end of the Linkage Assembly connected to the shaft of the Drive Bearing Support.
10. Remove hose clamps connecting Tygon tubes to four Female tubes at the lower left section of the Freezing Chamber; then, work each tube loose, allowing any water to drain into the Bin.
11. Remove the Curtain Assembly from the Hanger Assembly.
12. Remove the Cube Chute from inside the Freezing Chamber.
13. Remove the End Support Assembly from the Bearing Support; then, remove hose clamps at each end of the Tygon tube and detach from the Bearing Support and the Male Tube.
14. Remove the Hair Pin connector and disconnect the left end of the Spray Bar Assembly from the Drive Bearing Support and remove the End Support Assembly from the other end of the Spray Bar.
15. Remove four screws attaching the two Support Channels to the top of the Cabinet and remove the Freezing Chamber Assembly from the Cabinet.
16. Remove four screws and the two Support Channels from the two Freezing Chamber Support Assemblies.
17. Remove six nuts, lockwasher, washers and screws and separate two Freezing Chamber Support Assemblies, and the left and right Platen Support Angles from the top of both sides of the Freezing Chamber.
18. Remove seven screws and cap nuts and separate the two Cube Deflector Hangers, The Curtain Angle, Hanger Assembly and the Curtain Hanger Gasket from the inner and outer surfaces of the upper parts of the front opening of the Freezing Chamber.
19. Unscrew four Female Tubes and O-Rings from the left outside of the Freezing Chamber, connected to two Male Tubes, one Pump Pickup tube and one Stand Pipe, installed from inside the Freezing Chamber.
20. Unscrew the Hex Nut, inside the Freezing Chamber, and remove the Drive Bearing Support and O-Ring from the Freezing Chamber. Inspect and replace any O-Ring with cuts, tears, or is badly worn.

B. To Replace the Freezing Chamber Assembly, reverse the removal procedure.

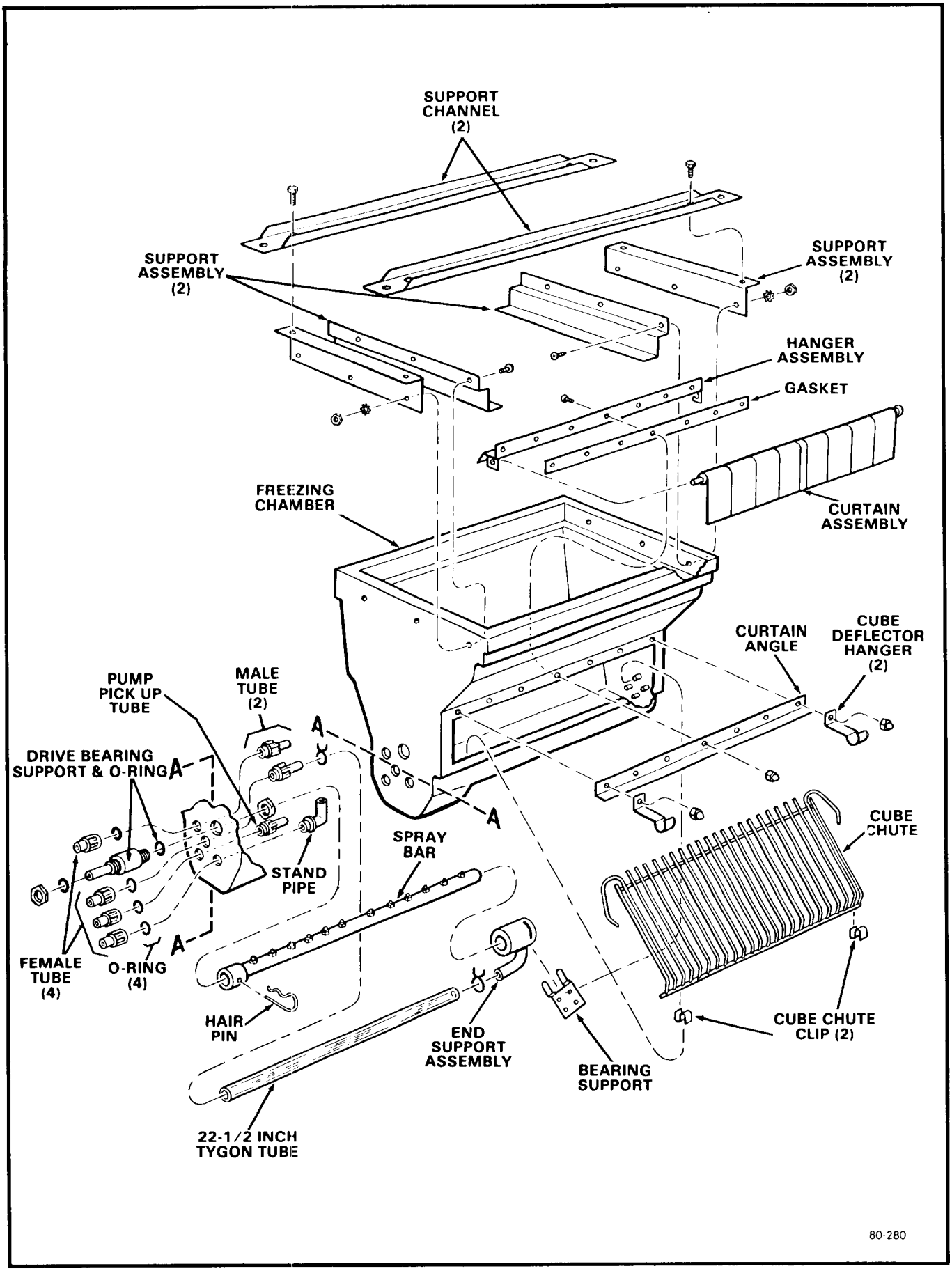

Figure 4-3. Freezing Chamber — Exploded View.

XIII. REMOVAL AND REPLACEMENT OF THE GRILL AND DRAIN TRAY ASSEMBLY

A. To remove the Grill and Drain Tray Assembly:

1. Remove the Left Side Panel.
2. Loosen two Wing Screws to unlock the Lower Door Assembly and rotate the Door to OPEN, left to right.
3. Remove the Wing Nut and Spacer to detach the Grill and Drain Tray Assembly from each other.
4. Remove the Grill from the front of the Lower Door Assembly.
5. Remove the Drain Tray Assembly from the rear of the Lower Door Assembly.

B. To replace the Grill and Drain Tray Assembly, reverse the removal procedure.

XIV. REMOVAL AND REPLACEMENT OF THE WATER PUMP ASSEMBLY

A. To remove the Water Pump Assembly:

1. Remove the Left Side Panel.
2. Remove hose clamps connecting Tygon tubes to four Female Tubes at the lower left section of the Freezing Chamber; then, work each tube loose, catching any draining water in rags, under the tubes.
3. Remove two nuts, lockwashers and screws and lift the Water Pump Assembly from the Pump Brackets.

B. To replace the Water Pump Assembly, reverse the removal procedure.

XV. REMOVAL AND REPLACEMENT OF THE WATER REGULATOR ASSEMBLY — WATER-COOLED MODELS

NOTE

Always install a replacement Drier, any time the sealed refrigeration system is opened. Do not replace the Drier until all other repair or replacement has been completed.

A. To remove the Water Regulator Assembly:

1. Remove the Left Side Panel.
2. Bleed off or blow the refrigerant charge through the Schrader valve.
3. Unsolder the capillary tube from the Water Regulator Assembly, where connected at the process header.
4. Disconnect the water inlet at the rear of the Water Regulator.
5. Disconnect the Condenser water inlet tube at the front of the Water Regulator.
6. Remove the Pal Nut and separate the Water Regulator from the rear of the Cabinet.

NOTE

Thoroughly evacuate the system to remove moisture and non-condensables.

B. To replace the Water Regulator Assembly, reverse the removal procedure.

SECTION V

MAINTENANCE & CLEANING INSTRUCTIONS

I. GENERAL

The periods and procedures for maintenance and cleaning are given as guides and are not to be construed as absolute or invariable. Cleaning especially will vary, depending upon local water conditions and the ice volume produced; and, each icemaker must be maintained individually, in accordance with its own particular location requirements.

II. ICEMAKER

THE FOLLOWING MAINTENANCE SHOULD BE SCHEDULED AT LEAST TWO TIMES PER YEAR ON THIS ICEMAKER-DISPENSR. CALL YOUR AUTHORIZED SCOTSMAN SERVICE AGENCY.

1. Check and clean the optional wire mesh strainer, when installed.
2. Check that the Dispenser is level, in the side-to-side and front-to-rear directions.
3. Clean the water system evaporator, Freezing Chamber reservoir and Spray Bar, using a solution of SCOTSMAN Ice Machine Cleaner. Refer to V-III CLEANING - Icemaker.

NOTE

Cleaning requirements vary according to local water conditions and individual user operation. Continuous check of the clarity of ice cubes and visual inspection of the water spray bar and jets, before and after cleaning will indicate frequency and procedure to be followed in local areas.

4. Remove and clean Spray Bar Assembly, checking individual spray nozzles, then replace Spray Bar Assembly.
5. Check that the Curtain Assembly is properly installed, the Cube Chute in place and the Cube Deflector moves freely.
6. Check and tighten all screws and all electrical connections.
7. Check Hot Gas Solenoid Valve for correct operation and high pressure controls for cut-in and cut-out pressures.
8. With the Icemaker and Fan Motor OFF, on Air-Cooled Models, clean the Condenser using vacuum cleaner, whisk broom or brush. Instruct owner-user to clean Condenser frequently. DO NO USE A WIRE BRUSH.
9. Check for water leaks and make corrections.
10. Check that Fan Blades move freely, do not touch any surfaces, are not bent or out of balance.
11. Check for refrigerant leaks, tighten line connections.
12. Pour water down Bin drain line to check that drain line is open and clear.
13. Check size, condition and texture of ice cubes. Perform adjustments as required. Refer to procedure II-I-15.
14. Check Bin Thermostat Control Bulb to test shutoff. With the Icemaker in the harvest cycle, place ice against the Bulb, which should cause the Icemaker to shut OFF at the end of the Harvest Cycle.

NOTE

Within minutes after the ice is removed from the sensing bulb, the bulb will warm up and cause the Icemaker to restart. This control is factory set and should not be reset until testing is performed. Normal setting is about 35-degrees F. CUT-OUT and 40-degrees F. CUT-IN.

III. CLEANING — Icemaker

1. Perform steps 1 through 6 of procedure II-I to gain access to the internal parts of the Dispenser.
2. Check that the Master ON-OFF toggle switch and the Compressor ON-OFF toggle switch are OFF on the front, upper left panel strip of the Chassis.
3. Rotate the shaft of the Timer & Switch Assembly, located in the hole in the front of the Control Box Cover, CLOCKWISE, until the actuator arm on the microswitch rides up out of the cam slot, to the outer surface of the cam, then stop. This is the START position for the Freezing Cycle. See Figure 5-1.

WARNING

SCOTSMAN Ice Machine Cleaner contains Phosphoric and Hydroxyacetic acids. These compounds are corrosive and may cause burns, if swallowed. DO NOT induce vomiting. Give large amounts of water or milk. Call physician immediately. In case of external contact, flush with water. KEEP OUT OF THE REACH OF CHILDREN.

4. Prepare cleaning solution: Mix eight ounces of SCOTSMAN Ice Machine Cleaner with six pints of fresh, potable warm water.

5. Carefully pour the cleaning solution into the Sump Assembly.
6. Immediately move the Master ON-OFF toggle switch, to the ON position.
7. Allow the system to operate for about twenty minutes.

NOTE

No ice cubes will be made, because the COMPRESSOR ON-OFF toggle switch, is OFF.

8. At the end of twenty minutes, rotate the shaft of the Timer/Switch Assembly, CLOCKWISE, to start a second Harvest Cycle. Repeat procedure to effect four complete Harvest Cycles. See Figure 5-1.

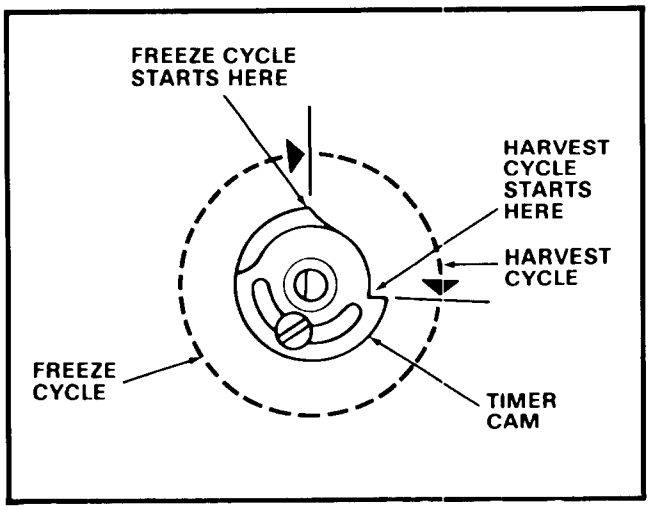

Figure 5-1. START Positions for the Freeze/Harvest Cycles.

NOTE

During each Harvest Cycle, fresh inlet water is introduced into the water system and acts to rinse all water-related parts and to wash away most mineral concentration through the Reservoir overflow drain.

9. Move the Compressor ON-OFF toggle switch to the ON position.
10. Check each ice cube harvest, until the ice cubes are clear and the acid taste is eliminated.

CAUTION

DO NOT use ice cubes produced from the cleaning solution. Be sure none remains in the Bin.

11. Add hot water to the bin to melt the ice cubes, or, remove and discard all ice cubes.

NOTE

Prior to the next step, be sure to note the position of the ice discharge opening on the Rotor, in relation to the Cam notch on the Drivemotor, so the Rotor can be replaced in identical position.

12. Unscrew the hand-tightened, large Cap Nut and washers and carefully remove the Bin Rotor from inside the Bin.
13. Scrub and clean all areas of the Bin Rotor with ordinary cleaning powder, such as Bon-Ami and Water. DO NOT USE CLEANERS WITH BLEACHING AGENTS, CHLORINE, ETC.
14. Rinse thoroughly with clear water, then, wash with the prepared SCOTSMAN Ice Machine Cleaner and hot water solution and use the solution to clean the interior walls of the Bin.
15. Sanitize the Bin Rotor and the interior walls of the Bin, then, replace the cleaned and sanitized Bin Rotor in the Bin, in the reverse order of removal. Refer to procedure V-IV Sanitizing.

IV. SANITIZING

Sanitizing is an important phase of the icemaking and dispensing operation. The following sanitizing procedure should be performed after every repair or replacement of parts in the CD450, in or through which ice is formed, stored, dispensed and water is flowed or drained. Additional requirements for performing the sanitizing procedure should be followed in accordance with the requirements of the local Health Authorities.

NOTE

Contact you local Health Authorities and obtain their approval of the sanitizer you intend to use when sanitizng the CD450.

Prior to performing the sanitizing procedure, it is assumed the cleaning procedure V-III, has been completed.

WARNING

Read WARNING thoroughly BEFORE preparing sanitizing solution, in next step.

1. STERILEX 3-Q SANITIZING TABLETS

DANGER: KEEP OUT OF REACH OF CHILDREN. Tablets may be harmful or fatal if swallowed. May cause skin irritation or eye damage. Avoid prolonged skin contact. Do not get in eyes. In case of contact, flush with plenty of water. If irritation persists get medical attention. Avoid contamination of food.

FIRST AID: If tablets are swallowed, drink promptly a large quantity of milk, egg whites or gelatin solution. Avoid alcohol.

NOTE TO PHYSICIAN: Probable mucosal damage may contraindicate the use gastric lavage. Measures against circulatory shock, respiratory depression and convulsion may be needed. Rinse empty carton container thoroughly with water and discard. Always follow your health department regulations.

2. MICRO-QUAT

DANGER: Causes high damage and skin irritation. Do not get in eyes, on skin, or on clothing. Protect eyes when handling concentrated product. Harmful if swallowed. Avoid contamination of food.

FIRST AID: In case of contact, immediately flush eyes or skin with plenty of water for at least 15 minutes. For eyes, call a physician. Remove and wash contaminated clothing before reuse. If swallowed, drink promptly a large quantity of milk, egg whites or gelatin solution or if these are not available, drink a large quantity of water. Call a physician immediately.

1. Prepare a sanitizing solution using a quaternary ammonium sanitizing compound.

NOTE

1. *Carefully follow directions and observe all precautions on the sanitizing compound container.*
2. *One *Sterilex 3-Q sanitizing tablet per three quarter yields 200 ppm active quaternary; or, one-third ounce of *Mikro-Quat to one gallon of water yields 235 ppm active quaternary.*
3. *The taste of ice and water will not be affected by the sanitizing of parts using the above mixed sanitizing solutions. Rinsing of parts is not required with this relatively mild solution, but air drying of the parts is suggested before reassembly.*

2. Immerse all parts, earlier removed and cleaned, in the sanitizing solution; or, if too large for the container of sanitizing solution, thoroughly wash the solution over all surfaces of all parts.
3. Drain all parts and allow to air dry.
4. Wash down the interior walls of the Bin with sanitizing solution and allow to air dry; then, replace the Bin Rotor when removed during sanitizing.
5. Pour some of the sanitizing solution into the Drain Tray Assembly, of the Lower Door Assembly, and into the Bin drain.
6. Clean and sanitize the interior bin parts and surfaces each week.

**Sterilex 3-Q sanitizing tablets are distributed by Pittsburgh Chemical Laboratory, Inc., Pittsburgh, PA 15222, and may be obtained through most restaurant supply houses.*

**Mikro-Quat, is manufactured by Economics Laboratory, Inc., Osborn Building, St. Paul, MN 55102, and may be obtained from them through their Magnus Division, The Klenzade division, or from restaurant supply houses.*

SECTION VI
SERVICE DIAGNOSIS

The Service Diagnosis Section is for use in aiding the serviceman in diagnosing a particular problem for pin-pointing the area in which the problem lies, thus an ever available reference for proper corrective action.

The following charts list corrective actions for the causes of known symptoms of certain problems that can occur in the Icemaking-Refrigeration System.

I. ICEMAKING - REFRIGERATION SYSTEM

SYMPTOM	POSSIBLE CAUSE	CORRECTION
Irregular size cubes and some cloudy.	Some jets plugged.	Clean jets.
	Shortage of water.	See Shortage of water CORRECTION.
	Unit not level. Water overflowing vent holes on low side, burning cubes.	Level cabinet, as required.
Cubes too large.	Cube Size Control set too cold.	Rotate Cube Size Control dial toward WARMER.
Cubes too small.	Cube Size Control set too warm.	Rotate Cube Size Control dial toward COLDER.
	Partially restricted capillary tube.	Blow refrigerant charge; replace drier; evacuate system; add refrigerant charge.
	Moisture in system.	Same as above CORRECTION.
	Shortage of water.	See Shortage of water CORRECTION.
	Loss of refrigerant.	Check for refrigerant leaks, correct leaks; recharge system.
Cloudy Cubes.	Shortage of water.	See Shortage of water SYMPTOM.
	Dirty water supply.	Install water filter or softener.
	Accumulated impurities.	Use SCOTSMAN Ice Machine Cleaner.
Shortage of water.	Water spraying out through curtain.	Hang curtain in proper position.
	Water solenoid not opening.	Repair or replace solenoid.
	Water leak in sump area.	Locate leak and repair or correct condition.
	Partial restrictions in water strainer.	Clean or replace strainer.
Shortage of water in upper freezing chamber.	Defective lower seal in upper freezing chamber.	Replace lower seal.

SYMPTOM	POSSIBLE CAUSE	CORRECTION
Decreased ice capacity.	Defective compressor.	Replace compressor.
	Leaky water valve.	Repair or replace valve.
	High head pressure, result of dirty condenser or faulty Fan Motor.	Clean condenser. Repair or replace Fan Motor.
	Non-condensable gas in the system.	Purge the system.
	Poor circulation or extreme hot location.	Relocate the cabinet; or provide ventilation by cutting openings.
	Overcharge of refrigerant.	Slowly purge off to correct charge.
	Hot gas solenoid valve leaking.	Replace valve.
	Partially restricted capillary tube.	See Cubes too small CORRECTION.
Poor harvests.	Too short defrost time.	Check and adjust harvest cycle. Check Timer two-minute setting.
	Restriction in water inlet line.	Check strainer and flow check valve. DO NOT remove flow control washers.
	Hot gas solenoid does not open.	Binds or burned out. Replace.
	Plugged air vent holes in upper part of cube cups.	Clean out air vent holes.
Icemaker does not harvest.	Water pressure too low.	Check for 20 PSI flowing water.
Compressor cycles intermittently.	Low voltage.	Check for circuit overload. Check building supply voltage, if low, contact power company.
	Dirty condenser.	Clean condenser with vacuum cleaner or brush. NO WIRE BRUSH.
	Air circulation blocked.	Locate cabinet with adequate air space for proper air flow.
	Defective Fan Motor.	Replace Fan Motor.
	Non-condensable gases in system.	Purge the system.
Icemaker will not operate.	Blown fuse in line.	Replace fuse and check for cause.
	Master switch in OFF position.	Set switch to ON position.
	Faulty Master switch.	Replace switch.
	Timer contacts open.	Replace Timer microswitch.
Hole washed inside ice cube.	Water over the top of cube cups during harvest cycle.	Check and re-level the cabinet.

To the Owner or User:

The Service Manual you are reading is intended to provide you, and the maintenance or service technician, with the information needed to install, start up, clean, maintain, and service the ice system.

Refer to this table of contents to locate the informtion you need.

TABLE OF CONTENTS

GENERAL INFORMATION & INSTALLATION

For the Installer 2
For the Electrician 6
For the Plumber 7

OPERATION

Start-Up 9
Operation 12
Operation - Electrical Sequence 16

MAINTENANCE & CLEANING INSTRUCTIONS

Icemaker 19
Ice Storage Bin 19

COMPONENT DESCRIPTION 23

SERVICE DIAGNOSIS 25

REMOVAL AND REPLACEMENT PROCEDURES

Water Pump 28
Reservoir 28
Distributors/Water Manifolds 28
Inlet Water Valve 28
Compressor 28
Condenser 28
Hot Gas Valve 28
Water Regulating Valve 29
Thermostatic Expansion Valve 29
Fan Motor or Blade 29
Cube Size Control 30
Timer 30
Bin Thermostat 30
Relay 30

LIST OF ILLUSTRATIONS

Specifications 2
Component Location 3
Installation 4
Stacking Instructions 5
Electrical Connections 6
Water & Drain Connections 7
Final Checklist 8
Timer Cam Positions 9
Ice Cube Size & Shape 10
Cube Size Adjustment 11
Freezing Cycle 12
Harvest Cycle 14
Component Description 22
Removal and Replacement 27
Removal and Replacement - Control Box 30

PARTS LIST AND WIRING DIAGRAMS 1
(Printed in Yellow)

PARTS LIST:

Component Location 2
Exterior Cabinet 3
Air-Cooled Assembly 4
Water-Cooled Assembly 5
Water System 6
Control Box 7
BH800 8

THE WIRING DIAGRAMS ARE FOR MODELS:

CM1000AE-32A (208-230/60/1) Air Cooled.....9
CM1000WE-32A (208-230/60/1) Water Cooled ...10
CM1000AE-3A (208-230/60/3) Air Cooled.....11
CM1000WE-3A (208-230/60/3) Water Cooled 13

THIS PAGE
INTENTIONALLY
LEFT BLANK

CM1000 FOR THE INSTALLER

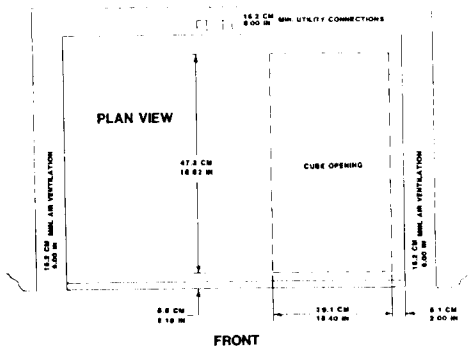

CM1000 CABINET SIZE AND UTILITY CONNECTIONS

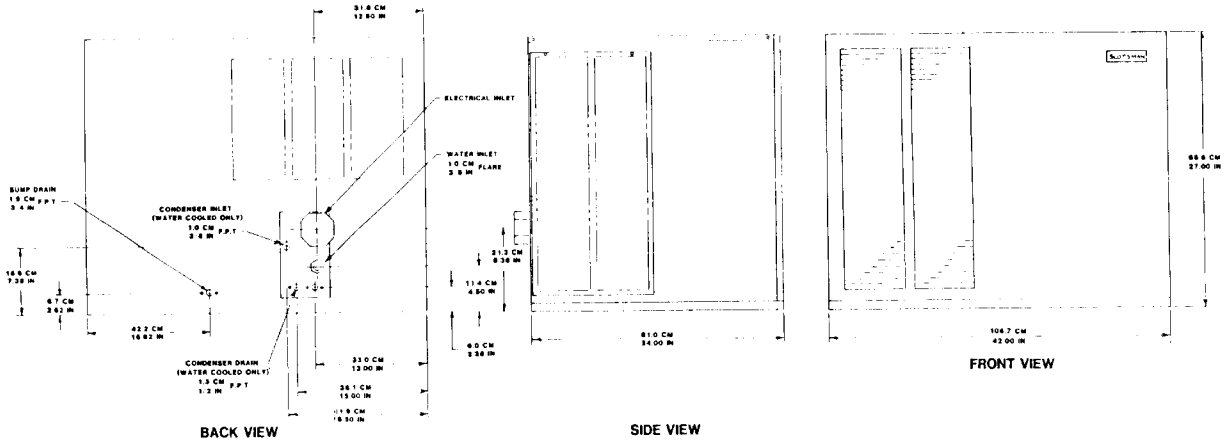

We reserve the right to make product improvements at any time. Specifications are subject to change without notice.

SPECIFICATIONS

Model Number	Dimensions H" x W" x D"	Ice Type	Cond. Type	Max. Fuse Size	Basic Electrical	Comp. H.P.	No. of Wires	Min. Circ. Ampacity*
CM1000AE-32A	27" X 42" X 24"	Contour Cube	Air	35	208-230/60/1	2.5	2	20.4
CM1000WE-32A	same		Water	35	208-230/60/1	2.5	2	19.7
CM1000AE-3A	same		Air	20	208-230/60/3	2.5	3	10.2
CM1000WE-3A	same		Water	20	208-230/60/3	2.5	3	9.3

The Standard Finish is Enamel Sandalwood.

* Minimum Circuit Ampacity is the figure used to determine wire size per National Electric Code.

IMPORTANT OPERATING REQUIREMENTS

	MINIMUM	MAXIMUM
Air Temperatures	50°F (10°C)	100°F (38°C)
Water Temperatures	40°F (4.4°C)	100°F (38°C)
Water Pressures	20 lbs. gauge	100 lbs. gauge
Electrical Voltage Variations Voltage rating specified on nameplate	-5%	+10%

(when compared to voltage on nameplate)

NOTICE: Extended periods of operation exceeding the above limitations consititute misuse under the terms of the Manufacturer's Limited Warranty, and will result in a loss of warranty coverage.

REFRIGERANT - R-502

OPTIONAL S.S. - PANEL KIT SPKCM1000

Includes top, front and side panels, must be field installed.

NAMEPLATE LOCATION

See illustration page 3.

STORAGE BIN: BH800

CM1000 FOR THE INSTALLER

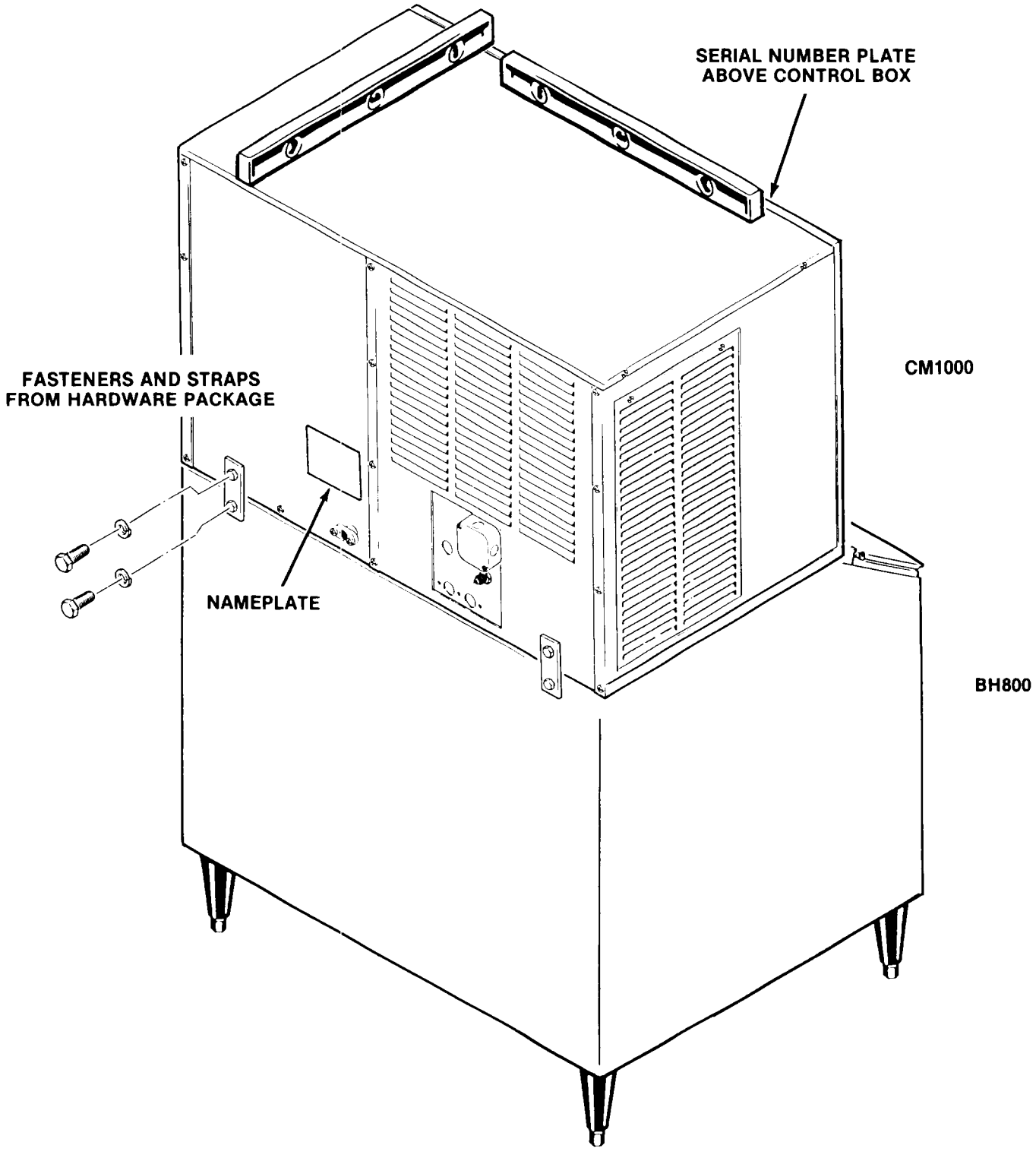

CM1000 FOR THE INSTALLER

SELECT LOCATION

The first step in installing the equipment is to select the location. The purchaser of the unit will have a desired spot in mind, check out that spot to insure that it is:

- indoors, in an environment that does not exceed the air and water temperature limitations for the equipment.
- that the necessary utilities are available including the correct voltage electrical power.
- that there be space around the installed machine for service, 6 inches **minimum** left, right, and rear for air-cooled models.

STORAGE BIN

The Scotsman bin for this unit is the BH800. Other bins may be available with bin tops to vary the storage capacity. Check to be sure that they are correct for the CM1000. Lay the bin on its back, using cardboard from the carton to support it, screw in the legs.

Stand the bin upright, and correct any possible small tears in the machine mounting gasket with food grade silicone sealant.

ICE MACHINE

The use of a mechanical lift is recommended for lifting the uncrated icemaker onto the bin. Place the unit directly onto the bin, align the panels so that the unit is even with the back, left, and right sides of the bin. Locate hardware package, take out two metal straps, and 4 mounting screws, use them to secure the icemaker to the bin. See illustration page 5.

Remove all shipping material, note the locations of the control box, utility connection location, and the bin control bracket.

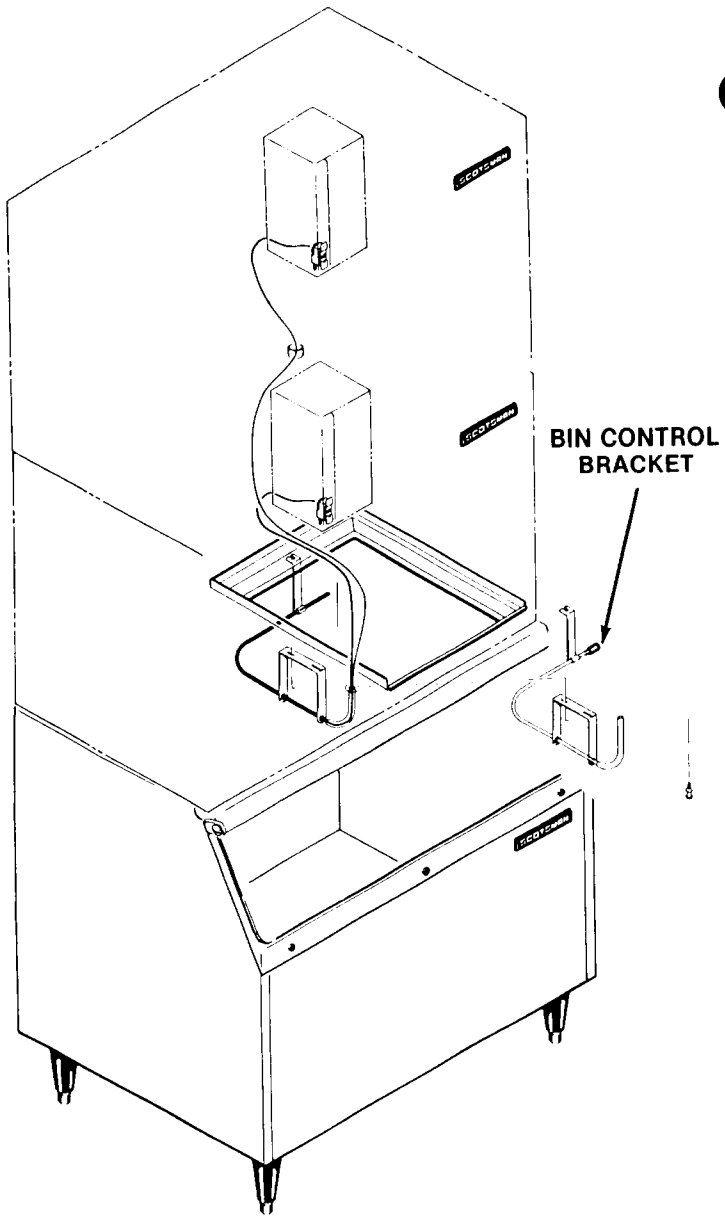

BIN CONTROL INSTALLATION

The bin control bracket is shipped in a cardboard retainer located in front of the freezing compartment. It is to be mounted to the bottom of the ice machine after it has been installed onto the bin.

Using 3 screws from the hardware package, mount the bracket to the machine. a) First install one screw at the back of the unit, and slip the bracket hanger over the head of that screw. Then b) use the remaining two screws to secure the bracket on the left of the freezing compartment.

Uncoil the bin thermostat capillary tube, and route it through the bin thermostat bracket tube, stopping at the end of the tube.

CM1000 FOR THE INSTALLER

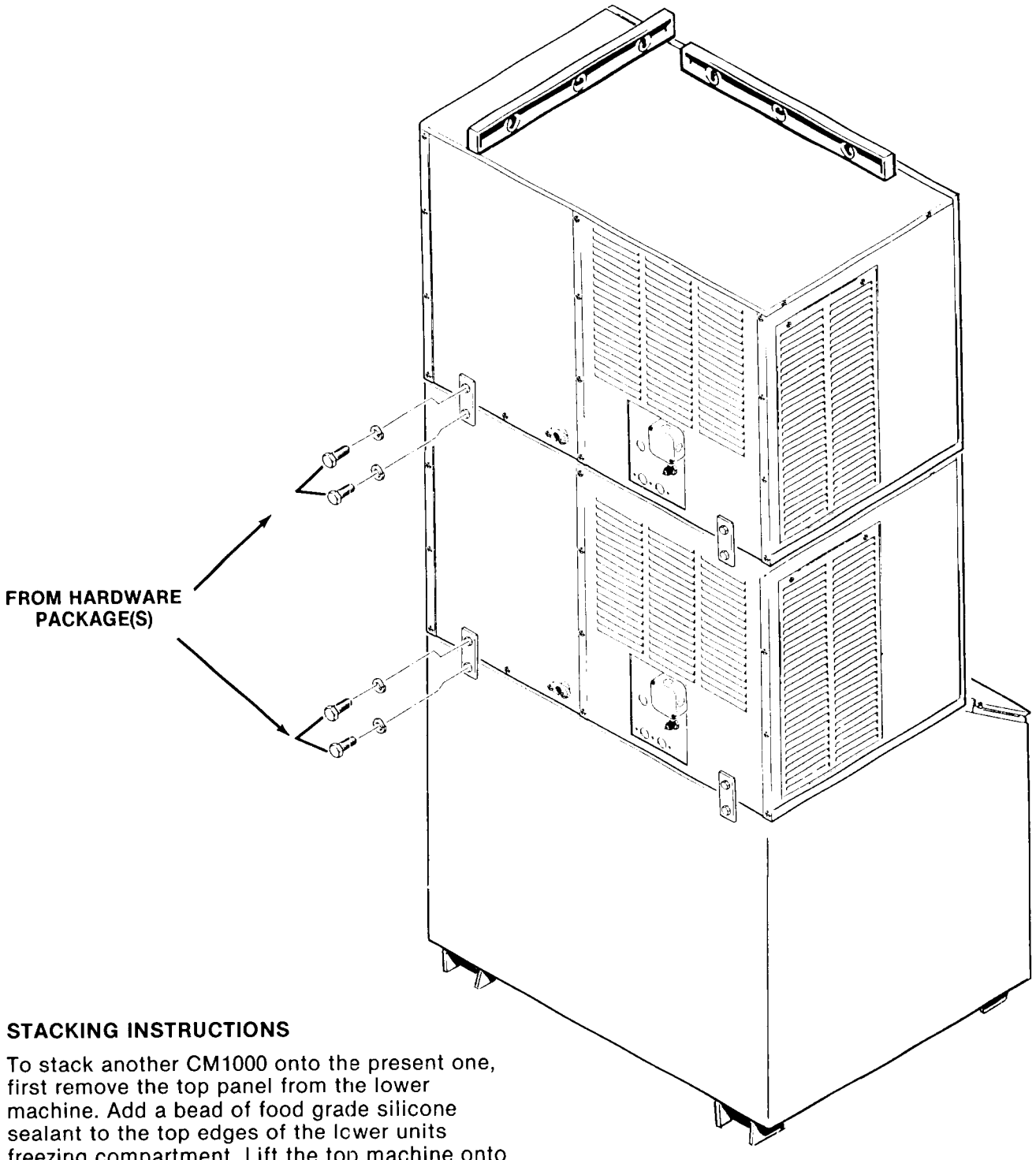

STACKING INSTRUCTIONS

To stack another CM1000 onto the present one, first remove the top panel from the lower machine. Add a bead of food grade silicone sealant to the top edges of the lower units freezing compartment. Lift the top machine onto the bottom machine, (the use of a mechanical lift is recommended for this step). Align the two machines cabinets, and using the 4 bolts and two straps from the top units hardware package, fasten the two units together at the back cabinets.

CM1000 FOR THE ELECTRICIAN

CONFORM TO ALL APPLICABLE CODES

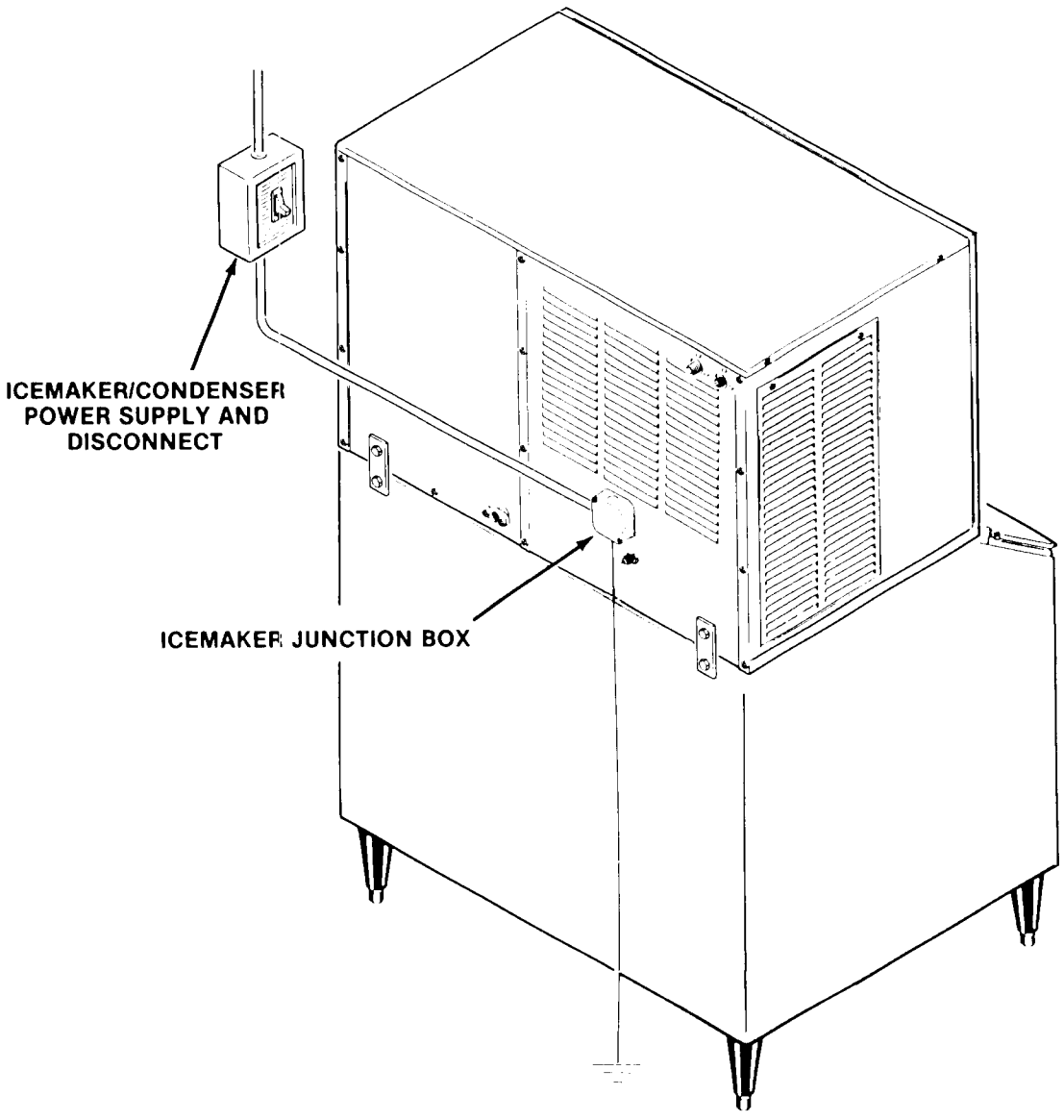

The electrical power to the unit is supplied through the junction box at the rear of the machine.

Check the nameplate for the units voltage requirements, and for the minimum circuit ampacity. The machine requires a solid chassis to earth ground wire.

The machine should be connected to its own electrical circuit so it would be individually fused. Voltage variation must remain within design limitations, even under storing conditions.

All external wiring must conform to national, state, and local electrical codes. The use of a licensed electrician is required to perform the electrical installation.

CM1000 FOR THE PLUMBER

CONFORM TO ALL APPLICABLE CODES

WATER INLET

AIR-COOLED MODELS: The recommended water supply is **cold** water, 3/8″ O.D. copper, connected to a 3/8″ male flare at the back of the cabinet. Install a hand valve near the machine to control the water supply.

WATER-COOLED MODELS: **A seperate** 3/8″ O.D. copper line is recommended, with a **seperate** hand valve to control it. It is connected to a 3/8″ FPT condenser inlet at the back of the cabinet. The water pressure must remain above 20 PSIG, at a maximum flow rate of 4 g.p.m.

DRAINS

AIR-COOLED MODELS: There is one 3/4″ FPT sump drain at the back of the cabinet, the drain lines are gravity type, and 1/4 inch per foot fall is recommended. Insulation in high humidity areas is recommended. There must be a vent at the highest point of the drain line, and the ideal drain receptacle would be a trapped and vented floor drain. **USE ONLY RIGID TUBING.**

WATER-COOLED MODELS: Besides the above drain, **a seperate** condenser drain must be run. Connect it to the 1/2″ FPT condenser drain connection at the back of the cabinet.

STORAGE BIN: **A seperate** gravity type drain needs to be run, similar to the air-cooled sump drain. Insulation of this drain line is recommended.

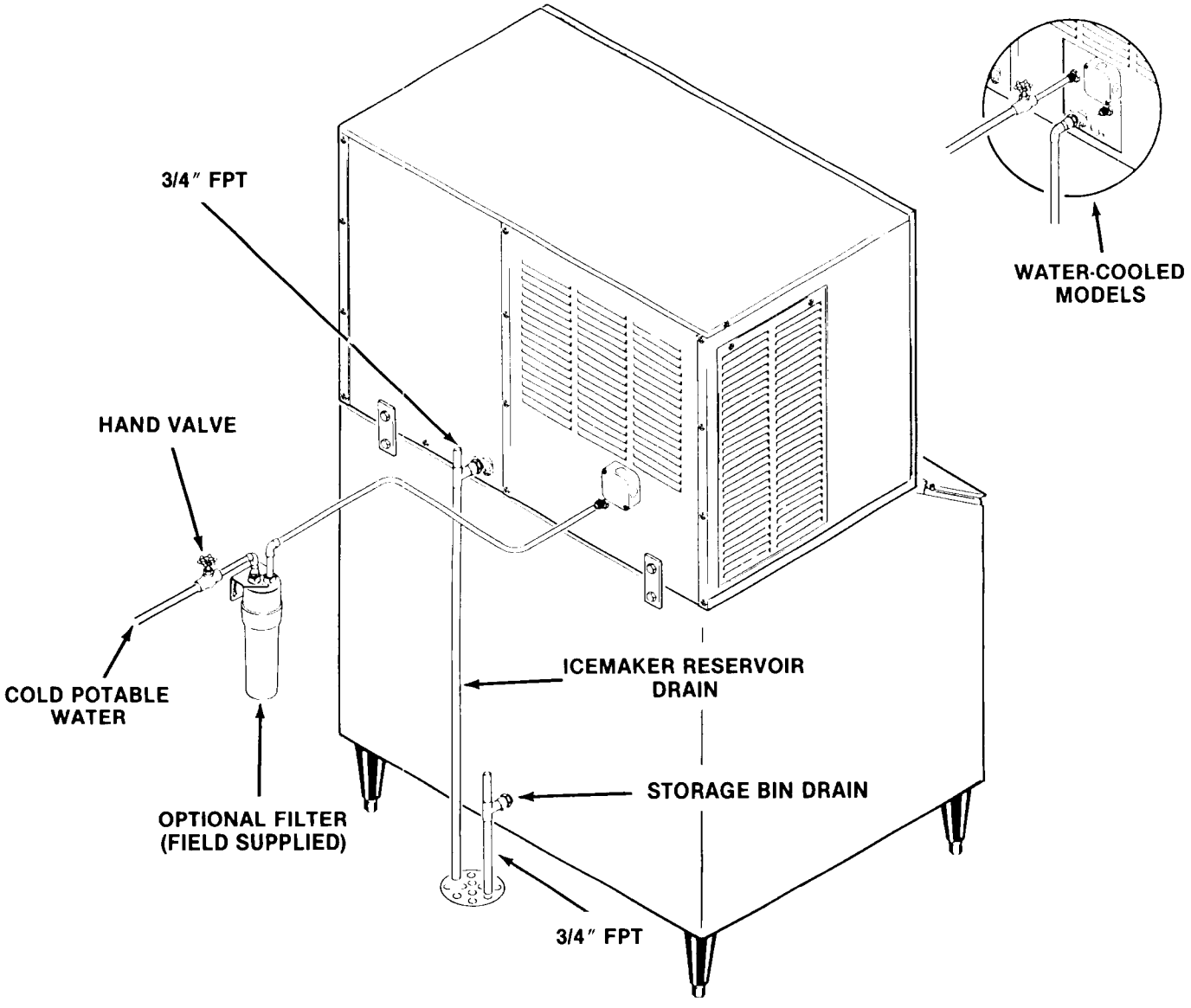

CM1000 FOR THE INSTALLER

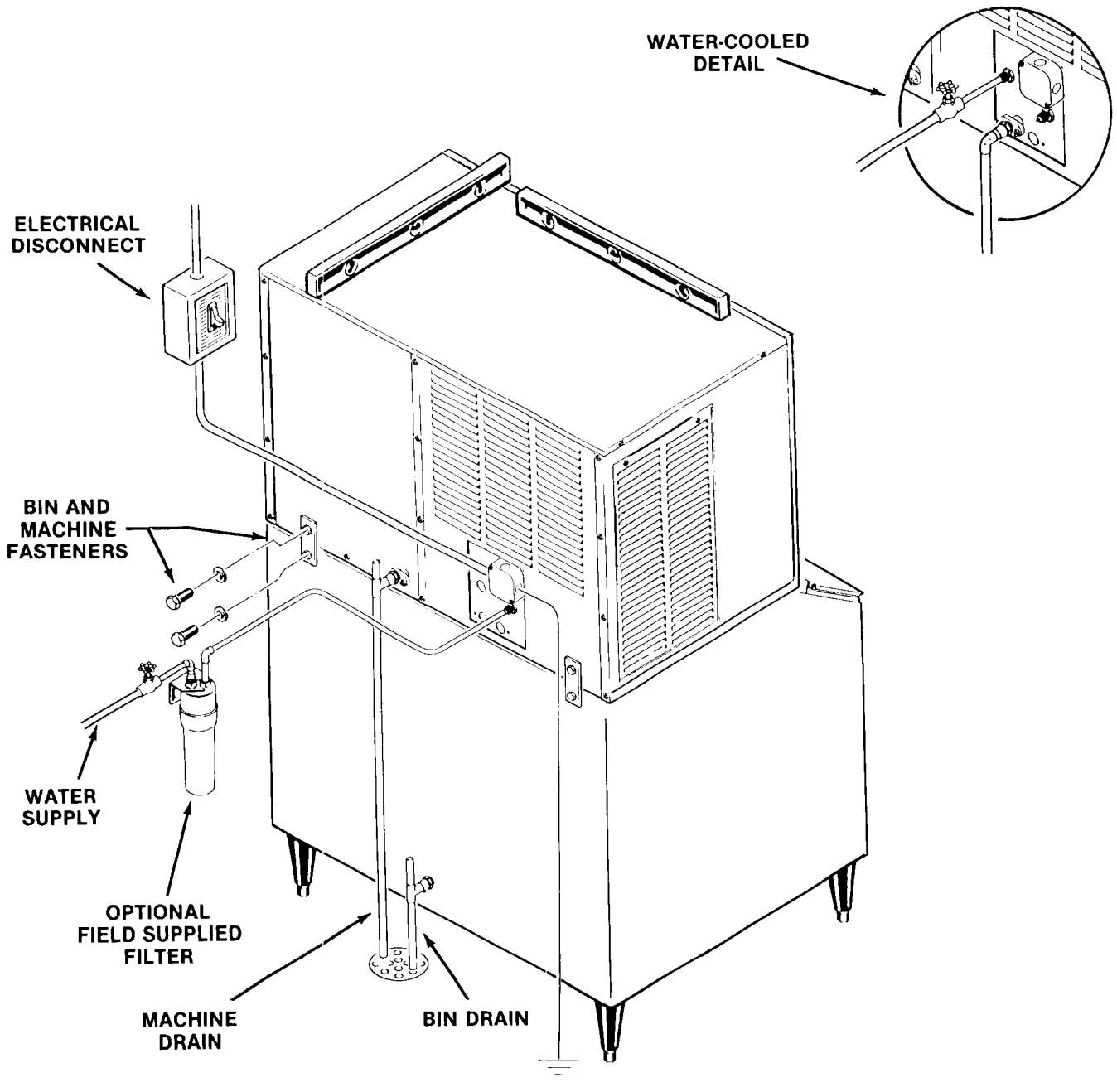

FINAL CHECKLIST

1. Is the unit in an area where the air and water temperatures will not exceed design limitations, including the heat produced by the air-cooled model?
2. Is there enough room around the unit for service, and at least 6 inches for the air-cooled model?
3. Water supply connected? Proper pressure? Drains?
4. Is the cabinet level?
5. Has all shipping material been removed?
6. Has the bin thermostat and bracket been installed?
7. Have all electrical connections been made?
8. Has the bin been cleaned and/or sanitized?
9. Has the warranty registration card been filled out and mailed in?
10. Has the owner/user been given the service manual, and instructed how to operate and maintain the equipment?
11. Has the owner/user been informed of the Scotsman Service Agency that can be contacted for service?

CM1000 START UP

START-UP

1. Remove front panel by pulling out to unsnap.
2. Remove two screws and the control box cover.
3. Remove the evaporator cover.
4. Check that the two toggle switches, the MASTER ON-OFF toggle switch and the COMPRESSOR ON-OFF toggle switch are in the OFF position, on the control box.
5. OPEN the water supply line shutoff valve.
6. Inside the control box is the shaft of the timer and the switch assembly. Rotate the shaft of the timer and switch assembly clockwise to start the timer. The timer starts when the actuator arm on the microswitch drops off outer cam into cam slot. See Timer Cam Positions. An audible click can be heard, but in a noisy area, look at the cam and switch to observe the event.

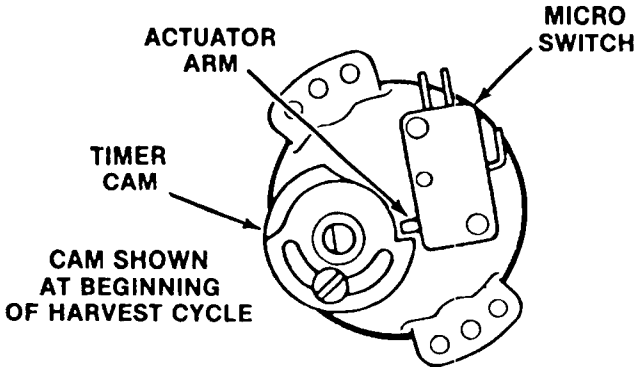

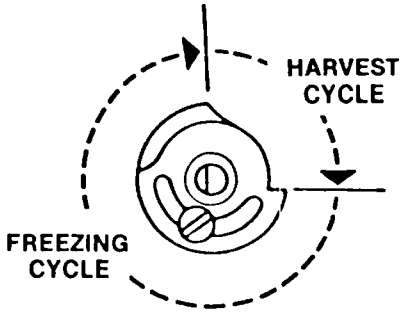

CAM SHOWN DIVIDED INTO TYPICAL FREEZING & HARVEST CYCLES

Timer Cam Positions

7. Move the master ON-OFF toggle switch, the top toggle switch, to the ON position.
8. Observe water fill cycle:

   Water pump operates and water inlet solenoid valve OPENS, incoming water flows from the valve through the tubing, the reservoir fills and excess water is overflowed through the stand pipe. This cycle will take about three minutes. Timer will close the water inlet solenoid valve and the water fill cycle is complete.

   Advancing the shaft of the timer and switch assembly into a new harvest cycle, restarts the timer and allows a check that: Water inlet solenoid valve OPENS and the reservoir overflows through the standpipe. Water inlet valve CLOSES, stopping water overflow.

   The water pump is operating, as seen by water moving through the tygon tube, up to the water distributor at the top of each evaporator plate, where water is uniformly dispensed and cascades down both sides of the evaporator plate and drains back into the sump assembly for recirculation.
9. Check that the water cascades down over each cube mold and into the sump.
10. When the second cycle is completed, move the compressor ON-OFF toggle switch, to the ON position.
11. Check operation of the freezing cycle:

    The compressor is operating.

    The icemaking process begins; feeling the metal parts of the evaporator plate reveals cold temperature, very shortly ice begins to form. Tubing will become frosted at the top of the evaporator plate.

    Freezing time will range between 10 and 20 minutes. Longer time for temperatures above 70-degrees F. and shorter time required when temperatures are below 70-degrees F. Average complete cycle time is about 16 minutes.

CM1000 START UP

12. Observe second and third cube harvest.

    Check size of SCOTSMAN CONTOUR CUBE

    Unlike other SCOTSMAN cubes which are made in a definite molded shape, contour cubes are produced in indentations and many shapes and sizes of contour cubes may be produced — only ONE size and shape combination is correct.

An under-charged refrigeration system produces smaller cubes at the top of the evaporator plate and large cubes at the bottom. Charge system per NAMEPLATE specifications.

Charge Refrigeration System with **REFRIGERANT 502 ONLY.**

In areas where extreme problem water condition exists, filtering or purifying equipment is recommended. Contact SCOTSMAN ICE SYSTEMS, Service Department, Albert Lea, Minnesota 56007 for further details.

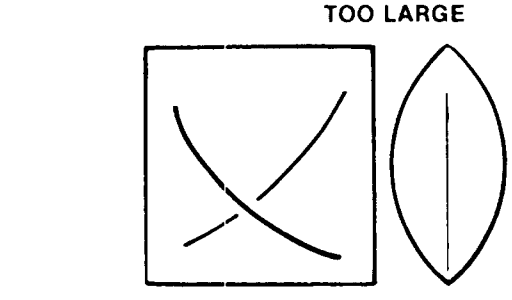

Too LARGE — may cause evaporator freeze ups. Adjust cube size control counter-clockwise to obtain smaller cubes

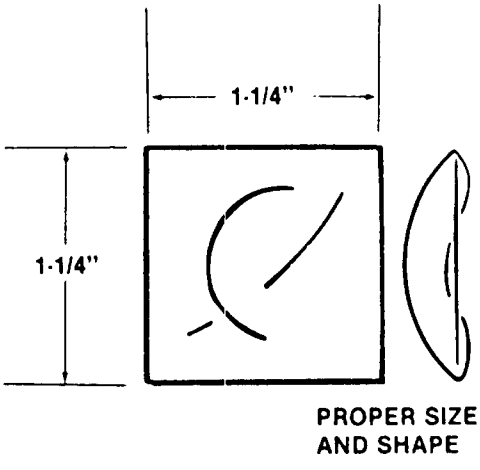

PROPER SIZE AND SHAPE of the contour cube. Icemaker operates at peak efficiency when a cube this size and shape is produced. A finely tuned system produces vertical strips of ice which easily break when they fall.

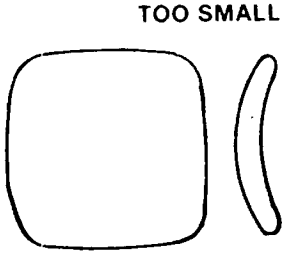

TOO SMALL. To obtain proper size cubes, adjust cube size control clockwise. May cause freeze up problems due to poor harvest.

Ice Cube Size & Shape

CM1000 START UP

ADJUSTMENT OF CUBE SIZE CONTROL

To produce SMALLER sized ice cubes:

Locate cube size control knob, in front of the control box.

Rotate the adjusting screw one-eighth of a turn COUNTERCLOCKWISE to WARMER.

Observe size of the ice cubes in the next two ice cube harvests and adjust in one-eighth turn or less increments, until correct ice cube is achieved.

To produce LARGER ice cubes:

Locate cube size control on the front of the control box

Rotate the adjusting screw one-eighth of a turn CLOCKWISE to COLDER.

Observe size of ice cubes in the next two cube harvests and adjust in one-eighth turn or less increments, until correct ice cube size is achieved.

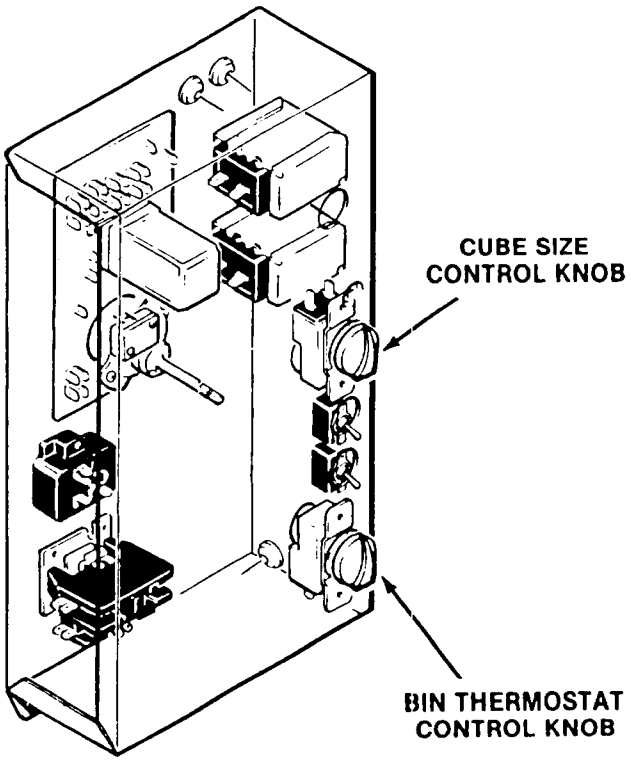

ROTATE ADJUSTMENT KNOB COUNTER-CLOCKWISE TO PRODUCE SMALLER CUBES.

ROTATE ADJUSTMENT KNOB CLOCKWISE TO PRODUCE LARGER CUBES.

BIN THERMOSTAT OPERATION

Check texture of ice cubes; when partially cloudy throughout, suggests icemaker is operating short of water; or, possibly an extreme problem water condition exists, where filtering or purifying equipment is recommended. Contact SCOTSMAN ICE SYSTEMS, Service Department, Albert Lea, Minnesota 56007 for further details. See SERVICE DIAGNOSIS chart, for shortage of water symptoms and corrections.

13. With the icemaker in the harvest cycle, hold ice against the bin thermostat control bulb to test shutoff, which should cause the icemaker to shut OFF at the END OF THE HARVEST CYCLE.

    Within minutes after the ice is removed from the sensing bulb, the bulb will warm up and cause the icemaker to restart. This control is factory set and should not be reset until testing is performed.

14. Replace control box cover and all cabinet panels and screws.

15. Thoroughly explain to the owner/user the significant specifications of the icemaker, the start up and operation, going through the procedures in the operating instructions. Answer all questions about the icemaker by the owner; and inform the owner of the name and telephone number of the authorized SCOTSMAN Distributor, or service agency serving him.

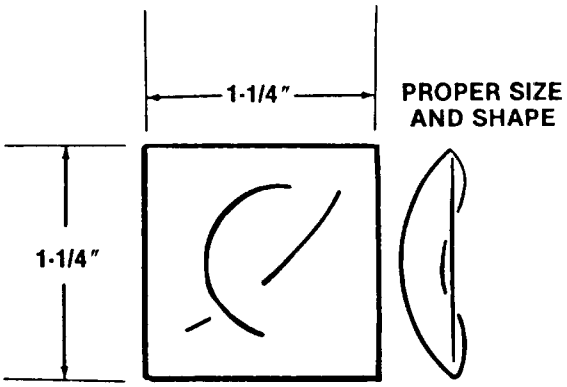

FREEZE CYCLE

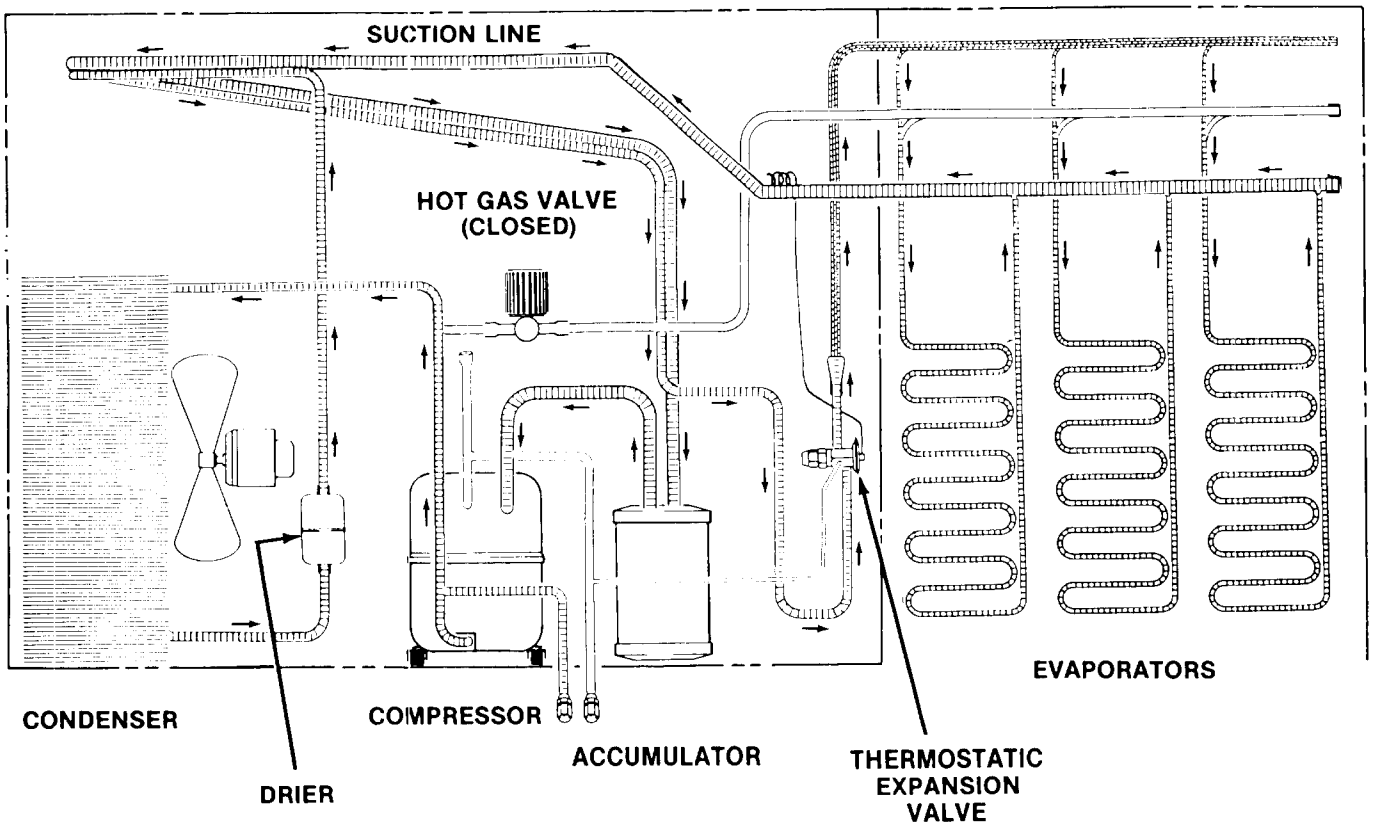

REFRIGERATION SYSTEM SCHEMATIC

REFRIGERATION DURING FREEZE:

This ice machine employs either air or water as a condensing media, the refrigeration system for either one is as follows:

At the hermetic compressor, Refrigerant 502 is compressed into a high temperature, high pressure gas. This gas contains the heat removed from the **evaporator,** as well as **compressor** motor heat. The gas moves through the **discharge** line into the **condenser,** air or water-cooled. If air-cooled, the discharge pressure will change with the heat load and the ambient air temperature. If water-cooled, the discharge pressure is controlled by the amount of water flowing through the **condenser** - which is determined by the water regulating valve. After the gas is cooled in the condenser, giving up much of its heat, the gas condenses into a high pressure liquid. This liquid travels through the **liquid line** to the metering device, a **thermostatic expansion valve.**

The thermostatic expansion valve meters how much liquid refrigerant is to be allowed into the evaporator section of the refrigeration system. This is determined by the temperature of the TXV sensing bulb, located on the **suction line** manifold, at the outlet of the **evaporators.** If the bulb senses a warm suction line, more refrigerant is allowed into the evaporator, (common at the beginning of the freeze cycle) and when the temperature begins to fall, less refrigerant is allowed through. This is why the suction side gauge pressure will decline throughout the freeze cycle. At the evaporator, the liquid refrigerant released from high pressure, boils off in the low pressure environment and absorbs heat, thus cooling the evaporator surface and anything near it, such as water.

The low pressure refrigerant vapor then is forced through the **accumulator,** where any excess liquid refrigerant is trapped, allowing only refrigerant vapor to enter the compressor suction tube, where it is recompressed into high pressure, high temperature gas again and the cycle repeats.

FREEZE CYCLE

WATER SYSTEM

A fixed charge of water had been brought into the machine during the harvest or defrost cycle.

A pump, running continuously, forces the water to the top of the evaporators, where it is distributed through manifolds, and then cascades down the evaporator surface by gravity. As it flows accross the refrigerated evaporators, some of the water will be chilled enough to change form, turn to ice, and stay frozen onto the evaporator. Most of the water returns to the reservoir, to be sucked back into the pump, and repumped over the evaporators.

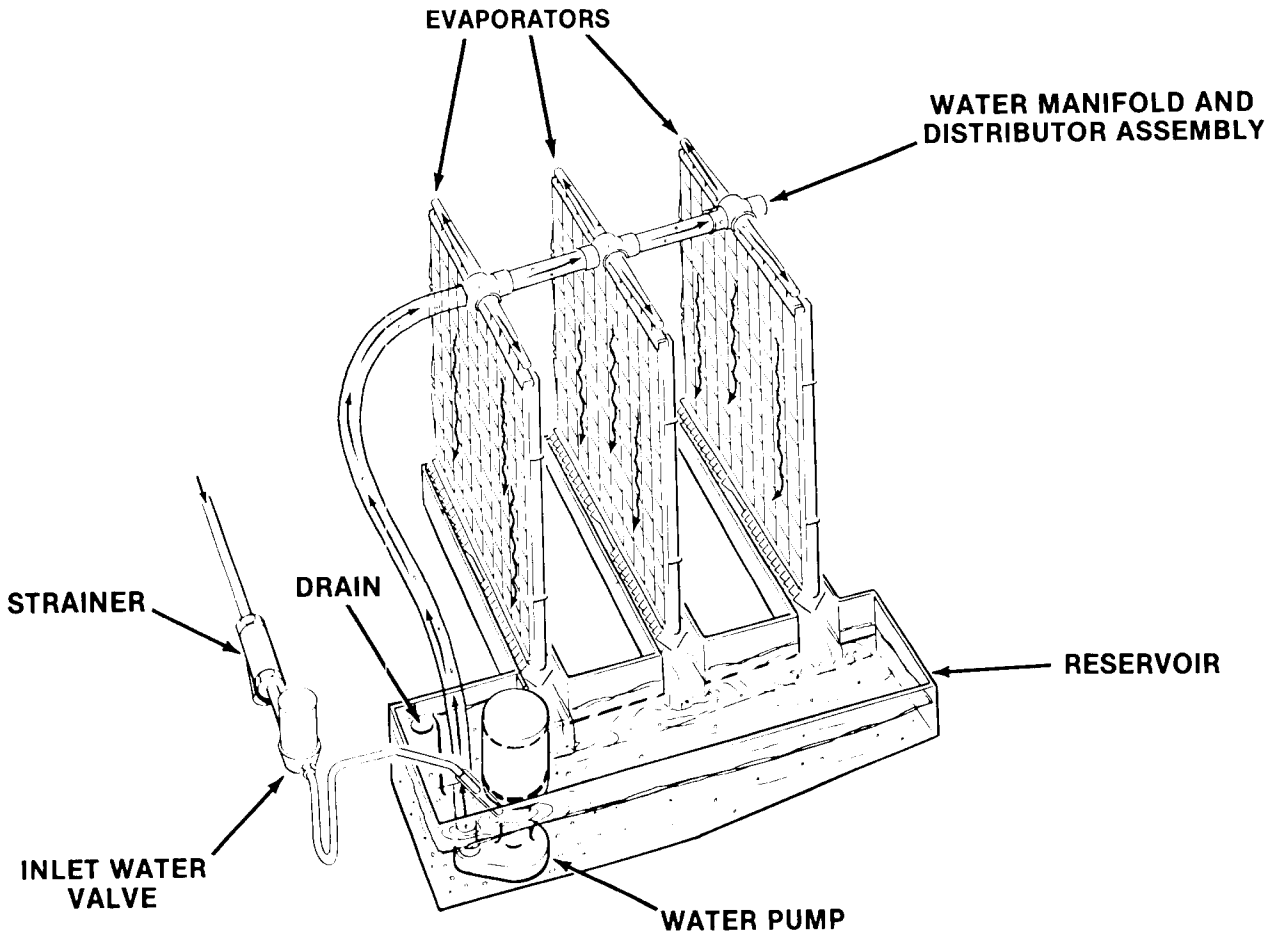

WATER FLOW SCHEMATIC

HARVEST (DEFROST) CYCLE

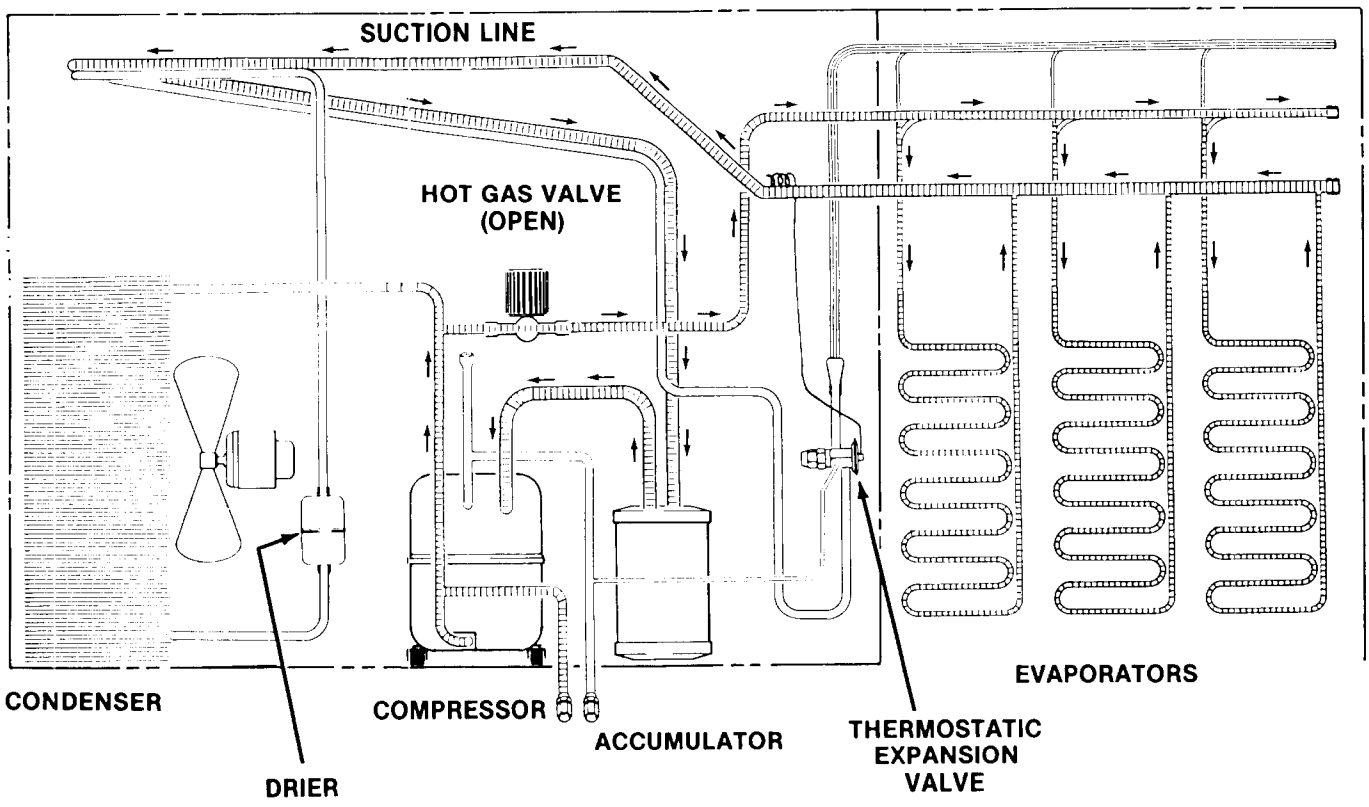

REFRIGERATION SYSTEM SCHEMATIC

REFRIGERATION SYSTEM DURING HARVEST

The refrigeration system performs the harvest of ice by use of a hot gas bypass valve. When the time comes to de-ice the evaporators, the hot gas valve is energized, and the high temperature, high pressure gas bypasses the condenser, and is allowed directly into the evaporators. The high temperature gas is cooled by the cold evaporators, so it condenses into a liquid, giving up its heat as it does so. This heat warms the evaporators, and the ice frozen onto the evaporator surface melts, releasing the frozen cubes. Ice then falls by gravity into the storage bin.

The liquid refrigerant goes through the suction line into the accumulator, where it is trapped, so that only refrigerant vapor is drawn off the top of the accumulator and back into the suction tube of the compressor.

HARVEST (DEFROST) CYCLE

WATER SYSTEM

The water in the reservoir has mostly been turned into ice during the freeze cycle, so the water level in the reservoir has gone down. During the harvest cycle, an electric water fill valve meters in a controlled amount of water into the reservoir. At the left side of the reservoir there is a stand pipe, and any excess water is drained off and out of the machine through it. The purpose of the extra water brought into the machine is to dilute the water remaining in the reservoir, and thus reduce the concentration of minerals.

The pump stays on, forcing the warm incoming water accross the evaporators to a) Assist the de-icing by warming the evaporators from the outside (as well as the refrigeration system warming it from the inside) b) Cool off the warm incoming water so that it takes less time to turn it into ice.

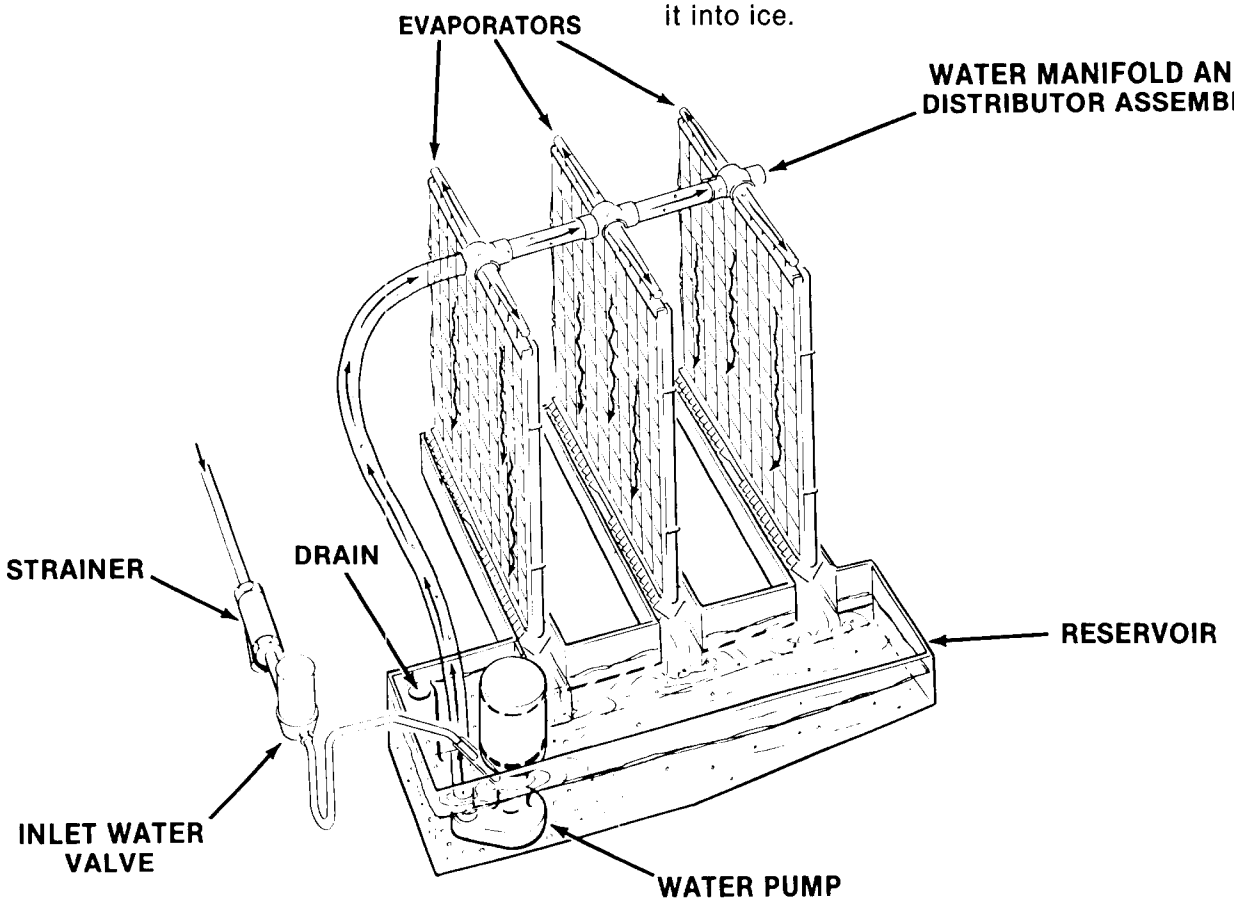

WATER FLOW SCHEMATIC

CM1000 OPERATION - ELECTRICAL SEQUENCE

The following charts illustrate which switches and which components are ON or OFF during a particular phase of the icemaking cycle.

Refer to the wiring diagram for a reference. Remember, the wiring diagram shows the unit as it is in the Timed Freeze Cycle.

BEGINNING FREEZE

ELECTRICAL COMPONENTS (LOADS)	ON	OFF
Finish Relay Coil	X	
Timer Motor		X
Hot Gas Valve		X
Water Fill Valve		X
Fan Motor (Air-Cooled)	X	
Compressor Contactor Coil	X	
Pump	X	
Compressor	X	

CONTACTS (OR SWITCHES)	ON (CLOSED)	OFF (OPEN)
Finish Relay 4-7	X	
Finish Relay 8-5	X	
Finish Relay 8-2		X
Finish Relay 3-9		X
Timer NC		X
Timer NO	X	
Bin Thermostat	X	
Cube Size Control		X
High Pressure Safety	X	
High Temperature Cut-out	X	
Master Switch	X	
High Pressure Fan Control	X	
Compressor Switch	X	
Contactor Contacts	X	

At the beginning of the freeze cycle, the suction line is still warm, so the cube size control, a reverse acting thermostat, is open.

TIMED FREEZE

ELECTRICAL COMPONENTS (LOADS)	ON	OFF
Finish Relay Coil	X	
Timer Motor	X	
Hot Gas Valve		X
Water Fill Valve		X
Fan Motor (Air-Cooled)	X	X
Compressor Contactor Coil	X	
Compressor	X	

CONTACTS (OR SWITCHES)	ON (CLOSED)	OFF (OPEN)
Finish Relay 4-7	X	
Finish Relay 8-5	X	
Finish Relay 8-2		X
Finish Relay 3-9		X
Timer NC		X
Timer NO	X	
Bin Thermostat	X	
Cube Size Control	X	
High Pressure Safety	X	
High Temperature Cut-out	X	
Master Switch	X	
High Pressure Fan Control	X	X
Compressor Switch	X	
Contactor Contacts	X	

The evaporator and suction line temperatures have gone down with the build up of ice of the evaporators. The cube size control has closed, starting the timer. The fan may be off and on in low air temperatures.

HARVEST

ELECTRICAL COMPONENTS (LOADS)	ON	OFF
Finish Relay Coil		X
Timer Motor	X	
Hot Gas Valve	X	
Water Fill Valve	X	
Fan Motor (Air-Cooled)		X
Compressor Contactor Coil	X	
Compressor	X	

CONTACTS (OR SWITCHES)	ON (CLOSED)	OFF (OPEN)
Finish Relay 4-7		X
Finish Relay 8-5		X
Finish Relay 8-2	X	
Finish Relay 3-9	X	
Timer NC	X	
Timer NO		X
Bin Thermostat	X	
Cube Size Control		X
High Pressure Safety	X	
High Temperature Cut-out	X	
Master Switch	X	
High Pressure Fan Control		X
Compressor Switch	X	
Contactor Contacts	X	

The timer has advanced to the position where the microswitch plunger drops into the open area of the cam. The NO contacts open, de-energizing the relay, placing the machine in harvest: hot gas and inlet water valves on.

CM1000 MAINTENANCE & CLEANING INSTRUCTIONS

A Scotsman Ice System represents a sizable investment of time and money in any company's business. In order to receive the best return for that investment, it MUST receive periodic maintenance.
It is the USER'S RESPONSIBILITY to see that the unit is properly maintained. It is always preferable, and less costly in the long run, to avoid possible down time by keeping it clean; adjusting it as needed; and by replacing worn parts before they can cause failure. The following is a list of recommended maintenance that will help keep the machine running with a minimum of problems.
Maintenance and Cleaning should be scheduled at a minimum of twice per year.

ICEMAKER

THE FOLLOWING MAINTENANCE SHOULD BE SCHEDULED AT LEAST TWO TIMES PER YEAR ON THIS ICEMAKER. CALL YOUR AUTHORIZED SCOTSMAN SERVICE AGENCY.

1. Check and clean or service any optional water treatment devices, if any.

2. Clean the water strainer.

3. On air cooled models, clean the air cooled condenser. Do not use a wire brush. Vacuum or blow out any dust in the fins of the condenser: the condenser is only clean when light can be seen through the fins.

4. Check that the cabinet is level in the side to side and front to back directions.

5. Clean the water system, evaporator plates and sump assembly, using a solution of Scotsman Ice Machine Cleaner. Refer to CLEANING - Icemaker. Cleaning requirements vary according to local water conditions and to how much the machine runs. Continuous check of the clarity and shape of the ice cubes, with a visual inspection of the water system parts, evaporator parts and the reservoir will indicate if more frequent cleaning is needed.

6. Check and tighten all bolts and screws.

7. Check for water leaks and make corrections.

8. Check that the bin thermostat operates correctly: holding ice on the thermostat control tube in the bin should cause the icemaker to shut off at the end of the harvest cycle. After the ice is removed, the icemaker should restart within a few minutes.

9. Check cube size, adjust if required.

10. Check harvest time, adjust if required.

ICE STORAGE BIN

The interior liner of the bin is in contact with a **food** product: **ice.** The storage bin must be **cleaned** regularly to maintain a **sanitary** environment. Once a week cleaning with soap and water, a hot water rinse and an air dry is a basic procedure.
Every 90 days, the liner should be sanitized with a commercial ice machine sanitizer, according to the directions of the sanitizer.

CM1000 MAINTENANCE & CLEANING INSTRUCTIONS

WARNING

SCOTSMAN Ice Machine Cleaner contains Phosphoric and Hydroxyacetic acids. These compounds are corrosive and may cause burns. If swallowed, DO NOT induce vomiting. Give large amounts of water or milk. Call physician immediately. In case of external contact, flush with water. KEEP OUT OF THE REACH OF CHILDREN.

1. Empty bin of ice.
2. Pull out and remove front panel.
3. Switch both the Master and Compressor switches OFF.
4. Remove evaporator cover by lifting up and pulling out.
5. Switch the Master switch ON. Pour 8 ounces of Scotsman Ice Machine Cleaner into the reservoir. Run unit this way for 30 minutes.
6. Switch the Master switch to OFF, remove the pump hose from the evaporator water manifold, point it into the bin and switch the Master switch back to ON. This pumps the cleaning solution out of the reservoir. Add fresh water to the reservoir to thoroughly rinse the reservoir.
7. Replace pump hose.
8. Remove the control box cover, turn timer shaft clockwise until it appears as illustrated (harvest cycle.) Replace cover.

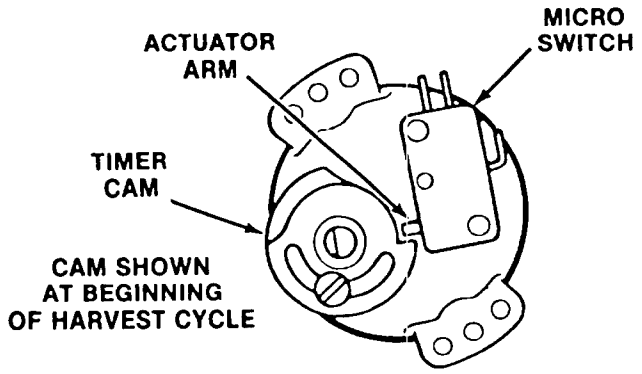

9. Switch the Compressor and Master switches ON.
10. Replace the evaporator cover and front panel.
11. Check the next batch of cubes to be sure all the cleaner is gone (no sour taste).

CAUTION

DO NOT use ice cubes produced from the cleaning solution. Be sure none remains in the bin.

12. Pour hot water into the storage bin to melt the cubes, and to also clean the bin drain.

    If necessary, the reservoir can be removed for cleaning by:

    a) Removing front panel.
    b) Switching Master switches to OFF.
    c) Removing the evaporator cover.
    d) Removing thumb screw securing pump to lower evaporator brace, unplug pump, pull it up and out of the machine. Remove hose from pump.
    e) Disconnect drain hose from left rear of reservoir, lift reservoir up and pull out off machine.
    f) Reverse to reassemble.

CM1000 SERVICE SPECIFICATIONS

In servicing a machine, it is often useful to compare that individual units operating characteristics to those of a normally operating machine. The data that follows gives those characteristics; however, be aware that these values are for NEW, CLEAN machines. USE THESE NUMBERS AS A GUIDELINE ONLY.

COMPONENT

Timer - 1 revolution of the cam, in minutes 8
Harvest Time, preset, in minutes 2-1/4
Inlet Water Valve, water flow in g.p.m. 1

	CI	CO	
Cube Size Control, Reverse Acting, Temperature range	(+ 25°F. to 0°F.)	—	Water-Cooled
	(+ 12°F. to -6° F.)	—	Air-Cooled
Bin Thermostat, Temperature Range	38.5°-43.5°	33.5°-38.5°	
High Pressure Safety Switch, psig Air-cooled	Manual	450	
High Pressure Safety Switch, psig Water-cooled	Manual	350	
Fan Pressure Control, in psig	210	193	

OPERATING CHARACTERISTICS

On air-cooled models during the freezing cycle, the discharge pressure will slowly decline as the unit freezes ice; and at the same time, the suction pressure will also decline, reaching it's lowest point just before freeze. Compressor amps experience a similar drop.

On water-cooled, the discharge pressure is constant, maintained during the freeze cycle by the water regulating valve at 220 PSIG. However, suction pressure and compressor amps will still decline as the machine freezes ice.

FREEZE CYCLE

Average Discharge Pressure A/C . . . 330-200 PSIG
Average Discharge Pressure W/C . . . . . 220 PSIG
Suction Pressure at the end of
the Freeze Cycle . . . . . 22-30 PSIG
Freeze Time . . . . . 10-20 Minutes
Ice Weight per cycle . . . . . 9-9.5 lbs.
Compressor Amps, 5 min. into Freeze . . . 10.3-11.4
Compressor Amps, end of Harvest 12-12.8

HARVEST CYCLE

Average Discharge Pressure . . . . . 150-120 PSIG
Average Suction Pressure . . . . . 115-80 PSIG
Harvest Time, assumed to be 2-1/4 minutes. This can be adjusted to suit local conditions.

The values listed are representative of values seen at a wide range of air and water temperatures and are for a normal cube size.

When comparing these figures to field data, allow a variation from each end of the range given.

CM1000 COMPONENT LOCATION AND DESCRIPTION

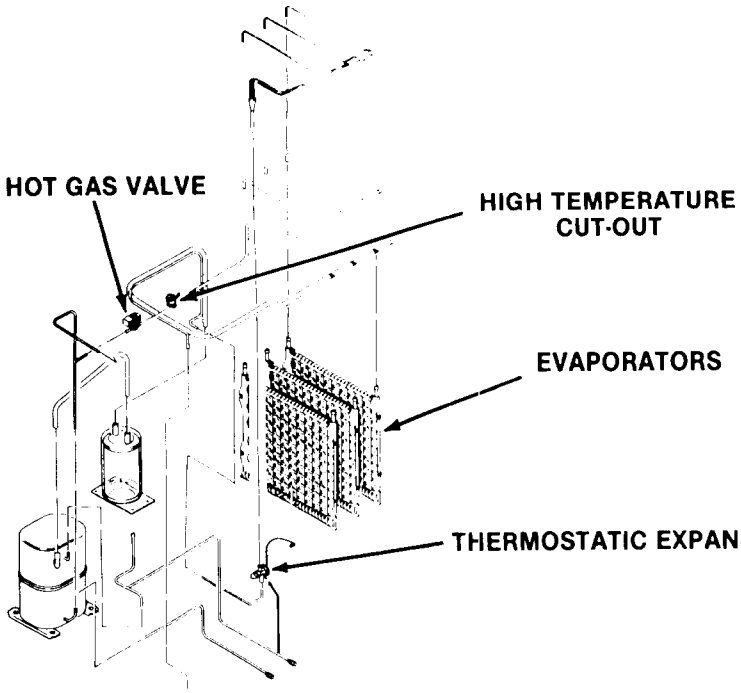

AIR-COOLED REFRIGERATION SYSTEM

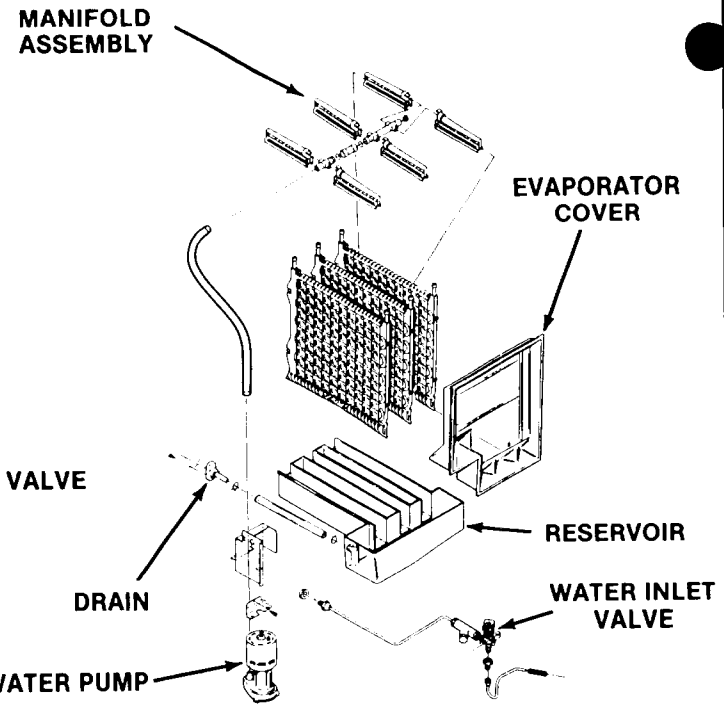

WATER AND DRAIN SYSTEM

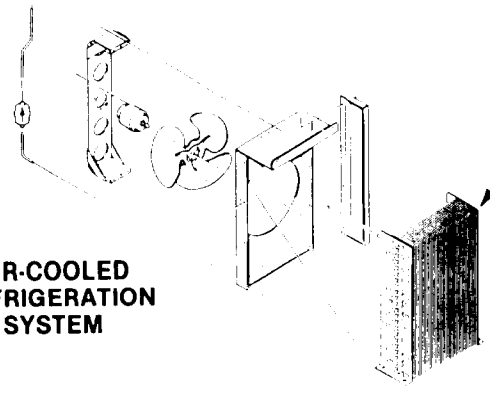

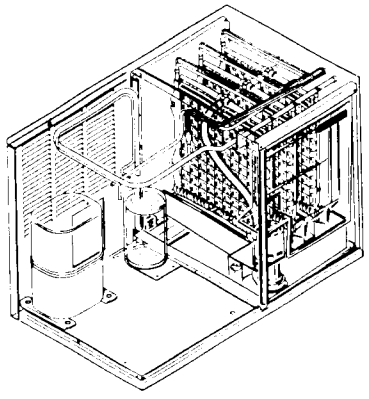

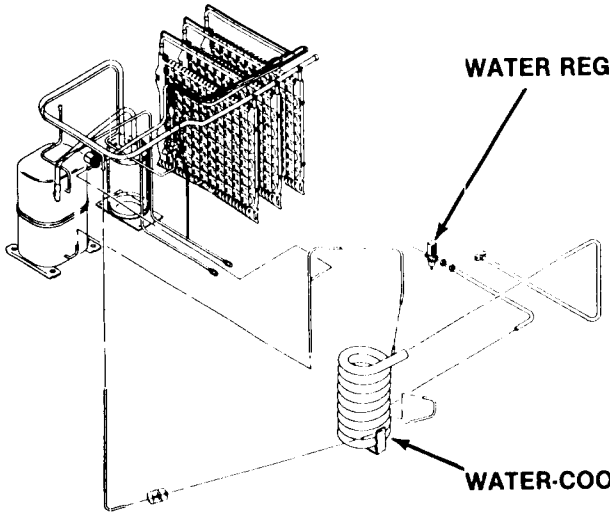

WATER-COOLED REFRIGERATION SYSTEM

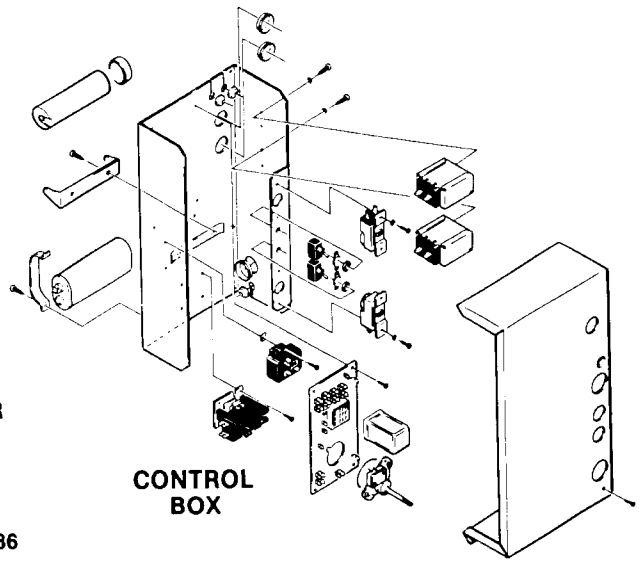

CONTROL BOX

CM1000 COMPONENT LOCATION AND DESCRIPTION

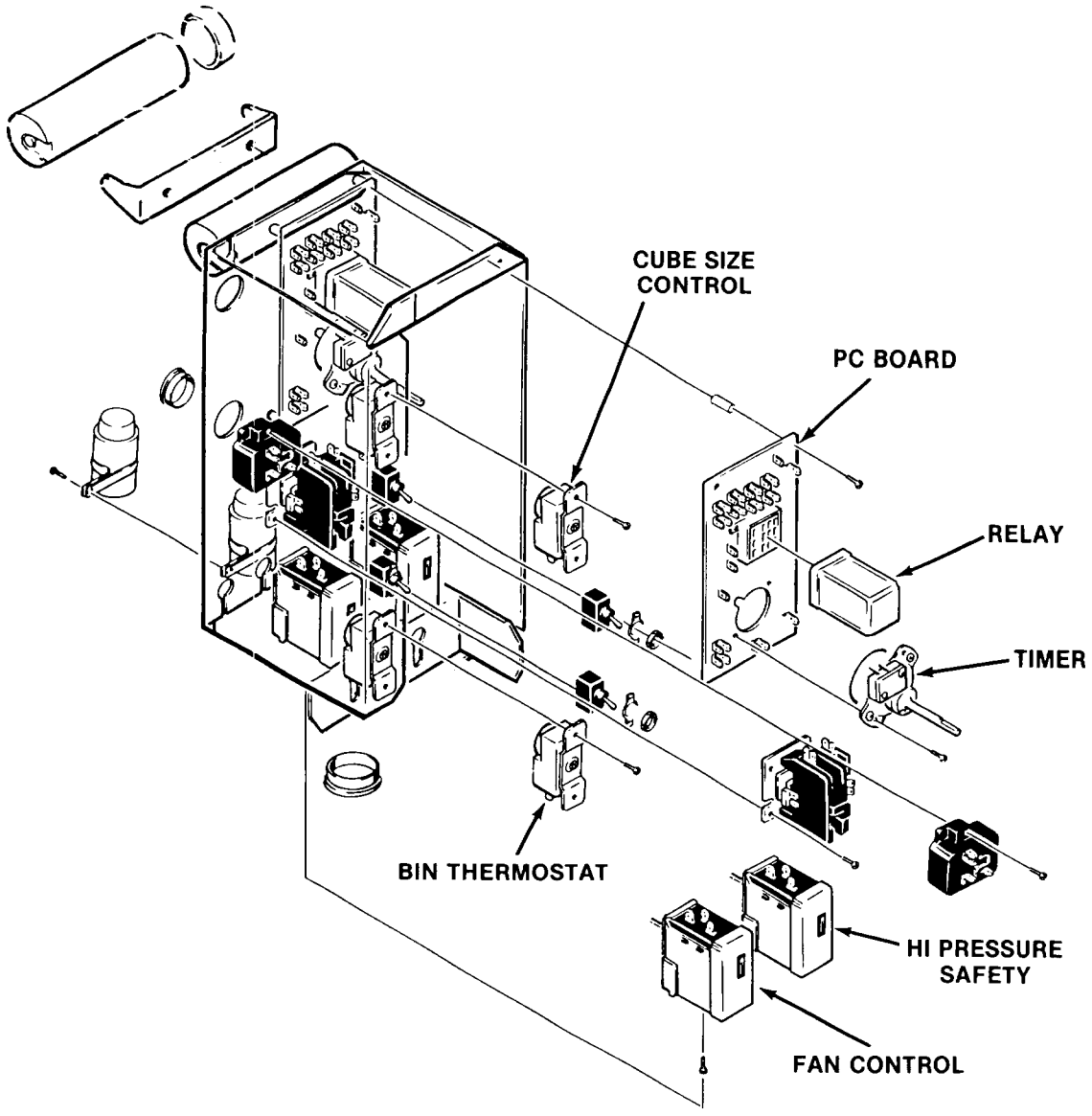

CONTROL BOX

BIN THERMOSTAT

The main control of the ice machine, opens when cold (ice on it). The unit will only turn off at the end of the first harvest cycle, after the control opens.

PC BOARD

The junction point for all of the controls.

CUBE SIZE CONTROL

A reverse acting thermostat (closes on tempeature fall). This control stabilizes the units during varying ambients. It only closes at the preset temperature the operator has it set for. The adjustment is to obtain the correct size cube.

RELAY

The machine is in FREEZE when the relay is energized, and on HARVEST when it is not energized. Plugs into the PC board.

TIMER

Harvest timer can be varied by adjusting the split cams.

HI PRESSURE SAFETY

Shuts the machine off should the high side pressure become too great. Manual reset.

FAN CONTROL

On air-cooled models, only, directly controls the fan motor. Keeps head pressure up in very cold ambients.

CM1000 COMPONENT LOCATION AND DESCRIPTION

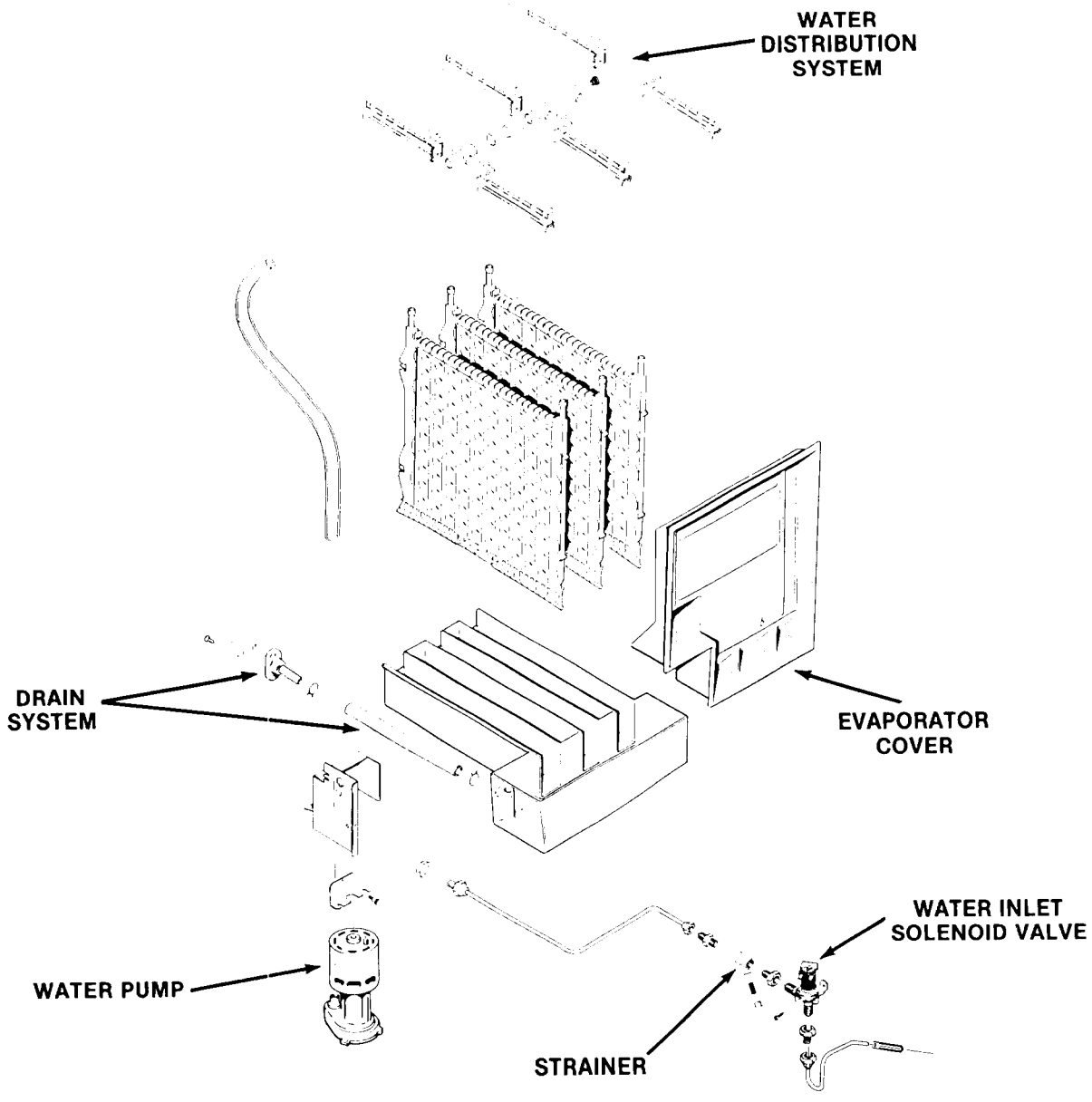

WATER INLET SOLENOID VALVE

The water inlet solenoid valve opens during harvest to fill the sump assembly with water. Excess water overflows through a stand pipe located at the back of the sump to flush minerals from the sump.

WATER PUMP

The water pump picks up water from the base of the reservoir, and forces it up to the top of the evaporators. It remains on throughout the freeze and harvest cycles.

EVAPORATOR COVER

This cover, held in place by shoulder screws, covers the freezing compartment front, keeping any ice and water from splashing the front panel and the water pump.

DRAIN SYSTEM

The drain system functions to allow the excess water brought into the machine during the harvest cycle, to be easily drained away. A standpipe in the back of the reservoir maintains the water level, and is connected to the cabinet drain fitting by tygon tubing.

WATER DISTRIBUTION SYSTEM

The water distribution system functions to evenly supply water to all cells of the evaporator plates. The water pump pumps water from the sump up to the vertical tygon tube to a tee. From there water is channeled through water manifolds to the water distributors, two atop each evaporator plate, and distributed evenly down both sides of each evaporator plate. Gravity flow returns the water to the sump reservoir for recirculation.

CM1000 SERVICE DIAGNOSIS

The table below is intended as a quick reference to aid the Service Agent in determining the cause of a particular type of malfunction, as well as the recommended repair. It is not intended to be an exclusive list.

Reference to other portions of this manual, including wiring diagrams, installation, and operation are recommended to better determine the cause of a problem.

SYMPTOM	POSSIBLE CAUSE	CORRECTION
Machine does not run at all.	Master switch open, high pressure safety open.	Test and replace. Reset or replace.
	High temperature cut-out open.	Check temperature of hot gas line, check switch.
	P.C. board open.	Remove board and check.
	No power to unit.	Check electrical source.
	Bin control open.	Test and replace.
Machine runs, compressor does not.	Compressor switch open.	Test and replace.
	Compressor contactor open.	Test and replace.
	Compressor relay open.	Test and replace.
	Compressor open.	Test and replace.
Machine runs, makes no ice.	No water.	Check water supply and fill valve.
	Water, but not pumping	Check power to pump, replace pump.
	Water pumping but does not cool.	Check refrigeration system pressure, check fill valve for leak through, check condenser for clog, or poor air circulation, check compressor. Test and replace relay, must be **energized** to freeze.
Machine runs, makes ice, does not try to harvest (timer does not advance).	Cube size control open.	Test and replace control.
	Timer motor open.	Test and replace timer.
	Refrigerant charge	Test and add refrigerant. Check for leak, weigh in charge after repair.
	P.C. board open to timer.	Check and replace.
	Relay contacts 8/5 open during freeze.	Test and replace relay.

CM1000 SERVICE DIAGNOSIS

SYMPTOM	POSSIBLE CAUSE	CORRECTION
Machine runs, makes and harvests ice, but very slowly; low ice capacity.	Low refrigerant charge.	Check system, repair leak weigh in charge.
	High discharge pressure due to non-condensable or over charge.	Evacuate and weigh in charge
	Extra water coming in during freeze.	Test and replace fill valve.
	Condenser dirty.	Clean.
	Low water pressure (water-cooled).	Check and repair.
	High air temperature (air-cooled).	Check temperature of air entering condenser.
Low ice capacity, machine runs fine.	Bin control shutting unit off prematurely.	Check bin control position and function.
	Water backing up into bin.	Check and clean bin drain.
	High temperature C.O. shuts unit off and on.	Check hot gas valve for leak through.
Machine makes irregular ice - Makes ice on some evaporators, or the top only.	Low water supply.	Check fill valve.
	Plugged water manifolds. TXV superheat wrong. Refrigerant charge low.	Clean machine. Adjust and replace. Adjust - check for leak, recharge.
Machine runs, makes ice, timer advances, but does not harvest.	Relay contacts 3-9 open during harvest.	Test and replace relay.
	Timer microswitch N.O. CONTACTS DO NOT open.	Test and replace timer.
	Hot gas valve coil open.	Test and replace hot gas valve.
	Hot gas valve will not open.	Test and replace hot gas valve.
	Low refrigerant charge.	Add refrigerant. Check and perform test for leaks.

CM1000 REMOVAL AND REPLACEMENT PROCEDURES

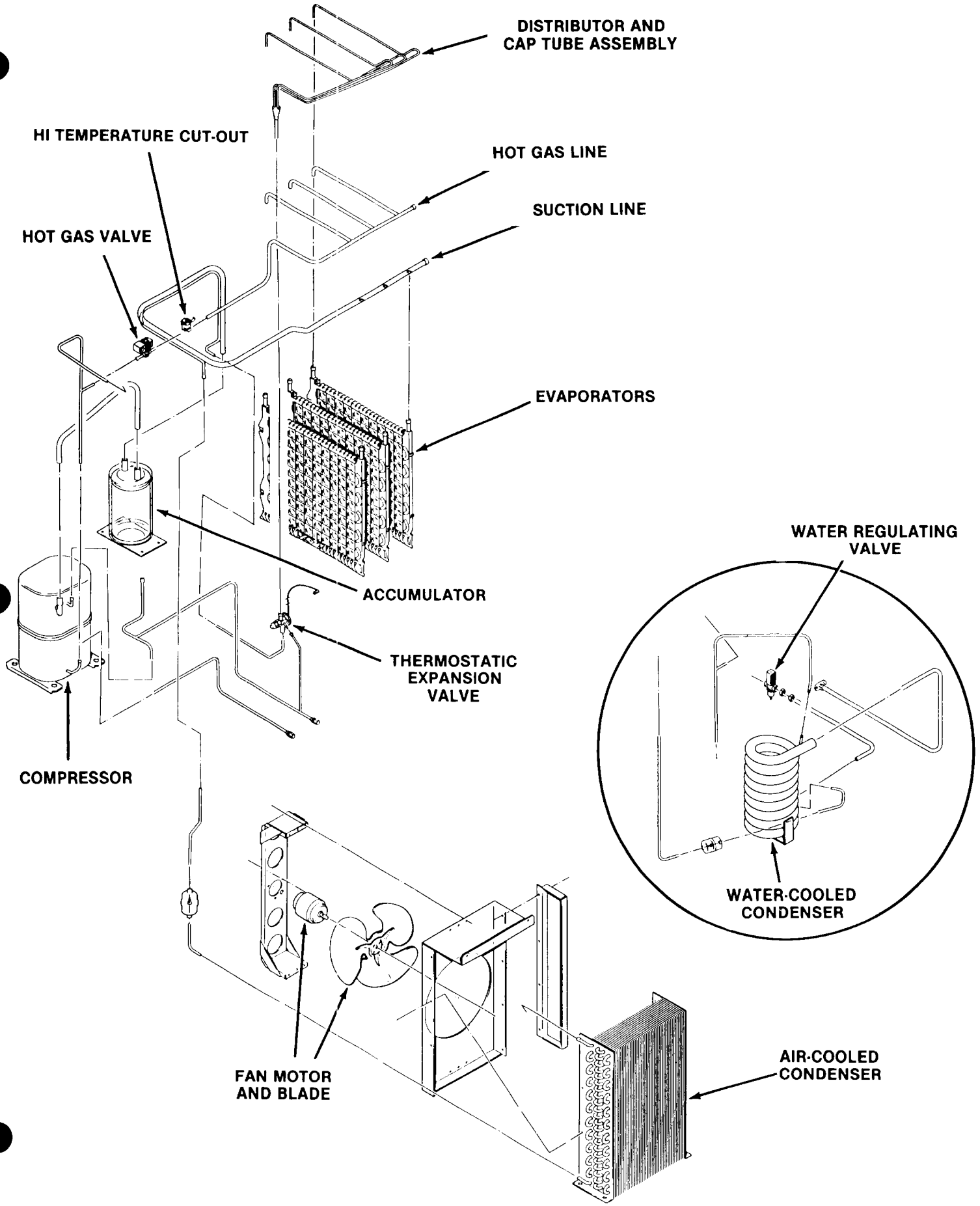

CM1000 REMOVAL AND REPLACEMENT PROCEDURES

WARNING

Disconnect electric power supply to icemaker whenever replacement procedures are performed.

WATER PUMP

1. Remove front panel.
2. Lift up, and remove evaporator cover.
3. Unplug pump.
4. Remove one screw holding pump bracket to evaporator cross brace.
5. Pull pump forward and lift up.
6. Remove discharge hose from pump outlet.

Reverse to replace.

RESERVOIR

1. Perform above steps and remove water pump.
2. Use corbin clamp pliers, push hose clamp of drain hose away from reservoir fitting. Remove drain hose from reservoir.
3. Lift up, and pull forward to remove reservoir.

Reverse to replace.

DISTRIBUTORS/WATER MANIFOLDS

1. Remove front panel.
2. Remove evaporator cover.
3. Pull distributor forward and lift up in the back, after distributor comes up in back, push back and unsnap distributor from water manifolds.
4. Water manifolds can be pulled away from each other. Check "O" rings in connectors.

Reverse to replace.

INLET WATER VALVE

1. Remove front panel.
2. Unplug water valve.
3. Remove flare nut securing outlet tube to valve.
4. Remove flare nut from inlet fitting.
5. Remove two screws securing valve to bulkhead wall, and remove valve.
6. Remove brass water fitting from old valve to put on new valve.

Reverse to replace.

COMPRESSOR

1. Remove top panel (if possible), front panel, and left side service panel.
2. Disconnect electrical lines from compressor.
3. Purge system of refrigerant.
4. Remove compressor mounting bolts.
5. Cut or unsweat discharge, process, and suction lines.
6. Remove compressor from unit. Check or replace starting components.

Reverse to reassemble.

CONDENSER

AIR-COOLED

1. Remove front and top panel.
2. Disconnect fan motor from condenser.
3. Purge system of refrigerant.
4. Cut or unsweat liquid and discharge lines.
5. Unbolt and remove condenser.
6. Dismount fan shroud from condenser.

Reverse to reassemble.

WATER-COOLED

1. Shut off water.
2. Remove front panel.
3. Purge system of refrigerant.
4. Unsweat water and refrigerant lines.
5. Unbolt and remove condenser.

Reverse to reassemble.

HOT GAS VALVE

1. Remove front, left side, and top panel (if possible).
2. Unplug hot gas valve.
3. Purge system of refrigerant.
4. Cut or unsweat valve, remove from machine.
5. To replace, heat sinking the valve is **CRITICAL.** Wrap the replacement valve in wet rags, and sweat into place. Leave rags on until joints cool.

Reverse steps 3-1 to reassemble.

CM1000 REMOVAL AND REPLACEMENT PROCEDURES

WARNING

Disconnect electric power supply to icemaker whenever replacement procedures are performed.

WATER REGULATING VALVE

1. Shut off water.
2. Remove front panel.
3. At the rear of the unit, unscrew water inlet connection and screws holding water regulator valve to cabinet back.
4. Purge system of refrigerant.
5. Unscrew fitting at outlet of valve.
6. Unsweat valve connection from "T" drilled hole.
7. Remove valve from machine.

Reverse to reassemble.

THERMOSTATIC EXPANSION VALVE

1. Remove front and top panel (if possible).
2. Purge system of refrigerant.
3. Cut or unsweat valve at inlet, equalizer, and outlet.
4. Remove insulation from valve bulb, remove mounting straps and valve from cabinet.
5. Place new valve bulb in same place as old valve, secure with straps, and reinsulate.
6. To replace, heat sinking the valve is **CRITICAL.** Wrap the body of the valve in wet rags and sweat into place. Leave rags on until joints cool.

Reverse to reassemble.

NOTE

Always install a replacement drier, anytime the sealed refrigeration system is opened. Do not replace the drier until all other repair or replacement has been completed. Thoroughly evacuate the system to remove moisture and non-condensables.

FAN MOTOR OR BLADE

1. Remove left side service panel.
2. Unplug fan motor.
3. Remove fan motor bracket.
4. Remove fan blade from motor. Note location on motor shaft, and hub position.
5. To replace fan motor also, remove it from bracket.

Reverse to reassemble.

NOTE

*When replacing a refrigeration component, the exact refrigerant charge must be **weighed** or metered into a completely evacuated system, because the CM1000 is a **critically** charged system.*

CM1000 REMOVAL AND REPLACEMENT PROCEDURES

WARNING

Be sure the electrical power supply circuit breaker and the inlet water supply are OFF, BEFORE starting any of the following REMOVAL AND REPLACEMENT procedures as a precaution to prevent possible personal injury or damage to equipment.

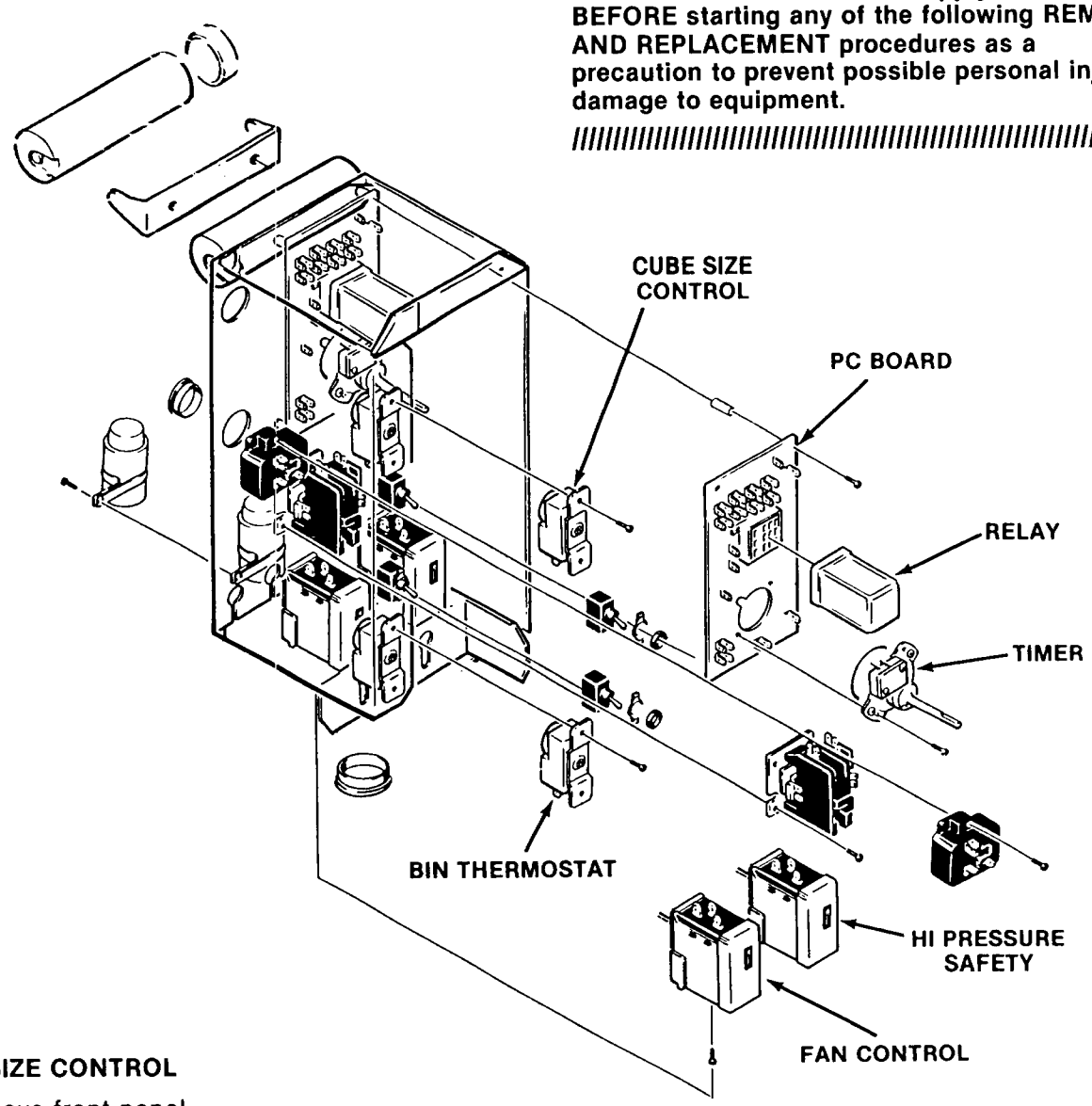

CUBE SIZE CONTROL

1. Remove front panel.
2. Remove control box cover.
3. Above control box, locate bulb well for cube size control, remove insulation and bulb from well.
4. Disconnect wires, remove knob and body of control from control box.

Reverse to reassemble.

TIMER

1. Remove front panel.
2. Remove control box cover.
3. Remove quick connects from P.C. board at posts marked "timer".
4. Unscrew timer from stand offs and remove.

Reverse to reassemble.

BIN THERMOSTAT

1. Remove front panel.
2. Pull bin control capillary out of bracket.
3. Remove control box cover
4. Disconnect wires from thermostat body, remove body from control box.

Reverse to reassemble.

RELAY

1. Relay is plugged into P.C. board.

CM1000R

TABLE OF CONTENTS

GENERAL INFORMATION & INSTALLATION
- For the Installer 2
- For the Electrician 10
- For the Plumber 13

OPERATION
- Start-Up 15
- Operation 18
- Operation - Electrical Sequence 23

MAINTENANCE & CLEANING INSTRUCTIONS
- Icemaker 27
- Ice Storage Bin 27
- Remote Condenser 29

COMPONENT DESCRIPTION 31

SERVICE DIAGNOSIS 36

REMOVAL AND REPLACEMENT PROCEDURES
- Water Pump 40
- Reservoir 40
- Distributors/Water Manifolds 40
- Inlet Water Valve 40
- Cube Size Control 41
- Timer 41
- Bin Thermostat 41
- Pressure Controls 41
- Compressor 42
- Hot Gas Valve or Liquid Line Valve 42
- Thermostatic Expansion Valve 42
- Head Pressure Control Valve 42
- Evaporator Plate Assembly 43

LIST OF ILLUSTRATIONS

- Specifications 2
- Stacking Instructions 5
- Bin Control Installation 6
- Component Location 7
- Remote Condenser Installation 8
- Coupling Instructions 9
- Electrical Connections 10
- Water & Drain Connections 13
- Final Checklist 14
- Timer Cam Positions 15
- Ice Cube Size & Shape 16
- Cube Size Adjustment 17
- Freezing Cycle 18
- Harvest Cycle 19
- Pump Down 20
- Water Flow Schematic 22
- Maintenance & Cleaning Instructions 29
- Component Description 30
- Removal and Replacement 39
- Removal and Replacement - Control Box 41
- Removal and Replacement - Evaporator Assembly 43

PARTS LIST AND WIRING DIAGRAM 1
(Printed in Yellow)

PARTS LIST:
- Component Location 2
- Exterior Cabinet 3
- Control Box 4
- Remote Condenser 5
- Pre-Charged Tubing Kit 5
- KCMR230 5
- Water System 6
- Refrigeration Assembly 7
- BH800 9

WIRING DIAGRAM:
- CM1000RE-32A

THIS PAGE
INTENTIONALLY
LEFT BLANK

CM1000R FOR THE INSTALLER

CM1000R CABINET SIZE AND UTILITY CONNECTIONS

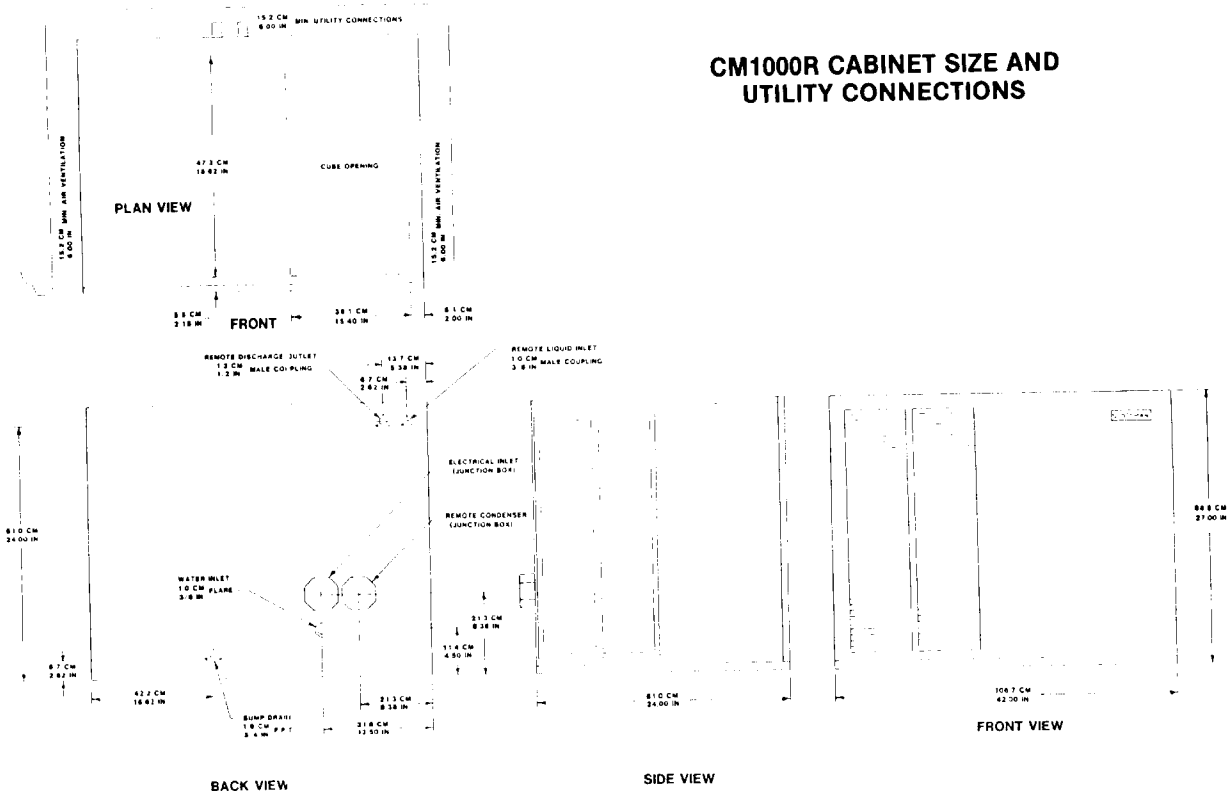

BH800 BIN

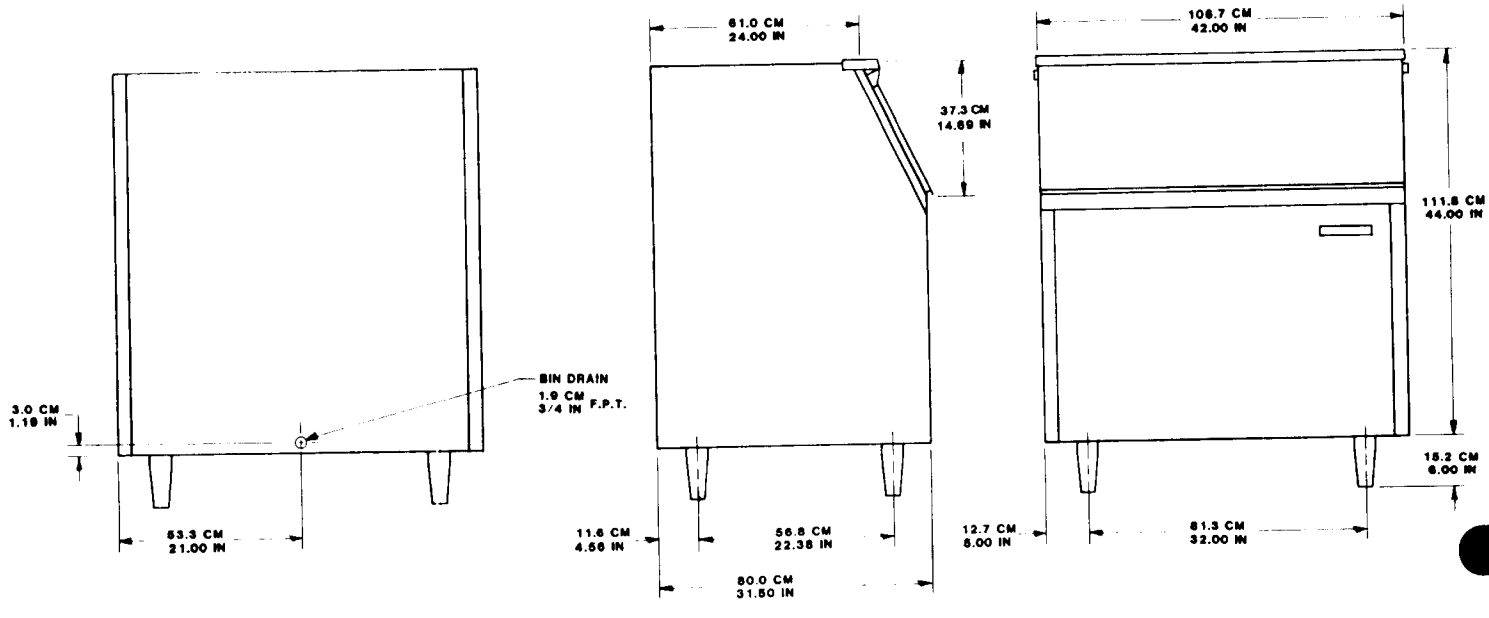

CM1000R FOR THE INSTALLER

EQUIPMENT LIST/CM1000R ICE SYSTEM

All of the following components must be available before assembly.

Icemaker - CM1000RE-32A
Ice Storage Bin - BH800E or BH800S
Leg kits included with storage bin.
Pre-Charged Refrigerant (R-502) Lines
- RT625 = 25 ft.
- RT640 = 40 ft.

Remote Condenser, (R-502)
RC-651-32B Single Pass
RC-652-32B Double Pass

If two CM1000RE's are to be installed on one RC652-32B condenser, a fan relay kit KCMR230 must be used to operate the condenser fan.

NAME PLATE

MODEL NUMBER
SERIAL NUMBER
A.C. SUPPLY VOLTAGE
MINIMUM CIRCUIT AMPACITY WIRES
MAXIMUM FUSE SIZE * HERTZ
HEATER WATTS PHASE
REFRIGERANT CHARGE OZ.
MOTORS VOLTS R.L.A./F.L.A. W/HP. L.R.A.
COMPRESSOR
FAN
DRIVE
OTHER
DESIGN PRESSURE LOW HIGH
* OR HACR TYPE CIRCUIT BREAKER

SCOTSMAN. A HOUSEHOLD INTERNATIONAL COMPANY

ALBERT LEA, MINNESOTA U.S.A.

SERIAL NUMBER PLATE

MODEL NUMBER
SERIAL NUMBER
VOLTS/HERTZ/PHASE
MAXIMUM FUSE SIZE
REFRIGERANT CHARGE OZ

We reserve the right to make product improvements at any time. Specifications and design are subject to change without notice.

SPECIFICATIONS - Icemaker

Model Number	(Height - w/o Legs) Dimensions H" x W" x D"	Ice Type	Cond. Type	Basic Electrical	Comp. H.P.	Min. Circuit Ampacity †	Max. Fuse Size	Ship. Wt. lbs.
CM1000RE-32A	27" x 42" x 24"	Contour Cube	Remote Air	208-230/60/1	2.5	18.0	30	295

The standard finish is Enamel Sandalwood.

The optional kit to convert the CM1000 to stainless steel finish is: SPKCM1000

SPECIFICATIONS - Remote Condenser

Model Number	(Height - w/o Legs) Dimensions H" x W" x D"	Use With	Basic Electrical	Min. Circuit Ampacity †	Ship. Wt. lbs./kg.
RC651-32B	29-1/4" x 30-1/4" x 33-3/4"	1-CM1000RE	208-230/60/1	2.0*	115/52
RC652-32B	29-1/4" x 30-1/4" x 33-3/4"	1 or 2-CM1000RE	208-230/60/1	2.0*	135/61

The finish of the condenser is galvanized.
† Use this value to determine wire size as per national electric code.
* The ampacity for the remote condenser is included in icemaker capacity. Use this figure to determine wire size between icemaker and fan motor, per the National Electric Code.

CM1000R FOR THE INSTALLER

SPECIFICATIONS - Storage Bin

Model Number	(Height - w/o Legs) Dimensions H" x W" x D"	Use With	Storage Capacity	Finish	Ship. Wt.
BH800E	44" x 42" x 31.5"	CM1000	800	Enamel Sandalwood	177 lbs.
BH800S	44" x 42" x 31.5"	CM1000*	800	Stainless Steel	186 lbs.

* The stainless steel panel kit for the CM1000 is SPKCM1000.

OPERATING LIMITATIONS

	MINIMUM	MAXIMUM
TEMPERATURE*		
Air Temperature	50°F (10.0°C)	100°F (38°C)
Water Temperatures	40°F (4.4°C)	100°F (38°C)
Water Pressure	20 lbs. gauge	100 lbs. gauge
Electrical Voltage Variations		
Voltage rating specified on nameplate	-5%	+10%

* This does not include the remote condenser. The remote condenser can operate between -20°F and 120°F.

NOTICE: Extended periods of operation exceeding the above limitations constitute misuse under the terms of the manufacturer's limited warranty, and can result in a loss of warranty.

Nameplate location: see illustration page 7.

CM1000R FOR THE INSTALLER

LOCATION

The first step in installing this equipment is to select the location. The purchaser of the unit will have a desired spot for it, so go over the location with the purchaser to insure that it is

- indoors - icemaker and bin.
- that the air and water temperatures do not exceed the design limitations for the equipment.
- that the necessary utilities are available - the correct voltage electrical power, the correct size water and drain lines.
- that there is some space around the unit available for servicing it and the utilities that are connected to it.
- that the distance between the icemaker and the remote condenser is less than the length of pre charged tubing on hand.

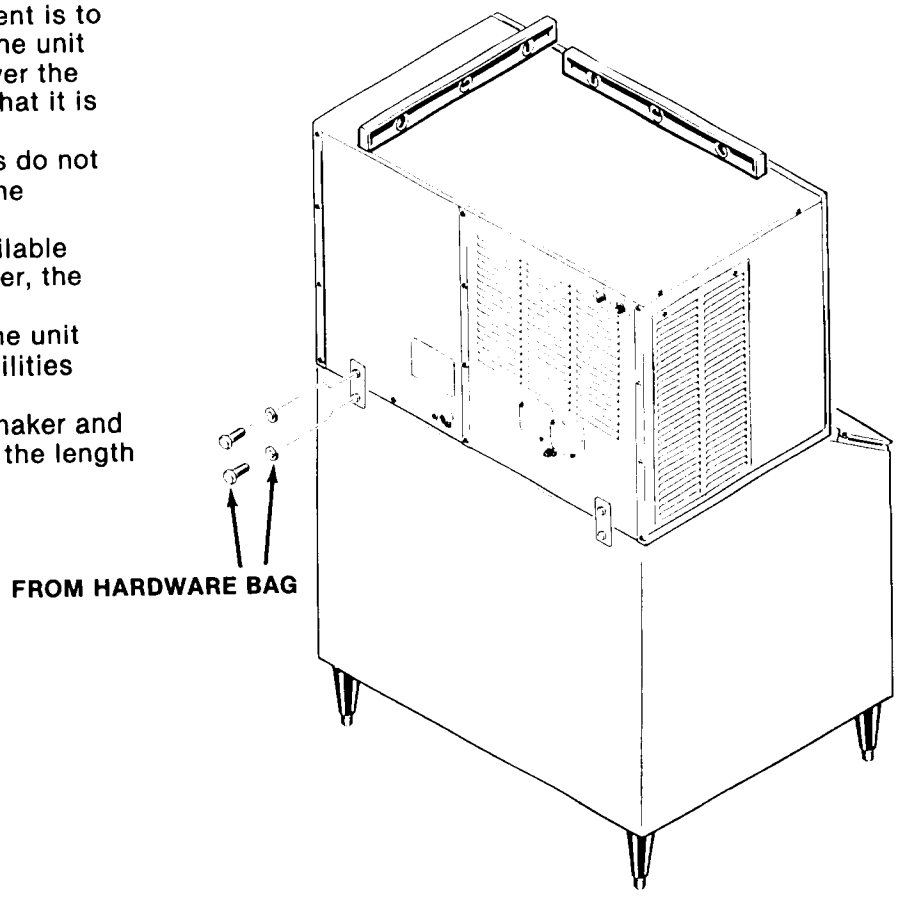

STORAGE BIN

Carefully lay the bin on its back, and install the legs (if used) into the threaded holes in the bottom of the bin. Stand the bin upright, and examine the bin top edge gasket for tears and gaps. Small gaps can be filled using food grade silicone sealant, just prior to installing the icemaker on the bin.

PLACE ICEMAKER ONTO THE BIN

The use of a mechanical lift is recommended for lifting the uncrated icemaker onto the bin. Place the unit directly onto the bin, align the panels so that the unit is even with the back, left and right sides of the bin. Locate hardware package, take out two metal straps, and 4 mounting bolts, use them to secure the icemaker to the bin. See illustration.

STACKING INSTRUCTIONS

If two icemakers are placed on one bin, the stacking of the machine requires the following:

A. Remove the top panel from the lower unit.

B. Place a bead of food grade silastic rubber on the top edge of the lower unit freezing compartment.

C. Using a mechanical lift, lift the top machine and place it on top of the bottom unit. Align the top unit to the bottom one.

D. Using the straps and bolts from the top machine's hardware package, secure the top unit to the bottom one (see illustration).

E. Locate and discard the upper unit bin control bracket.

F. Route upper unit bin control capillary tube through the hole in the base of the upper unit, through the lower unit, and install it inside the bin control bracket **with** the lower unit bin control capillary tube.

CM1000R FOR THE INSTALLER

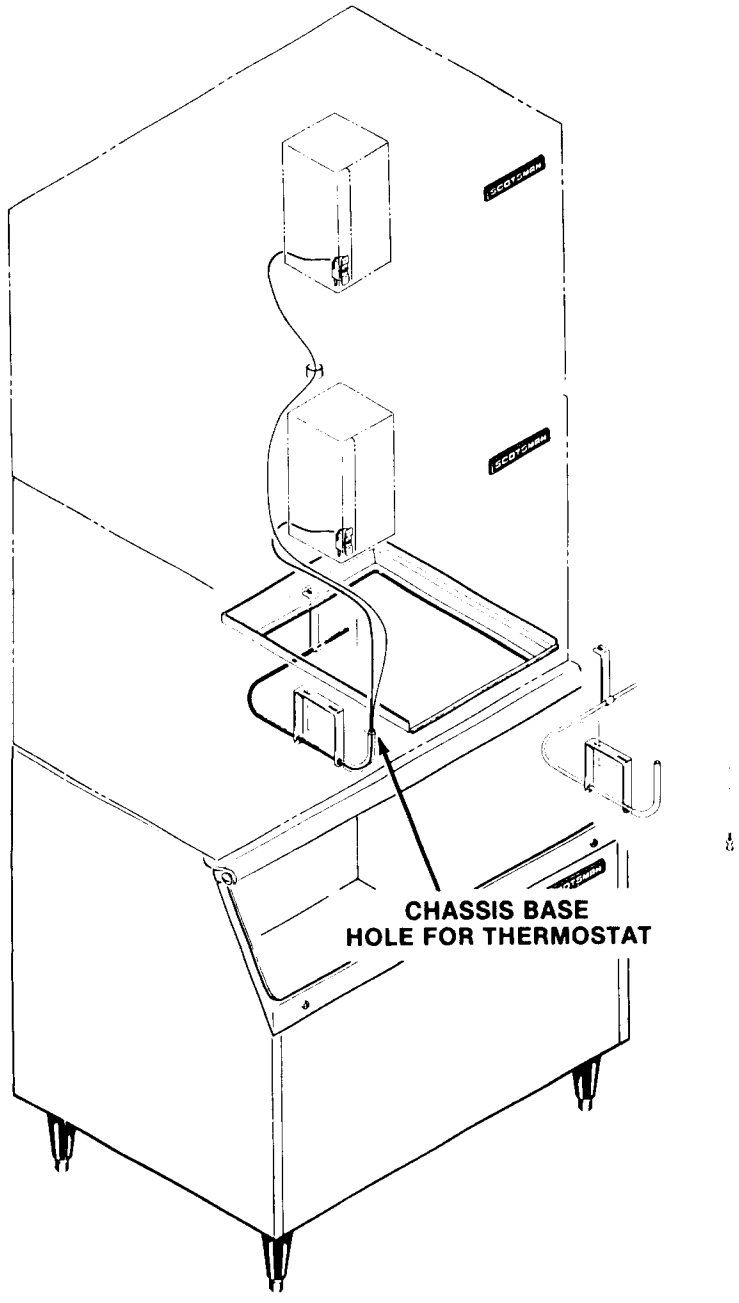

BIN CONTROL

The bin control bracket is packed for shipping in a cardboard retainer, located in front of the freezing compartment, behind the front panel. It is to be mounted onto the bottom of the icemaker **after** the unit has been installed on the bin. Discard rubber tip.

Using 3 thumbscrews from the hardware package, mount the bracket to the machine:

A. First install one screw in the hole provided at the back of the unit, and then slip the bracket hanger over the head of the screw (see illustration).

B. Use the two remaining screws to secure the bracket on the left side of the freezing compartment.

C. Uncoil and install the bin thermostat capillary tube into the bracket, stopping at the end of the tube.

CM1000R FOR THE INSTALLER

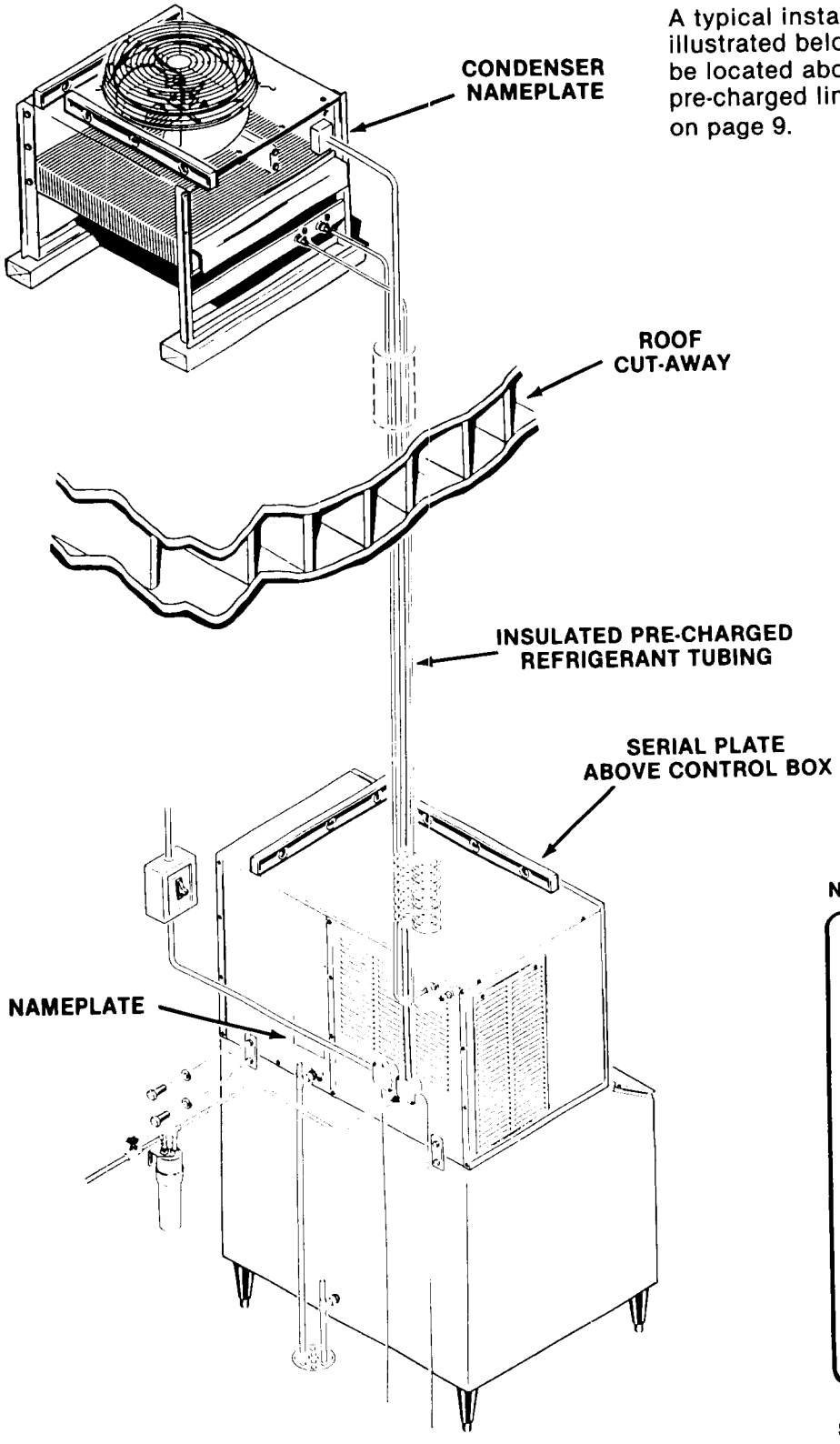

A typical installation should generally appear as illustrated below. The remote condenser must be located above the icemaker and the pre-charged lines installed per instructions on page 9.

NAME PLATE

MODEL NUMBER
SERIAL NUMBER
A.C. SUPPLY VOLTAGE
MINIMUM CIRCUIT AMPACITY WIRES
MAXIMUM FUSE SIZE * HERTZ
HEATER WATTS PHASE
REFRIGERANT CHARGE OZ.

MOTORS	VOLTS	R.L.A./F.L.A.	W/HP.	L.R.A.
COMPRESSOR				
FAN				
DRIVE				
OTHER				

DESIGN PRESSURE LOW HIGH
* OR HACR TYPE CIRCUIT BREAKER

SCOTSMAN A HOUSEHOLD INTERNATIONAL COMPANY

ALBERT LEA, MINNESOTA U.S.A.

SERIAL NUMBER PLATE

MODEL NUMBER
SERIAL NUMBER
VOLTS/HERTS/PHASE
MAXIMUM FUSE SIZE
REFRIGERANT CHARGE OZ.

CM1000R FOR THE INSTALLER

REMOTE CONDENSER INSTALLATION

Location Considerations:

Limited to a 40-foot length or a 25-foot length of pre-charged refrigerant line from the rear of the icemaker chassis to the remote condenser with consideration for routing. The condenser must be above or level with the highest (if stacked) icemaker.

Best available location, protected from the extremes of dirt, dust, and sun.

Must meet local building code installation requirements. Usually the services of a licensed electrician are required.

Remote Condenser - Roof Attachment.

1. Install and attach the remote condenser to the roof of the building, using the methods and practices of building standards that conforms to and meets the local building code requirements in your area.
2. Have an electrician connect the remote condenser fan motor electrically to the CM1000R at the junction box of the remote condenser and the junction box of the CM1000R.

PRE-CHARGED TUBING KIT ROUTING:

CAUTION

Do not connect pre-charged tubing until all routing and forming of tubing is complete. See Coupling Instructions, Pre-Charged Tubing Kit, page 9, for connecting instructions.

1. Each set of pre-charged refrigerant lines in the 25-foot length, or 40-foot length kits, consists of a 3/8-inch diameter, self-sealing LIQUID line and a 1/2-inch diameter, self-sealing DISCHARGE line. One coupling on each line is fitted with a charging port, which provides the service man with access for service gauges at the REMOTE CONDENSER location, when necessary.

NOTE

The openings in the building ceiling or wall, listed in the next step, are minimum sizes recommended, through which the pre-charged refrigerant lines may pass; and are to be considered only if they conform to and meet the local building code requirements in your area.

2. Minimum recommended sizes for openings required in a ceiling or wall for the pre-charged refrigerant lines to pass, is 1-3/4 inch diameter.

CAUTION

DO NOT KINK OR CRIMP REFRIGERANT LINES.

3. Route both refrigerant lines through the roof opening.

   Follow straight line routing, when possible.

   Retain excess pre-charged refrigerant line INSIDE the building.

4. SPIRAL the excess footage of the pre-charged refrigerant lines, in the best selected INSIDE location. See Pre-Charged Refrigerant Line Routing illustration for recommended methods of spiralling the excess refrigerant lines.

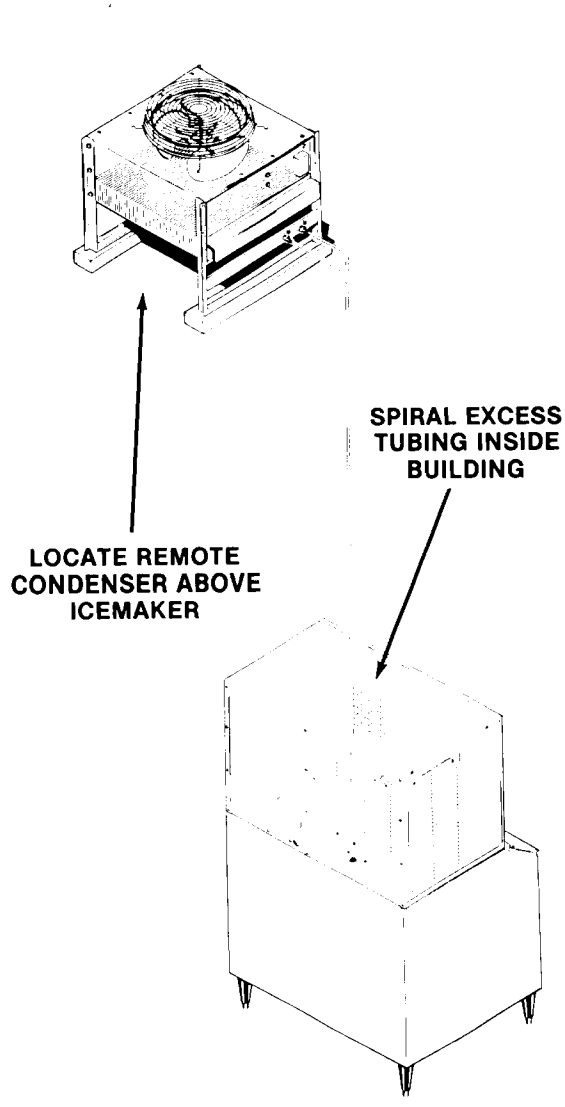

COUPLING INSTRUCTIONS, PRE-CHARGED TUBING KIT

CAUTION

The couplings on the sets of pre-charged refrigerant lines, the refrigerant fittings on the Remote Condenser, and the rear of the Icemaker Chassis are SELF-SEALING and should be connected as follows:

1. Remove protector caps and plugs and if necessary, carefully wipe coupling seats and threaded surfaces with a clean cloth to prevent the inclusion of dirt or any foreign material in the system.
2. LUBRICATE male half diaphragm and synthetic rubber seal with refrigerant oil. Thread coupling halves together by hand to insure proper mating of threads. Use proper size wrenches (on coupling body hex and on union nut) and tighten until coupling bodies "bottom" or a definite resistance is felt.
3. Using a marker or ink pen, mark a line lengthwise from the coupling union nut to the bulkhead. Then tighten an additional 1/4 turn; the misalignment of the line will show the amount the coupling has been tightened. This final 1/4 turn is necessary to insure the formation of leakproof joint.

ALWAYS USE TWO WRENCHES WHEN TIGHTENING THESE FITTINGS, ONE AS BACKUP WRENCH TO PREVENT TWISTING OF TUBING AND POSSIBLE KINKING OR LINE RUPTURE.

BE SURE to connect the ends of the pre-charged refrigerant lines, that have the charging port fittings, TO THE REMOTE CONDENSER FITTINGS. This gives the serviceman access for service gauges at the REMOTE CONDENSER location, when necessary.

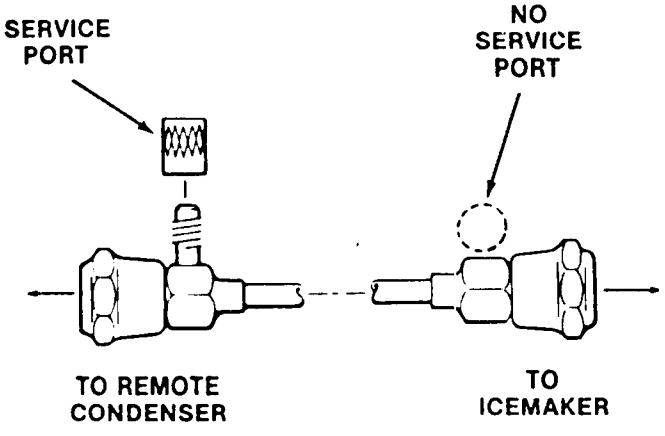

Pre-Charged Refrigerant Line Connections

4. Connect the 3/8-inch diameter refrigerant line coupling, with the SERVICE PORT fitting, to the remote condenser refrigerant fitting labeled: LIQUID LINE as detailed in Coupling Instructions.
5. Connect the 1/2-inch diameter refrigerant line coupling, with the CHARGING PORT fitting, to the Remote Condenser refrigerant fitting labeled: DISCHARGE LINE. Tighten as detailed in the Coupling Instructions.

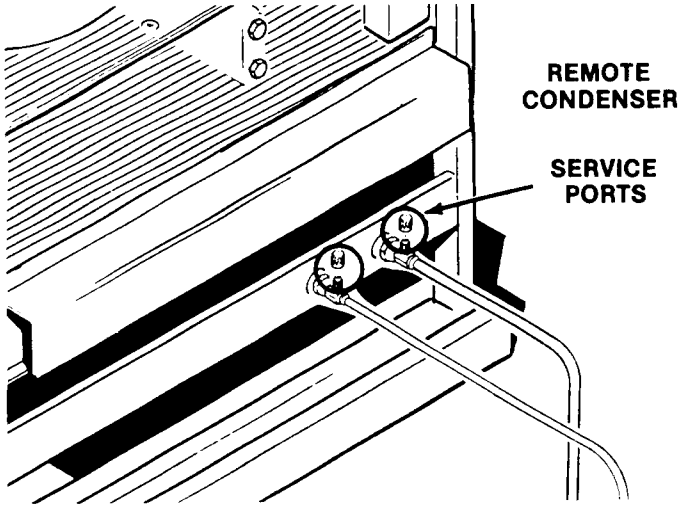

6. Connect the 3/8-inch diameter refrigerant line coupling, to the refrigerant fitting on the upper right rear of the icemaker chassis labeled: LIQUID LINE. Tighten as detailed in Coupling Instructions.
7. Connect the 1/2-inch diameter refrigerant line coupling, to the refrigerant fitting on the upper right rear of the icemaker Chassis labeled: DISCHARGE LINE. Tighten as detailed in step 4.

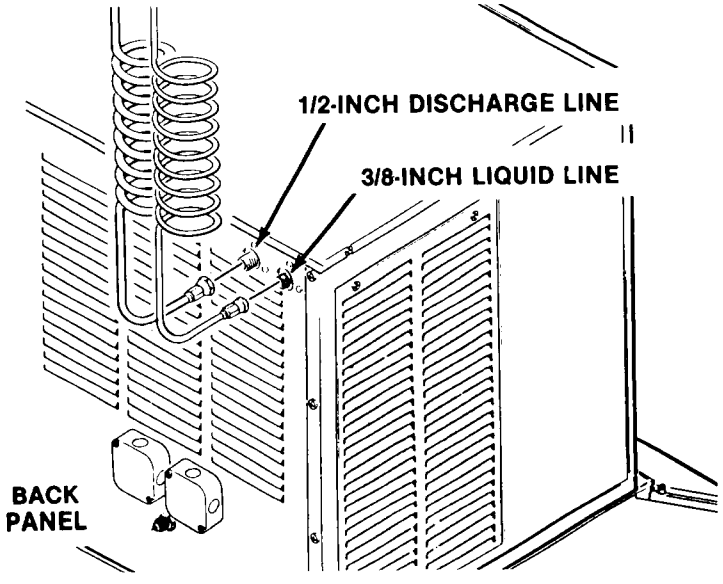

CM1000R FOR THE ELECTRICIAN

CONFORM TO ALL APPLICABLE CODES

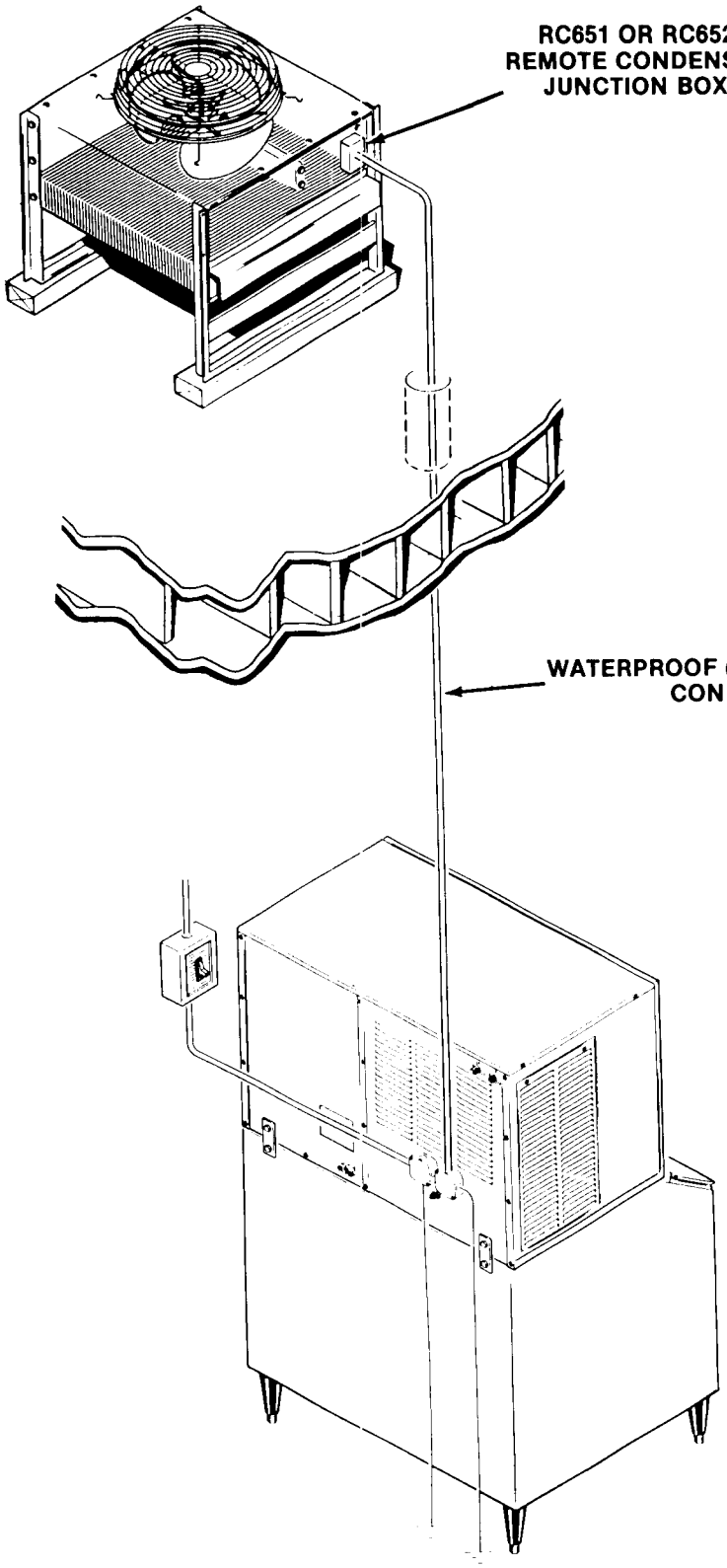

ELECTRICAL CONNECTIONS

SEE NAMEPLATE for current requirements to determine wire size to be used for electrical hookup. The cuber requires a solid chassis-to-chassis earth ground wire. See Wiring Diagram.

Be certain the cuber is connected to its own electrical circuit and individually fused. Running voltage must not be less than 95% of the lower nameplate voltage, or more than 110% of the higher nameplate voltage. Low voltages can cause erratic operation and may be responsible for serious damage to the icemaker.

Electrical connections are made at the rear of the icemaker, inside the junction box.

The remote condenser must be wired to the CM1000R icemaker in accordance with local and national electrical codes with a minimum of 18 Awg wire with a ground bonding wire connected to the ground screws provided in both the condenser and machine field wiring boxes. All outdoor wiring must be in rainproof conduit.

All external wiring should conform to the national, state and local electrical code requirements. Usually an electrical permit and services of a licensed electrician will be required.

Electrically the remote condenser fan motor is connected to the CM1000R at the contactor terminals for the compressor and the fan motor operates whenever the compressor operates.

CM1000R FOR THE ELECTRICIAN

FAN RELAY KIT

Installation instructions for the KCMR230 Kit when using (2) CM1000R Icemakers and the RC652-32B Model Condenser.

SEE NAMEPLATE for current requirements to determine wire size to be used for electrical hookup. Refer to wiring diagram.

All external wiring should conform to the national, state and local electrical code requirements. Usually an electrical permit and services of a licensed electrician will be required.

FOR CONNECTION OF TWO ICEMAKERS:

Refer to appropriate wiring diagrams and connect each icemaker to the KCMR230 terminal strip as follows:

1. Attach the KCMR230 to a permanent location, convenient for each icemaker hook up and future service. Attach a solid earth ground wire to the GROUND SCREW.
2. Route connecting wires from first ice machine lower junction box and connect to KCMR230 terminal strip connections marked: NO. 1 ICE MACHINE.
3. Route connecting wires from second ice machine lower junction box and connect to stacking kit terminal strip connections marked: NO. 2 ICE MACHINE.
4. Route connecting wires from KCMR230 terminal strip marked: TO REMOTE FAN and connect at the remote condenser junction.

CAUTION

IMPROPER VOLTAGE SUPPLED TO THE ICEMAKER WILL VOID YOUR PARTS REPLACEMENT PROGRAM.

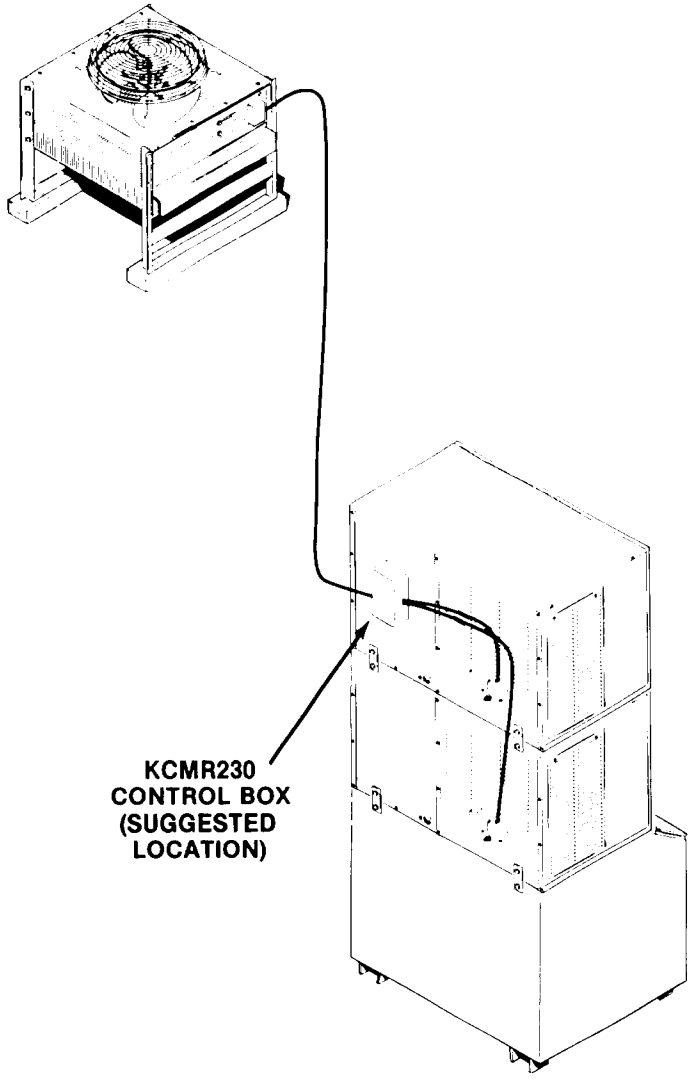

5. Check phasing of the electrical circuit as follows:

A. The phasing of the wiring **MUST** now be checked, as incorrect wiring will result in a failure of the kit relay.

Below is an illustration of the KCMR230 terminal strip. Note that each terminal is marked: 1 - 2 - 3 - 4 - 5 - 6. For proper phasing:

Terminals #1 and #3 must be connected on the same side of the line (such as L1).

Terminals #2 and #4 must be connected on the same side of the line (such as L2).

B. Make the test with a volt meter as follows:

1. Switch on icemaker #1 first, then switch on icemaker #2. (The compressors must be operating for this test).
2. Test with a volt meter between terminals #2 and #4, then between terminals #1 and #3. Compare the readings obtained to the ones in the following list.

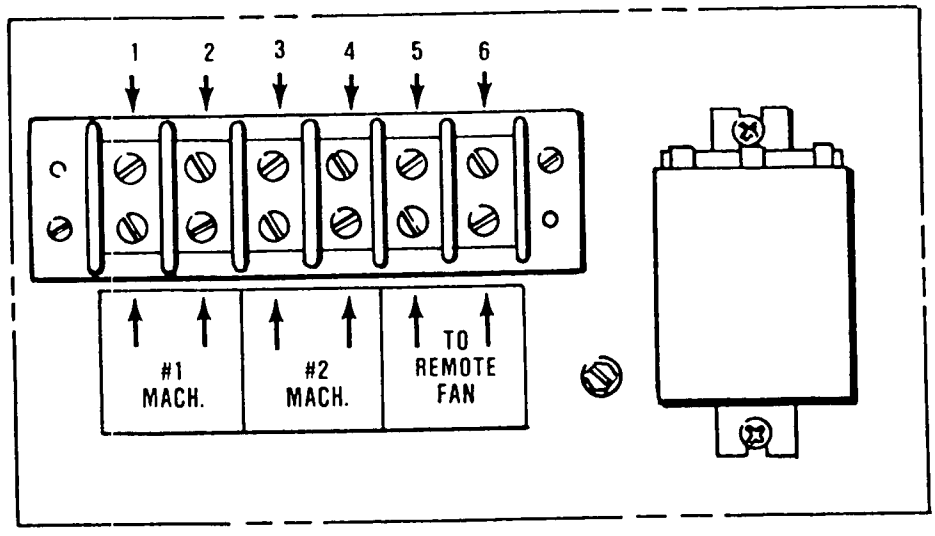

C.

	CORRECT VOLTAGE READINGS
Test terminals 1 - 2	Full voltage (208v-220v)
Test terminals 1 - 3	No voltage
Test terminals 2 - 3	Full voltage
Test terminals 2 - 4	No voltage
Test terminals 3 - 4	Full voltage
Test terminals 1 - 4	Full voltage

D. If there is full voltage where there should be no voltage, turn off icemaker #2, (both toggle switches). Then turn off icemaker #1 (both toggle switches). The connections at the KCMR230 terminal strip marked icemaker #1 must be **reversed** (put the wire that was on 1 on 2 and the wire that was on 2 on 1).

Remember to do all wiring with the electrical power to both icemakers disconnected at the source.

CM1000R FOR THE PLUMBER

CONFORM TO ALL APPLICABLE CODES

WATER SUPPLY

Connect a potable water supply to the icemaker water inlet connection. The connection on the unit is a 3/8" male flare. The recommended size water line is 3/8" O.D. copper tubing. When water conditions are doubtful, a test of the water should be made by a water treatment specialist, and their recommendations for filtration and/or treatment should be followed.

DRAIN CONNECTIONS

The drains are gravity type, and must have a minimum of 1/4" fall per foot on horizontal pipe runs. The drains must be installed per local codes. A vent is recommended at the icemaker and bin drain connections. The ideal drain receptical would be a trapped and vented floor drain.

The recommended drain size is 5/8" - 3/4" rigid pipe - the bin drain must be separated from the icemaker's. The bin and icemaker drain connections are 3/4" F.P.T.

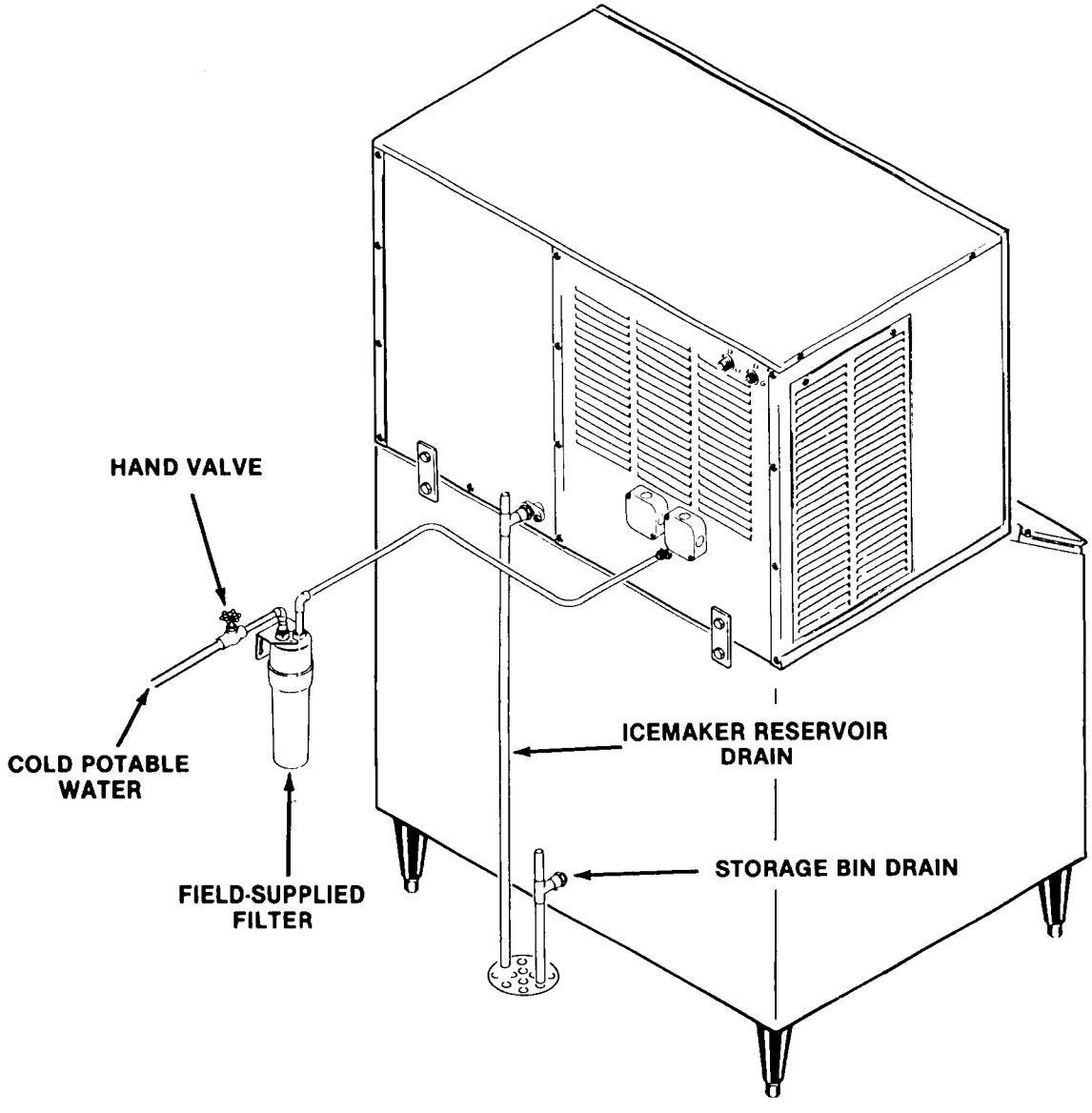

DRAIN LINES MUST SLOPE TOWARDS THE BUILDING DRAIN 1/4" PER FOOT MINIMUM.

CM1000R FOR THE INSTALLER

FINAL CHECKLIST

1. Is the icemaker and bin in a place where the air and water temperatures are maintained within the manufacturer's limitations?
2. Is the remote condenser installed per local building codes on the roof, where it has adequate ventilation and minimal solar heat gain?
3. Is the icemaker installed with adequate room for machine service?
4. Has the icemaker/bin combination been leveled?
5. Has all shipping material and literature been removed from the units?
6. Has the bin thermostat **and** bracket been installed?
7. Have all electrical and water connections been made?
8. Is there a hand valve in the water line to the icemaker?
9. Has the unit been wiped clean, and the bin interior sanitized?
10. Have the remote condenser and pre-charged lines been properly installed and connected?
11. Have the connections been checked for leaks?
12. Has the electrical connection between the icemaker and the condenser been made?
13. Verify that the master switch and the Compressor switch are in the **OFF** positions.
14. Switch on the electrical power, and check the voltage.
15. Fill out the registration card, and mail it in to the factory.
16. Refer to **PRE-START INSTRUCTIONS** page 15.

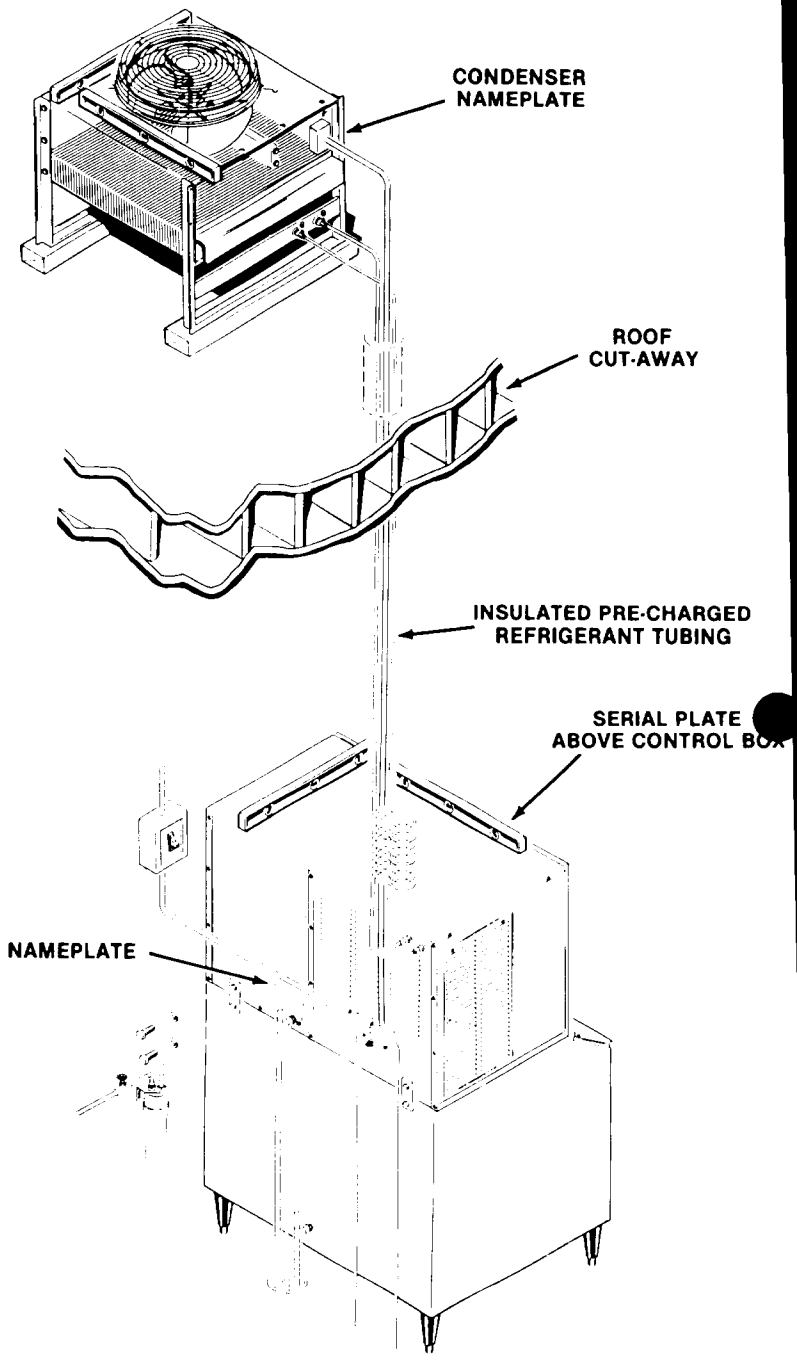

Completed Installation

CM1000R START-UP

PRE-START

1. Is the location of the equipment proper?
2. Is the electrical voltage correct?
3. Has power to the machine been on for at least 12 hours, and is the compressor dome warm? (Toggle switches on OFF?)
4. Has the water supply been turned on?
5. Is the icemaker level?
6. Are the refrigerant lines for the condenser properly connected and routed?
7. Are the bin thermostat controls mounted in the bracket and is the bracket in the proper mounting spot?

START-UP

1. Go through the Pre-Start check list.
2. Remove front panel by pulling out at the bottom to unsnap and lift off.
3. Remove the control box cover.
4. Remove left side service panel. Check that the King Valve is closed and the compressor is warm.
5. Rotate timer shaft clockwise until the timer cam appears the same as in the illustration.

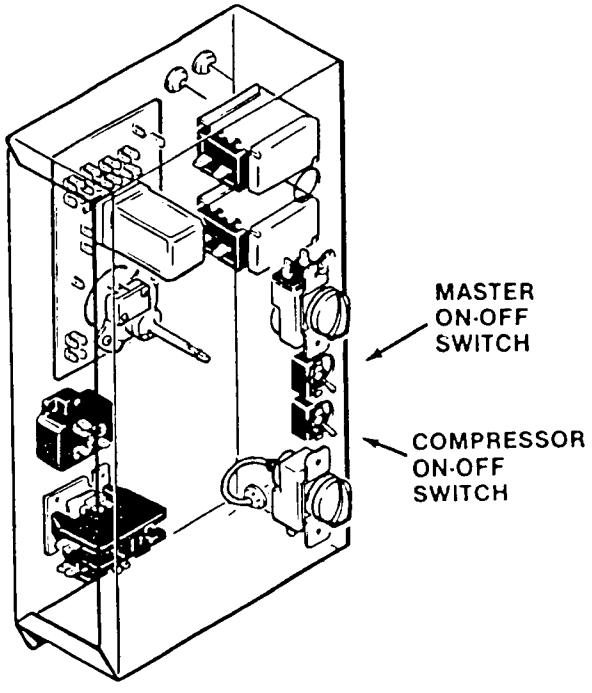

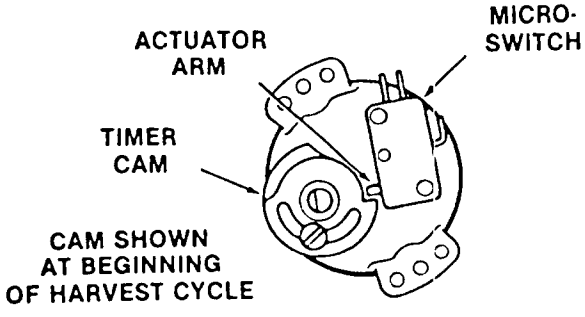

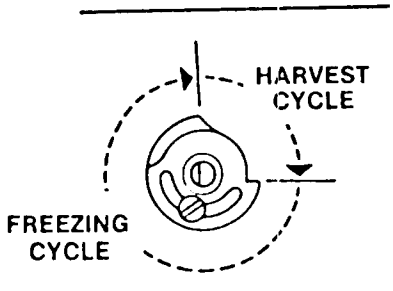

CAM SHOWN DIVIDED INTO TYPICAL FREEZING & HARVEST CYCLES

Timer Cam Positions

6. Turn the master switch to ON and observe that the inlet water solenoid opens, and water begins to enter the sump, also observe that the timer does advance in a clockwise direction.
7. The timer will move to the end of the harvest position and stop. If the sump is still not full, repeat step 5. When the sump is full the water pump will be circulating water over the evaporator plates. This water is returning to the sump and any excess will be drained out through the overflow standpipe in the sump. When the timer stops, the inlet water stops coming in, but the pump stays on.
8. Open the King Valve located on the receiver.
9. Move the compessor toggle switch to ON. Observe that the sight glass begins to fill with liquid refrigerant and stays full.
10. On the roof, observe that the condenser fan is running.
11. Now the icemaking process begins. The evaporator plates will soon begin to feel cool, and ice begins to form where the water is flowing over the metal portions of the plate.
12. Let the machine function as shipped, but observe the first harvest of cubes. ADJUSTMENTS MAY BE REQUIRED.

CM1000R START-UP — CUBE SIZE

13. Observe second and third cube harvest.

    Check size of SCOTSMAN CONTOUR CUBE

    Unlike other SCOTSMAN cubes which are made in a definite molded shape, contour cubes are produced in indentations and many shapes and sizes of contour cubes may be produced — only ONE size and shape combination is correct.

An under-charged refrigeration system produces smaller cubes at the top of the evaporator plate and large cubes at the bottom. Charge system per NAMEPLATE specifications.

Charge Refrigeration System with **REFRIGERANT 502 ONLY.**

In areas where extreme problem water condition exists, filtering or purifying equipment is recommended.

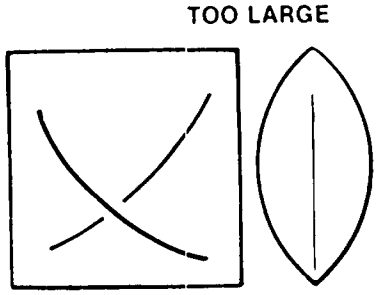

Too LARGE — may cause evaporator freeze ups. Adjust cube size control counter-clockwise to obtain smaller cubes

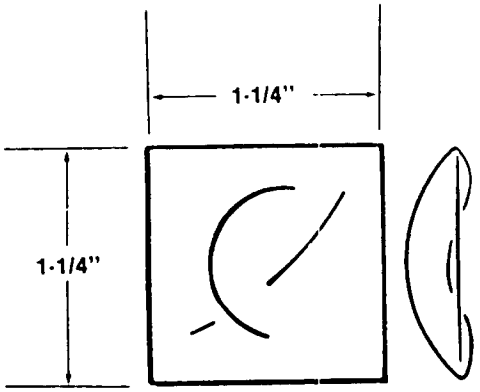

PROPER SIZE AND SHAPE of the contour cube. Icemaker operates at peak efficiency when a cube this size and shape is produced. A finely tuned system produces vertical strips of ice which easily break when they fall.

PROPER SIZE AND SHAPE

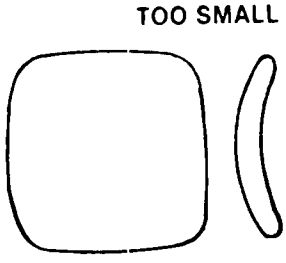

TOO SMALL. To obtain proper size cubes, adjust cube size control clockwise. May cause freeze up problems due to poor harvest.

Ice Cube Size & Shape

CM1000R START-UP — HARVEST TIME

14. Check the Harvest time. The correct setting is one that allows enough time for all of the ice to fall from the evaporators and to fill the sump, with water to the overflow point, plus 15-30 seconds extra time.

    To adust the timer:

A. Disconnect electrical power supply to the icemaker.

B. Loosen the screw on the timer that locks the two cams together.

C. To decrease Harvest time, rotate the shaft of the timer counter-clockwise. To increase, turn the shaft clockwise.

D. Retighten the screw to lock the two cams together again.

E. Return power to icemaker. Check cube size and Harvest time.

15. Check texture of ice cubes; when partially cloudy throughout, suggests icemaker is operating short of water; or, possibly an extreme problem water condition exists, wherein filtering or purifying equipment is recommended.

BIN THERMOSTAT OPERATION

With the icemaker in the harvest cycle, hold ice against the bin thermostat control bulb to test shutoff at the END OF THE HARVEST CYCLE. If the bin thermostat is OPEN, the liquid line solenoid valve will close, shutting off refrigeration flow to the evaporator and allowing the compressor to pump any refrigerant left in the evaporators into the high pressure receiver. When the evaporator pressure is lowered to approximately 3 PSIG, the low pressure switch opens, shutting off the compressor, remote fan and water pump.

Within minutes after the ice is removed from the sensing bulb, the bulb will warm up and cause the icemaker to restart. This control is factory set and should not be reset until testing is performed.

16. Replace control box cover and all cabinet panels and screws.

17. Thoroughly explain to the owner/user the significant specifications of the icemaker, the start up and operation, going through the procedures in the operating instructions. Answer all questions about the icemaker by the owner; and inform the owner of the name and telephone number of the authorized SCOTSMAN Distributor, or service agency serving him.

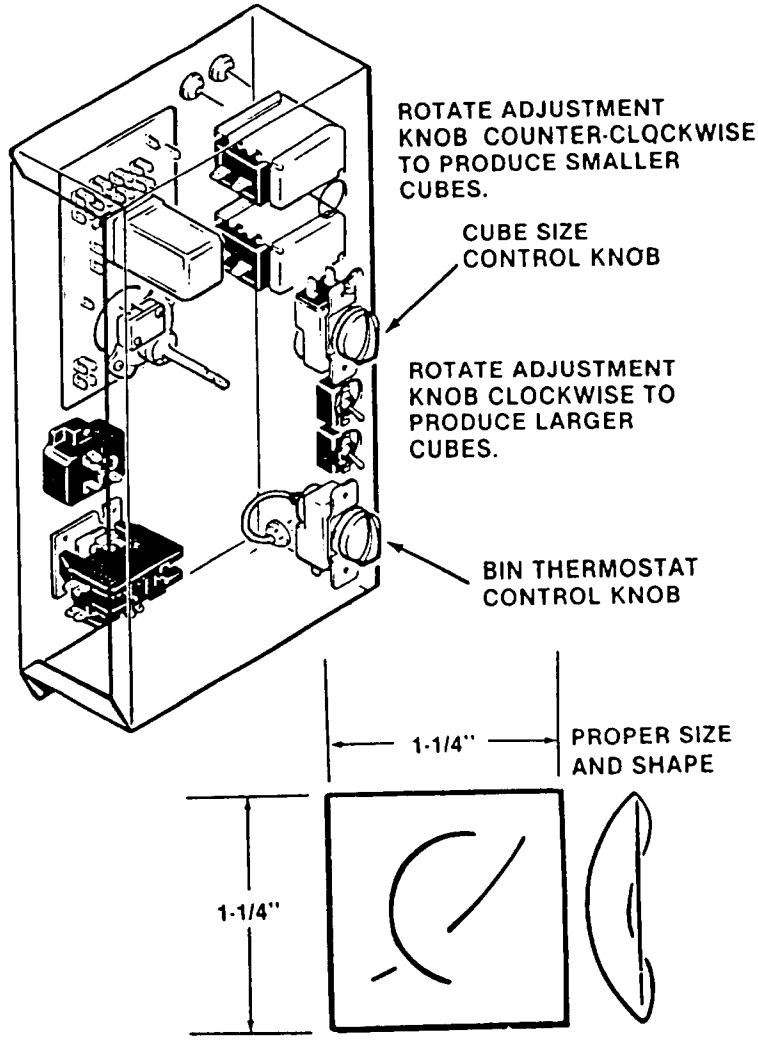

Cube Size Control Adjustment

CM1000R OPERATION

REFRIGERATION SYSTEM - SCHEMATIC DIAGRAM

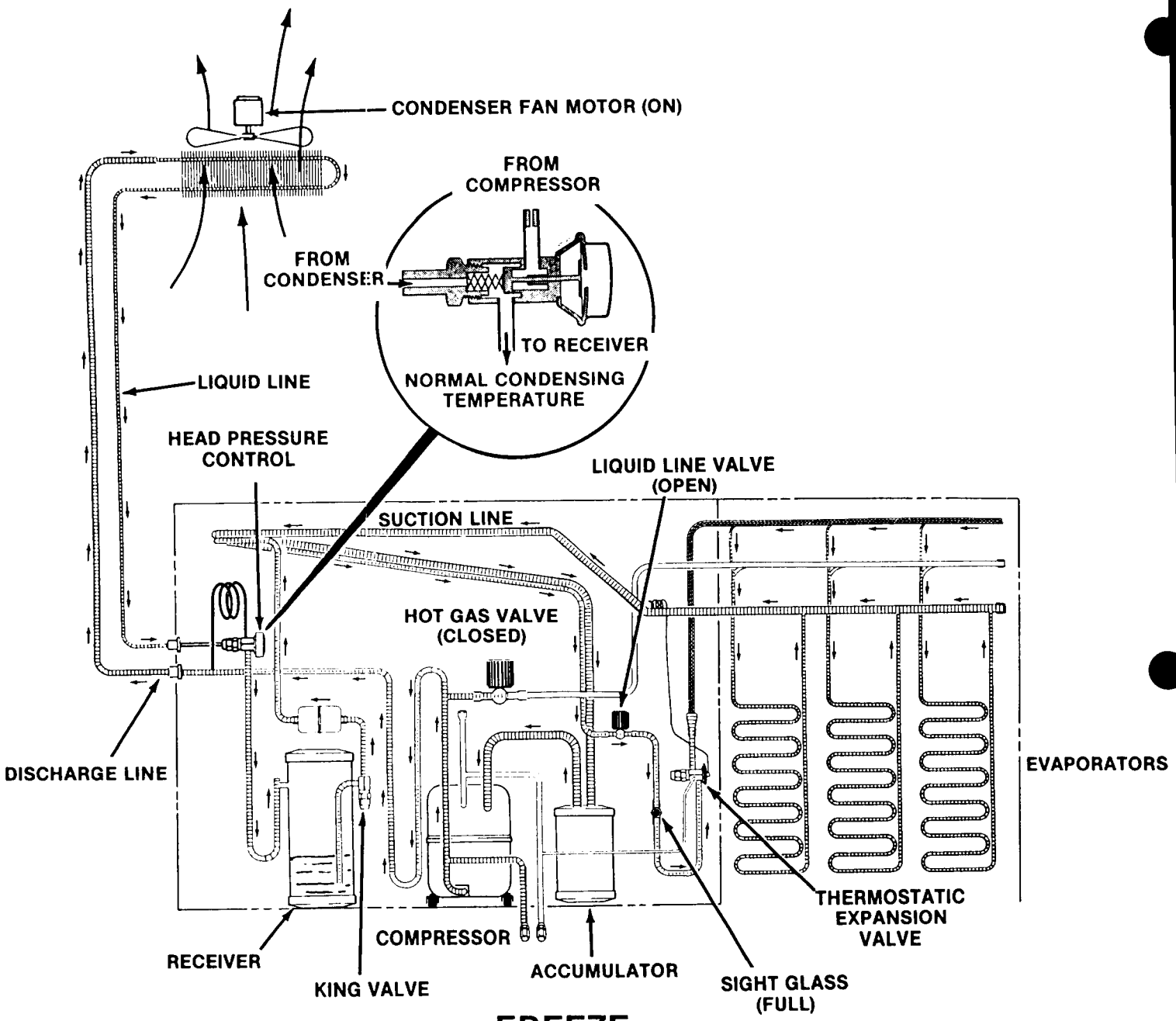

FREEZE

During the freeze cycle, at a normal condenser air temperature, the discharge gases from the compressor go through the discharge line up to the remote condenser, where the removal of heat causes the refrigerant to condense into liquid. The liquid refrigerant, still under high pressure, moves down to the ice machine, passing through the head pressure control, which is open because of the normal head pressure, and into the receiver. The receiver discharge connection picks up liquid refrigerant from near the base of the receiver and the refrigerant then moves through the liquid line solenoid valve (open at this time) up to the thermostatic expansion valve. At the TXV, the liquid refrigerant is metered into the evaporators, where the internal pressure is much reduced. This causes the refrigerant to rapidly "evaporate" or boil off, absorbing heat from the evaporators and the water being pumped over them. The refrigerant, now a low pressure gas, moves towards the compressor suction port. It goes through an accumulator in the system to insure no liquid refrigerant reaches the compressor and then to the compressor, where the cycle is repeated.

CM1000R OPERATION

REFRIGERATION SYSTEM - SCHEMATIC DIAGRAM

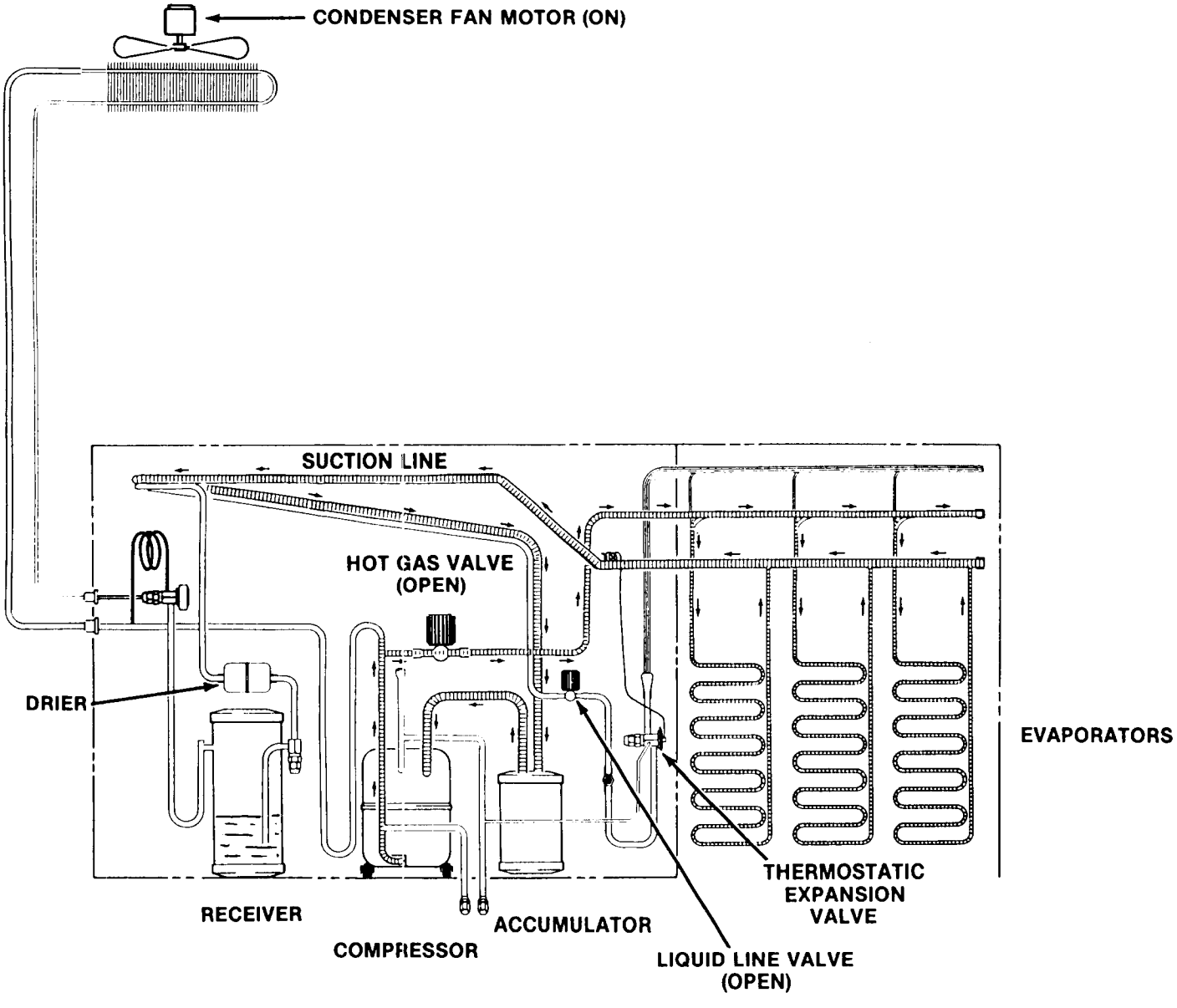

HARVEST

REFRIGERATION CYCLE, HARVEST

During the timed harvest cycle, the hot, high pressure refrigerant gases move through the discharge line, into the open hot gas valve, by-passing the remote condenser and the receiver. From the hot gas valve, the refrigerant flows into the evaporators, where the hot gases condense, giving off heat. It is this heat that, transferred to the evaporators, warms them up. That causes the ice to be released from the evaporator surface, so it falls, by gravity, into the storage bin.

After the refrigerant has gone through the evaporators, it enters the accumulator, and from there back to the compressor.

REFRIGERATION SYSTEM - SCHEMATIC DIAGRAM

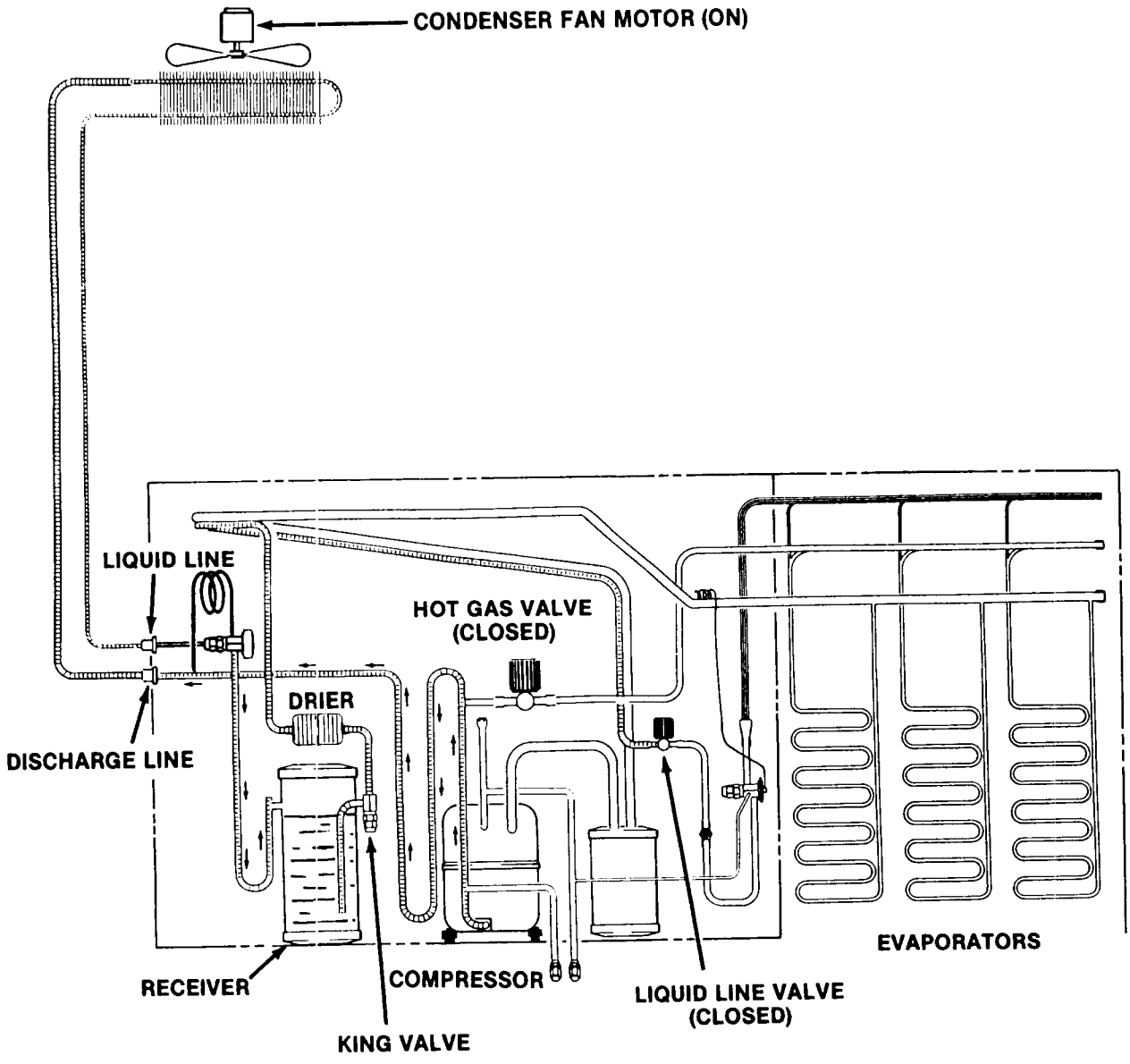

PUMP DOWN

REFRIGERATION SYSTEM, PUMP-DOWN

During the pump-down cycle (usually initiated by the bin thermostat being open, shutting the machine off) the discharge gases from the compressor follow their normal route to the remote condenser, through the head pressure control, and into the receiver. At this point the refrigerant flow is stopped by the closed liquid line valve. This action forces the refrigerant into the receiver, and keeps it out of the compressor. The pump-down continues until the low pressure control turns the compressor off.

CM1000R OPERATION

REFRIGERATION SYSTEM - SCHEMATIC DIAGRAM

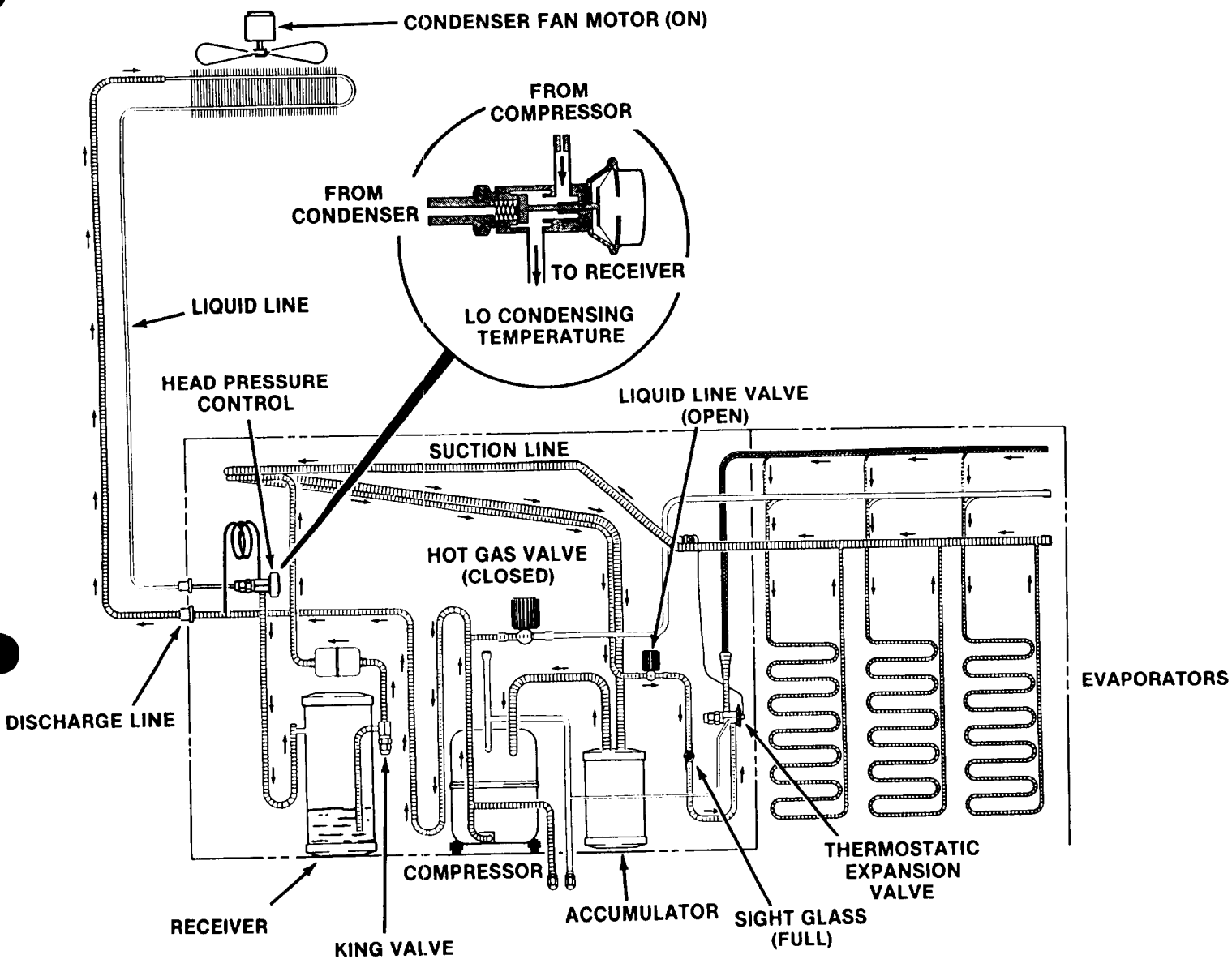

FREEZE

REFRIGERATION SYSTEM

LOW CONDENSER AIR TEMPERATURE

The freezing cycle under low condenser air temperatures is the same as the normal cycle, with the exception that the resulting low head pressures cause the head pressure control to close off the liquid line between the condenser and the receiver. This forces more refrigerant into the condenser (with a small amount of discharge gas going into the receiver to maintain pressure until the head pressure is built back up to the rated gauge pressure (220 PSIG), where the valve re-opens the passage between the condenser and the receiver.

WATER SYSTEM - SCHEMATIC DIAGRAM

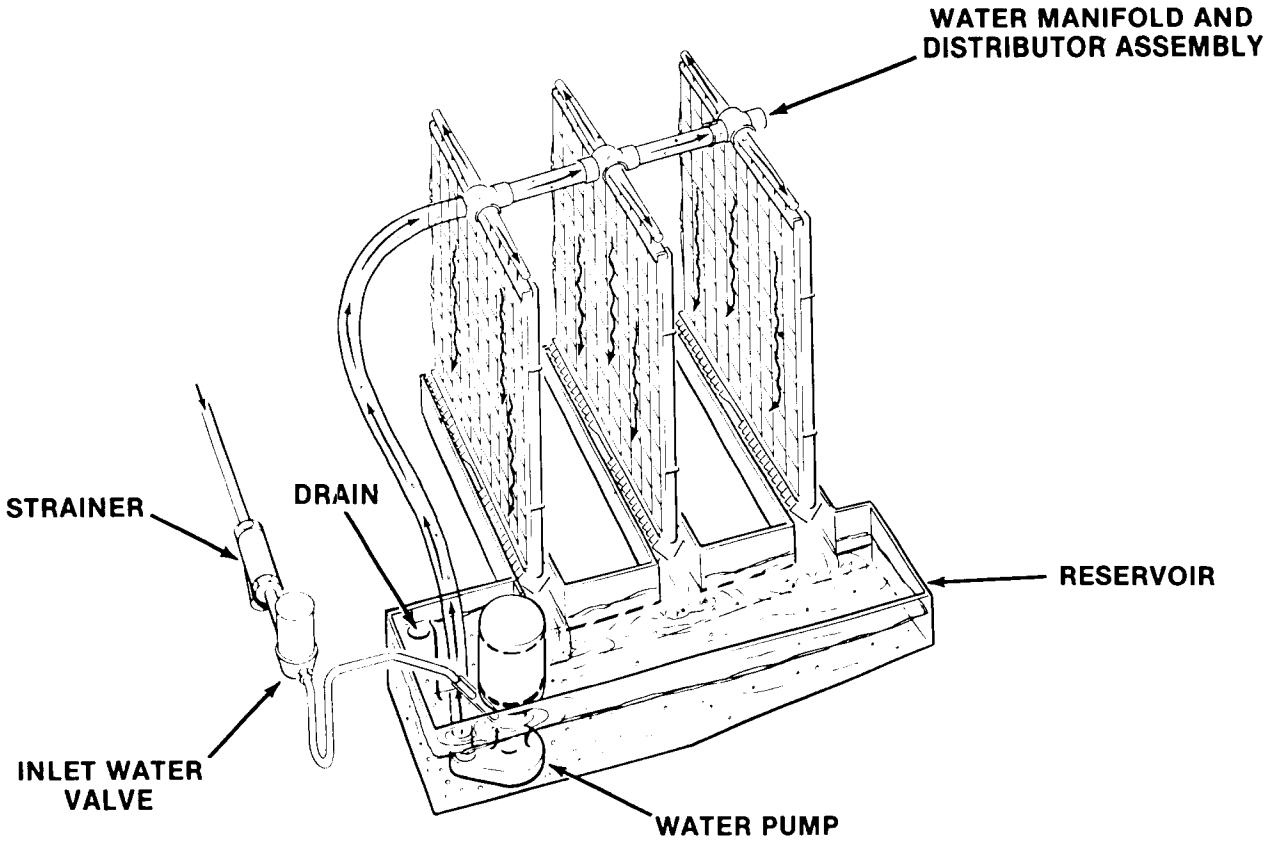

WATER FLOW SCHEMATIC

WATER SYSTEM

FREEZE

The water system during freeze consists of a fixed volume of water being continuously recirculated over the freezing surfaces of the evaporator, by means of a water pump. The pump forces the water to the top of each evaporator, from there it cascades down into the return trough the back to the reservoir where the pump is. As the unit freezes ice, the water level in the reservoir will drop.

HARVEST

The only change is that the inlet water valve has come on, letting in make-up water to fill the reservoir. Once it is full, excess water is drained out the reservoir, via a stand pipe. This excess water dilutes the possible concentration of minerals that can be expected to remain in the water after ice is formed.

CM1000R OPERATION - ELECTRICAL SEQUENCE

The following charts illustrate which switches and which components are ON or OFF during a particular phase of the icemaking cycle.

Refer to the wiring diagram for a reference. Remember, the wiring diagram shows the unit as it is in the Timed Freeze Cycle.

BEGINNING FREEZE

ELECTRICAL COMPONENTS (LOADS)	ON	OFF
Crankcase Heater	X	
Compressor	X	
Fan Motor	X	
Hot Gas Valve		X
Inlet Water Valve		X
Liquid Line Valve	X	
P.C. Board Relay Coil	X	
Timer		X
Water Pump	X	

SWITCHES	ON	OFF
Bin Thermostat	X	
Cube Size Thermostat		X
Toggle	X	
L.P. Control	X	
H.P. Control	X	
Timer Micro Switch N.C.		X
Timer Micro Switch N.O.	X	
High Temp Switch	X	

At the beginning of the freeze cycle, the timer is not turning, but the icemaker is refrigerating the water, starting to turn the water into ice.

CM1000R OPERATION - ELECTRICAL SEQUENCE

TIMED FREEZE

ELECTRICAL COMPONENTS (LOADS)	ON	OFF
Crankcase Heater	X	
Compressor	X	
Fan Motor	X	
Hot Gas Valve		X
Inlet Water Valve		X
Liquid Line Valve	X	
P.C. Board Relay Coil	X	
Timer	X	
Water Pump	X	

SWITCHES	ON	OFF
Bin Thermostat	X	
Cube Size Thermostat	X	
Toggle	X	
L.P. Control	X	
H.P. Control	X	
Timer Micro Switch N.C.		X
Timer Micro Switch N.O.	X	
High Temp Switch	X	

After the icemaker has cooled the water and formed some ice on the evaporator, the evaporator will have gotten cold enough to have the cube size control close. All this does is start and run the timer.

HARVEST

ELECTRICAL COMPONENTS (LOADS)	ON	OFF
Crankcase Heater	X	
Compressor	X	
Fan Motor	X	
Hot Gas Valve	X	
Inlet Water Valve	X	
Liquid Line Valve	X	
P.C. Board Relay Coil		X
Timer	X	
Water Pump	X	

SWITCHES	ON	OFF
Bin Thermostat	X	
Cube Size Thermostat		X
Toggle Switch	X	
L.P. Control	X	
H.P. Control	X	
Timer Micro Switch N.C.	X	
Timer Micro Switch N.O.		X
High Temp Switch	X	

The timer has now turned far enough so that the micro-switch plunger has dropped into the gap in the cam. This breaks the circuit to the relay in the P.C. Board - and that puts the machine into the Harvest cycle, where the hot gas valve and inlet water valve have opened to harvest the ice.

CM1000R OPERATION - ELECTRICAL SEQUENCE

PUMP DOWN - STAGE ONE

ELECTRICAL COMPONENTS (LOADS)	ON	OFF
Crankcase Heater	X	
Compressor	X	
Fan Motor	X	
Hot Gas Valve		X
Inlet Water Valve		X
Liquid Line Valve		X
P.C. Board Relay Coil		X
Timer		X
Water Pump	X	

SWITCHES	ON	OFF
Bin Thermostat		X
Cube Size Thermostat		X
Toggle	X	
L.P. Control	X	
H.P. Control	X	
Timer Micro Switch N.C.	X	
Timer Micro Switch N.O.		X
High Temp Switch	X	

When ice is on the bin control, it will OPEN and at the end of the Harvest Cycle, this will initiate a pump down cycle. The liquid line valve (normally closed) will close and the compressor will pump refrigerant into the receiver.

PUMP DOWN - STAGE TWO

ELECTRICAL COMPONENTS (LOADS)	ON	OFF
Crankcase Heater	X	
Compressor		X
Fan Motor		X
Hot Gas Valve		X
Inlet Water Valve		X
Liquid Line Valve		X
P.C. Board Relay Coil		X
Timer		X
Water Pump		X

SWITCHES	ON	OFF
Bin Thermostat		X
Cube Size Thermostat		X
Toggle (Master and Compressor)	X	
L.P. Control	X	
H.P. Control	X	
Timer Micro Switch N.C.		X
Timer Micro Switch N.O.	X	
High Temp Switch		

After the low side pressure has dropped under 20 psig, the compressor will be turned off by the low pressure control and the unit will be pumped down, OFF and in a standby mode.

CM1000R SERVICE SPECIFICATIONS

In servicing a machine, it is often useful to compare that individual units operating characteristics to those of a normally operating machine. The data that follows give those characteristics. However, be aware that these values are for NEW, CLEAN machines. USE THESE NUMBERS AS A GUIDELINE ONLY.

COMPONENT

Timer - 1 revolution of the cam, in minutes 8
Harvest Time, preset, in minutes 2-1/4
Inlet Water Valve, water flow in g.p.m. 1

	CI	CO
Cube Size Control, Reverse Acting, Temperature range	(+ 12°F. to -6°F.)	—
Bin Thermostat, Temperature Range	38.5°-43.5°	33.5°-38.5°
Low Pressure Control, (Pump Down) psig	35	20
High Pressure Safety Switch, psig	manual	450

The head pressure regulating valve will maintain a minimum discharge pressure during the freezing cycle, in excess of 200 PSIG.

OPERATING CHARACTERISTICS

The values listed below are representative of values seen at a wide range of air and water temperatures and are for a normal cube size.

FREEZE CYCLE

Average Discharge Pressure . . . . . 350-220 PSIG
Suction Pressure at the end of the Freeze Cycle . . . . . 26-23 PSIG
Freeze Time . . . . . 15-22 Minutes
Total Amp Draw 11.9-13.1

HARVEST CYCLE

Average Discharge Pressure . . . . . 250-210 PSIG
Average Suction Pressure . . . . . 140-120 PSIG
Harvest Time, assumed to be 2-1/4 minutes. This can be adjusted to suit local conditions.
Total Amp Draw 14-16

When comparing these figures to field data, allow a variation from each end of the range given.

TO SERVICE REFRIGERATION SYSTEM:

TORQUE REFRIGERATION ACCESS VALVE CAPS TO 60-75 INCH POUNDS.

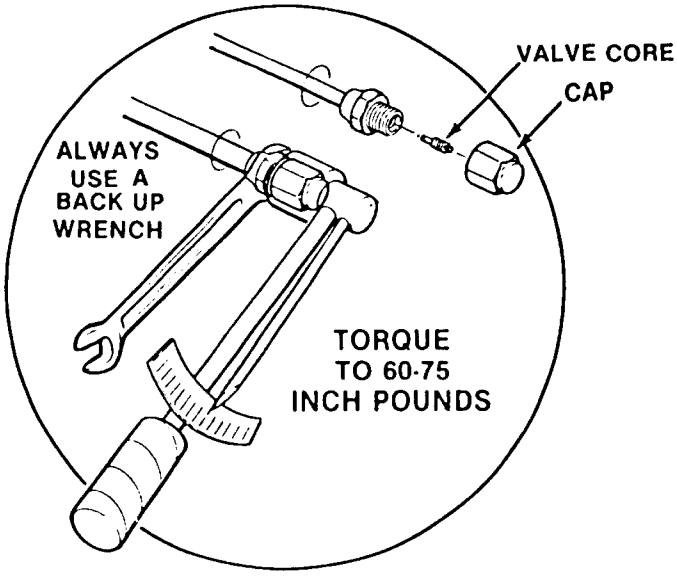

ALWAYS USE A BACK-UP WRENCH TO AVOID DAMAGE TO THE REFRIGERANT TUBING.

CM1000R MAINTENANCE & CLEANING INSTRUCTIONS

A Scotsman Ice System represents a sizable investment of time and money in any company's business. In order to receive the best return for that investment, it MUST receive periodic maintenance.

It is the USER'S RESPONSIBILITY to see that the unit is properly maintained. It is always preferable; and less costly in the long run, to avoid possible down time by keeping it clean, adjusting it as needed and by replacing worn parts before they can cause failure. The following is a list of recommended maintenance that will help keep your machine running with a minimum of problems.

Maintenance and Cleaning should be scheduled at a MINIMUM of twice per year.

ICEMAKER

THE FOLLOWING MAINTENANCE SHOULD BE SCHEDULED AT LEAST TWO TIMES PER YEAR ON THIS ICEMAKER. CALL YOUR AUTHORIZED SCOTSMAN SERVICE AGENCY.

1. Check and clean or service any optional water treatment devices, if any installed.
2. Clean water strainer.
3. Check that the cabinet is level, in the side-to-side and front-to-back directions.
4. Clean the water system, evaporator plate and sump assembly, using a solution of SCOTSMAN Ice Machine Cleaner. Refer to CLEANING - Icemaker.

Cleaning requirements vary according to local water conditions and individual user operation. Continuous check of the clarity of ice cubes and visual inspection of the water system parts, evaporator plates and the sump assembly before and after cleaning will indicate frequency and procedure to be followed in local areas.

5. Check and tighten all bolts and screws.
6. Check for water leaks and make corrections.
7. Check the bin thermostat control bulb to test shut off. Holding ice against bin thermostat control bulb should cause the icemaker to shut off at the end of the harvest cycle.

   Within minutes after ice is removed from the bin thermostat control bulb, the icemaker will restart.
8. Check cube size, adjust if required.
9. Check harvest time, adjust if required.

ICE STORAGE BIN

Clean and sanitize bin interior once per week.

CM1000R MAINTENANCE & CLEANING INSTRUCTIONS

CLEANING - Icemaker

1. Empty bin of ice.
2. Pull out and remove front panel.
3. Switch the master switch to OFF, after the unit shuts off, switch the compressor switch to OFF.
4. Remove the evaporator cover by lifting up, and pulling out.
5. Switch the master switch to CLEAN, pour 8 oz. of Scotsman Ice Machine Cleaner into the water reservoir. Run unit for 30 minutes.

WARNING

SCOTSMAN Ice Machine Cleaner contains Phosphoric and Hydroxyacetic acids. These compounds are corrosive and may cause burns. If swallowed, DO NOT induce vomiting. Give large amounts of water or milk. Call physician immediately. In case of external contact, flush with water. KEEP OUT OF THE REACH OF CHILDREN.

6. Switch the master switch to OFF. Remove the pump hose from the evaporator water manifold, point it into the bin (or a pail) and switch the master switch to ON. This pumps the cleaning solution out of the reservoir. Add fresh water to thoroughly rinse the reservoir.
7. Replace pump hose.
8. Remove control box cover, turn timer shaft clockwise until it appears as illustrated (harvest cycle). Replace cover.

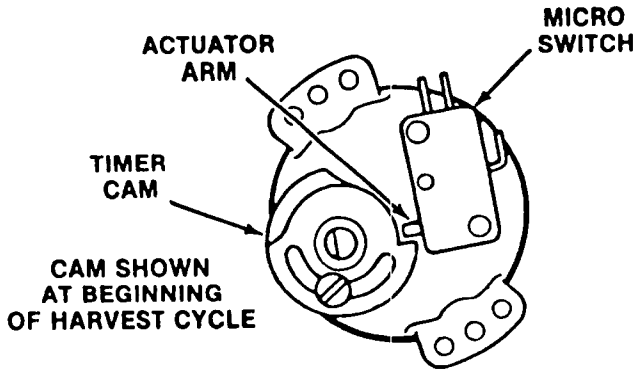

9. Switch the compressor and master switches ON.

CAUTION

DO NOT use ice cubes produced from the cleaning solution. Be sure none remains in the bin.

10. Replace the evaporator cover and front panel.
11. Check the next batch of cubes to be sure all the cleaner is gone (no sour taste).
12. Pour hot water into the storage bin to melt the cubes, and to also clean out the bin drain.

    Sanitize the bin, using an approved sanitizing solution, once per week.

    If necessary, the water reservoir can be removed for cleaning by:

    a) Removing the front panel.
    b) Switching the master switch to OFF.
    c) Removing evaporator cover.
    d) Removing thumb screw securing the pump to the lower evaporator brace, unplug pump, pull it up and out of the machine. Remove hose from pump.
    e) Disconnect drain hose from left rear of the reservoir, lift reservoir up and pull out off machine.
    f. Reverse to reassemble.

CM1000R MAINTENANCE & CLEANING INSTRUCTIONS

REMOTE CONDENSER

Frequent cleaning and inspection of the condenser should be performed to maintain maximum efficiency of Icemaker. A dirty condenser or blocked air flow will greatly decrease icemaking efficiency.

1. With building source electrical power OFF to the icemaker, clean the remote condenser fins, using a vacuum cleaner, whisk broom or brush. DO NOT USE A WIRE BRUSH. Instruct customer to clean frequently.
2. Check that fan blade moves freely, is not touching any surfaces, is not bent or out of balance; and, the wire guard is properly installed and securely attached.
3. Check that the roof area immediately surrounding the remote condenser is free and clear of any debris that may collect, such as leaves, paper, trash, etc.

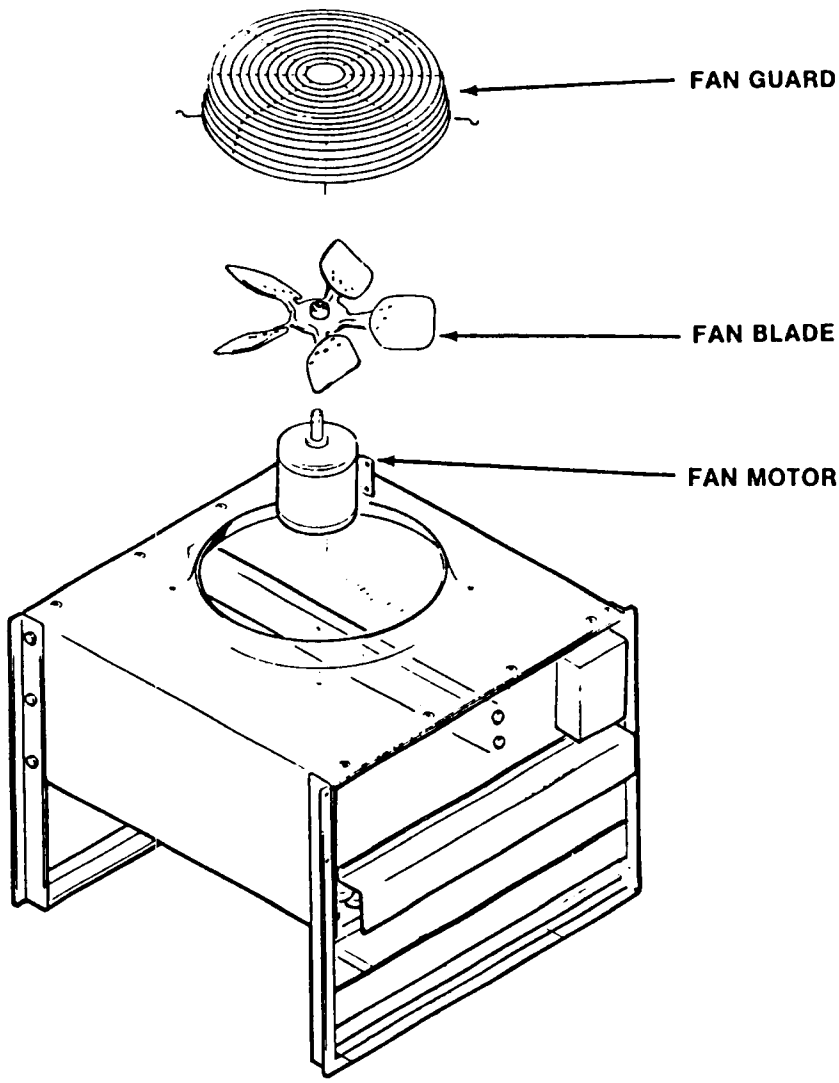

CM1000R COMPONENT LOCATION AND DESCRIPTION

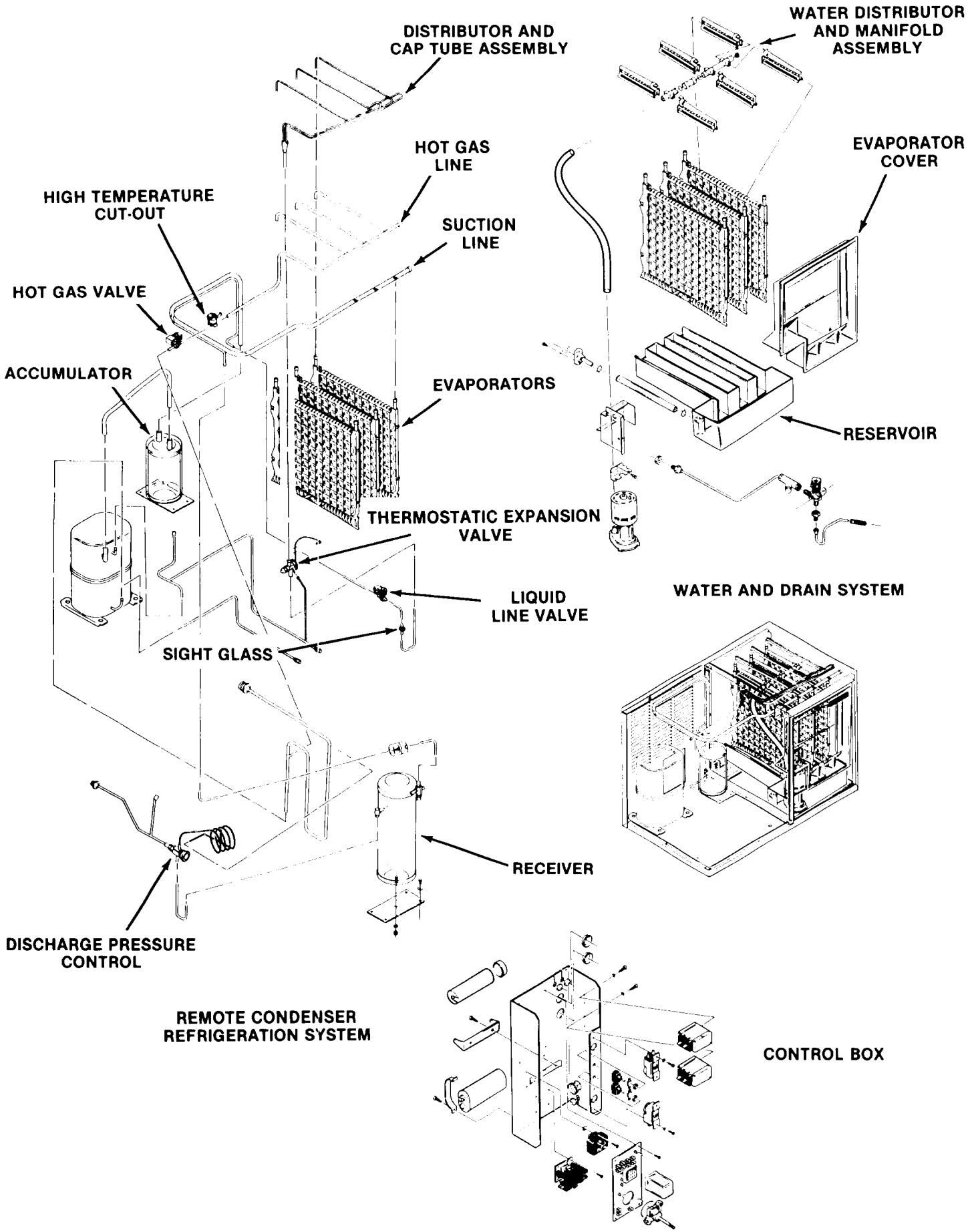

CM1000R COMPONENT LOCATION AND DESCRIPTION

WATER SYSTEM

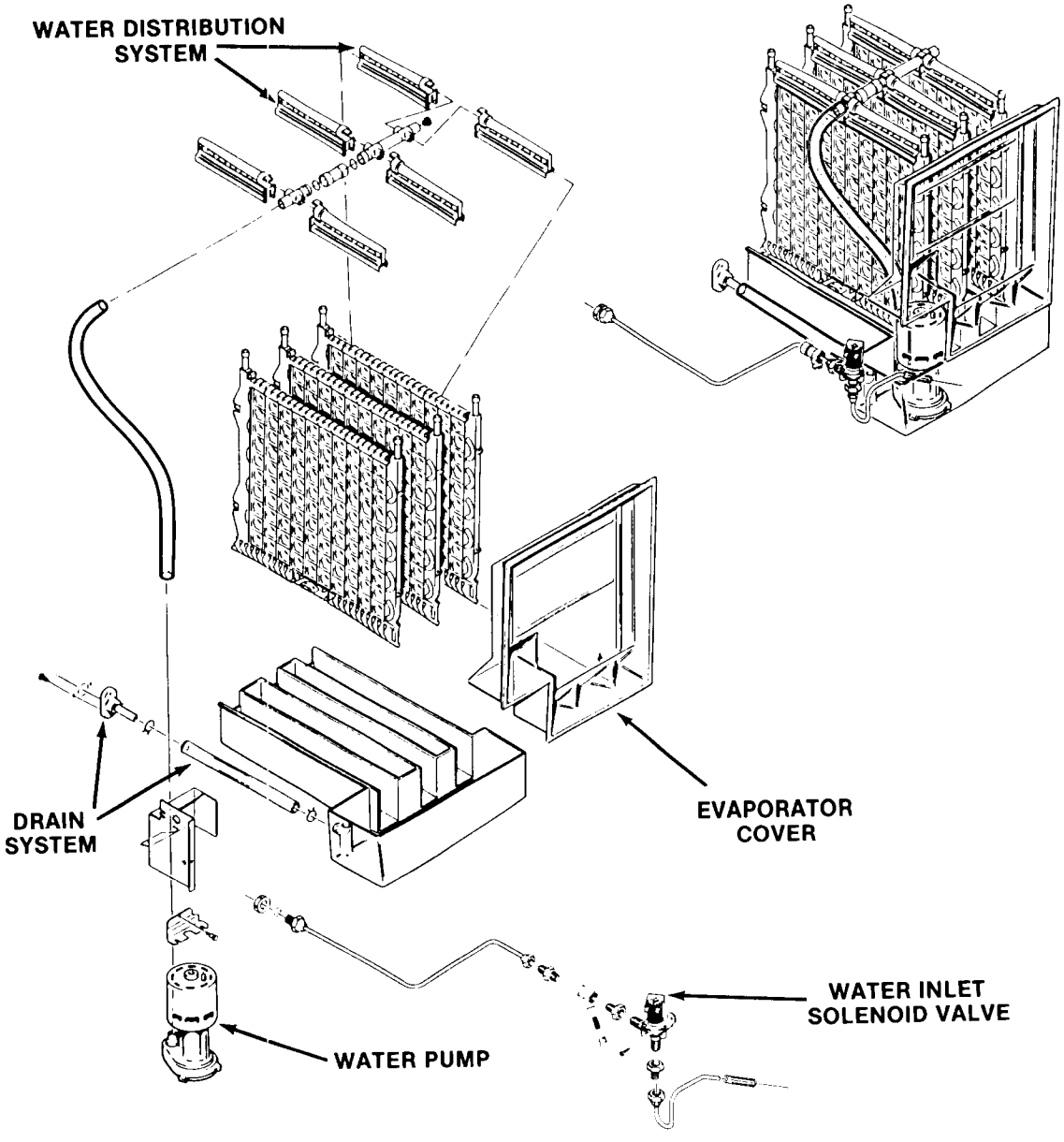

WATER INLET SOLENOID VALVE

The water inlet solenoid valve opens during harvest to fill the sump assembly with water. Excess water overflows through a stand pipe located at the back of the sump to flush minerals from the sump.

WATER PUMP

The water pump picks up water from the base of the reservoir, and forces it up to the top of the evaporators. It remains on throughout the freeze and harvest cycles.

EVAPORATOR COVER

This cover, held in place by shoulder screws, covers the freezing compartment front, keeping any ice and water from splashing the front panel and the water pump.

DRAIN SYSTEM

The drain system functions to allow the excess water brought into the machine during the harvest cycle, to be easily drained away. A standpipe in the back of the reservoir maintains the water level, and is connected to the cabinet drain fitting by tygon tubing.

WATER DISTRIBUTION SYSTEM

The water distribution system functions to evenly supply water to all cells of the evaporator plates. The water pump pumps water from the sump up to the vertical tygon tube to a tee. From there water is channeled through water manifolds to the water distributors, two atop each evaporator plate, and distributed evenly down both sides of each evaporator plate. Gravity flow returns the water to the sump reservoir for recirculation.

CM1000R COMPONENT LOCATION

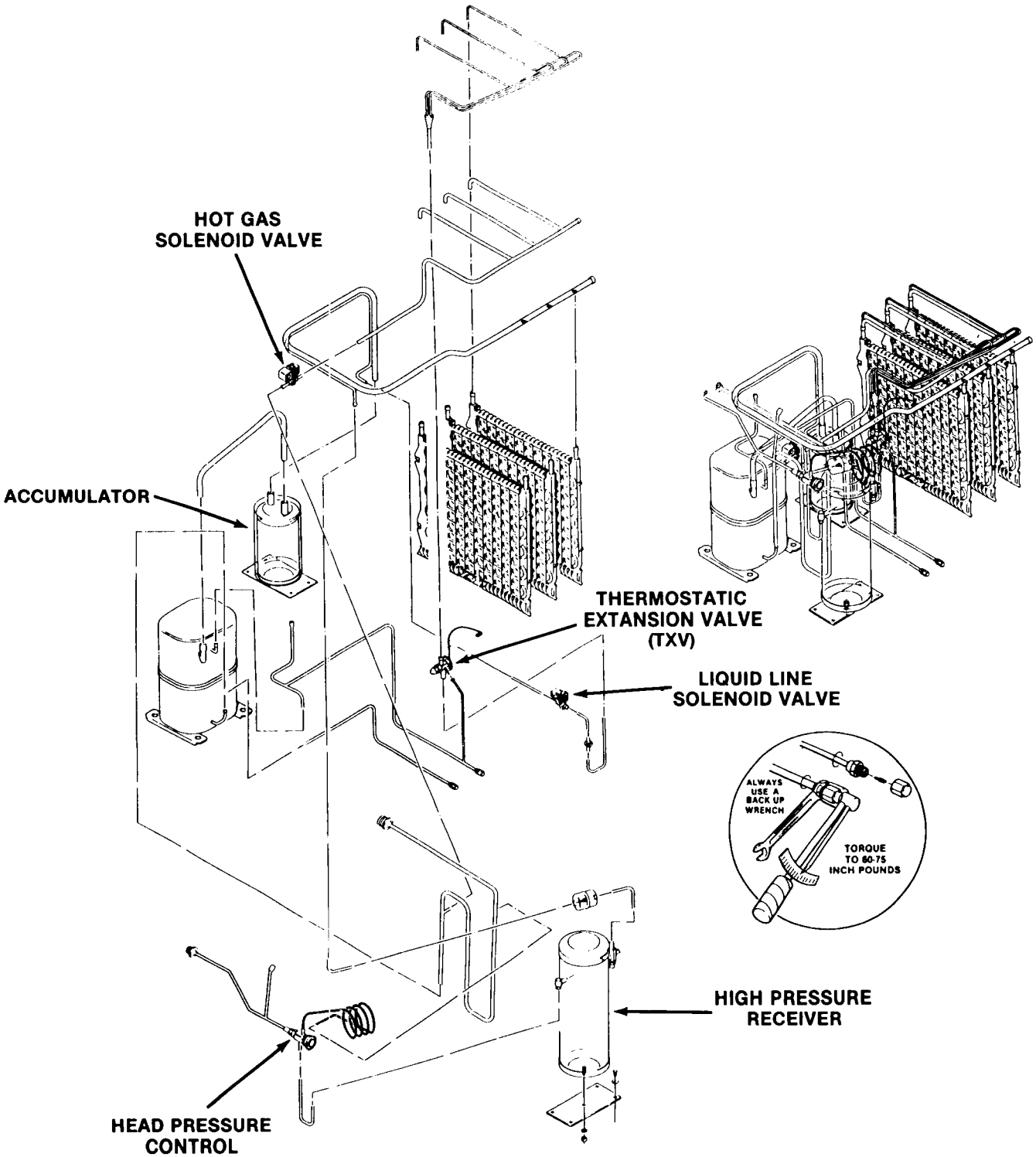

CM1000R COMPONENT DESCRIPTION

REFRIGERATION SYSTEM

HIGH PRESSURE RECEIVER

Provides storage volume for refrigerant during cross ambient operation. The high pressure receiver is sized large enough to hold the entire refrigerant charge. During cold operation there is enough liquid in the receiver to maintain a liquid seal to the liquid line.

LIQUID LINE SOLENOID VALVE

The liquid line solenoid valve provides positive shutoff of refrigerant flow for off cycle evaporator pump down.

HOT GAS SOLENOID VALVE

The hot gas solenoid valve opens during the harvest cycle to divert the hot discharge gas from the compressor, directly into the evaporator plates assembly to release ice cubes from the ice cube molds. The hot gas solenoid valve is comprised of two parts, the body and plunger and the coil and frame assemblies. Installed in the discharge line of the compressor, the energized solenoid coil lifts the valve stem within the valve body, to cause the hot discharge gas to be diverted when the finishing timer has advanced to the start of the harvest cycle.

THERMOSTATIC EXPANSION VALVE (TXV)

The thermostatic expansion valve regulates the flow of refrigerant to the evaporator and reduces pressure of liquid refrigerant from condensing pressure to evaporating pressure.

ACCUMULATOR

The accumulator traps liquid overfeed from the evaporator during harvest and meters it into the compressor at a controlled rate.

HEAD PRESSURE CONTROL

This control's function is to maintain the discharge pressure during the freeze cycle. If the condenser air temperature should drop, the head pressure control will block off the liquid line, forcing more refrigeration into the condenser, until the head pressure rises to normal, then the liquid line will be opened.

CM1000R COMPONENT LOCATION AND DESCRIPTION

CONTROL BOX

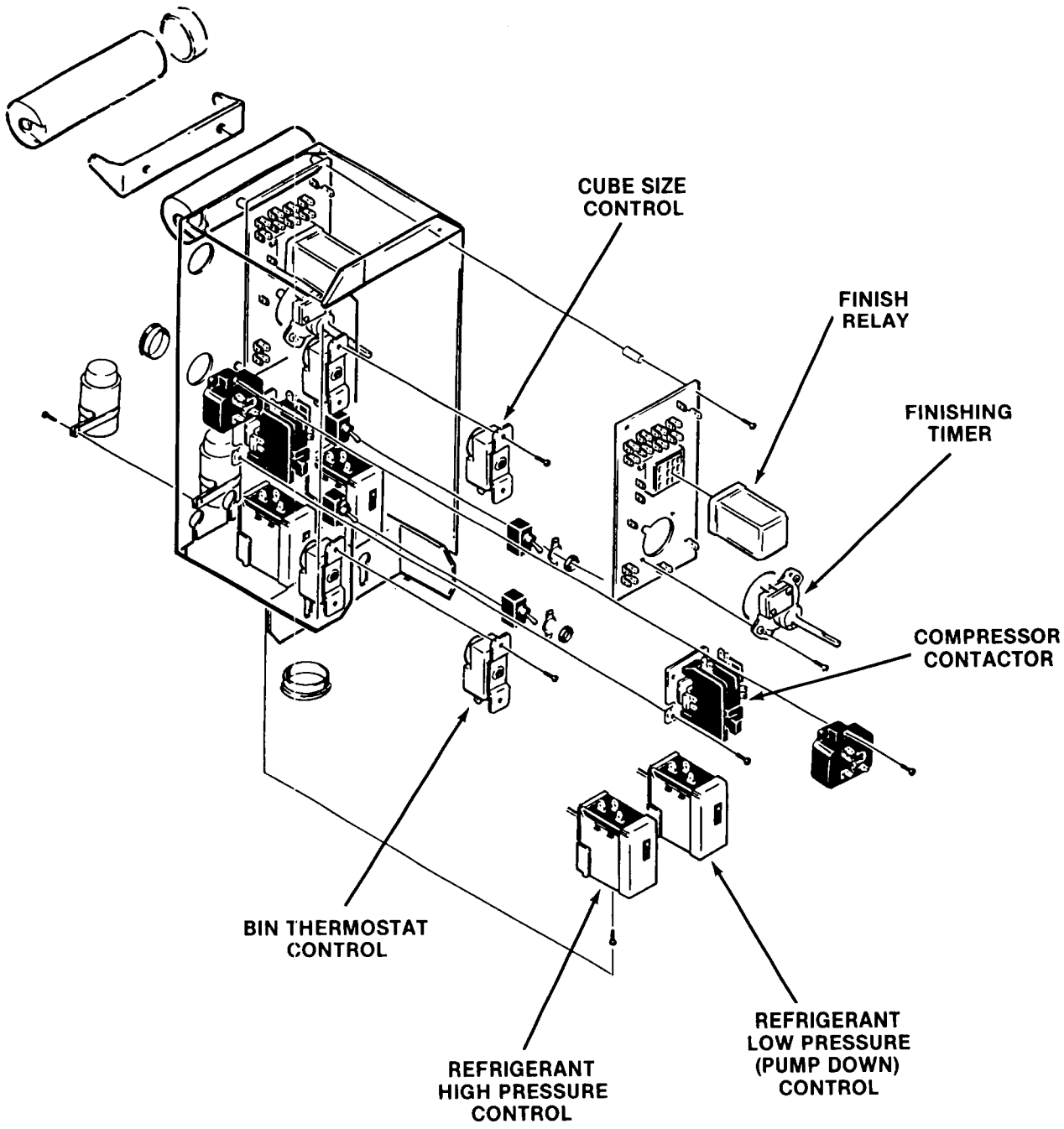

CM1000R COMPONENT DESCRIPTION

BIN THERMOSTAT CONTROL

The bin thermostat control is located in the bottom of the control box. The sensing capillary tube of the control is routed from the control box through the inner left wall in the evaporator section to the bin thermostat control bracket hanging in the ice storage bin. The bin thermostat control functions to automatically shut OFF the icemaker when the ice storage bin is filled and ice contacts the capillary tube. It also signals the RESTART of the icemaker when the capillary tube starts to warm up after ice has been removed from the bin.

Bin thermostat control adjustment should ONLY be performed if premature shut off occurs or ice backs up into the freezing section of the cabinet. Adjust only in increments of one eighth turn of a screw at a time.

COMPRESSOR CONTACTOR

The compressor contactor functions to carry the compressor line current. The contactor is wired so any control in the pilot circuit such as the bin thermostat, low pressure and high pressure controls, etc., will cause the contactor holding coil to be de-energized when the control contact OPENS; thereby, breaking the circuit to the compressor through the contactor points.

REFRIGERANT HIGH PRESSURE CONTROL

The purpose of this safety control is to protect the unit from damage due to high refrigerant pressure. It also provides additional protection for the unit in high ambient temperatures. This is a manual reset control connected to the refrigeration system high-side. It is set to stop the unit completely when the high-side pressure reaches the preset limit.

REFRIGERANT LOW PRESSURE (PUMP DOWN) CONTROL

The purpose of this switch is to control the compressor. It keeps the compressor on to pump the refrigerant into the receiver after the liquid line solenoid has closed. It also provides additional protection for the unit in case low ambient temperatures exist. This is an automatic reset control connected to the refrigeration system low side. It is set to stop the compressor when the low-side pressure drops to less than 20 psig.

CUBE SIZE CONTROL

The temperature sensing cube size control affects the length of the freezing cycle prior to initiating the finishing timer. The cube size control closes its contacts when the evaporator reaches a preset temperature starting the finishing timer. A variation in either ambient air or incoming water temperature will affect the efficiency of the refrigeration system. This will vary the length of time it takes the evaporator to reach the temperature at which the cube size control is preset to CLOSE which, in turn, will affect the overall cycle time.

See *Cube Size Admustment* BEFORE attempting to adjust the control.

FINISH RELAY

The multi-function, three pole, double-throw plug-in relay is installed directly into a receptacle on the printed circuit board in the control box. The relay functions, in part, to by-pass the bin thermostat control to prevent the icemaker from shutting OFF when a filled-bin condition occurs during the freezing cycle. The by-pass action serves to ensure full-sized cubes with each harvest cycle and to prevent short cycling on the bin thermostat control.

FINISHING TIMER — Timer & Switch Assembly.

The function of the finishing timer begins when activated by the cube size control. The outer surface, or large diameter lobe of the timer cam, determines the timer cycle for finish freezing of the ice cubes while the inner surface or small diameter lobe determines the time cycle for the harvest sequence. All electrical circuitry is connected through the printed circuit board and the finishing timer and double-throw microswitch. The microswitch is actuated by a cam assembly directly connected to the timer motor. The timer cam can be adjusted to vary the defrost time required.

CM1000R SERVICE DIAGNOSIS

The service diagnosis section is for use in aiding the serviceman in diagnosing a particular problem for pin-pointing the area in which the problem lies, thus an ever available reference for proper corrective action.

The following chart lists corrective actions for the causes of known symptoms of certain problems that can occur in the icemaking-refrigeration system.

ICEMAKING - REFRIGERATION SYTSTEM

SYMPTOM	POSSIBLE CAUSE	CORRECTION
Irregular size cubes	Some distributor holes plugged.	Clean distributor holes.
		Clean water sump.
	Shortage of water.	See Shortage of water CORRECTION.
	Unit not level.	Level cabinet, as required.
Cubes too large.	Dirty air-cooled condenser.	Clean remote condenser.
	Cube Size Control set too cold.	Rotate Cube Size Control dial toward WARMER.
	Loss of refrigerant.	Check for refrigerant leaks, correct leaks; recharge system.
Cubes too small.	Cube Size Control set too warm.	Rotate Cube Size Control dial toward COLDER.
	Moisture in refrigeration system.	Blow refrigerant charge; replace drier; evacuate system; add proper refrigerant charge.
	Shortage of water.	See shortage of water CORRECTION.
	TXV valve super heat too high.	Replace valve.
Cloudy Cubes.	Shortage of water.	See Shortage of water SYMPTOM.
	Dirty water supply.	Install water filter or treatment system.
	Accumulated impurities.	Use SCOTSMAN Ice Machine Cleaner. See Cleaning Instructions.
Shortage of water.	Short harvest cycle.	Adjust cam of timer and switch assembly.
	Water leak in sump area.	Locate leak and correct condition.
	Partial restrictions in water strainer.	Clean or replace strainer.
	Low water pressure.	Check for incorrect sypply line size or blockage.
		Check for low main pressure. If low, contact water company.

CM1000R SERVICE DIAGNOSIS

SYMPTOM	POSSIBLE CAUSE	CORRECTION
Decreased Ice capacity.	High head pressure, result of dirty Condenser or Faulty Fan Motor.	Clean Remote Condenser Fins.
		Repair or replace Fan Motor.
	Non-condensable gas in the system.	Purge the system and recharge per nameplate requirements.
	Overcharge of refrigerant.	Slowly purge off to correct charge.
	Hot gas solenoid valve leaking.	Replace valve.
	Defective Compressor. Check amp draw of Compressor.	Replace Compressor.
	Leaky inlet water valve.	Replace valve.
	High Ambient temperature for condenser.	If possible, reduce condenser inlet air temperature.
Poor harvests. Icemaker does not harvest.	Too short defrost time.	Check and adjust harvest cycle.
	Restriction in water inlet line.	Check strainer and inlet water valve.
	Hot gas solenoid does not open. Binds or burned out.	Replace solenoid.
	Undercharge of refrigerant.	Charge to nameplate requirements.
	Water pressure too low.	Check for 20 PSI flowing water.
	Head Pressure Regulator valve - low head.	Replace valve.
Compressor cycles intermittently.	Low voltage.	Check for circuit overload.
		Check building supply voltage, if low, contact power company.
	Cycling on Low Pressure Control.	Cold Ambient at Condenser.
		Pump down Solenoid Coil Open. Replace it.
Unit Trips on Hi Pressure Cut Out.	Dirty Condenser.	Clean Condenser with vacuum cleaner or brush. DO NOT USE A WIRE BRUSH.
	Defective Fan Motor.	Replace Fan Motor.
	Non-condensable gases in system.	Purge the system and recharge per nameplate requirements.
	Fan Relay of KCMR230 stuck.	Replace Relay.
Frost on Compressor.	TXV Metering too much Refrigerant.	Superheat set too low. Adjust or replace valve.

CM1000R SERVICE DIAGNOSIS

SYMPTOM	POSSIBLE CAUSE	CORRECTION
Icemaker will not operate.	Blown fuse in line.	Replace fuse and check for cause.
	Master switch in OFF position.	Set switch to ON position.
	Faulty Master switch.	Replace switch.
	Timer contacts open.	Replace Timer.
	Improperly wired.	Contact electrical contactor for correction.
	Out of refrigerant, off on Low Pressure control.	Correct leak, recharge system
	High Pressure control tripped.	Reset, check condenser.
	Bin control open.	Check Bin Control Unit in coldroom or bin control defective.
	Liquid Line Solenoid valve not opening - keeps unit pumped down.	Repair or replace valve.
	Hi Temp Switch open.	Determine why Refrigerant Line is too hot.
Icemaker will not go into the Harvest Cycle automatically.	Cube size Control will not close.	Replace Size Control.
	Timer motor open.	Replace timer.
	Plug in relay contacts open.	Replace relay.
	Cube Size Control may not close if condensing pressure is too high.	Check condenser and discharge pressure.
Water overflows from the sump into the bin.	Restricted sump drain.	Repair drain.
	Inlet water valve lets in too much water.	Replace inlet valve.
Icemaker stays in the Harvest Cycle.	Plug in Relay Coil open.	Replace Relay.
	Timer Motor open or stuck.	Replace Timer.
	Timer Microswitch N.O. contacts will not close.	Replace Timer.

REFRIGERANT CHARGE DIAGNOSIS

On this model, the refrigerant charge is adequate whenever the sight glass remains full of liquid refrigerant throughout the Freeze Cycle. HOWEVER, the condensing temperature will have a direct bearing on this. A unit with a marginal charge in summer will be undercharged when the outside air temperature drops. The only correct and accurate way to charge this unit is to weigh in the nameplate charge.

WATER SYSTEM

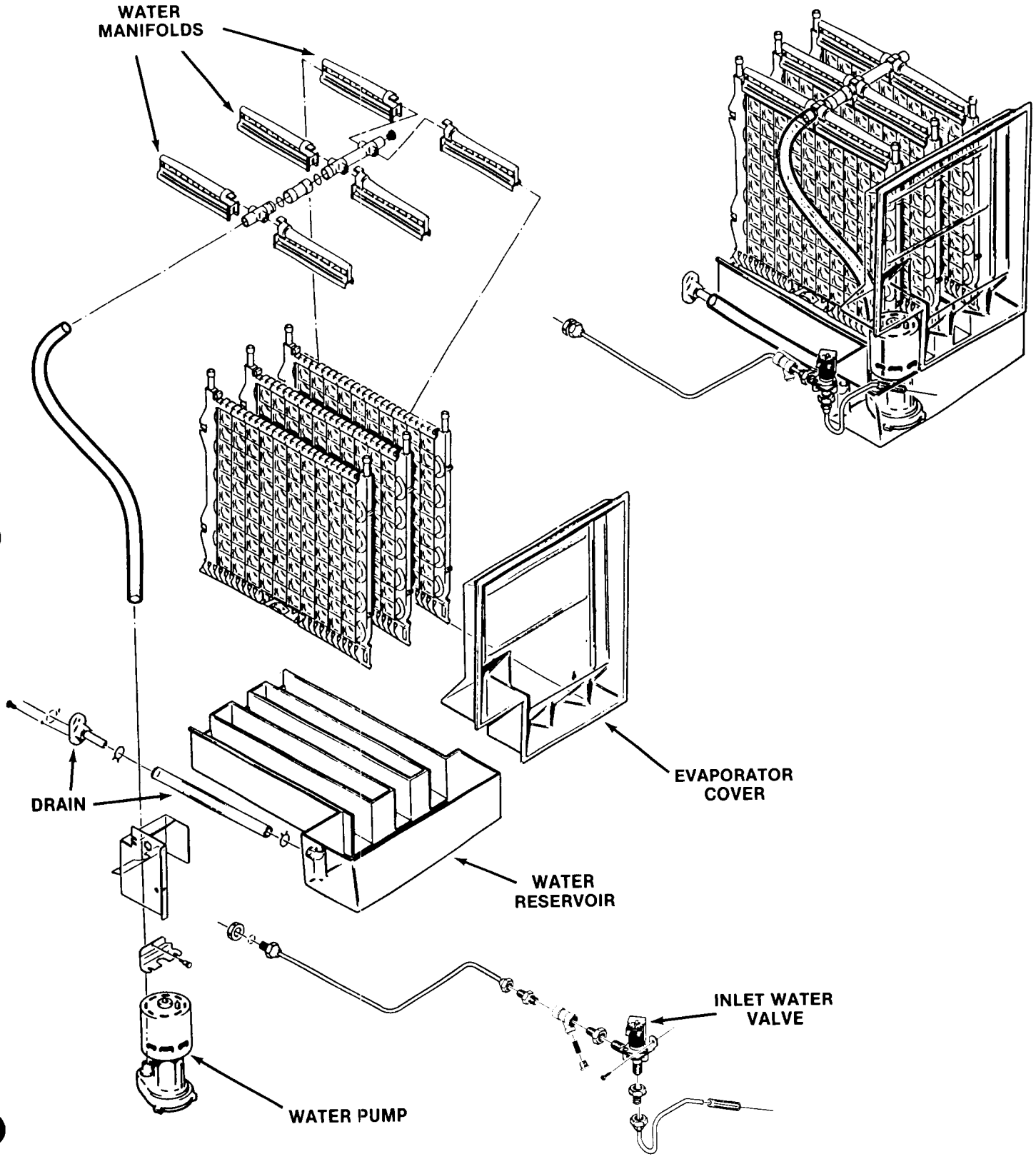

CM1000R REMOVAL AND REPLACEMENT PROCEDURES

WATER PUMP

1. Remove front panel.
2. Lift up, and remove evaporator cover.
3. Unplug pump.
4. Remove one screw holding pump bracket to evaporator cross brace.
5. Pull pump forward and lift up.
6. Remove discharge hose from pump outlet.

Reverse to replace.

RESERVOIR

1. Perform above steps and remove water pump.
2. Use corbin clamp pliers, push hose clamp of drain hose away from reservoir fitting. Remove drain hose from reservoir.
3. Lift up, and pull forward to remove reservoir.

Reverse to replace.

DISTRIBUTORS/WATER MANIFOLDS

1. Remove front panel.
2. Remove evaporator cover.
3. Pull distributor forward, and lift up in the back, after distributor comes up in back, push back and unsnap distributor from water manifolds.
4. Water manifolds can be pulled away from each other. Check "O" Rings in connectors.

Reverse to replace.

INLET WATER VALVE

1. Remove front panel.
2. Unplug water valve.
3. Remove flare nut securing outlet tube to valve.
4. Remove flare nut from inlet fitting.
5. Remove 2 screws securing valve to bulkhead wall, and remove valve.
6. Remove brass water fitting from old valve to put on new valve.

Reverse to replace.

WARNING

Disconnect electrical power before beginning removal and replacement procedures.

CM1000R REMOVAL AND REPLACEMENT PROCEDURES

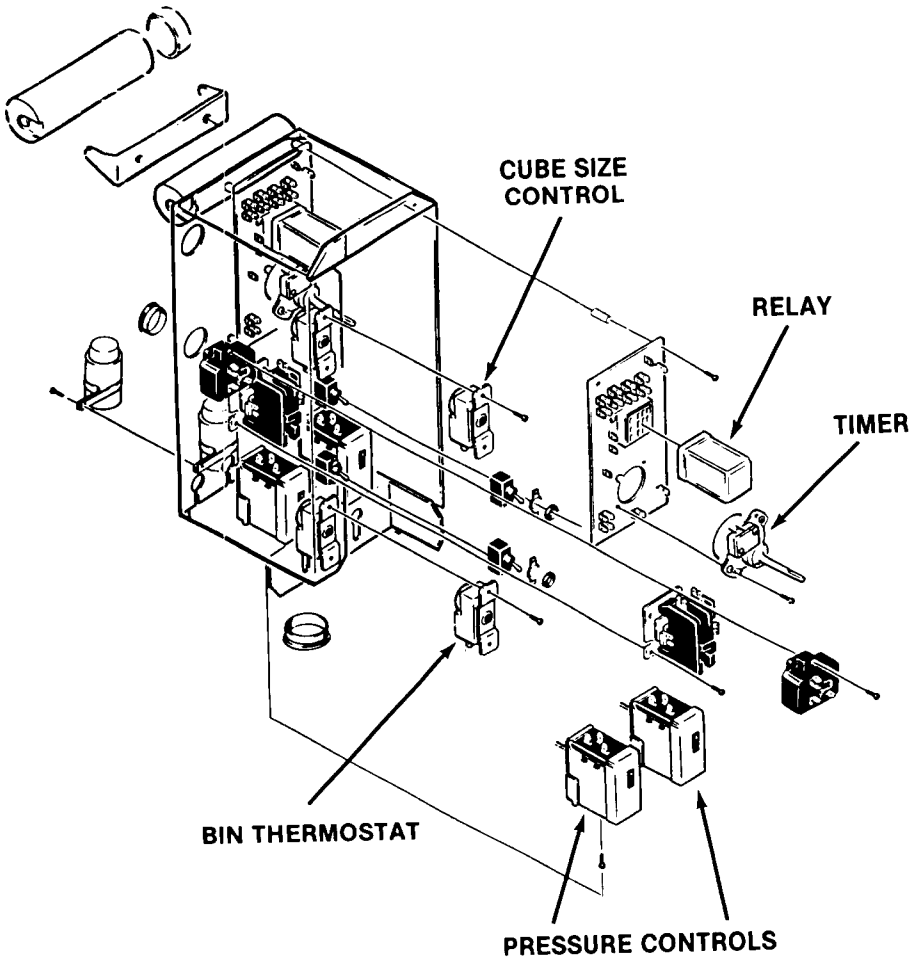

WARNING

Disconnect electrical power before proceeding with any removal.

CUBE SIZE CONTROL

1. Remove front panel.
2. Remove control box cover.
3. Above and behind control box cover, locate the bulbwell for the cube size control, remove the insulation and the bulb.
4. Disconnect wires, remove knob, and the body of the control from the control box.

Reverse to reassemble.

TIMER

1. Remove front panel.
2. Remove control box cover.
3. Remove wires from P.C. board at posts marked "timer."
4. Unscrew two screws at timer from standoffs, and remove.

Reverse to reassemble.

BIN THERMOSTAT

1. Remove front panel.
2. Pull bin control capillary out of bracket.
3. Remove control box cover.
4. Disconnect wires from thermostat.

Remove two screws, and thermostat from control box.

Reverse to reassemble.

PRESSURE CONTROLS

These are connected to the refrigeration system, and therefore the skills of that trade are required to replace them.

1. Remove front panel.
2. Remove control box cover.
3. Disconnect wires at control.
4. Purge system of refrigerant.
5. Unsweat control connection to refrigeration system, and remove control.
6. Reverse to reassemble, install new drier, evacuate and weigh in nameplate charge.

CM1000R REMOVAL AND REPLACEMENT PROCEDURES

WARNING

Disconnect electrical power supply to icemaker whenever replacement procedures are performed.

COMPRESSOR

1. Remove top panel (if possible), front panel and left side service panel.
2. Disconnect electrical lines from compressor.
3. Purge system of refrigerant.
4. Remove compressor mounting bolts.
5. Cut or unsweat discharge, process, and suction lines.
6. Remove old filter drier.
7. Remove compressor from unit.

Check or replace starting components. Reverse steps to reassemble.

HOT GAS VALVE OR LIQUID LINE VALVE

1. Remove front, left side service panel, and top panel (if possible).
2. Unplug electrical connection to valve coil.
3. Purge system of refrigerant.
4. Cut out or unsweat valve, remove from machine.
5. To replace, heat sinking of the valve body is **critical.** Wrap the replacement valve in wet rags, and sweat it into place (make sure arrow on valve points in direction of refrigerant flow). Reverse steps 1-3 to reassemble.

THERMOSTATIC EXPANSION VALVE

1. Remove front and top panel (if possible).
2. Purge system of refrigerant.
3. Cut out or unsweat at inlet, equalizer, and outlet.
4. Remove insulation from valve bulb, remove mounting strap and valve from unit.
5. Place new valve bulb in the same place as the old, secure with straps, and reinsulate.
6. When replacing the valve, heat sinking or protecting the valve from damage is **critical.** Wrap the body of the valve in wet rags and sweat into place. Leave the rags on until the joints cool.
7. Remove and replace drier.

HEAD PRESSURE CONTROL VALVE

1. Remove left side service panel.
2. Purge the system of refrigerant.
3. Cut out or unsweat valve.
4. Wrap the new valve in wet rags to prevent damage from heat, and sweat into place.
5. Remove and replace drier.

NOTE

Always install a replacement drier, any time the sealed refrigeration system is opened. Do not replace the drier until all other repair or replacement has been completed. Evacuate and **WEIGH IN** the nameplate charge.

CM1000R REMOVAL AND REPLACEMENT PROCEDURES

REMOVAL AND REPLACEMENT OF THE EVAPORATOR PLATE ASSEMBLY

1. Remove the front and top panels.
2. Bleed off or blow the refrigerant charge through the Schrader valve.
3. Disconnect Tygon water inlet tube(s), at the water manifold tee(s), above the evaporator plates.
4. Remove reservoir and pump.
5. Slide the water distributor tubes about 1/8-inch along the top of the evaporator plate to be removed, until the left water distributor tube can be lifted upward.
6. Lift the end of the water distributor tube and slide the distributors toward the left along the top of the evaporator plate, until the flexible right notch is cleared.
7. Unsnap and disconnect each left and right water distributor tube from the water manifold section.

CAUTION

Use EXTRA PRECAUTION to protect the plastic parts during the next step to unsolder the refrigerant lines, two places, at the top of the evaporator plate. Position wet cloths over top of plates, as well as over the plastic liner at the rear or sides, to prevent accidental heat damage or possible fire from torch flame.

8. Unsolder and remove the refrigerant lines at the top of the evaporator plate to be replaced.
9. Loosen the braces just enough to remove the evaporator plate. Temporarily replace the braces to support the remaining evaporator plate(s).

Always install a replacement drier, anytime the sealed refrigeration system is opened. Do not replace the drier until all other repair or replacement has been completed.

To replace the evaporator plate, reverse the removal procedures. See Nameplate. Weigh in proper charge of R-502.

Whenever a new charge of refrigerant is placed in the system, the compressor should NOT BE RUN until the crankcase heater has been on for 12 hours after re-charging.

CHARGING PROCEDURES

Particular care must be taken when recharging this remote system. No liquid refrigerant may be placed in the system at the compressor. DO NOT use the Schrader valves at the front of the machine for weighing in the charge. All liquid R-502 must be weighed into the receiver through the "front seated" King Valve.

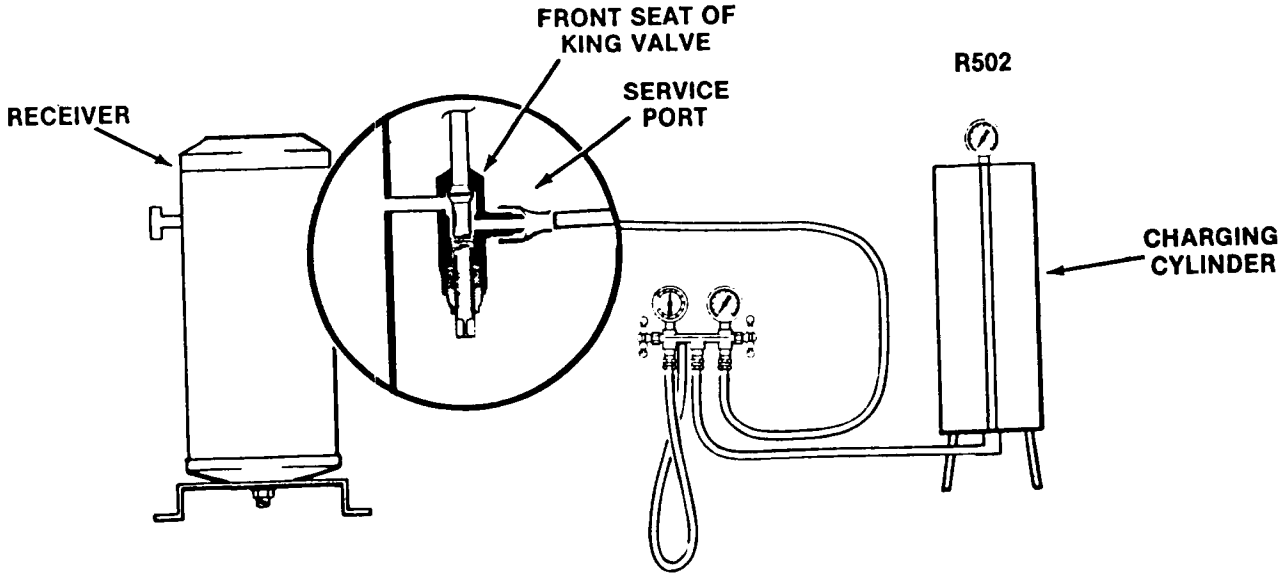

CM1200

TABLE OF CONTENTS

Table of Contents 1
List of Illustrations 2
Specifications 3

SECTION I - GENERAL INFORMATION & INSTALLATION 5
I. Introduction 5
II. Unpacking and Inspection 5
III. Location and Leveling 5
IV. Electrical Connections 9
V. Water Supply and Drain Connections 9
VI. Installation - Optionals 9
VII. Final Check List 9

SECTION II - OPERATING INSTRUCTIONS 11
I. Start Up 11
II. Operation - How It Works 13

SECTION III PRINCIPLES OF OPERATION - How It Works 15
I. Freezing Cycle 15
II. Harvest Cycle 16
III. Component Description 16

SECTION IV - ADJUSTMENT AND REMOVAL AND REPLACEMENT PROCEDURES 18
I. Adjustment of the Cube Size Control 18
II. Adjustment of the Timer & Switch Assembly 18
III. Adjustment of the Water Regulator Assembly—Water-Cooled Models 19
IV. Removal and Replacement of the Bin Thermostat Control 19
V. Removal and Replacement of the Compressor Assembly 19
VI. Removal and Replacement of the Condenser - Air-Cooled Models 20
VII. Removal and Replacement of the Condenser - Water-Cooled Models 20
VIII. Removal and Replacement of the Cube Size Control 20
IX. Removal and Replacement of the Drier 20
X. Removal and Replacement of the Evaporator Plate Assembly 21
XI. Removal and Replacement of the Fan Motor Assembly - Air-Cooled Models 22
XII. Removal and Replacement of the Inlet Water Valve Assembly 22
XIII. Removal and Replacement of the Sump Assembly 22
XIV. Removal and Replacement of the Water Distributor Tubes and Manifold Tubes 23
XV. Removal and Replacement of the Water Pump Assembly 23
XVI. Removal and Replacement of the Water Regulator Assembly - Water-Cooled Models 23

TABLE OF CONTENTS (Cont'd)

SECTION V - MAINTENANCE & CLEANING INSTRUCTIONS 24
I. General 24
II. Icemaker 24
III. Cleaning - Icemaker 24

SECTION VI- SERVICE DIAGNOSIS 26
I. Icemaking - Refrigeration System 26

SECTION VII- WIRING DIAGRAMS 28
Wiring Diagram CM1200—Air-Cooled - (115/208-220/60/3) 29
Wiring Diagram CM1200—Water-Cooled - (115/208-220/60/3) 30
Wiring Diagram CM1200—Air-Cooled - (115/208-230/60/1) 31
Wiring Diagram CM1200—Water-Cooled - (115/208-230/60/1) 32

SECTION VIII- THE PARTS ILLUSTRATIONS AND PARTS LISTS 33
I. General 33
II. How to Use the Illustrations and Parts Lists 33
III. How to Order Parts of Assemblies 33

LIST OF ILLUSTRATIONS

Specifications 3
Figure 1-1. Stacking Contour Cuber Equipment 6
Figure 1-2. Installing the Bin Thermo Bracket and Bin Thermostat Capillary Line 6
Figure 1-3. CM1200—Locational 7
Figure 1-4. Installation Practice 8
Figure 2-1. Sump Filled—Showing Water Level Line 11
Figure 2-2. Timer Cam Positions 11
Figure 2-3. Ice Cube Size and Shape 12
Figure 2-4. Freezing Cycle 13
Figure 2-5. Harvest Cycle 14
Figure 3-1. Freezing Cycle 15
Figure 3-2. Harvest Cycle 16
Figure 4-1. Adjustment of the Timer and Switch Assembly 19
Figure 4-2. Removal of the Water Distributor, Manifold, Tees 21
Figure 7-1. Wiring Diagram CM1200—Air-Cooled (115/208-220/60/3) 29
Figure 7-2. Wiring Diagram CM1200—Water-Cooled (115/208-220/60/3) 30
Figure 7-3. Wiring Diagram CM1200—Air-Cooled (115/208-230/60/1) 31
Figure 7-4. Wiring Diagram CM1200—Water-Cooled (115/208-230/60/1) 32
Figure 8-A. CM1200 Modular Cuber Flow Chart 34
Figure 8-1. CM1200 Cabinet 35
Figure 8-2. Major Assemblies—Air-Cooled 39
Figure 8-3. Major Assemblies—Water-Cooled 42
Figure 8-4. Evaporator Section Components and Assemblies 45
Figure 8-5. Control Box Assembly 47

CM1200

SPECIFICATIONS
MODEL CM1200

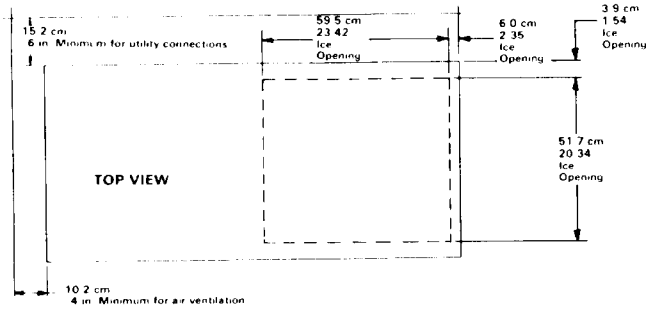

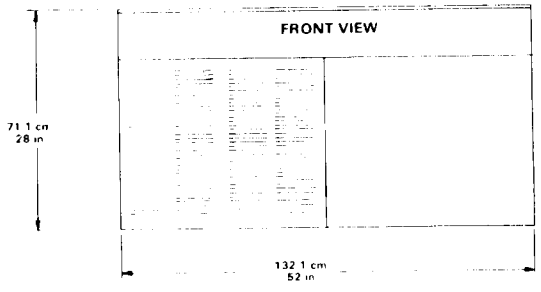

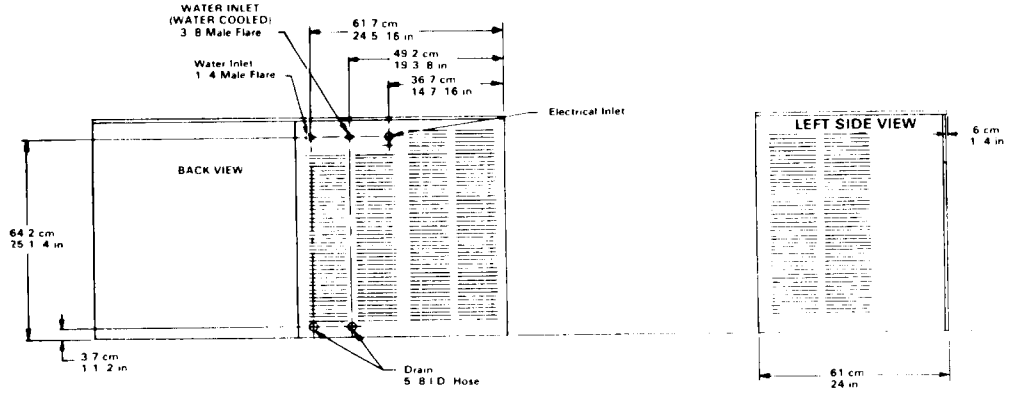

Height: 28 in./71.1 cm.
Width: 52 in./132.1 cm.
Depth: 24 in./61 cm.
Est. Ship. Wt.: 375 lbs.

SPECIFICATIONS (CONT'D.)

MODEL CM1200

Air-Cooled: Model CM1200SAE

Water-Cooled: Model CM 1200SWE

Electrical: 115/208-220/60/3
115/208-230/60/1

Est. Ship Wt.: 375 lbs.

MODEL NUMBER
SERIAL NUMBER
A.C. SUPPLY VOLTAGE
MINIMUM CIRCUIT AMPACITY WIRES
MAXIMUM FUSE SIZE HERTZ
HEATER WATTS PHASE
REFRIGERANT 12 OZ.

MOTORS	VOLTS	F.L.A.	L.R.A
COMPRESSOR			
FAN			
DRIVE			
OTHER			

TEST PRESSURE 140 LOW-235 HIGH

KING SEELEY KST THERMOS CO.
FAIRFAX OPERATION
FAIRFAX, SOUTH CAROLINA U.S.A.

MODEL NUMBER
SERIAL NUMBER

KING SEELEY KST THERMOS CO.
FAIRFAX OPERATION
FAIRFAX, SOUTH CAROLINA U.S.A.

FRONT SERVICE ACCESS PANELS

OPTIONALS:

SPKCM1200 Stainless Steel Cabinet Panels

BH750 BIN: 750 lbs. Storage Capacity

KWICMB: Sump Siphon Kit, rinses impurities from sump each time machine shuts off.

SEE NAMEPLATE, shown at left, for electrical and refrigeration specifications. NAMEPLATE located on rear service panel.

Remove Left Bottom Front Panel to locate the Model Serial Number plate, shown below, on the Chassis Front left vertical upright.

MODEL NUMBER	A.C. SUPPLY VOLTAGE
SERIAL NUMBER	TOTAL LOAD AMPS
TEST PRESSURES	REFRIGERANT 12
140-LO / 230-HI	OZ.

KING SEELEY KST THERMOS
FAIRFAX OPERATION
FAIRFAX, SOUTH CAROLINA U.S.A.

We reserve the right to make product improvements at any time. Specifications and design are subject to change without notice.

This icemaker has been engineered to our own rigid safety and performance standards. The National Sanitation Foundation (NSF) seal, signifies that it is listed with the NSF and that it complies with the materials and construction standards of the NSF. In addition, the Underwriters Laboratories, Inc., (UL) Listing Mark and the Canadian Standards Association (CSA) Monogram, both signifiy that its construction and design have been inspected and tested by them. NSF, UL and CSA inspectors also periodically examine production icemakers at the factory, to assure continued compliance.

To retain the safety and performance built into this icemaker, it is important that installation and maintenance be conducted in the manner outlined in this manual.

SECTION I
GENERAL INFORMATION & INSTALLATION

I. INTRODUCTION

These instructions provide the specifications and the step-by-step procedures for the installation, start up and operation for the Scotsman Model CM1200 Modular Cuber.

The Model CM1200 Modular Cubers are quality designed, engineered and constructed, and thoroughly tested icemaking systems, providing the utmost in flexibility to fit the needs of a particular user. Separate sections detail more specifically: General Information & Installation; Start Up Operation; Principles of Operation; Adjustment and Removal and Replacement Procedures; Maintenance and Cleaning Instructions; Service Diagnosis; Wiring Diagrams and The Illustrated Assemblies and Parts List.

DESCRIPTION

An attractive horizontal cabinet of leathergrain embossed steel with high gloss, almond baked enamel finish on all panels, with a contrasting charcoal brown upper front panel. Also, an optional stainless steel panel kit is available. These removable panels allow easy access to electrical and mechanical components for cleaning and maintenance.

SEALED REFRIGERATION SYSTEM

To provide quiet efficient operation of icemaker, the compressor motor is internally spring-mounted. The compressor motor is covered by a five year parts warranty.

STORAGE BIN

Since the Model CM1200, like other modular cubers in the SCOTSMAN line, does not have an attached ice storage bin, it is necessary to use an auxiliary bin. The Model BH750 Bin, a horizontal ice storage bin, has been designed to be used with the CM1200 Modular Cuber.

II. UNPACKING AND INSPECTION

1. Call your authorized SCOTSMAN Distributor or Dealer, for proper installation. He's listed under ICE MAKING EQUIPMENT AND MACHINERY in the Yellow Pages of the telephone book.
2. Visually inspect the exterior of the shipping container and skid and any severe damage noted should be reported to the delivering carrier; and a concealed damage claim filed subject to internal inspection, with the carrier representative present.
3. Remove screws and shipping tape, the left Side Panel, Top and three Front Panels, from the cabinet, and inspect for any concealed damage. Notify carrier of any concealed damage claims, as stated in step 2, above.
4. Remove all internal support packing, tape and wire, if any, in machinery compartment. Remove wood blocks, foam packing, from below Evaporator Plates; then, remove screws and Front Brace Supports from both Front Braces. Remove bolts and hold down straps from the skid and base of Cuber. RETAIN BOLTS AND SUPPORTS. See Figure 1-1.
5. Check that refrigerant lines do not rub or touch lines or other surfaces, and that fan blades, if any, move freely.
6. Check that compressor is snug on all mounting pads.
7. Use clean damp cloth or disposable paper wiper to wipe clean the exterior surfaces of the cabinet.
8. See NAMEPLATE on the top of the rear panel and check that the location source voltage corresponds with the voltage specified on the nameplate. Make certain that a Chassis-to-earth GROUND is installed.

CAUTION

Improper voltage supplied to the icemaker will void your parts replacement program. Improper grounding can cause electrical shocks and component failures.

9. Remove the Manufacturer's Registration Card from the literature pack and fill in all spaces including: Model Number and Serial Number taken from the Model-Serial Nameplate. Forward the completed, self-addressed registration card to the SCOTSMAN factory.

III. LOCATION & LEVELING

WARNING

This Modular Cuber is NOT designed for outdoor installations, or where air temperatures are below 50-degrees F., or above 100-degrees F., and water temperature is below 40-degrees F., or above 100-degrees F. Extended periods of operation at temperatures exceeding these limitations will constitute misuse, under the terms of the SCOTSMAN Manufacturer's limited warranty coverage.

1. Position the Model BH750 Bin in the selected location, which should have a minimum room temperature of 50-degrees F., and maximum room temperature of 100-degrees F. Level the bin, adjusting the leg levelers in both the front-to-rear and side-to-side directions. Select a well ventilated location for the air-cooled condenser.
2. Inspect the bin top mounting gasket, which should be flat, with no wrinkles, to provide a good water seal when the CM1200 Cuber is installed on top of the bin.
3. Install the CM1200 Modular Cuber on top of the BH750 Bin, using care to be sure a good seal is made between the two cabinets. Align the holes in the bottom rear of the CM1200 cabinet to mate with the two mounting straps on the top rear of the BH750 Bin.
4. Use two bolts retained from the removal of the hold down straps during unpacking, to secure the mounting straps to the CM1200 in the two holes used for the holddown straps. When alignment and leveling are completed, tighten the bolts to secure the mounting straps.
5. When stacking System Two contour cubers a length of gasket material (P/N 19-0503-04) is required between icemakers at the cabinet perimeter and also between freezing compartment and refrigeration compartment. CM1200 ice makers require 14'-5" of gasket material.

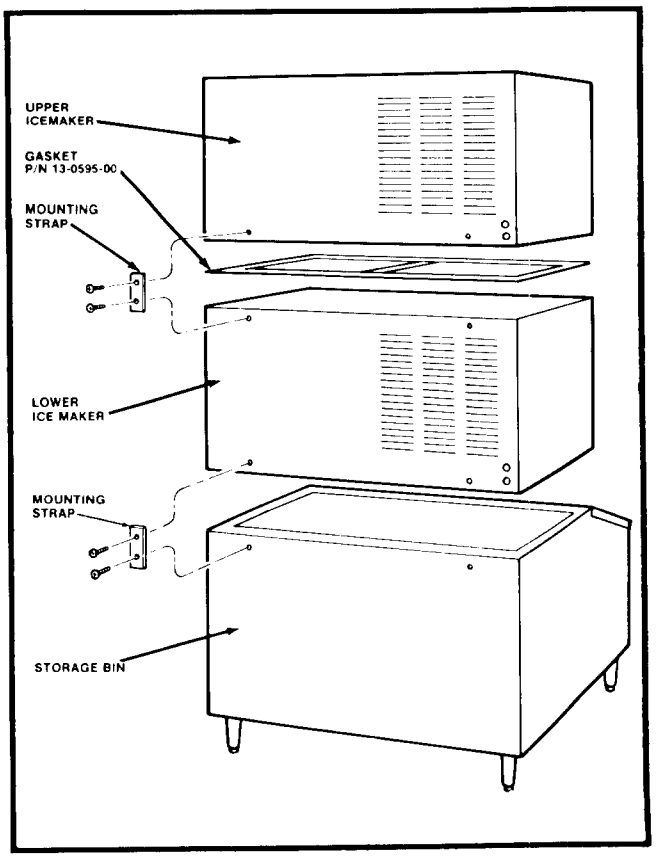

Figure 1-1. Stacking Contour Cuber Equipment.

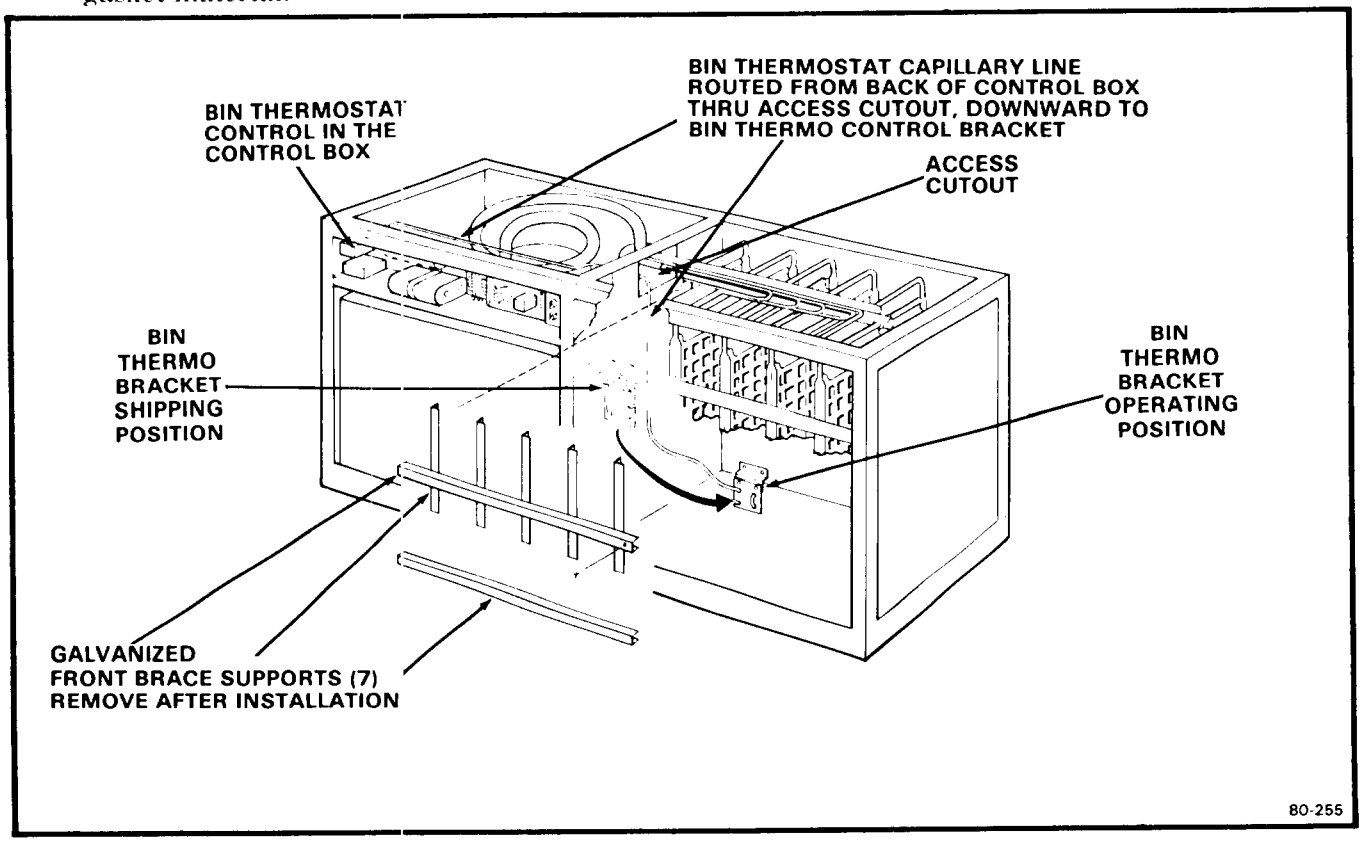

Figure 1-2. Installing the Bin Thermo Bracket and Bin Thermostat Capillary Line.

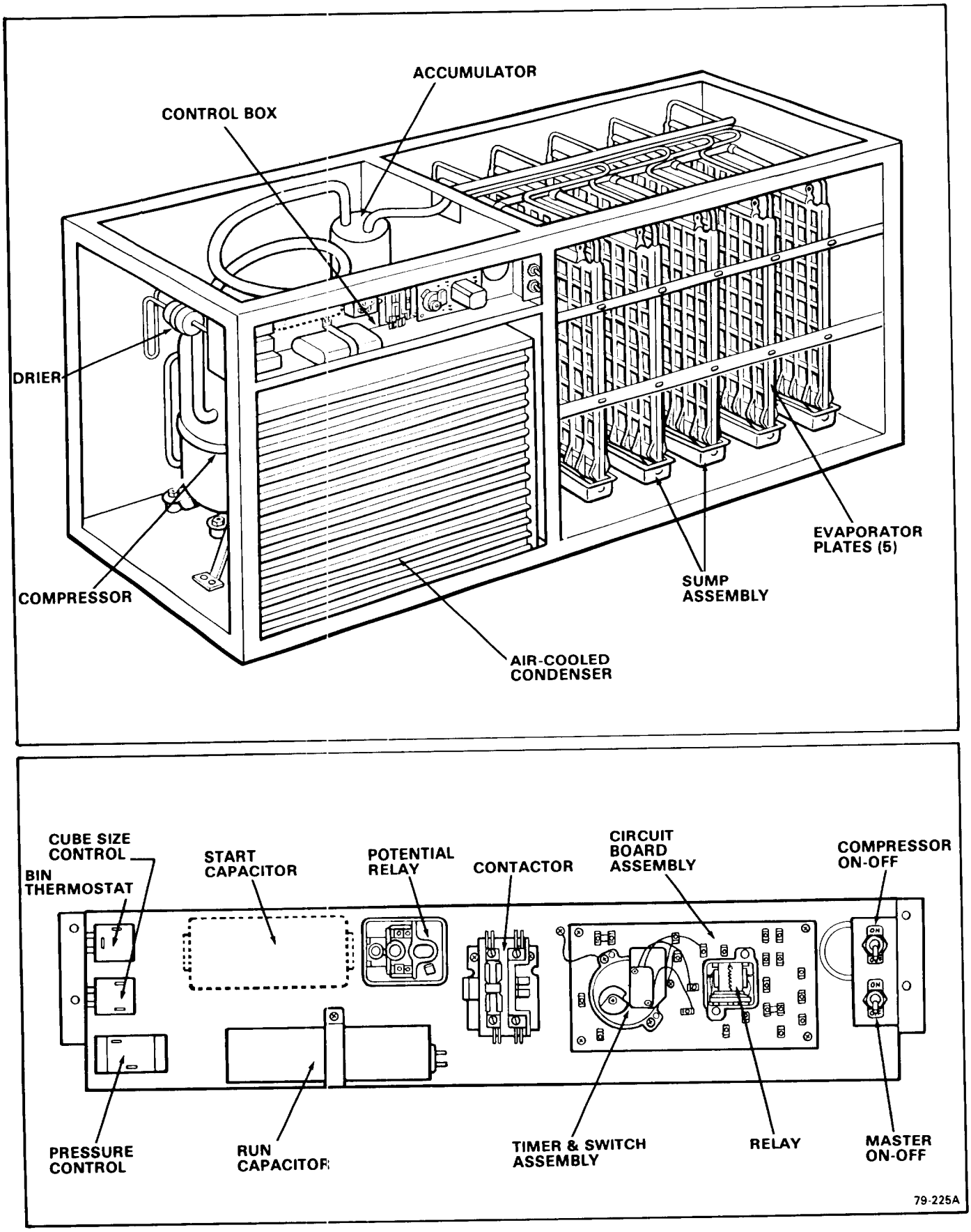

Figure 1-3. CM1200 — Locational.

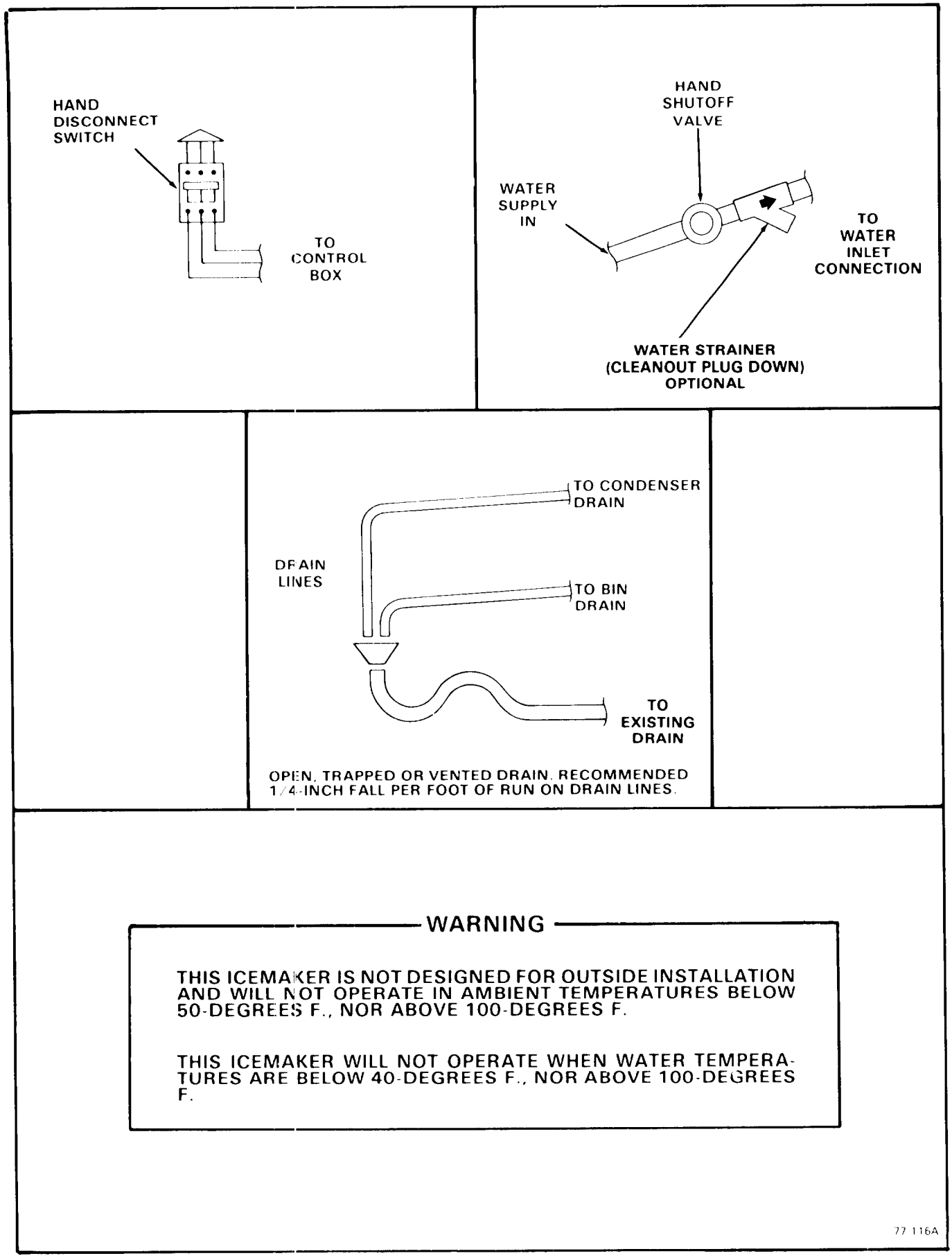

Figure 1-4. Installation Practice.

WARNING

Upper ice maker must be attached to lower ice maker and mounting straps and threaded holes are provided to attach ice makers to bins and upper stacked icemaker to lower icemaker.

5. Remove two tie wraps securing the bin thermo bracket in shipping position. Carefully uncoil the capillary tube and reposition the bin thermo bracket on the back liner wall, attach using existing screws and holes. When bin thermo bracket is in operating position it must be below icemaker base and extend into storage bin. Routing of capillary tube must not touch refrigerant tubing. Installation on other brand storage bins may require experimentation of bin thermo bracket location.

IV. ELECTRICAL CONNECTIONS

WARNING

DO NOT operate this Modular Cuber when the water supply is shut OFF, or is BELOW the recommended 20 PSIG water pressure. If this does occur, move the Master ON-OFF toggle switch on the Control Box to OFF immediately.

SEE NAMEPLATE for current requirements to determine wire size to be used for electrical hookup. The Cuber requires a solid Chassis-to-earth ground wire. See Wiring Diagram.

Be certain the Cuber is connected to its own electrical circuit and individually fused. The maximum allowable voltage variation should not exceed ten percent of the nameplate rating, even under starting conditions. Low voltages can cause erratic operation and may be responsible for serious damage to the motor windings.

All external wiring should conform to the national, state, and local electrical code requirements. Usually an electrical permit and services of a licensed electrician will be required.

V. WATER SUPPLY AND DRAIN CONNECTIONS

A. AIR-COOLED MODELS: The recommended water supply line is a 1/2-inch O.D. copper tubing. Connect to cold water supply line with standard plumbing fittings, with a shutoff valve installed in an accessible place between the water supply and the Cuber. Install the optional strainer with clean out plug down, between the shutoff valve and the Cuber. In some cases a plumbing permit and services of a licensed plumber will be required.

B. WATER-COOLED MODELS: On water-cooled models, a separate cold water supply inlet is required, to be connected to a separate 1/2-inch O.D. male flare fitting at the rear of the cabinet. Additional drain lines are required to drain the water-cooled condenser.

C. DRAIN CONNECTIONS: All drains are gravity type and must have a minimum of 1/4-inch fall per foot on horizontal runs. The drains to be installed to conform with the local plumbing code. Install separate drain line for discharge water from the water-cooled condenser. Install a vertical open vent on drain line to ensure good venting. The drain receptacle should be an open, trapped or vented construction. See Figure 1-4.

Recommended bin drain is 5/8-inch O.D. copper tubing and should be vented and run separately.

VI. INSTALLATION — OPTIONALS

Install optionals ordered with the CM1200:

1. SPKCM1200 — Stainless Steel Cabinet Panels.
2. BH750 Bin — 734 lbs. storage capacity.
3. KWICMB—Sump Siphon Kit

DESCRIPTION
This feature rinses impurities from the sump each time the machine shuts off. Water pump stops circulating water and distribution water returns to sump. Sump water level rises above overflow tube creating a siphon. Siphon rinses impurities from sump, drawing water level down to bottom of rubber cap and siphon effect is terminated.

VII. FINAL CHECK LIST

1. Is the Cabinet/Bin level? (IMPORTANT)
2. Is the Cuber in a room where ambient temperatures are a minimum of 50-degrees F. all year around?
3. Is there at least a six-inch clearance behind and around the cabinet for all connections and for proper air circulation?
4. All shipping tape removed from panels, doors, styrofoam blocks, etc.
5. Have mounting straps been installed between storage bin and icemaker? If stacking icemakers, have mounting straps and gasket been installed between upper and lower icemakers?

6. Have all electrical and piping connections been made?
7. Has the electrical power supply wiring been properly connected, and the voltage tested and checked against the nameplate rating? Has proper Chassis-to-earth ground been installed?
8. Is the water supply line shutoff valve installed and opened and has the inlet water supply pressure been checked to ensure a minimum of 20 PSIG? And the valve closed?
9. Check the wood blocks, foam packing and Front Brace Supports have been removed from the Evaporator Plates.
10. Have the Compressor hold down bolts been checked to be sure the compressor is snug on the mounting pads?
11. Check all refrigerant lines and conduit lines to guard against vibration and possible failure.
12. Check the Bin Thermostat Control bulb and Bracket. Have each been properly installed? See that capillary tube is not touching refrigerant tubing.
13. Has the owner/user been given the User Manual and instructed on how to operate the icemaker and the importance of periodic maintenance?
14. Has the owner/user been given the name and telephone number of the Authorized SCOTSMAN Distributor or Service Agency serving him?
15. Has the Manufacturer's Registration Card been properly filled out? Check for correct Model and Serial Numbers from nameplate, then mail the completed card to the SCOTSMAN factory.

SECTION II
OPERATING INSTRUCTIONS

I. START UP

1. Remove screws and pull the bottom of both the Left and Right Bottom Front Panels out slightly, and slide the top of each panel down, to clear the top from behind the upper Front Panel.
2. Remove screws and remove both the upper Front Panel and the Left Side Panel.
3. Check that the two toggle switches, the MASTER ON-OFF toggle switch and the COMPRESSOR ON-OFF toggle switch are in the OFF position, on the Control Box.
4. OPEN the water supply line shutoff valve.

NOTE

Observe that the inlet water can be seen flowing into the Sump Assembly. Allow water to fill the Sump, about three minutes, until the water is at a level of about one third of the diameter of the uppermost tube, in the left end of the Sump, when the Float should cause the water flow to STOP. See Figure 2-1.

5. Remove two screws at the top of the Control Box and OPEN the hinged Cover downward.
6. Rotate the shaft of the Timer and Switch Assembly CLOCKWISE to start the Timer.

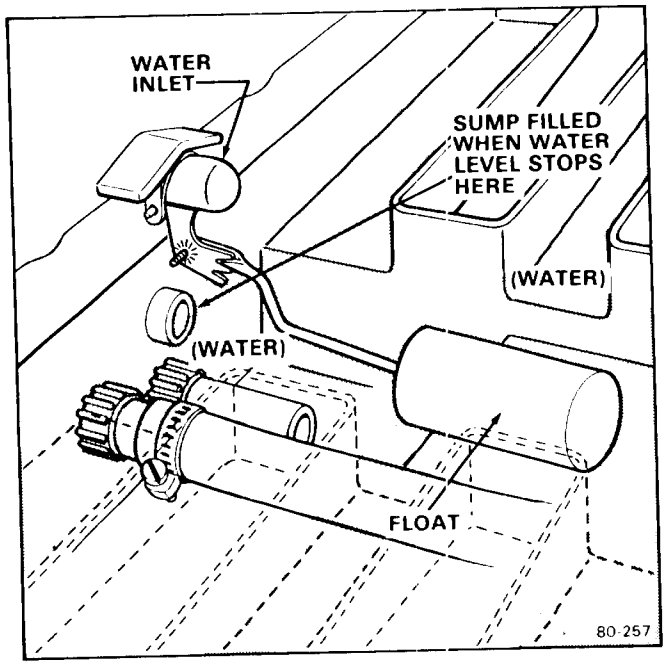

Figure 2-1. Sump Filled - Showing Water Level Line.

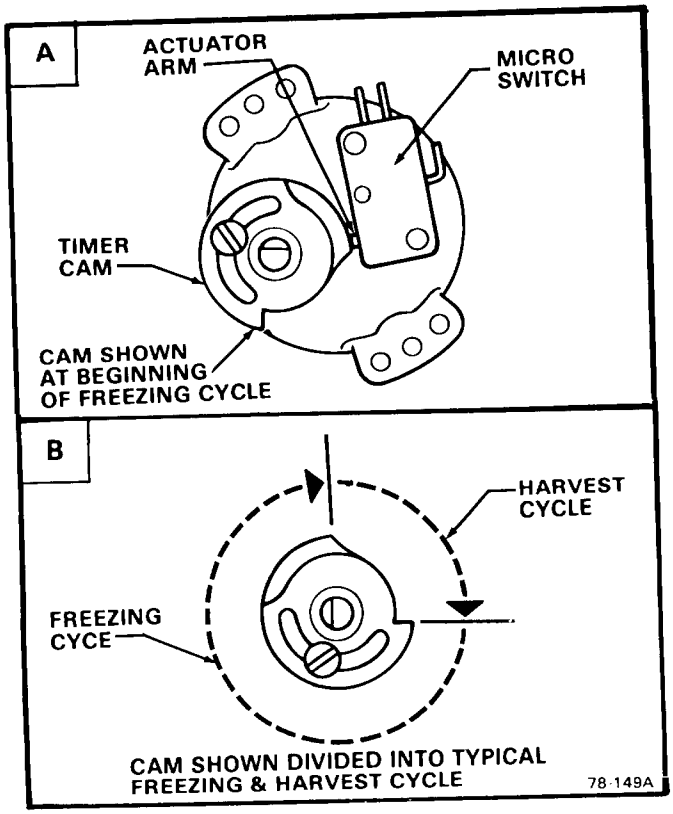

Figure 2-2. Timer Cam Positions.

NOTE

1. *See Figure 2-2 and rotate the shaft of the Timer and Switch Assembly CLOCKWISE, past the drop off and slot of the Harvest Cycle, and continue until the actuator arm of the microswitch rides up out of the slot, stop rotating the shaft with the actuator arm at the beginning of the outer cam. This is the start point of the Freezing Cycle.*
2. *When the Float has risen from water filling the Sump Assembly, the water has forced all trapped air out of the Water Pump and pump tube, thus preventing the pumping of water filled with air bubbles. DO NOT start Water Pump when the Sump Assembly is FILLING with water, WAIT until the Sump is FILLED.*

7. Move the MASTER ON-OFF toggle switch and the COMPRESSOR ON-OFF toggle switch to the ON position.
8. Check operation of the Freezing Cycle:
   a. Compressor is operating.
   b. Water Pump is operating, as seen by water moving through the two Tygon tubes between Evaporator Plates, up to the Water Manifold at the top of Evaporator Plates, where water is uniformly

dispensed and cascades down both sides of each Evaporator Plate and drains back into the Sump Assembly for recirculation.

c. Icemaking process begins: feeling metal parts of Evaporator Plates reveals cold temperature, very shortly ice begins to form. Tubing will become frosted at the top of the Evaporator Plates.

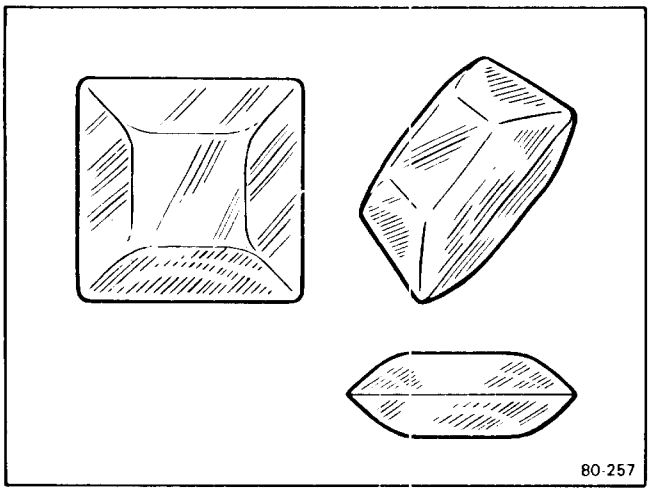

Figure 2-3. Ice Cube Size & Shape.

NOTE

Freezing time will range between 14 and 15 minutes in a 70-degree F. ambient temperature. Longer time for temperatures above 70-degrees F., and shorter time required when temperatures are below 70-degrees F. Average complete cycle range is about 17 to 21 minutes.

WARNING

DO NOT operate this icemaker when the water supply is shut OFF, or is BELOW the recommended 20 PSIG water pressure. Move the MASTER ON-OFF toggle switch to OFF immediately.

9. Observe first ice cube harvest:

   A. Check size of ice cubes: when too small, after a second harvest, refer to procedure IV-I for adjustment to the Cube Size Control to increase size of ice cube.

NOTE

See Figure 2-3, for representative size and shape of ice cubes made by these SCOTSMAN Evaporator Plates. Maximum capacities of ice cubes harvested, from this five-plate Evaporator Assembly, are achieved when a total BATCH OF ICE weighs 12 pounds, when harvested.

   B. Check texture of ice cubes: when partially cloudy throughout, suggests icemaker is operating short of water; or, possibly an extreme problem water condition exists, wherein filtering or purifying equipment is recommended. Contact SCOTSMAN—Queen Products Division, Service Department, Albert Lea, Minnesota 56007 for further details. See SERVICE DIAGNOSIS chart, for Shortage of Water symptoms and corrections.

10. With the icemaker in the Harvest Cycle, hold ice against the Bin Thermostat Control bulb to test shutoff, which should cause the icemaker to shut OFF at the END OF THE HARVEST CYCLE.

NOTE

Within minutes after the ice is removed from the sensing bulb, the bulb will warm up and cause the icemaker to restart. This control is factory set and should not be reset until testing is performed. Normal setting is about 35-degrees F. CUT-OUT and 39-degrees F. CUT-IN.

11. Install refrigerant service gauges on the high and low side Schrader valve fittings and check the Compressor head pressure and back pressure. RETAIN Schrader valve caps.

NOTE

1. *Air-Cooled Models:*
   a. *Head pressure after 12 minutes of Freezing Cycle at 70-degrees F. ambient temperature will be about 95 to 100 PSIG.*
   b. *Head pressure after 15 minutes of Freezing Cycle at 90-degrees F. ambient temperature will be about 135 PSIG.*
   c. *The back pressure gradually pulls down to about 10 PSIG, just before the Harvest Cycle. During the Harvest Cycle the back pressure increases to about 40 PSIG.*
   d. *Higher ambient temperatures or a dirty Condenser will cause increased pressures.*
2. *Water-Cooled Models: The Water Regulator Valve is factory set at 135 PSIG. Check the gauge indication and adjust, if necessary. Back pressure will operate the same as air-cooled models.*

12. Remove refrigerant service gauges, and BE SURE to REPLACE the Schrader valve caps on Schrader valves, to prevent leaks.
13. Replace Control Box cover and all service panels.
14. Thoroughly explain to the owner/user the significant specifications of the icemaker, the start up and operation, going through the procedures in the operating instructions. Answer all questions about the icemaker by the owner; and inform the owner of the name and telephone number of the authorized SCOTSMAN Distributor, or service agency serving him.

II. OPERATION — How It Works

A. FREEZING CYCLE

Water from the sump in the reservoir of the Sump Assembly is pumped to a Water Distributor System, at the top of the Evaporator Plates. From the Water Distributors at the top of each Evaporator Plate, the water cascades by gravity over all cells of the Plates and to the Sump Assembly below, for recirculation. See Figure 2-4. At the beginning of the Freezing Cycle, the electrical circuit is completed to the Compressor and the Water Pump. The Water Pump operates continously, through both the Freezing Cycle and the Harvest Cycle.

In Water-Cooled models, water also flows through the Condenser and out the drain. While in the Condenser, water removes heat from the refrigerant and allows the refrigerant to condense from a gas to a liquid.

In the Compressor, gaseous refrigerant is compressed and discharged into the Condenser, as a high pressure, high temperature gas. The refrigerant is cooled and condensed, by either air or water, and condenses into a high pressure, medium temperature liquid. This liquid refrigerant, then passes through a small capillary tube, where the temperature and pressure of the liquid refrigerant are lowered and it next enters the Evaporator Plates. The refrigerant is warmed by the water cascading over the Evaporator Plates and begins to boil off and become a gas. The refrigerant next travels through the Accumulator, where any remaining liquid refrigerant boils off and returns to the Compressor as a low pressure, low temperature gas, and the cycle starts again.

During the Freezing Cycle, the Hot Gas Solenoid Valve is CLOSED.

When the ice cubes are partially formed, the Cube Size Control bulb located on the suction line out of the Evaporator Plates Assembly, will sense the temperature at which it is preset to CLOSE. This will complete the electrical circuit to the Timer. The Timer then controls the remainder of the Freezing Cycle.

The Timer will keep the Icemaker operating in the Freezing Cycle for a selected length of time. This will give the ice cubes time to fully form. After that selected length of time, the Timer will switch the Icemaker into the Harvest cycle, through the contacts of the Timer Assembly microswitch.

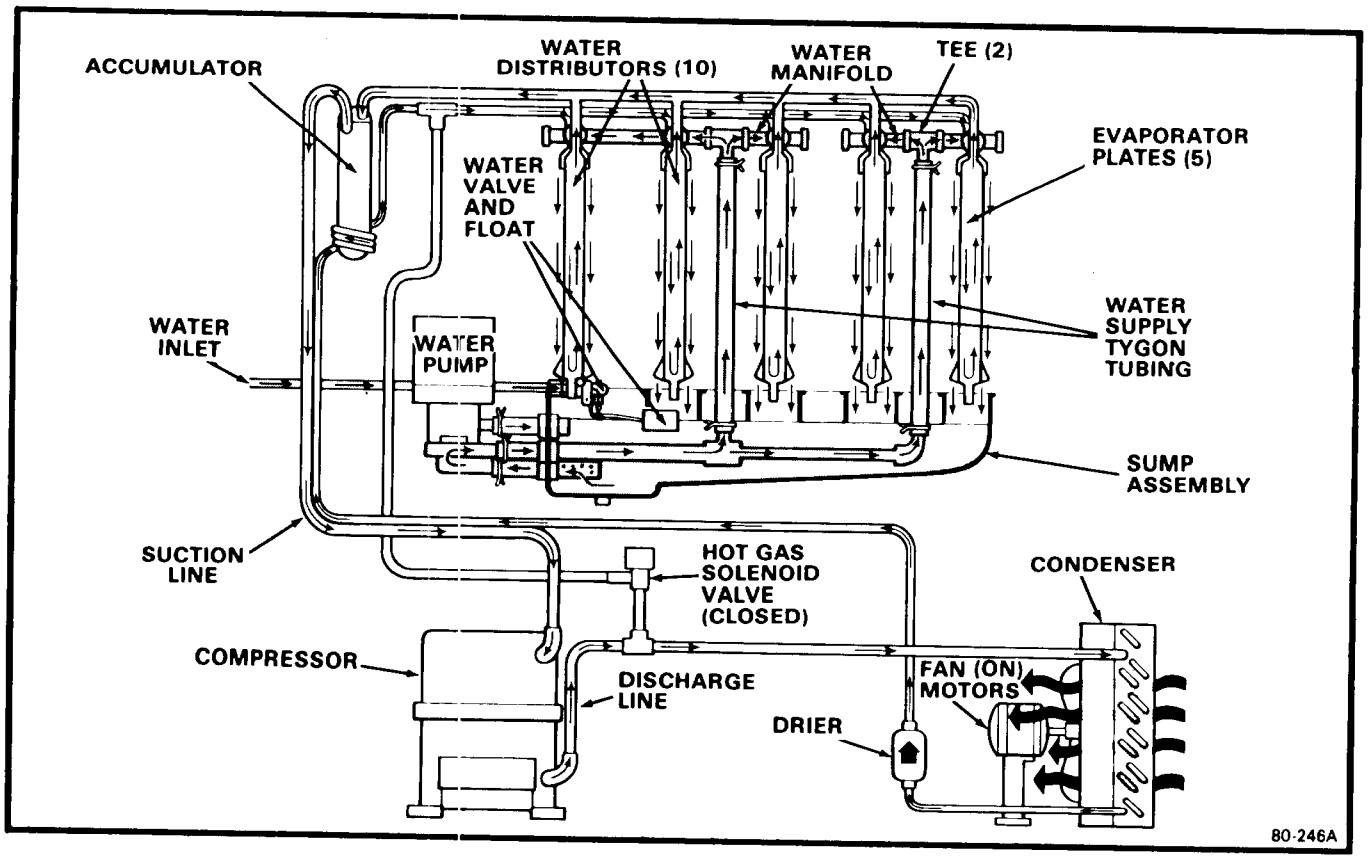

Figure 2-4. Freezing Cycle.

B. HARVEST CYCLE

When the Timer switches the Icemaker into the Harvest Cycle, high pressure, high temperature gas refrigerant being discharged from the Compressor is diverted from the Condenser through the Hot Gas Solenoid Valve into the Evaporator Plates Assembly. During this cycle, the gaseous high pressure, high temperature refrigerant circulates from the Compressor through the Evaporator Plates assembly and back again, bypassing the Condenser and the capillary tube. In the electrical circuit, both the Compressor and the Water Pump are operating and the Hot Gas Solenoid Valve is energized and OPEN. See Figure 2-5.

The finished ice cubes are released from the sides of the Evaporator Plates, by the warming effect of the hot gas flowing through the Evaporator Plate tubes and the water cascading over the ice cubes loosening from the warmed cells of the Plates. The released ice cubes drop into the ice storage bin below.

At the end of the Harvest Cycle, the Timer cam will push the actuator arm of the microswitch IN. If the Bin Thermostat is still CLOSED, a whole new cycle will begin. If the Bin Thermostat is OPEN, the icemaker will shut OFF, at this time.

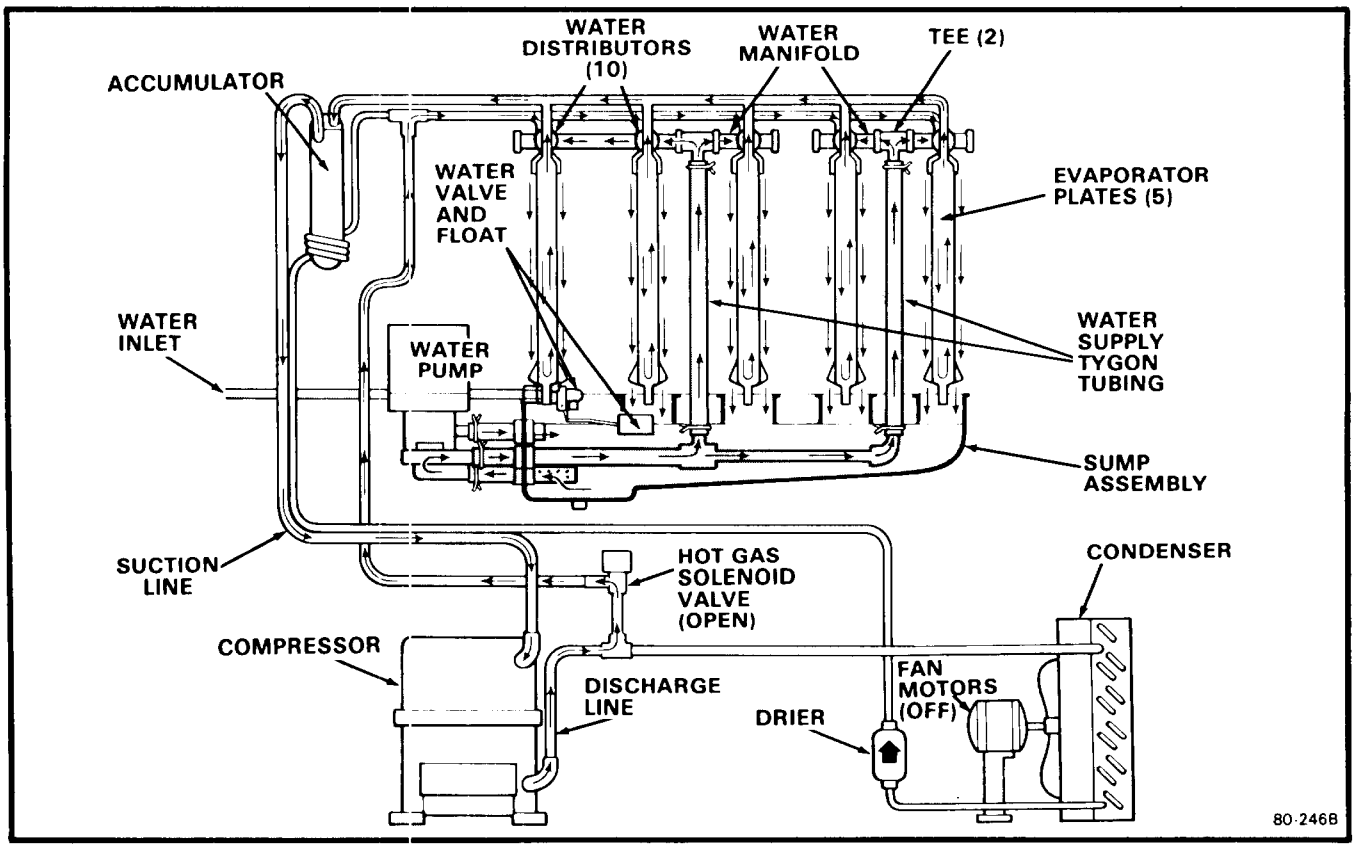

Figure 2-5. Harvest Cycle.

SECTION III
PRINCIPLES OF OPERATION—How It Works

I. FREEZING CYCLE

Water from the sump in the reservoir of the Sump Assembly is pumped to a Water Distributor System, at the top of the Evaporator Plates. From the Water Distributors, atop each Evaporator Plate, the water cascades by gravity over all cells of the Plates and to the Sump Assembly below, for recirculation. See Figure 3-1. At the beginning of the Freezing Cycle, the electrical circuit is completed to the Compressor and the Water Pump. The Water Pump operates continuously, through both the Freezing Cycle and the Harvest Cycle.

In Water-Cooled models, water also flows through the Condenser and out the drain. While in the Condenser, water removes heat from the refrigerant and allows the refrigerant to condense from a gas to a liquid.

In the Compressor, gaseous refrigerant is compressed and discharged into the Condenser, as a high pressure, high temperature gas. The refrigerant is cooled and condensed, by either air or water, and condenses into a high pressure, medium temperature liquid. This liquid refrigerant, then passes through a small capillary tube, where the temperature and pressure of the liquid refrigerant are lowered and it next enters the Evaporator Plates. The refrigerant is warmed by the water cascading over the Evaporator Plates and begins to boil off and become a gas. The refrigerant next travels through the Accumulator, where any remaining liquid refrigerant boils off and returns to the Compressor as a low pressure, low temperature gas, and the cycle starts again.

During the Freezing Cycle, the Hot Gas Solenoid Valve is CLOSED.

When the ice cubes are partially formed, the Cube Size Control bulb located on the suction line out of the Evaporator Plates Assembly, will sense the temperature at which it is preset to CLOSE. This will complete the electrical circuit to the Timer. The Timer then controls the remainder of the Freezing Cycle.

The Timer will keep the Icemaker operating in the Freezing Cycle for a selected length of time. This will give the ice cubes time to fully form. After that selected length of time, the Timer will switch the Icemaker into the Harvest Cycle, through the contacts of the Timer Assembly microswitch.

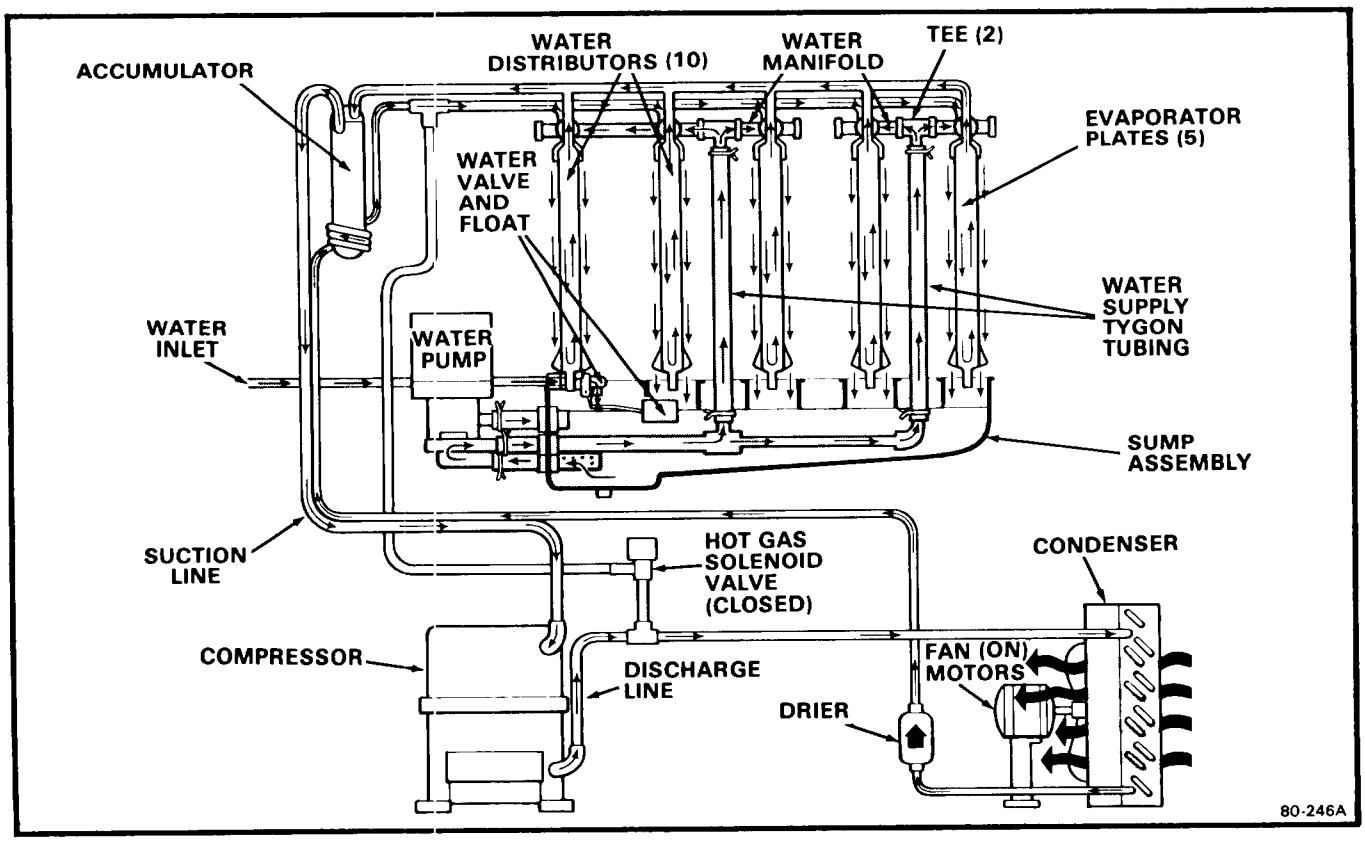

Figure 3-1. Freezing Cycle.

II. HARVEST CYCLE

When the Timer switches the Icemaker into the Harvest Cycle, high pressure, high temperature gas refrigerant being discharged from the Compressor is diverted from the Condenser through the Hot Gas Solenoid Valve into the Evaporator Plates Assembly. During this cycle, the gaseous high pressure, high temperature refrigerant circulates from the Compressor through the Evaporator Plates Assembly and back again, bypassing the Condenser and the capillary tube. In the electrical circuit, both the Compressor and the Water Pump are operating and the Hot Gas Solenoid Valve is energized and OPEN. See Figure 3-2.

The finished ice cubes are released from the sides of the Evaporator Plates, by the warming effect of the hot gas flowing through the Evaporator Plate tubes and the water cascading over the ice cubes loosening from the warmed cells of the Plates. The released ice cubes drop into the ice storage bin below.

At the end of the Harvest Cycle, the Timer cam will push the actuator arm of the microswitch IN. If the Bin Thermostat is still CLOSED, a whole new cycle will begin. If the Bin Thermostat is OPEN, the icemaker will shut OFF, at this time.

III. COMPONENT DESCRIPTION

A. BIN THERMOSTAT CONTROL

The Bin Thermostat Control is located in the left end of the Control Box. The sensing capillary tube of the control is routed from the rear of the Control Box through an access cutout in the inner left wall in the Evaporator section, downward to the Bin Thermo Control Bracket hanging in the ice storage Bin. The Bin Thermostat Control functions to automatically shut OFF the icemaker, when the ice storage Bin is filled and ice contacts the capillary tube. It also signals the RESTART of the icemaker, when the capillary tube starts to warm up, after ice has been removed from the Bin.

NOTE

Bin thermostat control adjustment should ONLY be performed on icemakers installed in extreme warm or cold locations and adjust only in increments of one eighth turn of screw at a time.

B. COMPRESSOR START RELAY

The Compressor Start Relay functions to carry the Compressor line current. The relay is wired so any control in the pilot circuit, such as the Bin Thermostat, Low Pressure - and High Pressure Controls, etc., will cause the relay holding coil to be de-energized,

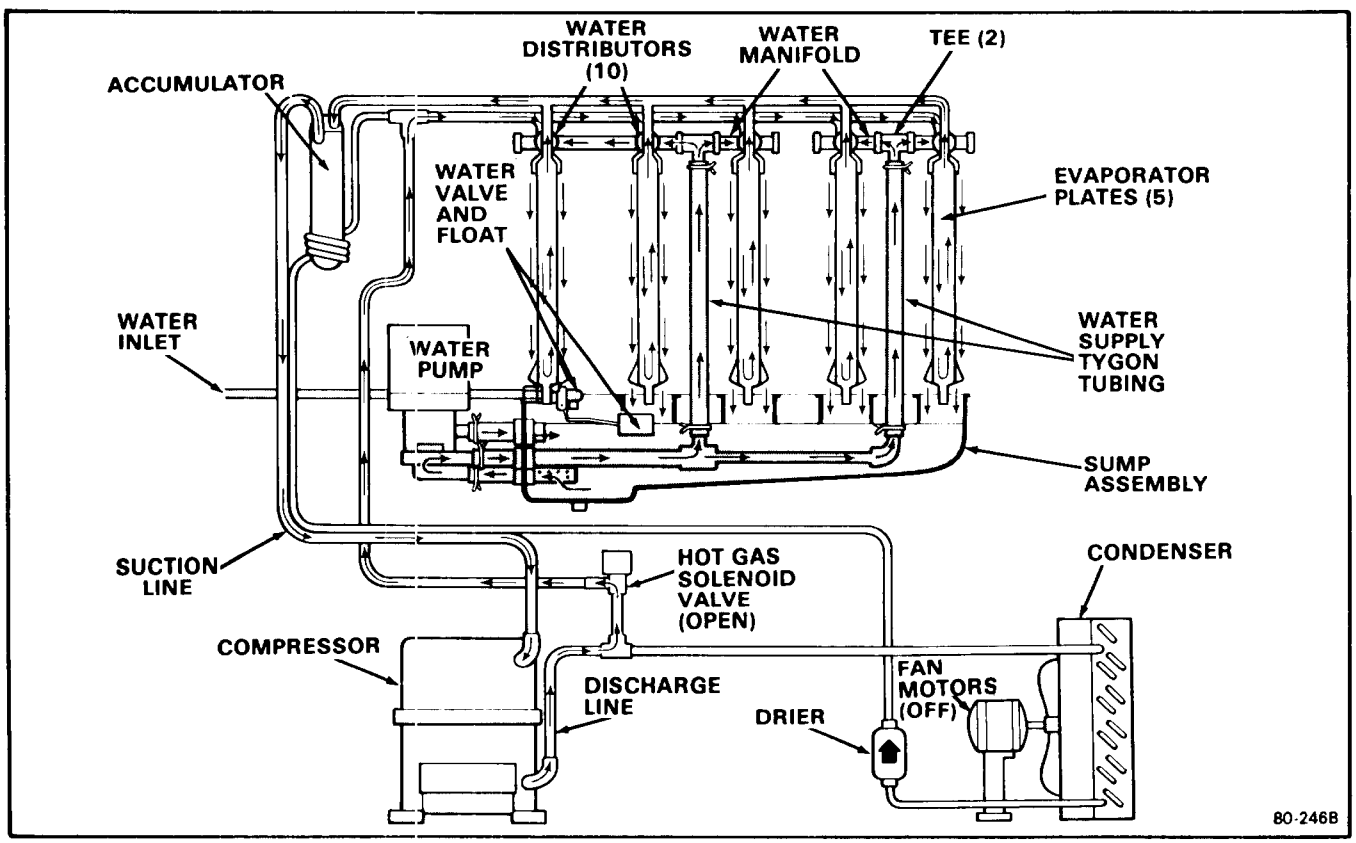

Figure 3-2. Harvest Cycle.

when the control contact OPENS, thereby breaking the circuit to the Compressor through the relay points.

C. CUBE SIZE CONTROL

The temperature sensing Cube Size Control affects the length of the Freezing Cycle prior to initiating the Finishing Timer. The Cube Size Control closes its contacts when the Evaporator reaches a preset temperature, starting the Finishing Timer. A variation in either ambient air or incoming water temperature will affect the efficiency of the refrigeration system. This will vary the length of time it takes the Evaporator to reach the temperature at which the Cube Size Control is preset to CLOSE; which, in turn, will affect the overall cycle time.

NOTE

Be sure to refer to procedure IV-I, Adjustment of the Cube Size Control, BEFORE attempting to adjust the control.

D. FINISH RELAY

The multi-function, three pole, double-throw, plug-in relay is installed directly into a receptacle on the printed circuit board in the Control Box. The relay functions, in part, to by-pass the Bin Thermostat Control to prevent the Icemaker from shutting OFF, when a filled-bin condition occurs, during the Freezing Cycle. The by-pass action serves to ensure full-sized ice cubes with each Harvest Cycle; and, to prevent short cycling on the Bin Thermostat Control.

E. FINISHING TIMER - Timer & Switch Assembly

The function of the Finishing Timer begins when activated by the Cube Size Control. The outer surface, or large diameter lobe of the Timer cam, determines the Time Cycle for finish freezing of the ice cubes, while the inner surface, or small diameter lobe, determines the Time Cycle for the Harvest sequence. All electrical circuitry is connected through the printed circuit board and the Finishing Timer and shunted by the single-pole, double-throw microswitch to either the Freezing Cycle or the Harvest Cycle. The microswitch is actuated by a Cam Assembly directly connected to the Timer Motor. The Timer Cam can be adjusted to vary the defrost time, as required.

F. HIGH PRESSURE CONTROL - Water-Cooled Model

The High Pressure Control, a safety control, is factory set at 250 PSIG. The control functions as a precautionary device, to shut OFF electrical power to the Icemaker, should a loss of water occur to the water-cooled Condenser. In addition to being a manual reset Control, there is an adjusting screw for raising or lowering the CUT-IN pressure.

G. HOT GAS SOLENOID VALVE

The Hot Gas Solenoid Valve functions only during the Harvest Cycle, to divert the hot discharge gas from the Compressor, by-passing the Condenser and capillary tube, for direct flow to the Evaporator Plates Assembly to release ice cubes from the ice cube molds. The Hot Gas Solenoid Valve is comprised of two parts, the Body & Plunger and the Coil & Frame assemblies. Installed in the discharge line of the Compressor, the energized solenoid coil lifts the valve stem within the valve body, to cause the hot discharge gas to be diverted when the Finishing Timer has advanced to the start of the Harvest Cycle.

H. WATER INLET FLOAT VALVE

The Water Inlet Float Valve functions to maintain the proper operating level of water in the Sump Assembly reservoir. As water pumped from the sump cascades over the Evaporator Plates and partially freezes to the Evaporator Plates, the Water Inlet OPENS to allow replacement water to enter the Sump Assembly reservoir. When the icemaker shuts OFF, the water level rises causing the Float to shut OFF the inlet makeup water.

I. WATER DISTRIBUTION SYSTEM

The Water Distribution System functions to evenly supply water to all cells of the Evaporator Plates. The Water Pump pumps water from the Sump up two vertical Tygon tubes to two Tees, from there water is channeled through Water Manifolds to ten Water Distributors, two atop each Evaporator Plate, and from six holes within each Distributor, water is uniformly pressed against sheeting surfaces and to the cells of each side of the Evaporator Plates. Gravity flow returns the unfrozen excess portion of water to the Sump reservoir for recirculation.

J. WATER REGULATOR VALVE - Water-Cooled Model

The Water Regulator Valve functions to maintain a constant Compressor head pressure, by regulating the amount of inlet water flow through the Condenser, on water-cooled models. The valve operates through the refrigerant system high side pressure. Rotating the adjusting screw, located on top of the valve, can INCREASE or DECREASE the water flow through the water-cooled Condenser, which in turn, will DECREASE or INCREASE the Compressor operating head pressure.

NOTE

When installing a replacement Water Regulator Valve, be sure the replacement valve is installed with the arrow positioned in the direction of the water flow.

NOTE

Always CHECK NAMEPLATE on individual Icemaker for specific refrigerant charge, BEFORE charging the refrigeration system. CHECK NAMEPLATE for each Icemaker, especially when there are different Compressors.

SECTION IV
ADJUSTMENT, REMOVAL AND REPLACEMENT PROCEDURES

The procedures provided in this section are arranged in alphabetical order, to make specific Adjustment and Removal and Replacement information easy to locate.

Read the instructions thoroughly before performing any Adjustment or Removal and Replacement procedures.

I. ADJUSTMENT OF THE CUBE SIZE CONTROL

CAUTION

BEFORE performing actual adjustment to the Cube Size Control, check other possible causes for cube size problems, refer to Section VI, SERVICE DIAGNOSIS for problem review and analysis. DO NOT perform adjustment when a new Cube Size Control is installed, until the control bulb has been properly installed in the tube well, on the refrigerant tube of the Platen Assembly and the Icemaker has progressed through several complete freezing and harvest cycles, to observe size and quality of ice cubes and whether or not a cube size problem exists.

As a reverse acting temperature control, adjustment on the Cube Size Control is performed to cause either larger sized ice cubes or smaller sized ice cubes to be produced.

A. To Produce LARGER Sized Ice Cubes:

1. Locate the Cube Size Control, in the left end of the Control Box.
2. Rotate the adjusting screw one-eighth of a turn CLOCKWISE toward COLDER.
3. Observe size of ice cubes in next two ice cube harvests and repeat step 2 above, in one-eighth turn increments, until desired ice cube size is achieved.

B. To Produce SMALLER Sized Ice Cubes:

1. Locate the Cube Size Control, in the left end of the Control Box.
2. Rotate the adjusting screw one-eighth of a turn COUNTERCLOCKWISE toward WARMER.
3. Observe size of ice cubes in next two ice cube harvests and repeat step 2 above, in one-eighth turn increments, until desired ice cube size is achieved.

II. ADJUSTMENT OF THE TIMER & SWITCH ASSEMBLY

The Timer & Switch Assembly is factory set, so that one complete revolution of the cam on the Timer represents fifteen minutes. Eleven and one-half minutes comprise the freezing cycle event during cam rotation, and the final three and one-half minutes program the defrost and harvest cycle. Rotating the shaft of the Timer Cam, CLOCKWISE, will allow positioning the actuator arm of the microswitch on the cam at the selected start position for either the freezing cycle or harvest cycle, as required, during the START UP procedures and in the CLEANING instructions. Rotating the shaft COUNTER-CLOCKWISE will unscrew the shaft from the threaded stud on the Timer Cam.

To Adjust the Timer Switch Assembly:

A. HARVEST CYCLE: To start, slowly rotate the shaft of the Timer & Switch Assembly, located in the Control Box, CLOCKWISE, until the actuator arm on the microswitch drops off of the outer cam into the cam slot. An audible click can be heard, but in a noisy area, look at the cam and switch to observe the event. See Figure 4-1.

B. FREEZING CYCLE: To start, slowly rotate the shaft of the Timer & Switch Assembly, located in the Control Box, CLOCKWISE, until the actuator arm on the microswitch rides up and out of the cam slot to the start of the surface of the outer cam.

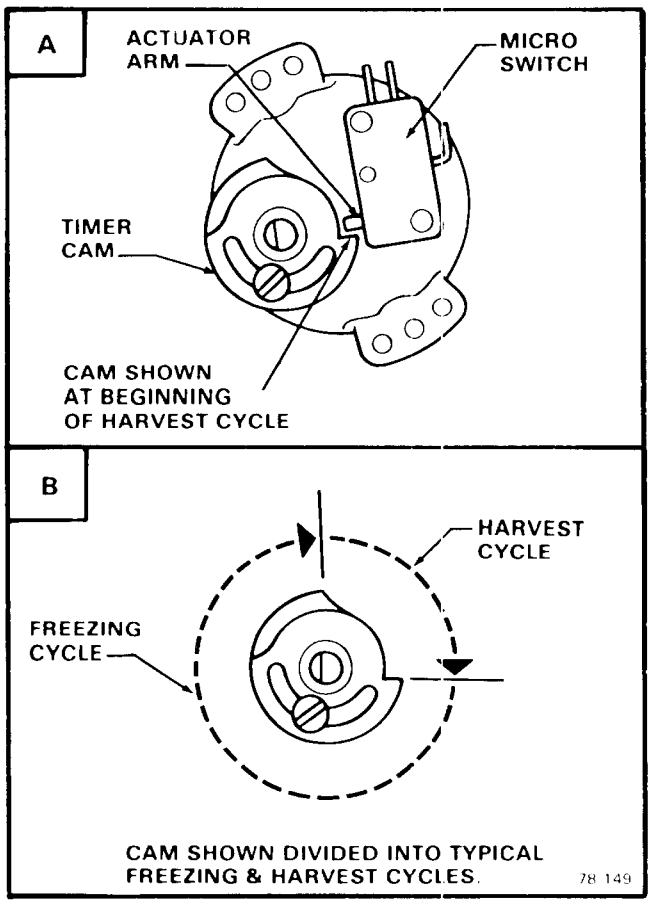

Figure 4-1. Adjustment of the Timer & Switch Assembly.

III. ADJUSTMENT OF THE WATER REGULATOR ASSEMBLY — WATER-COOLED MODELS

The correct Compressor head pressure on Water-Cooled Models is 135 PSIG. Adjusting the Water Regulator Valve increases or decreases the rate of flow of water, through the Water-Cooled Condenser; which increases or decreases the affected temperature/pressure of the Compressor head pressure. INCREASED water flow, results in DECREASED or LOWER head pressure: while, DECREASED water flow, results in INCREASED or HIGHER head pressure.

To adjust the Water Regulator Assembly:

A. To INCREASE the head pressure: Rotate the adjusting screw COUNTER-CLOCKWISE.

B. To DECREASE the head pressure: Rotate the adjusting screw CLOCKWISE.

C. Check change in Compressor head pressure, and repeat step A or B as necessary, to achieve desired operating head pressure.

WARNING

Be sure the electrical power supply and the water supply to the icemaker are OFF BEFORE starting any of the following REMOVAL AND REPLACEMENT procedures, as a precaution to prevent possible personal injury or damage to equipment.

NOTE

For installations having stacked CM1200 Cubers mounted on a Bin, disregard steps to remove the Top Panel. Access to all areas and parts can still be gained through removal of the necessary Front, Side or Rear Panels.

IV. REMOVAL AND REPLACEMENT OF THE BIN THERMOSTAT CONTROL

A. To remove the Bin Thermostat Control:

1. Remove screws and all Front Panels.
2. Remove two screws at the top of the Control Box and OPEN the hinged Cover downward.
3. Unthread the capillary tube and remove from the Bin Thermo Control Bracket at the bottom left side of the Evaporator section.
4. Remove two screws attaching the Bin Thermostat Control to the left end of the Control Box; then, carefully pull the capillary tube out of the Evaporator section through the cutout at the top center part of the left wall of the Evaporator section, and carefully remove the Bin Thermostat Control and capillary tube from the Control Box and refrigeration section of the Cabinet.

B. To replace the Bin Thermostat Control, reverse the removal procedure.

V. REMOVAL AND REPLACEMENT OF THE COMPRESSOR ASSEMBLY

NOTE

Always install a replacement Drier, anytime the sealed refrigeration system is opened. Do not replace the Drier until all other repair or replacement has been completed.

A. To remove the Compressor Assembly:

1. Remove screws and the top and left side panels.
2. Bleed off or blow the refrigerant charge through the Schrader valve.
3. Remove the cover from the terminal box on the Compressor; then, remove three screws and electrical leads from the Compressor.

4. Remove four bolts and washers which secure the Compressor to the Chassis mounting base.
5. Remove the Compressor from the Cabinet.

B. To replace the Compressor Assembly, reverse the removal procedure.

VI. REMOVAL AND REPLACEMENT OF THE CONDENSER — AIR-COOLED MODELS

NOTE

Always install a replacement Drier, anytime the sealed refrigeration system is opened. Do not replace the Drier until all other repair or replacement has been completed.

A. To remove the Condenser:

1. Remove screws and the Left Side Panel and three Front Panels.
2. Bleed off or blow the refrigerant charge through the Schrader valve.
3. Unsolder and disconnect refrigerant lines from the Condenser.
4. Unsolder and remove the Drier from the refrigerant lines connecting to the Condenser.
5. Remove screws, lockwashers and the Condenser from the Chassis base.

B. To replace the Air-Cooled Condenser, reverse the removal procedure.

VII. REMOVAL AND REPLACEMENT OF THE CONDENSER—WATER-COOLED MODELS

NOTE

Always install a replacement Drier, anytime the sealed refrigeration system is opened. Do not replace the Drier until all other repair or replacement has been completed.

A. To remove the Condenser:

1. Remove screws and the three Front Panels.
2. Bleed off or blow the refrigerant charge through the Schrader valve.
3. Check to be sure building source water inlet supply shutoff valve to rear of Chassis is OFF.
4. Disconnect Water-Cooled Condenser inlet water line at the Water Regulator Assembly outlet fitting.
5. Unsolder the refrigerant capillary tube distributor line at the outlet end of the Drier, the refrigerant outlet line from the bottom of the Condenser, and remove the Drier from the lines.
6. Unsolder the Compressor discharge line, at the top of the Water-Cooled Condenser.
7. Unsolder the Condenser water outlet line, at the top of the Water-Cooled Condenser.
8. Remove two screws and washers and the Water-Cooled Condenser from the Cabinet.

B. To replace the Water-Cooled Condenser, reverse the removal procedures.

VIII. REMOVAL AND REPLACEMENT OF THE CUBE SIZE CONTROL

A. To remove the Cube Size Control:

1. Remove screws and the three Front Panels and the Top Panel to gain access to the Cube Size Control.
2. Trace Capillary Tube, from the Cube Size Control, to the refrigerant suction line on the Evaporator Platen Assembly; then peel back the insulation.
3. Remove the coiled capillary tube bulb from the tube well on the suction line.
4. Remove electrical leads from the Cube Size Control.
5. Remove screws and the Cube Size Control.

B. To replace the Cube Size Control, reverse the removal procedure.

IX. REMOVAL AND REPLACEMENT OF THE DRIER

NOTE

Always install a replacement Drier, anytime the sealed refrigeration system is opened. Do not replace the Drier until all other repair or replacement has been completed.

A. To remove the Drier:

1. Remove screws and the Left Side Panel.
2. Bleed off or blow the refrigerant charge through the Schrader valve.
3. Unsolder refrigeration lines at both ends of the Drier, and remove the Drier.

B. To replace the Drier:

CAUTION

1. If the factory seal is broken on the replacement Drier, exposing it to the atmosphere more than a few minutes, the Drier will absorb moisture from the atmosphere and lose substantial ability for moisture removal.

2. Be sure the replacement Drier is installed with the arrow positioned in the direction of the refrigerant flow.

1. Remove the factory seals from the replacement Drier and install the Drier in the refrigerant lines with the arrow positioned in the direction of the refrigerant flow.
2. Solder the Drier into the lines, two places, taking precautions to NOT OVERHEAT the Drier body, during installation soldering.
3. Purge the system and check for leaks.
4. Thoroughly evacuate the system to remove moisture and non-condensables.
5. Charge the system with refrigerant, by weight. SEE NAMEPLATE.
6. Replace and attach the Left Side Panel.

X. REMOVAL AND REPLACEMENT OF THE EVAPORATOR PLATE ASSEMBLY — (FIVE)

NOTE

Always install a replacement Drier, anytime the sealed refrigeration system is opened. Do not replace the Drier until all other repair or replacement has been completed.

A. To Remove the Evaporator Plate:

1. Remove screws and the three Front Panels.
2. Bleed off or blow the refrigerant charge through the Schrader valve.
3. Remove hose clamp and rubber cap from bottom of Sump Assembly and drain all water. Replace rubber cap and hose clamp.
4. Slide three hose clamps off and unclamp Tygon tubes at left end of the Sump Assembly.
5. Remove Sump Covers.
6. Disconnect Tygon water inlet tube(s), at the Water Manifold Tee(s), above the Evaporator Plates.
7. Unsnap the Sump Assembly from the lower front and rear attachment points on each Evaporator Plate; then, CAREFULLY lower the RIGHT END of the Sump Assembly, to clear the bottom of the Plates, and work the connecting Tygon tubes OFF the LEFT end, and carefully remove the Sump Assembly so as not to split or break the plastic.
8. Slide the Water Distributor Tubes forward, about 1/8-inch along the top of the Evaporator Plate to be removed, until the rear Water Distributor Tube can be lifted upward. See Figure 4-2.
9. Lift the end of the rear Water Distributor Tube and slide the Distributors toward the rear along the top of the Evaporator Plate, until the flexible front notch is cleared.

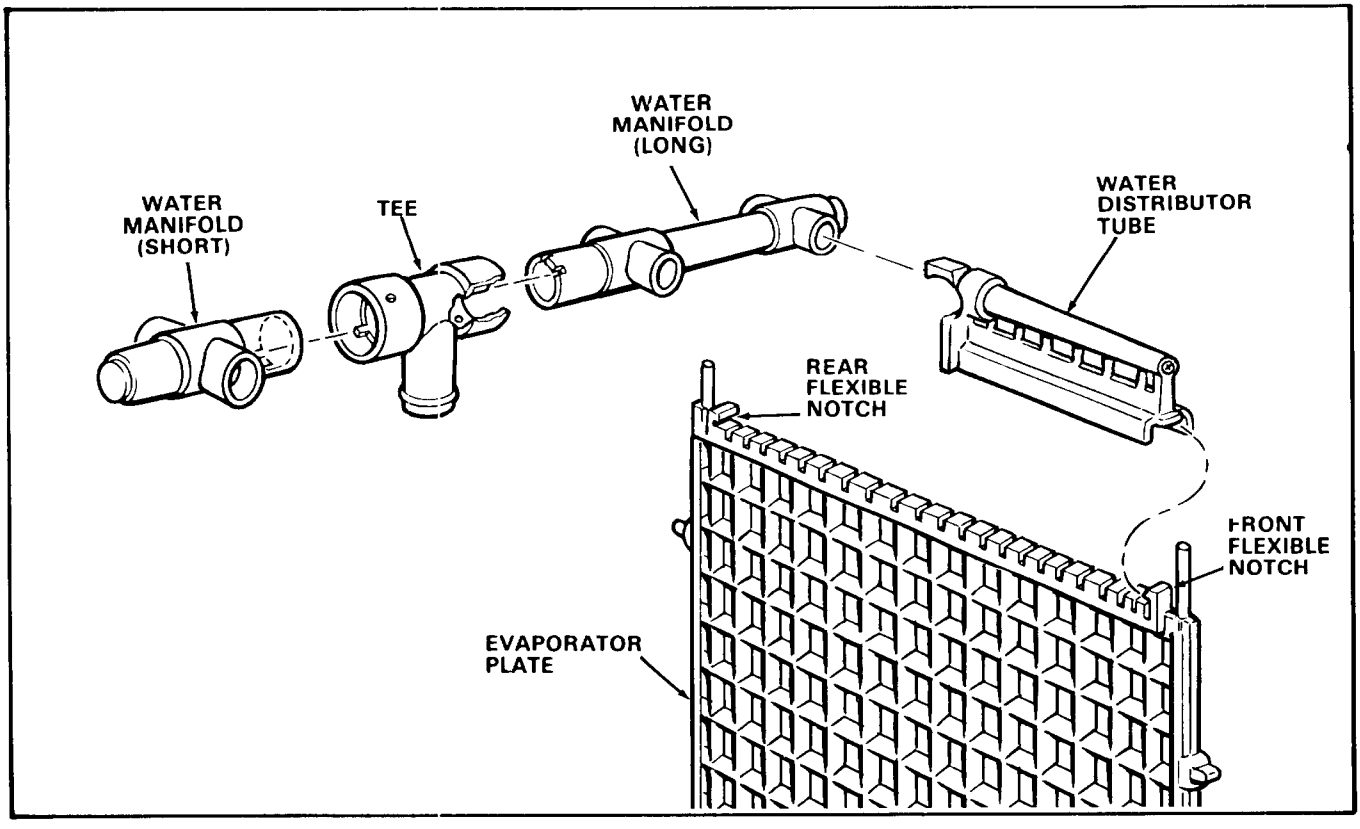

Figure 4-2. Removal of the Water Distributors, Manifold, Tees.

10. Unsnap and disconnect each front and rear Water Distributor Tube from the Water Manifold section.

NOTE

If all ten Water Distributor Tubes are being removed, disconnect the Water Manifold Tubes at the Tee(s) and remove the connected Water Distributors and Water Manifold Tubes as larger assemblies, from the tops of the Evaporator Plates; then, disassemble the individual parts at the workbench.

CAUTION

Use EXTRA PRECAUTION to protect the plastic parts during the next step to unsolder the refrigerant lines, two places, at the top of the Evaporator Plate. Position wet cloths over top of Plates, as well as over the plastic liner at the rear, or sides, to prevent accidental heat damage, or possible fire from torch flame.

11. Unsolder and remove the refrigerant lines at top front and rear of the Evaporator Plate to be replaced.
12. Carefully peel back gasket and remove screws at one end of the Front Braces, then, loosen the Braces just enough to remove the Evaporator Plate. Temporarily replace the Braces, to support the remaining Evaporator Plates.

B. To replace the Evaporator Plate, reverse the removal procedure.

XI. REMOVAL AND REPLACEMENT OF THE FAN MOTOR ASSEMBLY—AIR-COOLED MODELS - (TWO)

A. To remove the Fan Motor Assembly:

1. Remove screws and the Left Side Panel.
2. Disconnect the two electrical leads, from the Fan Motors, at the Control Box Assembly.

NOTE

BEFORE next step, measure or make accurate mental note of the distance the Fan Blades extend beyond the Fan Shroud, so during replacement the correct distance is maintained.

3. Remove screws and each Fan Motor and Bracket Assembly; and remove the Fan Motors and Brackets from the Chassis base.
4. Loosen set screws on the Fan Blade and remove the Fan Blade from the Fan Motor. Mark or note position of Blade on the shaft of the Fan Motor, for replacement.
5. Remove screws and lockwashers and separate the Fan Motor from the Fan Motor Bracket.

B. To replace the Fan Motor Assembly, reverse the removal procedure.

NOTE

Be sure to replace the Fan Blade with the hub of the Fan Blade facing the Fan Motor, to ensure air flow is toward the Fan Motor; and, is set at marked location on shaft and setscrews tightened on the FLAT part of the shaft of the Fan Motor.

XII. REMOVAL AND REPLACEMENT OF THE INLET WATER VALVE ASSEMBLY

A. To remove the Inlet Water Valve Assembly:

1. Remove Sump Assembly as in paragraph IV-XIII.
2. Loosen and remove inlet water line fitting from the inlet Water Valve Assembly, at the bottom left of the LEFT END Evaporator Plate; and slide the fitting away from the connection, to gain access to the hex nut.
3. Remove the hex nut, above, to detach the inlet Water Valve Assembly from the Evaporator Plate.
4. Slide the Valve body and attached Float to the RIGHT, out of the double-D hole in the Evaporator Plate and remove the inlet Water Valve Assembly from the Plate.

B. To replace the inlet Water Valve Assembly, reverse the removal procedure. Be sure the Valve body is properly positioned in the double-D hole and stays seated until the hex nut is tightened.

XIII. REMOVAL AND REPLACEMENT OF THE SUMP ASSEMBLY

A. To remove the Sump Assembly:

1. Remove screws and the right Front Panel.
2. Remove hose clamp and rubber cap from bottom of Sump Assembly and drain all water. Retain rubber cap and hose clamp.
3. Slide three hose clamps off and unclamp Tygon tubes at left end of Sump Assembly.
4. Remove screws and all Sump Covers.
5. Disconnect the two Tygon tubes at the Water Manifold Tees above the Evaporator Plates.
6. Unsnap the Sump Assembly from the lower front and rear attachment points on each Evaporator Plate; then, CAREFULLY lower the RIGHT END of the Sump Assembly, to clear the bottom of the Plates, and work the connecting Tygon tubes OFF the LEFT end, and carefully remove the Sump Assembly so as not to split or break the plastic.

7. Unscrew to disassemble three Female Tubes and O-Rings, from the outside of the Sump Assembly, connected to one Pump Pick-up Tube and two Male Tubes, installed from inside the Sump Assembly.

B. To replace the Sump Assembly, reverse the removal procedure. BE SURE the Pump Pickup Tube, lowest of three tubes, is installed with the slotted opening facing DOWN, toward bottom of Sump.

XIV. REMOVAL AND REPLACEMENT OF THE WATER DISTRIBUTOR TUBES AND MANIFOLD TUBES

A. To remove the Water Distributor Tubes and Manifold Tubes:

1. Remove screws and the lower Right Front Panel.
2. Slide the Water Distributor Tube to be removed, forward about 1/8-inch along the top of the Evaporator Plate, until the rear Water Distributor Tube can be lifted upward.
3. Lift the end of the rear Water Distributor Tube and slide the Distributors toward the rear along the top of the Evaporator Plate until the flexible front notch is cleared.
4. Unsnap and disconnect each front and rear Water Distributor Tube from the Water Manifold section.

NOTE

If all ten Water Distributor Tubes are being removed, disconnect the Water Manifold Tubes at the Tee(s) and remove the connected Water Distributors and Water Manifold Tubes as larger assemblies, from the tops of the Evaporator Plates; then, disassemble the individual parts at the workbench.

B. To replace the Water Distributor Tubes and Manifold Tubes, reverse the removal procedure. BE SURE the notches in the Water Manifold Tubes properly engage the alignment keys in the Tee(s). BE SURE each front Water Distributor Tube is securely fastened at the notch at the top front of the Evaporator Plate; and, check identical attachment for each rear Water Distributor Tube and notch; also, that the Distributor/Manifold connections at the top center of each Evaporator Plate is snug against the top of the Plate.

XV. REMOVAL AND REPLACEMENT OF THE WATER PUMP ASSEMBLY

NOTE

This procedure is written to assist the serviceman in removing and replacing the Water Pump Assembly, in an air-cooled model, when an installation is built-in; or, has limited overhead space for working from the top. In an open area, removal of the Top Panel, or Left Side Panel, will provide easier access to the Water Pump Assembly.

A. To remove the Water Pump Assembly:

1. Remove screws and three Front Panels.
2. Remove screws at each end of the Control Box and carefully pull the Control Box and attached wires out, and lay the Control Box on top of the Cabinet; or, let hang down in front of the Cabinet.
3. Remove three hose clamps connecting three Tygon Tubes to the left end of the Sump Assembly.
4. Disconnect electrical leads and ground wire from the Water Pump Assembly.
5. Remove two screws and washers, attaching the Water Pump Assembly to the Water Pump Bracket; then, work the Tygon Tubes loose from the Sump Assembly and remove the Water Pump Assembly.

B. To replace the Water Pump Assembly, reverse the removal procedure.

XVI. REMOVAL AND REPLACEMENT OF THE WATER REGULATOR ASSEMBLY—WATER-COOLED MODELS

NOTE

Always install a replacement Drier, anytime the sealed refrigeration system is opened. Do not replace the Drier until all other repair or replacement has been completed.

A. To Remove the Water Regulator Assembly:

1. Remove screws and the Left Bottom Front Panel.
2. Check to be sure building source water inlet supply shutoff valve to rear of Chassis is OFF.
3. Bleed off or blow the refrigerant charge through the Schrader valve.
4. Disconnect water inlet supply line at the left bottom rear of the Chassis.
5. Disconnect water line at the inlet and outlet fittings on the Water Regulator Assembly.
6. Unsolder the Water Regulator Valve capillary tube from the Compressor refrigerant discharge line.
7. Remove two screws and the Water Regulator Assembly from the Chassis Base.

B. To replace the Water Regulator Assembly reverse the removal procedure.

SECTION V
MAINTENANCE & CLEANING INSTRUCTIONS

I. GENERAL

The periods and procedures for maintenance and cleaning are given as guides and are not to be construed as absolute or invariable. Cleaning will vary depending upon local water conditions and the ice volume produced. Each icemaker must be maintained individually, in accordance with its own particular location requirements.

II. ICEMAKER

THE FOLLOWING MAINTENANCE SHOULD BE SCHEDULED AT LEAST TWO TIMES PER YEAR ON THIS ICEMAKER. CALL YOUR AUTHORIZED SCOTSMAN SERVICE AGENCY.

1. Check and clean or service any optional water treatment devices, if any installed.
2. Check that the CM1200 Cabinet is level, in the side-to-side and front-to-rear directions.
3. Clean the water system, Evaporator Plates and Sump Assembly, using a solution of SCOTSMAN Ice Machine Cleaner. Refer to Procedure V-III, CLEANING - Icemaker.

NOTE

Cleaning requirements vary according to local water conditions and individual user operation. Continuous check of the clarity of ice cubes and visual inspection of the water system parts, Evaporator Plates and the Sump Assembly before and after cleaning will indicate frequency and procedure to be followed in local areas.

4. Check that each Evaporator Plate Assembly is snug and secure on each wall support on the bin rear wall, in the holes of the Front Brace, and in each indent recessed in each arm of the Sump Assembly, below the bottom corners of the Evaporator Plates.
5. Check and tighten all bolts and screws.
6. Check and tighten all electrical connections.
7. Check hot gas solenoid valve for correct operation.
8. With MASTER ON-OFF toggle switch and COMPRESSOR ON-OFF toggle switch in the OFF position, clean the Condenser using vacuum cleaner, whisk broom or brush. Instruct customer to clean Condenser frequently. DO NOT USE A WIRE BRUSH.
9. Check for water leaks and make corrections.
10. Check the Bin Thermostat Control bulb to test shut off. Holding ice against Bin Thermostat Control bulb should cause the icemaker to shut OFF at the end of the Harvest Cycle.

NOTE

Soon after ice is removed from the Bin Thermostat Control bulb, the icemaker will restart.

III. CLEANING - Icemaker

NOTE

During the cleaning procedures contaminated ice will be produced therefore all ice should be removed from the storage bin.

1. Disconnect electrical supply to icemaker.
2. Remove lower left and right front panels then one piece liner covering freezing compartment and top panel.

NOTE

Top panel is held by (6) screws, 2 on each end and middle.

3. Turn both master and compressor toggle switches to the "Off" position.
4. Close water supply line shut off valve to icemaker.

NOTE

On water-cooled models DO NOT shut off water supply to the condenser; only to the icemaker inlet float.

5. Using plastic pail and hose clamp pliers remove hose clamp and rubber plug from underside of plastic sump. Catch all water and dispose.
6. Replace rubber plug and hose clamp.
7. Prepare cleaning solution in plastic pail. Mix 3 pints Scotsman cleaner with 9 pints fresh hot water.

WARNING

SCOTSMAN Ice Machine Cleaner contains Phosphoric and Hydroxyacetic acids. These compounds are corrosive and may cause burns, if swallowed. DO NOT induce vomiting. Give large amounts of water or milk. Call physician immediately. In case of external contact, flush with water. KEEP OUT OF THE REACH OF CHILDREN.

8. Insert plastic funnel into corner of sump

assembly and pour all the cleaning solution into sump.

9. Restore electrical power to icemaker and move the master on-off switch toggle to the "On" position.
10. Allow the icemaker to operate in this mode for 30 minutes.
11. Move master on-off switch to "Off" stopping circulation.
12. Use hose clamp pliers to remove clamp and drain plug. Allow solution to drain into the empty storage bin. This helps to clean the drain lines.
13. Replace rubber drain plug only. Fill pail full of clean cold water and pour into sump assembly until sump is full.
14. Move master on-off switch to "ON" for 5 minutes then switch to "OFF". Remove sump drain plug and drain water into bin.
15. Repeat steps 13 and 14 once more to complete flushing operation. Replace clamp and drain plug.
16. Open water supply line shut off valve and allow 3 minutes for sump to fill and the float valve to shut off.
17. Move both the master and compressor toggle switches to the "ON" position. This will restore the normal icemaking cycle. Observe that evaporator plates receive full water flow.
18. Using a sponge and clean cold water, wipe down the storage bin interior.
19. Replace all panels removed in step #2.
20. Wipe bin door and surfaces with clean, cold water.
21. Using pail and clean warm water, melt all ice in the storage bin.

CAUTION

DO NOT use ice produced from the cleaning solution. Be sure none remains in the bin.

SECTION VI
SERVICE DIAGNOSIS

The Service Diagnosis Section is for use in aiding the serviceman in diagnosing a particular problem for pin-pointing the area in which the problem lies, thus an ever available reference for proper corrective action.

The following chart lists corrective actions for the causes of known symptoms of certain problems that can occur in the Icemaking-Refrigeration System.

I. ICEMAKING - REFRIGERATION SYSTEM

SYMPTOM	POSSIBLE CAUSE	CORRECTION
Irregular size cubes some cloudy.	Some distributor holes plugged.	Clean distributor holes.
		Clean water sump.
	Shortage of water.	See Shortage of water CORRECTION.
	Unit not level.	Level cabinet, as required.
Cubes too large.	Dirty air-cooled condenser	Clean condenser.
	Cube Size Control set too cold.	Rotate Cube Size Control dial toward WARMER.
	Loss of refrigerant.	Check for refrigerant leaks, correct leaks; recharge system.
Cubes too small.	Cube Size Control set too warm.	Rotate Cube Size Control dial toward COLDER.
	Partially restricted capillary tube.	Blow refrigerant charge; replace drier; evacuate system; add proper refrigerant charge.
	Moisture in refrigeration system.	Same as above CORRECTION.
	Shortage of water.	See Shortage of water CORRECTION
Cloudy Cubes.	Shortage of water.	See Shortage of water SYMPTOM.
	Dirty water supply.	Install water filter or softener.
	Accumulated impurities.	Use SCOTSMAN Ice Machine Cleaner. Procedure V-III.
Shortage of water.	Water leak in sump area.	Locate leak and correct condition.
	Partial restrictions in water strainer.	Clean or replace strainer.

SYMPTOM	POSSIBLE CAUSE	CORRECTION
Decreased ice capacity.	Restricted water flow to condenser.	Restore proper water flow rate.
	High head pressure, result of dirty Condenser or faulty Fan Motor.	Clean Condenser. Repair or replace Fan Motor.
	Non-condensable gas in the system.	Purge the system and recharge per nameplate requirements.
	Poor circulation or extreme hot location.	Relocate the cabinet; or provide ventilation by cutting openings.
	Overcharge of refrigerant.	Slowly purge off to correct charge.
	Hot gas solenoid valve leaking.	Replace valve.
	Partially restricted capillary tube.	See Cubes Too Small CORRECTION.
	Defective Compressor.	Replace Compressor.
Poor harvests. Icemaker does not harvest.	Too short defrost time.	Check and adjust harvest cycle.
	Restriction in water inlet line.	Check strainer and flow check valve.
	Hot gas solenoid does not open. Binds or burned out.	Replace solenoid.
	Undercharge of refrigerant.	Charge to nameplate requirements.
	Water pressure too low.	Check for 20 PSI flowing water.
Compressor cycles intermittently.	Low voltage.	Check for circuit overload. Check building supply voltage, if low, contact power company.
	Dirty Condenser.	Clean Condenser with vacuum cleaner or brush. DO NOT USE A WIRE BURSH.
	Air circulation blocked.	Locate cabinet with adequate air space for proper air flow.
	Defective Fan Motor.	Replace Fan Motor.
	Non-condensable gases in system.	Purge the system and recharge per nameplate requirements.
Icemaker will not operate.	Blown fuse in line.	Replace fuse and check for cause.
	Master switch in OFF position.	Set switch to ON position.
	Low or loose at water pressure.	Restore water pressure—reset high pressure control.
	Faulty Master switch.	Replace switch.
	Timer contacts open.	Replace Timer microswitch.

SECTION VII
WIRING DIAGRAMS

This Section is provided as an aid in understanding the electrical circuitry of the Modular Cuber:

WARNING

When conducting a continuity check of the Modular Cuber:

1. **Disconnect the main power source.**
2. **DO NOT use an incandescent lamp or jumper wire, conduct all tests with a volt-ohm-meter.**

The Wiring Diagrams in this Section are:

Figure 7-1. Wiring Diagram CM1200 115/208-220/60/3-Air-Cooled.

Figure 7-2. Wiring Diagram CM1200 115/208-220/60/3 - Water-Cooled.

Figure 7-3. Wiring Diagram CM1200 115/208-230/60/1 - Air-Cooled.

Figure 7-4. Wiring Diagram CM1200 115/208-230/60/1 - Water-Cooled.

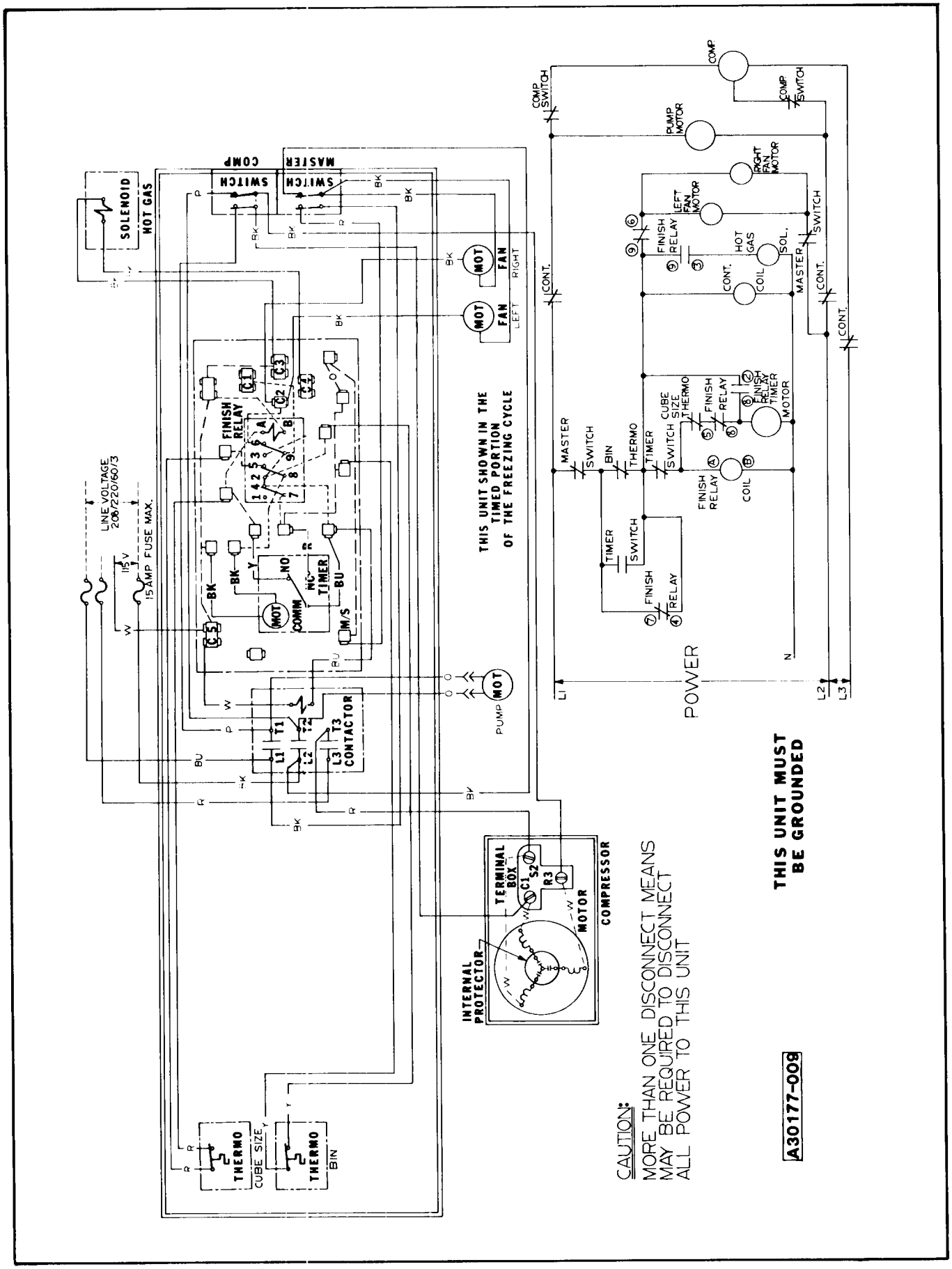

Figure 7-1. Wiring Diagram CM1200 — Air-Cooled (115/208-220/60/3).

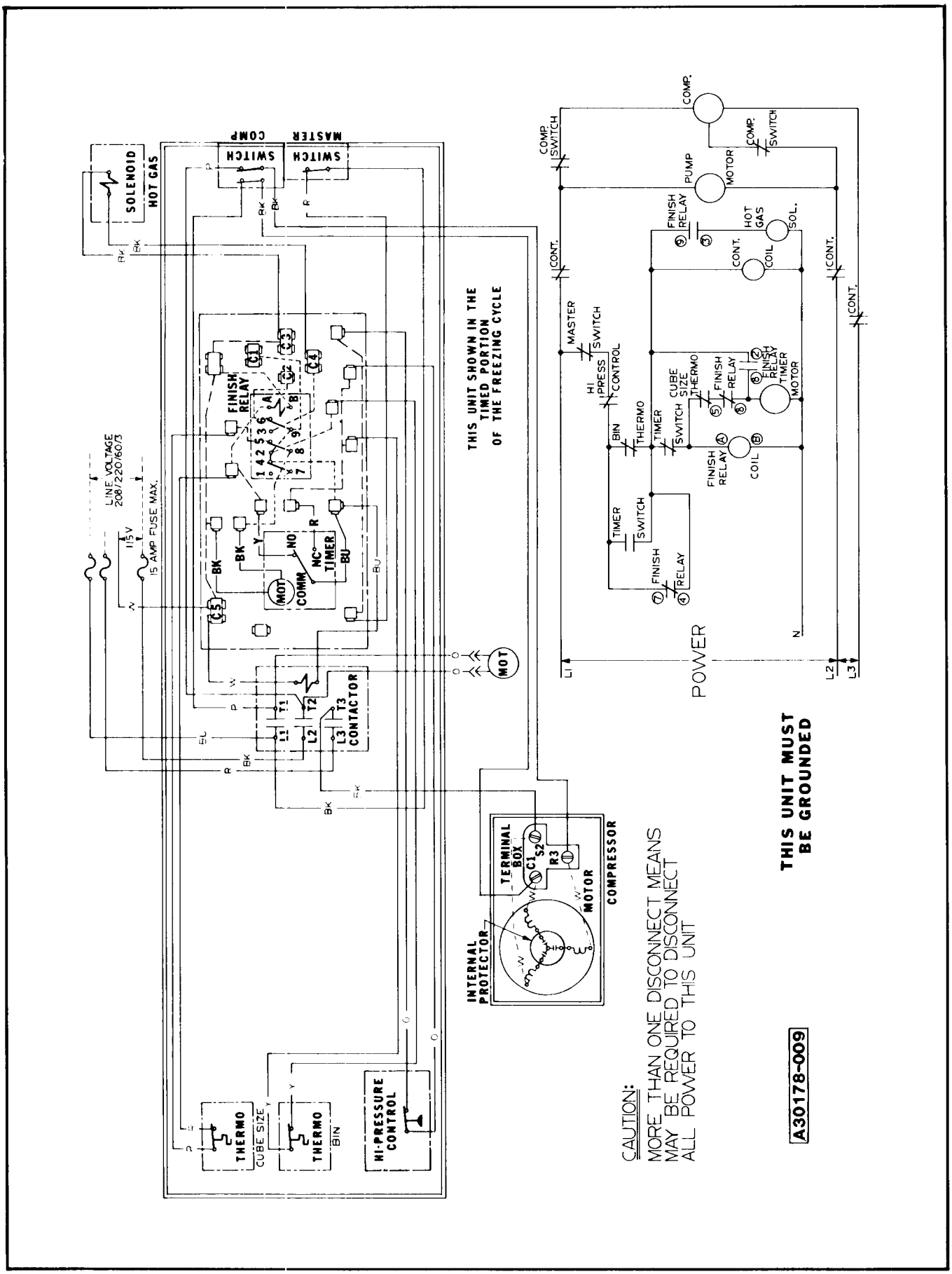

Figure 7-2. Wiring Diagram CM1200—Water-Cooled (115/208-220/60/3).

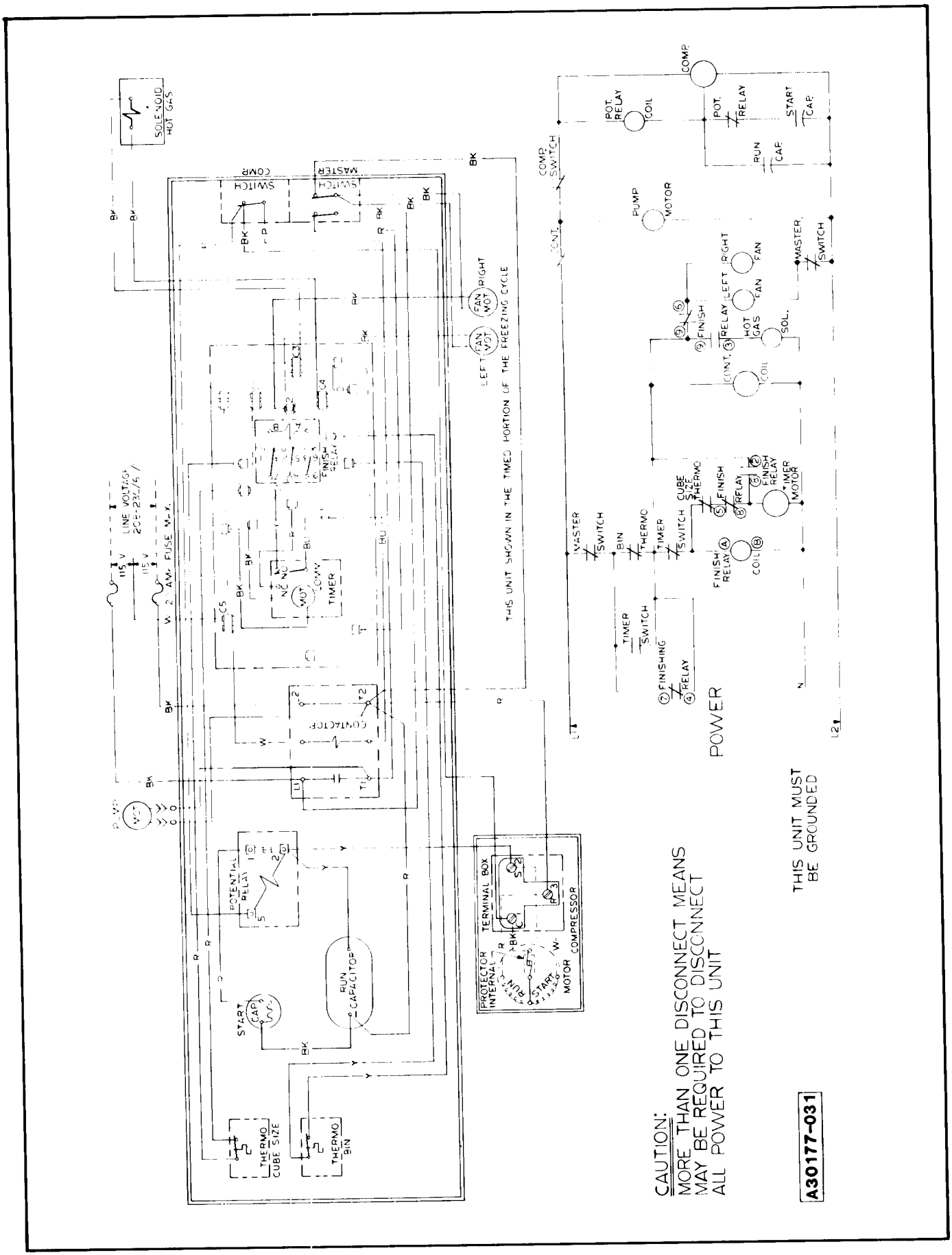

Figure 7-3. Wiring Diagram CM1200—Air-Cooled (115-208-230/60/1).

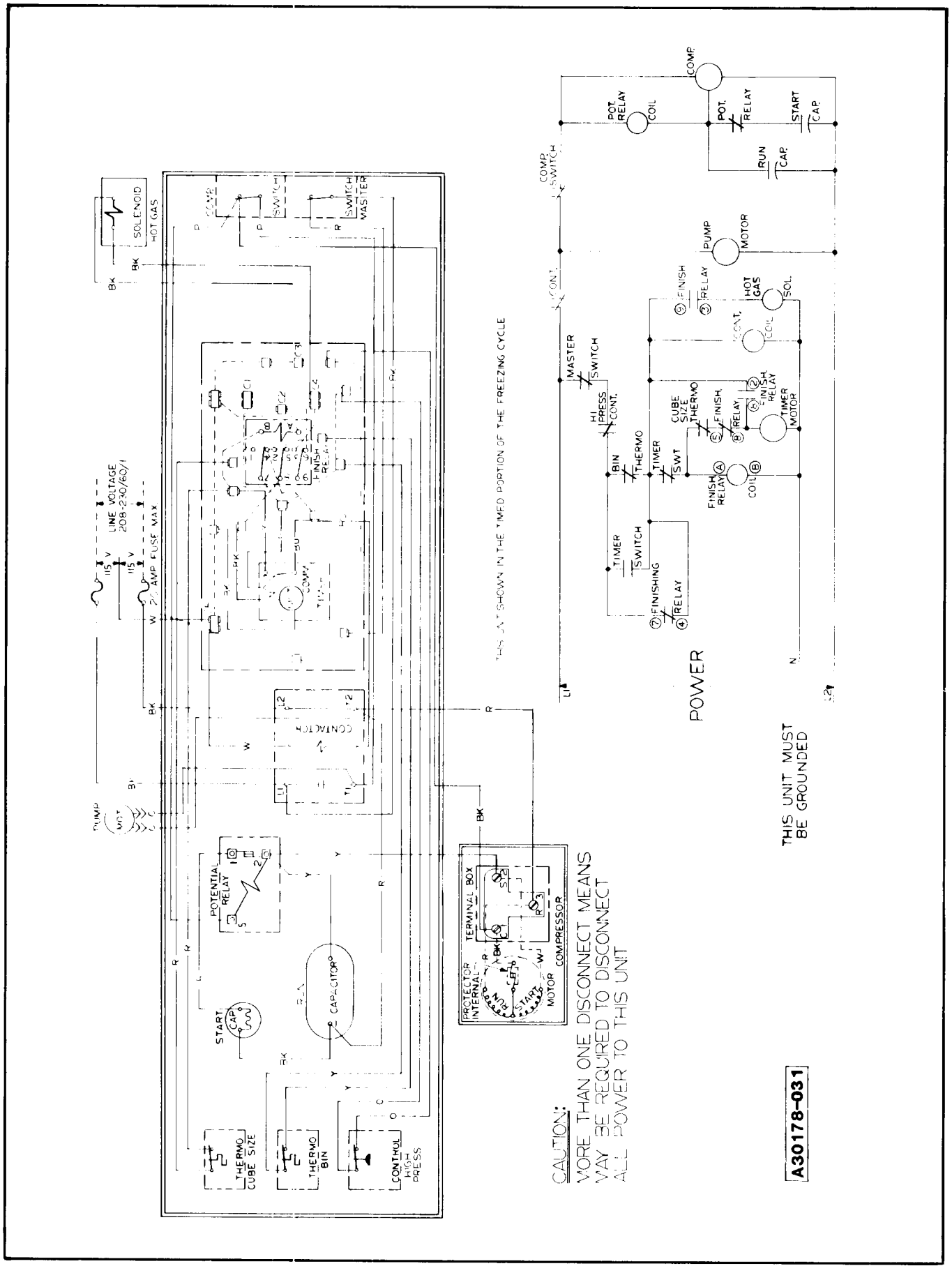

Figure 7-4. Wiring Diagram CM1200—Water-Cooled (115/208-230/60/1)

SECTION VIII
THE PARTS ILLUSTRATIONS AND PARTS LISTS

I. GENERAL

This section contains the Parts Illustrations and the Parts List for each of the major assemblies in the CM1200 Modular Cuber.

Each Parts Illustration shows an assembly as an exploded view, with an Index Number for each part or sub-assembly, given in disassembly order. These Index Numbers key with the Parts List for the assembly and are found in the Parts List Column headed Index Number. The Description Column gives the identifying nomenclature for the item indexed. The Part Number Required Column gives the number of items required per assembly, but not necessarily the total number of parts required per Cuber.

All assemblies are cross-referenced both from the major assembly listing where they first appear in the Parts Listing to their break-down listing, and from the break-down listing, back to the major assembly (next higher assembly) listing.

A *No Number* designation, when used in the Part Number Column indicates the unit is not available from SCOTSMAN as an assembly. This designation is used only for the convenience and clarity of division in cataloging.

When an Index Number is followed by a letter (e.g. la, lb), the letter indicates the part listed is part of the assembly indexed by the basic Index Number. The number required of the part indexed by the number and letter combination is for only one of the assemblies indexed by the basic Index Number and not necessarily the total number or parts used in the Cuber. Where the notation *Ref* occurs in the Number Required Column the number of the assemblies or parts required for use in the Cuber will be found under a previous Index Number or in the next higher assembly Parts Listing. The next higher listing Figure/Index number is shown in the Description Column immediately following the items description.

II. HOW TO USE THE ILLUSTRATIONS AND PARTS LISTS

To find the part number of a required part or assembly, turn to the List of Illustrations and find the page number of the Parts Illustration of the major or sub-assembly containing the part. Turn to the indicated page and locate the part and its Index Number on the specific illustration. Find the Index Number on the required part in the Parts List to determine the complete description of the part.

III. HOW TO ORDER PARTS OR ASSEMBLIES

When ordering parts or assemblies, to avoid costly delays and errors in shipment, give the part number, the complete description shown in the list, and the quantities of each part or assembly required. Also include the Model name, the serial number of the Cuber for which the part is required, and for parts which require color matching, the color of the Cabinet.

CM1200 Cabinet

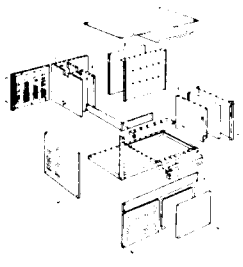

Figure 8-1.

Major Assemblies—Air-Cooled

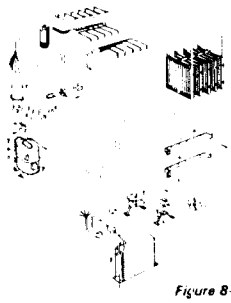

Figure 8-2.

Major Assemblies—Water-Cooled

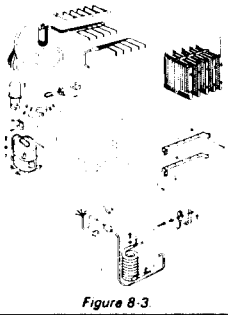

Figure 8-3.

Evaporator Section Components and Assemblies

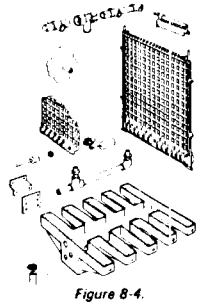

Figure 8-4.

Control Box Assembly



Figure 8-5.

Figure 8-A. CM1200 Modular Cuber Flow Chart.

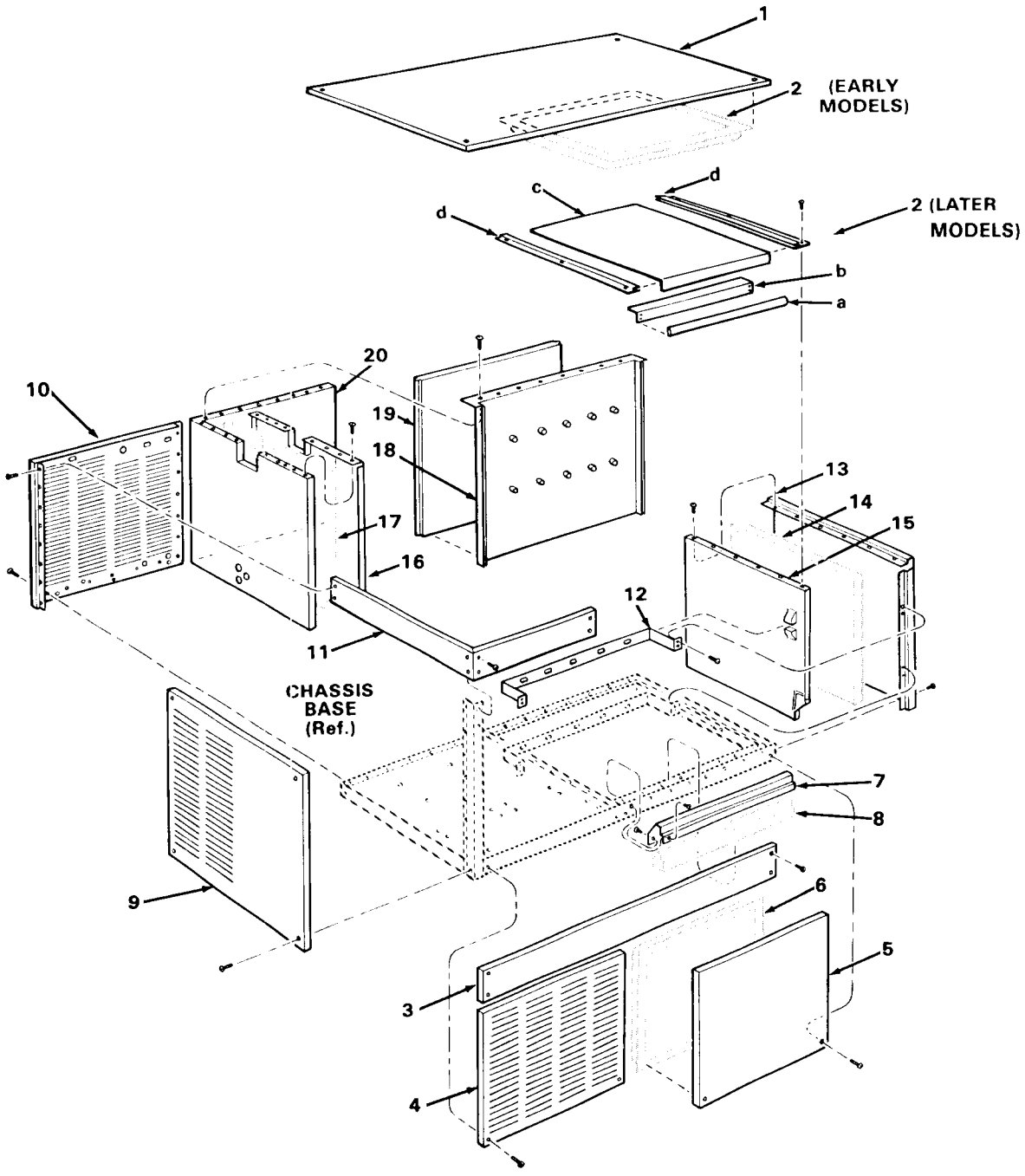

Figure 8-1. CM1200 Cabinet.

Figure 8-1. CM1200 Cabinet.

INDEX NO.	DESCRIPTION	PART NUMBER	REQ'D NUMBER
	CM1200 Cabinet	No Number	1
	* * *		
1	Panel, Top (C.R.S. Painted)	A29167-001	1
	Panel, Top (Stainless Steel)	A29167-002	1
	attaching parts, Index 1		
	Lockwasher, No. 8 External Tooth	03-1417-03	2
	Screw, No. 8 x 1 T/F Tap	03-1404-19	6
	* * *		
2	Liner, Top Panel Foam (EARLY MODELS)	A29183-001	1
	(Use bead of Silastic, SCOTSMAN P/N 19-0521-01)		
	* * *		
2	(LATER MODELS)		
a	Gasket	13-0595-00	A/R
b	Brace, Upper Front	A30330-001	1
	attaching parts, Index 2b		
	Screw, No. 8 x 1/2 stainless steel	03-1404-10	4
c	Top, Liner	A30329-001	1
d	Guide, Liner	02-2759-01	2
	attaching parts, Index 2d		
	Screw, No. 8 x 1/2 stainless steel	03-1404-10	6
3	Panel Assembly -- (Top Front) (C.R.S. Painted)	A29700-001	1
	Panel Assembly -- (Top Front) (Stainless Steel)	A29700-002	1
	attaching parts, Index 3		
	Lockwasher, No. 8 External Tooth	03-1417-03	2
	Screw, No. 8 x 1/2 T/F Tap (Stainless Steel)	03-1404-10	3
	* * *		
4	Panel, Left Bottom Front (C.R.S. Painted)	A29173-001	1
	Panel, Left Bottom Front (Stainless Steel)	A29173-002	1
5	Panel, Right Bottom Front (C.R.S. Painted)	A29174-001	1
	Panel, Right Bottom Front (Stainless Steel)	A29174-002	1
	attaching parts, Index 4 & 5		
	Lockwasher, No. 8 External Tooth	03-1417-03	2 (4)
	Screw, No. 8 x 1/2 T/F Tap (Stainless Steel)	03-1404-10	2 (4)
	* * *		
6	Liner, Lower Front Foam	A29184-001	1
	(Use bead of Silastic, SCOTSMAN P/N 19-0521-01)		
	* * *		

Figure 8-1. CM1200 Cabinet (Cont'd)

INDEX NO.	DESCRIPTION	PART NUMBER	REQ'D NUMBER
7	Liner, Cap	02-2532-01	1
8	Insulation, Cap Liner	02-2552-01	1
	attaching parts, Index 8 & 9		
	Screw, No. 8 x 1/2 T/F Tap (Stainless Steel)	03-1404-10	14
	* * *		
9	Panel, Left Side (C.R.S. Painted)	A29168-001	1
	Panel, Left Side (Stainless Steel)	A29168-002	1
	attaching parts, Index 9		
	Lockwasher, No. 8 External Tooth	03-1417-03	2
	Screw, No. 8 x 1/2 T/F Tap (Stainless Steel)	03-1404-10	6
	* * *		
10	Panel, Back - Left (Galvanized)	A29318-001	1
	attaching part, Index 10		
	Screw, No. 8 x 1 T/F Tap	03-1404-19	12
	* * *		
11	Brace, Front Corner	A29170-001	1
	attaching part, Index 11		
	Screw, No. 8 x 1/2 T/F Tap	03-1404-09	8
	* * *		
12	Brace, Front	A29204-001	2
	attaching part, Index 12		
	Screw, No. 8 x 1/2 T/F Tap (Stainless Steel)	03-1404-10	4 (8)
	* * *		
13	Panel, Right Side (C.R.S. Painted)	A29317-001	1
	Panel, Right Side (Stainless Steel)	A29317-002	1
	attaching parts, Index 13		
	Lockwasher, No. 8 External Tooth	03-1417-03	2
	Screw, No. 8 x 1/2 T/F Tap (Stainless Steel)	03-1404-10	6
	* * *		
14	Insulation, Right Side	03-2536-01	1
	* * *		
15	Liner, Right Side	02-2534-01	1
	(Use bead of Silastic, SCOTSMAN P/N 19-0521-01)		
	attaching part, Index 15		
	Screw, No. 8 x 1/2 T/F Tap (Stainless Steel)	03-1404-10	18
	* * *		

Figure 8-1. CM1200 Cabinet (Cont'd)

INDEX NO.	DESCRIPTION	PART NUMBER	REQ'D NUMBER
16	Liner, Left Side	02-2533-01	1
	(Use bead of Silastic, SCOTSMAN P/N 19-0521-01)		
	attaching part, Index 16		
	Screw, No. 8 x 1/2 T/F Tap (Stainless Steel)	03-1404-10	19
	* * *		
17	Insulation, Left Side	02-2538-01	1
	* * *		
18	Liner, Back	02-2531-01	1
	(Use bead of Silastic, SCOTSMAN P/N 19-0521-01		
	Screw, No. 8 x 1/2 T/F Tap (Stainless Steel)	03-1404-10	14
	* * *		
19	Insulation, Back	02-2537-01	1
	* * *		
20	Retainer	A29157-001	1
	attaching parts, Index 20		
	Screw, No. 8 x 1/2 T/F Tap	03-1404-09	15
	* * *		

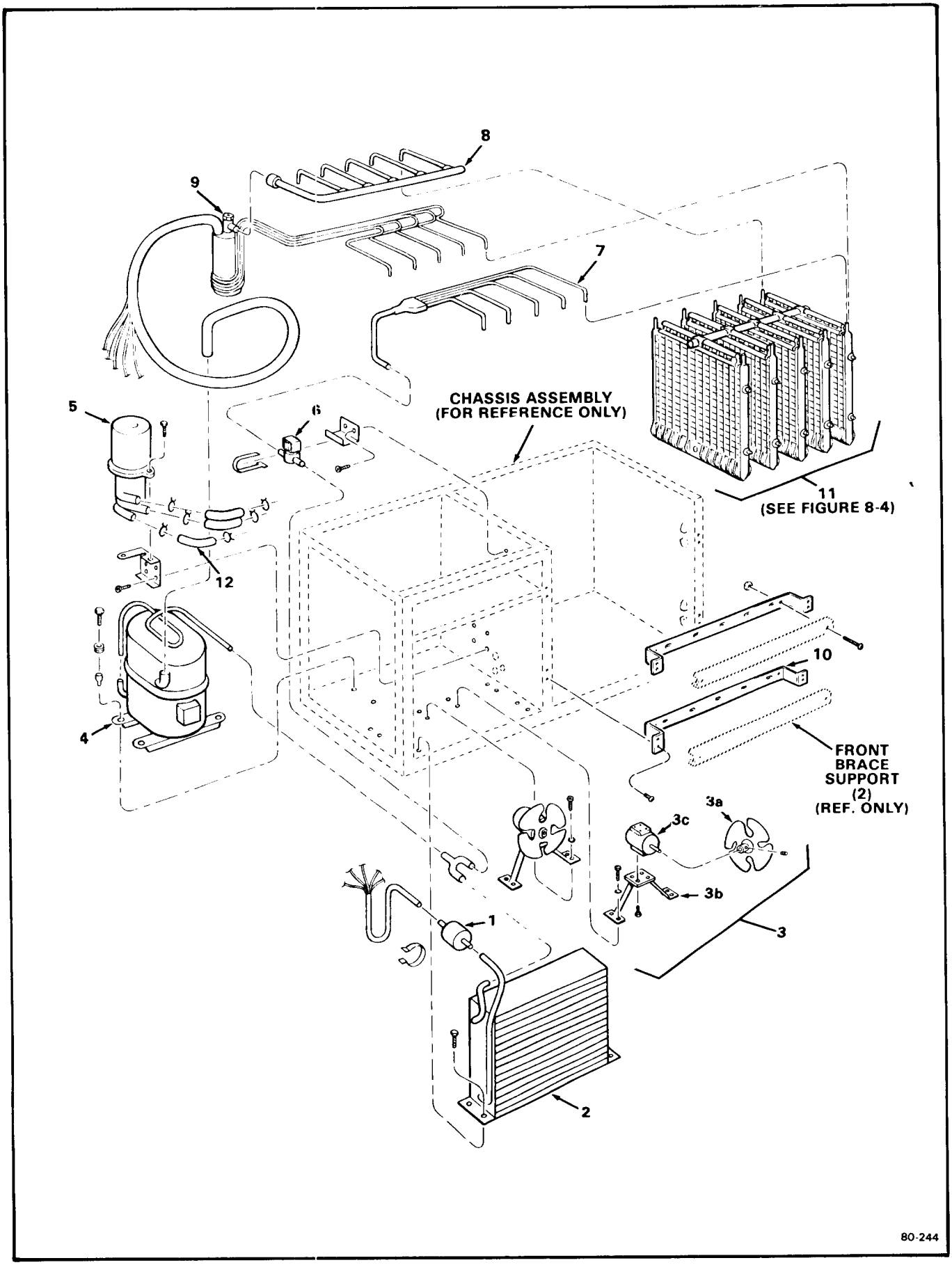

Figure 8-2. Major Assemblies — Air-Cooled

Figure 8-2. Major Assemblies — Air Cooled

INDEX NO.	DESCRIPTION	PART NUMBER	REQ'D NUMBER
	Major Assemblies — Air-Cooled	No Number	Ref.
	* * *		
1	Drier	02-2426-02	1
	attaching parts, Index 1		
	Bracket, Drier	A09388-001	1
	Screw, No. 8 x 1/2 T/F Tap	03-1404-09	1
	* * *		
2	Condenser — Air-Cooled	A29795-001	1
	attaching parts, Index 2		
	Screw, No. 1/4-20 x 1/2 T/C Hex Hd	03-0571-00	4
	* * *		
3	Fan Motor & Mounting Bracket Assembly	No Number	1
3a	Blade, Fan w/setscrew	18-3732-01	1
3b	Bracket, Fan Motor Mounting	18-0597-00	1
3c	Motor, Fan	18-5105-01	2
	attaching parts, Index 3		
	Screw, No. 1/4-20 x 1/2 T/C Hex Hd	03-0571-00	2 (4)
	* * *		
4	Compressor, COPELAND (115/208-230/60/1)	18-4300-02	1
	Compressor, COPELAND (115/208-220/60/3)	18-4300-03	1
	attaching parts, Index 4		
	Grommet	18-2300-27	4
	Sleeve, Mounting	18-2300-26	4
	Screw, No. 5/16-18 x 1-1/2 Hex Cap	03-1405-20	4
	* * *		
4	Compressor, TECUMSEH (115/208-230/60/1)	18-3850-02	1
	Compressor, TECUMSEH (115/208-220/60/3)	18-3850-03	1
	attaching parts, Index 4		
	Grommet	18-2300-27	4
	Sleeve, Mounting	18-2300-26	4
	Screw, No. 5/16-18 x 1-1/2 Hex Cap	03-1405-20	4
	* * *		
5	Pump Assembly, Water	A29829-001	1
	attaching parts, Index 5		
	Screw, No. 1/4-20 x 3/4 T/C Hex Hd	03-0571-01	2
	* * *		

Figure 8-2. Major Assemblies — Air-Cooled (Cont'd)

INDEX NO.	DESCRIPTION	PART NUMBER	REQ'D NUMBER
6	Valve, Solenoid — Hot Gas	12-2146-01	1
	attaching parts		
	Bracket	No Number	1
	Screw, No. 8 x 1/2 T/F Tap	03-1404-09	2
	* * *		
7	Tube Assembly, Hot Gas	A29260-001	1
	* * *		
8	Manifold Assembly	A29272-001	1
	* * *		
9	Exchanger Assembly, Heat (Accumulator) For use with Copeland and Tecumseh compressors.	A30325-020	1
	* * *		
10	Brace, Front	A29204-001	2
	attaching parts, Index 10		
	Screw, No. 8 x 1/2 T/F Tap (Stainless)	03-1404-10	4 (8)
	* * *		
11	Evaporator Section Components & Assemblies (See Figure 8-4)	No Number	Ref.
	* * *		
12	Performed Hose	05-0521-01	3
	* * *		

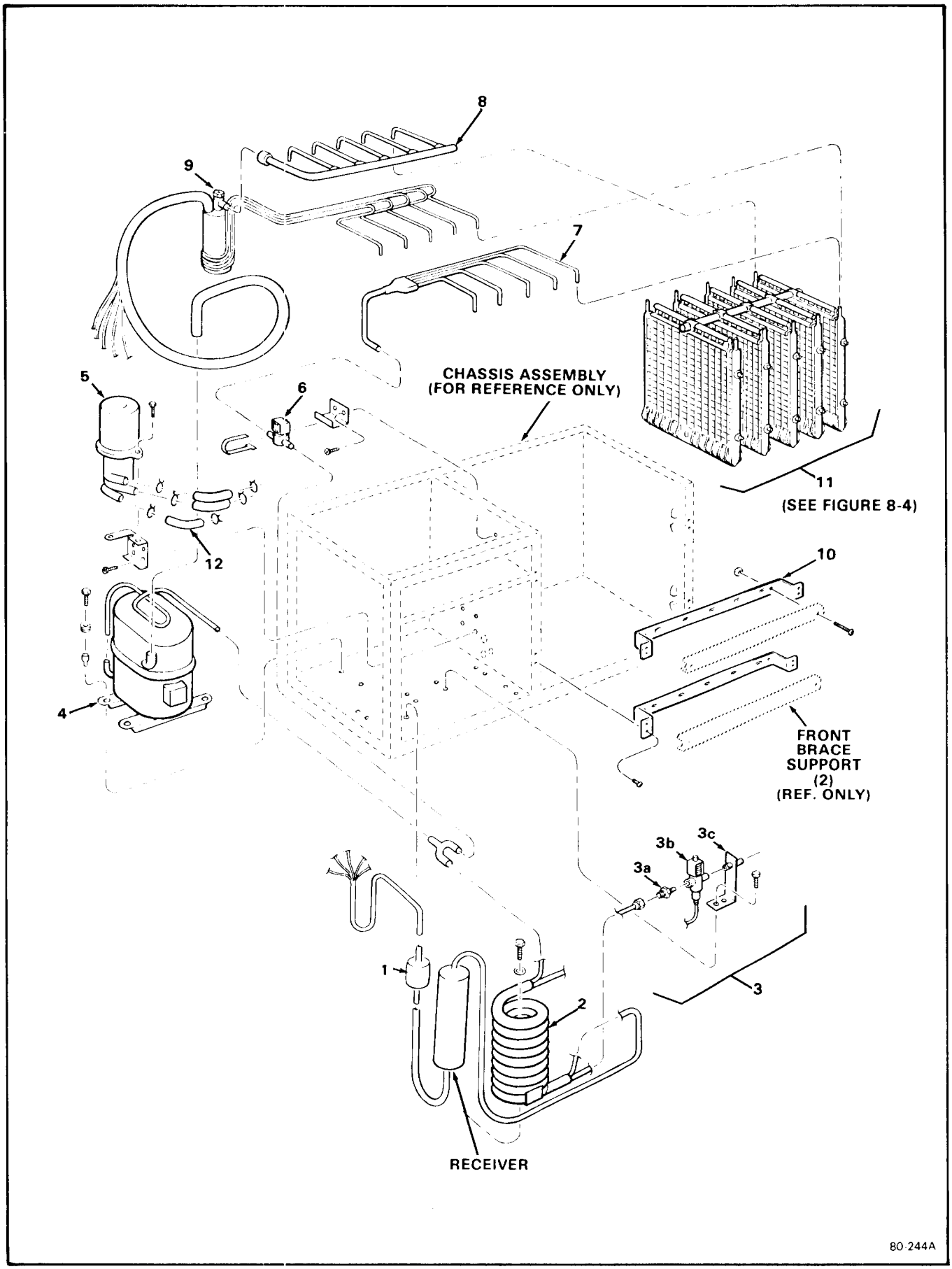

Figure 8-3. Major Assemblies — Water Cooled.

Figure 8-3. Major Assemblies — Water Cooled

INDEX NO.	DESCRIPTION	PART NUMBER	REQ'D NUMBER
	Major Assemblies — Water-Cooled	No Number	Ref.
	* * *		
1	Drier	02-2426-02	1
	attaching parts, Index 1		
	Bracket, Drier	A09388-001	1
	Screw, No. 8 x 1/2 T/F Tap	03-1404-09	1
	* * *		
2	Condenser — Water-Cooled	18-3306-03	1
	attaching parts, Index 2		
	Screw, No. 1/4-20 x 1/2 T/C Hex Hd	03-0571-00	2
	* * *		
3	Regulator Assembly, Water-Cooled	No Number	1
	attaching part, Index 3		
	Screw, No. 1/4-20 x 1/4 T/C Hex Hd	03-0571-00	2
3a	Coupling — 3/8 NPT x 3/8 Flare, Brass	16-0355-00	1
3b	Valve, Water Regulator	11-0198-02	1
3c	Bracket, Mounting — w/nipple	A15924-000	1
	* * *		
4	Compressor, COPELAND (115/208-230/60/1)	18-4300-02	1
	Compressor, COPELAND (115/208-220/60/3)	18-4300-03	1
	attaching parts, Index 4		
	Grommet	18-2300-27	4
	Sleeve, Mounting	18-2300-26	4
	Screw, No. 5/16-18 x 1-1/2 Hex Cap	03-1405-20	4
	* * *		
4	Compressor, TECUMSEH (115/208-230/60/1)	18-3850-02	1
	Compressor, TECUMSEH (115/208-220/60/3)	18-3850-03	1
	attaching parts, Index 4		
	Grommet	18-2300-27	4
	Sleeve, Mounting	18-2300-26	4
	Screw, No. 5/16-18 x 1-1/2 Hex Cap	03-1405-20	4
	* * *		
5	Pump Assembly, Water	A29829-001	1
	attaching parts, Index 5		
	Screw, No. 1/4-20 x 3/4 T/C Hex Hd	03-0571-01	2
	* * *		

Figure 8-3. Major Assemblies — Water Cooled (Cont'd)

INDEX NO.	DESCRIPTION	PART NUMBER	REQ'D NUMBER
6	Valve, Solenoid — Hot Gas	12-2146-01	1
	attaching parts		
	Bracket	No Number	1
	Screw, No. 8 x 1/2 T/F Tap	03-1404-09	2
	* * *		
7	Tube Assembly, Hot Gas	A29260-001	1
	* * *		
8	Manifold Assembly	A29272-001	1
	* * *		
9	Exchanger Assembly, Heat (Accumulator) For use with Copeland and Tecumseh compressors.	A30325-020	1
	* * *		
10	Brace, Front	A29204-001	2
	attaching parts, Index 10		
	Screw, No. 8 x 1/2 T/F Tap (Stainless)	03-1404-10	4 (8)
	* * *		
11	Evaporator Section Components & Assemblies (See Figure 8-4)	No Number	Ref.
	* * *		
12	Performed Hose	05-0521-01	3
	* * *		

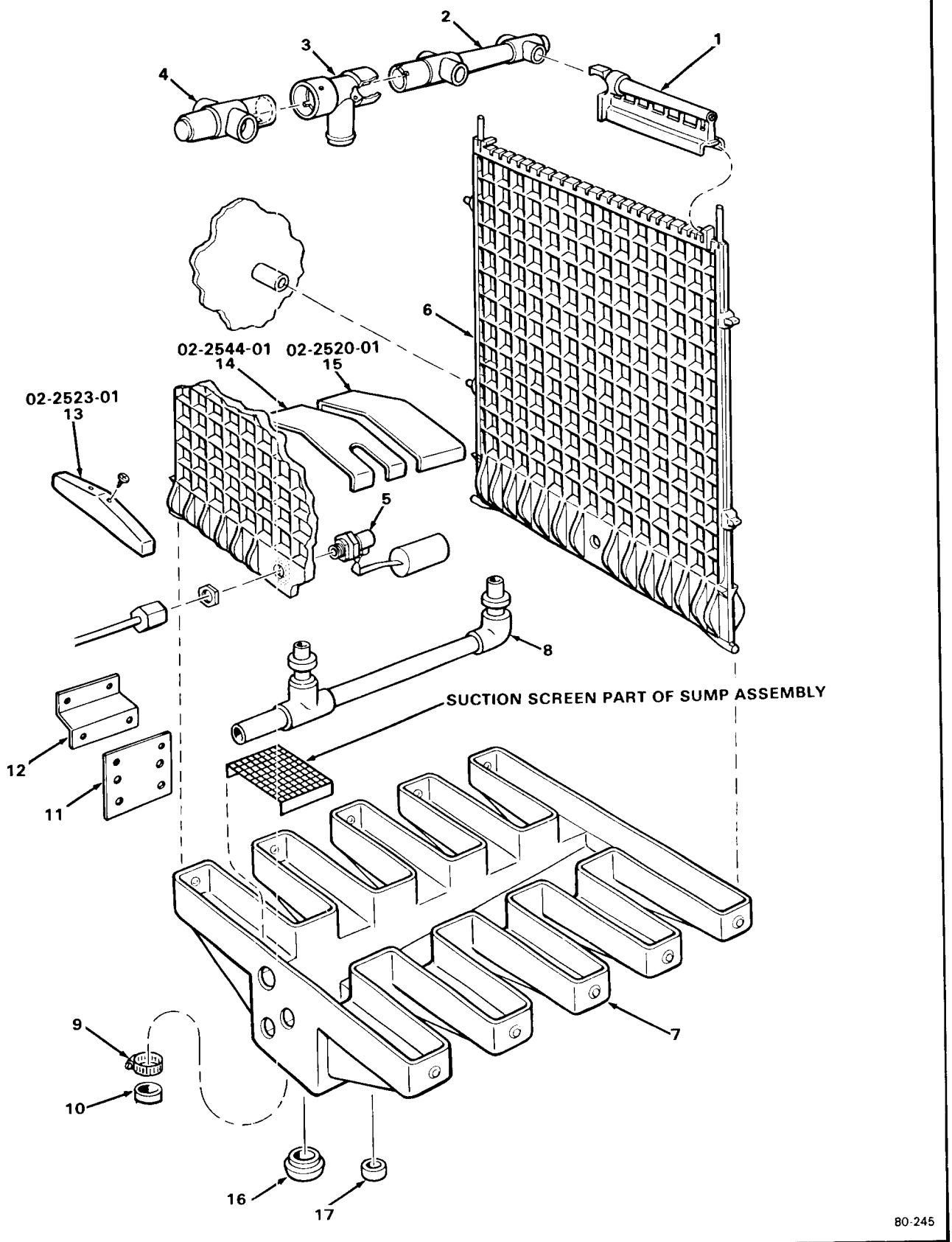

Figure 8-4. Evaporator Section Components & Assemblies.

Figure 8-4. Evaporator Section Components & Assemblies.

INDEX NO.	DESCRIPTION	PART NUMBER	REQ'D NUMBER
	Evaporator Section Components & Assemblies (See Figure 8-2 & 8-3 for next higher Assembly)	No Number	Ref.
	* * *		
1	Tube, Water Distributor	02-2527-01	10
	* * *		
2	Manifold, Water -- (Long)	02-2521-01	1
	* * *		
3	Tee	02-2519-01	2
	* * *		
4	Manifold, Water -- (Short)	A29703-001	3
	* * *		
5	Valve Assembly, Water — (includes Float)	02-2542-01	1
	attaching part, Index 5		
	Nut, Hex — (p/o Valve Assembly)	No Number	1
	* * *		
6	Plate, Evaporator (Holes drilled on both sides for attaching Sump Covers)	A29428-020	5
	* * *		
7	Sump Assembly (includes suction screen)	A29547-020	1
	* * *		
8	Water Tube, Sump	A29730-001	1
	* * *		
9	Clamp	02-1530-01	1
	* * *		
10	Cap, Sump	13-0796-01	1
	* * *		
11	Bracket, Bin Thermo	A30204-001	1
	* * *		
12	Bulb Holder	A29762-001	1
	* * *		
13	Cover, End Sump	02-2523-01	2
	* * *		
14	Cover, Sump	02-2544-01	2
	* * *		
15	Cover, Sump	02-2520-01	2
	* * *		
16	Plug-Rubber, Sump	13-0847-01	1
17	Plug, Drain		1

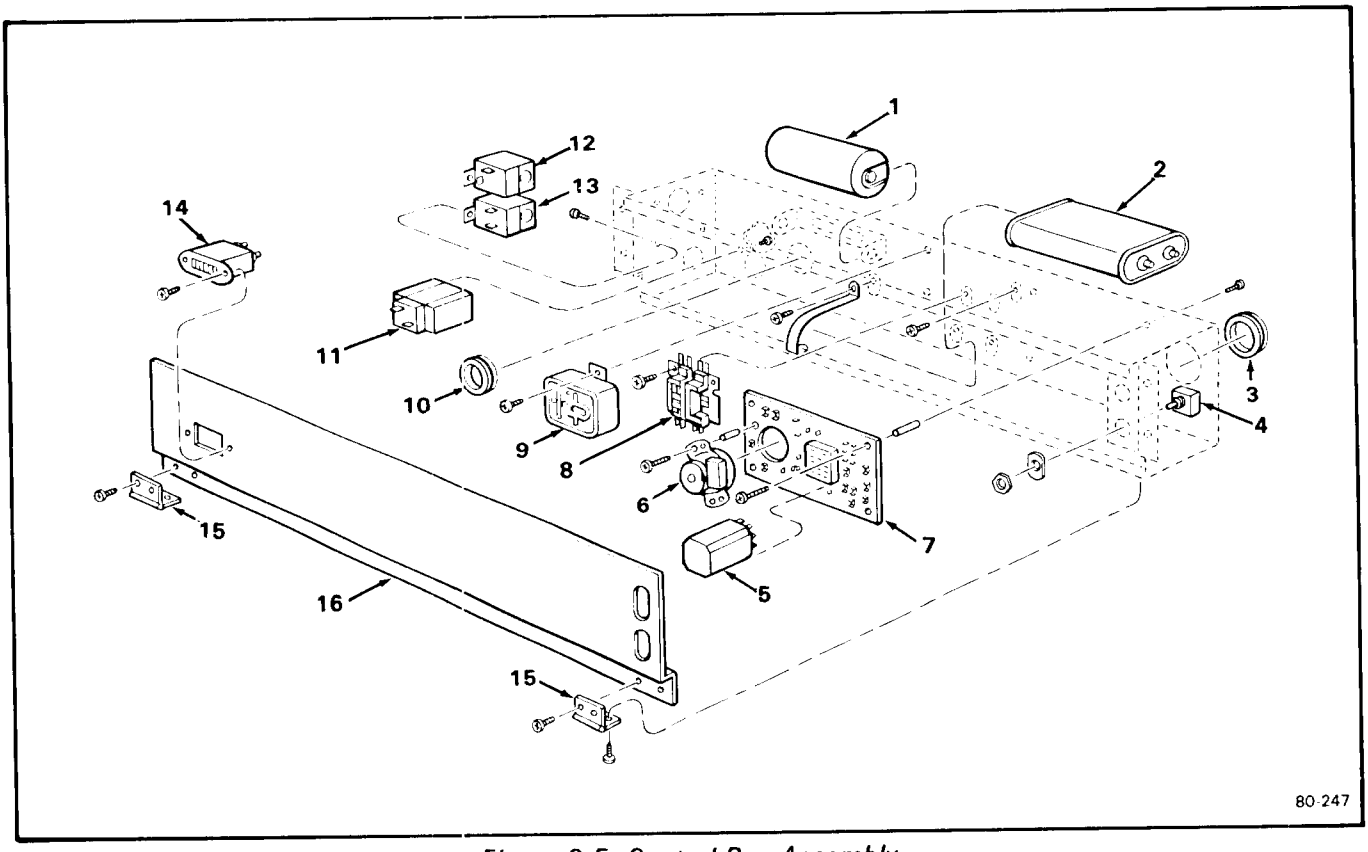

Figure 8-5. Control Box Assembly

INDEX NO.	DESCRIPTION (Air-Cooled: A/C, Water-Cooled: W/C)	A/C	W/C	PART NUMBER	PHASE 1 208 230 60	PHASE 3 208 220 60
	Control Box Assembly (See Figure 8-2 & 8-3 for next higher Assembly) * * *	X	X	No Number	Ref.	Ref.
1	Capacitor, Start (COPELAND Compressor Models)	X	X	18-1901-23	1	—
1	Capacitor, Start (TECUMSEH Compressor Models) * * *	X	X	18-1901-40	1	—
2	Capacitor, Run (COPELAND Compressor Models)	X	X	18-1902-45	1	—
2	Capacitor, Run (TECUMSEH Compressor Models)	X	X	18-1902-50	1	—
	attaching part, Index 2					
	Screw, No. 8-32 x 3/4 Phil Recess Pan Hd * * *			03-1403-21	1	—
3	Bushing, Snap * * *	X	X	12-1213-13	1	1
4	Switch, Toggle	X	X	12-0426-01	2	1
	Switch, Toggle — (Top switch/Compressor) * * *	X	X	12-2174-01	—	1

Figure 8-5. Control Box Assembly (Cont'd)

INDEX NO	DESCRIPTION Air-Cooled: A/C Water-Cooled: W/C	A/C	W/C	PART NUMBER	PHASE 1 208 230 60	PHASE 3 208 220 60
5	Relay	X	X	12-1879-02	1	1
	* * *					
6	Timer & Switch Assembly	X	X	12-1979-01	1	1
	attaching parts, Index 6					
	Stand-Off — 7/8-inch lg.	X	X	02-2242-01	2	2
	Screw, No. 6-32 x 1/4 Phil Recess Pan Hd	X	X	03-1403-02	4	4
	* * *					
7	Board Assembly, Circuit	X	X	12-1912-01	1	1
	attaching parts, Index 7					
	Stand-Off — 7/8-inch lg.	X	X	02-2242-01	5	5
	Screw, No. 6-32 x 1/4 Phil Recess Pan Hd	X	X	03-1403-02	5	5
	* * *					
8	Contactor	X	X	12-2037-01	1	—
	Contactor	X	X	12-0820-29	—	1
	attaching part, Index 8					
	Screw, No. 8-32 x 3/8 Phil Recess Pan Hd	X	X	03-1403-17	2	2
	* * *					
9	Relay, Potential	X	X	18-1903-34	1	—
	attaching part, Index 9					
	Screw, No. 6-32 x 3/8 Phil Recess Pan Hd	X	X	03-1403-04	1	—
	Nut, Speed — J-Type	X	X	03-1423-01	1	—
	* * *					
10	Bushing, Snap	X	X	12-1213-17	1	1
	* * *					
11	Control Pressure	—	X	11-0388-02	1	1
	attaching part, Index 10					
	Screw, No. 6-32 x 3/8 Phil Recess Pan Hd	—	X	03-1403-04	2	2
	* * *					
12	Thermostat, Bin	X	X	11-0419-01	1	1
13	Control, Cube Size	X	X	11-0351-02	1	1
	attaching parts, Index 12 & 13					
	Screw, No. 8-32 x 3/16 Phil Recess Pan Hd	X	X	03-1403-14	4	4
	* * *					
14	Meter, Hour	X	X	12-2058-01	1	1
	attaching part, Index 14					
	Lockwasher No. 4 (p/o Meter)	X	X	No Number	2	2

Figure 8-5. Control Box Assembly (Cont'd)

INDEX NO.	DESCRIPTION (Air-Cooled: A/C, Water-Cooled: W/C)	A/C	W/C	PART NUMBER	PHASE 1 208 330 60	PHASE 3 208 220 60
	Screw, No. 4-40 x 3/8 (p/o Meter)	X	X	No Number	2	2
	Nut, No. 4-40 Hex (p/o Meter)	X	X	No Number	2	2
	* * *					
15	Hinge	X	X	03-2607-01	1	2
	* * *					
16	Cover, Control Box	X	X	A29307-001	1	1
	attaching parts, Index 15 & 16					
	Screw, No. 4 x 3/8 T/F Tap	X	X	03-1404-01	8	8
	* * *					

CM1200C

TABLE OF CONTENTS

GENERAL INFORMATION & INSTALLATION
Introduction 3
Location and Leveling 4
Electrical Connections 5
Water Supply and Drain Connections 5
Final Check List 6

OPERATING INSTRUCTIONS
Start-Up 8
Adjustment of Cube Size 11
Operation -
Freezing Cycle 12
Harvest Cycle 13

COMPONENTS 14

ADJUSTMENT PROCEDURES
Cube Size Control 32
Timer and Switch Assembly 32
Water Regulator Assembly
(Water-Cooled Models) 33

REMOVAL AND REPLACEMENT PROCEDURES
Bin Thermostat Control 33
Compressor Assembly 33
Condenser (Air-Cooled Models) 33
Condenser (Water-Cooled Models) 34
Cube Size Control 34
Drier 34
Evaporator Plate Assembly 34
Fan Motor Assembly —
Air-Cooled Models — (Two) 35
Inlet Water Solenoid Valve Assembly 35
Sump Assembly 35
Water Distributor Tubes and Manifold Tubes 36
Water Pump Assembly 36
Water Regulator Assembly
(Water-Cooled Models) 36

SERVICE DIAGNOSIS 37

MAINTENANCE & CLEANING INSTRUCTIONS
General 39
Icemaker 39
Cleaning — Icemaker 40

LIST OF ILLUSTRATIONS

Specifications 2
CM1200C — Locational 3
Removing Shipping Supports and
Installing the Bin Thermostat Bracket 4
Mounting and Stacking Cubers 4
Installation, Electrical,
Water Supply and Drain Connection 5
Final Checklist 7
Timer Cam Positions 8
Operation 9
Ice Cube Size & Shape 10
Cube Size Control Adjustment 11
Freezing Cycle 12
Harvest Cycle 13

PARTS LIST & WIRING DIAGRAMS
(Printed in Yellow)

PARTS LIST:
Cabinet Assembly 16
Refrigeration Components and BH750 Bin .. 18
Major Assemblies (Air-Cooled). 20
Major Assemblies (Water-Cooled) 21
Water System 22
Control Box Assembly 24

WIRING DIAGRAMS
CM1200AE-9C — Air-Cooled —
(208-220/60/3) 26
CM1200WE-9C — Water-Cooled —
(208-220/60/3) 28
CM1200WE-31C — Water-Cooled —
(208-230/60/1) 27
CM1200AE-31C — Air-Cooled —
(208-230/60/1) 29

Component Description 31
Timer and Switch Assembly 32
Maintenance and Cleaning 39
Cleaning Water System 40

THIS PAGE
INTENTIONALLY
LEFT BLANK

CM1200C MODULAR CONTOUR CUBER

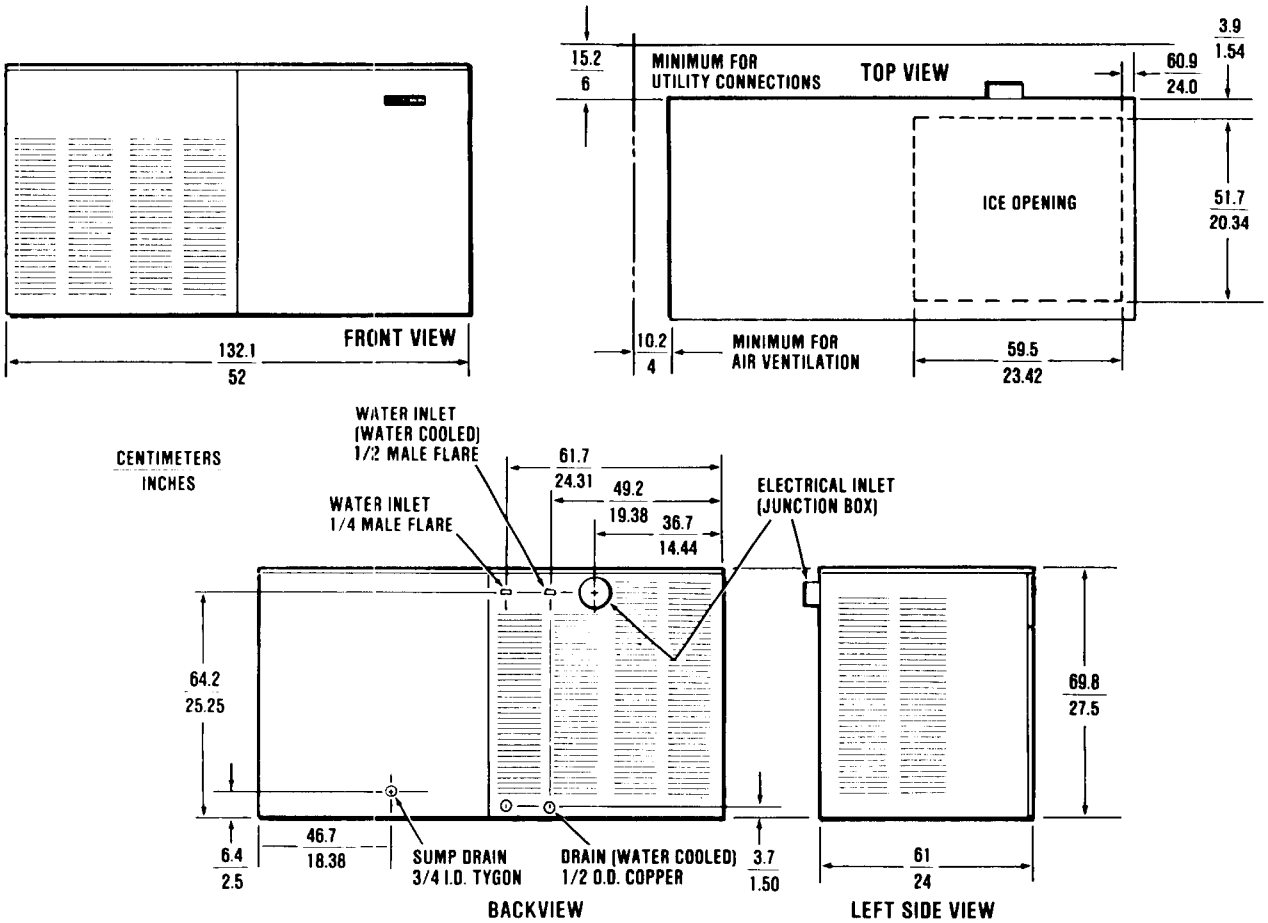

This product qualifies for the following listings:

SPECIFICATIONS

Model Number	Dimensions H" x W" x D"	Cond Unit	Finish **	Basic Electrical	Comp. H.P.	Run. Amps.	Max. Oper. Amps.	No. of Wires	Min. Circuit Ampacity †	Max. Fuse Size	Shpg. Wt. lbs./kg.
CM1200AE-9C	28 x 52 x 24	Air	ES	115/208-220/60/3	1.5	9.0	10.8	4	13.1	15	375/170
CM1200AE-31C	28 x 52 x 24	Air	ES	115/208-230/60/1	1.5	13.6	14.9	3	18.1	20	375/170
CM1200WE-9C	28 x 52 x 24	Water	ES	115/208-220/60/3	1.5	7.2	9.1	4	9.2	15	375/170
CM1200WE-31C	28 x 52 x 24	Water	ES	115/208-230/60/1	1.5	11.6	14.0	3	17.6	20	375/170

** (ES) Sandlewood, Leathergrain embossed steel with high gloss baked enamel finish.

† Use this value to determine minimum wire size as per National Electric Code Standards.

OPTIONAL STAINLESS STEEL PANEL KIT

SPKCM1200C contains top, front and 2 end panels. Not factory installed.

IMPORTANT OPERATING REQUIREMENTS

	MINIMUM	MAXIMUM
Air Temperatures	50° F (10.0° C)	100° F (37.7° C)
Water Temperatures	40° F (4.4° C)	100° F (37.7° C)
Water Pressures	20 lbs. gauge	120 lbs. gauge
Electrical Voltage Variation		
Voltage rating specified on nameplate	-10%	+10%

Extended periods of operation exceed ng these limitations constitutes misuse under the terms of Scotsman Manufacturer's Limited Warranty, resulting in a loss of warranty coverage.

STORAGE BIN

The CM1200 stacks onto Scotsman Bin Model BH750.

We reserve the right to make product improvements at any time. Specifications and design are subject to change without notice.

INTRODUCTION

These instructions provide the specifications and the step-by-step procedures for the installation, start up and operation for the Scotsman Model CM1200C Modular Cuber.

The Model CM1200C Modular Cubers are quality designed, engineered and constructed, and are thoroughly tested icemaking systems, providing the utmost in flexibility to fit the needs of a particular user.

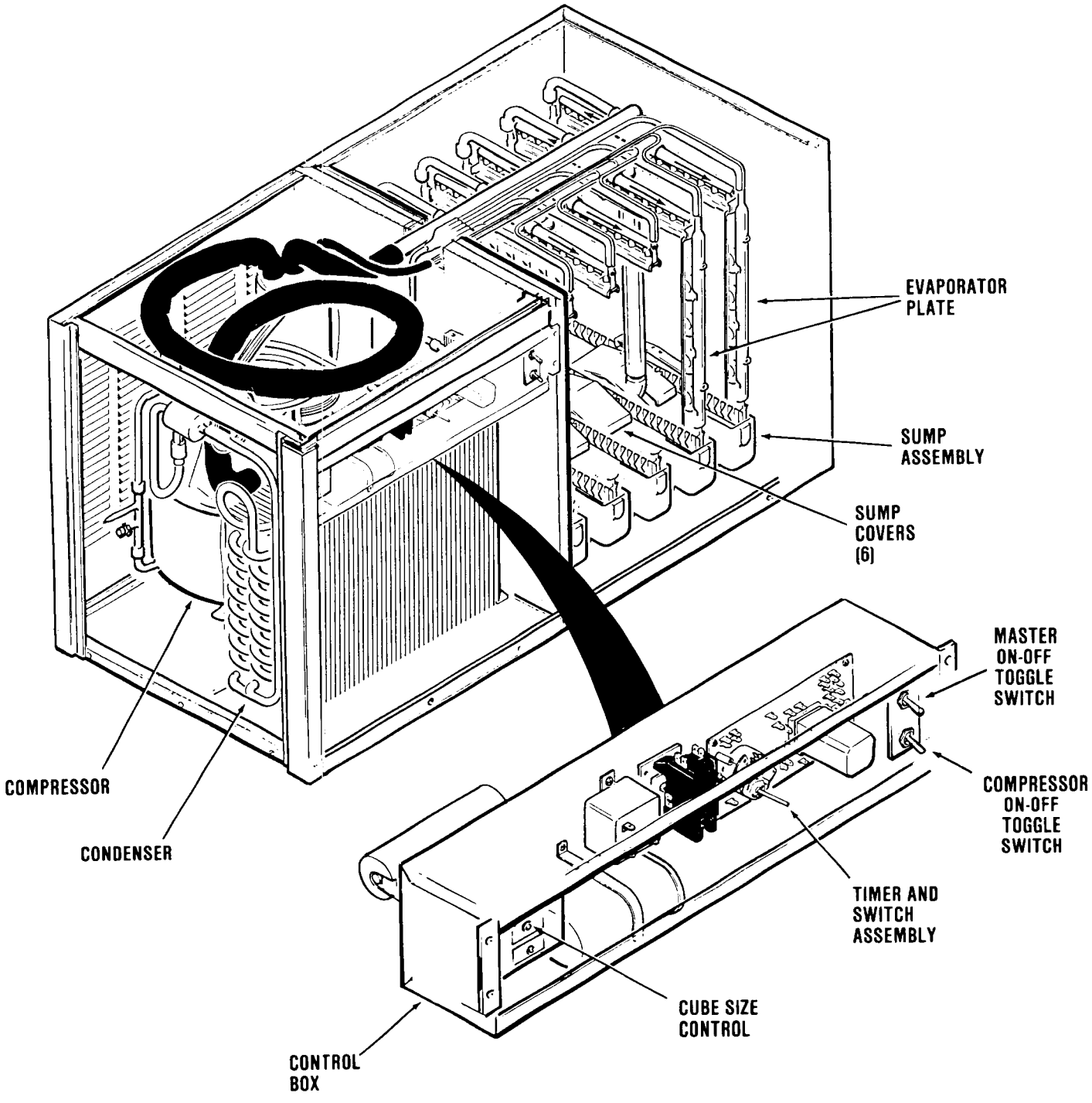

CM1200C — Component Location

LOCATION & LEVELING

1. Position the Model BH750 Bin in the selected location, which should have a minimum room temperature of 50-degrees F., and maximum room temperature of 100-degrees F. Level the bin, adjusting the leg levelers in both the front-to-rear and side-to-side directions. Select a well-ventilated location for the air-cooled models.
2. Inspect the bin top mounting gasket, which should be flat, with no wrinkles, to provide a good water seal when the CM1200 Cuber is installed on top of the bin.
3. Install the CM1200 Modular Cuber on top of the BH750 Bin, using care to be sure a good seal is made between the two cabinets. Align the holes in the bottom rear of the CM1200 cabinet to mate with the two mouning straps on the top rear of the BH750 Bin.
4. Use two bolts retained from the removal of the holddown straps during unpacking, to secure the mounting straps to the CM1200 in the two holes used for the holddown straps. When alignment and leveling are completed, tighten the bolts to secure the mounting straps.
5. Remove nylon straps securing bin thermostat bracket to the front evaporator support and carefully reposition bin thermostat bracket on the back wall of the freezing section of the cabinet and attach using the second and third screws from the left corner. When properly installed, the capillary tube is insulated from the dividing wall to the bin thermostat bracket and the bin thermo bracket hangs DOWN, below the bottom of the icemaker chassis into the bin.
6. Remove seven shipping supports from the evaporator plates.

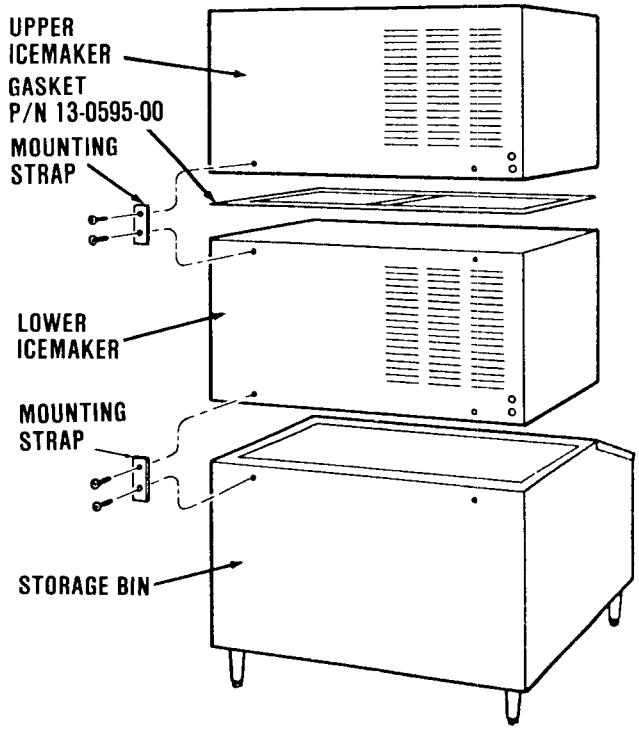

Mounting and Stacking Cubers

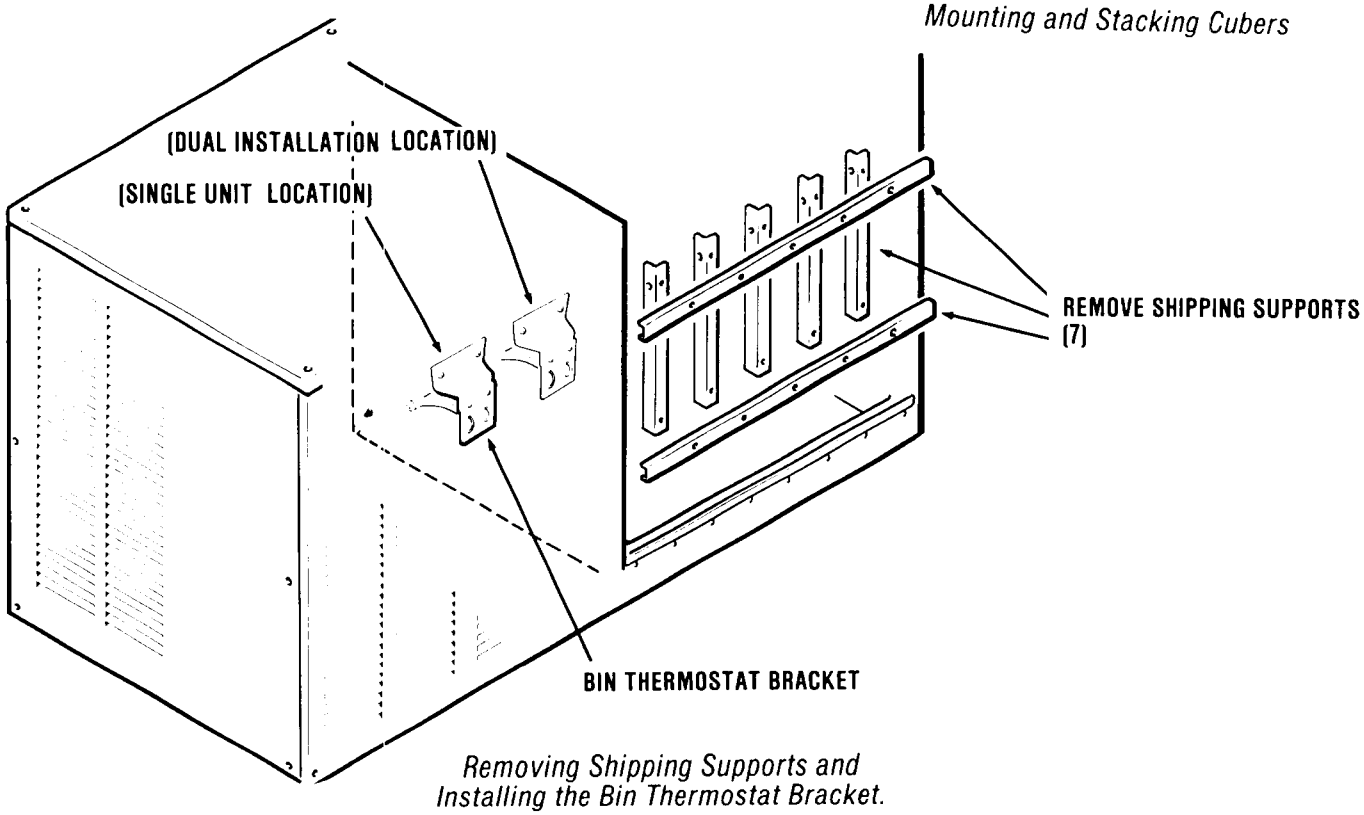

Removing Shipping Supports and Installing the Bin Thermostat Bracket.

ELECTRICAL CONNECTIONS

SEE NAMEPLATE for current requirements to determine wire size to be used for electrical hookup. The cuber requires a solid chassis-to-earth ground wire. See Wiring Diagram.

Be certain the cuber is connected to its own electrical circuit and individually fused. Voltage variation should not exceed ± ten percent of the nameplate rating, even under starting conditions. Low voltages can cause erratic operation and may be responsible for serious damage to the icemaker.

All external wiring should conform to the national, state and local electrical code requirements. Usually an electrical permit and services of a licensed electrician will be required.

WATER SUPPLY AND DRAIN CONNECTIONS

AIR-COOLED MODELS: The recommended water supply line is a 3/8-inch O.D. copper tubing with a minimum operating pressure of 20 PSIG and a maximum of 120 PSIG.

Connect to cold water supply line with standard plumbing fittings, with a shutoff valve installed in an accessible place between the water supply and the cuber. In some cases a plumbing permit and services of a licensed plumber will be required.

WATER-COOLED MODELS: On water-cooled models, a separate cold water supply inlet is required, to be connected to a second 1/2-inch O.D. male flare fitting at the rear of the cabinet. Additional drain lines are required to drain the water-cooled condenser.

DRAIN CONNECTIONS: All drains are gravity type and must have a minimum of 1/4-inch fall per foot on horizontal runs. The drains to be installed to conform with the local plumbing code. Install separate drain line for discharge water from the water-cooled condenser. Install a vertical open vent on drain line to ensure good venting. The drain receptacle should be an open, trapped or vented construction.

Recommended bin drain is 5/8-inch O.D. copper tubing and should be vented and run separately.

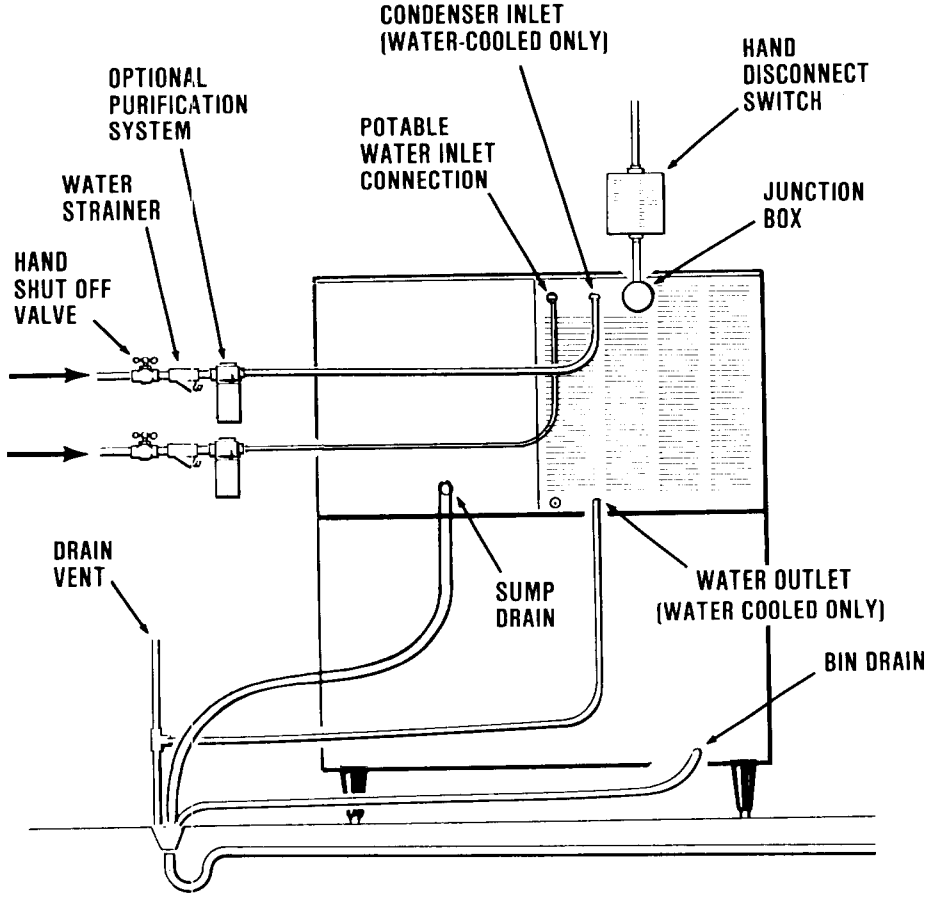

OPEN TRAPPED OR VENTED DRAINS — ALL DRAINS MUST HAVE 1/4 PER INCH FALL

Installation, Electrical, Water Supply and Drain Connection

FINAL CHECK LIST

1. Is the cabinet/bin level? (IMPORTANT)
2. Is the cuber in a location where ambient temperatures are a minimum of 50-degrees F. all year around and do not exceed a maximum of 100° F?
3. Is there at least a six-inch clearance behind and around the cabinet for all connections and for proper air circulation?
4. Have all electrical and piping connections been made?
5. Has the electrical power supply wiring been properly connected, and the voltage tested and checked against the nameplate rating? Has proper chassis-to-earth ground been installed?
6. Is the water supply line shutoff valve installed and opened and has the inlet water supply pressure been checked to ensure a minimum of 20 PSIG?
7. Check the wood blocks, foam packing and front brace supports have been removed from the evaporator plates.
8. Check that the reservoir is properly secured to the bottom of the evaporator plates.
9. Check that the sump covers are properly secured to the bottom of the evaporator plates.
10. Have the compressor holddown bolts been checked to be sure the compressor is snug on the mounting pads?
11. Check all refrigerant lines and conduit lines to guard against vibration and possible failure.
12. Has the bin thermostat bracket been properly installed?
13. Has the cuber and the bin been wiped clean with clean damp cloths?
14. Has the owner/user been given the User Manual and instructed on how to operate the icemaker and the importance of periodic maintenance?
15. Has the owner/user been given the name and telephone number of the Authorized Scotsman Distributor or Service Agency serving him?
16. Has the Manufacturer's Registration Card been properly filled out? Check for correct Model and Serial Numbers from nameplate, then mail the completed card to the SCOTSMAN factory.

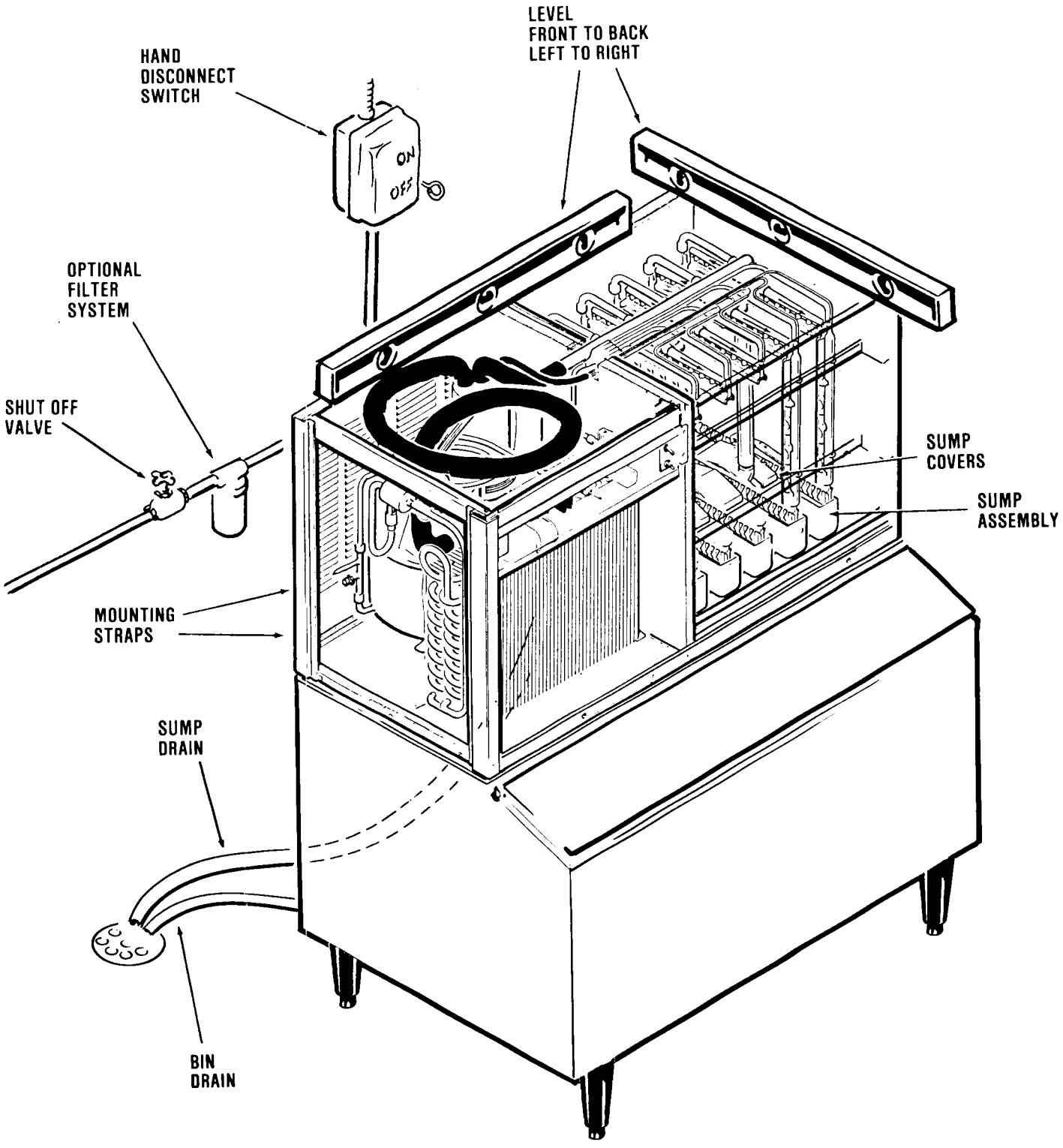

Final Checklist

OPERATING INSTRUCTIONS

START—UP

1. OPEN the water supply line shutoff valve.
2. Check that the two toggle switches, the MASTER ON-OFF toggle switch and the COMPRESSOR ON-OFF toggle switch are in the OFF position, on the control box.
3. Remove screws and remove both front panels and the left side panel.
4. Remove two screws at the top of the control box and OPEN the hinged cover downward.
5. Inside the control box is the shaft of the timer and the switch assembly. Rotate the shaft of the timer and switch assembly clockwise until the actuator arm on the microswitch drops off outer cam into cam slot. See Timer Cam Positions. An audible click can be heard, but in a noisy area, look at the cam and switch to observe the event.

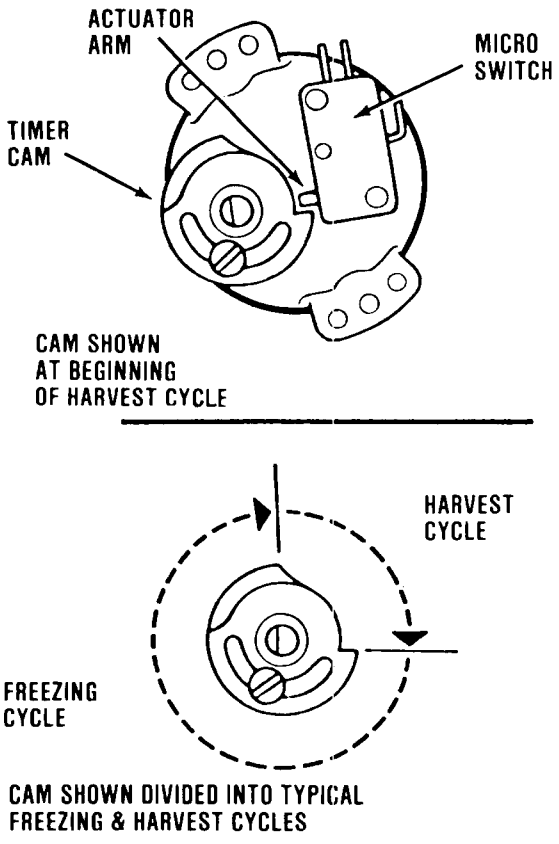

Timer Cam Positions

6. Move the master ON-OFF toggle switch, the bottom toggle switch, to the ON position.
7. Observe water fill cycle: Water inlet solenoid valve OPENS, incoming water flows from the valve through the tubing, the reservoir fills and excess water is overflowed through the stand pipe. This cycle will take about three minutes. Timer will close the water inlet solenoid valve and the water fill cycle is complete.

   Advancing the shaft of the timer and switch assembly through the remaining cycle into a new harvest cycle, restarts the timer and allows a check that: Water inlet solenoid valve OPENS and the reservoir overflows through the stand pipe. Water inlet valve CLOSES, stopping water overflow.
8. Check that the water cascades down over each cube mold and into the sump.
9. When the second cycle is completed, move the compressor ON-OFF toggle switch, to the ON position.
10. Check operation of the freezing cycle:

    The compressor is operating.

    The water pump is operating, as seen by water moving through the two tygon tubes between evaporator plates, up to the water manifold at the top of the evaporator plates, where water is uniformly dispensed and cascades down both sides of each evaporator plate and drains back into the sump assembly for recirculation.

    The icemaking process begins; feeling the metal parts of the evaporator plates reveals cold temperature, very shortly ice begins to form. Tubing will become frosted at the top of the evaporator plates.

    Freezing time will range between 16 and 19 minutes in a 70-degree F. ambient temperature. Longer time for temperatures above 70-degrees F., and shorter time required when temperatures are below 70-degrees F. Average complete cycle range is about 18 to 22 minutes.

(Continued on page 10)

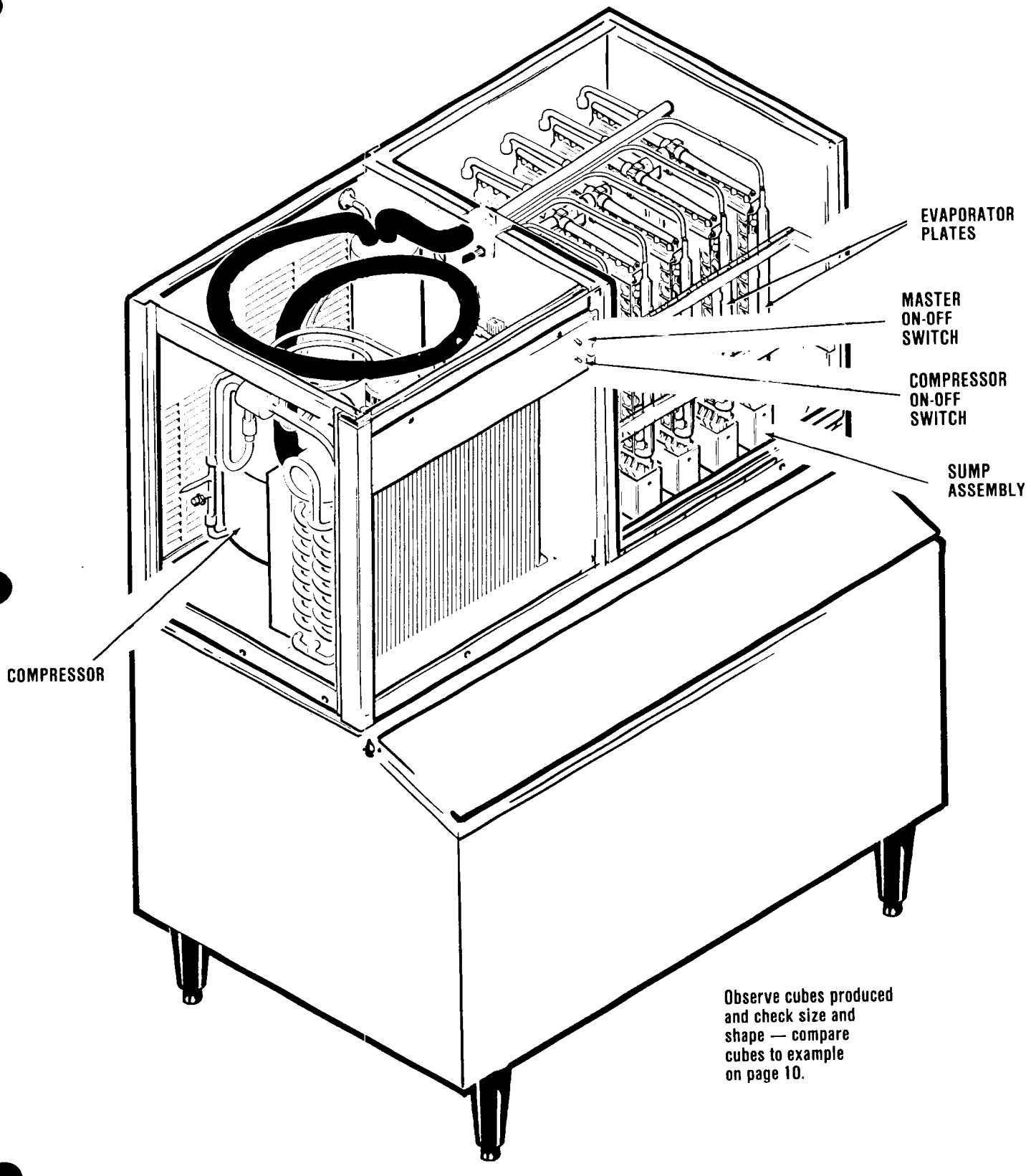

Observe cubes produced and check size and shape — compare cubes to example on page 10.

11. Observe first ice cube harvest:

Check size of SCOTSMAN CONTOUR CUBE

Unlike other SCOTSMAN cubes which are made in a definite molded shape, contour cubes are produced in indentations and many shapes and sizes of contour cubes may be produced — only ONE size and shape combination is correct.

An under-charged refrigeration system produces smaller cubers at the top of the evaporator plate and large cubes at the bottom. Charge system per NAMEPLATE specifications.

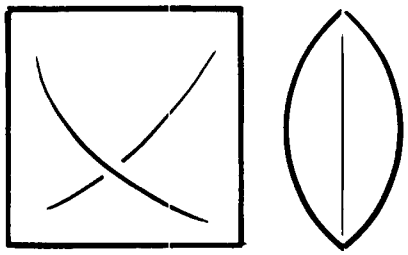

TOO LARGE

Too LARGE requires longer freezing cycle — may cause evaporator freeze ups. Adjust cube size control to produce a smaller cube.

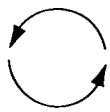

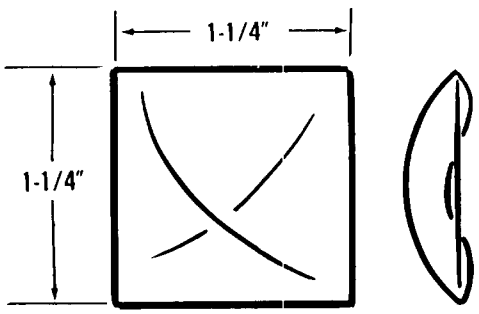

PROPER SIZE AND SHAPE

PROPER SIZE AND SHAPE of the contour cube. Icemaker operates at peak efficiency when a cube this size and shape is produced. A finely tuned system produces vertical strips of ice which easily break when they fall.

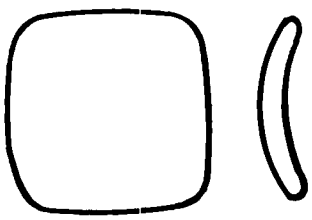

TOO SMALL

TOO SMALL. Adjust cube size control. Any cubes this size or shape are too small and cause excessive cycling to produce an equal quality of production. Can also lead to freeze up problems due to poor harvest.

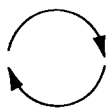

ADJUSTMENT OF CUBE SIZE

To produce LARGER sized ice cubes:

Locate cube size control, in the top right section of the control box.

Rotate the adjusting screw one-eighth of a turn CLOCKWISE to COLDER.

Observe size of ice cubes in the next two cube harvests and adjust in one-eighth turn or less increments, until desired ice cube size is achieved.

To produce SMALLER sized ice cubes:

Locate cube size control, in the top right section of the control box.

Rotate the adjusting screw one-eighth of a turn COUNTERCLOCKWISE to WARMER.

Observe size of the ice cubes in the next two ice cube harvests and adjust in one-eighth turn increments, until desired ice cube size is achieved.

Check texture of ice cubes; when cloudy throughout, suggests icemaker is operating short of water; or, possibly an extreme problem water condition exists, wherein filtering or purifying equipment is recommended. Contact SCOTSMAN ICE SYSTEMS, Service Department, Albert Lea, Minnesota 56007 for further details.

12. With the icemaker in the harvest cycle; hold ice against the bin thermostat control bulb to test shutoff, which should cause the icemaker to shut OFF at the END OF THE HARVEST CYCLE.

    Within minutes after the ice is removed from the sensing bulb, the bulb will warm up and cause the icemaker to restart. This control is factory set and should not be reset until testing is performed.

13. Replace control box cover and all cabinet panels and screws.

14. Thoroughly explain to the owner/user the significant specifications of the icemaker, the start up and operation, going through the procedures in the operating instructions. Answer all questions about the icemaker by the owner; and inform the owner of the name and telephone number of the authorized SCOTSMAN Distributor, or service agency serving him.

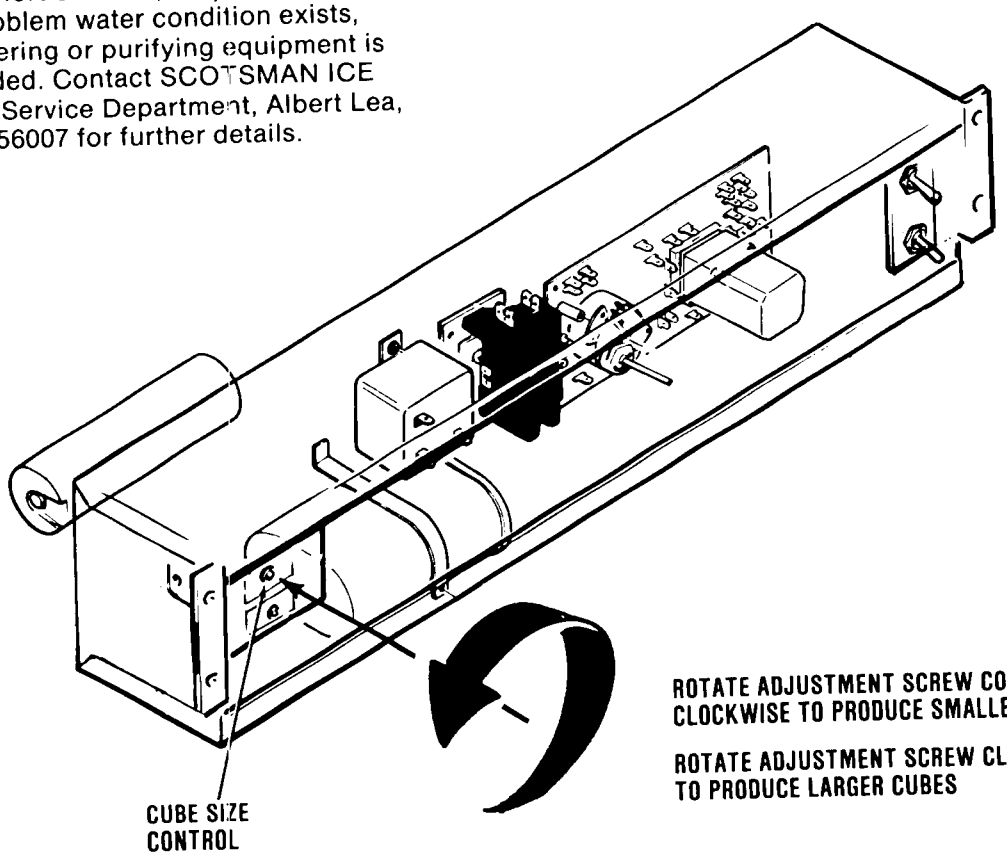

Cube Size Control Adjustment

OPERATION

FREEZING CYCLE

Water from the sump in the reservoir of the sump assembly is pumped to the water distributor system, at the top of the evaporator plates. From the water distributors at the top of each evaporator plate, the water cascades by gravity over all cells of the plates and to the sump assembly below for recirculation. At the beginning of the freezing cycle, the electrical circuit is completed to the compressor and the water pump. The water pump operates continuously, through both the freezing cycle and the harvest cycle.

In the compressor, gaseous refrigerant is compressed and discharged into the condenser, as a high pressure, high temperature gas. The refrigerant is cooled by either air or water, and condenses into a high pressure, medium temperature liquid. This liquid refrigerant is then distributed through the capillary tubes where the temperature and pressure of the liquid refrigerant are lowered and enters the evaporator plates. The refrigerant is warmed by the water cascading over the Evaporator plates and begins to boil off and become a gas. The refrigerant next travels through the accumulator and the heat exchange area of the suction line where any remaining liquid refrigerant boils off and returns to the compressor as a low pressure, low temperature gas, and the cycle starts again.

During the freezing cycle, the hot gas solenoid valve is CLOSED and the water inlet solenoid valve is CLOSED.

When the ice cubes are partially formed, the cube size control will sense the temperature at which it is preset to CLOSE. This will complete the electrical circuit to the timer. The timer then controls the remainder of the freezing cycle.

The timer will keep the icemaker operating in the freezing cycle for a selected length of time. This will give the ice cubes time to fully form. After that selected length of time, the timer will switch the icemaker into the harvest cycle, through the contacts of the timer assembly microswitch.

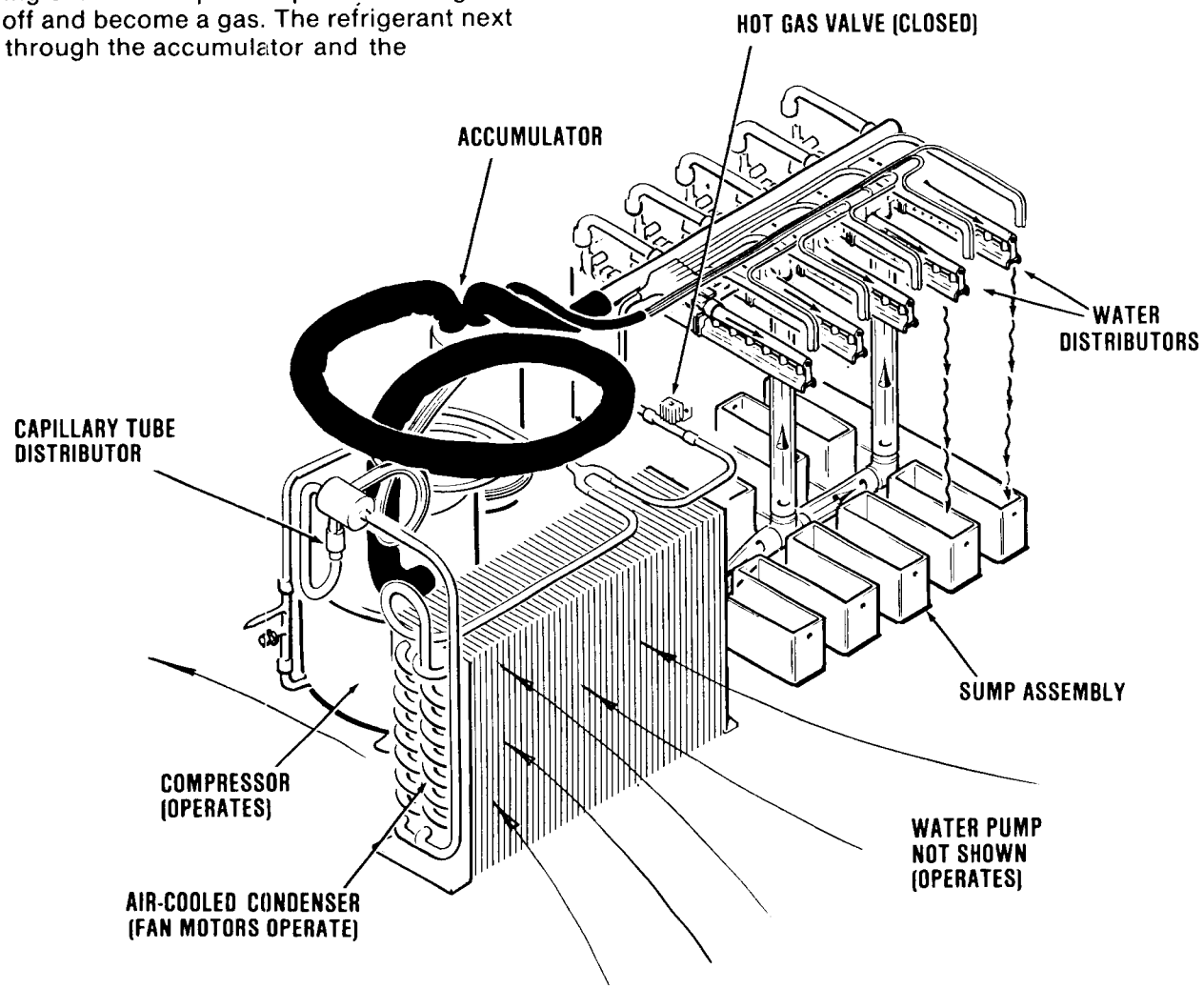

Freezing Cycle

HARVEST CYCLE

When the timer switches the icemaker into the harvest cycle, high pressure, high temperature gaseous refrigerant being discharged from the compressor is diverted from the condenser through the hot gas solenoid valve into the evaporator plates. During this cycle, the gaseous refrigerant bypasses the condenser and the capillary tube.

In the electrical circuit, both the compressor and the water pump are operating and the hot gas solenoid valve is energized and OPEN and the water inlet solenoid valve is OPEN.

The finished ice cubes are released from the sides of the evaporator plates, by the warming effect of the hot gas flowing through the evaporator plates and the water cascading over the ice cubes. The released ice cubes drop into the ice storage bin below.

At the end of the harvest cycle, the timer cam will push the actuator arm of the microswitch IN. If the bin thermostat is still CLOSED, a whole new cycle will begin. If the bin thermostat is OPEN, the icemaker will shut OFF, at this time.

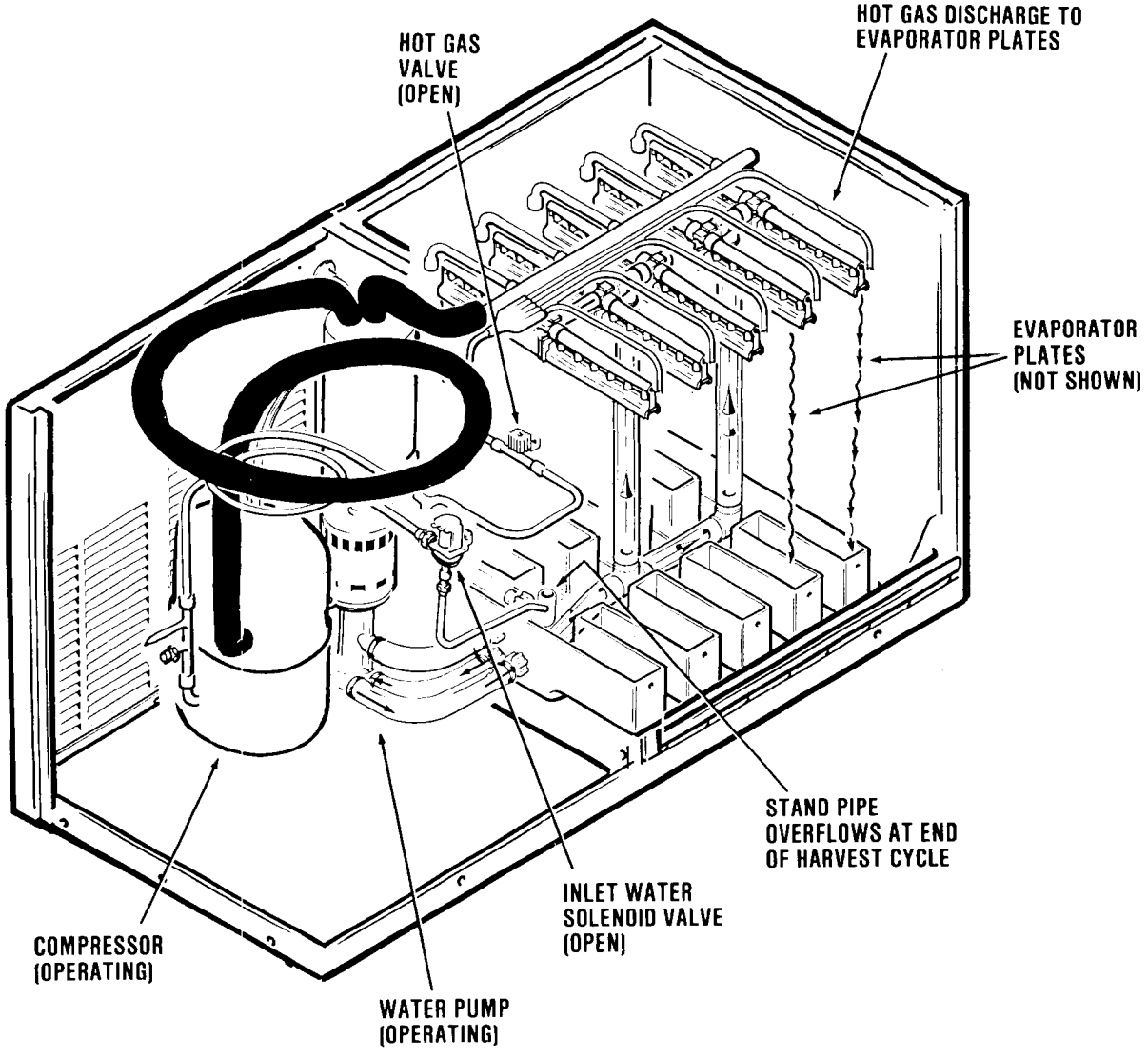

Harvest Cycle

COMPONENT DESCRIPTION

COMPONENT DESCRIPTION

BIN THERMOSTAT CONTROL

The bin thermostat control is located in the left end of the control box. The sensing capillary tube of the control is routed from the rear of the control box through a grommet in the lower back corner of the left wall of the evaporator section, downward to the bin thermo control bracket hanging in the ice storage bin. The bin thermostat control functions to automatically shut OFF the icemaker, when the ice storage bin is filled and ice contacts the capillary tube. It also signals the RESTART of the icemaker, when the capillary tube starts to warm up, after ice has been removed from the bin.

Adjustments to the bin control setpoint should only be made if the ice machine shuts off prematurely or ice fills up into the evaporator area and adjust only in increments of one eighth turn or less.

COMPRESSOR CONTACTOR

The compressor functions to carry the compressor line current. The contactor is wired so any control in the pilot circuit, such as the bin thermostat and high pressure controls, etc., will cause the holding coil to be de-energized, when the control contact OPENS, thereby breaking the circuit to the compressor.

CUBE SIZE CONTROL

The temperature sensing cube size control affects the length of the freezing cycle prior to initiating the finishing timer. The cube size control closes its contacts when the evaporator reaches a preset temperature, starting the finishing timer. A variation in either ambient air or incoming water temperature will affect the efficiency of the refrigeration system. This will vary the length of time it takes the evaporator to reach the temperature at which the cube size control is preset to CLOSE; which, in turn, will affect the overall cycle time.

See *Cube Size Adjustment* BEFORE attempting to adjust the control.

FINISH RELAY

The multi-function, three pole, double-throw, plug-in relay is installed directly into a receptacle on the printed circuit board in the control box. The relay functions, in part, to by-pass the bin thermostat control to prevent the icemaker from shutting OFF, when a filled-bin condition occurs, during the freezing cycle. The by-pass action serves to ensure full-sized ice cubes with each harvest cycle; and, to prevent short cycling on the bin thermostat control.

FINISHING TIMER — Timer & Switch Assembly.

The function of the finishing timer begins when activated by the cube size control. The outer surface, or large diameter lobe of the timer cam, determines the timer cycle to finish freezing the ice cubes, while the inner surface, or small diameter lobe, determines the time cycle for the harvest sequence. All electrical circuitry is connected through the printed circuit board, the finishing timer and the single-pole, double-throw microswitch. The microswitch is actuated by a cam assembly directly connected to the timer motor. The timer cam can be adjusted to vary the defrost line, as required.

HIGH PRESSURE CONTROL — Water-Cooled Model

The high pressure control, a safety control is factory set at 250 PSIG. The control functions as a precautionary device, to shut OFF electrical power to the icemaker, should a loss of water occur to the water-cooled condenser.

HOT GAS SOLENOID VALVE

The hot gas solenoid valve functions only during the harvest cycle, to divert the hot discharge gas from the compressor, bypassing the condenser and capillary tube, for direct flow in the evaporator plates assembly to release ice cubes from the ice cube molds. The hot gas solenoid valve is comprised of two parts, the body & plunger and the coil & frame assemblies. Installed in the discharge line of the compressor, the energized solenoid coil lifts the valve stem within the valve body, to cause the hot discharge gas to be diverted when the finishing timer has advanced to the start of the harvest cycle.

WATER INLET SOLENOID VALVE

The water inlet solenoid valve functions to fill the sump assembly with water and overflow out the overflow standpipe located at the side of the sump. This action rinses the sump at the end of each harvest cycle.

WATER DISTRIBUTION SYSTEM

The water distribution system functions to evenly supply water to all cells of the evaporator plates. The water pump pumps water from the sump up two vertical tygon tubes to two tees. From therer water is channeled through water manifolds to ten water distributors, two atop each evaporator plate, and distributed evenly down both sides of each evaporator plate.

(Continued on page 31)

THE PARTS ILLUSTRATIONS AND PARTS LISTS

GENERAL

This section contains the Parts illustrations and the Parts List for each of the major assemblies of the Model CM1200C Cuber.

A *No Number* designation, when used in the Part Number Column indicates the unit is not available from SCOTSMAN as an assembly. This designation is used only for the convenience and clarity of division in cataloging.

HOW TO ORDER PARTS OR ASSEMBLIES

When ordering parts or assemblies, to avoid costly delays and errors in shipment, give the part number, the complete description shown in the list, and the quantities of each part or assembly required. Also include the Model name, the serial number of the icemarker for which the part is required, and for parts which require color matching, the color of the Cabinet.

All Part Numbers have TEN DIGITS (spaces), required for use in the Computer System. BE SURE to fill in ALL SPACES in the CATALOG NUMBER column, on the Parts Order form.

Enter the QUANTITY of the Parts ordered, in the last digit column under the QUANTITY column heading, the one under the small 55 number, for parts from 1 thru 9. For 10 or more parts use two columns.

To be sure you receive the proper parts in the proper quantities. ALWAYS use the PART NUMBERS and DESCRIPTIONS given in the Parts Manuals.

Write an order for the Part. (Use SCOTSMAN Parts Order Form DN103). Be sure to include:

- ☐ Distributor Name.
- ☐ (Use for DROP-SHIP order ONLY.)
- ☐ Distributor Purchase Order Number.
- ☐ Carrier.
- ☐ How shipped (Truck, Rail, UPS, etc.)
- ☐ Date ordered.
- ☐ Part Catalog Number. (Use full TEN digits (spaces) listed in Parts Manual, including dashes between numbers.)
- ☐ Description - as listed in Parts Manual.
- ☐ Quantity - number of parts ordered. (Use far right column.)

CM1200C

WIRING DIAGRAMS

This section is provided as an aid in understanding the electrical circuitry of the modular cuber:

WARNING

When conducting a continuity check of the modular cuber:

1. **Disconnect the main power source.**
2. **DO NOT use an incandescent lamp or jumper wire, conduct all tests with a volt-ohm-meter.**

The wiring diagrams in this Section are:

CM1200-9C 115/208-230/60/3 - Air-Cooled

CM1200-9C 115/208-230/60/3 - Water-Cooled

CM1200-31C 115/208-230/60/1 - Air-Cooled

CM1200-31C 115/208-230/60/1 - Water-Cooled

CABINET ASSEMBLY

ITEM NUMBER	PART NUMBER	DESCRIPTION
1	03-1404-09	(6) Screws, 8 x 1/2
2	03-1407-03	(2) Washers
3	A30744-001	Panel Top (Enamel)
	A30744-002	Panel Top (Stainless Steel)
4	03-1404-10	Screw, 8 x 1/2 (Stainless Steel)
5	*No Number*	Liner Guide
6	A30329-001	Liner Top
7	*No Number*	Upper Front Brace
8	A29164-003	Right Panel (Enamel)
	A29164-002	Right Panel (Stainless Steel)
9	A29204-001	Brace Front
10	03-1404-10	Screw 8 x 1/2 (Stainless Steel)
11	02-2532-01	Liner Cap
12	*No Number*	Liner Guide
13	13-0595-00	Gasket — Foam
14	02-2795-01	Liner Front Panel
15	03-0271-00	(2) Speed Clip
16	A30743-001	Panel, right front (Enamel)
	A30743-001	Panel, right front (Stainless Steel)
17	15-0711-01	Emblem
18	03-1404-19	(2) Screws, 8 x 1
19	03-1417-03	(2) Washers
20	03-1404-10	(8) Screws, 8 x 1/2 (Stainless Steel)
21	A30742-001	Panel, left front (Enamel)
	A30742-002	Panel, left front (Stainless Steel)
22	03-1404-19	(2) Screws 8 x 1
23	03-1417-03	(2) Washers
24	*No Number*	Base Fab Assembly
25	02-2533-01	Liner Left Side
26	*No Number*	(4) Bushing
27	*No Number*	(2) Bushing
28	03-1407-03	(2) Washer
29	03-1404-10	(4) Screws 8 x 1/2 (Stainless Steel)
30	A29168-003	Panel, left side (Enamel)
	A29168-002	Panel, left side (Stainless Steel)
31	03-1404-09	(4) Screws, 8 x 1/2
32	A30604-001	Panel, left back
33	*No Number*	Retainer
34	03-1404-09	(4) Screws 8 x 1/2
35	02-2531-01	Liner back

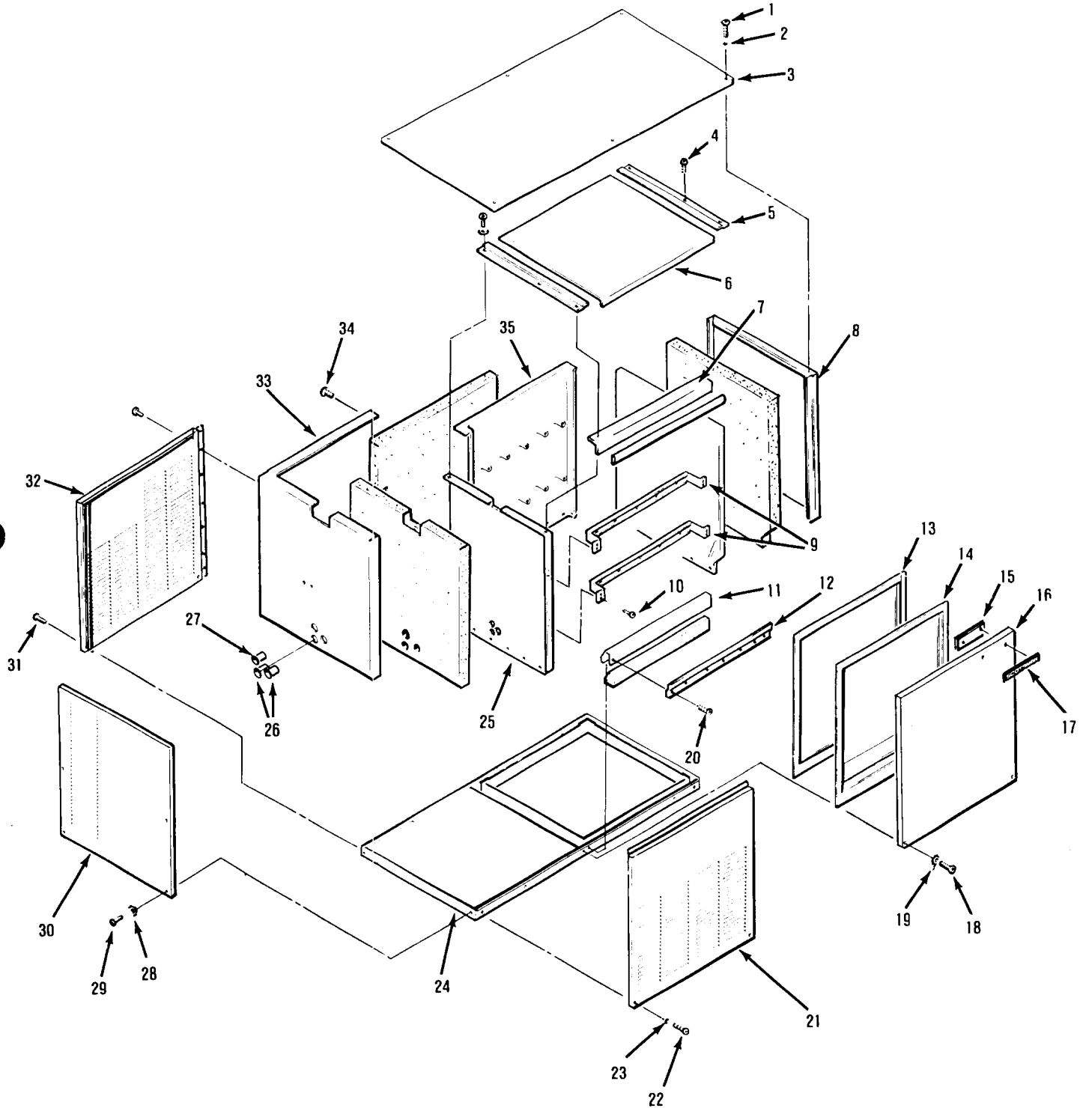
1
2
3
4
5
6
7
8
9
10
11
12
13
14
15
16
17
18
19
20
21
22
23
24
25
26
27
28
29
30
31
32
33
34
35

REFRIGERATION COMPONENTS
COMMON TO AIR-COOLED OR WATER-COOLED MODELS

ITEM NUMBER	PART NUMBER	DESCRIPTION
1	A30325-020	Heat Exchange F/A
2	A29260-001	Hot Gas Tube Assembly
3	12-2146-01	Hot Gas Valve
4	*No Number*	Evaporator Plate Adaptor
5	A30296-020	Evaporator Plates
6	18-5100-51	Grommet
7	18-5100-50	Sleeve
8	03-1407-07	Washer
9	03-1405-20	Screw 5/16-18 x 1 1/2
10	18-5100-02	Compressor 208-230/60/1
	18-5100-03	Compressor 230/60/3
11	02-2426-02	Drier
12	03-1404-09	Screw, 8 x 1/2

BH750 BIN (Not Shown)

ITEM NUMBER	PART NUMBER	DESCRIPTION
1	A29210-001	Left Door Hinge
2	A29210-002	Right Door Hinge
3	A29213-001	Left Bin Hinge
4	A29213-002	Right Bin Hinge
5	A29216-001	Door
6	A29407-001	Door Frame
7	02-2380-01	Hinge Bushing
8	02-2380-02	Spacer
9	02-2806-01	Shoulder Screw
10	03-1539-09	E Ring
11	KLP2	Enamel Legs (Set of 4)
12	KLP2S	Stainless Steel Legs (Set of 4)

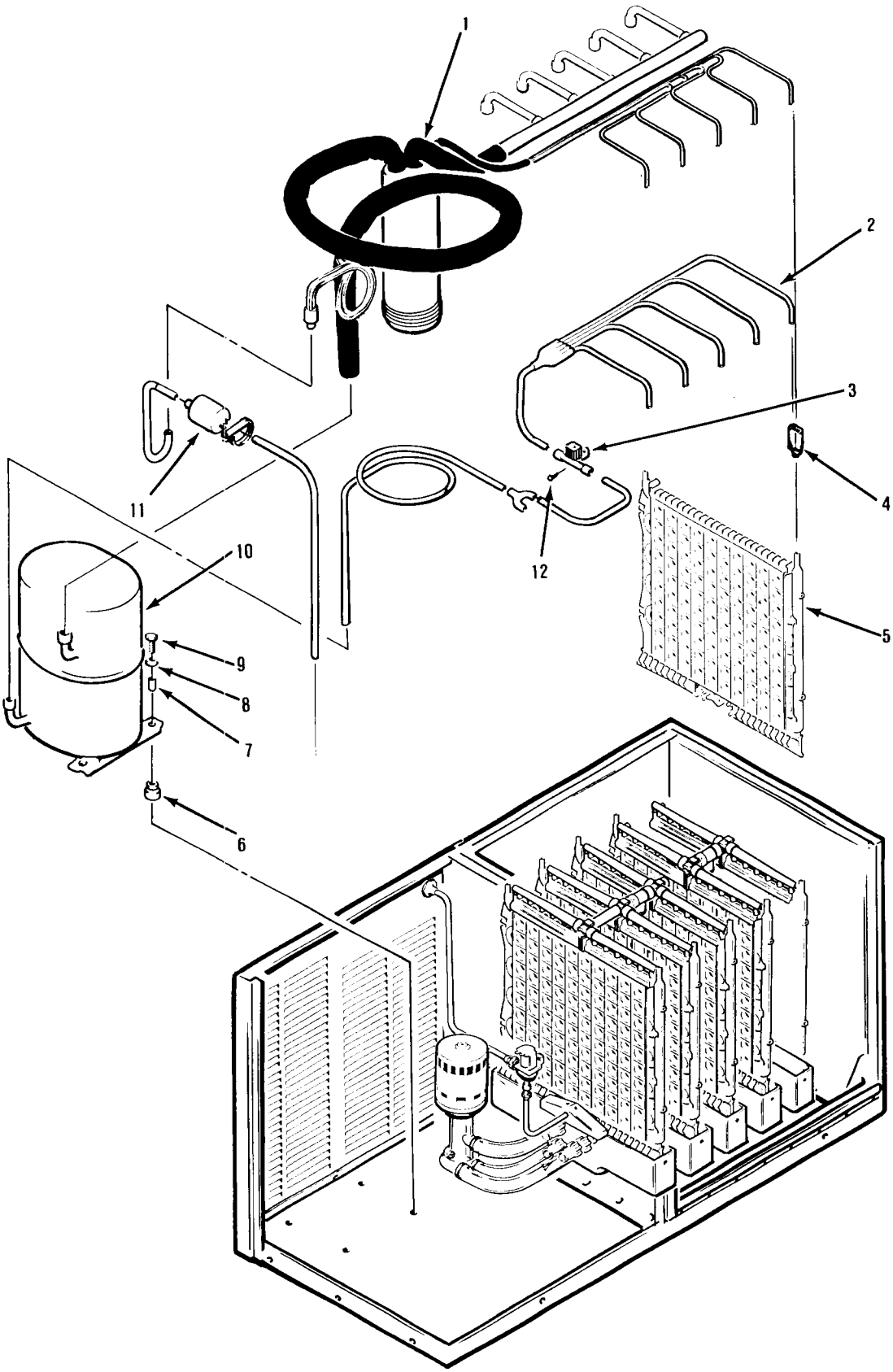
1
2
3
4
5
6
7
8
9
10
11
12

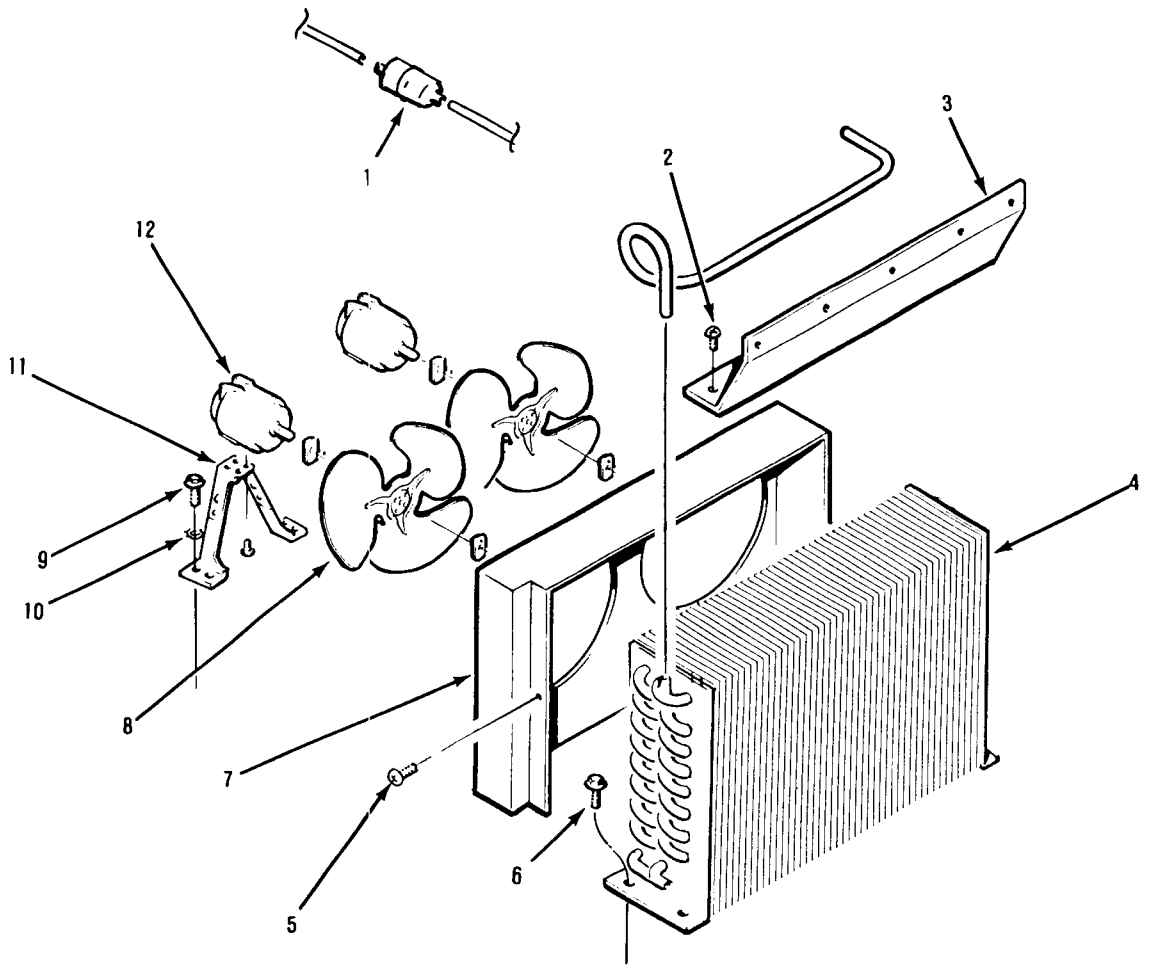

AIR-COOLED ASSEMBLIES

ITEM NUMBER	PART NUMBER	DESCRIPTION
1	02-2426-02	Drier
2	03-1404-09	(5) Screw No. 8 x 1/2
3	A29240-001	Shroud Extension
4	18-3311-01	Condenser
5	03-1404-09	(8) Screw No. 8 x 1/2
6	03-0571-00	Screw 1/4-20 x 1/2
7	A29182-001	Shroud
8	18-3732-01	Fan Blade
9	03-0571-00	(8) Screw 1/4-20 x 1/2
10	03-1417-08	Washer
11	18-0597-00	Fan Mounting Bracket
12	18-5105-02	Fan Motor

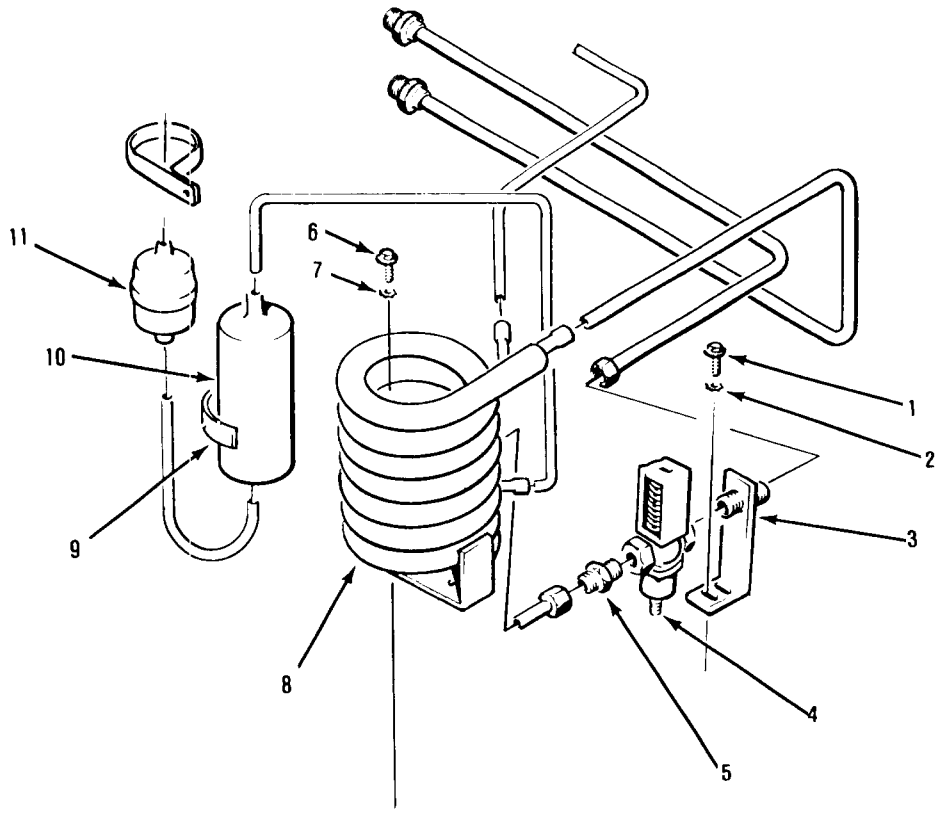

WATER-COOLED ASSEMBLIES

ITEM NUMBER	PART NUMBER	DESCRIPTION
1	03-0571-00	Screw 1/4-20 x 1/2
2	03-1417-08	Washer
3	A15924-000	Bracket, Water Regulator
4	11-0198-02	Water Regulator
5	16-0253-00	Fitting
6	03-0571-00	Screw 1/4-20 x 1/2
7	03-1417-08	Washer
8	18-3306-03	Condenser
9	02-0706-09	Clamp
10	02-2628-01	Receiver
11	02-2426-02	Drier

WATER SYSTEM

ITEM NUMBER	PART NUMBER	DESCRIPTION
1	02-2521-01	Manifold Water (Long)
2	02-2519-01	Tee
3	A29703-001	Manifold Water (Short)
4	02-2527-01	Tube, Water Distributor
5	02-1358-01	Clamp
6	A29730-001	Water Tube Assembly)
7	A30761-020	Sump Assembly
8	02-1530-01	Clamp
9	02-1800-01	Clamp
10	A29746-001	Pump Bracket
11	13-0571-01	Screw 1/4-20 x 3/4
12	A30751-022	Water Pump
13	12-1646-05	Water Valve
14	02-2523-01	End Cover - Sump
15	02-2520-01	Sump Cover
16	02-2520-02	Sump Cover - Center
17	A29259-001	Preformed Tubing
18	A30758-002	Pump Discharge Preformed
19	A30758-001	Pump Suction Preformed

SUMP ASSEMBLY

ITEM NUMBER	PART NUMBER	DESCRIPTION
1	A30761-020	Sump (Complete Assembly)
2	02-2787-01	Tube - Pick Up
3	03-1409-23	Washer - Rubber
4	02-1530-01	Clamp
5	13-0796-01	Rubber Cap
6	02-2786-01	Tube - Inlet
7	02-2788-01	Nut - Water Inlet
8	13-0617-02	"O" Ring
9	02-2125-01	Elbow
10	A30760-001	Screen
11	02-1800-01	Hose Clamp

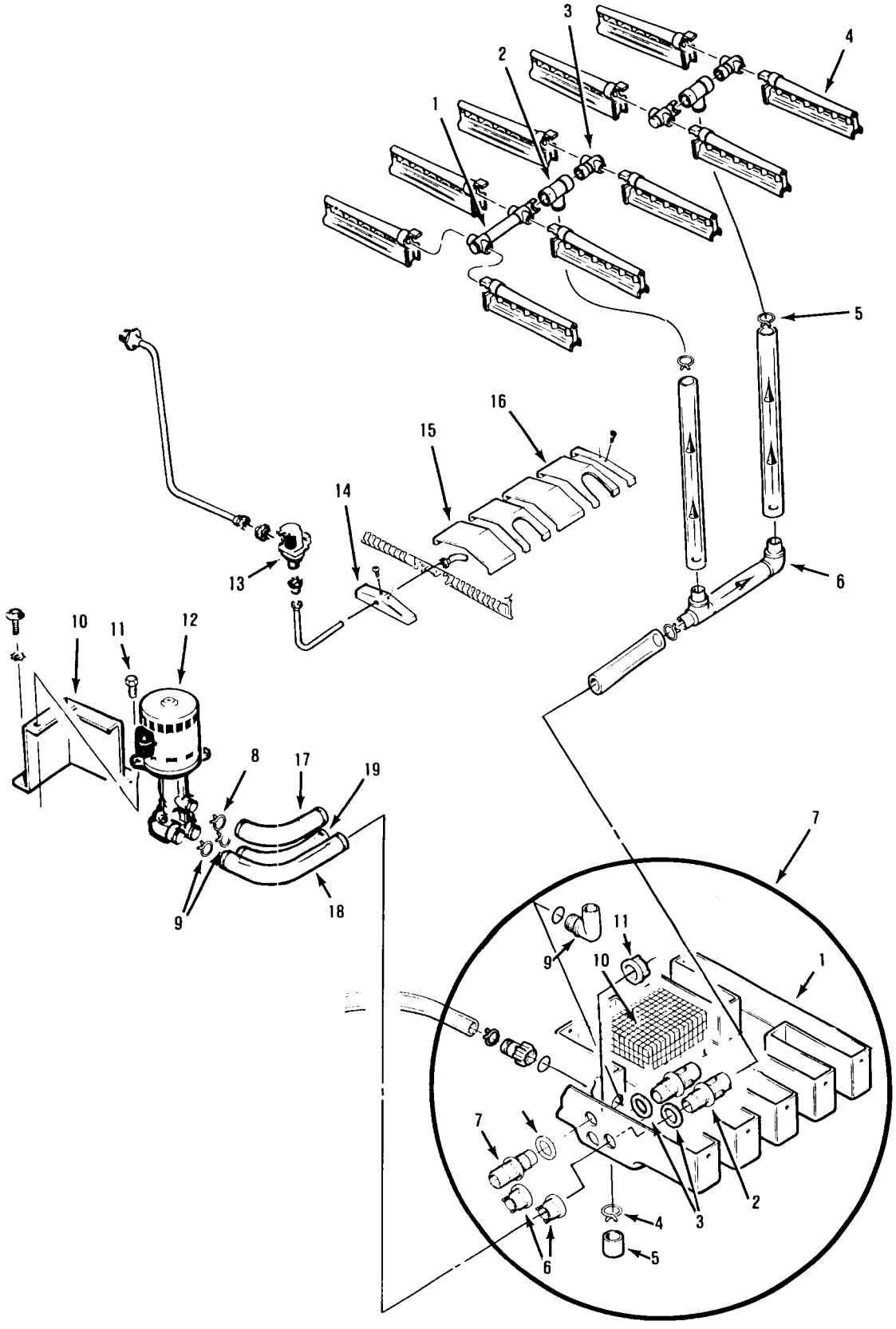
1
2
3
4
5
6
7
8
9
10
11
12
13
14
15
16
17
18
19

CONTROL BOX ASSEMBLY

ITEM NUMBER	PART NUMBER	DESCRIPTION
1	18-1901-40	Start Capacitor
2	18-3850-33	Cap Capacitor
3	03-1419-06	Screw
4	18-2200-39	Capacitor Bracket
5	03-1103-00	Twin Speed Nut
6	12-1213-13	Snap Bushing
7	12-0426-01	Compressor Switch - Single-Phase
	12-2174-01	Compressor Switch - Three-Phase
8	12-2174-01	Master Switch (Air-Cooled)
	12-0426-01	Master Switch (Water-Cooled)
9	03-1403-04	(5) Screw
10	12-1879-02	Relay
11	12-1979-01	Timer
12	12-2048-01	Contactor 208-230/60/1
	12-0739-01	Contactor 230/60/3
13	03-1403-17	(2) Screw
14	18-1903-40	Potential Relay
15	03-1423-01	Speed Nut
16	03-1403-04	Screw
17	18-1902-51	Run Capacitor
18	03-1403-21	Screw No. 8 - 32 x 3/4
19	03-1403-14	Screw
20	03-1403-14	(2) Screw
21	11-0351-02	Cube Size Control
22	11-0419-01	Bin Thermostat
23	12-1213-17	Snap Bushing
24	12-1912-01	Circuit Board
25	11-0388-02	Pressure Control (Water-Cooled)

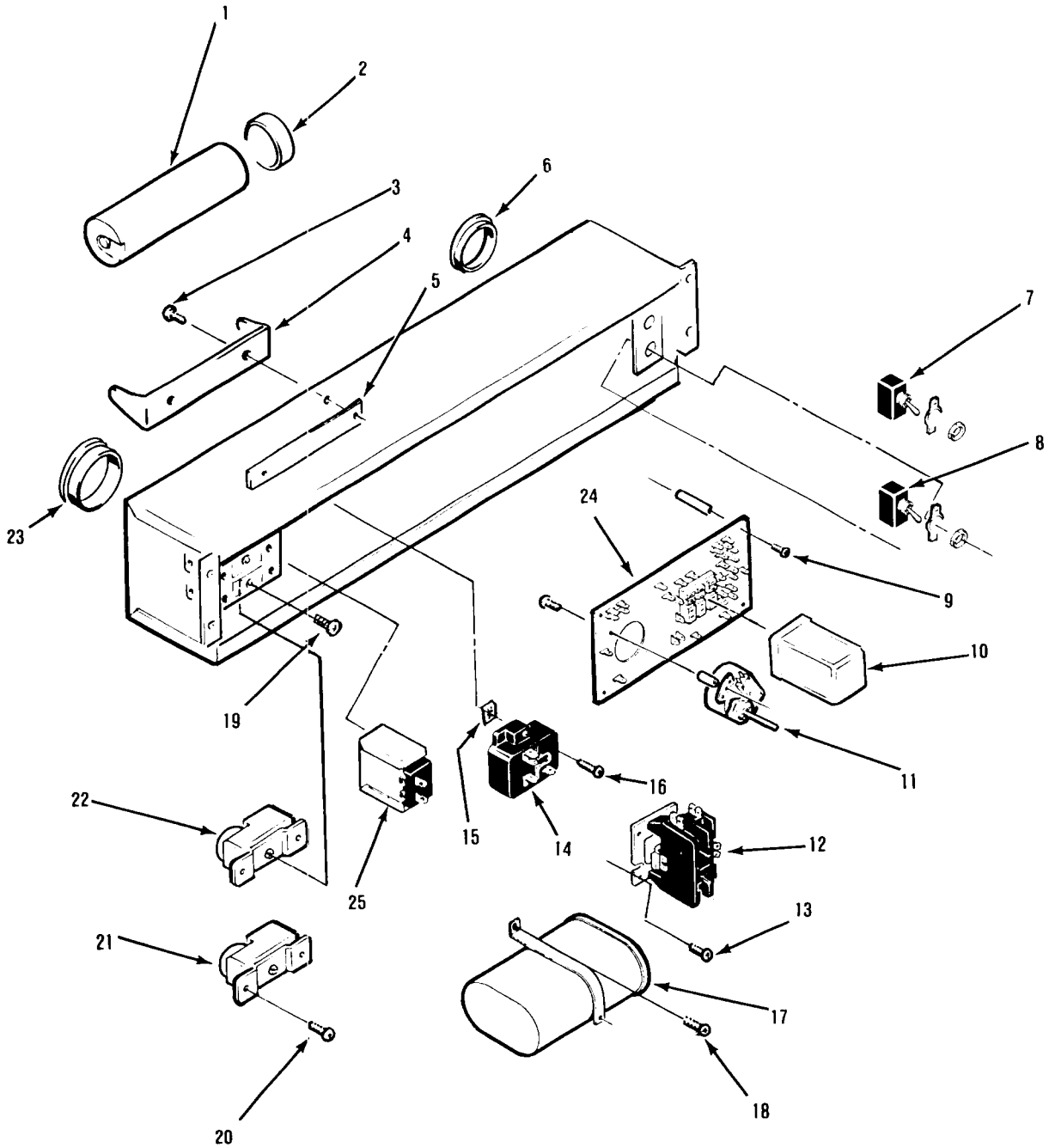
1
2
3
4
5
6
7
8
9
10
11
12
13
14
15
16
17
18
19
20
21
22
23
24
25

CM1200C
WIRING DIAGRAM

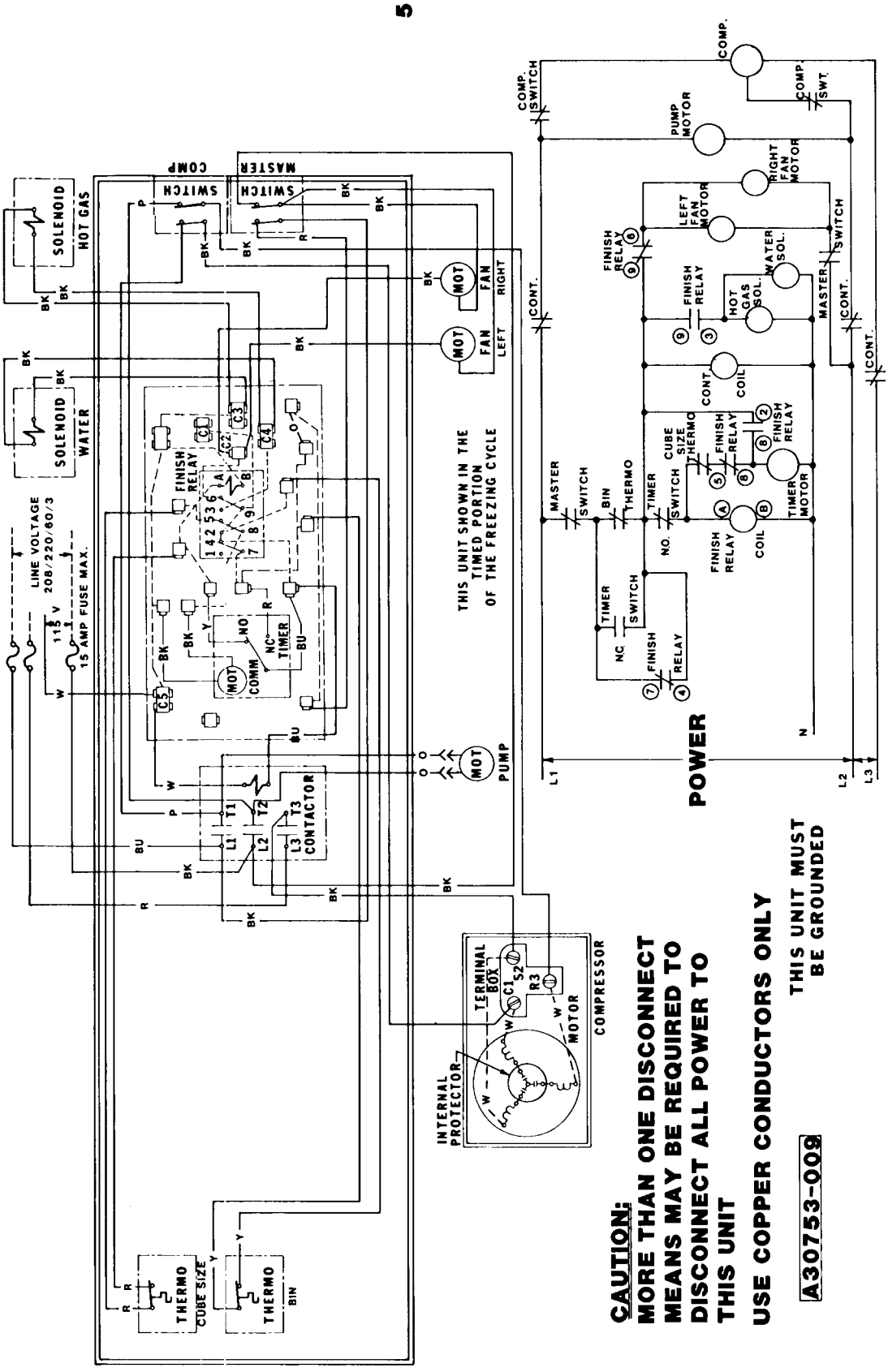

Wiring Diagram CM1200AE-9C Air-Cooled

CM1200C
WIRING DIAGRAM

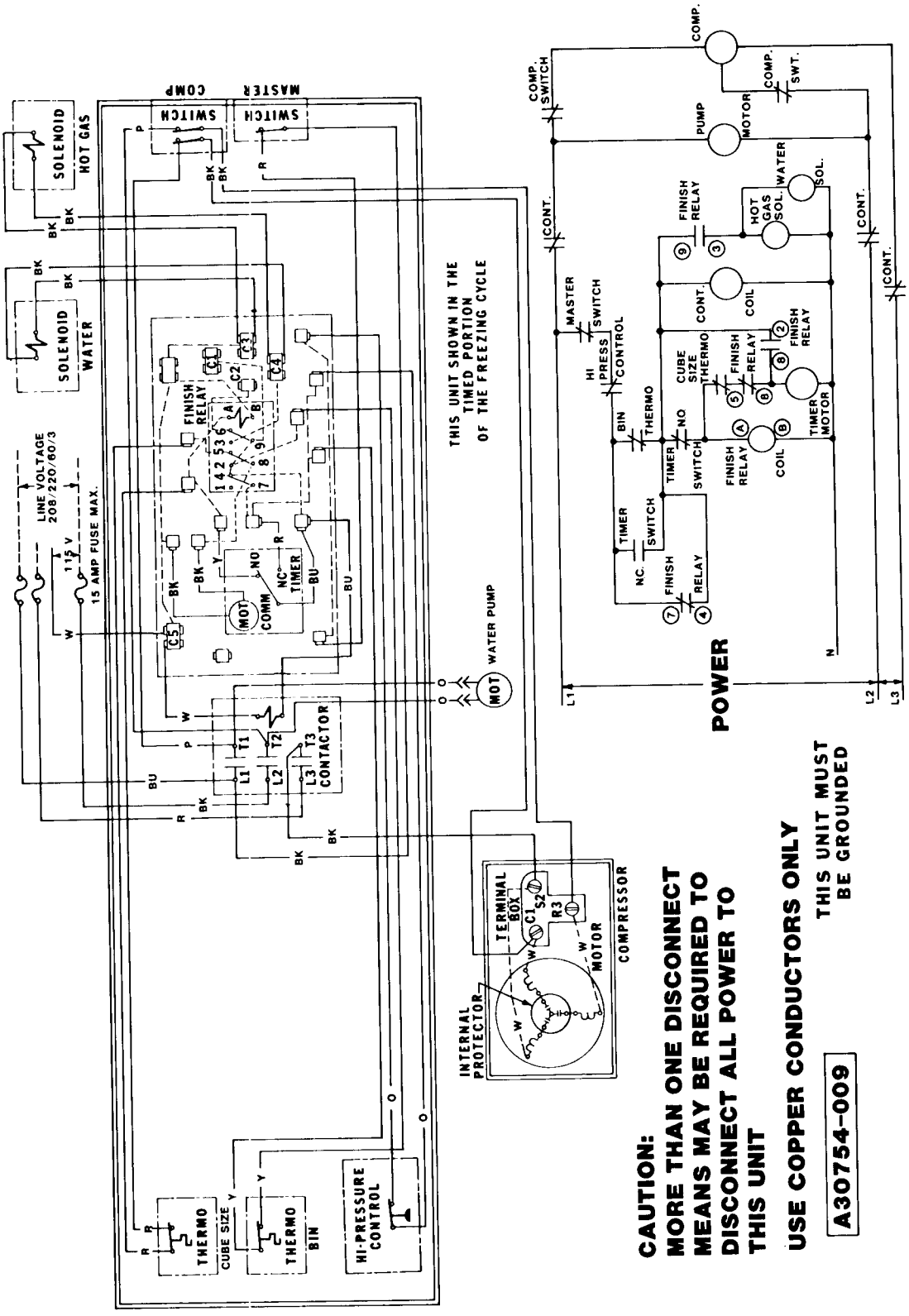

Wiring Diagram CM1200WE-9C Water-Cooled

CM1200C
WIRING DIAGRAM

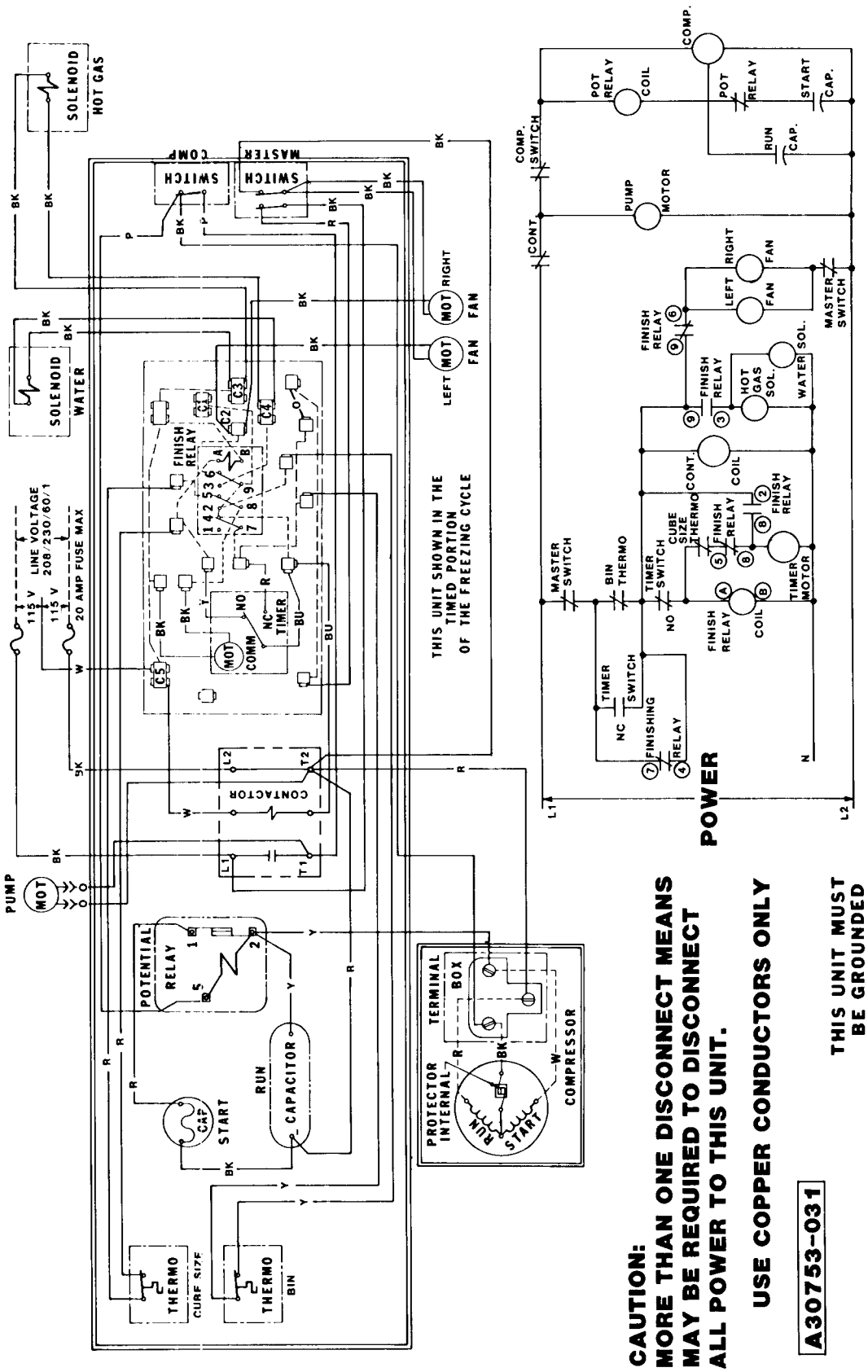

CAUTION:
MORE THAN ONE DISCONNECT MEANS MAY BE REQUIRED TO DISCONNECT ALL POWER TO THIS UNIT.

USE COPPER CONDUCTORS ONLY

A30753-031

THIS UNIT MUST BE GROUNDED

Wiring Diagram CM1200AE-31C Air-Cooled

CM1200C
WIRING DIAGRAM

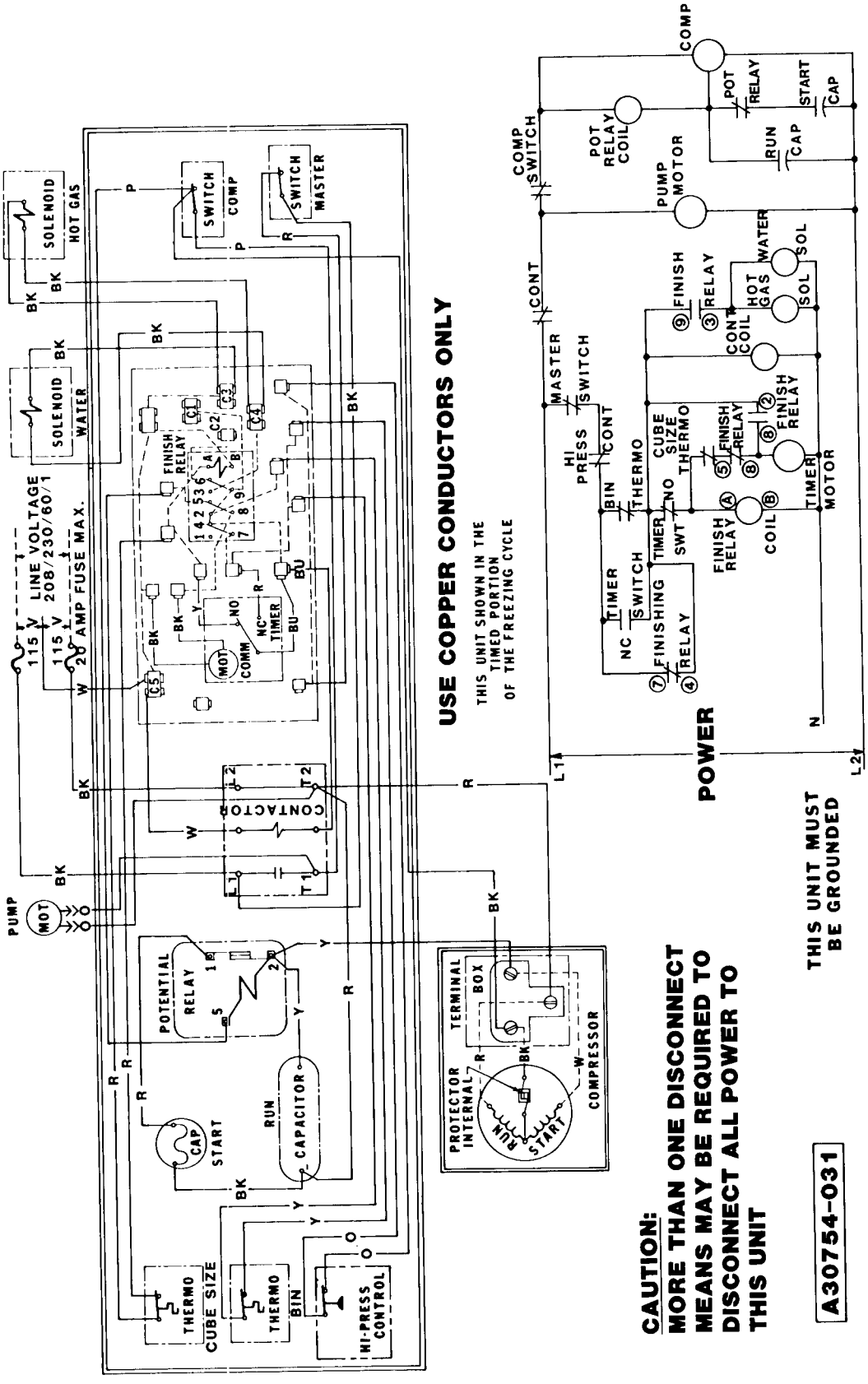

Wiring Diagram CM1200WE-31C Water-Cooled

SCOTSMAN

775 CORPORATE WOODS PARKWAY

VERNON HILLS, ILLINOIS 60061

U.S.A.

708/634-3505

(Continued from page 14)

Gravity flow returns the water to the sump reservoir for recirculation.

WATER REGULATOR VALVE — Water-Cooled Model

The water regulator valve functions to maintain a constant compressor head pressure, by regulating the amount of inlet water flow through the condenser on water-cooled models. The valve operates through the refrigerant system high side pressure. Rotating the adjusting screw, located on top of the valve, can INCREASE or DECREASE the water flow through the water-cooled condenser, which in turn, will DECREASE or INCREASE the compressor operating head pressure.

When installing a replacement water regulator valve, be sure the replacement valve is installed with the arrow positioned in the direction of the water flow.

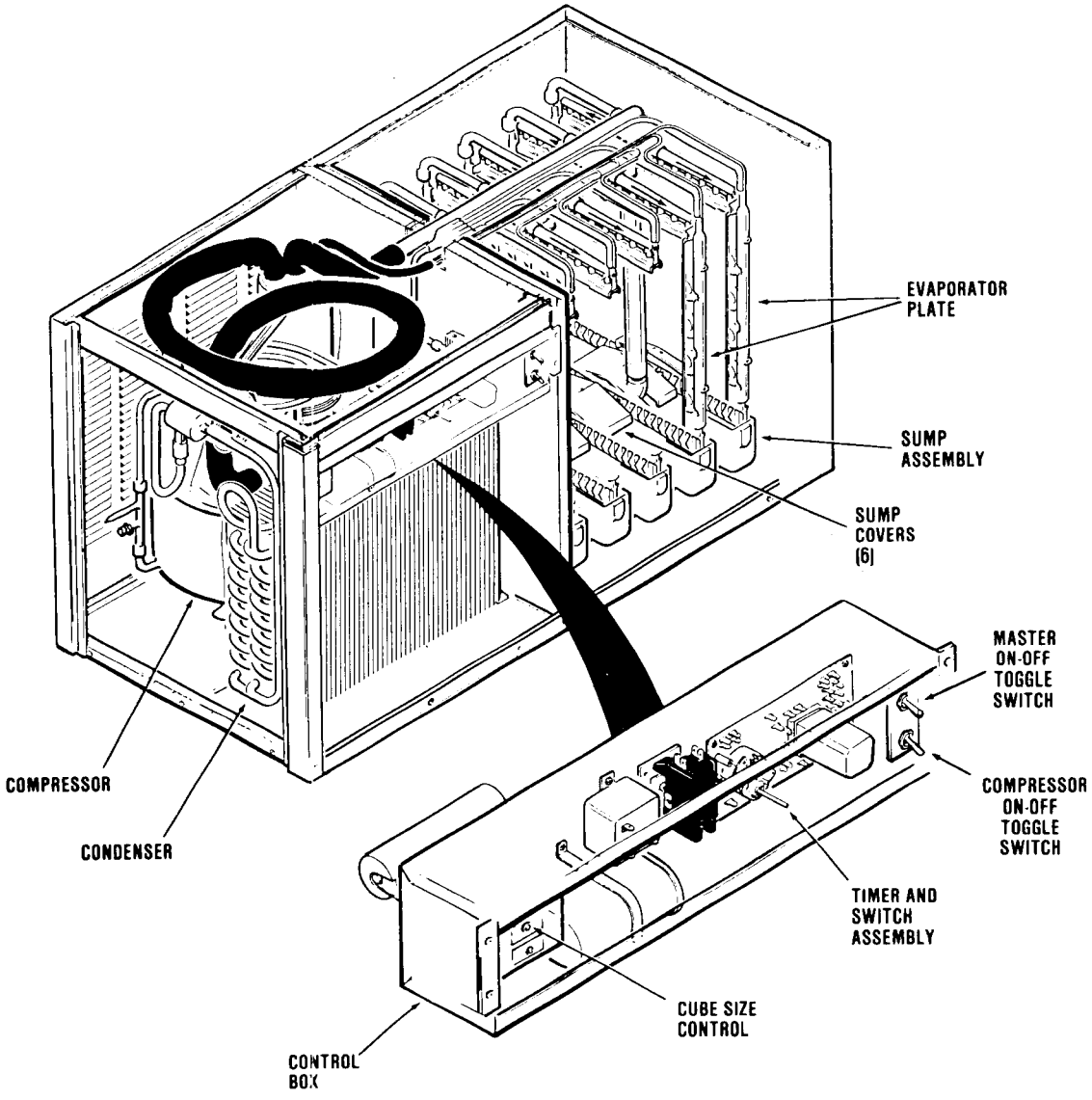

ADJUSTMENT, REMOVAL AND REPLACEMENT PROCEDURES

The procedures provided in this section are arranged in alphabetical order, to make specific Adjustment and Removal and Replacement information easy to locate.

Read the instructions thoroughly before performing any Adjustment or Removal and Replacement procedures.

ADJUSTMENT OF THE CUBE SIZE CONTROL

CAUTION

BEFORE performing actual adjustment to the cube size control, check other possible causes for cube size problems, refer to SERVICE DIAGNOSIS for problem review and analysis. DO NOT perform adjustment when a new cube size control is installed, until the control bulb has been properly installed in the tube well, on the refrigerant tube of the platen assembly and the icemaker has progressed through several complete freezing and harvest cycles, to observe size and quality of ice cubes and whether or not a cube size problem exists.

As a reverse acting temperature control, adjustment on the cube size control is performed to cause either larger sized ice cubes or smaller sized ice cubes to be produced.

To produce LARGER sized ice cubes:

1. Locate the cube size control, in the left end of the control box.
2. Rotate the adjusting screw one-eighth of a turn CLOCKWISE toward COLDER.
3. Observe size of ice cubes in next two ice cube harvests and repeat step 2 above, in one-eighth turn increments, until desired ice cube size is achieved.

To produce SMALLER sized ice cubes:

1. Locate the cube size control, in the left end of the control box.
2. Rotate the adjusting screw one-eighth of a turn COUNTERCLOCKWISE toward WARMER.
3. Observe size of ice cubes in next two ice cube harvests and adjust in one-eighth turn increments, until desired ice cube size is achieved.

ADJUSTMENT OF THE TIMER & SWITCH ASSEMBLY

The timer & switch assembly is factory set, so that one complete revolution of the cam on the Timer represents fifteen minutes. Eleven and one-half minutes comprise the freezing cycle event during cam rotation, and the final three and one-half minutes program the defrost and harvest cycle.

Rotating the shaft of the timer cam, CLOCKWISE, will allow positioning the actuator arm of the microswitch on the cam at the selected start position for either the freezing cycle or harvest cycle, as required, during the START UP procedures and in the CLEANING instructions. Rotating the shaft COUNTERCLOCKWISE will unscrew the shaft from the threaded stud on the timer cam.

WARNING

Be sure the electrical power supply to the icemaker is OFF before proceeding with removal procedures.

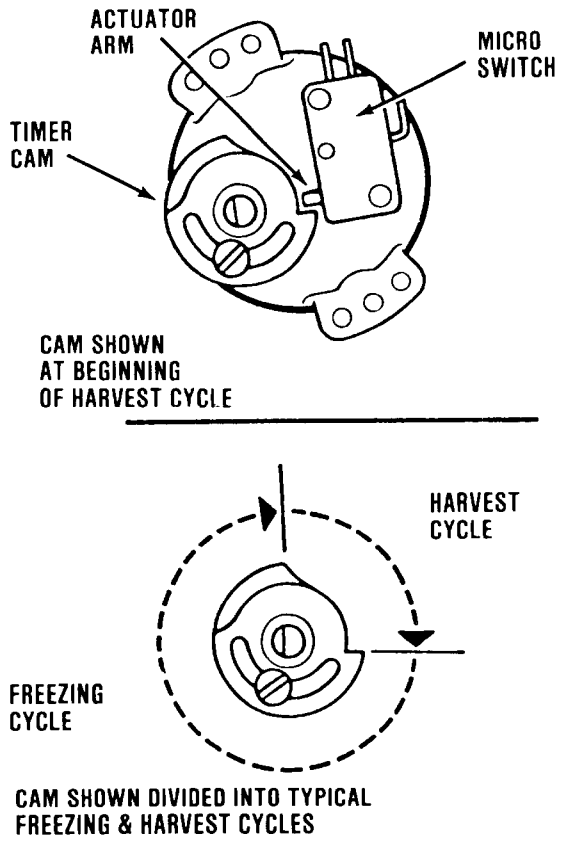

Adjustment of the Timer & Switch Assembly.

To adjust the timer switch assembly:

A. HARVEST CYCLE: To start, slowly rotate the shaft of the timer & switch assembly, located in the control box, CLOCKWISE, until the actuator arm on the microswitch drops off of the outer cam into the cam slot. An audible click can be heard, but in a noisy area, look at the cam and switch to observe the event. See *Adjustment of the Timer and Switch Assembly* illustration.

B. FREEZING CYCLE: To start, slowly rotate the shaft of the timer & switch assembly, located in the control box, CLOCKWISE, until the

actuator arm on the microswitch rides up and out of the cam slot to the start of the surface of the outer cam.

WARNING

Be sure the electrical power supply and the water supply to the icemaker are OFF BEFORE starting any of the following REMOVAL AND REPLACEMENT procedures, as a precaution to prevent possible personal injury or damage to equipment.

For installations having stacked CM1200 cubers mounted on a bin, disregard steps to remove the top panel. Access to all areas and parts can still be gained through removal of the necessary front, side.

ADJUSTMENT OF THE WATER REGULATOR ASSEMBLY — WATER-COOLED MODELS

The correct compressor head pressure on water-cooled models is 135 PSIG. Adjusting the water regulator valve increases or decreases the rate of flow of water, through the water-cooled condenser; which increases or decreases the affected temperature/pressure of the compressor head pressure, INCREASED water flow, results in DECREASED or LOWER head pressure; while, DECREASED water flow, results in INCREASED or HIGHER head pressure.

To adjust the water regulator assembly:

To INCREASE the head pressure: Rotate the adjusting screw COUNTERCLOCKWISE.

To DECREASE the head pressure: Rotate the adjusting screw CLOCKWISE.

Check change in compressor head pressure, and repeat step A or B as necessary, to achieve desired operating head pressure.

REMOVAL AND REPLACEMENT OF THE BIN THERMOSTAT CONTROL

To remove the bin thermostat control:

1. Remove screws and all front panels.
2. Remove two screws at the top of the control box and OPEN the hinged Cover downward.
3. Unthread the capillary tube and remove from the bin thermo control bracket at the bottom left side of the evaporator section.
4. Remove two screws attaching the bin thermostat control to the left end of the control box; then, carefully pull the capillary tube out of the evaporator section through the dividing wall and grommet and carefully remove the bin thermostat control and capillary tube from the control box and refrigeration section of the cabinet.

To replace the bin thermostat control, reverse the removal procedure.

REMOVAL AND REPLACEMENT OF THE COMPRESSOR ASSEMBLY

To remove the compressor assembly:

1. Remove screws and the top and left side panels.
2. Bleed off or blow the refrigerant charge through the Schrader valve.
3. Remove the cover from the terminal box on the compressor; then, remove electrical leads from the compressor.
4. Unsolder compressor.
5. Remove four bolts and washers which secure the compressor to the chassis mounting base.
6. Remove the compressor from the cabinet.

Always install a replacement drier, anytime the sealed refrigeration system is opened. Do not replace the drier until all other repair or replacement has been completed.

REMOVAL AND REPLACEMENT OF THE CONDENSER — AIR-COOLED MODELS

To remove the condenser:

1. Remove screws and the left side panel and left front panel.
2. Bleed off or blow the refrigerant charge through the Schrader valve.
3. Unsolder and disconnect refrigerant lines from the condenser.
4. Unsolder and remove the drier from the refrigerant lines connecting to the condenser.
5. Remove screws, lockwashers and the condenser from the chassis base.
6. Remove screws and condenser shroud from old condenser.

Always install a replacement drier, anytime the sealed refrigeration system is opened. Do not replace the drier until all other repair or replacement has been completed.

To replace the air-cooled condenser, reverse the removal procedure.

REMOVAL AND REPLACEMENT OF THE CONDENSER — WATER-COOLED MODELS

To remove the condenser:

1. Remove screws and the left front panels.
2. Bleed off or blow the refrigerant charge through the Schrader valve.
3. Check to be sure building source water inlet supply shutoff valve to rear of chassis is OFF.

4. Disconnect water-cooled condenser inlet water line at the water regulator assembly outlet fitting.
5. Unsolder the refrigerant capillary tube distributor line at the outlet end of the drier, the refrigerant outlet line from the bottom of the condenser, and remove the drier from the lines.
6. Unsolder the compressor discharge line, at the top of the water-cooled condenser.
7. Unsolder the condenser water outlet line, at the top of the water-cooled condenser.
8. Remove two screws and washers and the water-cooled condenser from the cabinet.

Always install a replacement drier, anytime the sealed refrigeration system is opened. Do not replace the drier until all other repair or replacement has been completed.

To replace the water-cooled condenser, reverse the removal procedures.

WARNING

Be sure the electrical power supply to the icemaker is OFF before proceeding with removal procedures.

REMOVAL AND REPLACEMENT OF THE CUBE SIZE CONTROL

To remove the cube size control:

1. Remove screws and the left front panel, Top panel and control box cover to gain access to the cube size control.
2. Trace capillary tube, from the cube size control, to the refrigerant suction line on the evaporator platen assembly; then peel back the insulation.
3. Remove the coiled capillary tube bulb from the tube well on the suction line.
4. Remove electrical leads from the cube size control.
5. Remove screws and the cube size control.

To replace the cube size control, reverse the removal procedure.

REMOVAL AND REPLACEMENT OF THE DRIER

To remove the drier:

1. Remove screws and the left side panel.
2. Bleed off or blow the refrigerant charge through the Schrader valve.
3. Unsolder refrigeration lines at both ends of the drier, and remove the drier.

Always install a replacement Drier, anytime the sealed refrigeration system is opened. Do not replace the drier until all other repair or replacement has been completed.

To replace the drier:

CAUTION

If the factory seal is broken on the replacement drier, exposing it to the atmosphere more than a few minutes, the drier will absorb moisture from the atmosphere and lose substantial ability for moisture removal.

Be sure the replacement drier is installed with the arrow positioned in the direction of the refrigerant flow.

1. Remove the factory seals from the replacement drier and install the drier in the refrigerant lines with the arrow positioned in the direction of the refrigerant flow.
2. Solder the drier into the lines, two places, taking precautions to NOT OVERHEAT the drier body, during installation soldering.
3. Purge the system and check for leaks.
4. Thoroughly evacuate the system to remove moisture and non-condensables.
5. Charge the system with refrigerant, by weight. SEE NAMEPLATE.
6. Replace and attach the left side panel.

REMOVAL AND REPLACEMENT OF THE EVAPORATOR PLATE ASSEMBLY

To remove the evaporator plate:

1. Remove screws and the top and two front panels.
2. Bleed off or blow the refrigerant charge through the Schrader valve.
3. Remove hose clamp and rubber cap from bottom of sump assembly and drain all water. Replace rubber cap and hose clamp.
4. Slide three hose clamps off and unclamp Tygon tubes at left end of the Sump Assembly.
5. Remove sump covers.
6. Disconnect Tygon water inlet tube(s), at the water manifold tee(s), above the evaporator plates.
7. Unsnap the sump assembly from the lower front and rear attachment points on each evaporator plate; then, CAREFULLY lower the RIGHT END of the sump assembly to clear the bottom of the plates, and work the connecting

Tygon tubes OFF the LEFT end, and carefully remove the sump assembly so as not to split or break the plastic.

8. Slide the water distributor tubes forward, about 1/8-inch along the top of the evaporator plate to be removed, until the rear water distributor tube can be lifted upward, see *Removal of the Water Distributors, Manifolds and Tees.*
9. Lift the end of the rear water distributor tube and slide the distributors toward the rear along the top of the evaporator plate, until the flexible front notch is cleared.
10. Unsnap and disconnect each front and rear water distributor tube from the water manifold section.

    If all ten water distributor tubes are being removed, disconnect the water manifold tubes at the tee(s) and remove the connected water distributors and water manifold tubes as larger assemblies, from the tops of the evaporator plates; then, disassemble the individual parts at the workbench.

CAUTION

Use EXTRA PRECAUTION to protect the plastic parts during the next step to unsolder the refrigrant lines, two places, at the top of the evaporator plate. Position wet cloths over top of plates, as well as over the plastic liner at the rear, or sides, to prevent accidental head damage, or possible fire from torch flame.

11. Unsolder and remove the refrigerant lines at top front and rear of the evaporator plate to be replaced.
12. Remove screws at one end of the front braces, then, loosen the braces just enough to remove the evaporator plate. Temporarily replace the braces, to support the remaining evaporator plates.

Always install a replacement drier, anytime the sealed refrigeration system is opened. Do not replace the drier until all other repair or replacement has been completed.

To replace the evaporator plate, reverse the removal procedure.

WARNING

Be sure the electrical power supply to the icemaker is OFF before proceeding with removal procedures.

REMOVAL AND REPLACEMENT OF THE FAN MOTOR ASSEMBLY — AIR-COOLED MODELS — (TWO)

To remove the fan motor assembly:

1. Remove screws and the left side panel, left front panel and control box cover.
2. Disconnect the two electrical leads, from the fan motors, at the control box assembly.

BEFORE next step, measure or make accurate mental note of the distance the fan blades extend beyond the fan shroud, so during replacement the correct distance is maintained.

3. Remove screws and each fan motor and bracket assembly; and remove the fan motors and brackets from the chassis base.
4. Loosen set screws on the fan blade and remove the fan blade from the fan motor. Mark or note position of the blade on the shaft of the fan motor, for replacement.
5. Remove screws and lockwashers and separate the fan motor from the fan motor bracket.

To replace the fan motor assembly, reverse the removal procedure.

Be sure to replace the fan blade with the hub of the fan blade facing the fan motor, to ensure air flow is toward the fan motor; and, is set at marked location on shaft and setscrews tightened on the FLAT part of the shaft of the fan motor.

WARNING

Be sure the electrical power supply to the icemaker is OFF before proceeding with removal procedures.

REMOVAL AND REPLACEMENT OF THE INLET WATER SOLENOID VALVE ASSEMBLY

To remove the inlet water valve assembly:

1. Remove screws, left front, left side and top panels.
2. Loosen and remove inlet water line fitting from the inlet water solenoid valve assembly.
3. Remove two screws and remove water valve assembly from the dividing wall.

To replace the inlet water valve assembly, reverse the removal procedure.

REMOVAL AND REPLACEMENT OF THE SUMP ASSEMBLY

To remove the sump assembly:

1. Remove screws and the right front panel.

2. Remove hose clamp and rubber cap from bottom of sump assembly and drain all water. Retain rubber cap and hose clamp.
3. Slide three hose clamps off and unclamp Tygon tubes at left end of sump assembly.
4. Remove hose from overflow drain.
5. Disconnect the two Tygon tubes at the water manifold tees above the evaporator plates.
6. Unsnap the sump assembly from the lower front and rear attachment points on each evaporator plate; then, carefully lower the right end of the sump assembly, to clear the bottom of the plates, and work the connecting Tygon tubes OFF the left end, carefully to prevent damage to the plastic.
7. Unscrew nuts on two fitings to disassemble three female tubes and O-Rings, from the outside of the sump assembly, connected to one pump pick-up tube and two male tubes, installed from inside the sump assembly and remove the overflow filters.

To replace the sump assembly, reverse the removal procedure. BE SURE the pump pickup tube, lowest of three tubes, is installed with the slotted opening facing DOWN, toward bottom of sump.

REMOVAL AND REPLACEMENT OF THE WATER DISTRIBUTOR TUBES AND MANIFOLD TUBES

To remove the water distributor tubes and manifold tubes:

1. Remove screws and the right front panel.
2. Slide each water distributor tube forward about 1/8-inch along the top of the evaporator plate, until the rear water distributor tube can be lifted upward.
3. Lift the end of the rear water distributor tube and slide the distributors toward the rear along the top of the evaporator plate until the flexible front notch is cleared.
4. Unsnap and disconnect each front and rear water distributor tube from the water manifold section.

If all ten water distributor tubes are being removed, disconnect the water manifold tubes at the tee(s) and remove the connected water distributors and water manifold tubes as larger assemblies, from the tops of the evaporator plates; then, disassemble the individual parts at the workbench.

To replace the water distributor tubes and manifold tubes, reverse the removal procedure. BE SURE the notches in the water manifold tubes properly engage the alignment keys in the tee(s).

BE SURE each front water distributor tube is securely fastened at the notch at the top front of the evaporator plate.

Check identical attachment for each rear water distributor tube and notch; also, that the distributor/manifold connections at the top center of each evaporator plate is snug against the top of the plate.

REMOVAL AND REPLACEMENT OF THE WATER PUMP ASSEMBLY

To remove the water pump assembly:

1. Remove screws and two front panels.
2. Remove drain plug and drain the sump.

   Air-Cooled Only:

3. Remove screws at each end of the control box and carefully pull the control box and attached wires out, and lay the control box on top of the cabinet; or, let hang down in front of the cabinet.
4. Remove three hose clamps connecting three Tygon tubes to the left end of the sump assembly.
5. Disconnect electrical leads and ground wire from the water pump assembly.
6. Remove two screws and washers, attaching the water pump assembly to the water pump bracket; then, work the Tygon tubes loose from the sump assembly and remove the water pump assembly.
7. Remove clamps, tygon tubes and insulation.

To replace the water pump assembly, reverse the removal procedure.

REMOVAL AND REPLACEMENT OF THE WATER REGULATOR ASSEMBLY — WATER-COOLED MODELS

To remove the water regulator assembly:

1. Remove screws and the left front panel.
2. Check to be sure building source water inlet supply shutoff valve to rear of chassis is OFF.
3. Bleed off or blow the refrigerant charge through the Schrader valve.
4. Disconnect water inlet supply line at the left bottom rear of the chassis.
5. Disconnect water line at the inlet and outlet fittings on the water regulator assembly.
6. Unsolder the water regulator valve capillary tube from the compressor refrigerant discharge line.
7. Remove two screws and the water regulator assembly from the chassis base.

Always install a replacement drier, anytime the sealed refrigeration system is opened. Do not replace the drier until all other repair or replacement has been completed.

To replace the water regulator assembly reverse the removal procedure.

SERVICE DIAGNOSIS

The service diagnosis section is for use in aiding the serviceman in diagnosing a particular problem for pin-pointing the area in which the problem lies, thus an ever available reference for proper corrective action.

The following chart lists corrective actions for the causes of known symptoms of certain problems that can occur in the icemaking-refrigeration system.

ICEMAKING - REFRIGERATION SYSTEM

SYMPTOM	POSSIBLE CAUSE	CORRECTION
Irregular size cubes some cloudy.	Some distributor holes plugged.	Clean distributor holes.
		Clean water sump.
	Shortage of water.	See Shortage of water CORRECTION.
	Unit not level.	Level cabinet, as required.
Cubes too large.	Dirty air-cooled condenser.	Clean condenser.
	Cube Size Control set too cold.	Rotate Cube Size Control dial toward WARMER.
Cubes too small.	Cube Size Control set too warm.	Rotate Cube Size Control dial toward COLDER.
	Partially restricted capillary tube.	Replace heat exchanger assembly.
	Moisture in refrigeration system.	Blow refrigerant charge; replace drier; evacuate system; add proper refrigerant charge.
	Shortage of water.	See Shortage of water CORRECTION.
Cloudy Cubes.	Shortage of water.	See Shortage of water SYMPTOM.
	Dirty water supply.	Install water filter or softener.
	Accumulated impurities.	Use SCOTSMAN Ice Machine Cleaner. Procedure V-III.
Shortage of water.	Short Harvest Cycle.	Adjust cam of timer and switch assembly.
	Water leak in sump area.	Locate Leak and correct condition.
	Partial restrictions in water strainer.	Clean or replace strainer.

CM1200C
SERVICE DIAGNOSIS

SYMPTOM	POSSIBLE CAUSE	CORRECTION
Decreased Ice capacity.	Restricted water flow to condenser.	Restore proper water flow rate.
	High head pressure, result of dirty Condenser or faulty Fan Motor.	Clean Condenser. Repair or replace Fan Motor.
	Non-condensable gas in the system.	Purge tye system and recharge per nameplate requirements.
	Poor circulation or extreme hot location.	Relocate the cabinet; or provide ventilation by cutting openings.
	Overcharge of refrigerant.	Slowly purge off to correct charge.
	Hot gas solenoid valve leaking.	Replace valve.
	Partially restricted capillary tube.	See Cubes Too Small CORRECTION.
	Defective Compressor.	Replace Compressor.
Poor harvests. Icemaker does not harvest.	Too short defrost time.	Check and adjust harvest cycle.
	Restriction in water inlet line.	Check strainer and flow check valve.
	Hot gas solenoid does not open. Binds or burned out.	Replace solenoid.
	Undercharge of refrigerant.	Charge to nameplate requirements.
	Water pressure too low.	Check for 20 PSI flowing water.
Compressor cycles intermittently.	Low voltage.	Check for circuit overload. Check building supply voltage, if low, contact power company.
	Dirty Condenser.	Clean Condenser with vacuum cleaner or brush. DO NOT USE A WIRE BRUSH.
	Air circulation blocked.	Locate cabinet with adequate air space for proper air flow.
	Defective Fan Motor.	Replace Fan Motor.
	Non-condensable gases in system.	Purge the system and recharge per nameplate requirements.
Icemaker will not operate.	Blown fuse in line.	Replace fuse and check for cause.
	Master switch in OFF position.	Set switch to ON position.
	Low or loose at water pressure.	Restore water pressure — reset high pressure control.
	Faulty Master switch.	Replace switch.
	Timer contacts open.	Replace Timer microswitch.

MAINTENANCE & CLEANING INSTRUCTIONS

GENERAL

The periods and procedures for maintenance and cleaning are given as guides and are not to be construed as absolute or invariable. Cleaning especially will vary, depending upon local water conditions and the ice volume produced; and, each icemaker must be maintained individually, in accordance with its own particular location requirements.

ICEMAKER

THE FOLLOWING MAINTENANCE SHOULD BE SCHEDULED AT LEAST TWO TIMES PER YEAR ON THIS ICEMAKER. CALL YOUR AUTHORIZED SCOTSMAN SERVICE AGENCY.

1. Check and clean or service any optional water treatment devices, if any installed.
2. Check the CM1200 cabinet is level, in the side-to-side and front-to-back directions.
3. Clean the water system, evaportor plates and sump assembly, using a solution of SCOTSMAN Ice Machine Cleaner. Refer to CLEANING
4. Check that each evaporator plate assembly is snug and secure on each wall support on the bin rear wall, in the holes of the front brace, and in each indent recessed in each arm of the sump assembly, below the bottom corners of the evaporator plates.
5. Check and tighten all bolts and screws.
6. Check and tighten all electrical connections.
7. Check hot gas solenoid valve for correct operation.
8. With MASTER ON-OFF toggle switch and COMPRESSOR ON-OFF toggle switch in the OFF position, clean the condenser using vacuum cleaner, whisk broom or brush. Instruct customer to clean condenser frequently. DO NOT USE A WIRE BRUSH.
9. Check for water leaks and make corrections.
10. Check the bin thermostat control bulb to test shut off. Holding ice against bin thermostat control bulb should cause the icemaker to shut off at the end of the harvest cycle.

    Within minutes after ice is removed from the bin thermostat control bulb, the icemaker will restart.

Cleaning requirements vary according to local water conditions and individual user operation. Continuous check of the clarity of ice cubes and visual inspection of the water system parts, evaporator plates and the sump assembly before and after cleaning will indicate frequency and procedure to be followed in local areas.

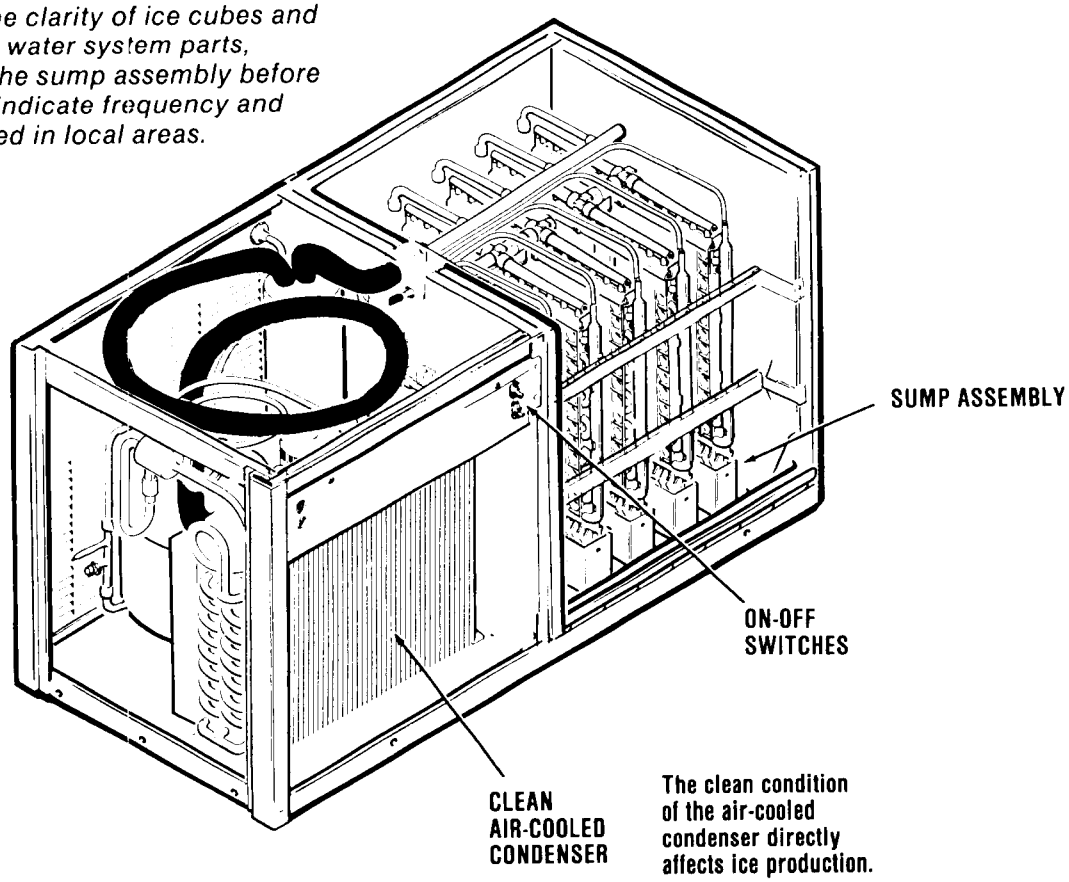

CLEANING - Icemaker

1. Remove screws and the front, and left side panels.
2. Check that both toggle switches on the control box are in the OFF position.
3. Rotate the shaft of the timer and switch assembly, located in the control box, CLOCKWISE, until the actuator arm on the microswitch rides up out of the cam slot, to the outer surface of the cam, then stop. This is the start position for the freezing cycle. See START Positions for the Freeze/Harvest Cycles.
4. Position a container for catching drain water under the rubber plug at the bottom of the sump assembly.
5. Remove hose clamp, the rubber plug, and drain all water from the sump assembly into the container.
6. Replace rubber plug and hose clamp.

WARNING

SCOTSMAN Ice Machine Cleaner contains Phosphoric and Hydroxyacetic acids. These compounds are corrosive and may cause burns, if swallowed. DO NOT induce vomitting. Give large amounts of water or milk. Call physician immediately. In case of external contact, flush with water. KEEP OUT OF THE REACH OF CHILDREN.

7. Prepare cleaning solution: Mix 24 ounces of SCOTSMAN Ice Machine Cleaner with two gallons of fresh, potable warm water.
8. Carefully pour the cleaning solution into the sump assembly.
9. Immediately move the MASTER ON-OFF toggle switch on the control box, to the ON position.
10. Allow the system to operate for about thirty minutes.

    No ice cubes will be made, because the COMPRESSOR ON-OFF toggle switch is off.

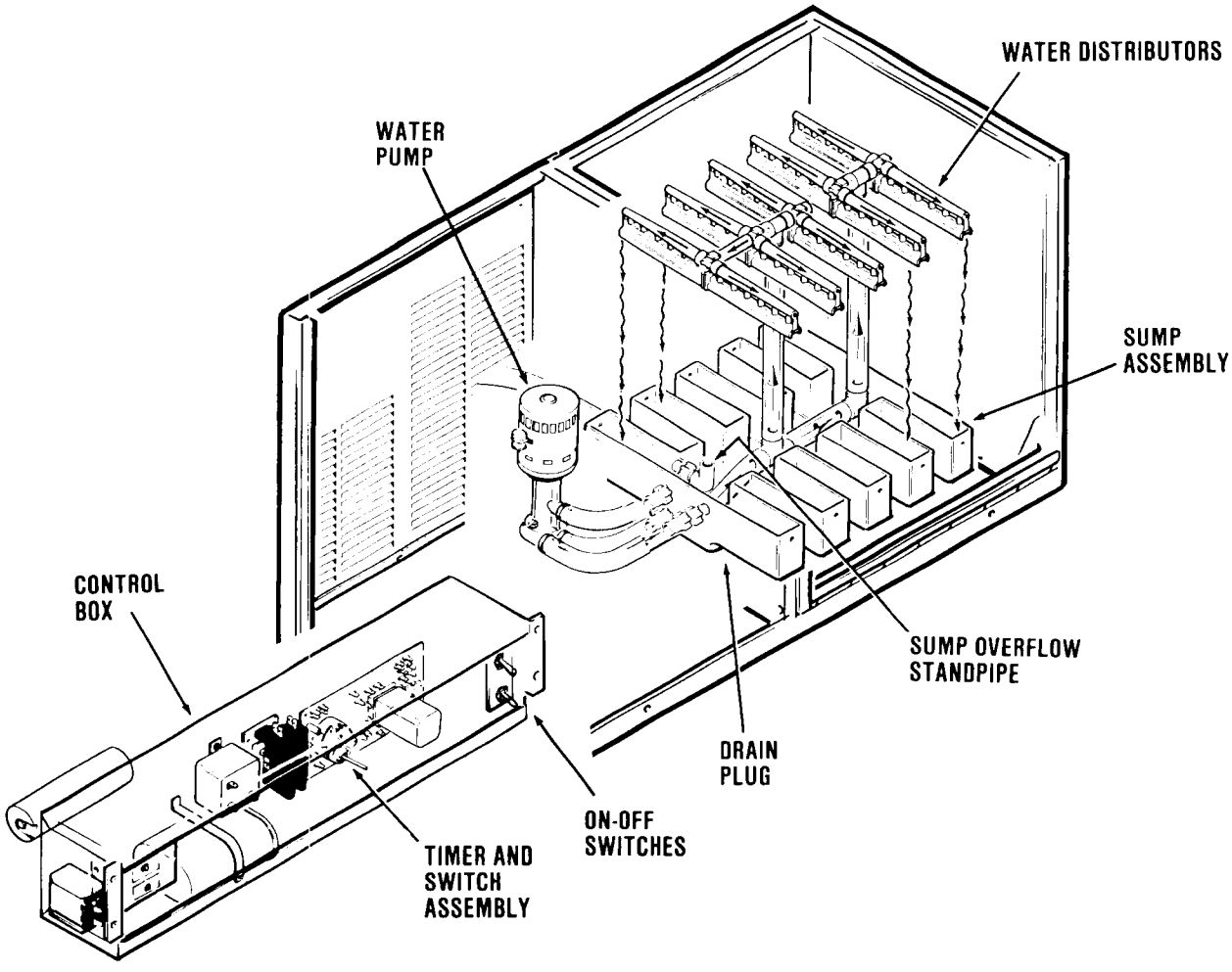

Cleaning Water System

11. At the end of thirty minutes, move the main ON-OFF switch to the OFF position. Remove drain plug and drain the cleaning solution from the sump and rinse. Replace drain plug.
12. Rotate the shaft of the timer and switch assembly CLOCKWISE advancing through the freezing cycle to start the harvest cycle. During each harvest cycle, fresh inlet water is introduced into the water system and acts to rinse all water-related parts and to wash away most mineral concentration through the reservoir overflow drain.

    If, after completing the cleaning and flushing procedure, inspection of the water flow reveals that one or more evaporator plates does not have a full flow of water for each vertical row of cubes, shut down the operation and remove and clean all water distributor tubes. Re-install the water distributor system.
13. Move the compressor ON-OFF toggle switch to the ON position to start the icemaking process.
14. Check each ice cube harvest, until the ice cubes are clear and the acid taste is eliminated.

CAUTION

DO NOT use ice cubes produced from the cleaning solution. Be sure none remains in the bin.

15. Add hot water to the bin to melt the ice cubes and thoroughly wash and rinse inner surfaces of the bin.
16. Check each ice cube harvest until the ice cubes are clear and the acid taste is eliminated.
17. Wash and wipe down all interior surfaces of the evaporator section of the cabinet with a clean cloth, or disposable paper wipers, soaked in the cleaning solution.
18. Wipe all washed surfaces dry, including the bin, with clean dry cloths, or clean dry disposable paper wipers.
19. Replace all panels.
20. Clean and sanitize the interior bin surfaces each week.

CM1200R

TABLE OF CONTENTS

GENERAL INFORMATION & INSTALLATION
Introduction 3
Location and Leveling 4
Remote Condenser and Pre-Charged Lines — Installation 5
Coupling Instructions, Pre-Charged Tubing Kit 6
Electrical Connections 8
Water Supply and Drain Connections 8
Final Check List 9

OPERATING INSTRUCTIONS
Start-Up 10
Adjustment of Cube Size 13
Operation -
Freezing Cycle 14
Harvest Cycle 15

COMPONENT DESCRIPTION 16

ADJUSTMENT PROCEDURES
Cube Size Control 34
Timer and Switch Assembly 34

REMOVAL AND REPLACEMENT PROCEDURES
Bin Thermostat Control 35
Compressor Assembly 35
Cube Size Control 35
Drier 36
Evaporator Plate Assembly 36
Inlet Water Solenoid Valve Assembly 37
Sump Assembly 37
Water Distributor Tubes and Manifolc Tubes 37
Water Pump Assembly 37

SERVICE DIAGNOSIS 38

MAINTENANCE AND CLEANING
General 40
Icemaker 40
Remote Condenser 40
Cleaning — Icemaker 40

LIST OF ILLUSTRATIONS

Specifications 2
CM1200R — Locational 3
Mounting and Stacking Cubers 4
Pre-Charged Refrigerant Line Routing and Hook-Up 5
Installing the Bin Thermostat Bracket and Bin Thermostat Capillary Line 5
Installation, Electrical, Water Supply and Drain Connection 8
Final Checklist 9
Timer Cam Positions 10
Operation 11
Ice Cube Size & Shape 12
Cube Size Control Adjustment 13
Freezing Cycle 14
PARTS LIST & WIRING DIAGRAMS (Printed in Yellow) 17
PARTS LIST:
Cabinet Assembly 18
Refrigeration System 20
Water System 22
Control Box 24
Remote Condenser 25
WIRING DIAGRAMS:
CM1200RE-3A (208-230/60/3) 26
CM1200RE-32A (208-230/60/1) 27
Harvest Cycle 15
Component Description 33
Timer and Switch Assembly 34
Cleaning Remote Condenser 41
Cleaning Water System, Icemaker 42

THIS PAGE
INTENTIONALLY
LEFT BLANK

CM1200R MODULAR CONTOUR CUBER

These products qualify for these listings.

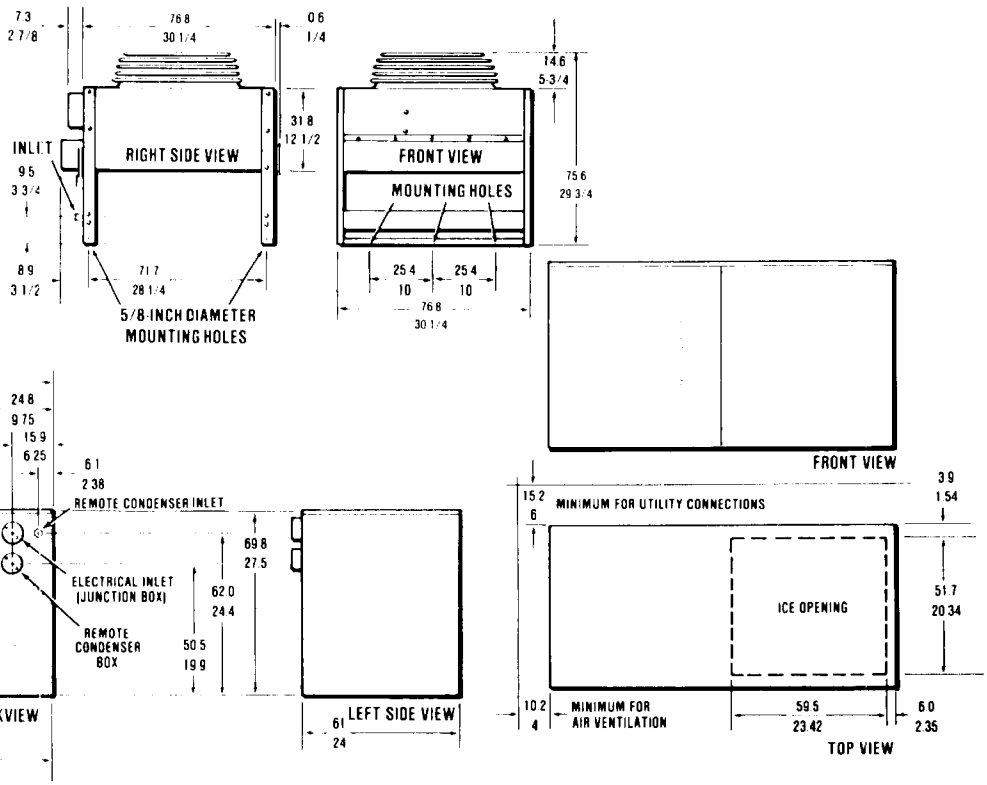

We reserve the right to make product improvements at any time. Specifications and design are subject to change without notice.

SPECIFICATIONS

Model Number	Dimensions H" x W" x D"			Cube Size	Cond. Unit	Finish **	Basic Electrical	Comp. H.P.	Run. Amps.	Max. Oper. Amps.	No. of Wires	Min. Circuit Ampacity †	Max. Fuse Size	Shpg. Wt. lbs./kg.
CM1200RE-3A	28 x 52 x 24			Contour	R-Air	ES	208-230/60/3	1.5	7.5	10.8	3	15	15	375/170
CM1200RE-32A	28 x 52 x 24			Contour	R-Air	ES	208-230/60/1	1.5	12.8	17.8	2	20	25	375/170

** (ES) Sandlewood, Leathergrain embossed steel with high gloss baked enamel finish.

† Use this value to determine minimum wire size as per National Electric Code Standards.

REMOTE CONDENSERS FOR USE WITH CM1200R CONTOUR CUBERS

		For Use With											
RC151-32B	29¼ x 30¼ x 33¼	(1) CM1200R	—	R-Air	Galv.	208-230/60/1	—	2.0	2.0	2	2.0	—	115/52
RC302-32B	29¼ x 30¼ x 33¼	(2) CM1200R	—	R-Air	Galv.	208-230/60/1	—	2.0	2.0	2	2.0	—	135/61

Order **RTCM225** - 25 foot pre-charged refrigerant tubing. **RTCM240** - 40 foot pre-charged refrigerant tubing.

IMPORTANT OPERATING REQUIREMENTS

	MINIMUM	MAXIMUM
Air Temperatures	50° F (10.0° C)	100° F (37.7° C)
Water Temperatures	40° F (4.4° C)	100° F (37.7° C)
Water Pressures	20 lbs. gauge	120 lbs. gauge
Electrical Voltage Variation		
Voltage rating specified on nameplate	-10%	+10%

This does not include the Remote Condenser. Remote Condensers are designed to operate in outdoor installations in a temperature range of -20° to 120° F.

Extended periods of operation at temperatures exceeding these limitations constitutes misuse under the terms of Scotsman Manufacturer's Limited Warranty, resulting in a loss of warranty coverage.

PRE-CHARGED REFRIGERANT TUBE KITS

RTCM225 25 foot pre-charged with R12 Freon tubing with connectors

RTCM240 40 foot pre-charged with R12 Freon tubing with connectors.

OPTIONAL STAINLESS STEEL PANEL KITS

SPKCM1200CA contains top, 2 front and 2 end panels. Not factory installed.

KRCM240 STACKING KIT

For use when electrically connecting (2) CM1200R icemakers to the RC302 remote condenser.

OPTIONAL BH750 STORAGE BIN

For use with one or two CM1200 icemakers.

GENERAL INFORMATION AND INSTALLATION

INTRODUCTION

These instructions provide the specifications and the step-by-step procedures for the installation, start up and operation for the Scotsman Model CM1200R Modular Cuber with Remote Condenser.

The Model CM1200R Modular Cubers are quality designed, engineered and constructed, and thoroughly tested icemaking systems, providing the utmost in flexibility to fit the needs of a particular user.

The Model CM1200R modular cuber can be installed with any one of two remote condensers and with either of two lengths of pre-charged refrigerant lines and sealed couplings.

Single circuit and two circuit condensers are available. The single circuit condenser can accommodate a single CM1200R cuber and one set of two pre-charged refrigerant lines. The two circuit condenser can accommodate two separate CM1200R cubers at two different locations; or, a double-stacked installation of two CM1200R cubers and two sets of the two pre-charged refrigerant lines.

In any of the above installations the sets of two pre-charged refrigerant lines to be used are the 25-foot line kits or the 40-foot line kits. These pre-charged refrigerant line kits are a one-time, initial charge type of hardware; once the sealed couplings are connected, the internal seal is severed and the lines cannot be disconnected without losing the refrigerant charge. However, they ARE REUSABLE in the refrigerant system, when they are removed and reconnected, and the complete refrigeration system is evacuated and re-charged.

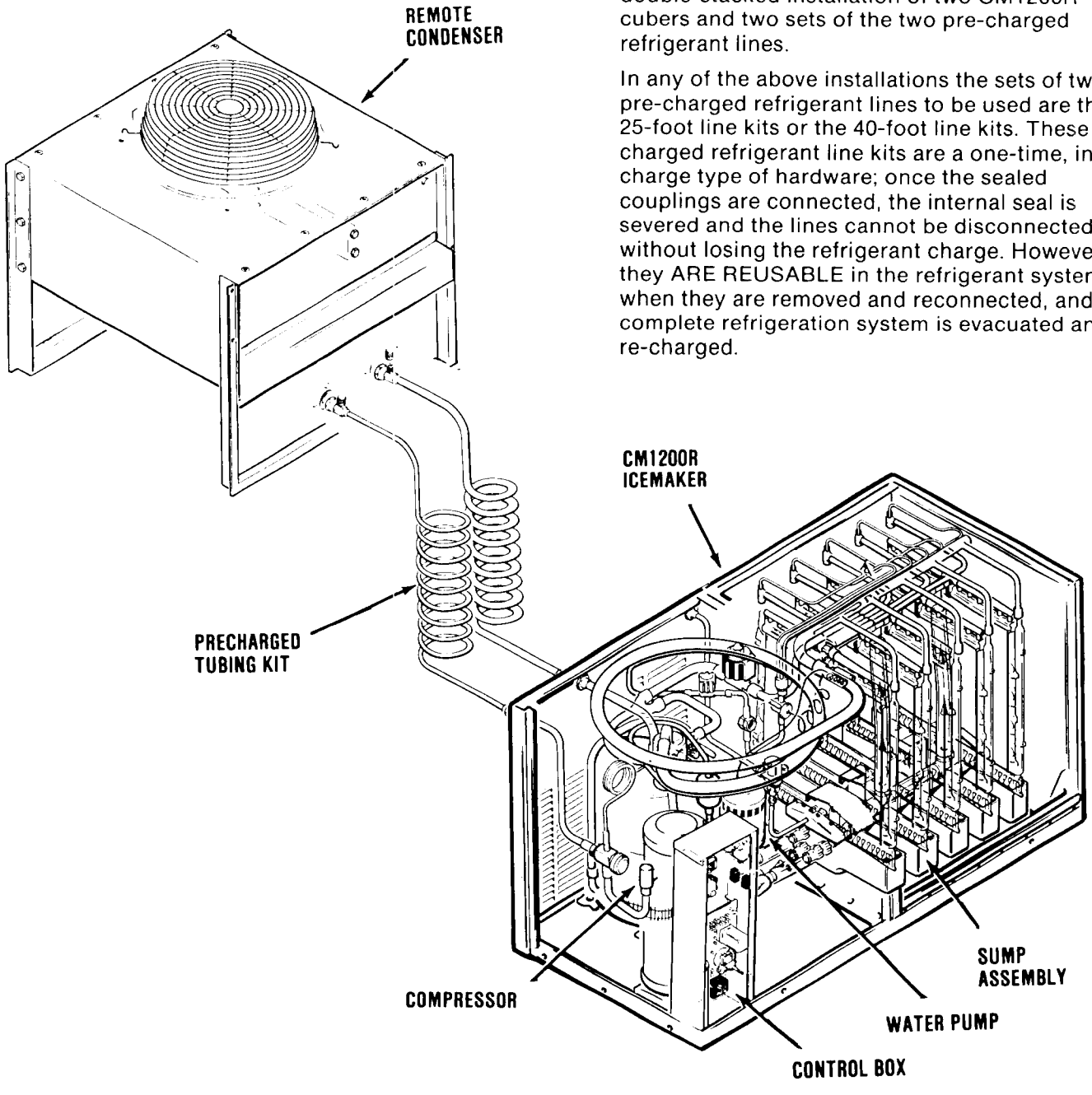

CM1200R — Component Location

LOCATION & LEVELING

Component location determines the length of pre-charged refrigerant lines, 25-foot kit or 40 foot kit.

1. Position the Model BH750 Bin in the selected location, which should have a minimum room temperature of 50-degrees F., and maximum room temperature of 100-degrees F. Level the bin, adjusting the leg levelers in both the front-to-rear and side-to-side directions.
2. Inspect the bin top mounting gasket, which should be flat, with no wrinkles, to provide a good water seal when the CM1200 Cuber is installed on top of the bin.
3. Install the CM1200 Modular Cuber on top of the BH750 Bin, using care to be sure a good seal is made between the two cabinets. Align the holes in the bottom rear of the CM1200 cabinet to mate with the two mounting straps on the top rear of the BH750 Bin.
4. Use two bolts retained from the removal of the holddown straps during unpacking, to secure the mounting straps to the CM1200 in the two holes used for the holddown straps. When alignment and leveling are completed, tighten the bolts to secure the mounting straps.
5. Remove nylon straps securing bin thermostat bracket to the front evaporator support and carefully reposition bin thermostat bracket on the back wall of the freezing section of the cabinet and attach using the second and third screws from the left corner. When properly installed, the capillary tube is insulated from the dividing wall to the bin thermostat bracket and the bin thermo bracket hangs DOWN, below the bottom of the icemaker chassis into the bin.

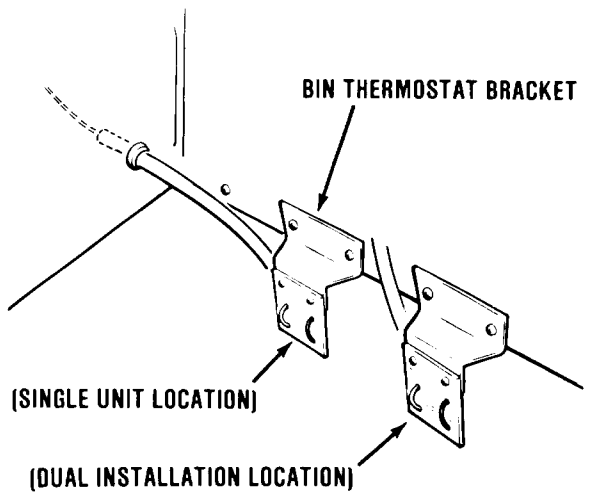

Installing the Bin Thermostat Bracket

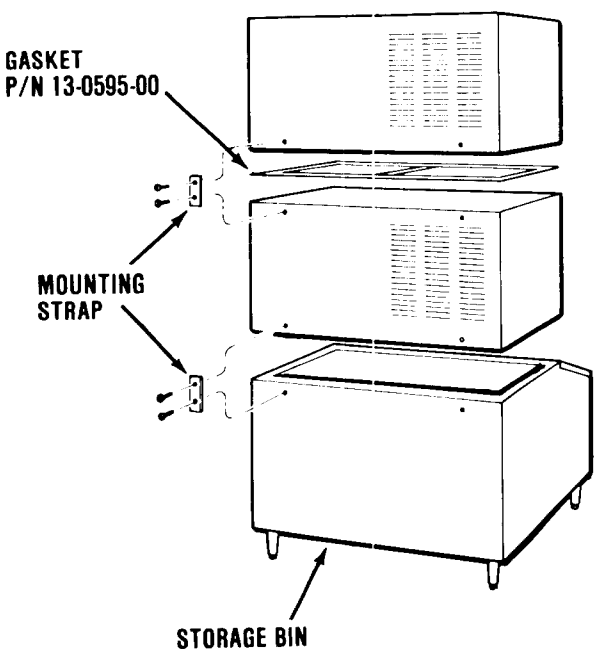

Mounting and Stacking Cubers

6. Remove seven shipping supports from the evaporator supports.

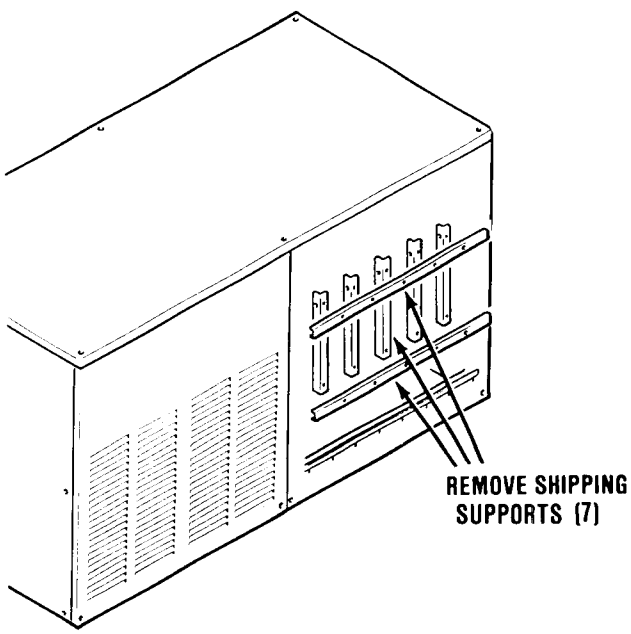

Removing Shipping Supports

REMOTE CONDENSER AND PRE-CHARGED LINES - INSTALLATION

Location Considerations:

Limited to a 40-foot length or a 25-foot length of pre-charged refrigerant line from the rear of the icemaker Chassis to the Remote Condenser.

Best available location, protected from the extremes of dirt, dust, and sun.

Must meet local building code installation requirements. Usually the services of a certified electrician are required.

Remote Condenser - Roof Attachment.

1. Install and attach the remote condenser to the roof of the building, using the methods and practices of building standards that conforms to and meets the local building code requirements in your area.
2. Refer to Wiring Diagram and connect the remote condenser fan motor electrically to the CM1200R at the junction box of the remote condenser and the lower junction box of the CM1200R.

CAUTION

BE SURE the icemaker is properly grounded and connected to the proper voltage at the location power source, to begin the 12-hour PRE-START heating of the Compressor Crankcase. This precautionary step heats the oil in the Compressor Crankcase, separates refrigerant from oil, which prevents possible damage to the Compressor, at START-UP.

Pre-Charged Refrigerant Lines:

1. Each set of pre-charged refrigerant lines in the 25-foot length, or 40-foot length kits, consists of a 3/8-inch diameter, self-sealing LIQUID line and a 1/2-inch diameter, self-sealing DISCHARGE line. One coupling on each line is fitted with a charging port, which provides the service man with access for service gauges at the REMOTE CONDENSER location, when necessary.

NOTE

The openings in the building ceiling or wall, listed in the next step, are minimum sizes recommended, through which the pre-charged refrigerant lines may pass; and, are to be considered only if they conform to and meet the local building code requirements in your area.

2. Minimum recommended sizes for openings required in a ceiling or wall, for the pre-charged refrigerant lines to pass, are as follows:
   a. Single-pass Condenser: 1-3/4-inch diameter.
   b. Two-pass Condenser: 2-inch diameter.
3. Whenever possible, route the maximum length of the pre-charged refrigerant lines INSIDE the building, with the minimum length on the roof, to prevent vandalism and to minimize the condenser effect that exposed lines can produce in cold weather. INSULATE refrigerant lines exposed to outside temperatures that will be below freezing, for extended periods of time.

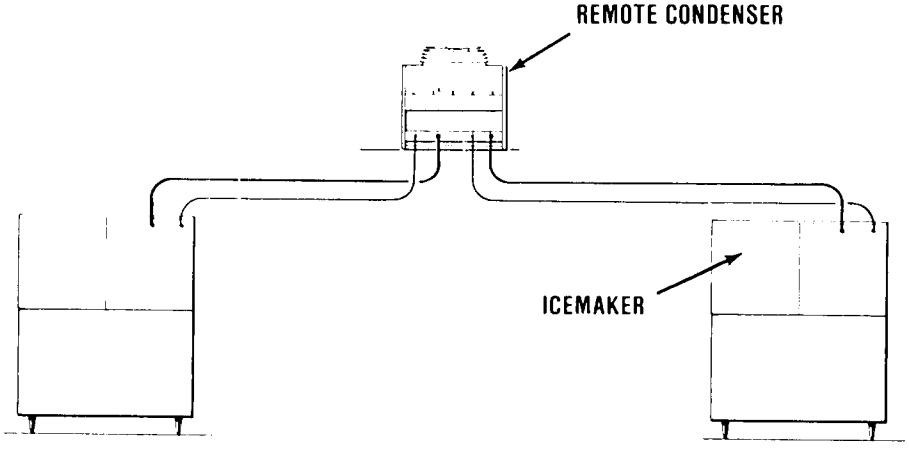

ONE OR TWO ICEMAKERS
USING ONE REMOTE CONDENSER

Pre-Charged Refrigerant Line Schematic

COUPLING INSTRUCTIONS, PRE-CHARGED TUBING KIT

CAUTION

The couplings on the sets of pre-charged refrigerant lines, the refrigerant fittings on the Remote Condenser, and the rear of the Icemaker Chassis are SELF-SEALING and should be connected as follows:

1. **Remove protector caps and plugs and if necessary, carefully wipe coupling seats and threaded surfaces with a clean cloth to prevent the inclusion of dirt or any foreign material in the system.**
2. **LUBRICATE male half diaphragm and synthetic rubber seal with refrigerant oil. Thread coupling halves together by hand to insure proper mating of threads. Use proper size wrenches (on coupling body hex and on union nut) and tighten until coupling bodies "bottom" or a definite resistance is felt.**
3. **Using a marker or ink pen, mark a line lengthwise from the coupling union nut to the bulkhead. Then tighten an additional 1/4 turn; the misalignment of the line will show the amount the coupling has been tightened. This final 1/4 turn is necessary to insure the formation of leakproof joint.**

ALWAYS USE TWO WRENCHES WHEN TIGHTENING THESE FITTINGS, ONE AS BACKUP WRENCH TO PREVENT TWISTING OF TUBING AND POSSIBLE KINKING OR LINE RUPTURE.

BE SURE to connect the ends of the precharged refrigerant lines, that have the charging port fittings, TO THE REMOTE CONDENSER FITTINGS. This gives the serviceman access for service gauges at the REMOTE CONDENSER location, when necessary.

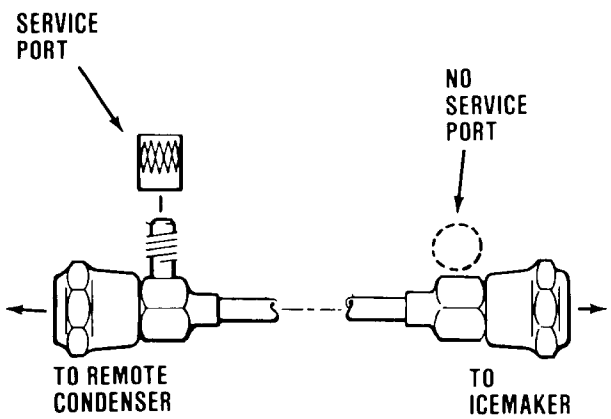

Pre-Charged Refrigerant Line Connection

4. Connect the 3/8-inch diameter refrigerant line coupling, with the SERVICE PORT fitting, to the remote condenser refrigerant fitting labeled: LIQUID LINE as detailed in Coupling Instructions.
5. Connect the 1/2-inch diameter refrigerant line coupling, with the CHARGING PORT fitting, to the Remote Condenser refrigerant fitting labeled: DISCHARGE LINE. Tighten as detailed in Coupling Instructions.

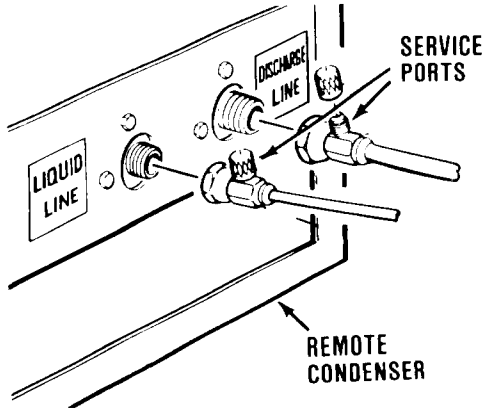

6. Connect the 3/8-inch diameter refrigerant line coupling, to the refrigerant fitting on the upper right rear of the icemaker chassis labeled: LIQUID LINE. Tighten as detailed in Coupling Instructions.
7. Connect the 1/2-inch diameter refrigerant line coupling, to the refrigerant fitting on the upper, right rear of the icemaker Chassis labeled: DISCHARGE LINE. Tighten as detailed in step 4.

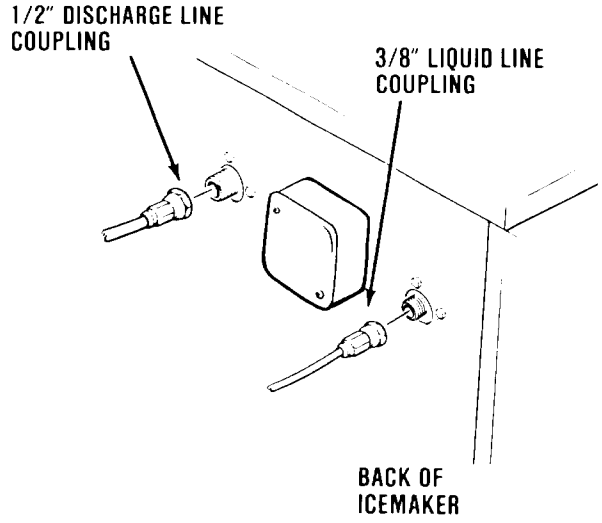

Excess Length of Pre-Charged Refrigerant Lines:

At installations where the icemaker Chassis-to-Remote Condenser refrigerant line path is substantially LESS than the 25-foot length or 40-foot length of pre-charged refrigerant line kit to be installed, route and dress the excess refrigerant line as follows:

1. Follow straight line routing, when possible.
2. Retain excess pre-charged refrigerant line INSIDE the building.
3. SPIRAL the excess footage of the pre-charged refrigerant line(s), in the best selected INSIDE location, and in a manner that PREVENTS refrigerant TRAPPING. See *Pre-Charged Refrigerant Line Routing* illustration for recommended methods of spiralling the excess refrigerant lines.

CAUTION

DO NOT kink or crimp the refrigerant lines. DO NOT bend the excess refrigerant lines in a vertical LOOP(s), which allow trapping of refrigerant in LOW sections, during OFF time. Bend and shape the excess refrigerant lines in VERTICAL spirals, not HORIZONTAL spirals. See Pre-Charged Refrigerant Line Hook-Up.

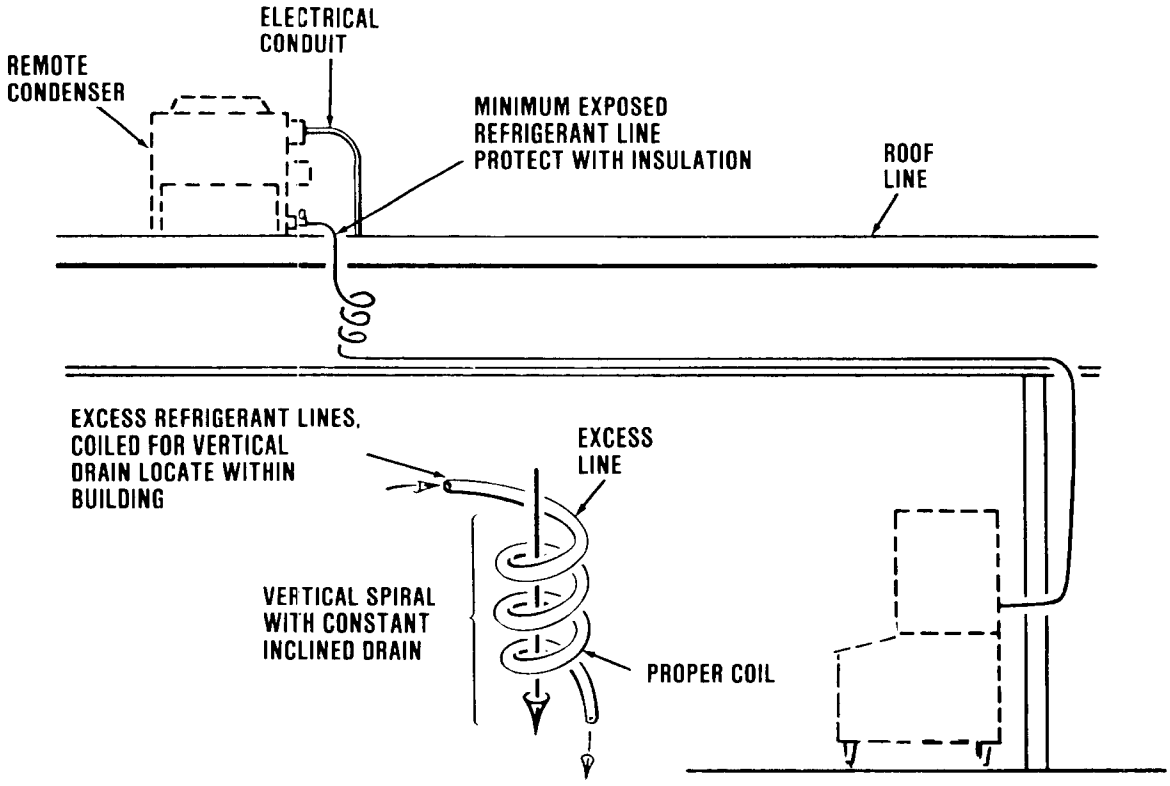

Pre-Charged Refrigerant Line Routing

ELECTRICAL CONNECTIONS

SEE NAMEPLATE for current requirements to determine wire size to be used for electrical hookup. The cuber requires a solid chassis-to-earth ground wire. See Wiring Diagram.

Be certain the cuber is connected to its own electrical circuit and individually fused. Voltage variation should not exceed ± ten percent of the nameplate rating, even under starting conditions. Low voltages can cause erratic operation and may be responsible for serious damage to the icemaker.

All external wiring should conform to the national, state and local electrical code requirements. Usually an electrical permit and services of a licensed electrician will be required.

Electrically the remote condenser fan motor is connected to the CM1200R at the contactor terminals for the compressor and the fan motor operates whenever the compressor operates.

When connecting two CM1200R icemakers with a RC302 remote condenser electrically, refer to the instruction sheet supplied with the KCMR230 Stacking Kit.

WATER SUPPLY AND DRAIN CONNECTIONS

The recommended water supply line is a 3/8-inch O.D. copper tubing with a minimum operating pressure of 20 PSIG and a maximum of 120 PSIG. Connect to cold water supply line with standard plumbing fittings, with a shutoff valve installed in an accessible place between the water supply and the cuber. In some cases a plumbing permit and services of a licensed plumber will be required.

DRAIN CONNECTIONS: All drains are gravity type and must have a minimum of 1/4-inch fall per foot on horizontal runs. The drains to be installed to conform with the local plumbing code. Install separate drain line for discharge water from the water-cooled condenser. Install a vertical open vent on drain line to ensure good venting. The drain receptacle should be an open, trapped or vented construction.

Recommended bin drain is 5/8-inch O.D. copper tubing and should be vented and run separately.

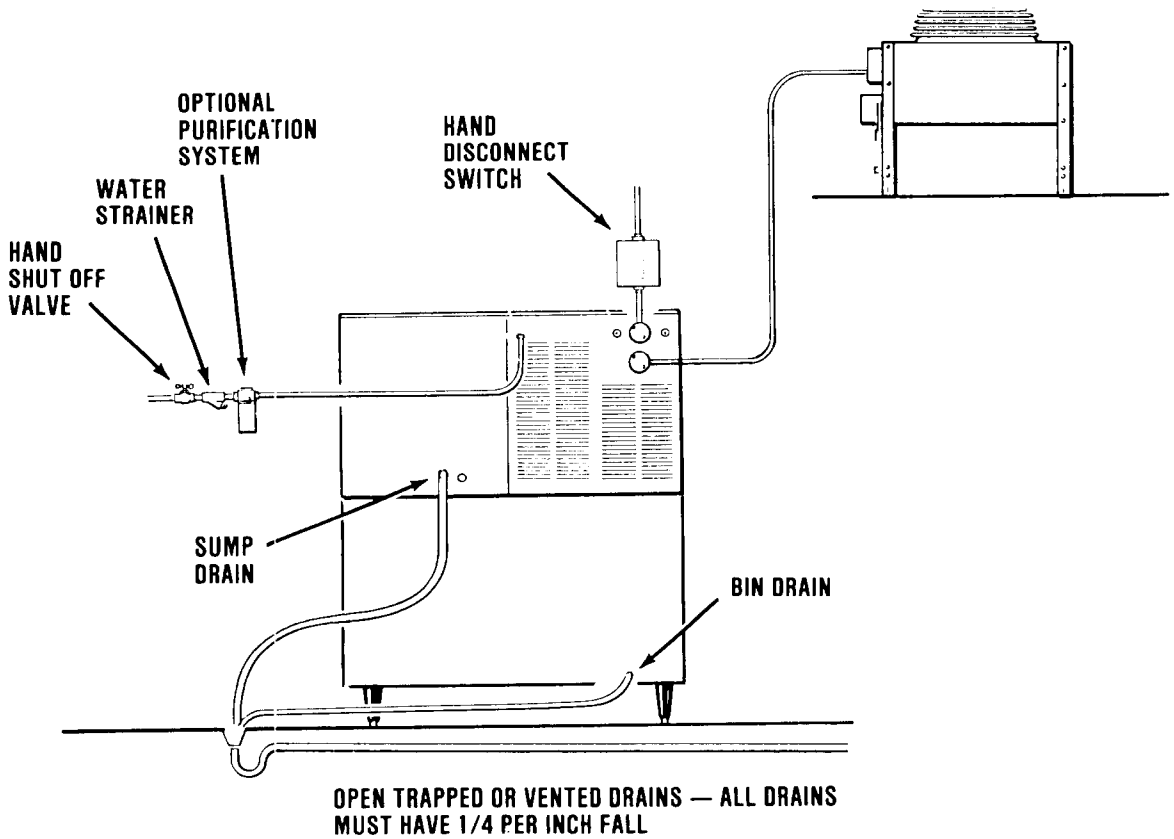

Installation, Water Supply and Drain Connection

FINAL CHECK LIST

1. Is the cabinet/bin level?
2. Is the cuber in a location where ambient temperatures are a minimum of 50-degrees F. all year around and do not exceed a maximum of 100° F?
3. Is there at least a six-inch clearance behind and around the cabinet for all connections and for proper air circulation?
4. Have all electrical and piping connections been made?
5. Has the electrical power supply wiring been properly connected, and the voltage tested and checked against the nameplate rating? Has proper chassis-to-earth ground been installed?
6. Is the water supply line shutoff valve installed and opened and has the inlet water supply pressure been checked to ensure a minimum of 20 PSIG and a maximum of 120 PSIG?
7. Check the wood blocks, foam packing and front brace supports have been removed from the evaporator plates.
8. Check that the reservoir is properly secured to the bottom of the evaporator plates.
9. Check that the sump covers are properly secured to the bottom of the evaporator plates.
10. Have the compressor holddown bolts been checked to be sure the compressor is snug on the mounting pads?
11. Check all refrigerant lines and conduit lines to guard against vibration and possible failure.
12. Has the bin thermostat bracket been properly installed?
13. Has the cuber and the bin been wiped clean with clean damp cloths?
14. Has the remote condenser and pre-charged refrigerant lines been properly installed and connections made and checked?
15. Has the remote condenser fan motor been connected electrically to the CM1200R at the junction box of the remote condenser and the lower junction box of the CM1200R?
16. Has the electrical power to the icemaker been connected to start the 12-hour period of PRE-START crankcase heating?
17. Has the owner/user been given the User Manual and instructed on how to operate the icemaker and the importance of periodic maintenance?
18. Has the owner/user been given the name and telephone number of the Authorized Scotsman Distributor or Service Agency serving him?
19. Has the Manufacturer's Registration Card been properly filled out? Check for correct Model and Serial Numbers from nameplate, then mail the completed card to the SCOTSMAN factory.

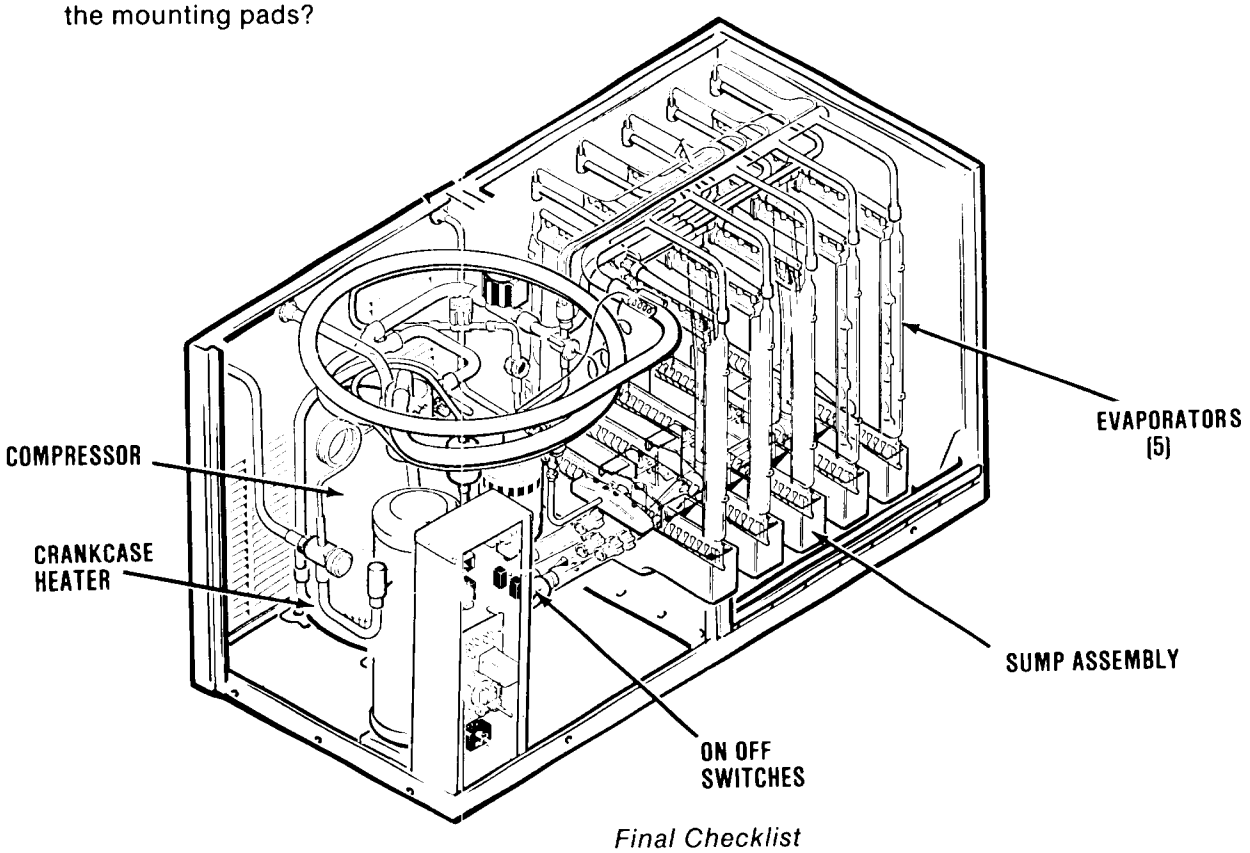

Final Checklist

OPERATING INSTRUCTIONS

PRE-START

1. Verify that the MASTER SWITCH and the COMPRESSOR SWITCH are both in the OFF position.
2. Operate the switch at the building source to supply electrical power to the icemaker a minimum of 12 hours BEFORE start up.

WARNING

BE SURE the icemaker is properly grounded and connected to the proper voltage at the location power source, to begin the 12-hour PRE-START heating of the Compressor Crankcase. This precautionary step heats the oil in the Compressor Crankcase, separates refrigerant from oil, which prevents probable damage to the Compressor, at START-UP.

START-UP

1. Remove screws and remove both front panels.
2. Check that the two toggle switches, the MASTER ON-OFF toggle switch and the COMPRESSOR ON-OFF toggle switch are in the OFF position, on the control box.
3. Remove four screws on the control box and remove the cover.
4. OPEN the water supply line shutoff valve.
5. **Remove the stem cap from the receiver outlet (King) valve and fully open the valve. Replace the cap.**
6. Inside the control box is the shaft of the timer and the switch assembly. Rotate the shaft of the timer and switch assembly clockwise until the actuator arm on the microswitch drops off outer cam into cam slot. See Timer Cam Positions. An audible click can be heard, but in a noisy area, look at the cam and switch to observe the event.
7. Move the master ON-OFF toggle switch, the closest to the front in the control box, to the ON position.
8. Observe water fill cycle: Water inlet solenoid valve OPENS, incoming water flows from the valve through the tubing, the reservoir fills and excess water is overflowed through the stand pipe. This cycle will take about three minutes. Timer will close the water inlet solenoid valve and the water fill cycle is complete.

   Advancing the shaft of the timer and switch assembly through the remaining cycle into a new harvest cycle, restarts the timer and allows a check that: Water inlet solenoid valve OPENS and the reservoir overflows through the stand pipe. Water inlet valve CLOSES, stopping water overflow.
9. Check that the water cascades down over each cube mold and into the sump.
10. When the second cycle is completed, move the compressor ON-OFF toggle switch, to the ON position. The compressor operates and the remote condenser fan operates.
11. Check operation of the freezing cycle:

    The water pump is operating, as seen by water moving through the two tygon tubes between evaporator plates, up to the water manifold at the top of the evaporator plates, where water is uniformly dispensed and cascades down both sides of each evaporator plate and drains back into the sump assembly for recirculation.

    The icemaking process begins; feeling the metal parts of the evaporator plates reveals cold temperature, very shortly ice begins to form. Tubing will become frosted at the top of the evaporator plates.

(Continued on page 12)

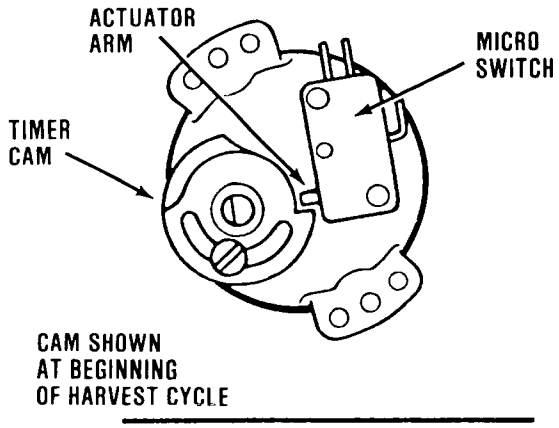

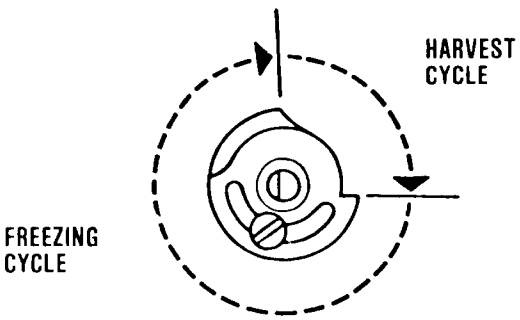

Timer Cam Positions

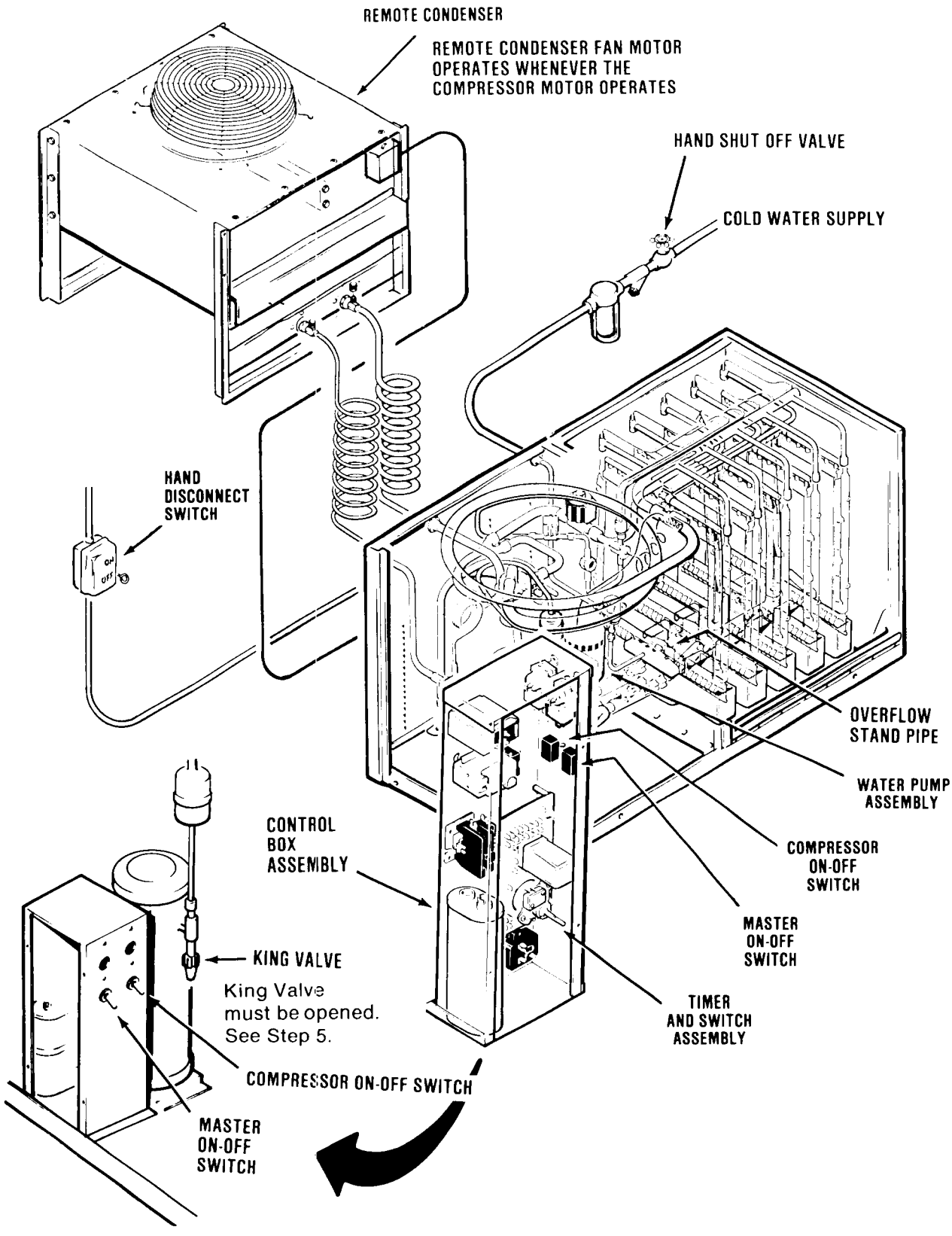
REMOTE CONDENSER
REMOTE CONDENSER FAN MOTOR OPERATES WHENEVER THE COMPRESSOR MOTOR OPERATES
HAND SHUT OFF VALVE
COLD WATER SUPPLY
HAND DISCONNECT SWITCH
OVERFLOW STAND PIPE
WATER PUMP ASSEMBLY
CONTROL BOX ASSEMBLY
COMPRESSOR ON-OFF SWITCH
MASTER ON-OFF SWITCH
TIMER AND SWITCH ASSEMBLY
KING VALVE
King Valve must be opened. See Step 5.
COMPRESSOR ON-OFF SWITCH
MASTER ON-OFF SWITCH

Freezing time will range between 16 and 19 minutes in a 70-degree F. ambient temperature. Longer time for temperatures above 70-degrees F., and shorter time required when temperatures are below 70-degrees F. Average complete cycle range is about 18 to 22 minutes.

12. Observe first ice cube harvest:

    Check size of SCOTSMAN CONTOUR CUBE

Unlike other SCOTSMAN cubes which are made in a definite molded shape, contour cubes are produced in indentations and many shapes and sizes of contour cubes may be produced — only ONE size and shape combination is correct.

An under-charged refrigeration system produces smaller cubes at the bottom of the evaporator plate and large cubes at the top. Charge system per NAMEPLATE specifications.

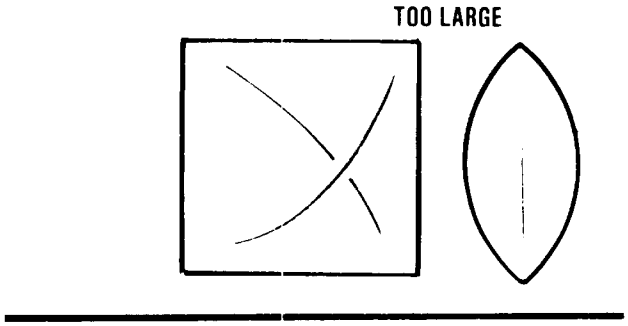

Too LARGE requires longer freezing cycle — may cause evaporator freeze ups. Adjust cube size control to obtain smaller cube.

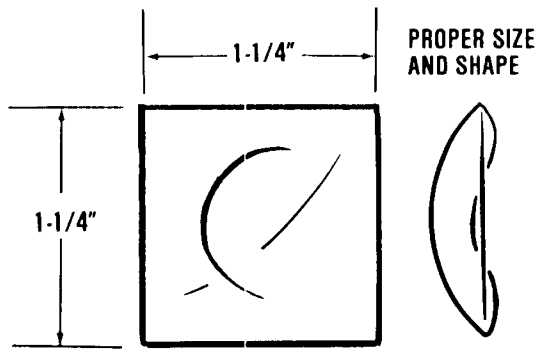

PROPER SIZE AND SHAPE of the contour cube. Icemaker operates at peak efficiency when a cube this size and shape is produced. A finely tuned system produces vertical strips of ice which easily break when they fall.

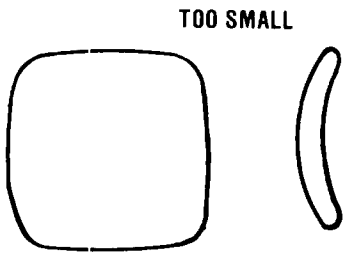

TOO SMALL. Adjust cube size control. Any cubes this size or shape are too small and cause excessive cycling to produce a equal quality of production. Can also lead to freeze up problems due to poor harvest.

Ice Cube Size & Shape

ADJUSTMENT OF CUBE SIZE

To produce LARGER sized ice cubes:

Locate cube size control, in the top right back section of the control box.

Rotate the adjusting screw one-eighth of a turn CLOCKWISE to COLDER.

Observe size of ice cubes in the next two cube harvests and adjust in one-eighth turn or less increments, until desired ice cube size is achieved.

To produce SMALLER sized ice cubes:

Locate cube size control, in the top right back section of the control box.

Rotate the adjusting screw one-eighth of a turn COUNTERCLOCKWISE to WARMER.

Observe size of the ice cubes in the next two ice cube harvests and adjust in one-eighth turn or less increments, until desired ice cube size is achieved.

13. Check texture of ice cubes; when partially cloudy throughout, suggests icemaker is operating short of water; or, possibly an extreme problem water condition exists, wherein filtering or purifying equipment is recommended. Contact SCOTSMAN ICE SYSTEMS, Service Department, Albert Lea, Minnesota 56007 for further details.

With the icemaker in the harvest cycle, hold ice against the bin thermostat control bulb to test shutoff at the END OF THE HARVEST CYCLE. If the bin thermostat is OPEN, the liquid line solenoid valve will close, shutting off refrigerant flow to the evaporator and allowing the compressor to pump any refrigerant left in the evaporators into the high pressure receiver. When the evaporator pressure is lowered to approximately 3 PSIG, the low pressure switch opens, shutting off the compressor, remote fan and water pump.

Within minutes after the ice is removed from the sensing bulb, the bulb will warm up and cause the icemaker to restart. This control is factory set and should not be reset until testing is performed.

14. Replace control box cover and all cabinet panels and screws.

15. Thoroughly explain to the owner/user the significant specifications of the icemaker, the start up and operation, going through the procedures in the operating instructions. Answer all questions abouit the icemaker by the owner; and inform the owner of the name and telephone number of the authorized SCOTSMAN Distributor, or service agency serving him.

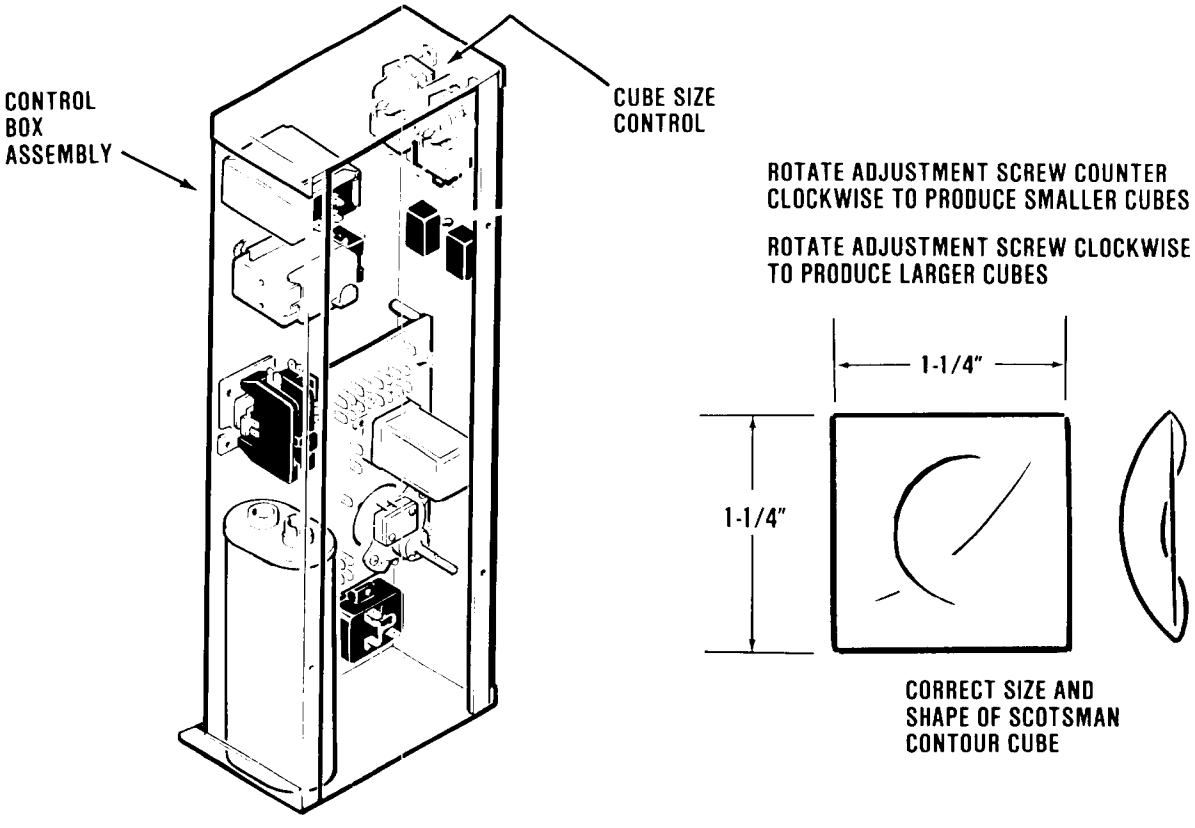

Cube Size Control Adjustment

FREEZING CYCLE

Water from the sump assembly is pumped to the water distributor system, at the top of the evaporator plates. From the water distributors at the top of each evaporator plate, the water cascades by gravity over all cells of the plates and to the sump assembly below, for recirculation. At the beginning of the freezing cycle, the electrical circuit is completed to the compressor and the water pump. The water pump and the remote fan motor operate continuously, through both the freezing cycle and the harvest cycle.

In the compressor, gaseous refrigerant is compressed and discharged into the condenser, as a high pressure, high temperature gas. The refrigerant is cooled by air and condenses into a high pressure, high temperature liquid. The liquid refrigerant then passes through a Receiver, which stores excess refrigerant not required at high condensing temperatures; then, on to the liquid line solenoid valve and Thermostatic Expansion Valve where the temperature and pressure of the liquid refrigerant are lowered. This liquid refrigerant is then distributed through capillary tubes to the evaporator plates. The refrigerant is warmed by the water cascading over the Evaporator plates and begins to boil off and become a gas. The refrigerant travels through the heat exchange area of the suction line where any remaining liquid refrigerant boils off and returns to the compressor as a low pressure, low temperature gas, and the cycle starts again.

During the freezing cycle, the hot gas solenoid valve is CLOSED and the water inlet solenoid valve is CLOSED.

When the ice cubes are partially formed, the cube size control will sense the temperature at which it is preset to CLOSE. This will complete the electrical circuit to the timer. The timer then controls the remainder of the freezing cycle.

The timer will keep the icemaker operating in the freezing cycle for a selected length of time. This will give the ice cubes time to fully form. After that selected length of time, the timer will switch the icemaker into the harvest cycle, through the contacts of the timer assembly microswitch.

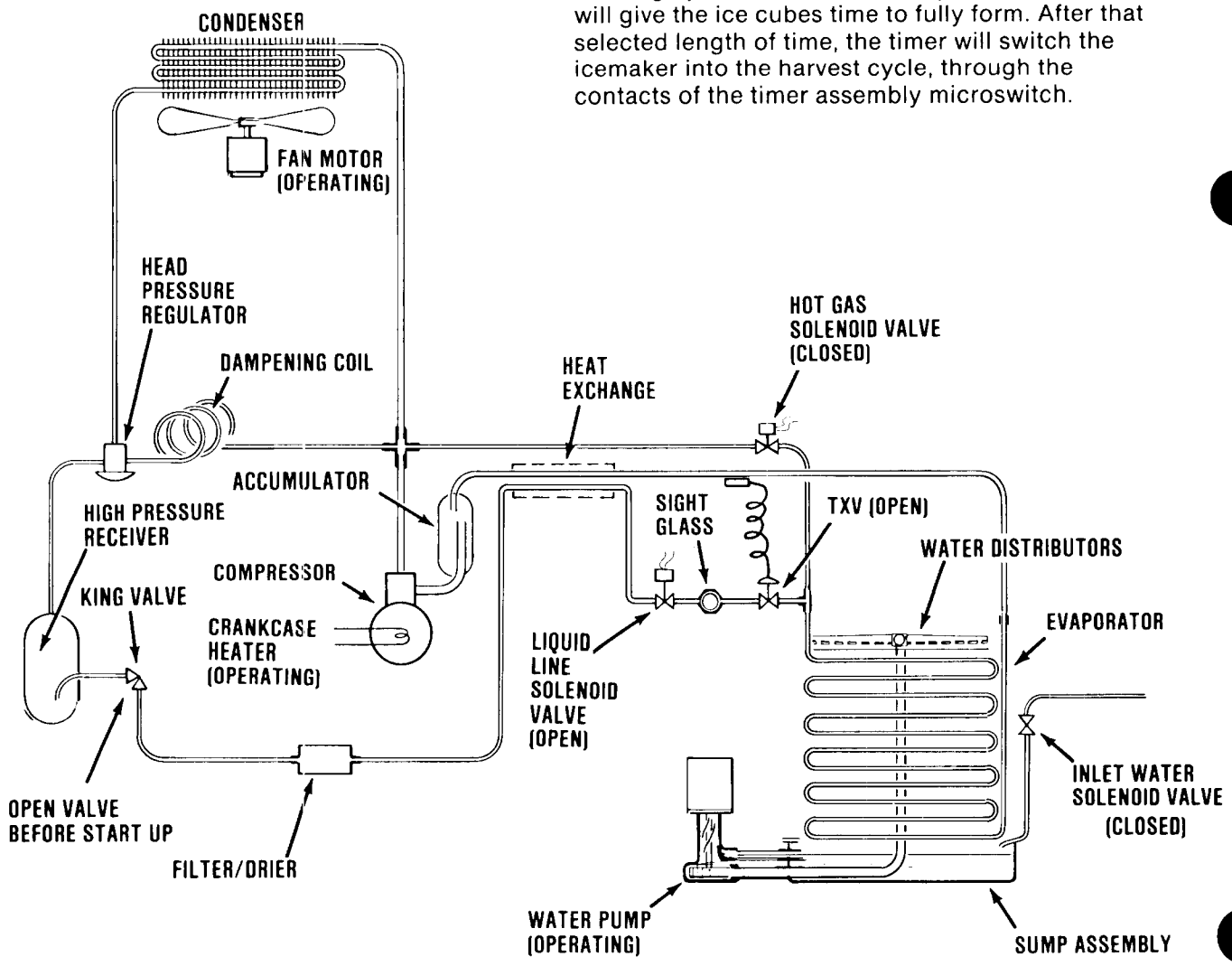

Freezing Cycle Schematic

HARVEST CYCLE

When the timer switches the icemaker into the harvest cycle, high pressure, high temperature gaseous refrigerant being discharged from the compressor is diverted from the condenser through the hot gas solenoid valve into the evaporator plates. During this cycle, the gaseous high pressure, high temperature refrigerant circulates from the compressor through the evaporator plates and back again, bypassing the condenser, and the thermostatic expansion valve. In the electrical circuit, both the compressor and the water pump are operating and the hot gas solenoid valve is energized and OPEN and the water inlet solenoid valve is OPEN.

The finished ice cubes are released from the sides of the evaporator plates, by the warming effect of the hot gas flowing through the evaporator plates and the water cascading over the ice cubes. The released ice cubes drop into the ice storage bin below.

At the end of the harvest cycle, the timer cam will push the actuator arm of the microswitch IN. If the bin thermostat is still CLOSED, a whole new cycle will begin. If the bin thermostat is OPEN, the liquid line solenoid valve will close, shutting off refrigerant flow to the evaporator and allowing the compressor to pump any refrigerant left in the evaporators into the high pressure receiver. When the evaporator pressure is lowered to approximately 3 PSIG, the low pressure switch opens, shutting off the compressor, remote fan and water pump.

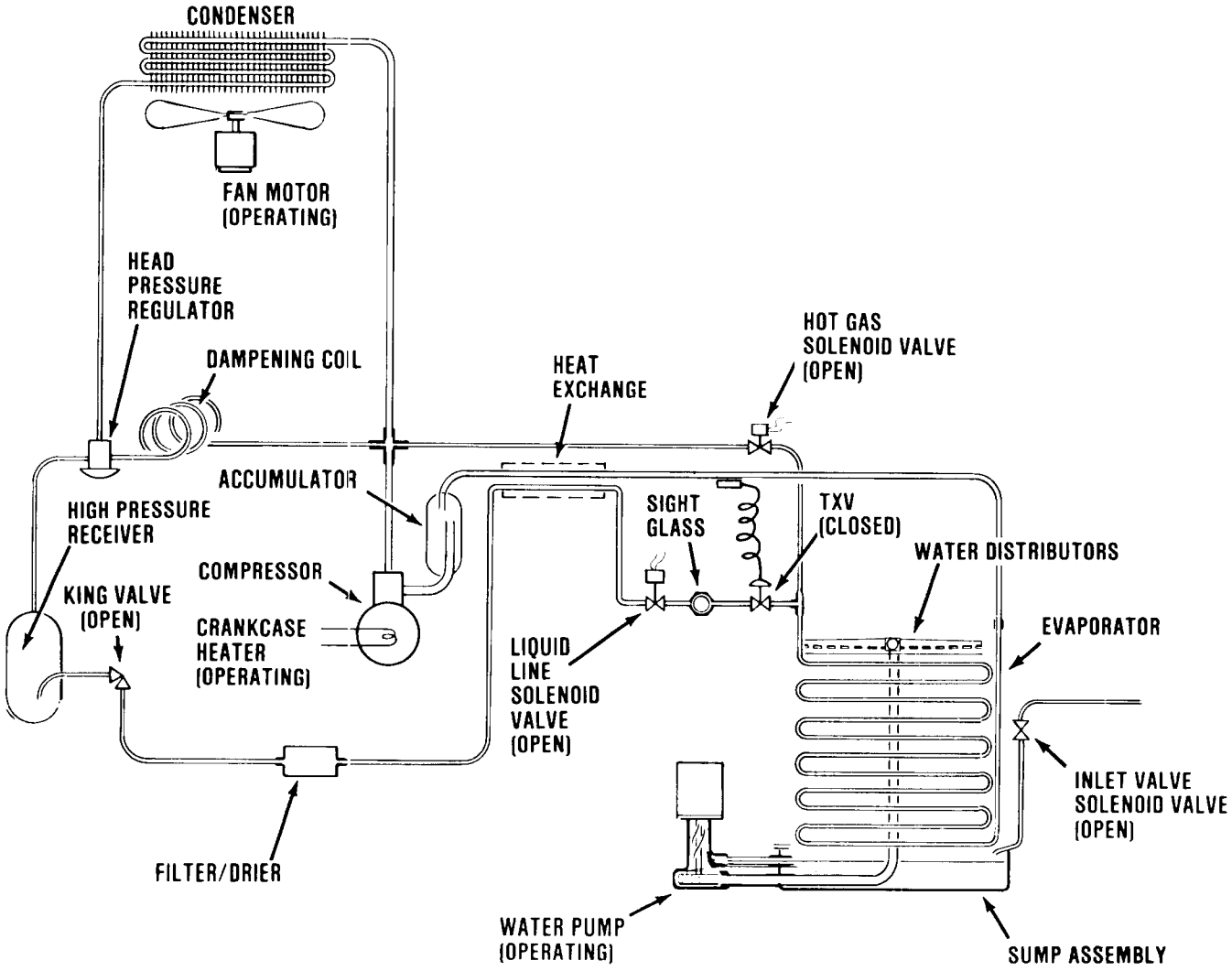

COMPONENT DESCRIPTION

BIN THERMOSTAT CONTROL

The bin thermostat control is located in the top of the control box. The sensing capillary tube of the control is routed from the control box through the inner left wall in the evaporator section, to the bin thermo control bracket hanging in the ice storage bin. The bin thermostat control functions to automatically shut OFF the icemaker, when the ice storage bin is filled and ice contacts the capillary tube. It also signals the RESTART of the icemaker, when the capillary tube starts to warm up, after ice has been removed from the bin.

Bin thermostat control adjustment should ONLY be performed if premature shut off occurs or ice backs up into the freezing section of the cabinet. Adjust only in increments of one eighth turn of a screw at a time.

COMPRESSOR CONTACTOR

The compressor contactor functions to carry the compressor line current. The contactor is wired so any control in the pilot circuit, such as the bin thermostat, low pressure and high pressure controls, etc., will cause the contactor holding coil to be de-energized, when the control contact OPENS, thereby breaking the circuit to the compressor through the contactor points.

CUBE SIZE CONTROL

The temperature sensing cube size control affects the length of the freezing cycle prior to initiating the finishing timer. The cube size control closes its contacts when the evaporator reaches a preset temperature, starting the finishing timer. A variation in either ambient air or incoming water temperature will affect the efficiency of the refrigeration system. This will vary the length of time it takes the evaporator to reach the temperature at which the cube size control is preset to CLOSE; which, in turn, will affect the overall cycle time.

See *Cube Size Adjustment* BEFORE attempting to adjust the control.

FINISH RELAY

The multi-function, three pole, double-throw, plug-in relay is installed directly into a receptacle on the printed circuit board in the control box. The relay functions, in part, to by-pass the bin thermostat control to prevent the icemaker from shutting OFF, when a filled-bin condition occurs, during the freezing cycle. The by-pass action serves to ensure full-sized ice cubes with each harvest cycle; and, to prevent short cycling on the bin thermostat control.

FINISHING TIMER — Timer & Switch Assembly.

The function of the finishing timer begins when activated by the cube size control. The outer surface, or large diameter lobe of the timer cam, determines the timer cycle for finish freezing of the ice cubes, while the inner surface, or small diameter lobe, determines the time cycle for the harvest sequence. All electrical circuitry is connected through the printed circuit board and the finishing timer and double-throw microswitch. The microswitch is actuated by a cam assembly directly connected to the timer motor. The timer cam can be adjusted to vary the defrost line, as required.

HIGH PRESSURE RECEIVER

Provides storage volume for refrigerant during cross ambient operation. The high pressure receiver is sized large enough to hold the entire refrigerant charge. During cold operation there is enough liquid in the receiver to maintain a liquid seal to the liquid line.

LIQUID LINE SOLENOID VALVE

The liquid line solenoid valve provides positive shutoff of refrigerant flow for off cycle evaporator pump down.

HOT GAS SOLENOID VALVE

The hot gas solenoid valve opens during the harvest cycle, to divert the hot discharge gas from the compressor, directly into the evaporator plates assembly to release ice cubes from the ice cube molds. The hot gas solenoid valve is comprised of two parts, the body and plunger and the coil and frame assemblies. Installed in the discharge line of the compressor, the energized solenoid coil lifts the valve stem within the valve body, to cause the hot discharge gas to be diverted when the finishing timer has advanced to the start of the harvest cycle.

WATER INLET SOLENOID VALVE

The water inlet solenoid valve opens during harvest to fill the sump assembly with water. Excess water overflows through a stand pipe located at the back of the sump to flush minerals from the sump.

WATER DISTRIBUTION SYSTEM

The water distribution system functions to evenly supply water to all cells of the evaporator plates. The water pump pumps water from the sump up two vertical tygon tubes to two tees. From there water is channeled through water manifolds to ten water distributors, two atop each evaporator plate, and distributed evenly down both sides of each evaporator plate. Gravity flow returns the water to the sump reservoir for recirculation.

(Continued on page 33)

THE PARTS ILLUSTRATIONS AND PARTS LISTS

GENERAL

This section contains the Parts Illustrations and the Parts List for each of the major assemblies in the Model CM1200R Dispenser.

A *No Number* designation, when used in the Part Number Column indicates the unit is not available from SCOTSMAN as an assembly. This designation is used only for the convenience and clarity of division in cataloging.

HOW TO ORDER PARTS OR ASSEMBLIES

When ordering parts or assemblies, to avoid costly delays and errors in shipment, give the part number, the complete description shown in the list, and the quantities of each part or assembly required. Also include the Model name, the serial number of the icemaker for which the part is required, and for parts which require color matching, the color of the Cabinet.

All Part Numbers have TEN DIGITS (spaces), required for use in the Computer System. BE SURE to fill in ALL SPACES in the CATALOG NUMBER column, on the Parts Order form.

Enter the QUANTITY of the Parts ordered, in the last digit column under the QUANTITY column heading, the one under the small 55 number, for parts from 1 thru 9. For 10 or more parts use two columns.

To be sure you receive the proper parts in the proper quantities, ALWAYS use the PART NUMBERS and DESCRIPTIONS given in the Parts Manuals.

Write an order for the Part. (Use SCOTSMAN Parts Order Form (DN103). Be sure to include:

- ☐ Distributor Name.
- ☐ (Use for DROP-SHIP order ONLY.)
- ☐ Distributor Purchase Order Number.
- ☐ Carrier.
- ☐ How shipped (Truck, Rail, UPS, etc.)
- ☐ Date ordered.
- ☐ Part Catalog Number. (Use full TEN digits (spaces) listed in Parts Manual, including dashes between numbers.)
- ☐ Description - as listed in Parts Manual.
- ☐ Quantity - number of parts ordered. (Use far right column.)

WIRING DIAGRAMS

This section is provided as an aid in understanding the electrical circuitry of the modular cuber:

WARNING

When conducting a continuity check of the modular cuber:

1. **Disconnect the main power source.**
2. **DO NOT use an incandescent lamp or jumper wire, conduct all tests with a volt-ohm-meter.**

The wiring diagrams in this Section are:

CM1200RE—3A 208-230/60/3

CM1200RE-32A 208-230/60/1

17-1614-20

CABINET ASSEMBLY

ITEM NUMBER	PART NUMBER	DESCRIPTION
1	03-1404-09	(6) Screws, 8 x 1/2
2	03-1407-03	(2) Washers
3	A30744-001	Panel Top (Enamel)
	A30744-002	Panel Top (Stainless Steel)
4	03-1404-10	Screw, 8 x 1/2 (Stainless Steel)
5	*No Number*	Liner Guide
6	A30329-001	Liner Top
7	*No Number*	Upper Front Brace
8	A29164-003	Right Panel (Enamel)
	A29164-002	Right Panel (Stainless Steel)
9	A29204-001	Brace Front
10	03-1404-10	Screw 8 x 1/2 (Stainless Steel)
11	02-2532-01	Liner Cap
12	*No Number*	Liner Guide
13	13-0595-00	Gasket — Foam
14	02-2795-01	Liner Front Panel
15	03-0271-00	(2) Speed Clip
16	A30743-001	Panel, right front (Enamel)
	A30743-001	Panel, right front (Stainless Steel)
17	15-0711-01	Emblem
18	03-1404-19	(2) Screws, 8 x 1
19	03-1417-03	(2) Washers
20	03-1404-10	(8) Screws, 8 x 1/2 (Stainless Steel)
21	A30742-001	Panel, left front (Enamel)
	A30742-002	Panel, left front (Stainless Steel)
22	03-1404-19	(2) Screws 8 x 1
23	03-1417-03	(2) Washers
24	*No Number*	Base Fab Assembly
25	02-2533-01	Liner Left Side
26	*No Number*	(4) Bushing
27	*No Number*	(2) Bushing
28	03-1407-03	(2) Washer
29	03-1404-10	(4) Screws 8 x 1/2 (Stainless Steel)
30	A29168-003	Panel, left side (Enamel)
	A29168-002	Panel, left side (Stainless Steel)
31	03-1404-09	(4) Screws, 8 x 1/2
32	A30604-001	Panel, left back
33	*No Number*	Retainer
34	03-1404-09	(4) Screws 8 x 1/2
35	02-2531-01	Liner back

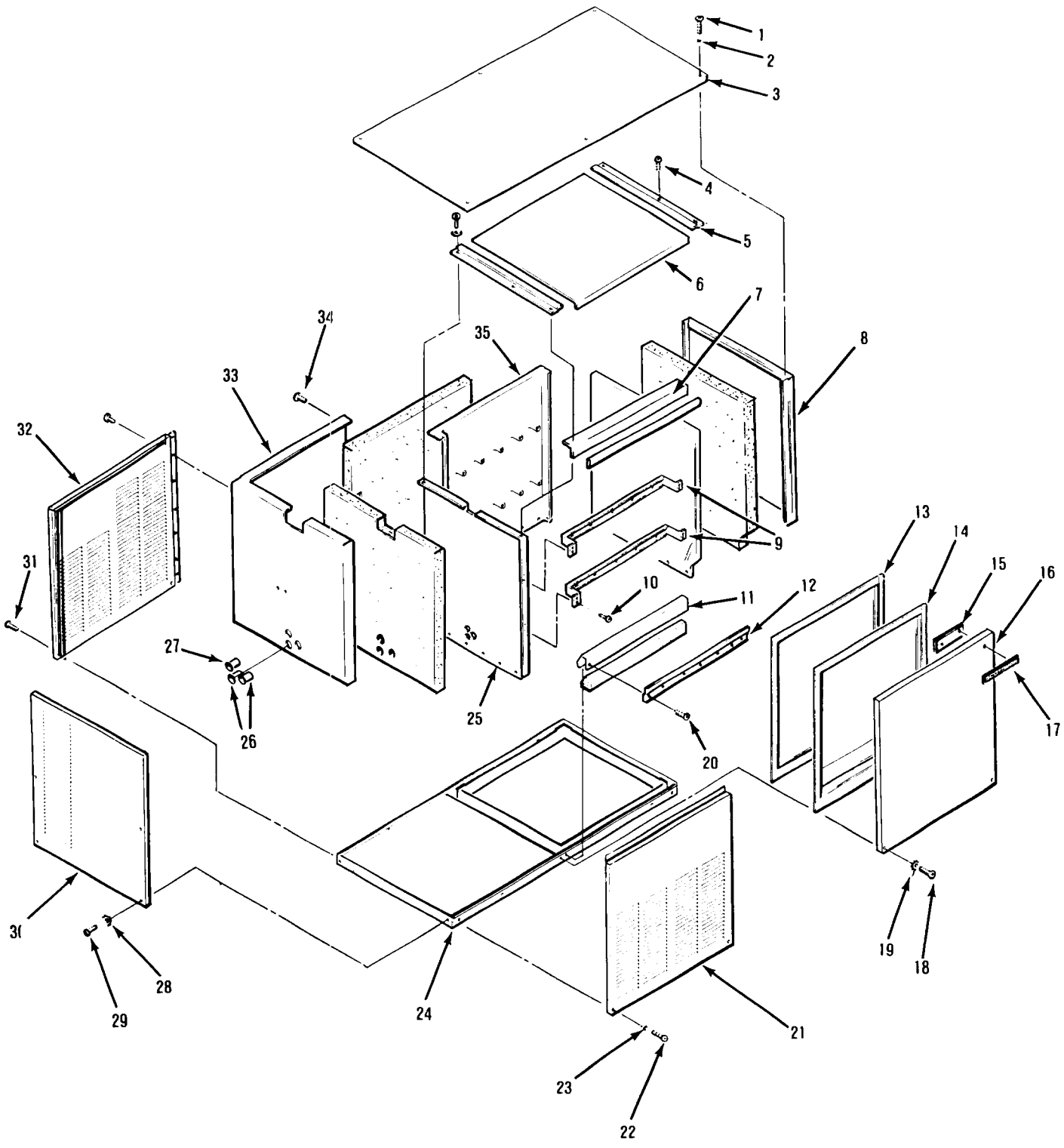
1
2
3
4
5
6
7
8
9
10
11
12
13
14
15
16
17
18
19
20
21
22
23
24
25
26
27
28
29
30
31
32
33
34
35

REFRIGERATION SYSTEM

ITEM NUMBER	PART NUMBER	DESCRIPTION
1	02-2426-02	Drier
2	16-0762-01	Sight Glass
3	16-0758-01	Thermostatic Expansion Valve
4	A30631-001	Evaporator Inlet Assembly
5	12-2257-01	Liquid Line Solenoid Valve
6	A30620-001	Suction Line Heat Exchange
7	16-0760-01	Accumulator
8	18-5100-02	Compressor 208-230/60/1
	18-5100-03	Compressor 230/60/3
9	11-0422-01	Head Pressure Regulator
10	03-1405-20	Screw 5/16 - 18 x 1-1/2
11	03-1407-07	Washer
12	18-5100-50	Sleeve
13	18-5100-51	Grommets
14	13-0571-01	Screw 1/4-20 x 3/4
15	16-0761-01	Receiver
16	16-0673-35	Process Header
17	12-2146-02	Hot Gas Valve
18	A30296-020	Evaporator Plate
19	12-1868-03	Crankcase Heater

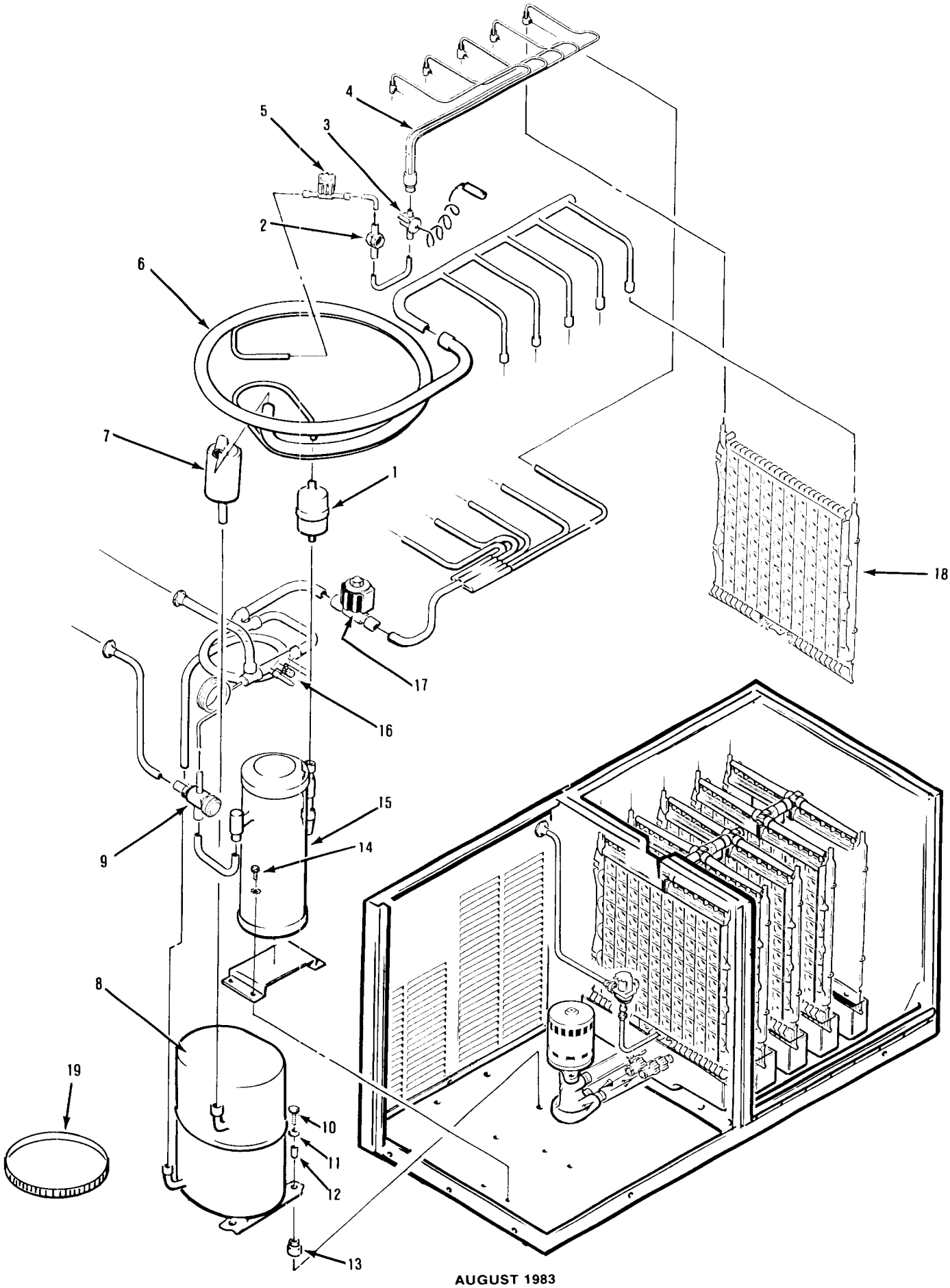
4
5
3
2
6
7
1
18
17
16
15
9
14
8
19
10
11
12
13

WATER SYSTEM

ITEM NUMBER	PART NUMBER	DESCRIPTION
1	02-2521-01	Manifold Water (Long)
2	02-2519-01	Tee
3	A29703-001	Manifold Water (Short)
4	02-2527-01	Tube, Water Distributor
5	02-1358-01	Clamp
6	A29730-001	Water Tube Assembly)
7	A30761-020	Sump Assembly
8	02-1530-01	Clamp
9	02-1800-01	Clamp
10	A29746-001	Pump Bracket
11	13-0571-01	Screw 1/4-20 x 3/4
12	A30751-022	Water Pump
13	12-1646-04	Water Valve
14	02-2523-01	End Cover - Sump
15	02-2520-01	Sump Cover
16	02-2520-02	Sump Cover - Center

SUMP ASSEMBLY

ITEM NUMBER	PART NUMBER	DESCRIPTION
1	A30761-020	Sump (Complete Assembly)
2	02-2787-01	Tube - Pick Up
3	03-1409-23	Washer - Rubber
4	02-1530-01	Clamp
5	13-0796-01	Rubber Cap
6	02-2786-01	Tube - Inlet
7	02-2788-01	Nut - Water Inlet
8	13-0617-02	"O" Ring
9	02-2125-01	Elbow
10	A30760-001	Screen
11	02-1800-01	Hose Clamp

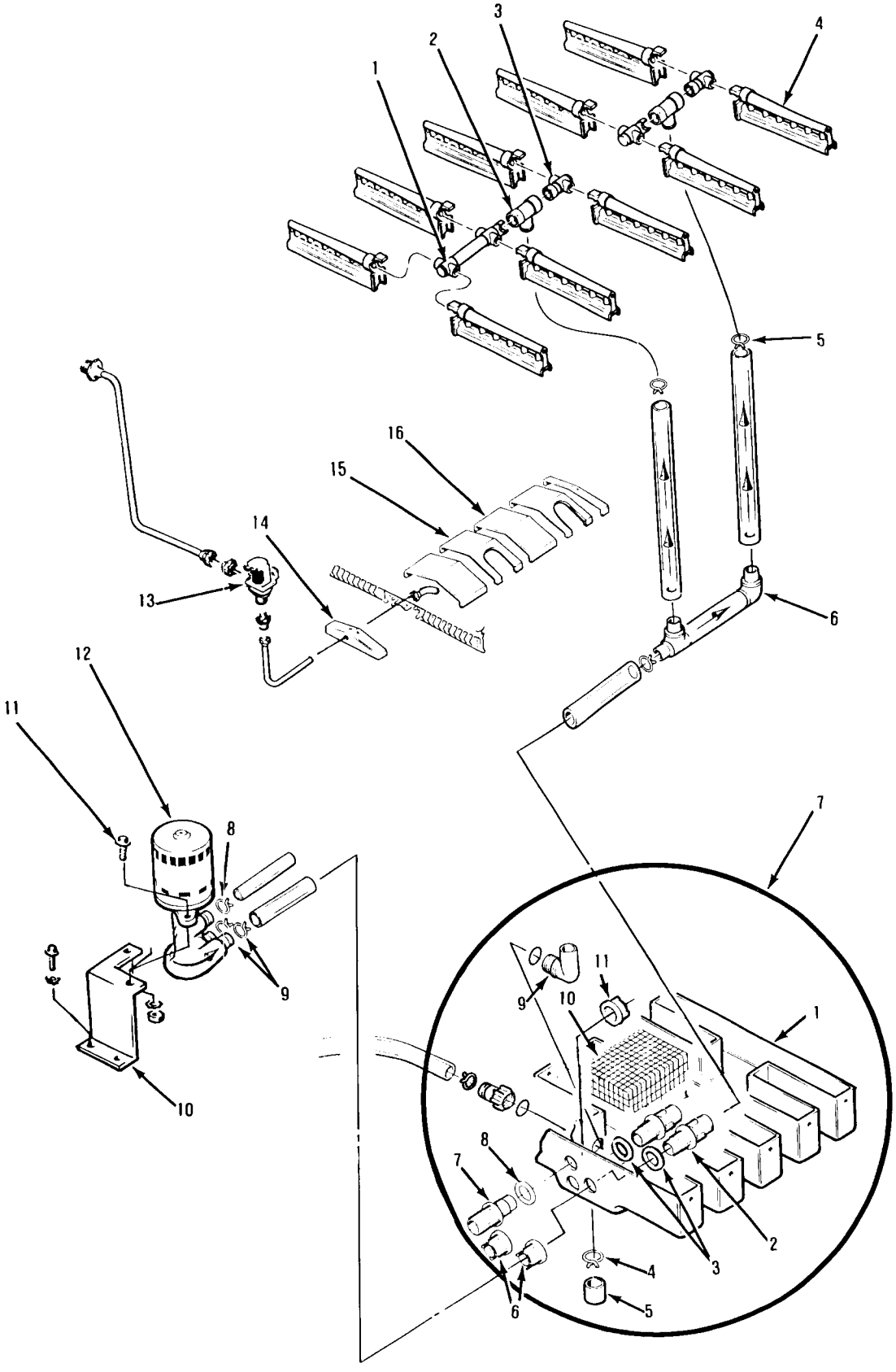
1
2
3
4
5
6
7
8
9
10
11
12
13
14
15
16

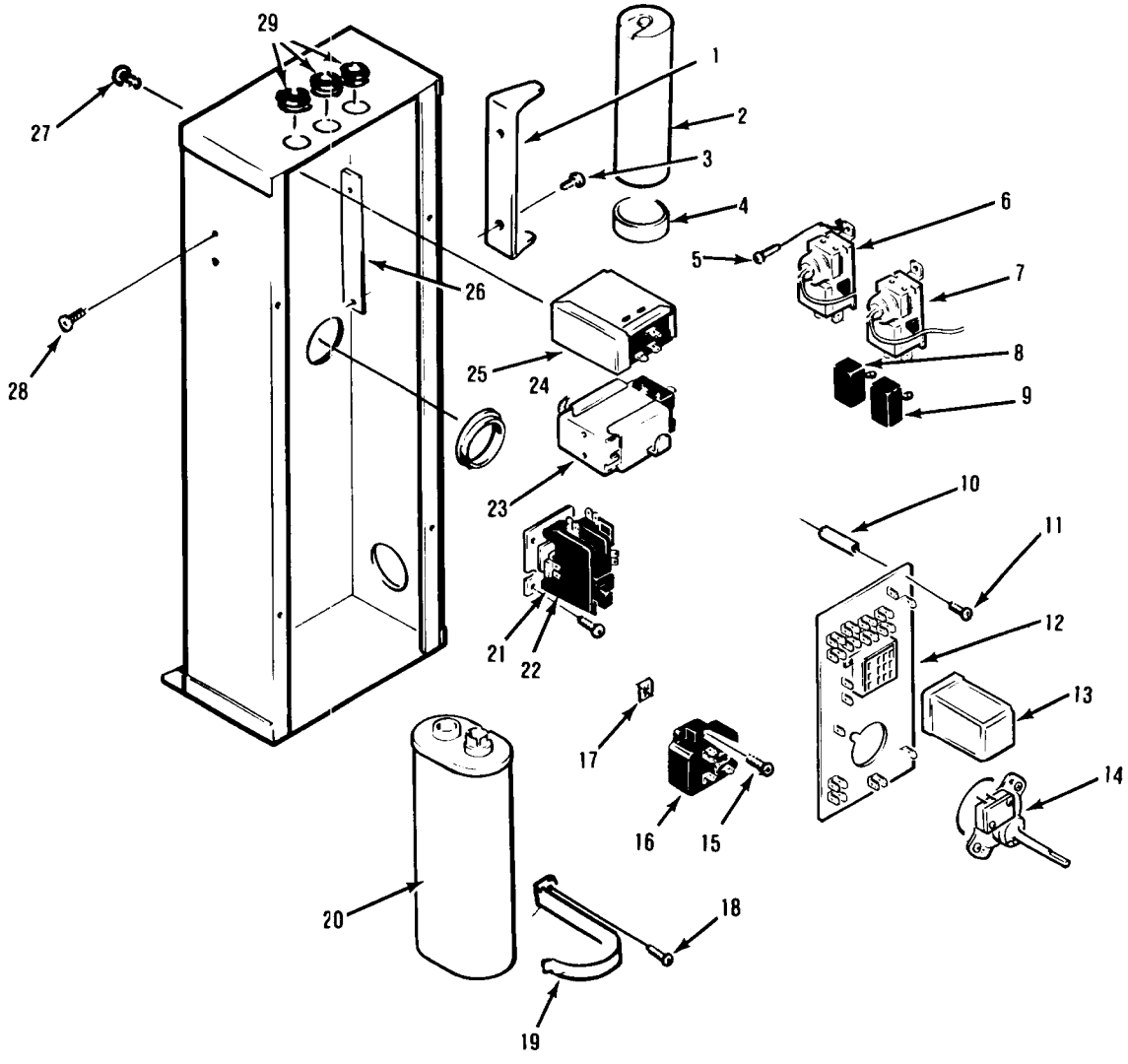

CONTROL BOX ASSEMBLY

ITEM NUMBER	PART NUMBER	DESCRIPTION
1	*No Number*	Capacitor Bracket
2	18-1901-40	Capacitor Start
3	*No Number*	Screw
4	18-3850-38	Capacitor Cap
5	03-1403-17	Screw 8 x 3/8
6	11-0419-01	Bin Thermostat
7	11-0351-02	Cube Size Control
8	12-2255-01	Toggle Switch DPDT, Clean
9	12-0426-01	Switch SPST, Compressor
10	12-1213-12	Bushing 1-3/8
11	03-1403-04	Screw 6 x 3/8
12	12-1912-01	Circuit Board
13	12-1879-03	Relay
14	12-1979-32	Time Switch Assembly
15	03-1463-04	Screw 6 x 3/8
16	18-1903-01	Potential Relay
17	03-1423-01	Speed Nut
18	03-1403-21	Screw 8 x 3/8
19	*No Number*	Bracket
20	18-1902-51	Run Capacitor
21	03-1403-17	Screw 8 x 3/8
22	12-0739-02	Contactor - 230/60/3 Contactor - 208-230/60/1
23	11-0410-01	Hi Pressure Control
24	12-1213-12	Snap Bushing 1-3/8
25	11-0420-01	Low Pressure Control
26	*No Number*	Twin Speed Nut
27	03-1403-04	Screw 6 x 3/8
28	03-1403-04	Screw 6 x 3/8
29	03-0557-00	Grommet

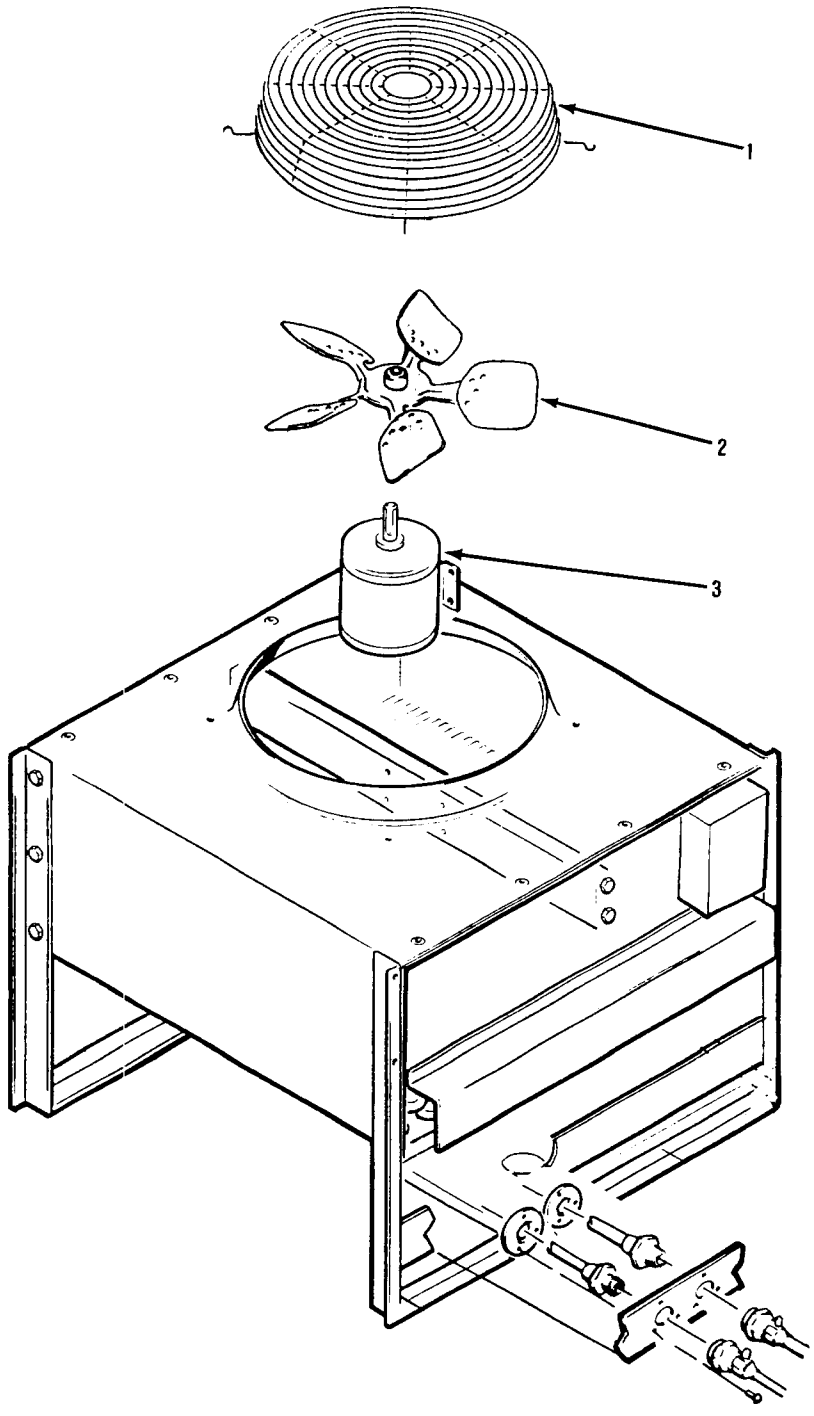

REMOTE CONDENSER RC151-32B
RC302-32B

ITEM NUMBER	PART NUMBER	DESCRIPTION
1	02-2618-01	Guard, Fan
2	18-3733-01	Blade, Fan
3	18-3734-01	Motor, Fan

CM1200R
WIRING DIAGRAM
3A-208-230/60/3

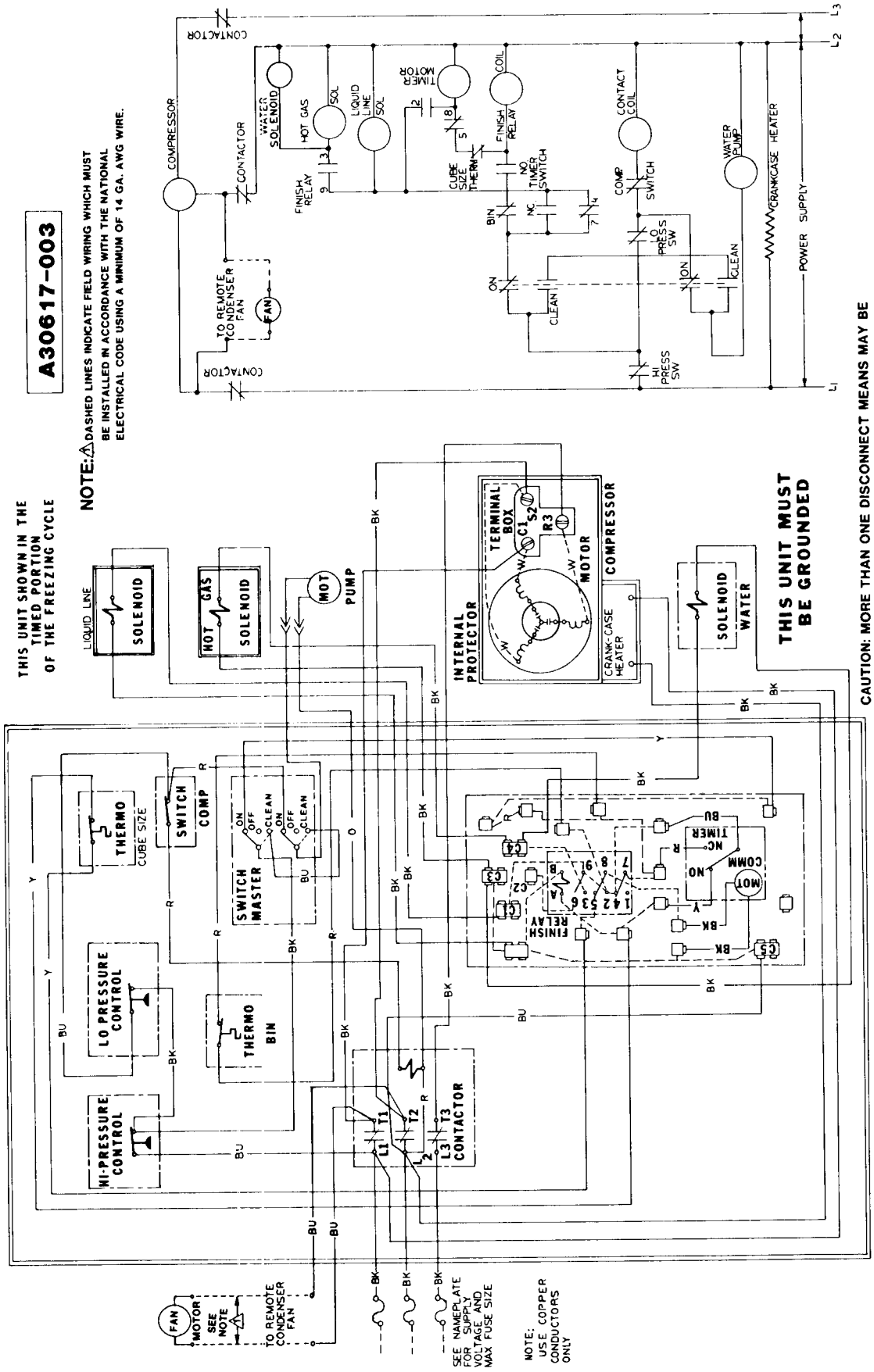

Wiring Diagram CM1200RE-3A 208-230/60/3

CM1200R
WIRING DIAGRAM
32A-208-230/60/1

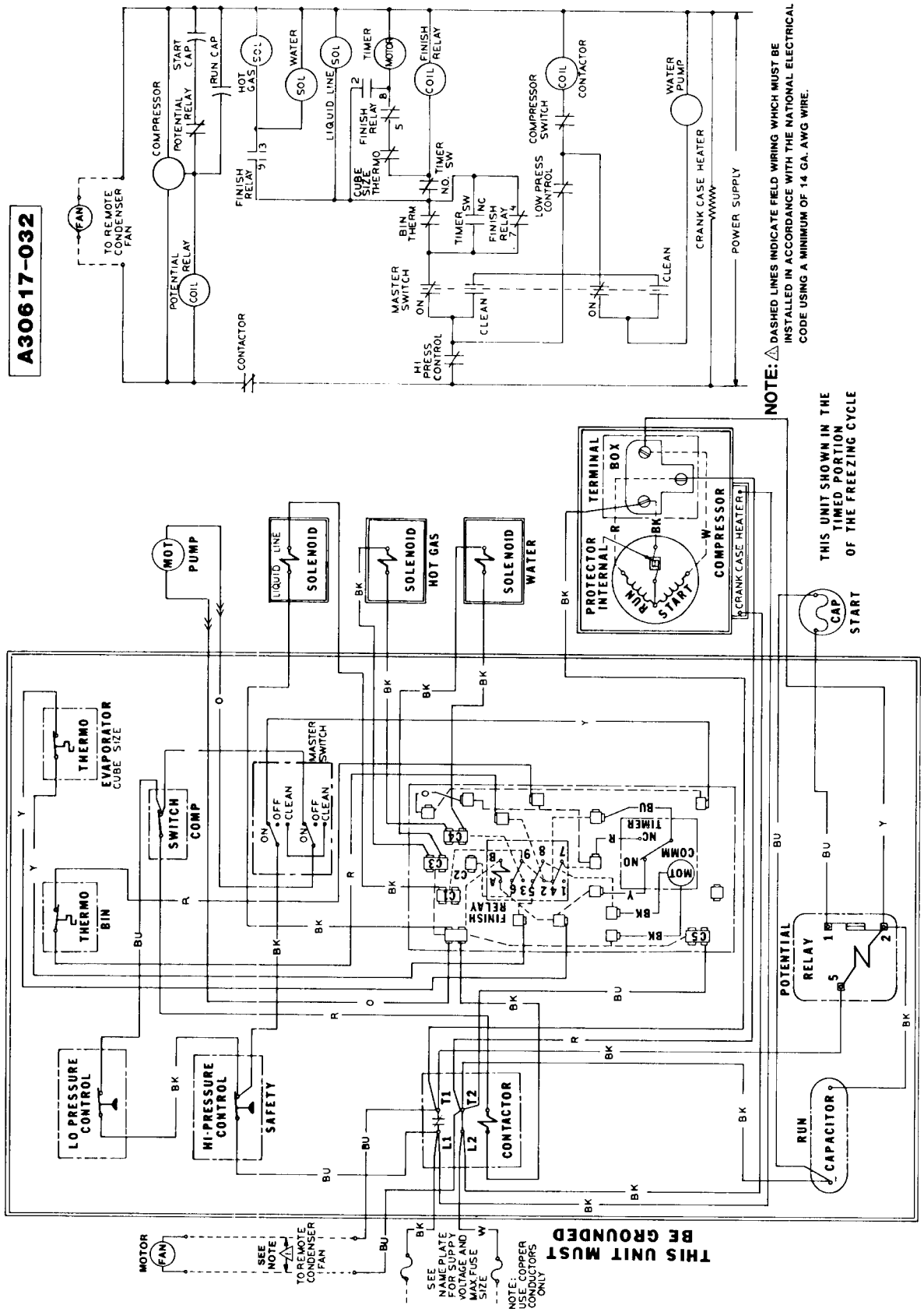

Wiring Diagram CM1200RE-32A 208-230/60/1

COMPONENT DESCRIPTION

(Continued from page 16)

THERMOSTATIC EXPANSION VALVE (TXV)

The thermostatic expansion valve regulates the flow of refrigerant to the evaporator, and reduces pressure of liquid refrigerant from condensing pressure to evaporating pressure.

ACCUMULATOR

The accumulator traps liquid overfeed from the evaporator during harvest and meters it into the compressor at a controlled rate.

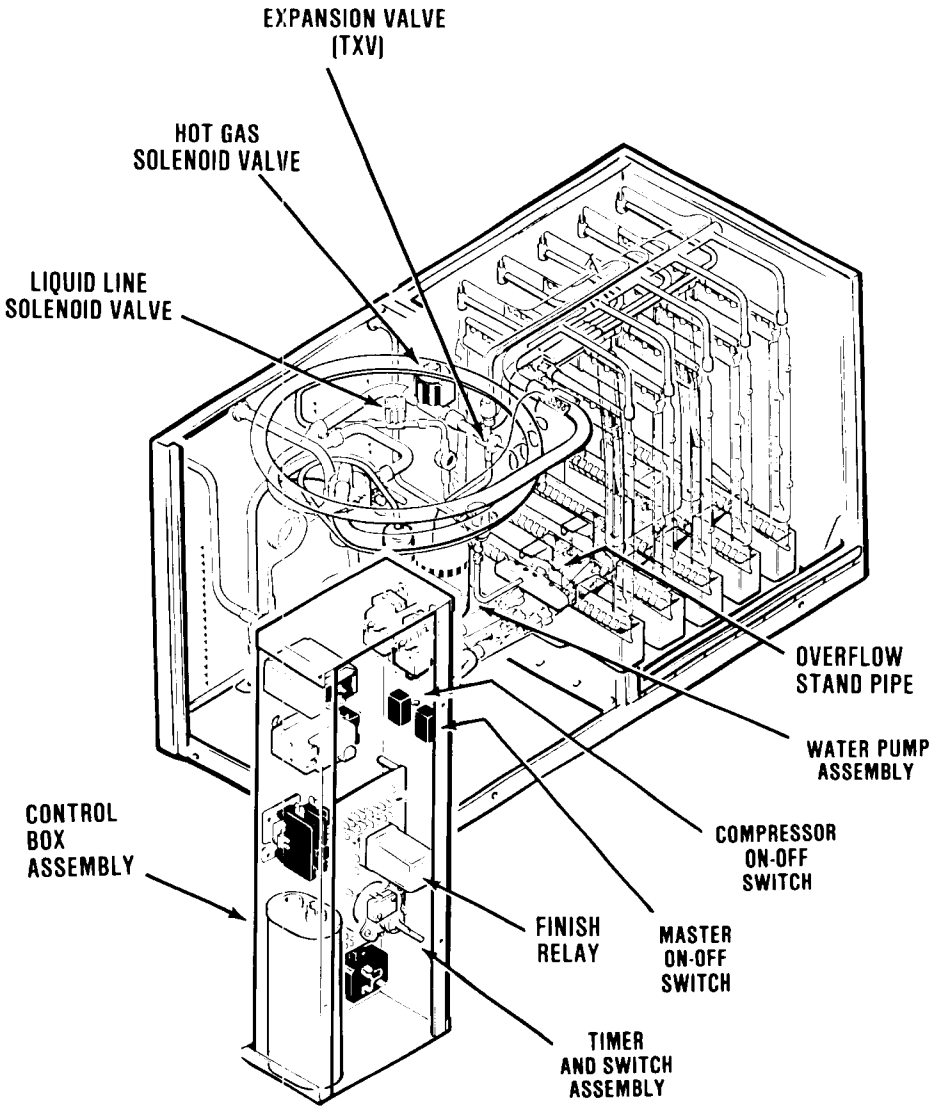

ADJUSTMENT PROCEDURES

The procedures provided in this section are arranged in alphabetical order, to make specific adjustment and removal and replacement information easy to locate.

Read the instructions thoroughly before performing any adjustment or removal and replacement procedures.

ADJUSTMENT OF THE CUBE SIZE CONTROL

CAUTION

BEFORE performing actual adjustment to the cube size control, check other possible causes for cube size problems, refer to SERVICE DIAGNOSIS for problem review and analysis. DO NOT perform adjustment when a new cube size control is installed, until the control bulb has been properly installed in the tube well, on the refrigerant tube of the platen assembly and the icemaker has progressed through several complete freezing and harvest cycles, to observe size and quality of ice cubes and whether or not a cube size problem exists.

Adjustment on the cube size control is performed to cause either larger sized ice cubes or smaller sized ice cubes to be produced.

To produce LARGER sized ice cubes:

1. Locate the cube size control, in the left end of the control box.
2. Rotate the adjusting screw one-eighth of a turn CLOCKWISE toward COLDER.
3. Observe size of ice cubes in next two ice cube harvests and repeat step 2 above, in one-eighth turn increments, until desired ice cube size is achieved.

To produce SMALLER sized ice cubes:

1. Locate the cube size control, in the left end of the control box.
2. Rotate the adjusting screw one-eighth of a turn COUNTERCLOCKWISE toward WARMER.
3. Observe size of ice cubes in next two ice cube harvests and adjust in one-eighth turn increments, until desired ice cube size is achieved.

ADJUSTMENT OF THE TIMER & SWITCH ASSEMBLY

The timer and switch assembly is factory set, so one complete revolution of the cam on the timer represents 15 minutes. 11-1/2 minutes comprise the freezing cycle event during cam rotation, and the final three and one-half minutes program the defrost and harvest cycle.

WARNING

Disconnect electrical power supply to icemaker whenever adjustment procedures are performed.

TO ADJUST THE TIMER & SWITCH ASSEMBLY:

A. HARVEST CYCLE: Slowly rotate the shaft of the timer and switch assembly, located in the control box, CLOCKWISE, until the actuator arm on the microswitch initiates the harvest cycle. An audible click can be heard, but in a noisy area, look at the cam and switch to observe the event.

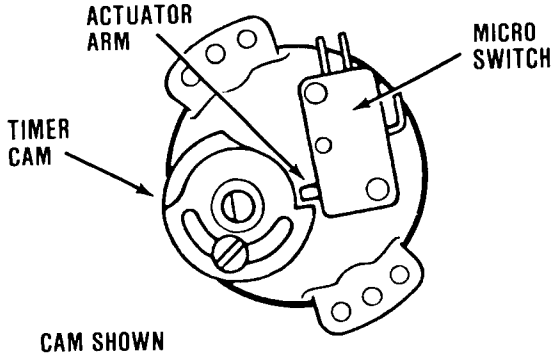

CAM SHOWN AT BEGINNING OF HARVEST CYCLE

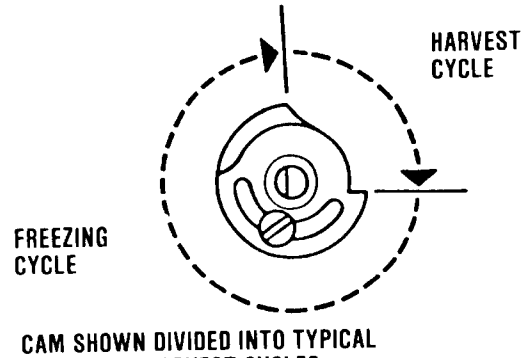

CAM SHOWN DIVIDED INTO TYPICAL FREEZING & HARVEST CYCLES

B. FREEZING CYCLE: Slowly rotate the shaft of the timer and switch assembly, located in the control box, CLOCKWISE, until the actuator arm on the microswitch initiates the freezing cycle.

C. The length of the harvest cycle can be changed by loosening the adjustment screw on the cam. The minimum harvest setting is two minutes; the maximum is seven minutes. It is important that the length of the harvest cycle allow enough time for all the ice cubes to fall from the evaporator. Too short of a time will cause the evaporator to freeze up and stop ejecting ice into the bin. Too much time wastes icemaking capacity, energy and water. Adjustment of the harvest cycle may require a corresponding adjustment of the cube size control.

WARNING

Be sure the electrical power supply and the water supply to the icemaker are OFF BEFORE starting any of the following REMOVAL AND REPLACEMENT procedures, as a precaution to prevent possible personal injury or damage to equipment.

CM1200R

REMOVAL AND REPLACEMENT PROCEDURES

For installations having stacked CM1200 cubers mounted on a bin, disregard steps to remove the top panel. Access to all areas and parts can still be gained through removal of the necessary front, side or rear panels.

REMOVAL AND REPLACEMENT OF THE BIN THERMOSTAT CONTROL

To remove the bin thermostat control:

1. Remove screws and two front panels.
2. Remove four screws and the control box cover.
3. Remove wire leads from the bin thermostat control.
4. Unthread the capillary tube and remove from the bin thermostat control bracket at the bottom left side of the evaporator section.
5. Remove two screws attaching the bin thermostat control to the top side of the control box; then, carefully pull the capillary tube out of the evaporator section through the grommet at the lower rear corner of the left wall of the evaporator section. Carefully remove the bin thermostat control and capillary tube from the control box.

To replace the bin thermostat control, reverse the removal procedure.

REMOVAL AND REPLACEMENT OF THE COMPRESSOR ASSEMBLY

To remove the compressor assembly:

1. Remove screws and the top panel, left side panel and left front panel.
2. Bleed off or blow the refrigerant charge through the Schrader valve.
3. Remove the cover from the terminal box on the compressor; then, remove three screws and electrical leads from the compressor.
4. Unsolder the tubing connections from the compressor.
5. Remove four bolts and washers which secure the compressor to the chassis mounting base.
6. Remove the compressor from the cabinet.

Always install a replacement drier, anytime the sealed refrigeration system is opened. Do not replace the drier until all other repair or replacement has been completed.

To replace the Compressor, reverse the removal procedures.

REMOVAL AND REPLACEMENT OF THE CUBE SIZE CONTROL

To remove the cube size control:

1. Remove screws and the left front panel.
2. Remove cover from control box.
3. Trace capillary tube, from the cube size control, to the refrigerant suction line; then peel back the insulation.
4. Remove the coiled capillary tube bulb from the tube well on the suction line.
5. Remove electrical leads from the cube size control.
6. Remove screws and the cube size control.

To replace the cube size control, reverse the removal procedure.

WARNING

Be sure the electrical power supply and the water supply to the icemaker are OFF BEFORE starting any of the following REMOVAL AND REPLACEMENT procedures, as a precaution to prevent possible personal injury or damage to equipment.

REMOVAL AND REPLACEMENT OF THE DRIER

To remove the drier:

1. Remove screws and the left front panel.
2. Bleed off or blow the refrigerant charge through the Schrader valve.
3. Unsolder refrigeration lines at both ends of the drier, and remove the drier.

To replace the drier:

CAUTION

If the factory seal is broken on the replacement drier, exposing it to the atmosphere more than a few minutes, the drier will absorb moisture from the atmosphere and lose substantial ability for moisture removal.

Be sure the replacement drier is installed with the arrow positioned in the direction of the refrigerant flow.

1. Remove the factory seals from the replacement drier and install the drier in the refrigerant lines with the arrow positioned in the direction of the refrigerant flow.
2. Solder the drier into the lines, two places, taking precautions to NOT OVERHEAT the drier body.
3. Purge the system and check for leaks.
4. Thoroughly evacuate the system to remove moisture and non-condensables.
5. Charge the system with refrigerant, by weight. SEE NAMEPLATE.
6. Replace and attach the left front panel.

REMOVAL AND REPLACEMENT OF THE EVAPORATOR PLATE ASSEMBLY

To remove the evaporator plate:

1. Remove the front and top panels. Remove top liner.
2. Bleed off or blow the refrigerant charge through the Schrader valve.
3. Remove hose clamp and rubber cap from bottom of sump assembly and drain all water. Replace rubber cap and hose clamp.
4. Slide three hose clamps off and unclamp Tygon tubes at left end of the sump assembly.
5. Remove overflow Tygon tube at rear of sump.
6. Remove sump covers.
7. Disconnect Tygon water inlet tube(s), at the water manifold tee(s), above the evaporator plates.
8. Unsnap the sump assembly from the lower front and rear attachment points on each evaporator plate; then, CAREFULLY lower the RIGHT END of the sump assembly to clear the bottom of the plates, and work the connecting Tygon tubes OFF the LEFT end, and carefully remove the sump assembly so as not to split or break the plastic.
9. Slide the water distributor tubes forward, about 1/8-inch along the top of the evaporator plate to be removed, until the rear water distributor tube can be lifted upward, see *Removal of the Water Distributors, Manifolds and Tees.*
10. Lift the end of the rear water distributor tube and slide the distributors toward the rear along the top of the evaporator plate, until the flexible front notch is cleared.
11. Unsnap and disconnect each front and rear water distributor tube from the water manifold section.

    If all ten water distributor tubes are being removed, disconnect the water manifold tubes at the tee(s) and remove the connected water distributors and water manifold tubes as larger assemblies, from the tops of the evaporator plates; then, disassemble the individual parts at the workbench.

CAUTION

Use EXTRA PRECAUTION to protect the plastic parts during the next step to unsolder the refrigerant lines, two places, at the top of the evaporator plate. Position wet cloths over top of plates, as well as over the plastic liner at the rear, or sides, to prevent accidental heat damage, or possible fire from torch flame.

12. Unsolder and remove the refrigerant lines at top front and rear of the evaporator plate to be replaced.
13. Remove screws at one end of the front braces, then, loosen the braces just enough to remove the evaporator plate. Temporarily replace the braces, to support the remaining evaporator plates.

Always install a replacement drier, anytime the sealed refrigeration system is opened. Do not replace the drier until all other repair or replacement has been completed.

To replace the evaporator plate, reverse the removal procedure.

REMOVAL AND REPLACEMENT OF THE INLET WATER SOLENOID VALVE ASSEMBLY

To remove the inlet water valve assembly:

1. Remove left front panel.
2. Loosen and remove inlet water line fitting from the inlet water solenoid valve assembly.
3. Loosen and remove the valve outlet water line.
4. Remove leads.
5. Remove water valve assembly from the dividing wall.

To replace the inlet water valve assembly, reverse the removal procedure.

REMOVAL AND REPLACEMENT OF THE SUMP ASSEMBLY

To remove the sump assembly:

1. Remove screws and the right front panel.
2. Remove hose clamp and rubber cap from bottom of sump assembly and drain all water. Retain rubber cap and hose clamp.
3. Slide three hose clamps off and unclamp Tygon tubes at left end of sump assembly.
4. Disconnect the two Tygon tubes at the water manifold tees above the evaporator plates and remove overflow Tygon tube.
5. Unsnap the sump assembly from the lower front and rear attachment points on each evaporator plate; then, carefully lower the right end of the sump assembly, to clear the bottom of the plates, and carefully work the connecting Tygon tubes OFF the left end, to prevent damage to the plastic.
6. Unsnap the sump assembly from the lower front and rear attachment points on each evaporator plate. Carefully lower the right end of the sump assembly, to clear the bottom of the plates, and work the connecting Tygon tubes OFF the left end, carefully to prevent damage to the plastic.

To replace the sump assembly, reverse the removal procedure. BE SURE the pump pickup tube, lowest of three tubes, is installed with the slotted opening facing DOWN, toward bottom of sump.

REMOVAL AND REPLACEMENT OF THE WATER DISTRIBUTOR TUBES AND MANIFOLD TUBES

To remove the water distributor tubes and manifold tubes:

1. Remove screws and the right front panel.
2. Pull forward on lock tab at upper front corner of the evaporator plate and lift up on the water distributor.
3. Slide each water distributor tube forward about 1/8-inch along the top of the evaporator plate, until the rear water distributor tube can be lifted upward.
4. Lift the end of the rear water distributor tube and slide the distributors toward the rear along the top of the evaporator plate until the flexible front notch is cleared.
5. Unsnap and disconnect each front and rear water distributor tube from the water manifold section.

If all ten water distributor tubes are being removed, disconnect the water manifold tubes at the tee(s) and remove the connected water distributors and water manifold tubes as larger assemblies, from the tops of the evaporator plates; then, disassemble the individual parts at the workbench.

To replace the water distributor tubes and manifold tubes, reverse the removal procedure. BE SURE the notches in the water manifold tubes properly engage the alignment keys in the tee(s).

BE SURE each front water distributor tube is securely fastened at the notch at the top front of the evaporator plate.

Check identical attachment for each rear water distributor tube and notch; also, that the distributor/manifold connections at the top center of each evaporator plate is snug against the top of the plate.

REMOVAL AND REPLACEMENT OF THE WATER PUMP ASSEMBLY

To remove the water pump assembly:

1. Remove screws and two front panels.
2. Remove three hose clamps connecting three Tygon tubes to the left end of the sump assembly.
3. Disconnect electrical leads from the water pump assembly.
4. Remove three screws and washers, attaching the water pump bracket to the machine base; then, work the Tygon tubes loose from the sump assembly and remove the water pump assembly.
5. Remove two screws and ground wire to remove pump from bracket.
6. Remove clamps and Tygon tubes from pump.

To replace the water pump assembly, reverse the removal procedure.

SERVICE DIAGNOSIS

The service diagnosis section is for use in aiding the serviceman in diagnosing a particular problem for pin-pointing the area in which the problem lies, thus an ever available reference for proper corrective action.

The following chart lists corrective actions for the causes of known symptoms of certain problems that can occur in the icemaking-refrigeration system.

ICEMAKING - REFRIGERATION SYSTEM

SYMPTOM	POSSIBLE CAUSE	CORRECTION
Irregular size cubes some cloudy.	Some distributor holes plugged.	Clean distributor holes.
		Clean water sump.
	Shortage of water.	See Shortage of water CORRECTION.
	Unit not level.	Level cabinet, as required.
Cubes too large.	Dirty air-cooled condenser.	Clean remote condenser.
	Cube Size Control set too cold.	Rotate Cube Size Control dial toward WARMER.
	Loss of refrigerant.	Check for refrigerant leaks, correct leaks; recharge system.
Cubes too small.	Cube Size Control set too warm.	Rotate Cube Size Control dial toward COLDER.
	Moisture in refrigeration system.	Blow refrigerant charge; replace drier; evacuate system; add proper refrigerant charge.
	Shortage of water.	See Shortage of water CORRECTION.
	TXV valve super heat too high.	Replace valve.
Cloudy Cubes.	Shortage of water.	See Shortage of water SYMPTOM.
	Dirty water supply.	Install water filter or treatment system.
	Accumulated impurities.	Use SCOTSMAN Ice Machine Cleaner. Procedure V-III.
Shortage of water.	Short Harvest Cycle.	Adjust cam of timer and switch assembly.
	Water leak in sump area.	Locate Leak and correct condition.
	Partial restrictions in water strainer.	Clean or replace strainer.
	Low water pressure.	Check for incorrect supply line size or blockage.
		Check for low main pressure. If low, contact water company.

SYMPTOM	POSSIBLE CAUSE	CORRECTION
Decreased Ice capacity.	High head pressure, result of dirty Condenser or faulty Fan Motor.	Clean Remote Condenser Fins. Repair or replace Fan Motor.
	Non-condensable gas in the system.	Purge the system and recharge per nameplate requirements.
	Overcharge of refrigerant.	Slowly purge off to correct charge.
	Hot gas solenoid valve leaking.	Replace valve.
	Defective Compressor.	Replace Compressor.
	Leaky inlet water valve.	Replace valve.
Poor harvests. Icemaker does not harvest.	Too short defrost time.	Check and adjust harvest cycle.
	Restriction in water inlet line.	Check strainer and flow check valve.
	Hot gas solenoid does not open. Binds or burned out.	Replace solenoid.
	Undercharge of refrigerant.	Charge to nameplate requirements.
	Water pressure too low.	Check for 20 PSI flowing water.
Compressor cycles intermittently.	Low voltage.	Check for circuit overload. Check building supply voltage, if low, contact power company.
Unit Trips on Hi Pressure Cut Out.	Dirty Condenser.	Clean Condenser with vacuum cleaner or brush. DO NOT USE A WIRE BRUSH.
	Defective Fan Motor.	Replace Fan Motor.
	Non-condensable gases in system.	Purge the system and recharge per nameplate requirements.
Icemaker will not operate.	Blown fuse in line.	Replace fuse and check for cause.
	Master switch in OFF position.	Set switch to ON position.
	Faulty Master switch.	Replace switch.
	Timer contacts open.	Replace Timer microswitch.
	Improperly wired.	Contact electrical contractor for correction.

MAINTENANCE & CLEANING INSTRUCTIONS

GENERAL

The periods and procedures for maintenance and cleaning are given as guides and are not to be construed as absolute or invariable. Cleaning especially will vary, depending upon local water conditions and the ice volume produced; and, each icemaker must be maintained individually, in accordance with its own particular location requirements.

ICEMAKER

THE FOLLOWING MAINTENANCE SHOULD BE SCHEDULED AT LEAST TWO TIMES PER YEAR ON THIS ICEMAKER. CALL YOUR AUTHORIZED SCOTSMAN SERVICE AGENCY.

1. Check and clean or service any optional water treatment devices, if any installed.
2. Check the CM1200 cabinet is level, in the side-to-side and front-to-back directions.
3. Clean the water system, evaportor plates and sump assembly, using a solution of SCOTSMAN Ice Machine Cleaner. Refer to CLEANING - Icemaker.

Cleaning requirements vary according to local water conditions and individual user operation. Continuous check of the clarity of ice cubes and visual inspection of the water system parts, evaporator plates and the sump assembly before and after cleaning will indicate frequency and procedure to be followed in local areas.

4. Check that each evaporator plate assembly is snug and secure on each wall support on the bin rear wall, in the holes of the front brace, and in each indent recessed in each arm of the sump assembly, below the bottom corners of the evaporator plates.
5. Check and tighten all bolts and screws.
6. Check and tighten all electrical connections.
7. Check hot gas solenoid valve for correct operation.
8. Check for water leaks and make corrections.
9. Check the bin thermostat control bulb to test shut off. Holding ice against bin thermostat control bulb should cause the icemaker and the remote condenser fan motor to shut off at the end of the harvest cycle.

   Within minutes after ice is removed from the bin thermostat control bulb, the icemaker will restart.

REMOTE CONDENSER

Frequent cleaning and inspection of the Condenser should be performed to maintain maximum efficiency of Icemaker. A dirty Condenser or blocked air flow will greatly decrease icemaking efficiency.

1. With building source electrical power OFF to the icemaker, clean the Remote Condenser fins, using a vacuum cleaner, whisk broom or brush. DO NOT USE A WIRE BRUSH. Instruct customer to clean frequently.
2. Check that Fan Blade moves freely, is not touching any surfaces, is not bent or out of balance; and, the wire guard is properly installed and securely attached.
3. Check that the roof area immediately surrounding the Remote Condenser is free and clear of any debris that may collect, such as leaves, paper, trash, etc.

CLEANING - Icemaker

1. Remove screws and the front panels.
2. Move the master switch to the CENTER position, leave the compressor switch in the ON position.
3. Rotate the shaft of the timer and switch assembly, located in the control box, CLOCKWISE, until the actuator arm on the microswitch rides up out of the cam slot, to the outer surface of the cam, then stop. This is the start position for the freezing cycle. See START Positions for the Freeze/Harvest Cycles.
4. Position a container for catching drain water under the rubber plug at the bottom of the sump assembly.
5. Remove hose clamp, the rubber plug, and drain all water from the sump assembly into the container. Replace rubber plug and hose clamp.
6. Prepare cleaning solution: Mix twenty-four ounces of SCOTSMAN Ice Machine Cleaner with two gallons of fresh, potable warm water.

WARNING

SCOTSMAN Ice Machine Cleaner contains Phosphoric and Hydroxyacetic acids. These compounds are corrosive and may cause burns, if swallowed. DO NOT induce vomiting. Give large amounts of water or milk. Call physician immediately. In case of external contact, flush with water. KEEP OUT OF THE REACH OF CHILDREN.

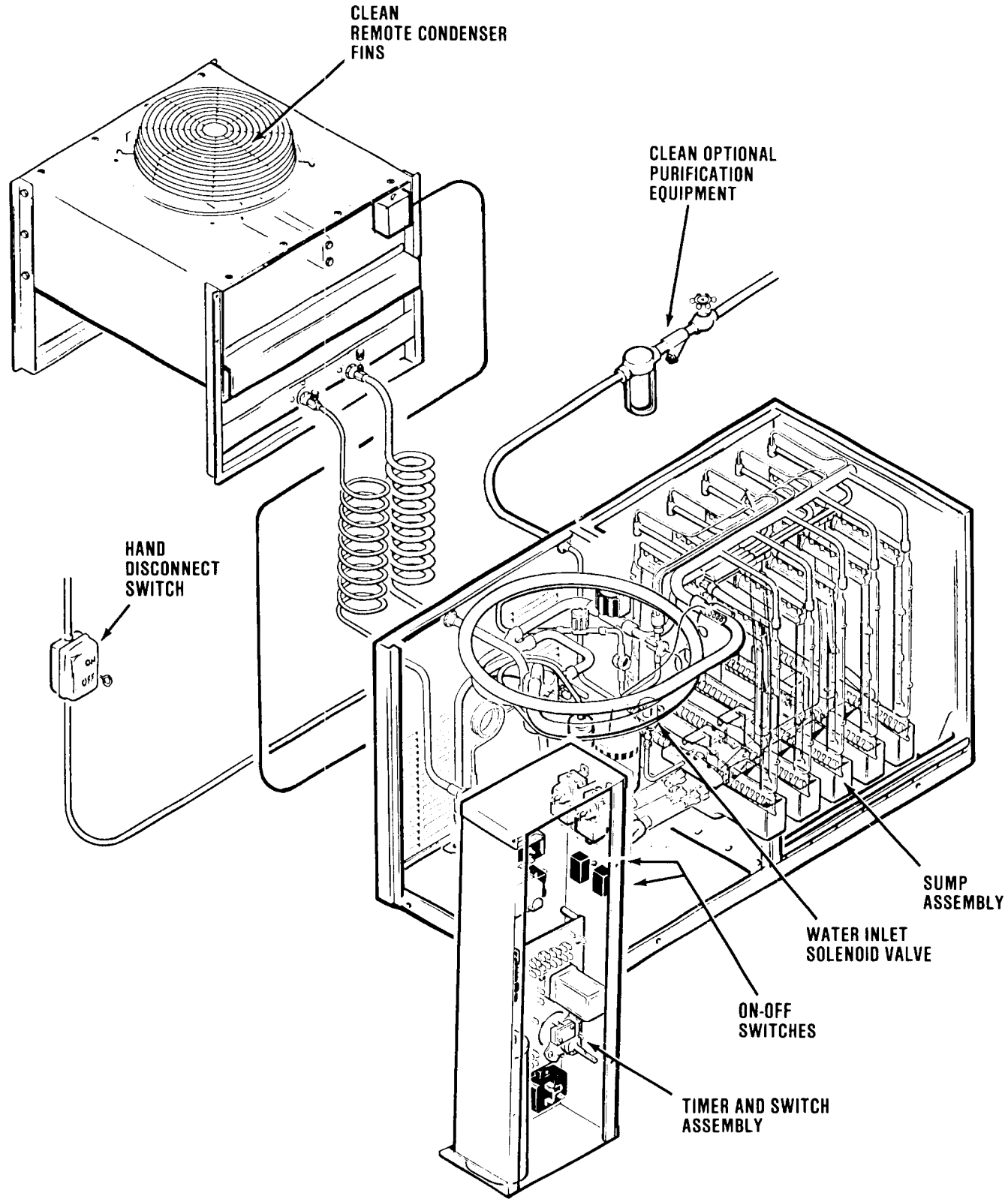

Cleaning Remote Condenser

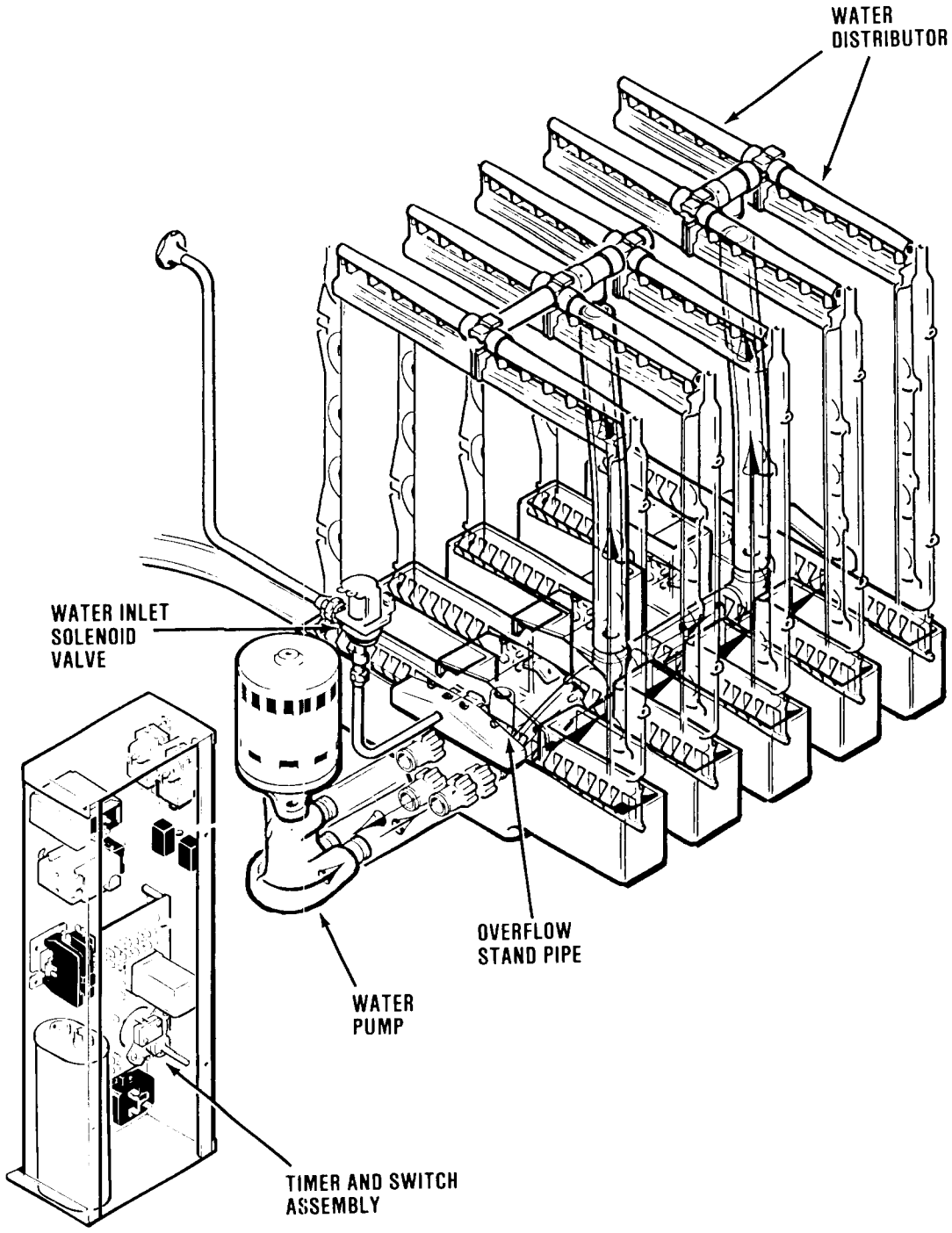

Cleaning Water System, Icemaker

7. Carefully pour the cleaning solution into the sump assembly.
8. Immediately move the MASTER ON-OFF toggle switch on the control box, to the CLEAN position.
9. Allow the system to operate for about thirty minutes.
10. At the end of thirty minutes, move the master switch to the CENTER position. Remove the plug and drain the cleaning solution from the sump and rinse. Replace the drain plug.
11. Add two gallons of fresh water to the sump, move the master switch to the clean position, operate for 5 minutes and drain. Repeat this procedure two more times.
12. Rotate the shaft of the timer and switch assembly, located in the control box, CLOCKWISE, until the actuator arm on the microswitch drops off the outer cam into the cam slot, then stop. This is the start position for the harvest cycle. See START positions for the Freeze/Harvest Cycles. The water inlet solenoid valve opens and a supply of water enters the sump.

    If, after completing the cleaning and flushing procedure, inspection of the water flow reveals that one or more evaporator plates does not have a full flow of water for each vertical row of cubes, shut down the operation and remove and clean all water distributor tubes. Then reinstall the water distribution system.
13. Move the master switch to the ON position to start the icemaking process. Check each ice cube harvest, until the ice cubes are clear and the acid taste is eliminated.

CAUTION

DO NOT use ice cubes produced from the cleaning solution. Be sure none remains in the bin.

14. Add hot water to the bin to melt the ice cubes and thoroughly wash and rinse inner surfaces of the bin.
15. Check each ice cube harvest until the ice cubes are clear and the acid taste is eliminated.
16. Wash and wipe down all interior surfaces of the evaporator section of the cabinet with a clean cloth, or disposable paper wipers, soaked in the cleaning solution.
17. Replace all panels.
18. Clean and sanitize the interior bin surfaces each week.

CM1400

TABLE OF CONTENTS

INTRODUCTION SECTION
Specifications 3

INSTALLATION SECTION
For the Installer 2
For the Electrician 6
For the Plumber 8
Final Checklist 10

START-UP SECTION
Start-Up 12
Adjustment of Cube Size 14

MAINTENANCE & CLEANING INSTRUCTIONS
General 16
Icemaker 16
Cleaning - Icemaker 17

OPERATION
Freezing Cycle 20
Harvest Cycle 21
Operating Characteristics 25
Beginning Freeze 23
Timed Freeze 24
Harvest Cycle 24
Component Description 26
Service Diagnosis 30

ADJUSTMENT PROCEDURES
Cube Size Control 32
Timer and Switch Assembly 32
Water Regulator Assembly - Water-Cooled ... 33

REMOVAL AND REPLACEMENT PROCEDURES
Bin Thermostat Control 33
Compressor Assembly 33
Condenser - Air-Cooled 33
Condenser - Water-Cooled 34
Cube Size Control 34
Drier 34
Evaporator Plate Assembly 36
Fan Motor - Air-Cooled 36
Inlet Water Solenoid Valve 36
Water Distributor Tubes and Manifold Tubes 37
Water Pump Assembly 37

LIST OF ILLUSTRATIONS

Component Location 2
Specifications 3
Mounting Cuber to Bin 4
Electrical Connections 6
Installation, Water Supply and Drain Connections 8
Final Checklist 11
Timer Cam Positions 12
Cube Size Control Adjustment 14
Maintenance and Cleaning 17

PARTS LIST AND WIRING DIAGRAMS 1
(Printed in Yellow)

PARTS LIST:
Component Location 2
Cabinet Assembly 3
Refrigeration System 4
Air-Cooled Assembly 5
Water-Cooled Assembly 5
Water System 6
Control Box 7
Bins, BH750/BH1000 8

WIRING DIAGRAMS:
CM1400AE-3A (208-230/60/3) 9
CM1400WE-3A (208-230/60/3) 10
CM1400AE-32A (208-230/60/1) 11
CM1400WE-32A (208-230/60/1) 12

Freezing Cycle 20
Harvest Cycle 21
Component Description 27
Optional Bins 38

THIS PAGE
INTENTIONALLY
LEFT BLANK

CM1400 FOR THE INSTALLER

INTRODUCTION

These instructions provide the specifications and the step-by-step procedures for the installation, start up and operation for the Scotsman Model CM1400 Modular Cuber.

The Model CM1400 Modular Cubers are quality designed, engineered, constructed, and are thoroughly tested icemaking systems providing the utmost in flexibility to fit the needs of a particular user.

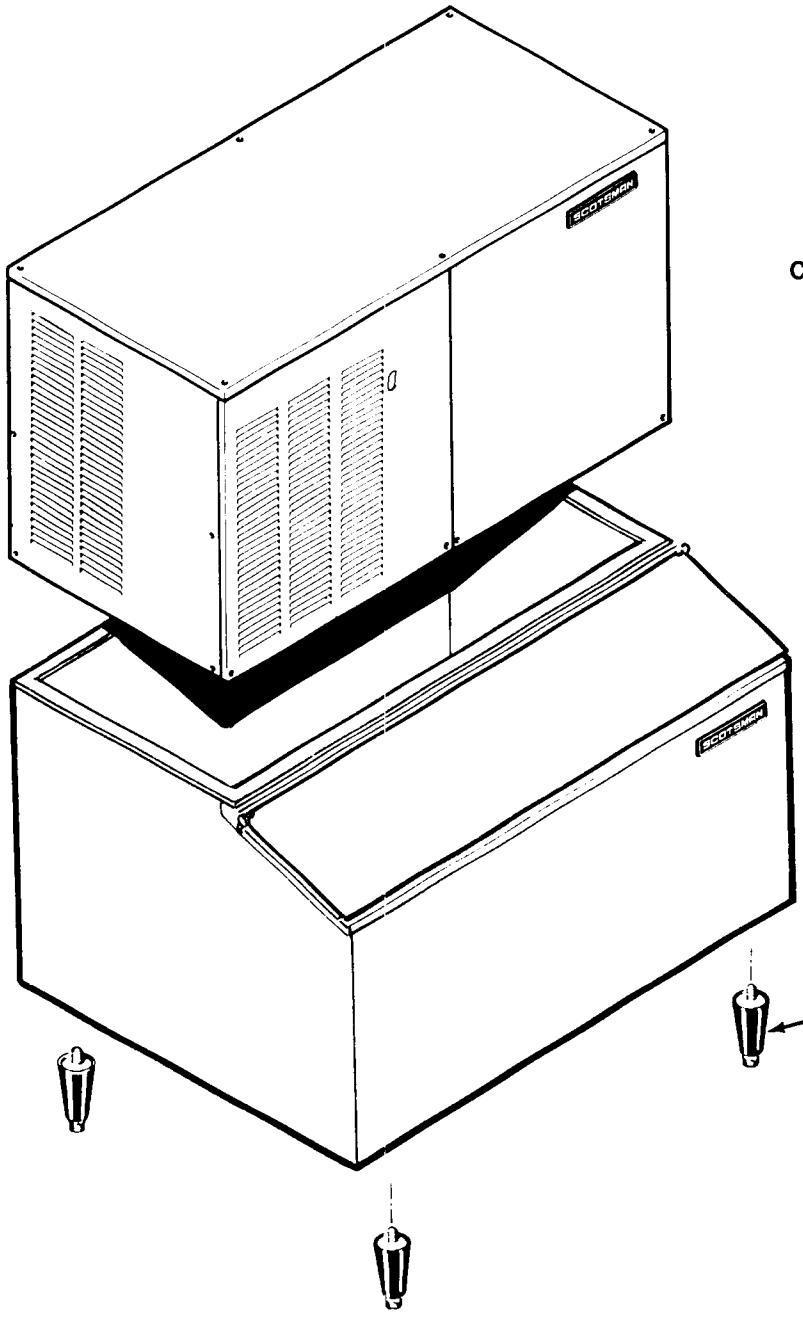

CM1400 MODULAR CUBER

BH750 STORAGE BIN
OR
BH1000 STORAGE BIN

ADJUSTABLE LEGS

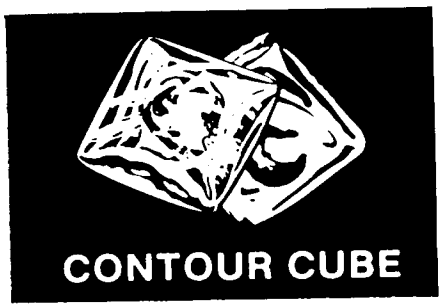

CM1400 FOR THE INSTALLER

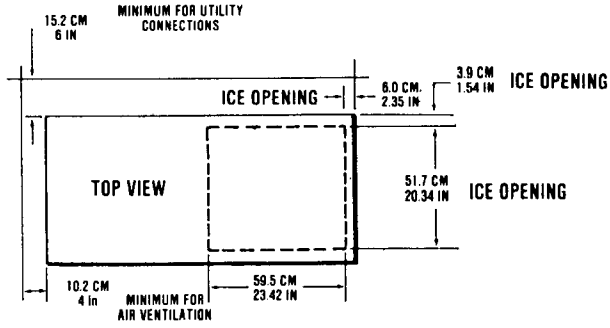

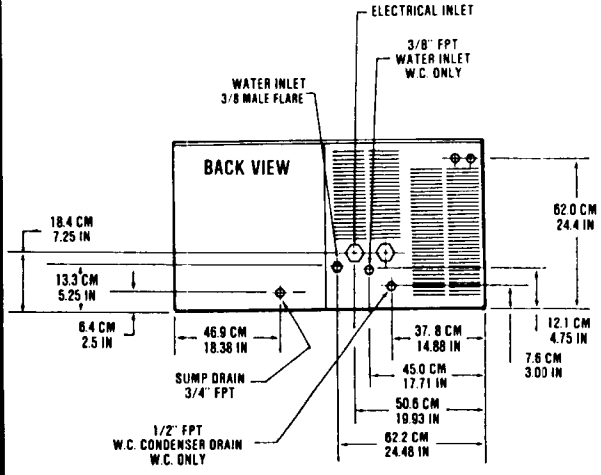

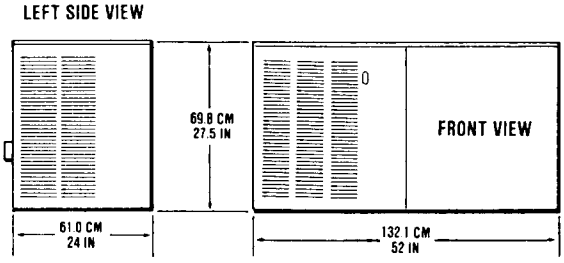

SPECIFICATIONS

Model Number	(Height - w/o Legs) Dimensions H" x W" x D"	Bin Cap.	Cube Size	Cond. Unit	Finish **	Basic Electrical	Comp. H.P.	No. of Wires	Min. Circuit Ampacity †	Max. Fuse Size	Ship. Wt. lbs./kg.
CM1400AE-3A	28 x 52 x 24	—	Contour	Air	ES	208-230/60/3	3.25	3	14.4	20	370/168
CM1400WE-3A	28 x 52 x 24	—	Contour	Water	ES	208-230/60/3	3.25	3	13.2	15	370/168
CM1400AE-32A	28 x 52 x 24	—	Contour	Air	ES	208-230/60/1	3.25	2	24.6	30	360/163
CM1400WE-32A	28 x 52 x 24	—	Contour	Water	ES	208-230/60/1	3.25	2	20.9	25	360/163

MODULAR ICE STORAGE BINS

Model Number	(Height - w/o Legs) Dimensions H" x W" x D"	** Bin Cap.	Finish	Ship. Wt. lbs./kg.
BH750E	29¾ x 52 x 36	734 lbs	ES	171/100
BH750S	29¾ x 52 x 36	734 lbs	SS	166/100
BH1000E	44 x 52 x 31½	1000 lbs	ES	231/105
BH1000S	44 x 52 x 31½	1000 lbs	SS	231/105

**** (ES) Sandalwood, Leathergrain embossed steel with high gloss baked enamel finish.**

† Use this value to determine minimum wire size as per National Electric Code Standards

OPTIONAL STAINLESS STEEL PANEL KIT

SPKCM1400 contains top, front and 2 end panels. Not factory installed.

IMPORTANT OPERATING REQUIREMENTS

	MINIMUM	MAXIMUM
Air Temperatures	50°F (10.0°C)	100°F (38°C)
Water Temperatures .	40°F (4.4°C)	100°F (38°C)
Water Pressures	20 lbs. gauge	120 lbs. gauge

Electrical Voltage Variation

Voltage rating specified on nameplate	-5%	10%

Extended periods of operation exceeding these limitations constitutes misuse under the terms of Scotsman Manufacturer's Limited Warranty, resulting in a loss of warranty coverage.

STORAGE BIN

The CM1400 stacks onto Scotsman bin model BH1000.

Scotsman Ice Systems are designed and manufactured wtih the highest regard for safety and performance. They meet ar exceed the standards of U.L., N.S.F., and C.S.A.

Scotsman assumes **no** liability of any kind for products manufactured by Scotsman that have been altered in any way, including the use of any parts and/or components not specifically approved by Scotsman.

Scotsman reserves the right to make design changes and/or improvements at any time. Specifications and designs are subject to change without notice.

LOCATION & LEVELING

1. Position the Model BH750 or BH1000 Bin in the selected location, which should have a minimum room temperature of 50-degrees F. and maximum room temperature of 100-degrees F. Level the bin, adjusting the leg levelers in both the front-to-back and side-to-side directions.
2. Inspect the bin top mounting gasket which should be flat with no wrinkles to provide a good water seal when the CM1400 Cuber is installed on top of the bin.
3. Install the CM1400 Modular Cuber on top of the BH750 or BH1000 Bin using care to be sure a good seal is made between the two cabinets. Align the holes in the bottom rear of the CM1400 cabinet to mate with the two mounting straps on the top rear of the BH750.
4. Bolt icemaker to bin with mounting straps and bolt from shipping skid. When alignment and leveling are completed, tighten the bolts to secure the mounting straps.
5. STACKING INSTRUCTIONS, CM1400
   When stacking two units, first remove the top panel from the bottom CM1400, and then remove the stainless steel liner top from that same unit. They will no longer have any function. Then either use gasket material 13-0595-00 (you will need about 15 feet) or food grade silicone rubber to make a seal on the top of the bottom unit. Carefully lift the uncrated top unit on to the bottom one, (use of a mechanical lift is recommended for this step) aligning the two so that the cabinets line up. Mount the upper unit bin control bracket assembly into the lower units bin control bracket. The lower units two front panels require four sheet metal screws to be added to the top of the panels to secure them to the icemaker. Fasten the two units together using mounting straps as illustrated.

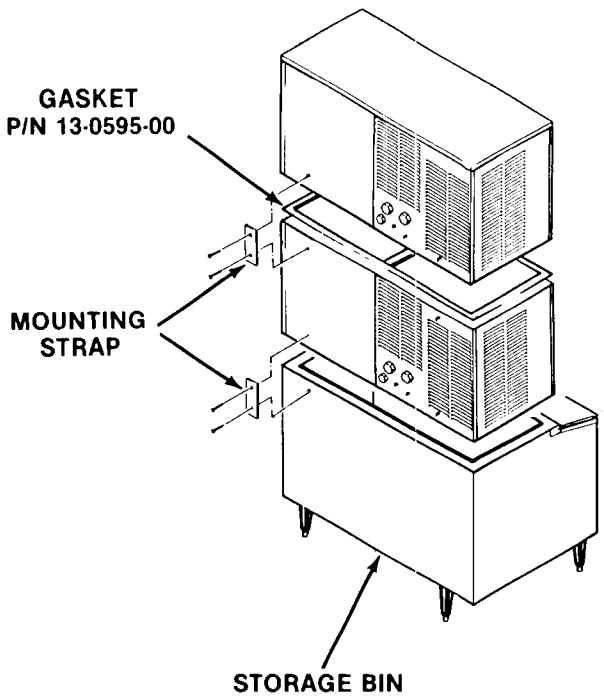

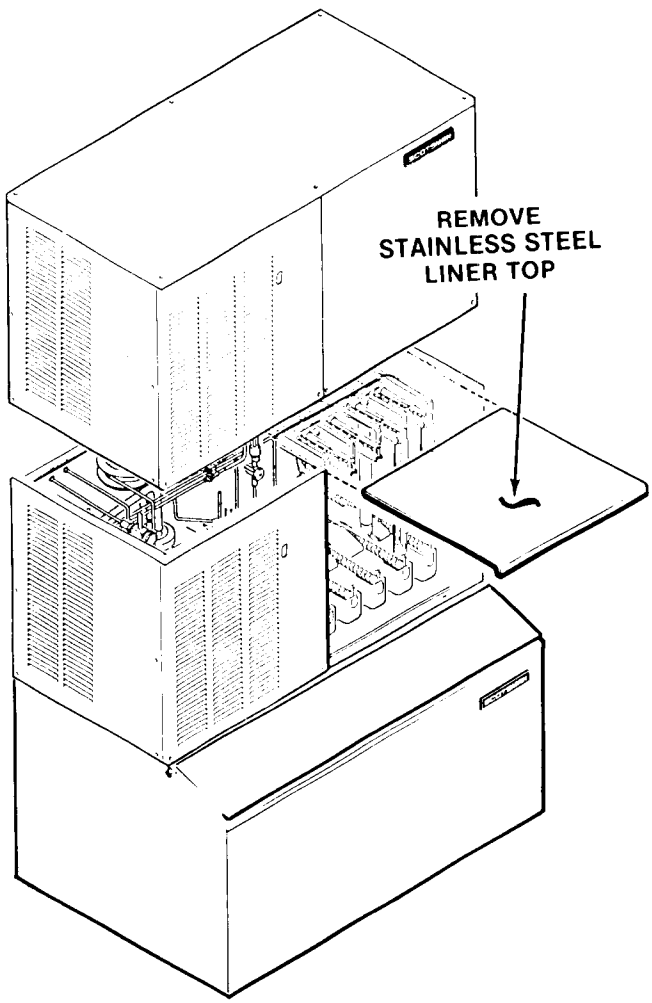

Location & Leveling

6. Remove bin thermostat bracket from shipping location on the evaporator supports.

   Turn the three installed mounting brackets down to 6 o'clock position as illustrated.

   Remove screw #1 shown and retain for use in attaching bracket.

   Using screw #1, attach the bracket and tube assembly as shown and snap into the remaining three brackets.

   Route the plastic tube thru the hole in the base (do not install on SS tube).

   Insert approximately 28 inches of bin thermostat cap tube thru the plastic tube and then thru the stainless steel tube. The cap tube should extend the entire length of the stainless steel tube.

   Install the plastic tube approximately 1 inch onto the stainless tube.

   In stacking applications, run the cap tube through the top unit base and the lower unit control box as shown, using grommets provided. Then route both bin stat cap tubes through the same bracket.

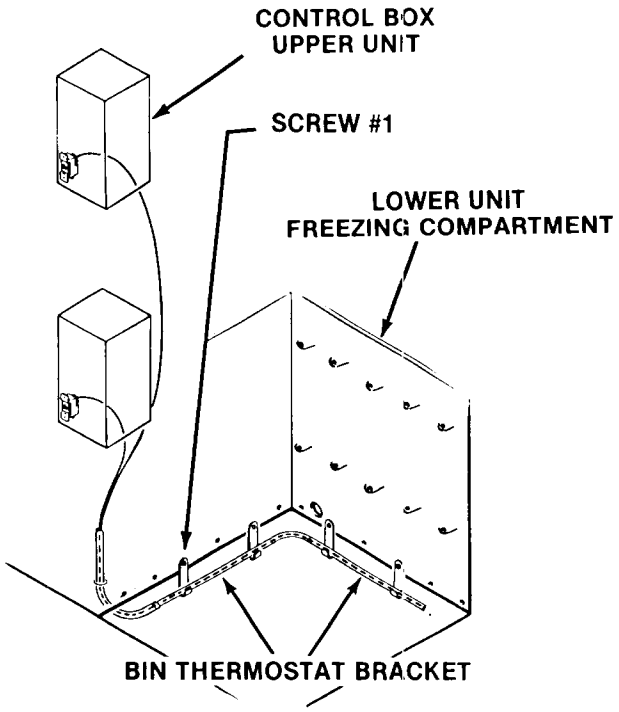

Install Bin Thermostat Bracket

7. Remove seven shipping supports from the evaporator supports.

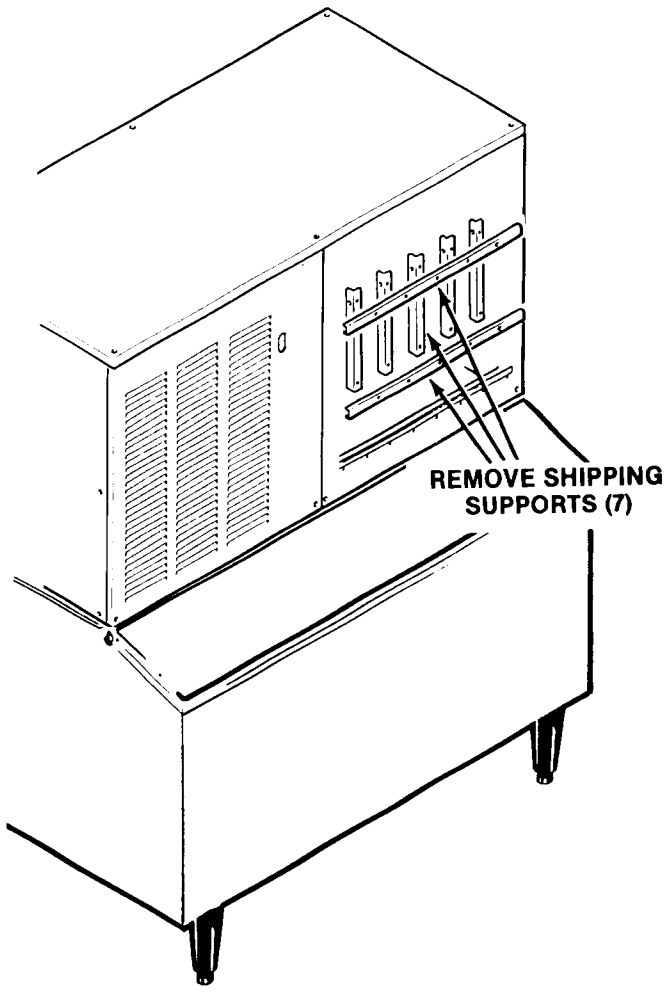

Remove Shipping Supports

ELECTRICAL CONNECTIONS

SEE NAMEPLATE for current requirements to determine wire size to be used for electrical hookup. The cuber requires a solid chassis-to-earth ground wire. See Wiring Diagram.

Be certain the cuber is connected to its own electrical circuit and individually fused. Voltage variation should not exceed ± ten percent of the nameplate rating, even under starting conditions. Low voltages can cause erratic operation and may be responsible for serious damage to the icemaker.

All external wiring should conform to the national, state and local electrical code requirements. Usually an electrical permit and services of a licensed electrician will be required.

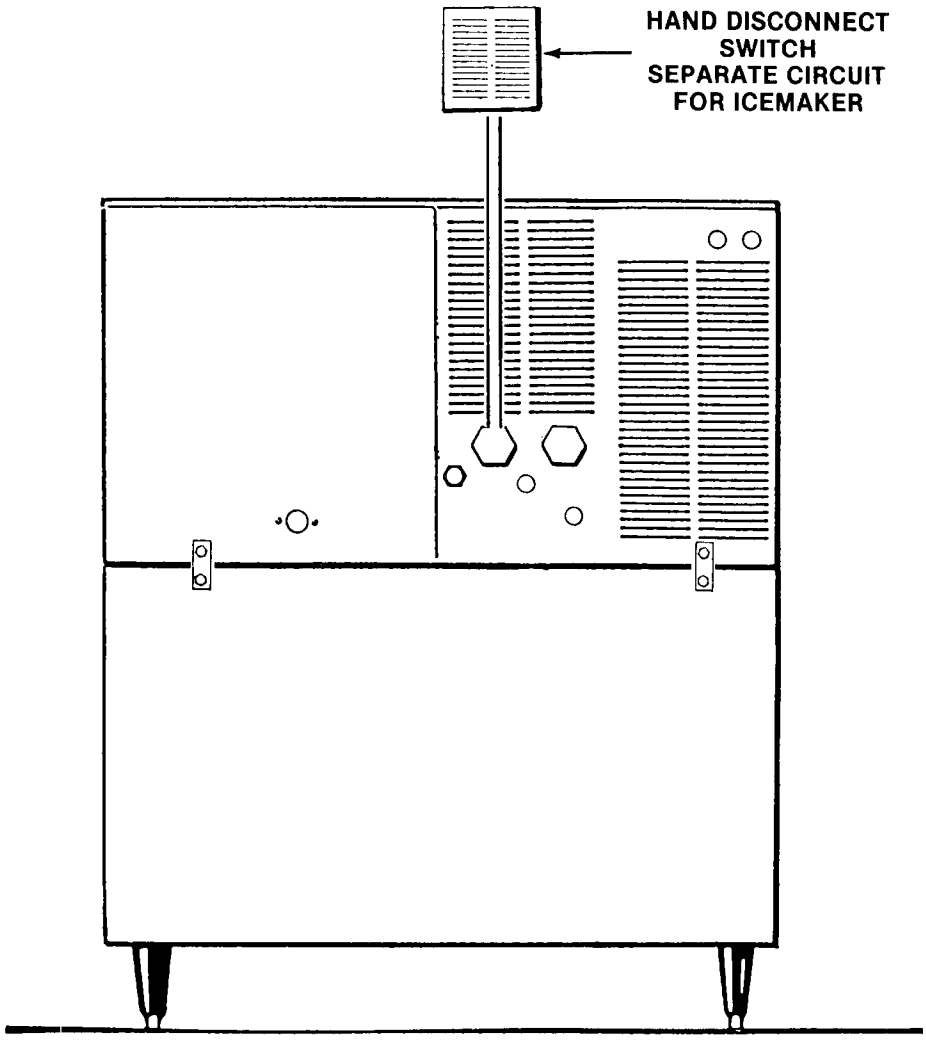

WATER SUPPLY AND DRAIN CONNECTIONS

AIR-COOLED MODELS: The recommended water supply line is a 3/8" O.D. copper tubing. Connect to cold water supply line with standard plumbing fittings with a shutoff valve installed in an accessible place between the water supply and the cuber. In some cases a plumbing permit and services of a licensed plumber will be required.

WATER-COOLED MODELS: On water-cooled models, a separate cold water supply inlet is required, to be connected to a second 3/8-inch female pipe thread (FPT) fitting at the rear of the cabinet. Additional drain lines are required to drain the water-cooled condenser.

DRAIN CONNECTIONS: All drains are gravity type and must have a minimum of 1/4-inch fall per foot on horizontal runs. The drains to be installed to conform with the local plumbing code. Install a vertical open vent on drain line to insure good venting. The drain receptacle should be an open, trapped or vented construction.

Recommended bin drain is 3/4-inch O.D. copper tubing and should be vented and run separately.

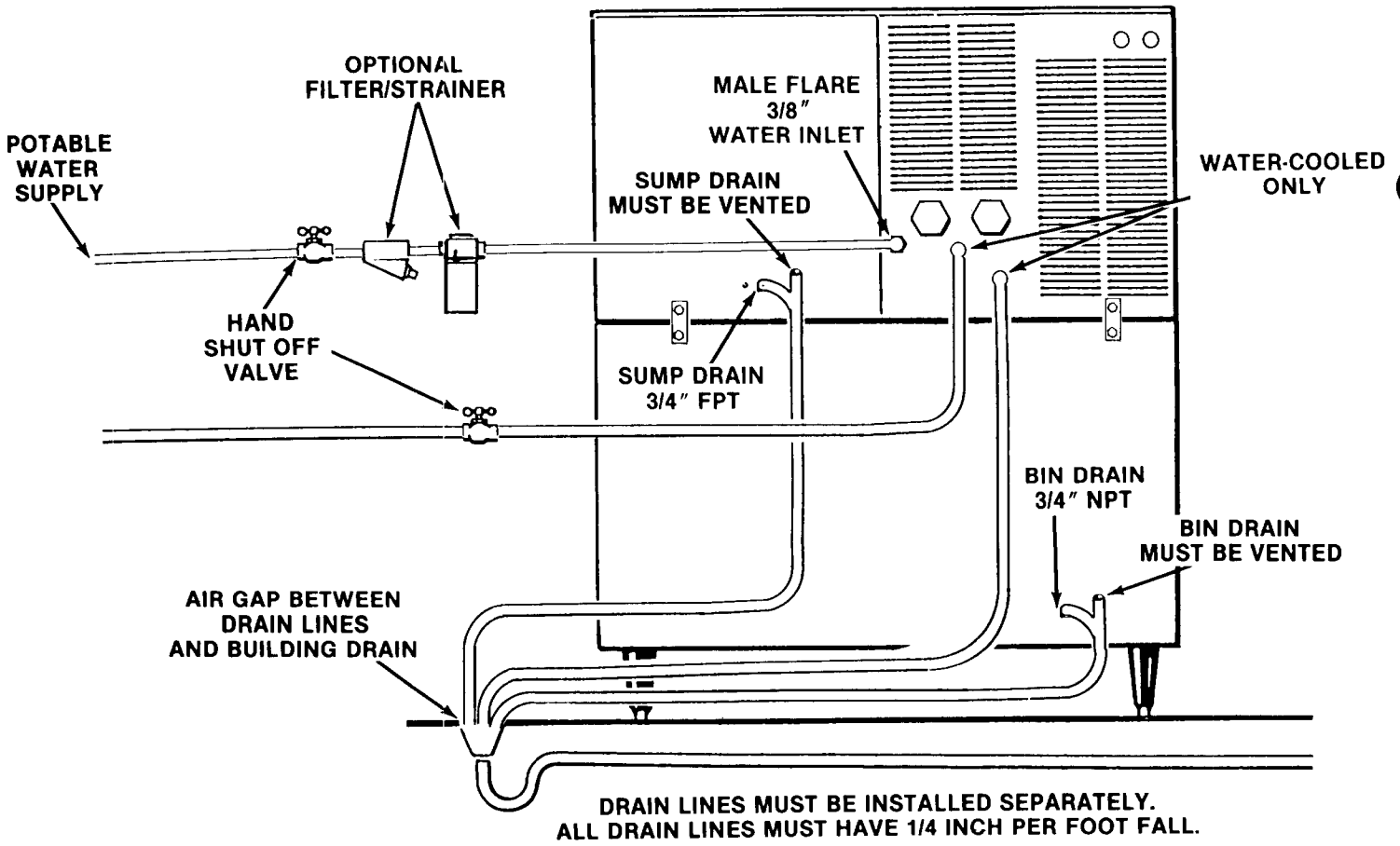

Water Supply and Drain Connection

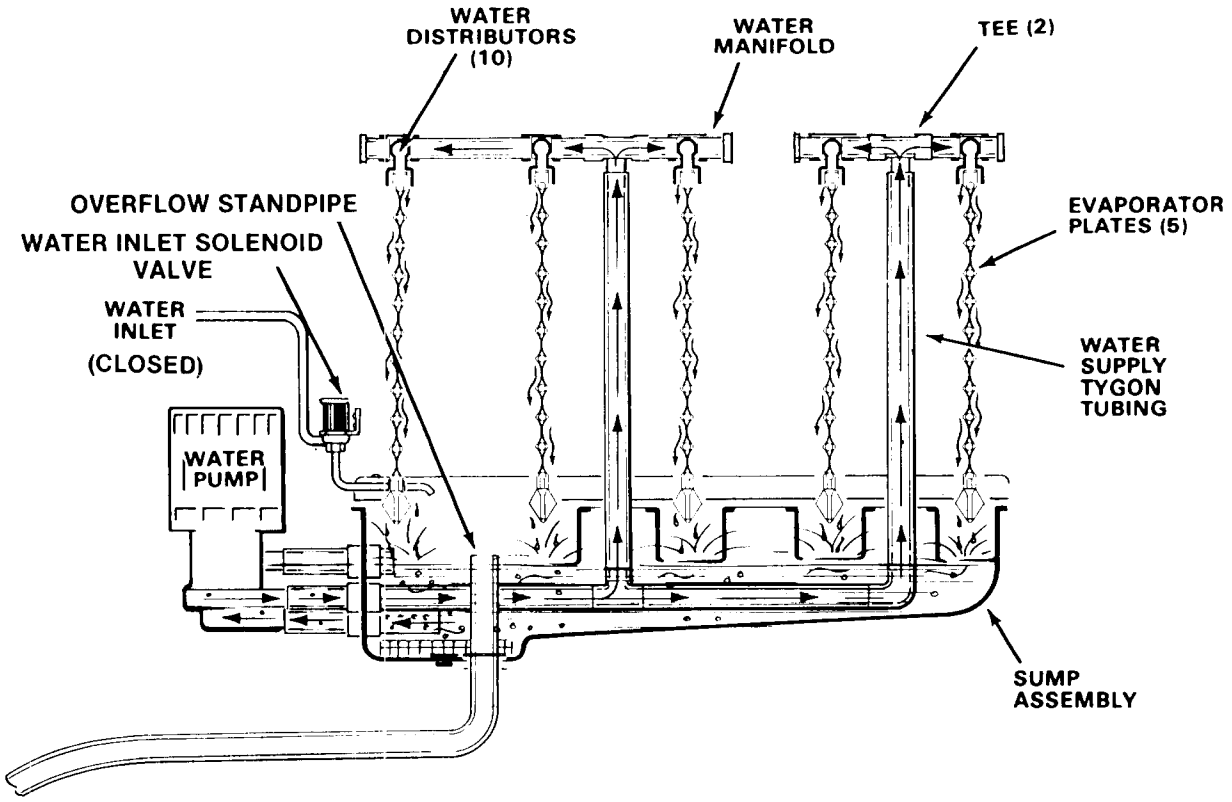

FREEZING CYCLE

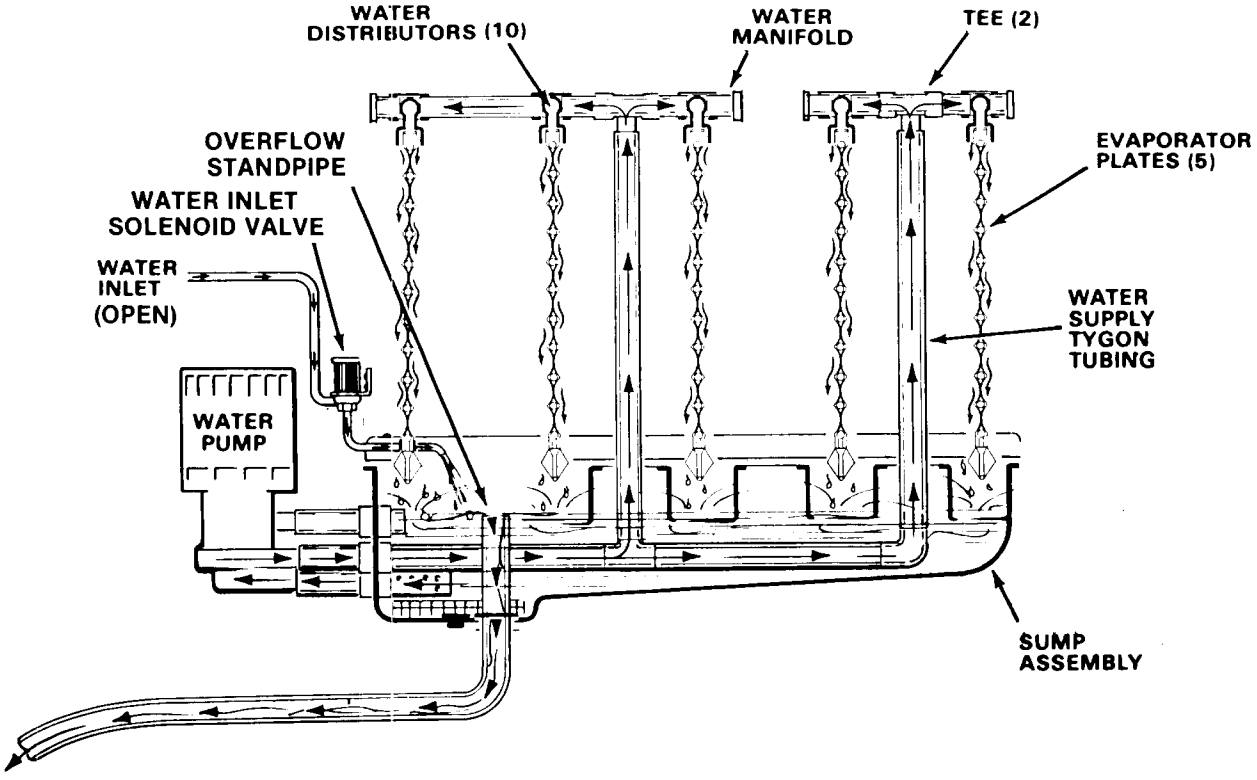

HARVEST CYCLE

Freezing Compartment — Water Schematic

FINAL CHECK LIST

1. Is the cabinet/bin level?
2. Is the cuber in a location where ambient temperatures are a minimum of 50-degrees F. all year around and do not exceed a maximum of 100°F?
3. Is there at least a six-inch clearance behind and around the cabinet for all connections and for proper air circulation?
4. Have all electrical and piping connections been made?
5. Has the electrical power supply wiring been properly connected and the voltage tested and checked against the nameplate rating? Has proper chassis-to-earth ground been installed?
6. Is the water supply line shutoff valve installed and opened and has the inlet water supply pressure been checked to insure a minimum of 20 PSIG without exceeding a maximum of 120 PSIG?
7. Have the compressor holddown bolts been checked to be sure the compressor is snug on the mounting pads?
8. Check all refrigerant lines and conduit lines to guard against vibration and possible failure.
9. Has the bin thermostat bracket been properly installed?
10. Has the cuber and the bin been wiped clean with clean damp cloths?
11. Has the owner/user been given the User Manual and instructed on how to operate the icemaker and the importance of periodic maintenance?
12. Has the owner/user been given the name and telephone number of the Authorized Scotsman Distributor or Service Agency serving him?
13. Has the Manufacturer's Registration Card been properly filled out? Check for correct Model and Serial Numbers from nameplate, then mail the completed card to the SCOTSMAN factory.

CM1400 FOR THE INSTALLER

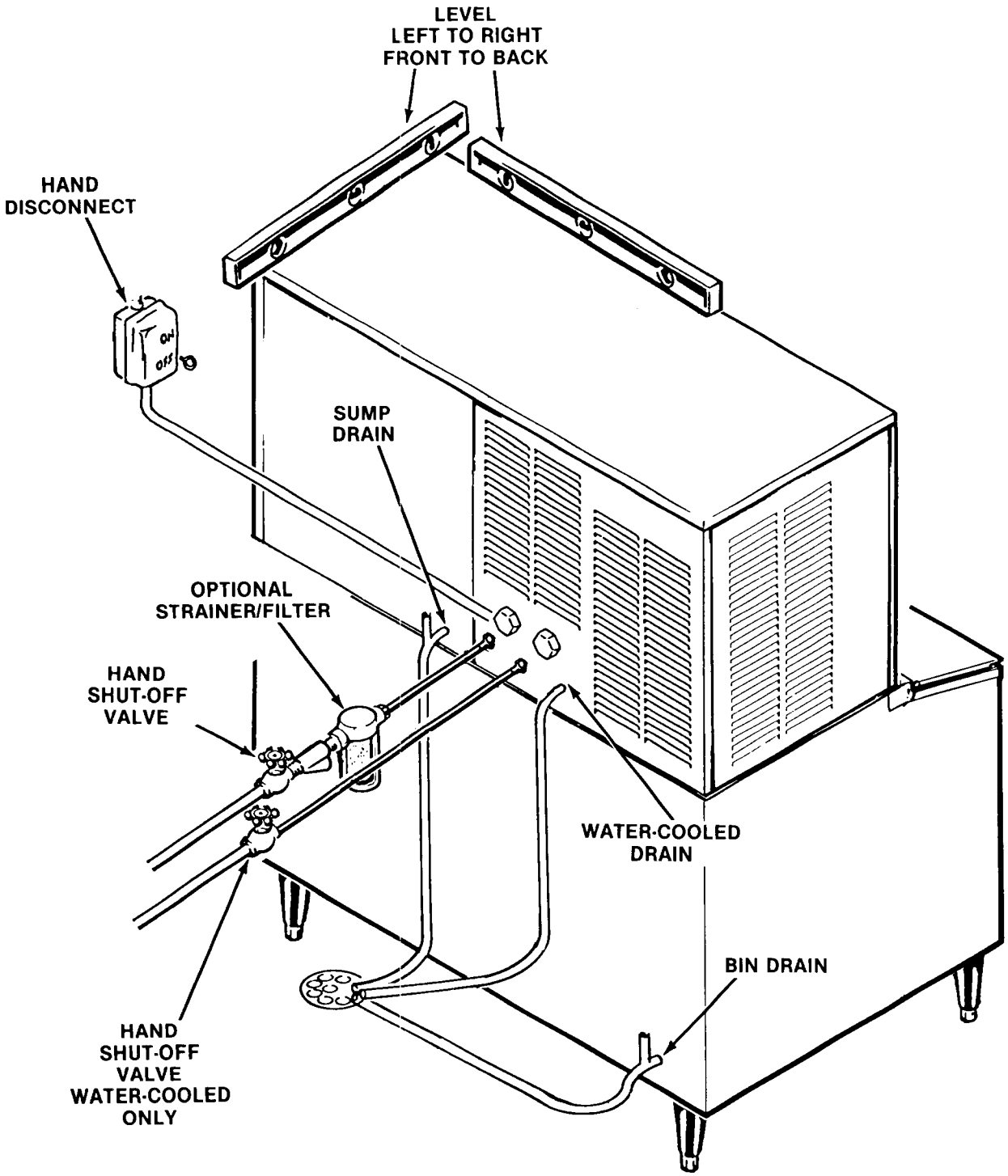

CM1400 START-UP CHECK LIST

START—UP

1. OPEN the water supply line shutoff valve.
2. Check that the two toggle switches, the MASTER ON-OFF toggle switch and the COMPRESSOR ON-OFF toggle switch are in the OFF position, on the control box.
3. Remove screws and remove both front panels.
4. Remove screws and remove the control box cover.
5. Inside the control box is the shaft of the timer and the switch assembly. Rotate the shaft of the timer and switch assembly clockwise until the actuator arm on the microswitch drops off outer cam into cam slot. See Timer Cam Positions. An audible click can be heard, but in a noisy area look at the cam and switch to observe the event.

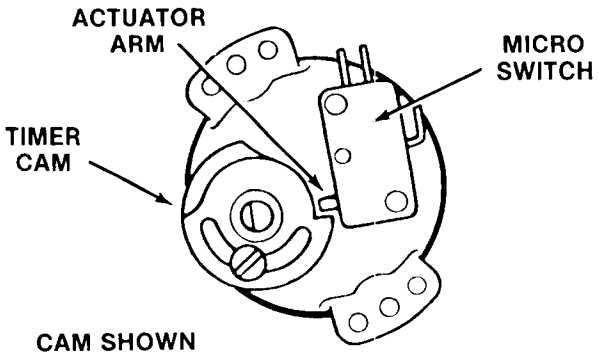

CAM SHOWN AT BEGINNING OF HARVEST CYCLE

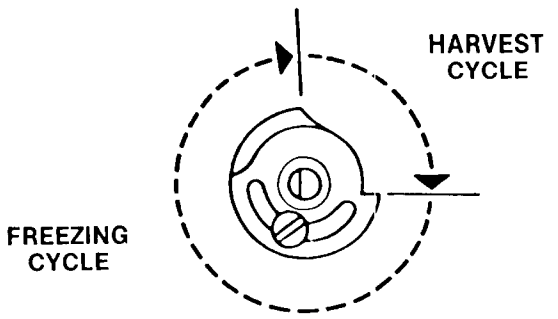

CAM SHOWN DIVIDED INTO TYPICAL FREEZING & HARVEST CYCLES

Timer Cam Positions

6. Move the master ON-OFF toggle switch, the bottom toggle switch, to the ON position.
7. Observe water fill cycle: Water inlet solenoid valve OPENS, incoming water flows from the valve through the tubing, the reservoir fills and excess water is overflowed through the stand pipe. This cycle will take about three minutes. Timer will close the water inlet solenoid valve and the water fill cycle is complete.

   Advancing the shaft of the timer and switch assembly through the remaining cycle into a new harvest cycle, restarts the timer and allows a check that: Water inlet solenoid valve OPENS and the reservoir overflows through the stand pipe. Water inlet valve CLOSES, stopping water overflow.
8. Check that the water cascades down over each cube mold and into the sump.
9. When the second cycle is completed, move the compressor ON-OFF toggle switch, to the ON position.
10. Check operation of the freezing cycle:

    The compressor is operating.

    The water pump is operating, as seen by water moving through the two tygon tubes between evaporator plates, up to the water manifold at the top of the evaporator plates, where water is uniformly dispensed and cascades down both sides of each evaporator plate and drains back into the sump assembly for recirculation.

    The icemaking process begins; feeling the metal parts of the evaporator plates reveals cold temperature, very shortly ice begins to form. Tubing will become frosted at the top of the evaporator plates.

    Freezing time will range between 9 and 14 minutes in a 70-degree F. ambient temperature. Longer time for temperatures above 70-degrees F., and shorter time required when temperatures are below 70-degrees F. Average complete cycle range is about 12 to 17 minutes.
11. Let the machine function as shipped. Observe the first harvest of cubes. ADJUSTMENTS MAY BE REQUIRED.

CM1400 START-UP

12. Observe second and third cube harvest.

Check size of SCOTSMAN CONTOUR CUBE

Unlike other SCOTSMAN cubes which are made in a definite molded shape, contour cubes are produced in indentations and many shapes and sizes of contour cubes may be produced — only ONE size and shape combination is correct.

Charge Refrigeration System with **REFRIGERANT 502 ONLY.**

In areas where extreme problem water condition exists, filtering or purifying equipment is recommended. Contact SCOTSMAN ICE SYSTEMS, Service Department, Albert Lea, Minnesota 56007 for further details.

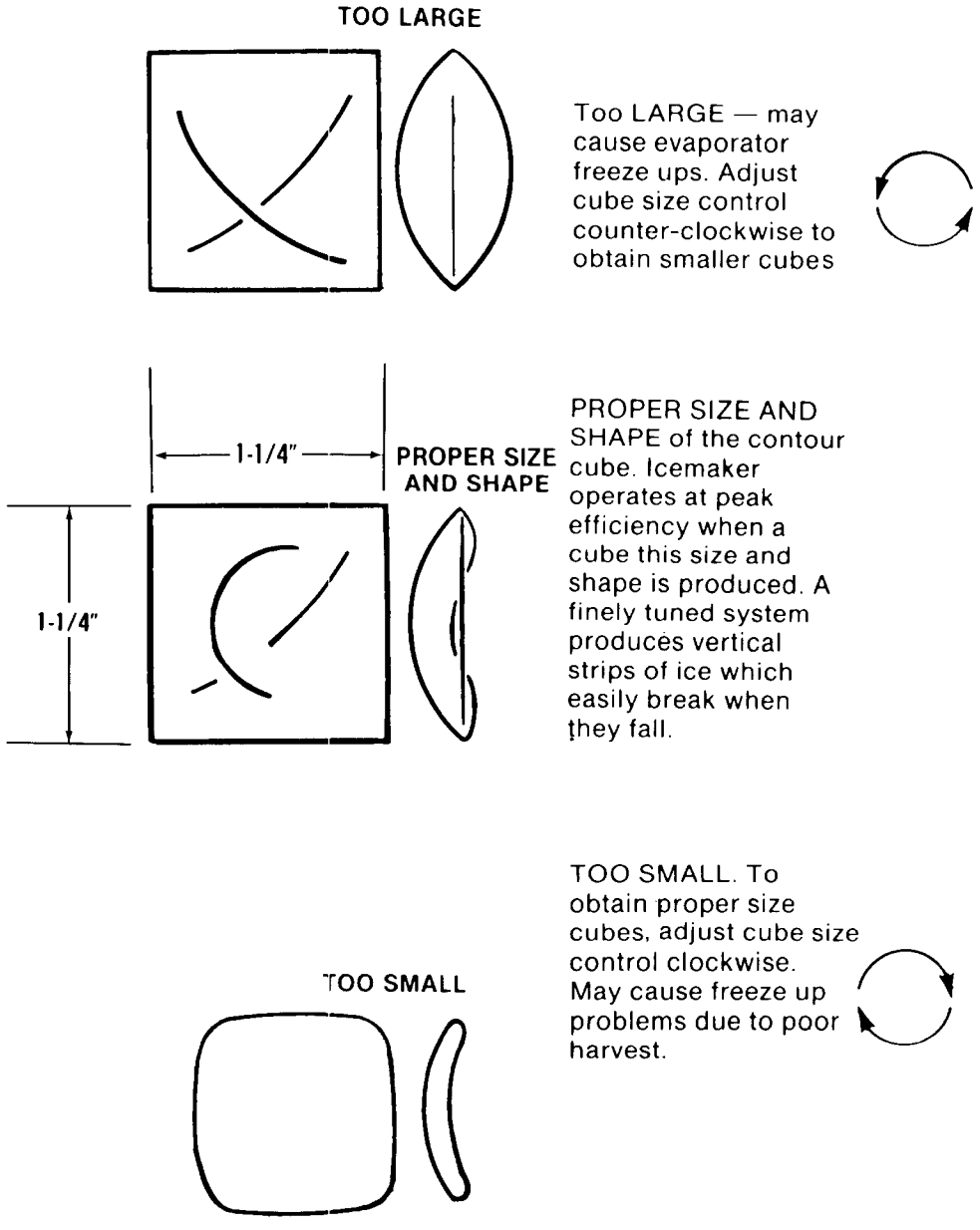

Ice Cube Size & Shape

CM1400 START-UP

ADJUSTMENT OF CUBE SIZE

To produce SMALLER sized ice cubes:

Locate cube size control knob in the front of the control box.

Rotate the adjusting screw one-eighth of a turn COUNTERCLOCKWISE to WARMER.

Observe size of the ice cubes in the next two ice cube harvests and adjust in one-eighth turn or less increments until desired ice cube is achieved.

To produce LARGER sized ice cubes:

Locate cube size control on the front of the control box.

Rotate the adjusting screw one-eighth of a turn CLOCKWISE to COLDER.

Observe size of ice cubes in the next two cube harvests and adjust in one-eighth turn or less increments until desired ice cube size is achieved.

Check texture of ice cubes; when partially cloudy throughout, suggests icemaker is operating short of water; or, possibly an extreme problem water condition exists where filtering or purifying equipment is recommended. Contact SCOTSMAN ICE SYSTEMS, Service Department, Albert Lea, Minnesota 56007 for further details. See SERVICE DIAGNOSIS chart for shortage of water symptoms and corrections.

ROTATE ADJUSTMENT KNOB COUNTER-CLOCKWISE TO PRODUCE SMALLER CUBES

ROTATE ADJUSTMENT KNOB CLOCKWISE TO PRODUCE LARGER CUBES

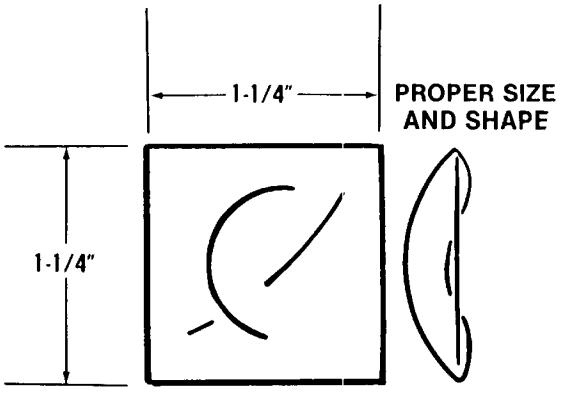

Check the Harvest time. The correct setting is one that allows enough time for all of the ice to fall from the evaporators and to fill the sump with water to the overflow point, plus 15-30 seconds extra time.

To adjust the timer:

A. Disconnect electrical power supply to the icemaker.

B. Loosen the screw on the timer that locks the two cams together.

C. To decrease Harvest time, rotate the shaft of the timer counter-clockwise. To increase, turn the shaft clockwise.

D. Retighten the screw to lock the two cams together again.

E. Return power to icemaker. Check cube size and Harvest time.

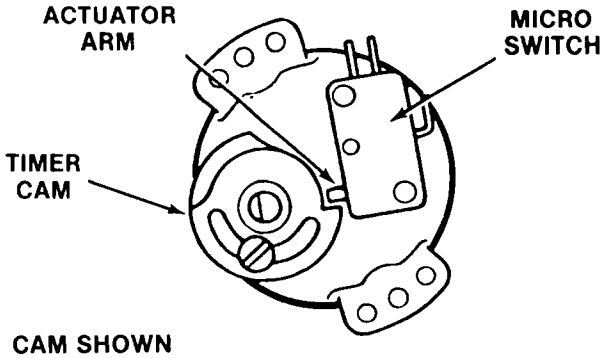

CAM SHOWN AT BEGINNING OF HARVEST CYCLE

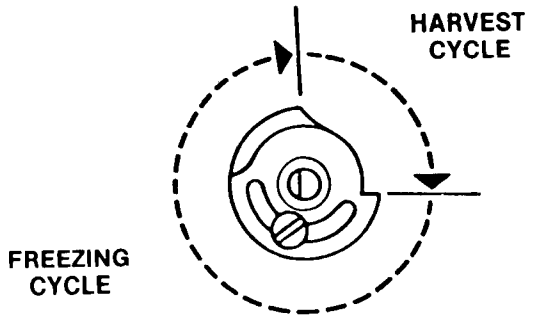

CAM SHOWN DIVIDED INTO TYPICAL FREEZING & HARVEST CYCLES

Cube Size Control Adjustment

CM1400 START-UP

BIN THERMOSTAT OPERATION

13. With the icemaker in the harvest cycle, hold ice against the bin thermostat control bulb to test shutoff which should cause the icemaker to shut OFF at the END OF THE HARVEST CYCLE.

    Within minutes after the ice is removed from the sensing bulb, the bulb will warm up and cause the icemaker to restart. This control is factory set and should not be reset until testing is performed.

14. Replace control box cover and all cabinet panels and screws.

15. Thoroughly explain to the owner/user the significant specifications of the icemaker, start up and operation and go through the procedures in the operating instructions. Answer all questions about the icemaker by the owner and inform the owner of the name and telephone number of the authorized SCOTSMAN Distributor or service agency serving him.

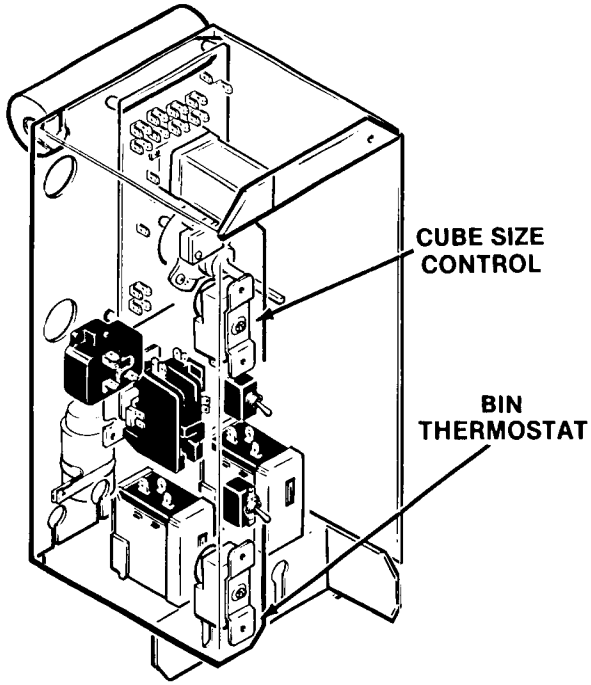

CM1400 MAINTENANCE & CLEANING INSTRUCTIONS

GENERAL

The periods and procedures for maintenance and cleaning are given as guides and are not to be construed as absolute or invariable. Cleaning especially will vary depending upon local water conditions and the ice volume produced and each icemaker must be maintained individually in accordance with its own particular location requirements.

ICEMAKER

THE FOLLOWING MAINTENANCE SHOULD BE SCHEDULED AT LEAST TWO TIMES PER YEAR ON THIS ICEMAKER. CALL YOUR AUTHORIZED SCOTSMAN SERVICE AGENCY.

1. Check and clean or service any optional water treatment devices, if any installed.
2. Check the CM1400 cabinet is level in the side-to-side and front-to-back directions.
3. Clean the water system, evaporator plates and sump assembly, using a solution of SCOTSMAN Ice Machine Cleaner. Refer to CLEANING

Cleaning requirements vary according to local water conditions and individual user operation. Continuous check of the clarity of ice cubes and visual inspection of the water system parts, evaporator plates and the sump assembly before and after cleaning will indicate frequency and procedures to be followed in local areas.

4. Check that each evaporator plate assembly is snug and secure on each wall support on the bin rear wall, in the holes of the front brace, and in each indent recessed in each arm of the sump assembly below the bottom corners of the evaporator plates.
5. Check and tighten all bolts and screws.
6. Check and tighten all electrical connections.
7. Check hot gas solenoid valve for correct operation.
8. With MASTER ON-OFF toggle switch and COMPRESSOR ON-OFF toggle switch in the OFF position, clean the condenser using vacuum cleaner, whisk broom or brush. Instruct customer to clean condenser frequently. DO NOT USE A WIRE BRUSH.
9. Check for water leaks and make corrections.
10. Check the bin thermostat control bulb to test shut off. Holding ice against bin thermostat control bulb should cause the icemaker to shut off at the end of the harvest cycle.

    Within minutes after ice is removed from the bin thermostat control bulb, the icemaker will restart.

CM1400 MAINTENANCE & CLEANING INSTRUCTIONS

CLEANING - Icemaker

1. Remove screws and the front, and left side panels.
2. Check that both toggle switches on the control box are in the OFF position.
3. Rotate the shaft of the timer and switch assembly located in the control box CLOCKWISE until the actuator arm on the microswitch rides up out of the cam slot, to the outer surface of the cam, then stop. This is the start position for the freezing cycle. See START Positions for the Freeze/Harvest Cycles.
4. Position a container for catching drain water under the rubber plug at the bottom of the sump assembly.
5. Remove hose clamp, the rubber plug, and drain all water from the sump assembly into the container.

   Replace rubber plug and hose clamp.

WARNING

SCOTSMAN Ice Machine Cleaner contains Phosphoric and Hydroxyacetic acids. These compounds are corrosive and may cause burns. If swallowed, DO NOT induce vomitting. Give large amounts of water or milk. Call physician immediately. In case of external contact, flush with water. KEEP OUT OF THE REACH OF CHILDREN.

6. Prepare cleaning solution: Mix 24 ounces of SCOTSMAN Ice Machine Cleaner with two gallons of fresh, potable warm water. (95^0F.-115^0F.)
7. Carefully pour the cleaning solution into the sump assembly.
8. Immediately move the MASTER ON-OFF toggle switch on the control box to the ON position.
9. Allow the system to operate for about thirty minutes.

   No ice cubes will be made because the COMPRESSOR ON-OFF toggle switch is off.

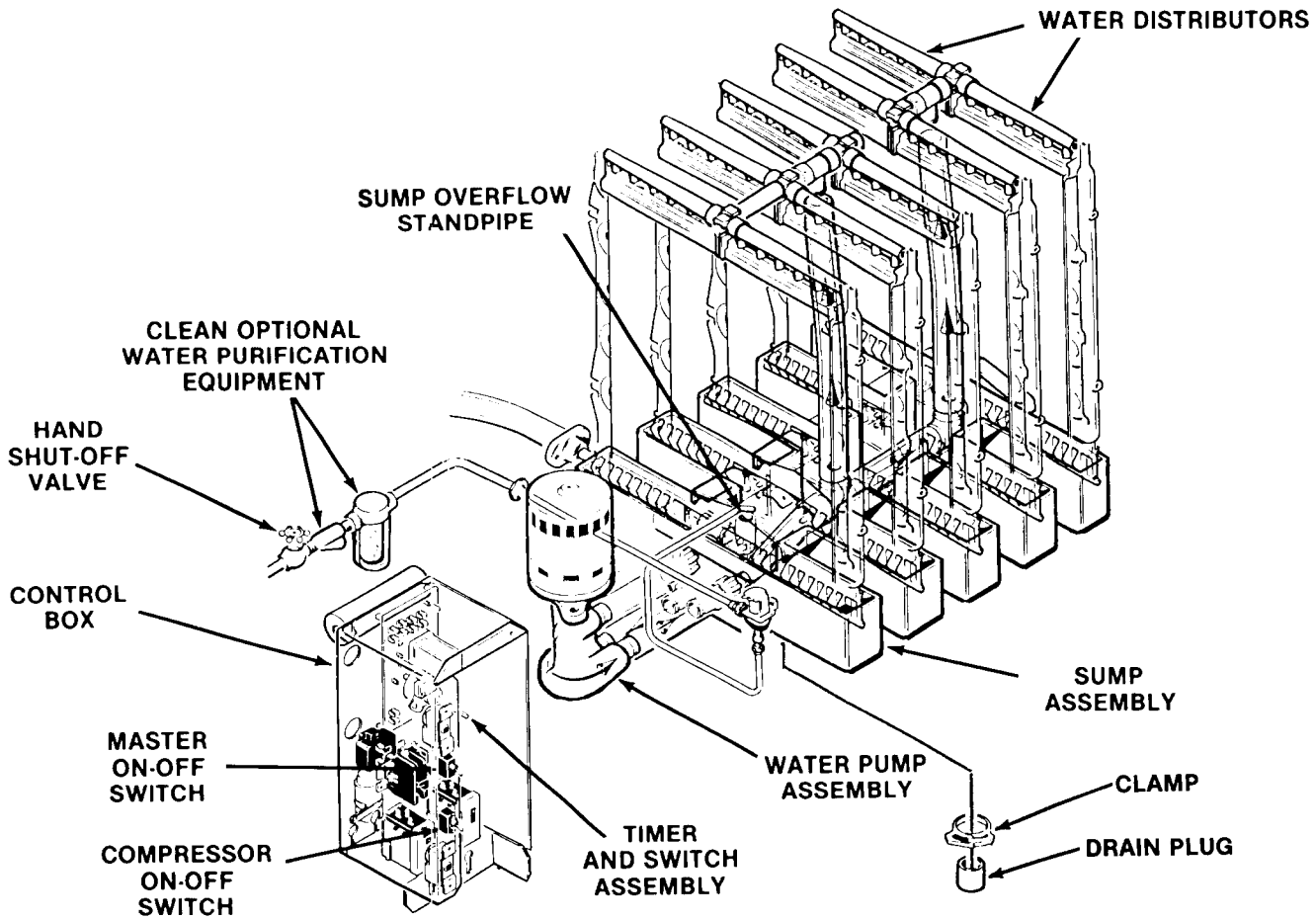

10. Move the master ON-Off switch to the OFF position.

11. Remove the plug and drain the cleaning solution from the sump and rinse. Replace the drain plug, add two gallons of fresh water to sump. Restart the water pump and operate for 5 minutes, and then drain. Repeat this procedure two more times.

12. Rotate the shaft of the timer and switch assembly CLOCKWISE advancing through the freezing cycle to the harvest position (low part of the cam against microswitch). Move the master switch to the ON position to start the Harvest cycle. During each harvest cycle fresh water enters the water reservoir; diluting any leftover water, rinsing all water related parts, and washing away most mineral concentrations through the overflow drain.

If after completing the cleaning and flushing procedure, inspection of the water flow reveals that one or more evaporator plates does not have a full flow of water for each vertical column of cubes, shut down the operation and remove and clean all water distributor manifolds. Reinstall the water distributor manifolds.

13. Move the compressor ON-OFF switch to the ON position to start the icemaking process.

////////////////////////////////////**CAUTION**////////////////////////////

DO NOT use ice produced from the cleaning solution. Be sure none remains in the bin.

//

14. Check the next few ice cube harvests until the ice cubes are clear and the acid taste is gone.

15. Add hot water to the bin to melt the ice.

16. Replace all panels.

ICE STORAGE BIN

The interior liner of the bin is in contact with a **food** product: **ice.** The storage bin must be **cleaned** regularly to maintain a **sanitary** environment. Once a week cleaning with soap and water, a hot water rinse and an air dry is a **basic** procedure.

Scale that may form on the plastic liner can be removed by scrubbing the surface with a mixture of Scotsman Ice Machine Cleaner and hot water. Remove any scale prior to sanitizing.

////////////////////////////**WARNING**////////////////////////////

Scotsman Ice Machine Cleaner contains Phosphoric and Hydroxyacetic acids. These compounds are corrosive and may cause burns. If swallowed, DO NOT induce vomiting. Give large amounts of water or milk. Call Physician immediately. In case of external contact, flush with water. KEEP OUT OF THE REACH OF CHILDREN.

//

To Remove Scale:

1. Mix a cleaning solution of 4 ounces of Scotsman Ice Machine Cleaner to 4 pints of hot (95^0F. to 110^0F.) water.

2. Using rubber gloves, dip a nylon scouring pad into the cleaning solution, and scrub the scale off of the liner.

3. After all the scale has been removed, rinse all of the surfaces inside the bin with clean, hot water. Sanitize the bin interior.

Every 90 days, the interior should be sanitized with an approved commercial ice machine sanitizer, according to the directions of the sanitizer. Check with the local health department for sanitizer that meet local codes.

CM1400 MAINTENANCE & CLEANING INSTRUCTIONS

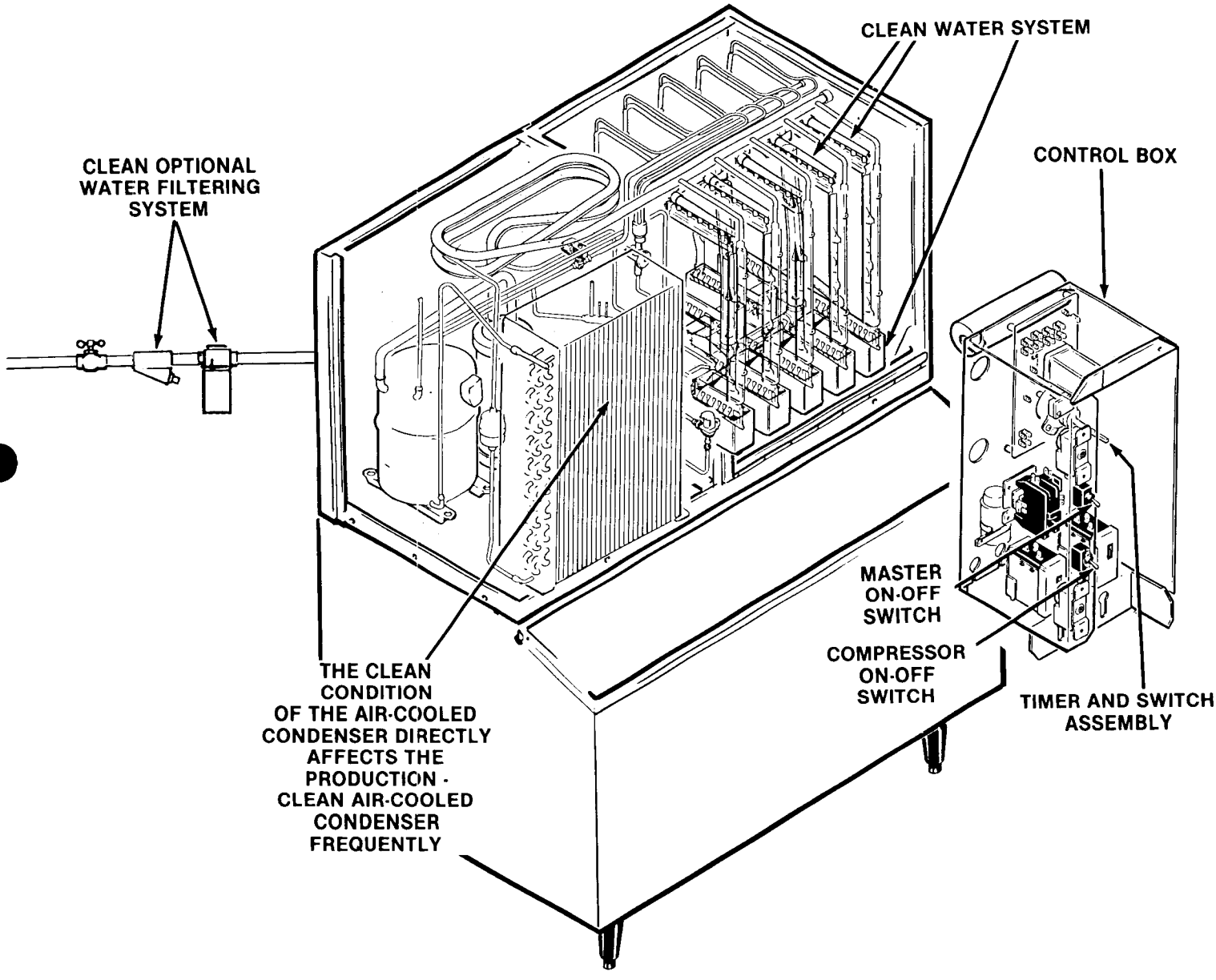

CM1400 OPERATION

OPERATION

FREEZING CYCLE

Water from the sump assembly is pumped to the water distributor system at the top of each evaporator plate. From the water distributor the water cascades by gravity over all cells of the plate and to the sump assembly below for recirculation. At the beginning of the freezing cycle the electrical circuit is completed to the compressor and the water pump. The water pump operates continuously through both the freezing cycle and the harvest cycle.

In water-cooled models, water also flows through the condenser and out the drain. While in the condenser, water removes heat from the refrigerant and allows the refrigerant to condense from a gas to a liquid.

In the compressor, gaseous refrigerant is compressed and discharged into the condenser as a high pressure, high temperature gas. The refrigerant is cooled by either air or water and condenses into a high pressure, medium temperature liquid. This liquid refrigerant then passes through the thermostatic expansion valve where the temperature and pressure of the liquid refrigerant is lowered. From the TXV, the refrigerant moves through smaller diameter tubes and it next enters the evaporator plates. The refrigerant is warmed by the water cascading over the Evaporator plate and begins to boil off and become a gas. The refrigerant next to boil off and become a gas. The refrigerant next travels through the accumulator and the heat exchange area of the suction line where any remaining liquid refrigerant boils off and returns to the compressor as a low pressure, low temperature gas, and the cycle starts again.

During the freezing cycle, the hot gas solenoid valve is CLOSED and the water inlet solenoid valve is CLOSED.

When the ice cubes are partially formed, the cube size control will sense the temperature at which it is preset to CLOSE. This will complete the electrical circuit to the timer. The timer then controls the remainder of the freezing cycle.

The timer will keep the icemaker operating in the freezing cycle for a selected length of time. This will give the ice cubes time to fully form. After that selected length of time, the timer will switch the icemaker into the harvest cycle through the contacts of the timer assembly microswitch.

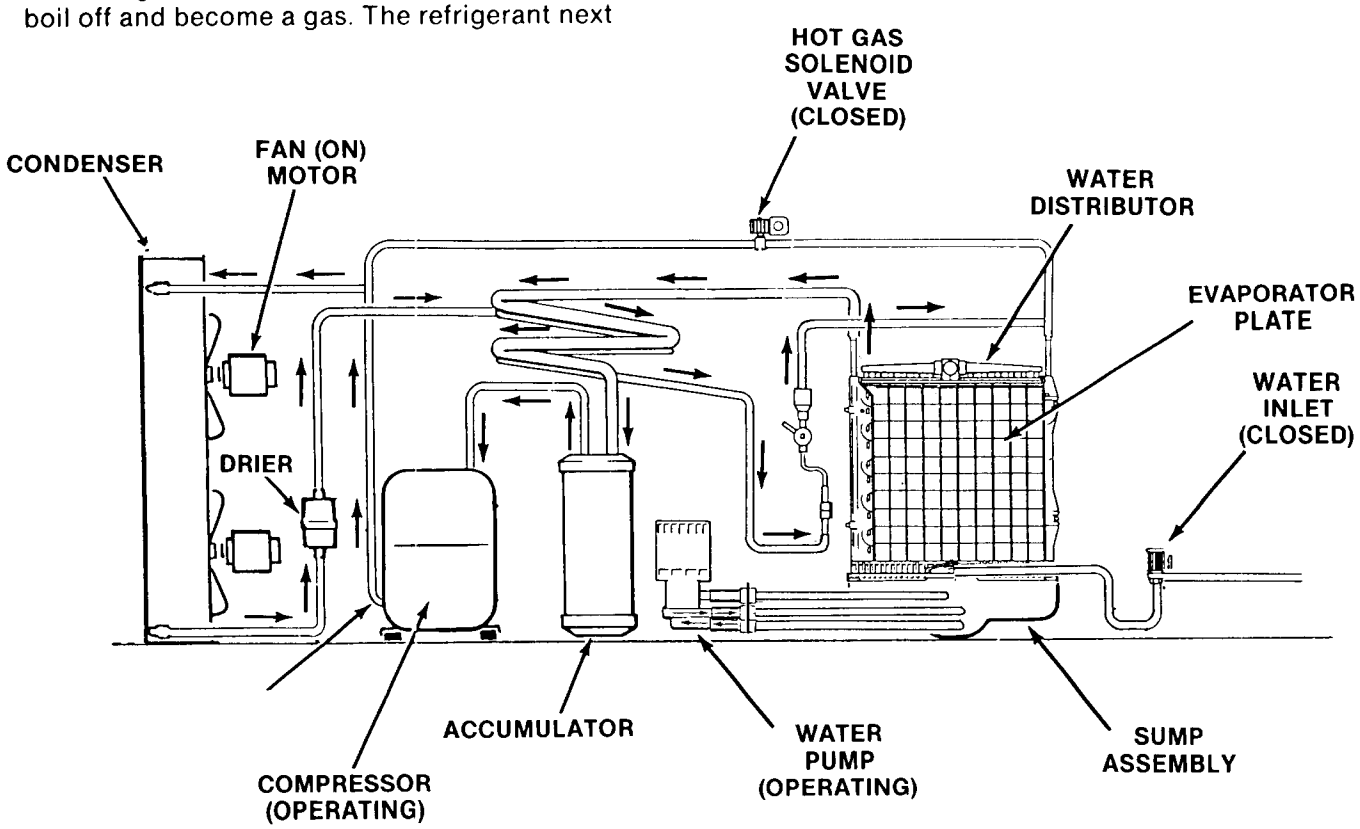

Freezing Cycle

CM1400 OPERATION

HARVEST CYCLE

When the timer switches the icemaker into the harvest cycle, high pressure, high temperature gas refrigerant being discharged from the compressor is diverted from the condenser through the hot gas solenoid valve into each evaporator plate. During this cycle, the gaseous refrigerant bypasses the condenser and the thermostatic expansion valve.

In the electrical circuit, both the compressor and the water pump are operating and the hot gas solenoid valve is energized and OPEN and the water inlet solenoid valve is OPEN.

The finished ice cubes are released from the sides of each evaporator plate, by the warming effect of the hot gas flowing through each evaporator plate and the water cascading over the ice cubes. The released ice cubes drop into the ice storage bin below.

At the end of the harvest cycle, the timer cam will push the actuator arm of the microswitch IN. If the bin thermostat is still CLOSED, a whole new cycle will begin. If the bin thermostat is OPEN, the icemaker will shut OFF, at this time.

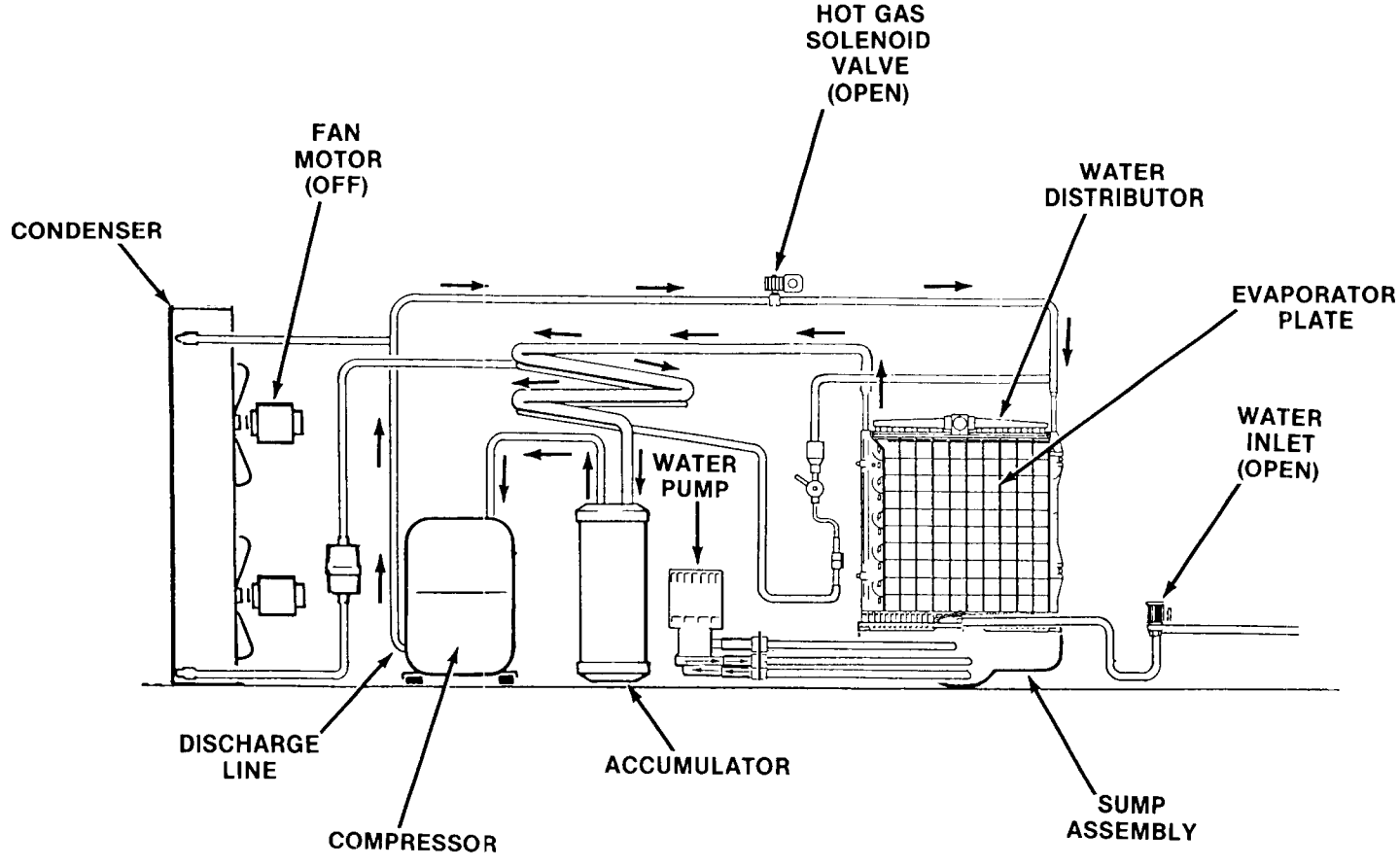

Harvest Cycle

CM1400 OPERATION - ELECTRICAL SEQUENCE

The following charts illustrate which switches and which components are ON or OFF during a particular phase of the icemaking cycle.

Refer to the wiring diagram for a reference. Remember, the wiring diagram shows the unit as it is in the Timed Freeze Cycle.

BEGINNING FREEZE

ELECTRICAL COMPONENTS (LOADS)	ON	OFF
Compressor	X	
*Fan Motor (Air-cooled only)	X	
Hot Gas Valve		X
Inlet Water Valve		X
P.C. Board Relay Coil	X	
Timer		X
Water Pump	X	

SWITCHES	ON	OFF
Bin Thermostat	X	
Cube Size Thermostat		X
H.P. Fan Control	X	
Toggle - Master	X	
Toggle - Compressor	X	
H.P. Control	X	
Timer Micro Switch N.C.		X
Timer Micro Switch N.O.	X	
High Temp Switch	X	

*The fan control will open and close with changes in discharge pressure, but will usually be closed during early freeze, so the fan will usually be ON.

At the beginning of the freeze cycle, the timer is not turning, but the icemaker is refrigerating the water, starting to turn the water into ice.

CM1400 OPERATION - ELECTRICAL SEQUENCE

TIMED FREEZE

ELECTRICAL COMPONENTS (LOADS)	ON	OFF
Compressor	X	
*Fan Motors (Air-cooled only)	X	
Hot Gas Valve		X
Inlet Water Valve		X
P.C. Board Relay Coil	X	
Timer	X	
Water Pump	X	

SWITCHES	ON	OFF
Bin Thermostat	X	
Cube Size Thermostat	X	
H.P. Fan Control	X	X
Toggle Switch - Master	X	
Toggle Switch - Compressor	X	
H.P. Control	X	
Timer Micro Switch N.C.		X
Timer Micro Switch N.O.	X	
High Temp Switch	X	

After the icemaker has cooled the water and formed some ice on the evaporator, the evaporator will have gotten cold enough to have the cube size control close. All this does is start and run the timer.

*The fan control will be opening and closing with the changes in discharge pressure, so the fan will be turning ON and OFF.

HARVEST

ELECTRICAL COMPONENTS (LOADS)	ON	OFF
Compressor	X	
*Fan Motors (Air-cooled only)		X
Hot Gas Valve	X	
Inlet Water Valve	X	
P.C. Board Relay Coil		X
Timer	X	
Water Pump	X	

SWITCHES	ON	OFF
Bin Thermostat	X	
Cube Size Thermostat		X
H.P. Fan Control		X
Toggle Switch - Master	X	
Toggle Switch - Compressor	X	
H.P. Control	X	
Timer Micro Switch N.C.	X	
Timer Micro Switch N.O.		X
High Temp Switch	X	

The timer has now turned far enough so that the micro-switch plunger has dropped into the gap in the cam, this breaks the circuit to the relay in the P.C. Board - and that puts the machine into the Harvest cycle where the hot gas valve and inlet water valve have opened to harvest the ice. When ice is on the bin control, it will open and at the end of the harvest cycle shut off the machine.

*The fan control will keep the fan OFF during the harvest cycle until the discharge pressure builds up to 190 PSIG, probably near the very end of the harvest cycle, then the fan will come ON.

CM1400 SYSTEM SPECIFICATIONS

In servicing a machine, it is often useful to compare that individual units operating characteristics to those of a normally operating machine. The data that follows gives those characteristics, however, be aware that these values are for NEW, CLEAN machines. USE THESE NUMBERS AS A GUIDELINE ONLY.

COMPONENT

Timer - 1 revolution of the cam, in minutes 8
Harvest Time, preset, in minutes 2-1/4
Inlet Water Valve, water flow in g.p.m. 1

	CI	CO
Cube Size Control, Reverse Acting, Temperature range	(0°F. to +25°F.)	—
Bin Thermostat, Temperature Range	38.5°-43.5°	33.5°-38.5°
High Pressure Safety Switch, psig Air-cooled	Manual	450
High Pressure Safety Switch, psig Water-cooled	Manual	350
Fan Pressure Control, in psig	210	193

OPERATING CHARACTERISTICS

On air-cooled models during the freezing cycle, the discharge pressure will slowly decline as the unit freezes ice and at the same time the suction pressure will also decline, reaching it's lowest point just before freeze. Compressor amps experience a similar drop.

On water-cooled, the discharge pressure is constant, maintained during the freeze cycle by the water regulating valve at 220 PSIG. However, suction pressure and compressor amps will still decline as the machine freezes ice.

FREEZE CYCLE

Average Discharge Pressure A/C . . . 350-200 PSIG
Average Discharge Pressure W/C . . . . . 220 PSIG
Suction Pressure at the end of the Freeze Cycle . . . . . 20-40 PSIG
Cycle Time (Includes Harvest) . . . . . 12-30 Minutes

HARVEST CYCLE

Average Discharge Pressure . . . . . 300-100 PSIG
Average Suction Pressure . . . . . 100-70 PSIG
Harvest Time, assumed to be 2-1/4 minutes. This can be adjusted to suit local conditions.

The values listed are representative of values seen at a wide range of air and water temperatures and are for a normal cube size.

When comparing these figures to field data, allow a variation from each end of the range given.

TO SERVICE REFRIGERATION SYSTEM:

TORQUE REFRIGERATION ACCESS VALVE CAPS TO 60-75 INCH POUNDS.

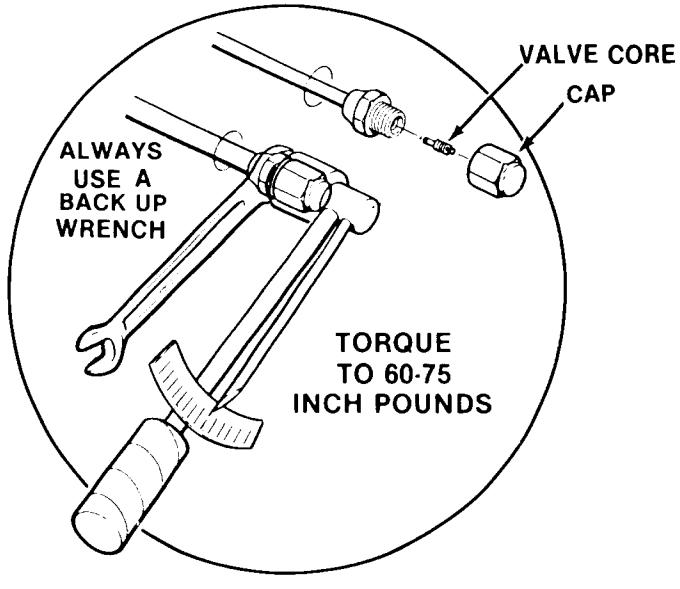

ALWAYS USE A BACK-UP WRENCH TO AVOID DAMAGE TO THE REFRIGERANT TUBING.

CM1400 COMPONENT DESCRIPTION

(1) BIN THERMOSTAT CONTROL

The bin thermostat is located or the front edge of the control box with an accessible knob on the front. The sensing capillary tube is routed from the control out the side of the control box down and across the front edge of the sump and down into the bin thermostat bracket. The bin thermostat control functions to automatically shut OFF the icemaker when the ice storage bin is filled and ice contacts the capillary tube. It also signals the RESTART of the icemaker when the capillary tube starts to warm up after ice has been removed from the bin.

Bin thermostat control adjustment should ONLY be performed on icemakers installed in extreme warm or cold locations and adjust only in increments of one eighth turn at a time.

(2) COMPRESSOR CONTACTOR

The compressor contactor functions to carry the compressor line current. The contactor is wired so any control in the pilot circuit such as the bin thermostat, and high pressure controls, etc., will cause the contactor holding coil to be de-energized when the control contact OPENS, thereby, breaking the circuit to the compressor.

(3) CUBE SIZE CONTROL

The temperature sensing cube size control affects the length of the freezing cycle prior to initiating the finishing timer. The cube size control closes its contacts when the evaporator reaches a preset temperature, starting the finishing timer. A variation in either ambient air or incoming water temperature will affect the efficiency of the refrigeration system. This will vary the length of time it takes the evaporator to reach the temperature at which the cube size control is preset to CLOSE which, in turn, will affect the overall cycle time.

See *Cube Size Adjustment* BEFORE attempting to adjust the control.

(4) FINISH RELAY

The multi-function, three pole, double-throw, plug-in relay is installed directly into a receptacle on the printed circuit board in the control box. The relay functions, in part, to by-pass the bin thermostat control to prevent the icemaker from shutting OFF when a filled-bin condition occurs during the freezing cycle. The by-pass action serves to ensure full-sized ice cubes with each harvest cycle and to prevent short cycling on the bin thermostat control.

(5) FINISHING TIMER — Timer & Switch Assembly.

The function of the finishing timer begins when activated by the cube size control. the outer surface, or large diameter lobe of the timer cam, determines the timer cycle for finish freezing of the ice cubes while the innter surface or small diameter lobe determines the time cycle for the harvest sequence. All electrical circuitry is connected through the printed circuit board and the finishing timer and shunted by the single-pole, double-throw microswitch to either the freezing cycle or the harvest cycle. The microswitch is actuated by a cam assembly directly connected to the timer motor. The timer cam can be adjusted to vary the defrost line, as required. One complete rotation of the cam will take eight minutes. Harvest is preset at two and one-fourth minutes.

(6) HOT GAS SOLENOID VALVE

The hot gas solenoid valve functions only during the harvest cycle, to divert the hot discharge gas from the compressor, bypassing the condenser and capillary tube, for direct flow in the evaporator plates to release ice cubes from the ice cube molds. The hot gas solenoid valve is comprised of two parts, the body & plunger and the coil & frame assemblies. Installed in the discharge line of the compressor, the energized solenoid coil lifts the valve stem within the valve body, to cause the hot discharge gas to be diverted when the finishing timer has advanced to the start of the harvest cycle.

CM1400 COMPONENT DESCRIPTION

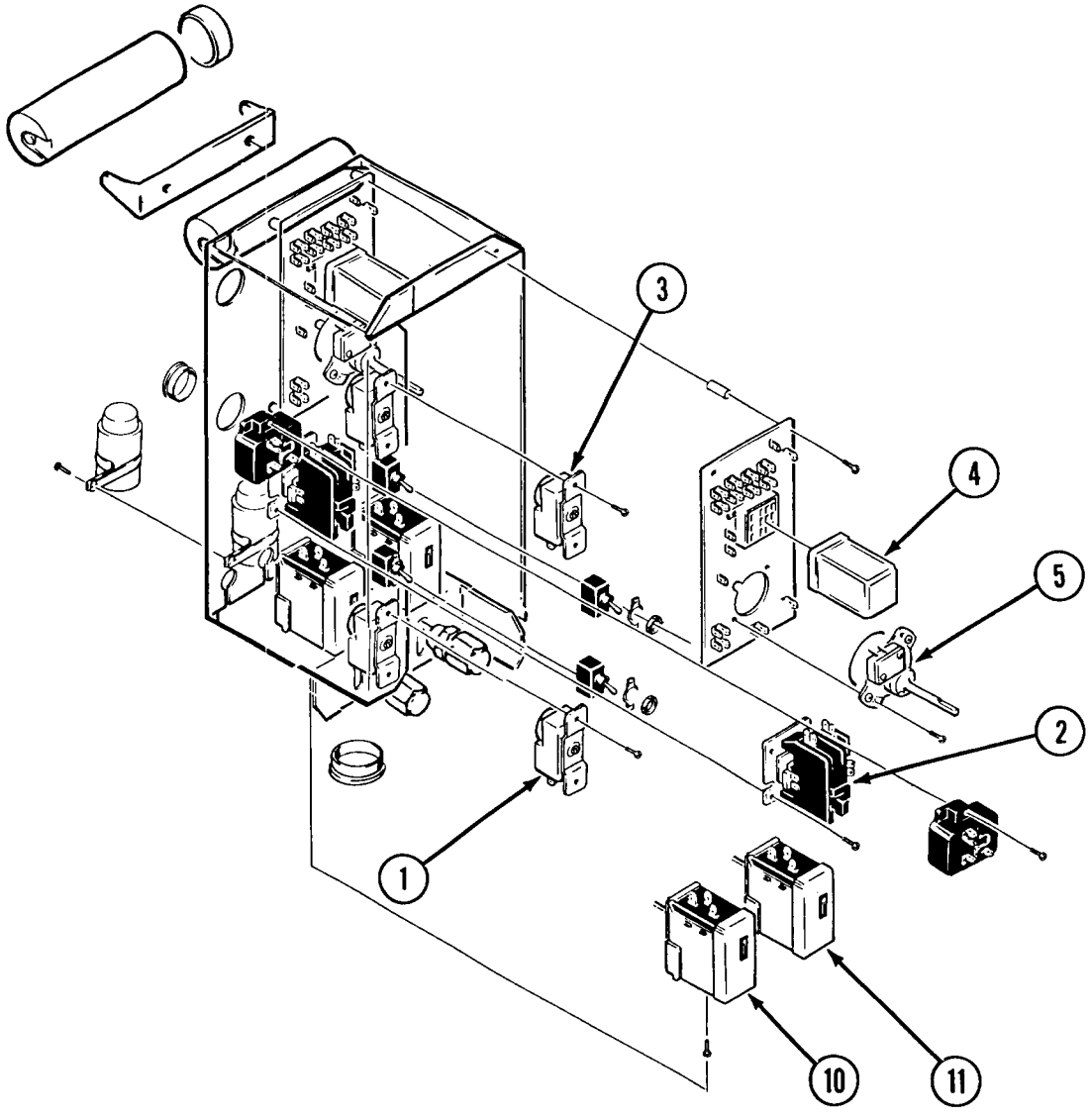

CM1400 COMPONENT DESCRIPTION

(7) WATER INLET SOLENOID VALVE

The water inlet solenoid valve functions to fill the sump assembly with water and overflow out the overflow standpipe located at the bottom of the sump. This action rinses the sump at the end of each harvest cycle. The flow rate is 1.0 g.p.m.

(8) WATER REGULATOR VALVE -- Water-Cooled Model

The water regulator valve functions to maintain a constant compressor head pressure, by regulating the amount of inlet water flow through the condenser on water-cooled models. The valve operates through the refrigerant system high side pressure. Rotating the adjusting screw, located on top of the valve, can INCREASE or DECREASE the water flow through the water-cooled condenser, which in turn, will DECREASE or INCREASE the compressor operating head pressure. It is to be set at 220 PSIG.

When installing a replacement water regulator valve, be sure the replacement valve is installed with the arrow positioned in the direction of the water flow.

(9) WATER DISTRIBUTION SYSTEM

The water distribution system functions to evenly supply water to all cells of the evaporator plates. The water pump pumps water from the sump up the vertical tygon tube to the tee. From there water is channeled through the water manifold to the water distributors, above each evaporator plate, and from six holes within each distributor, water flows to the cells of each side of the evaporator plates. Gravity flow returns the unfrozen excess portion of water to the sump reservoir for recirculation.

Always CHECK NAMEPLATE on individual icemaker for specific refrigerant charge, BEFORE charging the refrigeration system.

(10) FAN PRESSURE CONTROL — Air-Cooled Models only.

The fan pressure control functions to maintain a minimum discharge pressure by cycling the fan on and off. The approximate C.I. is 210 PSIG and C.O. is 193 PSIG.

(11) HIGH PRESSURE SAFETY CONTROL

This is a manual reset control that shuts down the icemaker, should the discharge pressure ever reach 450 PSIG on air-cooled and 350 PSIG on water-cooled.

(12) THERMOSTATIC EXPANSION VALVE (TXV)(FBRE 1-1/2L

The thermostatic expansion valve regulates the flow of refrigerant to the evaporator and reduces pressure of liquid refrigerant from condensing pressure to evaporating pressure.

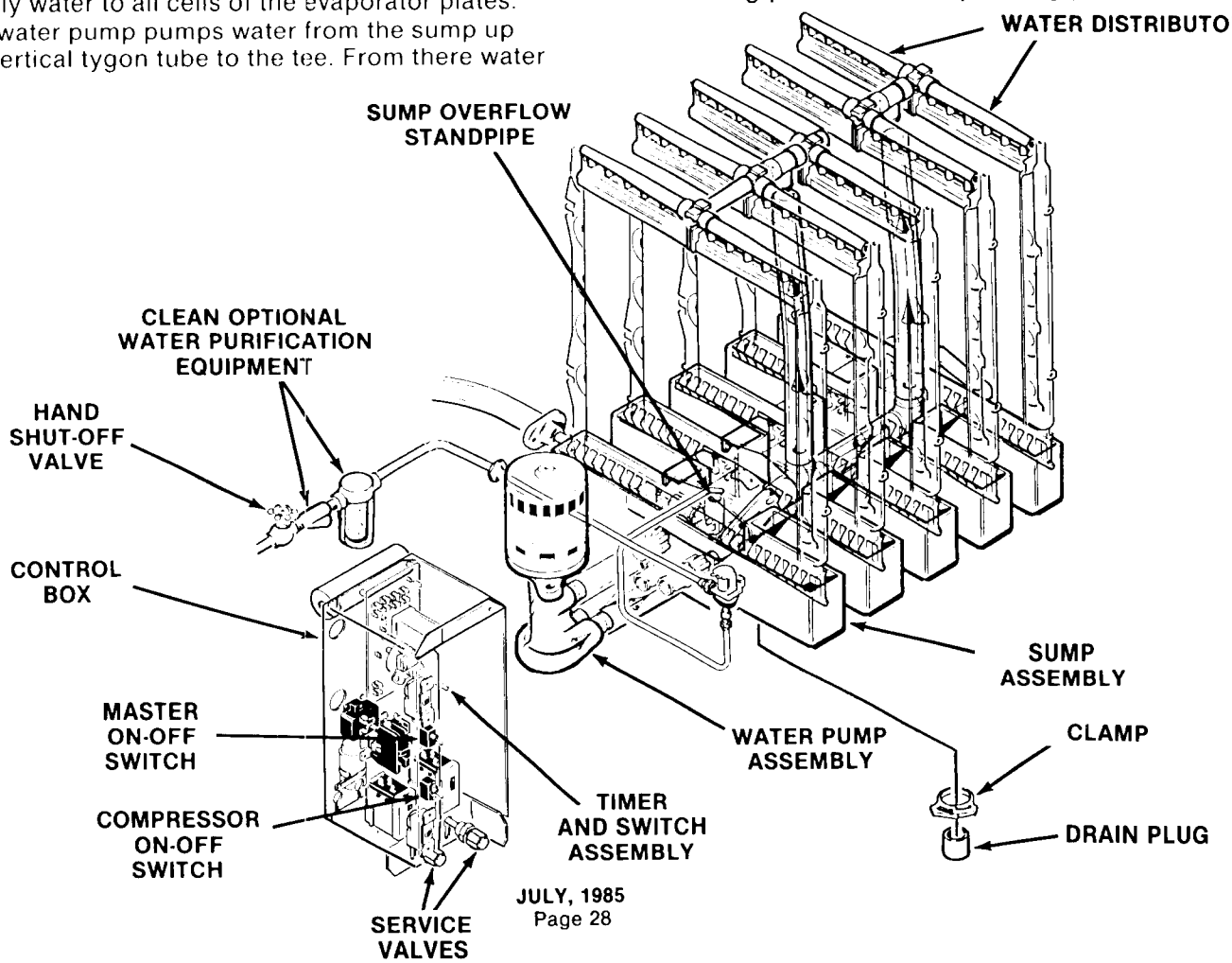

WATER-COOLED
REFRIGERATION
SYSTEM

AIR-COOLED
REFRIGERATION
SYSTEM

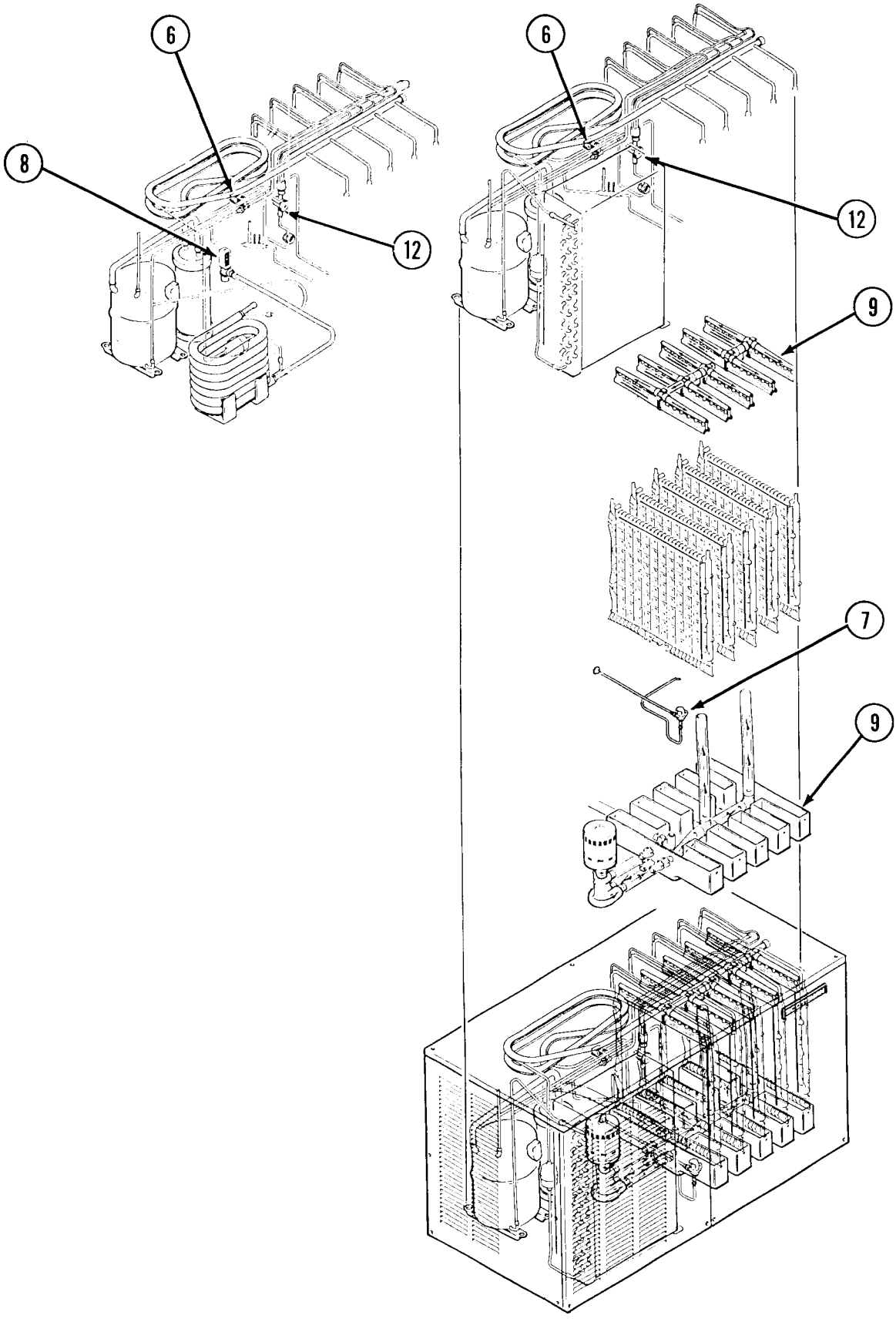

CM1400
SERVICE DIAGNOSIS

The service diagnosis section is for use in aiding the serviceman in diagnosing a particular problem for pin-pointing the area in which the problem lies, thus,an ever available reference for proper corrective action.

The following chart lists corrective actions for the causes of known symptoms of certain problems that can occur in the icemaking-refrigeration system.

ICEMAKING - REFRIGERATION SYSTEM

SYMPTOM	POSSIBLE CAUSE	CORRECTION
Irregular size cubes some cloudy.	Some distributor holes plugged.	Clean distributor holes.
		Clean water sump.
	Shortage of water.	See Shortage of water CORRECTION.
	Unit not level.	Level cabinet, as required.
Cubes too large.	Dirty air-cooled condenser.	Clean condenser.
	Cube Size Control set too cold.	Rotate Cube Size Control dial toward WARMER.
Cubes too small.	Cube Size Control set too warm.	Rotate Cube Size Control dial toward COLDER.
	Partially restricted capillary tube. (Kinked, pinched off, etc.)	Replace Heat Exch. Assy.
	Moisture in refrigeration system.	Blow refrigerant charge; replace drier; evacuate system; add proper refrigerant charge.
	Shortage of water.	See Shortage of water CORRECTION.
Cloudy Cubes.	Shortage of water.	See Shortage of water SYMPTOM.
	Dirty water supply.	Check water quality and install water purification system.
	Accumulated impurities.	Use SCOTSMAN Ice Machine Cleaner and clean icemaker.
Shortage of water.	Short Harvest Cycle.	Adjust cam of timer and switch assembly.
	Water leak in sump area or off evaporator plate.	Locate Leak and correct condition.
	Partial restrictions in water inlet strainer.	Clean or replace strainer.
	Water pressure too low.	Check for 20 PSI flowing water. Restore pressure.

CM1400
SERVICE DIAGNOSIS

SYMPTOM	POSSIBLE CAUSE	CORRECTION
Decreased Ice capacity.	High head pressure, result of dirty Condenser or faulty Fan Motor or faulty Fan Control.	Clean Condenser. Repair or replace Fan Motor or Controls.
	Non-condensable gas in the system.	Purge the system, evacuate and recharge per nameplate requirements.
	Poor air circulation or extreme hot location.	Relocate the cabinet; or provide ventilation.
	Overcharge of refrigerant.	Evacuate and recharge per name plate.
	Inlet water or hot gas solenoid valve leaking.	Replace valve.
	Partially restricted capillary tube.	See Cubes Too Small CORRECTION.
	Defective Compressor.	Replace Compressor.
Poor harvests. Icemaker does not harvest.	Too short defrost time.	Check and adjust harvest cycle.
	Restriction in water inlet line.	Check strainer and flow check valve.
	Hot gas solenoid does not open. Binds or burned out.	Replace solenoid, coil or valve as applicable.
	Undercharge of refrigerant.	Charge to nameplate requirements.
	Water pressure too low.	Check for 20 PSI flowing water. Restore pressure.
	Cube size too large or too small.	Adjust size with cube size control.
Compressor cycles intermittently.	Low voltage.	Check for circuit overload. Check building supply voltage, if low, contact power company.
	Dirty Condenser.	Clean Condenser with vacuum cleaner or brush. DO NOT USE A WIRE BRUSH.
	Air circulation blocked.	Locate cabinet with adequate air space for proper air flow.
	Defective Fan Motor.	Replace Fan Motor.
	Non-condensable gases in system.	Purge the system and recharge per nameplate requirements.
Icemaker will not operate.	Blown fuse in line.	Replace fuse and check for cause.
	Master switch in OFF position.	Set switch to ON position.
	Faulty Master switch.	Replace switch.
	Timer contacts open.	Replace Timer microswitch.
	Faulty Bin Thermo.	Replace.
	Hi Temp Switch open.	Determine why hot gas line is too hot.

ADJUSTMENT OF THE CUBE SIZE CONTROL

CAUTION

BEFORE performing actual adjustment to the cube size control, check other possible causes for cube size problems. Refer to SERVICE DIAGNOSIS for problem review and analysis. DO NOT perform adjustment when a new cube size control is installed until the control bulb has been properly installed in the tube well on the evaporator outlet tube and the icemaker has progressed through several complete freezing and harvest cycles, to observe size and quality of ice cubes freezing and harvest cycles, and whether or not a cube size problem exists.

As a reverse acting temperature control, adjustment on the cube size control is performed to cause either larger sized ice cubes or smaller sized ice cubes to be produced.

To produce LARGER sized ice cubes:

1. Locate the cube size control on the front of the control box.
2. Rotate the adjusting knob one-eighth of a turn CLOCKWISE toward COLDER.
3. Observe size of ice cubes in next two ice cube harvests and repeat step 2 above, in one-eighth turn increments, until desired ice cube size is achieved.

To produce SMALLER sized ice cubes:

1. Locate the cube size control on the front of the control box.
2. Rotate the adjusting knob one-eighth of a turn COUNTERCLOCKWISE toward warmer.
3. Observe size of ice cubes in next two ice cube harvests and adjust in one-eighth turn increments, until desired ice cube size is achieved.

ADJUSTMENT OF THE TIMER & SWITCH ASSEMBLY

The timer and switch assembly is factory set, so one complete revolution of the cam on the timer represents eight minutes. Five and one-half minutes comprise the freezing cycle event during cam rotation and the final two and one-half minutes program the defrost and harvest cycle. Rotating the shaft of the timer cam CLOCKWISE will allow positioning the actuator arm of the microswitch on the cam at the selected start position for either the freezing cycle or harvest cycle, as required in the cleaning instructions.

WARNING

Disconnect electrical power supply to icemaker whenever adjustment procedures are performed.

To adjust the timer & switch assembly:

A. HARVEST CYCLE: Slowly rotate the shaft of the timer and switch assembly located in the control box CLOCKWISE until the actuator arm on the microswitch initiates the harvest cycle. An audible click can be heard but in a noisy area, look at the cam and switch to observe the event.

B. FREEZING CYCLE: Slowly rotate the shaft of the timer and switch assembly located in the control box, CLOCKWISE, until the actuator arm on the microswitch initiates the freezing cycle.

C. The length of the harvest cycle can be changed by loosening the adjustment screw on the cam. The minimum harvest setting is two minutes; the normal setting is two and one-half minutes, as set at the factory. It is important that the length of the harvest cycle allow enough time for all the ice cubes to fall from the evaporator. Too short of a time will cause the evaporator to freeze up and stop ejecting ice into the bin. Too much time wastes icemaking capacity, energy and water. Adjustment of the harvest cycle may require a corresponding adjustment of the cube size control.

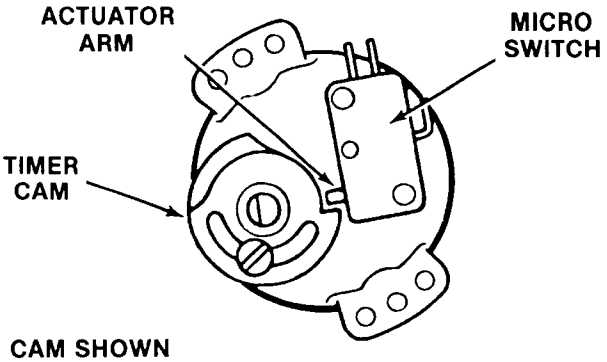

CAM SHOWN AT BEGINNING OF HARVEST CYCLE

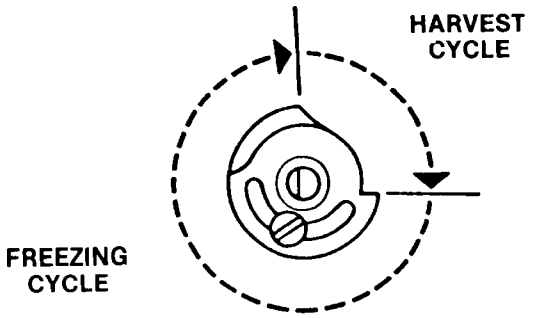

CAM SHOWN DIVIDED INTO TYPICAL FREEZING & HARVEST CYCLES

WARNING

Be sure the electrical power supply circuit breaker and the inlet water supply are OFF, BEFORE starting any of the following REMOVAL AND REPLACEMENT procedures as a precaution to prevent possible personal injury or damage to equipment.

ADJUSTMENT OF THE WATER REGULATOR ASSEMBLY — WATER-COOLED MODELS

The correct compressor head pressure on water-cooled models is 220 PSIG. Adjusting the water regulator valve increases or decreases the rate of flow of water, through the water-cooled condenser; which increases or decreases the affected temperature/pressure of the compressor head pressure, INCREASED water flow, results in DECREASED or LOWER head pressure; while, DECREASED water flow, results in INCREASED or HIGHER head pressure.

To adjust the water regulator assembly:

To INCREASE the head pressure: Rotate the adjusting screw COUNTERCLOCKWISE.

To DECREASE the head pressure: Rotate the adjusting screw CLOCKWISE.

Check change in compressor head pressure, and repeat adjustment as necessary, to achieve desired operating head pressure.

REMOVAL AND REPLACEMENT OF THE BIN THERMOSTAT CONTROL

To remove the bin thermostat control:

1. Remove screws and remove the front panel.
2. Remove screws and the control box cover.
3. Remove the bin thermostat capillary tube from the bin thermostat bracket.
4. Remove screws and the bin thermostat control.
5. Remove electrical leads.

To replace the bin thermostat control, reverse the removal procedure.

REMOVAL AND REPLACEMENT OF THE COMPRESSOR ASSEMBLY

To remove the compressor assembly:

1. Remove screws and remove the front panel.
2. Remove screws and remove left side panel.
3. Bleed off or blow the refrigerant charge through the Schrader valve.
4. Remove the cover from the terminal box on the compressor, then, remove electrical leads from the compressor.
5. Unsolder suction, discharge and process header from compressor.
6. Remove four bolts and washers which secure the compressor to the chassis mounting base.
7. Remove the compressor from the cabinet.

Always install a replacement drier anytime the sealed refrigeration system is opened. Do not replace the drier until all other repair or replacement has been completed.

REMOVAL AND REPLACEMENT OF THE CONDENSER — AIR-COOLED MODELS

To remove the condenser:

1. Remove screws and remove the front panel.
2. Remove screws and remove cabinet top and left side panels.
3. Bleed off or blow the refrigerant charge through the Schrader valve.
4. Unsolder and disconnect refrigerant lines from the condenser.
5. Unsolder and remove the drier from the refrigerant lines connecting to the condenser.
6. Remove screws, lockwashers and the condenser from the chassis base.

Always install a replacement drier, anytime the sealed refrigeration system is opened. Do not replace the drier until all other repair or replacement has been completed.

To replace the air-cooled condenser, reverse the removal procedure.

REMOVAL AND REPLACEMENT OF THE CONDENSER — WATER-COOLED MODELS

To remove the condenser:

1. Remove screws and the left front panel.
2. Bleed off or blow the refrigerant charge through the Schrader valve.
3. Check to be sure building source water inlet supply shutoff valve to rear of chassis is OFF.
4. Disconnect water-cooled condenser inlet water line at the water regulator assembly outlet fitting.
5. Unsolder the refrigerant capillary tube distributor line at the outlet end of the drier, the refrigerant outlet line from the bottom of the condenser, and remove the drier from the lines.
6. Unsolder the compressor discharge line, at the top of the water-cooled condenser.
7. Unsolder the condenser water outlet line, at the top of the water-cooled condenser.
8. Remove two screws and washers and the water-cooled condenser from the cabinet.

Always install a replacement drier, anytime the sealed refrigeration system is opened. Do not replace the drier until all other repair or replacement has been completed.

To replace the water-cooled condenser, reverse the removal procedures.

REMOVAL AND REPLACEMENT OF THE CUBE SIZE CONTROL

To remove the cube size control:

1. Remove screws and remove the left front panel.
2. Remove screws and control box cover.
3. Remove the coiled capillary tube bulb from sensing well on the evaporator outlet line.
4. Remove electrical leads from the cube size control.
5. Remove screws and the cube size control.

To replace the cube size control, reverse the removal procedure.

REMOVAL AND REPLACEMENT OF THE DRIER

To remove the drier:

1. Remove screws and remove the front panel.
2. Bleed off or blow the refrigerant charge through the Schrader valve.
3. Unsolder refrigeration lines at both ends of the drier and remove the drier.

Always install a replacement drier anytime the sealed refrigeration system is opened. Do not replace the drier until all other repair or replacement has been completed.

To replace the drier:

CAUTION

If the factory seal is broken on the replacement drier exposing it to the atmosphere more than a few minutes, the drier will absorb moisture from the atmosphere and lose substantial ability for moisture removal.

Be sure the replacement drier is installed with the arrow positioned in the direction of the refrigerant flow.

1. Remove the factory seals from the replacement drier and install the drier in the refrigerant lines with the arrow positioned in the direction of the refrigerant flow.
2. Solder the drier into the lines, two places, taking precautions to NOT OVERHEAT the drier body during installation soldering.
3. Purge the system and check for leaks.
4. Thoroughly evacuate the system to remove moisture and non-condensables.
5. Charge the system with refrigerant by weight. SEE NAMEPLATE.
6. Replace and attach the left side panel.

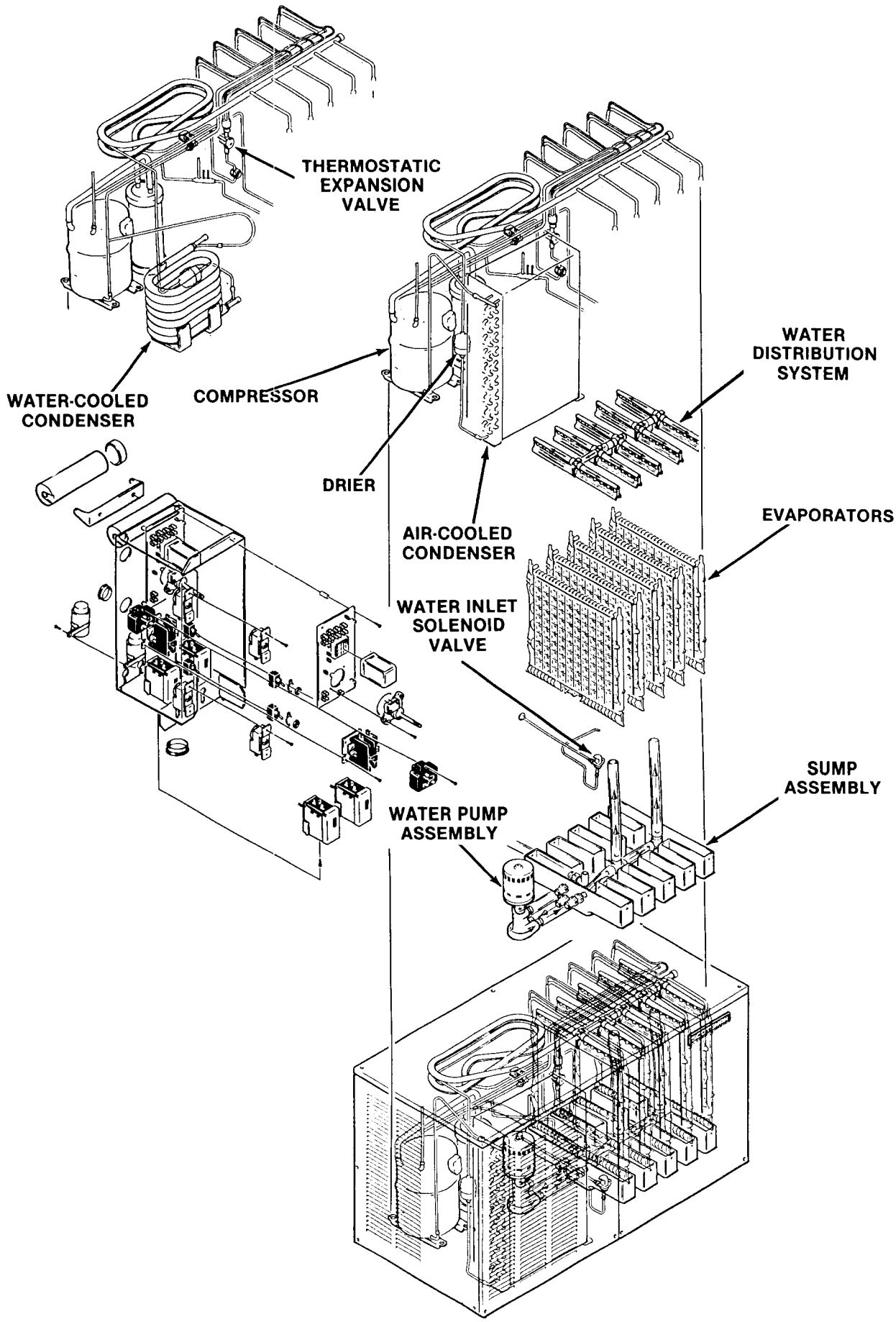
THERMOSTATIC EXPANSION VALVE
WATER DISTRIBUTION SYSTEM
WATER-COOLED CONDENSER
COMPRESSOR
DRIER
AIR-COOLED CONDENSER
EVAPORATORS
WATER INLET SOLENOID VALVE
SUMP ASSEMBLY
WATER PUMP ASSEMBLY

REMOVAL AND REPLACEMENT PROCEDURES

REMOVAL AND REPLACEMENT OF THE EVAPORATOR PLATE ASSEMBLY

To remove the evaporator plate:

1. Remove screws and remove the front right panel.
2. Remove screws and remove cabinet top panel.
3. Remove screws and remove front braces from the cabinet assembly.
4. Bleed off or blow the refrigerant charge through the Schrader valve.
5. Unsnap from the evaporator and remove reservoir.
6. Disconnect Tygon water inlet tubes at the water manifold tees above the evaporator plates.
7. Slide the water distributor tube on the left about 1/8-inch along the top of the evaporator plate until the water distributor tube can be unsnapped from the flexible notch.

CAUTION

Use EXTRA PRECAUTION to protect the plastic parts during the next step to unsolder the refrigerant lines, two places, at the top of the evaporator plate. Position wet cloths over top of plates, as well as over the plastic liner at the rear, to prevent accidental head damage or possible fire from torch flame.

8. Unsolder and remove the refrigerant lines at the top of the evaporator plate.
9. Remove screws attaching the evaporator plate support to the cabinet and remove the evaporator plate.
10. Remove screws and remove sump covers.

Always install a replacement drier anytime the sealed refrigeration system is opened. Do not replace the Drier until all other repair or replacement has been completed.

To replace the Evaporator Plate, reverse the removal procedure.

REMOVAL AND REPLACEMENT OF THE FAN MOTOR — AIR-COOLED MODELS

WARNING

Disconnect electrical power supply to icemaker whenever adjustment procedures are performed.

To remove the fan motor assembly:

1. Remove screws and remove the front panel.
2. Remove screws and remove cabinet left panel.
3. Disconnect the two electrical leads, from the fan motor, at the control box assembly.

Before next step, measure to make accurate mental note of the distance the fan blades extend beyond the fan shroud, so during replacement the correct distance is maintained.

4. Remove screws and the fan motor and bracket assembly; and remove the fan motor and bracket from the chassis base.
5. Loosen set screws on the fan blade and remove the fan blade from the fan motor. Mark or note position of the blade on the shaft of the fan motor, for replacement.
6. Remove screws and lockwashers and separate the fan motor from the fan motor bracket.

To replace the fan motor assembly, reverse the removal procedure.

Be sure to replace the fan blade with the hub of the fan blade facing the fan motor, to ensure air flow is toward the fan motor; and, is set at marked location on shaft and setscrews tightened on the FLAT part of the shaft of the fan motor.

REMOVAL AND REPLACEMENT OF THE INLET WATER SOLENOID VALVE ASSEMBLY

To remove the inlet water valve assembly:

1. Shut OFF water supply to machine.
2. Remove screws and remove front left panel.
3. Remove screws and pull the water solenoid valve out to gain access.
4. Loosen and remove inlet water line fitting from the inlet water solenoid valve assembly.
5. Remove inlet water Tygon tubing from the water solenoid valve.

To replace the inlet water valve assembly, reverse the removal procedure.

REMOVAL AND REPLACEMENT OF THE WATER DISTRIBUTOR TUBES AND MANIFOLD TUBES

To remove the water distributor tube and manifold tube:

1. Remove screws and remove the front right panel.
2. Slide the water distributor tube to the rear about 1/8-inch along the top of the evaporator plate until the water distributor tube can be unsnapped from the flexible notch and lifted upward at the right side.
3. Unsnap and disconnect water distributor tubes from the water manifold section.
4. To replace the water distributor tubes and manifold tubes, reverse the removal procedure. BE SURE the notches in the water manifold tubes properly engage the alignment keys in the tee.

BE SURE the water distributor tube is securely fastened at the notch at both sides of the evaporator plate.

Check identical attachment for the left water distributor tube and notch, also, that the distributor/manifold connections at the top center of each evaporator plate is snug against the top of the plate.

REMOVAL AND REPLACEMENT OF THE WATER PUMP ASSEMBLY

WARNING

Disconnect electrical power supply to icemaker whenever adjustment procedures are performed.

To remove the water pump assembly:

1. Remove screws and remove both front panels.
2. Remove plug from bottom of the sump and drain water from the sump into a bucket.
3. Unplug the wire harness from the water pump.
4. Remove two screws from the pump bracket to the icemaker base.
5. Remove three hose clamps by twisting and sliding the clamps at the clamp joints.
6. Pull the water pump and bracket forward to remove the bracket from the icemaker base.
7. Remove screw and remove the water pump ground wire from the icemaker base.
8. Separate the water pump from the tygon tubes.
9. Remove screws and separate the water pump from the bracket.

To replace the water pump assembly, reverse the removal procedures.

BH750/1000 BIN

BH750 MODULAR BIN

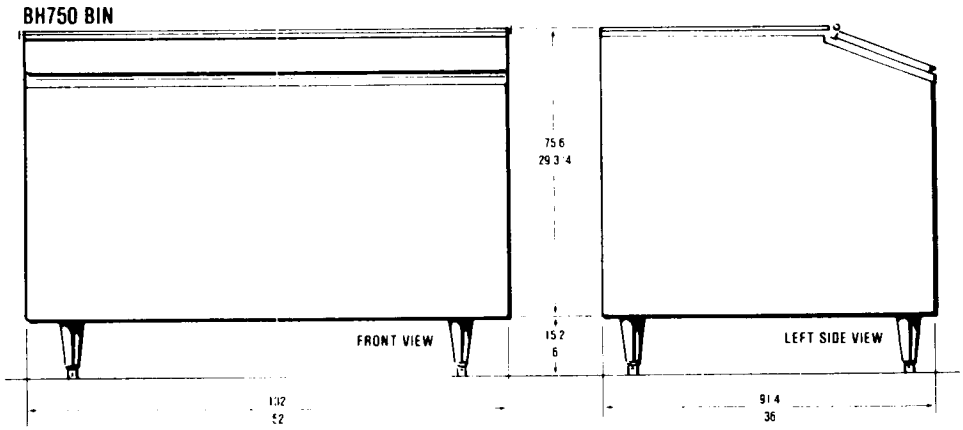

BH1000 STORAGE BIN

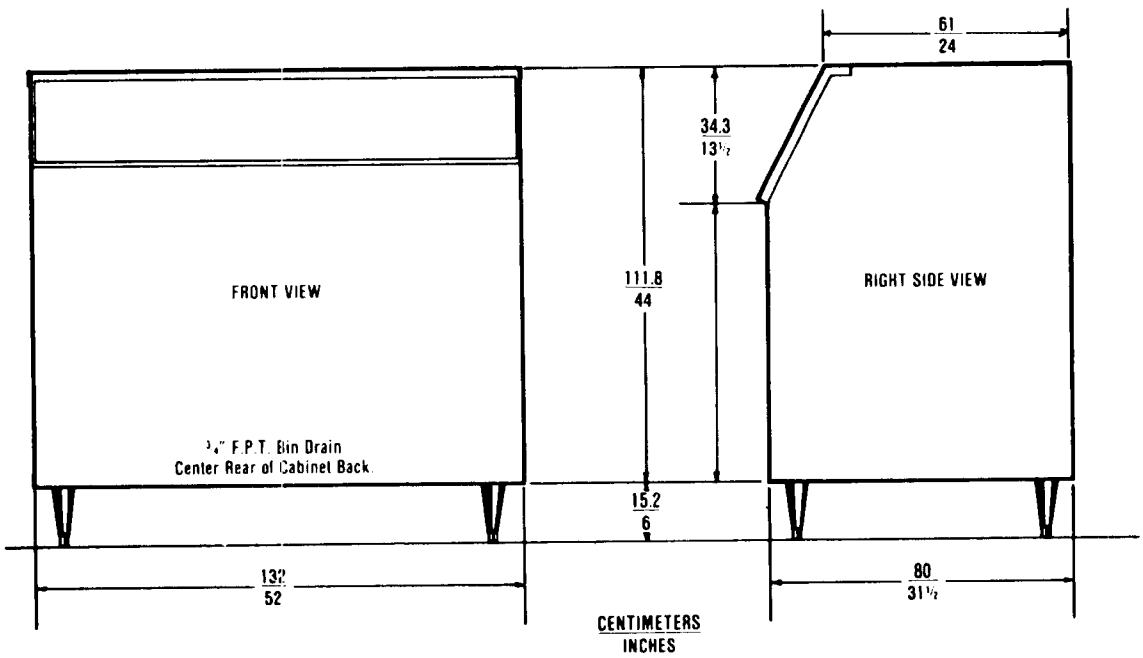

CM1400R

TABLE OF CONTENTS

INTRODUCTION SECTION
Specifications 4

INSTALLATION SECTION
For the Installer 3
Equipment List 5
For the Electrician 11
For the Plumber 12
Final Checklist 14

START-UP SECTION
Pre-Start 16
Start-Up 16

MAINTENANCE & CLEANING INSTRUCTIONS
Icemaker 21
Remote Condenser 22
Cleaning - Icemaker 23

OPERATION
Freezing Cycle 25
Harvest Cycle 26
Beginning Freeze 27
Timed Freeze 28
Harvest Cycle 28
Pump Down - Stage One 29
Pump Down - Stage Two 29
System Specifications 30
Operating Characteristics 30
Component Description 32
Service Diagnosis 35

ADJUSTMENT PROCEDURES
Cube Size Control 38
Timer and Switch Assembly 38

REMOVAL AND REPLACEMENT PROCEDURES
Bin Thermostat Control 40
Compressor Assembly 40
Cube Size Control 41
Drier 41
Evaporator Plate Assembly 42
Inlet Water Solenoid Valve Assembly 42
Water Distributor Tubes
and Manifold and Tubes 43
Water Pump Assembly 43
Charging Procedures 44

LIST OF ILLUSTRATIONS

Specifications 4
CM1400R Equipment Required 5
Mounting Cuber to Bin 6
Pre-Charged Refrigerant Line Routing 9
Pre-Charged Refrigerant Line Connections ... 10
Electrical Connections 11
Installation, Water Supply and
Drain Connections 12
Final Checklist 15
Timer Cam Positions 16
Cube Size Control Adjustment 19

PARTS LIST AND WIRING DIAGRAMS 1
(Printed in Yellow)

PARTS LIST:
Component Location 2
Cabinet Assembly 3
Refrigeration System 4
Water System 5
Control Box 6
Remote Condenser 7
Bins, BH750/BH1000 8

WIRING DIAGRAMS:
CM1400RE-3A (208-230/60/3) 10
CM1400RE-32A (208-230/60/1) 11

Cleaning Water System, Icemaker 21
Cleaning the Remote Condenser 22
Maintenance and Cleaning 24
Freezing Cycle 25
Harvest Cycle 26
Component Description 31
Charging Procedures 44
Optional Bins 45

THIS PAGE
INTENTIONALLY
LEFT BLANK

CM1400R FOR THE INSTALLER

INTRODUCTION

These instructions provide the specifications and the step-by-step procedures for the installation, start up and operation for the Scotsman Model CM1400R Modular Cuber with Remote Condenser.

The Model CM1400R Modular Cubers are quality designed, engineered, constructed and thoroughly tested icemaking systems providing the utmost in flexibility to fit the needs of a particular user.

Available in the single-circuit condenser only. The single-circuit condenser can accommodate a single CM1400R cuber and one set of two pre-charged refrigerant lines.

In the above installations the sets of two pre-charged refrigerant lines to be used are the 25-foot line kits or the 40-foot line kits. These pre-charged refrigerant line kits are a one-time initial charge type of hardware; once the sealed couplings are connected, the internal seal is severed and the lines cannot be disconnected without losing the refrigerant charge. However, they ARE REUSABLE in the refrigerant system when they are removed and reconnected and the complete refrigeration system is re-charged with refrigerant.

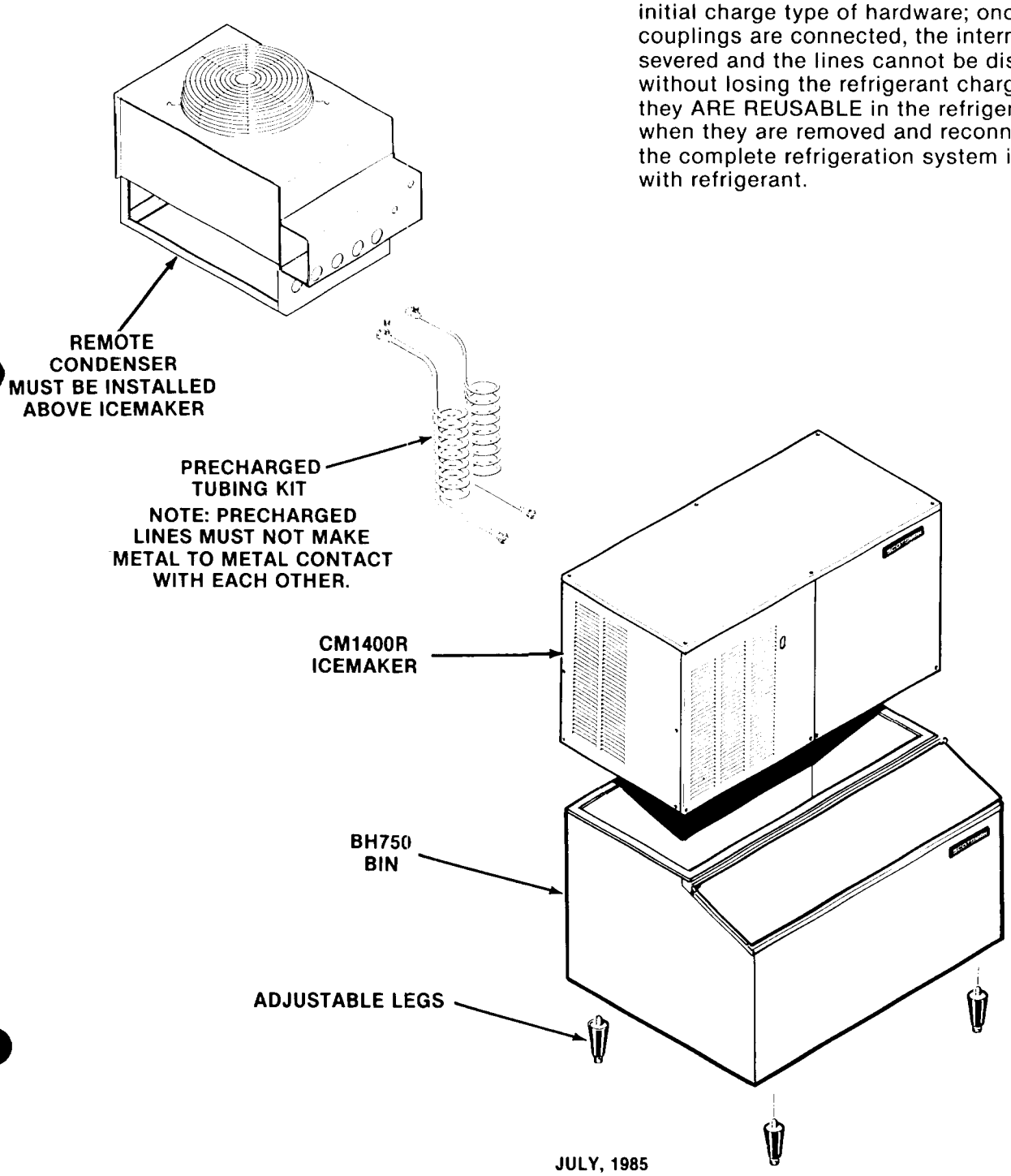

CM1400R SYSTEM SPECIFICATIONS

RC1451-32B REMOTE CONDENSER

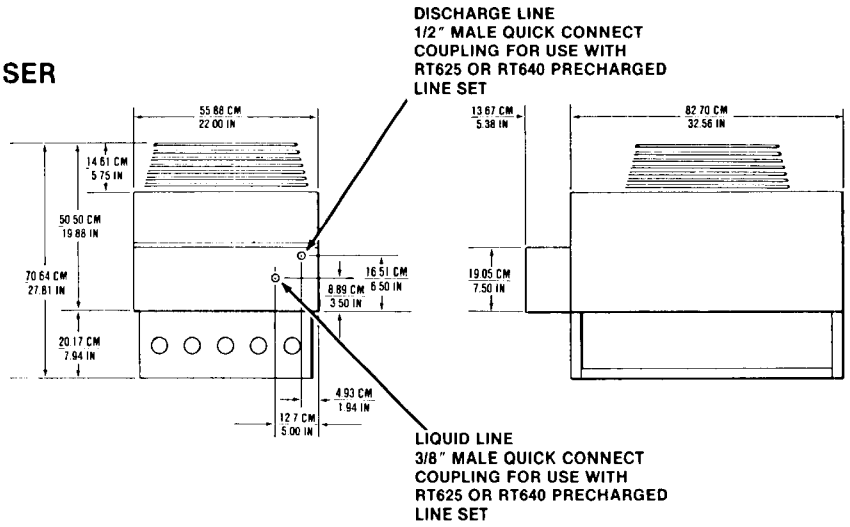

CM1400R MODULAR CONTOUR CUBER

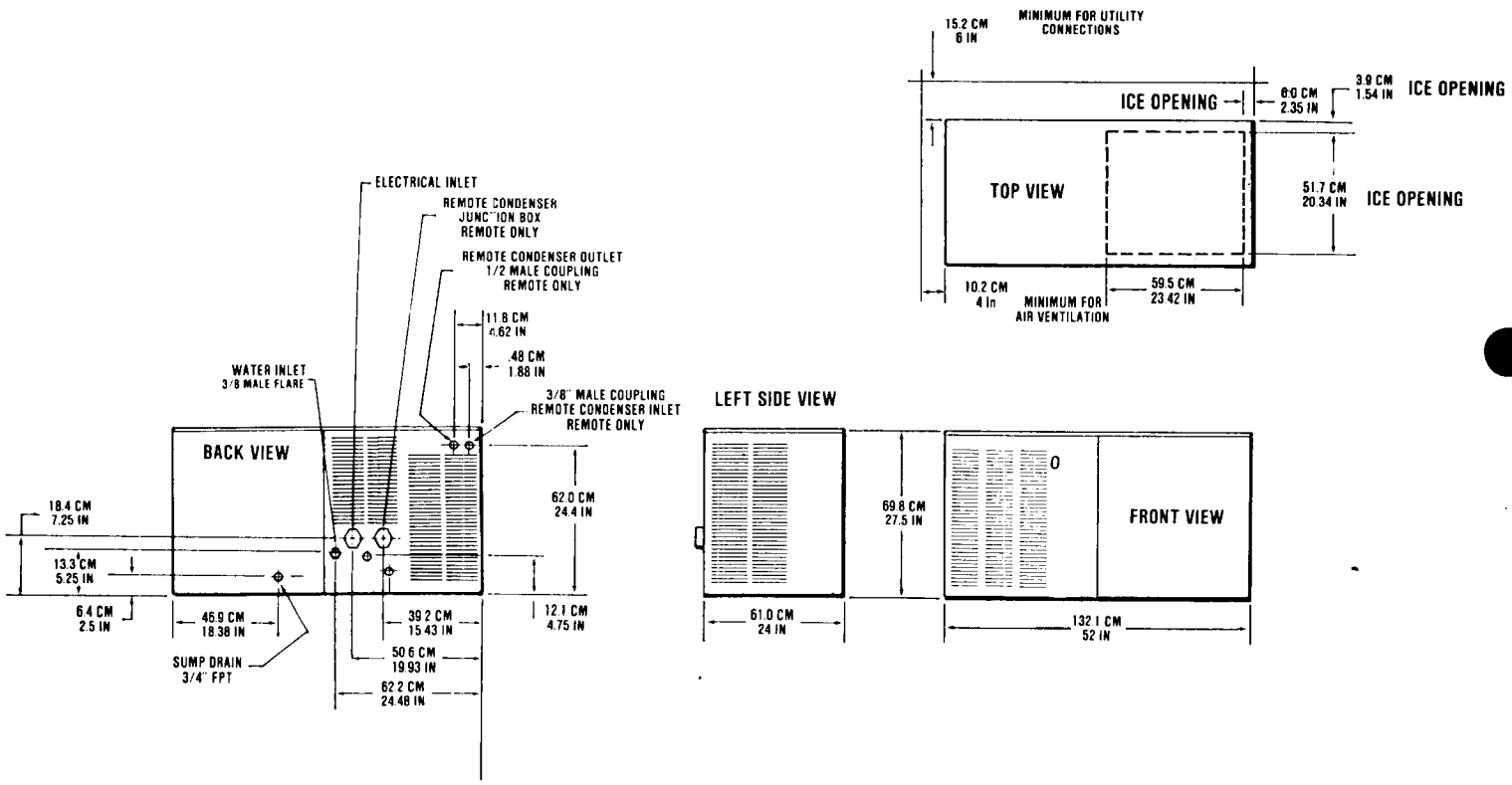

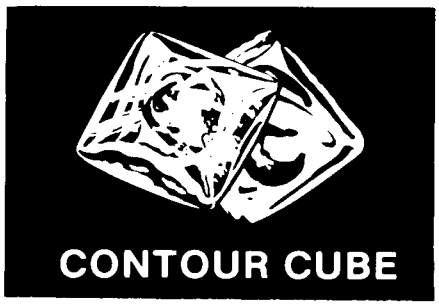

CM1400R FOR THE INSTALLER

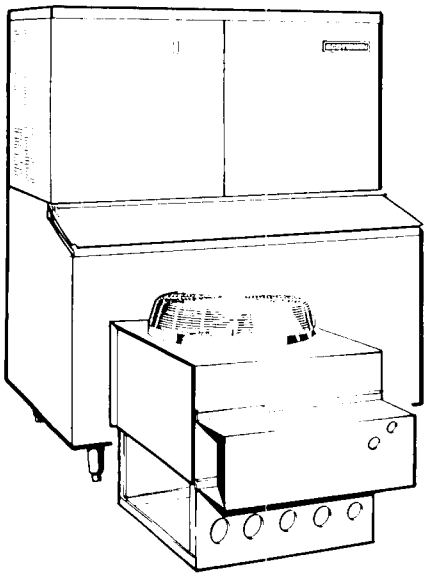

EQUIPMENT LIST/CM1400R ICE SYSTEM

All of the following components must be available before assembly.

Icemaker -	CM1400RE-3A or CM1400RE-32A
Ice Storage Bin -	BH750E or BH750S BH1000E or BH1000S
Leg Kit for the bin -	KLP2E - Black or KLP2S - Nickel plated
Pre-Charged Refrigerant Line Kit -	RT625 - 25 foot or RT640 - 40 foot
Remote Condenser -	RT1451-32B Single

We reserve the right to make product improvements at any time. Specifications and design are subject to change without notice.

SPECIFICATIONS

Model Number	(Height - w/o Legs) Dimensions H" x W" x D"	Bin Cap.	Cube Size	Cond. Unit	Finish **	Basic Electrical	Comp. H.P.	No. of Wires	Min. Circuit Ampacity †	Max. Fuse Size	Ship. Wt. lbs./kg.
CM1400RE-3A	28 x 52 x 24	—	Contour	Air	ES	208-230/60/3	3.25	3	17.5	25	360/163
CM1400RE-32A	28 x 52 x 24	—	Contour	Air	ES	208-230/60/1	3.25	2	28.5	45	360/163

SPECIFICATIONS

Model Number	Dimensions H" x W" x D"	For Use With	Cond. Unit	Basic Electrical	Comp. H.P.	Min. No. of Wires	Circuit Ampacity †	Max. Fuse Size	Ship. Wt. lbs./kg.
RC1451-32B	29¼ x 30¼ x 33¾	(1) CM1400R	R-Air	208-230/60/1	—	2	2.0*	—	115/52

MODULAR ICE STORAGE BINS

Model Number	(Height - w/o Legs) Dimensions H" x W" x D"	*** Bin Cap.	Finish	Ship. Wt. lbs./kg.
BH750E	29¼ x 52 x 36	734 lbs	ES	171/100
BH750S	29¼ x 52 x 36	734 lbs	SS	166/100
BH1000E	44 x 52 x 31¼	1000 lbs	ES	231/105
BH1000S	44 x 52 x 31¼	1000 lbs	SS	231/105

*Ampacity for remote condenser fan motor is included in icemaker ampacity. Use this figure to determine wire size between icemaker and fan motor.

These products qualify for these listings.

** (ES) Sandalwood. Leathergrain embossed steel with high gloss baked enamel finish.

† Use this value to determine minimum wire size as per National Electric Code Standards

*** Maximum storage capacity for bins is based on 90% of total volume in cubic feet x 34 lb. average density of ice. (A.R.I. Standard)

IMPORTANT OPERATING REQUIREMENTS

	MINIMUM	MAXIMUM
Air Temperatures	50°F (10.0°C)	100°F (38°C)
Water Temperatures .	40°F (4.4°C)	100°F (38°C)
Water Pressures	20 lbs. gauge	120 lbs. gauge

Electrical Voltage Variation

Voltage rating specified on nameplate .....-10% 10%

This does not include the Remote Condenser. Remote Condensers are designed to operate in outdoor installations in a temperature range of -20° to 120° F.

Extended periods of operation at temperatures exceeding these limitations constitutes misuse under the terms of Scotsman Manufacturer's Limited Warranty, resulting in a loss of warranty coverage.

PRE-CHARGED REFRIGERANT TUBE KITS:

RT625 — 25 foot pre-charged with R502 Refrigerant tubing with connectors.

RT640 — 40 foot pre-charged with R502 Refrigerant tubing with connectors.

SEE NAMEPLATE for electrical and refrigeration specifications. Locate the NAMEPLATE on the lower, left part of the Rear Panel.

NOTE: This system uses R502 Refrigerant.

OPTIONAL STAINLESS STEEL PANEL KITS:

SPKCM1400 contains top, 2 front and 2 end panels. Not factory installed.

OPTIONAL BH750 STORAGE BIN

For use with one or two CM1400 icemakers.

OPTIONAL BH1000 STORAGE BIN

For use with one or two CM1400 icemakers.

CM1400R FOR THE INSTALLER

LOCATION & LEVELING

Component location determines the length of pre-charged refrigerant lines, 25-foot kit or 40-foot kit.

1. Position the Model BH750 or BH1000 Bin in the selected location; which should have a minimum room temperature of 50-degrees F. and maximum room temperature of 100-degrees F. Level the bin, adjusting the leg levelers in both the front-to-back and side-to-side directions.
2. Inspect the bin top mounting gasket which should be flat with no wrinkles to provide a good water seal when the CM1400 Cuber is installed on top of the bin.
3. Install the CM1400 Modular Cuber on top of the BH750 or BH1000 Bin using care to be sure a good seal is made between the two cabinets. Align the holes in the bottom rear of the CM1400 cabinet to mate with the two mounting straps on the top rear of the BH750.
4. Bolt icemaker to bin with mounting straps and bolt from shipping skid. When alignment and leveling are completed, tighten the bolts to secure the mounting straps.
5. STACKING INSTRUCTIONS, CM1400R
   When stacking two units, first remove the top panel from the bottom CM1400R, and then remove the stainless steel liner top from that same unit. They will no longer have any function. Then either use gasket material 13-0595-00 (you will need about 15 feet) or food grade silicone rubber to make a seal on the top of the bottom unit. Carefully lift the uncrated top unit on to the bottom one, (use of a mechanical lift is recommended for this step) aligning the two so that the cabinets line up. Mount the upper unit bin control into the lower units bracket. The lower units two front panels require four sheet metal screws to be added to the top of the panels to secure them to the icemaker. Fasten the two units together using mounting straps as illustrated.

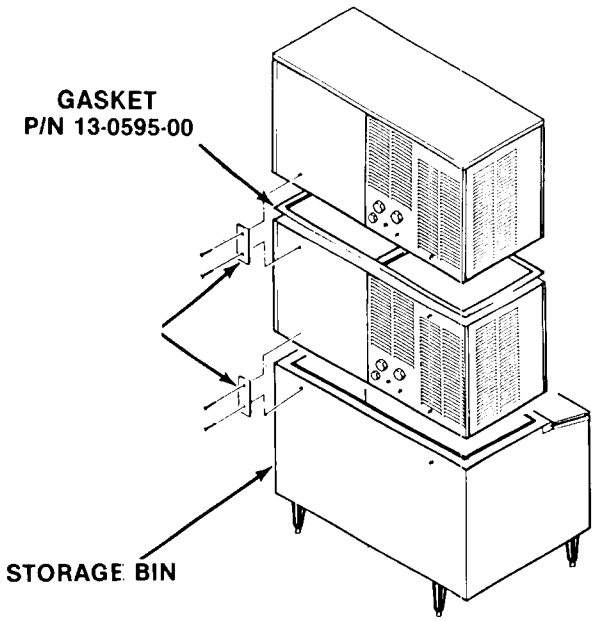

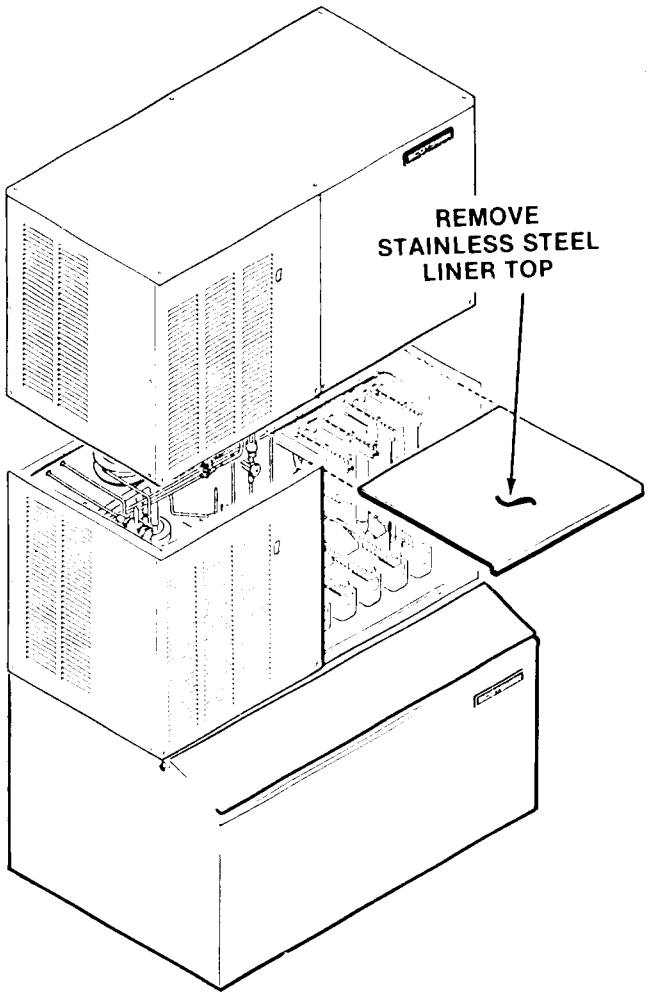

Location & Leveling

6. Remove bin thermostat bracket from shipping location on the evaporator supports.

   Turn the three installed mounting brackets down to 6 o'clock position as illustrated.

   Remove screw #1 shown and retain for use in attaching bracket.

   Using screw #1, attach the bracket and tube assembly as shown and snap into the remaining three brackets.

   Route the plastic tube thru the hole in the base (do not install on SS tube).

   Insert approximately 28 inches of bin thermostat cap tube thru the plastic tube and then thru the stainless steel tube. The cap tube should extend the entire length of the stainless steel tube.

   Install the plastic tube approximately 1 inch onto the stainless tube.

   In stacking applications, run the cap tube through the top unit base and the lower unit control box as shown, using grommets provided. Then route both bin stat cap tubes through the same bracket.

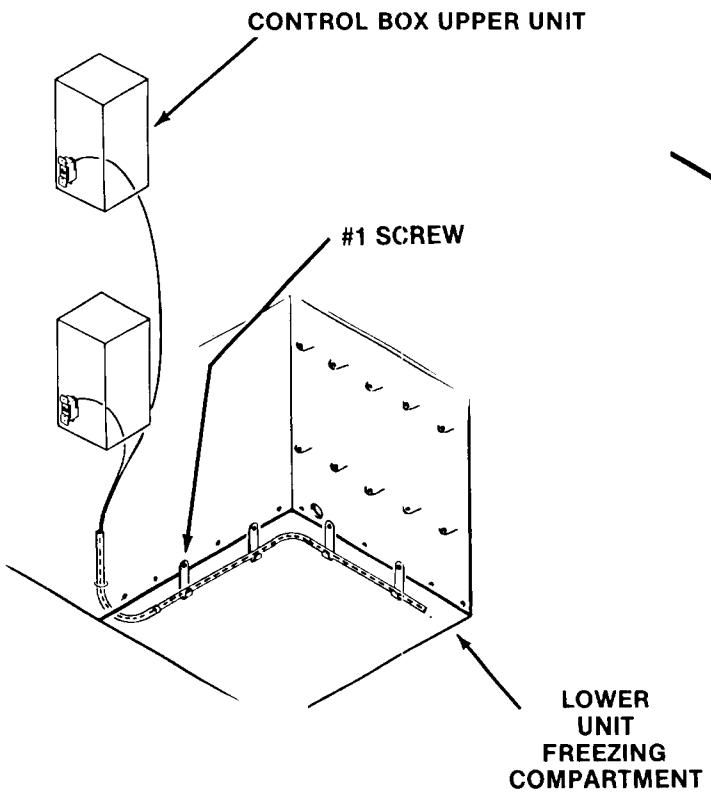

Install Bin Thermostat Bracket

7. Remove seven shipping supports from the evaporator supports.

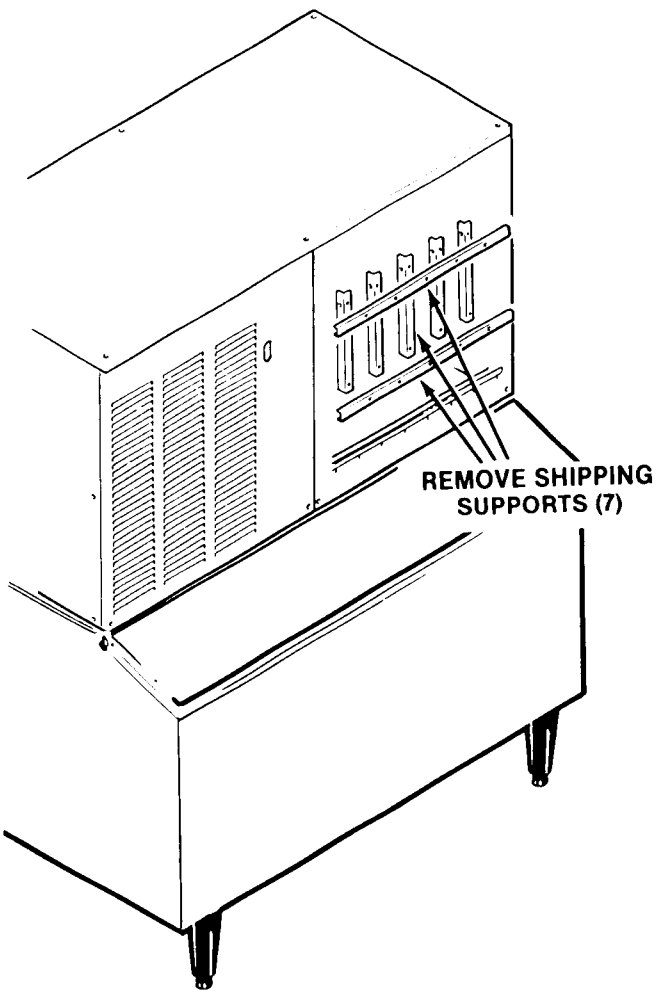

Remove Shipping Supports

REMOTE CONDENSER AND PRE-CHARGED LINES — INSTALLATION

Location Considerations:

Remote Condenser - Must be above icemaker. Limited to a 40-foot length or a 25-foot length of pre-charged refrigerant line from the rear of the icemaker Chassis to the Remote Condenser.

Best available location, protected from the extremes of dirt, dust, and sun. The Condenser location is very important for optimum performance, as reflected roof heat, or stagnant air will adversely affect ice production.

Must meet local building code installation requirements.

Remote Condenser - Roof Attachment:

1. Install and attach the remote condenser to the roof of the building using the methods and practices of building standards that conforms to and meets the local building code requirements in your area.

2. Refer to Electrical Installation Instructions to connect the remote condenser fan motor electrically to the CM1400R.

Pre-Charged Refrigerant Lines:

1. Each set of pre-charged refrigerant lines in the 25-foot length or 40-foot length kits consists of a 3/8-inch diameter self-sealing LIQUID line and a 1/2-inch diameter self-sealing DISCHARGE line. One coupling on each line is fitted with a charging port which provides the service man with access for service gauges at the REMOTE CONDENSER location when necessary.

NOTE

The openings in the building ceiling or wall, listed in the next step, are minimum sizes recommended through which the pre-charged refrigerant lines may pass; and, are to be considered only if they conform to and meet the local building code requirements in your area.

2. Minimum recommended sizes for openings required in a ceiling or wall, for the precharged refrigerant lines to pass, is 1-3/4 diameter.

3. Whenever possible, route the maximum length of the pre-charged refrigerant lines INSIDE the building with the minimum length on the roof to prevent vandalism and to minimize the condenser effect that exposed lines can produce in cold weather. INSULATE refrigerant lines exposed to outside temperatures that will be below freezing for extended periods of time. This is done because the liquid line will normally be at the outside ambient temperature, and in cold weather, this line would develop condensation on it.

PRE-CHARGED TUBING KIT ROUTING:

////////////////////// **CAUTION** //////////////////////

Do not connect pre-charged tubing until all routing and forming of tubing is complete. See Page 7 for connecting instructions.

//

Excess Length of Pre-Charged Refrigerant Lines:

At installations where the icemaker Chassis-to-Remote Condenser refrigerant line path is substantially LESS than the 25-foot length or 40-foot length of pre-charged refrigerant line kit to be installed, route and dress the excess refrigerant line as follows:

1. Follow straight line routing when possible.

2. Retain excess pre-charged refrigerant line INSIDE the building.

3. SPIRAL the excess footage of the pre-charged refrigerant line(s), in the best selected INSIDE location and in a manner that PREVENTS refrigerant TRAPPING. See *Pre-Charged Refrigerant Line Routing* illustration for recommended methods of spiralling the excess refrigerant lines.

CAUTION

DO NOT kink or crimp the refrigerant lines. DO NOT bend the excess refrigerant lines in a vertical LOOP(s) which allow trapping of refrigerant in LOW sections during OFF time. Bend and shape the excess refrigerant lines in VERTICAL spirals, not HORIZONTAL spirals. See Pre-Charged Refrigerant Line Hook-Up.

4. Insulate the pre-charged tubing lines individually, if not insulated from the factory.

CM1400R FOR THE INSTALLER

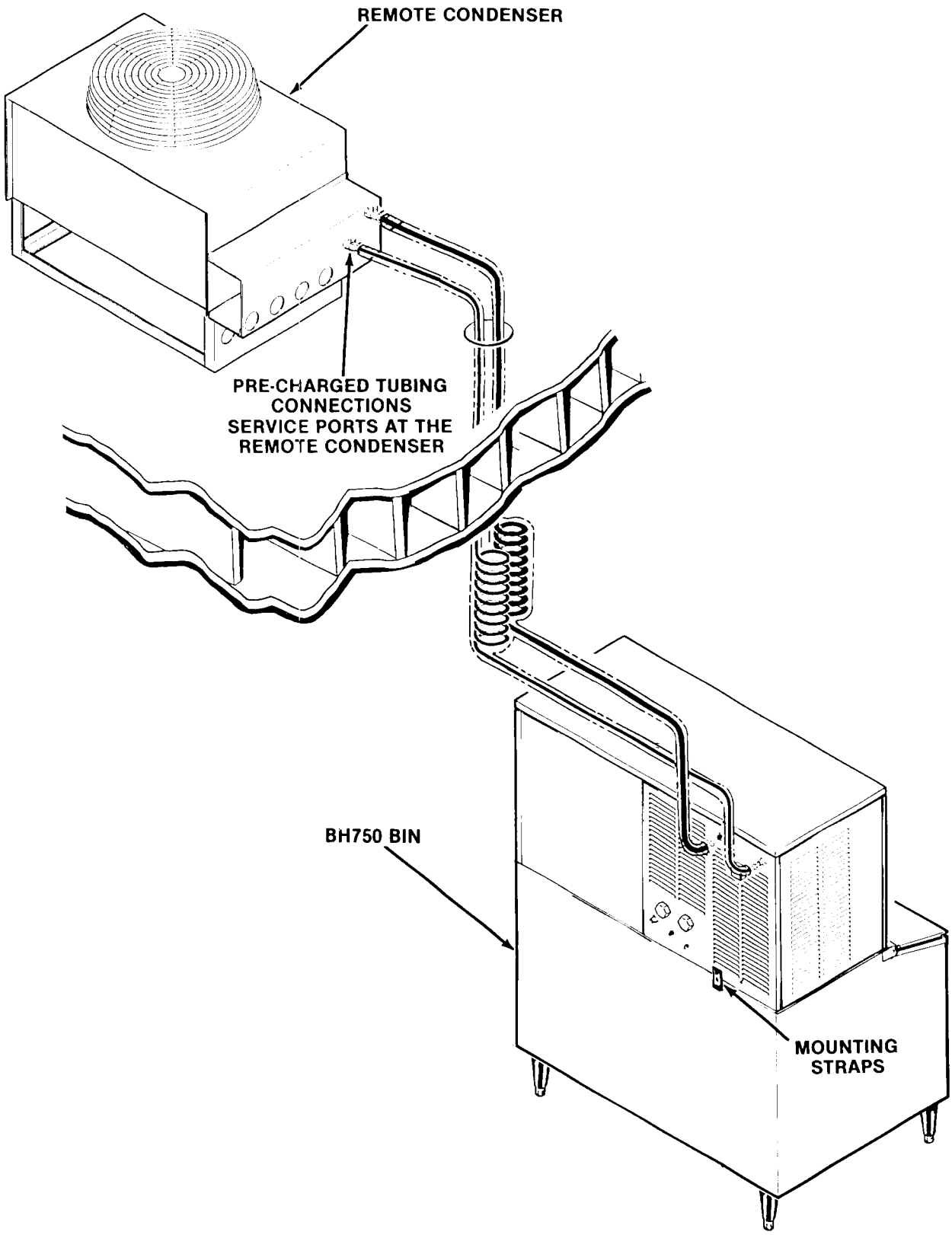

COUPLING INSTRUCTIONS, PRE-CHARGED TUBING KIT

CAUTION

The couplings on the sets of pre-charged refrigerant lines, the refrigerant fittings on the Remote Condenser, and the rear of the Icemaker Chassis are SELF-SEALING and should be connected as follows:

1. Remove protector caps and plugs and, if necessary, carefully wipe coupling seats and threaded surfaces with a clean cloth to prevent the inclusion of dirt or any foreign material in the system.
2. LUBRICATE male half diaphragm and synthetic rubber seal with refrigerant oil. Thread coupling halves together by hand to insure proper mating of threads. Use proper size wrenches (on coupling body hex and on union nut) and tighten until coupling bodies "bottom" or a definite resistance is felt.
3. Using a marker or ink pen, mark a line lengthwise from the coupling union nut to the bulkhead. Then tighten an additional 1/4 turn; the misalignment of the line will show the amount the coupling has been tightened. This final 1/4 turn is necessary to insure the formation of leakproof joint.

ALWAYS USE TWO WRENCHES WHEN TIGHTENING THESE FITTINGS, ONE AS BACKUP WRENCH TO PREVENT TWISTING OF TUBING AND POSSIBLE KINKING OR LINE RUPTURE.

BE SURE to connect the ends of the precharged refrigerant lines that have the charging port fittings TO THE REMOTE CONDENSER FITTINGS. This gives the serviceman access for service gauges at the REMOTE CONDENSER location, when necessary.

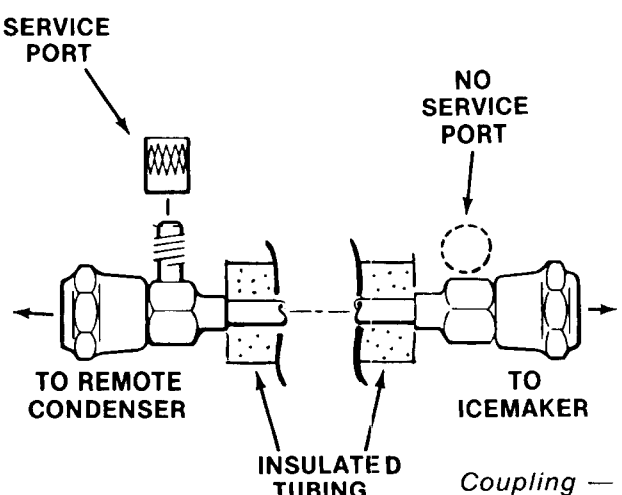

4. Connect the 3/8-inch diameter refrigerant line coupling with the SERVICE PORT fitting to the remote condenser refrigerant fitting labeled: LIQUID LINE as detailed in Coupling Instructions.
5. Connect the 1/2-inch diameter refrigerant line coupling with the CHARGING PORT fitting to the Remote Condenser refrigerant fitting labeled: DISCHARGE LINE. Tighten as detailed in Coupling Instructions.

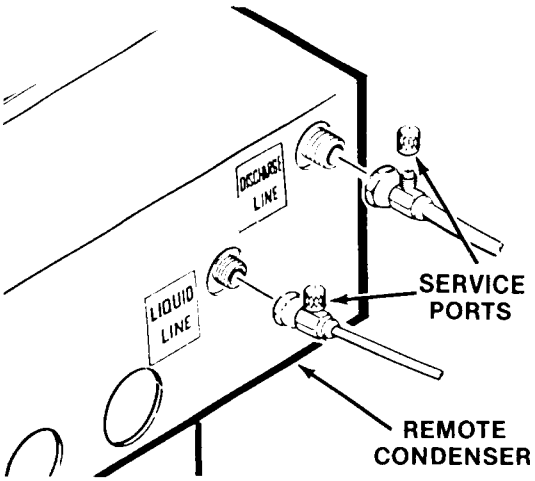

6. Connect the 3/8-inch diameter refrigerant line coupling to the refrigerant fitting on the upper right rear of the icemaker chassis labeled: LIQUID LINE. Tighten as detailed in Coupling Instructions.
7. Connect the 1/2-inch diameter refrigerant line coupling to the refrigerant fitting on the upper, right rear of the icemaker Chassis labeled: DISCHARGE LINE. Tighten as detailed in Coupling Instructions.

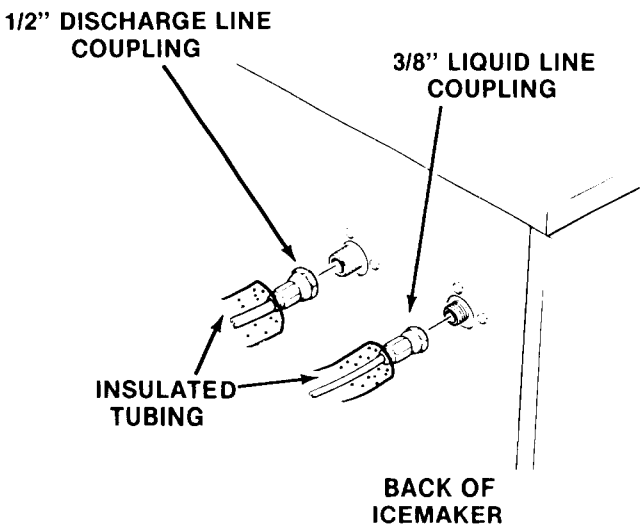

CM1400R FOR THE ELECTRICIAN

CONFORM TO ALL APPLICABLE CODES

ELECTRICAL CONNECTIONS

SEE NAMEPLATE for current requirements to determine wire size to be used for electrical hookup. The cuber requires a solid chassis-to-earth ground wire. See Wiring Diagram.

Be certain the cuber is connected to its own electrical circuit and individual y fused. Voltage variation should not exceed ±ten percent of the nameplate rating, even under starting conditions. Low voltages can cause erratic operation and may be responsible for serious damage to the icemaker.

Electrical connections are made at the rear of the CM1400R for both power supply and to electrically connect the icemaker to the condenser.

The remote condenser must be wired to the CM1400R icemaker in accordance with local and national electrical codes with a minimum of 18 Awg wire with a ground bonding wire connected to the ground screws provided in both the condenser and machine field wiring boxes. All outdoor wiring must be in rainproof conduit.

All external wiring should conform to the national, state and local electrical code requirements. Usually an electrical permit and services of a licensed electrician will be required.

Electrically, the remote condenser fan motor is connected to the CM1400R at the contactor terminals for the compressor and the fan motor operates whenever the compressor operates.

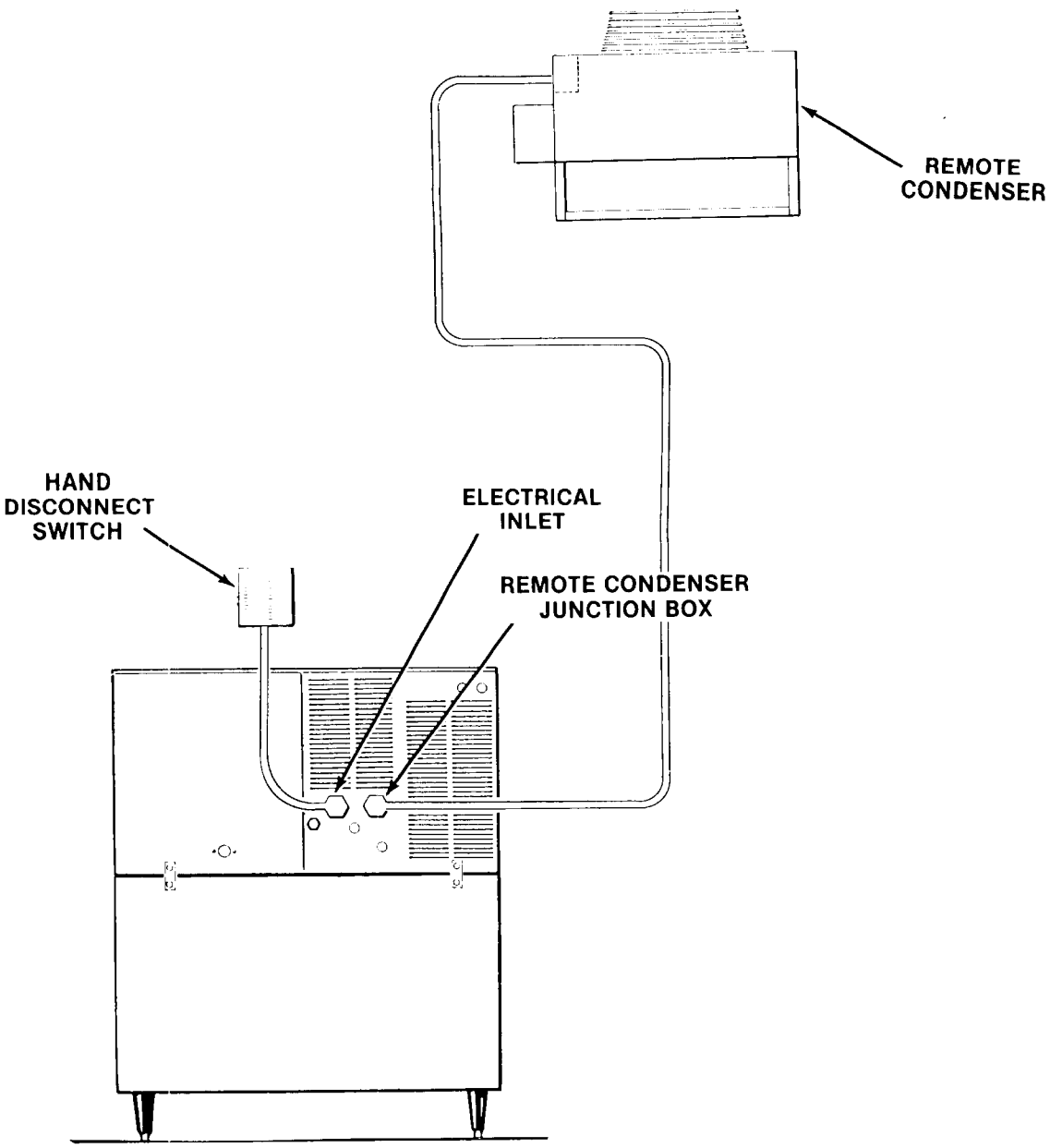

CM1400R FOR THE PLUMBER

WATER SUPPLY AND DRAIN CONNECTIONS

The recommended water supply line is a 3/8-inch O.D. copper tubing with a minimum operating pressure of 20 PSIG and a maximum of 120 PSIG. Connect to cold water supply line with standard plumbing fittings, with a shutoff valve installed in an accessible place between the water supply and the cuber. In some cases a plumbing permit and services of a licensed plumber will be required.

DRAIN CONNECTIONS: All drains are gravity type and must have a minimum of 1/4-inch fall per foot on horizontal runs. The drains are to be installed to conform with the local plumbing code. Install a vertical open vent on drain line to insure good venting. The drain receptacle must be either trapped or vented.

Recommended bin drain is 5/8-inch O.D. copper tubing and should be vented and run separately.

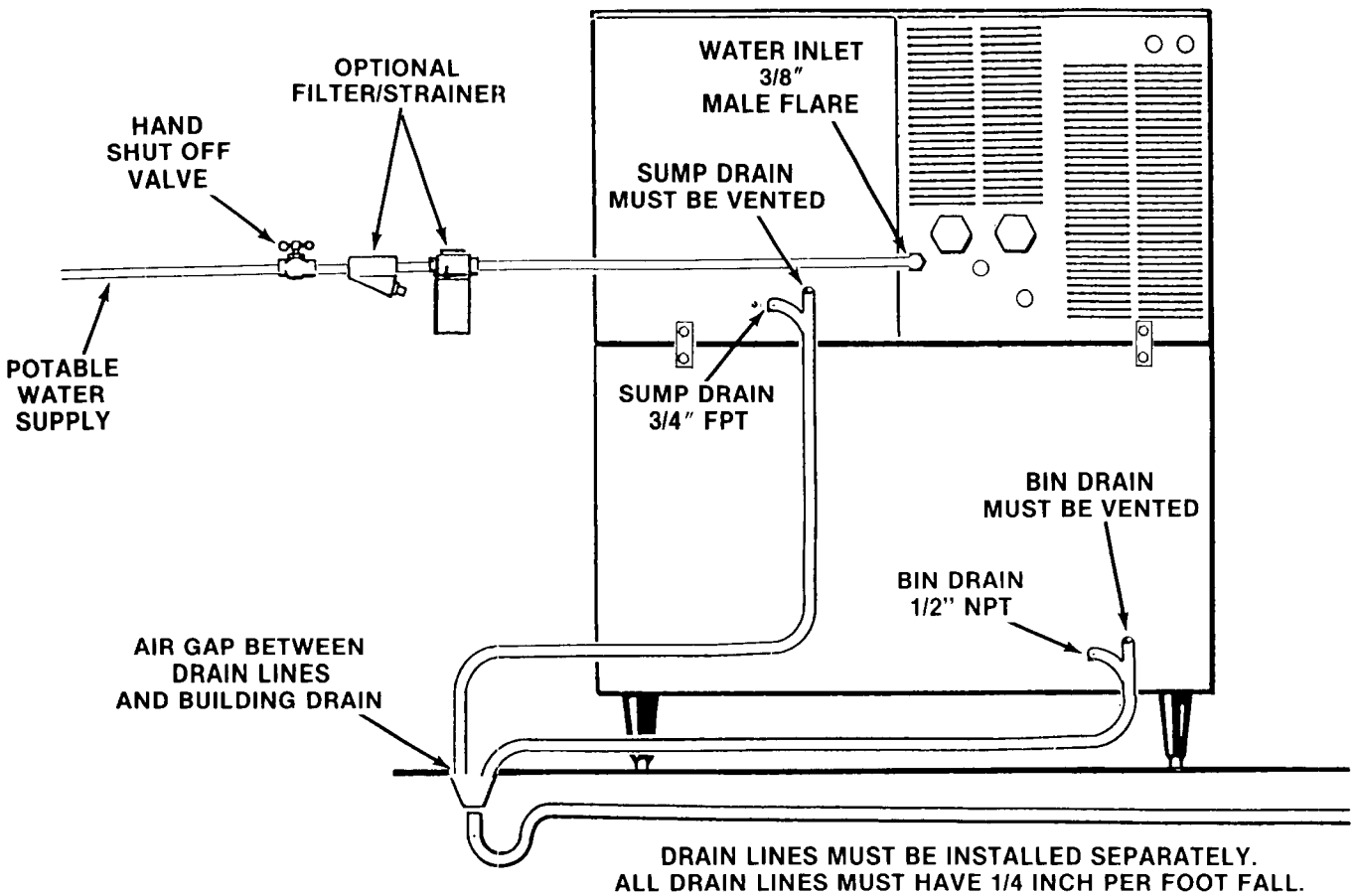

Water Supply and Drain Connection

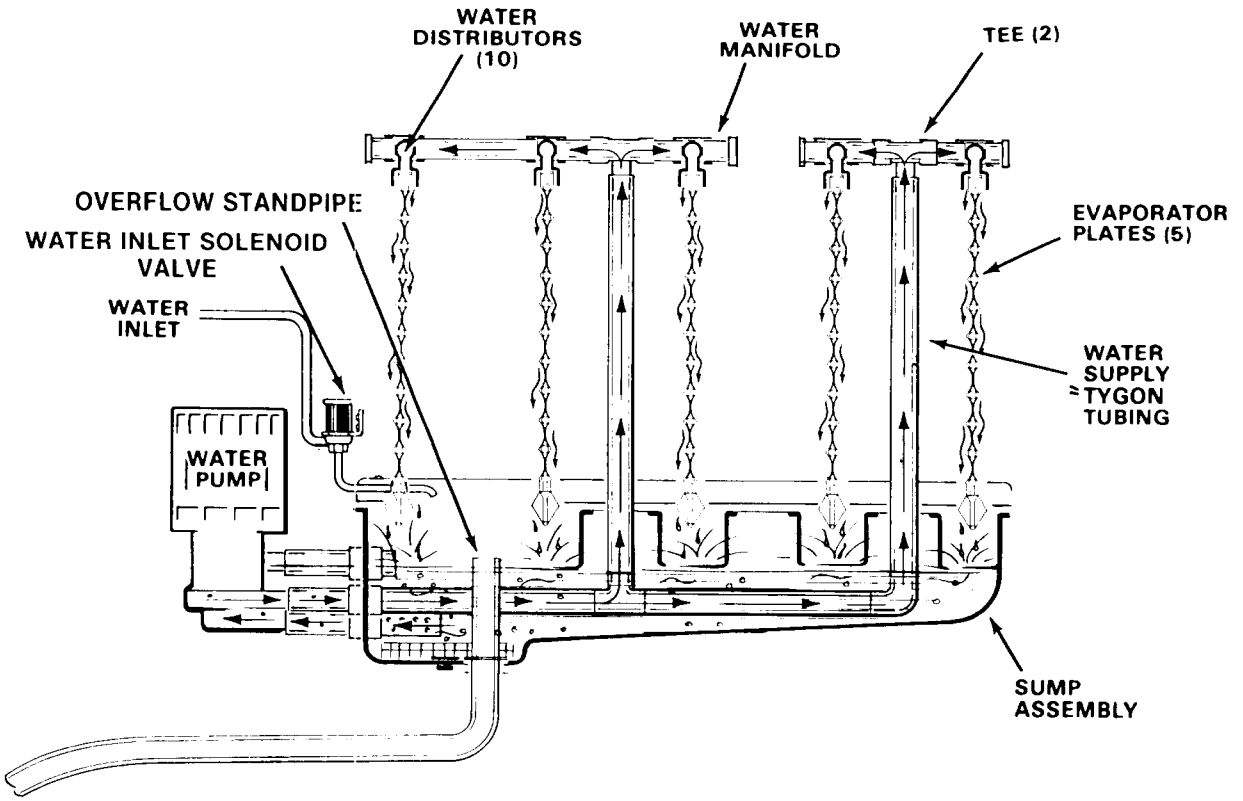

FREEZING CYCLE

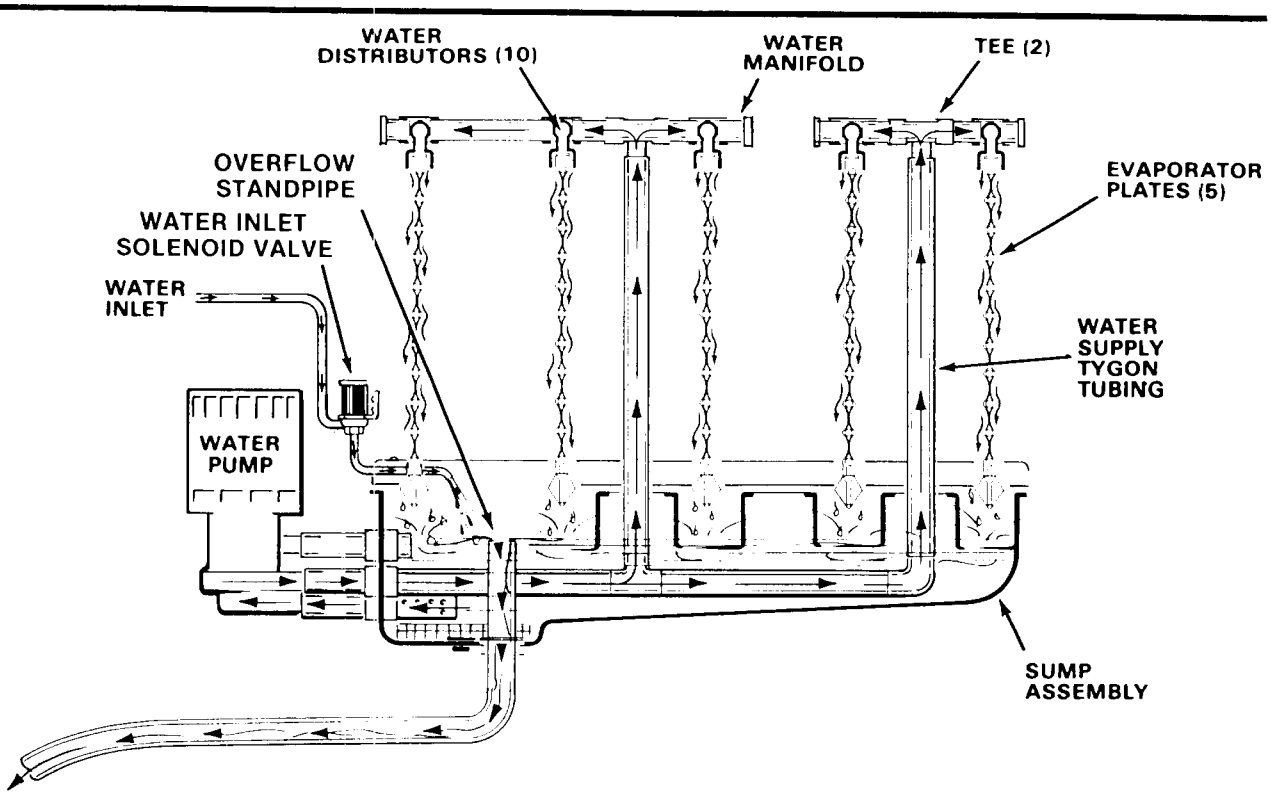

HARVEST CYCLE

Freezing Compartment — Water Schematic

CM1400R FOR THE INSTALLER

FINAL CHECK LIST

1. Is the cabinet/bin level?
2. Is the cuber in a location where ambient temperatures are a minimum of 50-degrees F. all year around and do not exceed a maximum of 100° F?
3. Is there at least a six-inch clearance behind and around the cabinet for all connections and for proper air circulation?
4. Have all plumbing connections been made and checked for leaks?
5. Has the electrical power supply wiring been properly connected and the voltage tested and checked against the nameplate rating? Has proper chassis-to-earth ground been installed?
6. Is the water supply line shutoff valve installed and opened and has the inlet water supply pressure been checked to insure a minimum of 20 PSIG and a maximum of 120 PSIG?
7. Check that the wood blocks, foam backing and front brace supports have been removed from the evaporator plates.
8. Check that the reservoir is properly secured to the bottom of the evaporator plates.
9. Check that the sump covers are properly secured to the bottom of the evaporator plates.
10. Have the compressor holddown bolts been checked to be sure the compressor is snug on the mounting pads?
11. Check all refrigerant lines and conduit lines to guard against vibration and possible failure.
12. Has the bin thermostat bracket been properly installed?
13. Have the cuber and the bin been wiped clean with clean damp cloths?
14. Have the remote condenser and pre-charged refrigerant lines been properly installed per instruction on page 6 and connections checked for leaks?
15. Has the remote condenser fan motor been connected electrically to the CM1400R at the junction box of the remote condenser and the junction box of the CM1400R?
16. Verify that the Master Switch and Compressor Switch are in the "OFF" position.
17. Has the owner/user been given the User Manual and instructed on how to operate the icemaker and the importance of periodic maintenance?
18. Has the owner/user been given the name and telephone number of the Authorized Scotsman Distributor or Service Agency serving him?
19. Has the Manufacturer's Registration Card been properly filled out? Check for correct Model and Serial Numbers from nameplate, then mail the completed card to the SCOTSMAN factory.
20. **Refer to Pre-Start Instructions on page 16.**

CM1400R FOR THE INSTALLER

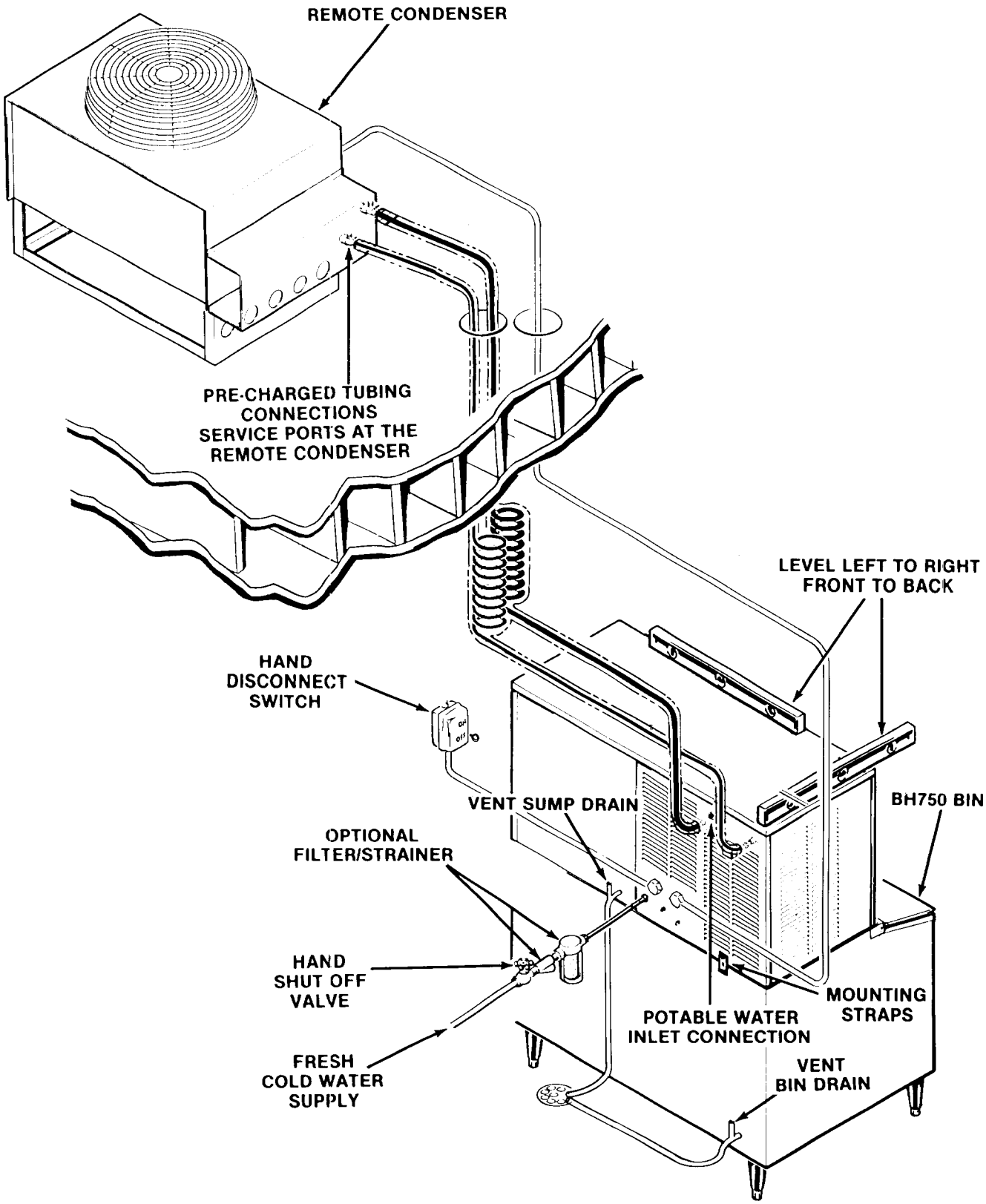

CM1400R START-UP CHECK LIST

////////////////// WARNING //////////////////

BE SURE the icemaker is properly grounded and connected to the proper voltage at the location power source to begin the 12-hour PRE-START heating of the Compressor Crankcase.

//

PRE-START

1. Verify that the MASTER SWITCH and the COMPRESSOR SWITCH are both in the OFF position.
2. Operate the switch at the building source to supply electrical power to the icemaker a minimum of 12 hours BEFORE start up.

START-UP

////////////////// WARNING //////////////////

DO NOT start Icemaker until the 12-hour pre-start Heating of the compressor has been completed. The dome of the compressor must be warm before start up.

//

1. Remove screws and remove both front panels.
2. Check that the MASTER ON-OFF toggle switch and the COMPRESSOR ON-OFF toggle switch are in the OFF position on the control box.
3. Remove four screws on the control box and remove the cover.
4. OPEN the water supply line shutoff valve.
5. Inside the control box is the shaft of the timer and the switch assembly. Rotate the shaft of the timer and switch assembly clockwise until the actuator arm on the microswitch drops off the outer cam into cam slot. See Timer Cam Position. An audible click can be heard, but in a noisy area, look at the cam and switch to observe the event.
6. Move the MASTER ON-OFF toggle switch to the ON position.
7. Observe water fill cycle: Water inlet solenoid valve OPENS, incoming water flows from the valve through the tubing, the reservoir fills and excess water is overflowed through the stand pipe. This cycle will take approximately three and one-half minutes. Timer will close the water inlet solenoid valve and the water fill cycle is complete.

NOTE: When the sump is full, some water will be seen seeping through the sump mounting holes where the sump is hanging from the evaporators. This is normal.

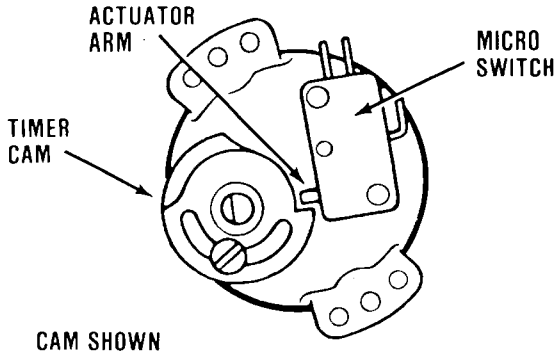

CAM SHOWN AT BEGINNING OF HARVEST CYCLE

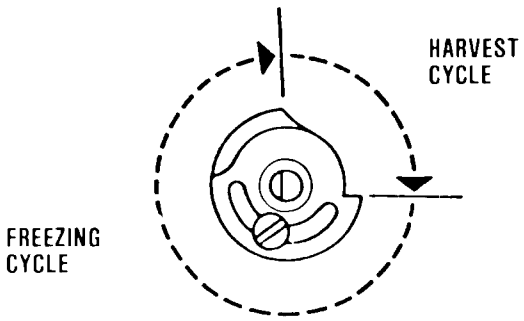

CAM SHOWN DIVIDED INTO TYPICAL FREEZING & HARVEST CYCLES

Advance the shaft of the timer and switch assembly through the remaining cycle into a new harvest cycle to restart the timer and check that: Water inlet solenoid valve OPENS and the reservoir overflows through the stand pipe.

8. Check that the water cascades down over each cube mold into the sump and does not drip into the bin.
9. When the second harvest cycle is completed, **remove the stem cap from the receiver outlet (King) valve and fully open the valve. Replace the cap. Check for leaks at the Stem Cap.** Move the COMPRESSOR ON-OFF toggle switch to the ON position. The compressor operates and the remote condenser fan operates.
10. Check operation of the freezing cycle.

    The water pump is operating, as seen by water moving through the two tygon tubes between evaporator plates, up to the water manifold at the top of the evaporator plates where water is uniformly dispensed and cascades down both sides of each evaporator plate and drains back into the sump assembly for recirculation.

    The icemaking process begins. The evaporator plates become cold and ice begins to form.

CM1400R START-UP

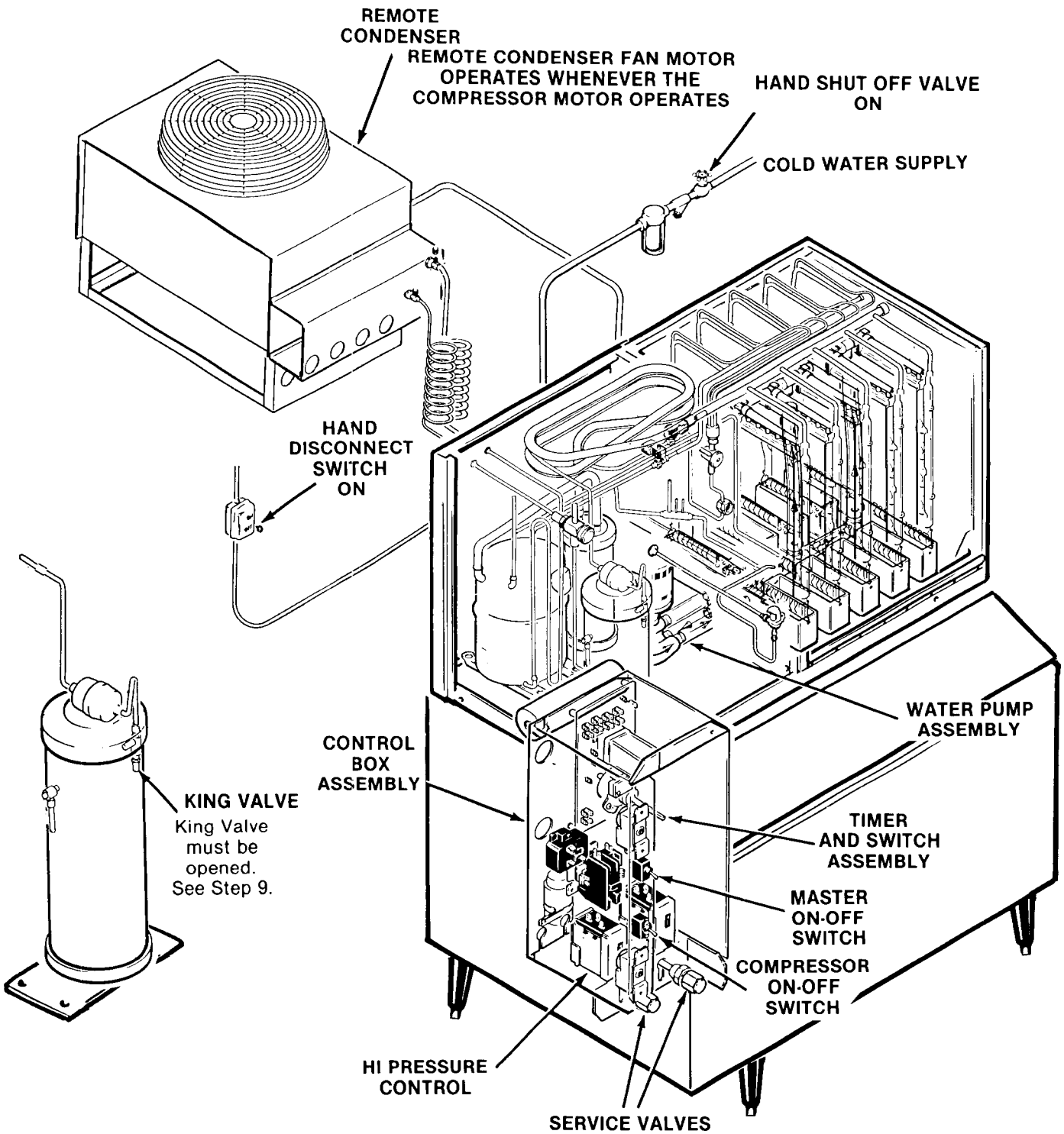

Freezing time will range between 12 and 20 minutes in a 70-degree F. ambient temperature. Longer time for temperatures above 70-degrees F., and shorter time required when temperatures are below 70-degrees F. Average complete cycle range is about 15 to 25 minutes. There is just enough water in the sump to complete one batch of ice. It is not unusual for the pump to pump some air at the end of the freeze cycle.

11. Check the dome of the compressor, there must not be any frost on the compressor at any time. If frost does form, do not adjust refrigerant charge. The thermostatic expansion valve superheat must be increased. If the TXV is adjustable, increase the superheat. Too much superheat will starve one or more evaporators during freeze, and the starved evaporator will produce much smaller cubes than normal.

12. Observe ice cube harvest:

Check size of SCOTSMAN CONTOUR CUBE

Unlike other SCOTSMAN cubes which are made in a definite molded shape, contour cubes are produced in indentations and many shapes and sizes of contour cubes may be produced — only ONE size and shape combination is correct.

An under-charged refrigeration system produces smaller cubes at the bottom of the evaporator plate and large cubes at the top. Charge system per NAMEPLATE specifications.

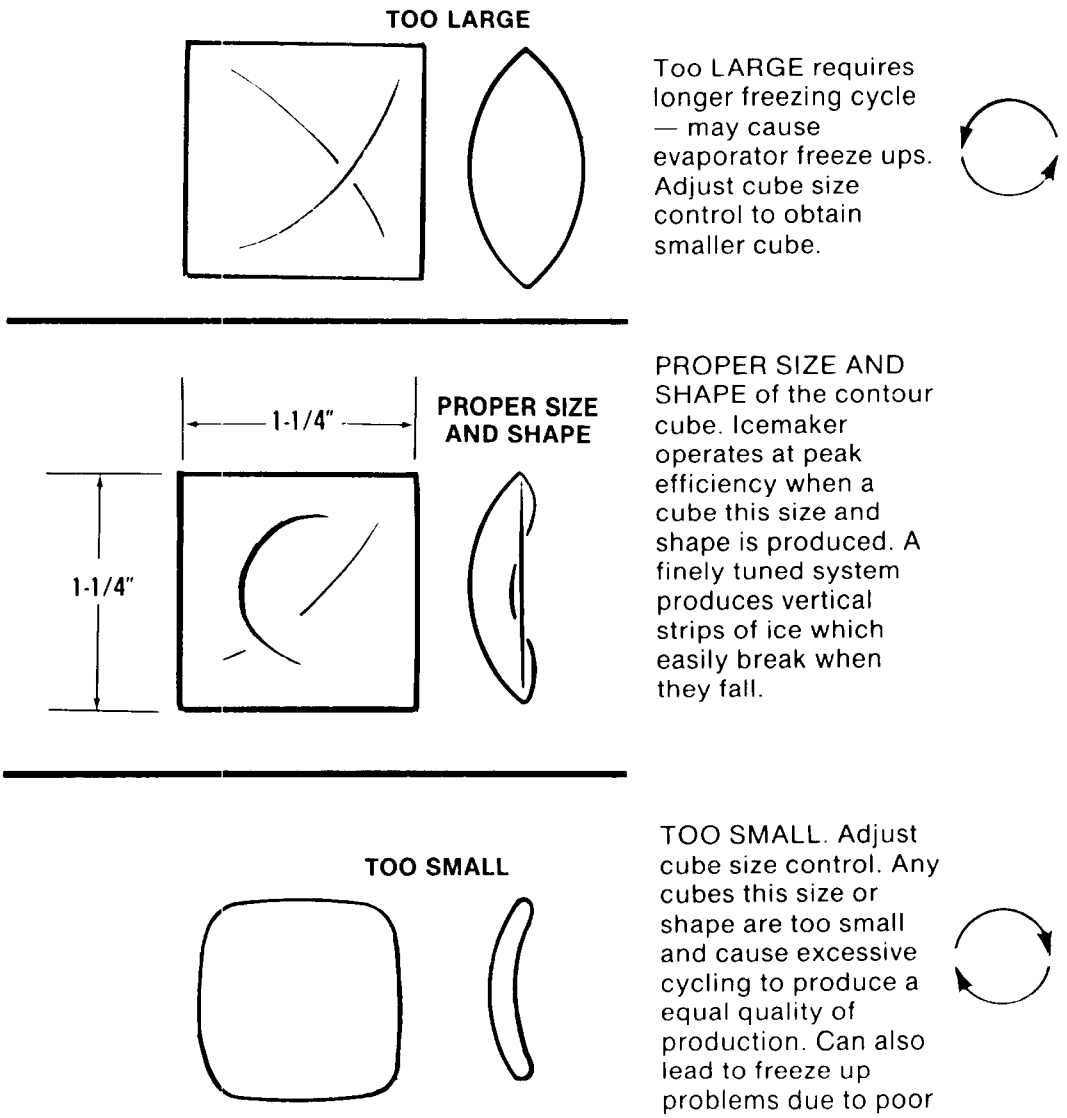

Contour Cube Size

CM1400R START-UP

ADJUSTMENT OF CUBE SIZE

To produce SMALLER sized ice cubes:

Locate cube size control knob in the front of the control box.

Rotate the adjusting screw one-eighth of a turn COUNTERCLOCKWISE to WARMER.

Observe size of the ice cubes in the next two ice cube harvests and adjust in one-eighth turn or less increments until desired ice cube is achieved.

To produce LARGER sized ice cubes:

Locate cube size control on the front of the control box.

Rotate the adjusting screw one-eighth of a turn CLOCKWISE to COLDER.

Observe size of ice cubes in the next two cube harvests and adjust in one-eighth turn or less increments until desired ice cube size is achieved.

Check texture of ice cubes; when partially cloudy throughout, suggests icemaker is operating short of water; or, possibly an extreme problem water condition exists where filtering or purifying equipment is recommended. Contact SCOTSMAN ICE SYSTEMS, Service Department, Albert Lea, Minnesota 56007 for further details. See SERVICE DIAGNOSIS chart for shortage of water symptoms and corrections.

ROTATE ADJUSTMENT KNOB COUNTER-CLOCKWISE TO PRODUCE SMALLER CUBES

ROTATE ADJUSTMENT KNOB CLOCKWISE TO PRODUCE LARGER CUBES

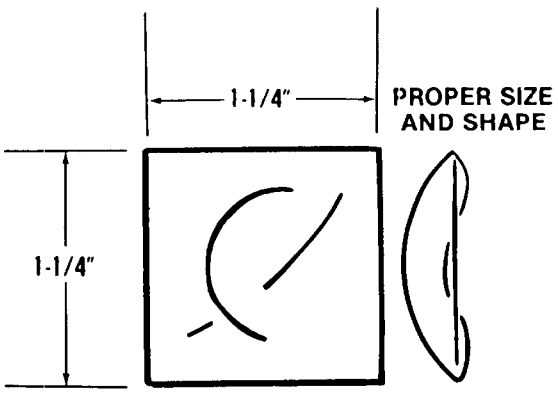

Cube Size Control Adjustment

ADJUSTMENT OF HARVEST TIME

Check the Harvest time. The correct setting is one that allows enough time for all of the ice to fall from the evaporators and to fill the sump with water to the overflow point, plus 15-30 seconds extra time.

To adjust the timer:

A. Disconnect electrical power supply to the icemaker.

B. Loosen the screw on the timer that locks the two cams together.

C. To decrease Harvest time, rotate the shaft of the timer counter-clockwise. To increase, turn the shaft clockwise.

D. Retighten the screw to lock the two cams together again.

E. Return power to icemaker. Check cube size and Harvest time.

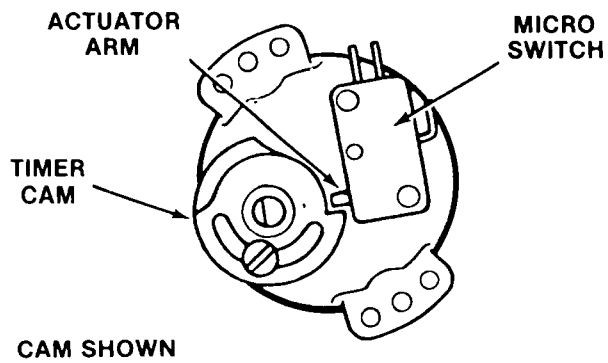

CAM SHOWN AT BEGINNING OF HARVEST CYCLE

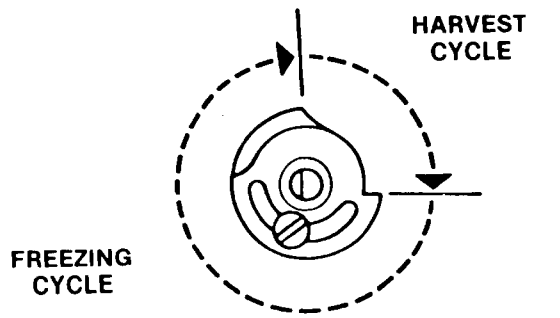

CAM SHOWN DIVIDED INTO TYPICAL FREEZING & HARVEST CYCLES

CM1400R START-UP

BIN THERMOSTAT OPERATION

13. With the icemaker in the harvest cycle, hold ice against the bin thermostat control bulb to test shutoff which should cause the icemaker to shut OFF at the END OF THE HARVEST CYCLE.

    Within minutes after the ice is removed from the sensing bulb, the bulb will warm up and cause the icemaker to restart. This control is factory set and should not be reset until testing is performed.

14. Replace control box cover and all cabinet panels and screws.

15. Thoroughly explain to the owner/user the significant specifications of the icemaker, start up and operation and go through the procedures in the operating instructions. Answer all questions about the icemaker by the owner and inform the owner of the name and telephone number of the authorized SCOTSMAN Distributor or service agency serving him.

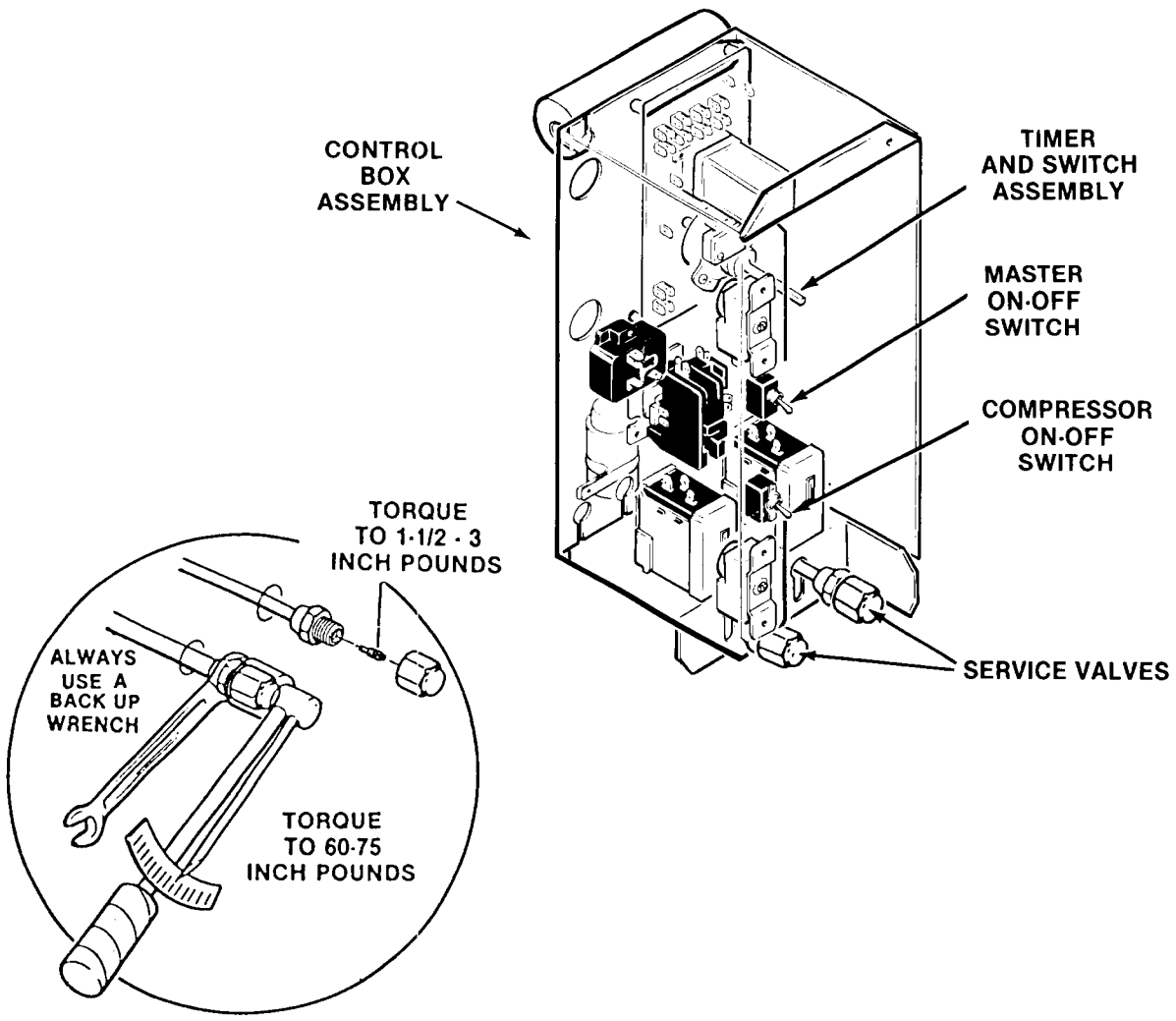

CM1400R MAINTENANCE & CLEANING INSTRUCTIONS

The periods and procedures for maintenance and cleaning are given as guides and are not to be construed as absolute or invariable. Cleaning especially will vary depending upon local water conditions and the ice volume produced and each icemaker must be maintained individually in accordance with its own particular location requirements.

ICEMAKER

THE FOLLOWING MAINTENANCE SHOULD BE SCHEDULED AT LEAST TWO TIMES PER YEAR ON THIS ICEMAKER. CALL YOUR AUTHORIZED SCOTSMAN SERVICE AGENCY.

1. Check and clean or service any optional water treatment devices if any installed.
2. Check the CM1400 cabinet is level in the side-to-side and front-to-back directions.
3. Clean the water system, evaporator plates and sump assembly, using a solution of SCOTSMAN Ice Machine Cleaner. Refer to CLEANING - Icemaker.

Cleaning requirements vary according to local water conditions and individual user operation. Continuous check of the clarity of ice cubes and visual inspection of the water system parts, evaporator plates and the sump assembly, before and after cleaning, will indicate frequency and procedures to be followed in local areas.

4. Check that each evaporator plate assembly is snug and secure on each wall support on the bin rear wall, in the holes of the front brace, and in each indent recessed in each arm of the sump assembly below the bottom corners of the evaporator plates.
5. Check and tighten all bolts and screws.
6. Check and tighten all electrical connections.
7. Check cube size.
8. Check defrost cycle for preset time. Adjust as required.
9. Check for water leaks and make corrections.
10. Check the bin thermostat control bulb to test shut off. Holding ice against bin thermostat control bulb should cause the icemaker and the remote condenser fan motor to shut off at the end of the harvest cycle.

    Within minutes after ice is removed from the bin thermostat control bulb, the icemaker will restart.
11. Check reservoir water level at the beginning of the freeze cycle.
12. Check drain system.
13. Check sight glass for refrigerant charge and moisture.

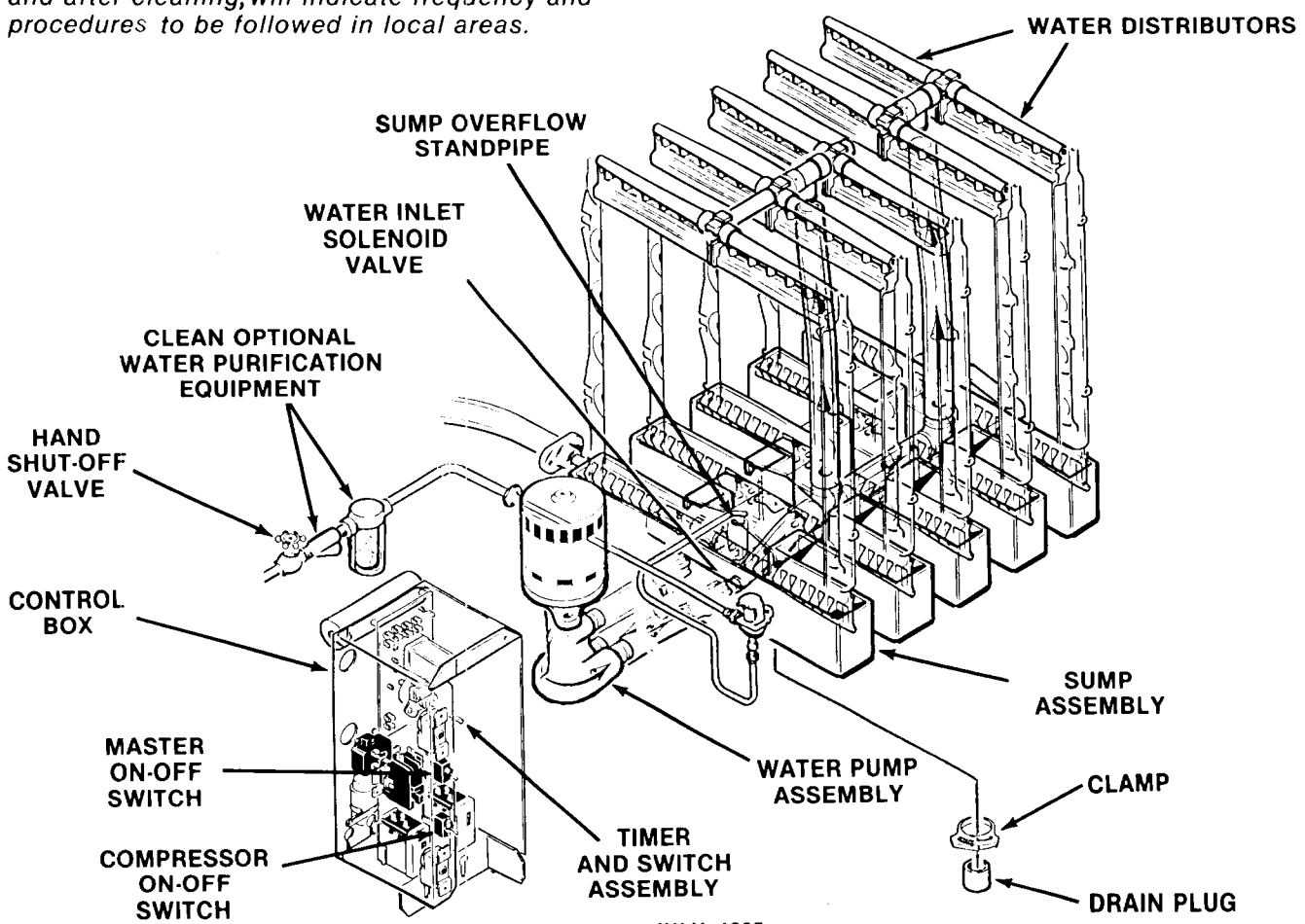

CM1400R MAINTENANCE & CLEANING INSTRUCTIONS

REMOTE CONDENSER

Frequent cleaning and inspection of the Condenser should be performed to maintain maximum efficiency of Icemaker. A dirty Condenser or blocked air flow will greatly decrease icemaking efficiency.

1. With building source electrical power OFF to the icemaker, clean the Remote Condenser fins using a vacuum cleaner, whisk broom or brush. DO NOT USE A WIRE BRUSH. Instruct customer to clean frequently.
2. Check that Fan Blade moves freely, is not touching any surfaces, is not bent or out of balance and the wire guard is properly installed and securely attached.
3. Check that the roof area immediately surrounding the Remote Condenser is free and clear of any debris that may collect such as leaves, paper, trash, etc.

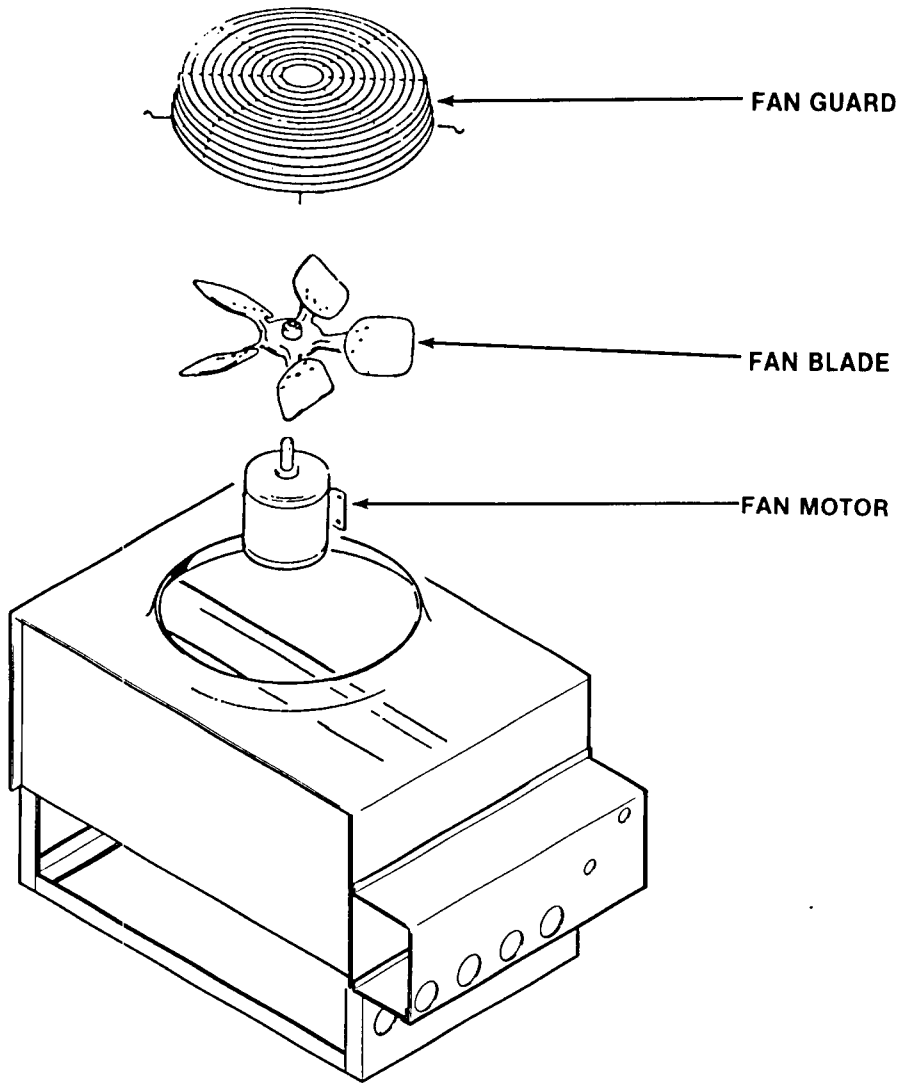

Cleaning Remote Condenser

CM1400R MAINTENANCE & CLEANING INSTRUCTIONS

CLEANING - Icemaker

1. Remove screws and the front panels.
2. Move the master switch to the CENTER position, leave the compressor switch in the ON position.
3. Rotate the shaft of the timer and switch assembly located in the control box CLOCKWISE, until the actuator arm on the microswitch rides up out of the cam slot to the outer surface of the cam, then stop. This is the start position for the freezing cycle. See START Positions for the Freeze/Harvest Cycles.
4. Position a container for catching drain water under the rubber plug at the bottom of the sump assembly.
5. Remove hose clamp, the rubber plug, and drain all water from the sump assembly into the container. Replace rubber plug and hose clamp.
6. Prepare cleaning solution: Mix twenty-four ounces of SCOTSMAN Ice Machine Cleaner with two gallons of fresh, potable warm water.

WARNING

SCOTSMAN Ice Machine Cleaner contains Phosphoric and Hydroxyacetic acids. These compounds are corrosive and may cause burns. If swallowed, DO NOT induce vomiting. Give large amounts of water or milk. Call physician immediately. In case of external contact, flush with water. KEEP OUT OF THE REACH OF CHILDREN.

7. Carefully pour the cleaning solution into the sump assembly.
8. Immediately move the MASTER ON-OFF toggle switch on the control box to the CLEAN position.
9. Allow the system to operate for about thirty minutes.
10. At the end of thirty minutes, move the master switch to the CENTER position. Remove the plug and drain the cleaning solution from the sump and rinse. Replace the drain plug.
11. Add two gallons of fresh water to the sump. Move the master switch to the clean position. Operate for 5 minutes and drain. Repeat this procedure two more times.
12. Rotate the shaft of the timer and switch assembly, located in the control box, CLOCKWISE until the actuator arm on the microswitch drops off the outer cam into the cam slot, then stop. This is the start position for the harvest cycle. See START positions for the Freeze/Harvest Cycles. The water inlet solenoid valve opens and a supply of water enters the sump.

    If, after completing the cleaning and flushing procedure, inspection of the water flow reveals that one or more evaporator plates does not have a full flow of water for each vertical row of cubes, shut down the operation and remove and clean all water distributor tubes. Then reinstall the water distribution system.
13. Move the master switch to the ON position to start the icemaking process. Check each ice cube harvest until the ice cubes are clear and the acid taste is eliminated.

CAUTION

DO NOT use ice cubes produced from the cleaning solution. Be sure none remains in the bin.

14. Add hot water to the bin to melt the ice cubes and thoroughly wash and rinse inner surfaces of the bin.
15. Check each ice cube harvest until the ice cubes are clear and the acid taste is eliminated.
16. Wash and wipe down all interior surfaces of the evaporator section of the cabinet with a clean cloth or disposable paper wipers soaked in the cleaning solution.
17. Replace all panels.
18. Clean and sanitize the interior bin surfaces each week.

CM1400R MAINTENANCE & CLEANING INSTRUCTIONS

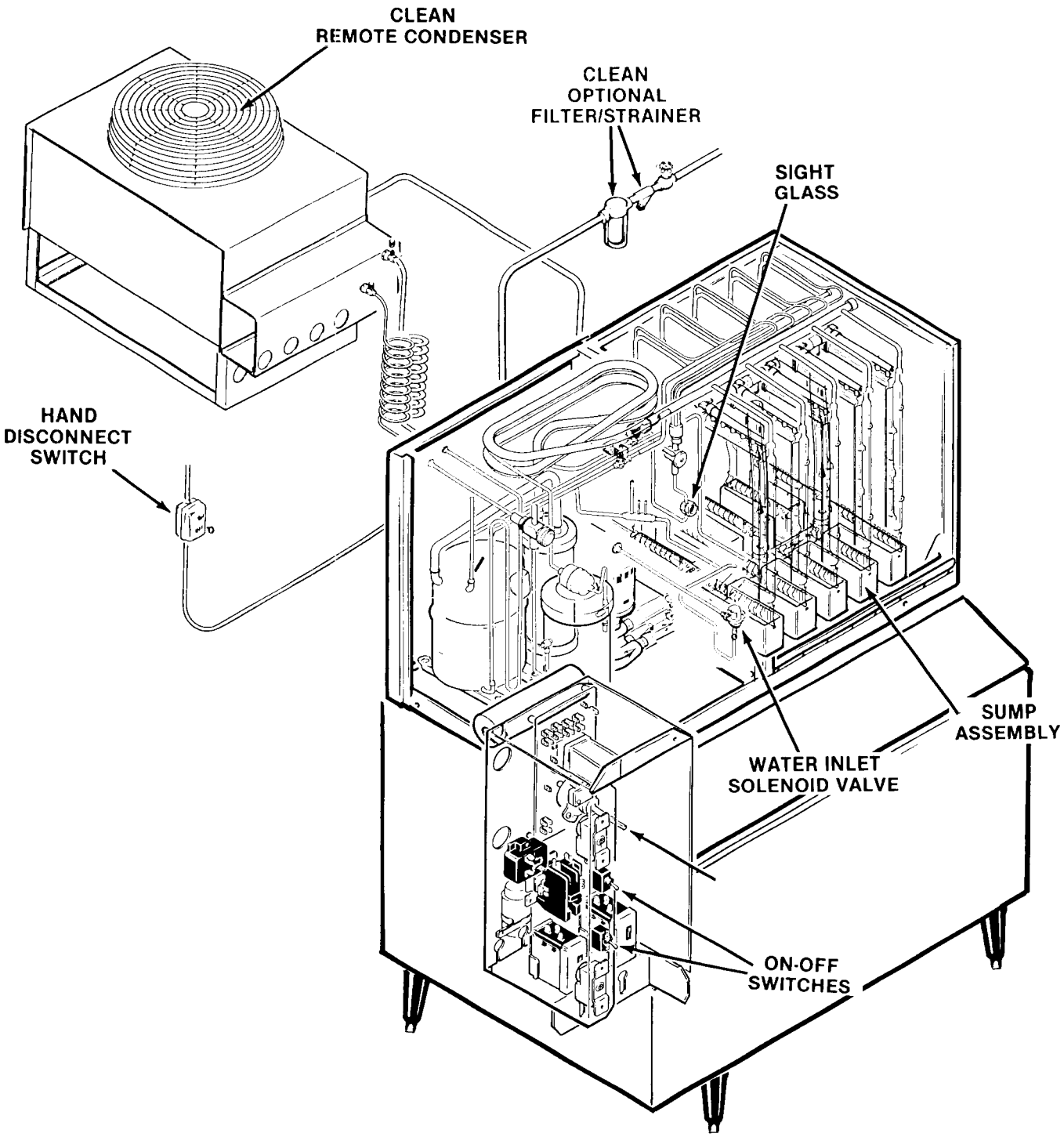

Maintenance & Cleaning

CM1400R OPERATION

FREEZING CYCLE

Water from the sump assembly is pumped to the water distributor system at the top of the evaporator plates. From the water distributors at the top of each evaporator plate, the water cascades as gravity over all cells of the plates and to the sump assembly below for recirculation. At the beginning of the freezing cycle, the electrical circuit is completed to the compressor and the water pump. The water pump and the remote fan motor operate continuously through both the freezing cycle and the harvest cycle.

In the compressor, gaseous refrigerant is compressed and discharged into the condenser as a high pressure, high temperature gas. The refrigerant is cooled by air and condenses into a high pressure, high temperature liquid. The liquid refrigerant then passes through a receiver, which stores excess refrigerant not required at high condensing temperatures; then, on to the liquid line solenoid valve and thermostatic expansion valve where the temperature and pressure of the liquid refrigerant are lowered. This liquid refrigerant is then distributed through capillary tubes to the evaporator plates. The refrigerant is warmed by the water cascading over the evaporator plates and begins to boil off and becomes a gas. The refrigerant travels through the heat exchange area of the suction line where any remaining liquid refrigerant boils off and returns to the compressor as a low pressure, low temperature gas and the cycle starts again.

During the freezing cycle, the hot gas solenoid valve is CLOSED and the water inlet solenoid valve is CLOSED.

When the ice cubes are partially formed, the cube size control will sense the temperature at which it is preset to CLOSE. This will complete the electrical circuit to the timer. The timer then controls the remainder of the freezing cycle.

The timer will keep the icemaker operating in the freezing cycle for a selected length of time. This will give the ice cubes time to fully form. After that selected length of time, the timer will switch the icemaker into the harvest cycle through the contacts of the timer assembly microswitch.

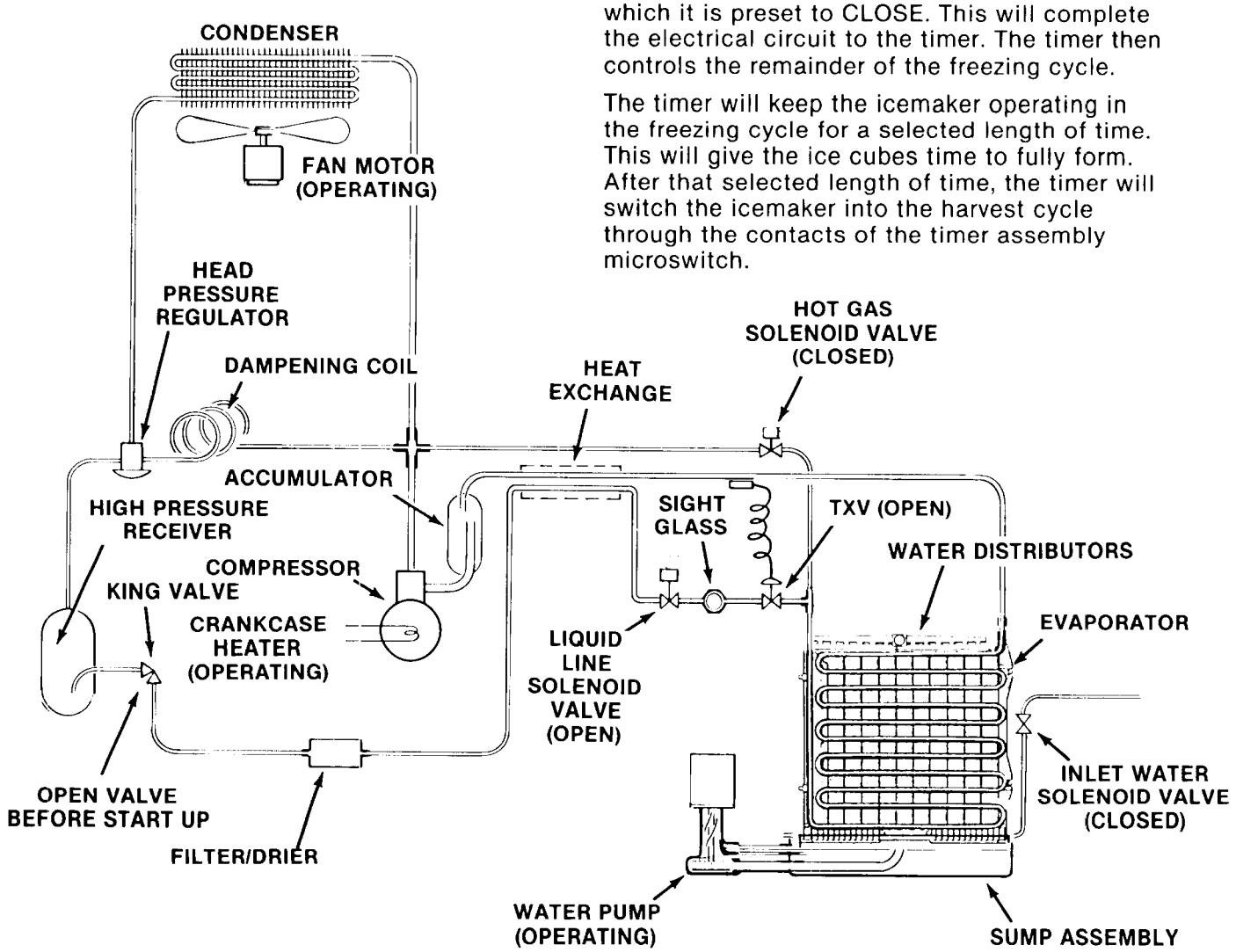

Freezing Cycle — Refrigeration Schematic

CM1400R OPERATION

HARVEST CYCLE

When the timer switches the icemaker into the harvest cycle, high pressure, high temperature gaseous refrigerant being discharged from the compressor is diverted from the condenser through the hot gas solenoid valve into the evaporator plates. During this cycle, the gaseous high pressure, high temperature refrigerant circulates from the compressor through the evaporator plates and back again bypassing the condenser and the thermostatic expansion valve. In the electrical circuit, both the compressor and the water pump are operating and the hot gas solenoid valve is energized and OPEN and the water inlet solenoid valve is OPEN.

The finished ice cubes are released from the sides of the evaporator plates by the warming effect of the hot gas flowing through the evaporator plates and the water cascading over the ice cubes. The released ice cubes drop into the ice storage bin below.

At the end of the harvest cycle, the timer cam will push the actuator arm of the microswitch IN. If the bin thermostat is still CLOSED, a whole new cycle will begin. If the bin thermostat is OPEN, the liquid line solenoid valve will close, shutting off refrigerant flow to the evaporator and allowing the compressor to pump any refrigerant left in the evaporators into the high pressure receiver. When the evaporator pressure is lowered to approximately 3 PSIG, the low pressure switch opens, shutting off the compressor, remote fan and water pump.

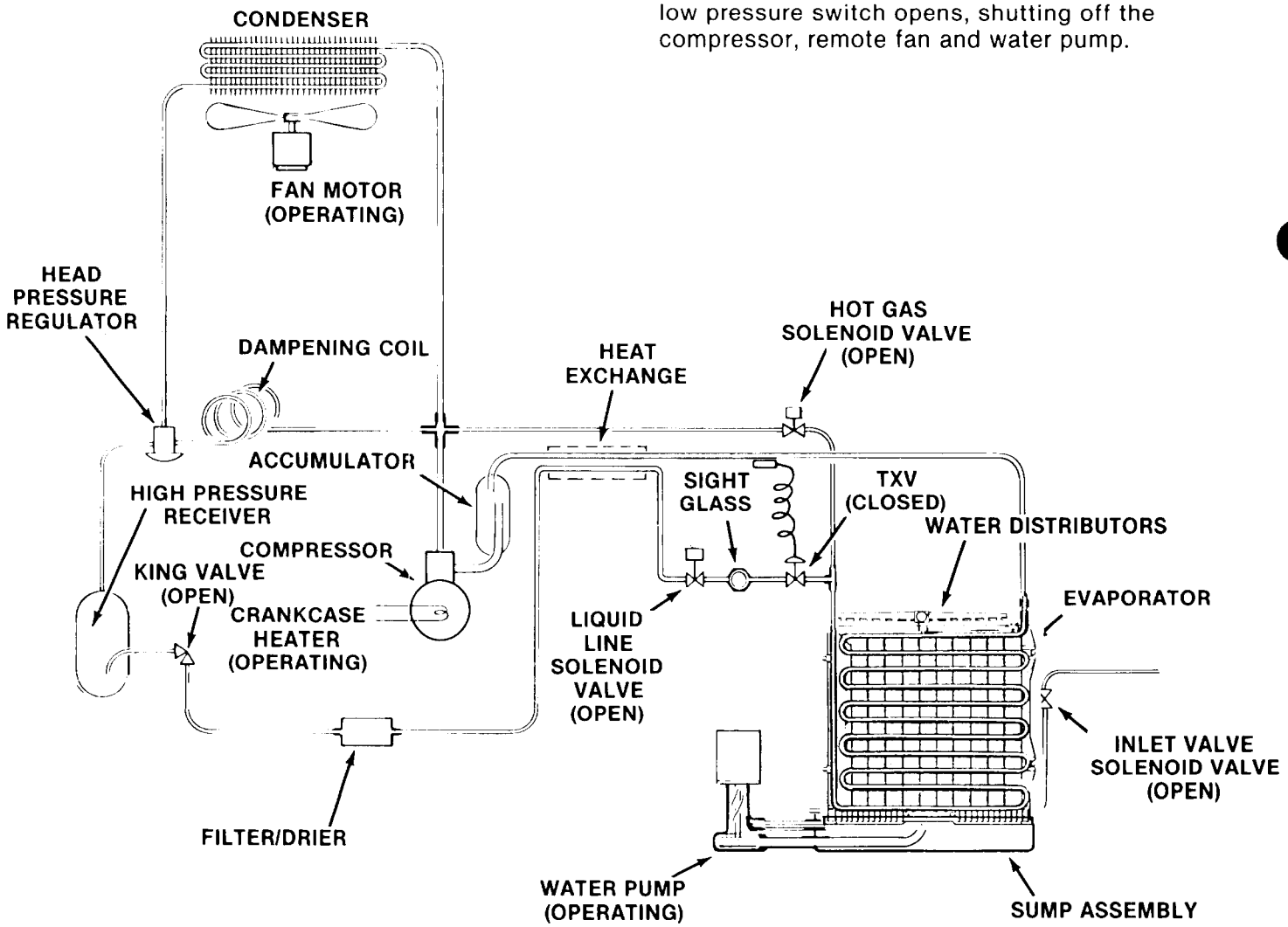

Harvest Cycle — Refrigeration Schematic

CM1400R OPERATION - ELECTRICAL SEQUENCE

The following charts illustrate which switches and which components are ON or OFF during a particular phase of the icemaking cycle.

Refer to the wiring diagram for a reference. Remember, the wiring diagram shows the unit as it is in the Timed Freeze Cycle.

BEGINNING FREEZE

ELECTRICAL COMPONENTS (LOADS)	ON	OFF
Crankcase Heater	X	
Compressor	X	
Fan Motor	X	
Hot Gas Valve		X
Inlet Water Valve		X
Liquid Line Valve	X	
P.C. Board Relay Coil	X	
Timer		X
Water Pump	X	

SWITCHES	ON	OFF
Bin Thermostat	X	
Cube Size Thermostat		X
Toggle	X	
L.P. Control	X	
H.P. Control	X	
Timer Micro Switch N.C.		X
Timer Micro Switch N.O.	X	
High Temp Switch	X	

At the beginning of the freeze cycle, the timer is not turning, but the icemaker is refrigerating the water, starting to turn the water into ice.

TIMED FREEZE

ELECTRICAL COMPONENTS (LOADS)	ON	OFF
Crankcase Heater	X	
Compressor	X	
Fan Motor	X	
Hot Gas Valve		X
Inlet Water Valve		X
Liquid Line Valve	X	
P.C. Board Relay Coil	X	
Timer	X	
Water Pump	X	

SWITCHES	ON	OFF
Bin Thermostat	X	
Cube Size Thermostat	X	
Toggle Switch	X	
L.P. Control	X	
H.P. Control	X	
Timer Micro Switch N.C.		X
Timer Micro Switch N.O.	X	
High Temp Switch	X	

After the icemaker has cooled the water and formed some ice on the evaporator, the evaporator will have gotten cold enough to have the cube size control close. All this does is start and run the timer.

HARVEST

ELECTRICAL COMPONENTS (LOADS)	ON	OFF
Crankcase Heater	X	
Compressor	X	
Fan Motor	X	
Hot Gas Valve	X	
Inlet Water Valve	X	
Liquid Line Valve	X	
P.C. Board Relay Coil		X
Timer	X	
Water Pump	X	

SWITCHES	ON	OFF
Bin Thermostat	X	
Cube Size Thermostat		X
Toggle Switch	X	
L.P. Control	X	
H.P. Control	X	
Timer Micro Switch N.C.	X	
Timer Micro Switch N.O.		X
High Temp Switch	X	

The timer has now turned far enough so that the micro-switch plunger has dropped into the gap in the cam. This breaks the circuit to the relay in the P.C. Board - and that puts the machine into the Harvest cycle, where the hot gas valve and inlet water valve have opened to harvest the ice.

PUMP DOWN - STAGE ONE

ELECTRICAL COMPONENTS (LOADS)	ON	OFF
Crankcase Heater	X	
Compressor	X	
Fan Motor	X	
Hot Gas Valve		X
Inlet Water Valve		X
Liquid Line Valve		X
P.C. Board Relay Coil		X
Timer		X
Water Pump	X	

SWITCHES	ON	OFF
Bin Thermostat		X
Cube Size Thermostat		X
Toggle Switch	X	
L.P. Control	X	
H.P. Control	X	
Timer Micro Switch N.C.	X	
Timer Micro Switch N.O.		X
High Temp Switch	X	

When ice is on the bin control, it will OPEN and at the end of the Harvest Cycle, this will initiate a pump down cycle. The liquid line valve (normally closed) will close and the compressor will pump refrigerant into the receiver.

PUMP DOWN - STAGE TWO

ELECTRICAL COMPONENTS (LOADS)	ON	OFF
Crankcase Heater	X	
Compressor		X
Fan Motor		X
Hot Gas Valve		X
Inlet Water Valve		X
Liquid Line Valve		X
P.C. Board Relay Coil		X
Timer		X
Water Pump		X

SWITCHES	ON	OFF
Bin Thermostat		X
Cube Size Thermostat		X
Toggle (Master and Compressor)	X	
L.P. Control		X
H.P. Control	X	
Timer Micro Switch N.C.	X	
Timer Micro Switch N.O.		X
High Temp Switch	X	

After the low side pressure has dropped under 3 psig, the compressor will be turned off by the low pressure control and the unit will be pumped down, OFF and in a standby mode.

CM1400R SYSTEM SPECIFICATIONS

In servicing a machine, it is often useful to compare that individual units operating characteristics to those of a normally operating machine. The data that follows gives those characteristics, however; be aware that these values are for NEW, CLEAN machines. USE THESE NUMBERS AS A GUIDELINE ONLY.

COMPONENT

Timer - 1 revolution of the cam, in minutes 8
Harvest Time, preset, in minutes 2-1/4
Inlet Water Valve, water flow in g.p.m. 1

	CI	CO
Cube Size Control, Reverse Acting, Temperature range	(+15°F. to +44°F.)	—
Bin Thermostat, Temperature Range	38.5°-43.5°	33.5°-38.5°
High Pressure Safety Switch, PSIG	Manual	450
Low Pressure Control, PSIG	40	20

OPERATING CHARACTERISTICS

On remote air-cooled models during the freezing cycle, the discharge pressure will slowly decline as the unit freezes ice and at the same time the suction pressure will also decline, reaching it's lowest point just before freeze. Compressor amps experience a similar drop.

FREEZE CYCLE

Average Discharge Pressure A/C . . . 350-200 PSIG
Suction Pressure at the end of the Freeze Cycle . . . . . 22-40 PSIG
Freeze Time . . . . . 12-20 Minutes

HARVEST CYCLE

Average Discharge Pressure . . . . . 250-100 PSIG
Average Suction Pressure . . . . . 130-65 PSIG
Harvest Time, assumed to be 2-1/4 minutes. This can be adjusted to suit local conditions.

The values listed are representative of values seen at a wide range of air and water temperatures and are for a normal cube size.

When comparing these figures to field data, allow a variation from each end of the range given.

TO SERVICE REFRIGERATION SYSTEM:

TORQUE REFRIGERATION ACCESS VALVE CAPS TO 60-75 INCH POUNDS.

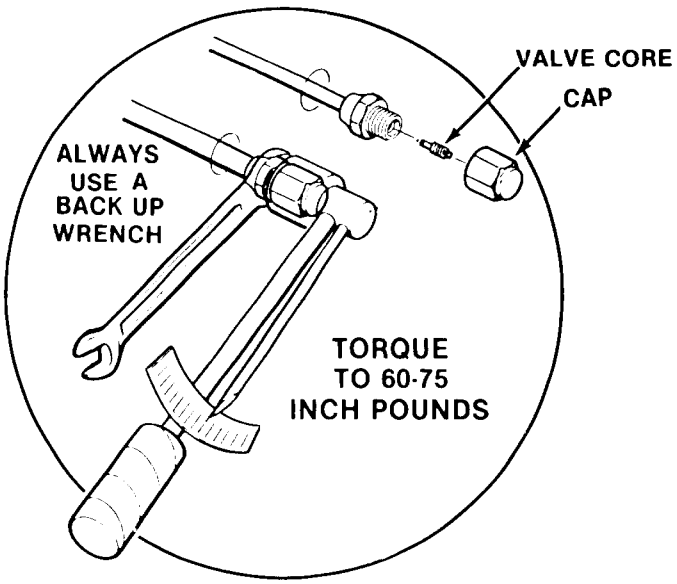

ALWAYS USE A BACK-UP WRENCH TO AVOID DAMAGE TO THE REFRIGERANT TUBING.

CM1400R COMPONENT DESCRIPTION

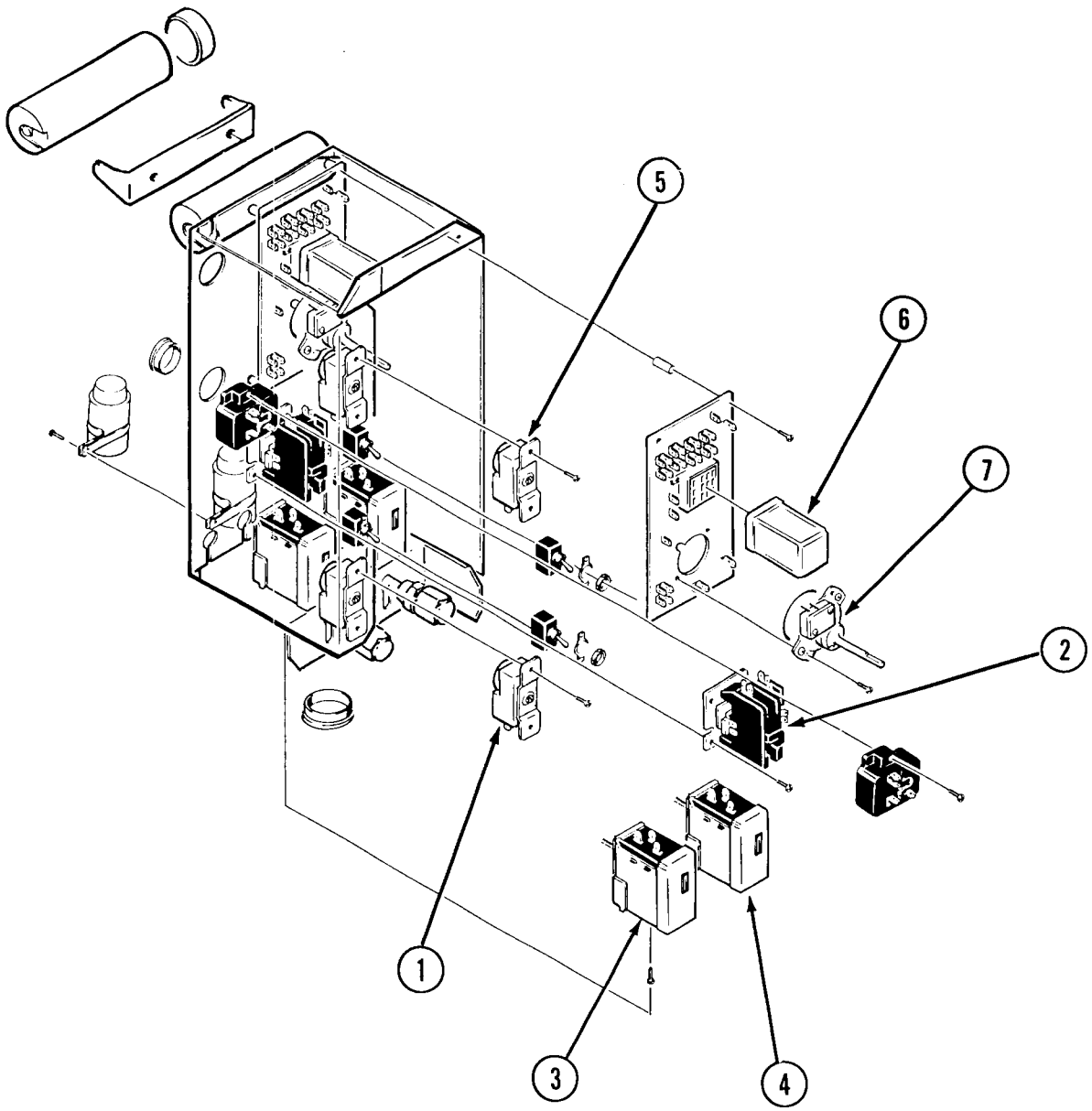

CM1400R COMPONENT DESCRIPTION

(1) BIN THERMOSTAT CONTROL

The bin thermostat control is located in the bottom of the control box. The sensing capillary tube of the control is routed from the control box through the inner left wall in the evaporator section to the bin thermostat control bracket hanging in the ice storage bin. The bin thermostat control functions to automatically shut OFF the icemaker when the ice storage bin is filled and ice contacts the capillary tube. It also signals the RESTART of the icemaker when the capillary tube starts to warm up after ice has been removed from the bin.

Bin thermostat control adjustment should ONLY be performed if premature shut off occurs or ice backs up into the freezing section of the cabinet. Adjust only in increments of one eighth turn of a screw at a time.

(2) COMPRESSOR CONTACTOR

The compressor contactor functions to carry the compressor line current. The contactor is wired so any control in the pilot circuit such as the bin thermostat, low pressure and high pressure controls, etc., will cause the contactor holding coil to be de-energized when the control contact OPENS; thereby, breaking the circuit to the compressor through the contactor points.

(3) REFRIGERANT HIGH PRESSURE CONTROL

The purpose of this safety control is to protect the unit from damage due to high refrigerant pressure. It also provides additional protection for the unit in high ambient temperatures. This is a manual reset control connected to the refrigeration system high-side. It is set to stop the unit completely when the high-side pressure reaches the preset limit.

(4) REFRIGERANT LOW PRESSURE PUMP DOWN CONTROL

The purpose of this switch is to control the compressor. It keeps the compressor on, to pump the refrigerant into the receiver, after the liquid line solenoid has closed. It also provides additional protection for the unit in case low ambient temperatures exist. This is an automatic reset control connected to the refrigeration system low side. It is set to stop the compressor when the low side pressure drops to less than 20 psig.

(5) CUBE SIZE CONTROL

The temperature sensing cube size control affects the length of the freezing cycle prior to initiating the finishing timer. The cube size control closes its contacts when the evaporator reaches a preset temperature starting the finishing timer. A variation in either ambient air or incoming water temperature will affect the efficiency of the refrigeration system. This will vary the length of timer it takes the evaporator to reach the temperature at which the cube size control is preset to CLOSE which, in turn, will affect the overall cycle time.

See *Cube Size Adjustment* BEFORE attempting to adjust the control.

(6) FINISH RELAY

The multi-function, three pole, double-throw plug-in relay is installed directly into a receptacle on the printed circuit board in the control box. The relay functions, in part, to by-pass the bin thermostat control to prevent the icemaker from shutting OFF when a filled-bin condition occurs during the freezing cycle. The by-pass action serves to ensure full-sized cubes with each harvest cycle and to prevent short cycling on the bin thermostat control.

(7) FINISHING TIMER — Timer & Switch Assembly.

The function of the finishing timer begins when activated by the cube size control. The outer surface, or large diameter lobe of the timer cam, determines the timer cycle for finish freezing of the ice cubes while the inner surface or small diameter lobe determines the time cycle for the harvest sequence. All electrical circuitry is connected through the printed circuit board and the finishing timer and double-throw microswitch. The microswitch is actuated by a cam assembly directly connected to the timer motor. The timer cam can be adjusted to vary the defrost time required.

CM1400R COMPONENT DESCRIPTION

(8) HIGH PRESSURE RECEIVER

Provides storage volume for refrigerant during cross ambient operation. The high pressure receiver is sized large enough to hold the entire refrigerant charge. During cold operation there is enough liquid in the receiver to maintain a liquid seal to the liquid line.

(9) LIQUID LINE SOLENOID VALVE

The liquid line solenoid valve provides positive shutoff of refrigerant flow for off cycle evaporator pump down.

(10) HOT GAS SOLENOID VALVE

The hot gas solenoid valve opens during the harvest cycle to divert the hot discharge gas from the compressor directly into the evaporator plates assembly to release ice cubes from the ice cube molds. The hot gas solenoid valve is comprised of two parts: the body and plunger and the coil and frame assemblies. Installed in the discharge line of the compressor, the energized solenoid coil lifts the valve stem within the valve body to cause the hot discharge gas to be diverted when the finishing timer has advanced to the start of the harvest cycle.

(11) WATER INLET SOLENOID VALVE

The water inlet solenoid valve opens during harvest to fill the sump assembly with water. Excess water overflows through a stand pipe located at the back of the sump to flush minerals from the sump.

(12) WATER DISTRIBUTION SYSTEM

The water distribution system functions to evenly supply water to all cells of the evaporator plates. The water pump pumps water from the sump up to the vertical tygon tube to a tee. From there,water is channeled through water manifolds to four water distributors, two atop each evaporator plate, and distributed evenly down both sides of each evaporator plate. Gravity flow returns the water to the sump reservoir for recirculation.

(13) THERMOSTATIC EXPANSION VALVE (TXV) (FBRE 1-1/2L)

The thermostatic expansion valve regulates the flow of refrigerant to the evaporator and reduces pressure of liquid refrigerant from condensing pressure to evaporating pressure.

(14) ACCUMULATOR

The accumulator traps liquid overfeed from the evaporator during harvest and meters it into the compressor at a controlled rate.

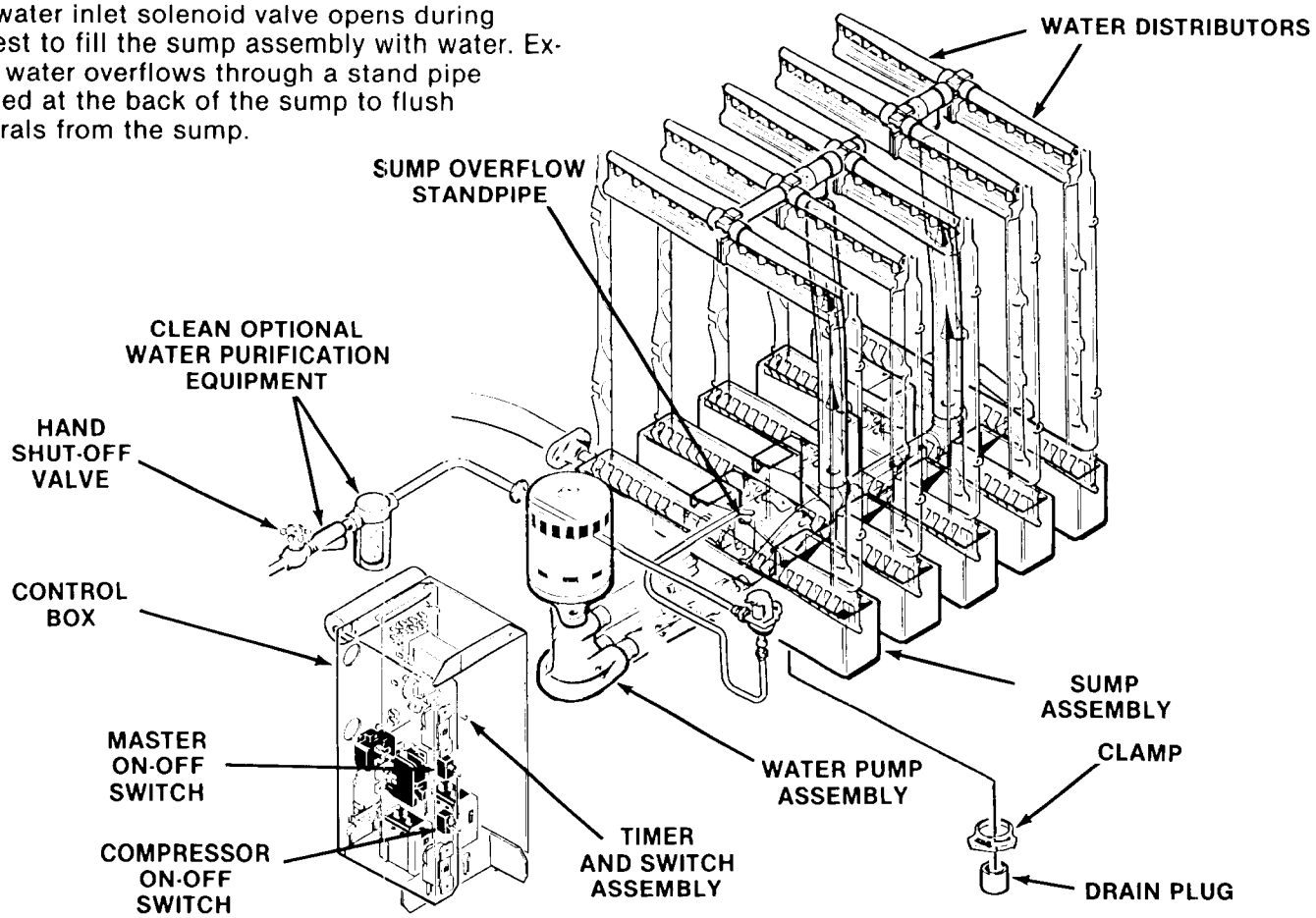

CM1400R COMPONENT DESCRIPTION

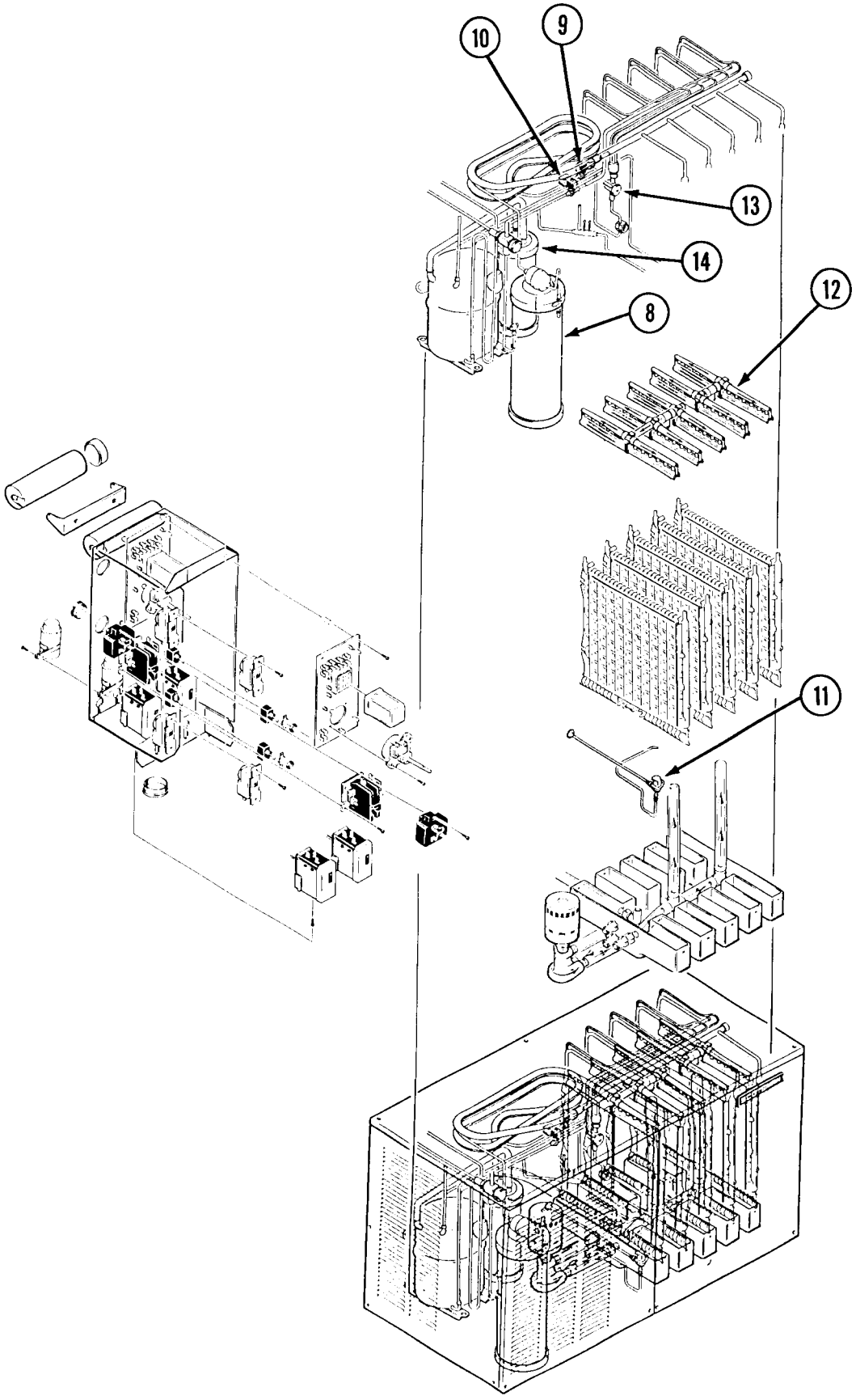

CM1400R SERVICE DIAGNOSIS

The service diagnosis section is for use in aiding the serviceman in diagnosing a particular problem for pin-pointing the area in which the problem lies, thus,an ever available reference for proper corrective action.

The following chart lists corrective actions for the causes of known symptoms of certain problems that can occur in the icemaking-refrigeration system.

ICEMAKING - REFRIGERATION SYSTEM

SYMPTOM	POSSIBLE CAUSE	CORRECTION
Irregular size cubes	Some distributor holes plugged.	Clean distributor holes.
		Clean water sump.
	Shortage of water.	See Shortage of water CORRECTION.
	Unit not level.	Level cabinet, as required.
Cubes too large.	Dirty air-cooled condenser.	Clean remote condenser.
	Cube Size Control set too cold.	Rotate Cube Size Control dial toward WARMER.
	Loss of refrigerant.	Check for refrigerant leaks, correct leaks; recharge system.
Cubes too small.	Cube Size Control set too warm.	Rotate Cube Size Control dial toward COLDER.
	Moisture in refrigeration system.	Blow refrigerant charge; replace drier; evacuate system; add proper refrigerant charge.
	Shortage of water.	See shortage of water CORRECTION.
	TXV valve super heat too high.	Replace valve.
Cloudy Cubes.	Shortage of water.	See Shortage of water SYMPTOM.
	Dirty water supply.	Install water filter or treatment system.
	Accumulated impurities.	Use SCOTSMAN Ice Machine Cleaner. See Cleaning Instructions.
Shortage of water.	Short harvest cycle.	Adjust cam of timer and switch assembly.
	Water leak in sump area.	Locate leak and correct condition.
	Partial restrictions in water strainer.	Clean or replace strainer.
	Low water pressure.	Check for incorrect supply line size or blockage.
		Check for low main pressure. If low, contact water company.

CM1400R
SERVICE DIAGNOSIS

SYMPTOM	POSSIBLE CAUSE	CORRECTION
Decreased Ice capacity.	High head pressure, result of dirty Condenser or faulty Fan Motor.	Clean Remote Condenser Fins. Repair or replace Fan Motor.
	Non-condensable gas in the system.	Purge the system and recharge per nameplate requirements.
	Overcharge of refrigerant.	Slowly purge off to correct charge.
	Hot gas solenoid valve leaking.	Replace valve.
	Defective Compressor. Check amp draw of Compressor.	Replace Compressor.
	Leaky inlet water valve.	Replace valve.
	High Ambient temperature for condenser	If possible, reduce condenser inlet air temperature.
Poor harvests. Icemaker does not harvest.	Too short defrost time.	Check and adjust harvest cycle.
	Restriction in water inlet line.	Check strainer and inlet water valve.
	Hot gas solenoid does not open. Binds or burned out.	Replace solenoid.
	Undercharge of refrigerant.	Charge to nameplate requirements.
	Water pressure too low.	Check for 20 PSI flowing water
	Head Pressure Regulator valve - low head.	Replace valve.
Compressor cycles intermittently.	Low voltage.	Check for circuit overload. Check building supply voltage, if low, contact power company.
	Cycling on Low Pressure Control.	Cold Ambient at Condenser. Pump down Solenoid Coil Open. Replace it.
Unit Trips on Hi Pressure Cut Out.	Dirty Condenser.	Clean Condenser with vacuum cleaner or brush. DO NOT USE A WIRE BRUSH.
	Defective Fan Motor.	Replace Fan Motor.
	Non-condensable gases in system.	Purge the system and recharge per nameplate requirements.
Frost on Compressor.	TXV Metering too much Refrigerant.	Superheat set too low. Adjust or replace valve.

CM1400R
SERVICE DIAGNOSIS

SYMPTOMS	POSSIBLE CAUSE	CORRECTION
Icemaker will not operate.	Blown fuse in line.	Replace fuse and check for cause.
	Master switch in OFF position.	Set switch to ON position.
	Faulty Master switch.	Replace switch.
	Timer contacts open.	Replace Timer.
	Improperly wired.	Contact electrical contractor for correction.
	Out of refrigerant, off on Low Pressure control.	Correct leak, recharge system
	High Pressure control tripped	Reset, check condenser.
	Bin control open.	Check Bin Control Unit in coldroom or bin control defective.
	Liquid Line Solenoid valve not opening - keeps unit pumped down.	Repair or replace valve.
	High Temp Switch open.	Check why Hot Gas Line too hot.
Icemaker will not go into the Harvest Cycle automatically.	Cube size Control will not close.	Replace Cube Size Control.
	Timer motor open.	Replace timer.
	Plug in relay contacts open.	Replace relay.
	Cube Size Control may not close if condensing pressure is too high.	Check condenser and discharge pressure.
Water overflows from the sump into the bin.	Restricted sump drain.	Repair drain.
	Inlet water valve lets in too much water.	Replace inlet valve.
Icemaker stays in the Harvest Cycle.	Plug in Relay Coil open.	Replace Relay.
	Timer Motor open or stuck.	Replace Timer.
	Timer Microswitch N.O. contacts. Will not close.	Replace Timer

REFRIGERANT CHARGE DIAGNOSIS

On this model, the refrigerant charge is adequate whenever the sight glass remains full of liquid refrigerant throughout the Freeze Cycle. HOWEVER, the condensing temperature will have a direct bearing on this. A unit with a marginal charge in summer will be undercharged when the outside air temperature drops. The only correct and accurate way to charge this unit is to weigh in the nameplate charge.

CM1400R ADJUSTMENT PROCEDURES

The procedures provided in this section are arranged in alphabetical order to make specific adjustment, removal and replacement information easy to locate.

Read the instructions thoroughly before performing any adjustment or removal and replacement procedures.

ADJUSTMENT OF THE CUBE SIZE CONTROL

CAUTION

BEFORE performing actual adjustment to the cube size control, check other possible causes for cube size problems. Refer to SERVICE DIAGNOSIS for problem review and analysis. DO NOT perform adjustment when a new cube size control is installed until the control bulb has been properly installed in the tube well on the refrigerant tube of the platen assembly and the icemaker has progressed through several complete freezing and harvest cycles. Observe size and quality of ice cubes and whether or not a cube size problem exists.

Adjustment on the cube size control is performed to cause either larger sized ice cubes or smaller sized ice cubes to be produced.

To produce LARGER sized ice cubes:

1. Locate the cube size control in the left end of the control box.
2. Rotate the adjusting screw one-eighth of a turn CLOCKWISE toward COLDER.
3. Observe size of ice cubes in next two ice cube harvests and repeat step 2 above, in one-eighth turn increments, until desired ice cube size is achieved.

To produce SMALLER sized ice cubes:

1. Locate the cube size control in the left end of the control box.
2. Rotate the adjusting screw one-eighth of a turn COUNTERCLOCKWISE toward WARMER.
3. Observe size of ice cubes in next two ice cube harvests and adjust in one-eighth turn increments, until desired ice cube size is achieved.

ADJUSTMENT OF THE TIMER & SWITCH ASSEMBLY

The timer and switch assembly is factory set, so one complete revolution of the cam on the timer represents 8 minutes. 5-1/2 minutes comprise the freezing cycle event during cam rotation and the final two and one-half minutes program the defrost and harvest cycle.

WARNING

Disconnect electrical power supply to icemaker whenever adjustment procedures are performed.

TO ADJUST THE TIMER & SWITCH ASSEMBLY:

A. HARVEST CYCLE: Slowly rotate the shaft of the timer and switch assembly located in the control box CLOCKWISE until the actuator arm on the microswitch initiates the harvest cycle. An audible click can be heard but in a noisy area, look at the cam and switch to observe the event.

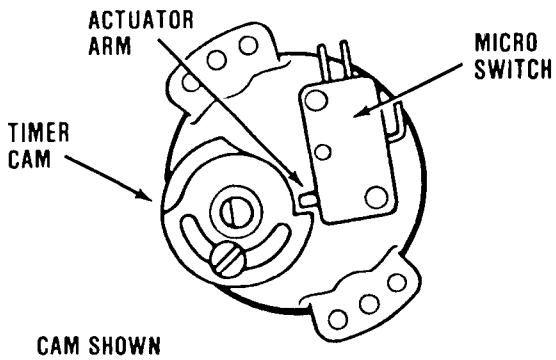

CAM SHOWN AT BEGINNING OF HARVEST CYCLE

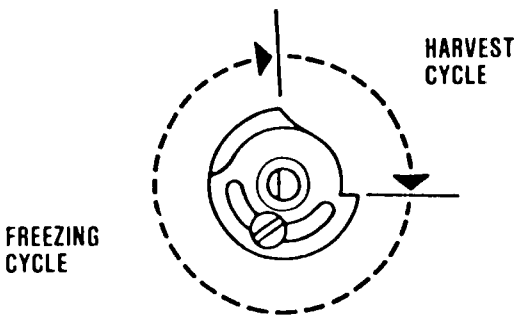

CAM SHOWN DIVIDED INTO TYPICAL FREEZING & HARVEST CYCLES

B. FREEZING CYCLE: Slowly rotate the shaft of the timer and switch assembly located in the control box CLOCKWISE until the actuator arm on the microswitch initiates the freezing cycle.

C. The length of the harvest cycle can be changed by loosening the adjustment screw on the cam. The minimum harvest setting is two minutes, the maximum is four minutes. It is important that the length of the harvest cycle allow enough time for all the ice cubes to fall from the evaporator. Too short of a time will cause the evaporator to freeze up and stop ejecting ice into the bin. Too much time wastes icemaking capacity, energy and water. Adjustment of the harvest cycle may require a corresponding adjustment of the cube size control.

WARNING

Be sure the electrical power supply and the water supply to the icemaker are OFF BEFORE starting any of the following REMOVAL AND REPLACEMENT procedures as a precaution to prevent possible personal injury or damage to equipment.

WARNING

Be sure the electrical power supply circuit breaker and the inlet water supply are OFF BEFORE starting any of the following REMOVAL AND REPLACEMENT procedures as a precaution to prevent possible personal injury or damage to equipment.

REMOVAL AND REPLACEMENT OF THE BIN THERMOSTAT CONTROL

To remove the bin thermostat control:

1. Remove screws and remove the front panel.
2. Remove screws and the control box cover.
3. Remove the bin thermostat capillary tube from the bin thermostat bracket and from the capillary clips.
4. Remove screws and the bin thermostat control.
5. Remove electrical leads.

To replace the bin thermostat control, reverse the removal procedure.

REMOVAL AND REPLACEMENT OF THE COMPRESSOR ASSEMBLY

To remove the compressor assembly:

1. Remove screws and remove the front panel.
2. Remove screws and remove left side panel.
3. Bleed off or blow the refrigerant charge through the Schrader valve.
4. Remove the cover from the terminal box on the compressor, then, remove electrical leads from the compressor.
5. Unsolder suction, discharge and process header from compressor.
6. Remove four bolts and washers which secure the compressor to the chassis mounting base.
7. Remove the compressor from the cabinet.

Always install a replacement drier anytime the sealed refrigeration system is opened. Do not replace the drier until all other repair or replacement has been completed.

REMOVAL AND REPLACEMENT OF THE CUBE SIZE CONTROL

To remove the cube size control:

1. Remove screws and remove the front panel.
2. Remove screws and control box cover.
3. Remove the coiled capillary tube bulb from sensing well on the evaporator outlet line.
4. Remove electrical leads from the cube size control.
5. Remove screws and the cube size control.

To replace the cube size control, reverse the removal procedure.

REMOVAL AND REPLACEMENT OF THE DRIER

To remove the drier:

1. Remove screws and remove the front panels.
2. Bleed off or blow the refrigerant charge through the Schrader valve.
3. Unsolder refrigeration lines at both ends of the drier and remove the drier.

Always install a replacement drier anytime the sealed refrigeration system is opened. Do not replace the drier until all other repair or replacement has been completed.

To replace the drier:

CAUTION

If the factory seal is broken on the replacement drier exposing it to the atmosphere more than a few minutes, the drier will absorb moisture from the atmosphere and lose substantial ability for moisture removal.

Be sure the replacement drier is installed with the arrow positioned in the direction of the refrigerant flow.

1. Remove the factory seals from the replacement drier and install the drier in the refrigerant lines with the arrow positioned in the direction of the refrigerant flow.
2. Solder the drier into the lines, two places, taking precautions to NOT OVERHEAT the drier body during installation soldering.
3. Purge the system and check for leaks.
4. Thoroughly evacuate the system to remove moisture and non-condensables.
5. Charge the system with refrigerant by weight. SEE NAMEPLATE.
6. Replace and attach the left side panel.

REMOVAL AND REPLACEMENT PROCEDURES

REMOVAL AND REPLACEMENT OF THE EVAPORATOR PLATE ASSEMBLY

To remove an evaporator plate:

1. Remove screws and remove the right front panel.
2. Remove screws and remove cabinet top panel.
3. Remove screws and remove front braces from the cabinet assembly.
4. Bleed off or blow the refrigerant charge through the Schrader valve.
5. Unsnap from the evaporator and remove the water reservoir.
6. Disconnect Tygon water inlet tube at the water manifold tee above the evaporator plate.
7. Slide the water distributor tube on the left about 1/8-inch along the top of the evaporator plate until the water distributor tube can be unsnapped from the flexible notch.

//////////////////// CAUTION ////////////////////

Use EXTRA PRECAUTION to protect the plastic parts during the next step to unsolder the refrigerant lines, two places, at the top of the evaporator plate. Position wet cloths over top of plates, as well as over the plastic liner at the rear, to prevent accidental head damage or possible fire from torch flame.

//

8. Unsolder and remove the refrigerant lines at the top of the evaporator plate.
9. Remove screws and remove sump covers.

Always install a replacement drier anytime the sealed refrigeration system is opened. Do not replace the Drier until all other repair or replacement has been completed.

To replace the Evaporator Plate, reverse the removal procedure.

REMOVAL AND REPLACEMENT OF THE INLET WATER SOLENOID VALVE ASSEMBLY

To remove the inlet water valve assembly:

1. Shut OFF water supply to machine.
2. Remove screws and remove front left panel.
3. Loosen and remove inlet water line fitting from the inlet water solenoid valve assembly.
4. Remove screws and pull the water solenoid valve out.
5. Remove inlet water Tygon tubing from the water solenoid valve.

To replace the inlet water valve assembly, reverse the removal procedure.

REMOVAL AND REPLACEMENT OF THE WATER DISTRIBUTOR TUBES AND MANIFOLD TUBES

To remove the water distributor tube and manifold tube:

1. Remove screws and remove the right front panel.
2. Slide the water distributor tube to the left about 1/8-inch along the top of the evaporator plate until the water distributor tube can be unsnapped from the flexible notch and lifted upward at the right side.
3. Unsnap and disconnect water distributor tubes from the water manifold section.
4. To replace the water distributor tubes and manifold tubes, reverse the removal procedure. BE SURE the notches in the water manifold tubes properly engage the alignment keys in the tee.

BE SURE the water distributor tube is securely fastened at the notch at both sides of the evaporator plate.

Check identical attachment for the left water distributor tube and notch, also, that the distributor/manifold connections at the top center of each evaporator plate is snug against the top of the plate.

REMOVAL AND REPLACEMENT OF THE WATER PUMP ASSEMBLY

////////////////////// **WARNING** //////////////////////

Disconnect electrical power supply to icemaker whenever adjustment procedures are performed.

//

To remove the water pump assembly:

1. Remove screws and remove the front left panel.
2. Remove the Tygon tube clamps to the pump assembly.
3. Disconnect electrical leads from the water pump assembly.
4. Remove screws and the water pump from the machine.

To replace the water pump assembly, reverse the removal procedure.

CHARGING PROCEDURES

Particular care must be taken when recharging this remote system. No liquid refrigerant may be placed in the system at the compressor. DO NOT use the Schrader valves at the front of the machine for weighing in the charge. All liquid R-502 must be weighed into the receiver through the "front seated" King Valve.

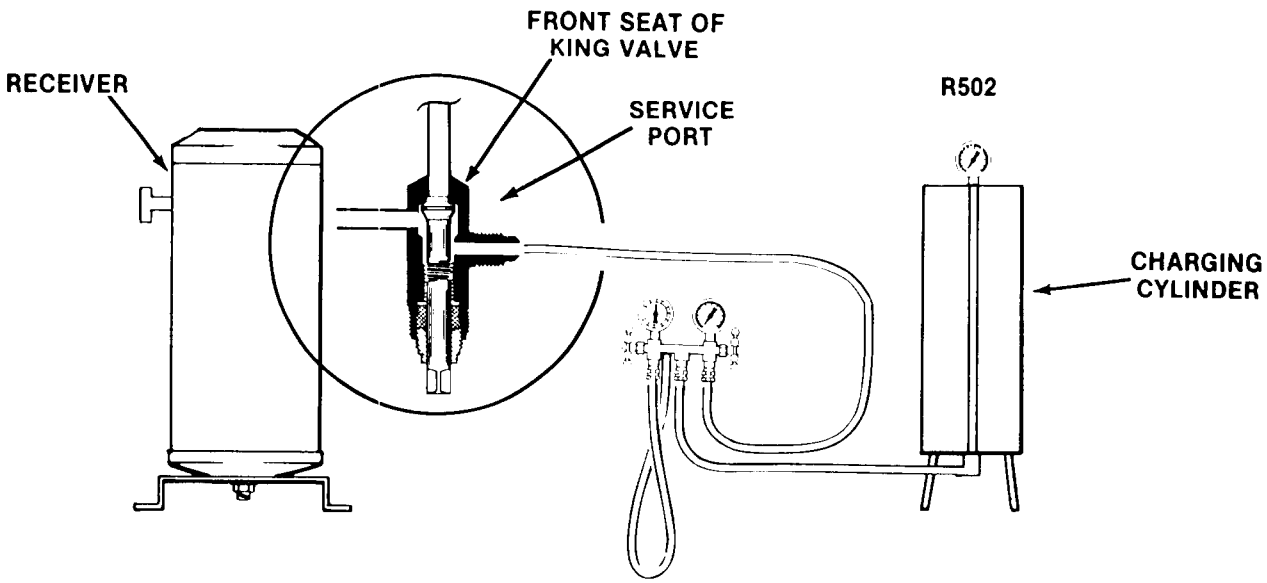

BH750/1000 BIN

BH750 MODULAR BIN

BH750 BIN

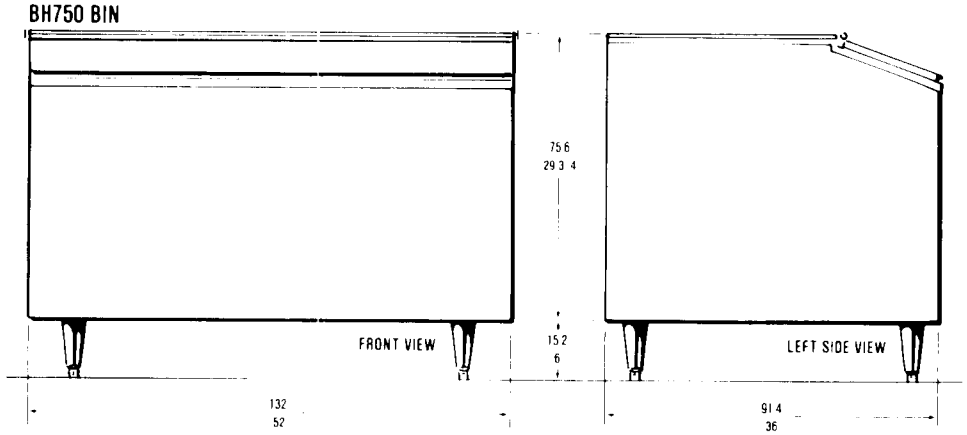

BH1000 STORAGE BIN

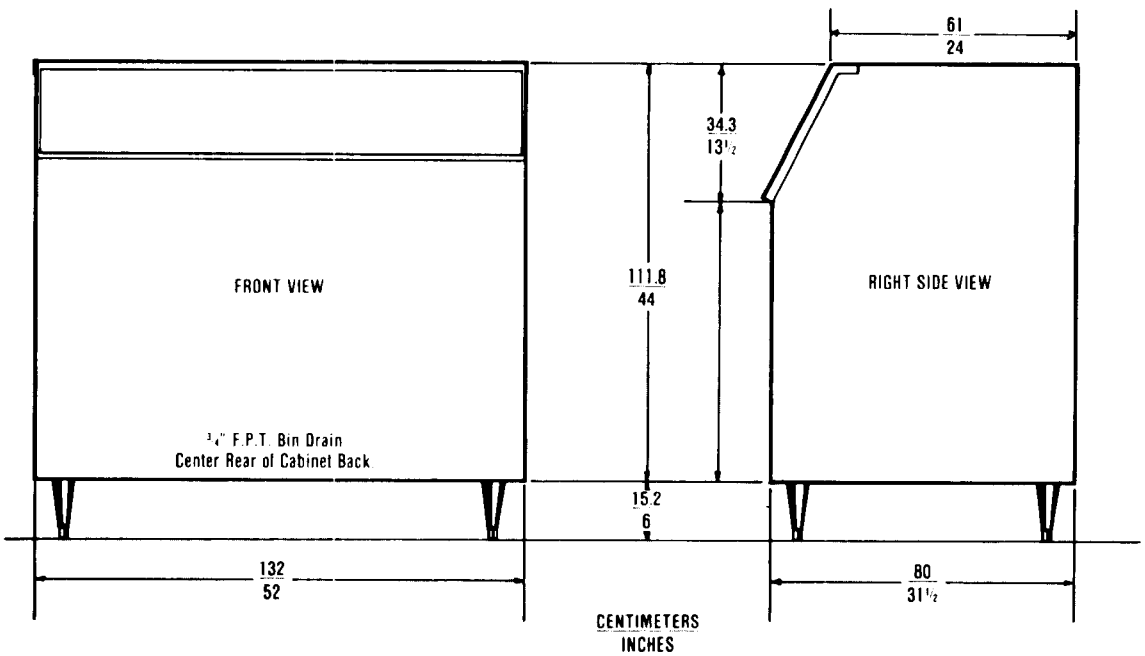

CM450D

TABLE OF CONTENTS

GENERAL INFORMATION & INSTALLATION
- For the Installer 2
- For the Electrician 6
- For the Plumber 7
- Final Checklist 8

OPERATION
- Start-Up 9
- Operation 12
- Operation - Electrical Sequence 14

MAINTENANCE & CLEANING INSTRUCTIONS
- Icemaker 17
- Ice Storage Bin 17
- Cleaning - Icemaker 17

COMPONENT DESCRIPTION 20

SERVICE DIAGNOSIS 24

ADJUSTMENT PROCEDURES
- Bin Thermostat Control 26
- Water Regulator Assembly (Water-Cooled) 26
- Cube Size Control 27
- Timer & Switch Assembly 27

REMOVAL AND REPLACEMENT PROCEDURES
- Drier 28
- Evaporator Plate Assembly 28
- Compressor Assembly 29
- Condenser (Air-Cooled) 30
- Condenser (Water-Cooled) 30
- Fan Motor (Air-Cooled) 30
- Cube Size Control 31
- Water Distributor Tubes and Manifold Tubes 31
- Bin Thermostat Control 31
- Inlet Water Solenoid Valve Assembly 31
- Water Pump Assembly 32

LIST OF ILLUSTRATIONS

- Specifications 3
- Component Location 4
- Stacking Instructions 5
- Electrical Connections 6
- Water & Drain Connections 7
- Final Checklist 8
- Timer Cam Positions 9
- Ice Cube Size and Shape 10
- Cube Size Adjustment 11
- Freezing Cycle 12
- Harvest Cycle 13
- Maintenance & Cleaning 18
- Component Description 19
- Adjustment Procedures 26
- Removal and Replacement 29

PARTS LIST AND WIRING DIAGRAMS 1
(Printed in Yellow)

PARTS LIST:
- Component Location 3
- Cabinet Assembly (Part I) 4
- Cabinet Assembly (Part II) 5
- Air-Cooled Refrigeration System 6
- Water-Cooled Refrigeration System 7
- Water System 8
- Control Box 9

WIRING DIAGRAMS:
- CM450AE-32C (208-230/60/1) Air-Cooled 10
- CM450WE-32C (208-230/60/1) Water-Cooled . 11
- CM450AE-32D (208-230/60/1) Air-Cooled 12
- CM450WE-32D (208-230/60/1) Water-Cooled . 13

THIS PAGE
INTENTIONALLY
LEFT BLANK

CM450D FOR THE INSTALLER

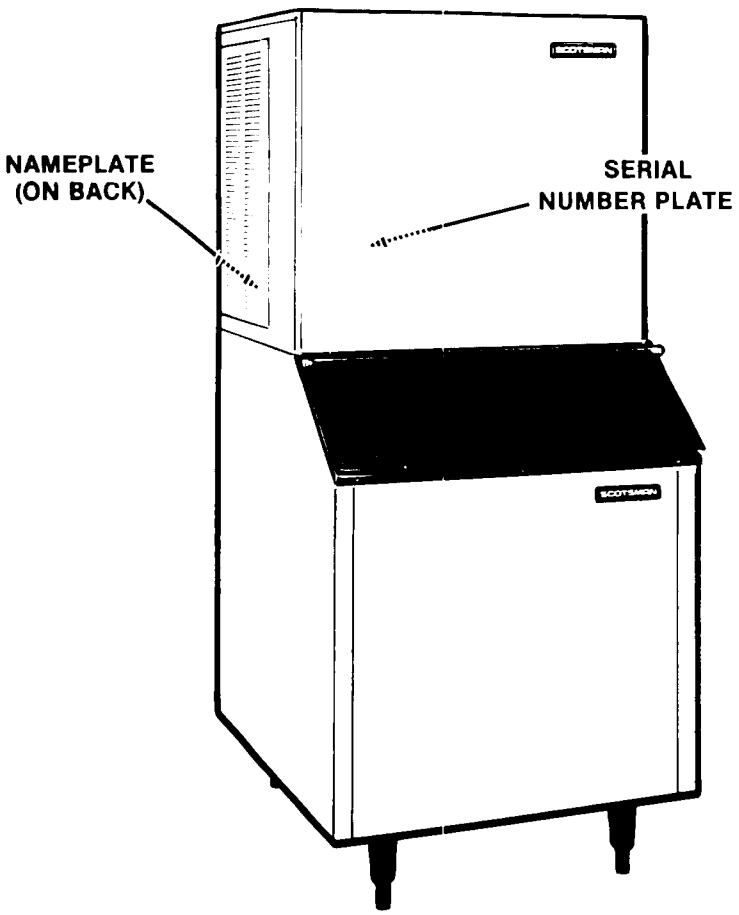

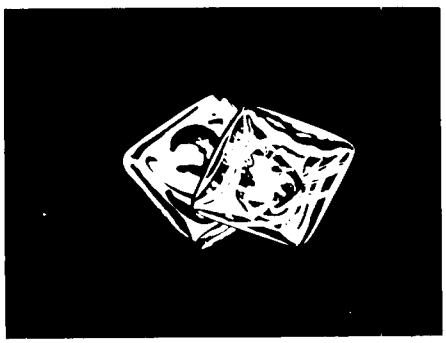

SCOTSMAN CONTOUR CUBE

INTRODUCTION

These instructions provide the specifications and the step-by-step procedures for the installation, start up and operation for the Scotsman Model CM450D Modular Cuber.

The Model CM450D Modular Cubers are quality designed, engineered and constructed, and are thoroughly tested icemaking systems, providing the utmost in flexibility to fit the needs of a particular user.

NAME PLATE

MODEL NUMBER
SERIAL NUMBER
A.C. SUPPLY VOLTAGE
MINIMUM CIRCUIT AMPACITY — WIRES
MAXIMUM FUSE SIZE * — HERTZ
HEATER WATTS — PHASE
REFRIGERANT — CHARGE — OZ

MOTORS	VOLTS	R.L.A./F.L.A.	W/HP.	L.R.A.
COMPRESSOR				
FAN				
DRIVE				
OTHER				

DESIGN PRESSURE — LOW — HIGH
* OR HACR TYPE CIRCUIT BREAKER

SCOTSMAN

SERIAL NUMBER PLATE

MODEL NUMBER
SERIAL NUMBER
VOLTS/HERTZ/PHASE
MAXIMUM FUSE SIZE
REFRIGERANT — CHARGE — OZ

This product qualifies for the following listings:

This icemaker has been engineered to our own rigid safety and performance standards. The National Sanitation Foundation (NSF) seal, signifies that it is listed with NSF and that it complies with the materials and construction standards of NSF. In addition, the Underwriters Laboratories, Inc., (UL) Listing Mark and the Canadian Standards Association (CSA) Monogram, both signify that its construction and design have been inspected and tested by them. NSF, UL and CSA inspectors also periodically examine production icemakers at the factory, to assure continued compliance.

To retain the safety and performance built into this icemaker, it is important that installation and maintenance be conducted in the manner outlined in this manual.

CM450D FOR THE INSTALLER

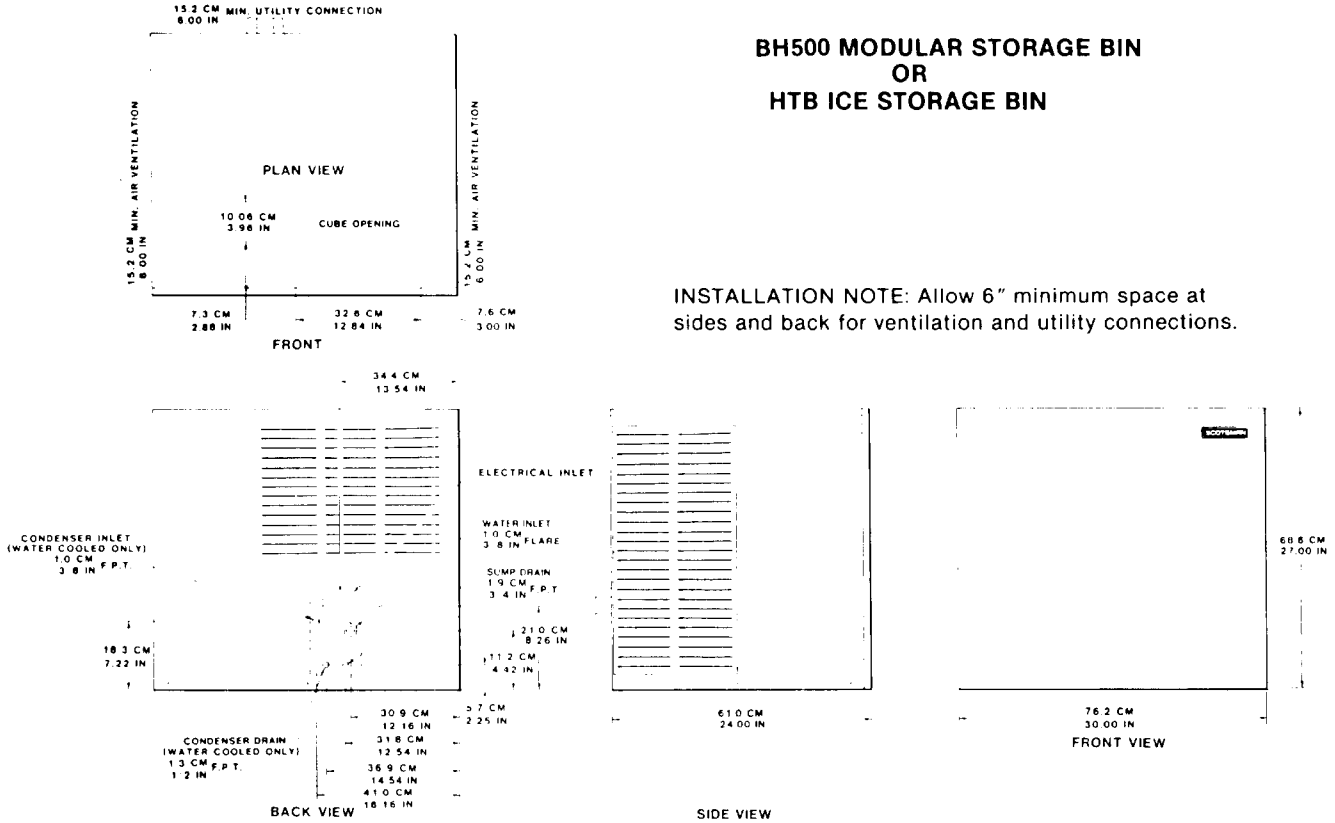

BH500 MODULAR STORAGE BIN
OR
HTB ICE STORAGE BIN

INSTALLATION NOTE: Allow 6" minimum space at sides and back for ventilation and utility connections.

We reserve the right to make product improvements at any time. Specifications and design are subject to change without notice.

SPECIFICATIONS

Model Number	(Height - w/o Legs) Dimensions H" x W" x D"	Cube Size	Cond. Unit	Finish **	Basic Electrical	Comp. H.P.	No. of Wires	Min. Circuit Ampacity †	* Max. Fuse Size	Ship. Wt. lbs./kg.
CM450AE-32D	27 x 30 x 24	Contour	Air	ES	208-230/60/1	1.0	2	18.0	20	175/79

Ice production capacity at 90°A/70°W
Air-cooled: 300 lbs.

** (ES) Sandalwood, Leathergrain embossed steel with high gloss baked enamel finish.
† Use this value to determine minimum wire size as per National Electric Code Standards.

★ Or HACR type circuit breakers.

IMPORTANT OPERATING REQUIREMENTS

	MINIMUM	MAXIMUM
Air Temperatures	50°F (10.0°C)	100°F (38°C)
Water Temperatures	40°F (4.4°C)	100°F (38°C)
Water Pressures	20 lbs. gauge	120 lbs. gauge
Electrical Voltage Variations Voltage rating specified on nameplate	−5%	+10%

Extended periods of operation exceeding these limitations constitutes misuse under the terms of Scotsman Manufacturer's Limited Warranty, resulting in a loss of warranty coverage.

NOTE: CM450's were manufactured in "A", "C" and "D" series. As CM450AE-1C vs. CM450AE-1D. This manual is primarily for the "D" series, but applies as well to the prior models.

STORAGE BIN

The CM450D stacks onto Scotsman Bin Model's BH500, HTB500 or HTB350.

Refrigerant R502
Charge per nameplate rating.

STANDARD LEGS: Furnished with storage bin. Four metal legs screw into mounting plates on cabinet base. Provide 6" minimum height including adjustable leveling foot. Black enamel finish.

OPTIONAL LEG KIT, KLP2S:
Nickel plated, brushed metal finish with stainless steel foot. Recommended for stainless steel cabinets.

SPKCMD-1:
Optional stainless steel panel kit for CM450D model.

CM450D FOR THE INSTALLER

AIR-COOLED ASSEMBLY

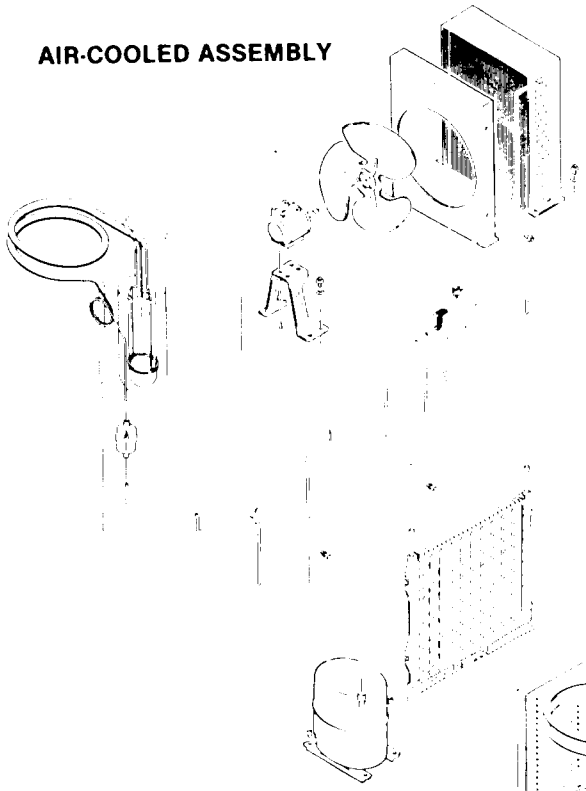

WATER SYSTEM

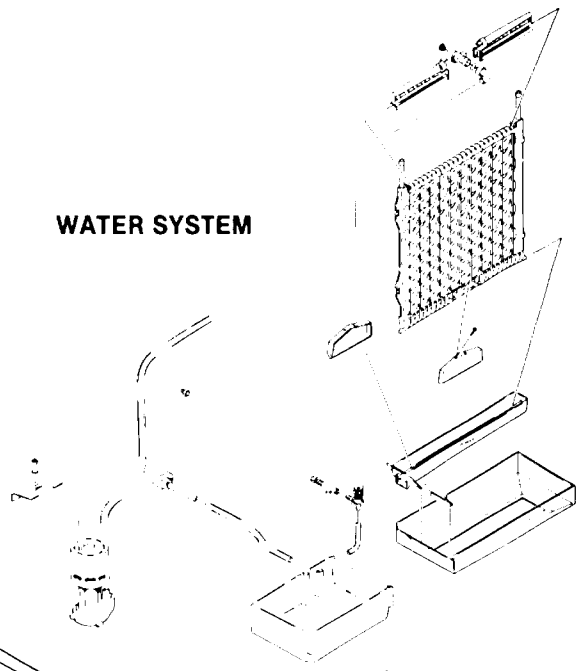

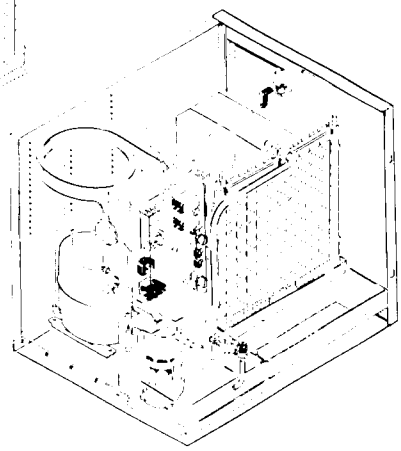

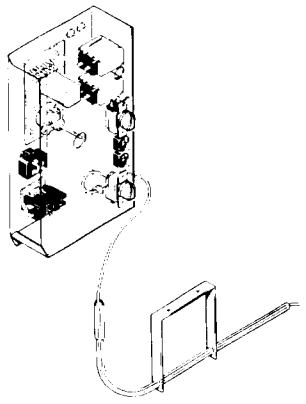

BIN THERMOSTAT BRACKET

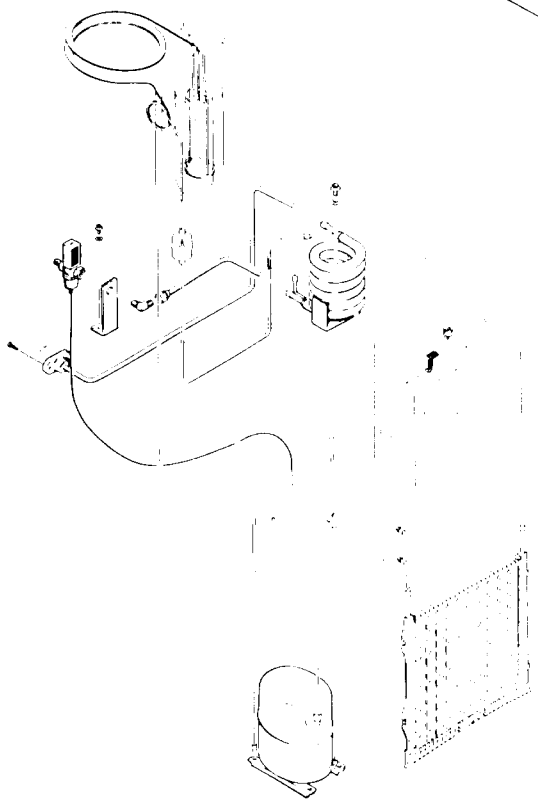

WATER-COOLED ASSEMBLY

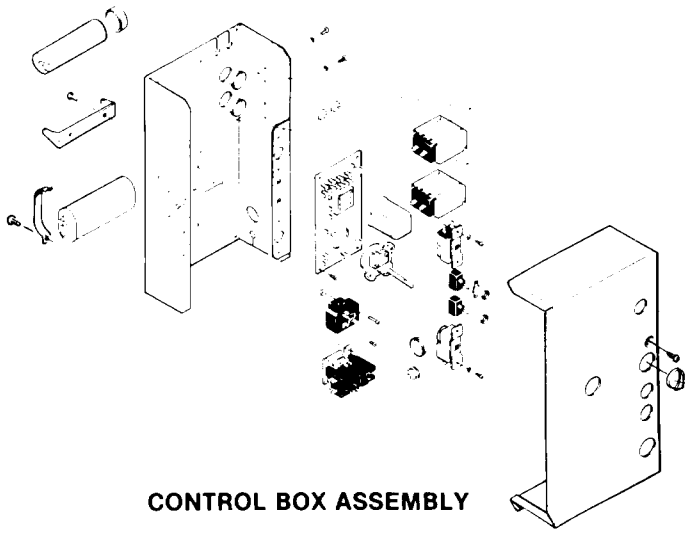

CONTROL BOX ASSEMBLY

CM450D FOR THE INSTALLER

LOCATION & LEVELING

1. Arrange for proper electric, water and drain. See instructions for the plumber and for the electrician.
2. After mounting the legs, position the ice storage bin in the selected location which should have a minimum room temperature of 50-degrees F. and maximum room temperature of 100-degrees F. Level the bin, adjusting the leg levelers in both the front to rear and side to side directions. Select a well-ventilated location for the air-cooled condenser.
3. Inspect the bin top mounting gasket which should be flat, with no wrinkles, to provide a good water seal when the Cuber is installed on top of the bin. Remove baffle from bin to gain access.
4. Install the modular cuber on top of the bin using care to be sure a good seal is made between the two cabinets. Align the holes in the bottom rear of the cabinet to mate with the two mounting straps on the top rear of the bin.
5. Use bolts and straps found in hardware package to secure the ice machine. When alignment and leveling are completed, tighten the bolts to secure the mounting straps.

STACKING INSTRUCTIONS

NOTE: Only stack "D" models onto "D" models.

DO NOT stack "D" models onto "C" or "A" models.

When stacking two units, remove the top panel from the lower icemaker. (The top removed from the lower icemaker will no longer have any function.)

Carefully lift the uncrated top unit onto the bottom one and align the two cabinets. Use of a mechanical lift is recommended for this step.

At the back of the two icemakers, bolt the upper icemaker cabinet to the lower icemaker cabinet using the mounting straps and bolts from the hardware package.

BIN THERMOSTAT INSTALLATION

1. Remove cap from bin thermostat bracket. Insert bin thermostat bracket up through routing hole in sump.
2. Attach the bin thermostat bracket to the bottom of the cuber base using the thumb screws and threaded holes provided.
3. Carefully uncoil the capillary tube to the icemaker and route the capillary tube through the routing hole provided in the sump and through the full length of the bin thermostat bracket.

NOTE: When stacking, route the bin thermostat control from the upper ice machine through the routing hole provided in the sump of the lower icemaker and through the bin thermostat control bracket.

NOTE: Extend bin thermostat capillary tube through entire length of the tubular section of the bin thermostat bracket. When properly installed, the tip of the capillary tube should be flush with the tip of the bin thermostat bracket.

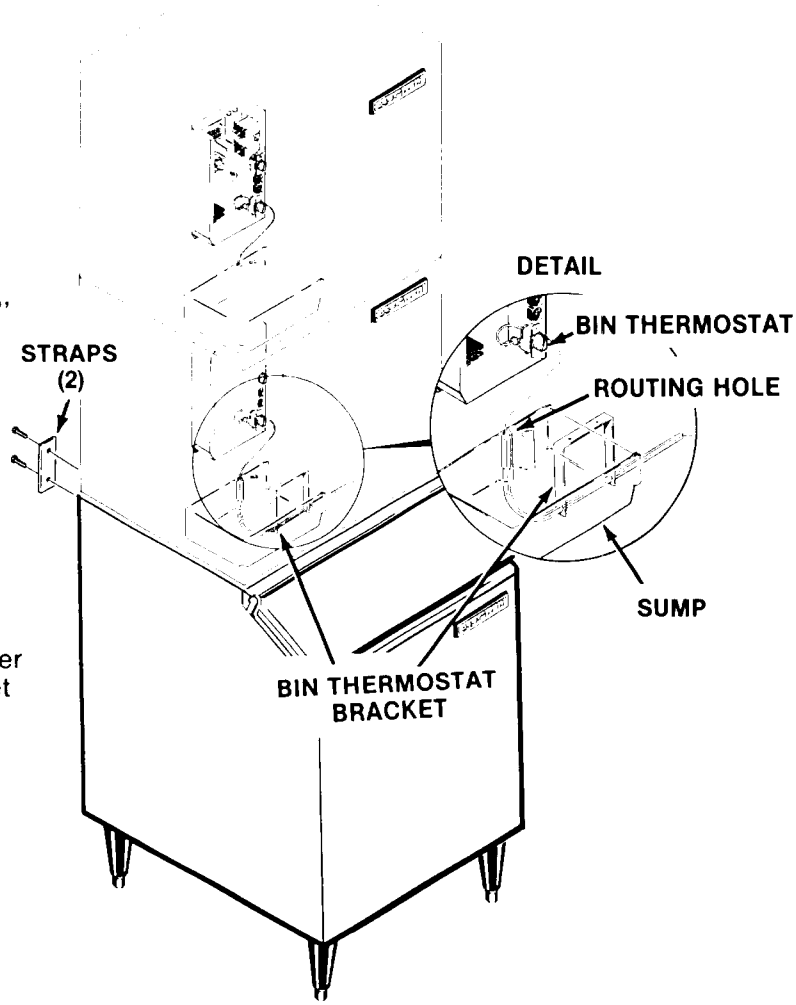

CM450D FOR THE ELECTRICIAN

CONFORM TO ALL APPLICABLE CODES

ELECTRICAL CONNECTIONS

SEE NAMEPLATE for current requirements to determine wire size to be used for electrical hookup. The cuber requires a solid chassis-to-chassis earth ground wire. See Wiring Diagram.

Be certain the cuber is connected to its own electrical circuit and individually fused. Voltage variation should not exceed ten percent of the nameplate rating, even under starting conditions. Low voltages can cause erratic operation and may be responsible for serious damage to the icemaker.

Electrical connections are made at the rear of the icemaker, inside the junction box.

All external wiring should conform to the national, state and local electrical code requirements. Usually an electrical permit and services of a licensed electrician will be required.

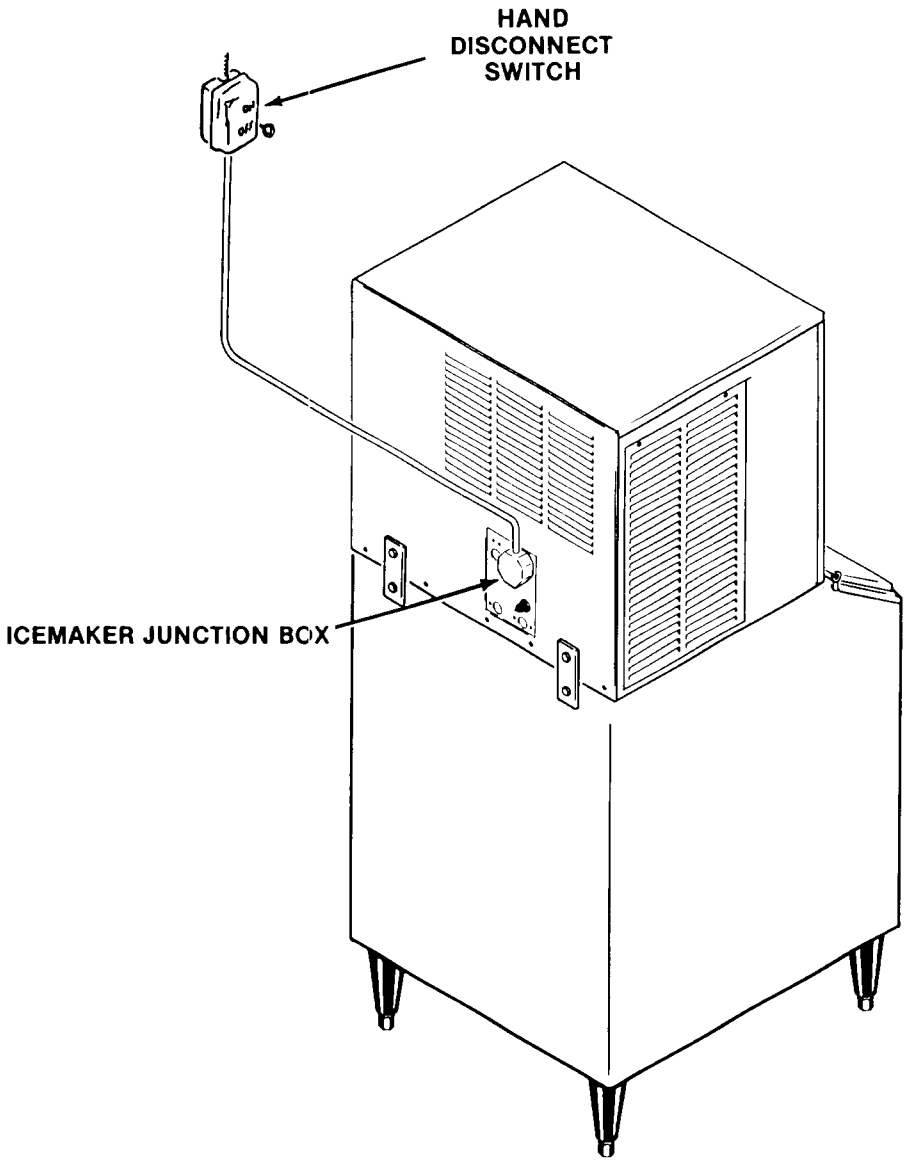

CM450D FOR THE PLUMBER

CONFORM TO ALL APPLICABLE CODES

WATER SUPPLY AND DRAIN CONNECTIONS

The recommended water supply line is a 3/8-inch O.D. copper tubing with a minimum operating pressure of 20 PSIG and a maximum of 120 PSIG. Connect to cold water supply line with standard plumbing fittings, with shutoff valve installed in an accessible place between the water supply and the cuber. In some cases a plumber will be required.

DRAIN CONNECTIONS: All drains are gravity type and must have a minimum of 1/4-inch fall per foot on horizontal runs. The drains to be installed to conform with the local plumbing code. Install a vertical open vent on drain line high point to ensure good draining. The ideal drain receptacle is a trapped and vented floor drain.

Recommended bin drain is 5/8-inch O.D. copper tubing and should be vented and run separately. Insulation for high humidity areas is recommended.

The ice machine sump drain is 3/4" FPT. There must be a vent at this connection for proper sump drainage.

WATER-COOLED MODELS: On water-cooled models, a separate cold water supply inlet is required, to be connected to a second 3/8-inch female pipe thread (FPT) fitting at the rear of the cabinet. Additional drain lines are required to drain the water-cooled condenser, and they must not interconnect to any other of the units drains.

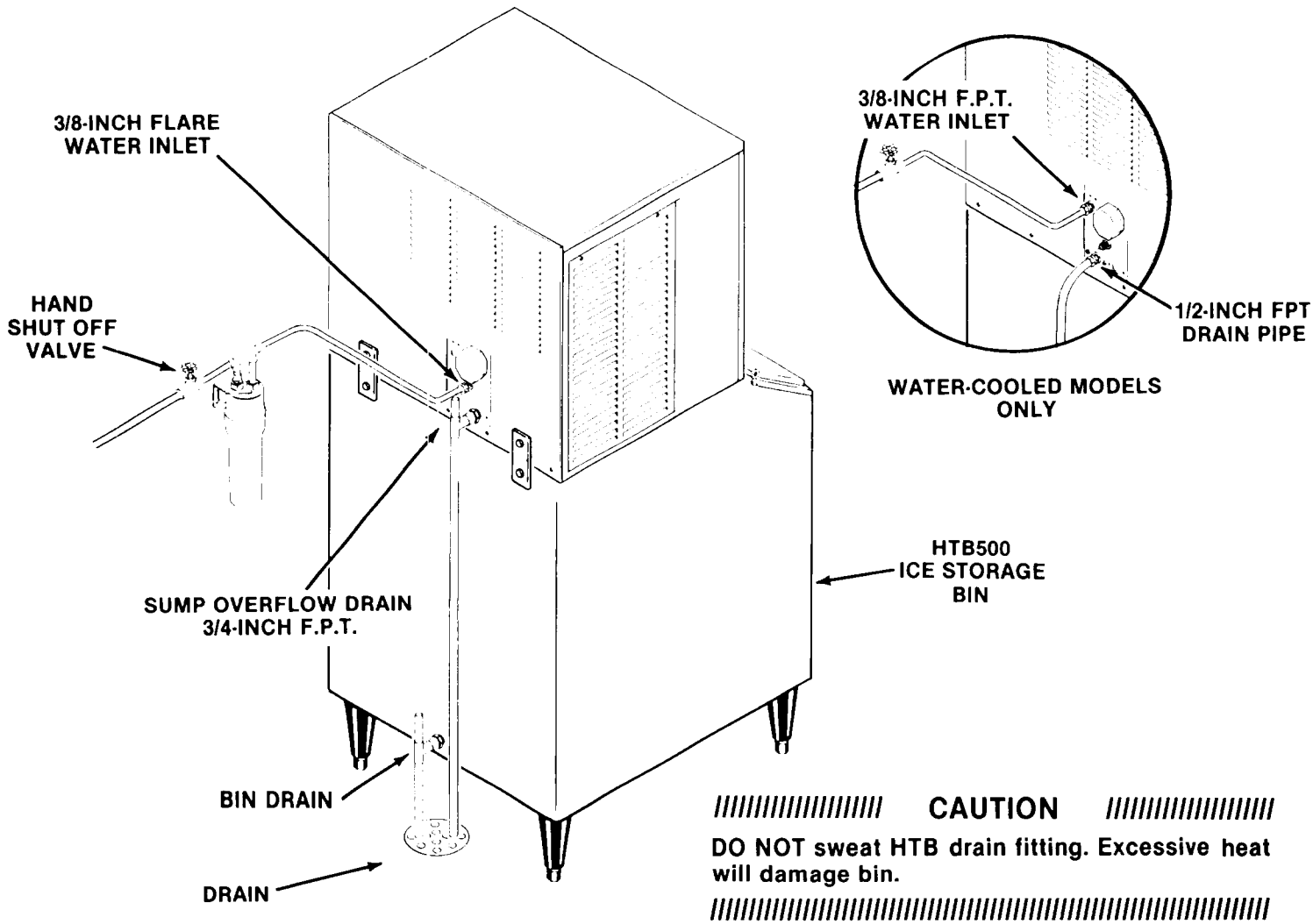

CAUTION

DO NOT sweat HTB drain fitting. Excessive heat will damage bin.

Water Supply and Drain Connection

CM450D FOR THE INSTALLER

FINAL CHECK LIST

1. Is the cabinet in a room where ambient temperatures are within the minimum and maximum temperatures specified?
2. Is there at least six inches clearance at both sides of the cabinet for proper air circulation? (Air-Cooled models)
3. Has water supply pressure been checked to insure a minimum of 20 PSIG and a maximum of 120 PSIG operating pressure?
4. Is the cabinet level?
5. Check that any shipping material has been removed from inside the cabinet.
6. Has the bin thermostat and bracket been properly installed?
7. Check that the drain troughs are properly secured to the bottom of the evaporator plates.
8. Have all electrical and piping connections been made?
9. Is the water supply line shut-off valve installed and electrical wiring properly connected?
10. Check all refrigerant lines and conduit lines, to guard against vibration or rubbing and possible failure.
11. Have the bin and cabinet been wiped clean?
12. Has the Manufacturer's Registration Card been properly filled out? Check for correct model and serial numbers from Serial nameplate, then mail the completed card to the SCOTSMAN factory.
13. Has the owner/user been given the Service Manual and instructed how to operate and maintain the icemaker?
14. Has the owner been given the name and telephone number of the authorized SCOTSMAN Service Agency serving him?

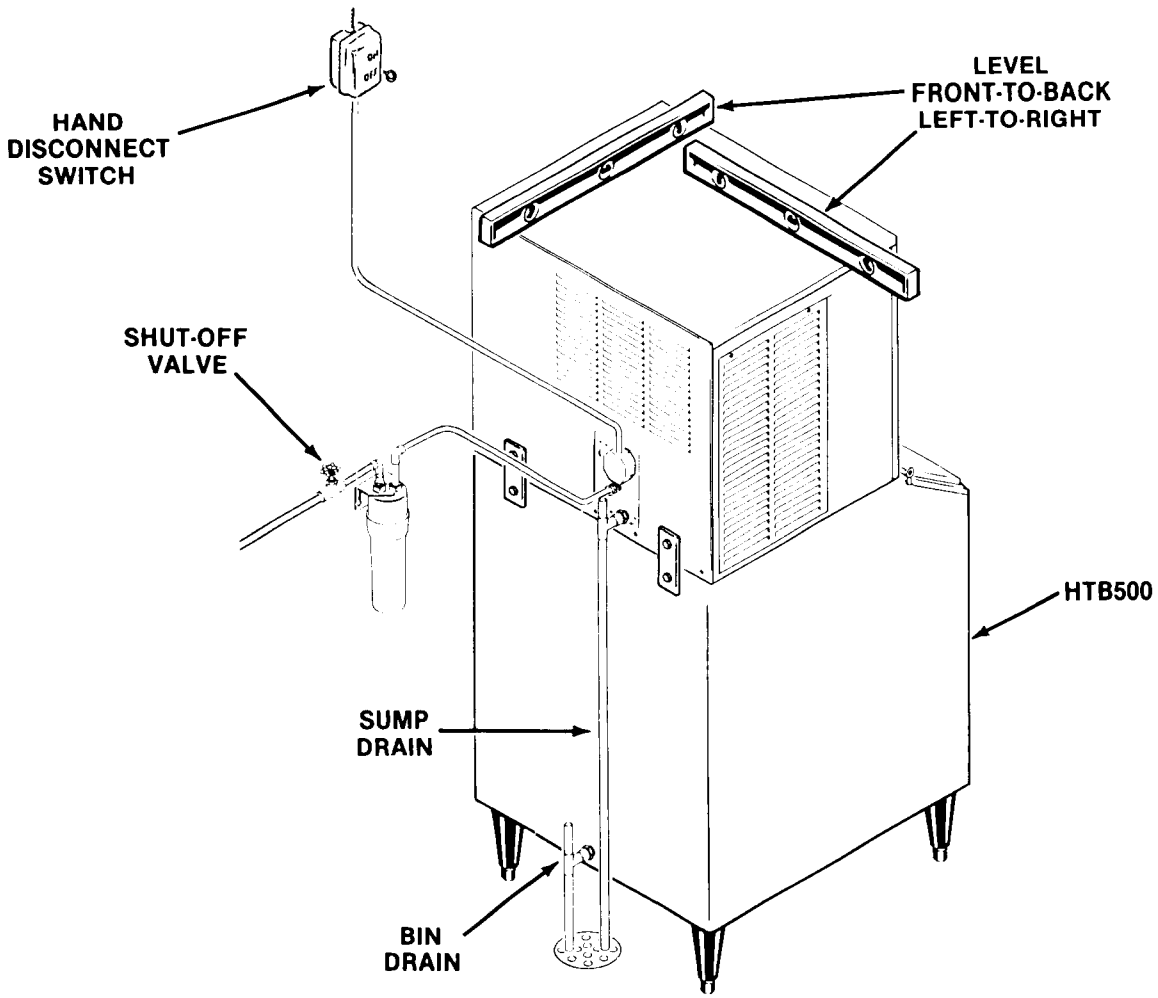

CM450D START-UP

START-UP

1. Remove front panel by pulling out to unsnap.
2. Remove two screws and the control box cover.
3. Remove four thumb screws and the evaporator cover.
4. Check that the two toggle switches, the MASTER ON-OFF toggle switch and the COMPRESSOR ON-OFF toggle switch are in the OFF position, on the control box.
5. OPEN the water supply line shutoff valve.
6. Inside the control box is the shaft of the timer and the switch assembly. Rotate the shaft of the timer and switch assembly clockwise to start the timer. The timer starts when the actuator arm on the microswitch drops off outer cam into cam slot. See Timer Cam Positions. An audible click can be heard, but in a noisy area, look at the cam and switch to observe the event.

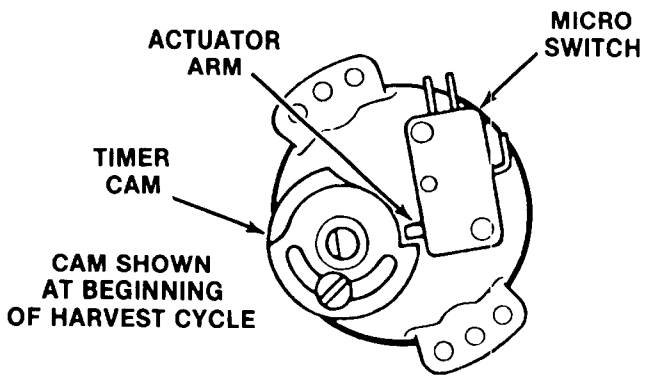

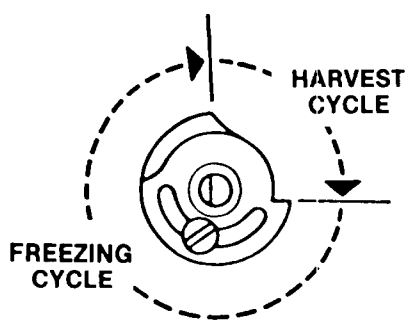

CAM SHOWN DIVIDED INTO TYPICAL FREEZING & HARVEST CYCLES

Timer Cam Positions

7. Move the master ON-OFF toggle switch, the top toggle switch, to the ON position.
8. Observe water fill cycle:

   Water pump operates and water inlet solenoid valve OPENS, incoming water flows from the valve through the tubing, the reservoir fills and excess water is overflowed through the stand pipe. This cycle will take about three minutes. Timer will close the water inlet solenoid valve and the water fill cycle is complete.

   Advancing the shaft of the timer and switch assembly into a new harvest cycle, restarts the timer and allows a check that: Water inlet solenoid valve OPENS and the reservoir overflows through the stand pipe. Water inlet valve CLOSES, stopping water overflow.

   The water pump is operating, as seen by water moving through the tygon tube, up to the water distributor at the top of each evaporator plate, where water is uniformly dispensed and cascades down both sides of the evaporator plate and drains back into the sump assembly for recirculation.
9. Check that the water cascades down over each cube mold and into the sump.
10. When the second cycle is completed, move the compressor ON-OFF toggle switch, to the ON position.
11. Check operation of the freezing cycle:

    The compressor is operating.

    The icemaking process begins; feeling the metal parts of the evaporator plate reveals cold temperature, very shortly ice begins to form. Tubing will become frosted at the top of the evaporator plate.

    Freezing time will range between 10 and 15 minutes. Longer time for temperatures above 70-degrees F. and shorter time required when temperatures are below 70-degrees F. Average complete cycle time is about 13 minutes.

CM450D START-UP

12. Observe second and third cube harvest.

    Check size of SCOTSMAN CONTOUR CUBE

    Unlike other SCOTSMAN cubes which are made in a definite molded shape, contour cubes are produced in indentations and many shapes and sizes of contour cubes may be produced — only ONE size and shape combination is correct.

    An under-charged refrigeration system produces smaller cubes at the top of the evaporator plate and large cubes at the bottom. Charge system per NAMEPLATE specifications.

    Charge Refrigeration System with **REFRIGERANT 502 ONLY.**

    In areas where extreme problem water condition exists, filtering or purifying equipment is recommended. Contact SCOTSMAN ICE SYSTEMS, Service Department, Albert Lea, Minnesota 56007 for further details.

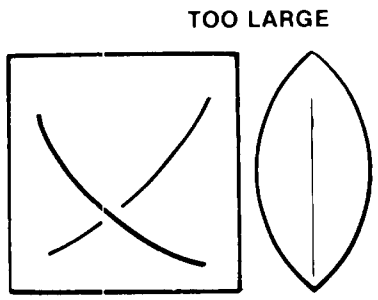

Too LARGE — may cause evaporator freeze ups. Adjust cube size control counter-clockwise to obtain smaller cubes

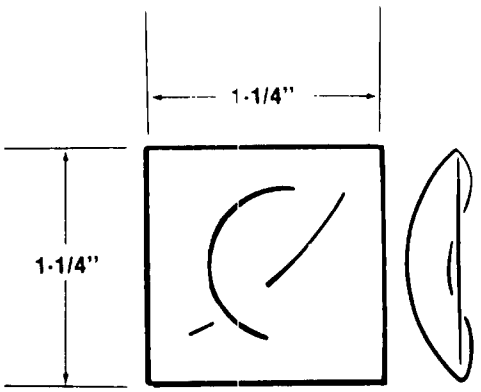

PROPER SIZE AND SHAPE of the contour cube. Icemaker operates at peak efficiency when a cube this size and shape is produced. A finely tuned system produces vertical strips of ice which easily break when they fall.

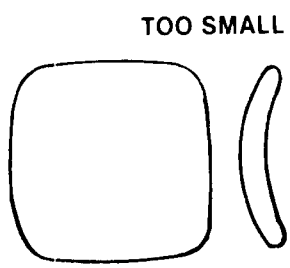

TOO SMALL. To obtain proper size cubes, adjust cube size control clockwise. May cause freeze up problems due to poor harvest.

Ice Cube Size & Shape

CM450D START-UP

ADJUSTMENT OF CUBE SIZE

To produce SMALLER sized ice cubes:

Locate cube size control knob, in the front of the control box.

Rotate the adjusting screw one-eighth of a turn COUNTERCLOCKWISE to WARMER.

Observe size of the ice cubes in the next two ice cube harvests and adjust in one-eighth turn or less increments, until correct ice cube is achieved.

To produce LARGER ice cubes:

Locate cube size control on the front of the control box

Rotate the adjusting screw one-eighth of a turn CLOCKWISE to COLDER.

Observe size of ice cubes in the next two cube harvests and adjust in one-eighth turn or less increments, until correct ice cube size is achieved.

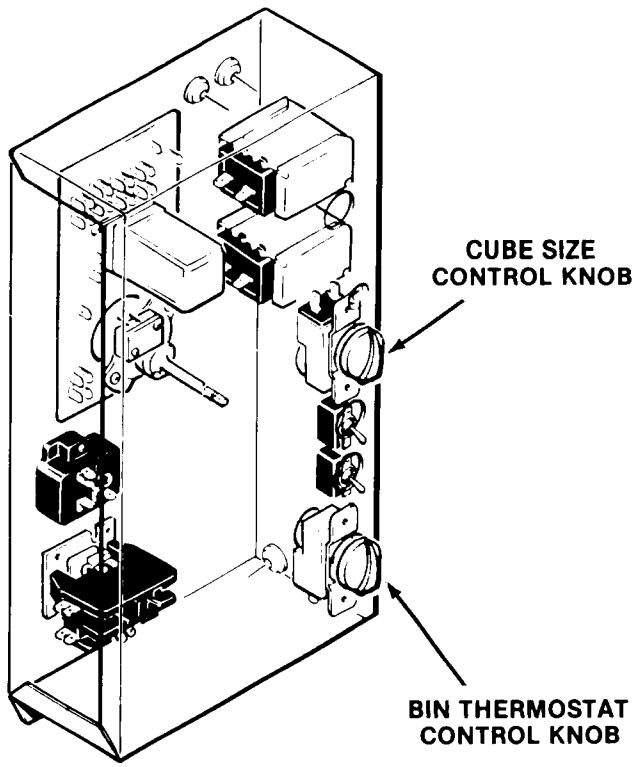

ROTATE ADJUSTMENT KNOB COUNTER-CLOCKWISE TO PRODUCE SMALLER CUBES.

ROTATE ADJUSTMENT KNOB CLOCKWISE TO PRODUCE LARGER CUBES.

BIN THERMOSTAT OPERATION

Check texture of ice cubes; when partially cloudy throughout, suggests icemaker is operating short of water; or, possibly an extreme problem water condition exists, where filtering or purifying equipment is recommended. Contact SCOTSMAN ICE SYSTEMS, Service Department, Albert Lea, Minnesota 56007 for further details. See SERVICE DIGNOSIS chart, for shortage of water symptoms and corrections.

13. With the icemaker in the harvest cycle, hold ice against the bin thermostat control bulb to test shutoff, which should cause the icemaker to shut OFF at the END OF THE HARVEST CYCLE.

    Within minutes after the ice is removed from the sensing bulb, the bulb will warm up and cause the icemaker to restart. This control is factory set and should not be reset until testing is performed.

14. Replace control box cover and all cabinet panels and screws.
15. Thoroughly explain to the owner/user the significant specifications of the icemaker, the start up and operation, going through the procedures in the operating instructions. Answer all questions about the icemaker by the owner; and inform the owner of the name and telephone number of the authorized SCOTSMAN Distributor, or service agency serving him.

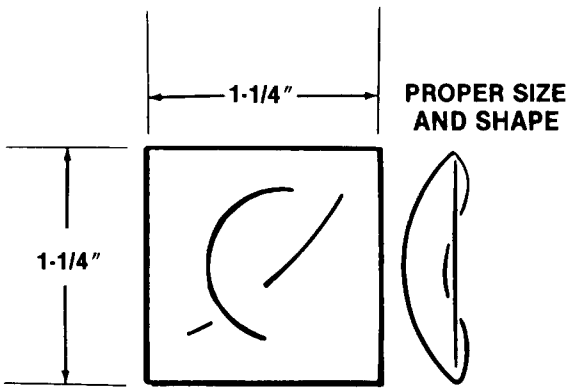

CM450D OPERATION

OPERATION

FREEZING CYCLE

Water from the sump assembly is pumped to the water distributor system, at the top of each evaporator plate. From the water distributor the water cascades by gravity over all cells of the plate and to the sump assembly below, for recirculation. At the beginning of the freezing cycle, the electrical circuit is completed to the compressor and the water pump. The water pump operates continuously, through both the freezing cycle and the harvest cycle.

In water-cooled models, water also flows through the condenser and out the drain. While in the condenser, water removes heat from the refrigerant and allows the refrigerant to condense from a gas to a liquid.

In the compressor, gaseous refrigerant is compressed and discharged into the condenser, as a high pressure, high temperature gas. The refrigerant is cooled by either air or water, and condenses into a high pressure, medium temperature liquid. This liquid refrigerant then passes through a small capillary tube, where the temperature and pressure of the liquid refrigerant are lowered and it next enters the evaporator plates. The refrigerant is warmed by the water cascading over the Evaporator plate and begins to boil off and become a gas. The refrigerant next travels through the accumulator and the heat exchange area of the suction line where any remaining liquid refrigerant boils off and returns to the compressor as a low pressure, low temperature gas, and the cycle starts again.

During the freezing cycle, the hot gas solenoid valve is CLOSED and the water inlet solenoid valve is CLOSED.

When the ice cubes are partially formed, the cube size control will sense the temperature at which it is preset to CLOSE. This will complete the electrical circuit to the timer. The timer then controls the remainder of the freezing cycle.

The timer will keep the icemaker operating in the freezing cycle for a selected length of time. This will give the ice cubes time to fully form. after that selected length of time, the timer will switch the icemaker into the harvest cycle, through the contacts of the timer assembly microswitch.

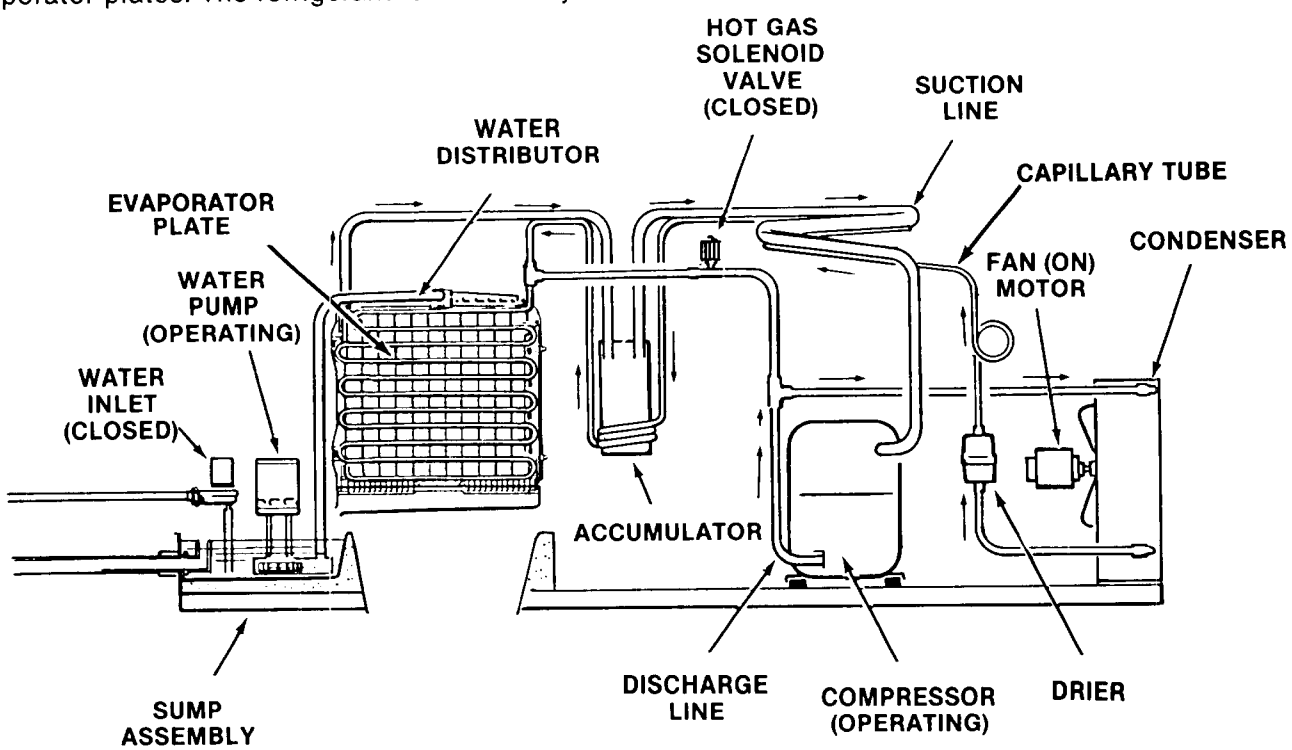

Freezing Cycle

CM450D OPERATION

HARVEST CYCLE - HOT GAS BYPASS

When the timer switches the icemaker into the harvest cycle, high pressure, high temperature gas refrigerant being discharged from the compressor is diverted from the condenser through the hot gas solenoid valve into each evaporator plate. During this cycle, the gaseous refrigerant bypasses the condenser and the capillary tube.

In the electrical circuit, both the compressor and the water pump are operating and the hot gas solenoid valve is energized and OPEN and the water inlet solenoid valve is OPEN.

The finished ice cubes are released from the sides of each evaporator plate, by the warming effect of the hot gas condensing in each evaporator plate and the water cascading over the ice cubes. The released ice cubes drop into the ice storage bin below.

At the end of the harvest cycle, the timer cam will push the actuator arm to the microswitch IN. If the bin thermostat is still CLOSED, a whole new cycle will begin. If the bin thermostat is OPEN, the icemaker will shut OFF, at this time.

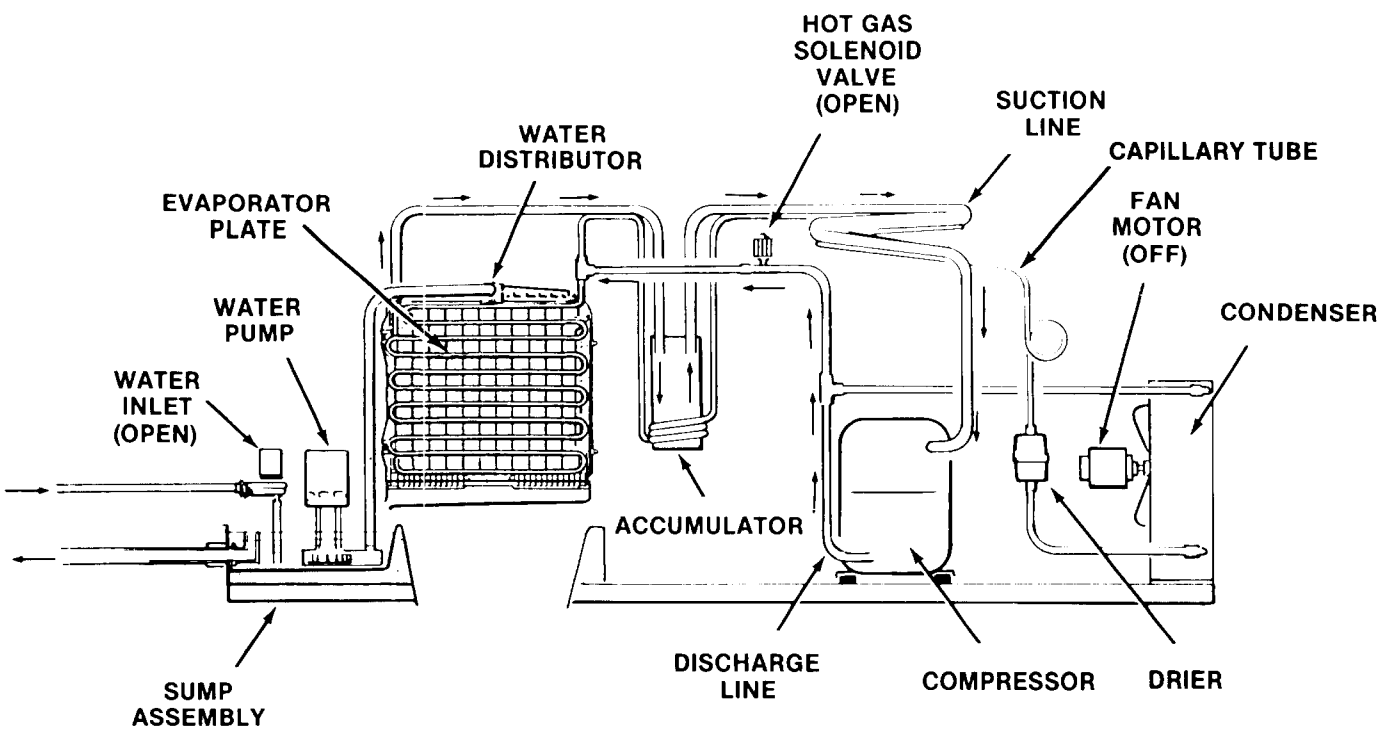

Harvest Cycle

CM450D OPERATION - ELECTRICAL SEQUENCE

The following charts illustrate which switches and which components are ON or OFF during a particular phase of the icemaking cycle.

Refer to the wiring diagram for a reference. Remember, the wiring diagram shows the unit as it is in the Timed Freeze Cycle.

BEGINNING FREEZE

ELECTRICAL COMPONENTS (LOADS)	ON	OFF
Compressor	X	
*Fan Motor (Air-cooled only)	X	
Hot Gas Valve		X
Inlet Water Valve		X
P.C. Board Relay Coil	X	
Timer		X
Water Pump	X	

SWITCHES	ON	OFF
Bin Thermostat	X	
Cube Size Thermostat		X
H.P. Fan Control	X	
Toggle - Master	X	
Toggle - Compressor	X	
H.P. Control	X	
Timer Micro Switch N.C.	X	
Timer Micro Switch N.O.	X	
Hi Temp Switch	X	

*The fan control will open and close with changes in discharge pressure, but will usually be closed during early freeze so the fan will usually be ON.

At the beginning of the freeze cycle the timer is not turning, but the icemaker is refrigerating the water starting to turn the water into ice.

CM450D OPERATION - ELECTRICAL SEQUENCE
TIMED FREEZE

ELECTRICAL COMPONENTS (LOADS)	ON	OFF
Compressor	X	
*Fan Motor (Air-cooled only)	X	X
Hot Gas Valve		X
Inlet Water Valve		X
P.C. Board Relay Coil	X	
Timer	X	
Water Pump	X	

SWITCHES	ON	OFF
Bin Thermostat	X	
Cube Size Thermostat	X	
H.P. Fan Control	X	X
Toggle Switch - Master	X	
Toggle Switch - Compressor	X	
H.P. Control	X	
Timer Micro Switch N.C.	X	
Timer Micro Switch N.O.	X	
Hi Temp Switch	X	

After the icemaker has cooled the water and formed some ice on the evaporator, the evaporator will have gotten cold enough to have the cube size control close. All this does is start and run the timer.

*The fan control will be opening and closing with the changes in discharge pressure, so the fan will be turning ON and OFF.

HARVEST

ELECTRICAL COMPONENTS (LOADS)	ON	OFF
Compressor	X	
*Fan Motor (Air-cooled only)		X
Hot Gas Valve	X	
Inlet Water Valve	X	
P.C. Board Relay Coil		X
Timer	X	
Water Pump	X	

SWITCHES	ON	OFF
Bin Thermostat	X	
Cube Size Thermostat		X
H.P. Fan Control		X
Toggle Switch - Master	X	
Toggle Switch - Compressor	X	
H.P. Control	X	
Timer Micro Switch N.C.	X	
Timer Micro Switch N.O.	X	
Hi Temp Switch	X	

The timer has now turned far enough so that the micro-switch plunger has dropped into the gap in the cam, this breaks the circuit to the relay in the P.C. Board - and that puts the machine into the Harvest cycle, where the hot gas valve and inlet water valve have opened to harvest the ice. When ice is on the bin control, it will open and at the end of the harvest cycle shut off the machine.

*The fan control will keep the fan OFF during the harvest cycle until the discharge pressure builds up to 190 PSIG, probably near the very end of the harvest cycle, then the fan will come ON.

CM450D SERVICE SPECIFICATIONS

In servicing a machine, it is often useful to compare that individual units operating characteristics to those of a normally operating machine. The data that follows gives those characteristics; however, be aware that these values are for NEW, CLEAN machines. USE THESE NUMBERS AS A GUIDELINE ONLY.

COMPONENT

Timer - 1 revolution of the cam, in minutes 8
Harvest Time, preset, in minutes 2-1/4
Inlet Water Valve, water flow in g.p.m. 1/3

	CI	CO
Cube Size Control, Reverse Acting, Temperature range	(+ 12°F. to − 6°F.)	—
Bin Thermostat, Temperature Range	38.5°-43.5°	33.5°-38.5°
High Pressure Safety Switch, psig Air-cooled	Manual	450
High Pressure Safety Switch, psig Water-cooled	Manual	350
Fan Pressure Control, in psig	210	193

OPERATING CHARACTERISTICS

On air-cooled models during the freezing cycle, the discharge pressure will slowly decline as the unit freezes ice; and at the same time, the suction pressure will also decline, reaching it's lowest point just before freeze. Compressor amps experience a similar drop.

On water-cooled, the discharge pressure is constant, maintained during the freeze cycle by the water regulating valve at 220 PSIG. However, suction pressure and compressor amps will still decline as the machine freezes ice.

FREEZE CYCLE

Average Discharge Pressure A/C . . . 350-200 PSIG
Average Discharge Pressure W/C . . . . . 220 PSIG
Suction Pressure at the end of the Freeze Cycle . . . . . 20-25 PSIG
Freeze Time . . . . . 10-16 Minutes
Ice Weight per cycle . . . . . 2.5-3 lbs.
Compressor Amps, 5 minutes into Freeze Cycle 7.0-8.0

HARVEST CYCLE

Average Discharge Pressure . . . . . 250-100 PSIG
Average Suction Pressure . . . . . 150-110 PSIG
Harvest Time, assumed to be 2-1/4 minutes. This can be adjusted to suit local conditions.

The values listed are representative of values seen at a wide range of air and water temperatures and are for a normal cube size.

When comparing these figures to field data, allow a variation from each end of the range given.

TO SERVICE REFRIGERATION SYSTEM:

TORQUE REFRIGERATION ACCESS VALVE CAPS TO 60-75 INCH POUNDS.

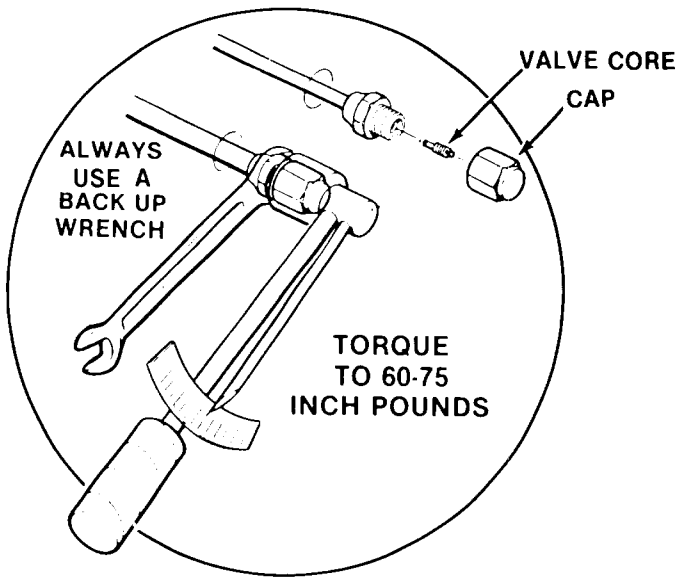

ALWAYS USE A BACK-UP WRENCH TO AVOID DAMAGE TO THE REFRIGERANT TUBING.

CM450D MAINTENANCE & CLEANING INSTRUCTIONS

A Scotsman Ice System represents a sizable investment of time and money in any company's business. In order to receive the best return for that investment, it MUST receive periodic maintenance.

It is the USER'S RESPONSIBILITY to see that the unit is properly maintained. It is always preferable; and less costly in the long run, to avoid possible down time by keeping it clean, adjusting it as needed and by replacing worn parts before they can cause failure. The following is a list of recommended maintenance that will help keep your machine running with a minimum of problems.

Maintenance and Cleaning should be scheduled at a MINIMUM of twice per year.

ICEMAKER

THE FOLLOWING MAINTENANCE SHOULD BE SCHEDULED AT LEAST TWO TIMES PER YEAR ON THIS ICEMAKER. CALL YOUR AUTHORIZED SCOTSMAN SERVICE AGENCY.

1. Check and clean or service any optional water treatment devices, if any installed.
2. Clean water strainer.
3. Check that the cabinet is level, in the side-to-side and front-to-back directions.
4. Clean the water system, evaporator plate and sump assembly, using a solution of SCOTSMAN Ice Machine Cleaner. Refer to CLEANING - Icemaker.

Cleaning requirements vary according to local water conditions and individual user operation. Continuous check of the clarity of ice cubes and visual inspection of the water system parts, evaporator plates and the sump assembly before and after cleaning will indicate frequency and procedure to be followed in local areas.

5. Check that the drain trough is snug on the evaporator plate.
6. Check and tighten all bolts and screws.
7. Check for water leaks and make corrections.
8. Check the bin thermostat control bulb to test shut off. Holding ice against bin thermostat control bulb should cause the icemaker to shut off at the end of the harvest cycle.

   Within minutes after ice is removed from the bin thermostat control bulb, the icemaker will restart.

ICE STORAGE BIN

Clean and sanitize bin interior once per week.

CLEANING - Icemaker

WARNING

SCOTSMAN Ice Machine Cleaner contains Phosphoric and Hydroxyacetic acids. These compounds are corrosive and may cause burns. If swallowed, DO NOT induce vomiting. Give large amounts of water or milk. Call physician immediately. In case of external contact, flush with water. KEEP OUT OF THE REACH OF CHILDREN.

1. Remove front panel.
2. Switch the compressor switch to OFF.

   Switch the master switch OFF.
3. Switch the master switch ON. Pour 8 ounces of Scotsman Ice Machine Cleaner into the sump filled with water.
4. Let the unit operate for 40 minutes with the compressor off, then switch the unit off.
5. Remove the front liner by removing 4 thumb screws. Remove the drain trough from one evaporator plate.
6. Switch on the master switch to pump water from the sump into the bin. Continue to add fresh water to flush residual cleaner from the system. Switch unit to OFF and wipe the sump clean.
7. Wash the plastic and stainless liners of the freezer section with a solution of household bleach and water. (1 ounce of bleach in 1 gallon of water.)
8. Replace the drain trough and the front liner.

CM450D MAINTENANCE & CLEANING INSTRUCTIONS

9. Turn the master and compressor switches back on.
10. Replace front panel.
11. Check each batch of cubes until they are clear and until the acid taste has been removed from the cubes.

CAUTION

DO NOT use ice cubes produced from the cleaning solution. Be sure none remains in the bin.

12. Pour hot water into storage bin to melt the cubes and thereby clean the bin and drains with the same solution that has just cleaned the unit.
13. The unit is now ready for continued automatic operation.

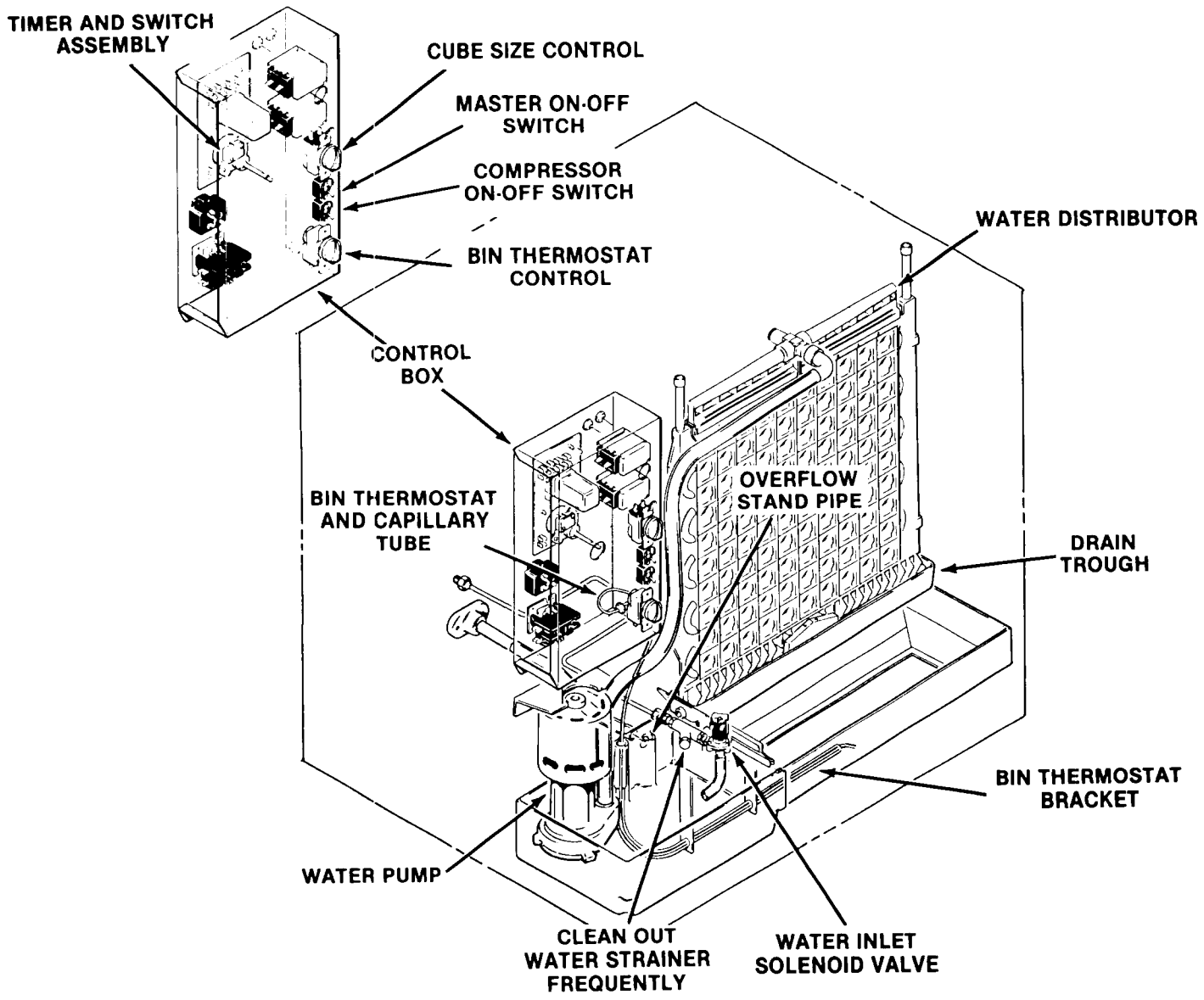

Cleaning Water System, Icemaker

CM450D COMPONENT DESCRIPTION

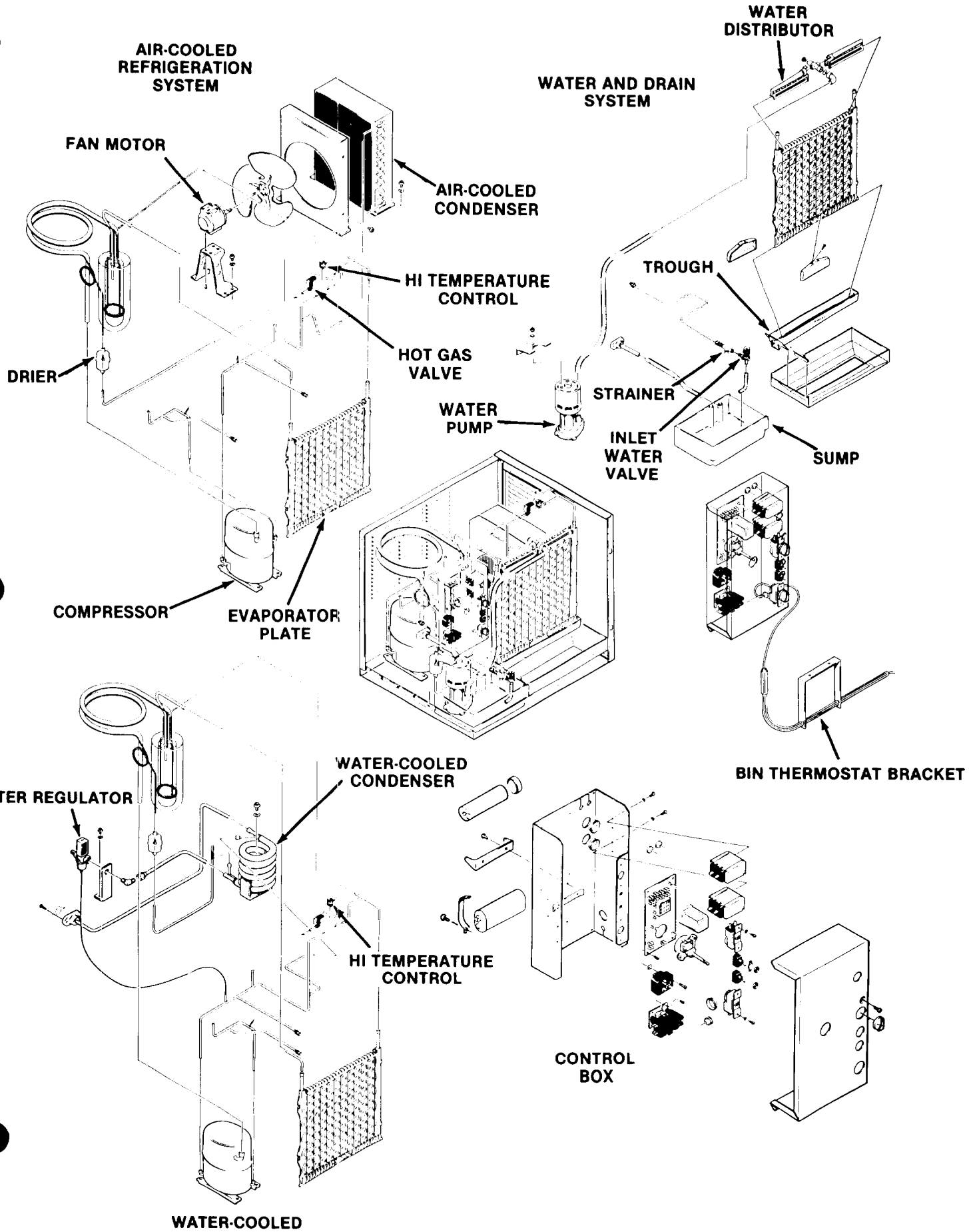

CM450D COMPONENT DESCRIPTION

BIN THERMOSTAT CONTROL

The bin thermostat is located on the front edge of the control box with an accessible knob on the front. The sensing capillary tube is routed from the control out the side of the control box down and across the front edge of the sump and down into the bin thermostat bracket. The bin thermostat control functions to automatically shut OFF the icemaker, when the ice storage bin is filled and ice contacts the capillary tube. It also signals the RESTART of the icemaker, when the capillary tube starts to warm up, after ice has been removed from the bin.

Bin thermostat control adjustment should ONLY be performed on icemakers installed in extreme warm or cold locations and adjust only in increments of one eighth turn at a time.

COMPRESSOR CONTACTOR

The compressor contactor functions to carry the compressor line current. The contactor is wired so any control in the pilot circuit, such as the bin thermostat, and high pressure controls, etc., will cause the contactor holding coil to be de-energized, when the control contact OPENS, thereby breaking the circuit to the compressor.

CUBE SIZE CONTROL

The temperature sensing cube size control affects the length of the freezing cycle prior to initiating the finishing timer. The cube size control closes its contacts when the evaporator reaches a preset temperature, starting the finishing timer. A variation in either ambient air or incoming water temperature will affect the efficiency of the refrigeration system. This will vary the length of time it takes the evaporator to reach the temperature at which the cube size control is preset to CLOSE; which, in turn, will affect the overall cycle time.

See *Cube Size Adjustment* BEFORE attempting to adjust the control.

RELAY

The multi-function, three pole, double-throw, plug-in relay is installed directly into a receptacle on the printed circuit board in the control box. The relay functions in part to by-pass the bin thermostat control to prevent the icemaker from shutting OFF, when a filled-bin condition occurs during the freezing cycle. The by-pass action serves to ensure full-sized ice cubes with each harvest cycle; and, to prevent short cycling on the bin thermostat control.

TIMER — Timer & Switch Assembly

The function of the timer begins when activated by the cube size control. The outer surface, or large diameter lobe of the timer cam, determines the timer cycle for finish freezing of the ice cubes, while the inner surface, or small diameter lobe, determines the time cycle for the harvest sequence. All electrical circuitry is connected through the printed circuit board and the timer and shunted by the single-pole, double-throw microswitch to either the freezing cycle or the harvest cycle. The microswitch is actuated by a cam assembly directly connected to the timer motor. The timer cam can be adjusted to vary the defrost line, as required. One complete rotation of the cam will take eight minutes. Harvest is preset at two and one-fourth minutes.

HIGH PRESSURE SAFETY CONTROL

This is a manual reset control that shuts down the icemaker, should the discharge pressure ever reach 450 PSIG on air-cooled and 350 PSIG on water-cooled.

CM450D COMPONENT DESCRIPTION

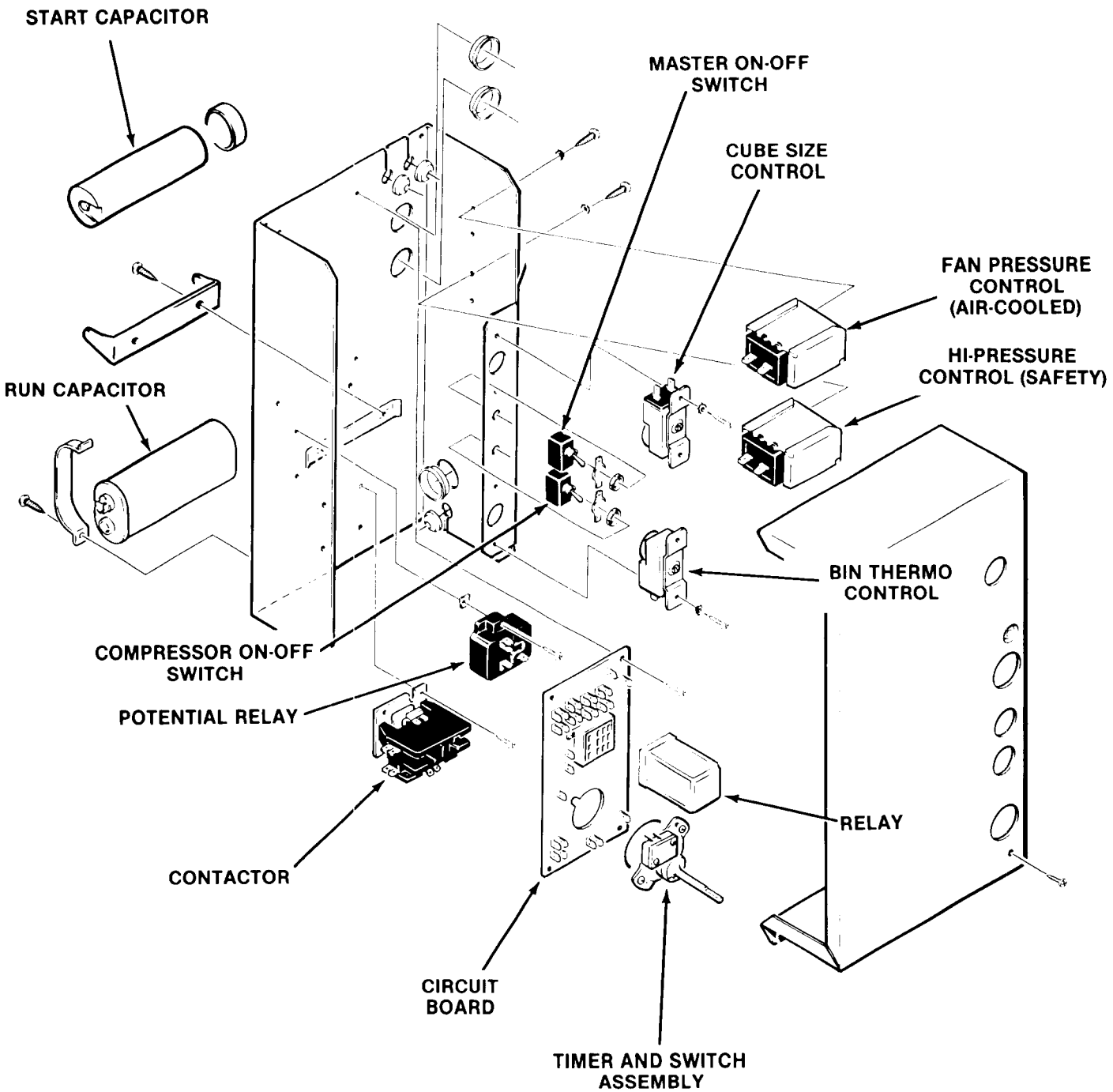

WATER INLET SOLENOID VALVE

The water inlet solenoid valve functions to fill the sump assembly with water and overflow out the overflow standpipe located at the bottom of the sump. This action fills and rinses the sump during each harvest cycle. The flow rate is .75 g.p.m.

WATER REGULATOR VALVE -- Water-Cooled Model

The water regulator valve functions to maintain a constant compressor head pressure, by regulating the amount of inlet water flow through the condenser on water-cooled models. The valve operates through the refrigerant system high side pressure. Rotating the adjusting screw, located on top of the valve, can INCREASE or DECREASE the water flow through the water-cooled condenser, which in turn, will DECREASE or INCREASE the compressor operating head pressure. It is to be set at 220 PSIG.

When installing a replacement water regulator valve, be sure the replacement valve is installed with the arrow positioned in the direction of the water flow.

WATER DISTRIBUTION SYSTEM

The water distribution system functions to evenly supply water to all cells of the evaporator plates. The water pump pumps water from the sump up the vertical tygon tube to the tee. From there water is channeled through the water manifold to the water distributors, above each evaporator plate, and from six holes within each distributor, water flows to the cells of each side of the evaporator plates. Gravity flow returns the unfrozen excess portion of water to the sump reservoir for recirculation.

HOT GAS SOLENOID VALVE

The hot gas solenoid valve functions only during the harvest cycle, to divert the hot discharge gas from the compressor, bypassing the condenser and capillary tube, for direct flow in the evaporator plates to release ice cubes from the ice cube molds. The hot gas solenoid valve is comprised of two parts, the body & plunger and the coil & frame assemblies. Installed in the discharge line of the compressor, the energized solenoid coil lifts the valve stem within the valve body, to cause the hot discharge gas to be diverted when the finishing timer has advanced to the start of the harvest cycle.

FAN PRESSURE CONTROL — Air-Cooled Models only. In both freeze and harvest cycles, the fan pressure control functions to maintain a minimum discharge pressure by cycling the fan on and off. The approximate C.I. is 210 PSIG and C.O. is 193 PSIG.

STRAINER

A water strainer is located in the potable inlet water line before the water inlet solenoid valve. Clean the water strainer frequently.

CM450D COMPONENT DESCRIPTION

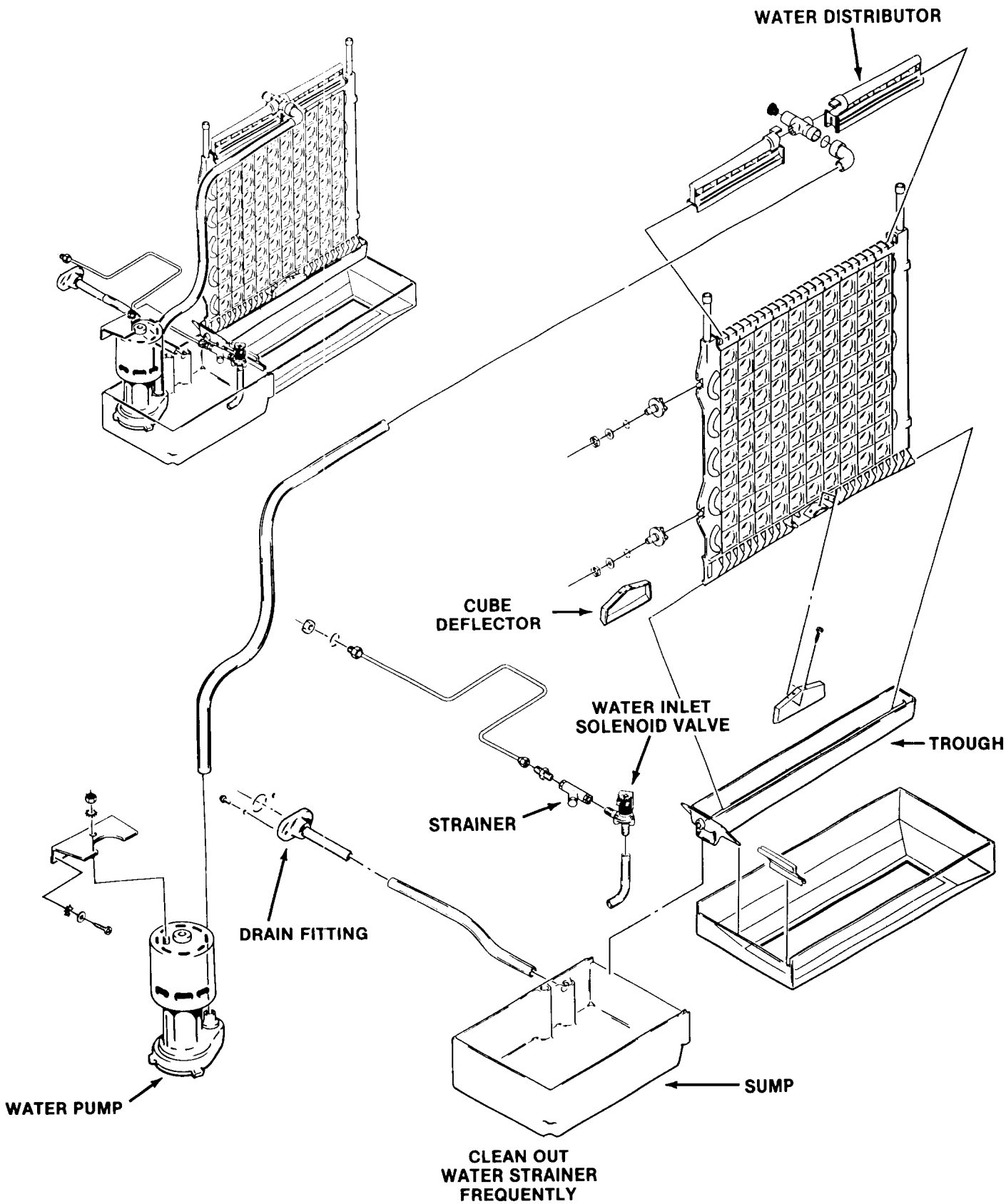

CM450D SERVICE DIAGNOSIS

The service diagnosis section is for use in aiding the serviceman in diagnosing a particular problem for pin-pointing the area in which the problem lies, thus an ever available reference for proper corrective action.

The following chart lists corrective actions for the causes of known symptoms of certain problems that can occur in the icemaking-refrigeration system.

ICEMAKING - REFRIGERATION SYSTEM

SYMPTOM	POSSIBLE CAUSE	CORRECTION
Irregular size cubes some cloudy.	Some distributor holes plugged	Clean distributor holes.
		Clean water sump.
	Shortage of water.	See shortage of water CORRECTION.
	Unit not level.	Level cabinet, as required.
Cubes too large.	Dirty air-cooled condenser.	Clean condenser.
	Cube size control set too cold.	Rotate cube size control dial toward WARMER.
Cubes too small.	Cube size control set too warm.	Rotate cube size control dial toward COLDER.
	Partially restricted capillary tube. (Kinked, pinched off, etc.)	Replace heat exchange assembly.
	Moisture in refrigeration system.	Blow refrigerant charge; replace drier; evacuate system; add proper refrigerant charge.
	Shortage of water.	See shortage of water CORRECTION.
Cloudy cubes.	Shortage of water.	See shortage of water SYMPTOM.
	Dirty water supply.	Check water quality and install water purification system.
	Accumulated impurities.	Use SCOTSMAN Ice Machine Cleaner and clean icemaker.
Shortage of water.	Short harvest cycle.	Adjust cam of timer and switch assembly.
	Water leak in sump area or off evaporator plate.	Locate Leak and correct condition.
	Partial restriction in water inlet strainer or inlet water valve.	Clean or replace strainer or valve.
	Water pressure too low.	Check for 20 PSI flowing water. Restore pressure.

CM450D SERVICE DIAGNOSIS

SYMPTOM	POSSIBLE CAUSE	CORRECTION
Decreased ice capacity.	High head pressure, result of dirty condenser or faulty fan motor or fan pressure switch or on water-cooled - not enough water through condenser.	Clean condenser. Repair or replace fan motor or switch. Check with regulator valve.
	Non-condensable gas in the system	Purge the system, evacuate and recharge per nameplate requirements.
	Poor air circulation or extreme hot location.	Relocate the cabinet; or provide ventilation.
	Overcharge of refrigerant.	Evacuate and recharge per nameplate.
	Hot gas solenoid valve leaking.	Replace valve.
	Partially restricted capillary tube.	See cubes too small CORRECTION.
	Defective compressor.	Replace compressor.
Poor harvests. Icemaker does not harvest.	Too short defrost time.	Check and adjust harvest cycle.
	Restriction in water inlet line.	Check strainer and inlet water valve.
	Hot gas solenoid does not open. Binds or burned out.	Replace solenoid, coil or valve as applicable.
	Undercharge of refrigerant.	Charge to nameplate requirements.
	Water pressure too low.	Check for 20 PSI flowing water. Restore pressure.
	Cube size too large or too small.	Adjust size with cube size control.
	Water-cooled models: water Regulator valve leaks water thru during harvest.	Replace water regulator valve.
Compressor cycles intermittently.	Low voltage.	Check for circuit overload. Check building supply voltage, if low, contact power company.
	Dirty condenser.	Clean condenser with vacuum cleaner or brush. DO NOT USE A WIRE BRUSH.
	Air circulation blocked.	Locate cabinet with adequate air space for proper air flow.
	Defective fan motor.	Replace fan motor.
	Non-condensable gases in system.	Purge the system and recharge per nameplate requirements.
Icemaker will not operate.	Blown fuse in line.	Replace fuse and check for cause.
	Master switch in OFF position.	Set switch to ON position.
	Faulty master switch.	Replace switch.
	Timer contacts open.	Replace timer microswitch.
	Faulty bin thermo.	Replace.
	Off on high head pressure safety switch.	Water-Cooled - water interruption correct. Air-Cooled - condenser not getting air.

CM450D ADJUSTMENT PROCEDURES

ADJUSTMENT OF THE BIN THERMOSTAT CONTROL

The control for the bin thermostat is the temperature control, located in the front of the control box.

The bin thermostat control requires adjustment only if the icemaker shuts off prematurely. Turn adjusting knob, in 1/8 turn or less increments, in the appropriate direction until the icemaker shuts OFF.

Remove ice from the capillary bulb; then, place warm hand on the capillary bulb to restart the icemaker.

Place handful of ice against the capillary bulb and observe that the icemaker should shut OFF. (Only at the end of harvest).

CAUTION

The adjusting screws on the temperature control device have very sensitive response to adjustment. DO NOT attempt to adjust the screw until after thoroughly reading and understanding the instructions and illustrations. Over-adjusting or erratic guessing, can foul the instrument and cause ultimate delay and part replacement, WHICH COULD HAVE BEEN PREVENTED.

ALTITUDE ADJUSTMENT
over 2,000 feet above sea level only

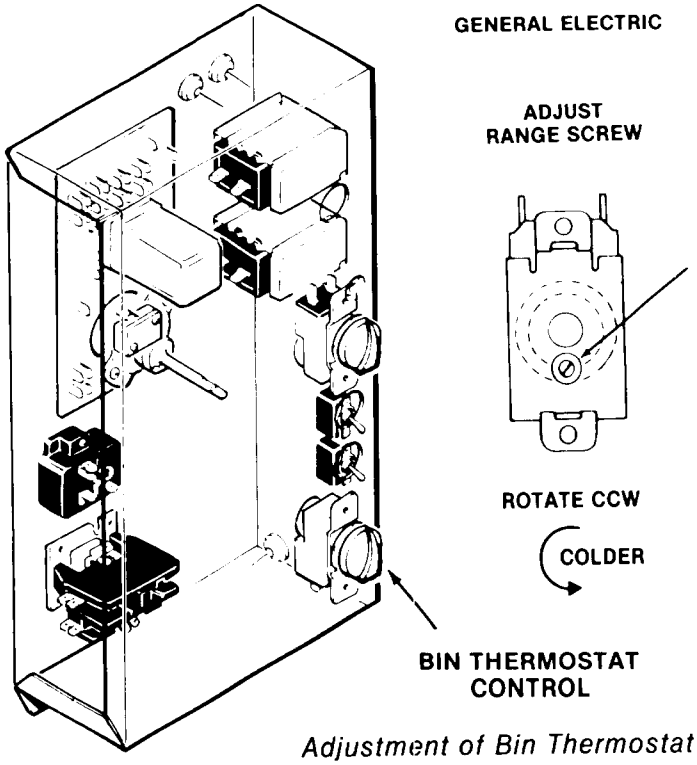

Adjustment of Bin Thermostat

ADJUSTMENT OF THE WATER REGULATOR ASSEMBLY — WATER-COOLED MODELS

The correct compressor head pressure on water-cooled models is 220 PSIG. Adjusting the water regulator valve increases or decreases the rate of flow of water, through the water-cooled condenser; which increases or decreases the affected temperature/pressure of the compressor head pressure, INCREASED water flow, results in DECREASED or LOWER head pressure; while, DECREASED water flow, results in INCREASED or HIGHER head pressure.

To adjust the water regulator assembly:

To INCREASE the head pressure: Rotate the adjusting screw COUNTERCLOCKWISE.

To DECREASE the head pressure: Rotate the adjusting screw CLOCKWISE.

Check change in compressor head pressure, and repeat adjustment as necessary, to achieve desired operating head pressure.

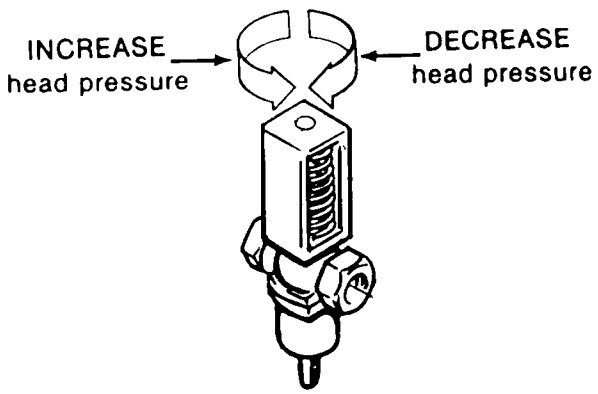

WATER REGULATOR

CM450D ADJUSTMENT PROCEDURES

ADJUSTMENT OF THE CUBE SIZE CONTROL

CAUTION

BEFORE performing actual adjustments to the cube size control, check other possible causes for cube size problems, refer to SERVICE DIAGNOSIS for problem review and analysis. DO NOT perform adjustment when a new cube size control is installed, until the control bulb has been properly installed in the tube well, on the evaporator outlet tube and the icemaker has progressed through several complete freezing and harvest cycles, to observe size and quality of ice cubes freezing and harvest cycles, and whether or not a cube size problem exists.

As a reverse acting temperature control, adjustment on the cube size control is performed to cause either larger sized ice cubes or smaller sized ice cubes to be produced.

To produce LARGER sized ice cubes:

1. Locate the cube size control, on the front of the control box.
2. Rotate the adjusting knob one-eighth of a turn CLOCKWISE toward COLDER.
3. Observe size of ice cubes in next two ice cube harvests and repeat step 2 above, in one-eighth turn increments, until correct ice cube size is achieved.

To produce SMALLER sized ice cubes:

1. Locate the cube size control, on the front of the control box.
2. Rotate the adjusting knob one-eighth of a turn COUNTERCLOCKWISE toward warmer.
3. Observe size of ice cubes in next two ice cube harvests and adjust in one-eighth turn increments, until correct ice cube size is achieved.

ADJUSTMENT OF THE TIMER & SWITCH ASSEMBLY

The timer and switch assembly if factory set, so one complete revolution of the cam on the timer represents eight minutes. Five and one-half minutes comprise the freezing cycle event during cam rotation, and the final two and one-half minutes program the defrost and harvest cycle. Rotating the shaft of the timer cam CLOCKWISE will allow positioning the actuator arm of the microswitch on the cam at the selected start position for either the freezing cycle or harvest cycle, as required in the cleaning instructions.

WARNING

Disconnect electrical power supply to icemaker whenever adjustment procedures are performed.

To adjust the timer & switch assembly:

A. HARVEST CYCLE: Slowly rotate the shaft of the timer and switch assembly, located in the control box, CLOCKWISE, until the actuator arm on the microswitch initiates the harvest cycle. An audible click can be heard, but in a noisy area, look at the cam and switch to observe the event.

B. FREEZING CYCLE: Slowly rotate the shaft of the timer and switch assembly, located in the control box, CLOCKWISE, until the actuator arm on the microswitch initiates the freezing cycle.

C. The length of the harvest cycle can be changed by loosening the adjustment screw on the cam. The normal setting is two and one-quarter minutes, as set at the factory. It is important that the length of the harvest cycle allow enough time for all the ice cubes to fall from the evaporator. Too short of a time will cause the evaporator to freeze up and stop ejecting ice into the bin. Too much time wastes icemaking capacity, energy and water. Adjustment of the harvest cycle may require a corresponding adjustment of the cube size control.

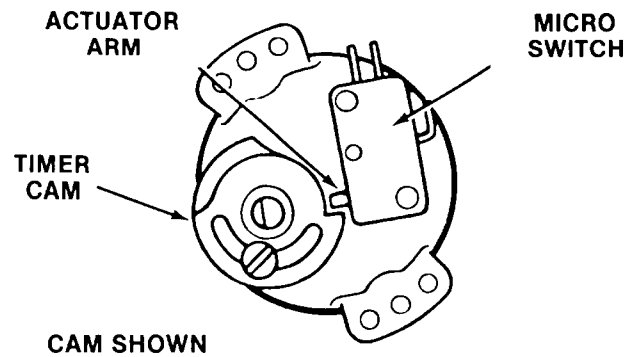

CAM SHOWN AT BEGINNING OF HARVEST CYCLE

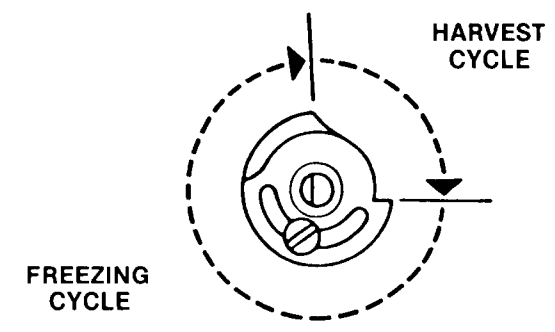

CAM SHOWN DIVIDED INTO TYPICAL FREEZING AND HARVEST CYCLES

CM450D REMOVAL AND REPLACEMENT PROCEDURES

WARNING

Be sure the electrical power supply circuit breaker and the inlet water supply are OFF, BEFORE starting any of the following REMOVAL AND REPLACEMENT procedures as a precaution to prevent possible personal injury or damage to equipment.

REMOVAL AND REPLACEMENT OF THE DRIER

To remove the drier:

1. Pull out to unsnap catches and remove the front panel.
2. Remove screws and remove left side access panel.
3. Bleed off or blow the refrigerant charge through the Schrader valve.
4. Unsolder refrigeration lines at both ends of the drier, and remove the drier.

To replace the drier:

CAUTION

If the factory seal is broken on the replacement drier, exposing it to the atmosphere more than a few minutes, the drier will absorb moisture from the atmosphere and lose substantial ability for moisture removal.

Be sure the replacement drier is installed with the arrow positioned in the direction of the refrigerant flow.

1. Remove the factory seals from the replacement drier and install the drier in the refrigerant lines with the arrow positioned in the direction of the refrigerant flow.
2. Solder the drier into the lines, two places, taking precautions to NOT OVERHEAT the drier body, during installation soldering.
3. Purge the system and check for leaks.
4. Thoroughly evacuate the system to remove moisture and non-condensables.
5. Charge the system with refrigerant, by weight. SEE NAMEPLATE.
6. Replace and attach the left side panel.

NOTE

Always install a replacement drier, anytime the sealed refrigeration system is opened. Do not replace the drier until all other repair or replacement has been completed.

REMOVAL AND REPLACEMENT OF THE EVAPORATOR PLATE ASSEMBLY

1. Remove the front and top panels.
2. Bleed off or blow the refrigerant charge through the Schrader valve.
3. Disconnect Tygon water inlet tube(s), at the water manifold tee(s), above the evaporator plates.
4. Unsnap the sump assembly from the lower left and right attachment points on each evaporator plate.
5. Slide the water distributor tubes about 1/8-inch along the top of the evaporator plate to be removed, until the left water distributor tube can be lifted upward.
6. Lift the end of the water distributor tube and slide the distributors toward the left along the top of the evaporator plate, until the flexible right notch is cleared.
7. Unsnap and disconnect each left and right water distributor tube from the water manifold section.

CAUTION

Use EXTRA PRECAUTION to protect the plastic parts during the next step to unsolder the refrigerant lines, two places, at the top of the evaporator plate. Position wet cloths over top of plates, as well as over the plastic liner at the rear, or sides, to prevent accidental heat damage, or possible fire from torch flame.

8. Unsolder and remove the refrigerant lines at the top of the evaporator plate to be replaced.
9. Remove nuts at left of the evaporator then, loosen the braces just enough to remove the evaporator plate. Temporarily replace the braces, to support the remaining evaporator plate.

To replace the evaporator plate, reverse the removal procedures. See Nameplate. Weigh in proper charge of R-502.

CM450D REMOVAL AND REPLACEMENT PROCEDURES

REMOVAL AND REPLACEMENT OF THE COMPRESSOR ASSEMBLY

To remove the compressor assembly:

1. Pull out to unsnap catches and remove the front panel.
2. Remove screws and remove cabinet top and left side access panel.
3. Bleed off or blow the refrigerant charge through the Schrader valve.
4. Remove the cover from the terminal box on the compressor; then, remove electrical leads from the compressor.
5. Unsolder suction, discharge and process header from compressor.
6. Remove four bolts and washers which secure the compressor to the chassis mounting base.
7. Remove the compressor from the cabinet.

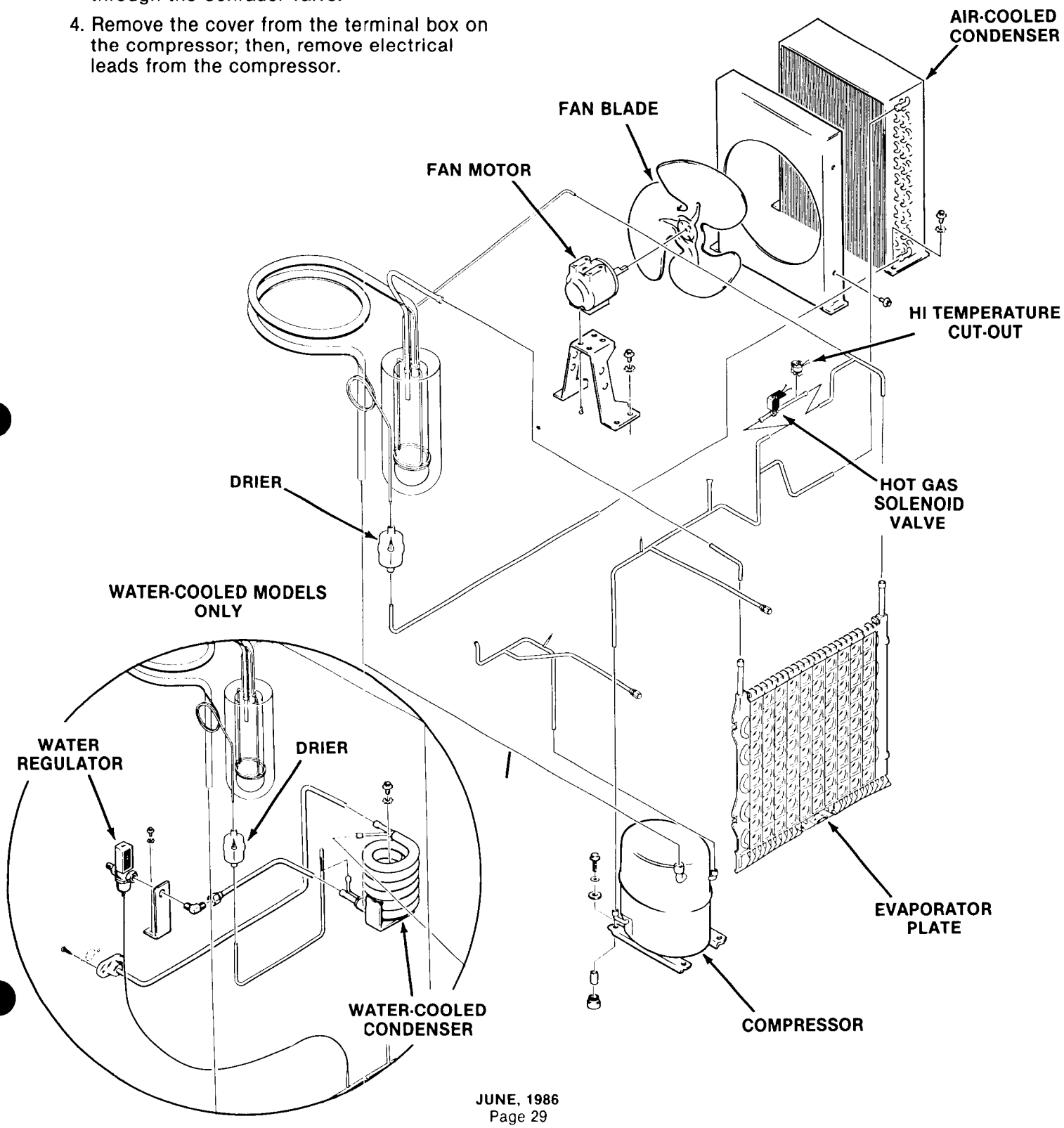

CM450D REMOVAL AND REPLACEMENT PROCEDURES

WARNING

Disconnect electrical power supply to icemaker whenever adjustment procedures are performed.

REMOVAL AND REPLACEMENT OF THE CONDENSER — AIR-COOLED MODELS

To remove the condenser:

1. Pull out to unsnap catches and remove the front panel.
2. Remove screws and remove cabinet top and right service side panels.
3. Bleed off or blow the refrigerant charge through the Schrader valve.
4. Unsolder and disconnect refrigerant lines from the condenser.
5. Unsolder and remove the drier from the refrigerant lines connecting to the condenser.
6. Remove screws, lockwashers and the condenser from the chassis base.

To replace the air-cooled condenser, reverse the removal procedure.

REMOVAL AND REPLACEMENT OF THE CONDENSER — WATER-COOLED MODELS

To remove the condenser:

1. Remove screws and the right side panel.
2. Bleed off or blow the refrigerant charge through the Schrader valve.
3. Check to be sure building source water inlet supply shutoff valve to rear of chassis is OFF.
4. Disconnect water-cooled condenser inlet water line at the water regulator assembly outlet fitting.
5. Unsolder the refrigerant capillary tube distributor line at the outlet end of the drier, the refrigerant liquid line from the bottom of the condenser, and remove the drier from the lines.
6. Unsolder the compressor discharge line, at the top of the water-cooled condenser.
7. Unsolder the compressor discharge line at the top of the water-cooled condenser and the refrigerant line from the bottom of the water regulator valve.
8. Remove two screws and washers and the water-cooled condenser from the cabinet.

To replace the water-cooled condenser, reverse the removal procedures.

REMOVAL AND REPLACEMENT OF THE FAN MOTOR — AIR-COOLED MODELS

To remove the fan motor assembly:

1. Pull out to unsnap catches and remove the front panel.
2. Remove unit top or left side panel.
3. Disconnect the two electrical leads, from the fan motor, at the control box assembly.

Before next step, measure or make accurate mental note of the distance the fan blades extend beyond the fan shroud, so during replacement the correct distance is maintained.

4. Remove screws and the fan motor and bracket assembly; and remove the fan motor and bracket from the chassis base.
5. Loosen set screws on the fan blade and remove the fan blade from the fan motor. Mark or note position of the blade on the shaft of the fan motor, for replacement.
6. Remove screws and lockwasher and separate the fan motor from the fan motor bracket.

To replace the fan motor assembly, reverse the removal procedure.

Be sure to replace the fan blade with the hub of the fan blade facing the fan motor, to ensure air flow is toward the fan motor; and, is set at marked location on shaft and setscrews tightened on the FLAT part of the shaft of the fan motor.

NOTE

Always install a replacement drier, anytime the sealed refrigeration system is opened. Do not replace the drier until all other repair or replacement has been completed.

Thoroughly evacuate the system to remove moisture and non-condensables.

CM450D REMOVAL AND REPLACEMENT PROCEDURES

WARNING

Disconnect electrical power supply to icemaker whenever adjustment procedures are performed.

REMOVAL AND REPLACEMENT OF THE CUBE SIZE CONTROL

To remove the cube size control:

1. Remove front panel.
2. Remove cover from control box.
3. Trace capillary tube, from the cube size control to the refrigerant suction line.
4. Remove the coiled capillary tube bulb from the tube well on the suction line.
5. Remove electrical leads from the cube size control.
6. Remove screws and the cube size control.

To replace the cube size control, reverse the removal procedure.

REMOVAL AND REPLACEMENT OF THE WATER DISTRIBUTOR TUBES AND MANIFOLD TUBES

To remove the water distributor tube and manifold tube:

1. Pull out to unsnap catches and remove the front panel.
2. Remove 4 thumb screws and remove the evaporator cover.
3. Slide the water distributor tube to the left about 1/8-inch along the top of the evaporator plate, until the water distributor tube can be unsnapped from the flexible notch and lifted upward to the right side.
4. Unsnap and disconnect water distributor tubes from the water manifold section.

To replace the water distributor tubes and manifold tubes, reverse the removal procedure. BE SURE the notches in the water manifold tubes properly engage the alignment keys in the tee.

BE SURE the water distributor tube is securely fastened at the notch at both sides of the evaporator plate.

Check identical attachment for the left water distributor tube and notch; also, that the distributor/manifold connections at the top center of each evaporator plate is snug against the top of the plate.

REMOVAL AND REPLACEMENT OF THE BIN THERMOSTAT CONTROL

To remove the bin thermostat control:

1. Remove front panel.
2. Remove screws and the control box cover.
3. Remove wire leads from the bin thermostat control.
4. Unthread the capillary tube and remove from the bin thermostat control bracket at the bottom right side of the evaporator section.
5. Remove the two screws attaching the bin thermostat control to the side of the control box; then, carefully pull the capillary tube out of the evaporator section. Carefully remove the bin thermostat control and capillary tube from the control box.

To replace the bin thermostat control, reverse the removal procedure.

REMOVAL AND REPLACEMENT OF THE INLET WATER SOLENOID VALVE ASSEMBLY

To remove the inlet water solenoid valve assembly:

1. Shut OFF water supply to machine.
2. Remove screws and pull the water solenoid valve out to gain access.
3. Loosen and remove inlet water line fitting from the inlet water solenoid valve assembly.
4. Remove inlet water Tygon tubing from the water solenoid valve.

To replace the inlet water valve assembly, reverse the removal procedures.

NOTE

Always install a replacement drier, anytime the sealed refrigeration system is opened. Do not replace the drier until all other repair or replacement has been completed.

CM450D REMOVAL AND REPLACEMENT PROCEDURES

WARNING

Disconnect electrical power supply to icemaker whenever adjustment procedures are performed.

REMOVAL AND REPLACEMENT OF THE WATER PUMP ASSEMBLY

To remove the water pump assembly:

1. Pull out to unsnap catches and remove the front panel.
2. Remove the Tygon tube to the pump assembly.
3. Disconnect electrical leads from the water pump assembly.
4. Loosen thumbscrew, loosen Phillips headscrew, lift pump up and remove from unit.
5. Remove one nut and mounting bracket from top of water pump.

To replace the water pump assembly, reverse the removal procedure.

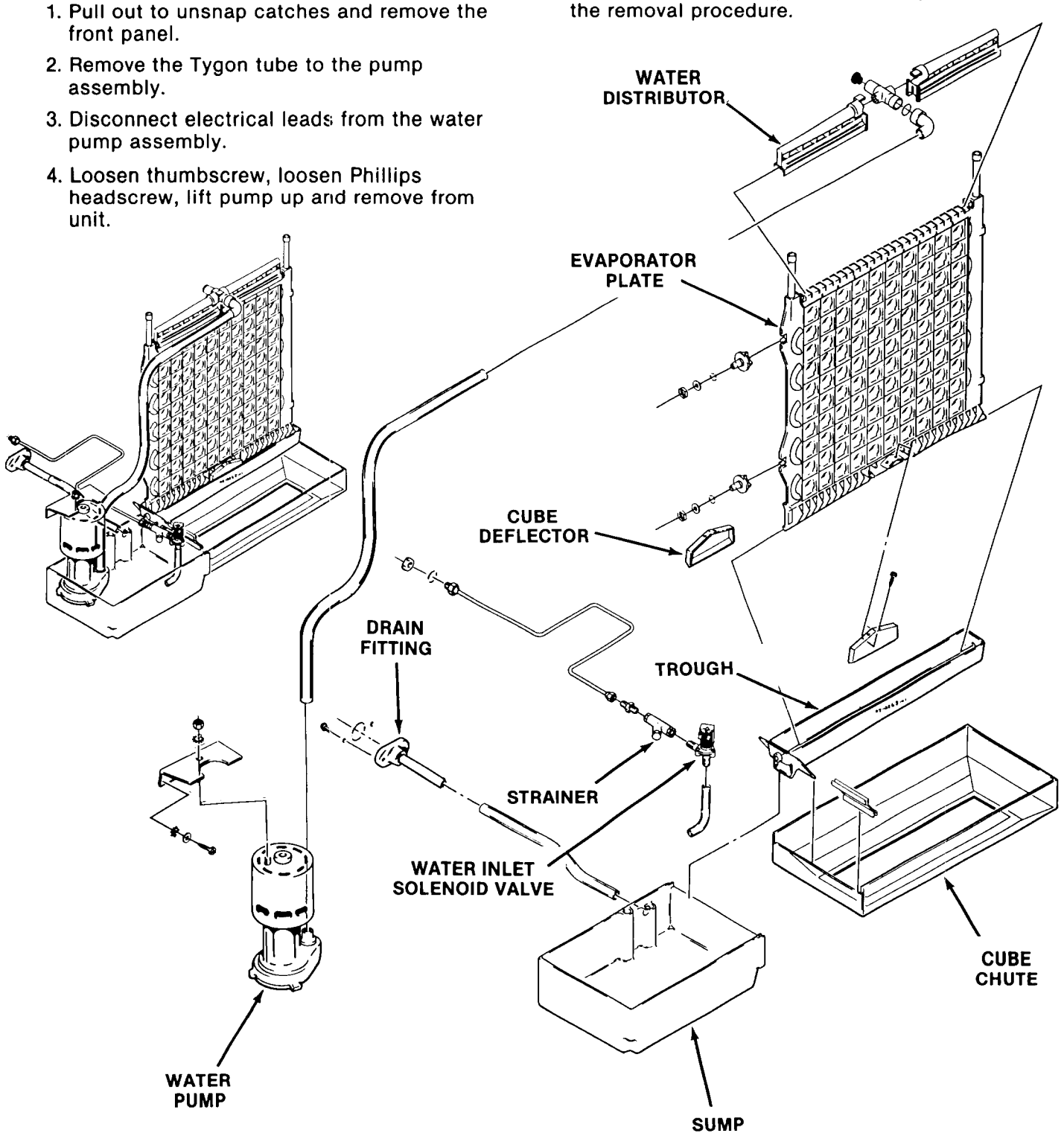

CM450 TABLE OF CONTENTS

For the Installer

Specifications 2

Location 5

For the Electrician 6

For the Plumber 7

Final Check List 8

Start Up 9

Operation 12

Service Specifications 16

Maintenance and Cleaning 17

Component Description 19

Service Diagnosis 24

Adjustment 26

Removal and Replacement 28

Parts Lists and Wiring Diagrams are located in the center of this manaul, printed on yellow paper.

THIS PAGE
INTENTIONALLY
LEFT BLANK

CM450 FOR THE INSTALLER

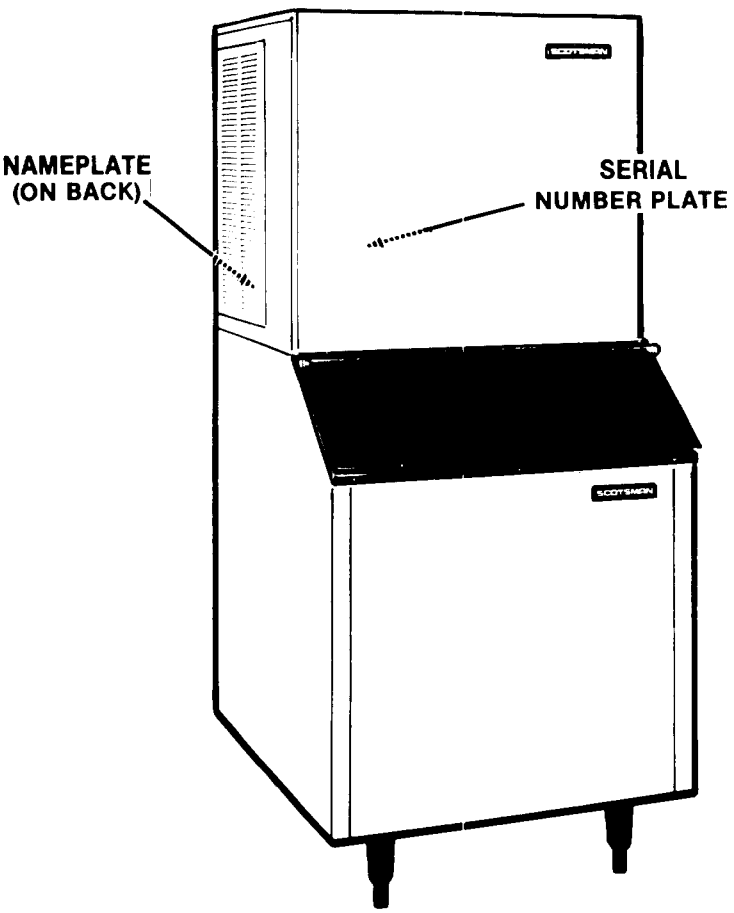

INTRODUCTION

These instructions provide the specifications and the step-by-step procedures for the installation, start up and operation for the Scotsman Model CM450 Modular Cuber.

The Model CM450 Modular Cubers are quality designed, engineered and constructed, and are thoroughly tested icemaking systems, providing the utmost in flexibility to fit the needs of a particular user.

NAME PLATE

MODEL NUMBER
SERIAL NUMBER
A.C. SUPPLY VOLTAGE
MINIMUM CIRCUIT AMPACITY WIRES
MAXIMUM FUSE SIZE * HERTZ
HEATER WATTS PHASE
REFRIGERANT CHARGE OZ.

MOTORS	VOLTS	R.L.A./F.L.A.	W/HP.	L.R.A.
COMPRESSOR				
FAN				
DRIVE				
OTHER				

DESIGN PRESSURE LOW HIGH
* OR HACR TYPE CIRCUIT BREAKER

SCOTSMAN

SERIAL NUMBER PLATE

MODEL NUMBER
SERIAL NUMBER
VOLTS/HERTZ/PHASE
MAXIMUM FUSE SIZE
REFRIGERANT CHARGE OZ.

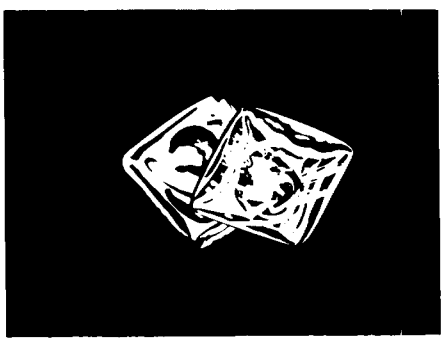

SCOTSMAN CONTOUR CUBE

This product qualifies for the following listings:

This icemaker has been engineered to our own rigid safety and performance standards. The National Sanitation Foundation (NSF) seal, signifies that it is listed with NSF and that it complies with the materials and construction standards of NSF. In addition, the Underwriters Laboratories, Inc., (UL) Listing Mark and the Canadian Standards Association (CSA) Monogram, both signify that its construction and design have been inspected and tested by them. NSF, UL and CSA inspectors also periodically examine production icemakers at the factory, to assure continued compliance.

To retain the safety and performance built into this icemaker, it is important that installation and maintenance be conducted in the manner outlined in this manual.

CM450E FOR THE INSTALLER

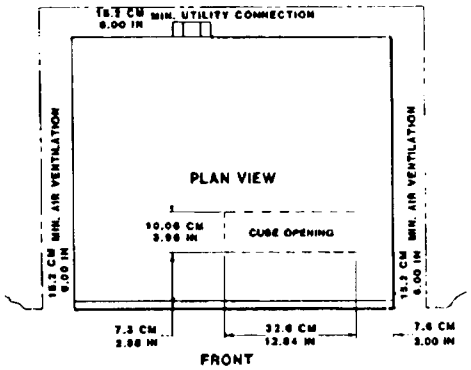

INSTALLATION NOTE: Allow 6" minimum space at sides and back for ventilation and utility connections.

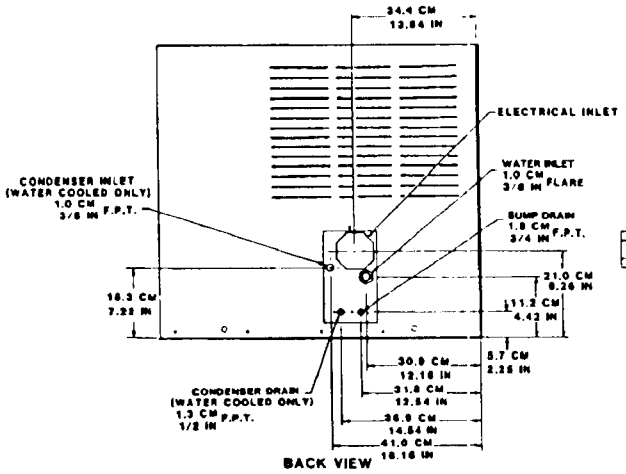

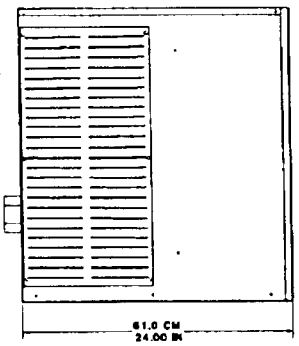

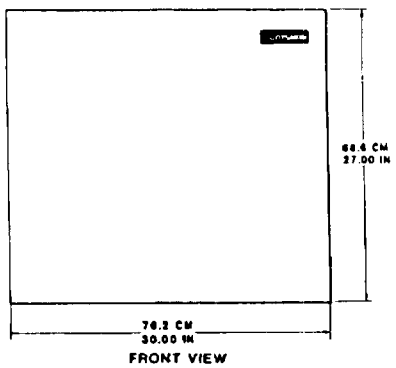

The CM450 is designed to fit the following Scotsman storage bins:

- HTB350 or HTB500 or BH550

When installing a new system, check to be sure that you have everything you need before beginning:

- Correct Bin
- Correct Ice Machine either CM450AE-32E or CM450WE-3E
- All kits, legs, and information required for the specific job.
- Optional Stainless Steel Panel Kit, SPKCMD1 contains the front, top, 2 ends, and 2 service panels.

Installation Limitations:

This ice system is designed to be installed indoors, in a controlled environment:

	Min	Max
Air Temperature	50°F	100°F
Water Temperature	40°F	100°F
Water Pressure	20	80
Voltage	-5%	+10%

(Compared to the nameplate)

Operating the machine outside of the limitations is misuse and can void the warranty.

SPECIFICATIONS

Model Number	(Height - w/0 Bin) Dimensions H" x W" x D"	Ice Type	Condenser Type	Basic Electrical	Comp. H.P.	No. of Wires	Min. Circ. Ampacity+	Max. Fuse Size
CM450AE-32E	27 x 30 x 24	Contour Cube	Air	208-230/60/1	1.5	2	20.6	30
CM450WE-32E	same	same	Water	same	1.5	2	16.0	25

+Use this value to determine wire size and type per National Electric Code. Standard finish is enamel sandalwood.

Scotsman Ice Systems are designed and manufactured with the highest regard for safety and performance. They meet or exceed the standards of UL, NSF, and CSA.

Scotsman assumes no liability or responsibility of any kind for products manufactured by Scotsman that have been altered in any way, including the use of any part and/or other components not specifically approved by Scotsman.

Scotsman reserves the right to make design changes and/or improvements at any time. Specifications and design are subject to change without notice.

AIR-COOLED ASSEMBLY

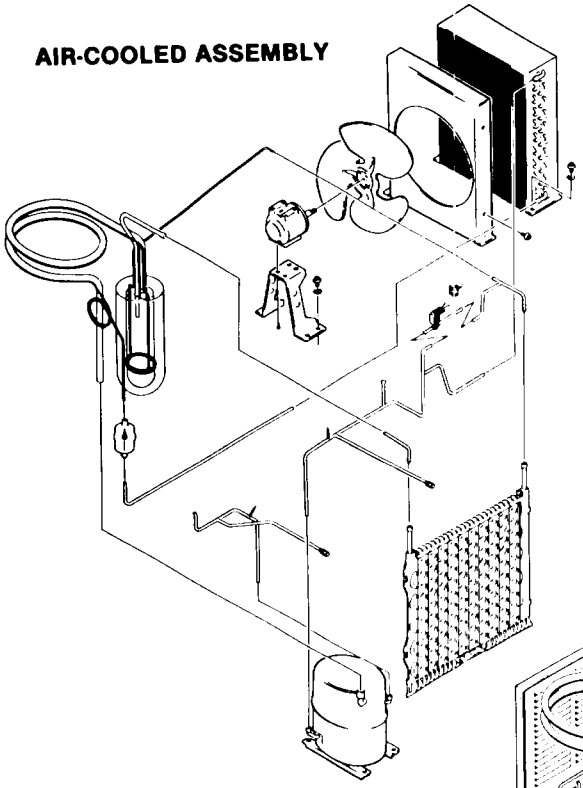

WATER SYSTEM

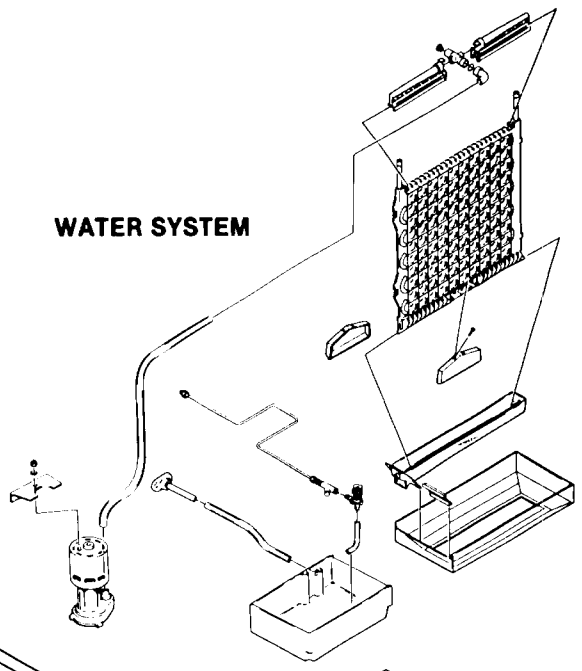

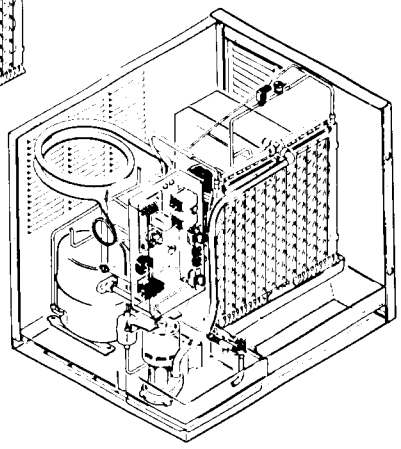

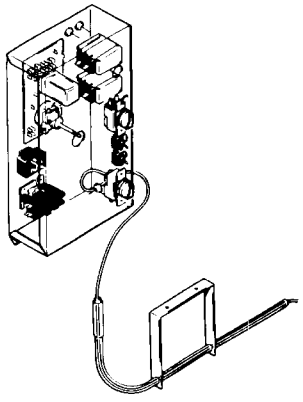

BIN THERMOSTAT BRACKET

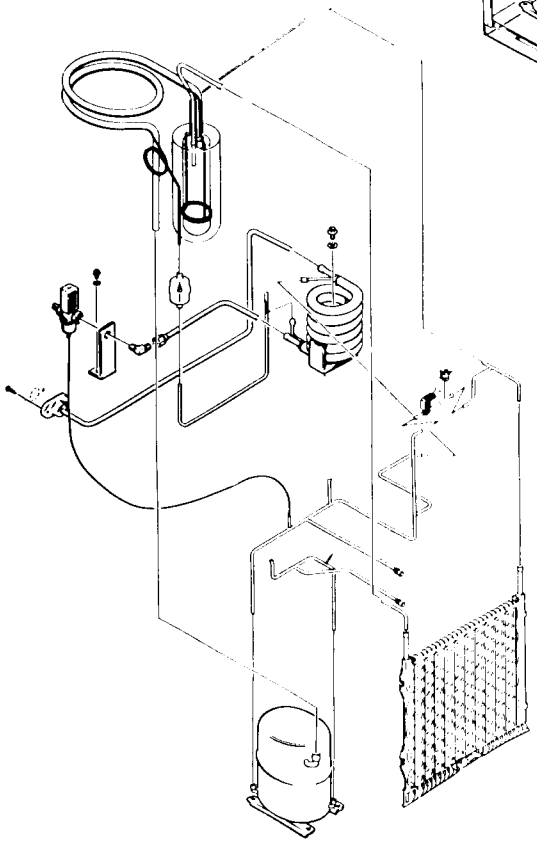

WATER-COOLED ASSEMBLY

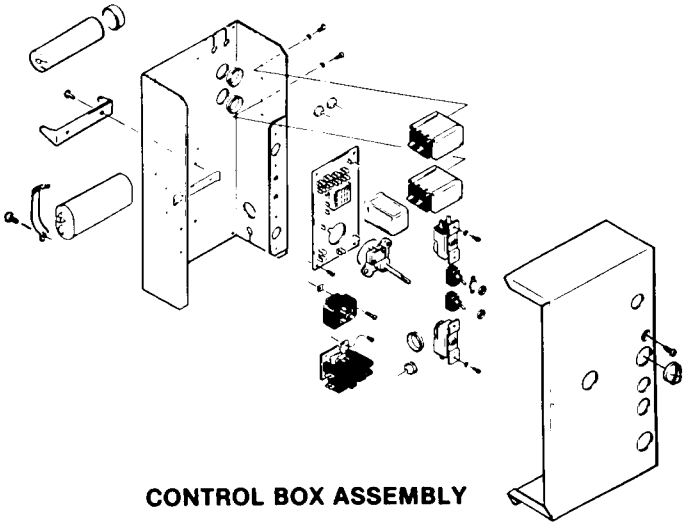

CONTROL BOX ASSEMBLY

CM450 FOR THE INSTALLER

LOCATION & LEVELING

1. Arrange for proper electric, water and drain. See instructions for the plumber and for the electrician.
2. After mounting the legs, position the ice storage bin in the selected location which should have a minimum room temperature of 50-degrees F. and maximum room temperature of 100-degrees F. Level the bin, adjusting the leg levelers in both the front to rear and side to side directions. Select a well-ventilated location for the air-cooled condenser.
3. Inspect the bin top mounting gasket which should be flat, with no wrinkles, to provide a good water seal when the Cuber is installed on top of the bin. Remove baffle from bin to gain access.
4. Install the modular cuber on top of the bin using care to be sure a good seal is made between the two cabinets. Align the holes in the bottom rear of the cabinet to mate with the two mounting straps on the top rear of the bin.
5. Use bolts and straps found in hardware package to secure the ice machine. When alignment and leveling are completed, tighten the bolts to secure the mounting straps.

STACKING INSTRUCTIONS

NOTE: This model can only be stacked onto Scotsman units with the same size cabinet as itself. Earlier models are not compatable.

When stacking two units, remove the top panel from the lower icemaker. (The top removed from the lower icemaker will no longer have any function.)

Carefully lift the uncrated top unit onto the bottom one and align the two cabinets. Use of a mechanical lift is recommended for this step.

At the back of the two icemakers, bolt the upper icemaker cabinet to the lower icemaker cabinet using the mounting straps and bolts from the hardware package.

BIN THERMOSTAT INSTALLATION

1. Remove cap from bin thermostat bracket. Insert bin thermostat bracket up through routing hole in sump.
2. Attach the bin thermostat bracket to the bottom of the cuber base using the thumb screws and threaded holes provided.
3. Carefully uncoil the capillary tube to the icemaker and route the capillary tube through the routing hole provided in the sump and through the full length of the bin thermostat bracket.

NOTE: When stacking, route the bin thermostat control from the upper ice machine through the routing hole provided in the sump of the lower icemaker and through the bin thermostat control bracket.

NOTE: Extend bin thermostat capillary tube through entire length of the tubular section of the bin thermostat bracket. When properly installed, the tip of the capillary tube should be flush with the tip of the bin thermostat bracket.

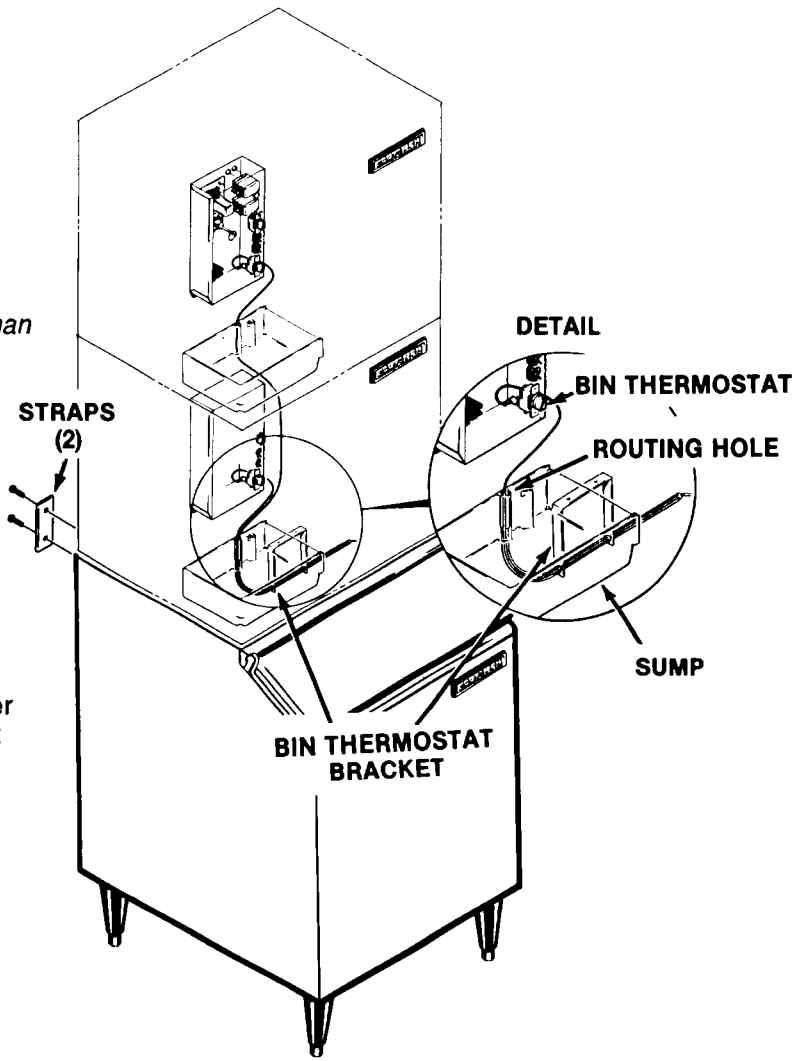

CM450 FOR THE ELECTRICIAN

CONFORM TO ALL APPLICABLE CODES

ELECTRICAL CONNECTIONS

SEE NAMEPLATE for current requirements to determine wire size to be used for electrical hookup. The cuber requires a solid chassis-to-chassis earth ground wire. See Wiring Diagram.

Be certain the cuber is connected to its own electrical circuit and individually fused. Voltage variation should not exceed ten percent of the nameplate rating, even under starting conditions. Low voltages can cause erratic operation and may be responsible for serious damage to the icemaker.

Electrical connections are made at the rear of the icemaker, inside the junction box.

All external wiring should conform to the national, state and local electrical code requirements. Usually an electrical permit and services of a licensed electrician will be required.

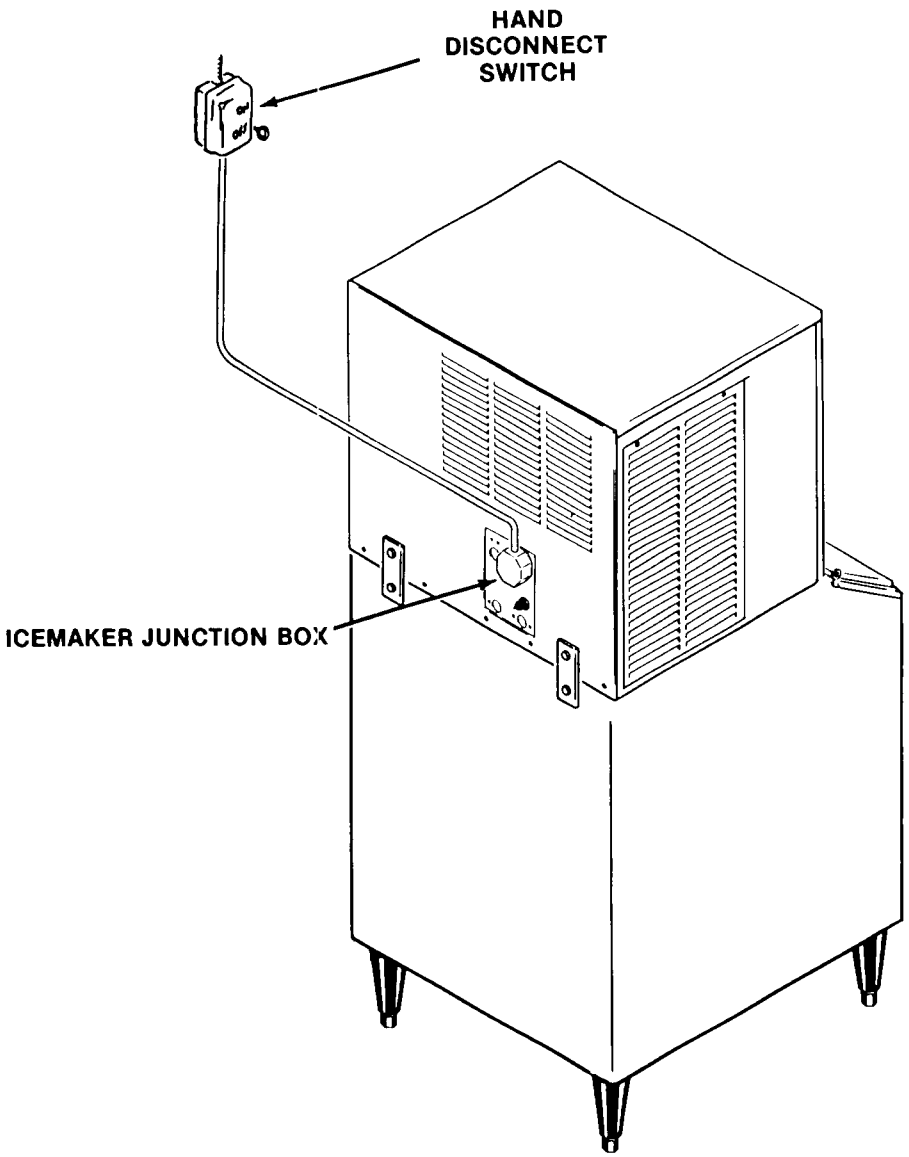

CM450 FOR THE PLUMBER

CONFORM TO ALL APPLICABLE CODES

WATER SUPPLY AND DRAIN CONNECTIONS

The recommended water supply line is a 3/8-inch O.D. copper tubing with a minimum operating pressure of 20 PSIG and a maximum of 120 PSIG. Connect to cold water supply line with standard plumbing fittings, with shutoff valve installed in an accessible place between the water supply and the cuber. In some cases a plumber will be required.

DRAIN CONNECTIONS: All drains are gravity type and must have a minimum of 1/4-inch fall per foot on horizontal runs. The drains to be installed to conform with the local plumbing code. Install a vertical open vent on drain line high point to ensure good draining. The ideal drain receptacle is a trapped and vented floor drain.

Recommended bin drain is 5/8-inch O.D. copper tubing and should be vented and run separately. Insulation for high humidity areas is recommended.

The ice machine sump drain is 3/4" FPT. There must be a vent at this connection for proper sump drainage.

WATER-COOLED MODELS: On water-cooled models, a separate cold water supply inlet is required, to be connected to a second 3/8-inch female pipe thread (FPT) fitting at the rear of the cabinet. Additional drain lines are required to drain the water-cooled condenser, and they must not interconnect to any other of the units drains.

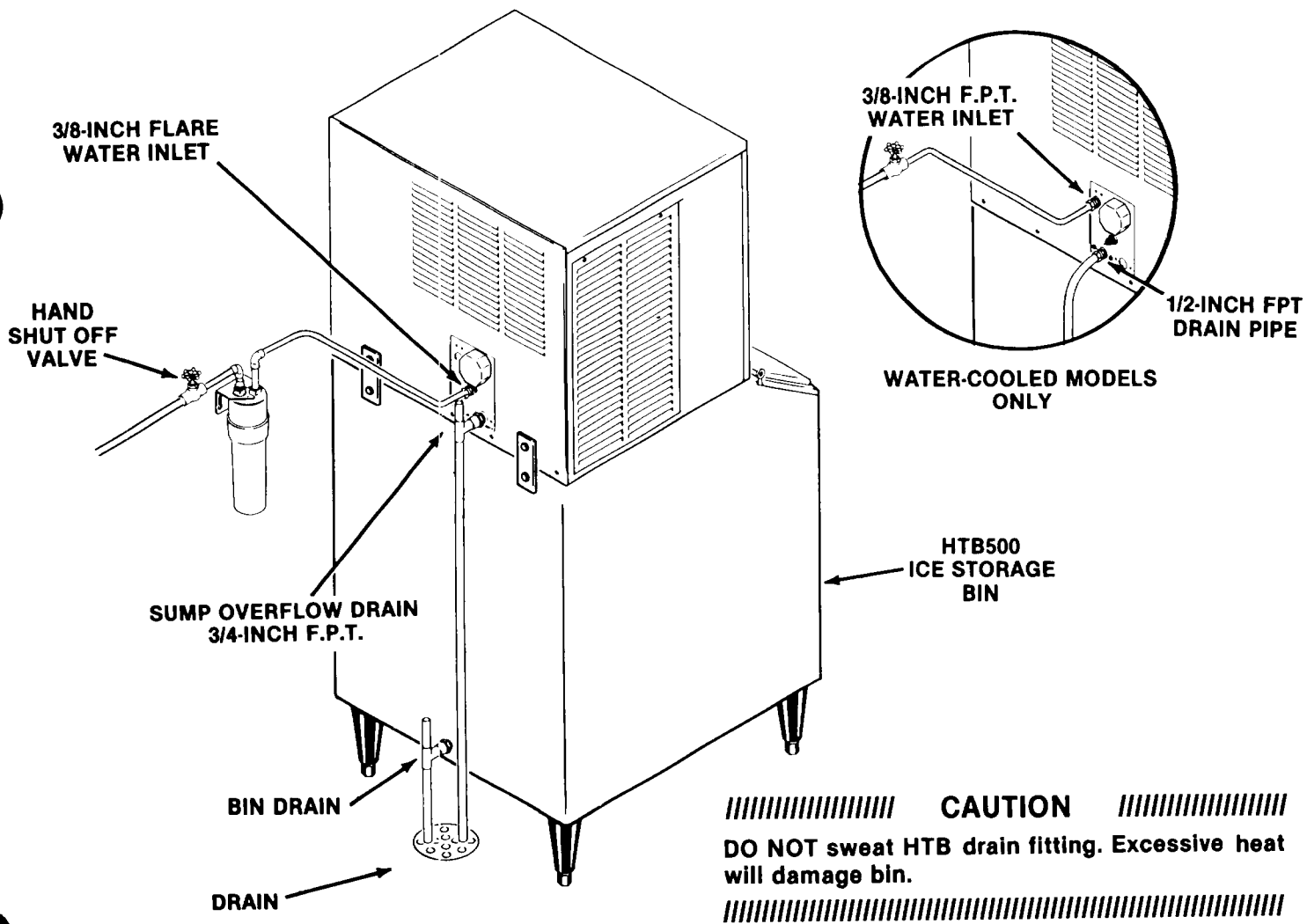

CAUTION

DO NOT sweat HTB drain fitting. Excessive heat will damage bin.

Water Supply and Drain Connection

CM450 FOR THE INSTALLER

FINAL CHECK LIST

1. Is the cabinet in a room where ambient temperatures are within the minimum and maximum temperatures specified?
2. Is there at least six inches clearance at both sides of the cabinet for proper air circulation? (Air-Cooled models)
3. Has water supply pressure been checked to insure a minimum of 20 PSIG and a maximum of 120 PSIG operating pressure?
4. Is the cabinet level?
5. Check that any shipping material has been removed from inside the cabinet.
6. Has the bin thermostat and bracket been properly installed?
7. Check that the drain troughs are properly secured to the bottom of the evaporator plates.
8. Have all electrical and piping connections been made?
9. Is the water supply line shut-off valve installed and electrical wiring properly connected?
10. Check all refrigerant lines and conduit lines, to guard against vibration or rubbing and possible failure.
11. Have the bin and cabinet been wiped clean?
12. Has the Manufacturer's Registration Card been properly filled out? Check for correct model and serial numbers from Serial nameplate, then mail the completed card to the SCOTSMAN factory.
13. Has the owner/user been given the Service Manual and instructed how to operate and maintain the icemaker?
14. Has the owner been given the name and telephone number of the authorized SCOTSMAN Service Agency serving him?

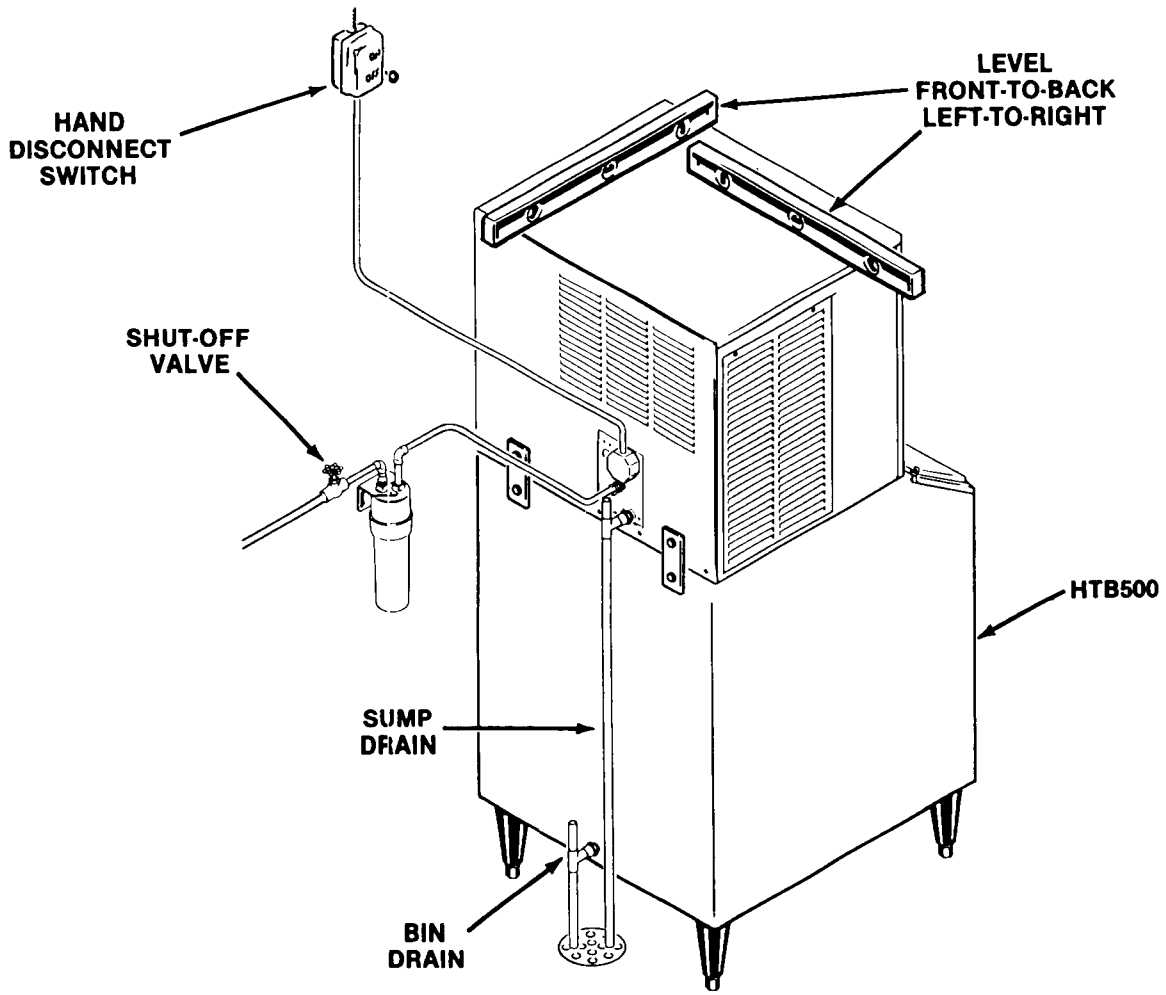

CM450 START-UP

START-UP

1. Remove front panel by pulling out to unsnap.
2. Remove two screws and the control box cover.
3. Remove four thumb screws and the evaporator cover.
4. Check that the two toggle switches, the MASTER ON-OFF toggle switch and the COMPRESSOR ON-OFF toggle switch are in the OFF position, on the control box.
5. OPEN the water supply line shutoff valve.
6. Inside the control box is the shaft of the timer and the switch assembly. Rotate the shaft of the timer and switch assembly clockwise to start the timer. The timer starts when the actuator arm on the microswitch drops off outer cam into cam slot. See Timer Cam Positions. An audible click can be heard, but in a noisy area, look at the cam and switch to observe the event.

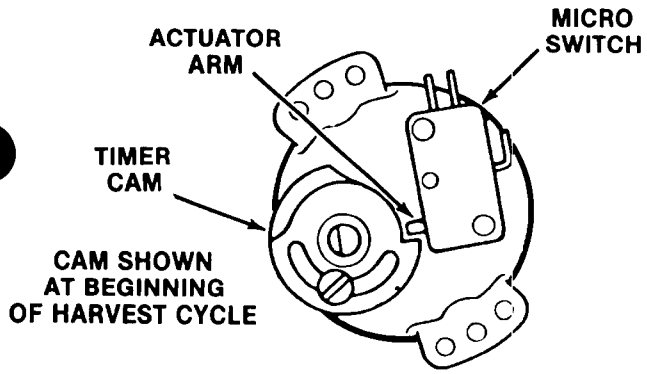

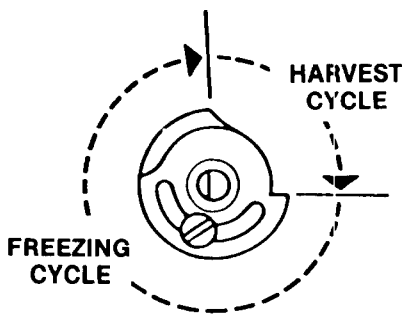

CAM SHOWN DIVIDED INTO TYPICAL FREEZING & HARVEST CYCLES

Timer Cam Positions

7. Move the master ON-OFF toggle switch, the top toggle switch, to the ON position.
8. Observe water fill cycle:

   Water pump operates and water inlet solenoid valve OPENS, incoming water flows from the valve through the tubing, the reservoir fills and excess water is overflowed through the stand pipe. This cycle will take about three minutes. Timer will close the water inlet solenoid valve and the water fill cycle is complete.

   Advancing the shaft of the timer and switch assembly into a new harvest cycle, restarts the timer and allows a check that: Water inlet solenoid valve OPENS and the reservoir overflows through the stand pipe. Water inlet valve CLOSES, stopping water overflow.

   The water pump is operating, as seen by water moving through the tygon tube, up to the water distributor at the top of each evaporator plate, where water is uniformly dispensed and cascades down both sides of the evaporator plate and drains back into the sump assembly for recirculation.
9. Check that the water cascades down over each cube mold and into the sump.
10. When the second cycle is completed, move the compressor ON-OFF toggle switch, to the ON position.
11. Check operation of the freezing cycle:

    The compressor is operating.

    The icemaking process begins; feeling the metal parts of the evaporator plate reveals cold temperature, very shortly ice begins to form. Tubing will become frosted at the top of the evaporator plate.

    Freezing time will range between 15 and 30 minutes. Longer time for temperatures above 70-degrees F. and shorter time required when temperatures are below 70-degrees F. Average complete cycle time is about 18 minutes.

CM450 START-UP

12. Observe second and third cube harvest.

    Check size of SCOTSMAN CONTOUR CUBE

    Unlike other SCOTSMAN cubes which are made in a definite molded shape, contour cubes are produced in indentations and many shapes and sizes of contour cubes may be produced — only ONE size and shape combination is correct.

    An under-charged refrigeration system produces smaller cubes at the top of the evaporator plate and large cubes at the bottom. Charge system per NAMEPLATE specifications.

    Charge Refrigeration System with **REFRIGERANT 502 ONLY.**

    In areas where extreme problem water condition exists, filtering or purifying equipment is recommended. Contact SCOTSMAN ICE SYSTEMS, Service Department, Albert Lea, Minnesota 56007 for further details.

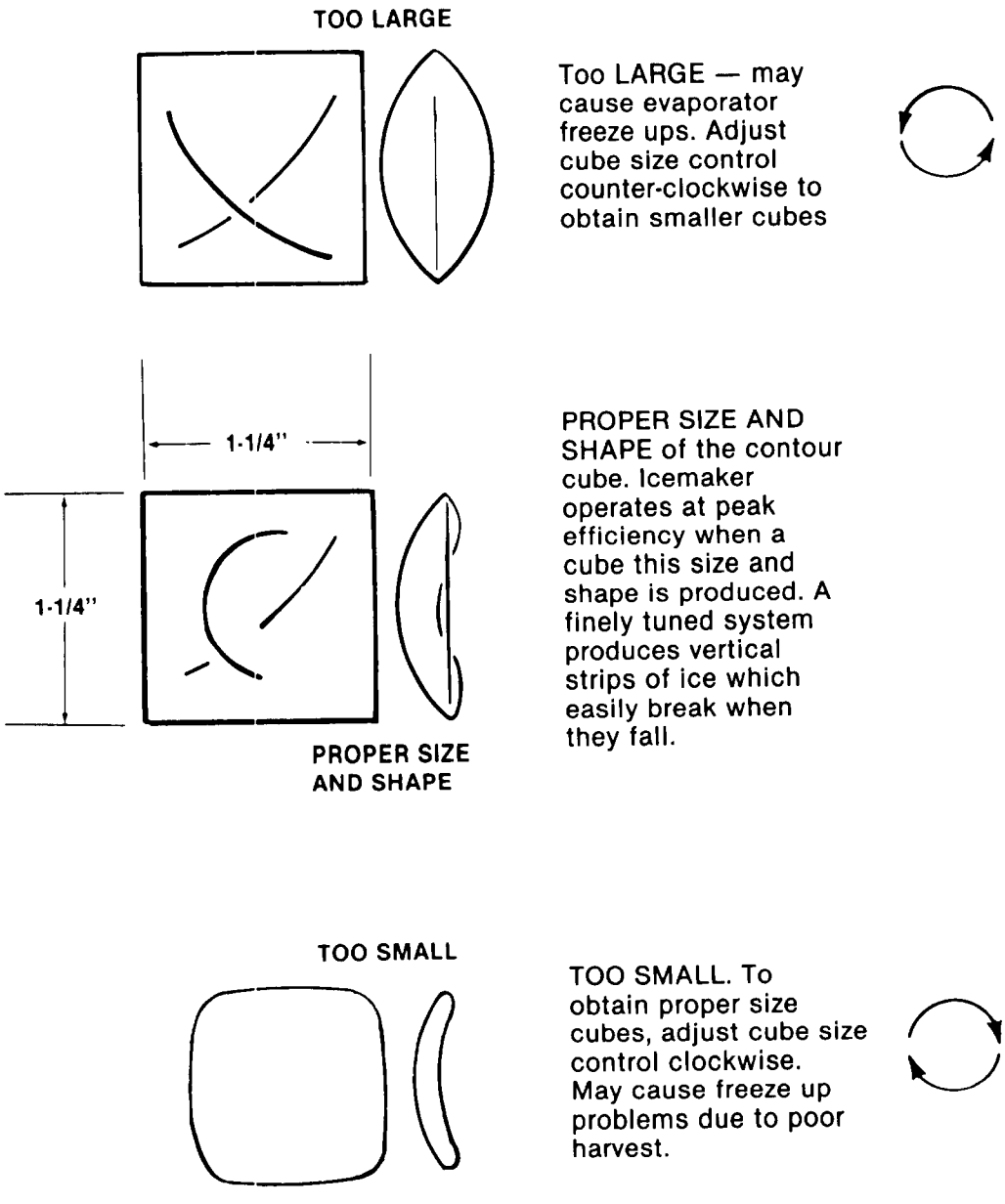

Ice Cube Size & Shape

CM450 START-UP

ADJUSTMENT OF CUBE SIZE

To produce SMALLER sized ice cubes:

Locate cube size control knob, in the front of the control box.

Rotate the adjusting screw one-eighth of a turn COUNTERCLOCKWISE to WARMER.

Observe size of the ice cubes in the next two ice cube harvests and adjust in one-eighth turn or less increments, until correct ice cube is achieved.

To produce LARGER ice cubes:

Locate cube size control on the front of the control box

Rotate the adjusting screw one-eighth of a turn CLOCKWISE to COLDER.

Observe size of ice cubes in the next two cube harvests and adjust in one-eighth turn or less increments, until correct ice cube size is achieved.

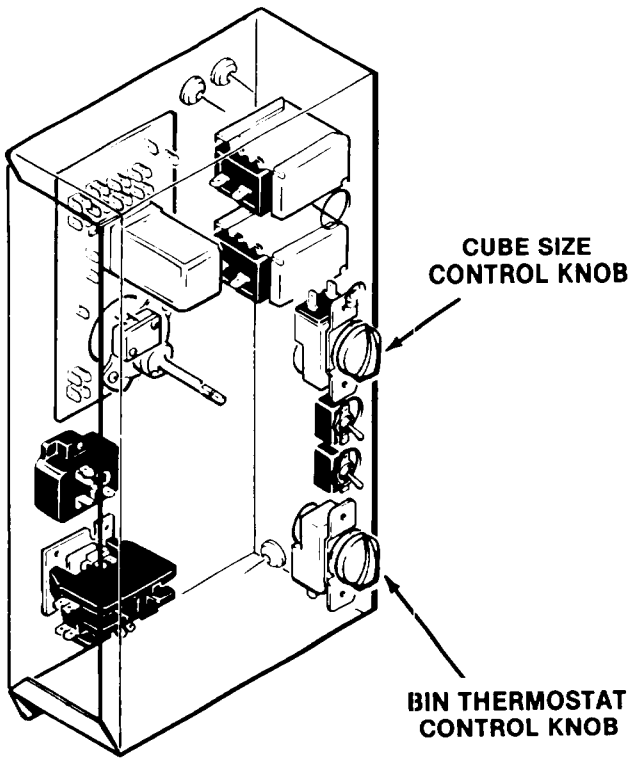

ROTATE ADJUSTMENT KNOB COUNTER-CLOCKWISE TO PRODUCE SMALLER CUBES.

ROTATE ADJUSTMENT KNOB CLOCKWISE TO PRODUCE LARGER CUBES.

BIN THERMOSTAT OPERATION

Check texture of ice cubes; when partially cloudy throughout, suggests icemaker is operating short of water; or, possibly an extreme problem water condition exists, where filtering or purifying equipment is recommended. Contact SCOTSMAN ICE SYSTEMS, Service Department, Albert Lea, Minnesota 56007 for further details. See SERVICE DIGNOSIS chart, for shortage of water symptoms and corrections.

13. With the icemaker in the harvest cycle, hold ice against the bin thermostat control bulb to test shutoff, which should cause the icemaker to shut OFF at the END OF THE HARVEST CYCLE.

    Within minutes after the ice is removed from the sensing bulb, the bulb will warm up and cause the icemaker to restart. This control is factory set and should not be reset until testing is performed.

14. Replace control box cover and all cabinet panels and screws.

15. Thoroughly explain to the owner/user the significant specifications of the icemaker, the start up and operation, going through the procedures in the operating instructions. Answer all questions about the icemaker by the owner; and inform the owner of the name and telephone number of the authorized SCOTSMAN Distributor, or service agency serving him.

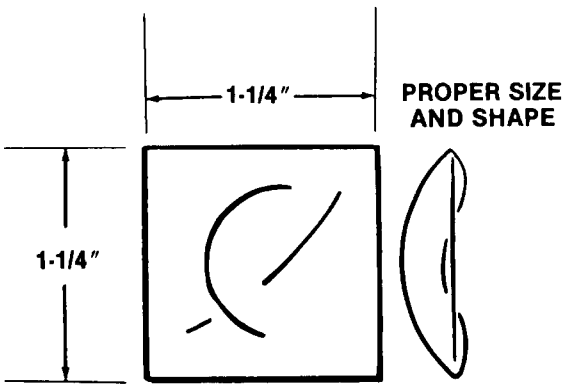

OPERATION

FREEZING CYCLE

Water from the sump assembly is pumped to the water distributor system, at the top of each evaporator plate. From the water distributor the water cascades by gravity over all cells of the plate and to the sump assembly below, for recirculation. At the beginning of the freezing cycle, the electrical circuit is completed to the compressor and the water pump. The water pump operates continuously, through both the freezing cycle and the harvest cycle.

In water-cooled models, water also flows through the condenser and out the drain. While in the condenser, water removes heat from the refrigerant and allows the refrigerant to condense from a gas to a liquid.

In the compressor, gaseous refrigerant is compressed and discharged into the condenser, as a high pressure, high temperature gas. The refrigerant is cooled by either air or water, and condenses into a high pressure, medium temperature liquid. This liquid refrigerant then passes through a small capillary tube, where the temperature and pressure of the liquid refrigerant are lowered and it next enters the evaporator plates. The refrigerant is warmed by the water cascading over the Evaporator plate and begins to boil off and become a gas. The refrigerant next travels through the accumulator and the heat exchange area of the suction line where any remaining liquid refrigerant boils off and returns to the compressor as a low pressure, low temperature gas, and the cycle starts again.

During the freezing cycle, the hot gas solenoid valve is CLOSED and the water inlet solenoid valve is CLOSED.

When the ice cubes are partially formed, the cube size control will sense the temperature at which it is preset to CLOSE. This will complete the electrical circuit to the timer. The timer then controls the remainder of the freezing cycle.

The timer will keep the icemaker operating in the freezing cycle for a selected length of time. This will give the ice cubes time to fully form. after that selected length of time, the timer will switch the icemaker into the harvest cycle, through the contacts of the timer assembly microswitch.

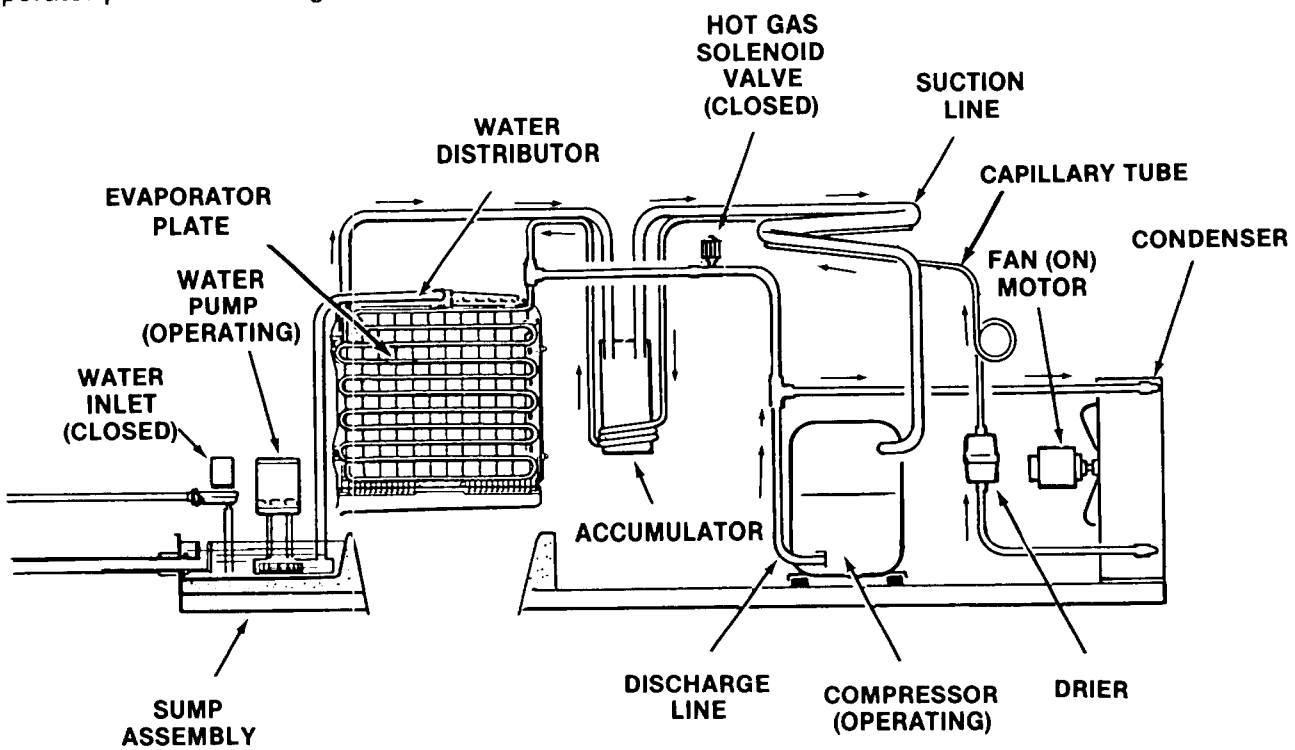

Freezing Cycle

HARVEST CYCLE - HOT GAS BYPASS

When the timer switches the icemaker into the harvest cycle, high pressure, high temperature gas refrigerant being discharged from the compressor is diverted from the condenser through the hot gas solenoid valve into each evaporator plate. During this cycle, the gaseous refrigerant bypasses the condenser and the capillary tube.

In the electrical circuit, both the compressor and the water pump are operating and the hot gas solenoid valve is energized and OPEN and the water inlet solenoid valve is OPEN.

The finished ice cubes are released from the sides of each evaporator plate, by the warming effect of the hot gas condensing in each evaporator plate and the water cascading over the ice cubes. The released ice cubes drop into the ice storage bin below.

At the end of the harvest cycle, the timer cam will push the actuator arm to the microswitch IN. If the bin thermostat is still CLOSED, a whole new cycle will begin. If the bin thermostat is OPEN, the icemaker will shut OFF, at this time.

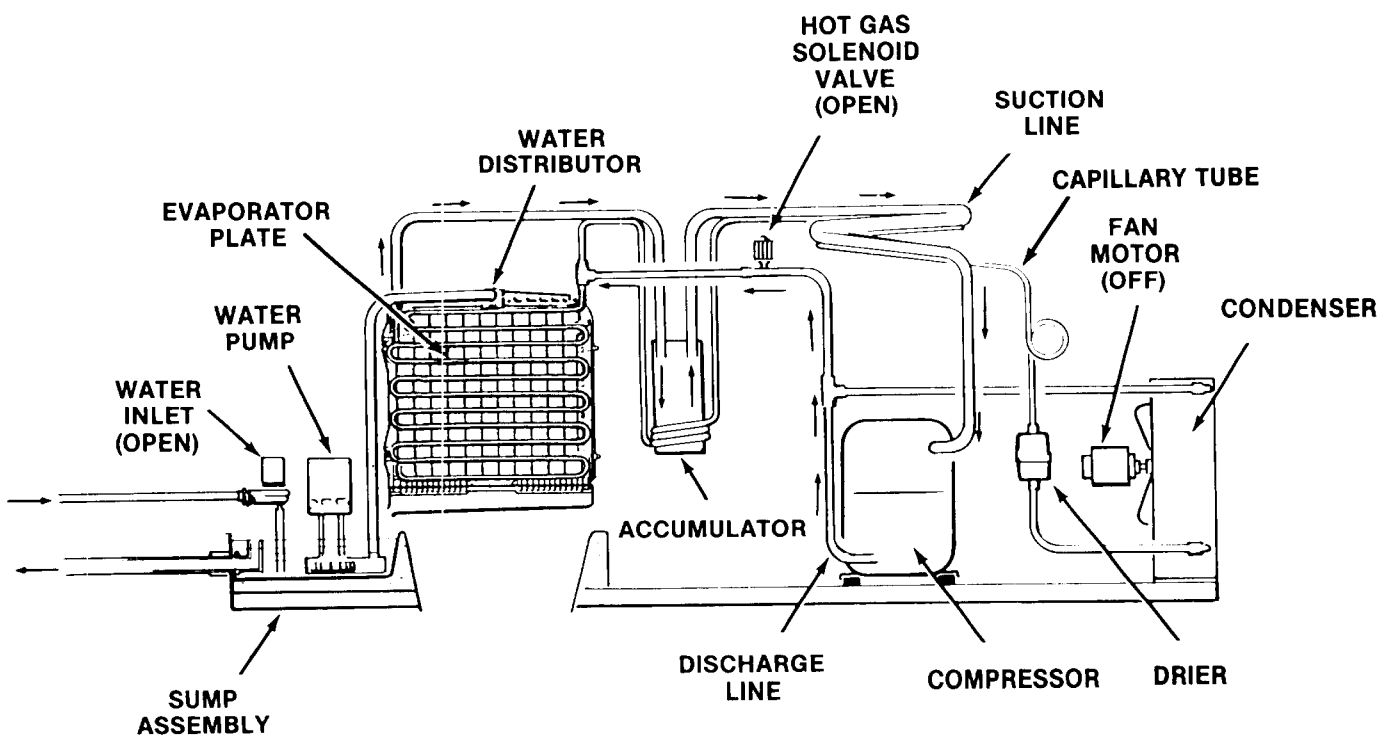

Harvest Cycle

CM450 OPERATION - ELECTRICAL SEQUENCE

The following charts illustrate which switches and which components are ON or OFF during a particular phase of the icemaking cycle.

Refer to the wiring diagram for a reference. Remember, the wiring diagram shows the unit as it is in the Timed Freeze Cycle.

BEGINNING FREEZE

ELECTRICAL COMPONENTS (LOADS)	ON	OFF
Compressor	X	
*Fan Motor (Air-cooled only)	X	
Hot Gas Valve		X
Inlet Water Valve		X
P.C. Board Relay Coil	X	
Timer		X
Water Pump	X	

SWITCHES	ON	OFF
Bin Thermostat	X	
Cube Size Thermostat		X
H.P. Fan Control	X	
Toggle - Master	X	
Toggle - Compressor	X	
H.P. Control	X	
Timer Micro Switch N.C.	X	
Timer Micro Switch N.O.	X	
Hi Temp Switch	X	

*The fan control will open and close with changes in discharge pressure, but will usually be closed during early freeze so the fan will usually be ON.

At the beginning of the freeze cycle the timer is not turning, but the icemaker is refrigerating the water starting to turn the water into ice.

CM450 OPERATION - ELECTRICAL SEQUENCE

TIMED FREEZE

ELECTRICAL COMPONENTS (LOADS)	ON	OFF
Compressor	X	
*Fan Motor (Air-cooled only)	X	X
Hot Gas Valve		X
Inlet Water Valve		X
P.C. Board Relay Coil	X	
Timer	X	
Water Pump	X	

SWITCHES	ON	OFF
Bin Thermostat	X	
Cube Size Thermostat	X	
H.P. Fan Control	X	X
Toggle Switch - Master	X	
Toggle Switch - Compressor	X	
H.P. Control	X	
Timer Micro Switch N.C.	X	
Timer Micro Switch N.O.	X	
Hi Temp Switch	X	

After the icemaker has cooled the water and formed some ice on the evaporator, the evaporator will have gotten cold enough to have the cube size control close. All this does is start and run the timer.

*The fan control will be opening and closing with the changes in discharge pressure, so the fan will be turning ON and OFF.

HARVEST

ELECTRICAL COMPONENTS (LOADS)	ON	OFF
Compressor	X	
*Fan Motor (Air-cooled only)		X
Hot Gas Valve	X	
Inlet Water Valve	X	
P.C. Board Relay Coil		X
Timer	X	
Water Pump	X	

SWITCHES	ON	OFF
Bin Thermostat	X	
Cube Size Thermostat		X
H.P. Fan Control		X
Toggle Switch - Master	X	
Toggle Switch - Compressor	X	
H.P. Control	X	
Timer Micro Switch N.C.	X	
Timer Micro Switch N.O.	X	
Hi Temp Switch	X	

The timer has now turned far enough so that the micro-switch plunger has dropped into the gap in the cam, this breaks the circuit to the relay in the P.C. Board - and that puts the machine into the Harvest cycle, where the hot gas valve and inlet water valve have opened to harvest the ice. When ice is on the bin control, it will open and at the end of the harvest cycle shut off the machine.

*The fan control will keep the fan OFF during the harvest cycle until the discharge pressure builds up to 190 PSIG, probably near the very end of the harvest cycle, then the fan will come ON.

CM450 SERVICE SPECIFICATIONS

In servicing a machine, it is often useful to compare that individual unit's operating characteristics to those of a normally operating machine. The numbers and facts listed on this page are for NEW, CLEAN machines.

Use these numbers as a guideline only.

COMPONENT	
Timer: 1 revolution of the cam, in minutes	8
Harvest Time, preset, in minutes	2-1/4
Inlet Water Valve, water flow in g.p.m.	1/3

	Close	Open
Cube Size Thermostat, Reverse Acting, Temperature Range	(+12^{0}F. to -6^{0}F.)	n/a
Bin Thermostat Temperature Range	38.5^0 - 43.5^0	33.5^0 - 38.5^0
High Pressure Safety Switch, Air Cooled PSIG	manual	450
High Pressure Safety Switch, Water Cooled, PSIG	manual	350
Fan Control	210	193

OPERATING CHARACTERISTICS

This model is air cooled or water cooled, and on air cooled models during the freezing cycle, the discharge pressure will slowly decline as the unit forms ice on the evaporators. At the same time the suction pressure is also dropping, reaching it's lowest point at the end of the freeze cycle. Compressor amps experience a similar decline. Water cooled models have a constant discharge pressure, usually about 220 psig.

During the harvest or defrost cycle, the suction pressure goes up dramatically with the opening of the hot gas by pass valve. The discharge pressure falls when this happens. On air cooled the fan may cycle during either cycle. Compressor amps reach their peak during harvest.

Freeze Cycle:

For example, on air cooled with conditions at 70^{0}F. air, and 50^{0}F. water, the discharge pressure will decline from about 270 at the begining to 200 by the end. Suction pressure at the end of freeze will be about 23 PSIG.

Freeze cycle time will be about 9-10 minutes.

Single phase total amps 5 minutes into the freeze cycle will be about 5.9.

At 90^0/70^0, the discharge pressures will go from about 300 down to 240. Suction pressure will be about 25 PSIG at the end of the 12-13 minute freeze cycle.

Harvest Cycle:

Discharge pressure at 70^0/50^0 will be about 155-160, and suction pressure will be around 95-100 PSIG.

At 90^0/70^0, discharge pressure will be about 190. Suction pressure will be about 105 PSIG.

The ice per cycle is 2.5 to 3 pounds.

The values listed are representative of values seen at a wide range of air and water temperatures and are for a normal cube size. When comparing these figures to field data, allow a variation from each end of the range given.

After servicing refrigeration system, always torque the access valve caps to 60-75 inch pounds.

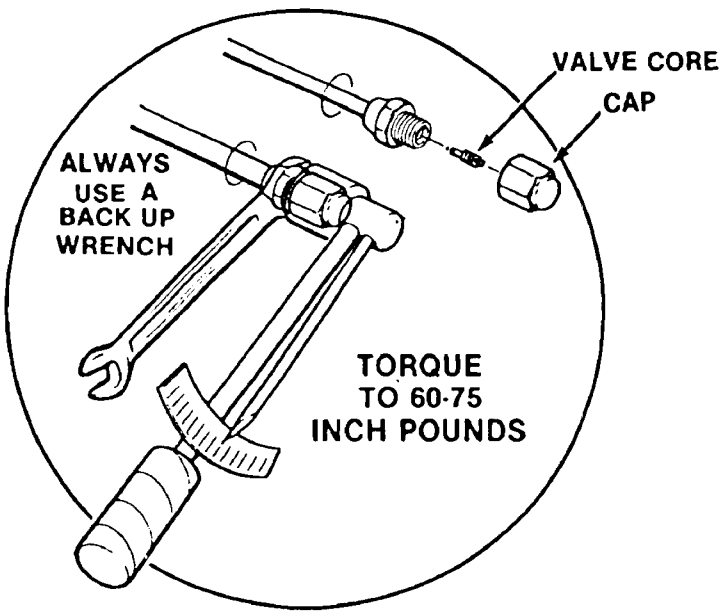

CM450 MAINTENANCE & CLEANING INSTRUCTIONS

A Scotsman Ice System represents a sizable investment of time and money in any company's business. In order to receive the best return for that investment, it MUST receive periodic maintenance.

It is the USER'S RESPONSIBILITY to see that the unit is properly maintained. It is always preferable, and less costly in the long run, to avoid possible down time by keeping it clean; adjusting it as needed; and by replacing worn parts before they can cause failure. The following is a list of recommended maintenance that will help keep the machine running with a minimum of problems.

Maintenance and Cleaning should be scheduled at a minimum of twice per year.

ICEMAKER

THE FOLLOWING MAINTENANCE SHOULD BE SCHEDULED AT LEAST TWO TIMES PER YEAR ON THIS ICEMAKER. CALL YOUR AUTHORIZED SCOTSMAN SERVICE AGENCY.

1. Check and clean or service any optional water treatment devices, if any.

2. Clean the water strainer.

3. On air cooled models, clean the air cooled condenser. Do not use a wire brush. Vacuum or blow out any dust in the fins of the condenser: the condenser is only clean when light can be seen through the fins.

4. Check that the cabinet is level in the side to side and front to back directions.

5. Clean the water system, evaporator plates and sump assembly, using a solution of Scotsman Ice Machine Cleaner. Refer to CLEANING - Icemaker.

Cleaning requirements vary according to local water conditions and to how much the machine runs. Continuous check of the clarity and shape of the ice cubes, with a visual inspection of the water system parts, evaporator parts and the reservoir will indicate if more frequent cleaning is needed.

6. Check and tighten all bolts and screws.

7. Check for water leaks and make corrections.

8. Check that the bin thermostat operates correctly: holding ice on the thermostat control tube in the bin should cause the icemaker to shut off at the end of the harvest cycle. After the ice is removed, the icemaker should restart within a few minutes.

9. Check cube size, adjust if required.

10. Check harvest time, adjust if required.

ICE STORAGE BIN

The interior liner of the bin is in contact with a **food** product: **ice.** The storage bin must be **cleaned** regularly to maintain a **sanitary** environment. Once a week cleaning with soap and water, a hot water rinse and an air dry is a basic procedure.

Every 90 days, the liner should be sanitized with a commercial ice machine sanitizer, according to the directions of the sanitizer, or with a solution of household bleach and water:

1. Mix the bleach and water using the ratio of two ounces of bleach to two gallons of water.

2. Wipe all interior surfaces of the ice storage bin with the bleach and water.

3. Allow to air dry.

CLEANING: ICEMAKER

1. Remove front panel.

2. Switch the compressor switch to OFF. Switch the master switch to OFF.

3. Remove 4 thumbscrews and the front liner.

4. Twist forward and remove the front drain trough, and switch the master switch to ON, pumping the water from the reservoir into the bin. Replace the drain trough.

5. Mix 8 ounces of Scotsman Ice Machine Cleaner with 1 gallon of warm (95^0F. - 115^0F.) water and pour into the reservoir until full.

WARNING

Scotsman Ice Machine Cleaner contains Phosphoric and Hydroxyacetic acids. These compounds are corrosive and may cause burns. If swallowed, DO NOT induce vomiting. Give large amounts of water or milk. Call Physician immediately. In case of external contact, flush with water. KEEP OUT OF THE REACH OF CHILDREN.

CM450 MAINTENANCE & CLEANING INSTRUCTIONS

6. Let the unit operate for 30 minutes with the compressor off, then switch the unit off.

7. Remove the front drain trough again.

8. Switch on the master switch to pump water from the sump into the bin. Continue to add fresh water to flush residual cleaner from the system. Switch the master switch off.

9. Wash the plastic and stainless liners of the freezer section with a solution of household bleach (1 ounce of bleach to 1 gallon of water) and warm (95^0F.-115^0F.) water. Allow to air dry.

10. Replace the drain trough and front liner.

11. Switch the master and compressor switches back on.

12. Replace the front panel

13. Check the next batch of cubes to make sure all of the acid taste is gone.

////////////////////////////////CAUTION////////////////////////////

DO NOT use ice cubes produced from the cleaning solution. Be sure none remain in the bin.

//

14. Pour hot water into the storage bin to melt the cubes and also clean out the bin drain.

15. The unit is now ready for continued automatic operation.

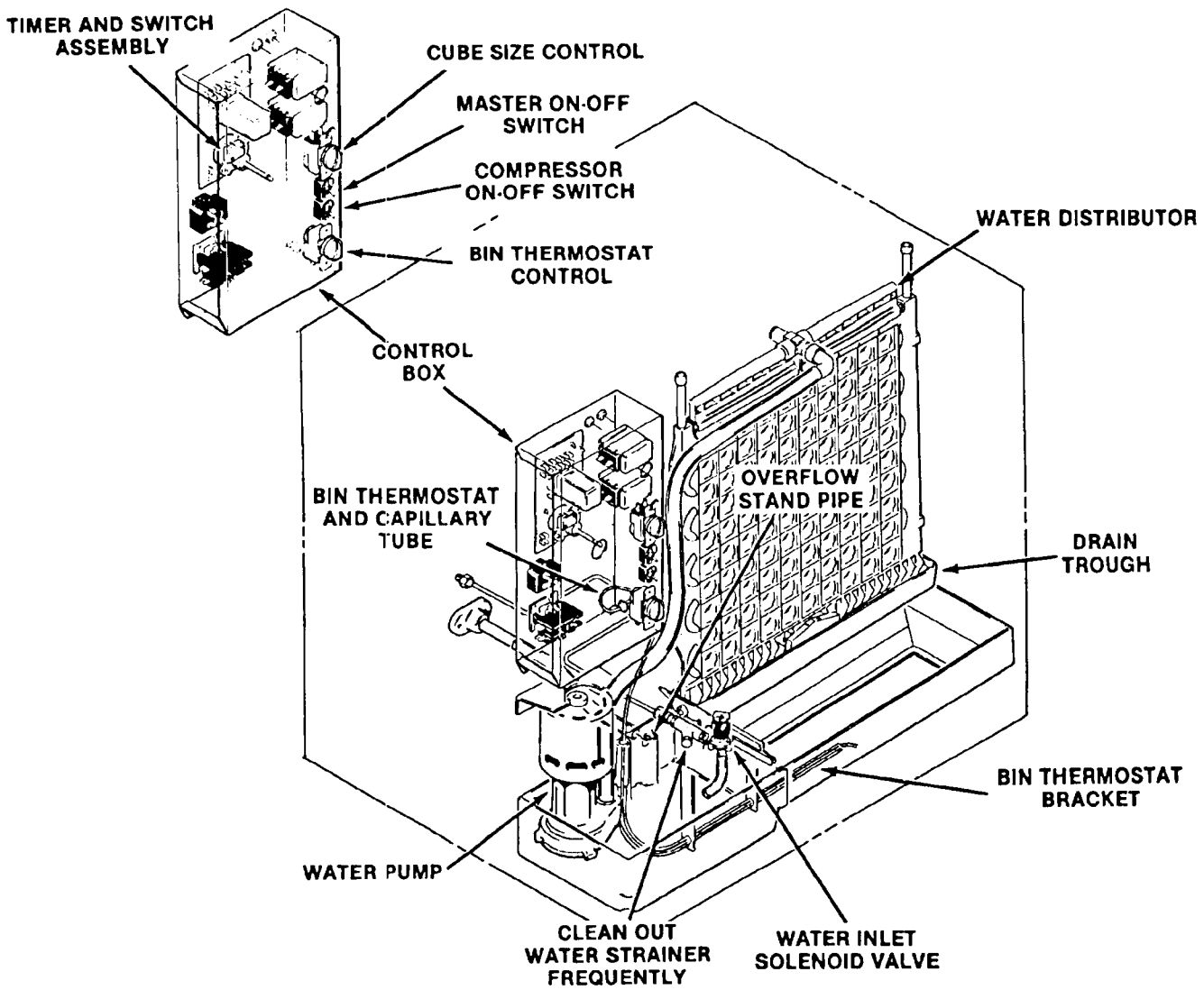

CM450 COMPONENT DESCRIPTION

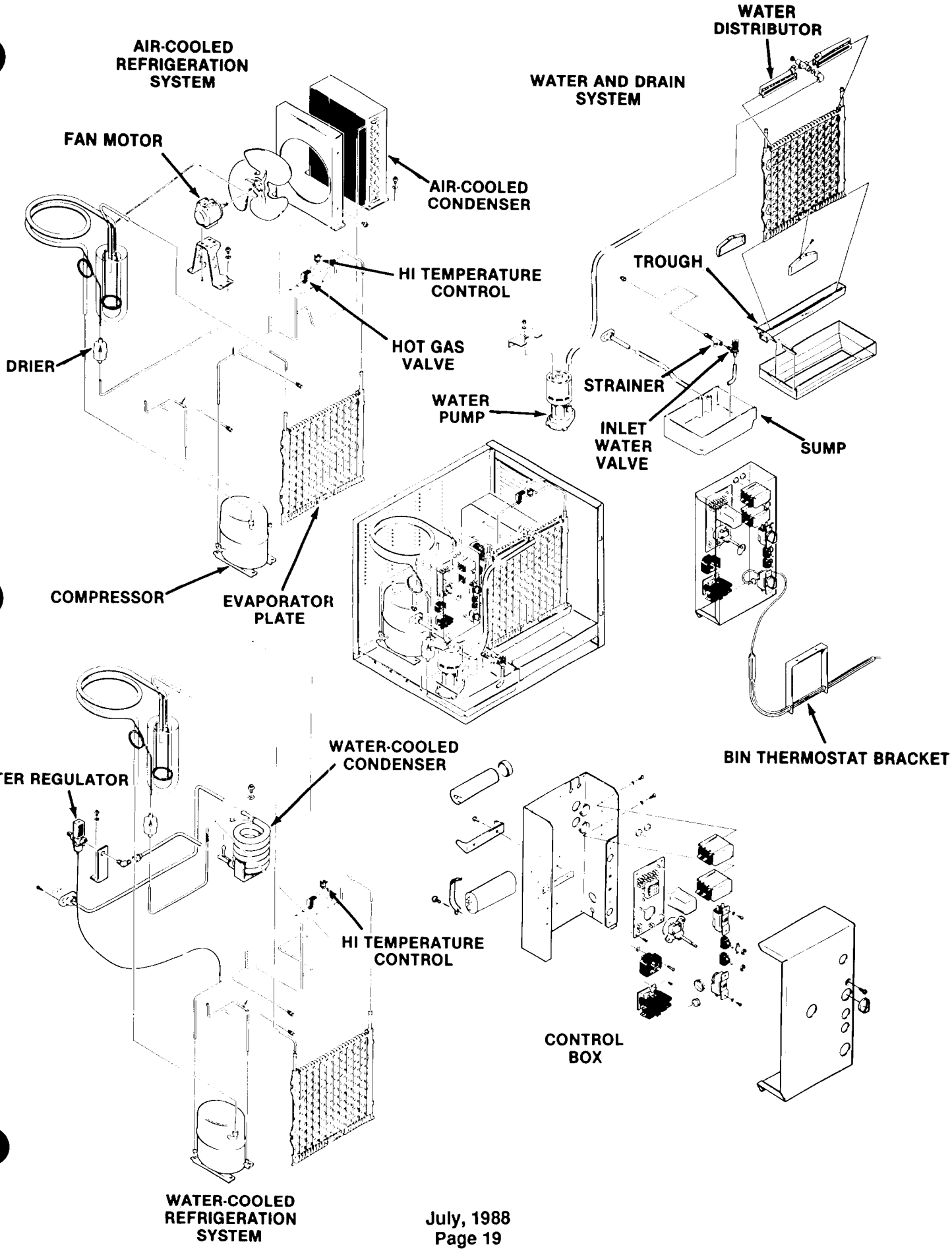

CM450 COMPONENT DESCRIPTION

BIN THERMOSTAT CONTROL

The bin thermostat is located on the front edge of the control box with an accessible knob on the front. The sensing capillary tube is routed from the control out the side of the control box down and across the front edge of the sump and down into the bin thermostat bracket. The bin thermostat control functions to automatically shut OFF the icemaker, when the ice storage bin is filled and ice contacts the capillary tube. It also signals the RESTART of the icemaker, when the capillary tube starts to warm up, after ice has been removed from the bin.

Bin thermostat control adjustment should ONLY be performed on icemakers installed in extreme warm or cold locations and adjust only in increments of one eighth turn at a time.

COMPRESSOR CONTACTOR

The compressor contactor functions to carry the compressor line current. The contactor is wired so any control in the pilot circuit, such as the bin thermostat, and high pressure controls, etc., will cause the contactor holding coil to be de-energized, when the control contact OPENS, thereby breaking the circuit to the compressor.

CUBE SIZE CONTROL

The temperature sensing cube size control affects the length of the freezing cycle prior to initiating the finishing timer. The cube size control closes its contacts when the evaporator reaches a preset temperature, starting the finishing timer. A variation in either ambient air or incoming water temperature will affect the efficiency of the refrigeration system. This will vary the length of time it takes the evaporator to reach the temperature at which the cube size control is preset to CLOSE; which, in turn, will affect the overall cycle time.

See *Cube Size Adjustment* BEFORE attempting to adjust the control.

RELAY

The multi-function, three pole, double-throw, plug-in relay is installed directly into a receptacle on the printed circuit board in the control box. The relay functions in part to by-pass the bin thermostat control to prevent the icemaker from shutting OFF, when a filled-bin condition occurs during the freezing cycle. The by-pass action serves to ensure full-sized ice cubes with each harvest cycle; and, to prevent short cycling on the bin thermostat control.

TIMER — Timer & Switch Assembly

The function of the timer begins when activated by the cube size control. The outer surface, or large diameter lobe of the timer cam, determines the timer cycle for finish freezing of the ice cubes, while the inner surface, or small diameter lobe, determines the time cycle for the harvest sequence. All electrical circuitry is connected through the printed circuit board and the timer and shunted by the single-pole, double-throw microswitch to either the freezing cycle or the harvest cycle. The microswitch is actuated by a cam assembly directly connected to the timer motor. The timer cam can be adjusted to vary the defrost line, as required. One complete rotation of the cam will take eight minutes. Harvest is preset at two and one-fourth minutes.

HIGH PRESSURE SAFETY CONTROL

This is a manual reset control that shuts down the icemaker, should the discharge pressure ever reach 450 PSIG on air-cooled and 350 PSIG on water-cooled.

CM450 COMPONENT DESCRIPTION

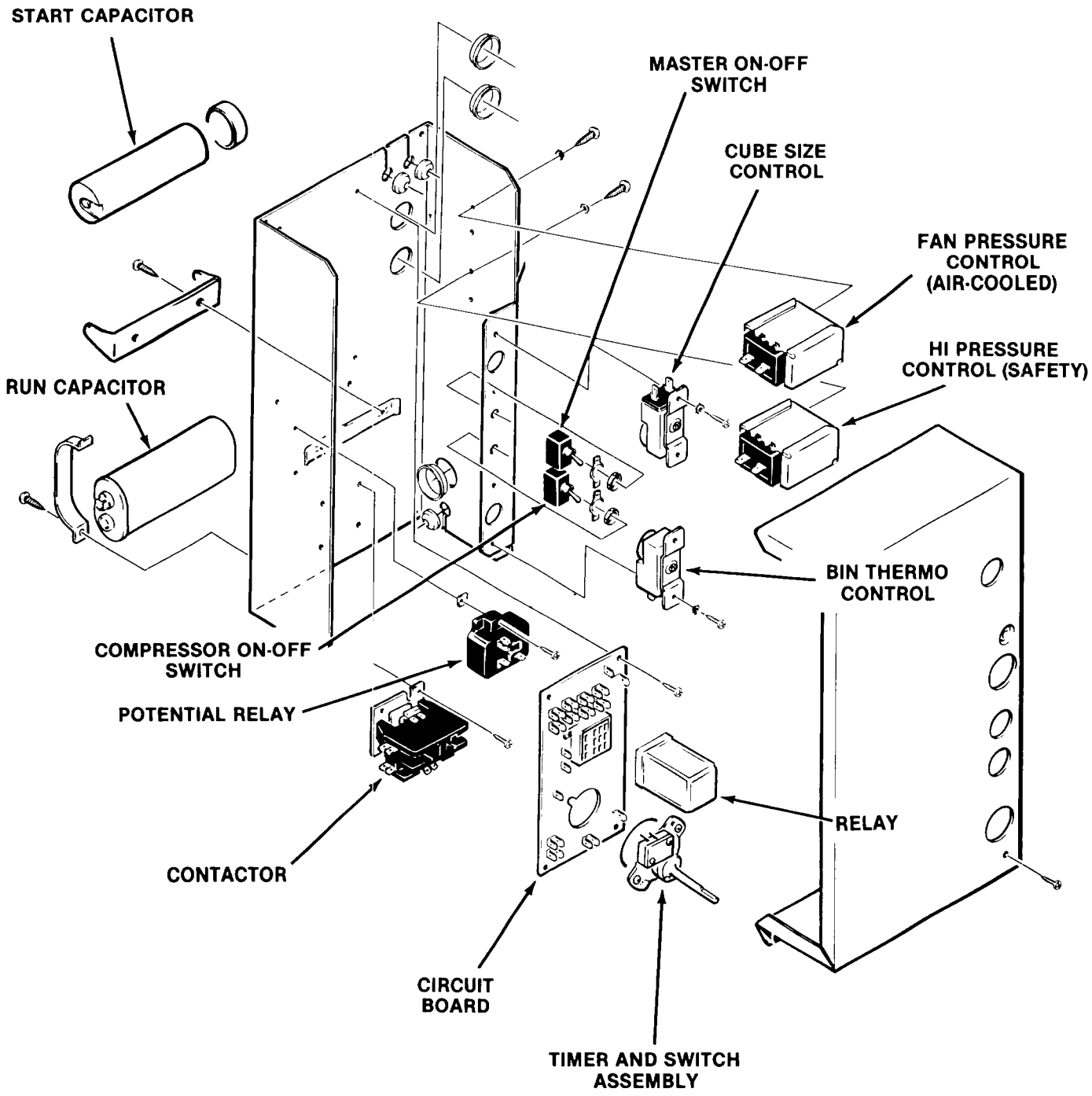

CM450 COMPONENT DESCRIPTION

WATER INLET SOLENOID VALVE

The water inlet solenoid valve functions to fill the sump assembly with water and overflow out the overflow standpipe located at the bottom of the sump. This action fills and rinses the sump during each harvest cycle. The flow rate is .33 g.p.m.

WATER REGULATOR VALVE — Water-Cooled Model

The water regulator valve functions to maintain a constant compressor head pressure, by regulating the amount of inlet water flow through the condenser on water-cooled models. The valve operates through the refrigerant system high side pressure. Rotating the adjusting screw, located on top of the valve, can INCREASE or DECREASE the water flow through the water-cooled condenser, which in turn, will DECREASE or INCREASE the compressor operating head pressure. It is to be set at 220 PSIG.

When installing a replacement water regulator valve, be sure the replacement valve is installed with the arrow positioned in the direction of the water flow.

WATER DISTRIBUTION SYSTEM

The water distribution system functions to evenly supply water to all cells of the evaporator plates. The water pump pumps water from the sump up the vertical tygon tube to the tee. From there water is channeled through the water manifold to the water distributors, above each evaporator plate, and from six holes within each distributor, water flows to the cells of each side of the evaporator plates. Gravity flow returns the unfrozen excess portion of water to the sump reservoir for recirculation.

HOT GAS SOLENOID VALVE

The hot gas solenoid valve functions only during the harvest cycle, to divert the hot discharge gas from the compressor, bypassing the condenser and capillary tube, for direct flow in the evaporator plates to release ice cubes from the ice cube molds. The hot gas solenoid valve is comprised of two parts, the body & plunger and the coil & frame assemblies. Installed in the discharge line of the compressor, the energized solenoid coil lifts the valve stem within the valve body, to cause the hot discharge gas to be diverted when the finishing timer has advanced to the start of the harvest cycle.

FAN PRESSURE CONTROL — Air-Cooled Models only. In both freeze and harvest cycles, the fan pressure control functions to maintain a minimum discharge pressure by cycling the fan on and off. The approximate C.I. is 210 PSIG and C.O. is 193 PSIG.

STRAINER

A water strainer is located in the potable inlet water line before the water inlet solenoid valve. Clean the water strainer frequently.

CM450 COMPONENT DESCRIPTION

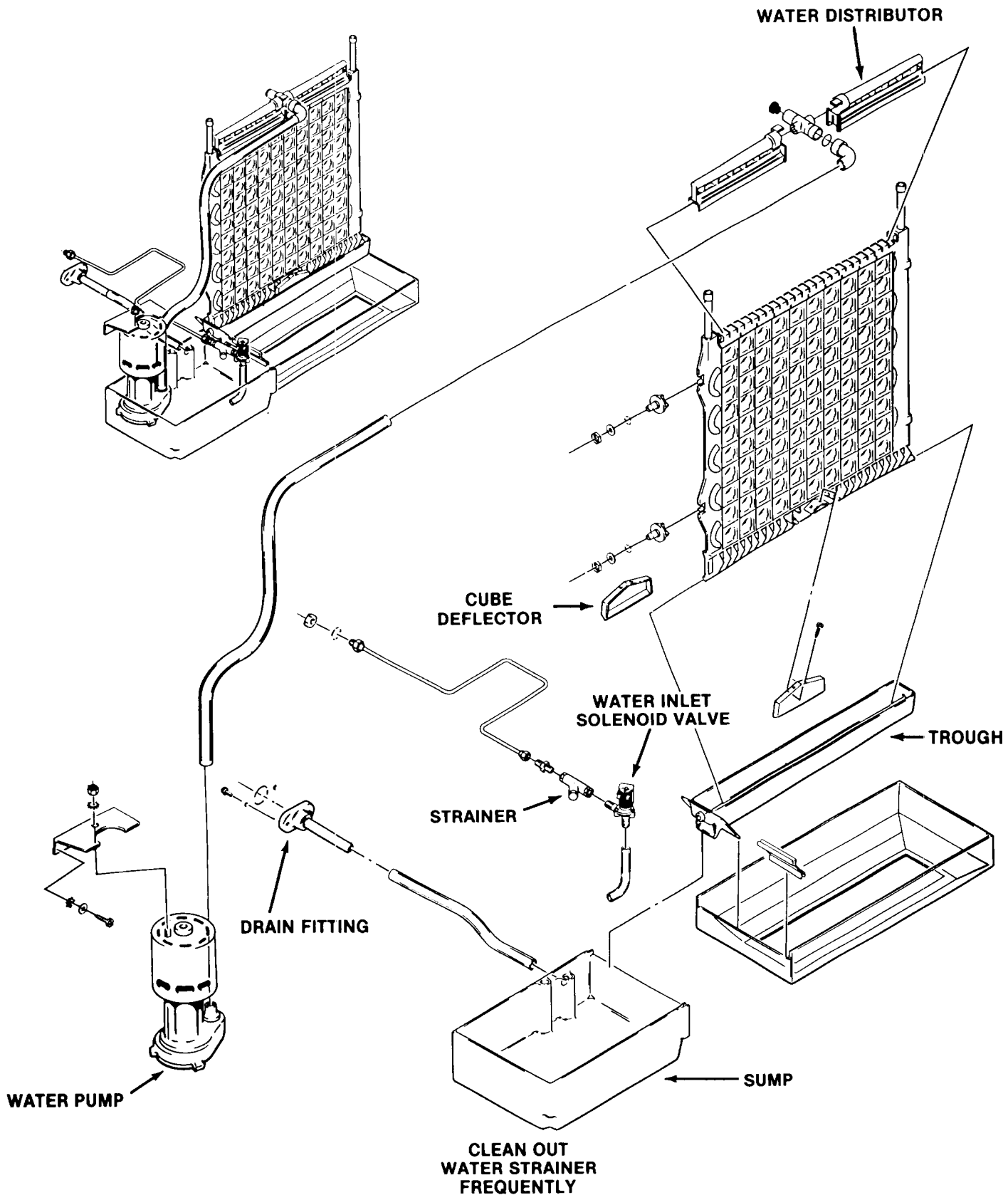

CM450 SERVICE DIAGNOSIS

The service diagnosis section is for use in aiding the serviceman in diagnosing a particular problem for pin-pointing the area in which the problem lies, thus an ever available reference for proper corrective action.

The following chart lists corrective actions for the causes of known symptoms of certain problems that can occur in the icemaking-refrigeration system.

ICEMAKING - REFRIGERATION SYSTEM

SYMPTOM	POSSIBLE CAUSE	CORRECTION
Irregular size cubes some cloudy.	Some distributor holes plugged.	Clean distributor holes.
		Clean water sump.
	Shortage of water.	See shortage of water CORRECTION.
	Unit not level.	Level cabinet, as required.
Cubes too large.	Dirty air-cooled condenser.	Clean condenser.
	Cube size control set too cold.	Rotate cube size control dial toward WARMER.
Cubes too small.	Cube size control set too warm.	Rotate cube size control dial toward COLDER.
	Partially restricted capillary tube. (Kinked, pinched off, etc.)	Replace heat exchange assembly.
	Moisture in refrigeration system.	Blow refrigerant charge; replace drier; evacuate system; add proper refrigerant charge.
	Shortage of water.	See shortage of water CORRECTION.
Cloudy cubes.	Shortage of water.	See shortage of water SYMPTOM.
	Dirty water supply.	Check water quality and install water purification system.
	Accumulated impurities.	Use SCOTSMAN Ice Machine Cleaner and clean icemaker.
Shortage of water.	Short harvest cycle.	Adjust cam of timer and switch assembly.
	Water leak in sump area or off evaporator plate.	Locate Leak and correct condition.
	Partial restriction in water inlet strainer or inlet water valve.	Clean or replace strainer or valve.
	Water pressure too low.	Check for 20 PSI flowing water. Restore pressure.

CM450 SERVICE DIAGNOSIS

SYMPTOM	POSSIBLE CAUSE	CORRECTION
Decreased ice capacity.	High head pressure, result of dirty condenser or faulty fan motor or fan pressure switch or on water-cooled - not enough water through condenser.	Clean condenser. Repair or replace fan motor or switch. Check with regulator valve.
	Non-condensable gas in the system	Purge the system, evacuate and recharge per nameplate requirements.
	Poor air circulation or extreme hot location.	Relocate the cabinet; or provide ventilation.
	Overcharge of refrigerant.	Evacuate and recharge per nameplate.
	Hot gas solenoid valve leaking.	Replace valve.
	Partially restricted capillary tube.	See cubes too small CORRECTION.
	Defective compressor.	Replace compressor.
Poor harvests. Icemaker does not harvest.	Too short defrost time.	Check and adjust harvest cycle.
	Restriction in water inlet line.	Check strainer and inlet water valve.
	Hot gas solenoid does not open. Binds or burned out.	Replace solenoid, coil or valve as applicable.
	Undercharge of refrigerant.	Charge to nameplate requirements.
	Water pressure too low.	Check for 20 PSI flowing water. Restore pressure.
	Cube size too large or too small.	Adjust size with cube size control.
	Water-cooled models: water Regulator valve leaks water thru during harvest.	Replace water regulator valve.
Compressor cycles intermittently.	Low voltage.	Check for circuit overload. Check building supply voltage, if low, contact power company.
	Dirty condenser.	Clean condenser with vacuum cleaner or brush. DO NOT USE A WIRE BRUSH.
	Air circulation blocked.	Locate cabinet with adequate air space for proper air flow.
	Defective fan motor.	Replace fan motor.
	Non-condensable gases in system.	Purge the system and recharge per nameplate requirements.
Icemaker will not operate.	Blown fuse in line.	Replace fuse and check for cause.
	Master switch in OFF position.	Set switch to ON position.
	Faulty master switch.	Replace switch.
	Timer contacts open.	Replace timer microswitch.
	Faulty bin thermo.	Replace.
	Off on high head pressure safety switch.	Water-Cooled - water interruption correct. Air-Cooled - condenser not getting air.

ADJUSTMENT OF THE BIN THERMOSTAT CONTROL

The control for the bin thermostat is the temperature control, located in the front of the control box.

The bin thermostat control requires adjustment only if the icemaker shuts off prematurely. Turn adjusting knob, in 1/8 turn or less increments, in the appropriate direction until the icemaker shuts OFF.

Remove ice from the capillary bulb; then, place warm hand on the capillary bulb to restart the icemaker.

Place handful of ice against the capillary bulb and observe that the icemaker should shut OFF. (Only at the end of harvest).

CAUTION

The adjusting screws on the temperature control device have very sensitive response to adjustment. DO NOT attempt to adjust the screw until after thoroughly reading and understanding the instructions and illustrations. Over-adjusting or erratic guessing, can foul the instrument and cause ultimate delay and part replacement, WHICH COULD HAVE BEEN PREVENTED.

ALTITUDE ADJUSTMENT
over 2,000 feet above sea level only

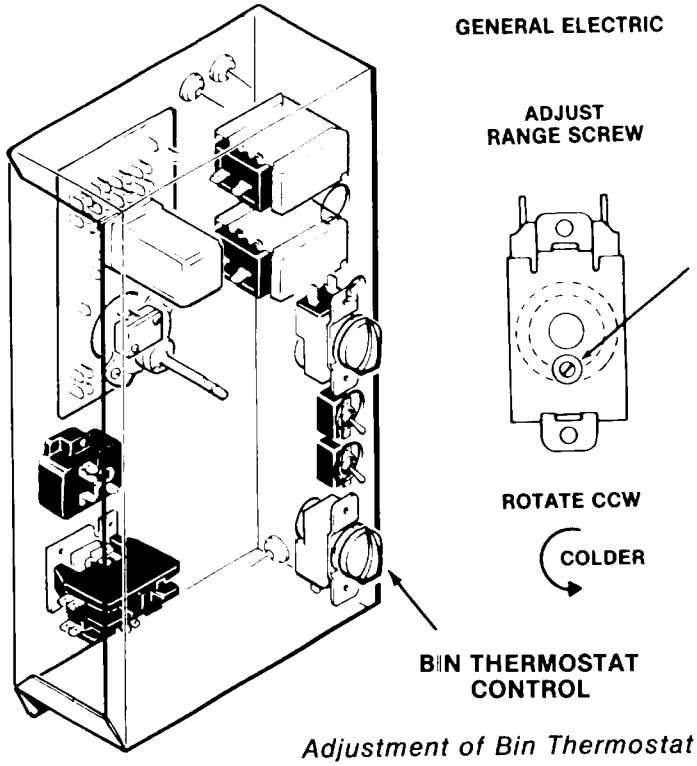

Adjustment of Bin Thermostat

ADJUSTMENT OF THE WATER REGULATOR ASSEMBLY — WATER-COOLED MODELS

The correct compressor head pressure on water-cooled models is 220 PSIG. Adjusting the water regulator valve increases or decreases the rate of flow of water, through the water-cooled condenser; which increases or decreases the affected temperature/pressure of the compressor head pressure, INCREASED water flow, results in DECREASED or LOWER head pressure; while, DECREASED water flow, results in INCREASED or HIGHER head pressure.

To adjust the water regulator assembly:

To INCREASE the head pressure: Rotate the adjusting screw COUNTERCLOCKWISE.

To DECREASE the head pressure: Rotate the adjusting screw CLOCKWISE.

Check change in compressor head pressure, and repeat adjustment as necessary, to achieve desired operating head pressure.

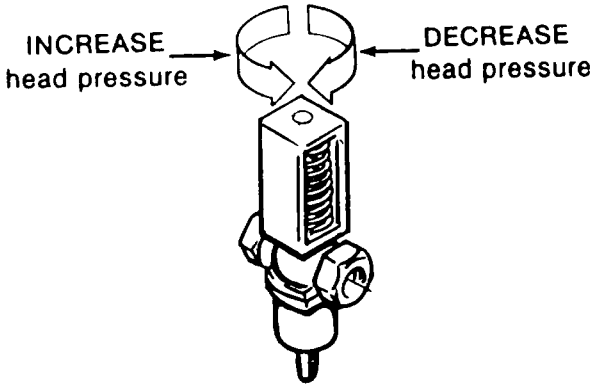

WATER REGULATOR

ADJUSTMENT OF THE CUBE SIZE CONTROL

CAUTION

BEFORE performing actual adjustments to the cube size control, check other possible causes for cube size problems, refer to SERVICE DIAGNOSIS for problem review and analysis. DO NOT perform adjustment when a new cube size control is installed, until the control bulb has been properly installed in the tube well, on the evaporator outlet tube and the icemaker has progressed through several complete freezing and harvest cycles, to observe size and quality of ice cubes freezing and harvest cycles, and whether or not a cube size problem exists.

As a reverse acting temperature control, adjustment on the cube size control is performed to cause either larger sized ice cubes or smaller sized ice cubes to be produced.

To produce LARGER sized ice cubes:

1. Locate the cube size control, on the front of the control box.
2. Rotate the adjusting knob one-eighth of a turn CLOCKWISE toward COLDER.
3. Observe size of ice cubes in next two ice cube harvests and repeat step 2 above, in one-eighth turn increments, until correct ice cube size is achieved.

To produce SMALLER sized ice cubes:

1. Locate the cube size control, on the front of the control box.
2. Rotate the adjusting knob one-eighth of a turn COUNTERCLOCKWISE toward warmer.
3. Observe size of ice cubes in next two ice cube harvests and adjust in one-eighth turn increments, until correct ice cube size is achieved.

ADJUSTMENT OF THE TIMER & SWITCH ASSEMBLY

The timer and switch assembly if factory set, so one complete revolution of the cam on the timer represents eight minutes. Five and one-half minutes comprise the freezing cycle event during cam rotation, and the final two and one-half minutes program the defrost and harvest cycle. Rotating the shaft of the timer cam CLOCKWISE will allow positioning the actuator arm of the microswitch on the cam at the selected start position for either the freezing cycle or harvest cycle, as required in the cleaning instructions.

WARNING

Disconnect electrical power supply to icemaker whenever adjustment procedures are performed.

To adjust the timer & switch assembly:

A. HARVEST CYCLE: Slowly rotate the shaft of the timer and switch assembly, located in the control box, CLOCKWISE, until the actuator arm on the microswitch initiates the harvest cycle. An audible click can be heard, but in a noisy area, look at the cam and switch to observe the event.

B. FREEZING CYCLE: Slowly rotate the shaft of the timer and switch assembly, located in the control box, CLOCKWISE, until the actuator arm on the microswitch initiates the freezing cycle.

C. The length of the harvest cycle can be changed by loosening the adjustment screw on the cam. The normal setting is two and one-quarter minutes, as set at the factory. It is important that the length of the harvest cycle allow enough time for all the ice cubes to fall from the evaporator. Too short of a time will cause the evaporator to freeze up and stop ejecting ice into the bin. Too much time wastes icemaking capacity, energy and water. Adjustment of the harvest cycle may require a corresponding adjustment of the cube size control.

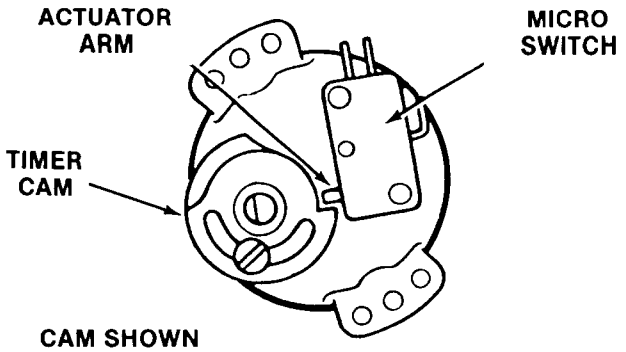

CAM SHOWN AT BEGINNING OF HARVEST CYCLE

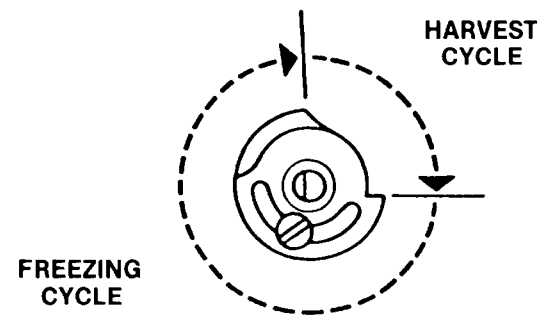

CAM SHOWN DIVIDED INTO TYPICAL FREEZING AND HARVEST CYCLES

WARNING

Be sure the electrical power supply circuit breaker and the inlet water supply are OFF, BEFORE starting any of the following REMOVAL AND REPLACEMENT procedures as a precaution to prevent possible personal injury or damage to equipment.

REMOVAL AND REPLACEMENT OF THE DRIER

To remove the drier:

1. Pull out to unsnap catches and remove the front panel.
2. Remove screws and remove left side access panel.
3. Bleed off or blow the refrigerant charge through the Schrader valve.
4. Unsolder refrigeration lines at both ends of the drier, and remove the drier.

To replace the drier:

CAUTION

If the factory seal is broken on the replacement drier, exposing it to the atmosphere more than a few minutes, the drier will absorb moisture from the atmosphere and lose substantial ability for moisture removal.

Be sure the replacement drier is installed with the arrow positioned in the direction of the refrigerant flow.

1. Remove the factory seals from the replacement drier and install the drier in the refrigerant lines with the arrow positioned in the direction of the refrigerant flow.
2. Solder the drier into the lines, two places, taking precautions to NOT OVERHEAT the drier body, during installation soldering.
3. Purge the system and check for leaks.
4. Thoroughly evacuate the system to remove moisture and non-condensables.
5. Charge the system with refrigerant, by weight. SEE NAMEPLATE.
6. Replace and attach the left side panel.

NOTE

Always install a replacement drier, anytime the sealed refrigeration system is opened. Do not replace the drier until all other repair or replacement has been completed.

REMOVAL AND REPLACEMENT OF THE EVAPORATOR PLATE ASSEMBLY

1. Remove the front and top panels.
2. Bleed off or blow the refrigerant charge through the Schrader valve.
3. Disconnect Tygon water inlet tube(s), at the water manifold tee(s), above the evaporator plates.
4. Unsnap the sump assembly from the lower left and right attachment points on each evaporator plate.
5. Slide the water distributor tubes about 1/8-inch along the top of the evaporator plate to be removed, until the left water distributor tube can be lifted upward.
6. Lift the end of the water distributor tube and slide the distributors toward the left along the top of the evaporator plate, until the flexible right notch is cleared.
7. Unsnap and disconnect each left and right water distributor tube from the water manifold section.

CAUTION

Use EXTRA PRECAUTION to protect the plastic parts during the next step to unsolder the refrigerant lines, two places, at the top of the evaporator plate. Position wet cloths over top of plates, as well as over the plastic liner at the rear, or sides, to prevent accidental heat damage, or possible fire from torch flame.

8. Unsolder and remove the refrigerant lines at the top of the evaporator plate to be replaced.
9. Remove nuts at left of the evaporator then, loosen the braces just enough to remove the evaporator plate. Temporarily replace the braces, to support the remaining evaporator plate.

To replace the evaporator plate, reverse the removal procedures. See Nameplate. Weigh in proper charge of R-502.

REMOVAL AND REPLACEMENT OF THE COMPRESSOR ASSEMBLY

To remove the compressor assembly:

1. Pull out to unsnap catches and remove the front panel.
2. Remove screws and remove cabinet top and left side access panel.
3. Bleed off or blow the refrigerant charge through the Schrader valve.
4. Remove the cover from the terminal box on the compressor; then, remove electrical leads from the compressor.
5. Unsolder suction, discharge and process header from compressor.
6. Remove four bolts and washers which secure the compressor to the chassis mounting base.
7. Remove the compressor from the cabinet.

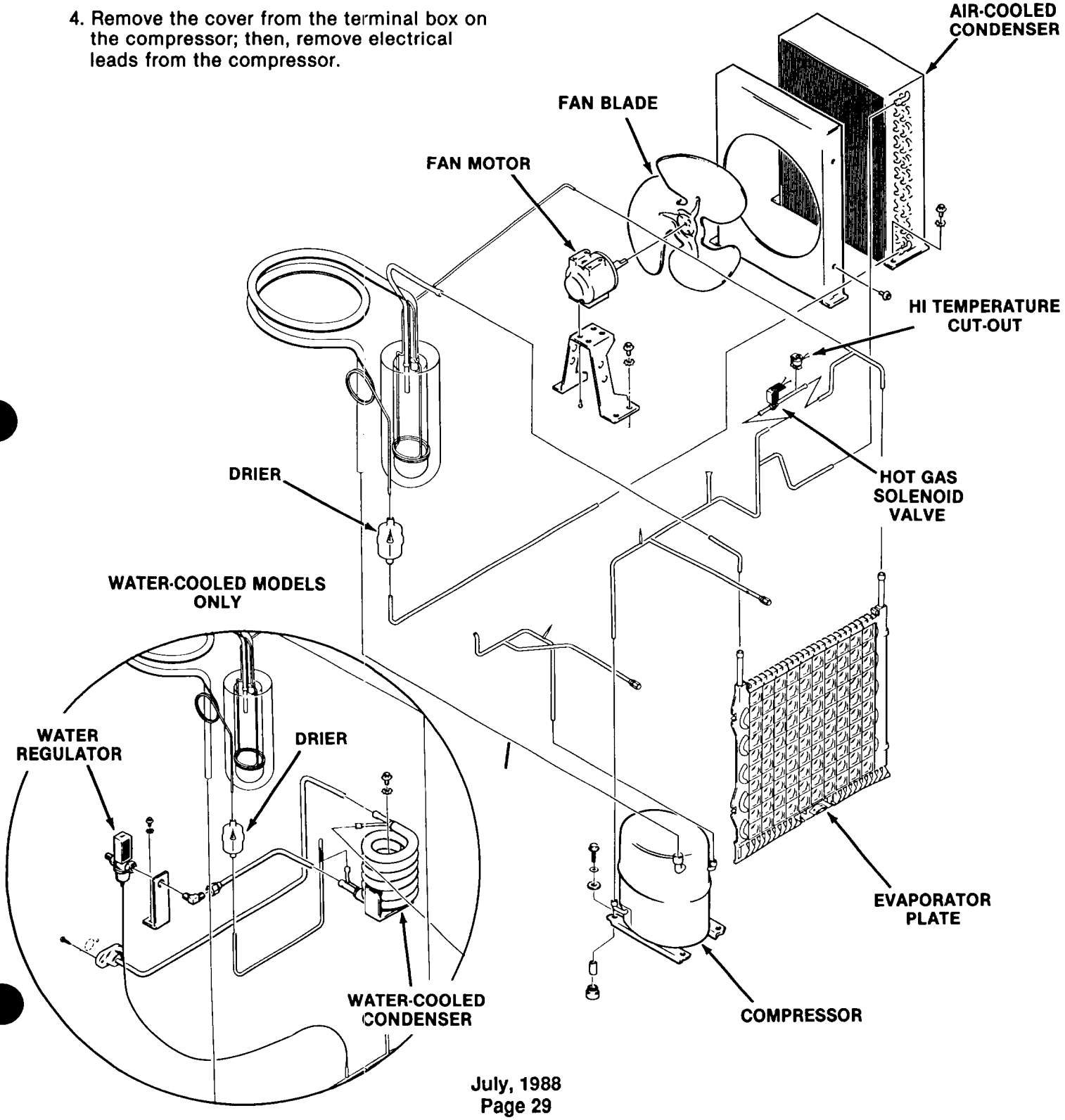

WARNING

Disconnect electrical power supply to icemaker whenever adjustment procedures are performed.

REMOVAL AND REPLACEMENT OF THE CONDENSER — AIR-COOLED MODELS

To remove the condenser:

1. Pull out to unsnap catches and remove the front panel.
2. Remove screws and remove cabinet top and right service side panels.
3. Bleed off or blow the refrigerant charge through the Schrader valve.
4. Unsolder and disconnect refrigerant lines from the condenser.
5. Unsolder and remove the drier from the refrigerant lines connecting to the condenser.
6. Remove screws, lockwashers and the condenser from the chassis base.

To replace the air-cooled condenser, reverse the removal procedure.

REMOVAL AND REPLACEMENT OF THE CONDENSER — WATER-COOLED MODELS

To remove the condenser:

1. Remove screws and the right side panel.
2. Bleed off or blow the refrigerant charge through the Schrader valve.
3. Check to be sure building source water inlet supply shutoff valve to rear of chassis is OFF.
4. Disconnect water-cooled condenser inlet water line at the water regulator assembly outlet fitting.
5. Unsolder the refrigerant capillary tube distributor line at the outlet end of the drier, the refrigerant liquid line from the bottom of the condenser, and remove the drier from the lines.
6. Unsolder the compressor discharge line, at the top of the water-cooled condenser.
7. Unsolder the compressor discharge line at the top of the water-cooled condenser and the refrigerant line from the bottom of the water regulator valve.
8. Remove two screws and washers and the water-cooled condenser from the cabinet.

To replace the water-cooled condenser, reverse the removal procedures.

REMOVAL AND REPLACEMENT OF THE FAN MOTOR — AIR-COOLED MODELS

To remove the fan motor assembly:

1. Pull out to unsnap catches and remove the front panel.
2. Remove unit top or left side panel.
3. Disconnect the two electrical leads, from the fan motor, at the control box assembly.

Before next step, measure or make accurate mental note of the distance the fan blades extend beyond the fan shroud, so during replacement the correct distance is maintained.

4. Remove screws and the fan motor and bracket assembly; and remove the fan motor and bracket from the chassis base.
5. Loosen set screws on the fan blade and remove the fan blade from the fan motor. Mark or note position of the blade on the shaft of the fan motor, for replacement.
6. Remove screws and lockwasher and separate the fan motor from the fan motor bracket.

To replace the fan motor assembly, reverse the removal procedure.

Be sure to replace the fan blade with the hub of the fan blade facing the fan motor, to ensure air flow is toward the fan motor; and, is set at marked location on shaft and setscrews tightened on the FLAT part of the shaft of the fan motor.

NOTE

Always install a replacement drier, anytime the sealed refrigeration system is opened. Do not replace the drier until all other repair or replacement has been completed.

Thoroughly evacuate the system to remove moisture and non-condensables.

REMOVAL AND REPLACEMENT PROCEDURES

WARNING

Disconnect electrical power supply to icemaker whenever adjustment procedures are performed.

REMOVAL AND REPLACEMENT OF THE CUBE SIZE CONTROL

To remove the cube size control:

1. Remove front panel.
2. Remove cover from control box.
3. Trace capillary tube, from the cube size control to the refrigerant suction line.
4. Remove the coiled capillary tube bulb from the tube well on the suction line.
5. Remove electrical leads from the cube size control.
6. Remove screws and the cube size control.

To replace the cube size control, reverse the removal procedure.

REMOVAL AND REPLACEMENT OF THE WATER DISTRIBUTOR TUBES AND MANIFOLD TUBES

To remove the water distributor tube and manifold tube:

1. Pull out to unsnap catches and remove the front panel.
2. Remove 4 thumb screws and remove the evaporator cover.
3. Slide the water distributor tube to the left about 1/8-inch along the top of the evaporator plate, until the water distributor tube can be unsnapped from the flexible notch and lifted upward to the right side.
4. Unsnap and disconnect water distributor tubes from the water manifold section.

To replace the water distributor tubes and manifold tubes, reverse the removal procedure. BE SURE the notches in the water manifold tubes properly engage the alignment keys in the tee.

BE SURE the water distributor tube is securely fastened at the notch at both sides of the evaporator plate.

Check identical attachment for the left water distributor tube and notch; also, that the distributor/manifold connections at the top center of each evaporator plate is snug against the top of the plate.

REMOVAL AND REPLACEMENT OF THE BIN THERMOSTAT CONTROL

To remove the bin thermostat control:

1. Remove front panel.
2. Remove screws and the control box cover.
3. Remove wire leads from the bin thermostat control.
4. Unthread the capillary tube and remove from the bin thermostat control bracket at the bottom right side of the evaporator section.
5. Remove the two screws attaching the bin thermostat control to the side of the control box; then, carefully pull the capillary tube out of the evaporator section. Carefully remove the bin thermostat control and capillary tube from the control box.

To replace the bin thermostat control, reverse the removal procedure.

REMOVAL AND REPLACEMENT OF THE INLET WATER SOLENOID VALVE ASSEMBLY

To remove the inlet water solenoid valve assembly:

1. Shut OFF water supply to machine.
2. Remove screws and pull the water solenoid valve out to gain access.
3. Loosen and remove inlet water line fitting from the inlet water solenoid valve assembly.
4. Remove inlet water Tygon tubing from the water solenoid valve.

To replace the inlet water valve assembly, reverse the removal procedures.

NOTE

Always install a replacement drier, anytime the sealed refrigeration system is opened. Do not replace the drier until all other repair or replacement has been completed.

WARNING

Disconnect electrical power supply to icemaker whenever adjustment procedures are performed.

REMOVAL AND REPLACEMENT OF THE WATER PUMP ASSEMBLY

To remove the water pump assembly:

1. Pull out to unsnap catches and remove the front panel.
2. Remove the Tygon tube to the pump assembly.
3. Disconnect electrical leads from the water pump assembly.
4. Loosen thumbscrew, loosen Phillips headscrew, lift pump up and remove from unit.
5. Remove one nut and mounting bracket from top of water pump.

To replace the water pump assembly, reverse the removal procedure.

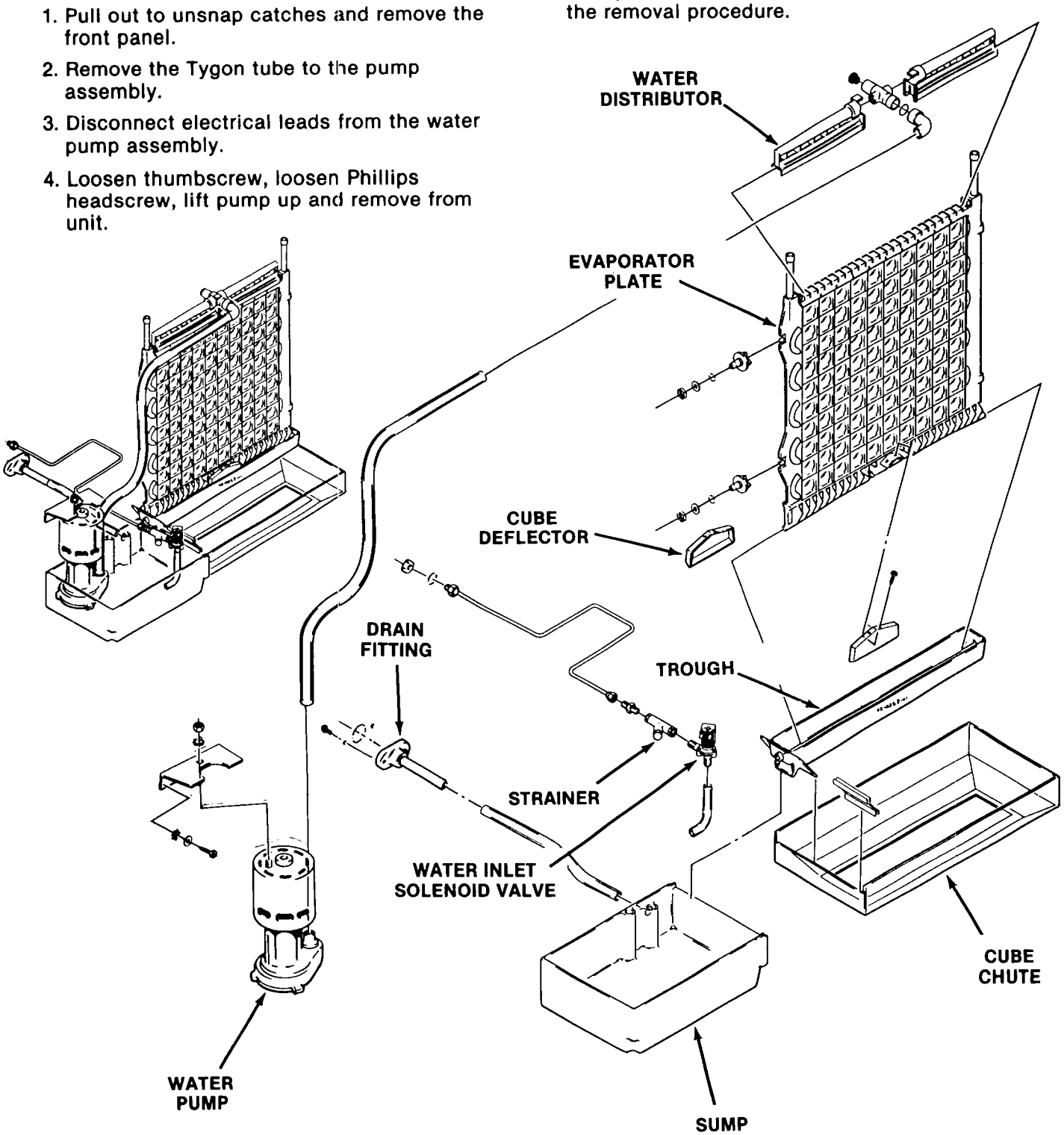

CM550

TABLE OF CONTENTS

General Information and Installation

For the Installer 2
For the Electrician 6
For the Plumber 7
Final Checklist 8

Operation

Start Up 9
Operation 12
Operation - Electrical Sequence 14

Maintenance & Cleaning Instructions

Icemaker 17
Storage Bin 17
Cleaning: Icemaker 17

Component Description 20

Service Diagnosis 24

Adjustment Procedures

Bin Thermostat 26
Cube Size Control 27
Timer & Switch 27

Removal and Replacement

Evaporator 28
Compressor 28
Condenser 30
Fan Motor 30
Cube Size Control 31
Bin Thermostat 31
Inlet Water Valve 31
Water Pump 32

Parts Lists and Wiring Diagrams are located in the center of this manual, printed on yellow paper.

THIS PAGE
INTENTIONALLY
LEFT BLANK

CM550 FOR THE INSTALLER

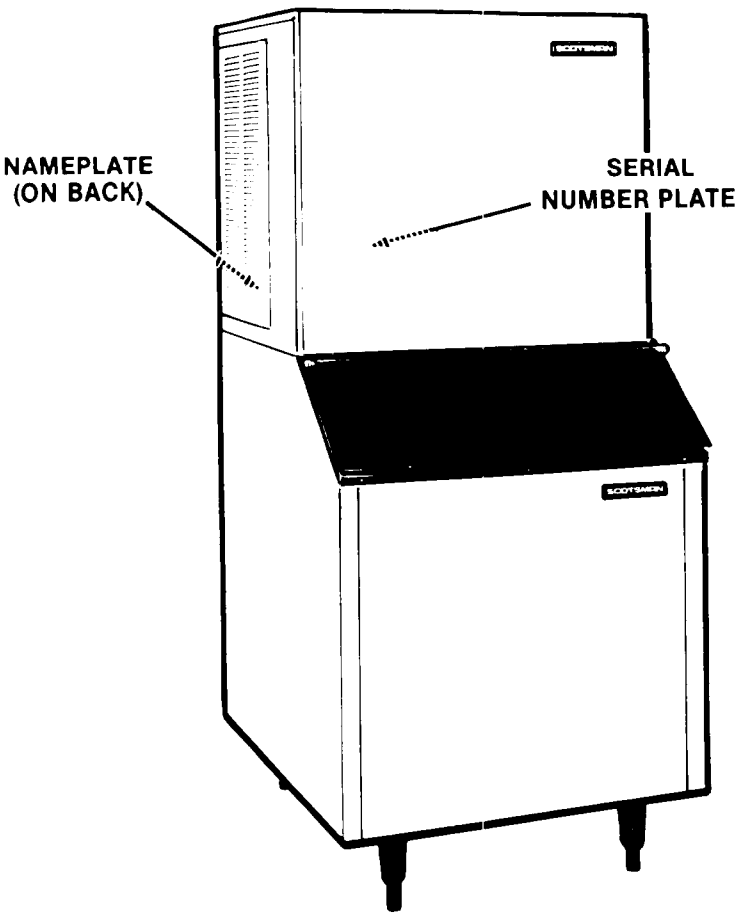

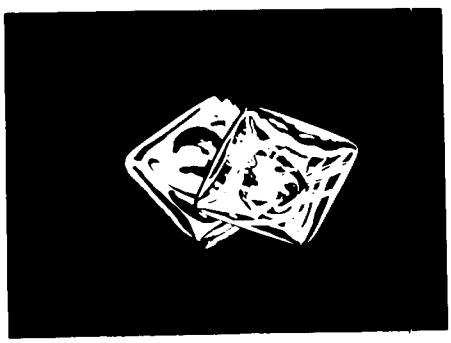

SCOTSMAN CONTOUR CUBE

INTRODUCTION

These instructions provide the specifications and the step-by-step procedures for the installation, start up and operation for the Scotsman Model CM550 Modular Cuber.

The Model CM550 Modular Cubers are quality designed, engineered and constructed, and are thoroughly tested icemaking systems, providing the utmost in flexibility to fit the needs of a particular user.

NAME PLATE

MODEL NUMBER
SERIAL NUMBER
A.C. SUPPLY VOLTAGE
MINIMUM CIRCUIT AMPACITY WIRES
MAXIMUM FUSE SIZE * HERTZ
HEATER WATTS PHASE
REFRIGERANT CHARGE OZ

MOTORS	VOLTS	R.L.A./F.L.A.	W/HP	L.R.A.
COMPRESSOR				
FAN				
DRIVE				
OTHER				

DESIGN PRESSURE LOW HIGH
OR HACR TYPE CIRCUIT BREAKER

SCOTSMAN A HOUSEHOLD INTERNATIONAL COMPANY
ALBERT LEA, MINNESOTA U.S.A.

SERIAL NUMBER PLATE

MODEL NUMBER
SERIAL NUMBER
VOLTS/HERTZ/PHASE
MAXIMUM FUSE SIZE
REFRIGERANT CHARGE OZ

This product qualifies for the following listings:

This icemaker has been engineered to our own rigid safety and performance standards. The National Sanitation Foundation (NSF) seal, signifies that it is listed with NSF and that it complies with the materials and construction standards of NSF. In addition, the Underwriters Laboratories, Inc., (UL) Listing Mark and the Canadian Standards Association (CSA) Monogram, both signify that its construction and design have been inspected and tested by them. NSF, UL and CSA inspectors also periodically examine production icemakers at the factory, to assure continued compliance.

To retain the safety and performance built into this icemaker, it is important that installation and maintenance be conducted in the manner outlined in this manual.

CM550 FOR THE INSTALLER

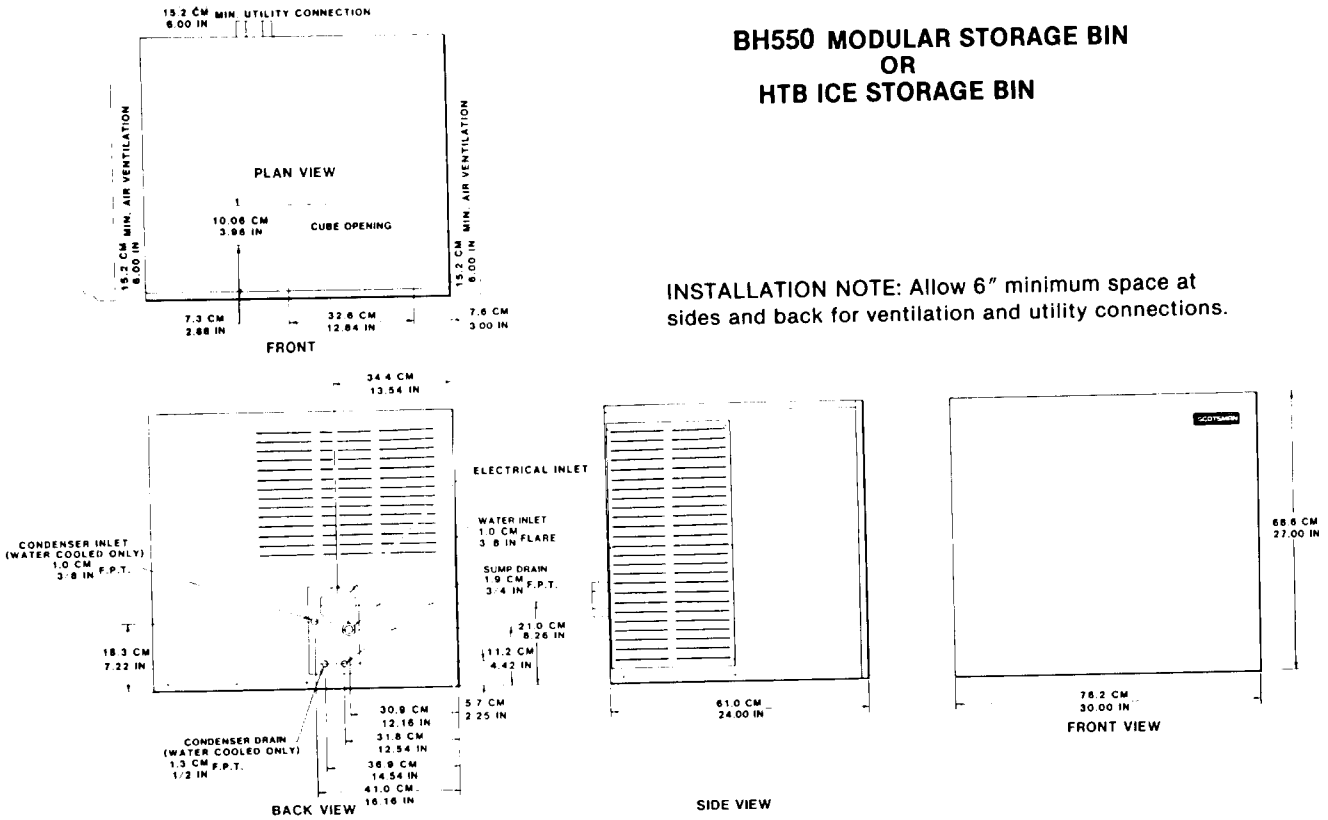

BH550 MODULAR STORAGE BIN
OR
HTB ICE STORAGE BIN

INSTALLATION NOTE: Allow 6" minimum space at sides and back for ventilation and utility connections.

Scotsman Ice Systems are designed and manufactured with the highest regard for safety and performance. They meet or exceed the standards of U.L., N.S.F., and C.S.A.

Scotsman assumes no liability or responsibility of any kind for products manufactured by Scotsman that have been altered in any way, including the use of any parts and/or other components not specifically approved by Scotsman.

Scotsman reserves the right to make design changes and/or improvements at any time. Specifications and designs are subject to change without notice.

SPECIFICATIONS

Model Number	(Height - w/o bin) Dimensions H" x W" x D"	Ice Type	Condenser Type	Finish **	Basic Electrical	Comp. H.P.	Min. Circuit Ampacity +	Max. Fuse Size *
CM550AE-1A	27 x 30 x 24	Contour Cube	Air Cooled	ES	115/60/1	3/4	24.8	45

** (ES) Sandalwood, embossed steel with enamel finish. * Or HCAR type circuit breakers.

+ Use this value to determine wire size per National Electric Code Standards.

IMPORTANT OPERATING REQUIREMENTS

	MINIMUM	MAXIMUM
Air Temperatures	50°F (10.0°C)	100°F (38°C)
Water Temperatures	40°F (4.4°C)	100°F (38°C)
Water Pressures	20 lbs. gauge	120 lbs. gauge
Electrical Voltage Variations Voltage rating specified on nameplate	-10%	+ 10%

Extended periods of operation exceeding these limitations constitutes misuse under the terms of Scotsman Manufacturer's Limited Warranty, resulting in a loss of warranty coverage.

STORAGE BIN

The CM550 stacks onto Scotsman's Bins, Models: BH550, HTB500, OR HTB350.

Refrigerant R502
Charge per nameplate rating.

STANDARD LEGS: Furnished with storage bin. Four metal legs screw into mounting plates on cabinet base. Provide 6" minimum height including adjustable leveling foot. Black enamel finish.

OPTIONAL LEG KIT, KLP2S:
Nickel plated, brushed metal finish with stainless steel foot. Recommended for stainless steel cabinets.

SPKCMD-1:
Optional stainless steel panel kit for CM550 model.

AIR-COOLED ASSEMBLY

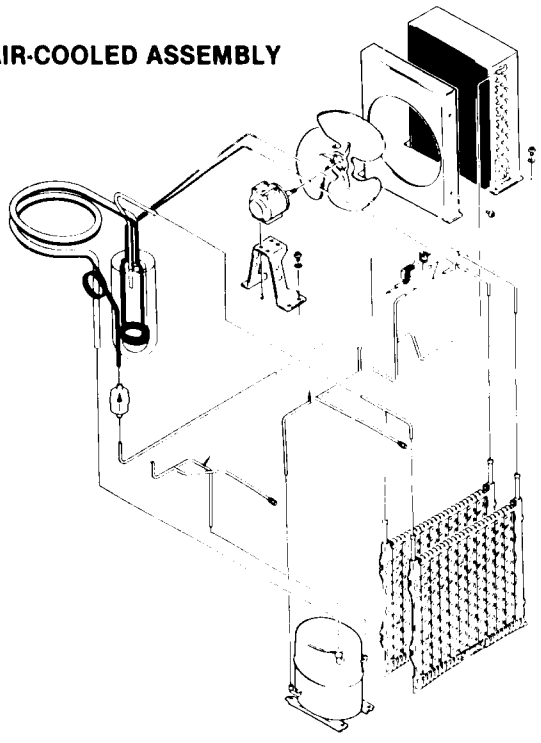

WATER SYSTEM

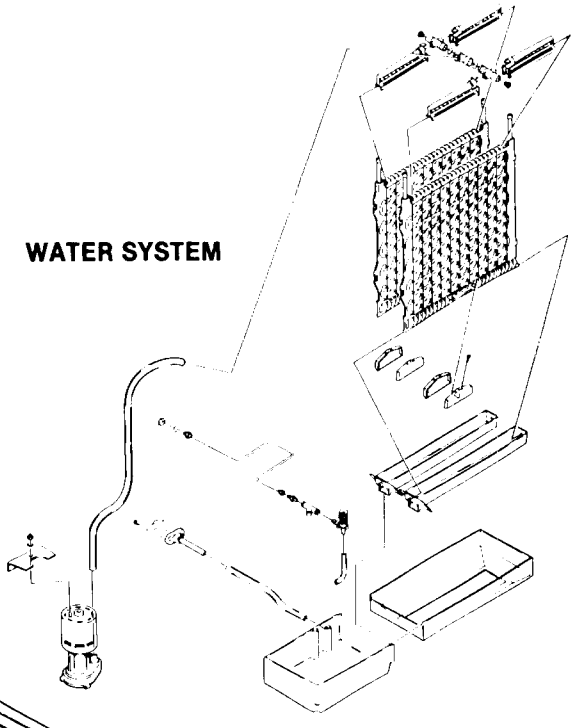

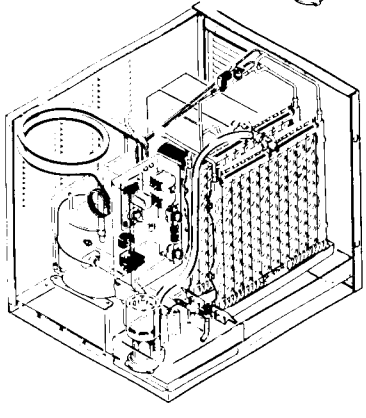

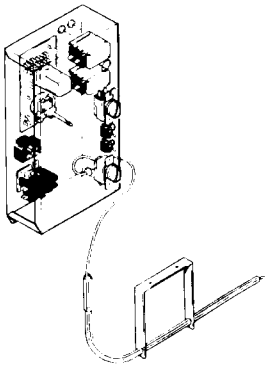

BIN THERMOSTAT BRACKET

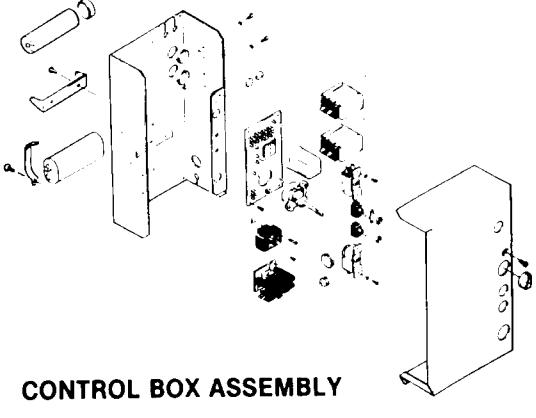

CONTROL BOX ASSEMBLY

CM550 FOR THE INSTALLER

LOCATION & LEVELING

1. Arrange for proper electric, water and drain. See instructions for the plumber and for the electrician.
2. After mounting the legs, position the ice storage bin in the selected location which should have a minimum room temperature of 50-degrees F. and maximum room temperature of 100-degrees F. Level the bin, adjusting the leg levelers in both the front to rear and side to side directions. Select a well-ventilated location for the air-cooled condenser.
3. Inspect the bin top mounting gasket which should be flat, with no wrinkles, to provide a good water seal when the Cuber is installed on top of the bin. Remove baffle from bin to gain access.
4. Install the modular cuber on top of the bin using care to be sure a good seal is made between the two cabinets. Align the holes in the bottom rear of the cabinet to mate with the two mounting straps on the top rear of the bin.
5. Use bolts and straps found in hardware package to secure the ice machine. When alignment and leveling are completed, tighten the bolts to secure the mounting straps.

STACKING INSTRUCTIONS

NOTE: This model can only be stacked onto Scotman units with the same size cabinet as itself. Earlier models are not compatable.

When stacking two units, remove the top panel from the lower icemaker. (The top removed from the lower icemaker will no longer have any function.)

Carefully lift the uncrated top unit onto the bottom one and align the two cabinets. Use of a mechanical lift is recommended for this step.

At the back of the two icemakers, bolt the upper icemaker cabinet to the lower icemaker cabinet using the mounting straps and bolts from the hardware package.

BIN THERMOSTAT INSTALLATION

1. Remove cap from bin thermostat bracket. Insert bin thermostat bracket up through routing hole in sump.
2. Attach the bin thermostat bracket to the bottom of the cuber base using the thumb screws and threaded holes provided.
3. Carefully uncoil the capillary tube to the icemaker and route the capillary tube through the routing hole provided in the sump and through the full length of the bin thermostat bracket.

NOTE: When stacking, route the bin thermostat control from the upper ice machine through the routing hole provided in the sump of the lower icemaker and through the bin thermostat control bracket.

NOTE: Extend bin thermostat capillary tube through entire length of the tubular section of the bin thermostat bracket. When properly installed, the tip of the capillary tube should be flush with the tip of the bin thermostat bracket.

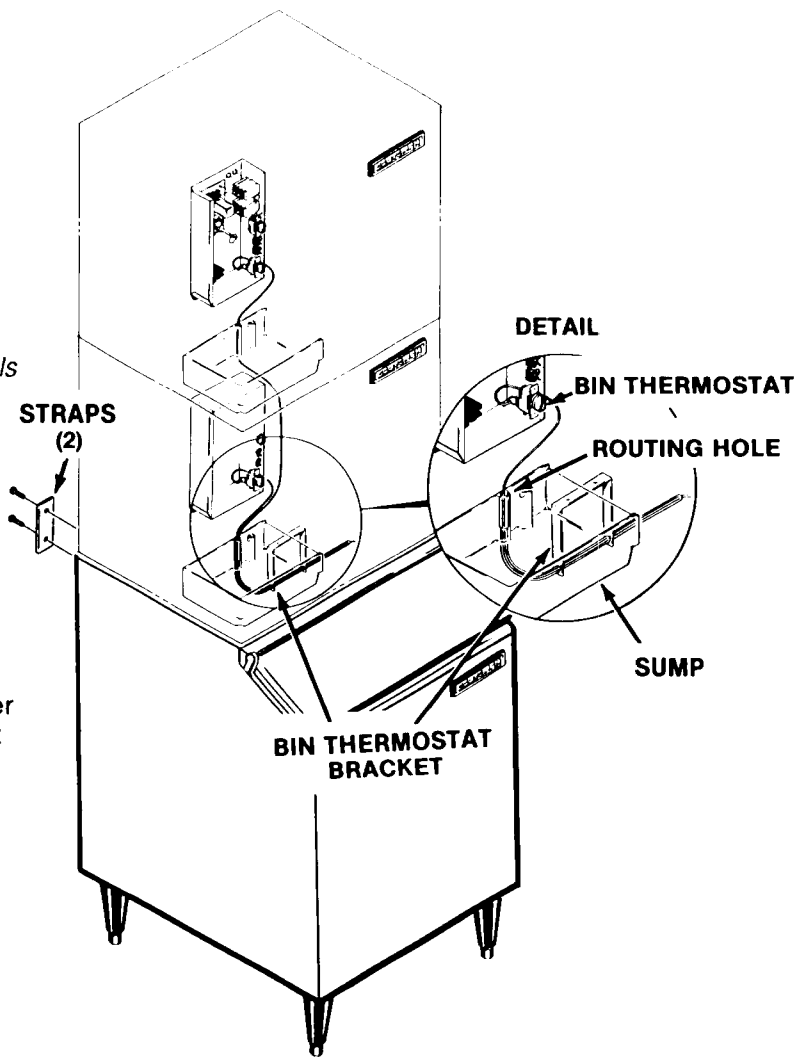

CM550 FOR THE ELECTRICIAN

CONFORM TO ALL APPLICABLE CODES

ELECTRICAL CONNECTIONS

SEE NAMEPLATE for current requirements to determine wire size to be used for electrical hookup. The cuber requires a solid chassis-to-chassis earth ground wire. See Wiring Diagram.

Be certain the cuber is connected to its own electrical circuit and individually fused. Voltage variation should not exceed ten percent of the nameplate rating, even under starting conditions. Low voltages can cause erratic operation and may be responsible for serious damage to the icemaker.

Electrical connections are made at the rear of the icemaker, inside the junction box.

All external wiring should conform to the national, state and local electrical code requirements. Usually an electrical permit and services of a licensed electrician will be required.

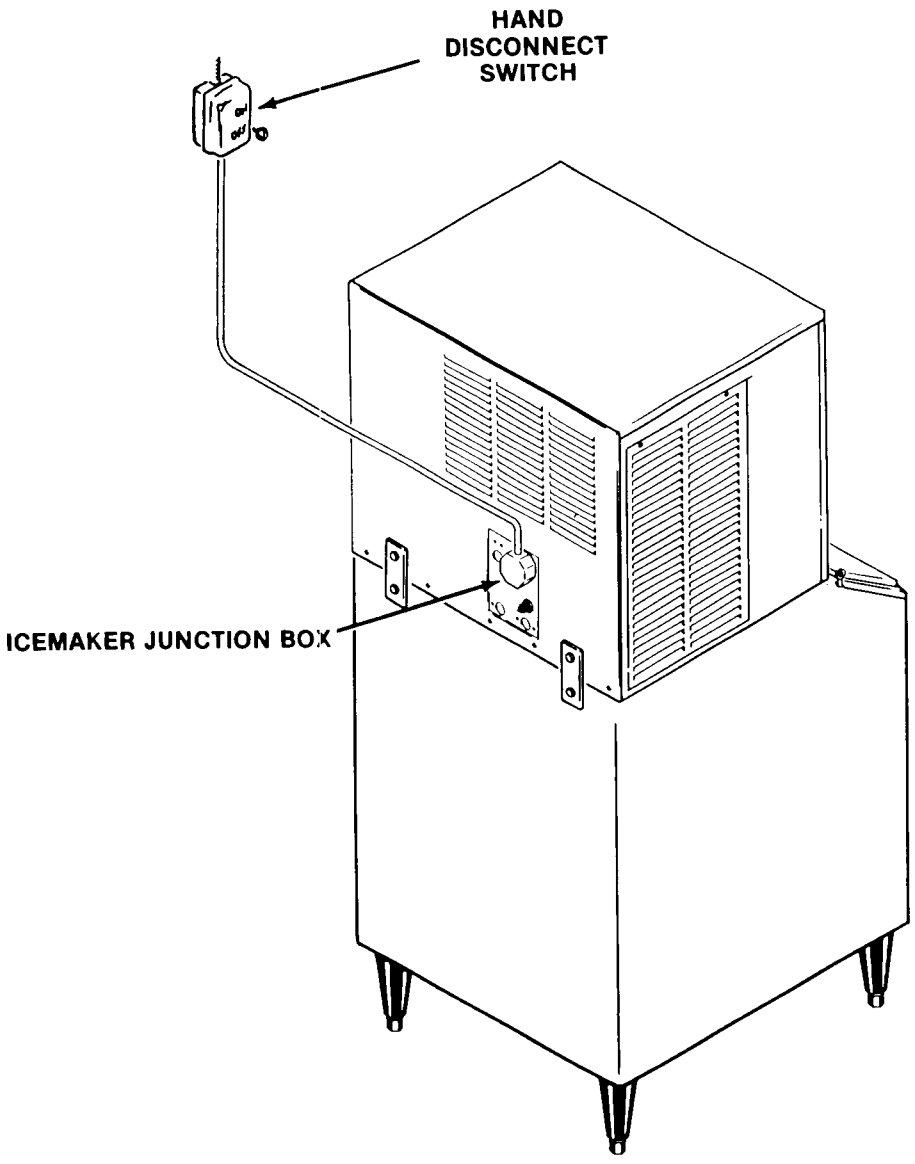

CM550 FOR THE PLUMBER

CONFORM TO ALL APPLICABLE CODES

WATER SUPPLY AND DRAIN CONNECTIONS

The recommended water supply line is a 3/8-inch O.D. copper tubing with a minimum operating pressure of 20 PSIG and a maximum of 120 PSIG. Connect to cold water supply line with standard plumbing fittings, with shutoff valve installed in an accessible place between the water supply and the cuber. In some cases a plumber will be required.

DRAIN CONNECTIONS: All drains are gravity type and must have a minimum of 1/4-inch fall per foot on horizontal runs. The drains to be installed to conform with the local plumbing code. Install a vertical open vent on drain line high point to ensure good draining. The ideal drain receptacle is a trapped and vented floor drain.

Recommended bin drain is 5/8-inch O.D. copper tubing and should be vented and run separately. Insulation for high humidity areas is recommended.

The ice machine sump drain is 3/4" FPT. There must be a vent at this connection for proper sump drainage.

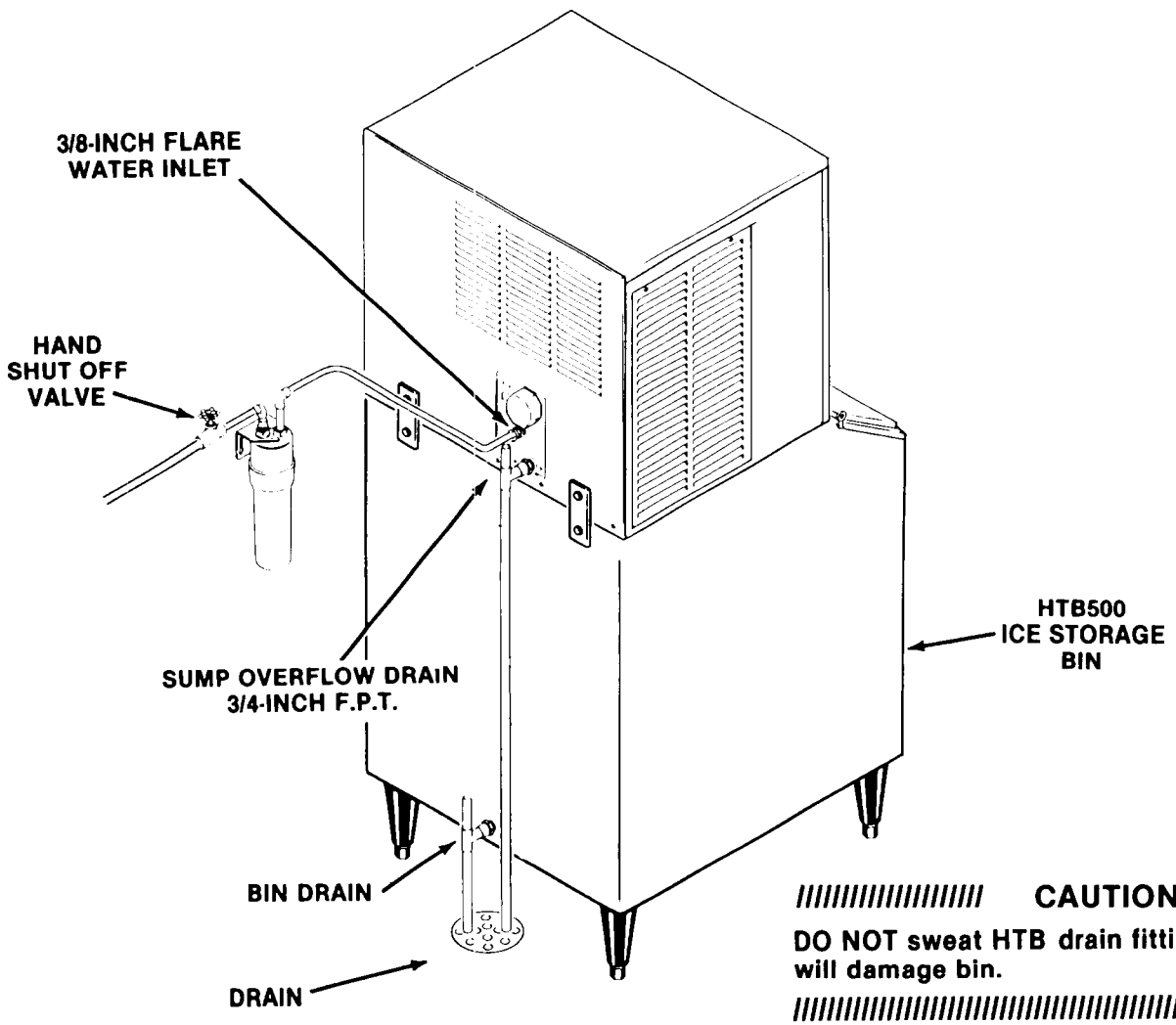

CAUTION

DO NOT sweat HTB drain fitting. Excessive heat will damage bin.

Water Supply and Drain Connection

CM550 FOR THE INSTALLER

FINAL CHECK LIST

1. Is the cabinet in a room where ambient temperatures are within the minimum and maximum temperatures specified?
2. Is there at least six inches clearance at both sides of the cabinet for proper air circulation? (Air-Cooled models)
3. Has water supply pressure been checked to insure a minimum of 20 PSIG and a maximum of 120 PSIG operating pressure?
4. Is the cabinet level?
5. Check that any shipping material has been removed from inside the cabinet.
6. Has the bin thermostat and bracket been properly installed?
7. Check that the drain troughs are properly secured to the bottom of the evaporator plates.
8. Have all electrical and piping connections been made?
9. Is the water supply line shut-off valve installed and electrical wiring properly connected?
10. Check all refrigerant lines and conduit lines, to guard against vibration or rubbing and possible failure.
11. Have the bin and cabinet been wiped clean?
12. Has the Manufacturer's Registration Card been properly filled out? Check for correct model and serial numbers from Serial nameplate, then mail the completed card to the SCOTSMAN factory.
13. Has the owner/user been given the Service Manual and instructed how to operate and maintain the icemaker?
14. Has the owner been given the name and telephone number of the authorized SCOTSMAN Service Agency serving him?

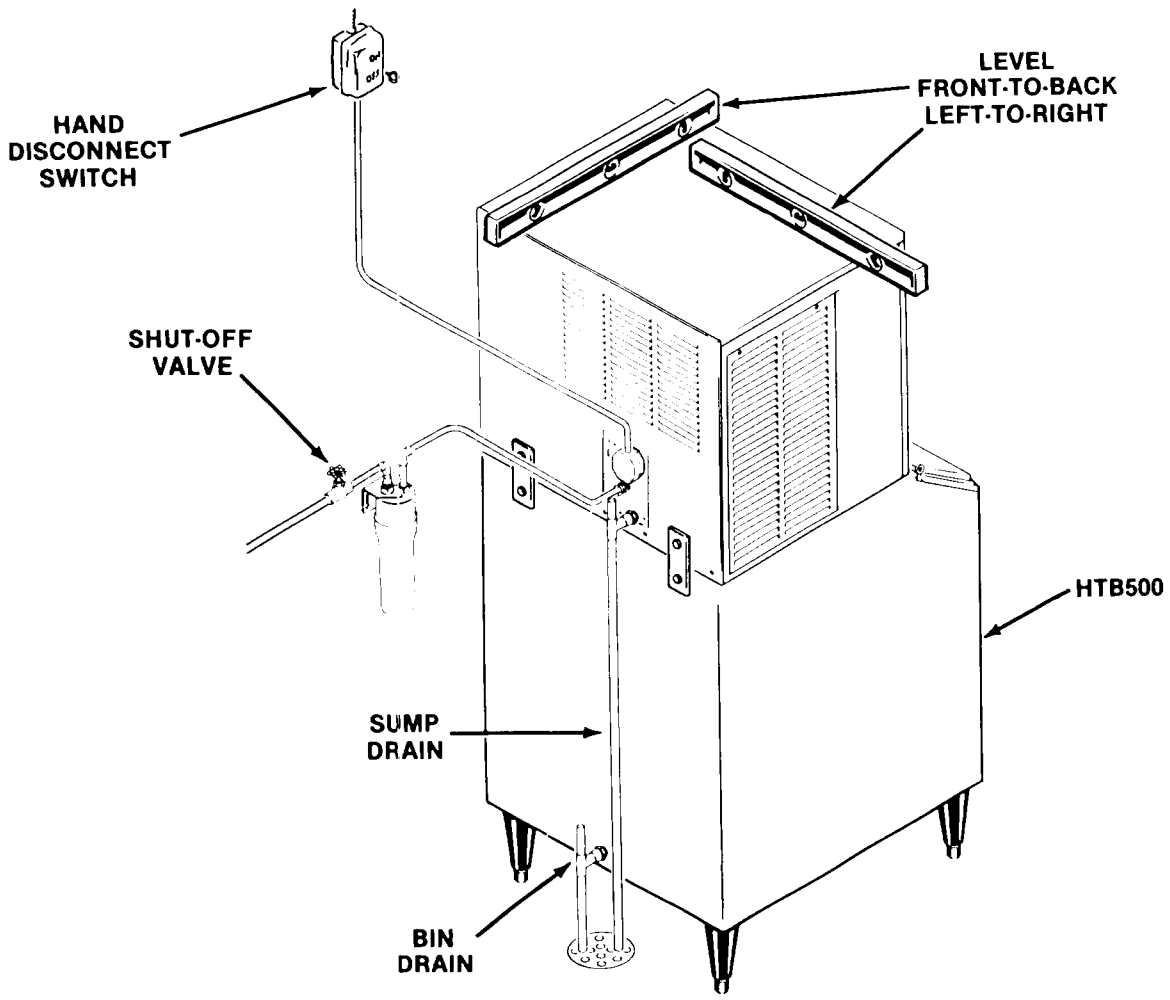

CM550 START-UP

START-UP

1. Remove front panel by pulling out to unsnap.
2. Remove two screws and the control box cover.
3. Remove four thumb screws and the evaporator cover.
4. Check that the two toggle switches, the MASTER ON-OFF toggle switch and the COMPRESSOR ON-OFF toggle switch are in the OFF position, on the control box.
5. OPEN the water supply line shutoff valve.
6. Inside the control box is the shaft of the timer and the switch assembly. Rotate the shaft of the timer and switch assembly clockwise to start the timer. The timer starts when the actuator arm on the microswitch drops off outer cam into cam slot. See Timer Cam Positions. An audible click can be heard, but in a noisy area, look at the cam and switch to observe the event.

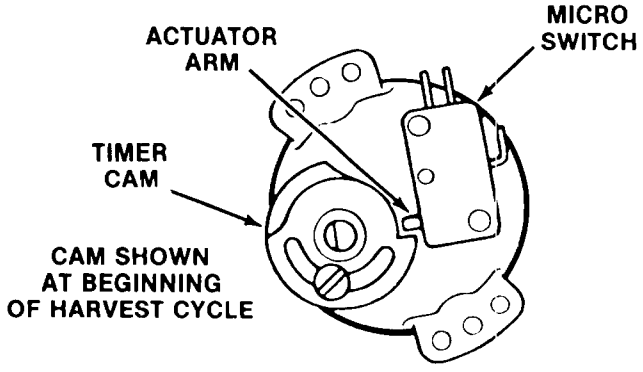

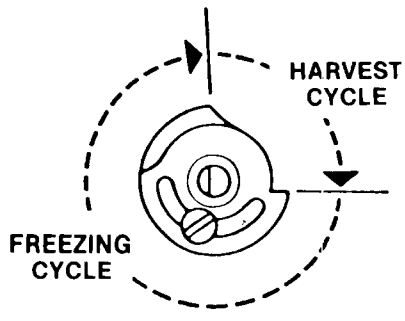

CAM SHOWN DIVIDED INTO TYPICAL FREEZING & HARVEST CYCLES

Timer Cam Positions

7. Move the master ON-OFF toggle switch, the top toggle switch, to the ON position.
8. Observe water fill cycle:

   Water pump operates and water inlet solenoid valve OPENS, incoming water flows from the valve through the tubing, the reservoir fills and excess water is overflowed through the stand pipe. This cycle will take about three minutes. Timer will close the water inlet solenoid valve and the water fill cycle is complete.

   Advancing the shaft of the timer and switch assembly into a new harvest cycle, restarts the timer and allows a check that: Water inlet solenoid valve OPENS and the reservoir overflows through the stand pipe. Water inlet valve CLOSES, stopping water overflow.

   The water pump is operating, as seen by water moving through the tygon tube, up to the water distributor at the top of each evaporator plate, where water is uniformly dispensed and cascades down both sides of the evaporator plate and drains back into the sump assembly for recirculation.
9. Check that the water cascades down over each cube mold and into the sump.
10. When the second cycle is completed, move the compressor ON-OFF toggle switch, to the ON position.
11. Check operation of the freezing cycle:

    The compressor is operating.

    The icemaking process begins; feeling the metal parts of the evaporator plate reveals cold temperature, very shortly ice begins to form. Tubing will become frosted at the top of the evaporator plate.

    Freezing time will range between 15 and 30 minutes. Longer time for temperatures above 70-degrees F. and shorter time required when temperatures are below 70-degrees F. Average complete cycle time is about 18 minutes.

12. Observe second and third cube harvest.

Check size of SCOTSMAN CONTOUR CUBE

Unlike other SCOTSMAN cubes which are made in a definite molded shape, contour cubes are produced in indentations and many shapes and sizes of contour cubes may be produced — only ONE size and shape combination is correct.

An under-charged refrigeration system produces smaller cubes at the top of the evaporator plate and large cubes at the bottom. Charge system per NAMEPLATE specifications.

Charge Refrigeration System with **REFRIGERANT 502 ONLY.**

In areas where extreme problem water condition exists, filtering or purifying equipment is recommended. Contact SCOTSMAN ICE SYSTEMS, Service Department, Albert Lea, Minnesota 56007 for further details.

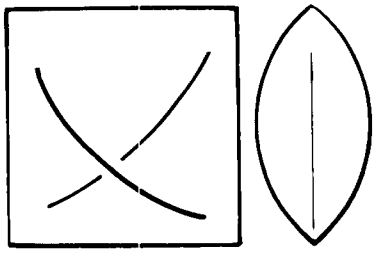

Too LARGE — may cause evaporator freeze ups. Adjust cube size control counter-clockwise to obtain smaller cubes

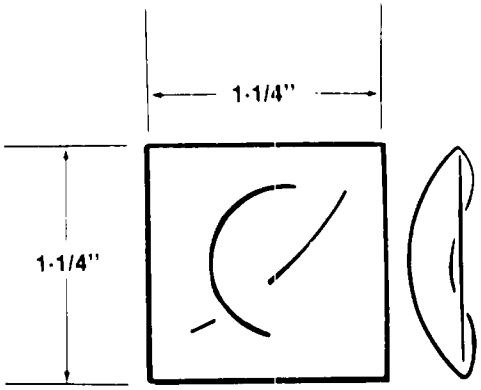

PROPER SIZE AND SHAPE of the contour cube. Icemaker operates at peak efficiency when a cube this size and shape is produced. A finely tuned system produces vertical strips of ice which easily break when they fall.

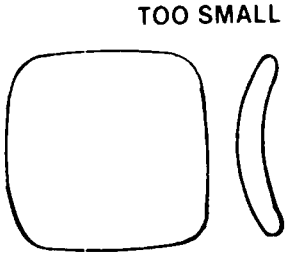

TOO SMALL. To obtain proper size cubes, adjust cube size control clockwise. May cause freeze up problems due to poor harvest.

Ice Cube Size & Shape

CM550 START-UP

ADJUSTMENT OF CUBE SIZE

To produce SMALLER sized ice cubes:

Locate cube size control knob, in the front of the control box.

Rotate the adjusting screw one-eighth of a turn COUNTERCLOCKWISE to WARMER.

Observe size of the ice cubes in the next two ice cube harvests and adjust in one-eighth turn or less increments, until correct ice cube is achieved.

To produce LARGER ice cubes:

Locate cube size control on the front of the control box

Rotate the adjusting screw one-eighth of a turn CLOCKWISE to COLDER.

Observe size of ice cubes in the next two cube harvests and adjust in one-eighth turn or less increments, until correct ice cube size is achieved.

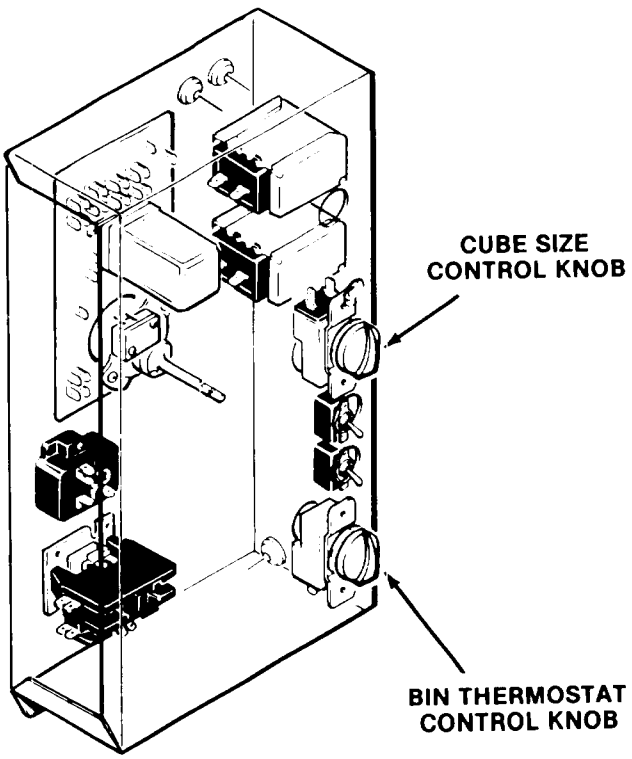

ROTATE ADJUSTMENT KNOB COUNTER-CLOCKWISE TO PRODUCE SMALLER CUBES.

ROTATE ADJUSTMENT KNOB CLOCKWISE TO PRODUCE LARGER CUBES.

BIN THERMOSTAT OPERATION

Check texture of ice cubes; when partially cloudy throughout, suggests icemaker is operating short of water; or, possibly an extreme problem water condition exists, where filtering or purifying equipment is recommended. Contact SCOTSMAN ICE SYSTEMS, Service Department, Albert Lea, Minnesota 56007 for further details. See SERVICE DIGNOSIS chart, for shortage of water symptoms and corrections.

13. With the icemaker in the harvest cycle, hold ice against the bin thermostat control bulb to test shutoff, which should cause the icemaker to shut OFF at the END OF THE HARVEST CYCLE.

    Within minutes after the ice is removed from the sensing bulb, the bulb will warm up and cause the icemaker to restart. This control is factory set and should not be reset until testing is performed.

14. Replace control box cover and all cabinet panels and screws.

15. Thoroughly explain to the owner/user the significant specifications of the icemaker, the start up and operation, going through the procedures in the operating instructions. Answer all questions about the icemaker by the owner; and inform the owner of the name and telephone number of the authorized SCOTSMAN Distributor, or service agency serving him.

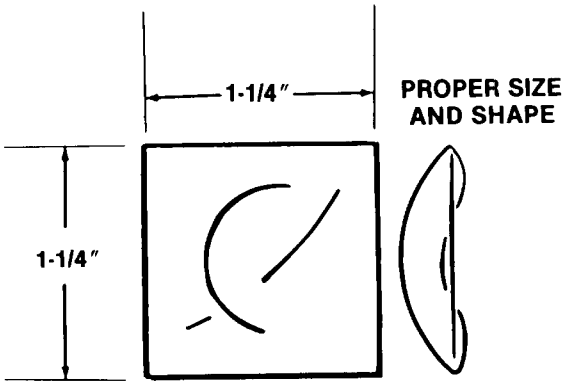

OPERATION

FREEZING CYCLE

Water from the sump assembly is pumped to the water distributor system, at the top of each evaporator plate. From the water distributor the water cascades by gravity over all cells of the plate and to the sump assembly below, for recirculation. At the beginning of the freezing cycle, the electrical circuit is completed to the compressor and the water pump. The water pump operates continuously, through both the freezing cycle and the harvest cycle.

In the compressor, gaseous refrigerant is compressed and discharged into the condenser, as a high pressure, high temperature gas. The refrigerant is cooled by either air or water, and condenses into a high pressure, medium temperature liquid. This liquid refrigerant then passes through a small capillary tube, where the temperature and pressure of the liquid refrigerant are lowered and it next enters the evaporator plates. The refrigerant is warmed by the water cascading over the Evaporator plate and begins to boil off and become a gas. The refrigerant next travels through the accumulator and the heat exchange area of the suction line where any remaining liquid refrigerant boils off and returns to the compressor as a low pressure, low temperature gas, and the cycle starts again.

During the freezing cycle, the hot gas solenoid valve is CLOSED and the water inlet solenoid valve is CLOSED.

When the ice cubes are partially formed, the cube size control will sense the temperature at which it is preset to CLOSE. This will complete the electrical circuit to the timer. The timer then controls the remainder of the freezing cycle.

The timer will keep the icemaker operating in the freezing cycle for a selected length of time. This will give the ice cubes time to fully form. after that selected length of time, the timer will switch the icemaker into the harvest cycle, through the contacts of the timer assembly microswitch.

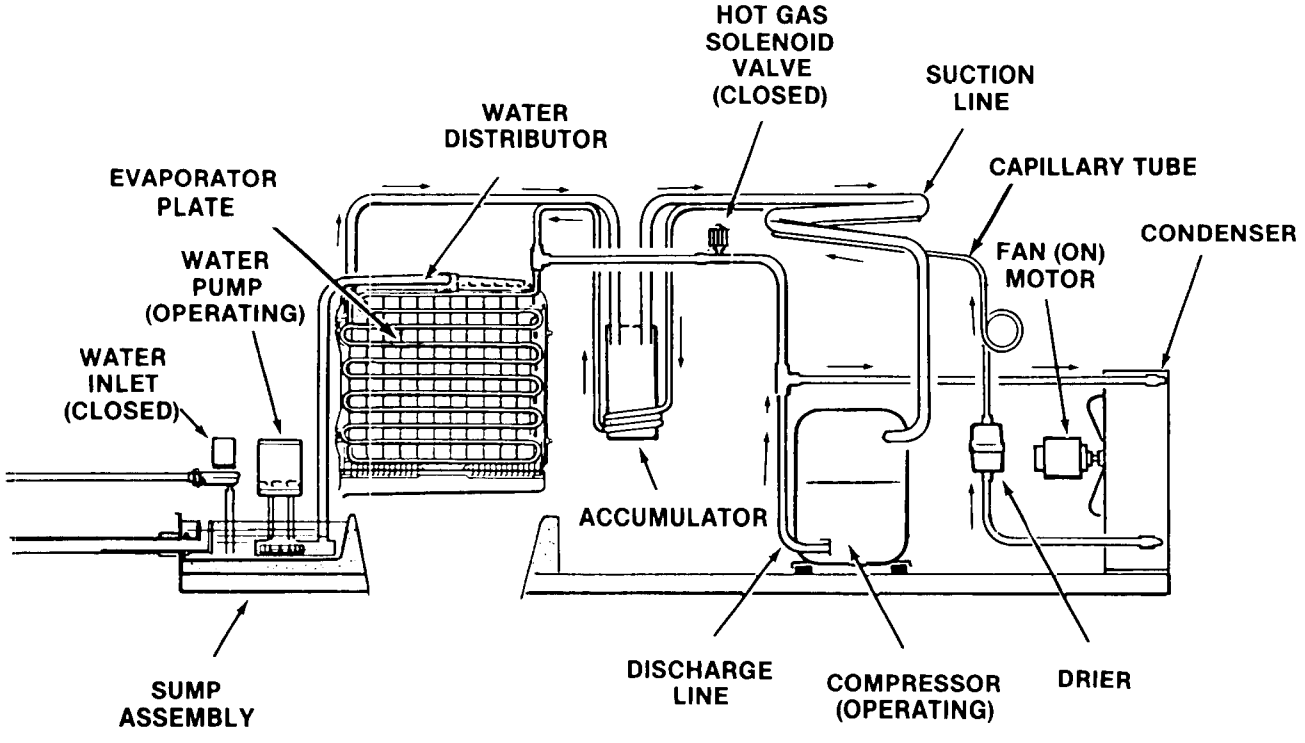

Freezing Cycle

HARVEST CYCLE - HOT GAS BYPASS

When the timer switches the icemaker into the harvest cycle, high pressure, high temperature gas refrigerant being discharged from the compressor is diverted from the condenser through the hot gas solenoid valve into each evaporator plate. During this cycle, the gaseous refrigerant bypasses the condenser and the capillary tube.

In the electrical circuit, both the compressor and the water pump are operating and the hot gas solenoid valve is energized and OPEN and the water inlet solenoid valve is OPEN.

The finished ice cubes are released from the sides of each evaporator plate, by the warming effect of the hot gas condensing in each evaporator plate and the water cascading over the ice cubes. The released ice cubes drop into the ice storage bin below.

At the end of the harvest cycle, the timer cam will push the actuator arm to the microswitch IN. If the bin thermostat is still CLOSED, a whole new cycle will begin. If the bin thermostat is OPEN, the icemaker will shut OFF, at this time.

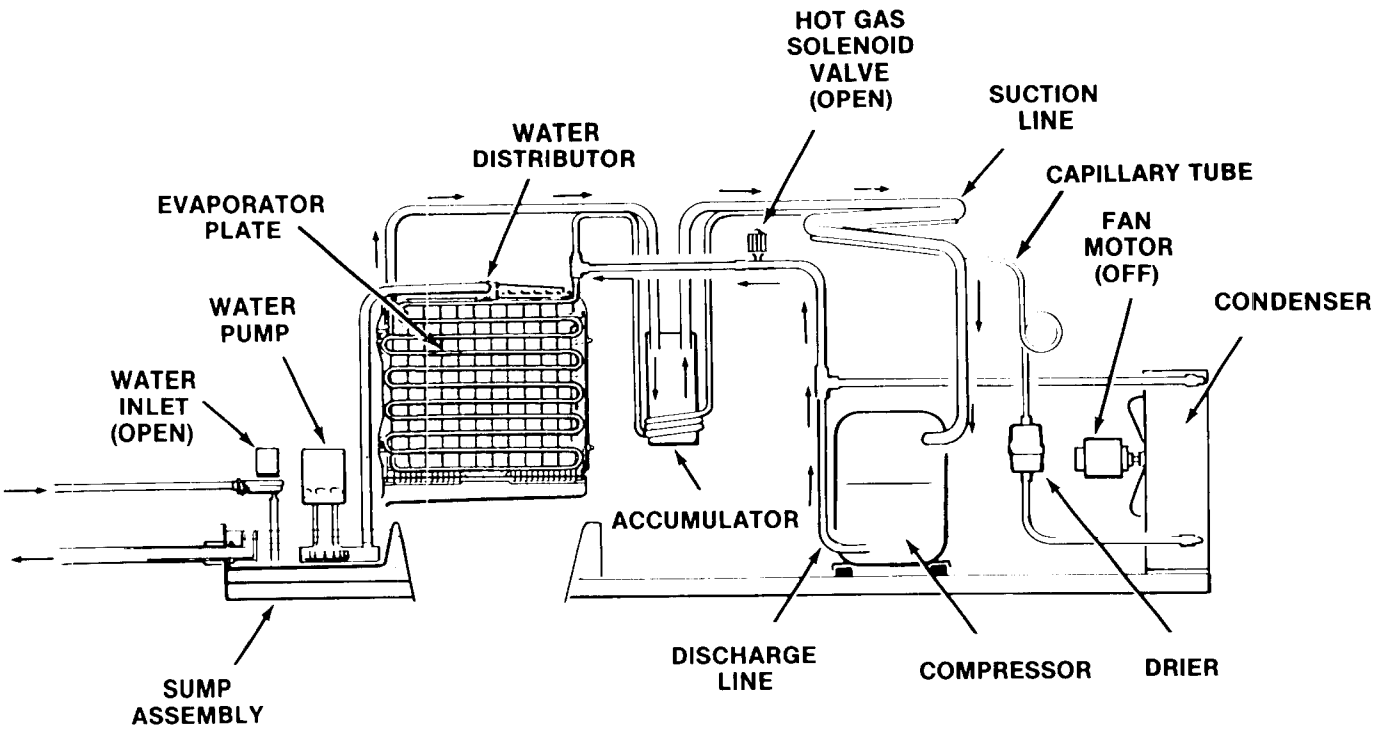

Harvest Cycle

CM550 OPERATION - ELECTRICAL SEQUENCE

The following charts illustrate which switches and which components are ON or OFF during a particular phase of the icemaking cycle.

Refer to the wiring diagram for a reference. Remember, the wiring diagram shows the unit as it is in the Timed Freeze Cycle.

BEGINNING FREEZE

ELECTRICAL COMPONENTS (LOADS)	ON	OFF
Compressor	X	
*Fan Motor (Air-cooled only)	X	
Hot Gas Valve		X
Inlet Water Valve		X
P.C. Board Relay Coil	X	
Timer		X
Water Pump	X	

SWITCHES	ON	OFF
Bin Thermostat	X	
Cube Size Thermostat		X
Toggle - Master	X	
Toggle - Compressor	X	
H.P. Control	X	
Timer Micro Switch N.C.	X	
Timer Micro Switch N.O.	X	
Hi Temp Switch	X	

At the beginning of the freeze cycle the timer is not turning, but the icemaker is refrigerating the water starting to turn the water into ice.

CM550 OPERATION - ELECTRICAL SEQUENCE

TIMED FREEZE

ELECTRICAL COMPONENTS (LOADS)	ON	OFF
Compressor	X	
*Fan Motor (Air-cooled only)	X	X
Hot Gas Valve		X
Inlet Water Valve		X
P.C. Board Relay Coil	X	
Timer	X	
Water Pump	X	

SWITCHES	ON	OFF
Bin Thermostat	X	
Cube Size Thermostat	X	
		X
Toggle Switch - Master	X	
Toggle Switch - Compressor	X	
H.P. Control	X	
Timer Micro Switch N.C.	X	
Timer Micro Switch N.O.	X	
Hi Temp Switch	X	

After the icemaker has cooled the water and formed some ice on the evaporator, the evaporator will have gotten cold enough to have the cube size control close. All this does is start and run the timer.

HARVEST

ELECTRICAL COMPONENTS (LOADS)	ON	OFF
Compressor	X	
*Fan Motor (Air-cooled only)		X
Hot Gas Valve	X	
Inlet Water Valve	X	
P.C. Board Relay Coil		X
Timer	X	
Water Pump	X	

SWITCHES	ON	OFF
Bin Thermostat	X	
Cube Size Thermostat		X
Toggle Switch - Master	X	
Toggle Switch - Compressor	X	
H.P. Control	X	
Timer Micro Switch N.C.	X	
Timer Micro Switch N.O.	X	
Hi Temp Switch	X	

The timer has now turned far enough so that the micro-switch plunger has dropped into the gap in the cam, this breaks the circuit to the relay in the P.C. Board - and that puts the machine into the Harvest cycle, where the hot gas valve and inlet water valve have opened to harvest the ice. When ice is on the bin control, it will open and at the end of the harvest cycle shut off the machine.

CM550 SERVICE SPECIFICATIONS

In servicing a machine, it is often useful to compare that individual unit's operating characteristics to those of a normally operating machine. The numbers and facts listed on this page are for NEW, CLEAN machines.

Use these numbers as a guideline only.

COMPONENT

Timer: 1 revolution of the cam, in minutes 8

Harvest Time, preset, in minutes 2-1/4

Inlet Water Valve, water flow in g.p.m. 3/4

	Close	Open
Cube Size Thermostat, Reverse Acting, Temperature Range	(+15^{0}F. to +2^{0}F.)	n/a
Bin Thermostat Temperature Range	38.5^0 - 43.5^0	33.5^0 - 38.5^0
High Pressure Safety Switch, PSIG	manual	450

OPERATING CHARACTERISTICS

This model is air cooled only, and during the freezing cycle, the discharge pressure will slowly decline as the unit forms ice on the evaporators. At the same time the suction pressure is also dropping, reaching it's lowest point at the end of the freeze cycle. Compressor amps experience a similar decline.

During the harvest or defrost cycle, the suction pressure goes up dramatically with the opening of the hot gas by pass valve. The discharge pressure falls when this happens. The fan is OFF during the harvest cycle. Compressor amps reach their peak during harvest.

Freeze Cycle:

For example, with conditions at 70^{0}F. air, and 50^{0}F. water, the discharge pressure will decline from about 225 at the begining to 180 by the end. Suction pressure at the end of freeze will be about 28 PSIG.

Freeze cycle time will be about 14-15 minutes.

Compressor amps 5 minutes into the freeze cycle will be about 15.5.

At 90^0/70^0, the discharge pressures will go from about 300 down to 240. Suction pressure will be about 28 PSIG at the end of the 18-19 minute freeze cycle.

Harvest Cycle:

Discharge pressure at 70^0/50^0 will be about 105-125, and suction pressure will be around 95-100 PSIG.

At 90^0/70^0, discharge pressure will be about 140. Suction pressure will be about 130 PSIG.

Peak amp draw during harvest: 17.4.

The ice per cycle is 5.5 to 6 pounds.

The values listed are representative of values seen at a wide range of air and water temperatures and are for a normal cube size. When comparing these figures to field data, allow a variation from each end of the range given.

After servicing refrigeration system, always torque the access valve caps to 60-75 inch pounds.

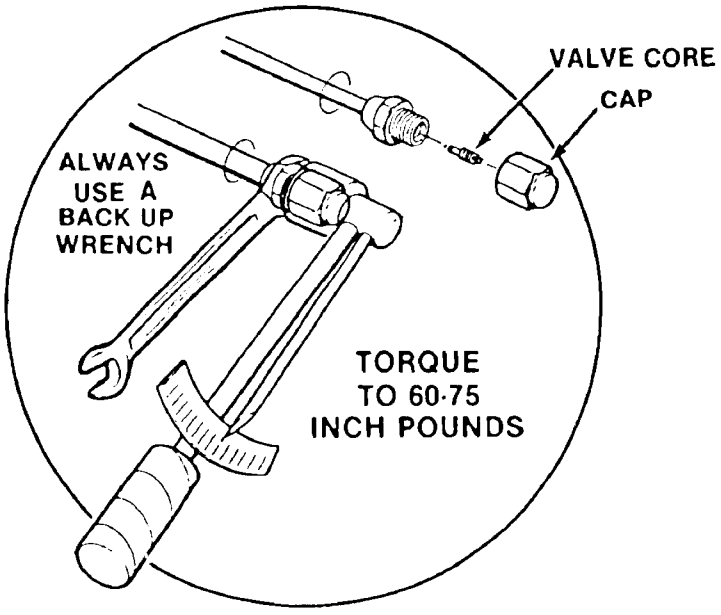

CM550 MAINTENANCE & CLEANING INSTRUCTIONS

A Scotsman Ice System represents a sizable investment of time and money in any company's business. In order to receive the best return for that investment, it MUST receive periodic maintenance.

It is the USER'S RESPONSIBILITY to see that the unit is properly maintained. It is always preferable, and less costly in the long run, to avoid possible down time by keeping it clean; adjusting it as needed; and by replacing worn parts before they can cause failure. The following is a list of recommended maintenance that will help keep the machine running with a minimum of problems.

Maintenance and Cleaning should be scheduled at a minimum of twice per year.

ICEMAKER

THE FOLLOWING MAINTENANCE SHOULD BE SCHEDULED AT LEAST TWO TIMES PER YEAR ON THIS ICEMAKER. CALL YOUR AUTHORIZED SCOTSMAN SERVICE AGENCY.

1. Check and clean or service any optional water treatment devices, if any.

2. Clean the water strainer.

3. On air cooled models, clean the air cooled condenser. Do not use a wire brush. Vacuum or blow out any dust in the fins of the condenser: the condenser is only clean when light can be seen through the fins.

4. Check that the cabinet is level in the side to side and front to back directions.

5. Clean the water system, evaporator plates and sump assembly, using a solution of Scotsman Ice Machine Cleaner. Refer to CLEANING - Icemaker.

Cleaning requirements vary according to local water conditions and to how much the machine runs. Continuous check of the clarity and shape of the ice cubes, with a visual inspection of the water system parts, evaporator parts and the reservoir will indicate if more frequent cleaning is needed.

6. Check and tighten all bolts and screws.

7. Check for water leaks and make corrections.

8. Check that the bin thermostat operates correctly: holding ice on the thermostat control tube in the bin should cause the icemaker to shut off at the end of the harvest cycle. After the ice is removed, the icemaker should restart within a few minutes.

9. Check cube size, adjust if required.

10. Check harvest time, adjust if required.

ICE STORAGE BIN

The interior liner of the bin is in contact with a **food** product: **ice.** The storage bin must be **cleaned** regularly to maintain a **sanitary** environment. Once a week cleaning with soap and water, a hot water rinse and an air dry is a basic procedure.

Every 90 days, the liner should be sanitized with a commercial ice machine sanitizer, according to the directions of the sanitizer, or with a solution of household bleach and water:

1. Mix the bleach and water using the ratio of two ounces of bleach to two gallons of water.

2. Wipe all interior surfaces of the ice storage bin with the bleach and water.

3. Allow to air dry.

CLEANING: ICEMAKER

1. Remove front panel.

2. Switch the compressor switch to OFF. Switch the master switch to OFF.

3. Remove 4 thumbscrews and the front liner.

4. Twist forward and remove the front drain trough, and switch the master switch to ON, pumping the water from the reservoir into the bin. Replace the drain trough.

5. Mix 8 ounces of Scotsman Ice Machine Cleaner with 1 gallon of warm (95^0F. - 115^0F.) water and pour into the reservoir until full.

WARNING

Scotsman Ice Machine Cleaner contains Phosphoric and Hydroxyacetic acids. These compounds are corrosive and may cause burns. If swallowed, DO NOT induce vomiting. Give large amounts of water or milk. Call Physician immediately. In case of external contact, flush with water. KEEP OUT OF THE REACH OF CHILDREN.

CM550 MAINTENANCE & CLEANING INSTRUCTIONS

6. Let the unit operate for 30 minutes with the compressor off, then switch the unit off.

7. Remove the front drain trough again.

8. Switch on the master switch to pump water from the sump into the bin. Continue to add fresh water to flush residual cleaner from the system. Switch the master switch off.

9. Wash the plastic and stainless liners of the freezer section with a solution of household bleach (1 ounce of bleach to 1 gallon of water) and warm (95^0F.-115^0F.) water. Allow to air dry.

10. Replace the drain trough and front liner.

11. Switch the master and compressor switches back on.

12. Replace the front panel

13. Check the next batch of cubes to make sure all of the acid taste is gone.

////////////////////////////////////CAUTION////////////////////////////////////

DO NOT use ice cubes produced from the cleaning solution. Be sure none remain in the bin

//

14. Pour hot water into the storage bin to melt the cubes and also clean out the bin drain.

15. The unit is now ready for continued automatic operation.

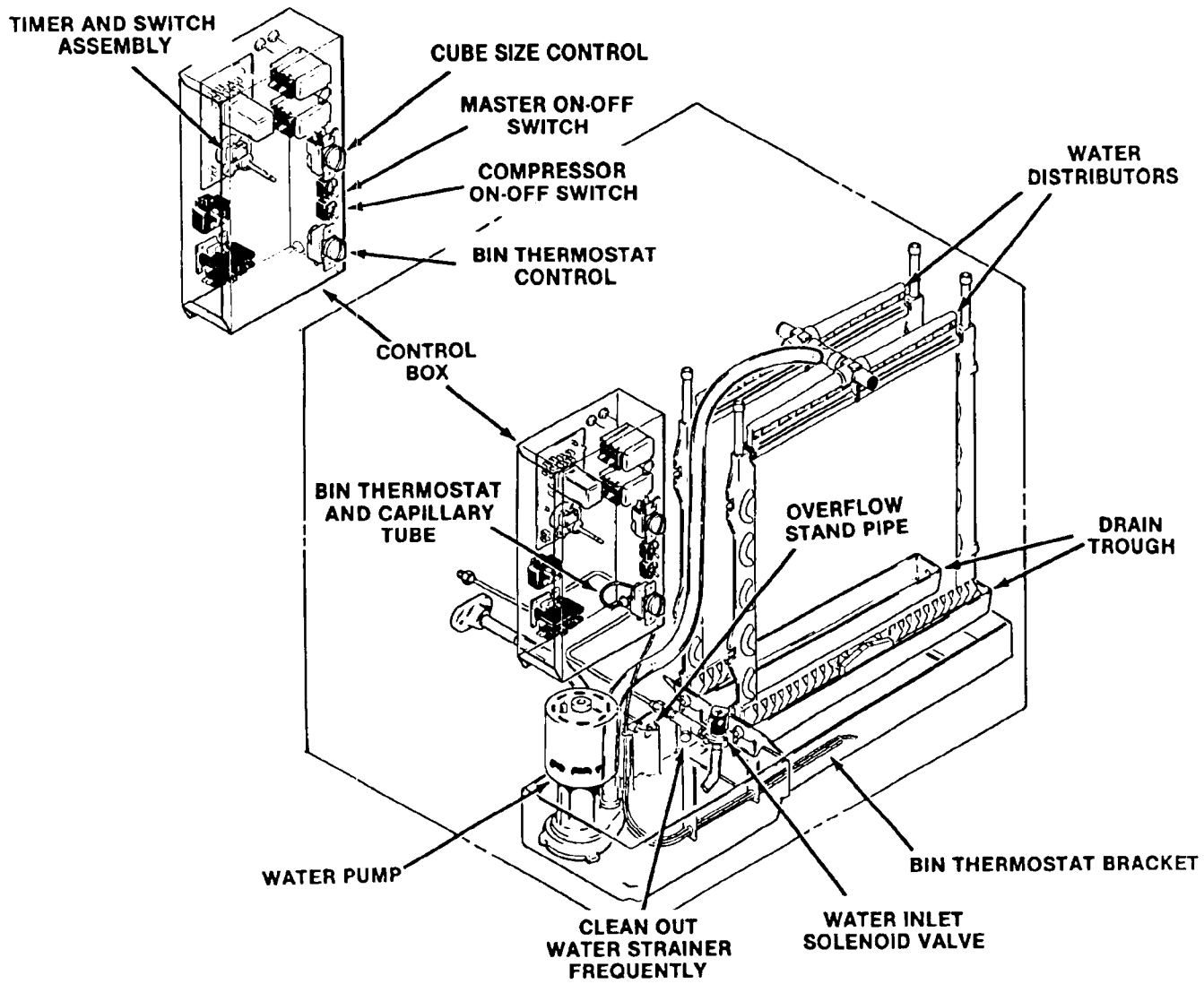

CM550 COMPONENT DESCRIPTION

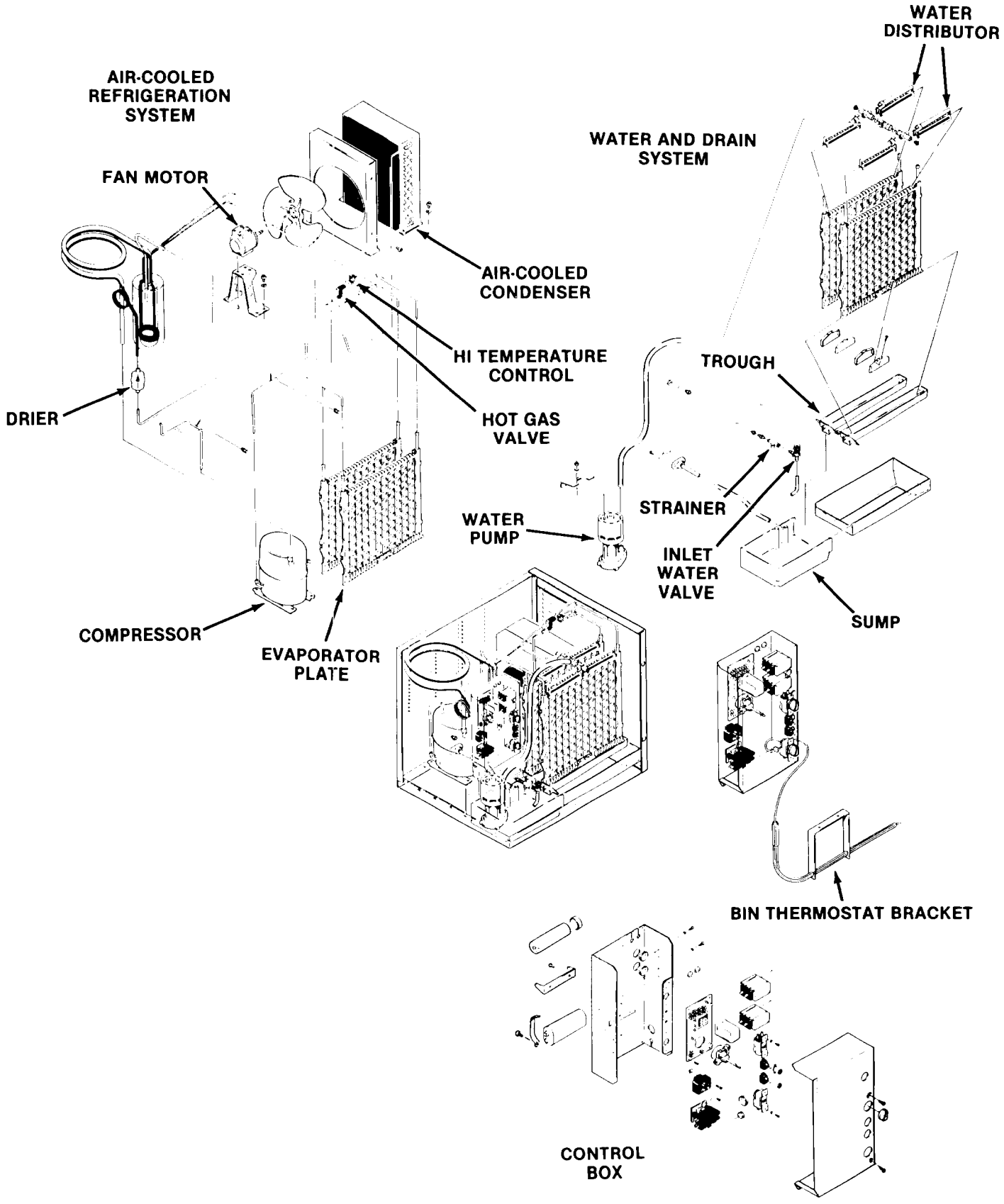

CM550 COMPONENT DESCRIPTION

BIN THERMOSTAT CONTROL

The bin thermostat is located on the front edge of the control box with an accessible knob on the front. The sensing capillary tube is routed from the control out the side of the control box down and across the front edge of the sump and down into the bin thermostat bracket. The bin thermostat control functions to automatically shut OFF the icemaker, when the ice storage bin is filled and ice contacts the capillary tube. It also signals the RESTART of the icemaker, when the capillary tube starts to warm up, after ice has been removed from the bin.

Bin thermostat control adjustment should ONLY be performed on icemakers installed in extreme warm or cold locations and adjust only in increments of one eighth turn at a time.

COMPRESSOR CONTACTOR

The compressor contactor functions to carry the compressor line current. The contactor is wired so any control in the pilot circuit, such as the bin thermostat, and high pressure controls, etc., will cause the contactor holding coil to be de-energized, when the control contact OPENS, thereby breaking the circuit to the compressor.

CUBE SIZE CONTROL

The temperature sensing cube size control affects the length of the freezing cycle prior to initiating the finishing timer. The cube size control closes its contacts when the evaporator reaches a preset temperature, starting the finishing timer. A variation in either ambient air or incoming water temperature will affect the efficiency of the refrigeration system. This will vary the length of time it takes the evaporator to reach the temperature at which the cube size control is preset to CLOSE; which, in turn, will affect the overall cycle time.

See *Cube Size Adjustment* BEFORE attempting to adjust the control.

RELAY

The multi-function, three pole, double-throw, plug-in relay is installed directly into a receptacle on the printed circuit board in the control box. The relay functions in part to by-pass the bin thermostat control to prevent the icemaker from shutting OFF, when a filled-bin condition occurs during the freezing cycle. The by-pass action serves to ensure full-sized ice cubes with each harvest cycle; and, to prevent short cycling on the bin thermostat control.

TIMER — Timer & Switch Assembly

The function of the timer begins when activated by the cube size control. The outer surface, or large diameter lobe of the timer cam, determines the timer cycle for finish freezing of the ice cubes, while the inner surface, or small diameter lobe, determines the time cycle for the harvest sequence. All electrical circuitry is connected through the printed circuit board and the timer and shunted by the single-pole, double-throw microswitch to either the freezing cycle or the harvest cycle. The microswitch is actuated by a cam assembly directly connected to the timer motor. The timer cam can be adjusted to vary the defrost line, as required. One complete rotation of the cam will take eight minutes. Harvest is preset at two and one-fourth minutes.

HIGH PRESSURE SAFETY CONTROL

This is a manual reset control that shuts down the icemaker, should the discharge pressure ever reach 450 PSIG on air-cooled

CM550 COMPONENT DESCRIPTION

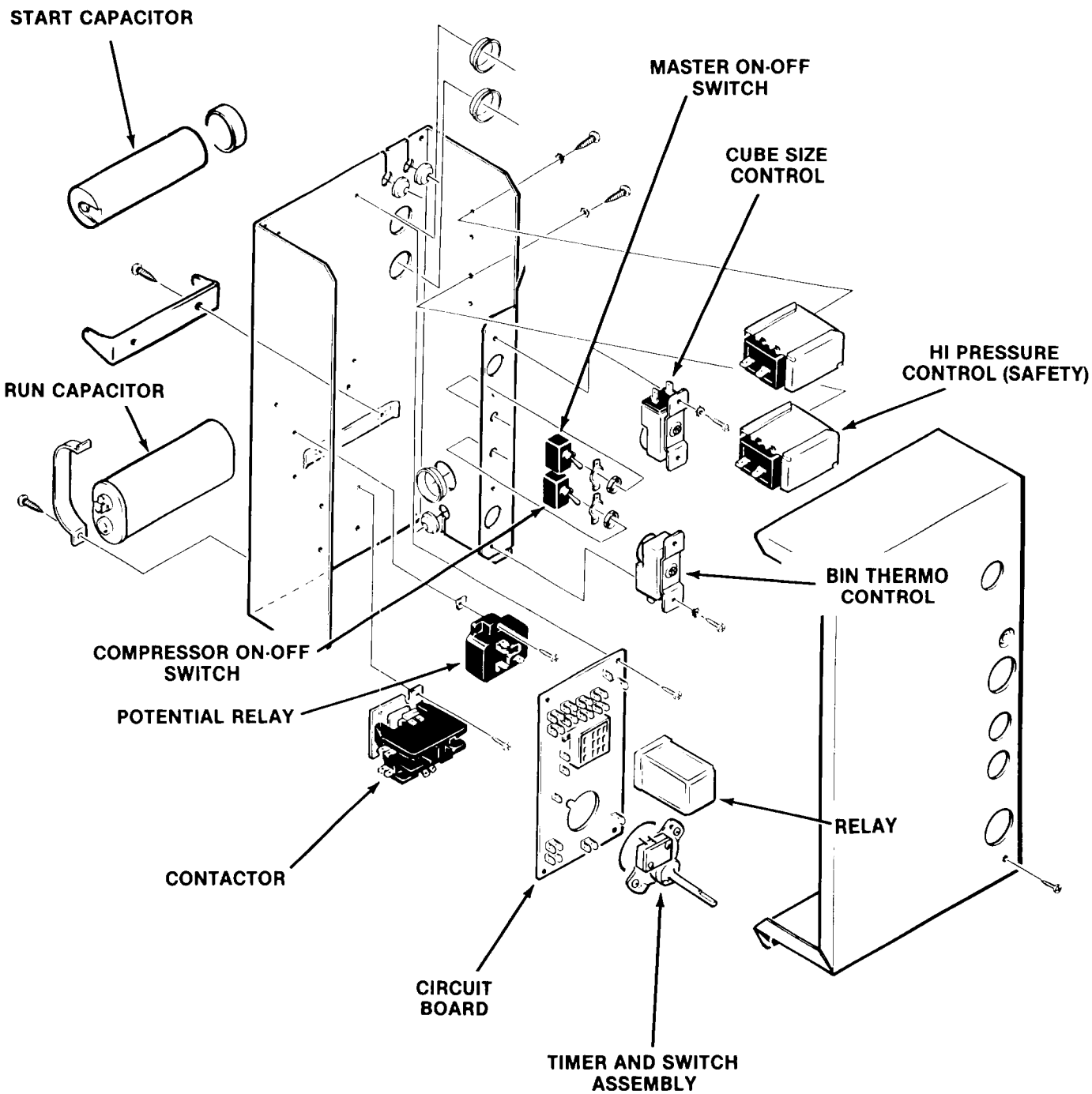

CM550 COMPONENT DESCRIPTION

WATER INLET SOLENOID VALVE

The water inlet solenoid valve functions to fill the sump assembly with water and overflow out the overflow standpipe located at the bottom of the sump. This action fills and rinses the sump during each harvest cycle. The flow rate is .75 g.p.m.

WATER DISTRIBUTION SYSTEM

The water distribution system functions to evenly supply water to all cells of the evaporator plates. The water pump pumps water from the sump up the vertical tygon tube to the tee. From there water is channeled through the water manifold to the water distributors, above each evaporator plate, and from six holes within each distributor, water flows to the cells of each side of the evaporator plates. Gravity flow returns the unfrozen excess portion of water to the sump reservoir for recirculation.

HOT GAS SOLENOID VALVE

The hot gas solenoid valve functions only during the harvest cycle, to divert the hot discharge gas from the compressor, bypassing the condenser and capillary tube, for direct flow in the evaporator plates to release ice cubes from the ice cube molds. The hot gas solenoid valve is comprised of two parts, the body & plunger and the coil & frame assemblies. Installed in the discharge line of the compressor, the energized solenoid coil lifts the valve stem within the valve body, to cause the hot discharge gas to be diverted when the finishing timer has advanced to the start of the harvest cycle.

STRAINER

A water strainer is located in the potable water inlet tube before the water inlet solenoid valve. Clean the water strainer frequently.

CM550 COMPONENT DESCRIPTION

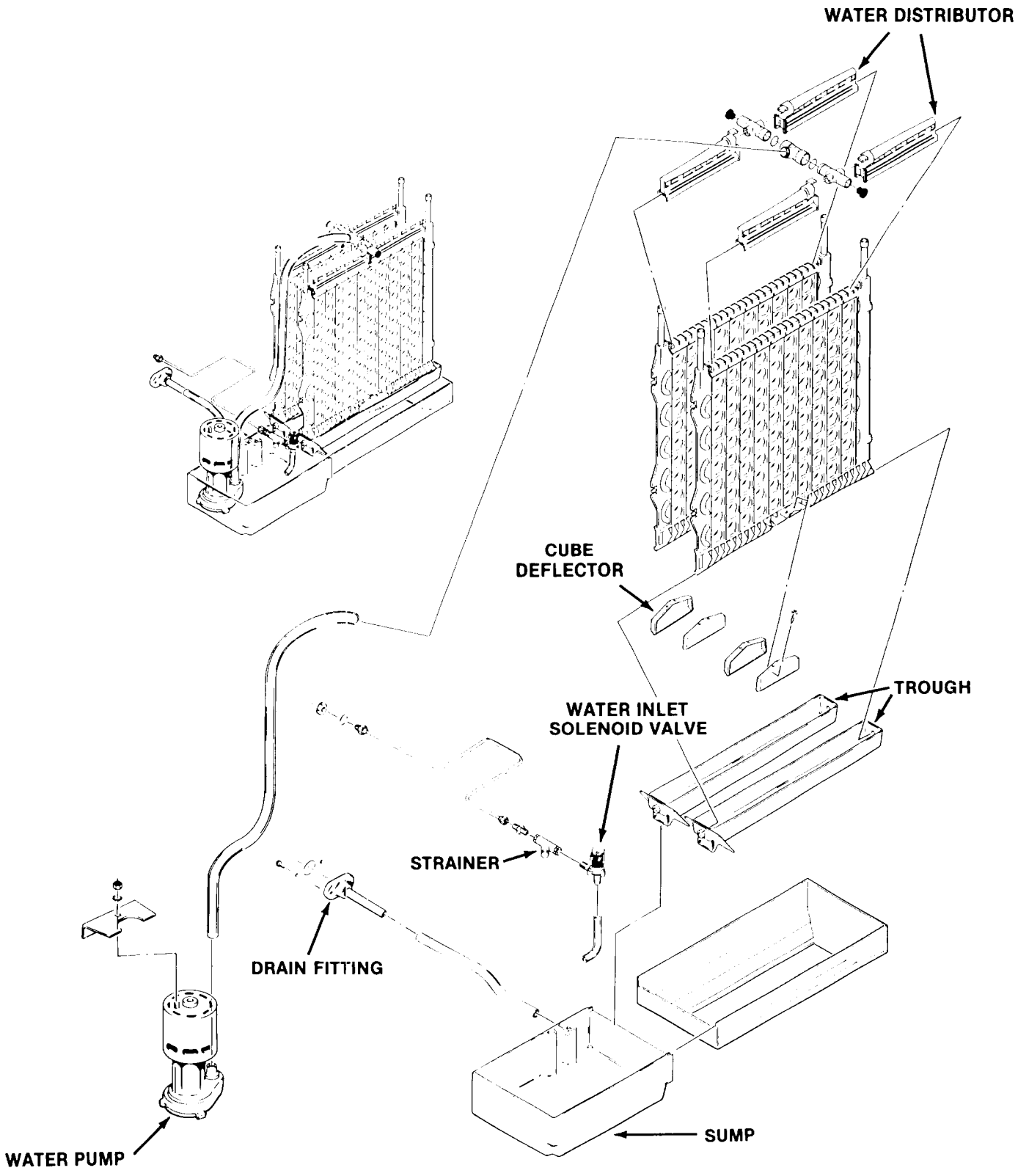

CLEAN OUT
WATER STRAINER
FREQUENTLY

CM550 SERVICE DIAGNOSIS

The service diagnosis section is for use in aiding the serviceman in diagnosing a particular problem for pin-pointing the area in which the problem lies, thus an ever available reference for proper corrective action.

The following chart lists corrective actions for the causes of known symptoms of certain problems that can occur in the icemaking-refrigeration system.

ICEMAKING - REFRIGERATION SYSTEM

SYMPTOM	POSSIBLE CAUSE	CORRECTION
Irregular size cubes some cloudy.	Some distributor holes plugged.	Clean distributor holes.
		Clean water sump.
	Shortage of water.	See shortage of water CORRECTION.
	Unit not level.	Level cabinet, as required.
Cubes too large.	Dirty air-cooled condenser.	Clean condenser.
	Cube size control set too cold.	Rotate cube size control dial toward WARMER.
Cubes too small.	Cube size control set too warm.	Rotate cube size control dial toward COLDER.
	Partially restricted capillary tube. (Kinked, pinched off, etc.)	Replace heat exchange assembly.
	Moisture in refrigeration system.	Blow refrigerant charge; replace drier; evacuate system; add proper refrigerant charge.
	Shortage of water.	See shortage of water CORRECTION.
Cloudy cubes.	Shortage of water.	See shortage of water SYMPTOM.
	Dirty water supply.	Check water quality and install water purification system.
	Accumulated impurities.	Use SCOTSMAN Ice Machine Cleaner and clean icemaker.
Shortage of water.	Short harvest cycle.	Adjust cam of timer and switch assembly.
	Water leak in sump area or off evaporator plate.	Locate Leak and correct condition.
	Partial restriction in water inlet strainer or inlet water valve.	Clean or replace strainer or valve.
	Water pressure too low.	Check for 20 PSI flowing water. Restore pressure.

CM550 SERVICE DIAGNOSIS

SYMPTOM	POSSIBLE CAUSE	CORRECTION
Decreased ice capacity.	High head pressure, result of dirty condenser or faulty fan motor,	Clean condenser. Repair or replace fan motor
	Non-condensable gas in the system	Purge the system, evacuate and recharge per nameplate requirements.
	Poor air circulation or extreme hot location.	Relocate the cabinet; or provide ventilation.
	Overcharge of refrigerant.	Evacuate and recharge per nameplate.
	Hot gas solenoid valve leaking.	Replace valve.
	Partially restricted capillary tube.	See cubes too small CORRECTION.
	Defective compressor.	Replace compressor.
Poor harvests. Icemaker does not harvest.	Too short defrost time.	Check and adjust harvest cycle.
	Restriction in water inlet line.	Check strainer and inlet water valve.
	Hot gas solenoid does not open. Binds or burned out.	Replace solenoid, coil or valve as applicable.
	Undercharge of refrigerant.	Charge to nameplate requirements.
	Water pressure too low.	Check for 20 PSI flowing water. Restore pressure.
	Cube size too large or too small.	Adjust size with cube size control.
Compressor cycles intermittently.	Low voltage.	Check for circuit overload. Check building supply voltage, if low, contact power company.
	Dirty condenser.	Clean condenser with vacuum cleaner or brush. DO NOT USE A WIRE BRUSH.
	Air circulation blocked.	Locate cabinet with adequate air space for proper air flow.
	Defective fan motor.	Replace fan motor.
	Non-condensable gases in system.	Purge the system and recharge per nameplate requirements.
Icemaker will not operate.	Blown fuse in line.	Replace fuse and check for cause.
	Master switch in OFF position.	Set switch to ON position.
	Faulty master switch.	Replace switch.
	Timer contacts open.	Replace timer microswitch.
	Faulty bin thermo.	Replace.
	Off on high head pressure safety switch.	Air-Cooled - condenser not getting air.

ADJUSTMENT OF THE BIN THERMOSTAT CONTROL.

The control for the bin thermostat is the temperature control, located in the front of the control box.

The bin thermostat control requires adjustment only if the icemaker shuts off prematurely. Turn adjusting knob, in 1/8 turn or less increments, in the appropriate direction until the icemaker shuts OFF.

Remove ice from the capillary bulb; then, place warm hand on the capillary bulb to restart the icemaker.

Place handful of ice against the capillary bulb and observe that the icemaker should shut OFF. (Only at the end of harvest).

CAUTION

The adjusting screws on the temperature control device have very sensitive response to adjustment. DO NOT attempt to adjust the screw until after thoroughly reading and understanding the instructions and illustrations. Over-adjusting or erratic guessing, can foul the instrument and cause ultimate delay and part replacement, WHICH COULD HAVE BEEN PREVENTED.

ALTITUDE ADJUSTMENT
over 2,000 feet above sea level only

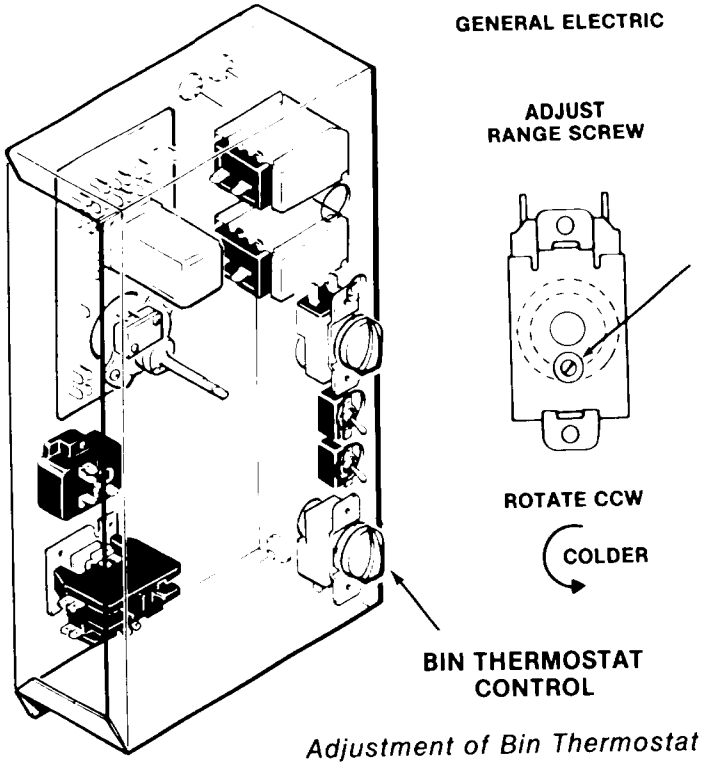

Adjustment of Bin Thermostat

CM550 ADJUSTMENT PROCEDURES

ADJUSTMENT OF THE CUBE SIZE CONTROL

CAUTION

BEFORE performing actual adjustments to the cube size control, check other possible causes for cube size problems, refer to SERVICE DIAGNOSIS for problem review and analysis. DO NOT perform adjustment when a new cube size control is installed, until the control bulb has been properly installed in the tube well, on the evaporator outlet tube and the icemaker has progressed through several complete freezing and harvest cycles, to observe size and quality of ice cubes freezing and harvest cycles, and whether or not a cube size problem exists.

As a reverse acting temperature control, adjustment on the cube size control is performed to cause either larger sized ice cubes or smaller sized ice cubes to be produced.

To produce LARGER sized ice cubes:

1. Locate the cube size control, on the front of the control box.
2. Rotate the adjusting knob one-eighth of a turn CLOCKWISE toward COLDER.
3. Observe size of ice cubes in next two ice cube harvests and repeat step 2 above, in one-eighth turn increments, until correct ice cube size is achieved.

To produce SMALLER sized ice cubes:

1. Locate the cube size control, on the front of the control box.
2. Rotate the adjusting knob one-eighth of a turn COUNTERCLOCKWISE toward warmer.
3. Observe size of ice cubes in next two ice cube harvests and adjust in one-eighth turn increments, until correct ice cube size is achieved.

ADJUSTMENT OF THE TIMER & SWITCH ASSEMBLY

The timer and switch assembly if factory set, so one complete revolution of the cam on the timer represents eight minutes. Five and one-half minutes comprise the freezing cycle event during cam rotation, and the final two and one-half minutes program the defrost and harvest cycle. Rotating the shaft of the timer cam CLOCKWISE will allow positioning the actuator arm of the microswitch on the cam at the selected start position for either the freezing cycle or harvest cycle, as required in the cleaning instructions.

WARNING

Disconnect electrical power supply to icemaker whenever adjustment procedures are performed.

To adjust the timer & switch assembly:

A. HARVEST CYCLE: Slowly rotate the shaft of the timer and switch assembly, located in the control box, CLOCKWISE, until the actuator arm on the microswitch initiates the harvest cycle. An audible click can be heard, but in a noisy area, look at the cam and switch to observe the event.

B. FREEZING CYCLE: Slowly rotate the shaft of the timer and switch assembly, located in the control box, CLOCKWISE, until the actuator arm on the microswitch initiates the freezing cycle.

C. The length of the harvest cycle can be changed by loosening the adjustment screw on the cam. The normal setting is two and one-quarter minutes, as set at the factory. It is important that the length of the harvest cycle allow enough time for all the ice cubes to fall from the evaporator. Too short of a time will cause the evaporator to freeze up and stop ejecting ice into the bin. Too much time wastes icemaking capacity, energy and water. Adjustment of the harvest cycle may require a corresponding adjustment of the cube size control.

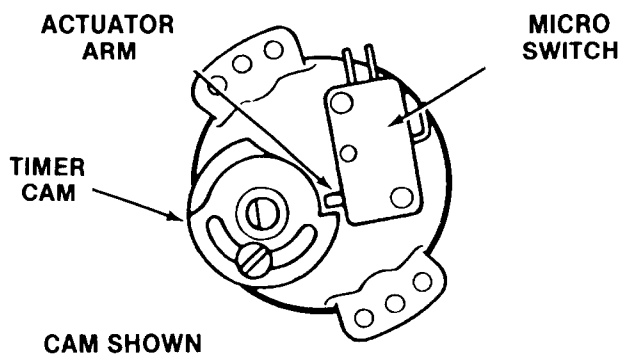

CAM SHOWN AT BEGINNING OF HARVEST CYCLE

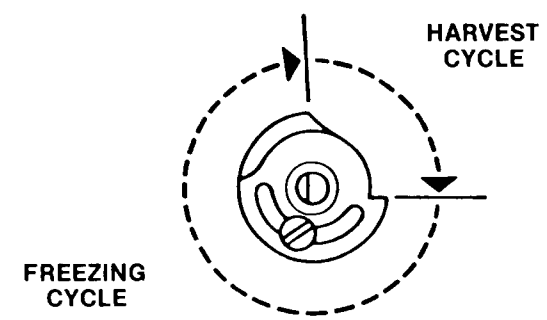

CAM SHOWN DIVIDED INTO TYPICAL FREEZING AND HARVEST CYCLES

CM550 REMOVAL AND REPLACEMENT PROCEDURES

WARNING

Be sure the electrical power supply circuit breaker and the inlet water supply are OFF, BEFORE starting any of the following REMOVAL AND REPLACEMENT procedures as a precaution to prevent possible personal injury or damage to equipment.

REMOVAL AND REPLACEMENT OF THE DRIER

To remove the drier:

1. Pull out to unsnap catches and remove the front panel.
2. Remove screws and remove left side access panel.
3. Bleed off or blow the refrigerant charge through the Schrader valve.
4. Unsolder refrigeration lines at both ends of the drier, and remove the drier.

To replace the drier:

CAUTION

If the factory seal is broken on the replacement drier, exposing it to the atmosphere more than a few minutes, the drier will absorb moisture from the atmosphere and lose substantial ability for moisture removal.

Be sure the replacement drier is installed with the arrow positioned in the direction of the refrigerant flow.

1. Remove the factory seals from the replacement drier and install the drier in the refrigerant lines with the arrow positioned in the direction of the refrigerant flow.
2. Solder the drier into the lines, two places, taking precautions to NOT OVERHEAT the drier body, during installation soldering.
3. Purge the system and check for leaks.
4. Thoroughly evacuate the system to remove moisture and non-condensables.
5. Charge the system with refrigerant, by weight. SEE NAMEPLATE.
6. Replace and attach the left side panel.

NOTE

Always install a replacement drier, anytime the sealed refrigeration system is opened. Do not replace the drier until all other repair or replacement has been completed.

REMOVAL AND REPLACEMENT OF THE EVAPORATOR PLATE ASSEMBLY

1. Remove the front and top panels.
2. Bleed off or blow the refrigerant charge through the Schrader valve.
3. Disconnect Tygon water inlet tube(s), at the water manifold tee(s), above the evaporator plates.
4. Unsnap the sump assembly from the lower left and right attachment points on each evaporator plate.
5. Slide the water distributor tubes about 1/8-inch along the top of the evaporator plate to be removed, until the left water distributor tube can be lifted upward.
6. Lift the end of the water distributor tube and slide the distributors toward the left along the top of the evaporator plate, until the flexible right notch is cleared.
7. Unsnap and disconnect each left and right water distributor tube from the water manifold section.

CAUTION

Use EXTRA PRECAUTION to protect the plastic parts during the next step to unsolder the refrigerant lines, two places, at the top of the evaporator plate. Position wet cloths over top of plates, as well as over the plastic liner at the rear, or sides, to prevent accidental heat damage, or possible fire from torch flame.

8. Unsolder and remove the refrigerant lines at the top of the evaporator plate to be replaced.
9. Remove nuts at left of the evaporator then, loosen the braces just enough to remove the evaporator plate. Temporarily replace the braces, to support the remaining evaporator plate.

To replace the evaporator plate, reverse the removal procedures. See Nameplate. Weigh in proper charge of R-502.

REMOVAL AND REPLACEMENT OF THE COMPRESSOR ASSEMBLY

To remove the compressor assembly:

1. Pull out to unsnap catches and remove the front panel.
2. Remove screws and remove cabinet top and left side access panel.
3. Bleed off or blow the refrigerant charge through the Schrader valve.
4. Remove the cover from the terminal box on the compressor; then, remove electrical leads from the compressor.
5. Unsolder suction, discharge and process header from compressor.
6. Remove four bolts and washers which secure the compressor to the chassis mounting base.
7. Remove the compressor from the cabinet.

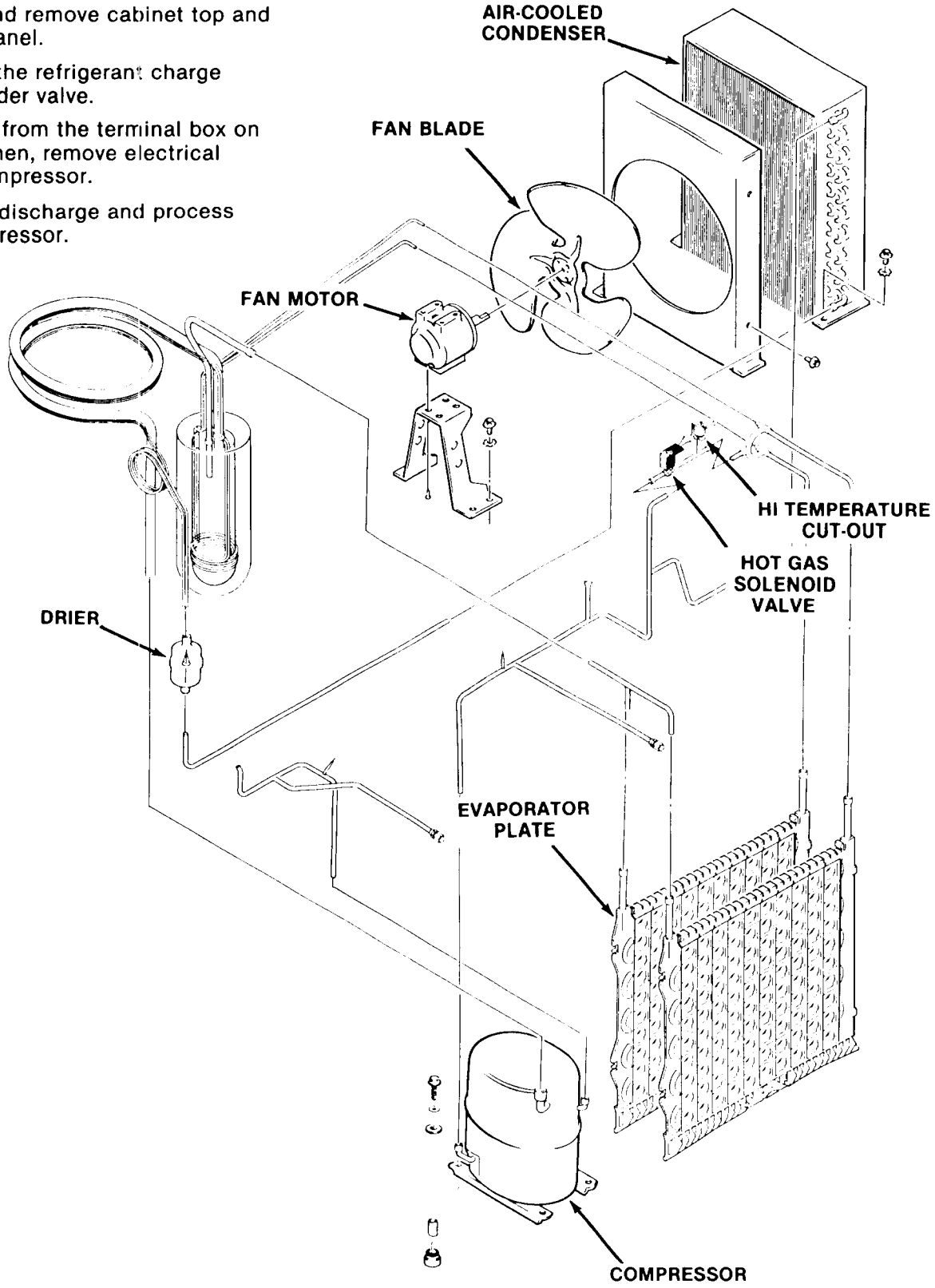

CM550 REMOVAL AND REPLACEMENT PROCEDURES

WARNING

Disconnect electrical power supply to icemaker whenever adjustment procedures are performed.

REMOVAL AND REPLACEMENT OF THE CONDENSER — AIR-COOLED MODELS

To remove the condenser:

1. Pull out to unsnap catches and remove the front panel.
2. Remove screws and remove cabinet top and right service side panels.
3. Bleed off or blow the refrigerant charge through the Schrader valve.
4. Unsolder and disconnect refrigerant lines from the condenser.
5. Unsolder and remove the drier from the refrigerant lines connecting to the condenser.
6. Remove screws, lockwashers and the condenser from the chassis base.

To replace the air-cooled condenser, reverse the removal procedure.

REMOVAL AND REPLACEMENT OF THE FAN MOTOR — AIR-COOLED MODELS

To remove the fan motor assembly:

1. Pull out to unsnap catches and remove the front panel.
2. Remove unit top or left side panel.
3. Disconnect the two electrical leads, from the fan motor, at the control box assembly.

Before next step, measure or make accurate mental note of the distance the fan blades extend beyond the fan shroud, so during replacement the correct distance is maintained.

4. Remove screws and the fan motor and bracket assembly; and remove the fan motor and bracket from the chassis base.
5. Loosen set screws on the fan blade and remove the fan blade from the fan motor. Mark or note position of the blade on the shaft of the fan motor, for replacement.
6. Remove screws and lockwasher and separate the fan motor from the fan motor bracket.

To replace the fan motor assembly, reverse the removal procedure.

Be sure to replace the fan blade with the hub of the fan blade facing the fan motor, to ensure air flow is toward the fan motor; and, is set at marked location on shaft and setscrews tightened on the FLAT part of the shaft of the fan motor.

Always install a replacement drier, anytime the sealed refrigeration system is opened. Do not replace the drier until all other repair or replacement has been completed.

NOTE

Thoroughly evacuate the system to remove moisture and non-condensables.

CM550 REMOVAL AND REPLACEMENT PROCEDURES

WARNING

Disconnect electrical power supply to icemaker whenever adjustment procedures are performed.

REMOVAL AND REPLACEMENT OF THE CUBE SIZE CONTROL

To remove the cube size control:

1. Remove front panel.
2. Remove cover from control box.
3. Trace capillary tube, from the cube size control to the refrigerant suction line.
4. Remove the coiled capillary tube bulb from the tube well on the suction line.
5. Remove electrical leads from the cube size control.
6. Remove screws and the cube size control.

To replace the cube size control, reverse the removal procedure.

REMOVAL AND REPLACEMENT OF THE WATER DISTRIBUTOR TUBES AND MANIFOLD TUBES

To remove the water distributor tube and manifold tube:

1. Pull out to unsnap catches and remove the front panel.
2. Remove 4 thumb screws and remove the evaporator cover.
3. Slide the water distributor tube to the left about 1/8-inch along the top of the evaporator plate, until the water distributor tube can be unsnapped from the flexible notch and lifted upward to the right side.
4. Unsnap and disconnect water distributor tubes from the water manifold section.

To replace the water distributor tubes and manifold tubes, reverse the removal procedure. BE SURE the notches in the water manifold tubes properly engage the alignment keys in the tee.

BE SURE the water distributor tube is securely fastened at the notch at both sides of the evaporator plate.

Check identical attachment for the left water distributor tube and notch; also, that the distributor/manifold connections at the top center of each evaporator plate is snug against the top of the plate.

REMOVAL AND REPLACEMENT OF THE BIN THERMOSTAT CONTROL

To remove the bin thermostat control:

1. Remove front panel.
2. Remove screws and the control box cover.
3. Remove wire leads from the bin thermostat control.
4. Unthread the capillary tube and remove from the bin thermostat control bracket at the bottom right side of the evaporator section.
5. Remove the two screws attaching the bin thermostat control to the side of the control box; then, carefully pull the capillary tube out of the evaporator section. Carefully remove the bin thermostat control and capillary tube from the control box.

To replace the bin thermostat control, reverse the removal procedure.

REMOVAL AND REPLACEMENT OF THE INLET WATER SOLENOID VALVE ASSEMBLY

To remove the inlet water solenoid valve assembly:

1. Shut OFF water supply to machine.
2. Remove screws and pull the water solenoid valve out to gain access.
3. Loosen and remove inlet water line fitting from the inlet water solenoid valve assembly.
4. Remove inlet water Tygon tubing from the water solenoid valve.

To replace the inlet water valve assembly, reverse the removal procedures.

NOTE

Always install a replacement drier, anytime the sealed refrigeration system is opened. Do not replace the drier until all other repair or replacement has been completed.

WARNING

Disconnect electrical power supply to icemaker whenever adjustment procedures are performed.

REMOVAL AND REPLACEMENT OF THE WATER PUMP ASSEMBLY

To remove the water pump assembly:

1. Pull out to unsnap catches and remove the front panel.
2. Remove the Tygon tube to the pump assembly.
3. Disconnect electrical leads from the water pump assembly.
4. Loosen thumbscrew, loosen Phillips headscrew, lift pump up and remove from unit.
5. Remove one nut and mounting bracket from top of water pump.

To replace the water pump assembly, reverse the removal procedure.

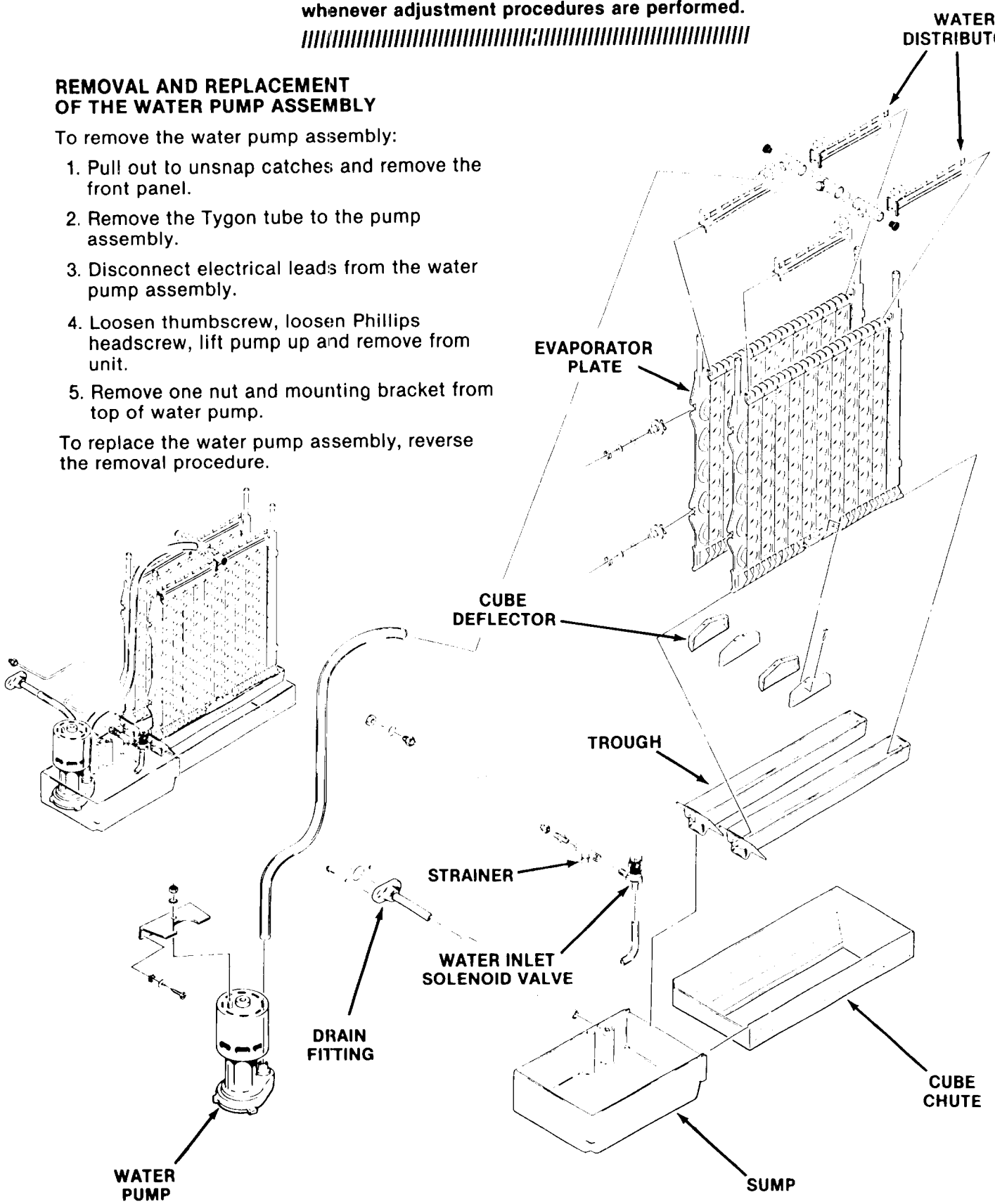

CM550 SERVICE PARTS

This section contains the parts illustrations and parts lists for the CM550.
A "no number" designation, when found in the part number column, indicates the part in question is not available from Scotsman as an assemby. This designation is used only for clarity in making the list.
When ordering parts, to avoid costly delays and errors, give the part number, the complete description as shown in the list, and the quantity of each part or assembly required.

TABLE OF CONTENTS

Exterior Panels.....2

Interior Panels.....3

Air Cooled Refrigeration.....4

Water System 5

Control Box 6

Wiring Diagrams 7

CM550 SERVICE PARTS

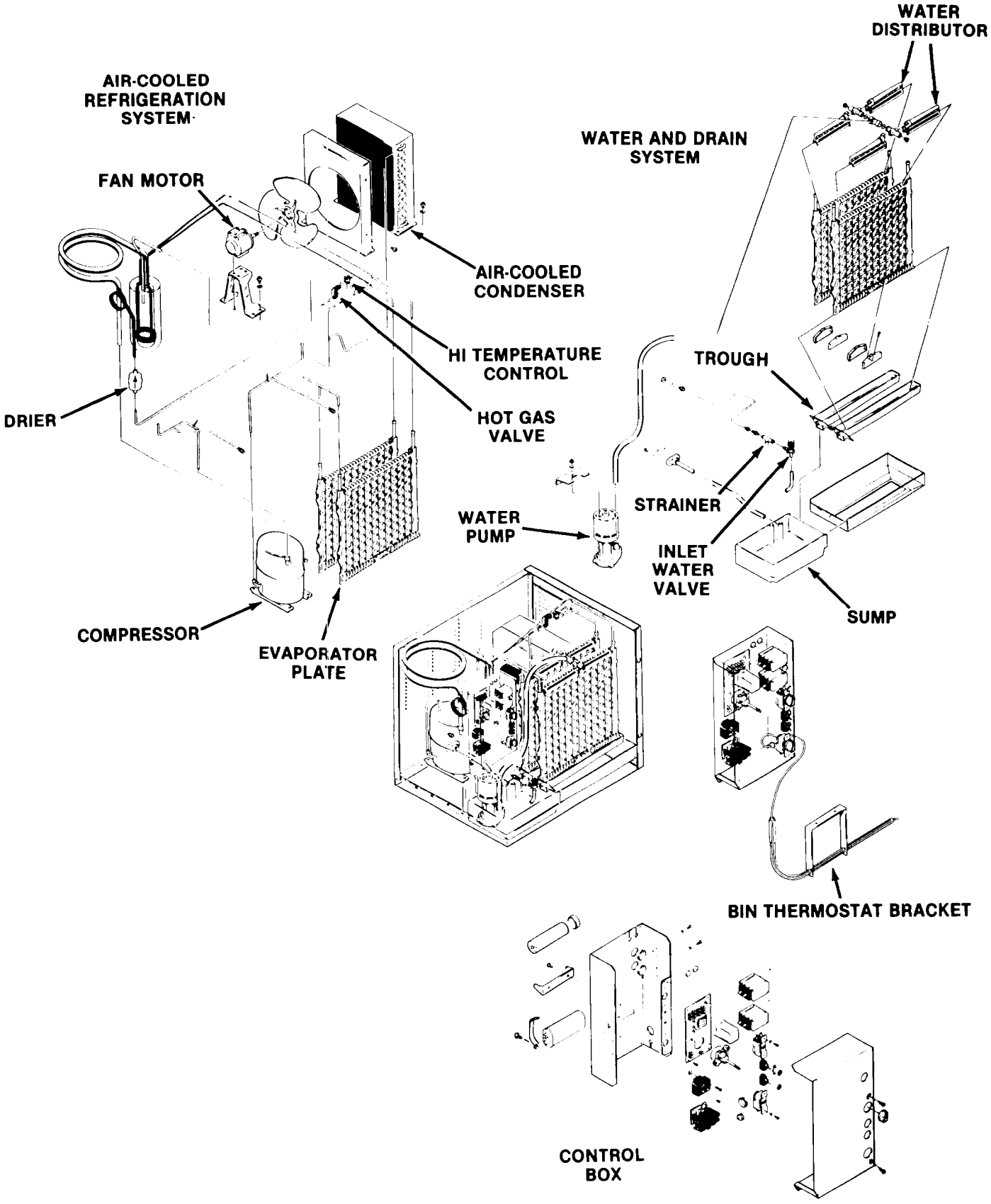

CM550 SERVICE PARTS

CABINET ASSEMBLY

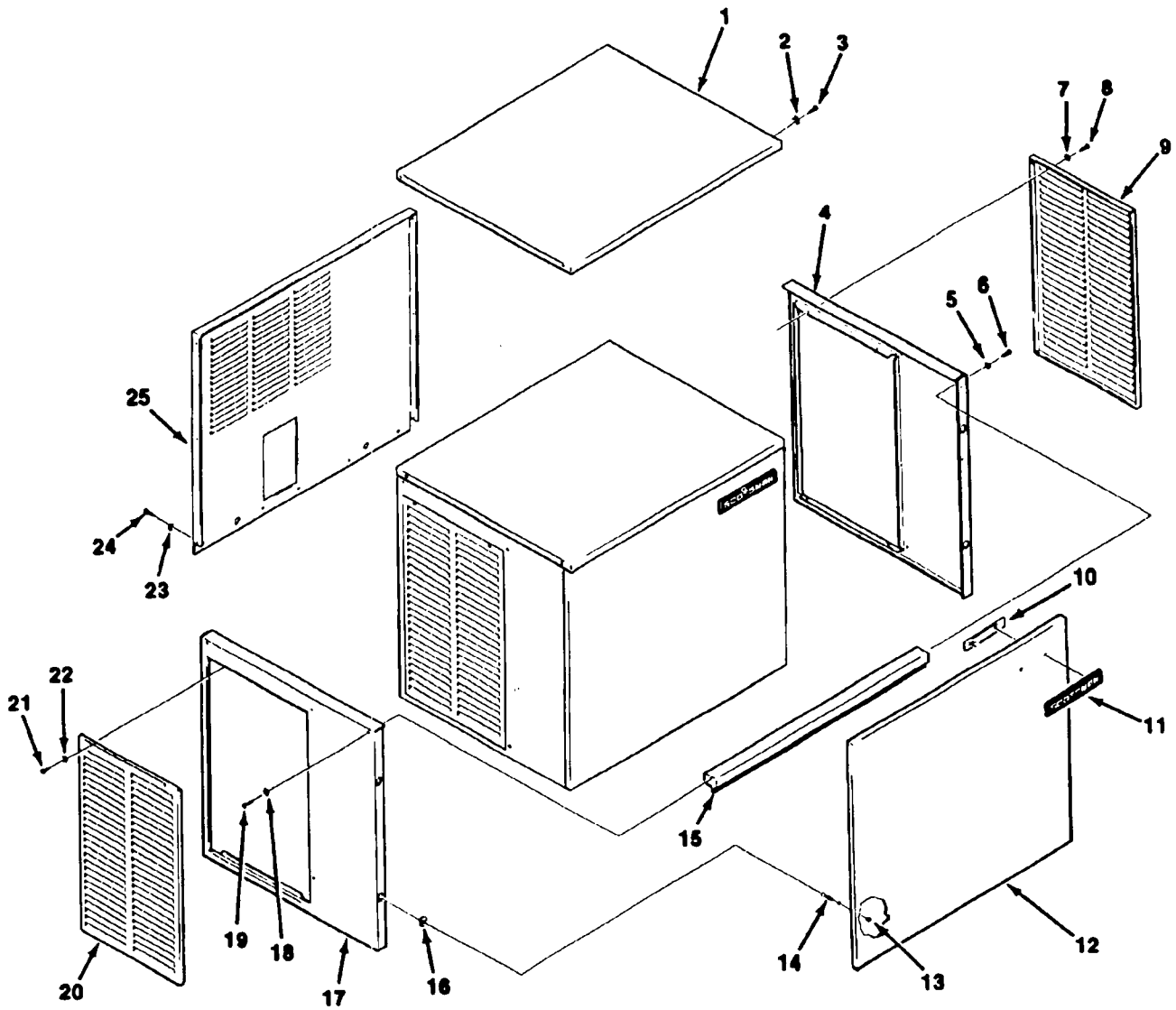

ITEM NUMBER	PART NUMBER	DESCRIPTION
1	A32159-001	Top Panel, Painted
	A32159-002	Top Panel, S. S.
2	03-1417-03	Lockwasher
3	03-1531-01	Screw
4	A32162-001	Right End Panel, Paint
	A32162-002	Right End Panel, S.S.
5.	03-1417-03	Lockwasher
6	03-1531-01	Screw
7	03-1417-03	Lockwasher
8	03-1404-12	Screw
9	A32161-001	Service Panel, Painted
	A32161-002	Service Panel, S.S.
10	03-0271-00	Speed Nut
11	15-0711-00	Emblem
12	A32160-001	Front Panel, Painted
	A32160-002	Front Panel, S.S.

ITEM NUMBER	PART NUMBER	DESCRIPTION
13	03-1406-04	Nut
14	15-0411-00	Strike
15	A32169-001	Front Support
16	02-0836-00	Cabinet Catch
17	A32163-001	Left End Panel, Paint
	A32163-002	Left End Panel, S.S.
18	03-1417-03	Lockwasher
19	03-1531-01	Screw
20	A32161-001	Service Panel, Paint
	A32161-002	Service Panel, S.S.
21	03-1404-12	Screw
22	03-1412-03	Lockwasher
23	03-1417-03	Lockwasher
24	03-1531-01	Screw
25	A32202-001	Back Panel

CM550 SERVICE PARTS

CABINET INTERIOR

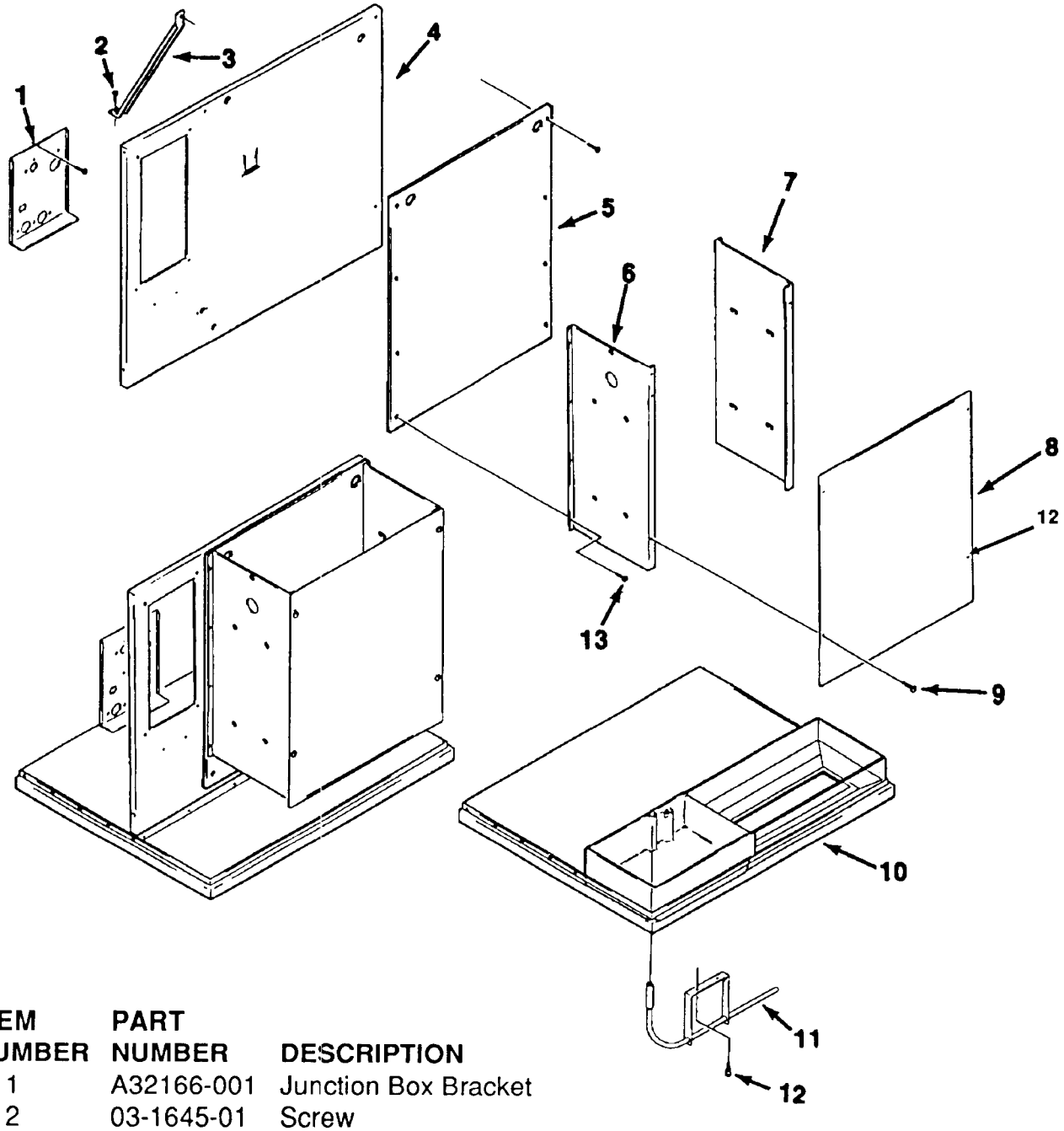

ITEM NUMBER	PART NUMBER	DESCRIPTION
1	A32166-001	Junction Box Bracket
2	03-1645-01	Screw
3	A32210-001	Support Brace
4	A32158-001	Retainer
5	02-2867-01	Splash Panel
6	A32172-001	Evaporator Bracket, Right
7	A32173-001	Evaporator Bracket, Left
8	A32165-001	Evaporator Plate Cover
9	03-0727-09	Thumbscrew
10	A32153-001	Base, with sump and chute
11	A32262-001	Bin Thermostat Bracket
12	03-0727-09	Thumbscrew
13	03-1531-02	Screw

CM550 SERVICE PARTS

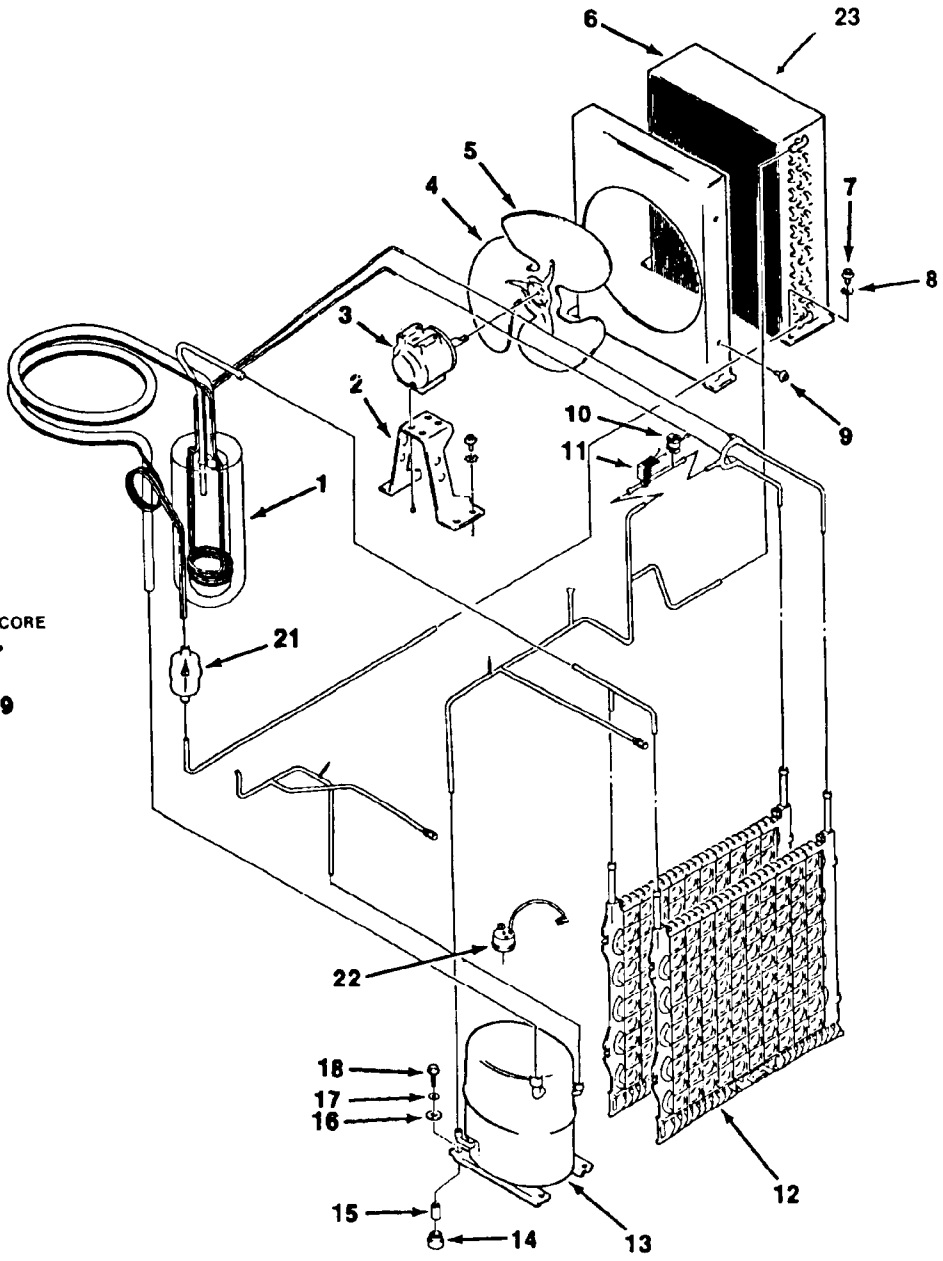

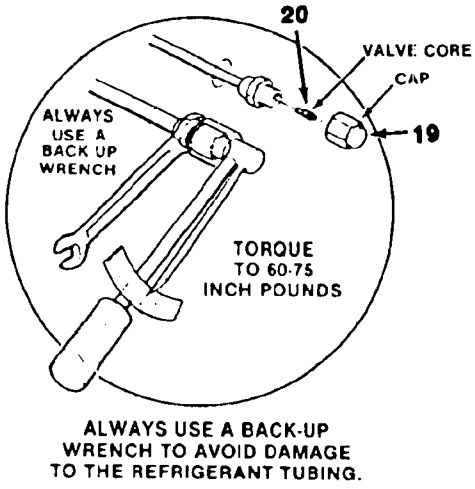

ALWAYS USE A BACK-UP WRENCH TO AVOID DAMAGE TO THE REFRIGERANT TUBING.

ITEM NUMBER	PART NUMBER	DESCRIPTION
1	A32174-020	Heat Exchanger
2	18-3739-01	Fan Motor Bracket
3	18-5105-11	Fan Motor
4	18-3732-01	Fan Blade
5	A32170-001	Fan Shroud
6	18-3709-01	Condenser
7	03-1645-01	Screw
8	03-1410-03	Lockwasher
	03-1407-05	Washer
9	03-1531-01	Screw
10	12-2300-03	Hi Temp Cut Out

ITEM NUMBER	PART NUMBER	DESCRIPTION
11	12-2135-01	Hot Gas Valve
12	A30296-020	Evaporator
13	18-6100-01	Compressor
14	18-2200-28	Grommet
15	18-2200-27	Sleeve
16	03-1407-07	Washer
17	no number	washer
18	03-1405-20	Screw
19	16-0563-00	Cap
20	16-0560-00	Core
21	02-2426-02	Drier
22	18-6100-50	Compressor Overload
23	A32975-001	Foam Filter

CM550 SERVICE PARTS

WATER SYSTEM

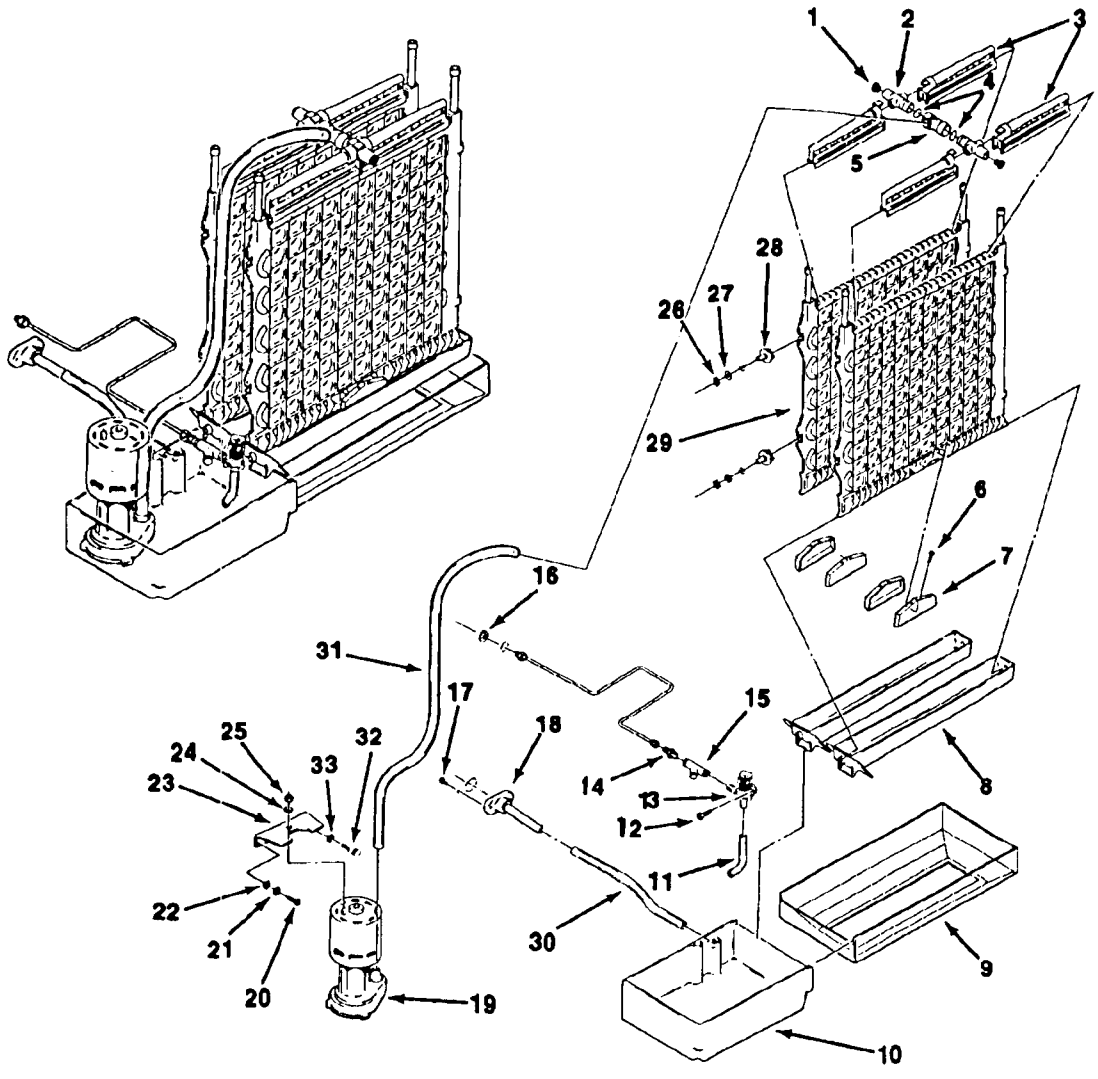

ITEM NUMBER	PART NUMBER	DESCRIPTION
1	13-0840-01	Manifold Plug
2	A29703-001	Manifold Water Tube
3	02-2527-01	Water Distrib. Tube
4	13-0617-48	O-Ring (2)
5	02-2519-01	Plastic Tee
6	03-1404-10	Screw
7	02-2878-01	Sump End Cover
8	02-2868-01	Drain Trough
9	no number	Cube Chute
10	02-2869-01	Sump
11	A30918-001	Sump Inlet Tube
12	03-1531-01	Screw
13	12-2313-04	Solenoid Valve
14	16-0791-01	Half Union
15	16-0162-00	Stainer
16	03-1394-01	Pal Nut
17	03-1645-01	Screw

ITEM NUMBER	PART NUMBER	DESCRIPTION
18	A32282-003	Drain Ass. (Air Cooled)
19	12-2265-21	Water Pump Assembly
20	03-1403-17	Screw
21	03-1407-03	Washer
22	03-1408-31	Washer
23	A30914-002	Pump Mounting Bracket
24	03-1417-05	Lockwasher
25	03-1406-05	Nut
26	03-1394-03	Pal Nut
27	03-1408-34	Special Washer
28	02-2642-01	Plate Mount
29	A30296-020	Evaporator
30	13-0674-07	Drain Hose, 8"
31	13-0674-07	Pump Hose, 33"
32	03-0727-09	Thumbscrew
33	03-1417-03	Lockwasher

CM550 SERVICE PARTS

CONTROL BOX

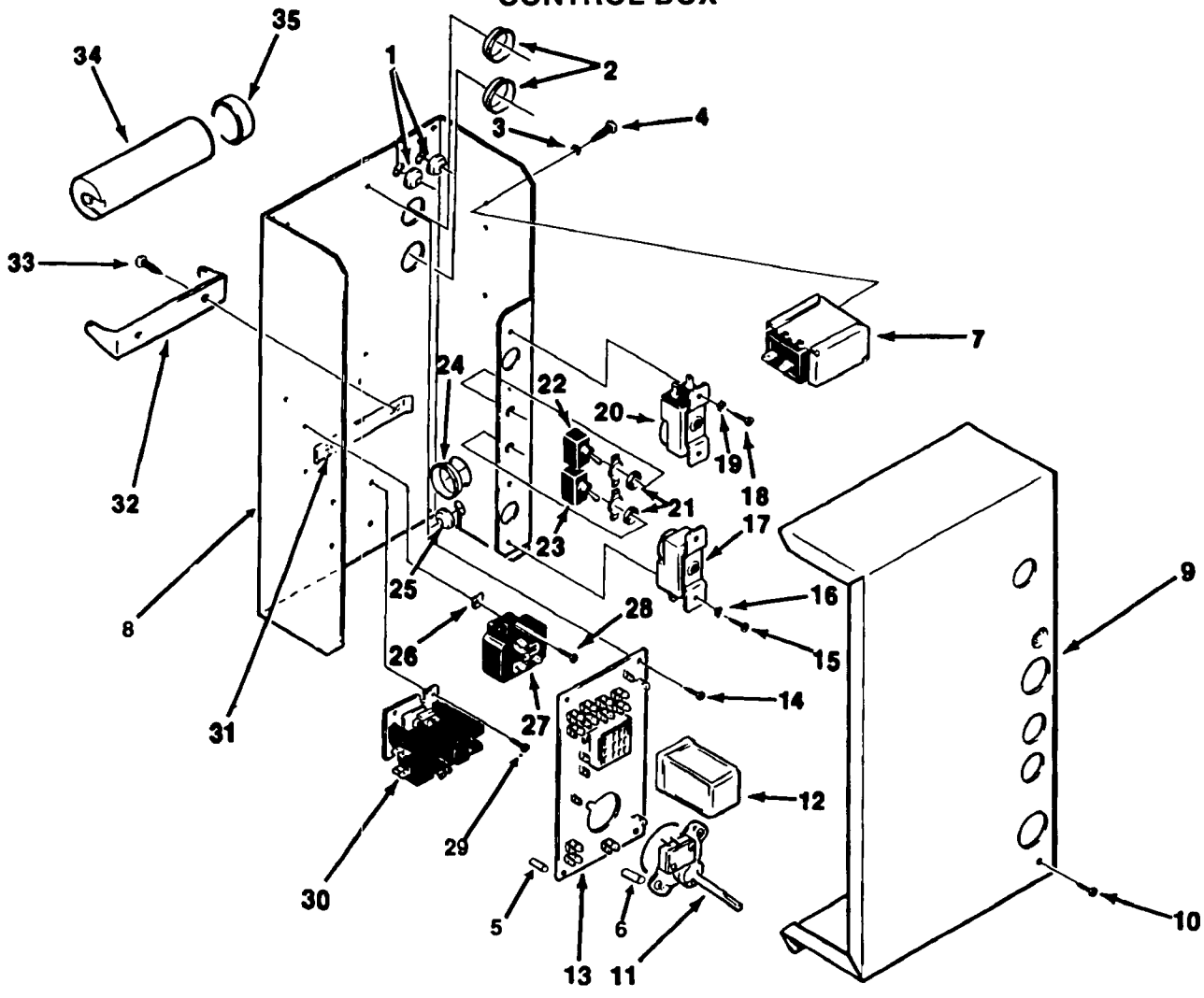

ITEM NUMBER	PART NUMBER	DESCRIPTION
1	13-0557-00	Grommet
2	12-1213-10	Snap Bushing
3	03-1417-18	Lockwasher
4	03-1403-02	Screw
5	02-2242-02	Stand Off
6	02-2242-01	Stand Off
7	11-0425-01	High Pressure Switch (Air Cooled)
8	no number	Control Box
9	A32168-001	Control Box Cover
10	03-1531-01	Screw
11	12-1980-01	Timer & Switch
12	12-1879-02	Relay, 115 V
13	12-1912-01	Circuit Board
14	03-1403-02	Screw
15	03-1403-05	Screw
16	03-1417-03	Lockwasher

ITEM NUMBER	PART NUMBER	DESCRIPTION
17	11-0427-02	Bin Thermostat
18	03-1403-05	Screw
19	03-1417-03	Lockwasher
20	11-0435-01	Cube Size Control
21	03-1417-16	Lockwasher
22	12-0426-01	Switch
23	12-0426-01	Switch
24	12-1213-17	Snap Bushing
25	13-0557-00	Grommet
26	03-1423-01	Speed Nut
27	18-1903-44	Potential Relay
28	03-1403-02	Screw
29	03-1403-15	Screw
30	12-2048-01	Contactor
31	03-1103-00	Twin Speed Nut
32	18-2200-39	Start Capacitor Bracket
33	03-1403-15	Screw
34	18-1901-42	Start Capacitor

CM550 WIRING DIAGRAMS

A34383-001

USE COPPER CONDUCTORS ONLY

Caution: More than one disconnect means may be required to disconnect all power to this unit.

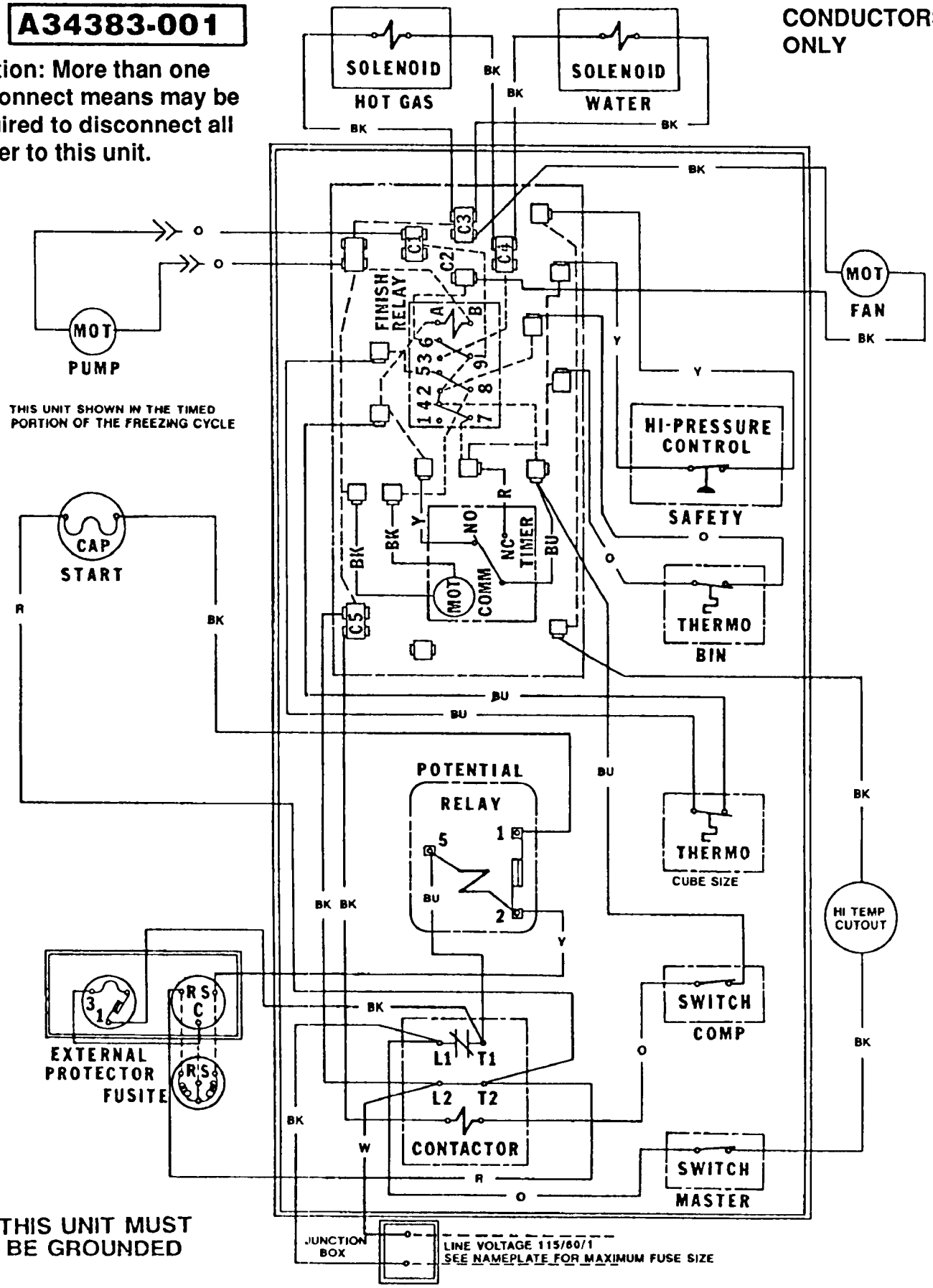

Component Layout Diagram for CM550AE-1A (115/60/1)

CM550 WIRING DIAGRAMS

Schematic Diagram for CM550AE-1A (115/60/1)

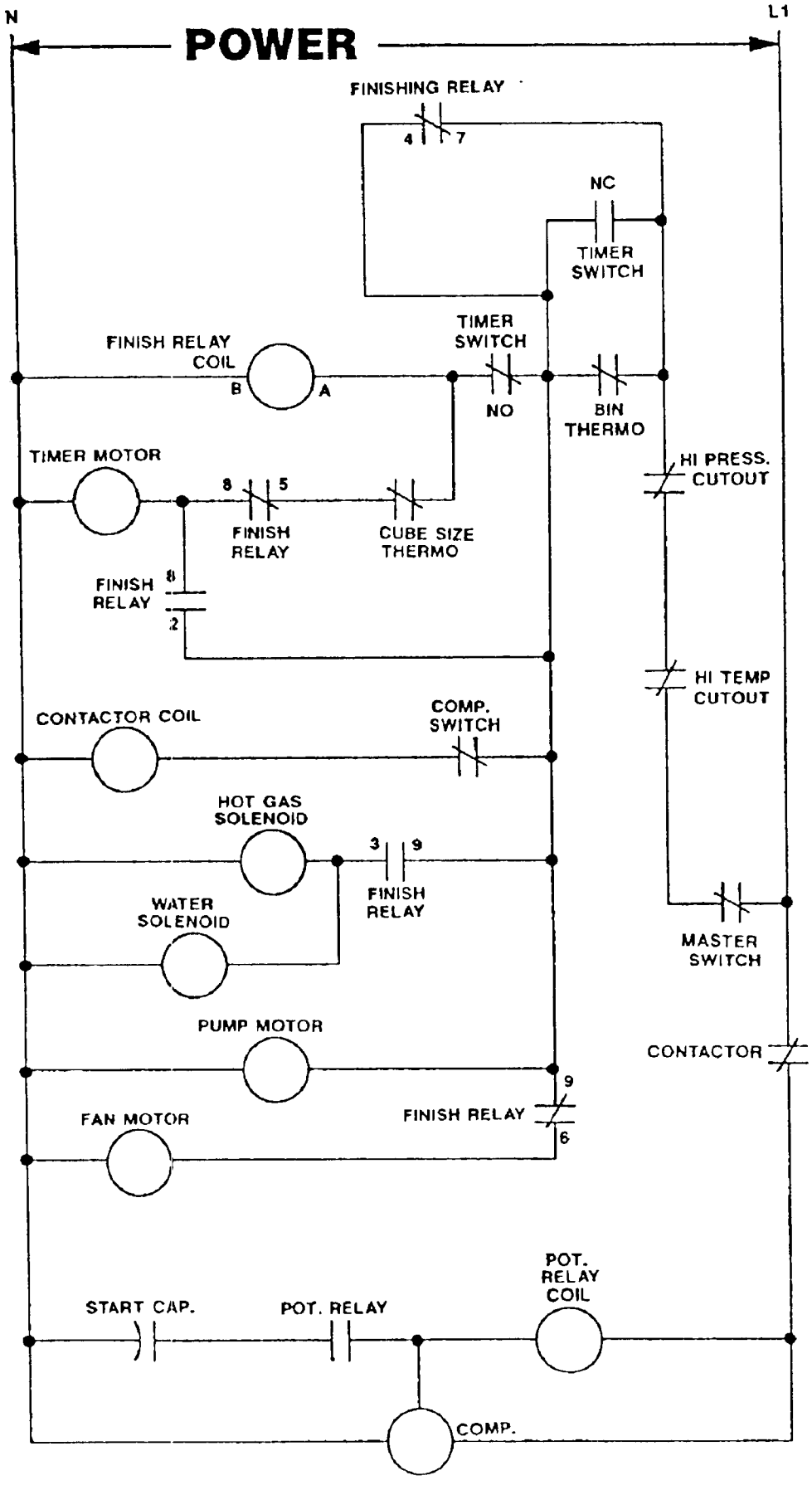

CM650D

TABLE OF CONTENTS

GENERAL INFORMATION & INSTALLATION
- For the Installer 2
- For the Electrician 6
- For the Plumber 7
- Final Checklist 8

OPERATION
- Start-Up 9
- Operation 12
- Operation - Electrical Sequence 14

MAINTENANCE & CLEANING INSTRUCTIONS
- Icemaker 17
- Ice Storage Bin 17
- Cleaning - Icemaker 17

COMPONENT DESCRIPTION 20

SERVICE DIAGNOSIS 24

ADJUSTMENT PROCEDURES
- Bin Thermostat Control 26
- Water Regulator Assembly (Water-Cooled) 26
- Cube Size Control 27
- Timer & Switch Assembly 27

REMOVAL AND REPLACEMENT PROCEDURES
- Drier 28
- Evaporator Plate Assembly 28
- Compressor Assembly 29
- Condenser (Air-Cooled) 30
- Condenser (Water-Cooled) 30
- Fan Motor (Air-Cooled) 30
- Cube Size Control 31
- Water Distributor Tubes and Manifold Tubes 31
- Bin Thermostat Control 31
- Inlet Water Solenoid Valve Assembly 31
- Water Pump Assembly 32

LIST OF ILLUSTRATIONS

- Specifications 3
- Component Location 4
- Stacking Instructions 5
- Electrical Connections 6
- Water & Drain Connections 7
- Final Checklist 8
- Timer Cam Positions 9
- Ice Cube Size and Shape 10
- Cube Size Adjustment 11
- Freezing Cycle 12
- Harvest Cycle 13
- Maintenance & Cleaning 18
- Component Description 19
- Adjustment Procedures 26
- Removal and Replacement 29

PARTS LIST AND WIRING DIAGRAMS 1
(Printed in Yellow)

PARTS LIST:
- Component Location 3
- Cabinet Assembly (Part I) 4
- Cabinet Assembly (Part II) 5
- Air-Cooled Refrigeration System 6
- Water-Cooled Refrigeration System 7
- Water System 8
- Control Box 9

WIRING DIAGRAMS:
- CM650AE-32C (208-230/60/1) Air-Cooled 10
- CM650WE-32C (208-230/60/1) Water-Cooled . 11
- CM650AE-3C (208-220/60/3) Air-Cooled 12
- CM650WE-3C (208-220/60/3) Water-Cooled .. 13
- CM650AE-32D (208-230/60/1) Air-Cooled 14
- CM650WE-32D (208-230/60/1) Water-Cooled . 15
- CM650AE-3D (208-220/60/3) Air-Cooled 16
- CM650WE-3D (208-220/60/3) Water-Cooled .. 17

THIS PAGE
INTENTIONALLY
LEFT BLANK

CM650D FOR THE INSTALLER

INTRODUCTION

These instructions provide the specifications and the step-by-step procedures for the installation, start up and operation for the Scotsman Model CM650D Modular Cuber.

The Model CM650D Modular Cubers are quality designed, engineered and constructed, and are thoroughly tested icemaking systems, providing the utmost in flexibility to fit the needs of a particular user.

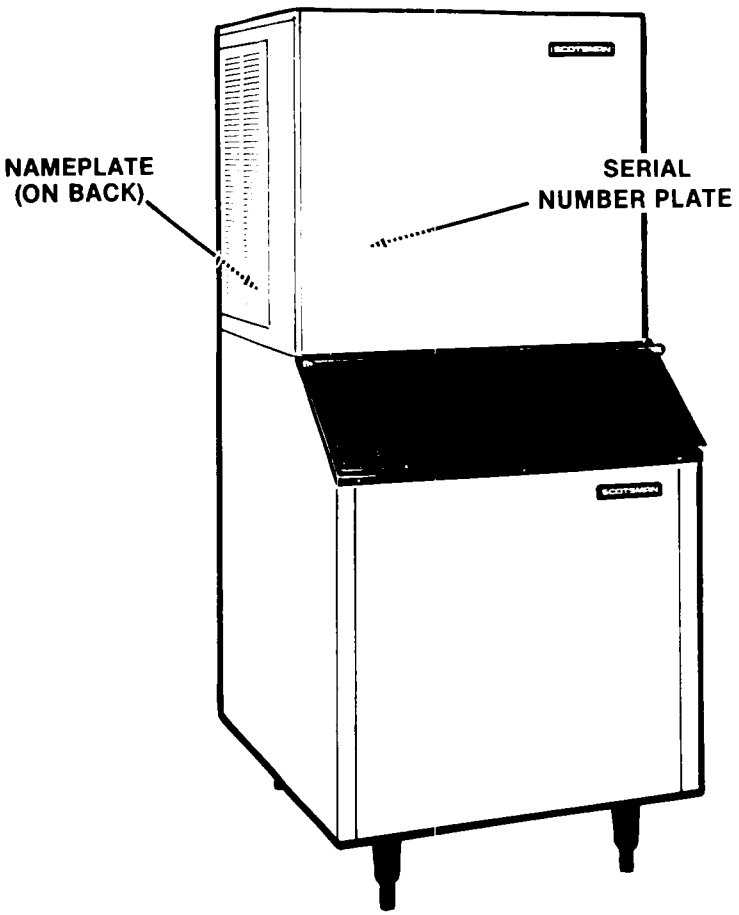

NAME PLATE

MODEL NUMBER
SERIAL NUMBER
A.C. SUPPLY VOLTAGE
MINIMUM CIRCUIT AMPACITY WIRES
MAXIMUM FUSE SIZE * HERTZ
HEATER WATTS PHASE
REFRIGERANT CHARGE OZ

MOTORS	VOLTS	R.L.A./F.L.A.	W/HP.	L.R.A.
COMPRESSOR				
FAN				
DRIVE				
OTHER				

DESIGN PRESSURE LOW HIGH
* OR HACR TYPE CIRCUIT BREAKER

SCOTSMAN A HOUSEHOLD INTERNATIONAL COMPANY
ALBERT LEA, MINNESOTA U.S.A.

SERIAL NUMBER PLATE

MODEL NUMBER
SERIAL NUMBER
VOLTS/HERTZ/PHASE
MAXIMUM FUSE SIZE
REFRIGERANT CHARGE OZ

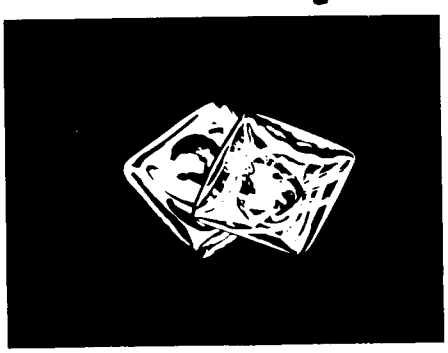

SCOTSMAN CONTOUR CUBE

This product qualifies for the following listings:

This icemaker has been engineered to our own rigid safety and performance standards. The National Sanitation Foundation (NSF) seal, signifies that it is listed with NSF and that it complies with the materials and construction standards of NSF. In addition, the Underwriters Laboratories, Inc., (UL) Listing Mark and the Canadian Standards Association (CSA) Monogram, both signify that its construction and design have been inspected and tested by them. NSF, UL and CSA inspectors also periodically examine production icemakers at the factory, to assure continued compliance.

To retain the safety and performance built into this icemaker, it is important that installation and maintenance be conducted in the manner outlined in this manual.

CM650D FOR THE INSTALLER

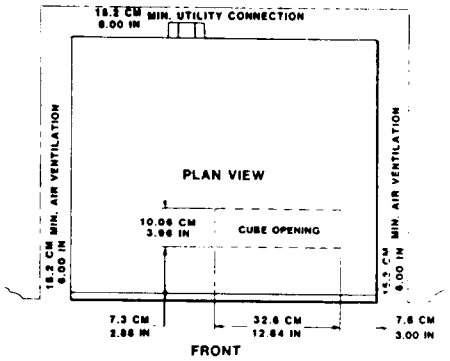

BH500 MODULAR STORAGE BIN
OR
HTB ICE STORAGE BIN

INSTALLATION NOTE: Allow 6" minimum space at sides and back for ventilation and utility connections.

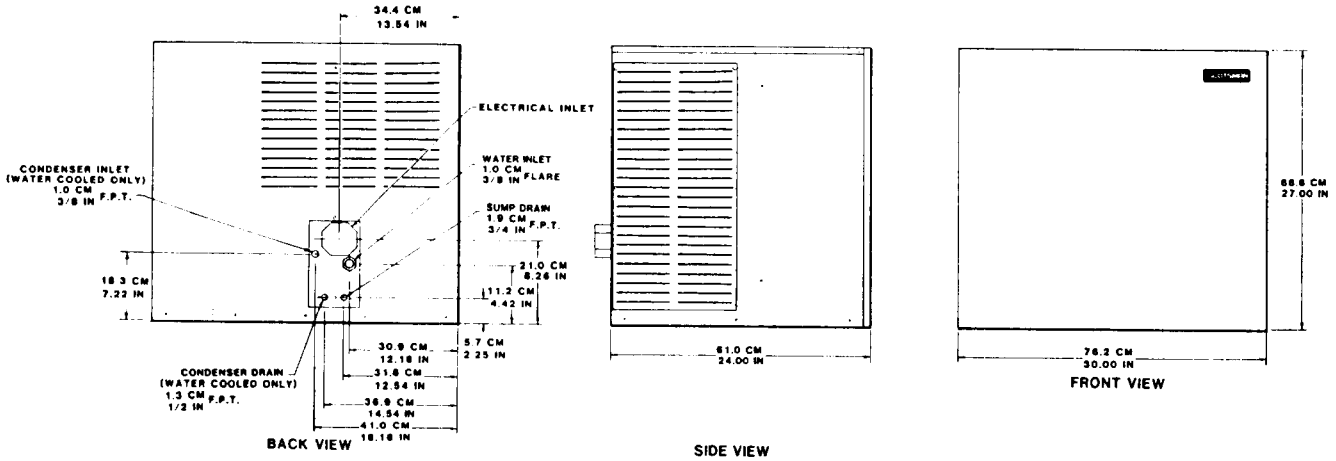

We reserve the right to make product improvements at any time. Specifications and design are subject to change without notice.

SPECIFICATIONS

Model Number	Dimensions (Height - w/o Legs) H" x W" x D"	Cube Size	Cond. Unit	Finish **	Basic Electrical	Comp. H.P.	No. of Wires	Min. Circuit Ampacity †	* Max. Fuse Size	Ship. Wt. lbs./kg.
CM650AE-32D	27 x 30 x 24	Contour	Air	ES	208-230/60/1	1.0	2	19.8	30	220/100
CM650WE-32D	27 x 30 x 24	Contour	Water	ES	208-230/60/1	1.0	2	18.6	30	220/100

Ice production capacity at 90°A/70°W Air-cooled: 502 lbs.

** (ES) Sandalwood, Leathergrain embossed steel with high gloss baked enamel finish.
Use this value to determine minimum wire size as per National Electric Code Standards.

★ Or HACR type circuit breakers.

IMPORTANT OPERATING REQUIREMENTS

	MINIMUM	MAXIMUM
Air Temperatures	50°F (10.0°C)	100°F (38°C)
Water Temperatures	40°F (4.4°C)	100°F (38°C)
Water Pressures	20 lbs. gauge	120 lbs. gauge
Electrical Voltage Variations Voltage rating specified on nameplate	−5%	+10%

Extended periods of operation exceeding these limitations constitutes misuse under the terms of Scotsman Manufacturer's Limited Warranty, resulting in a loss of warranty coverage.

NOTE: CM650's were manufactured in "A", "C" and "D" series. As in CM650AE-1C vs. CM650AE-1D. This manual is primarily for the "D" series, but applies as well to the prior model.

STORAGE BIN

The CM650D stacks onto Scotsman Bin Model's BH500, HTB500, HTB350 or BH1000 with Bin top.

Refrigerant.....R502
Charge per nameplate rating.

STANDARD LEGS: Furnished with storage bin. Four metal legs screw into mounting plates on cabinet base. Provide 6" minimum height including adjustable leveling foot. Black enamel finish.

OPTIONAL LEG KIT, KLP2S:
Nickel plated, brushed metal finish with stainless steel foot. Recommended for stainless steel cabinets.

SPKCMD-1:
Optional stainless steel panel kit for CM650D model.

CM650D FOR THE INSTALLER

AIR-COOLED ASSEMBLY

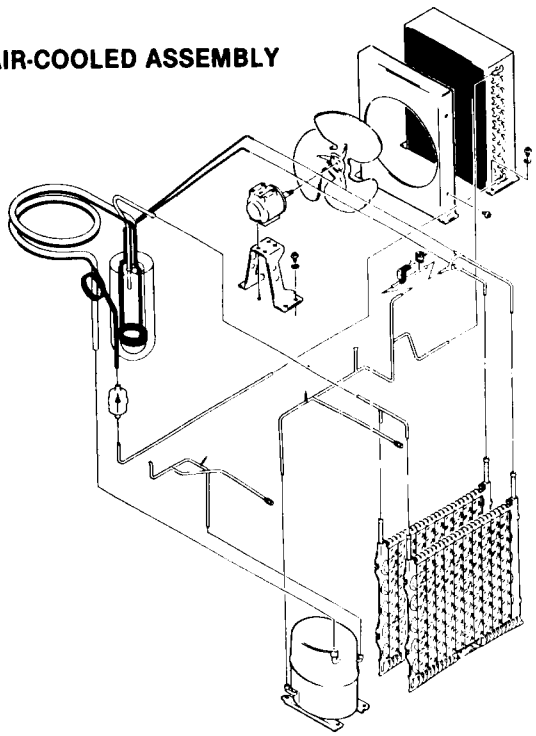

WATER SYSTEM

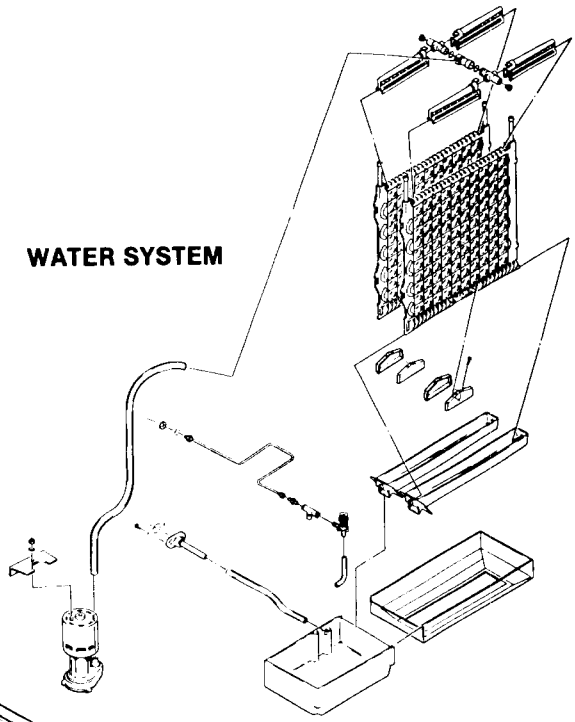

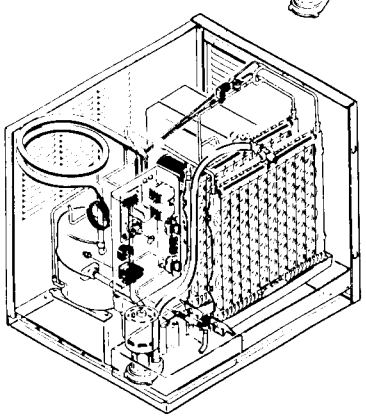

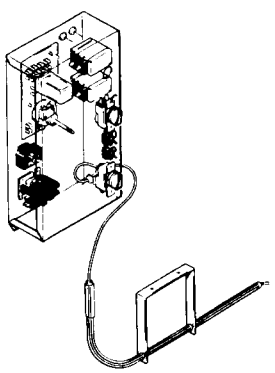

BIN THERMOSTAT BRACKET

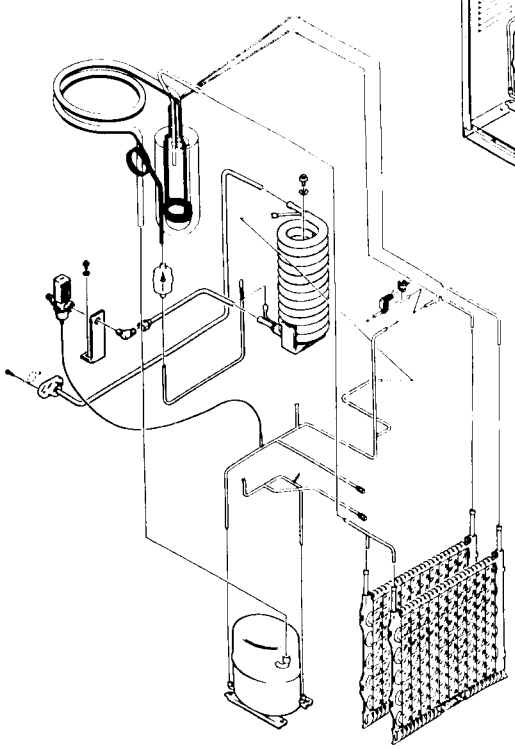

WATER-COOLED ASSEMBLY

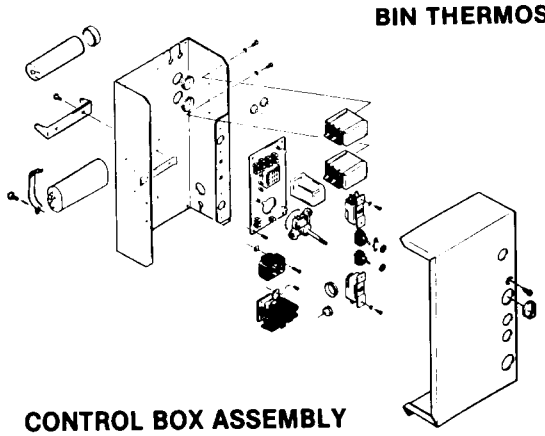

CONTROL BOX ASSEMBLY

CM650D FOR THE INSTALLER

LOCATION & LEVELING

1. Arrange for proper electric, water and drain. See instructions for the plumber and for the electrician.
2. After mounting the legs, position the ice storage bin in the selected location which should have a minimum room temperature of 50-degrees F. and maximum room temperature of 100-degrees F. Level the bin, adjusting the leg levelers in both the front to rear and side to side directions. Select a well-ventilated location for the air-cooled condenser.
3. Inspect the bin top mounting gasket which should be flat, with no wrinkles, to provide a good water seal when the Cuber is installed on top of the bin. Remove baffle from bin to gain access.
4. Install the modular cuber on top of the bin using care to be sure a good seal is made between the two cabinets. Align the holes in the bottom rear of the cabinet to mate with the two mounting straps on the top rear of the bin.
5. Use bolts and straps found in hardware package to secure the ice machine. When alignment and leveling are completed, tighten the bolts to secure the mounting straps.

STACKING INSTRUCTIONS

NOTE: Only stack "D" models onto "D" models.

DO NOT stack "D" models onto "C" or "A" models.

When stacking two units, remove the top panel from the lower icemaker. (The top removed from the lower icemaker will no longer have any function.)

Carefully lift the uncrated top unit onto the bottom one and align the two cabinets. Use of a mechanical lift is recommended for this step.

At the back of the two icemakers, bolt the upper icemaker cabinet to the lower icemaker cabinet using the mounting straps and bolts from the hardware package.

BIN THERMOSTAT INSTALLATION

1. Remove cap from bin thermostat bracket. Insert bin thermostat bracket up through routing hole in sump.
2. Attach the bin thermostat bracket to the bottom of the cuber base using the thumb screws and threaded holes provided.
3. Carefully uncoil the capillary tube to the icemaker and route the capillary tube through the routing hole provided in the sump and through the full length of the bin thermostat bracket.

NOTE: When stacking, route the bin thermostat control from the upper ice machine through the routing hole provided in the sump of the lower icemaker and through the bin thermostat control bracket.

NOTE: Extend bin thermostat capillary tube through entire length of the tubular section of the bin thermostat bracket. When properly installed, the tip of the capillary tube should be flush with the tip of the bin thermostat bracket.

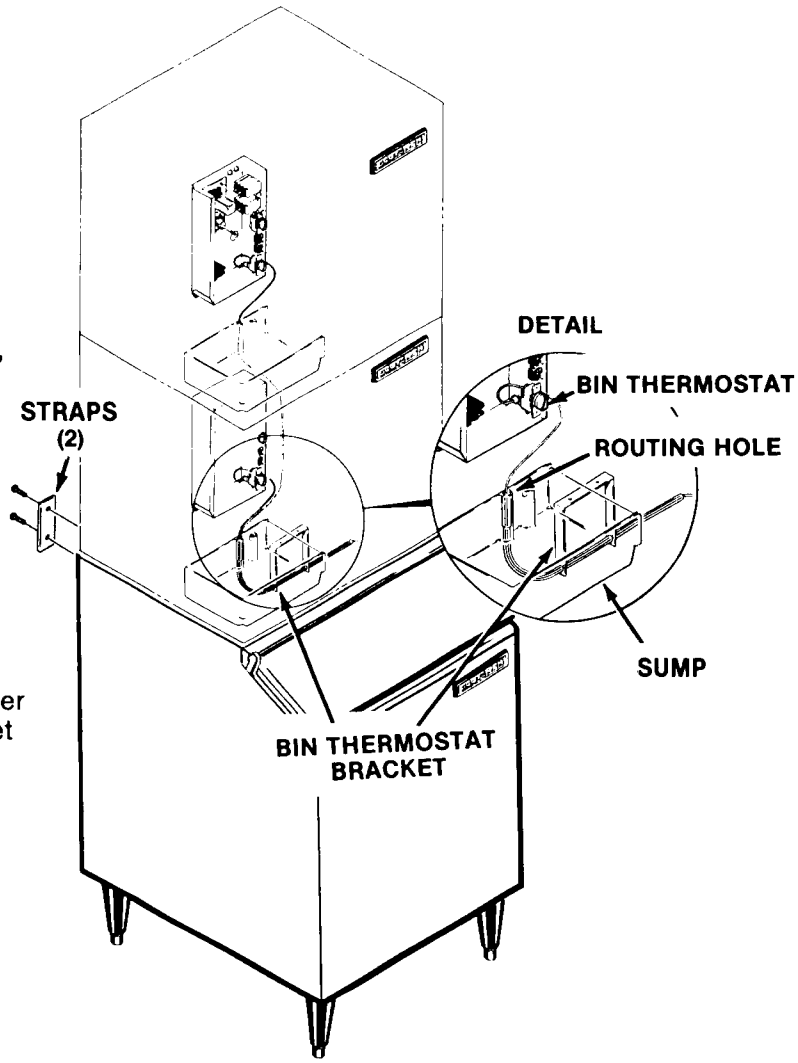

CM650D FOR THE ELECTRICIAN

CONFORM TO ALL APPLICABLE CODES

ELECTRICAL CONNECTIONS

SEE NAMEPLATE for current requirements to determine wire size to be used for electrical hookup. The cuber requires a solid chassis-to-chassis earth ground wire. See Wiring Diagram.

Be certain the cuber is connected to its own electrical circuit and individually fused. Voltage variation should not exceed ten percent of the nameplate rating, even under starting conditions. Low voltages can cause erratic operation and may be responsible for serious damage to the icemaker.

Electrical connections are made at the rear of the icemaker, inside the junction box.

All external wiring should conform to the national, state and local electrical code requirements. Usually an electrical permit and services of a licensed electrician will be required.

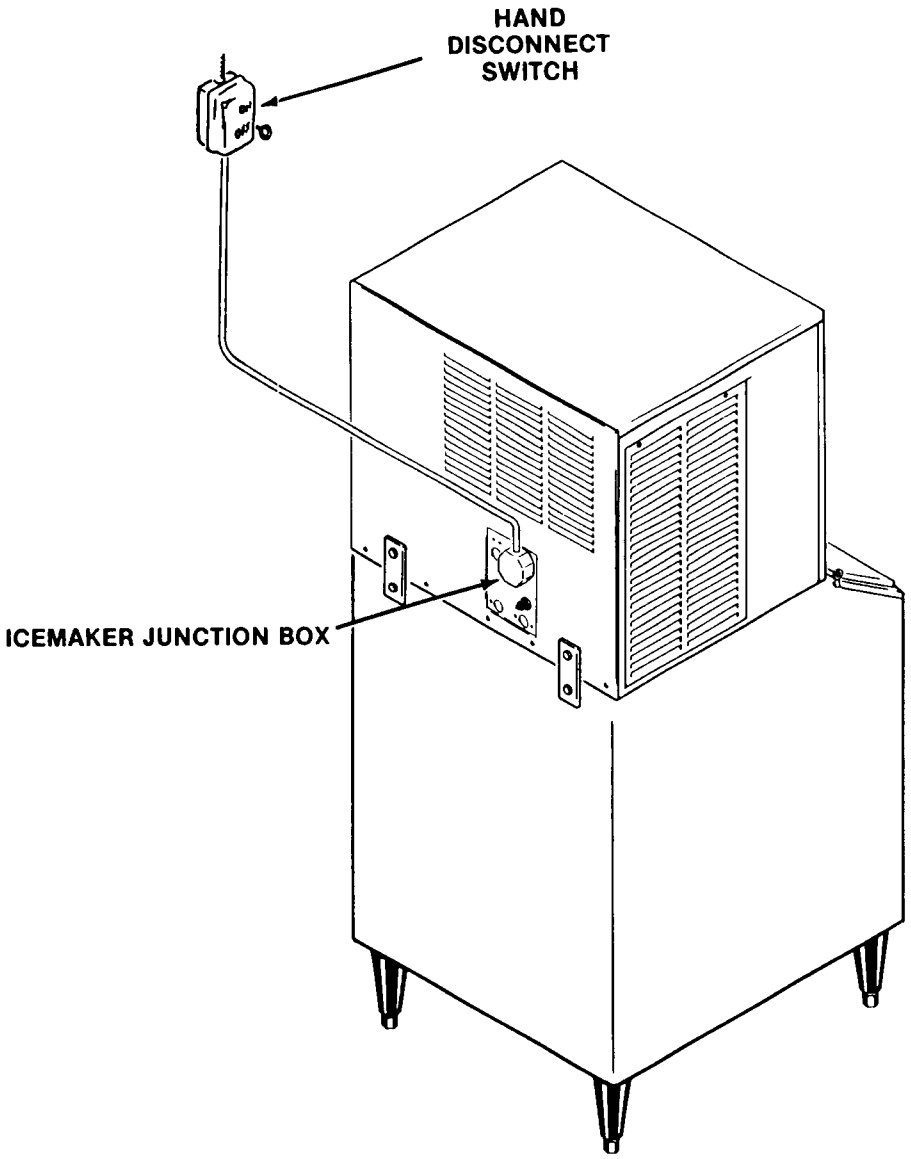

CM650D FOR THE PLUMBER

CONFORM TO ALL APPLICABLE CODES

WATER SUPPLY AND DRAIN CONNECTIONS

The recommended water supply line is a 3/8-inch O.D. copper tubing with a minimum operating pressure of 20 PSIG and a maximum of 120 PSIG. Connect to cold water supply line with standard plumbing fittings, with shutoff valve installed in an accessible place between the water supply and the cuber. In some cases a plumber will be required.

DRAIN CONNECTIONS: All drains are gravity type and must have a minimum of 1/4-inch fall per foot on horizontal runs. The drains to be installed to conform with the local plumbing code. Install a vertical open vent on drain line high point to ensure good draining. The ideal drain receptacle is a trapped and vented floor drain.

Recommended bin drain is 5/8-inch O.D. copper tubing and should be vented and run separately. Insulation for high humidity areas is recommended.

The ice machine sump drain is 3/4" FPT. There must be a vent at this connection for proper sump drainage.

WATER-COOLED MODELS: On water-cooled models, a separate cold water supply inlet is required, to be connected to a second 3/8-inch female pipe thread (FPT) fitting at the rear of the cabinet. Additional drain lines are required to drain the water-cooled condenser, and they must not interconnect to any other of the units drains.

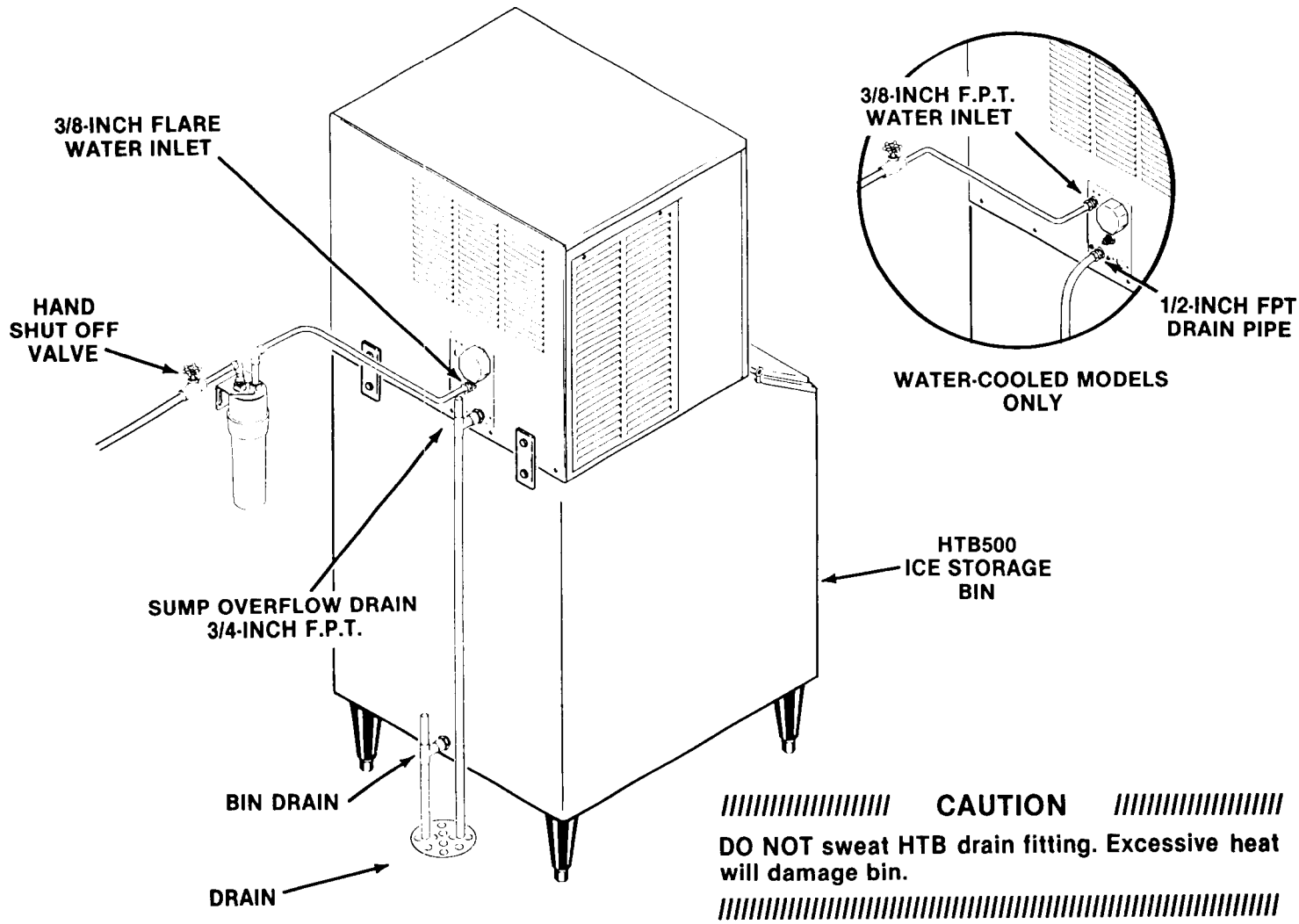

CAUTION

DO NOT sweat HTB drain fitting. Excessive heat will damage bin.

Water Supply and Drain Connection

CM650D FOR THE INSTALLER

FINAL CHECK LIST

1. Is the cabinet in a room where ambient temperatures are within the minimum and maximum temperatures specified?
2. Is there at least six inches clearance at both sides of the cabinet for proper air circulation? (Air-Cooled models)
3. Has water supply pressure been checked to insure a minimum of 20 PSIG and a maximum of 120 PSIG operating pressure?
4. Is the cabinet level?
5. Check that any shipping material has been removed from inside the cabinet.
6. Has the bin thermostat and bracket been properly installed?
7. Check that the drain troughs are properly secured to the bottom of the evaporator plates.
8. Have all electrical and piping connections been made?
9. Is the water supply line shut-off valve installed and electrical wiring properly connected?
10. Check all refrigerant lines and conduit lines, to guard against vibration or rubbing and possible failure.
11. Have the bin and cabinet been wiped clean?
12. Has the Manufacturer's Registration Card been properly filled out? Check for correct model and serial numbers from Serial nameplate, then mail the completed card to the SCOTSMAN factory.
13. Has the owner/user been given the Service Manual and instructed how to operate and maintain the icemaker?
14. Has the owner been given the name and telephone number of the authorized SCOTSMAN Service Agency serving him?

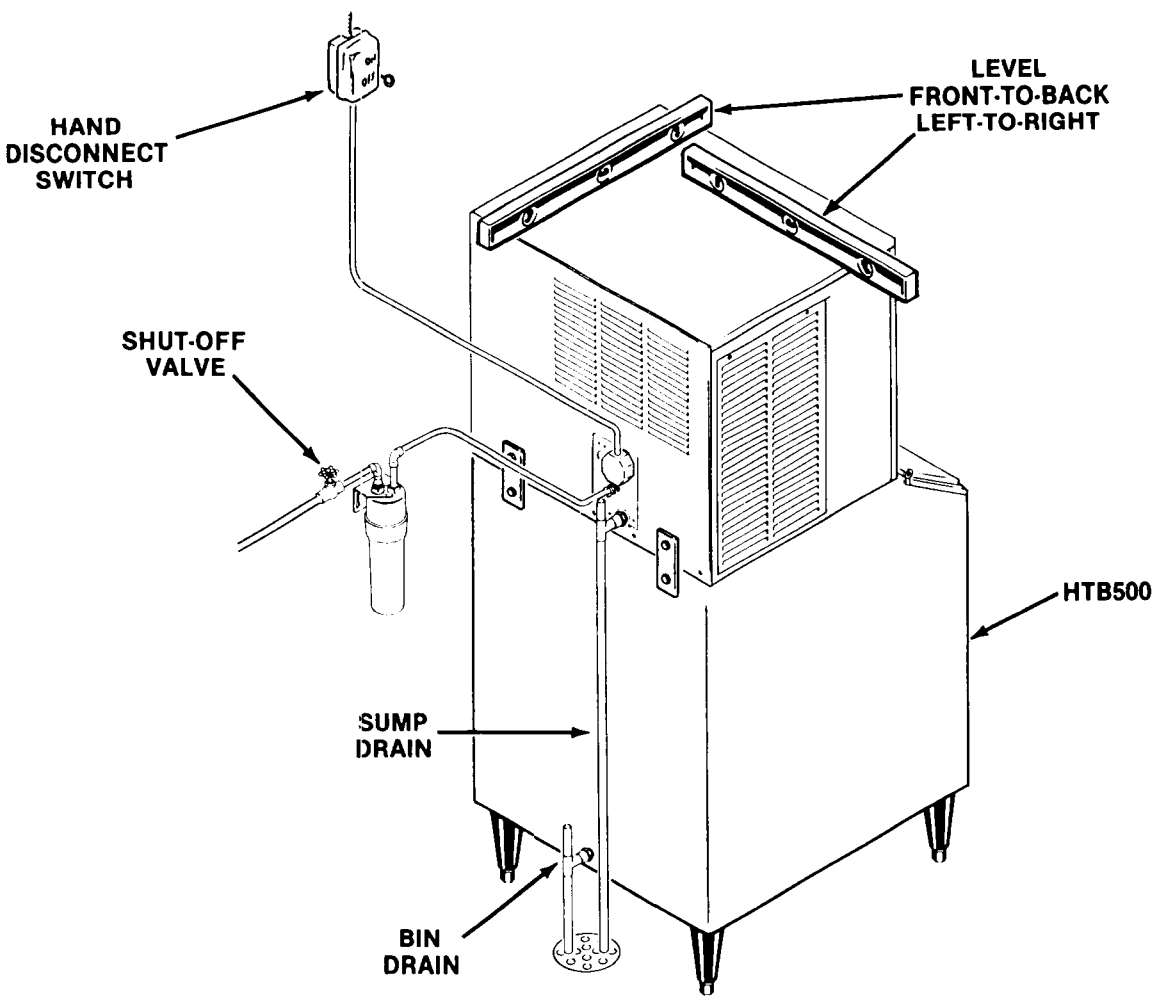

CM650D START-UP

START-UP

1. Remove front panel by pulling out to unsnap.
2. Remove two screws and the control box cover.
3. Remove four thumb screws and the evaporator cover.
4. Check that the two toggle switches, the MASTER ON-OFF toggle switch and the COMPRESSOR ON-OFF toggle switch are in the OFF position, on the control box.
5. OPEN the water supply line shutoff valve.
6. Inside the control box is the shaft of the timer and the switch assembly. Rotate the shaft of the timer and switch assembly clockwise to start the timer. The timer starts when the actuator arm on the microswitch drops off outer cam into cam slot. See Timer Cam Positions. An audible click can be heard, but in a noisy area, look at the cam and switch to observe the event.

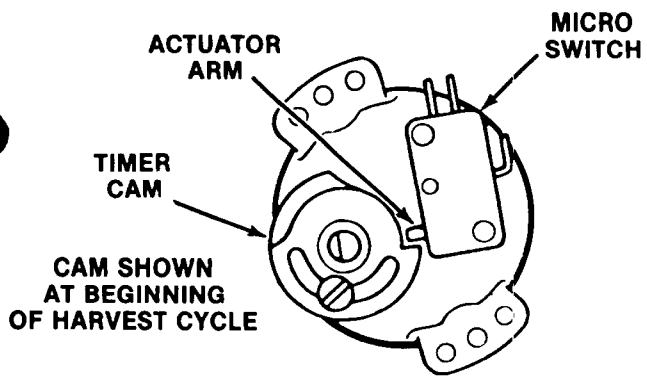

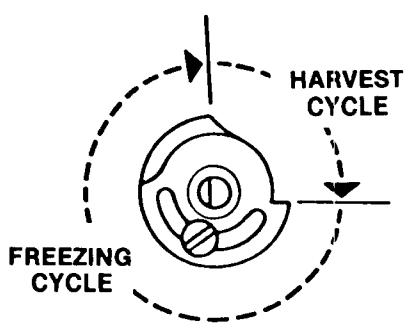

CAM SHOWN DIVIDED INTO TYPICAL FREEZING & HARVEST CYCLES

Timer Cam Positions

7. Move the master ON-OFF toggle switch, the top toggle switch, to the ON position.
8. Observe water fill cycle:

   Water pump operates and water inlet solenoid valve OPENS, incoming water flows from the valve through the tubing, the reservoir fills and excess water is overflowed through the stand pipe. This cycle will take about three minutes. Timer will close the water inlet solenoid valve and the water fill cycle is complete.

   Advancing the shaft of the timer and switch assembly into a new harvest cycle, restarts the timer and allows a check that: Water inlet solenoid valve OPENS and the reservoir overflows through the stand pipe. Water inlet valve CLOSES, stopping water overflow.

   The water pump is operating, as seen by water moving through the tygon tube, up to the water distributor at the top of each evaporator plate, where water is uniformly dispensed and cascades down both sides of the evaporator plate and drains back into the sump assembly for recirculation.
9. Check that the water cascades down over each cube mold and into the sump.
10. When the second cycle is completed, move the compressor ON-OFF toggle switch, to the ON position.
11. Check operation of the freezing cycle:

    The compressor is operating.

    The icemaking process begins; feeling the metal parts of the evaporator plate reveals cold temperature, very shortly ice begins to form. Tubing will become frosted at the top of the evaporator plate.

    Freezing time will range between 12 and 22 minutes. Longer time for temperatures above 70-degrees F. and shorter time required when temperatures are below 70-degrees F. Average complete cycle time is about 15 minutes.

CM650D START-UP

12. Observe second and third cube harvest.

    Check size of SCOTSMAN CONTOUR CUBE

    Unlike other SCOTSMAN cubes which are made in a definite molded shape, contour cubes are produced in indentations and many shapes and sizes of contour cubes may be produced — only ONE size and shape combination is correct.

An under-charged refrigeration system produces smaller cubes at the top of the evaporator plate and large cubes at the bottom. Charge system per NAMEPLATE specifications.

Charge Refrigeration System with **REFRIGERANT 502 ONLY.**

In areas where extreme problem water condition exists, filtering or purifying equipment is recommended. Contact SCOTSMAN ICE SYSTEMS, Service Department, Albert Lea, Minnesota 56007 for further details.

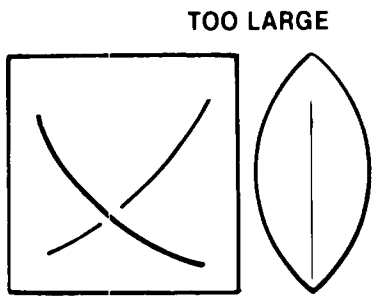

Too LARGE — may cause evaporator freeze ups. Adjust cube size control counter-clockwise to obtain smaller cubes

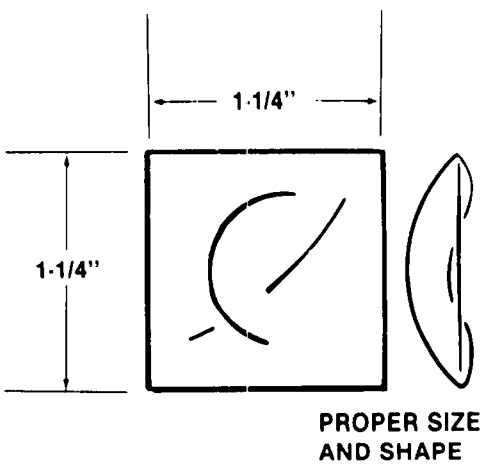

PROPER SIZE AND SHAPE of the contour cube. Icemaker operates at peak efficiency when a cube this size and shape is produced. A finely tuned system produces vertical strips of ice which easily break when they fall.

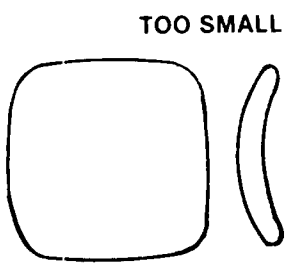

TOO SMALL. To obtain proper size cubes, adjust cube size control clockwise. May cause freeze up problems due to poor harvest.

Ice Cube Size & Shape

CM650D START-UP

ADJUSTMENT OF CUBE SIZE

To produce SMALLER sized ice cubes:

Locate cube size control knob, in the front of the control box.

Rotate the adjusting screw one-eighth of a turn COUNTERCLOCKWISE to WARMER.

Observe size of the ice cubes in the next two ice cube harvests and adjust in one-eighth turn or less increments, until correct ice cube is achieved.

To produce LARGER ice cubes:

Locate cube size control on the front of the control box

Rotate the adjusting screw one-eighth of a turn CLOCKWISE to COLDER.

Observe size of ice cubes in the next two cube harvests and adjust in one-eighth turn or less increments, until correct ice cube size is achieved.

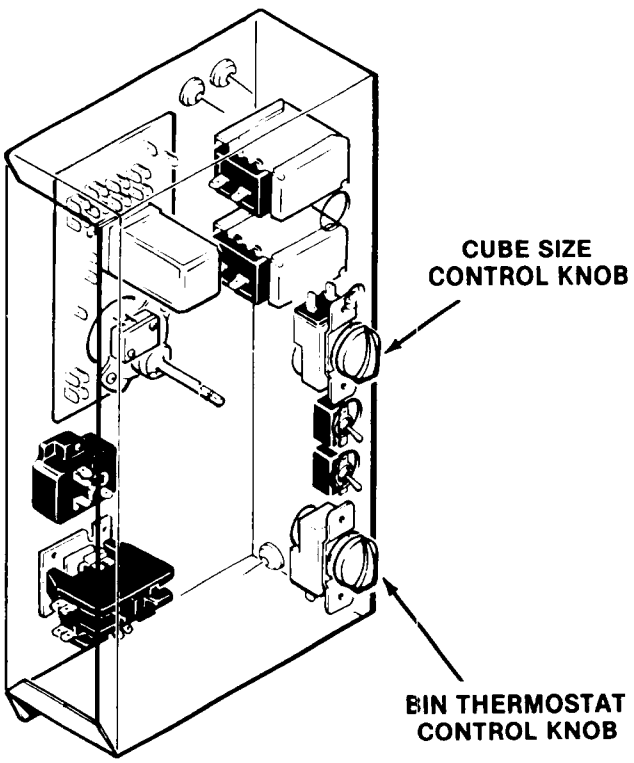

ROTATE ADJUSTMENT KNOB COUNTER-CLOCKWISE TO PRODUCE SMALLER CUBES.

ROTATE ADJUSTMENT KNOB CLOCKWISE TO PRODUCE LARGER CUBES.

BIN THERMOSTAT OPERATION

Check texture of ice cubes; when partially cloudy throughout, suggests icemaker is operating short of water; or, possibly an extreme problem water condition exists, where filtering or purifying equipment is recommended. Contact SCOTSMAN ICE SYSTEMS, Service Department, Albert Lea, Minnesota 56007 for further details. See SERVICE DIGNOSIS chart, for shortage of water symptoms and corrections.

13. With the icemaker in the harvest cycle, hold ice against the bin thermostat control bulb to test shutoff, which should cause the icemaker to shut OFF at the END OF THE HARVEST CYCLE.

    Within minutes after the ice is removed from the sensing bulb, the bulb will warm up and cause the icemaker to restart. This control is factory set and should not be reset until testing is performed.

14. Replace control box cover and all cabinet panels and screws.

15. Thoroughly explain to the owner/user the significant specifications of the icemaker, the start up and operation, going through the procedures in the operating instructions. Answer all questions about the icemaker by the owner; and inform the owner of the name and telephone number of the authorized SCOTSMAN Distributor, or service agency serving him.

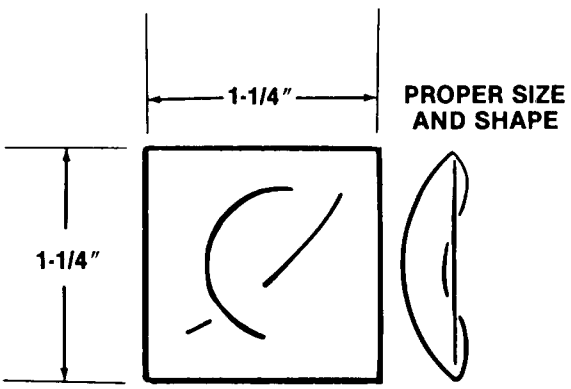

CM650D OPERATION

OPERATION

FREEZING CYCLE

Water from the sump assembly is pumped to the water distributor system, at the top of each evaporator plate. From the water distributor the water cascades by gravity over all cells of the plate and to the sump assembly below, for recirculation. At the beginning of the freezing cycle, the electrical circuit is completed to the compressor and the water pump. The water pump operates continuously, through both the freezing cycle and the harvest cycle.

In water-cooled models, water also flows through the condenser and out the drain. While in the condenser, water removes heat from the refrigerant and allows the refrigerant to condense from a gas to a liquid.

In the compressor, gaseous refrigerant is compressed and discharged into the condenser, as a high pressure, high temperature gas. The refrigerant is cooled by either air or water, and condenses into a high pressure, medium temperature liquid. This liquid refrigerant then passes through a small capillary tube, where the temperature and pressure of the liquid refrigerant are lowered and it next enters the evaporator plates. The refrigerant is warmed by the water cascading over the Evaporator plate and begins to boil off and become a gas. The refrigerant next travels through the accumulator and the heat exchange area of the suction line where any remaining liquid refrigerant boils off and returns to the compressor as a low pressure, low temperature gas, and the cycle starts again.

During the freezing cycle, the hot gas solenoid valve is CLOSED and the water inlet solenoid valve is CLOSED.

When the ice cubes are partially formed, the cube size control will sense the temperature at which it is preset to CLOSE. This will complete the electrical circuit to the timer. The timer then controls the remainder of the freezing cycle.

The timer will keep the icemaker operating in the freezing cycle for a selected length of time. This will give the ice cubes time to fully form. after that selected length of time, the timer will switch the icemaker into the harvest cycle, through the contacts of the timer assembly microswitch.

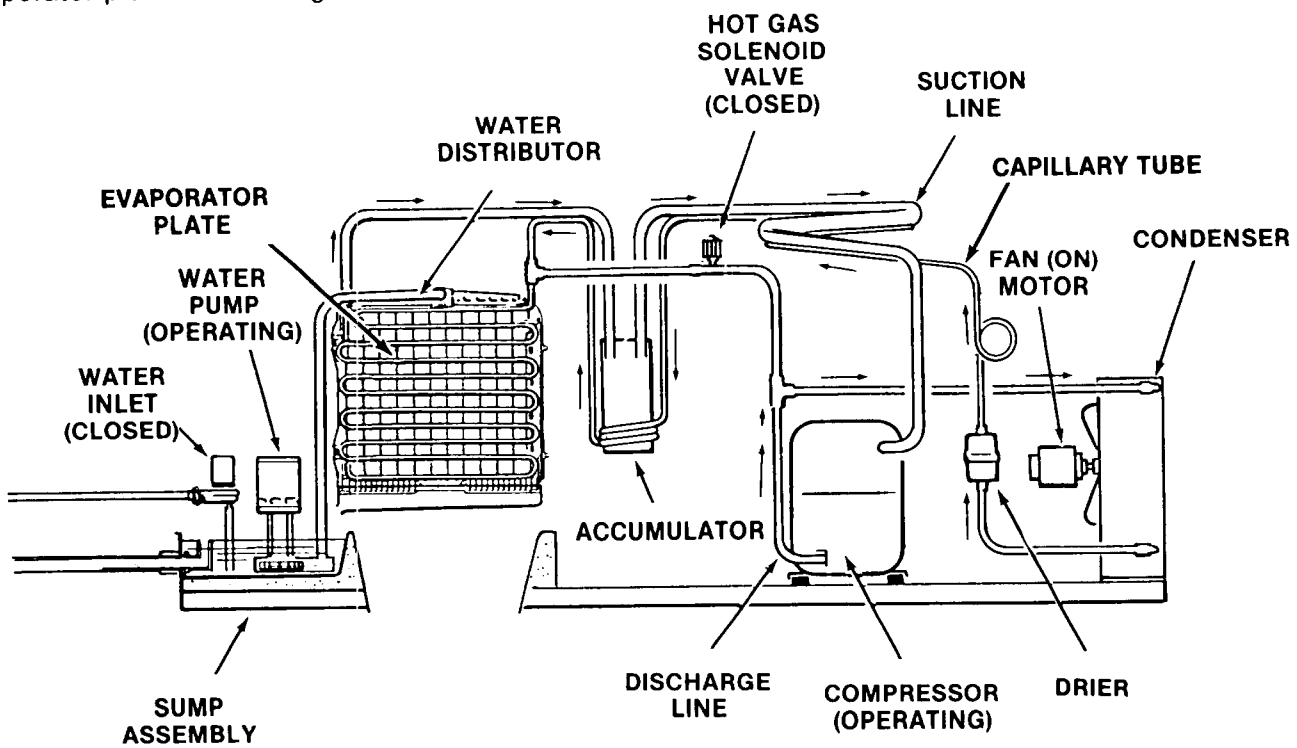

Freezing Cycle

CM650D OPERATION

HARVEST CYCLE - HOT GAS BYPASS

When the timer switches the icemaker into the harvest cycle, high pressure, high temperature gas refrigerant being discharged from the compressor is diverted from the condenser through the hot gas solenoid valve into each evaporator plate. During this cycle, the gaseous refrigerant bypasses the condenser and the capillary tube.

In the electrical circuit, both the compressor and the water pump are operating and the hot gas solenoid valve is energized and OPEN and the water inlet solenoid valve is OPEN.

The finished ice cubes are released from the sides of each evaporator plate, by the warming effect of the hot gas condensing in each evaporator plate and the water cascading over the ice cubes. The released ice cubes drop into the ice storage bin below.

At the end of the harvest cycle, the timer cam will push the actuator arm to the microswitch IN. If the bin thermostat is still CLOSED, a whole new cycle will begin. If the bin thermostat is OPEN, the icemaker will shut OFF, at this time.

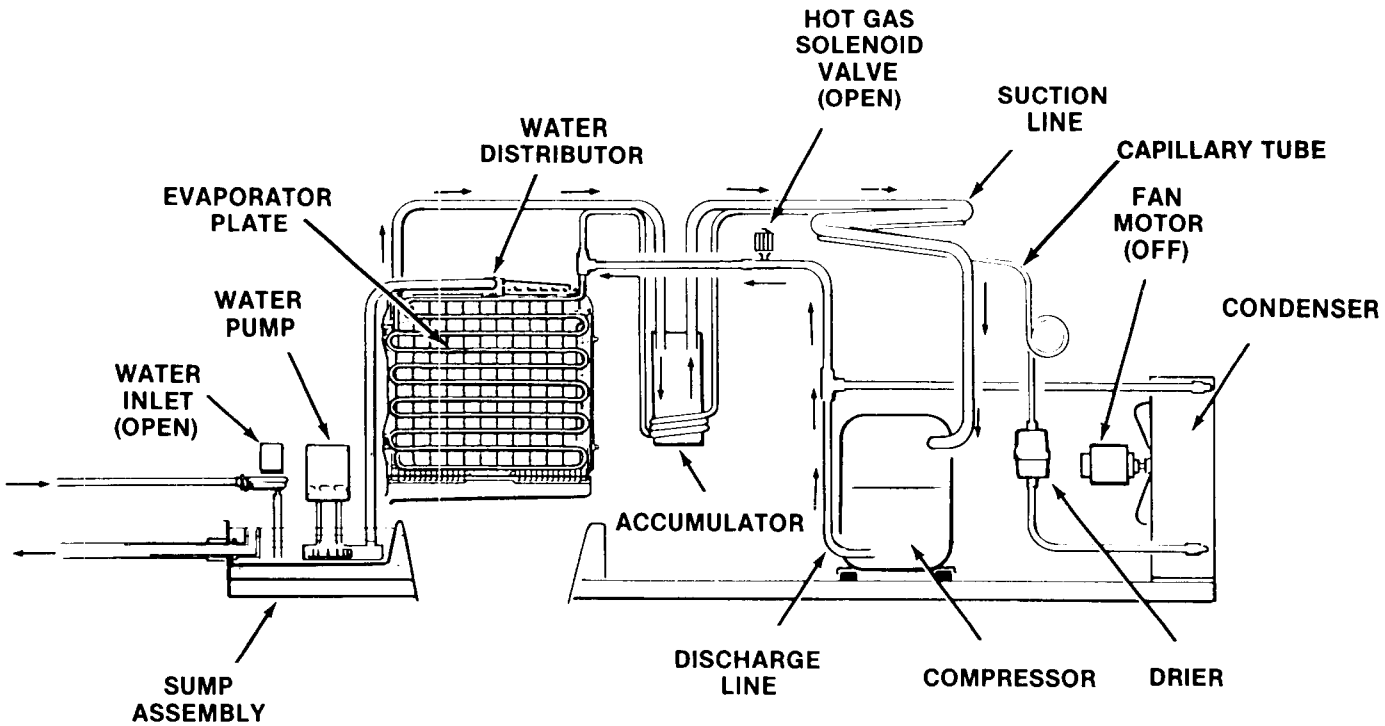

Harvest Cycle

CM650D OPERATION - ELECTRICAL SEQUENCE

The following charts illustrate which switches and which components are ON or OFF during a particular phase of the icemaking cycle.

Refer to the wiring diagram for a reference. Remember, the wiring diagram shows the unit as it is in the Timed Freeze Cycle.

BEGINNING FREEZE

ELECTRICAL COMPONENTS (LOADS)	ON	OFF
Compressor	X	
*Fan Motor (Air-cooled only)	X	
Hot Gas Valve		X
Inlet Water Valve		X
P.C. Board Relay Coil	X	
Timer		X
Water Pump	X	

SWITCHES	ON	OFF
Bin Thermostat	X	
Cube Size Thermostat		X
H.P. Fan Control	X	
Toggle - Master	X	
Toggle - Compressor	X	
H.P. Control	X	
Timer Micro Switch N.C.	X	
Timer Micro Switch N.O.	X	
Hi Temp Switch	X	

*The fan control will open and close with changes in discharge pressure, but will usually be closed during early freeze so the fan will usually be ON.

At the beginning of the freeze cycle the timer is not turning, but the icemaker is refrigerating the water starting to turn the water into ice.

CM650D OPERATION - ELECTRICAL SEQUENCE
TIMED FREEZE

ELECTRICAL COMPONENTS (LOADS)	ON	OFF
Compressor	X	
*Fan Motor (Air-cooled only)	X	X
Hot Gas Valve		X
Inlet Water Valve		X
P.C. Board Relay Coil	X	
Timer	X	
Water Pump	X	

SWITCHES	ON	OFF
Bin Thermostat	X	
Cube Size Thermostat	X	
H.P. Fan Control	X	X
Toggle Switch - Master	X	
Toggle Switch - Compressor	X	
H.P. Control	X	
Timer Micro Switch N.C.	X	
Timer Micro Switch N.O.	X	
Hi Temp Switch	X	

After the icemaker has cooled the water and formed some ice on the evaporator, the evaporator will have gotten cold enough to have the cube size control close. All this does is start and run the timer.

*The fan control will be opening and closing with the changes in discharge pressure, so the fan will be turning ON and OFF.

HARVEST

ELECTRICAL COMPONENTS (LOADS)	ON	OFF
Compressor	X	
*Fan Motor (Air-cooled only)		X
Hot Gas Valve	X	
Inlet Water Valve	X	
P.C. Board Relay Coil		X
Timer	X	
Water Pump	X	

SWITCHES	ON	OFF
Bin Thermostat	X	
Cube Size Thermostat		X
H.P. Fan Control		X
Toggle Switch - Master	X	
Toggle Switch - Compressor	X	
H.P. Control	X	
Timer Micro Switch N.C.	X	
Timer Micro Switch N.O.	X	
Hi Temp Switch	X	

The timer has now turned far enough so that the micro-switch plunger has dropped into the gap in the cam, this breaks the circuit to the relay in the P.C. Board - and that puts the machine into the Harvest cycle, where the hot gas valve and inlet water valve have opened to harvest the ice. When ice is on the bin control, it will open and at the end of the harvest cycle shut off the machine.

*The fan control will keep the fan OFF during the harvest cycle until the discharge pressure builds up to 190 PSIG, probably near the very end of the harvest cycle, then the fan will come ON.

CM650D SERVICE SPECIFICATIONS

In servicing a machine, it is often useful to compare that individual units operating characteristics to those of a normally operating machine. The data that follows gives those characteristics; however, be aware that these values are for NEW, CLEAN machines. USE THESE NUMBERS AS A GUIDELINE ONLY.

COMPONENT

Timer - 1 revolution of the cam, in minutes 8
Harvest Time, preset, in minutes 2-1/4
Inlet Water Valve, water flow in g.p.m. 3/4

	CI	CO
Cube Size Control, Reverse Acting, Temperature range	(+12°F. to −6°F.)	—
Bin Thermostat, Temperature Range	38.5°-43.5°	33.5°-38.5°
High Pressure Safety Switch, psig Air-cooled	Manual	450
High Pressure Safety Switch, psig Water-cooled	Manual	350
Fan Pressure Control, in psig	210	193

OPERATING CHARACTERISTICS

On air-cooled models during the freezing cycle, the discharge pressure will slowly decline as the unit freezes ice; and at the same time, the suction pressure will also decline, reaching it's lowest point just before freeze. Compressor amps experience a similar drop.

On water-cooled, the discharge pressure is constant, maintained during the freeze cycle by the water regulating valve at 220 PSIG. However, suction pressure and compressor amps will still decline as the machine freezes ice.

FREEZE CYCLE

Average Discharge Pressure A/C ... 350-200 PSIG
Average Discharge Pressure W/C ..... 220 PSIG
Suction Pressure at the end of the Freeze Cycle ..... 22-30 PSIG
Freeze Time ..... 12-22 Minutes
Ice Weight per cycle ..... 5-6 lbs.

HARVEST CYCLE

Average Discharge Pressure ..... 175-100 PSIG
Average Suction Pressure ..... 150-110 PSIG
Harvest Time, assumed to be 2-1/4 minutes. This can be adjusted to suit local conditions.

The values listed are representative of values seen at a wide range of air and water temperatures and are for a normal cube size.

When comparing these figures to field data, allow a variation from each end of the range given.

TO SERVICE REFRIGERATION SYSTEM:

TORQUE REFRIGERATION ACCESS VALVE CAPS TO 60-75 INCH POUNDS.

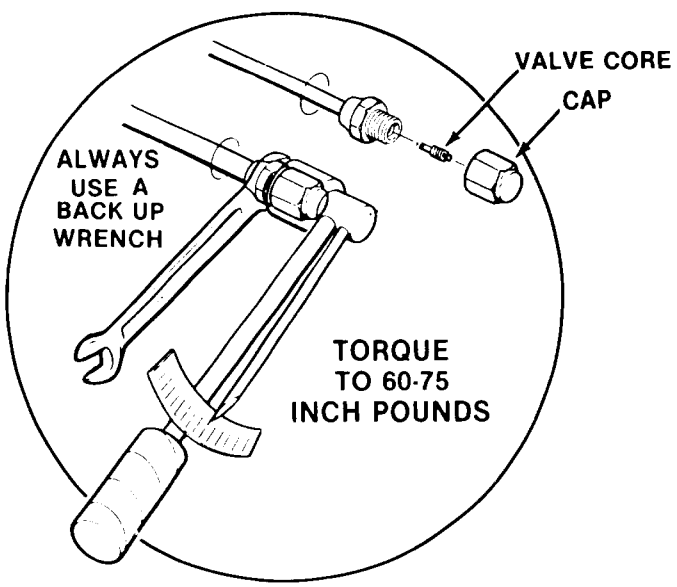

ALWAYS USE A BACK-UP WRENCH TO AVOID DAMAGE TO THE REFRIGERANT TUBING.

CM650D MAINTENANCE & CLEANING INSTRUCTIONS

A Scotsman Ice System represents a sizable investment of time and money in any company's business. In order to receive the best return for that investment, it MUST receive periodic maintenance.

It is the USER'S RESPONSIBILITY to see that the unit is properly maintained. It is always preferable; and less costly in the long run, to avoid possible down time by keeping it clean, adjusting it as needed and by replacing worn parts before they can cause failure. The following is a list of recommended maintenance that will help keep your machine running with a minimum of problems.

Maintenance and Cleaning should be scheduled at a MINIMUM of twice per year.

ICEMAKER

THE FOLLOWING MAINTENANCE SHOULD BE SCHEDULED AT LEAST TWO TIMES PER YEAR ON THIS ICEMAKER. CALL YOUR AUTHORIZED SCOTSMAN SERVICE AGENCY.

1. Check and clean or service any optional water treatment devices, if any installed.
2. Clean water strainer.
3. Check that the cabinet is level, in the side-to-side and front-to-back directions.
4. Clean the water system, evaporator plate and sump assembly, using a solution of SCOTSMAN Ice Machine Cleaner. Refer to CLEANING - Icemaker.

Cleaning requirements vary according to local water conditions and individual user operation. Continuous check of the clarity of ice cubes and visual inspection of the water system parts, evaporator plates and the sump assembly before and after cleaning will indicate frequency and procedure to be followed in local areas.

5. Check that the drain trough is snug on the evaporator plate.
6. Check and tighten all bolts and screws.
7. Check for water leaks and make corrections.
8. Check the bin thermostat control bulb to test shut off. Holding ice against bin thermostat control bulb should cause the icemaker to shut off at the end of the harvest cycle.

   Within minutes after ice is removed from the bin thermostat control bulb, the icemaker will restart.

ICE STORAGE BIN

Clean and sanitize bin interior once per week.

CLEANING - Icemaker

WARNING

SCOTSMAN Ice Machine Cleaner contains Phosphoric and Hydroxyacetic acids. These compounds are corrosive and may cause burns. If swallowed, DO NOT induce vomiting. Give large amounts of water or milk. Call physician immediately. In case of external contact, flush with water. KEEP OUT OF THE REACH OF CHILDREN.

1. Remove front panel.
2. Switch the compressor switch to OFF.

   Switch the master switch OFF.
3. Switch the master switch ON. Pour 8 ounces of Scotsman Ice Machine Cleaner into the sump filled with water.
4. Let the unit operate for 40 minutes with the compressor off, then switch the unit off.
5. Remove the front liner by removing 4 thumb screws. Remove the drain trough from one evaporator plate.
6. Switch on the master switch to pump water from the sump into the bin. Continue to add fresh water to flush residual cleaner from the system. Switch unit to OFF and wipe the sump clean.
7. Wash the plastic and stainless liners of the freezer section with a solution of household bleach and water. (1 ounce of bleach in 1 gallon of water.)
8. Replace the drain trough and the front liner.

CM650D MAINTENANCE & CLEANING INSTRUCTIONS

9. Turn the master and compressor switches back on.
10. Replace front panel.
11. Check each batch of cubes until they are clear and until the acid taste has been removed from the cubes.

CAUTION

DO NOT use ice cubes produced from the cleaning solution. Be sure none remains in the bin.

12. Pour hot water into storage bin to melt the cubes and thereby clean the bin and drains with the same solution that has just cleaned the unit.
13. The unit is now ready for continued automatic operation.

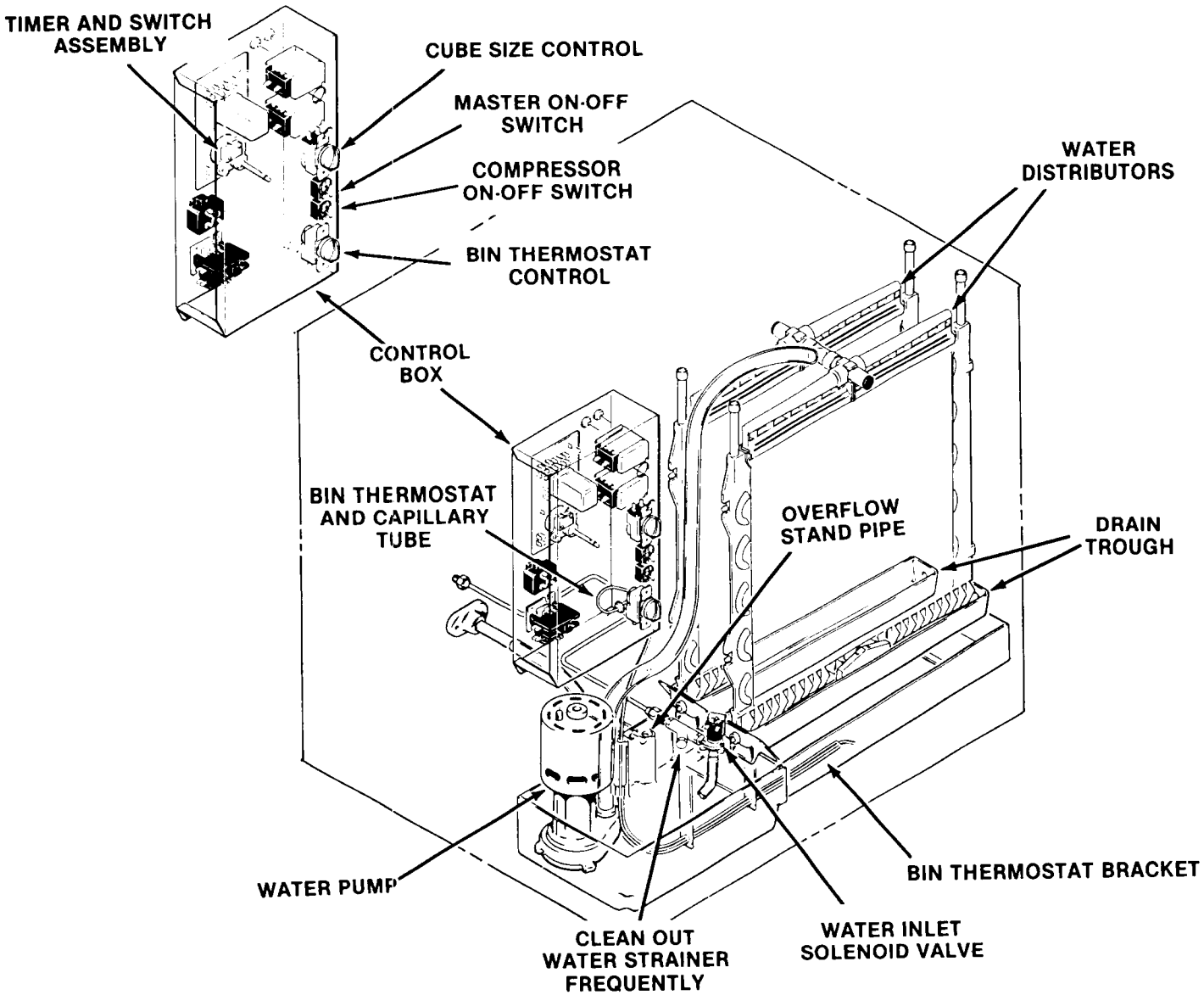

Cleaning Water System, Icemaker

CM650D COMPONENT DESCRIPTION

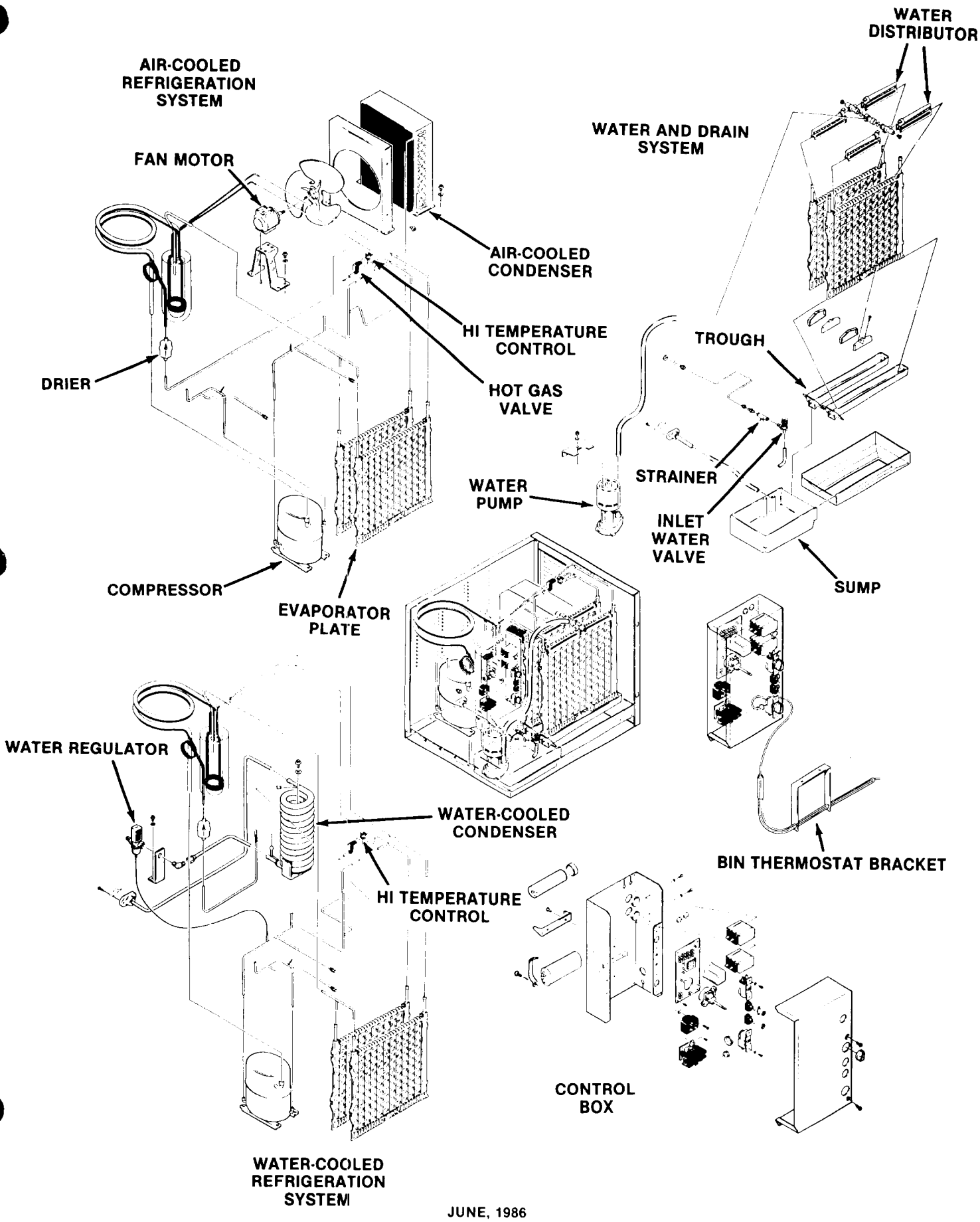

CM650D COMPONENT DESCRIPTION

BIN THERMOSTAT CONTROL

The bin thermostat is located on the front edge of the control box with an accessible knob on the front. The sensing capillary tube is routed from the control out the side of the control box down and across the front edge of the sump and down into the bin thermostat bracket. The bin thermostat control functions to automatically shut OFF the icemaker, when the ice storage bin is filled and ice contacts the capillary tube. It also signals the RESTART of the icemaker, when the capillary tube starts to warm up, after ice has been removed from the bin.

Bin thermostat control adjustment should ONLY be performed on icemakers installed in extreme warm or cold locations and adjust only in increments of one eighth turn at a time.

COMPRESSOR CONTACTOR

The compressor contactor functions to carry the compressor line current. The contactor is wired so any control in the pilot circuit, such as the bin thermostat, and high pressure controls, etc., will cause the contactor holding coil to be de-energized, when the control contact OPENS, thereby breaking the circuit to the compressor.

CUBE SIZE CONTROL

The temperature sensing cube size control affects the length of the freezing cycle prior to initiating the finishing timer. The cube size control closes its contacts when the evaporator reaches a preset temperature, starting the finishing timer. A variation in either ambient air or incoming water temperature will affect the efficiency of the refrigeration system. This will vary the length of time it takes the evaporator to reach the temperature at which the cube size control is preset to CLOSE; which, in turn, will affect the overall cycle time.

See *Cube Size Adjustment* BEFORE attempting to adjust the control.

RELAY

The multi-function, three pole, double-throw, plug-in relay is installed directly into a receptacle on the printed circuit board in the control box. The relay functions in part to by-pass the bin thermostat control to prevent the icemaker from shutting OFF, when a filled-bin condition occurs during the freezing cycle. The by-pass action serves to ensure full-sized ice cubes with each harvest cycle; and, to prevent short cycling on the bin thermostat control.

TIMER — Timer & Switch Assembly

The function of the timer begins when activated by the cube size control. The outer surface, or large diameter lobe of the timer cam, determines the timer cycle for finish freezing of the ice cubes, while the inner surface, or small diameter lobe, determines the time cycle for the harvest sequence. All electrical circuitry is connected through the printed circuit board and the timer and shunted by the single-pole, double-throw microswitch to either the freezing cycle or the harvest cycle. The microswitch is actuated by a cam assembly directly connected to the timer motor. The timer cam can be adjusted to vary the defrost line, as required. One complete rotation of the cam will take eight minutes. Harvest is preset at two and one-fourth minutes.

HIGH PRESSURE SAFETY CONTROL

This is a manual reset control that shuts down the icemaker, should the discharge pressure ever reach 450 PSIG on air-cooled and 350 PSIG on water-cooled.

CM650D COMPONENT DESCRIPTION

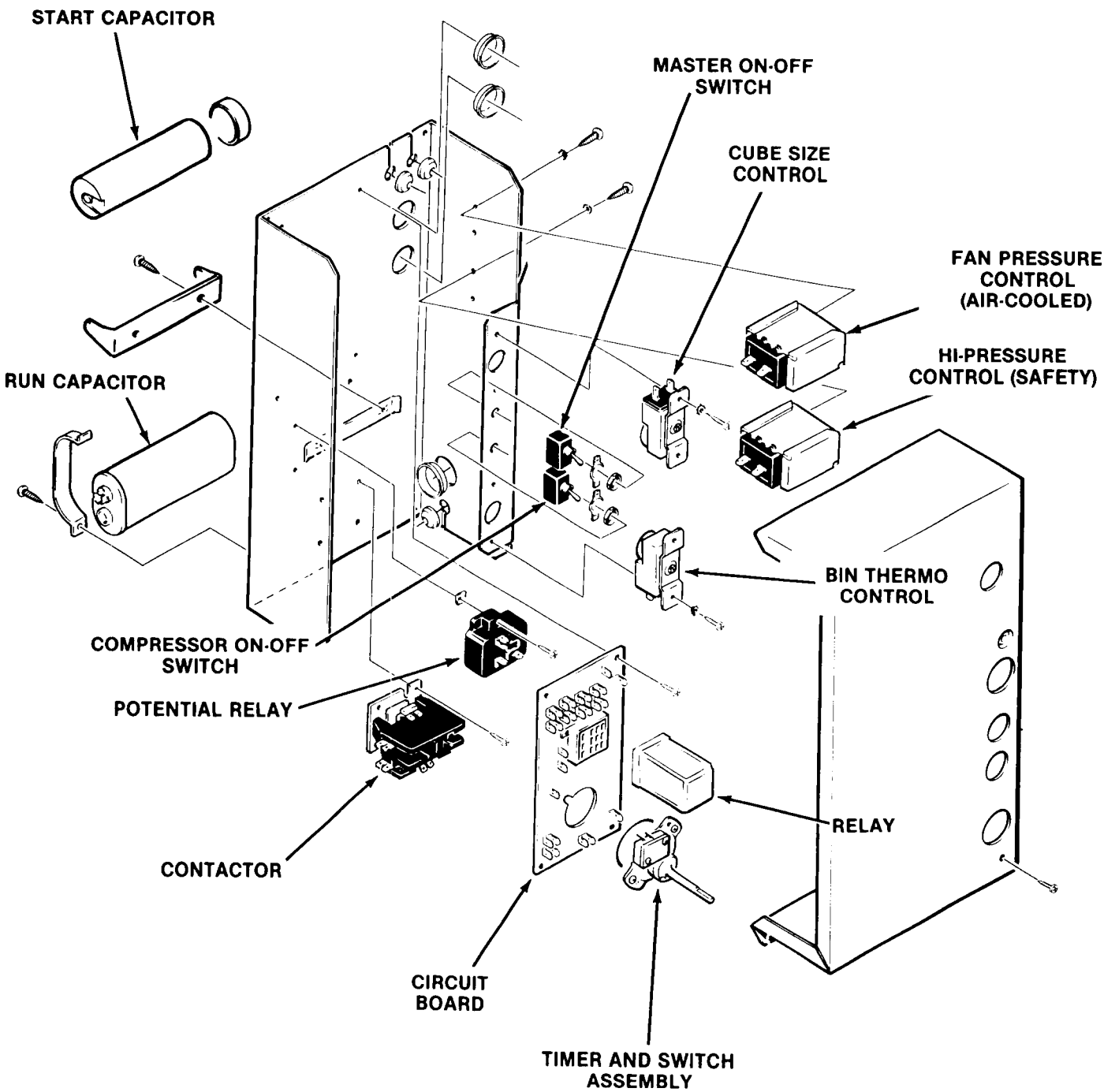

CM650D COMPONENT DESCRIPTION

WATER INLET SOLENOID VALVE

The water inlet solenoid valve functions to fill the sump assembly with water and overflow out the overflow standpipe located at the bottom of the sump. This action fills and rinses the sump during each harvest cycle. The flow rate is .75 g.p.m.

WATER REGULATOR VALVE — Water-Cooled Model

The water regulator valve functions to maintain a constant compressor head pressure, by regulating the amount of inlet water flow through the condenser on water-cooled models. The valve operates through the refrigerant system high side pressure. Rotating the adjusting screw, located on top of the valve, can INCREASE or DECREASE the water flow through the water-cooled condenser, which in turn, will DECREASE or INCREASE the compressor operating head pressure. It is to be set at 220 PSIG.

When installing a replacement water regulator valve, be sure the replacement valve is installed with the arrow positioned in the direction of the water flow.

WATER DISTRIBUTION SYSTEM

The water distribution system functions to evenly supply water to all cells of the evaporator plates. The water pump pumps water from the sump up the vertical tygon tube to the tee. From there water is channeled through the water manifold to the water distributors, above each evaporator plate, and from six holes within each distributor, water flows to the cells of each side of the evaporator plates. Gravity flow returns the unfrozen excess portion of water to the sump reservoir for recirculation.

HOT GAS SOLENOID VALVE

The hot gas solenoid valve functions only during the harvest cycle, to divert the hot discharge gas from the compressor, bypassing the condenser and capillary tube, for direct flow in the evaporator plates to release ice cubes from the ice cube molds. The hot gas solenoid valve is comprised of two parts, the body & plunger and the coil & frame assemblies. Installed in the discharge line of the compressor, the energized solenoid coil lifts the valve stem within the valve body, to cause the hot discharge gas to be diverted when the finishing timer has advanced to the start of the harvest cycle.

FAN PRESSURE CONTROL — Air-Cooled Models only.

In both freeze and harvest cycles, the fan pressure control functions to maintain a minimum discharge pressure by cycling the fan on and off. The approximate C.I. is 210 PSIG and C.O. is 193 PSIG.

STRAINER

A water strainer is located in the potable inlet water line before the water inlet solenoid valve. Clean the water strainer frequently.

CM650D COMPONENT DESCRIPTION

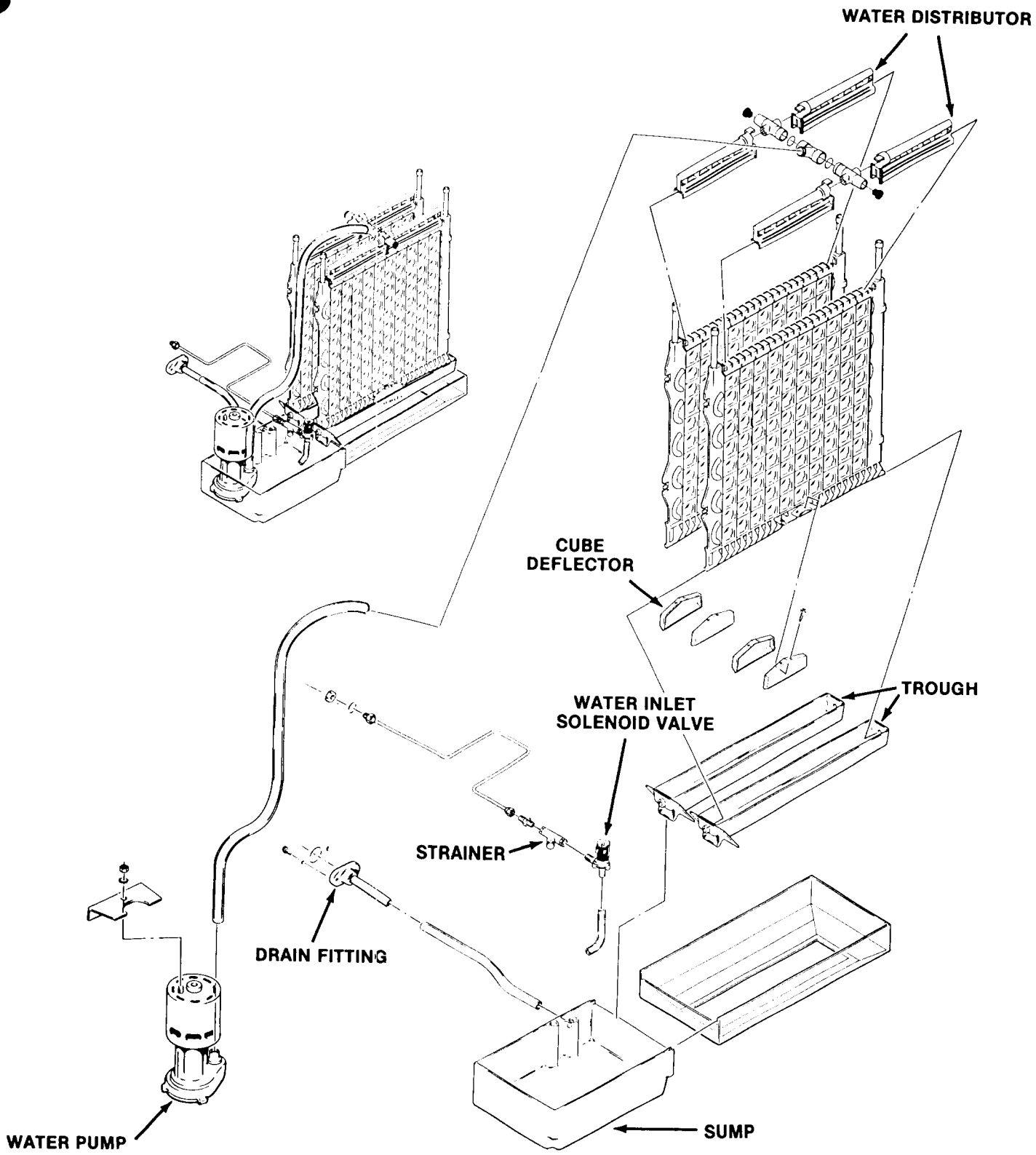

CLEAN OUT WATER STRAINER FREQUENTLY

CM650D SERVICE DIAGNOSIS

The service diagnosis section is for use in aiding the serviceman in diagnosing a particular problem for pin-pointing the area in which the problem lies, thus an ever available reference for proper corrective action.

The following chart lists corrective actions for the causes of known symptoms of certain problems that can occur in the icemaking-refrigeration system.

ICEMAKING - REFRIGERATION SYSTEM

SYMPTOM	POSSIBLE CAUSE	CORRECTION
Irregular size cubes some cloudy.	Some distributor holes plugged.	Clean distributor holes.
		Clean water sump.
	Shortage of water.	See shortage of water CORRECTION.
	Unit not level.	Level cabinet, as required.
Cubes too large.	Dirty air-cooled condenser.	Clean condenser.
	Cube size control set too cold.	Rotate cube size control dial toward WARMER.
Cubes too small.	Cube size control set too warm.	Rotate cube size control dial toward COLDER.
	Partially restricted capillary tube. (Kinked, pinched off, etc.)	Replace heat exchange assembly.
	Moisture in refrigeration system.	Blow refrigerant charge; replace drier; evacuate system; add proper refrigerant charge.
	Shortage of water.	See shortage of water CORRECTION.
Cloudy cubes.	Shortage of water.	See shortage of water SYMPTOM.
	Dirty water supply.	Check water quality and install water purification system.
	Accumulated impurities.	Use SCOTSMAN Ice Machine Cleaner and clean icemaker.
Shortage of water.	Short harvest cycle.	Adjust cam of timer and switch assembly.
	Water leak in sump area or off evaporator plate.	Locate Leak and correct condition.
	Partial restriction in water inlet strainer or inlet water valve.	Clean or replace strainer or valve.
	Water pressure too low.	Check for 20 PSI flowing water. Restore pressure.

CM650D SERVICE DIAGNOSIS

SYMPTOM	POSSIBLE CAUSE	CORRECTION
Decreased ice capacity.	High head pressure, result of dirty condenser or faulty fan motor or fan pressure switch or on water-cooled - not enough water through condenser.	Clean condenser. Repair or replace fan motor or switch. Check with regulator valve.
	Non-condensable gas in the system	Purge the system, evacuate and recharge per nameplate requirements.
	Poor air circulation or extreme hot location.	Relocate the cabinet; or provide ventilation.
	Overcharge of refrigerant.	Evacuate and recharge per nameplate.
	Hot gas solenoid valve leaking.	Replace valve.
	Partially restricted capillary tube.	See cubes too small CORRECTION.
	Defective compressor.	Replace compressor.
Poor harvests. Icemaker does not harvest.	Too short defrost time.	Check and adjust harvest cycle.
	Restriction in water inlet line.	Check strainer and inlet water valve.
	Hot gas solenoid does not open. Binds or burned out.	Replace solenoid, coil or valve as applicable.
	Undercharge of refrigerant.	Charge to nameplate requirements.
	Water pressure too low.	Check for 20 PSI flowing water. Restore pressure.
	Cube size too large or too small.	Adjust size with cube size control.
	Water-cooled models: water Regulator valve leaks water thru during harvest.	Replace water regulator valve.
Compressor cycles intermittently.	Low voltage.	Check for circuit overload. Check building supply voltage, if low, contact power company.
	Dirty condenser.	Clean condenser with vacuum cleaner or brush. DO NOT USE A WIRE BRUSH.
	Air circulation blocked.	Locate cabinet with adequate air space for proper air flow.
	Defective fan motor.	Replace fan motor.
	Non-condensable gases in system.	Purge the system and recharge per nameplate requirements.
Icemaker will not operate.	Blown fuse in line.	Replace fuse and check for cause.
	Master switch in OFF position.	Set switch to ON position.
	Faulty master switch.	Replace switch.
	Timer contacts open.	Replace timer microswitch.
	Faulty bin thermo.	Replace.
	Off on high head pressure safety switch.	Water-Cooled - water interruption correct. Air-Cooled - condenser not getting air.

CM650D ADJUSTMENT PROCEDURES

ADJUSTMENT OF THE BIN THERMOSTAT CONTROL

The control for the bin thermostat is the temperature control, located in the front of the control box.

The bin thermostat control requires adjustment only if the icemaker shuts off prematurely. Turn adjusting knob, in 1/8 turn or less increments, in the appropriate direction until the icemaker shuts OFF.

Remove ice from the capillary bulb; then, place warm hand on the capillary bulb to restart the icemaker.

Place handful of ice against the capillary bulb and observe that the icemaker should shut OFF. (Only at the end of harvest).

CAUTION

The adjusting screws on the temperature control device have very sensitive response to adjustment. DO NOT attempt to adjust the screw until after thoroughly reading and understanding the instructions and illustrations. Over-adjusting or erratic guessing, can foul the instrument and cause ultimate delay and part replacement, WHICH COULD HAVE BEEN PREVENTED.

ALTITUDE ADJUSTMENT
over 2,000 feet above sea level only

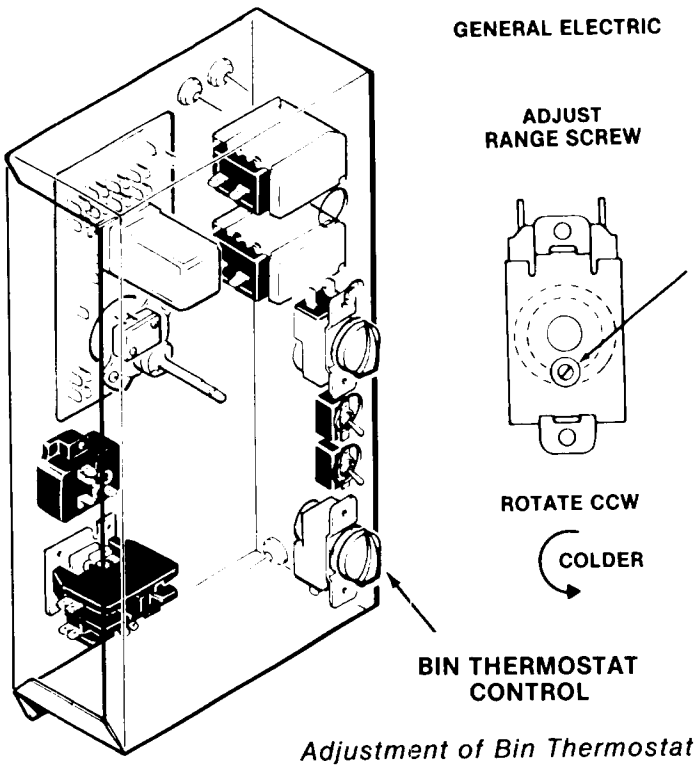

Adjustment of Bin Thermostat

ADJUSTMENT OF THE WATER REGULATOR ASSEMBLY — WATER-COOLED MODELS

The correct compressor head pressure on water-cooled models is 220 PSIG. Adjusting the water regulator valve increases or decreases the rate of flow of water, through the water-cooled condenser; which increases or decreases the affected temperature/pressure of the compressor head pressure, INCREASED water flow, results in DECREASED or LOWER head pressure; while, DECREASED water flow, results in INCREASED or HIGHER head pressure.

To adjust the water regulator assembly:

To INCREASE the head pressure: Rotate the adjusting screw COUNTERCLOCKWISE.

To DECREASE the head pressure: Rotate the adjusting screw CLOCKWISE.

Check change in compressor head pressure, and repeat adjustment as necessary, to achieve desired operating head pressure.

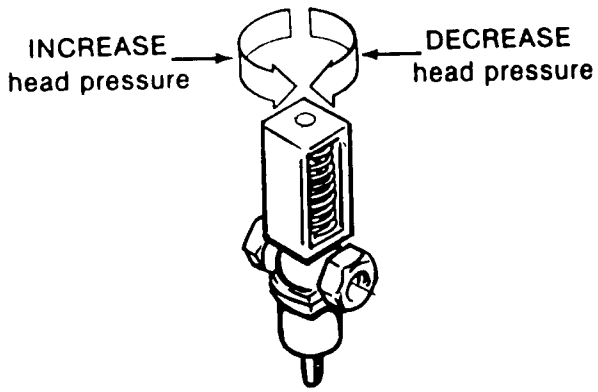

WATER REGULATOR

CM650D ADJUSTMENT PROCEDURES

ADJUSTMENT OF THE CUBE SIZE CONTROL

CAUTION

BEFORE performing actual adjustments to the cube size control, check other possible causes for cube size problems, refer to SERVICE DIAGNOSIS for problem review and analysis. DO NOT perform adjustment when a new cube size control is installed, until the control bulb has been properly installed in the tube well, on the evaporator outlet tube and the icemaker has progressed through several complete freezing and harvest cycles, to observe size and quality of ice cubes freezing and harvest cycles, and whether or not a cube size problem exists.

As a reverse acting temperature control, adjustment on the cube size control is performed to cause either larger sized ice cubes or smaller sized ice cubes to be produced.

To produce LARGER sized ice cubes:

1. Locate the cube size control, on the front of the control box.
2. Rotate the adjusting knob one-eighth of a turn CLOCKWISE toward COLDER.
3. Observe size of ice cubes in next two ice cube harvests and repeat step 2 above, in one-eighth turn increments, until correct ice cube size is achieved.

To produce SMALLER sized ice cubes:

1. Locate the cube size control, on the front of the control box.
2. Rotate the adjusting knob one-eighth of a turn COUNTERCLOCKWISE toward warmer.
3. Observe size of ice cubes in next two ice cube harvests and adjust in one-eighth turn increments, until correct ice cube size is achieved.

ADJUSTMENT OF THE TIMER & SWITCH ASSEMBLY

The timer and switch assembly if factory set, so one complete revolution of the cam on the timer represents eight minutes. Five and one-half minutes comprise the freezing cycle event during cam rotation, and the final two and one-half minutes program the defrost and harvest cycle. Rotating the shaft of the timer cam CLOCKWISE will allow positioning the actuator arm of the microswitch on the cam at the selected start position for either the freezing cycle or harvest cycle, as required in the cleaning instructions.

WARNING

Disconnect electrical power supply to icemaker whenever adjustment procedures are performed.

To adjust the timer & switch assembly:

A. HARVEST CYCLE: Slowly rotate the shaft of the timer and switch assembly, located in the control box, CLOCKWISE, until the actuator arm on the microswitch initiates the harvest cycle. An audible click can be heard, but in a noisy area, look at the cam and switch to observe the event.

B. FREEZING CYCLE: Slowly rotate the shaft of the timer and switch assembly, located in the control box, CLOCKWISE, until the actuator arm on the microswitch initiates the freezing cycle.

C. The length of the harvest cycle can be changed by loosening the adjustment screw on the cam. The normal setting is two and one-quarter minutes, as set at the factory. It is important that the length of the harvest cycle allow enough time for all the ice cubes to fall from the evaporator. Too short of a time will cause the evaporator to freeze up and stop ejecting ice into the bin. Too much time wastes icemaking capacity, energy and water. Adjustment of the harvest cycle may require a corresponding adjustment of the cube size control.

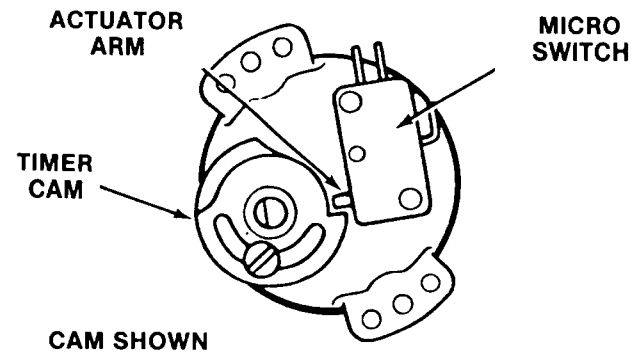

CAM SHOWN AT BEGINNING OF HARVEST CYCLE

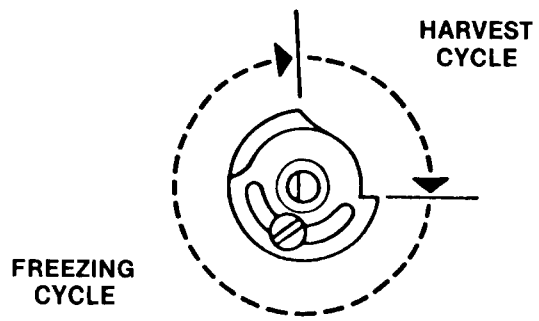

CAM SHOWN DIVIDED INTO TYPICAL FREEZING AND HARVEST CYCLES

CM650D REMOVAL AND REPLACEMENT PROCEDURES

WARNING

Be sure the electrical power supply circuit breaker and the inlet water supply are OFF, BEFORE starting any of the following REMOVAL AND REPLACEMENT procedures as a precaution to prevent possible personal injury or damage to equipment.

REMOVAL AND REPLACEMENT OF THE DRIER

To remove the drier:

1. Pull out to unsnap catches and remove the front panel.
2. Remove screws and remove left side access panel.
3. Bleed off or blow the refrigerant charge through the Schrader valve.
4. Unsolder refrigeration lines at both ends of the drier, and remove the drier.

To replace the drier:

CAUTION

If the factory seal is broken on the replacement drier, exposing it to the atmosphere more than a few minutes, the drier will absorb moisture from the atmosphere and lose substantial ability for moisture removal.

Be sure the replacement drier is installed with the arrow positioned in the direction of the refrigerant flow.

1. Remove the factory seals from the replacement drier and install the drier in the refrigerant lines with the arrow positioned in the direction of the refrigerant flow.
2. Solder the drier into the lines, two places, taking precautions to NOT OVERHEAT the drier body, during installation soldering.
3. Purge the system and check for leaks.
4. Thoroughly evacuate the system to remove moisture and non-condensables.
5. Charge the system with refrigerant, by weight. SEE NAMEPLATE.
6. Replace and attach the left side panel.

NOTE

Always install a replacement drier, anytime the sealed refrigeration system is opened. Do not replace the drier until all other repair or replacement has been completed.

REMOVAL AND REPLACEMENT OF THE EVAPORATOR PLATE ASSEMBLY

1. Remove the front and top panels.
2. Bleed off or blow the refrigerant charge through the Schrader valve.
3. Disconnect Tygon water inlet tube(s), at the water manifold tee(s), above the evaporator plates.
4. Unsnap the sump assembly from the lower left and right attachment points on each evaporator plate.
5. Slide the water distributor tubes about 1/8-inch along the top of the evaporator plate to be removed, until the left water distributor tube can be lifted upward.
6. Lift the end of the water distributor tube and slide the distributors toward the left along the top of the evaporator plate, until the flexible right notch is cleared.
7. Unsnap and disconnect each left and right water distributor tube from the water manifold section.

CAUTION

Use EXTRA PRECAUTION to protect the plastic parts during the next step to unsolder the refrigerant lines, two places, at the top of the evaporator plate. Position wet cloths over top of plates, as well as over the plastic liner at the rear, or sides, to prevent accidental heat damage, or possible fire from torch flame.

8. Unsolder and remove the refrigerant lines at the top of the evaporator plate to be replaced.
9. Remove nuts at left of the evaporator then, loosen the braces just enough to remove the evaporator plate. Temporarily replace the braces, to support the remaining evaporator plate.

To replace the evaporator plate, reverse the removal procedures. See Nameplate. Weigh in proper charge of R-502.

CM650D REMOVAL AND REPLACEMENT PROCEDURES

REMOVAL AND REPLACEMENT OF THE COMPRESSOR ASSEMBLY

To remove the compressor assembly:

1. Pull out to unsnap catches and remove the front panel.
2. Remove screws and remove cabinet top and left side access panel.
3. Bleed off or blow the refrigerant charge through the Schrader valve.
4. Remove the cover from the terminal box on the compressor; then, remove electrical leads from the compressor.
5. Unsolder suction, discharge and process header from compressor.
6. Remove four bolts and washers which secure the compressor to the chassis mounting base.
7. Remove the compressor from the cabinet.

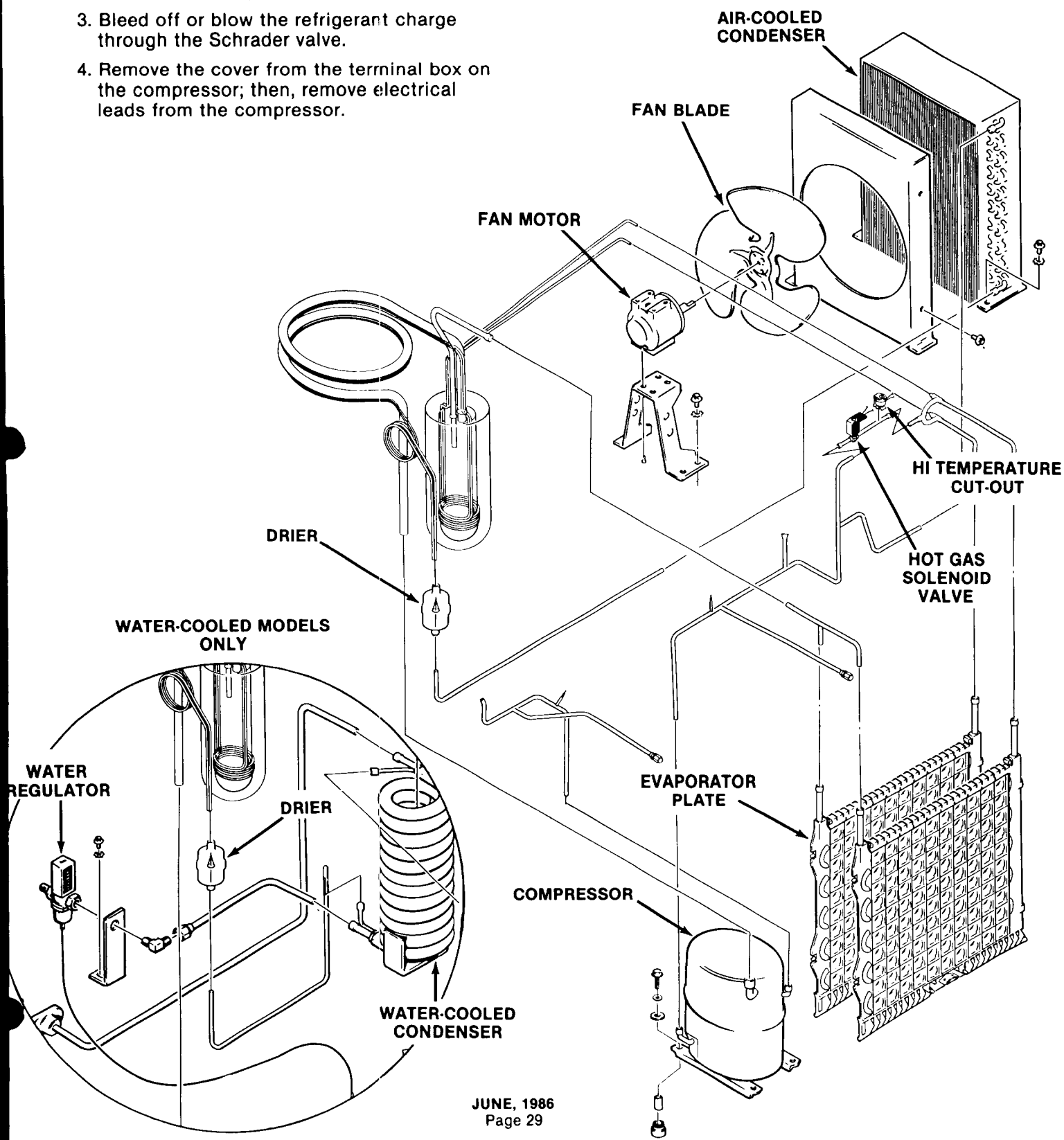

CM650D REMOVAL AND REPLACEMENT PROCEDURES

WARNING

Disconnect electrical power supply to icemaker whenever adjustment procedures are performed.

REMOVAL AND REPLACEMENT OF THE CONDENSER — AIR-COOLED MODELS

To remove the condenser:

1. Pull out to unsnap catches and remove the front panel.
2. Remove screws and remove cabinet top and right service side panels.
3. Bleed off or blow the refrigerant charge through the Schrader valve.
4. Unsolder and disconnect refrigerant lines from the condenser.
5. Unsolder and remove the drier from the refrigerant lines connecting to the condenser.
6. Remove screws, lockwashers and the condenser from the chassis base.

To replace the air-cooled condenser, reverse the removal procedure.

REMOVAL AND REPLACEMENT OF THE CONDENSER — WATER-COOLED MODELS

To remove the condenser:

1. Remove screws and the right side panel.
2. Bleed off or blow the refrigerant charge through the Schrader valve.
3. Check to be sure building source water inlet supply shutoff valve to rear of chassis is OFF.
4. Disconnect water-cooled condenser inlet water line at the water regulator assembly outlet fitting.
5. Unsolder the refrigerant capillary tube distributor line at the outlet end of the drier, the refrigerant liquid line from the bottom of the condenser, and remove the drier from the lines.
6. Unsolder the compressor discharge line, at the top of the water-cooled condenser.
7. Unsolder the compressor discharge line at the top of the water-cooled condenser and the refrigerant line from the bottom of the water regulator valve.
8. Remove two screws and washers and the water-cooled condenser from the cabinet.

To replace the water-cooled condenser, reverse the removal procedures.

REMOVAL AND REPLACEMENT OF THE FAN MOTOR — AIR-COOLED MODELS

To remove the fan motor assembly:

1. Pull out to unsnap catches and remove the front panel.
2. Remove unit top or left side panel.
3. Disconnect the two electrical leads, from the fan motor, at the control box assembly.

Before next step, measure or make accurate mental note of the distance the fan blades extend beyond the fan shroud, so during replacement the correct distance is maintained.

4. Remove screws and the fan motor and bracket assembly; and remove the fan motor and bracket from the chassis base.
5. Loosen set screws on the fan blade and remove the fan blade from the fan motor. Mark or note position of the blade on the shaft of the fan motor, for replacement.
6. Remove screws and lockwasher and separate the fan motor from the fan motor bracket.

To replace the fan motor assembly, reverse the removal procedure.

Be sure to replace the fan blade with the hub of the fan blade facing the fan motor, to ensure air flow is toward the fan motor; and, is set at marked location on shaft and setscrews tightened on the FLAT part of the shaft of the fan motor.

NOTE

Always install a replacement drier, anytime the sealed refrigeration system is opened. Do not replace the drier until all other repair or replacement has been completed.

Thoroughly evacuate the system to remove moisture and non-condensables.

CM650D REMOVAL AND REPLACEMENT PROCEDURES

WARNING

Disconnect electrical power supply to icemaker whenever adjustment procedures are performed.

REMOVAL AND REPLACEMENT OF THE CUBE SIZE CONTROL

To remove the cube size control:

1. Remove front panel.
2. Remove cover from control box.
3. Trace capillary tube, from the cube size control to the refrigerant suction line.
4. Remove the coiled capillary tube bulb from the tube well on the suction line.
5. Remove electrical leads from the cube size control.
6. Remove screws and the cube size control.

To replace the cube size control, reverse the removal procedure.

REMOVAL AND REPLACEMENT OF THE WATER DISTRIBUTOR TUBES AND MANIFOLD TUBES

To remove the water distributor tube and manifold tube:

1. Pull out to unsnap catches and remove the front panel.
2. Remove 4 thumb screws and remove the evaporator cover.
3. Slide the water distributor tube to the left about 1/8-inch along the top of the evaporator plate, until the water distributor tube can be unsnapped from the flexible notch and lifted upward to the right side.
4. Unsnap and disconnect water distributor tubes from the water manifold section.

To replace the water distributor tubes and manifold tubes, reverse the removal procedure. BE SURE the notches in the water manifold tubes properly engage the alignment keys in the tee.

BE SURE the water distributor tube is securely fastened at the notch at both sides of the evaporator plate.

Check identical attachment for the left water distributor tube and notch; also, that the distributor/manifold connections at the top center of each evaporator plate is snug against the top of the plate.

REMOVAL AND REPLACEMENT OF THE BIN THERMOSTAT CONTROL

To remove the bin thermostat control:

1. Remove front panel.
2. Remove screws and the control box cover.
3. Remove wire leads from the bin thermostat control.
4. Unthread the capillary tube and remove from the bin thermostat control bracket at the bottom right side of the evaporator section.
5. Remove the two screws attaching the bin thermostat control to the side of the control box; then, carefully pull the capillary tube out of the evaporator section. Carefully remove the bin thermostat control and capillary tube from the control box.

To replace the bin thermostat control, reverse the removal procedure.

REMOVAL AND REPLACEMENT OF THE INLET WATER SOLENOID VALVE ASSEMBLY

To remove the inlet water solenoid valve assembly:

1. Shut OFF water supply to machine.
2. Remove screws and pull the water solenoid valve out to gain access.
3. Loosen and remove inlet water line fitting from the inlet water solenoid valve assembly.
4. Remove inlet water Tygon tubing from the water solenoid valve.

To replace the inlet water valve assembly, reverse the removal procedures.

NOTE

Always install a replacement drier, anytime the sealed refrigeration system is opened. Do not replace the drier until all other repair or replacement has been completed.

CM650D REMOVAL AND REPLACEMENT PROCEDURES

WARNING

Disconnect electrical power supply to icemaker whenever adjustment procedures are performed.

REMOVAL AND REPLACEMENT OF THE WATER PUMP ASSEMBLY

To remove the water pump assembly:

1. Pull out to unsnap catches and remove the front panel.
2. Remove the Tygon tube to the pump assembly.
3. Disconnect electrical leads from the water pump assembly.
4. Loosen thumbscrew, loosen Phillips headscrew, lift pump up and remove from unit.
5. Remove one nut and mounting bracket from top of water pump.

To replace the water pump assembly, reverse the removal procedure.

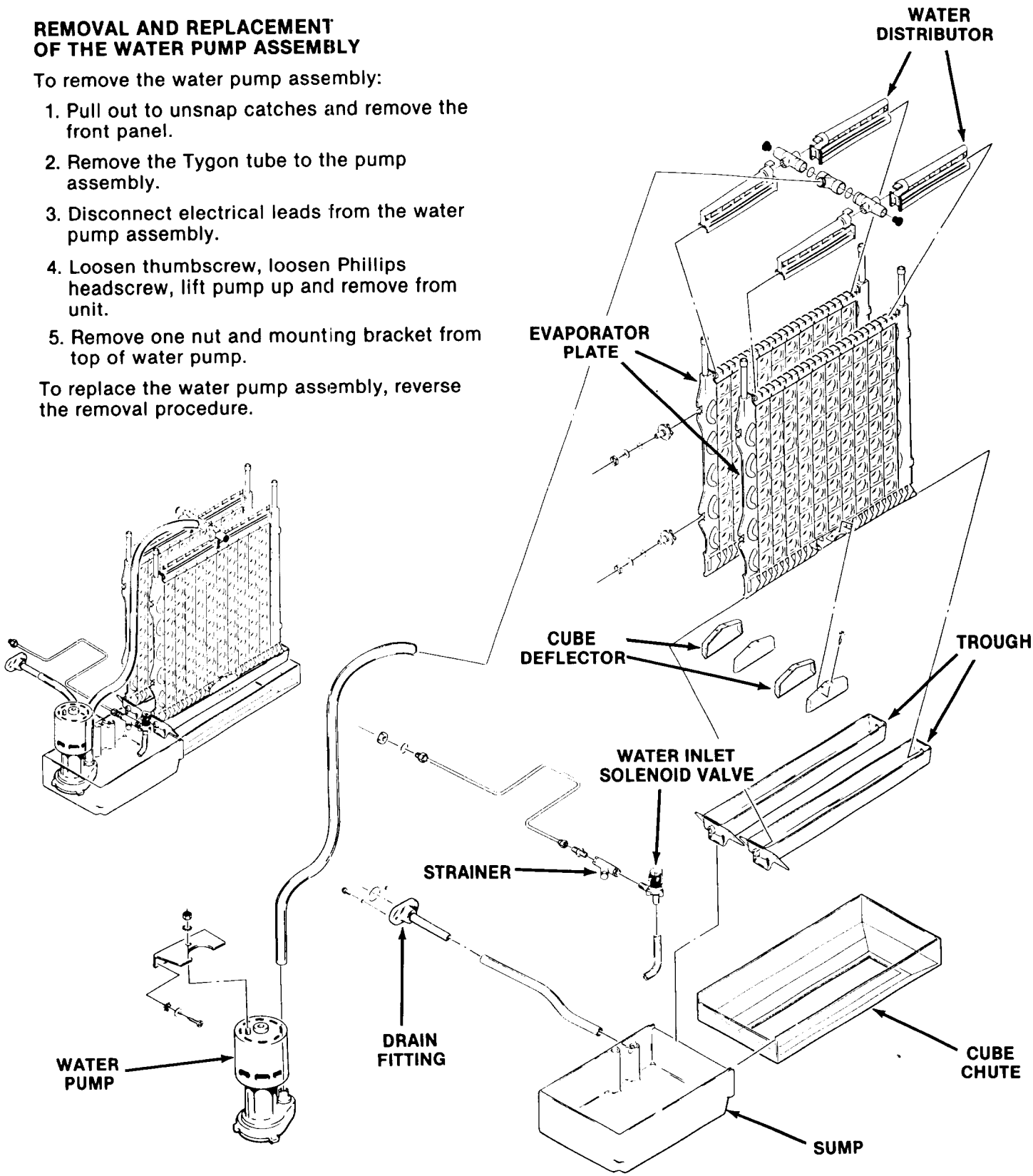

CM650 TABLE OF CONTENTS

For the Installer

Specifications 2

Location 5

For the Electrician 6

For the Plumber 7

Final Check List 8

Start Up 9

Operation 12

Service Specifications 16

Maintenance and Cleaning 17

Component Description 19

Service Diagnosis 24

Adjustment 26

Removal and Replacement 28

Parts Lists and Wiring Diagrams are located in the center of this manaul, printed on yellow paper.

THIS PAGE
INTENTIONALLY
LEFT BLANK

CM650 FOR THE INSTALLER

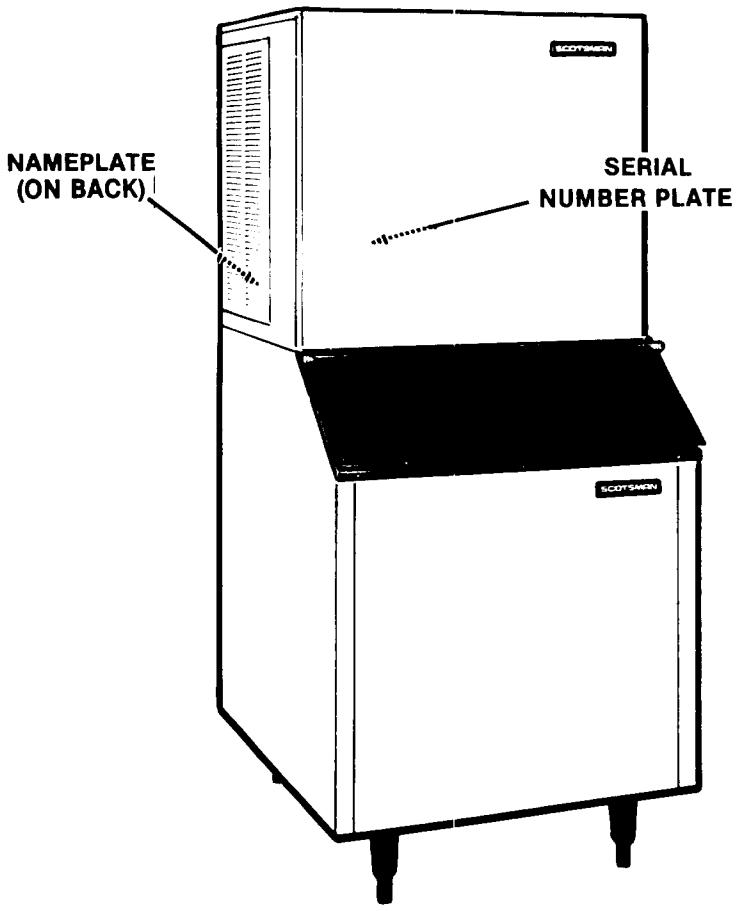

INTRODUCTION

These instructions provide the specifications and the step-by-step procedures for the installation, start up and operation for the Scotsman Model CM650 Modular Cuber.

The Model CM650 Modular Cubers are quality designed, engineered and constructed, and are thoroughly tested icemaking systems, providing the utmost in flexibility to fit the needs of a particular user.

NAME PLATE

MODEL NUMBER
SERIAL NUMBER
A.C. SUPPLY VOLTAGE
MINIMUM CIRCUIT AMPACITY WIRES
MAXIMUM FUSE SIZE * HERTZ
HEATER WATTS PHASE
REFRIGERANT CHARGE OZ.

MOTORS	VOLTS	R.L.A./F.L.A	W/HP.	L.R.A.
COMPRESSOR				
FAN				
DRIVE				
OTHER				

DESIGN PRESSURE LOW HIGH
* OR HACR TYPE CIRCUIT BREAKER

SCOTSMAN A HOUSEHOLD INTERNATIONAL COMPANY
ALBERT LEA, MINNESOTA U.S.A.

SERIAL NUMBER PLATE

MODEL NUMBER
SERIAL NUMBER
VOLTS/HERTZ/PHASE
MAXIMUM FUSE SIZE
REFRIGERANT CHARGE OZ.

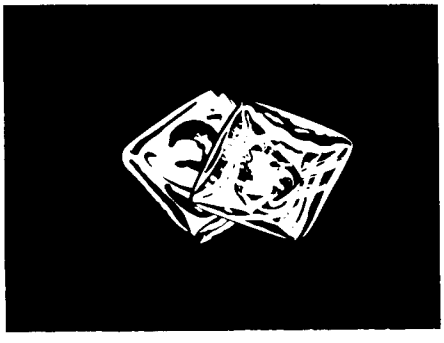

SCOTSMAN CONTOUR CUBE

This product qualifies for the following listings:

This icemaker has been engineered to our own rigid safety and performance standards. The National Sanitation Foundation (NSF) seal, signifies that it is listed with NSF and that it complies with the materials and construction standards of NSF. In addition, the Underwriters Laboratories, Inc., (UL) Listing Mark and the Canadian Standards Association (CSA) Monogram, both signify that its construction and design have been inspected and tested by them. NSF, UL and CSA inspectors also periodically examine production icemakers at the factory, to assure continued compliance.

To retain the safety and performance built into this icemaker, it is important that installation and maintenance be conducted in the manner outlined in this manual.

AIR-COOLED ASSEMBLY

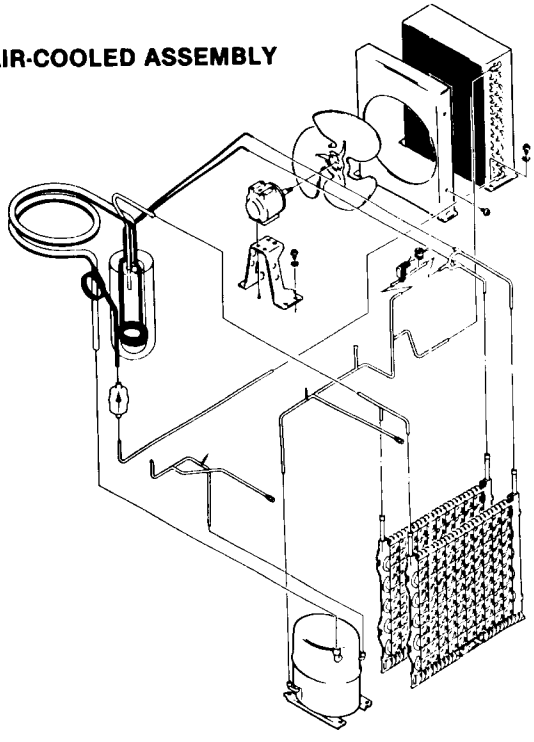

WATER SYSTEM

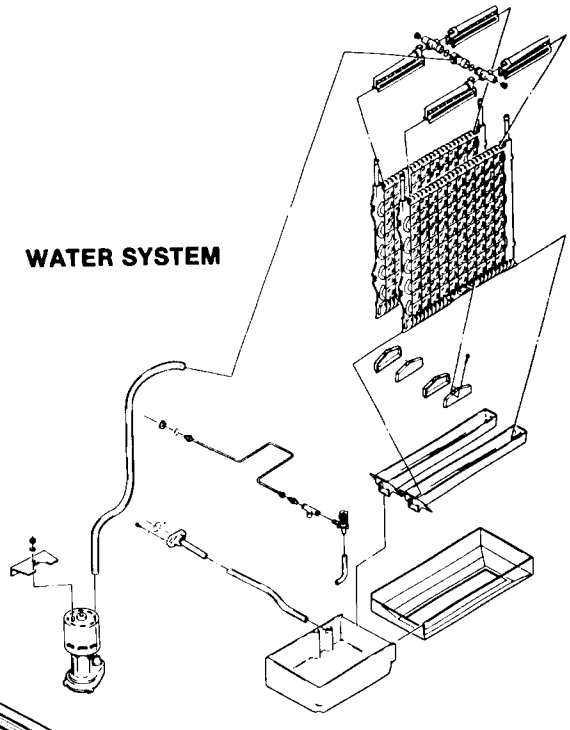

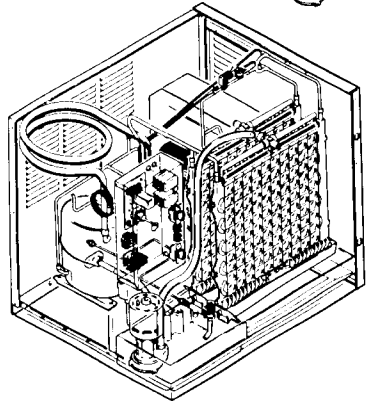

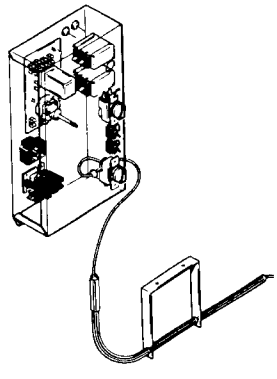

BIN THERMOSTAT BRACKET

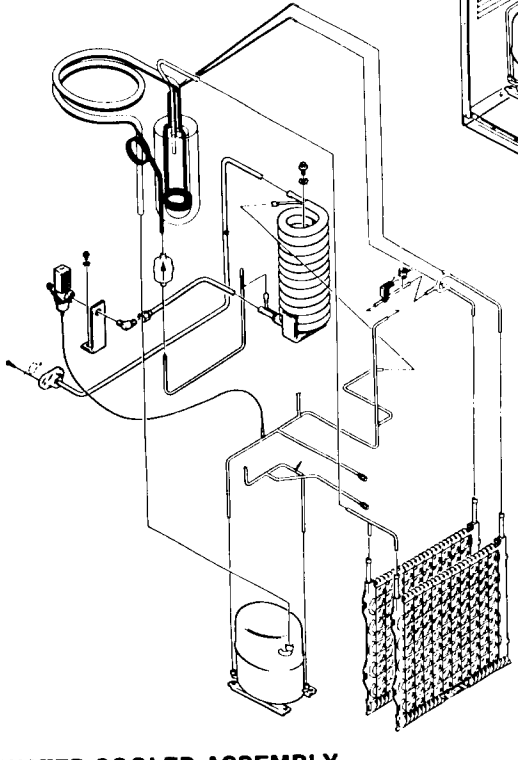

WATER-COOLED ASSEMBLY

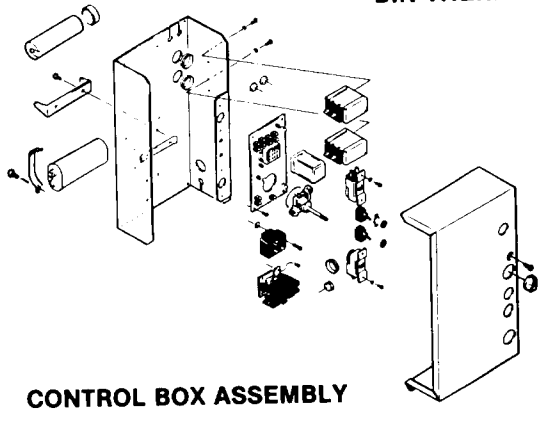

CONTROL BOX ASSEMBLY

CM650E FOR THE INSTALLER

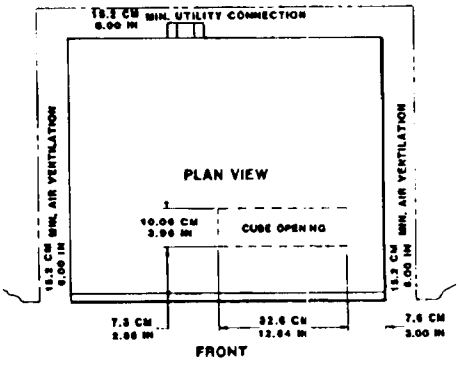

INSTALLATION NOTE: Allow 6" minimum space at sides and back for ventilation and utility connections.

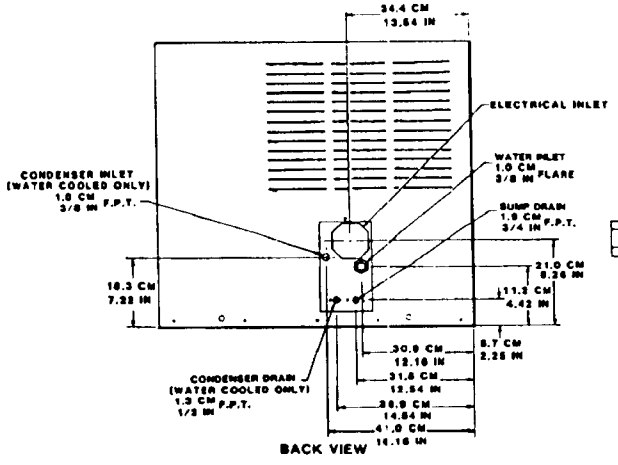

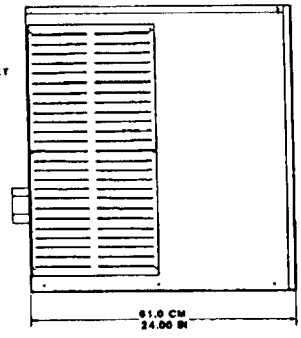

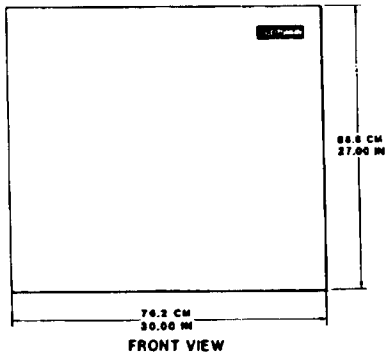

The CM650 is designed to fit the following Scotsman storage bins:

- HTB500 or BH550

When installing a new system, check to be sure that you have everything you need before beginning:

- Correct Bin
- Correct Ice Machine either CM650E-32E or CM650E-3E
- All kits, legs, and information required for the specific job.
- Optional Stainless Steel Panel Kit, SPKCMD1 contains the front, top, 2 ends, and 2 service panels.

Installation Limitations:

This ice system is designed to be installed indoors, in a controlled environment:

	Min	Max
Air Temperature	50°F	100°F
Water Temperature	40°F	100°F
Water Pressure	20	80
Voltage	-5%	+10%

(Compared to the nameplate)

Operating the machine outside of the limitations is misuse and can void the warranty.

SPECIFICATIONS

Model Number	(Height - w/0 Bin) Dimensions H" x W" x D"	Ice Type	Condenser Type	Basic Electrical	Comp. H.P.	No. of Wires	Min. Circ. Ampacity+	Max. Fuse Size
CM650AE-32E	27 x 30 x 24	Contour Cube	Air	208-230/60/1	1.5	2	19.8	30
CM650WE-32E	same	same	Water	same	1.5	2	18.6	30
CM650AE-3E	same	same	Air	208-230/60/3	1.5	3	9.2	15
CM650WE-3E	same	same	Water	same	1.5	3	8.5	15

+Use this value to determine wire size and type per National Electric Code. Standard finish is enamel sandalwood.

Scotsman Ice Systems are designed and manufactured with the highest regard for safety and performance. They meet or exceed the standards of UL, NSF, and CSA.

Scotsman assumes no liability or responsibility of any kind for products manufactured by Scotsman that have been altered in any way, including the use of any part and/or other components not specifically approved by Scotsman.

Scotsman reserves the right to make design changes and/or improvements at any time. Specifications and design are subject to change without notice.

CM650 FOR THE INSTALLER

LOCATION & LEVELING

1. Arrange for proper electric, water and drain. See instructions for the plumber and for the electrician.
2. After mounting the legs, position the ice storage bin in the selected location which should have a minimum room temperature of 50-degrees F. and maximum room temperature of 100-degrees F. Level the bin, adjusting the leg levelers in both the front to rear and side to side directions. Select a well-ventilated location for the air-cooled condenser.
3. Inspect the bin top mounting gasket which should be flat, with no wrinkles, to provide a good water seal when the Cuber is installed on top of the bin. Remove baffle from bin to gain access.
4. Install the modular cuber on top of the bin using care to be sure a good seal is made between the two cabinets. Align the holes in the bottom rear of the cabinet to mate with the two mounting straps on the top rear of the bin.
5. Use bolts and straps found in hardware package to secure the ice machine. When alignment and leveling are completed, tighten the bolts to secure the mounting straps.

STACKING INSTRUCTIONS

NOTE: This model can only be stacked onto Scotsman units with the same size cabinet as itself. Earlier models are not compatable.

When stacking two units, remove the top panel from the lower icemaker. (The top removed from the lower icemaker will no longer have any function.)

Carefully lift the uncrated top unit onto the bottom one and align the two cabinets. Use of a mechanical lift is recommended for this step.

At the back of the two icemakers, bolt the upper icemaker cabinet to the lower icemaker cabinet using the mounting straps and bolts from the hardware package.

BIN THERMOSTAT INSTALLATION

1. Remove cap from bin thermostat bracket. Insert bin thermostat bracket up through routing hole in sump.
2. Attach the bin thermostat bracket to the bottom of the cuber base using the thumb screws and threaded holes provided.
3. Carefully uncoil the capillary tube to the icemaker and route the capillary tube through the routing hole provided in the sump and through the full length of the bin thermostat bracket.

NOTE: When stacking, route the bin thermostat control from the upper ice machine through the routing hole provided in the sump of the lower icemaker and through the bin thermostat control bracket.

NOTE: Extend bin thermostat capillary tube through entire length of the tubular section of the bin thermostat bracket. When properly installed, the tip of the capillary tube should be flush with the tip of the bin thermostat bracket.

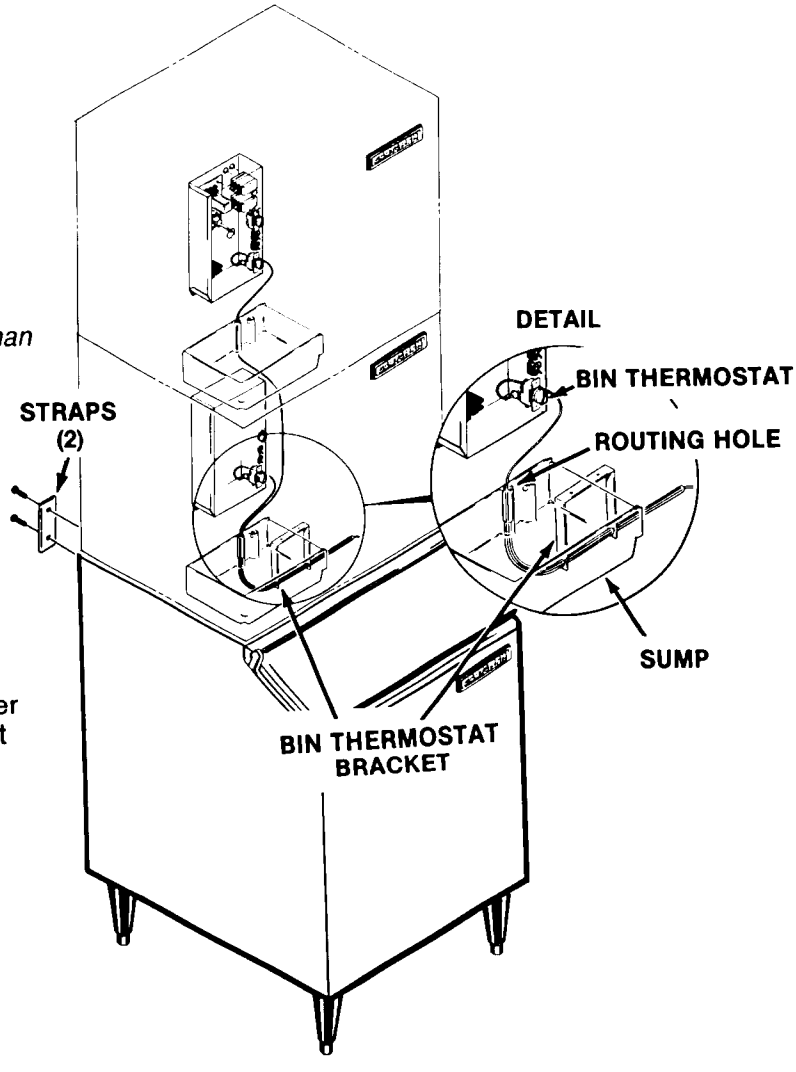

CM650 FOR THE ELECTRICIAN

CONFORM TO ALL APPLICABLE CODES

ELECTRICAL CONNECTIONS

SEE NAMEPLATE for current requirements to determine wire size to be used for electrical hookup. The cuber requires a solid chassis-to-chassis earth ground wire. See Wiring Diagram.

Be certain the cuber is connected to its own electrical circuit and individually fused. Voltage variation should not exceed ten percent of the nameplate rating, even under starting conditions. Low voltages can cause erratic operation and may be responsible for serious damage to the icemaker.

Electrical connections are made at the rear of the icemaker, inside the junction box.

All external wiring should conform to the national, state and local electrical code requirements. Usually an electrical permit and services of a licensed electrician will be required.

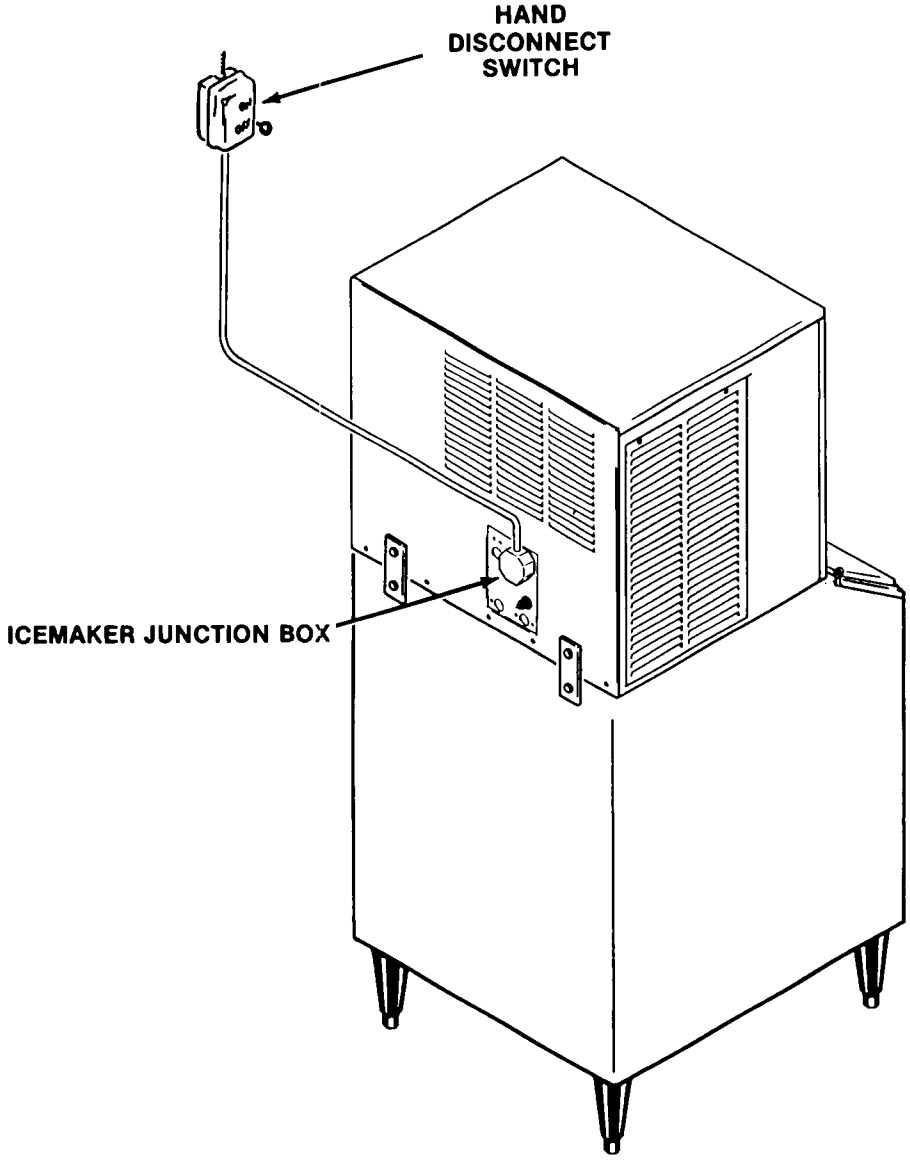

CM650 FOR THE PLUMBER

CONFORM TO ALL APPLICABLE CODES

WATER SUPPLY AND DRAIN CONNECTIONS

The recommended water supply line is a 3/8-inch O.D. copper tubing with a minimum operating pressure of 20 PSIG and a maximum of 120 PSIG. Connect to cold water supply line with standard plumbing fittings, with shutoff valve installed in an accessible place between the water supply and the cuber. In some cases a plumber will be required.

DRAIN CONNECTIONS: All drains are gravity type and must have a minimum of 1/4-inch fall per foot on horizontal runs. The drains to be installed to conform with the local plumbing code. Install a vertical open vent on drain line high point to ensure good draining. The ideal drain receptacle is a trapped and vented floor drain.

Recommended bin drain is 5/8-inch O.D. copper tubing and should be vented and run separately. Insulation for high humidity areas is recommended.

The ice machine sump drain is 3/4" FPT. There must be a vent at this connection for proper sump drainage.

WATER-COOLED MODELS: On water-cooled models, a separate cold water supply inlet is required, to be connected to a second 3/8-inch female pipe thread (FPT) fitting at the rear of the cabinet. Additional drain lines are required to drain the water-cooled condenser, and they must not interconnect to any other of the units drains.

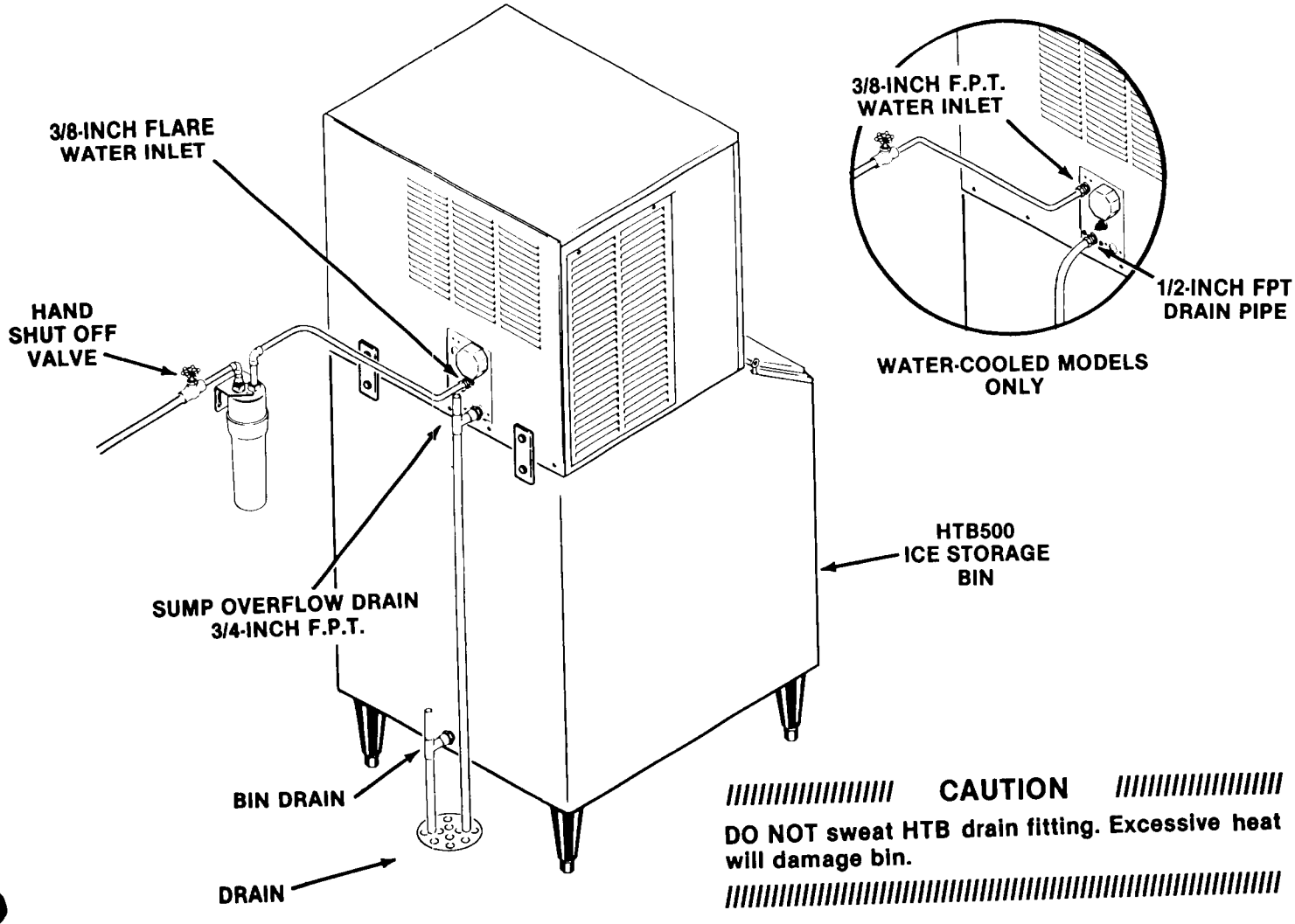

CAUTION

DO NOT sweat HTB drain fitting. Excessive heat will damage bin.

Water Supply and Drain Connection

CM650 FOR THE INSTALLER

FINAL CHECK LIST

1. Is the cabinet in a room where ambient temperatures are within the minimum and maximum temperatures specified?
2. Is there at least six inches clearance at both sides of the cabinet for proper air circulation? (Air-Cooled models)
3. Has water supply pressure been checked to insure a minimum of 20 PSIG and a maximum of 120 PSIG operating pressure?
4. Is the cabinet level?
5. Check that any shipping material has been removed from inside the cabinet.
6. Has the bin thermostat and bracket been properly installed?
7. Check that the drain troughs are properly secured to the bottom of the evaporator plates.
8. Have all electrical and piping connections been made?
9. Is the water supply line shut-off valve installed and electrical wiring properly connected?
10. Check all refrigerant lines and conduit lines, to guard against vibration or rubbing and possible failure.
11. Have the bin and cabinet been wiped clean?
12. Has the Manufacturer's Registration Card been properly filled out? Check for correct model and serial numbers from Serial nameplate, then mail the completed card to the SCOTSMAN factory.
13. Has the owner/user been given the Service Manual and instructed how to operate and maintain the icemaker?
14. Has the owner been given the name and telephone number of the authorized SCOTSMAN Service Agency serving him?

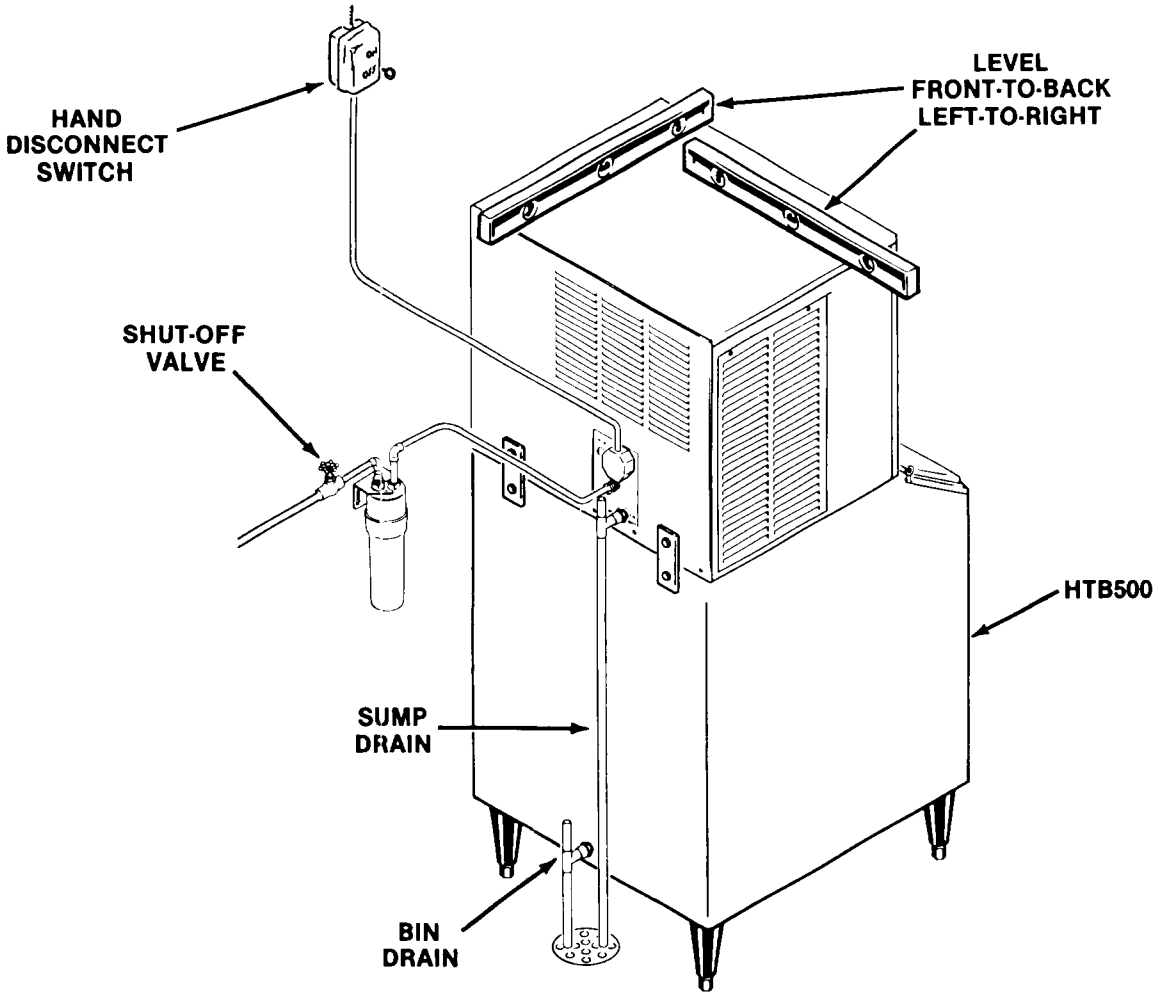

CM650 START-UP

START-UP

1. Remove front panel by pulling out to unsnap.
2. Remove two screws and the control box cover.
3. Remove four thumb screws and the evaporator cover.
4. Check that the two toggle switches, the MASTER ON-OFF toggle switch and the COMPRESSOR ON-OFF toggle switch are in the OFF position, on the control box.
5. OPEN the water supply line shutoff valve.
6. Inside the control box is the shaft of the timer and the switch assembly. Rotate the shaft of the timer and switch assembly clockwise to start the timer. The timer starts when the actuator arm on the microswitch drops off outer cam into cam slot. See Timer Cam Positions. An audible click can be heard, but in a noisy area, look at the cam and switch to observe the event.

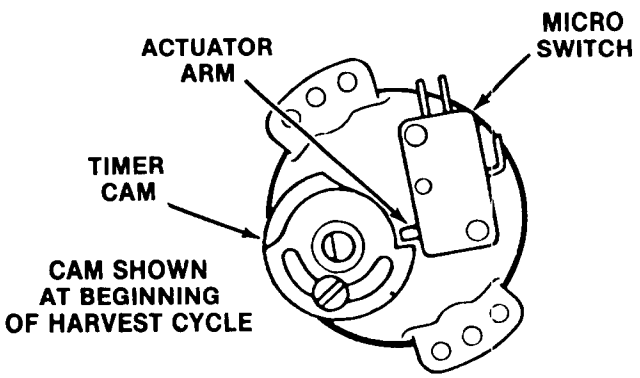

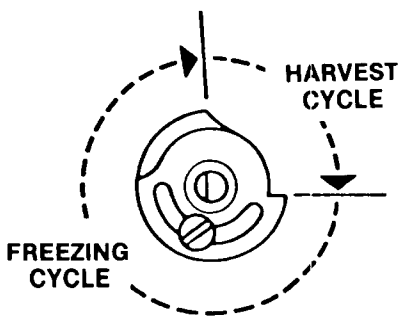

CAM SHOWN DIVIDED INTO TYPICAL FREEZING & HARVEST CYCLES

Timer Cam Positions

7. Move the master ON-OFF toggle switch, the top toggle switch, to the ON position.
8. Observe water fill cycle:

   Water pump operates and water inlet solenoid valve OPENS, incoming water flows from the valve through the tubing, the reservoir fills and excess water is overflowed through the stand pipe. This cycle will take about three minutes. Timer will close the water inlet solenoid valve and the water fill cycle is complete.

   Advancing the shaft of the timer and switch assembly into a new harvest cycle, restarts the timer and allows a check that: Water inlet solenoid valve OPENS and the reservoir overflows through the stand pipe. Water inlet valve CLOSES, stopping water overflow.

   The water pump is operating, as seen by water moving through the tygon tube, up to the water distributor at the top of each evaporator plate, where water is uniformly dispensed and cascades down both sides of the evaporator plate and drains back into the sump assembly for recirculation.
9. Check that the water cascades down over each cube mold and into the sump.
10. When the second cycle is completed, move the compressor ON-OFF toggle switch, to the ON position.
11. Check operation of the freezing cycle:

    The compressor is operating.

    The icemaking process begins; feeling the metal parts of the evaporator plate reveals cold temperature, very shortly ice begins to form. Tubing will become frosted at the top of the evaporator plate.

    Freezing time will range between 15 and 30 minutes. Longer time for temperatures above 70-degrees F. and shorter time required when temperatures are below 70-degrees F. Average complete cycle time is about 18 minutes.

12. Observe second and third cube harvest.

    Check size of SCOTSMAN CONTOUR CUBE

    Unlike other SCOTSMAN cubes which are made in a definite molded shape, contour cubes are produced in indentations and many shapes and sizes of contour cubes may be produced — only ONE size and shape combination is correct.

An under-charged refrigeration system produces smaller cubes at the top of the evaporator plate and large cubes at the bottom. Charge system per NAMEPLATE specifications.

Charge Refrigeration System with **REFRIGERANT 502 ONLY.**

In areas where extreme problem water condition exists, filtering or purifying equipment is recommended. Contact SCOTSMAN ICE SYSTEMS, Service Department, Albert Lea, Minnesota 56007 for further details.

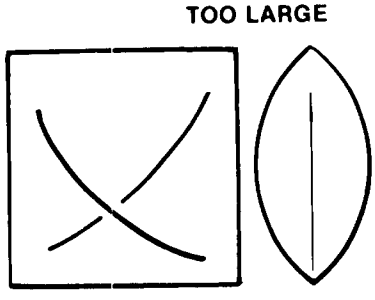

Too LARGE — may cause evaporator freeze ups. Adjust cube size control counter-clockwise to obtain smaller cubes

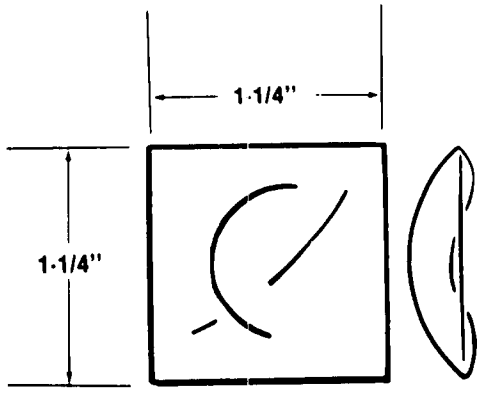

PROPER SIZE AND SHAPE of the contour cube. Icemaker operates at peak efficiency when a cube this size and shape is produced. A finely tuned system produces vertical strips of ice which easily break when they fall.

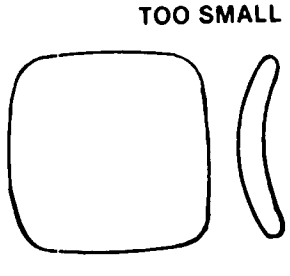

TOO SMALL. To obtain proper size cubes, adjust cube size control clockwise. May cause freeze up problems due to poor harvest.

Ice Cube Size & Shape

CM650 START-UP

ADJUSTMENT OF CUBE SIZE

To produce SMALLER sized ice cubes:

Locate cube size control knob, in the front of the control box.

Rotate the adjusting screw one-eighth of a turn COUNTERCLOCKWISE to WARMER.

Observe size of the ice cubes in the next two ice cube harvests and adjust in one-eighth turn or less increments, until correct ice cube is achieved.

To produce LARGER ice cubes:

Locate cube size control on the front of the control box

Rotate the adjusting screw one-eighth of a turn CLOCKWISE to COLDER.

Observe size of ice cubes in the next two cube harvests and adjust in one-eighth turn or less increments, until correct ice cube size is achieved.

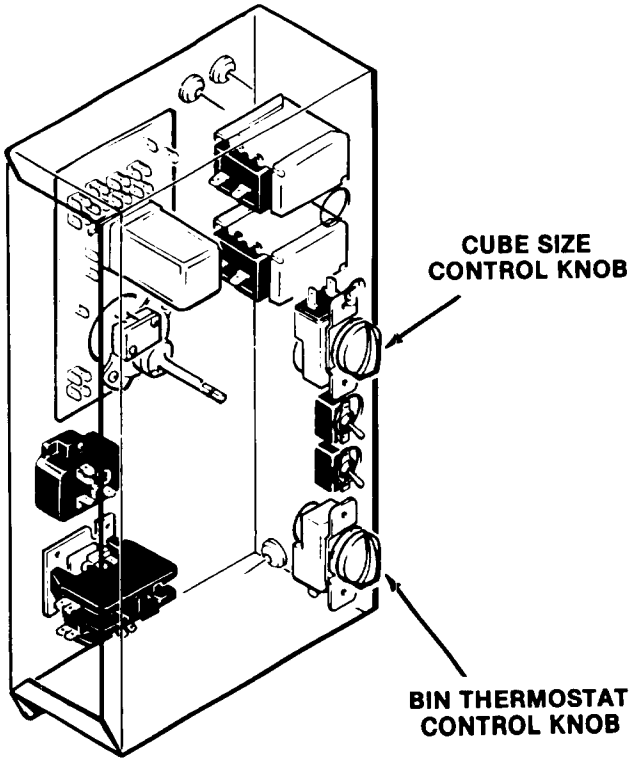

ROTATE ADJUSTMENT KNOB COUNTER-CLOCKWISE TO PRODUCE SMALLER CUBES.

ROTATE ADJUSTMENT KNOB CLOCKWISE TO PRODUCE LARGER CUBES.

BIN THERMOSTAT OPERATION

Check texture of ice cubes; when partially cloudy throughout, suggests icemaker is operating short of water; or, possibly an extreme problem water condition exists, where filtering or purifying equipment is recommended. Contact SCOTSMAN ICE SYSTEMS, Service Department, Albert Lea, Minnesota 56007 for further details. See SERVICE DIGNOSIS chart, for shortage of water symptoms and corrections.

13. With the icemaker in the harvest cycle, hold ice against the bin thermostat control bulb to test shutoff, which should cause the icemaker to shut OFF at the END OF THE HARVEST CYCLE.

    Within minutes after the ice is removed from the sensing bulb, the bulb will warm up and cause the icemaker to restart. This control is factory set and should not be reset until testing is performed.

14. Replace control box cover and all cabinet panels and screws.

15. Thoroughly explain to the owner/user the significant specifications of the icemaker, the start up and operation, going through the procedures in the operating instructions. Answer all questions about the icemaker by the owner; and inform the owner of the name and telephone number of the authorized SCOTSMAN Distributor, or service agency serving him.

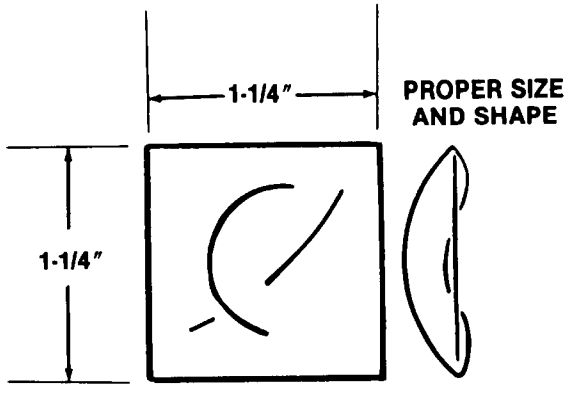

OPERATION

FREEZING CYCLE

Water from the sump assembly is pumped to the water distributor system, at the top of each evaporator plate. From the water distributor the water cascades by gravity over all cells of the plate and to the sump assembly below, for recirculation. At the beginning of the freezing cycle, the electrical circuit is completed to the compressor and the water pump. The water pump operates continuously, through both the freezing cycle and the harvest cycle.

In water-cooled models, water also flows through the condenser and out the drain. While in the condenser, water removes heat from the refrigerant and allows the refrigerant to condense from a gas to a liquid.

In the compressor, gaseous refrigerant is compressed and discharged into the condenser, as a high pressure, high temperature gas. The refrigerant is cooled by either air or water, and condenses into a high pressure, medium temperature liquid. This liquid refrigerant then passes through a small capillary tube, where the temperature and pressure of the liquid refrigerant are lowered and it next enters the evaporator plates. The refrigerant is warmed by the water cascading over the Evaporator plate and begins to boil off and become a gas. The refrigerant next travels through the accumulator and the heat exchange area of the suction line where any remaining liquid refrigerant boils off and returns to the compressor as a low pressure, low temperature gas, and the cycle starts again.

During the freezing cycle, the hot gas solenoid valve is CLOSED and the water inlet solenoid valve is CLOSED.

When the ice cubes are partially formed, the cube size control will sense the temperature at which it is preset to CLOSE. This will complete the electrical circuit to the timer. The timer then controls the remainder of the freezing cycle.

The timer will keep the icemaker operating in the freezing cycle for a selected length of time. This will give the ice cubes time to fully form. after that selected length of time, the timer will switch the icemaker into the harvest cycle, through the contacts of the timer assembly microswitch.

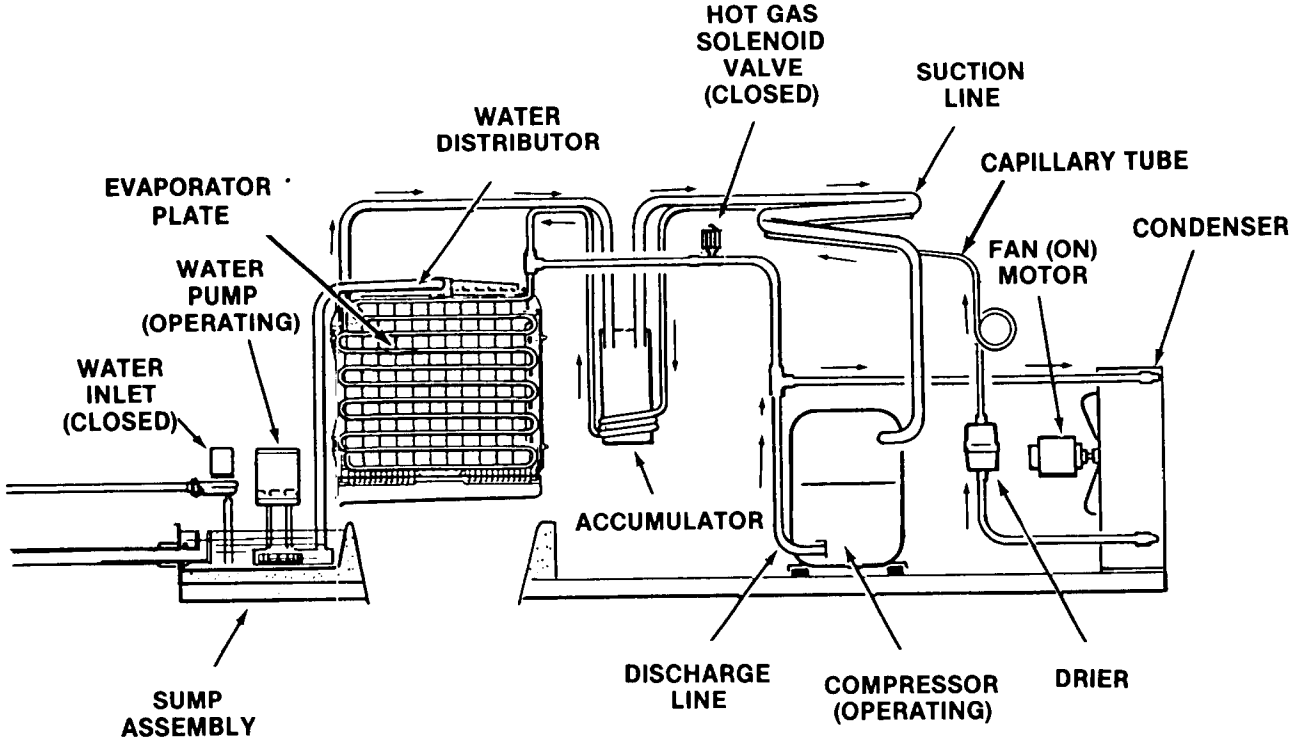

Freezing Cycle

CM650 OPERATION

HARVEST CYCLE - HOT GAS BYPASS

When the timer switches the icemaker into the harvest cycle, high pressure, high temperature gas refrigerant being discharged from the compressor is diverted from the condenser through the hot gas solenoid valve into each evaporator plate. During this cycle, the gaseous refrigerant bypasses the condenser and the capillary tube.

In the electrical circuit, both the compressor and the water pump are operating and the hot gas solenoid valve is energized and OPEN and the water inlet solenoid valve is OPEN.

The finished ice cubes are released from the sides of each evaporator plate, by the warming effect of the hot gas condensing in each evaporator plate and the water cascading over the ice cubes. The released ice cubes drop into the ice storage bin below.

At the end of the harvest cycle, the timer cam will push the actuator arm to the microswitch IN. If the bin thermostat is still CLOSED, a whole new cycle will begin. If the bin thermostat is OPEN, the icemaker will shut OFF, at this time.

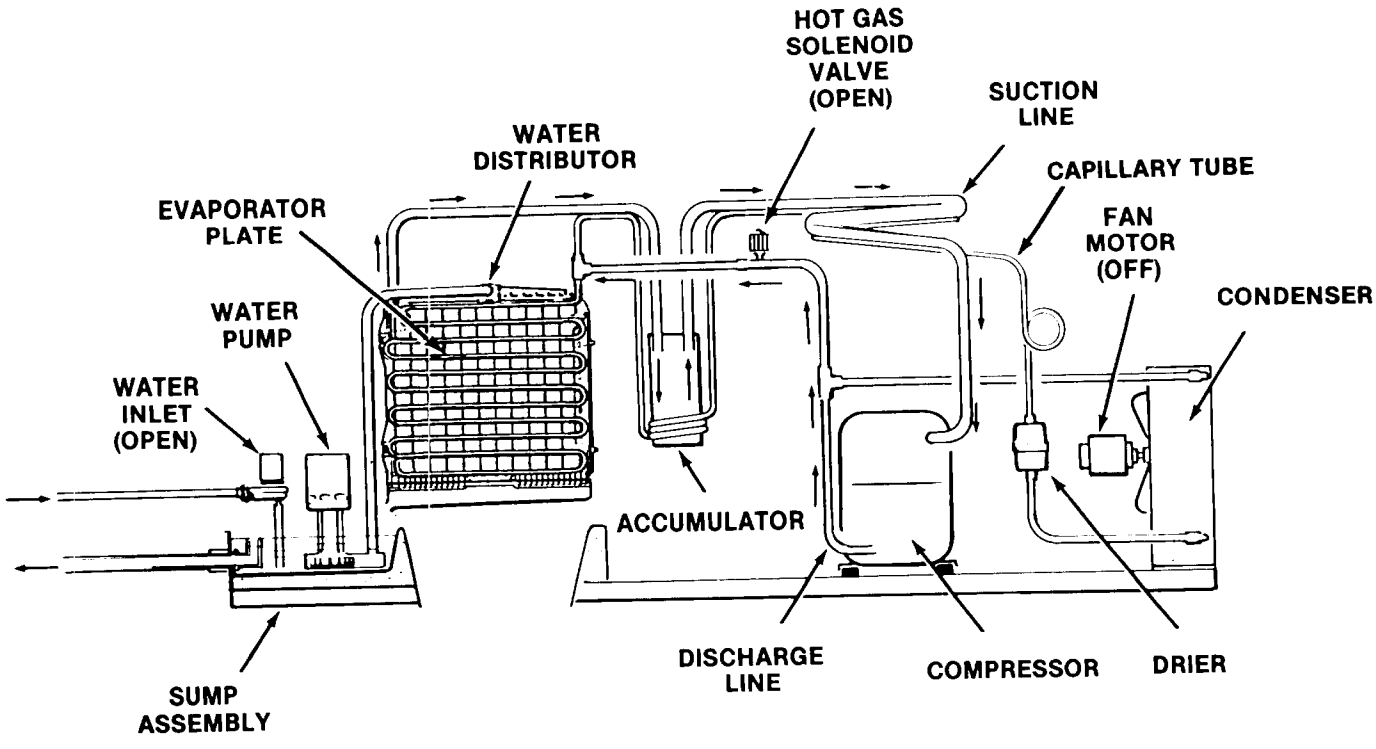

Harvest Cycle

CM650 OPERATION - ELECTRICAL SEQUENCE

The following charts illustrate which switches and which components are ON or OFF during a particular phase of the icemaking cycle.

Refer to the wiring diagram for a reference. Remember, the wiring diagram shows the unit as it is in the Timed Freeze Cycle.

BEGINNING FREEZE

ELECTRICAL COMPONENTS (LOADS)	ON	OFF
Compressor	X	
*Fan Motor (Air-cooled only)	X	
Hot Gas Valve		X
Inlet Water Valve		X
P.C. Board Relay Coil	X	
Timer		X
Water Pump	X	

SWITCHES	ON	OFF
Bin Thermostat	X	
Cube Size Thermostat		X
H.P. Fan Control	X	
Toggle - Master	X	
Toggle - Compressor	X	
H.P. Control	X	
Timer Micro Switch N.C.	X	
Timer Micro Switch N.O.	X	
Hi Temp Switch	X	

*The fan control will open and close with changes in discharge pressure, but will usually be closed during early freeze so the fan will usually be ON.

At the beginning of the freeze cycle the timer is not turning, but the icemaker is refrigerating the water starting to turn the water into ice.

CM650 OPERATION - ELECTRICAL SEQUENCE
TIMED FREEZE

ELECTRICAL COMPONENTS (LOADS)	ON	OFF
Compressor	X	
*Fan Motor (Air-cooled only)	X	
Hot Gas Valve		X
Inlet Water Valve		X
P.C. Board Relay Coil	X	
Timer	X	
Water Pump	X	

SWITCHES	ON	OFF
Bin Thermostat	X	
Cube Size Thermostat	X	
H.P. Fan Control	X	
Toggle Switch - Master	X	
Toggle Switch - Compressor	X	
H.P. Control	X	
Timer Micro Switch N.C.	X	
Timer Micro Switch N.O.	X	
Hi Temp Switch	X	

After the icemaker has cooled the water and formed some ice on the evaporator, the evaporator will have gotten cold enough to have the cube size control close. All this does is start and run the timer.

*The fan control will be opening and closing with the changes in discharge pressure, so the fan will be turning ON and OFF.

HARVEST

ELECTRICAL COMPONENTS (LOADS)	ON	OFF
Compressor	X	
*Fan Motor (Air-cooled only)		X
Hot Gas Valve	X	
Inlet Water Valve	X	
P.C. Board Relay Coil		X
Timer	X	
Water Pump	X	

SWITCHES	ON	OFF
Bin Thermostat	X	
Cube Size Thermostat		X
H.P. Fan Control		X
Toggle Switch - Master	X	
Toggle Switch - Compressor	X	
H.P. Control	X	
Timer Micro Switch N.C.	X	
Timer Micro Switch N.O.	X	
Hi Temp Switch	X	

The timer has now turned far enough so that the micro-switch plunger has dropped into the gap in the cam, this breaks the circuit to the relay in the P.C. Board - and that puts the machine into the Harvest cycle, where the hot gas valve and inlet water valve have opened to harvest the ice. When ice is on the bin control, it will open and at the end of the harvest cycle shut off the machine.

*The fan control will keep the fan OFF during the harvest cycle until the discharge pressure builds up to 190 PSIG, probably near the very end of the harvest cycle, then the fan will come ON.

CM650 SERVICE SPECIFICATIONS

In servicing a machine, it is often useful to compare that individual unit's operating characteristics to those of a normally operating machine. The numbers and facts listed on this page are for NEW, CLEAN machines.

Use these numbers as a guideline only.

COMPONENT	
Timer: 1 revolution of the cam, in minutes	8
Harvest Time, preset, in minutes	2-1/4
Inlet Water Valve, water flow in g.p.m.	3/4

	Close	Open
Cube Size Thermostat, Reverse Acting, Temperature Range	(+12^{0}F. to -6^{0}F.)	n/a
Bin Thermostat Temperature Range	38.5^0 - 43.5^0	33.5^0 - 38.5^0
High Pressure Safety Switch, Air Cooled PSIG	manual	450
High Pressure Safety Switch, Water Cooled, PSIG	manual	350
Fan Control	210	193

OPERATING CHARACTERISTICS

This model is air cooled or water cooled, and on air cooled models during the freezing cycle, the discharge pressure will slowly decline as the unit forms ice on the evaporators. At the same time the suction pressure is also dropping, reaching it's lowest point at the end of the freeze cycle. Compressor amps experience a similar decline. Water cooled models have a constant discharge pressure, usually about 220 psig.

During the harvest or defrost cycle, the suction pressure goes up dramatically with the opening of the hot gas by pass valve. The discharge pressure falls when this happens. On air cooled the fan may cycle during either cycle. Compressor amps reach their peak during harvest.

Freeze Cycle:

For example, on air cooled with conditions at 70^{0}F. air, and 50^{0}F. water, the discharge pressure will decline from about 250 at the begining to 200 by the end. Suction pressure at the end of freeze will be about 23 PSIG.

Freeze cycle time will be about 12-13 minutes.

Single phase total amps 5 minutes into the freeze cycle will be about 7.

At 90^0/70^0, the discharge pressures will go from about 350 down to 220. Suction pressure will be about 33 PSIG at the end of the 16-17 minute freeze cycle.

Harvest Cycle:

Discharge pressure at 70^0/50^0 will be about 140-150, and suction pressure will be around 95-100 PSIG.

At 90^0/70^0, discharge pressure will be about 160. Suction pressure will be about 110-120 PSIG.

The ice per cycle is 5.5 to 6 pounds.

The values listed are representative of values seen at a wide range of air and water temperatures and are for a normal cube size. When comparing these figures to field data, allow a variation from each end of the range given.

After servicing refrigeration system, always torque the access valve caps to 60-75 inch pounds.

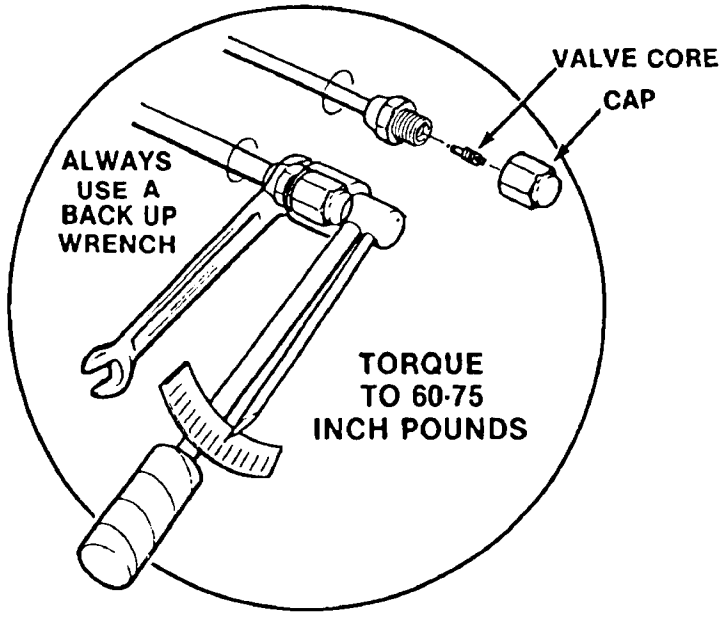

CM650 MAINTENANCE & CLEANING INSTRUCTIONS

A Scotsman Ice System represents a sizable investment of time and money in any company's business. In order to receive the best return for that investment, it MUST receive periodic maintenance.

It is the USER'S RESPONSIBILITY to see that the unit is properly maintained. It is always preferable, and less costly in the long run, to avoid possible down time by keeping it clean; adjusting it as needed; and by replacing worn parts before they can cause failure. The following is a list of recommended maintenance that will help keep the machine running with a minimum of problems.

Maintenance and Cleaning should be scheduled at a minimum of twice per year.

ICEMAKER

THE FOLLOWING MAINTENANCE SHOULD BE SCHEDULED AT LEAST TWO TIMES PER YEAR ON THIS ICEMAKER. CALL YOUR AUTHORIZED SCOTSMAN SERVICE AGENCY.

1. Check and clean or service any optional water treatment devices, if any.

2. Clean the water strainer.

3. On air cooled models, clean the air cooled condenser. Do not use a wire brush. Vacuum or blow out any dust in the fins of the condenser: the condenser is only clean when light can be seen through the fins.

4. Check that the cabinet is level in the side to side and front to back directions.

5. Clean the water system, evaporator plates and sump assembly, using a solution of Scotsman Ice Machine Cleaner. Refer to CLEANING - Icemaker.

Cleaning requirements vary according to local water conditions and to how much the machine runs. Continuous check of the clarity and shape of the ice cubes, with a visual inspection of the water system parts, evaporator parts and the reservoir will indicate if more frequent cleaning is needed.

6. Check and tighten all bolts and screws.

7. Check for water leaks and make corrections.

8. Check that the bin thermostat operates correctly: holding ice on the thermostat control tube in the bin should cause the icemaker to shut off at the end of the harvest cycle. After the ice is removed, the icemaker should restart within a few minutes.

9. Check cube size, adjust if required.

10. Check harvest time, adjust if required.

ICE STORAGE BIN

The interior liner of the bin is in contact with a **food** product: **ice.** The storage bin must be **cleaned** regularly to maintain a **sanitary** environment. Once a week cleaning with soap and water, a hot water rinse and an air dry is a basic procedure.

Every 90 days, the liner should be sanitized with a commercial ice machine sanitizer, according to the directions of the sanitizer, or with a solution of household bleach and water:

1. Mix the bleach and water using the ratio of two ounces of bleach to two gallons of water.

2. Wipe all interior surfaces of the ice storage bin with the bleach and water.

3. Allow to air dry.

CLEANING: ICEMAKER

1. Remove front panel.

2. Switch the compressor switch to OFF. Switch the master switch to OFF.

3. Remove 4 thumbscrews and the front liner.

4. Twist forward and remove the front drain trough, and switch the master switch to ON, pumping the water from the reservoir into the bin. Replace the drain trough.

5. Mix 8 ounces of Scotsman Ice Machine Cleaner with 1 gallon of warm (95^0F. - 115^0F.) water and pour into the reservoir until full.

WARNING

Scotsman Ice Machine Cleaner contains Phosphoric and Hydroxyacetic acids. These compounds are corrosive and may cause burns. If swallowed, DO NOT induce vomiting. Give large amounts of water or milk. Call Physician immediately. In case of external contact, flush with water. KEEP OUT OF THE REACH OF CHILDREN.

CM650 MAINTENANCE & CLEANING INSTRUCTIONS

6. Let the unit operate for 30 minutes with the compressor off, then switch the unit off.

7. Remove the front drain trough again.

8. Switch on the master switch to pump water from the sump into the bin. Continue to add fresh water to flush residual cleaner from the system. Switch the master switch off.

9. Wash the plastic and stainless liners of the freezer section with a solution of household bleach (1 ounce of bleach to 1 gallon of water) and warm (95^0F.-115^0F.) water. Allow to air dry.

10. Replace the drain trough and front liner.

11. Switch the master and compressor switches back on.

12. Replace the front panel

13. Check the next batch of cubes to make sure all of the acid taste is gone.

////////////////////////////////CAUTION////////////////////////////////

DO NOT use ice cubes produced from the cleaning solution. Be sure none remain in the bin.

//

14. Pour hot water into the storage bin to melt the cubes and also clean out the bin drain.

15. The unit is now ready for continued automatic operation.

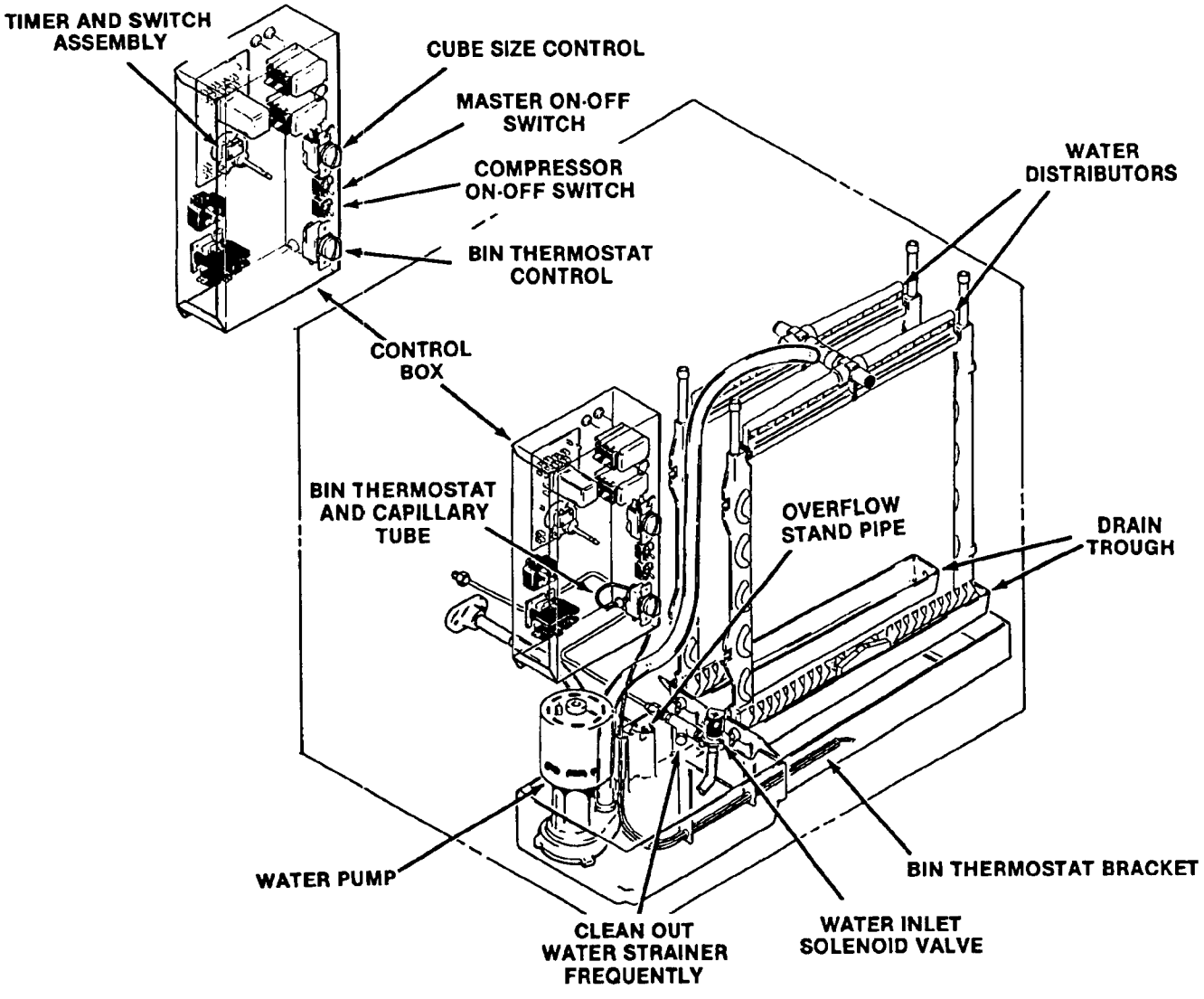

CM650 COMPONENT DESCRIPTION

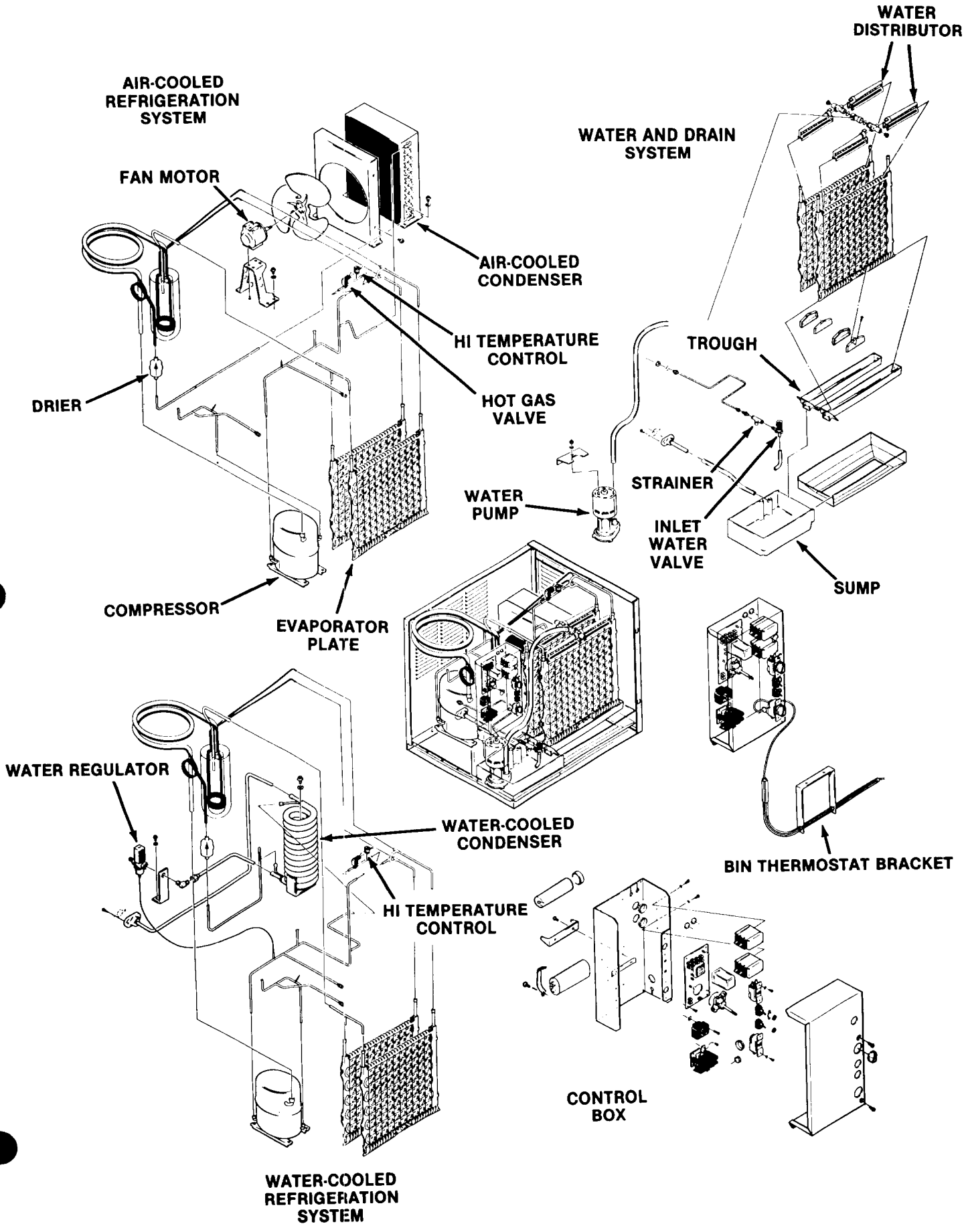

CM650 COMPONENT DESCRIPTION

BIN THERMOSTAT CONTROL

The bin thermostat is located on the front edge of the control box with an accessible knob on the front. The sensing capillary tube is routed from the control out the side of the control box down and across the front edge of the sump and down into the bin thermostat bracket. The bin thermostat control functions to automatically shut OFF the icemaker, when the ice storage bin is filled and ice contacts the capillary tube. It also signals the RESTART of the icemaker, when the capillary tube starts to warm up, after ice has been removed from the bin.

Bin thermostat control adjustment should ONLY be performed on icemakers installed in extreme warm or cold locations and adjust only in increments of one eighth turn at a time.

COMPRESSOR CONTACTOR

The compressor contactor functions to carry the compressor line current. The contactor is wired so any control in the pilot circuit, such as the bin thermostat, and high pressure controls, etc., will cause the contactor holding coil to be de-energized, when the control contact OPENS, thereby breaking the circuit to the compressor.

CUBE SIZE CONTROL

The temperature sensing cube size control affects the length of the freezing cycle prior to initiating the finishing timer. The cube size control closes its contacts when the evaporator reaches a preset temperature, starting the finishing timer. A variation in either ambient air or incoming water temperature will affect the efficiency of the refrigeration system. This will vary the length of time it takes the evaporator to reach the temperature at which the cube size control is preset to CLOSE; which, in turn, will affect the overall cycle time.

See *Cube Size Adjustment* BEFORE attempting to adjust the control.

RELAY

The multi-function, three pole, double-throw, plug-in relay is installed directly into a receptacle on the printed circuit board in the control box. The relay functions in part to by-pass the bin thermostat control to prevent the icemaker from shutting OFF, when a filled-bin condition occurs during the freezing cycle. The by-pass action serves to ensure full-sized ice cubes with each harvest cycle; and, to prevent short cycling on the bin thermostat control.

TIMER — Timer & Switch Assembly

The function of the timer begins when activated by the cube size control. The outer surface, or large diameter lobe of the timer cam, determines the timer cycle for finish freezing of the ice cubes, while the inner surface, or small diameter lobe, determines the time cycle for the harvest sequence. All electrical circuitry is connected through the printed circuit board and the timer and shunted by the single-pole, double-throw microswitch to either the freezing cycle or the harvest cycle. The microswitch is actuated by a cam assembly directly connected to the timer motor. The timer cam can be adjusted to vary the defrost line, as required. One complete rotation of the cam will take eight minutes. Harvest is preset at two and one-fourth minutes.

HIGH PRESSURE SAFETY CONTROL

This is a manual reset control that shuts down the icemaker, should the discharge pressure ever reach 450 PSIG on air-cooled and 350 PSIG on water-cooled.

CM650 COMPONENT DESCRIPTION

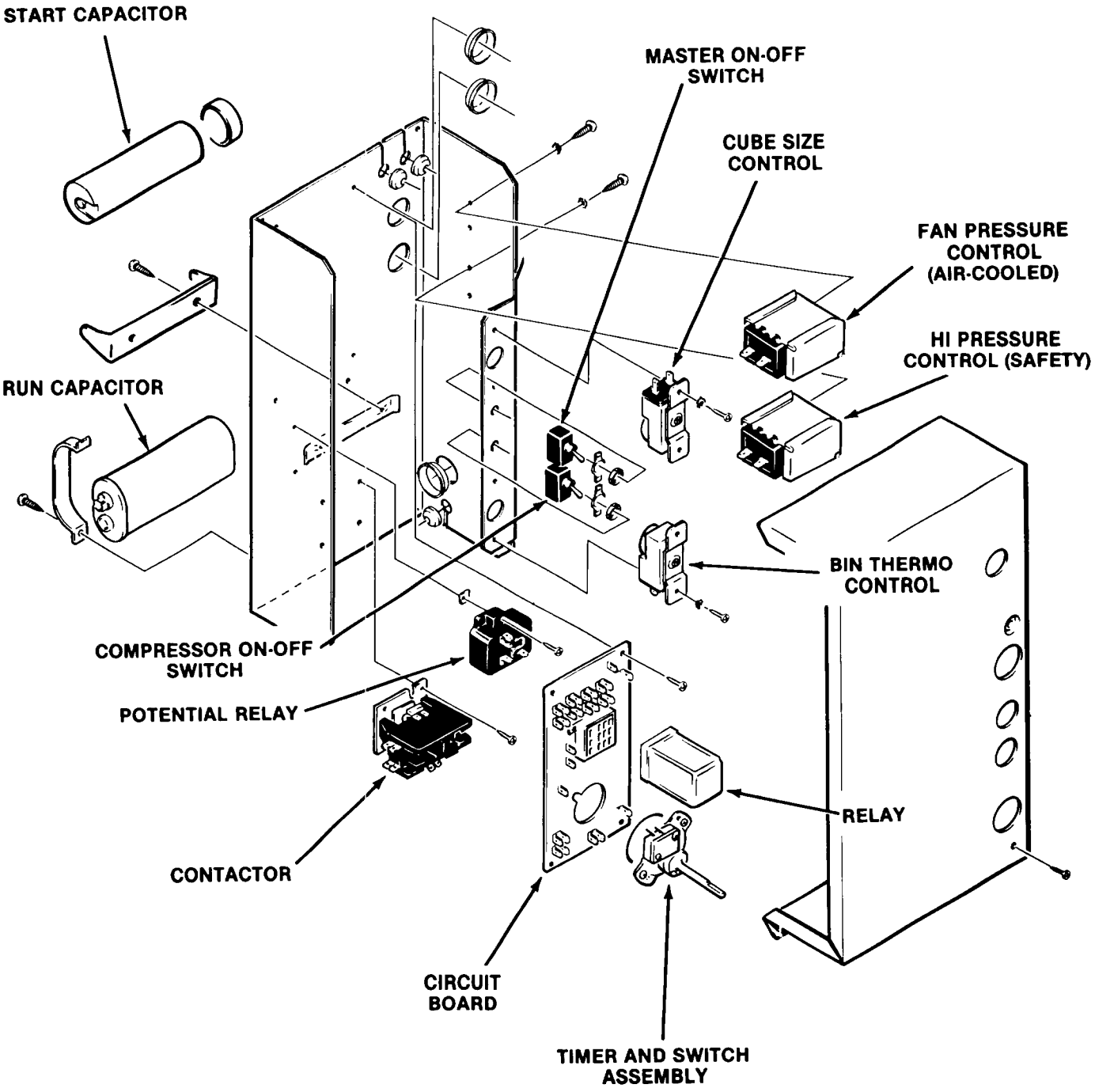

WATER INLET SOLENOID VALVE

The water inlet solenoid valve functions to fill the sump assembly with water and overflow out the overflow standpipe located at the bottom of the sump. This action fills and rinses the sump during each harvest cycle. The flow rate is .75 g.p.m.

WATER REGULATOR VALVE -- Water-Cooled Model

The water regulator valve functions to maintain a constant compressor head pressure, by regulating the amount of inlet water flow through the condenser on water-cooled models. The valve operates through the refrigerant system high side pressure. Rotating the adjusting screw, located on top of the valve, can INCREASE or DECREASE the water flow through the water-cooled condenser, which in turn, will DECREASE or INCREASE the compressor operating head pressure. It is to be set at 220 PSIG.

When installing a replacement water regulator valve, be sure the replacement valve is installed with the arrow positioned in the direction of the water flow.

WATER DISTRIBUTION SYSTEM

The water distribution system functions to evenly supply water to all cells of the evaporator plates. The water pump pumps water from the sump up the vertical tygon tube to the tee. From there water is channeled through the water manifold to the water distributors, above each evaporator plate, and from six holes within each distributor, water flows to the cells of each side of the evaporator plates. Gravity flow returns the unfrozen excess portion of water to the sump reservoir for recirculation.

HOT GAS SOLENOID VALVE

The hot gas solenoid valve functions only during the harvest cycle, to divert the hot discharge gas from the compressor, bypassing the condenser and capillary tube, for direct flow in the evaporator plates to release ice cubes from the ice cube molds. The hot gas solenoid valve is comprised of two parts, the body & plunger and the coil & frame assemblies. Installed in the discharge line of the compressor, the energized solenoid coil lifts the valve stem within the valve body, to cause the hot discharge gas to be diverted when the finishing timer has advanced to the start of the harvest cycle.

FAN PRESSURE CONTROL — Air-Cooled Models only. In both freeze and harvest cycles, the fan pressure control functions to maintain a minimum discharge pressure by cycling the fan on and off. The approximate C.I. is 210 PSIG and C.O. is 193 PSIG.

STRAINER

A water strainer is located in the potable inlet water line before the water inlet solenoid valve. Clean the water strainer frequently.

CM650 COMPONENT DESCRIPTION

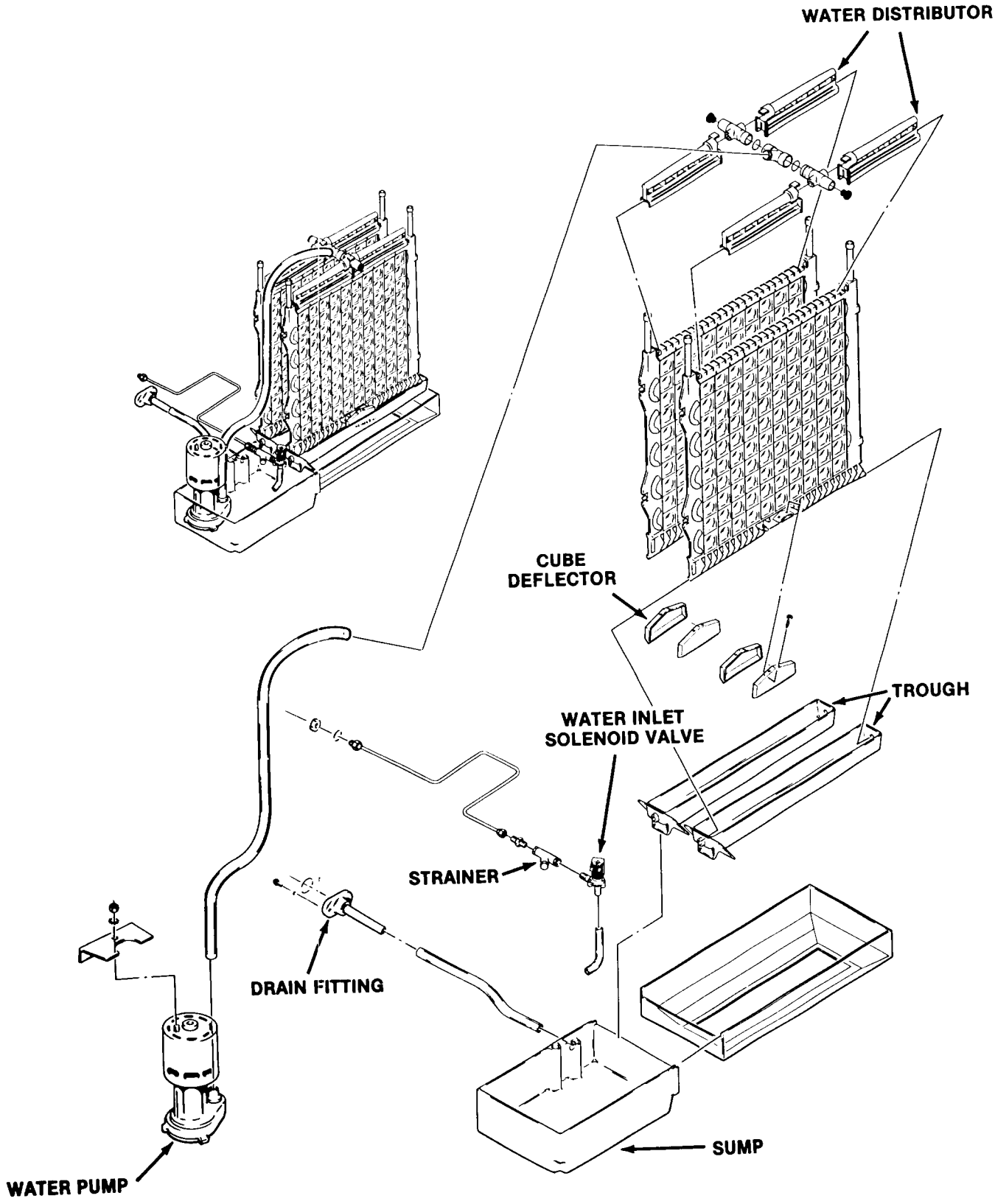

CLEAN OUT
WATER STRAINER
FREQUENTLY

CM650 SERVICE DIAGNOSIS

The service diagnosis section is for use in aiding the serviceman in diagnosing a particular problem for pin-pointing the area in which the problem lies, thus an ever available reference for proper corrective action.

The following chart lists corrective actions for the causes of known symptoms of certain problems that can occur in the icemaking-refrigeration system.

ICEMAKING - REFRIGERATION SYSTEM

SYMPTOM	POSSIBLE CAUSE	CORRECTION
Irregular size cubes some cloudy.	Some distributor holes plugged.	Clean distributor holes.
		Clean water sump.
	Shortage of water.	See shortage of water CORRECTION.
	Unit not level.	Level cabinet, as required.
Cubes too large.	Dirty air-cooled condenser.	Clean condenser.
	Cube size control set too cold.	Rotate cube size control dial toward WARMER.
Cubes too small.	Cube size control set too warm.	Rotate cube size control dial toward COLDER.
	Partially restricted capillary tube. (Kinked, pinched off, etc.)	Replace heat exchange assembly.
	Moisture in refrigeration system.	Blow refrigerant charge; replace drier; evacuate system; add proper refrigerant charge.
	Shortage of water.	See shortage of water CORRECTION.
Cloudy cubes.	Shortage of water.	See shortage of water SYMPTOM.
	Dirty water supply.	Check water quality and install water purification system.
	Accumulated impurities.	Use SCOTSMAN Ice Machine Cleaner and clean icemaker.
Shortage of water.	Short harvest cycle.	Adjust cam of timer and switch assembly.
	Water leak in sump area or off evaporator plate.	Locate Leak and correct condition.
	Partial restriction in water inlet strainer or inlet water valve.	Clean or replace strainer or valve.
	Water pressure too low.	Check for 20 PSI flowing water. Restore pressure.

CM650 SERVICE DIAGNOSIS

SYMPTOM	POSSIBLE CAUSE	CORRECTION
Decreased ice capacity.	High head pressure, result of dirty condenser or faulty fan motor or fan pressure switch or on water-cooled - not enough water through condenser.	Clean condenser. Repair or replace fan motor or switch. Check with regulator valve.
	Non-condensable gas in the system	Purge the system, evacuate and recharge per nameplate requirements.
	Poor air circulation or extreme hot location.	Relocate the cabinet; or provide ventilation.
	Overcharge of refrigerant.	Evacuate and recharge per nameplate.
	Hot gas solenoid valve leaking.	Replace valve.
	Partially restricted capillary tube.	See cubes too small CORRECTION.
	Defective compressor.	Replace compressor.
Poor harvests. Icemaker does not harvest.	Too short defrost time.	Check and adjust harvest cycle.
	Restriction in water inlet line.	Check strainer and inlet water valve.
	Hot gas solenoid does not open. Binds or burned out.	Replace solenoid, coil or valve as applicable.
	Undercharge of refrigerant.	Charge to nameplate requirements.
	Water pressure too low.	Check for 20 PSI flowing water. Restore pressure.
	Cube size too large or too small.	Adjust size with cube size control.
	Water-cooled models: water Regulator valve leaks water thru during harvest.	Replace water regulator valve.
Compressor cycles intermittently.	Low voltage.	Check for circuit overload. Check building supply voltage, if low, contact power company.
	Dirty condenser.	Clean condenser with vacuum cleaner or brush. DO NOT USE A WIRE BRUSH.
	Air circulation blocked.	Locate cabinet with adequate air space for proper air flow.
	Defective fan motor.	Replace fan motor.
	Non-condensable gases in system.	Purge the system and recharge per nameplate requirements.
Icemaker will not operate.	Blown fuse in line.	Replace fuse and check for cause.
	Master switch in OFF position.	Set switch to ON position.
	Faulty master switch.	Replace switch.
	Timer contacts open.	Replace timer microswitch.
	Faulty bin thermo.	Replace.
	Off on high head pressure safety switch.	Water-Cooled - water interruption correct. Air-Cooled - condenser not getting air.

CM650 ADJUSTMENT PROCEDURES

ADJUSTMENT OF THE BIN THERMOSTAT CONTROL

The control for the bin thermostat is the temperature control, located in the front of the control box.

The bin thermostat control requires adjustment only if the icemaker shuts off prematurely. Turn adjusting knob, in 1/8 turn or less increments, in the appropriate direction until the icemaker shuts OFF.

Remove ice from the capillary bulb; then, place warm hand on the capillary bulb to restart the icemaker.

Place handful of ice against the capillary bulb and observe that the icemaker should shut OFF. (Only at the end of harvest).

CAUTION

The adjusting screws on the temperature control device have very sensitive response to adjustment. DO NOT attempt to adjust the screw until after thoroughly reading and understanding the instructions and illustrations. Over-adjusting or erratic guessing, can foul the instrument and cause ultimate delay and part replacement, WHICH COULD HAVE BEEN PREVENTED.

ALTITUDE ADJUSTMENT
over 2,000 feet above sea level only

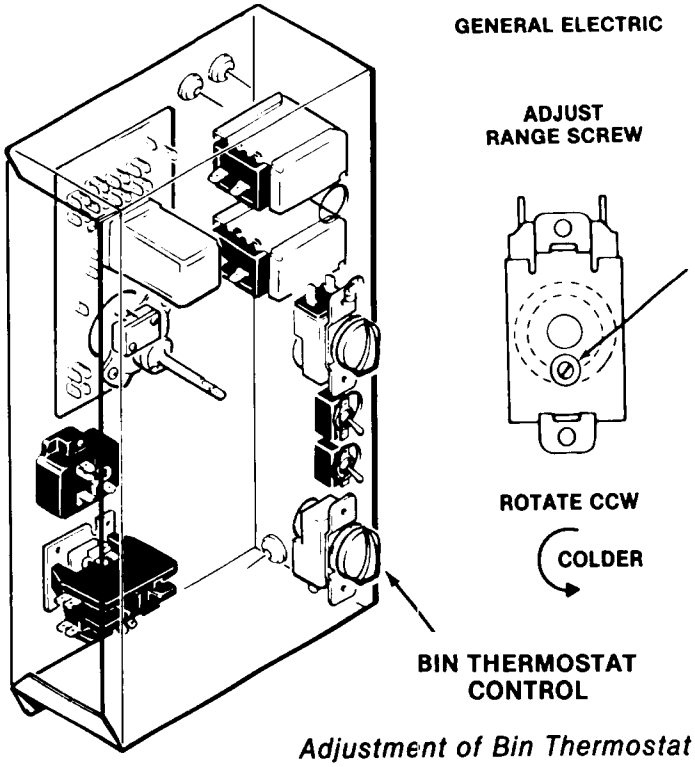

Adjustment of Bin Thermostat

ADJUSTMENT OF THE WATER REGULATOR ASSEMBLY — WATER-COOLED MODELS

The correct compressor head pressure on water-cooled models is 220 PSIG. Adjusting the water regulator valve increases or decreases the rate of flow of water, through the water-cooled condenser; which increases or decreases the affected temperature/pressure of the compressor head pressure, INCREASED water flow, results in DECREASED or LOWER head pressure; while, DECREASED water flow, results in INCREASED or HIGHER head pressure.

To adjust the water regulator assembly:

To INCREASE the head pressure: Rotate the adjusting screw COUNTERCLOCKWISE.

To DECREASE the head pressure: Rotate the adjusting screw CLOCKWISE.

Check change in compressor head pressure, and repeat adjustment as necessary, to achieve desired operating head pressure.

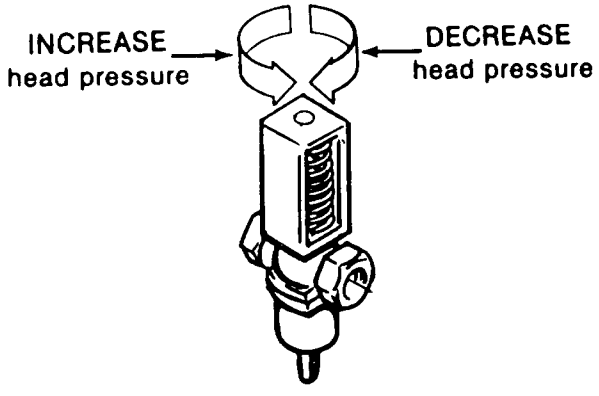

WATER REGULATOR

CM650 ADJUSTMENT PROCEDURES

ADJUSTMENT OF THE CUBE SIZE CONTROL

CAUTION

BEFORE performing actual adjustments to the cube size control, check other possible causes for cube size problems, refer to SERVICE DIAGNOSIS for problem review and analysis. DO NOT perform adjustment when a new cube size control is installed, until the control bulb has been properly installed in the tube well, on the evaporator outlet tube and the icemaker has progressed through several complete freezing and harvest cycles, to observe size and quality of ice cubes freezing and harvest cycles, and whether or not a cube size problem exists.

As a reverse acting temperature control, adjustment on the cube size control is performed to cause either larger sized ice cubes or smaller sized ice cubes to be produced.

To produce LARGER sized ice cubes:

1. Locate the cube size control, on the front of the control box.
2. Rotate the adjusting knob one-eighth of a turn CLOCKWISE toward COLDER.
3. Observe size of ice cubes in next two ice cube harvests and repeat step 2 above, in one-eighth turn increments, until correct ice cube size is achieved.

To produce SMALLER sized ice cubes:

1. Locate the cube size control, on the front of the control box.
2. Rotate the adjusting knob one-eighth of a turn COUNTERCLOCKWISE toward warmer.
3. Observe size of ice cubes in next two ice cube harvests and adjust in one-eighth turn increments, until correct ice cube size is achieved.

ADJUSTMENT OF THE TIMER & SWITCH ASSEMBLY

The timer and switch assembly if factory set, so one complete revolution of the cam on the timer represents eight minutes. Five and one-half minutes comprise the freezing cycle event during cam rotation, and the final two and one-half minutes program the defrost and harvest cycle. Rotating the shaft of the timer cam CLOCKWISE will allow positioning the actuator arm of the microswitch on the cam at the selected start position for either the freezing cycle or harvest cycle, as required in the cleaning instructions.

WARNING

Disconnect electrical power supply to icemaker whenever adjustment procedures are performed.

To adjust the timer & switch assembly:

A. HARVEST CYCLE: Slowly rotate the shaft of the timer and switch assembly, located in the control box, CLOCKWISE, until the actuator arm on the microswitch initiates the harvest cycle. An audible click can be heard, but in a noisy area, look at the cam and switch to observe the event.

B. FREEZING CYCLE: Slowly rotate the shaft of the timer and switch assembly, located in the control box, CLOCKWISE, until the actuator arm on the microswitch initiates the freezing cycle.

C. The length of the harvest cycle can be changed by loosening the adjustment screw on the cam. The normal setting is two and one-quarter minutes, as set at the factory. It is important that the length of the harvest cycle allow enough time for all the ice cubes to fall from the evaporator. Too short of a time will cause the evaporator to freeze up and stop ejecting ice into the bin. Too much time wastes icemaking capacity, energy and water. Adjustment of the harvest cycle may require a corresponding adjustment of the cube size control.

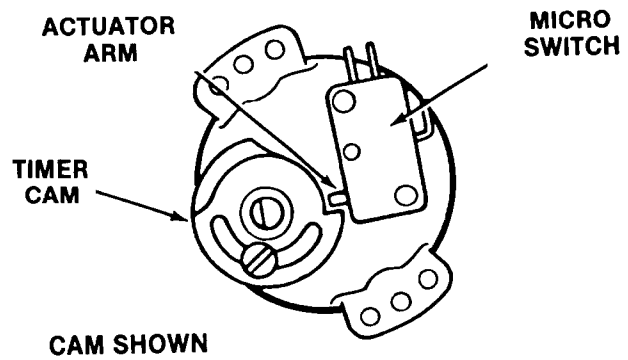

CAM SHOWN AT BEGINNING OF HARVEST CYCLE

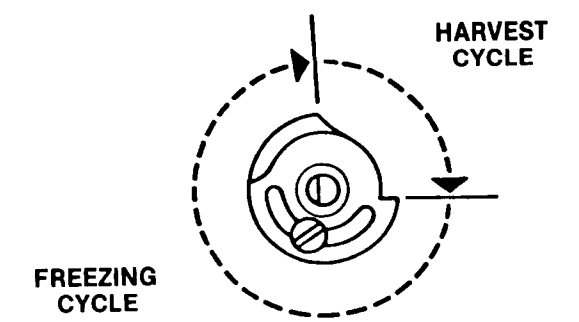

CAM SHOWN DIVIDED INTO TYPICAL FREEZING AND HARVEST CYCLES

CM650 REMOVAL AND REPLACEMENT PROCEDURES

WARNING

Be sure the electrical power supply circuit breaker and the inlet water supply are OFF, BEFORE starting any of the following REMOVAL AND REPLACEMENT procedures as a precaution to prevent possible personal injury or damage to equipment.

REMOVAL AND REPLACEMENT OF THE DRIER

To remove the drier:

1. Pull out to unsnap catches and remove the front panel.
2. Remove screws and remove left side access panel.
3. Bleed off or blow the refrigerant charge through the Schrader valve.
4. Unsolder refrigeration lines at both ends of the drier, and remove the drier.

To replace the drier:

CAUTION

If the factory seal is broken on the replacement drier, exposing it to the atmosphere more than a few minutes, the drier will absorb moisture from the atmosphere and lose substantial ability for moisture removal.

Be sure the replacement drier is installed with the arrow positioned in the direction of the refrigerant flow.

1. Remove the factory seals from the replacement drier and install the drier in the refrigerant lines with the arrow positioned in the direction of the refrigerant flow.
2. Solder the drier into the lines, two places, taking precautions to NOT OVERHEAT the drier body, during installation soldering.
3. Purge the system and check for leaks.
4. Thoroughly evacuate the system to remove moisture and non-condensables.
5. Charge the system with refrigerant, by weight. SEE NAMEPLATE.
6. Replace and attach the left side panel.

NOTE

Always install a replacement drier, anytime the sealed refrigeration system is opened. Do not replace the drier until all other repair or replacement has been completed.

REMOVAL AND REPLACEMENT OF THE EVAPORATOR PLATE ASSEMBLY

1. Remove the front and top panels.
2. Bleed off or blow the refrigerant charge through the Schrader valve.
3. Disconnect Tygon water inlet tube(s), at the water manifold tee(s), above the evaporator plates.
4. Unsnap the sump assembly from the lower left and right attachment points on each evaporator plate.
5. Slide the water distributor tubes about 1/8-inch along the top of the evaporator plate to be removed, until the left water distributor tube can be lifted upward.
6. Lift the end of the water distributor tube and slide the distributors toward the left along the top of the evaporator plate, until the flexible right notch is cleared.
7. Unsnap and disconnect each left and right water distributor tube from the water manifold section.

CAUTION

Use EXTRA PRECAUTION to protect the plastic parts during the next step to unsolder the refrigerant lines, two places, at the top of the evaporator plate. Position wet cloths over top of plates, as well as over the plastic liner at the rear, or sides, to prevent accidental heat damage, or possible fire from torch flame.

8. Unsolder and remove the refrigerant lines at the top of the evaporator plate to be replaced.
9. Remove nuts at left of the evaporator then, loosen the braces just enough to remove the evaporator plate. Temporarily replace the braces, to support the remaining evaporator plate.

To replace the evaporator plate, reverse the removal procedures. See Nameplate. Weigh in proper charge of R-502.

CM650 REMOVAL AND REPLACEMENT PROCEDURES

REMOVAL AND REPLACEMENT OF THE COMPRESSOR ASSEMBLY

To remove the compressor assembly:

1. Pull out to unsnap catches and remove the front panel.
2. Remove screws and remove cabinet top and left side access panel.
3. Bleed off or blow the refrigerant charge through the Schrader valve.
4. Remove the cover from the terminal box on the compressor; then, remove electrical leads from the compressor.
5. Unsolder suction, discharge and process header from compressor.
6. Remove four bolts and washers which secure the compressor to the chassis mounting base.
7. Remove the compressor from the cabinet.

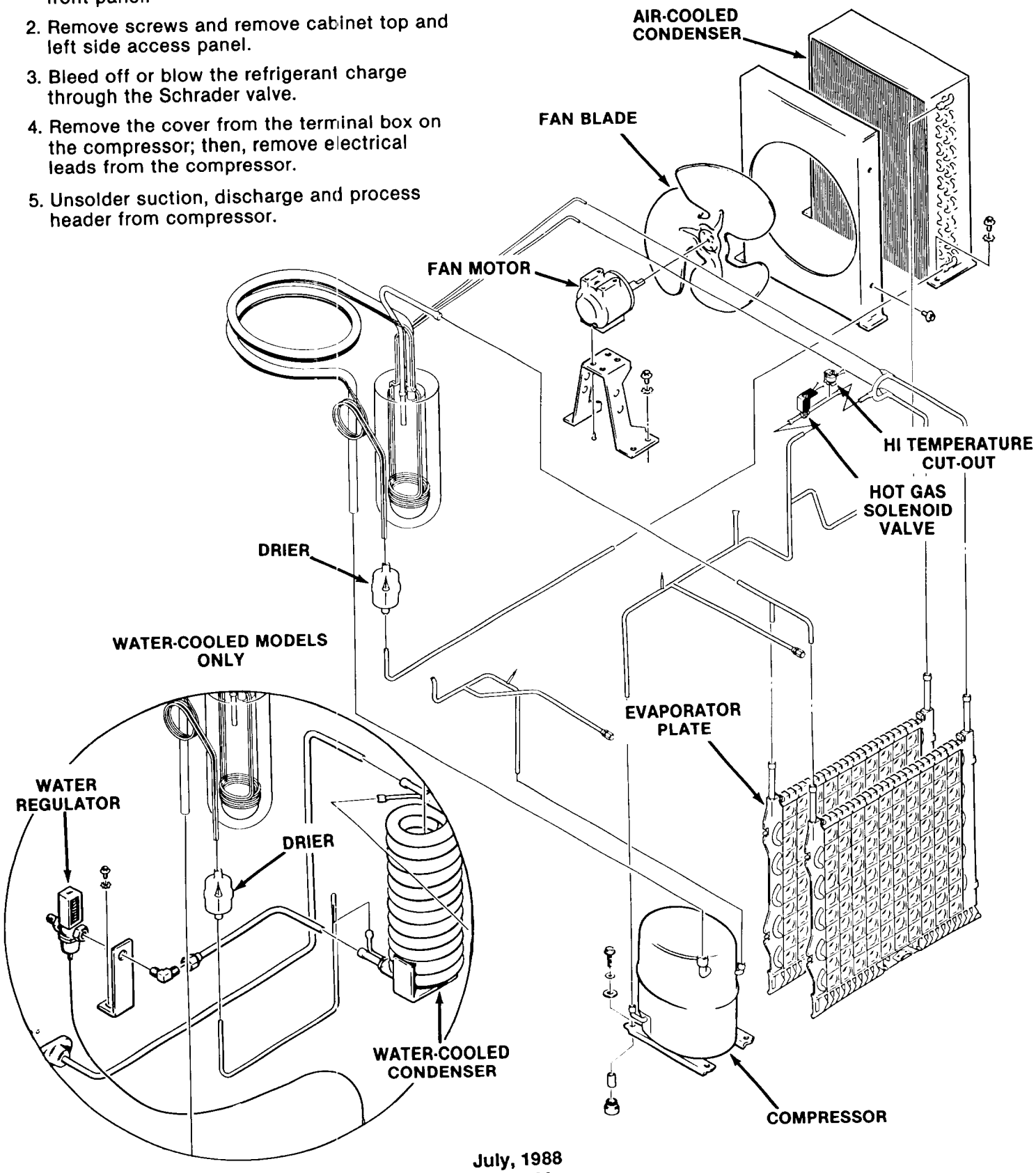

CM650 REMOVAL AND REPLACEMENT PROCEDURES

WARNING

Disconnect electrical power supply to icemaker whenever adjustment procedures are performed.

REMOVAL AND REPLACEMENT OF THE CONDENSER — AIR-COOLED MODELS

To remove the condenser:

1. Pull out to unsnap catches and remove the front panel.
2. Remove screws and remove cabinet top and right service side panels.
3. Bleed off or blow the refrigerant charge through the Schrader valve.
4. Unsolder and disconnect refrigerant lines from the condenser.
5. Unsolder and remove the drier from the refrigerant lines connecting to the condenser.
6. Remove screws, lockwashers and the condenser from the chassis base.

To replace the air-cooled condenser, reverse the removal procedure.

REMOVAL AND REPLACEMENT OF THE CONDENSER — WATER-COOLED MODELS

To remove the condenser:

1. Remove screws and the right side panel.
2. Bleed off or blow the refrigerant charge through the Schrader valve.
3. Check to be sure building source water inlet supply shutoff valve to rear of chassis is OFF.
4. Disconnect water-cooled condenser inlet water line at the water regulator assembly outlet fitting.
5. Unsolder the refrigerant capillary tube distributor line at the outlet end of the drier, the refrigerant liquid line from the bottom of the condenser, and remove the drier from the lines.
6. Unsolder the compressor discharge line, at the top of the water-cooled condenser.
7. Unsolder the compressor discharge line at the top of the water-cooled condenser and the refrigerant line from the bottom of the water regulator valve.
8. Remove two screws and washers and the water-cooled condenser from the cabinet.

To replace the water-cooled condenser, reverse the removal procedures.

REMOVAL AND REPLACEMENT OF THE FAN MOTOR — AIR-COOLED MODELS

To remove the fan motor assembly:

1. Pull out to unsnap catches and remove the front panel.
2. Remove unit top or left side panel.
3. Disconnect the two electrical leads, from the fan motor, at the control box assembly.

Before next step, measure or make accurate mental note of the distance the fan blades extend beyond the fan shroud, so during replacement the correct distance is maintained.

4. Remove screws and the fan motor and bracket assembly; and remove the fan motor and bracket from the chassis base.
5. Loosen set screws on the fan blade and remove the fan blade from the fan motor. Mark or note position of the blade on the shaft of the fan motor, for replacement.
6. Remove screws and lockwasher and separate the fan motor from the fan motor bracket.

To replace the fan motor assembly, reverse the removal procedure.

Be sure to replace the fan blade with the hub of the fan blade facing the fan motor, to ensure air flow is toward the fan motor; and, is set at marked location on shaft and setscrews tightened on the FLAT part of the shaft of the fan motor.

NOTE

Always install a replacement drier, anytime the sealed refrigeration system is opened. Do not replace the drier until all other repair or replacement has been completed.

Thoroughly evacuate the system to remove moisture and non-condensables.

CM650 REMOVAL AND REPLACEMENT PROCEDURES

WARNING

Disconnect electrical power supply to icemaker whenever adjustment procedures are performed.

REMOVAL AND REPLACEMENT OF THE CUBE SIZE CONTROL

To remove the cube size control:

1. Remove front panel.
2. Remove cover from control box.
3. Trace capillary tube, from the cube size control to the refrigerant suction line.
4. Remove the coiled capillary tube bulb from the tube well on the suction line.
5. Remove electrical leads from the cube size control.
6. Remove screws and the cube size control.

To replace the cube size control, reverse the removal procedure.

REMOVAL AND REPLACEMENT OF THE WATER DISTRIBUTOR TUBES AND MANIFOLD TUBES

To remove the water distributor tube and manifold tube:

1. Pull out to unsnap catches and remove the front panel.
2. Remove 4 thumb screws and remove the evaporator cover.
3. Slide the water distributor tube to the left about 1/8-inch along the top of the evaporator plate, until the water distributor tube can be unsnapped from the flexible notch and lifted upward to the right side.
4. Unsnap and disconnect water distributor tubes from the water manifold section.

To replace the water distributor tubes and manifold tubes, reverse the removal procedure. BE SURE the notches in the water manifold tubes properly engage the alignment keys in the tee.

BE SURE the water distributor tube is securely fastened at the notch at both sides of the evaporator plate.

Check identical attachment for the left water distributor tube and notch; also, that the distributor/manifold connections at the top center of each evaporator plate is snug against the top of the plate.

REMOVAL AND REPLACEMENT OF THE BIN THERMOSTAT CONTROL

To remove the bin thermostat control:

1. Remove front panel.
2. Remove screws and the control box cover.
3. Remove wire leads from the bin thermostat control.
4. Unthread the capillary tube and remove from the bin thermostat control bracket at the bottom right side of the evaporator section.
5. Remove the two screws attaching the bin thermostat control to the side of the control box; then, carefully pull the capillary tube out of the evaporator section. Carefully remove the bin thermostat control and capillary tube from the control box.

To replace the bin thermostat control, reverse the removal procedure.

REMOVAL AND REPLACEMENT OF THE INLET WATER SOLENOID VALVE ASSEMBLY

To remove the inlet water solenoid valve assembly:

1. Shut OFF water supply to machine.
2. Remove screws and pull the water solenoid valve out to gain access.
3. Loosen and remove inlet water line fitting from the inlet water solenoid valve assembly.
4. Remove inlet water Tygon tubing from the water solenoid valve.

To replace the inlet water valve assembly, reverse the removal procedures.

NOTE

Always install a replacement drier, anytime the sealed refrigeration system is opened. Do not replace the drier until all other repair or replacement has been completed.

CM650 REMOVAL AND REPLACEMENT PROCEDURES

WARNING

Disconnect electrical power supply to icemaker whenever adjustment procedures are performed.

REMOVAL AND REPLACEMENT OF THE WATER PUMP ASSEMBLY

To remove the water pump assembly:

1. Pull out to unsnap catches and remove the front panel.
2. Remove the Tygon tube to the pump assembly.
3. Disconnect electrical leads from the water pump assembly.
4. Loosen thumbscrew, loosen Phillips headscrew, lift pump up and remove from unit.
5. Remove one nut and mounting bracket from top of water pump.

To replace the water pump assembly, reverse the removal procedure.

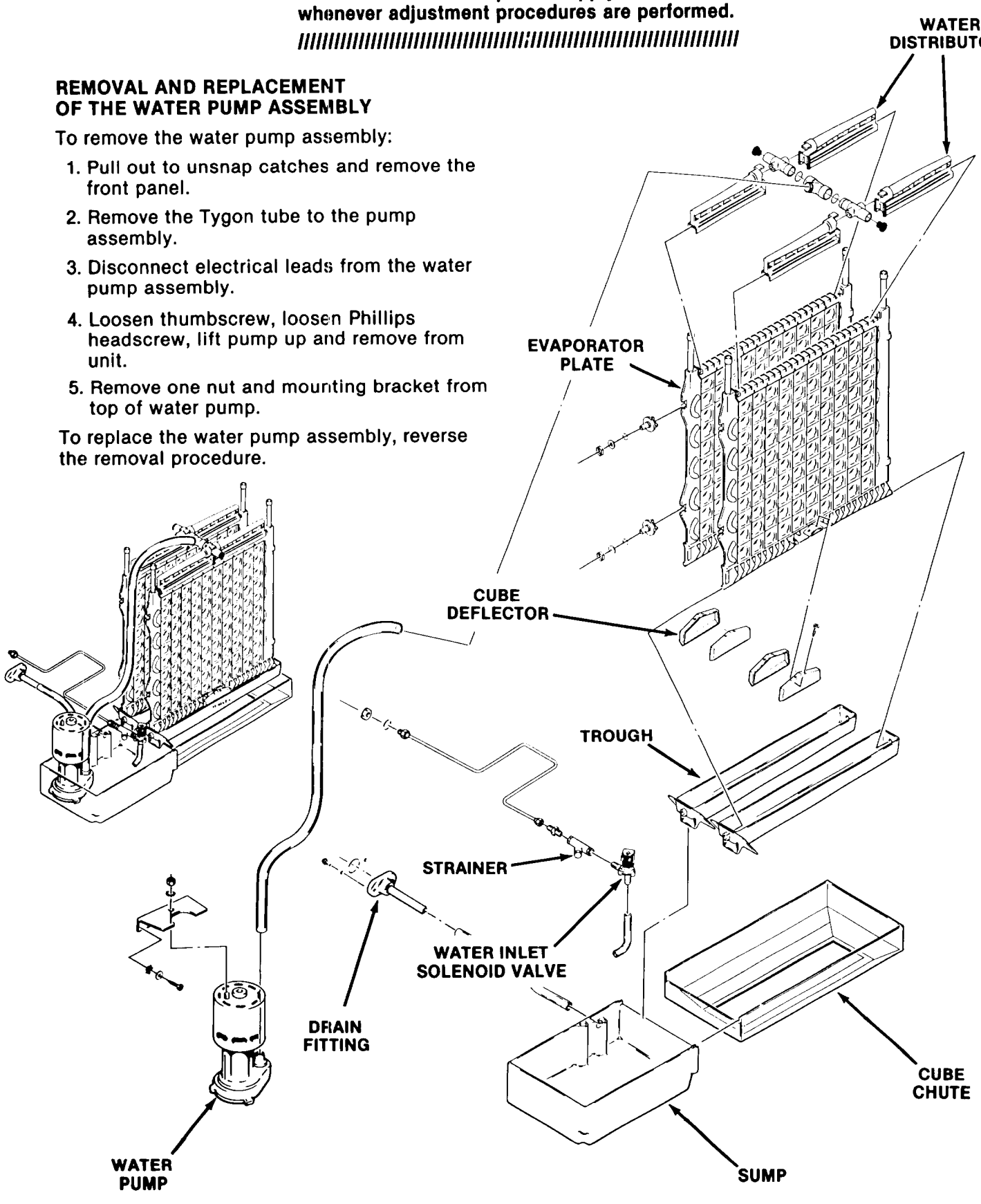

CM650R TABLE OF CONTENTS

For the Installer

Specifications 2

Location 6

Remote Condenser 7

Tubing Kit 9

]For the Electrician 10

For the Plumber 13

Final Check List 14

Start Up 15

Operation 18

Service Specifications 23

Maintenance and Cleaning 24

Component Description 27

Service Diagnosis 31

Removal and Replacement 34

Parts Lists and Wiring Diagrams are located in the center of this manaul, printed on yellow paper.

THIS PAGE
INTENTIONALLY
LEFT BLANK

CM650R FOR THE INSTALLER

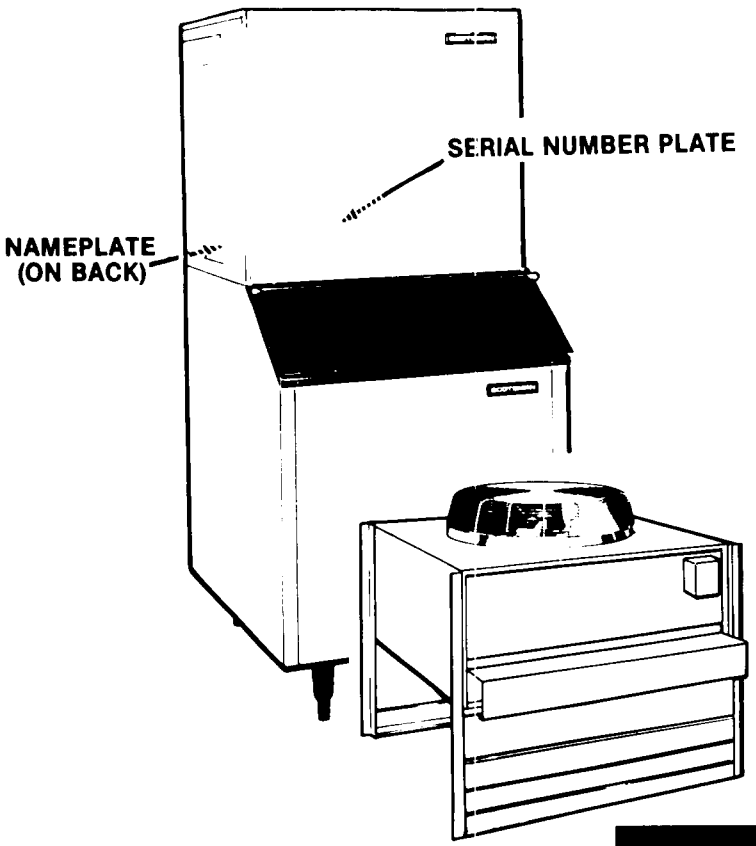

NAME PLATE

MODEL NUMBER
SERIAL NUMBER
A.C. SUPPLY VOLTAGE
MINIMUM CIRCUIT AMPACITY WIRES
MAXIMUM FUSE SIZE * HERTZ
HEATER WATTS PHASE
REFRIGERANT CHARGE OZ

MOTORS	VOLTS	R.L.A./F.L.A.	W/HP.	L.R.A.
COMPRESSOR				
FAN				
DRIVE				
OTHER				

DESIGN PRESSURE LOW HIGH
* OR HACR TYPE CIRCUIT BREAKER

SCOTSMAN

SERIAL NUMBER PLATE

MODEL NUMBER
SERIAL NUMBER
VOLTS/HERTZ/PHASE
MAXIMUM FUSE SIZE
REFRIGERANT CHARGE OZ.

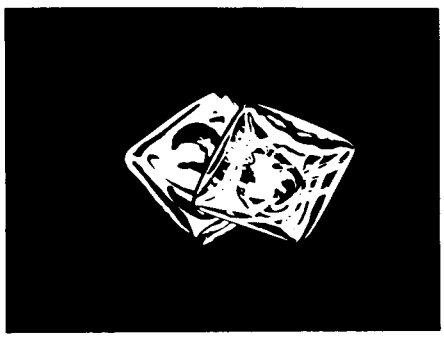

This product qualifies for the following listings:

This icemaker has been engineered to our own rigid safety and performance standards. The National Sanitation Foundation (NSF) seal, signifies that it is listed with NSF and that it complies with the materials and construction standards of NSF. In addition, the Underwriters Laboratories, Inc., (UL) Listing Mark and the Canadian Standards Association (CSA) Monogram, both signify that its construction and design have been inspected and tested by them. NSF, UL and CSA inspectors also periodically examine production icemakers at the factory, to assure continued compliance.

To retain the safety and performance built into this icemaker, it is important that installation and maintenance be conducted in the manner outlined in this manual.

CM650R FOR THE INSTALLER

REMOTE CONDENSER SPECIFICATIONS

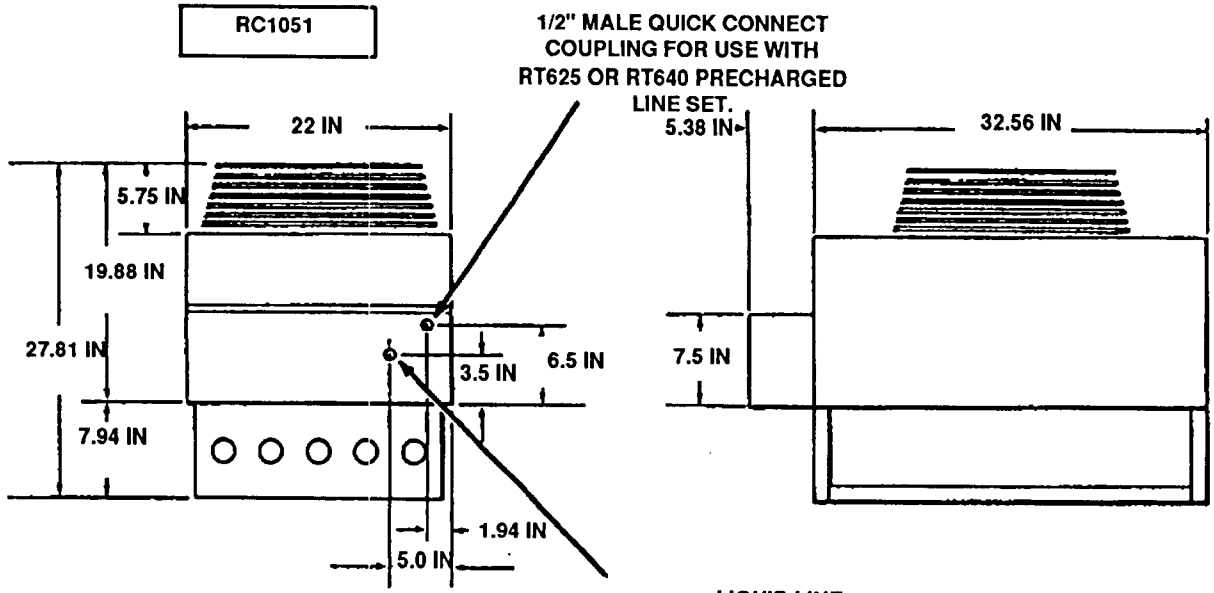

CM650R MODULAR CONTOUR CUBER

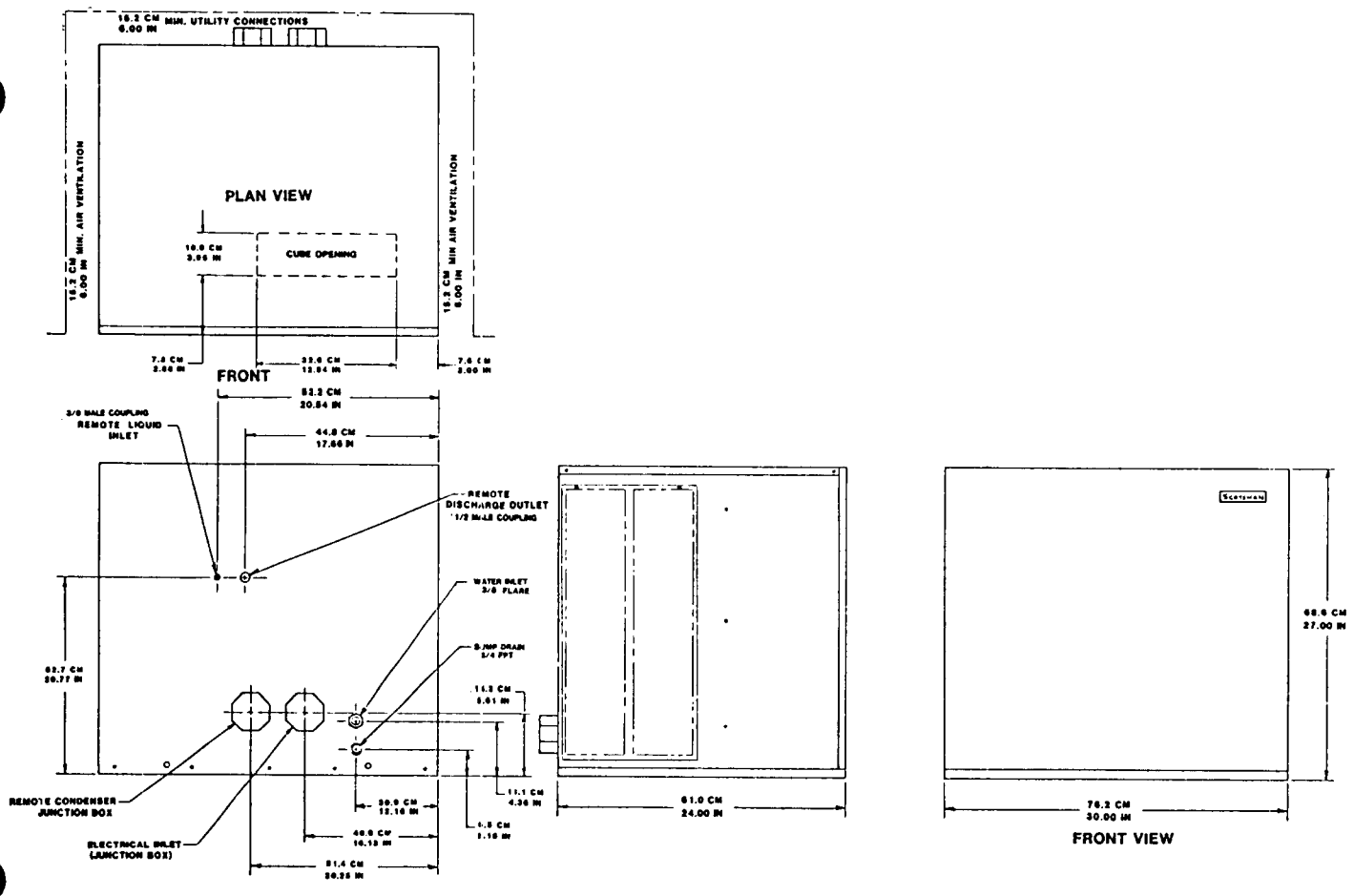

CM650RE FOR THE INSTALLER

The CM650R is designed to fit the following Scotsman storage bins:

- HTB500 or BH550

When installing a new system, check to be sure that you have everything you need before beginning:

- Correct Bin
- Correct Ice Machine either CM650RE-32E or CM650RE-3E
- All kits, legs, and information required for the specific job.
- Pre-Charged Refrigerant Lines Kit either: RT625 - 25 ft. or RT640 - 40 ft.
- Scotsman Remote Condenser, either RC1051-32 or RC652-32.
- If two CM650RE icemakers are to be installed on one RC652-32 condenser, a relay kit KCMR230 must be used to operate the condenser fan.
- Optional Stainless Steel Panel Kit, SPKCMD1 contains the front, top, 2 ends, and 2 service panels.

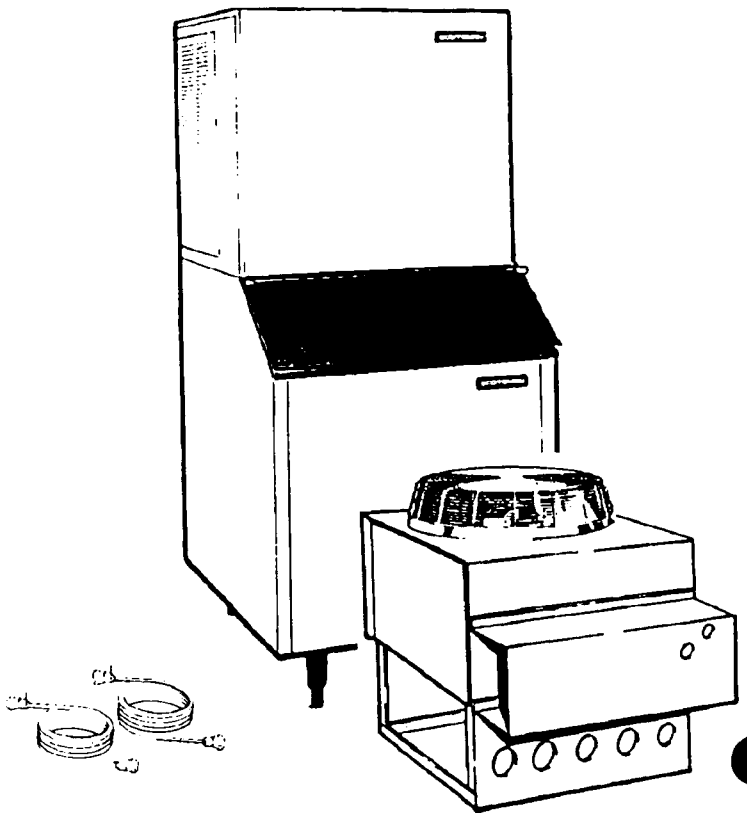

Installation Limitations:

This ice system is designed to be installed indoors, in a controlled environment:

	Min	Max
Air Temperature	50^0F	100^0F
Water Temperature	40^0F	100^0F
Water Pressure	20	80
Voltage	-5%	+10%

(Compared to the nameplate)

Operating the machine outside of the limitations is misuse and can void the warranty.

SPECIFICATIONS

Model Number	(Height - w/0 Bin) Dimensions H" x W" x D"	Ice Type	Condenser Type	Basic Electrical	Comp. H.P.	No. of Wires	Min. Circ. Ampacity+	Max. Fuse Size
CM650RE-32E	27 x 30 x 24	Contour Cube	Remote Air	208-230/60/1	1.5	2	20.8	35
CM650RE-3E	27 x 30 x 24	same	Remote Air	208-230/60/3	1.5	3	10.0	15

+Use this value to determine wire size and type per National Electric Code. Standard Finish is enamel sandalwood.

Model Number	Dimensions H" x W" x D"	For Use With	Finish	Basic Electrcial	No. of Wires	*Min. Circ. Ampacity
RC1051-32	27 x 22 x 38	(1) CM650R	Galvanized	208-230/60/1	2	2
RC652-32B	29.5 X 30.25 X 33.75	(1 or 2) CM650R	Galvanized	208-230/60/1	2	2

*Ampacity for remote condenser is included in icemaker ampacity, use this figure to determine wire size between icemaker and fan motor.

Scotsman Ice Systems are designed and manufactured with the highest regard for safety and performance. They meet or exceed the standards of UL, NSF, and CSA.

Scotsman assumes no liability or responsibility of any kind for products manufactured by Scotsman that have been altered in any way, including the use of any part and/or other components not specifically approved by Scotsman.

Scotsman reserves the right to make design changes and/or improvements at any time. Specifications and design are subject to change without notice.

CM650R FOR THE INSTALLER

A typical installation should generally appear as illustrated below. The remote condenser must be located above the icemaker and the pre-charged lines installed per instructions. Refer to page 7 for the instructions for routing the pre-charged lines through the roof.

Refer to page 4 for the temperature limitations within which these machines will function properly.

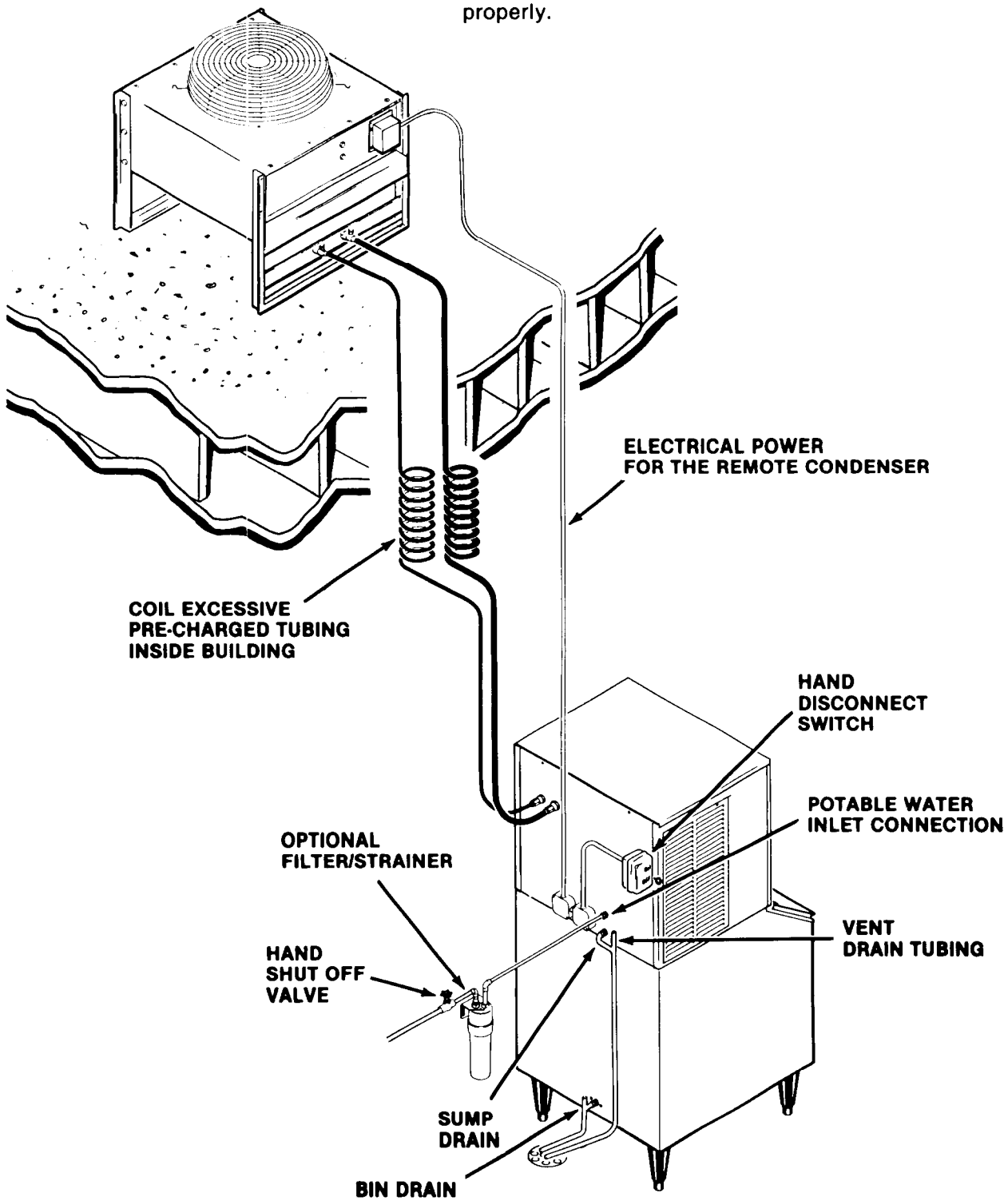

CM650R FOR THE INSTALLER

LOCATION & LEVELING

1. Arrange for proper electric, water and drain. See instructions for the plumber and for the electrician.
2. Position the ice storage bin in the selected location, which should have a minimum room temperature of 50-degrees F., and maximum room temperature of 100-degrees F. Level the bin, adjusting the leg levelers in both the front to rear and side to side directions. Select a well-ventilated location for the air-cooled condenser.
3. Inspect the bin top mounting gasket which should be flat, with no wrinkles, to provide a good water seal when the Cuber is installed on top of the bin.
4. Install the modular cuber on top of the bin using care to be sure a good seal is made between the two cabinets. Align the holes in the bottom rear of the cabinet to mate with the two mounting straps on the top rear of the bin.
5. Use the bolts from the hardware bag to secure the machine to the bin using holes at the back. When alignment and leveling are completed, tighten the bolts to secure the mounting straps.

STACKING AND BIN THERMOSTAT INSTALLATION INSTRUCTIONS

NOTE: This model can only be stacked onto Scotsman units with the same size cabinet as itself. Earlier models are not compatable.

When stacking two units, remove the top panel from the lower icemaker. (The top removed from the lower icemaker will no longer have any function.)

Carefully lift the uncrated top unit onto the bottom one and align the two cabinets. Use of a mechanical lift is recommended for this step.

At the back of the two icemakers, bolt the upper icemaker cabinet to the lower icemaker cabinet using the mounting straps and bolts from the hardware package.

NOTE: When stacking, route the bin thermostat control from the upper machine inside the same bin thermostat control bracket as the lower one.

NOTE: Extend bin thermostat capillary tube through entire length of the tubular section of the bin thermostat bracket. When properly installed, the tip of the capillary tube should be flush with the tip of the bin thermostat bracket.

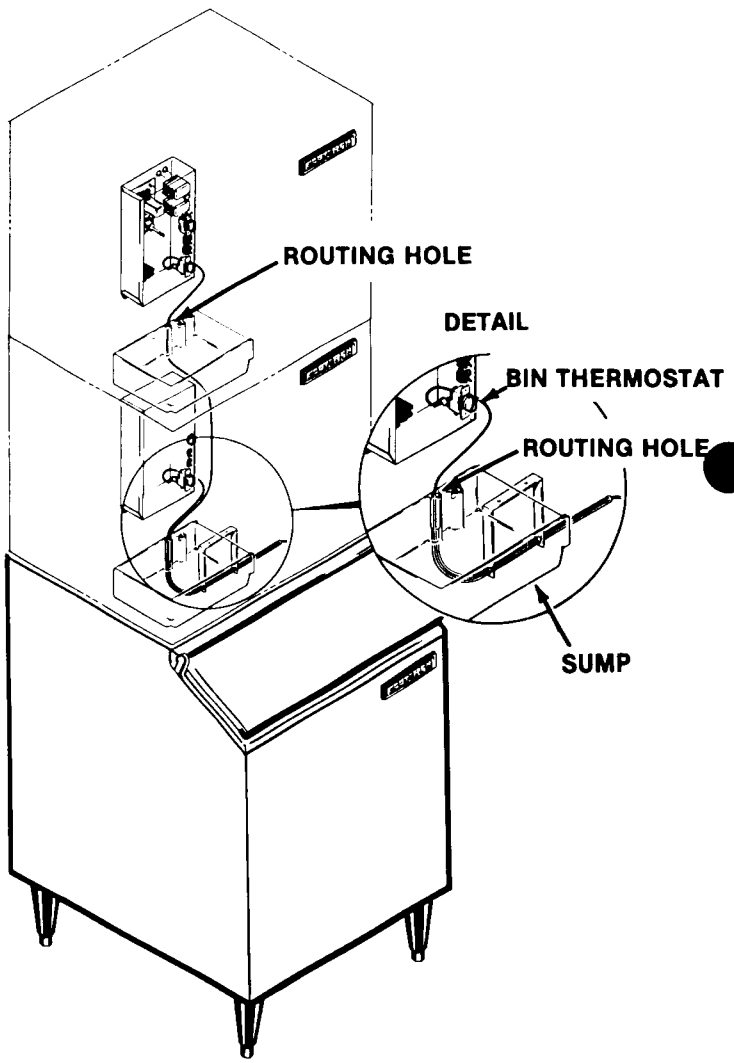

CM650R FOR THE INSTALLER

REMOTE CONDENSER INSTALLATION

Location Considerations:

Limited to a 40-foot length or a 25-foot length of pre-charged refrigerant line from the rear of the icemaker chassis to the remote condenser with consideration for routing. The condenser must be above or level with the highest (if stacked) icemaker.

Best available location, protected from the extremes of dirt, dust, and sun.

Must meet local building code installation requirements. Usually the services of a licensed electrician are required.

Remote Condenser - Roof Attachment.

1. Install and attach the remote condenser to the roof of the building, using the methods and practices of building standards that conforms to and meets the local building code requirements in your area.
2. Have an electrician connect the remote condenser fan motor electrically to the CM650R at the junction box of the remote condenser and the junction box of the CM650R.

PRE-CHARGED TUBING KIT ROUTING:

CAUTION

Do not connect pre-charged tubing until all routing and forming of tubing is complete. See Coupling Instructions, Pre-Charged Tubing Kit, page 8, for connecting instructions.

1. Each set of pre-charged refrigerant lines in the 25-foot length, or 40-foot length kits, consists of a 3/8-inch diameter, self-sealing LIQUID line and a 1/2-inch diameter, self-sealing DISCHARGE line. One coupling on each line is fitted with a charging port, which provides the service man with access for service gauges at the REMOTE CONDENSER location, when necessary.

NOTE

The openings in the building ceiling or wall, listed in the next step, are minimum sizes recommended, through which the pre-charged refrigerant lines may pass; and are to be considered only if they conform to and meet the local building code requirements in your area.

2. Minimum recommended sizes for openings required in a ceiling or wall for the pre-charged refrigerant lines to pass, is 1-3/4 inch diameter.

CAUTION

DO NOT KINK OR CRIMP REFRIGERANT LINES.

3. Route both refrigerant lines through the roof opening.

   Follow straight line routing, when possible.

   Retain excess pre-charged refrigerant line INSIDE the building.

4. SPIRAL the excess footage of the pre-charged refrigerant lines, in the best selected INSIDE location. See Pre-Charged Refrigerant Line Routing illustration for recommended methods of spiralling the excess refrigerant lines.

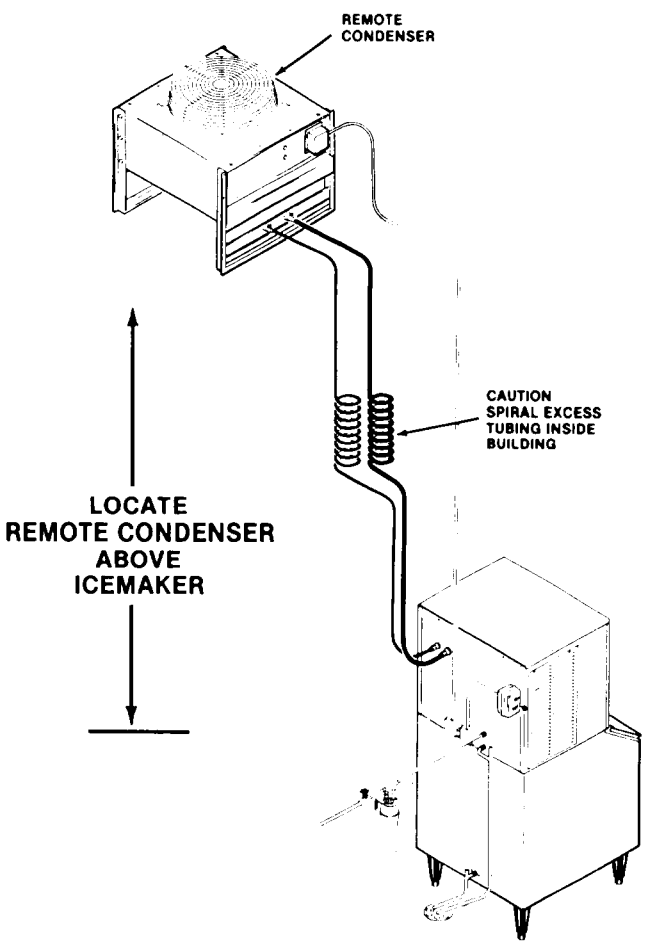

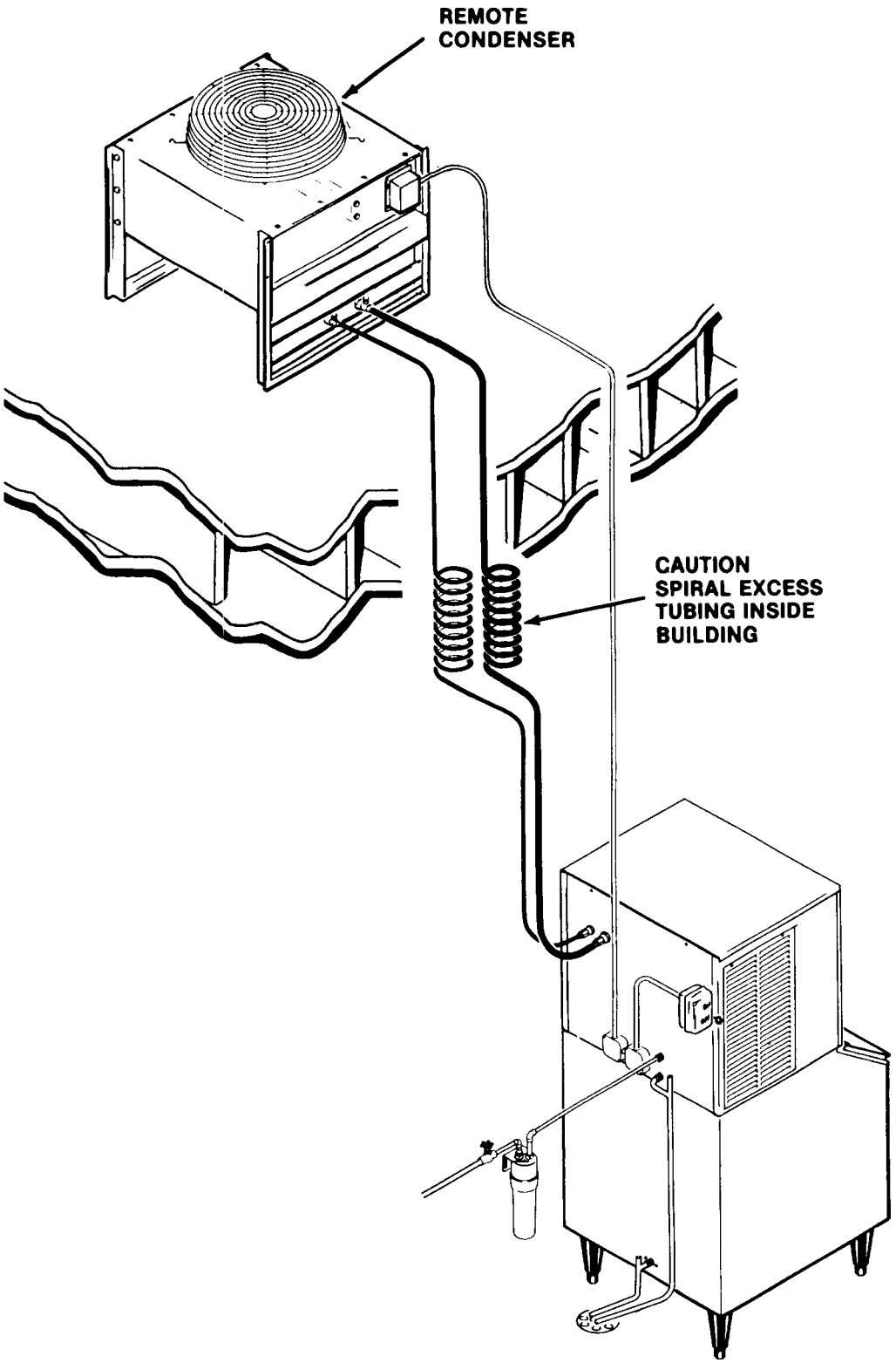

Pre-Charged Refrigerant Line Routing

CM650R FOR THE INSTALLER

COUPLING INSTRUCTIONS, PRE-CHARGED TUBING KIT

//////////////////// CAUTION ////////////////////

The couplings on the sets of pre-charged refrigerant lines, the refrigerant fittings on the Remote Condenser, and the rear of the Icemaker Chassis are SELF-SEALING and should be connected as follows:

//

1. Remove protector caps and plugs and if necessary, carefully wipe coupling seats ar threaded surfaces with a clean cloth to prevent the inclusion of dirt or any foreign material in the system.
2. LUBRICATE male half diaphragm and synthetic rubber seal with refrigerant oil. Thread coupling halves together by hand to insure proper mating of threads. Use proper size wrenches (on coupling body hex and on union nut) and tighten until coupling bodies "bottom" or a definite resistance is felt.
3. Using a marker or ink pen, mark a line lengthwise from the coupling union nut to the bulkhead. Then tighten an additional 1/4 turn; the misalignment of the line will show the amount the coupling has been tightened. This final 1/4 turn is necessary to insure the formation of leakproof joint.

ALWAYS USE TWO WRENCHES WHEN TIGHTENING THESE FITTINGS, ONE AS BACKUP WRENCH TO PREVENT TWISTING OF TUBING AND POSSIBLE KINKING OR LINE RUPTURE.

BE SURE to connect the ends of the pre-charged refrigerant lines, that have the charging port fittings, TO THE REMOTE CONDENSER FITTINGS. This gives the serviceman access for service gauges at the REMOTE CONDENSER location, when necessary.

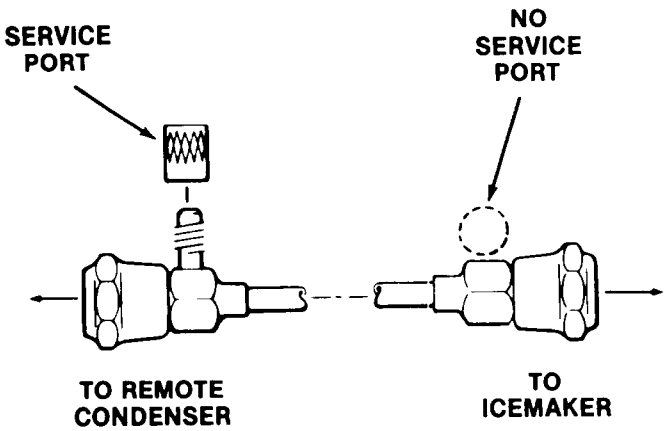

Pre-Charged Refrigerant Line Connections

4. Connect the 3/8-inch diameter refrigerant line coupling, with the SERVICE PORT fitting, to the remote condenser refrigerant fitting labeled: LIQUID LINE as detailed in Coupling Instructions.
5. Connect the 1/2-inch diameter refrigerant line coupling, with the CHARGING PORT fitting, to the Remote Condenser refrigerant fitting labeled: DISCHARGE LINE. Tighten as detailed in the Coupling instructions.

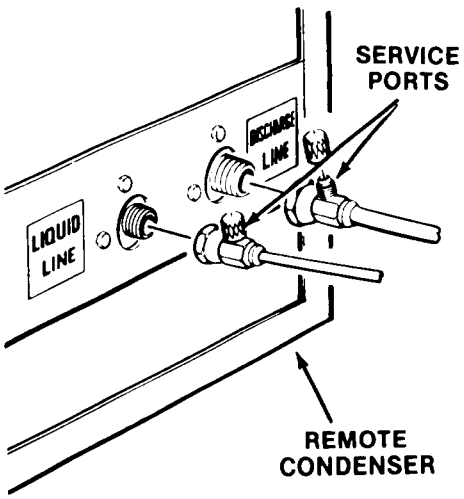

6. Connect the 3/8-inch diameter refrigerant line coupling, to the refrigerant fitting on the upper right rear of the icemaker chassis labeled: LIQUID LINE. Tighten as detailed in Coupling Instructions.
7. Connect the 1/2-inch diameter refrigerant line coupling, to the refrigerant fitting on the upper right rear of the icemaker Chassis labeled: DISCHARGE LINE. Tighten as detailed in step 4.

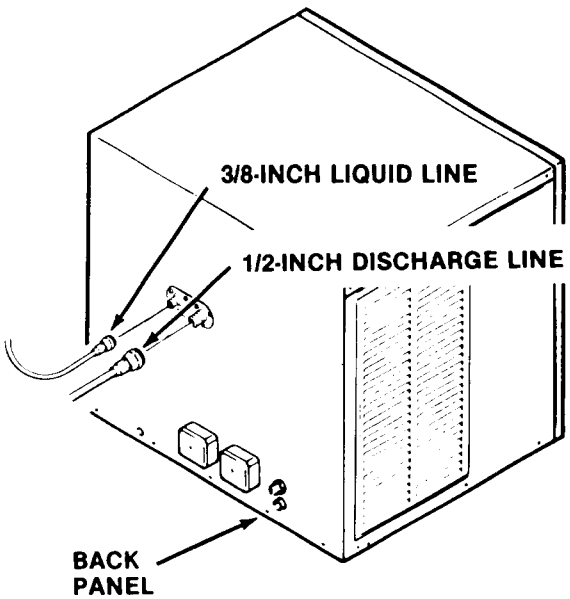

CM650R FOR THE ELECTRICIAN

CONFORM TO ALL APPLICABLE CODES

ELECTRICAL CONNECTIONS

SEE NAMEPLATE for current requirements to determine wire size to be used for electrical hookup. The cuber requires a solid chassis-to-chassis earth ground wire. See Wiring Diagram.

Be certain the cuber is connected to its own electrical circuit and individually fused. Voltage variation should not exceed ten percent of the nameplate rating, even under starting conditions. Low voltages can cause erratic operation and may be responsible for serious damage to the icemaker.

Electrical connections are made at the rear of the icemaker, inside the junction box.

The remote condenser must be wired to the CM650R icemaker in accordance with local and national electrical codes with a minimum of 18 Awg wire with a ground bonding wire connected to the ground screws provided in both the condenser and machine field wiring boxes. All outdoor wiring must be in rainproof conduit.

All external wiring should conform to the national, state and local electrical code requirements. Usually an electrical permit and services of a licensed electrician will be required.

Electrically the remote condenser fan motor is connected to the CM650R at the contactor terminals for the compressor and the fan motor operates whenever the compressor operates.

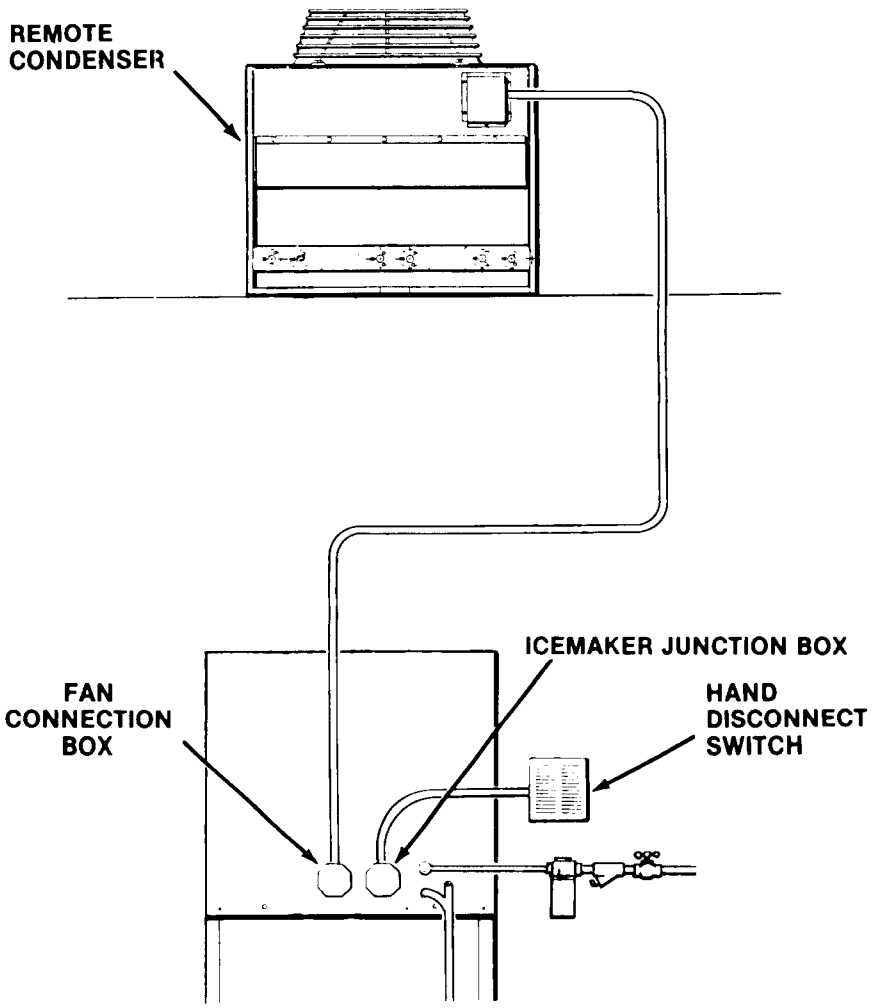

CM650R FOR THE ELECTRICIAN

INSTALLATION INSTRUCTIONS

Installation instructions for the KCMR230 Kit when using (2) CM650R Icemakers and the RC652-32B Model Condenser.

SEE NAMEPLATE for current requirements to determine wire size to be used for electrical hookup. Refer to wiring diagram.

All external wiring should conform to the national, state and local electrical code requirements. Usually an electrical permit and services of a licensed electrician will be required.

FOR CONNECTION OF TWO ICEMAKERS:

Refer to appropriate wiring diagrams and connect each icemaker to the KCMR230 terminal strip as follows:

1. Attach the KCMR230 to a permanent location, convenient for each icemaker hook up and future service. Attach a solid earth ground wire to the GROUND SCREW.
2. Route connecting wires from first ice machine lower junction box and connect to KCMR230 terminal strip connections marked: NO. 1 ICE MACHINE.
3. Route connecting wires from second ice machine lower junction box and connect to stacking kit terminal strip connections marked: NO. 2 ICE MACHINE.
4. Route connecting wires from KCMR230 terminal strip marked: TO REMOTE FAN and connect at the remote condenser junction.

CAUTION

IMPROPER VOLTAGE SUPPLIED TO THE ICEMAKER WILL VOID YOUR PARTS REPLACEMENT PROGRAM.

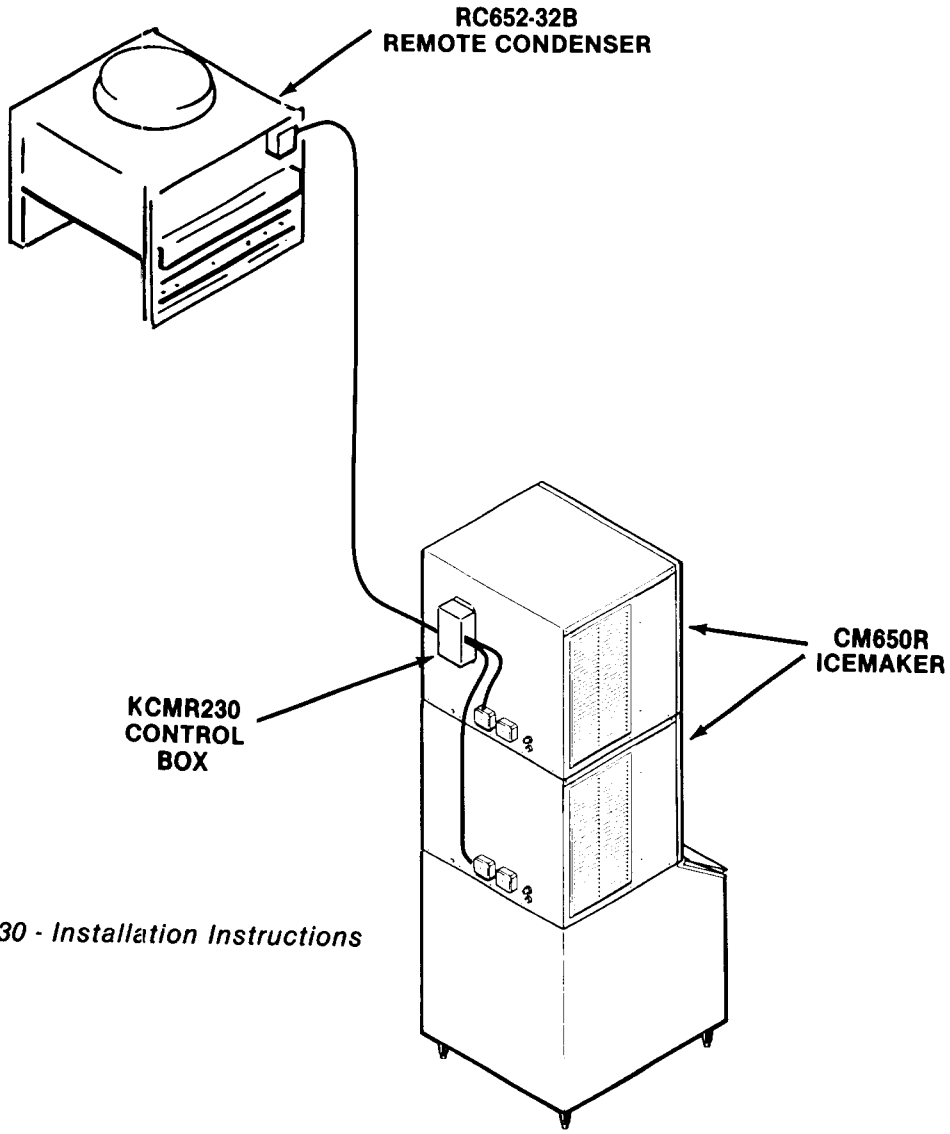

KCMR230 INSTALLATION INSTRUCTIONS

NOTE: 3 phase machines. It is critical to have the same "leg" or line run to L3 on both ice makers' contactors and if **WILD LEG** current is used, hook the wild leg to **L3** on **BOTH** ice makers.

5. Check phasing of the electrical circuit as follows:

   A. The phasing of the wiring **MUST** now be checked, as incorrect wiring will result in a failure of the kit relay.

   Below is an illustration of the KCMR230 terminal strip. Note that each terminal is marked: 1 - 2 - 3 - 4 - 5 - 6. For proper phasing:

   Terminals #1 and #3 must be connected on the same side of the line (such as L1).

   Terminals #2 and #4 must be connected on the same side of the line (such as L2).

   B. Make the test with a volt meter as follows:

   1. Switch on icemaker #1 first, then switch on icemaker #2. (The compressors must be operating for this test).
   2. Test with a volt meter between terminals #2 and #4, then between terminals #1 and #3. Compare the readings obtained to the ones in the following list.

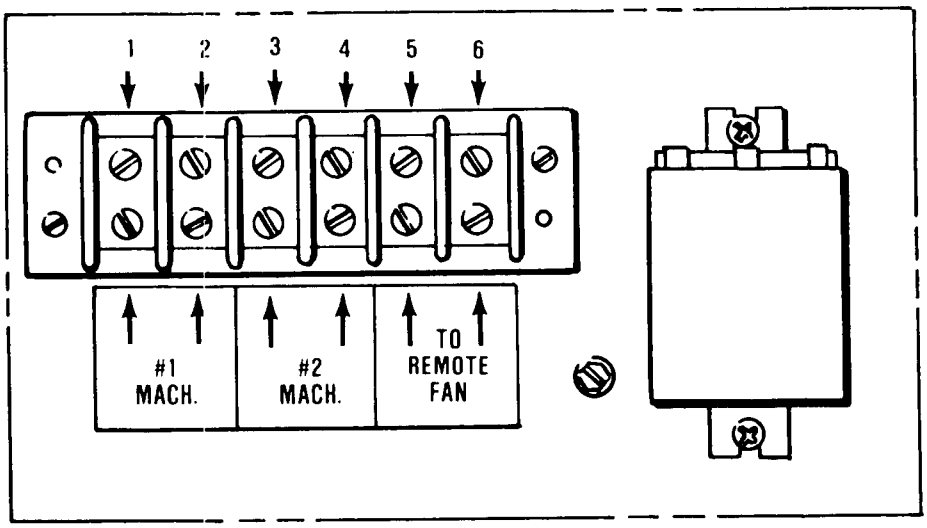

C.

	CORRECT VOLTAGE READINGS
Test terminals 1 - 2	Full voltage (208v-220v)
Test terminals 1 - 3	No voltage
Test terminals 2 - 3	Full voltage
Test terminals 2 - 4	No voltage
Test terminals 3 - 4	Full voltage
Test terminals 1 - 4	Full voltage

D. If there is full voltage where there should be no voltage, turn off icemaker #2, (both toggle switches). Then turn off icemaker #1 (both toggle switches). The connections at the KCMR230 terminal strip marked icemaker #1 must be **reversed** (put the wire that was on 1 on 2 and the wire that was on 2 on 1).

Remember to do all wiring with the electrical power to both icemakers disconnected at the source.

CM650R FOR THE PLUMBER

CONFORM TO ALL APPLICABLE CODES

WATER SUPPLY AND DRAIN CONNECTIONS

The recommended water supply line is a 3/8-inch O.D. copper tubing with a minimum operating pressure of 20 PSIG and a maximum of 120 PSIG. Connect to cold water supply line with standard plumbing fittings, with shutoff valve installed in an accessible place between the water supply and the cuber. In some cases a plumber will be required.

DRAIN CONNECTIONS: All drains are gravity type and must have a minimum of 1/4-inch fall per foot on horizontal runs. The drains to be installed to conform with the local plumbing code. Install a vertical open vent on drain line to ensure good venting. The drain receptacle should be an open, trapped or vented construction.

Recommended bin drain is 5/8-inch O.D. copper tubing and should be vented and run separately.

The ice machine sump drain is 3/4" FPT. There must be a vent at this connection for proper sump drainage.

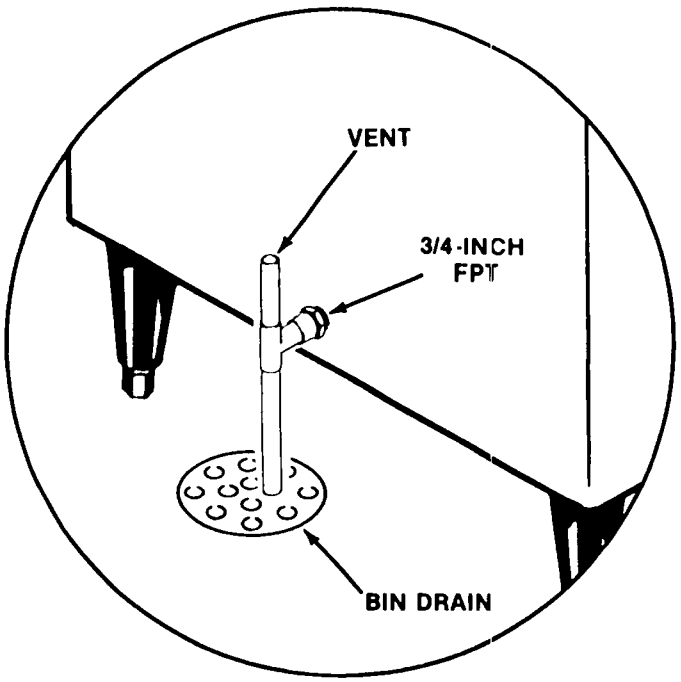

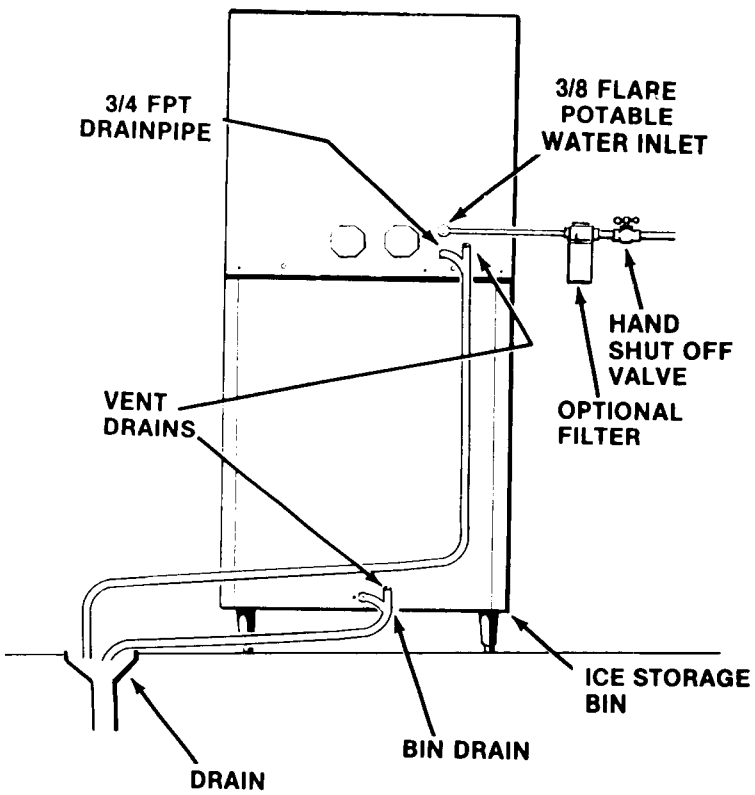

DO NOT SWEAT HTB DRAIN FITTINGS. EXCESSIVE HEAT WILL DAMAGE THE BIN.

Installation, Water Supply and Drain Connection

CM650R FOR THE INSTALLER

FINAL CHECK LIST

1. Is the cabinet in a room where ambient temperatures are within the minimum and maximum temperatures specified?
2. Is there at least six inches clearance at both sides of the cabinet for proper air circulation?
3. Has water supply pressure been checked to insure a minimum of 20 PSIG and a maximum of 120 PSIG operating pressure?
4. Is the cabinet level?
5. Check that the shipping material and foam backing have been removed from inside the cabinet.
6. Has the bin thermostat bracket been properly installed?
7. Check that the drain troughs are properly secured to the bottom of the evaporator plates.
8. Have all electrical and piping connections been made?
9. Is the water supply line shut-off valve installed and electrical wiring properly connected?
10. Has the shipping block been removed from under the compressor. Have the compressor hold-down nuts been checked to be sure the compressor is snug on the mounting pads?
11. Check all refrigerant lines and conduit lines, to guard against vibration or rubbing and possible failure.
12. Have the bin and cabinet been wiped clean?
13. Have the remote condenser and pre-charged refrigerant lines been properly installed per instruction on page 6 and connections checked for leaks?
14. Has the remote condenser fan motor been connected electrically to the icemaker at the junction box of the remote condenser and the junction box of the icemaker?
15. Verify that the Master Switch and Compressor Switch are in the "OFF" position.
16. Has the Manufacturer's Registration Card been properly filled out? Check for correct model and serial numbers from Serial nameplate, then mail the completed card to the SCOTSMAN factory.
17. Has the owner/user been given the Service Manual and instructed how to operate and maintain the icemaker?
18. Has the owner been given the name and telephone number of the authorized SCOTSMAN Service Agency serving him?
19. **Refer to Pre-Start Instruction on page 13.**

CM650R START-UP

PRE-START

1. Is the location of the equipment proper?
2. Is the electrical voltage correct?
3. Has power to the machine been on for at least 12 hours, and is the compressor dome warm? (Toggle switches on OFF?)
4. Has the water supply been turned on?
5. Is the icemaker level?
6. Are the refrigerant lines for the condenser properly connected and routed?
7. Are the bin thermostat controls mounted in the bracket and is the bracket in the proper mounting spot?

START-UP

1. Go through the Pre-Start check list.
2. Remove front panel by pulling out at the bottom to unsnap and lift off.
3. Remove the control box cover.
4. Remove side service panels. Check that the King Valve is closed and the compressor is warm.
5. Rotate timer shaft clockwise until the timer cam appears the same as in the illustration.

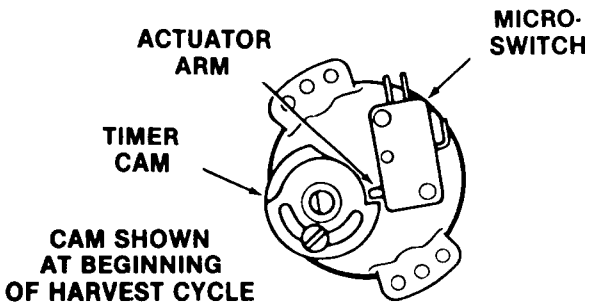

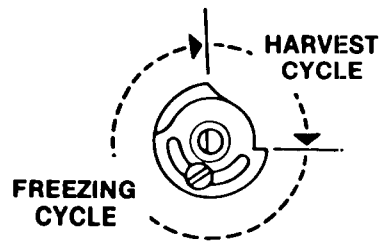

CAM SHOWN DIVIDED INTO TYPICAL FREEZING & HARVEST CYCLES

Timer Cam Positions

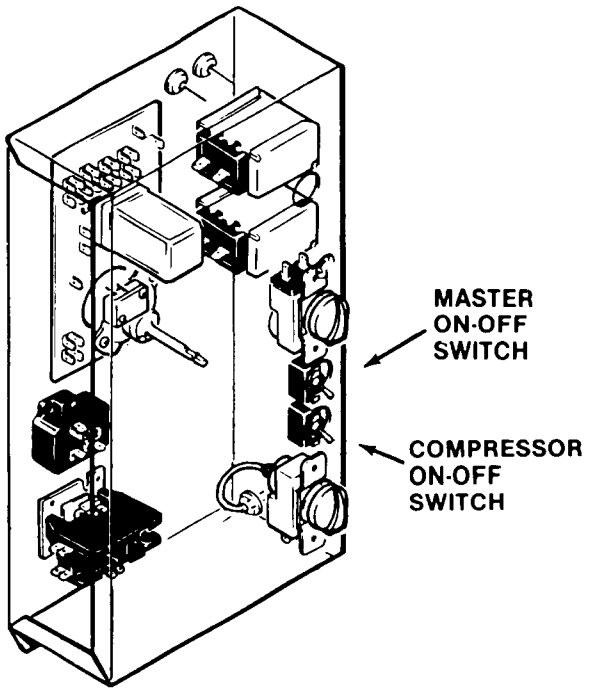

6. Turn the master switch to ON and observe that the inlet water solenoid opens, and water begins to enter the sump, also observe that the timer does advance in a clockwise direction.
7. The timer will move to the end of the harvest position and stop. If the sump is still not full, repeat step 5. When the sump is full the water pump will be circulating water over the evaporator plates. This water is returning to the sump and any excess will be drained out through the overflow standpipe in the sump. When the timer stops, the inlet water stops coming in, but the pump stays on.
8. Open the King Valve located on the receiver.
9. Move the compressor toggle switch to ON. Observe that the sight glass begins to fill with liquid refrigerant and stays full.
10. On the roof, observe that the condenser fan is running.
11. Now the icemaking process begins. The evaporator plates will soon begin to feel cool, and ice begins to form where the water is flowing over the metal portions of the plate.
12. Let the machine function as shipped, but observe the first harvest of cubes. ADJUSTMENTS MAY BE REQUIRED.

CM650R START-UP

13. Observe second and third cube harvest.

    Check size of SCOTSMAN CONTOUR CUBE

    Unlike other SCOTSMAN cubes which are made in a definite molded shape, contour cubes are produced in indentations and many shapes and sizes of contour cubes may be produced — only ONE size and shape combination is correct.

An under-charged refrigeration system produces smaller cubes at the top of the evaporator plate and large cubes at the bottom. Charge system per NAMEPLATE specifications.

Charge Refrigeration System with **REFRIGERANT 502 ONLY.**

In areas where extreme problem water condition exists, filtering or purifying equipment is recommended. Contact SCOTSMAN ICE SYSTEMS, Service Department, Albert Lea, Minnesota 56007 for further details.

TOO LARGE

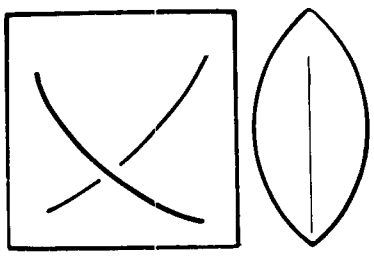

Too LARGE — may cause evaporator freeze ups. Adjust cube size control counter-clockwise to obtain smaller cubes

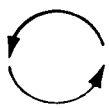

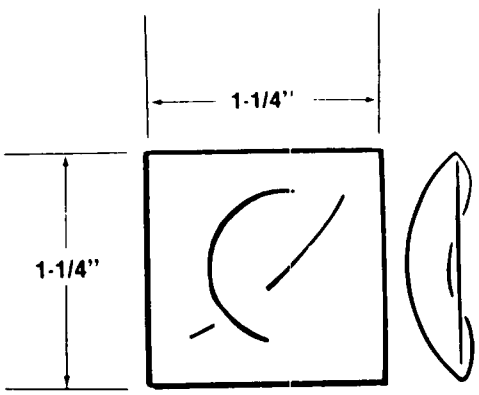

PROPER SIZE AND SHAPE

PROPER SIZE AND SHAPE of the contour cube. Icemaker operates at peak efficiency when a cube this size and shape is produced. A finely tuned system produces vertical strips of ice which easily break when they fall.

TOO SMALL

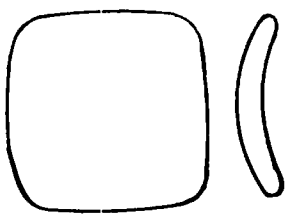

TOO SMALL. To obtain proper size cubes, adjust cube size control clockwise. May cause freeze up problems due to poor harvest.

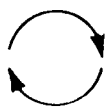

14. Check the Harvest time. The correct setting is one that allows enough time for all of the ice to fall from the evaporators and to fill the sump with water to the overflow point, plus 15-30 seconds extra time.

    To adjust the timer:

    A. Disconnect electrical power supply to the icemaker.

    B. Loosen the screw on the timer that locks the two cams together.

    C. To decrease Harvest time, rotate the shaft of the timer counter-clockwise. To increase, turn the shaft clockwise.

    D. Retighten the screw to lock the two cams together again.

    E. Return power to icemaker. Check cube size and Harvest time.

ADJUSTMENT OF CUBE SIZE

To produce SMALLER sized ice cubes:

Locate cube size control, in the top right section of the control box.

Rotate the adjusting knob one-eighth of a TURN COUNTERCLOCKWISE to WARMER.

Observe size of the ice cubes in the next two ice cube harvests and adjust in one-eighth turn or less increments, until correct ice cube size is achieved.

To produce LARGER sized ice cubes:

Locate cube size control, in the top right section of the control box.

Rotate the adjusting knob one-eighth of a turn CLOCKWISE to COLDER.

Observe size of ice cubes in the next two cube harvests and adjust in one-eighth turn or less increments, until correct ice cube size is achieved.

15. Check texture if ice cubes; when partially cloudy throughout, suggests icemaker is operating short of water; or, possibly an extreme problem water condition exists, wherein filtering or purifying equipment is recommended. Contact SCOTSMAN ICE SYSTEMS, Service Department, Albert Lea, Minnesota 56007 for further details.

BIN THERMOSTAT OPERATION

With the icemaker in the harvest cycle, hold ice against the bin thermostat control bulb to test shutoff at the END OF THE HARVEST CYCLE. If the bin thermostat is OPEN, the liquid line solenoid valve will close, shutting off refrigeration flow to the evaporator and allowing the compressor to pump any refrigerant left in the evaporators into the high pressure receiver. When the evaporator pressure is lowered to approximately 3 PSIG, the low pressure switch opens, shutting off the compressor, remote fan and water pump.

Within minutes after the ice is removed from the sensing bulb, the bulb will warm up and cause the icemaker to restart. This control is factory set and should not be reset until testing is performed.

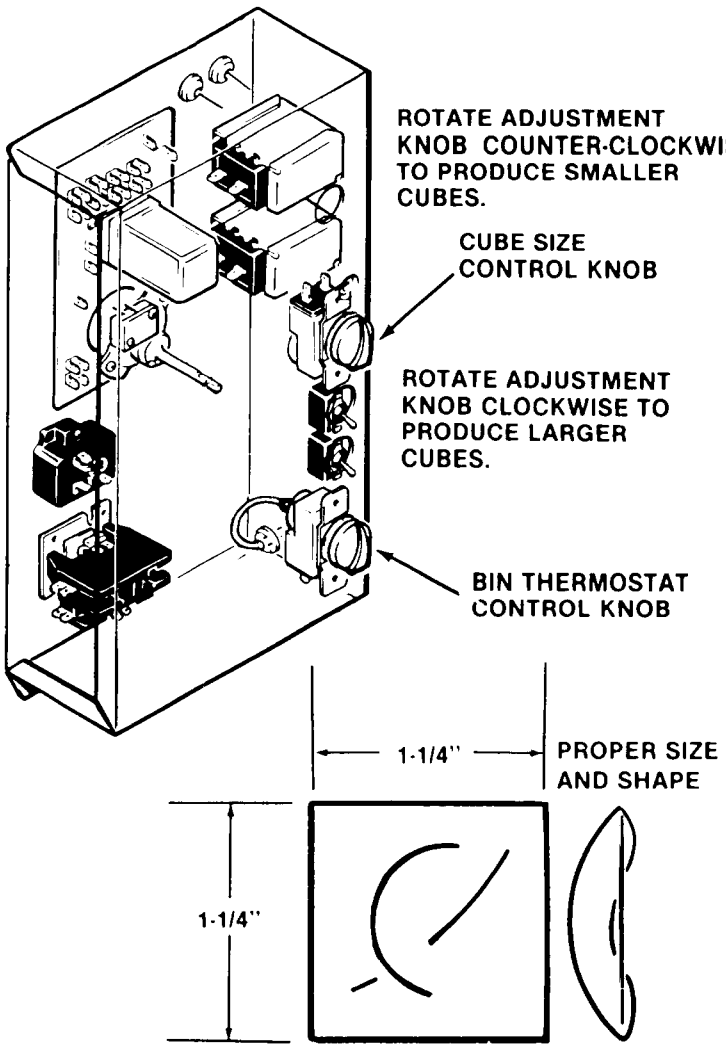

Cube Size Control Adjustment

16. Replace control box cover and all cabinet panels and screws.

17. Thoroughly explain to the owner/user the significant specifications of the icemaker, the start up and operation, going through the procedures in the operating instructions. Answer all questions about the icemaker by the owner; and inform the owner of the name and telephone number of the authorized SCOTSMAN Distributor, or service agency serving him.

CM650R OPERATION

FREEZING CYCLE

Water from the sump assembly is pumped to the water distributor system, at the top of the evaporator plates. From the water distributors at the top of each evaporator plate, the water cascades by gravity over all cells of the plates and to the sump assembly below, for recirculation. At the beginning of the freezing cycle, the electrical circuit is completed to the compressor and the water pump. The water pump and the remote fan motor operate continuously, through both the freezing cycle and the harvest cycle.

In the compressor, gaseous refrigerant is compressed and discharged into the condenser, as a high pressure, high temperature gas. The refrigerant is cooled by air and condenses into a high pressure liquid. The liquid refrigerant then passes through a receiver, which stores excess refrigerant not required at high condensing temperatures: then, on to the liquid line solenoid valve and thermostatic expansion valve where the temperature and pressure of the liquid refrigerant are lowered.

This liquid refrigerant is then distributed through capillary tubes to the evaporator plates. The refrigerant is warmed by the water cascading over the evaporator plates and begins to boil off and become a gas. The refrigerant travels through the heat exchange area of the suction line where any remaining liquid refrigerant boils off and returns to the compressor as a low pressure, low temperature gas, and the cycle starts again.

During the freezing cycle, the hot gas solenoid valve is CLOSED and the water inlet solenoid valve is CLOSED.

When the ice cubes are partially formed, the cube size control will sense the temperature at which it is preset to CLOSE. This will complete the electrical circuit to the timer. The timer then controls the remainder of the freezing cycle.

The timer will keep the icemaker operating in the freezing cycle for a selected length of time. This will give the ice cubes time to fully form. After that selected length of time, the timer will switch the icemaker into the harvest cycle, through the contacts of the timer assembly microswitch.

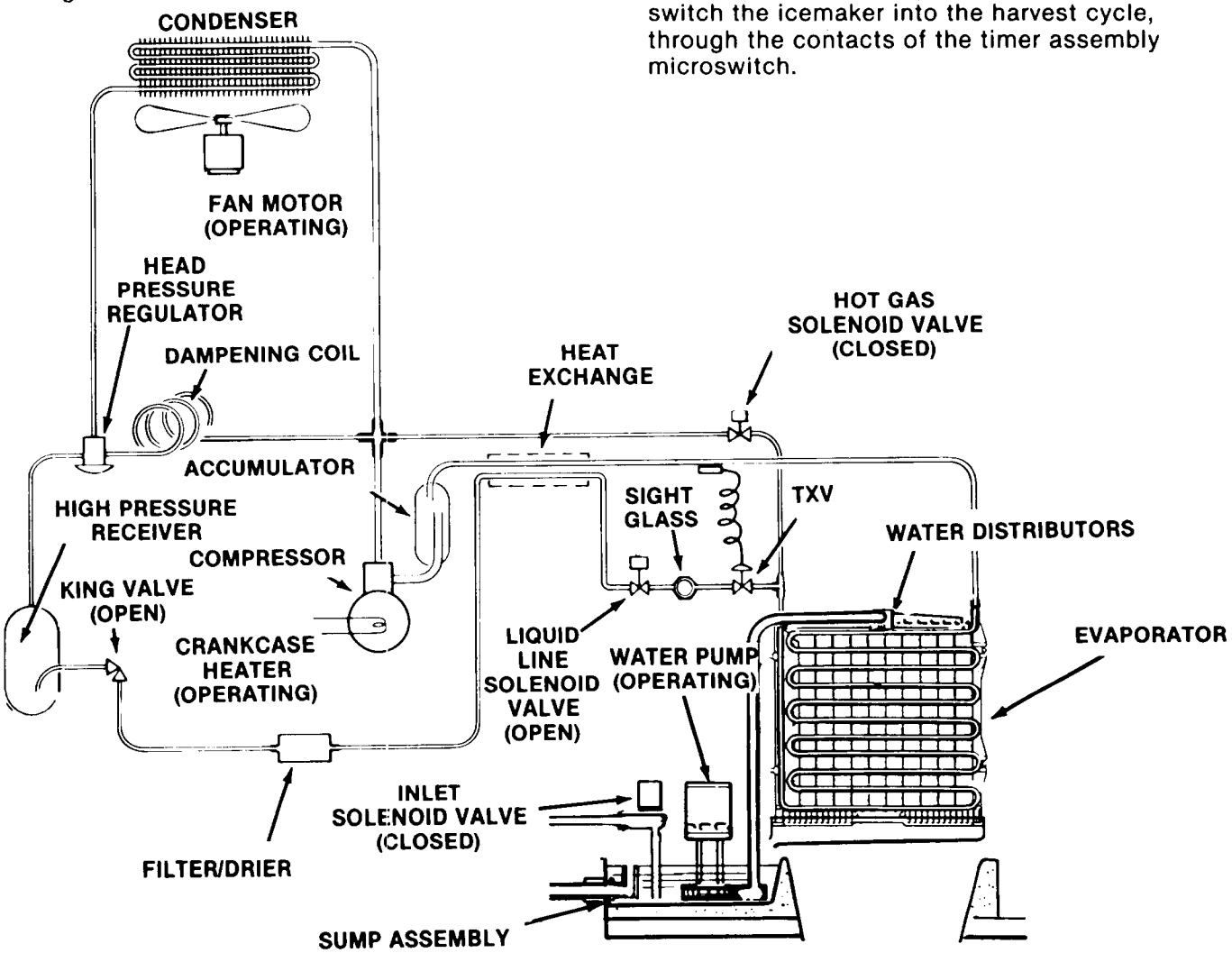

Freezing Cycle

CM650R OPERATION

HARVEST CYCLE

When the timer switches the icemaker into the harvest cycle, high pressure, high temperature gaseous refrigerant being discharged from the compressor is diverted from the condenser through the hot gas solenoid valve into the evaporator plates. During this cycle, the gaseous high pressure, high temperature refrigerant circulates from the compressor through the evaporator plates and back again, bypassing the condenser, and the thermostatic expansion valve. In the electrical circuit, both the compressor and the water pump are operating and the hot gas solenoid valve is energized and OPEN and the water inlet solenoid valve is OPEN.

The finished ice cubes are released from the sides of the evaporator plates, by the warming effect of the hot gas flowing through the evaporator plates and the water cascading over the ice cubes. The released ice cubes drop into the ice storage bin below.

At the end of the harvest cycle, the timer cam will push the actuator arm of the microswitch IN. If the bin thermostat is still CLOSED, a whole new cycle will begin. If the bin thermostat is OPEN, the liquid line solenoid valve will close, shutting off refrigerant flow to the evaporator and allowing the compressor to pump any refrigerant left in the evaporators into the high pressure receiver. When the evaporator pressure is lowered to approximately 3 PSIG, the low pressure switch opens, shutting off the compressor, remote fan and water pump.

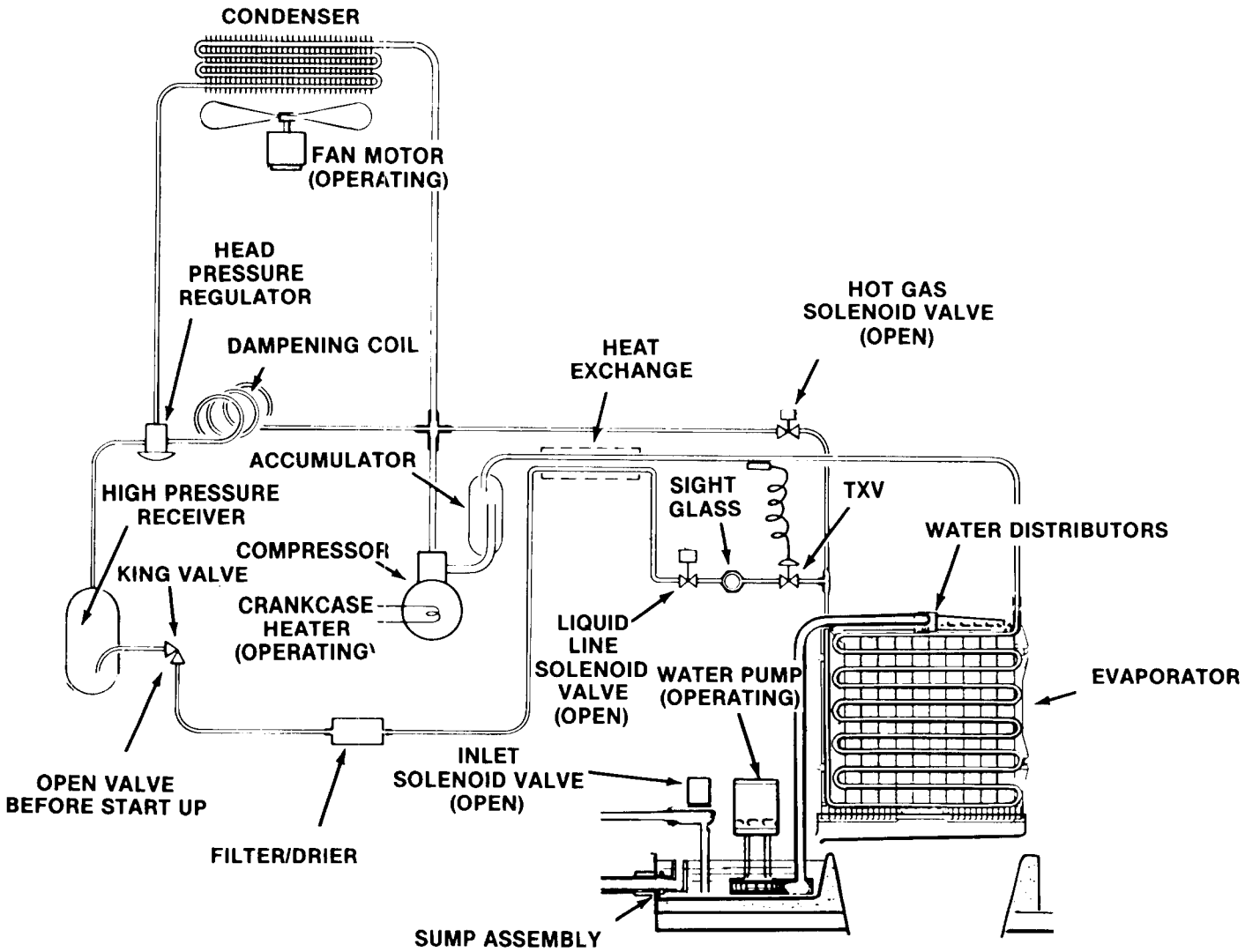

Harvest Cycle

CM650R OPERATION - ELECTRICAL SEQUENCE

The following charts illustrate which switches and which components are ON or OFF during a particular phase of the icemaking cycle.

Refer to the wiring diagram for a reference. Remember, the wiring diagram shows the unit as it is in the Timed Freeze Cycle.

BEGINNING FREEZE

ELECTRICAL COMPONENTS (LOADS)	ON	OFF
Crankcase Heater	X	
Compressor	X	
Fan Motor	X	
Hot Gas Valve		X
Inlet Water Valve		X
Liquid Line Valve	X	
P.C. Board Relay Coil	X	
Timer		X
Water Pump	X	

SWITCHES	ON	OFF
Bin Thermostat	X	
Cube Size Thermostat		X
Toggle	X	
L.P. Control	X	
H.P. Control	X	
Timer Micro Switch N.C.		X
Timer Micro Switch N.O.	X	
High Temp Switch	X	

At the beginning of the cycle, the timer is not turning, but the icemaker is refrigerating the water, starting to turn the water into ice.

CM650R OPERATION - ELECTRICAL SEQUENCE
TIMED FREEZE

ELECTRICAL COMPONENTS (LOADS)	ON	OFF
Crankcase Heater	X	
Compressor	X	
Fan Motor	X	
Hot Gas Valve		X
Inlet Water Valve		X
Liquid Line Valve	X	
P.C. Board Relay Coil	X	
Timer	X	
Water Pump	X	

SWITCHES	ON	OFF
Bin Thermostat	X	
Cube Size Thermostat	X	
Toggle Switch	X	
L.P. Control	X	
H.P. Control	X	
Timer Micro Switch N.C.		X
Timer Micro Switch N.O.	X	
High Temp Switch	X	

After the icemaker has cooled the water and formed some ice on the evaporator, the evaporator will have gotten cold enough to have the cube size control close. All this does is start and run the timer.

HARVEST

ELECTRICAL COMPONENTS (LOADS)	ON	OFF
Crankcase Heater	X	
Compressor	X	
Fan Motor	X	
Hot Gas Valve	X	
Inlet Water Valve	X	
Liquid Line Valve	X	
P.C. Board Relay Coil		X
Timer	X	
Water Pump	X	

SWITCHES	ON	OFF
Bin Thermostat	X	
Cube Size Thermostat		X
Toggle Switch	X	
L.P. Control	X	
H.P. Control	X	
Timer Micro Switch N.C.	X	
Timer Micro Switch N.O.		X
High Temp Switch	X	

The timer has now turned far enough so that the micro-switch plunger has dropped into the gap in the cam, this breaks the circuit to the relay in the P.C. Board - and that puts the machine into the harvest cycle, where the hot gas valve and inlet water valve have opened to harvest the ice.

CM650R OPERATION - ELECTRICAL SEQUENCE

PUMP DOWN - STAGE ONE

ELECTRICAL COMPONENTS (LOADS)	ON	OFF
Crankcase Heater	X	
Compressor	X	
Fan Motor	X	
Hot Gas Valve		X
Inlet Water Valve		X
Liquid Line Valve		X
P.C. Board Relay Coil		X
Timer		X
Water Pump	X	

SWITCHES	ON	OFF
Bin Thermostat		X
Cube Size Thermostat		X
Toggle Switch	X	
L.P. Control	X	
H.P. Control	X	
Timer Micro Switch N.C.	X	
Timer Micro Switch N.O.		X
High Temp Switch	X	

When ice is on the bin control, it will OPEN and at the end of the harvest cycle, this will initiate a pump down cycle. The liquid line valve (normally closed) will close and the compressor will pump refrigerant into the receiver.

PUMP DOWN - STAGE TWO

ELECTRICAL COMPONENTS (LOADS)	ON	OFF
Crankcase Heater	X	
Compressor		X
Fan Motor		X
Hot Gas Valve		X
Inlet Water Valve		X
Liquid Line Valve		X
P.C. Board Relay Coil		X
Timer		X
Water Pump		X

SWITCHES	ON	OFF
Bin Thermostat		X
Cube Size Thermostat		X
Toggle (Master and Compressor)	X	
L.P. Control		X
H.P. Control	X	
Timer Micro Switch N.C.	X	
Timer Micro Switch N.O.		X
High Temp Switch	X	

After the low side pressure has dropped under 3 psig, the compressor will be turned off by the low pressure control and the unit will be pumped down, OFF and in a standby mode.

CM650R SERVICE SPECIFICATIONS

In servicing a machine, it is often useful to compare that individual unit's operating characteristics to those of a normally operating machine. The numbers and facts listed on this page are for NEW, CLEAN machines.

Use these numbers as a guideline only.

COMPONENT

Timer: 1 revolution of the cam, in minutes 8

Harvest Time, preset, in minutes 2-1/4

Inlet Water Valve, water flow in g.p.m. 3/4

	Close	Open
Cube Size Thermostat, Reverse Acting, Temperature Range	. (+15^{0}F. to +2^{0}F.)	n/a
Bin Thermostat Temperature Range	. 38.5^0 - 43.5^0	33.5^0 - 38.5^0
High Pressure Safety Switch, PSIG	. manual	450
Low Pressure Control Switch, PSIG	. 23	3

OPERATING CHARACTERISTICS

This model is remote air cooled and during the freezing cycle, the discharge pressure will slowly decline as the unit forms ice on the evaporators. At the same time the suction pressure is also dropping, reaching it's lowest point at the end of the freeze cycle. Compressor amps experience a similar decline.

During the harvest or defrost cycle, the suction pressure goes up dramatically with the opening of the hot gas by pass valve. The discharge pressure falls when this happens.

Freeze Cycle:

For example, with conditions at 70^{0}F. air, 55^{0}F. water, and with the condenser air intake temperature at -5^{0}F. the discharge pressure will be about 225 PSIG. Suction pressure at the end of freeze will be about 28 PSIG.

Freeze cycle time will be about 12-13 minutes.

Compressor amps 5 minutes into the freeze cycle will be about 7 for single phase.

At 110^0/90^0/80^0, the discharge pressures will go from about 350 down to 290. Suction pressure will be about 33 PSIG at the end of the 19-20 minute freeze cycle.

Harvest Cycle:

Discharge pressure at 70^0/55^0/-5^0 will be about 170, and suction pressure will be around 80 PSIG.

At 110^0/90^0/80^0, discharge pressure will be about 260. Suction pressure will be about 120 PSIG.

The ice per cycle is 5.5 to 6 pounds.

The values listed are representative of values seen at a wide range of air and water temperatures and are for a normal cube size. When comparing these figures to field data, allow a variation from each end of the range given.

After servicing refrigeration system, always torque the access valve caps to 60-75 inch pounds.

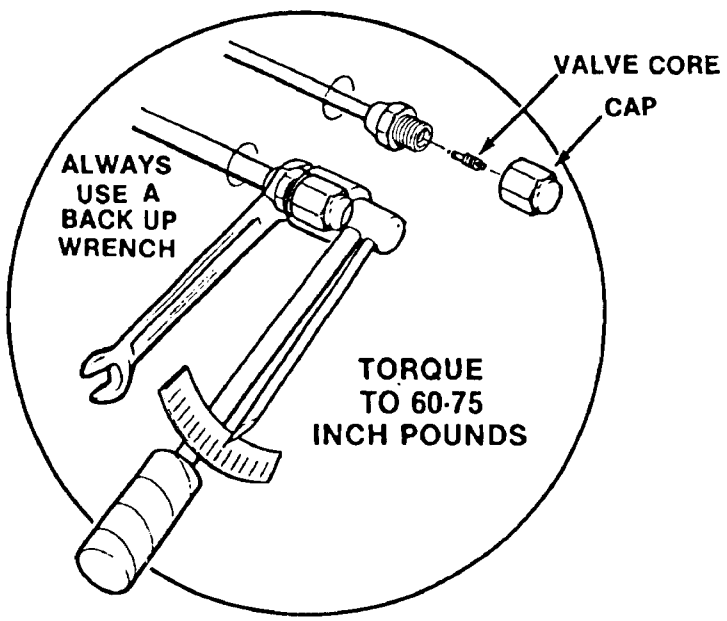

CM650R MAINTENANCE & CLEANING INSTRUCTIONS

A Scotsman Ice System represents a sizable investment of time and money in any company's business. In order to receive the best return for that investment, it MUST receive periodic maintenance.

It is the USER'S RESPONSIBILITY to see that the unit is properly maintained. It is always preferable, and less costly in the long run, to avoid possible down time by keeping it clean; adjusting it as needed; and by replacing worn parts before they can cause failure. The following is a list of recommended maintenance that will help keep the machine running with a minimum of problems.

Maintenance and Cleaning should be scheduled at a minimum of twice per year.

ICEMAKER

THE FOLLOWING MAINTENANCE SHOULD BE SCHEDULED AT LEAST TWO TIMES PER YEAR ON THIS ICEMAKER. CALL YOUR AUTHORIZED SCOTSMAN SERVICE AGENCY.

1. Check and clean or service any optional water treatment devices, if any.

2. Clean the water strainer.

3. Clean the remote air cooled condenser. Do not use a wire brush. Vacuum or blow out any dust in the fins of the condenser: the condenser is only clean when light can be seen through the fins.

4. Check that the cabinet is level in the side to side and front to back directions.

5. Clean the water system, evaporator plates and sump assembly, using a solution of Scotsman Ice Machine Cleaner. Refer to CLEANING - Icemaker.

Cleaning requirements vary according to local water conditions and to how much the machine runs. Continuous check of the clarity and shape of the ice cubes, with a visual inspection of the water system parts, evaporator parts and the reservoir will indicate if more frequent cleaning is needed.

6. Check and tighten all bolts and screws.

7. Check for water leaks and make corrections.

8. Check that the bin thermostat operates correctly: holding ice on the thermostat control tube in the bin should cause the icemaker to shut off at the end of the harvest cycle. After the ice is removed, the icemaker should restart within a few minutes.

9. Check cube size, adjust if required.

10. Check harvest time, adjust if required.

ICE STORAGE BIN

The interior liner of the bin is in contact with a **food** product: **ice.** The storage bin must be **cleaned** regularly to maintain a **sanitary** environment. Once a week cleaning with soap and water, a hot water rinse and an air dry is a basic procedure.

Every 90 days, the liner should be sanitized with a commercial ice machine sanitizer, according to the directions of the sanitizer, or with a solution of household bleach and water:

1. Mix the bleach and water using the ratio of two ounces of bleach to two gallons of water.

2. Wipe all interior surfaces of the ice storage bin with the bleach and water.

3. Allow to air dry.

CLEANING: ICEMAKER

1. Remove front panel.

2. Switch the compressor switch to OFF. Switch the master switch to OFF.

3. Remove 4 thumbscrews and the front liner.

4. Twist forward and remove the front drain trough, and switch the master switch to CLEAN, pumping the water from the reservoir into the bin. Replace the drain trough.

5. Mix 8 ounces of Scotsman Ice Machine Cleaner with 1 gallon of warm (95^0F. - 115^0F.) water and pour into the reservoir until full.

WARNING

Scotsman Ice Machine Cleaner contains Phosphoric and Hydroxyacetic acids. These compounds are corrosive and may cause burns. If swallowed, DO NOT induce vomiting. Give large amounts of water or milk. Call Physician immediately. In case of external contact, flush with water. KEEP OUT OF THE REACH OF CHILDREN.

CM650R MAINTENANCE & CLEANING INSTRUCTIONS

6. Let the unit operate for 30 minutes with the compressor off, then switch the unit off.

7. Remove the front drain trough again.

8. Switch the master switch to CLEAN to pump water from the sump into the bin. Continue to add fresh water to flush residual cleaner from the system. Switch the master switch off.

9. Wash the plastic and stainless liners of the freezer section with a solution of household bleach (1 ounce of bleach to 1 gallon of water) and warm (95^0F.-115^0F.) water. Allow to air dry.

10. Replace the drain trough and front liner.

11. Switch the master and compressor switches back on.

12. Replace the front panel

13. Check the next batch of cubes to make sure all of the acid taste is gone.

////////////////////////////////////CAUTION////////////////////////////////////

DO NOT use ice cubes produced from the cleaning solution. Be sure none remain in the bin.

//

14. Pour hot water into the storage bin to melt the cubes and also clean out the bin drain.

15. The unit is now ready for continued automatic operation.

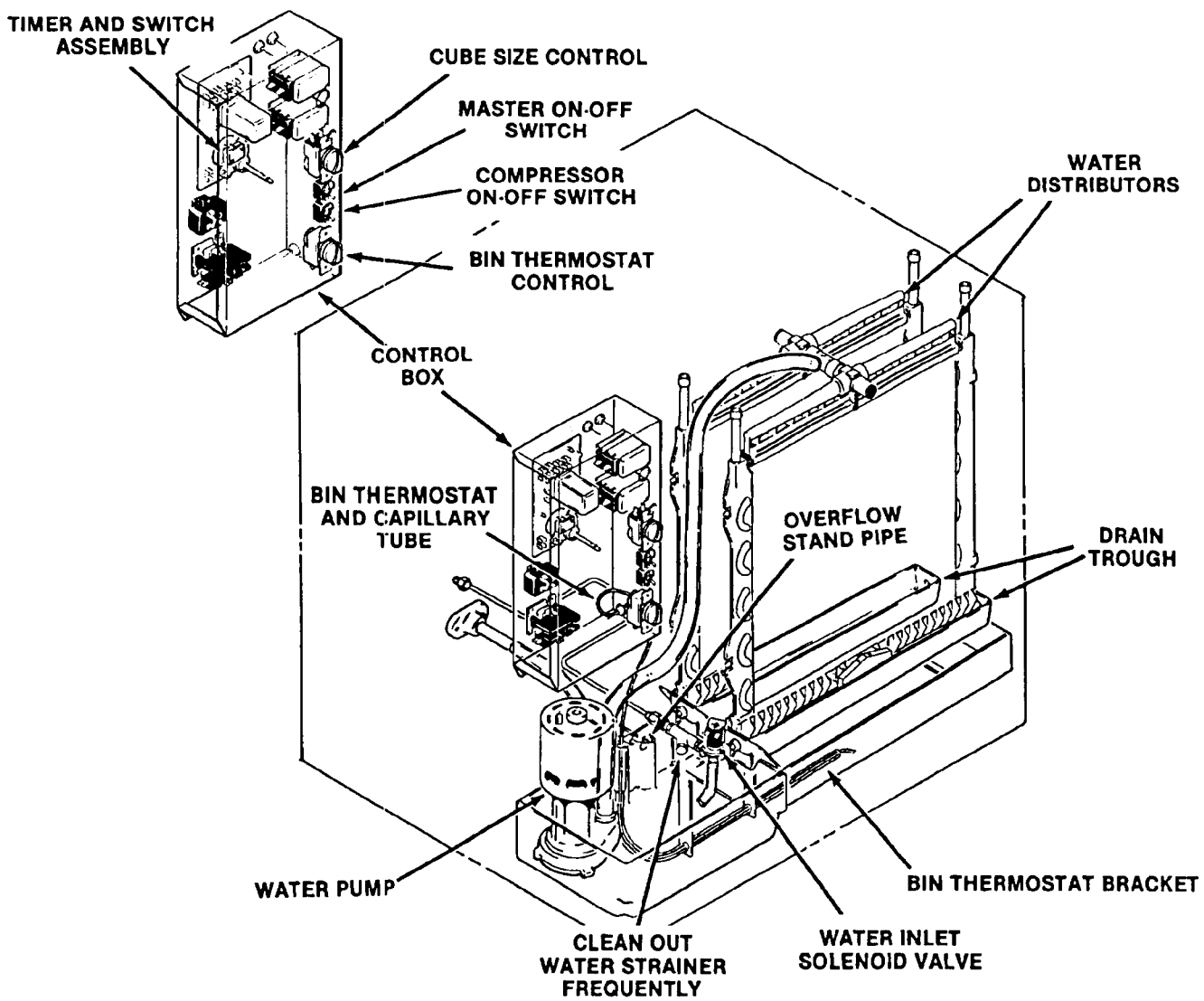

CM650R MAINTENANCE & CLEANING INSTRUCTIONS

REMOTE CONDENSER

Frequent cleaning and inspection of the condenser should be performed to maintain maximum efficiency of Icemaker. A dirty condenser or blocked air flow will greatly decrease icemaking efficiency.

1. With building source electrical power OFF to the icemaker, clean the remote condenser fins, using a vacuum cleaner, whisk broom or brush. DO NOT USE A WIRE BRUSH. Instruct customer to clean frequently.
2. Check that fan blade moves freely, is not touching any surfaces, is not bent or out of balance; and, the wire guard is properly installed and securely attached.
3. Check that the roof area immediately surrounding the remote condenser is free and clear of any debris that may collect, such as leaves, paper, trash, etc.

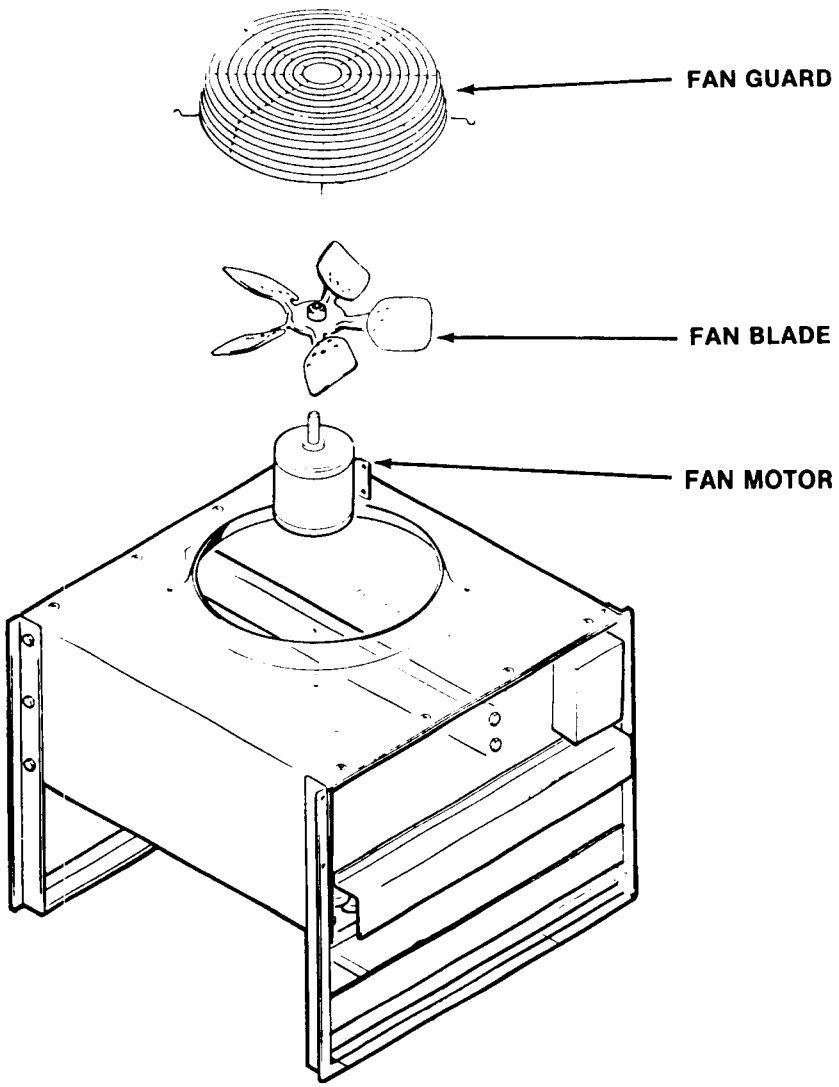

Cleaning Remote Condenser

CM650R COMPONENT DESCRIPTION

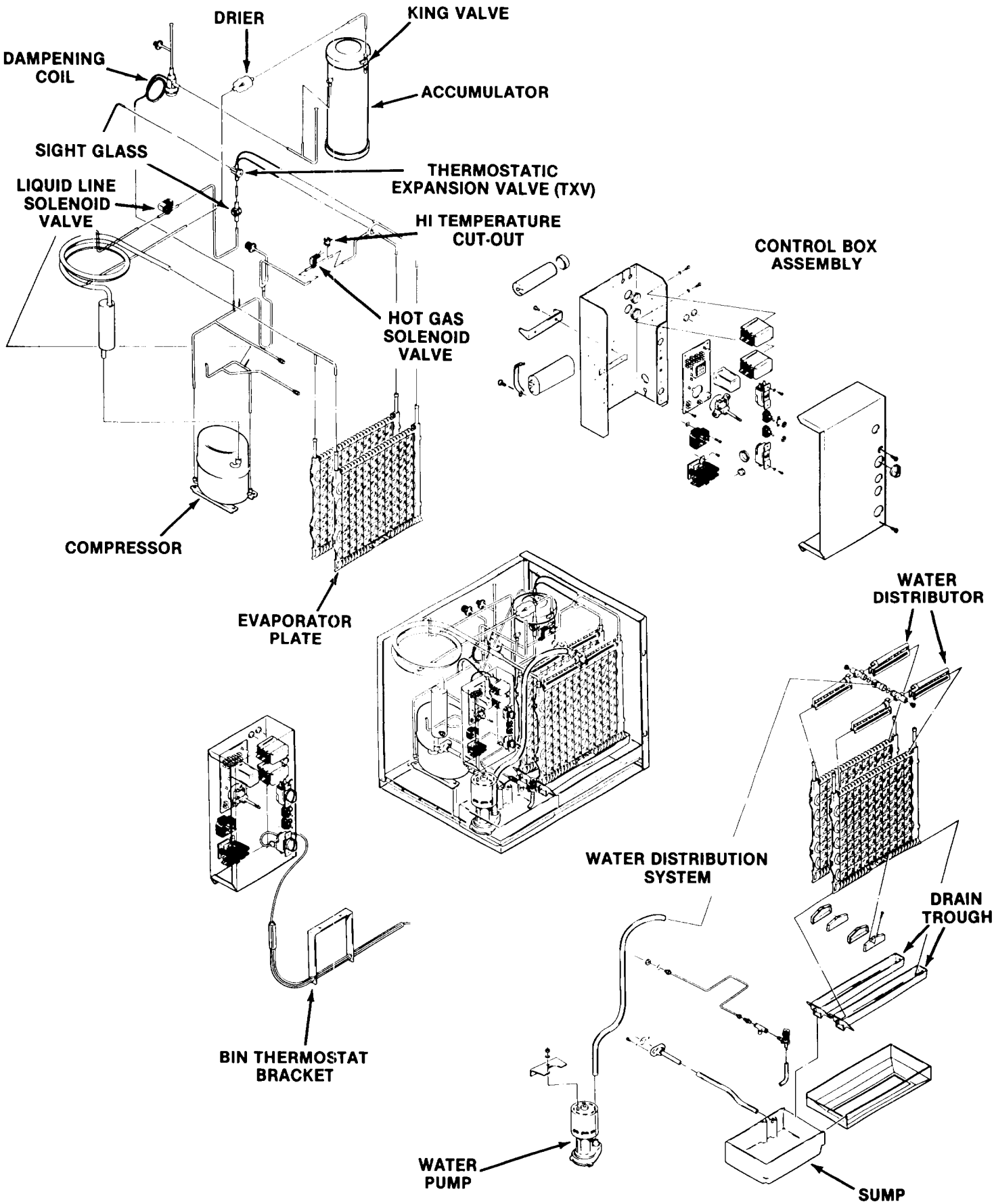

CM650R COMPONENT DESCRIPTION

BIN THERMOSTAT CONTROL

The bin thermostat control is located in the bottom of the control box. The sensing capillary tube of the control is routed from the control box through the inner left wall in the evaporator section, to the bin thermostat control bracket hanging in the ice storage bin. The bin thermostat control functions to automatically shut OFF the icemaker, when the ice storage bin is filled and ice contacts the capillary tube. It also signals the RESTART of the icemaker, when the capillary tube starts to warm up, after ice has been removed from the bin.

Bin thermostat control adjustment should ONLY be performed if premature shut off occurs or ice backs up into the freezing section of the cabinet. Adjust only in increments of one eighth turn of a screw at a time.

COMPRESSOR CONTACTOR

The compressor contactor functions to carry the compressor line current. The contactor is wired so any control in the pilot circuit, such as the bin thermostat, low pressure and high pressure controls, etc., will cause the contactor holding coil to be de-energized, when the control contact OPENS, thereby breaking the circuit to the compressor through the contactor points.

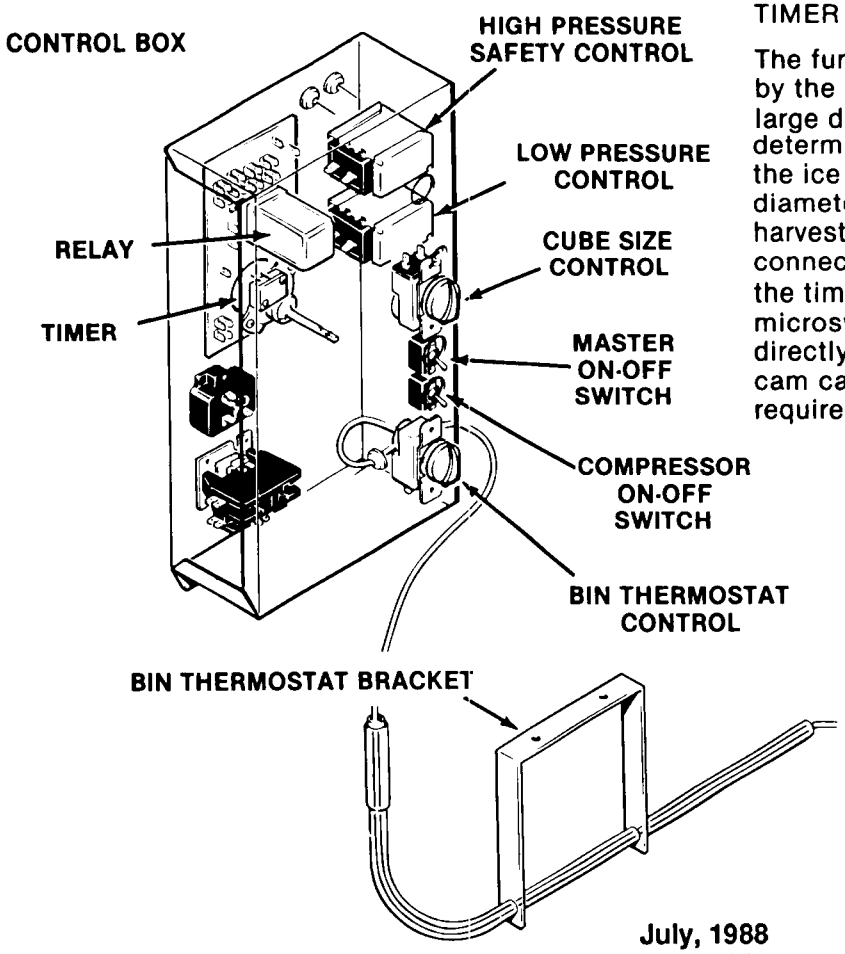

CUBE SIZE CONTROL

The temperature sensing cube size control affects the length of the freezing cycle prior to initiating the finishing timer. The cube size control closes its contacts when the evaporator reaches a preset temperature starting the finishing timer. A variation in either ambient air or incoming water temperature will affect the efficiency of the refrigeration system. This will vary the length of time it takes the evaporator to reach the temperature at which the cube size control is preset to CLOSE; which, in turn, will affect the overall cycle time.

See *Cube Size Adjustment* BEFORE attempting to adjust the control.

RELAY

The multi-function, three pole, double-throw, plug-in relay is installed directly into a receptacle on the printed circuit board in the control box. The relay functions, in part, to by-pass the bin thermostat control to prevent the icemaker from shutting OFF, when a filled-bin condition occurs, during the freezing cycle. The by-pass action serves to ensure full-sized cubes with each harvest cycle; and, to prevent short cycling on the bin thermostat control.

TIMER — Timer & Switch Assembly.

The function of the timer begins when activated by the cube size control. The outer surface, or large diameter lobe of the timer cam, determines the timer cycle for finish freezing of the ice cubes, while the inner surface, or small diameter lobe, determines the time cycle for the harvest sequence. All electrical circuitry is connected through the printed circuit board and the timer and double-throw microswitch. The microswitch is actuated by a cam assembly directly connected to the timer motor. The timer cam can be adjusted to vary the defrost time required.

CM650R COMPONENT DESCRIPTION

WATER INLET SOLENOID VALVE

The water inlet solenoid valve opens during harvest to fill the sump assembly with water. Excess water overflows through a stand pipe located at the back of the sump to flush minerals from the sump.

WATER DISTRIBUTION SYSTEM

The water distribution system functions to evenly supply water to all cells of the evaporator plates. The water pump pumps water from the sump up to the vertical tygon tube to a tee. From there water is channeled through water manifolds to four water distributors, two atop each evaporator plate, and distributed evenly down both sides of each evaporator plate. Gravity flow returns the water to the sump reservoir for recirculations.

STRAINER

In the water line before the inlet water valve, functions to trap large particles suspended in the water supply before they enter the inlet water valve. The screen is easily removed for cleaning and should be cleaned frequently.

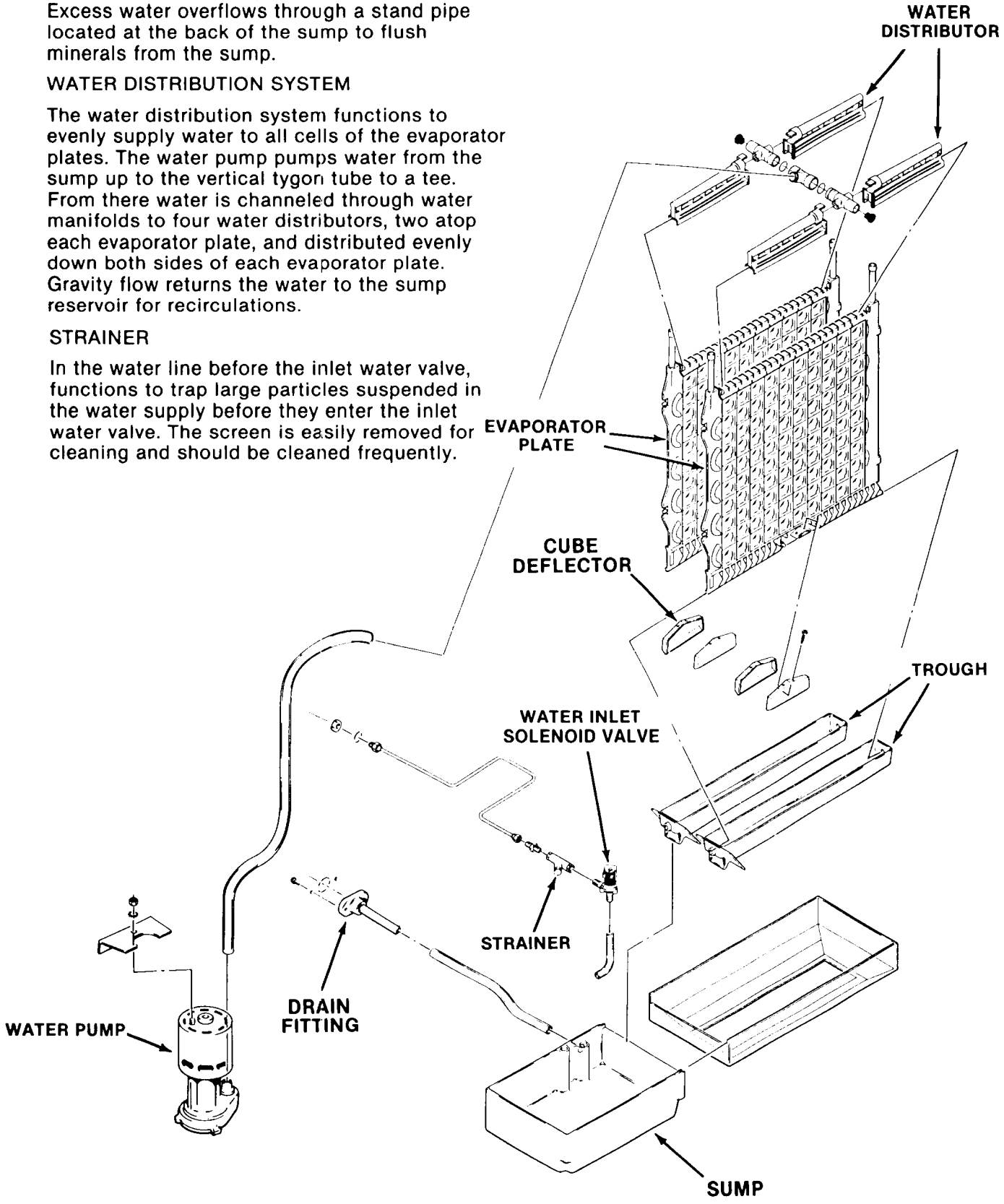

CM650R COMPONENT DESCRIPTION

HIGH PRESSURE RECEIVER

Provides storage volume for refrigerant during cross ambient operation. The high pressure receiver is sized large enough to hold the entire refrigerant charge. During cold operation there is enough liquid in the receiver to maintain a liquid seal to the liquid line.

THERMOSTATIC EXPANSION VALVE (TXV)

The thermostatic expansion valve regulates the flow of refrigerant to the evaporator, and reduces pressure of liquid refrigerant from condensing pressure to evaporating pressure.

ACCUMULATOR

The accumulator traps liquid overfeed from the evaporator during harvest and meters it into the compressor at a controlled rate.

LIQUID LINE SOLENOID VALVE

The liquid line solenoid valve provides positive shutoff of refrigerant flow for off cycle evaporator pump down.

HOT GAS SOLENOID VALVE

The hot gas solenoid valve opens during the harvest cycle, to divert the hot discharge gas from the compressor, directly into the evaporator plates assembly to release ice cubes from the ice cube molds. The hot gas solenoid valve is comprised of two parts, the body and plunger and the coil and frame assemblies. Installed in the discharge line of the compressor, the energized solenoid coil lifts the valve stem within the valve body, to cause the hot discharge gas to be diverted when the finishing timer has advanced to the start of the harvest cycle.

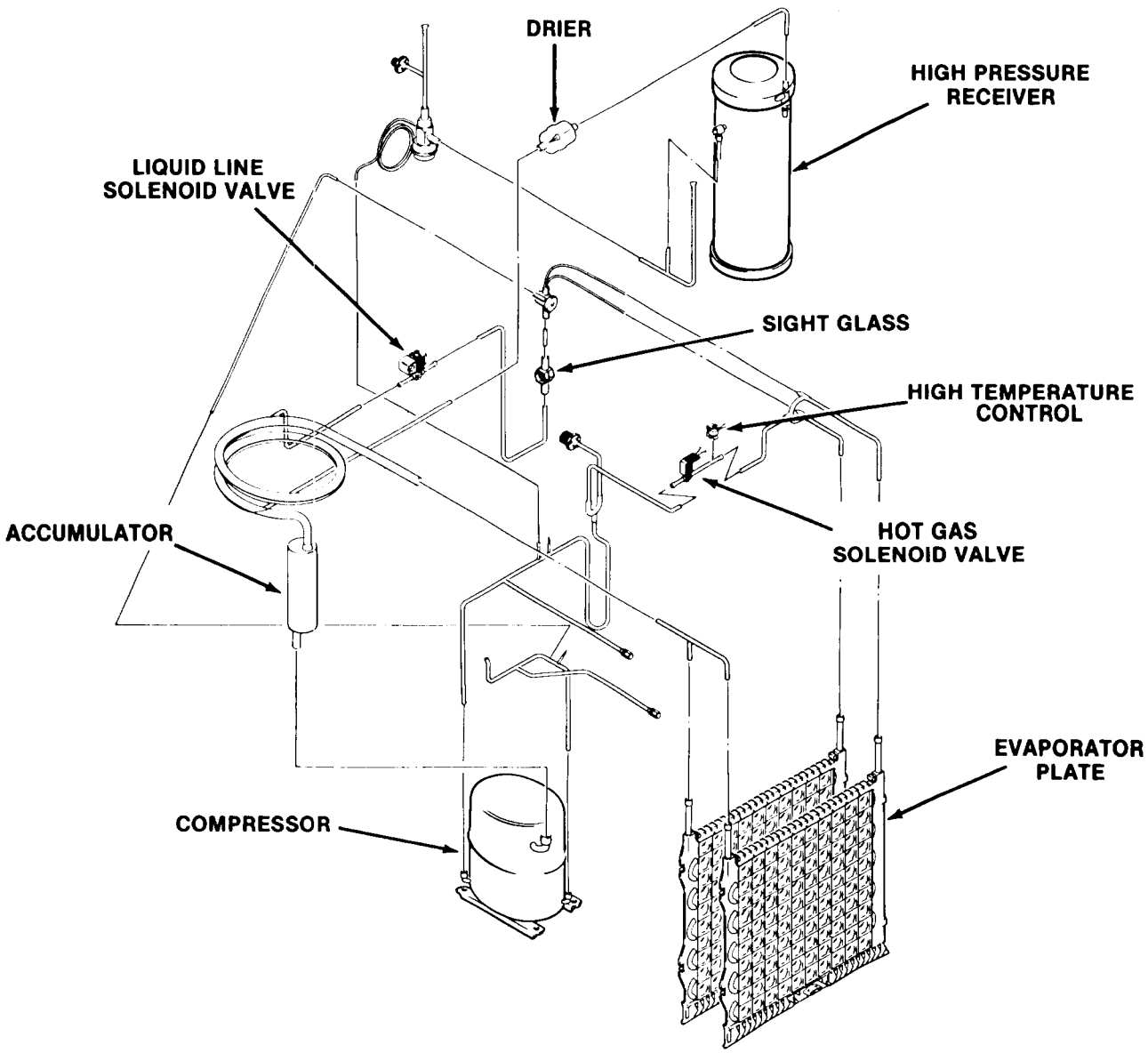

CM650R SERVICE DIAGNOSIS

The service diagnosis section is for use in aiding the serviceman in diagnosing a particular problem for pin-pointing the area in which the problem lies, thus an ever available reference for proper corrective action.

The following chart lists corrective actions for the causes of known symptoms of certain problems that can occur in the icemaking-refrigeration system.

SYMPTOM	POSSIBLE CAUSE	CORRECTION
Irregular size cubes	Some distributor holes plugged.	Clean distributor holes.
		Clean water sump.
	Shortage of water.	See Shortage of water CORRECTION.
	Unit not level.	Level cabinet, as required.
Cubes too large.	Dirty air-cooled condenser.	Clean remote condenser.
	Cube Size Control set too cold.	Rotate Cube Size Control dial toward WARMER.
	Loss of refrigerant.	Check for refrigerant leaks, correct leaks; recharge system.
Cubes too small.	Cube Size Control set too warm.	Rotate Cube Size Control dial toward COLDER.
	Moisture in refrigeration system.	Blow refrigerant charge; replace drier; evacuate system; add proper refrigerant charge.
	Shortage of water.	See shortage of water CORRECTION.
	TXV valve super heat too high.	Replace valve.
Cloudy Cubes.	Shortage of water.	See Shortage of water SYMPTOM.
	Dirty water supply.	Install water filter or treatment system.
	Accumulated impurities.	Use SCOTSMAN Ice Machine Cleaner. See Cleaning Instructions.
Shortage of water.	Short harvest cycle.	Adjust cam of timer and switch assembly.
	Water leak in sump area.	Locate leak and correct condition.
	Partial restrictions in water strainer.	Clean or replace strainer.
	Low water pressure.	Check for incorrect supply line size or blockage.
		Check for low main pressure. If low, contact water company.

CM650R SERVICE DIAGNOSIS

SYMPTOM	POSSIBLE CAUSE	CORRECTION
Decreased Ice capacity.	High head pressure, result of dirty Condenser or faulty fan Motor.	Clean remote condenser fins. Repair or replace fan motor.
	Non-condensable gas in the system	Purge the system and recharge per nameplate requirements.
	Overcharge of refrigerant	Slowly purge off to correct charge.
	Hot gas solenoid valve leaking.	Replace valve.
	Defective compressor. Check amp draw of compressor.	Replace compressor.
	Leaky inlet water valve.	Replace valve.
	High ambient temperature for condenser	If possible, reduce condenser inlet air temperature.
Poor harvests. Icemaker does not harvest.	Too short defrost time.	Check and adjust harvest cycle.
	Restriction in water inlet line.	Check strainer and inlet water valve.
	Hot gas solenoid does not open. Binds or burned out.	Replace solenoid.
	Undercharge of refrigerant.	Charge to nameplate requirements.
	Water pressure too low.	Check for 20 PSI flowing water
	Head pressure regulator valve - low head.	Replace valve.
Compressor cycles intermittently.	Low voltage.	Check for circuit overload.
		Check building supply voltage, if low, contact power company.
	Cycling on low pressure control.	Cold ambient at condenser.
		Pump down solenoid coil opens. Replace it.
Unit trips on Hi pressure cut out.	Dirty condenser.	Clean condenser with vacuum cleaner or brush. DO NOT USE A WIRE BRUSH.
	Defective fan motor.	Replace fan motor.
	Non-condensable gases in system.	Purge system and recharge per nameplate requirements.
Frost on compressor.	TXV metering too much refrigerant.	Superheat set too low. Adjust or replace valve.
Unit cycles on high-temp switch.	Hot gas valve leaks thru in freeze cycle or unit stuck in harvest.	Check hot gas valve and electrical controls for harvest cycle.

CM650R SERVICE DIAGNOSIS

SYMPTOMS	POSSIBLE CAUSE	CORRECTION
Icemaker will not operate.	Blown fuse in line.	Replace fuse and check for cause.
	Master switch in OFF position.	Set switch to ON position.
	Faulty master switch.	Replace switch.
	Timer contacts open.	Replace timer.
	Improperly wired.	Contact electrical contactor for correction.
	Out of refrigerant, off on Low pressure control.	Correct leak, recharge system.
	High pressure control tripped.	Reset, check condenser.
	Bin control open.	Check bin control Unit in coldroom or bin control defective.
	Liquid line solenoid valve not opening - keeps unit pumped down.	Repair or replace valve.
Icemaker will not go into the harvest cycle automatically.	Cube size control will not close.	Replace cube size control.
	Timer motor open.	Replace timer.
	Plug in relay contacts open.	Replace relay.
	Cube size control may not close if condensing pressure is too high.	Check condenser and discharge pressure.
Water overflows from the sump into the bin.	Restricted sump drain.	Repair drain.
	Inlet water valve lets in too much water.	Replace inlet valve.
Icemaker stays in the harvest cycle.	Plug in relay coil open.	Replace relay.
	Timer motor open or stuck.	Replace timer.
	Timer microswitch N.O. contacts. Will not close.	Replace timer.

CM650R REFRIGERANT CHARGE DIAGNOSIS

On this model, the refrigerant charge is adequate whenever the sight glass remains full of liquid refrigerant throughout the freeze cycle. HOWEVER, the condensing temperature will have a direct bearing on this. A unit with a marginal charge in summer, will be undercharged when the outside air temperature drops. The only correct and accurate way to charge this unit is to weigh in the nameplate charge.

CM650R REMOVAL AND REPLACEMENT PROCEDURES

WARNING

Be sure the electrical power supply and the water supply to the icemaker are OFF BEFORE starting any of the following REMOVAL AND REPLACEMENT procedures, as a precaution to prevent possible personal injury or damage to equipment.

For installations having stacked cubers mounted on a bin, disregard steps to remove the top panel. Access to all areas and parts can still be gained through removal of the necessary front or side panels.

REMOVAL AND REPLACEMENT OF THE BIN THERMOSTAT CONTROL

To remove the bin thermostat control:

1. Remove front panel.
2. Remove screws and the control box cover.
3. Remove wire leads from the bin thermostat control.
4. Unthread the capillary tube and remove from the bin thermostat control bracket at the bottom right side of the evaporator section.
5. Remove the two screws attaching the bin thermostat control to the side of the control box; then, carefully pull the capillary tube out of the evaporator section. Carefully remove the bin thermostat control and capillary tube from the control box.

To replace the bin thermostat control, reverse the removal procedure.

REMOVAL AND REPLACEMENT OF THE CUBE SIZE CONTROL

To remove the cube size control:

1. Remove front panel.
2. Remove cover from control box.
3. Trace capillary tube, from the cube size control to the refrigerant suction line.
4. Remove the coiled capillary tube bulb from the tube well on the suction line.
5. Remove electrical leads from the cube size control.
6. Remove screws and the cube size control.

To replace the cube size control, reverse the removal procedure.

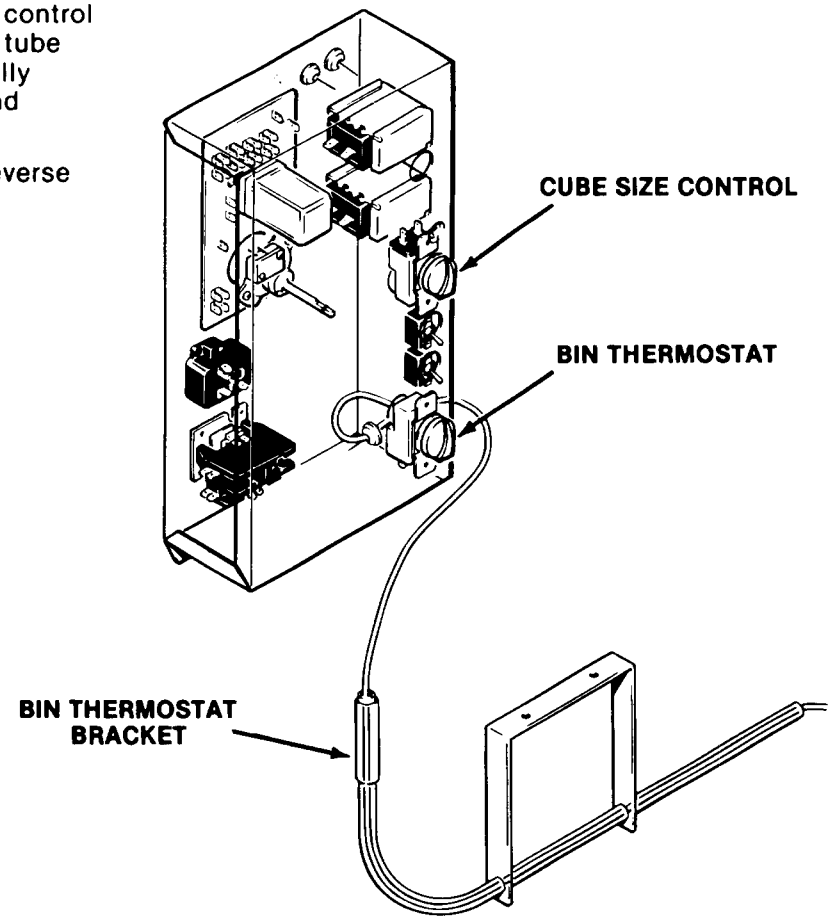

CM650R REMOVAL AND REPLACEMENT PROCEDURES

WARNING

Disconnect electrical power supply to icemaker whenever adjustment procedures are performed.

REMOVAL AND REPLACEMENT OF THE WATER DISTRIBUTOR TUBES AND MANIFOLD TUBES

To remove the water distributor tube and manifold tube:

1. Pull out to unsnap catches and remove the front panel.
2. Remove 4 thumb screws and remove the evaporator cover.
3. Slide the water distributor tube to the left about 1/8-inch along the top of the evaporator plate, until the water distributor tube can be unsnapped from the flexible notch and lifted upward to the right side.
4. Unsnap and disconnect water distributor tubes from the water manifold section.

To replace the water distributor tubes and manifold tubes, reverse the removal procedure. BE SURE the notches in the water manifold tubes properly engage the alignment keys in the tee.

BE SURE the water distributor tube is securely fastened at the notch at both sides of the evaporator plate.

Check identical attachment for the left water distributor tube and notch; also, that the distributor/manifold connections at the top center of each evaporator plate is snug against the top of the plate.

REMOVAL AND REPLACEMENT OF THE WATER PUMP ASSEMBLY

To remove the water pump assembly:

1. Pull out to unsnap catches and remove the front panel.
2. Remove the Tygon tube to the pump assembly.
3. Disconnect electrical leads from the water pump assembly.
4. Remove thumb screws and the water pump from the sump.
5. Remove one nut and mounting bracket from top of water pump.

To replace the water pump assembly, reverse the removal procedure.

REMOVAL AND REPLACEMENT OF THE INLET WATER SOLENOID VALVE ASSEMBLY

1. Shut OFF water supply to machine.
2. Remove screws and pull the water solenoid valve out to gain access.
3. Loosen and remove inlet water line fitting from the inlet water solenoid valve assembly.
4. Remove inlet water Tygon tubing from the water solenoid valve.

To replace the inlet water valve assembly, reverse the removal procedures.

CM650R REMOVAL AND REPLACEMENT PROCEDURES

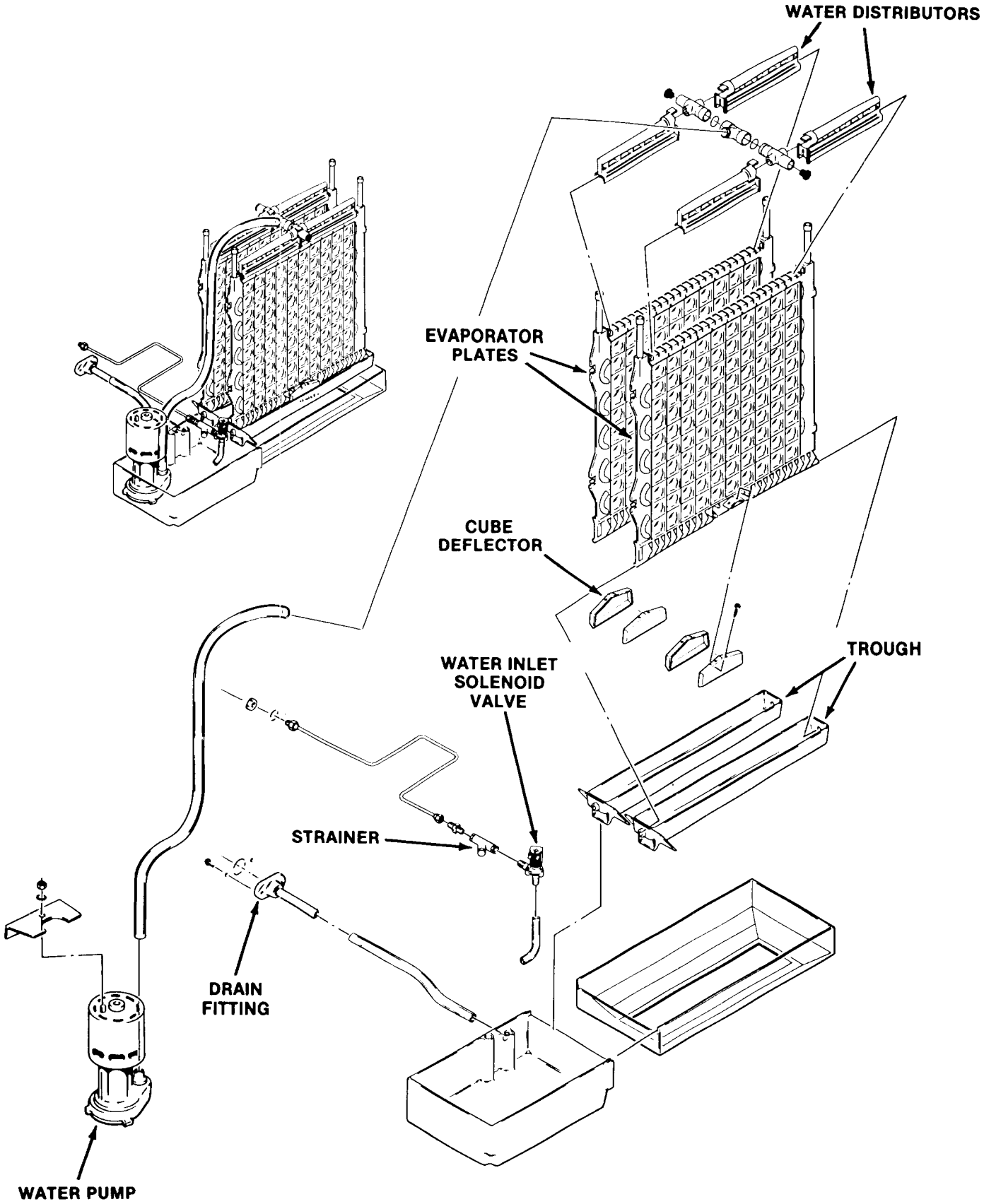

CM650R REMOVAL AND REPLACEMENT PROCEDURES

WARNING

Disconnect electrical power supply to icemaker whenever adjustment procedures are performed.

REMOVAL AND REPLACEMENT OF THE EVAPORATOR PLATE ASSEMBLY

1. Remove the front and top panels.
2. Bleed off or blow the refrigerant charge through the Schrader valve.
3. Disconnect Tygon water inlet tube(s), af the water manifold tee(s), above the evaporator plates.
4. Unsnap the sump assembly from the lower left and right attachment points on each evaporator plate.
5. Slide the water distributor tubes about 1/8-inch along the top of the evaporator plate to be removed, until the left water distributor tube can be lifted upward.
6. Lift the end of the water distributor tube and slide the distributors toward the left along the top of the evaporator plate, until the flexible right notch is cleared.
7. Unsnap and disconnect each left and right water distributor tube from the water manifold section.

CAUTION

Use EXTRA PRECAUTION to protect the plastic parts during the next step to unsolder the refrigerant lines, two places, at the top of the evaporator plate. Position wet cloths over top of plates, as well as over the plastic liner at the rear, or sides, to prevent accidental heat damage, or possible fire from torch flame.

8. Unsolder and remove the refrigerant lines at the top of the evaporator plate to be replaced.
9. Remove nuts at left of the evaporator then, loosen the braces just enough to remove the evaporator plate. Temporarily replace the braces, to support the remaining evaporator plate.

To replace the evaporator plate, reverse the removal procedures. See Nameplate. Weigh in proper charge of R-502.

Whenever a new charge of refrigerant is placed in the system, the compressor should NOT BE RUN until the crankcase heater has been on for 12 hours after re-charging.

CHARGING PROCEDURES

Particular care must be taken when recharging this remote system. No liquid refrigerant may be placed in the system at the compressor. DO NOT use the Schrader valves at the front of the machine for weighing in the charge. All liquid R-502 must be weighed into the receiver through the "front seated" King Valve.

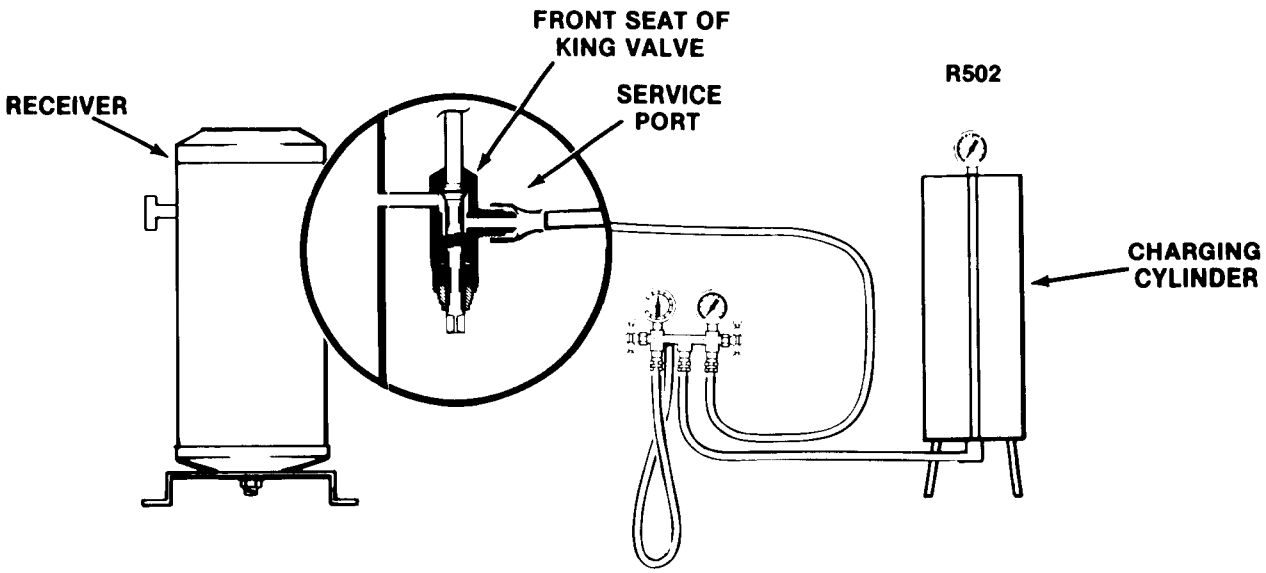

CM650R REMOVAL AND REPLACEMENT PROCEDURES

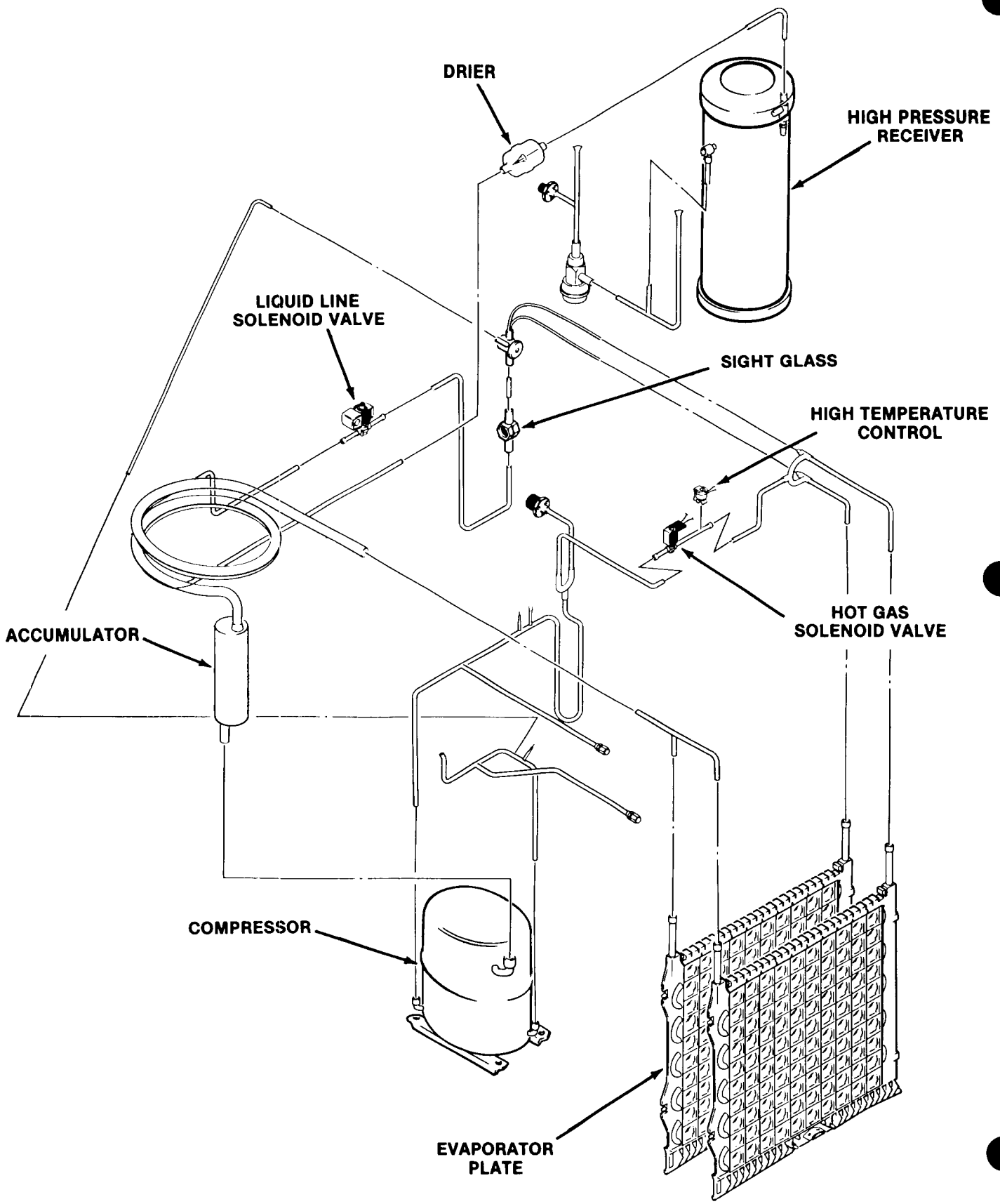

CM650R

TABLE OF CONTENTS

GENERAL INFORMATION & INSTALLATION
- For the Installer 3
- For the Electrician 11
- For the Plumber 14
- Final Checklist 15

OPERATION
- Pre-Start 16
- Start-Up 16
- Operation 19
- Operation - Electrical Sequence 21

MAINTENANCE & CLEANING INSTRUCTIONS
- Icemaker 25
- Ice Storage Bin 25
- Cleaning - Icemaker 25
- Remote Condenser 27

COMPONENT DESCRIPTION 29

SERVICE DIAGNOSIS 32

REMOVAL AND REPLACEMENT PROCEDURES
- Bin Thermostat Control 35
- Cube Size Control 35
- Water Distributor Tubes and Manifold Tubes 36
- Water Pump Assembly 36
- Inlet Water Solenoid Valve Assembly 36
- Evaporator Plate Assembly 38

LIST OF ILLUSTRATIONS

- Specifications 5
- Component Location 6
- Stacking Instructions 7
- Remote Condenser Installation 8
- Pre-Charged Refrigerant Line Routing 9
- Coupling Instructions 10
- Electrical Connections 11
- KCMR230 Kit Installation 12
- Water & Drain Connections 14
- Timer Cam Positions 16
- Ice Cube Size and Shape 17
- Cube Size Adjustment 18
- Freezing Cycle 19
- Harvest Cycle 20
- Maintenance & Cleaning 26
- Component Description 28
- Removal and Replacement 35

PARTS LIST AND WIRING DIAGRAMS 1
(Printed in Yellow)

PARTS LIST:
- Component Location 3
- Cabinet Assembly (Part I) 4
- Cabinet Assembly (Part II) 5
- Refrigeration System 6
- Water System 7
- Control Box 8

WIRING DIAGRAMS:
- CM650RE-3C (208-220/60/3) 10
- CM650RE-32C (208-230/60/1) 11
- CM650RE-3D (208-220/60/3) 12
- CM650RE-32D (208-230/60/1) 13

THIS PAGE
INTENTIONALLY
LEFT BLANK

CM650R FOR THE INSTALLER

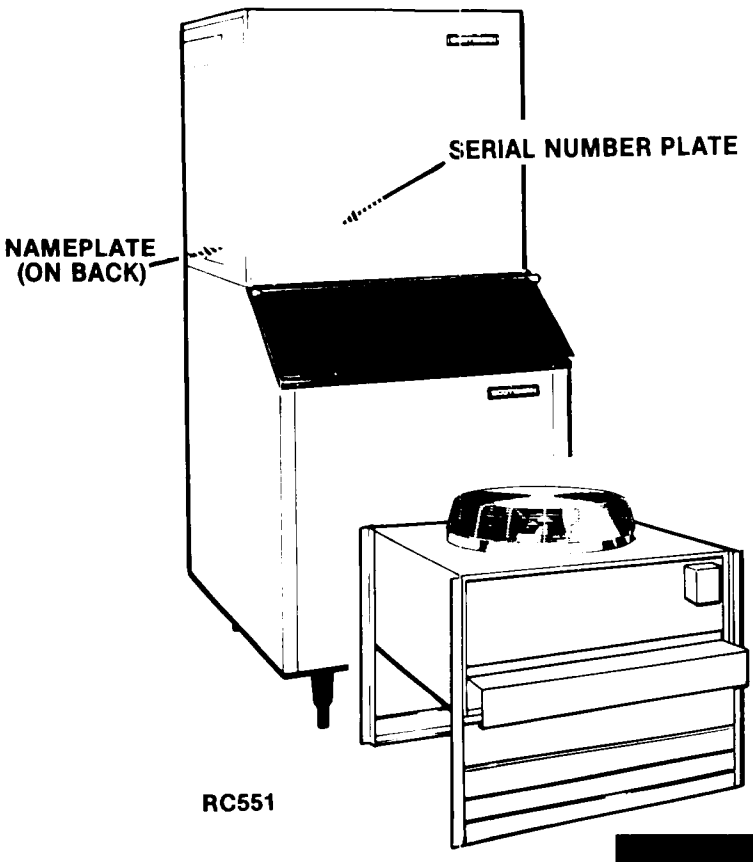

RC551

NAME PLATE

MODEL NUMBER
SERIAL NUMBER
A.C. SUPPLY VOLTAGE
MINIMUM CIRCUIT AMPACITY WIRES
MAXIMUM FUSE SIZE * HERTZ
HEATER WATTS PHASE
REFRIGERANT CHARGE OZ

MOTORS	VOLTS	R.L.A./F.L.A.	W/HP.	L.R.A.
COMPRESSOR				
FAN				
DRIVE				
OTHER				

DESIGN PRESSURE LOW HIGH
* OR HACR TYPE CIRCUIT BREAKER

SCOTSMAN A HOUSEHOLD INTERNATIONAL COMPANY
ALBERT LEA, MINNESOTA U.S.A.

SERIAL NUMBER PLATE

MODEL NUMBER
SERIAL NUMBER
VOLTS/HERTZ/PHASE
MAXIMUM FUSE SIZE
REFRIGERANT CHARGE OZ

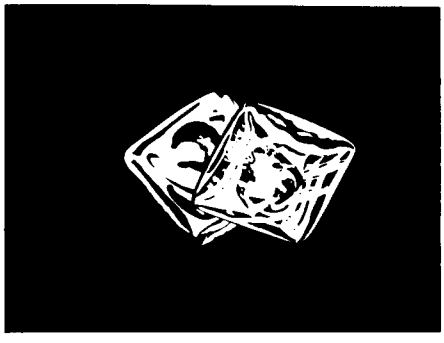

This product qualifies for the follow ng listings:

This icemaker has been engineered to our own rigid safety and performance standards. The National Sanitation Foundation (NSF) seal, signifies that it is listed with NSF and that it complies with the materials and construction standards of NSF. In addition, the Underwriters Laboratories, Inc., (UL) Listing Mark and the Canadian Standards Association (CSA) Monogram, both signify that its construction and design have been inspected and tested by them. NSF, UL and CSA inspectors also periodically examine production icemakers at the factory, to assure continued compliance.

To retain the safety and performance built into this icemaker, it is important that installation and maintenance be conducted in the manner outlined in this manual.

CM650R FOR THE INSTALLER

RC651/RC652 REMOTE CONDENSER

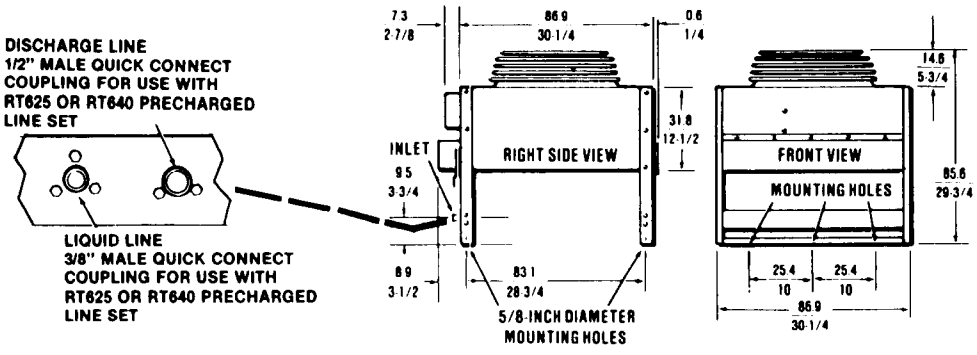

CM650R MODULAR CONTOUR CUBER

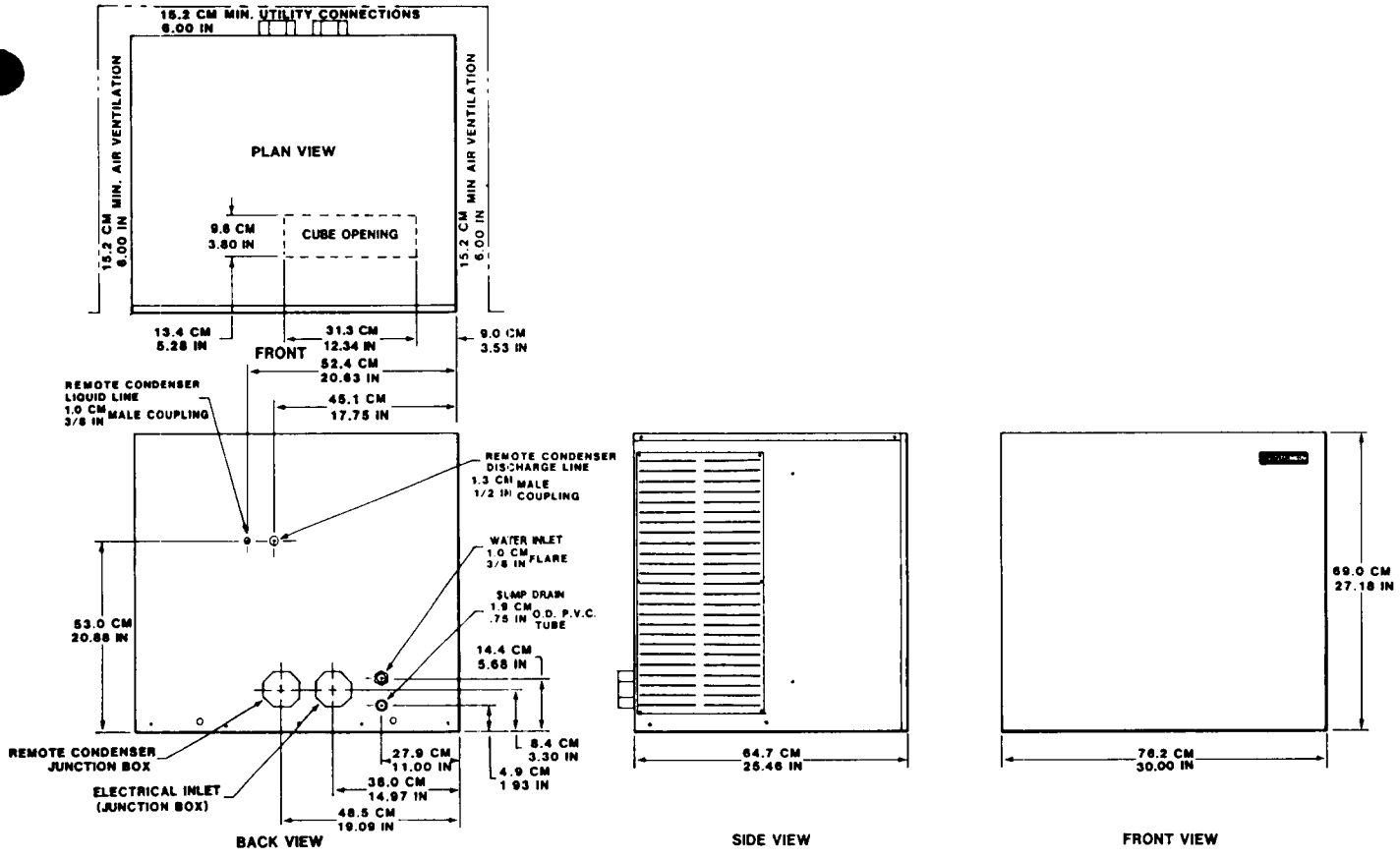

CM650R FOR THE INSTALLER

EQUIPMENT LIST/CM650R ICE SYSTEM

All of the following components must be available before assembly.

Icemaker - CM650RE-32D or CM650RE-3D

Ice Storage Bin - Scotsman Models HTB500 or BH500 or HTB350

Leg Kit for the Bin - KLP2E - Black
KLP2S - Nickel Plated

Pre-Charged Refrigerant Lines Kit
RT625 - 25 ft. or RT640 - 40 ft.

Remote Condenser RC651-32B Single Pass or RC652-32B Double Pass

If two CM650RE Icemakers are to be installed on one RC652-32B Condenser, a relay kit KCMR230 must be used to operate the condenser fan.

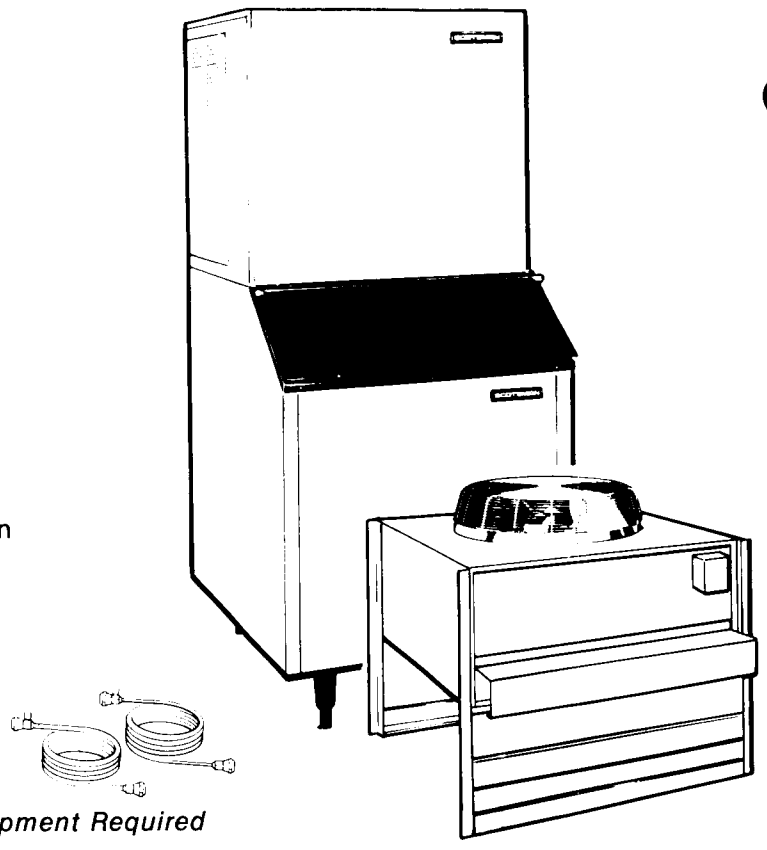

CM650R Equipment Required

We reserve the right to make product improvements at any time. Specifications and design are subject to change without notice.

SPECIFICATIONS

Model Number	(Height - w/o Legs) Dimensions H" x W" x D"	Cube Size	Cond. Unit	Finish **	Basic Electrical	Comp. H.P.	No. of Wires	Min. Circuit Ampacity †	* Max. Fuse Size	Ship. Wt. lbs./kg.
CM650RE-3D	27 x 30 x 24	Contour	R-Air	ES	208-230/60/3	1.75	3	10.0	15	222/101
CM650RE-32D	27 x 30 x 24	Contour	R-Air	ES	208-230/60/1	1.00	2	20.8	35	222/101

*Or HACR type circuit breaker.

REMOTE CONDENSERS FOR USE WITH CM650R ICE MACHINES

Model Number	(Height - w/o Legs) Dimensions H" x W" x D"	For Use With	Cond. Unit	Finish **	Basic Electrical	Comp. H.P.	No. of Wires	Min. Circuit Ampacity †	Ship. Wt. lbs./kg.
RC651-32B	29¼ x 30¼ x 33¾	(1) CM650R	Air	Galvanized	208-230/60/1	—	2	2.0 *	115/52
RC652-32B	29¼ x 30¼ x 33¾	(1 or 2) CM650R	Air	Galvanized	208-230/60/1	—	2	2.0 *	135/61

** EC - Enamel Charcoal, ES - Enamel Sandalwood, SS - Stainless Steel,

Use this value to determine minimum wire size as per National/Electric Code Standards.

*Ampacity for remote condenser fan motor is included in icemaker ampacity. Use this figure to determine wire size between icemaker and fan motor.

IMPORTANT OPERATING REQUIREMENTS

	MINIMUM	MAXIMUM
Air Temperatures	50°F (10.0°C)	100°F (38°C)
Water Temperatures	40°F (4.4°C)	100°F (38°C)
Water Pressures	20 lbs. gauge	120 lbs. gauge
Single Voltage Units	-10%	+10%

(Voltage rating specified on nameplate)

Extended periods of operation exceeding these limitations constitutes misuse under the terms of Scotsman Manufacturer's Limited Warranty, resulting in a loss of warranty coverage.
*This does not include the Remote Condenser. Remote Condensers are designed to operate in outdoor installations in a temperature range of -20° to 120° F.

CM650R's were manufactured in "A", "C" and "D" models. This manual is intended for the "D" model, but applies as well to the prior models.

REFRIGERANT - R502

PRE-CHARGED REFRIGERANT TUBE KITS:
RT625 — 25 foot pre-charged with R502 Refrigerant tubing with connectors.

RT640 — 40 foot pre-charged with R502 Refrigerant tubing with connectors.

SEE NAMEPLATE for electrical and refrigeration specifications. Locate the NAMEPLATE on the lower, left part of the Rear Panel.

SPKCMD-1 (fits ALL D models)
Optional panel kit for stainless steel front, top, 2 ends and 2 service panels.

FAN RELAY KIT:
KCMR230 Relay Kit — used when coupling two CM650RE Icemakers to one RC652-32B Condenser.

A typical installation should generally appear as illustrated below. The remote condenser must be located above the icemaker and the pre-charged lines installed per instructions. Refer to page 7 for the instructions for routing the pre-charged lines through the roof.

Refer to page 4 for the temperature limitations within which these machines will function properly.

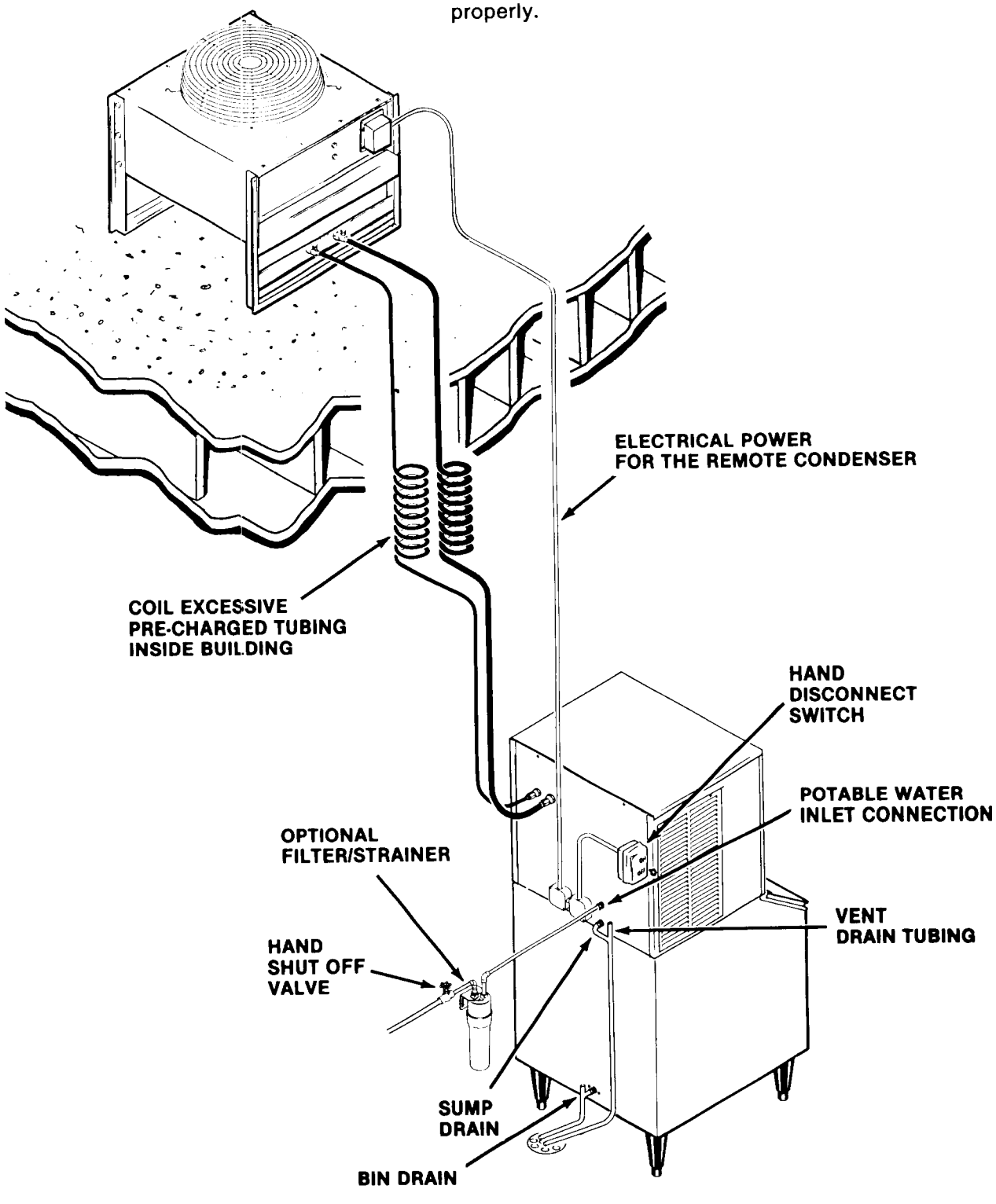

CM650R FOR THE INSTALLER

LOCATION & LEVELING

1. Arrange for proper electric, water and drain. See instructions for the plumber and for the electrician.
2. Position the ice storage bin in the selected location, which should have a minimum room temperature of 50-degrees F., and maximum room temperature of 100-degrees F. Level the bin, adjusting the leg levelers in both the front to rear and side to side directions. Select a well-ventilated location for the air-cooled condenser.
3. Inspect the bin top mounting gasket which should be flat, with no wrinkles, to provide a good water seal when the Cuber is installed on top of the bin.
4. Install the modular cuber on top of the bin using care to be sure a good seal is made between the two cabinets. Align the holes in the bottom rear of the cabinet to mate with the two mounting straps on the top rear of the bin.
5. Use the bolts from the hardware bag to secure the machine to the bin using holes at the back. When alignment and leveling are completed, tighten the bolts to secure the mounting straps.

STACKING AND BIN THERMOSTAT INSTALLATION INSTRUCTIONS

NOTE: Only stack "D" models onto "D" models. DO NOT stack "D" models onto "C" or "A" models.

When stacking two units, remove the top panel from the lower icemaker. (The top removed from the lower icemaker will no longer have any function.)

Carefully lift the uncrated top unit onto the bottom one and align the two cabinets. Use of a mechanical lift is recommended for this step.

At the back of the two icemakers, bolt the upper icemaker cabinet to the lower icemaker cabinet using the mounting straps and bolts from the hardware package.

NOTE: When stacking, route the bin thermostat control from the upper machine inside the same bin thermostat control bracket as the lower one.

NOTE: Extend bin thermostat capillary tube through entire length of the tubular section of the bin thermostat bracket. When properly installed, the tip of the capillary tube should be flush with the tip of the bin thermostat bracket.

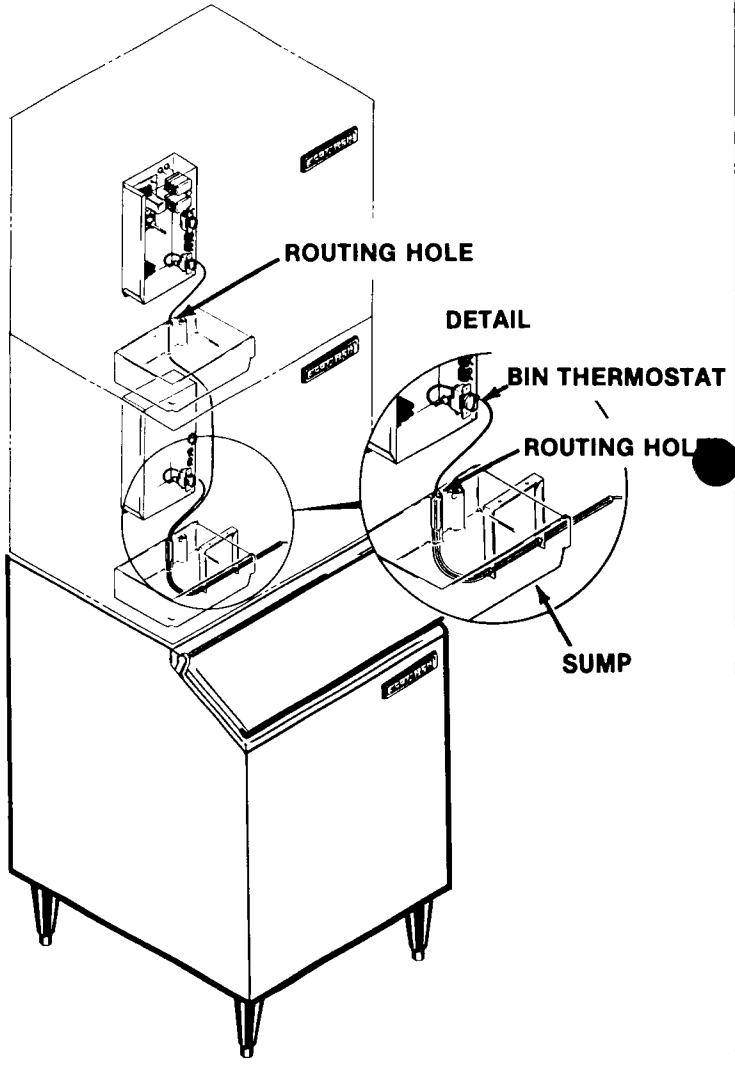

CM650R FOR THE INSTALLER

REMOTE CONDENSER INSTALLATION

Location Considerations:

Limited to a 40-foot length or a 25-foot length of pre-charged refrigerant line from the rear of the icemaker chassis to the remote condenser with consideration for routing. The condenser must be above or level with the highest (if stacked) icemaker.

Best available location, protected from the extremes of dirt, dust, and sun.

Must meet local building code installation requirements. Usually the services of a licensed electrician are required.

Remote Condenser - Roof Attachment.

1. Install and attach the remote condenser to the roof of the building, using the methods and practices of building standards that conforms to and meets the local building code requirements in your area.
2. Have an electrician connect the remote condenser fan motor electrically to the CM650R at the junction box of the remote condenser and the junction box of the CM650R.

PRE-CHARGED TUBING KIT ROUTING:

CAUTION

Do not connect pre-charged tubing until all routing and forming of tubing is complete. See Coupling Instructions, Pre-Charged Tubing Kit, page 8, for connecting instructions.

1. Each set of pre-charged refrigerant lines in the 25-foot length, or 40-foot length kits, consists of a 3/8-inch diameter, self-sealing LIQUID line and a 1/2-inch diameter, self-sealing DISCHARGE line. One coupling on each line is fitted with a charging port, which provides the service man with access for service gauges at the REMOTE CONDENSER location, when necessary.

NOTE

The openings in the building ceiling or wall, listed in the next step, are minimum sizes recommended, through which the pre-charged refrigerant lines may pass; and are to be considered only if they conform to and meet the local building code requirements in your area.

2. Minimum recommended sizes for openings required in a ceiling or wall for the pre-charged refrigerant lines to pass, is 1-3/4 inch diameter.

CAUTION

DO NOT KINK OR CRIMP REFRIGERANT LINES.

3. Route both refrigerant lines through the roof opening.

   Follow straight line routing, when possible.

   Retain excess pre-charged refrigerant line INSIDE the building.

4. SPIRAL the excess footage of the pre-charged refrigerant lines, in the best selected INSIDE location. See Pre-Charged Refrigerant Line Routing illustration for recommended methods of spiralling the excess refrigerant lines.

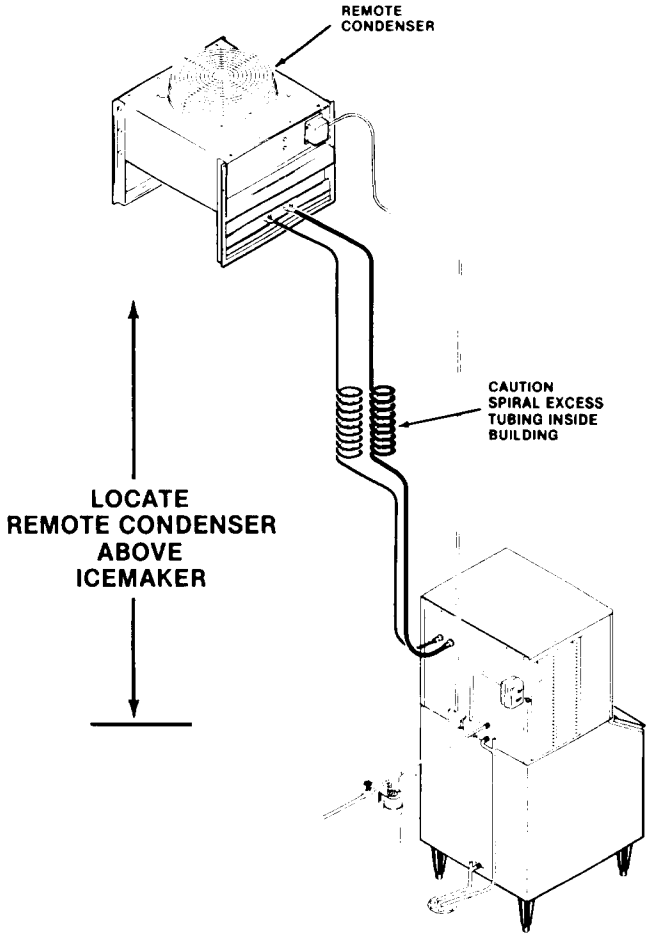

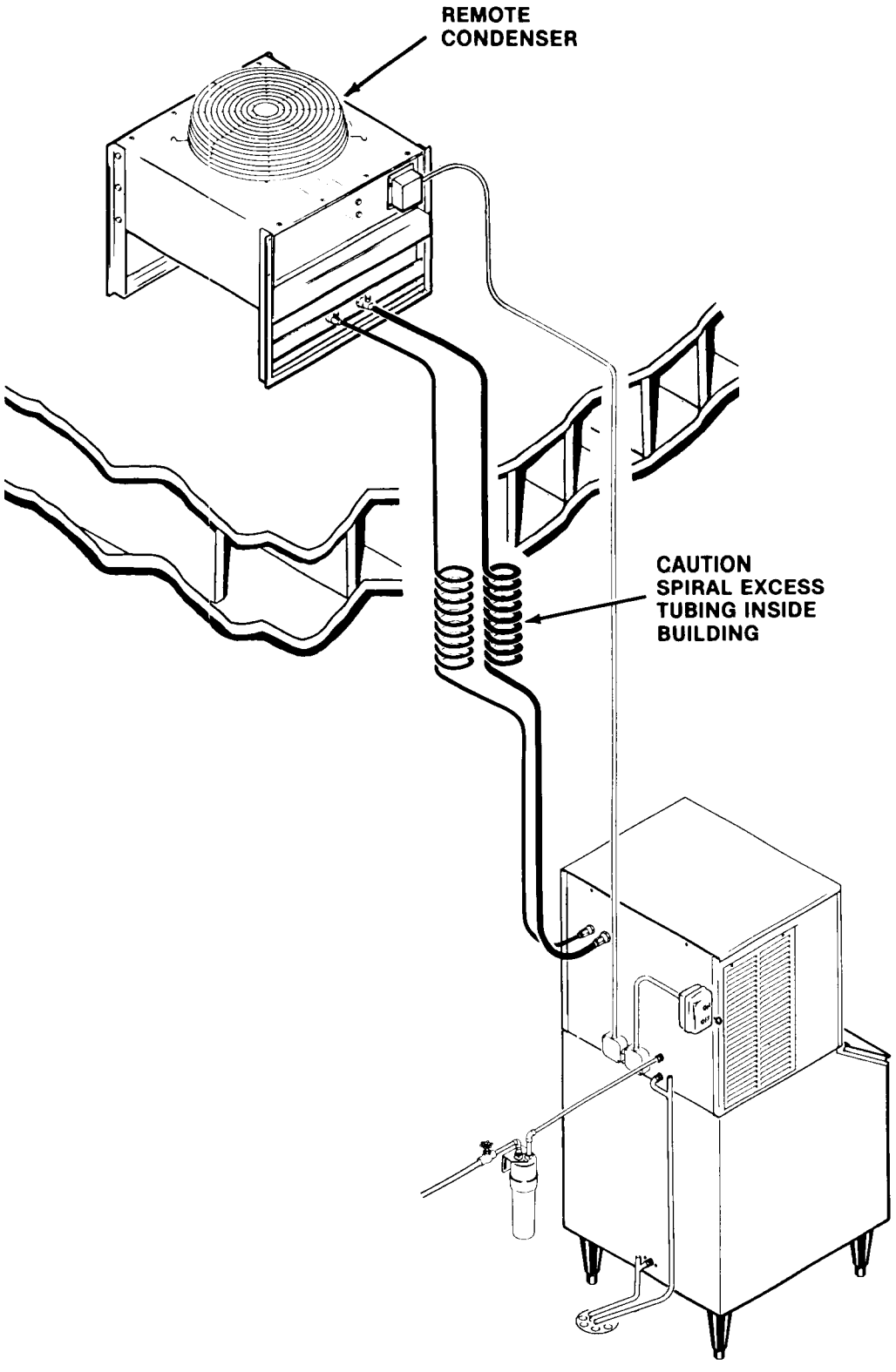

Pre-Charged Refrigerant Line Routing

CM650R FOR THE INSTALLER

COUPLING INSTRUCTIONS, PRE-CHARGED TUBING KIT

//////////////////// CAUTION ////////////////////

The couplings on the sets of pre-charged refrigerant lines, the refrigerant fittings on the Remote Condenser, and the rear of the Icemaker Chassis are SELF-SEALING and should be connected as follows:

//

1. Remove protector caps and plugs and if necessary, carefully wipe coupling seats ar threaded surfaces with a clean cloth to prevent the inclusion of dirt or any foreign material in the system.
2. LUBRICATE male half diaphragm and synthetic rubber seal with refrigerant oil. Thread coupling halves together by hand to insure proper mating of threads. Use proper size wrenches (on coupling body hex and on union nut) and tighten until coupling bodies "bottom" or a definite resistance is felt.
3. Using a marker or ink pen, mark a line lengthwise from the coupling union nut to the bulkhead. Then tighten an additional 1/4 turn; the misalignment of the line will show the amount the coupling has been tightened. This final 1/4 turn is necessary to insure the formation of leakproof joint.

ALWAYS USE TWO WRENCHES WHEN TIGHTENING THESE FITTINGS, ONE AS BACKUP WRENCH TO PREVENT TWISTING OF TUBING AND POSSIBLE KINKING OR LINE RUPTURE.

BE SURE to connect the ends of the pre-charged refrigerant lines, that have the charging port fittings, TO THE REMOTE CONDENSER FITTINGS. This gives the serviceman access for service gauges at the REMOTE CONDENSER location, when necessary.

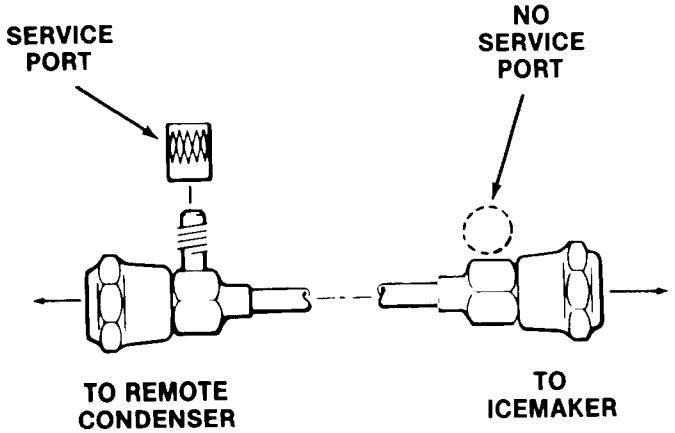

Pre-Charged Refrigerant Line Connections

4. Connect the 3/8-inch diameter refrigerant line coupling, with the SERVICE PORT fitting, to the remote condenser refrigerant fitting labeled: LIQUID LINE as detailed in Coupling Instructions.
5. Connect the 1/2-inch diameter refrigerant line coupling, with the CHARGING PORT fitting, to the Remote Condenser refrigerant fitting labeled: DISCHARGE LINE. Tighten as detailed in the Coupling instructions.

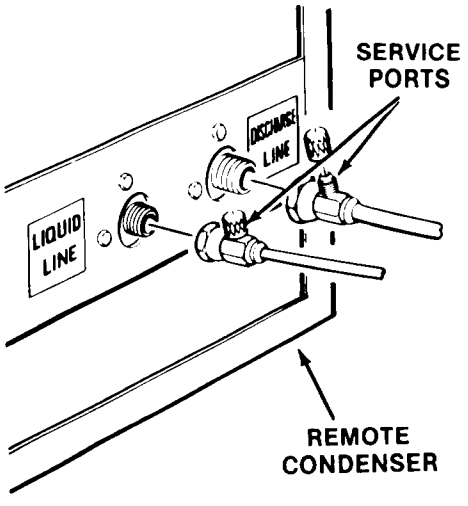

6. Connect the 3/8-inch diameter refrigerant line coupling, to the refrigerant fitting on the upper right rear of the icemaker chassis labeled: LIQUID LINE. Tighten as detailed in Coupling Instructions.
7. Connect the 1/2-inch diameter refrigerant line coupling, to the refrigerant fitting on the upper right rear of the icemaker Chassis labeled: DISCHARGE LINE. Tighten as detailed in step 4.

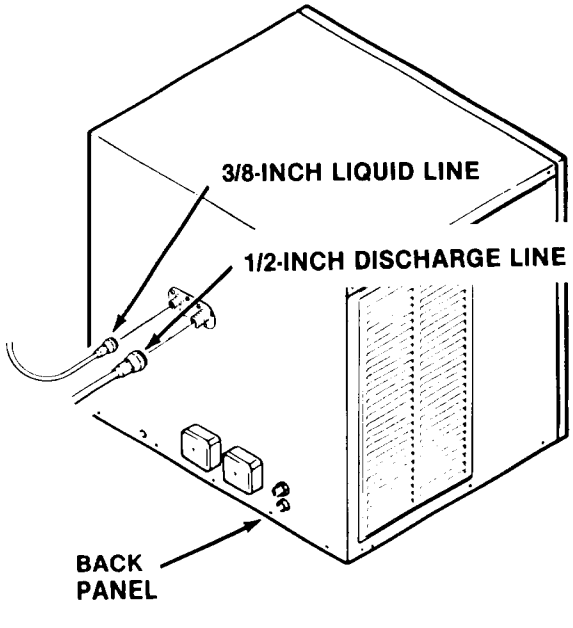

CM650R FOR THE ELECTRICIAN

CONFORM TO ALL APPLICABLE CODES

ELECTRICAL CONNECTIONS

SEE NAMEPLATE for current requirements to determine wire size to be used for electrical hookup. The cuber requires a solid chassis-to-chassis earth ground wire. See Wiring Diagram.

Be certain the cuber is connected to its own electrical circuit and individually fused. Voltage variation should not exceed ten percent of the nameplate rating, even under starting conditions. Low voltages can cause erratic operation and may be responsible for serious damage to the icemaker.

Electrical connections are made at the rear of the icemaker, inside the junction box.

The remote condenser must be wired to the CM650R icemaker in accordance with local and national electrical codes with a minimum of 18 Awg wire with a ground bonding wire connected to the ground screws provided in both the condenser and machine field wiring boxes. All outdoor wiring must be in rainproof conduit.

All external wiring should conform to the national, state and local electrical code requirements. Usually an electrical permit and services of a licensed electrician will be required.

Electrically the remote condenser fan motor is connected to the CM650R at the contactor terminals for the compressor and the fan motor operates whenever the compressor operates.

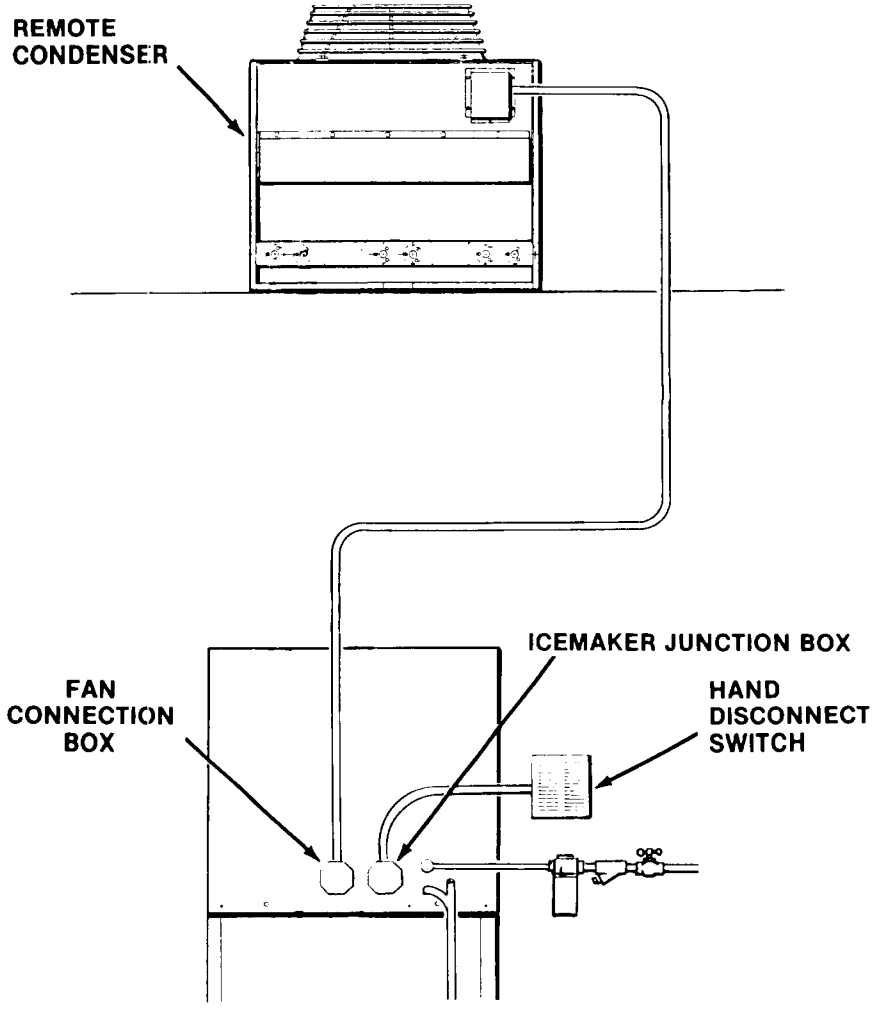

CM650R FOR THE ELECTRICIAN

INSTALLATION INSTRUCTIONS

Installation instructions for the KCMR230 Kit when using (2) CM650R Icemakers and the RC652-32B Model Condenser.

SEE NAMEPLATE for current requirements to determine wire size to be used for electrical hookup. Refer to wiring diagram.

All external wiring should conform to the national, state and local electrical code requirements. Usually an electrical permit and services of a licensed electrician will be required.

FOR CONNECTION OF TWO ICEMAKERS:

Refer to appropriate wiring diagrams and connect each icemaker to the KCMR230 terminal strip as follows:

1. Attach the KCMR230 to a permanent location, convenient for each icemaker hook up and future service. Attach a solid earth ground wire to the GROUND SCREW.
2. Route connecting wires from first ice machine lower junction box and connect to KCMR230 terminal strip connections marked: NO. 1 ICE MACHINE.
3. Route connecting wires from second ice machine lower junction box and connect to stacking kit terminal strip connections marked: NO. 2 ICE MACHINE.
4. Route connecting wires from KCMR230 terminal strip marked: TO REMOTE FAN and connect at the remote condenser junction.

CAUTION

IMPROPER VOLTAGE SUPPLIED TO THE ICEMAKER WILL VOID YOUR PARTS REPLACEMENT PROGRAM.

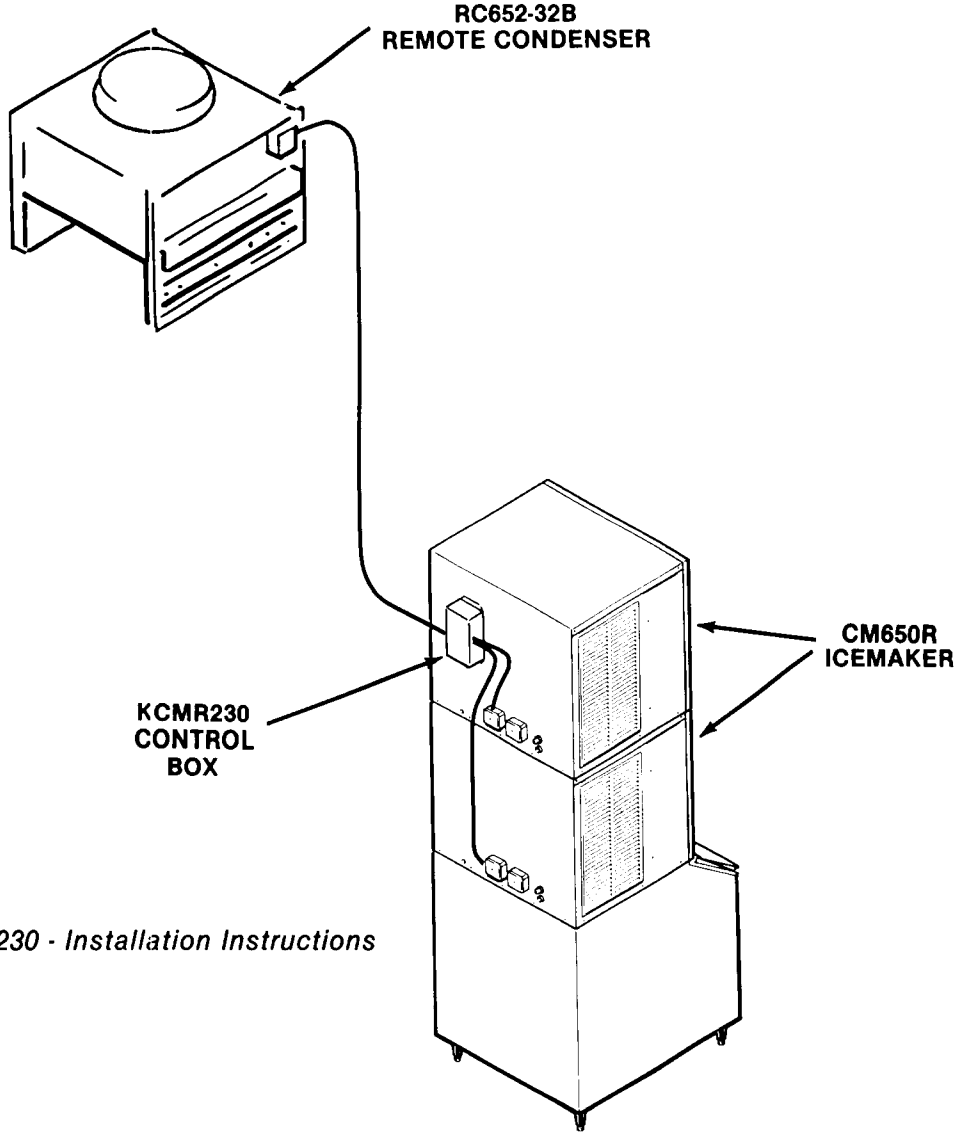

KCMR230 - Installation Instructions

KCMR230 INSTALLATION INSTRUCTIONS

NOTE: 3 phase machines. It is critical to have the same "leg" or line run to L3 on both ice makers' contactors and if **WILD LEG** current is used, hook the wild leg to **L3** on **BOTH** ice makers.

5. Check phasing of the electrical circuit as follows:

   A. The phasing of the wiring **MUST** now be checked, as incorrect wiring will result in a failure of the kit relay.

   Below is an illustration of the KCMR230 terminal strip. Note that each terminal is marked: 1 - 2 - 3 - 4 - 5 - 6. For proper phasing:

   Terminals #1 and #3 must be connected on the same side of the line (such as L1).

   Terminals #2 and #4 must be connected on the same side of the line (such as L2).

   B. Make the test with a volt meter as follows:

   1. Switch on icemaker #1 first, then switch on icemaker #2. (The compressors must be operating for this test).
   2. Test with a volt meter between terminals #2 and #4, then between terminals #1 and #3. Compare the readings obtained to the ones in the following list.

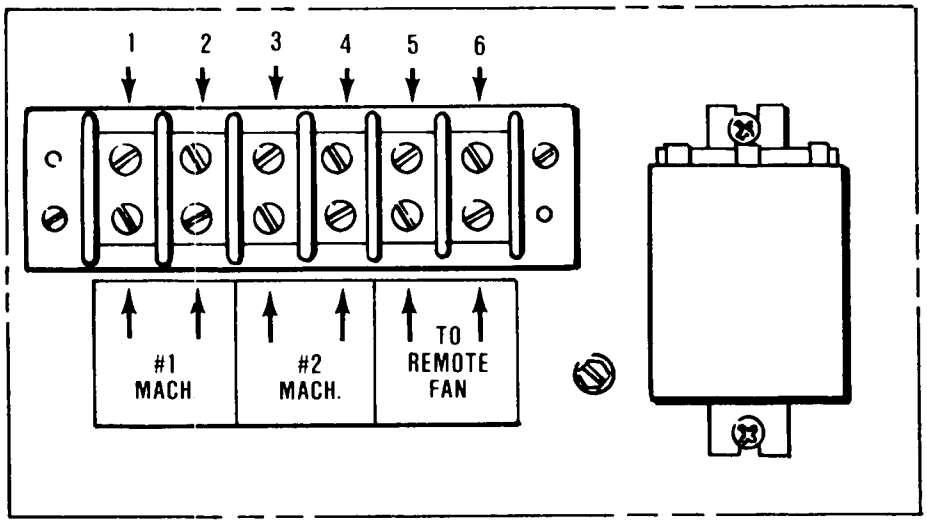

C.

	CORRECT VOLTAGE READINGS
Test terminals 1 - 2	Full voltage (208v-220v)
Test terminals 1 - 3	No voltage
Test terminals 2 - 3	Full voltage
Test terminals 2 - 4	No voltage
Test terminals 3 - 4	Full voltage
Test terminals 1 - 4	Full voltage

D. If there is full voltage where there should be no voltage, turn off icemaker #2, (both toggle switches). Then turn off icemaker #1 (both toggle switches). The connections at the KCMR230 terminal strip marked icemaker #1 must be **reversed** (put the wire that was on 1 on 2 and the wire that was on 2 on 1).

Remember to do all wiring with the electrical power to both icemakers disconnected at the source.

CM650R FOR THE PLUMBER

CONFORM TO ALL APPLICABLE CODES

WATER SUPPLY AND DRAIN CONNECTIONS

The recommended water supply line is a 3/8-inch O.D. copper tubing with a minimum operating pressure of 20 PSIG and a maximum of 120 PSIG. Connect to cold water supply line with standard plumbing fittings, with shutoff valve installed in an accessible place between the water supply and the cuber. In some cases a plumber will be required.

DRAIN CONNECTIONS: All drains are gravity type and must have a minimum of 1/4-inch fall per foot on horizontal runs. The drains to be installed to conform with the local plumbing code. Install a vertical open vent on drain line to ensure good venting. The drain receptacle should be an open, trapped or vented construction.

Recommended bin drain is 5/8-inch O.D. copper tubing and should be vented and run separately.

The ice machine sump drain is 3/4″ FPT. There must be a vent at this connection for proper sump drainage.

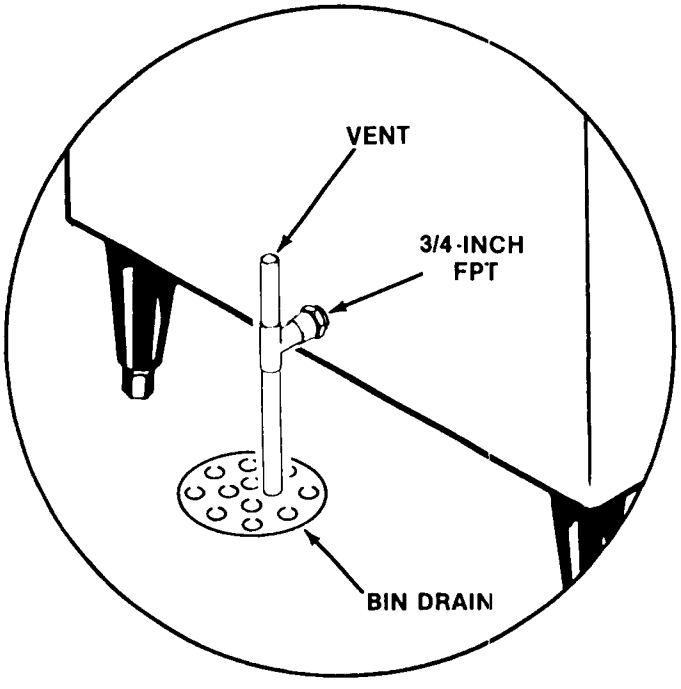

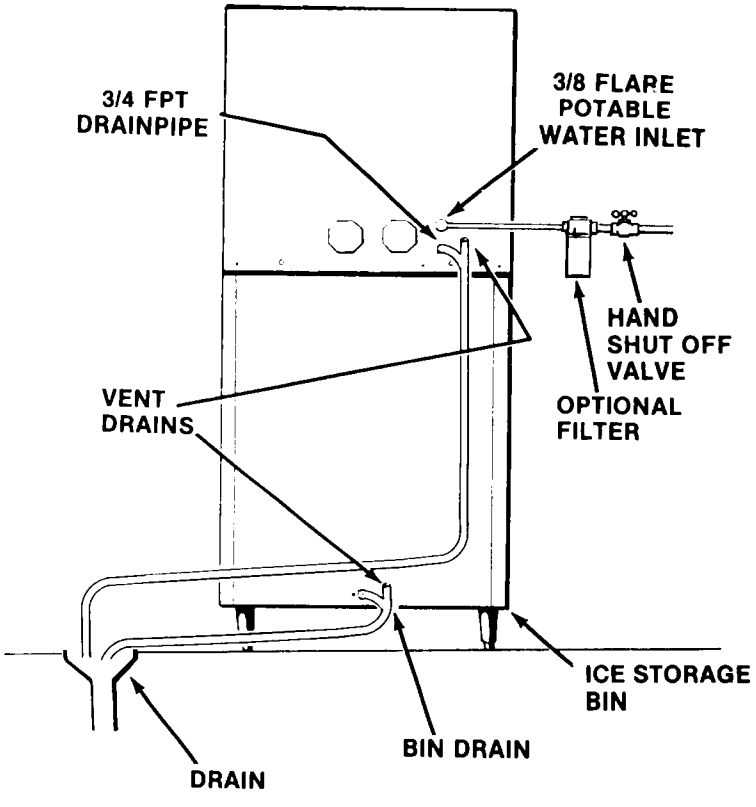

DO NOT SWEAT HTB DRAIN FITTINGS. EXCESSIVE HEAT WILL DAMAGE THE BIN.

Installation, Water Supply and Drain Connection

CM650R FOR THE INSTALLER

FINAL CHECK LIST

1. Is the cabinet in a room where ambient temperatures are within the minimum and maximum temperatures specified?
2. Is there at least six inches clearance at both sides of the cabinet for proper air circulation?
3. Has water supply pressure been checked to insure a minimum of 20 PSIG and a maximum of 120 PSIG operating pressure?
4. Is the cabinet level?
5. Check that the shipping material and foam backing have been removed from inside the cabinet.
6. Has the bin thermostat bracket been properly installed?
7. Check that the drain troughs are properly secured to the bottom of the evaporator plates.
8. Have all electrical and piping connections been made?
9. Is the water supply line shut-off valve installed and electrical wiring properly connected?
10. Has the shipping block been removed from under the compressor. Have the compressor hold-down nuts been checked to be sure the compressor is snug on the mounting pads?
11. Check all refrigerant lines and conduit lines, to guard against vibration or rubbing and possible failure.
12. Have the bin and cabinet been wiped clean?
13. Have the remote condenser and pre-charged refrigerant lines been properly installed per instruction on page 6 and connections checked for leaks?
14. Has the remote condenser fan motor been connected electrically to the icemaker at the junction box of the remote condenser and the junction box of the icemaker?
15. Verify that the Master Switch and Compressor Switch are in the "OFF" position.
16. Has the Manufacturer's Registration Card been properly filled out? Check for correct model and serial numbers from Serial nameplate, then mail the completed card to the SCOTSMAN factory.
17. Has the owner/user been given the Service Manual and instructed how to operate and maintain the icemaker?
18. Has the owner been given the name and telephone number of the authorized SCOTSMAN Service Agency serving him?
19. **Refer to Pre-Start instruction on page 13.**

CM650R START-UP

PRE-START

1. Is the location of the equipment proper?
2. Is the electrical voltage correct?
3. Has power to the machine been on for at least 12 hours, and is the compressor dome warm? (Toggle switches on OFF?)
4. Has the water supply been turned on?
5. Is the icemaker level?
6. Are the refrigerant lines for the condenser properly connected and routed?
7. Are the bin thermostat controls mounted in the bracket and is the bracket in the proper mounting spot?

START-UP

1. Go through the Pre-Start check list.
2. Remove front panel by pulling out at the bottom to unsnap and lift off.
3. Remove the control box cover.
4. Remove side service panels. Check that the King Valve is closed and the compressor is warm.
5. Rotate timer shaft clockwise until the timer cam appears the same as in the illustration.

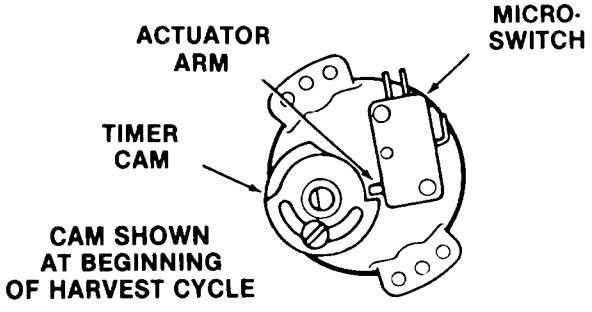

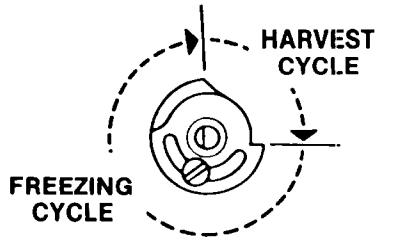

CAM SHOWN DIVIDED INTO TYPICAL FREEZING & HARVEST CYCLES

Timer Cam Positions

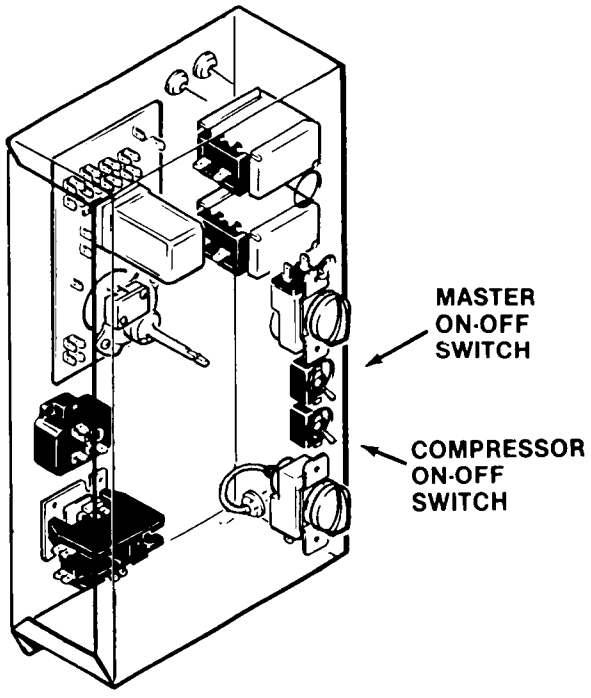

6. Turn the master switch to ON and observe that the inlet water solenoid opens, and water begins to enter the sump, also observe that the timer does advance in a clockwise direction.
7. The timer will move to the end of the harvest position and stop. If the sump is still not full, repeat step 5. When the sump is full the water pump will be circulating water over the evaporator plates. This water is returning to the sump and any excess will be drained out through the overflow standpipe in the sump. When the timer stops, the inlet water stops coming in, but the pump stays on.
8. Open the King Valve located on the receiver.
9. Move the compressor toggle switch to ON. Observe that the sight glass begins to fill with liquid refrigerant and stays full.
10. On the roof, observe that the condenser fan is running.
11. Now the icemaking process begins. The evaporator plates will soon begin to feel cool, and ice begins to form where the water is flowing over the metal portions of the plate.
12. Let the machine function as shipped, but observe the first harvest of cubes. ADJUSTMENTS MAY BE REQUIRED.

CM650R START-UP

13. Observe second and third cube harvest.

Check size of SCOTSMAN CONTOUR CUBE

Unlike other SCOTSMAN cubes which are made in a definite molded shape, contour cubes are produced in indentations and many shapes and sizes of contour cubes may be produced — only ONE size and shape combination is correct.

An under-charged refrigeration system produces smaller cubes at the top of the evaporator plate and large cubes at the bottom. Charge system per NAMEPLATE specifications.

Charge Refrigeration System with **REFRIGERANT 502 ONLY.**

In areas where extreme problem water condition exists, filtering or purifying equipment is recommended. Contact SCOTSMAN ICE SYSTEMS, Service Department, Albert Lea, Minnesota 56007 for further details.

TOO LARGE

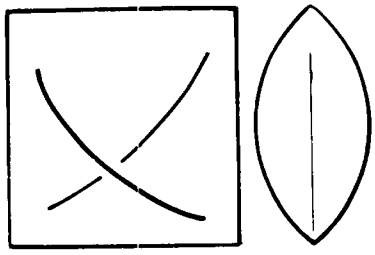

Too LARGE — may cause evaporator freeze ups. Adjust cube size control counter-clockwise to obtain smaller cubes

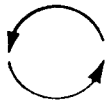

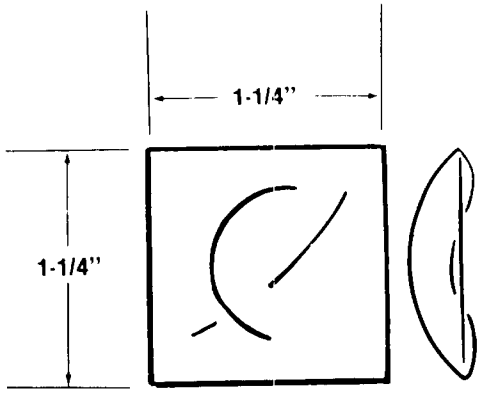

PROPER SIZE AND SHAPE

PROPER SIZE AND SHAPE of the contour cube. Icemaker operates at peak efficiency when a cube this size and shape is produced. A finely tuned system produces vertical strips of ice which easily break when they fall.

TOO SMALL

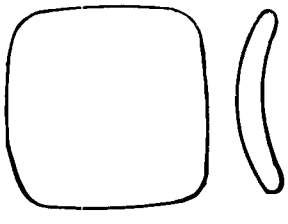

TOO SMALL. To obtain proper size cubes, adjust cube size control clockwise. May cause freeze up problems due to poor harvest.

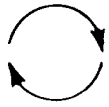

14. Check the Harvest time. The correct setting is one that allows enough time for all of the ice to fall from the evaporators and to fill the sump with water to the overflow point, plus 15-30 seconds extra time.

    To adjust the timer:

    A. Disconnect electrical power supply to the icemaker.

    B. Loosen the screw on the timer that locks the two cams together.

    C. To decrease Harvest time, rotate the shaft of the timer counter-clockwise. To increase, turn the shaft clockwise.

    D. Retighten the screw to lock the two cams together again.

    E. Return power to icemaker. Check cube size and Harvest time.

ADJUSTMENT OF CUBE SIZE

To produce SMALLER sized ice cubes:

Locate cube size control, in the top right section of the control box.

Rotate the adjusting knob one-eighth of a TURN COUNTERCLOCKWISE to WARMER.

Observe size of the ice cubes in the next two ice cube harvests and adjust in one-eighth turn or less increments, until correct ice cube size is achieved.

To produce LARGER sized ice cubes:

Locate cube size control, in the top right section of the control box.

Rotate the adjusting knob one-eighth of a turn CLOCKWISE to COLDER.

Observe size of ice cubes in the next two cube harvests and adjust in one-eighth turn or less increments, until correct ice cube size is achieved.

15. Check texture if ice cubes; when partially cloudy throughout, suggests icemaker is operating short of water; or, possibly an extreme problem water condition exists, wherein filtering or purifying equipment is recommended. Contact SCOTSMAN ICE SYSTEMS, Service Department, Albert Lea, Minnesota 56007 for further details.

BIN THERMOSTAT OPERATION

With the icemaker in the harvest cycle, hold ice against the bin thermostat control bulb to test shutoff at the END OF THE HARVEST CYCLE. If the bin thermostat is OPEN, the liquid line solenoid valve will close, shutting off refrigeration flow to the evaporator and allowing the compressor to pump any refrigerant left in the evaporators into the high pressure receiver. When the evaporator pressure is lowered to approximately 3 PSIG, the low pressure switch opens, shutting off the compressor, remote fan and water pump.

Within minutes after the ice is removed from the sensing bulb, the bulb will warm up and cause the icemaker to restart. This control is factory set and should not be reset until testing is performed.

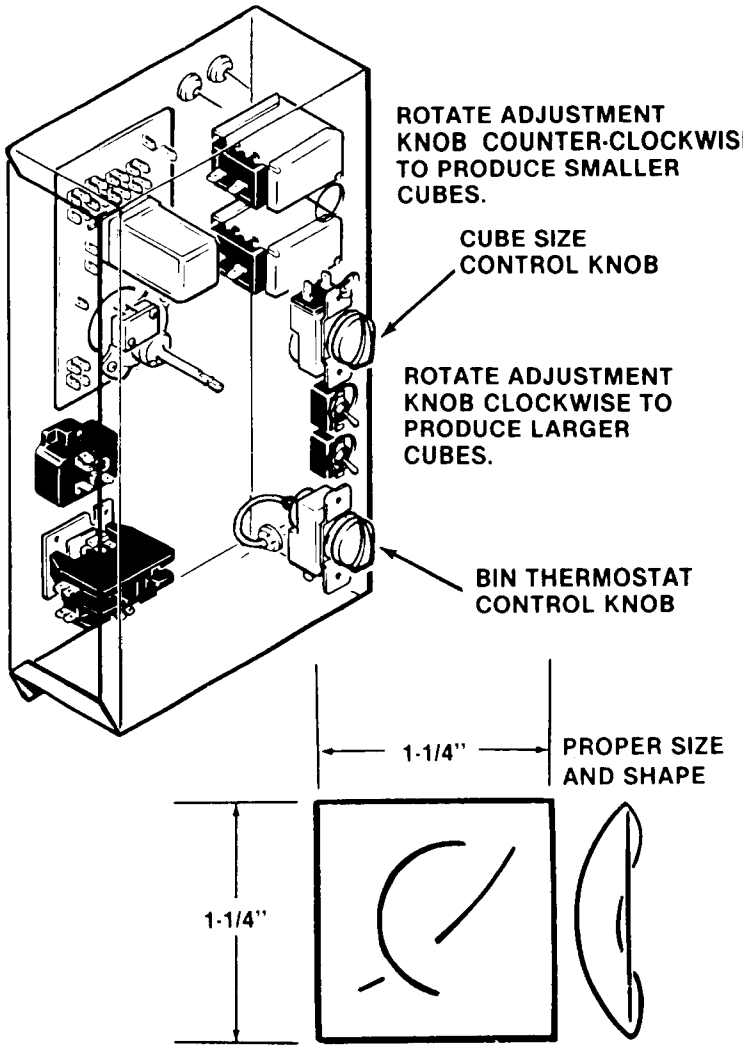

Cube Size Control Adjustment

16. Replace control box cover and all cabinet panels and screws.

17. Thoroughly explain to the owner/user the significant specifications of the icemaker, the start up and operation, going through the procedures in the operating instructions. Answer all questions about the icemaker by the owner; and inform the owner of the name and telephone number of the authorized SCOTSMAN Distributor, or service agency serving him.

CM650R OPERATION

FREEZING CYCLE

Water from the sump assembly is pumped to the water distributor system, at the top of the evaporator plates. From the water distributors at the top of each evaporator plate, the water cascades by gravity over all cells of the plates and to the sump assembly below, for recirculation. At the beginning of the freezing cycle, the electrical circuit is completed to the compressor and the water pump. The water pump and the remote fan motor operate continuously, through both the freezing cycle and the harvest cycle.

In the compressor, gaseous refrigerant is compressed and discharged into the condenser, as a high pressure, high temperature gas. The refrigerant is cooled by air and condenses into a high pressure liquid. The liquid refrigerant then passes through a receiver, which stores excess refrigerant not required at high condensing temperatures: then, on to the liquid line solenoid valve and thermostatic expansion valve where the temperature and pressure of the liquid refrigerant are lowered.

This liquid refrigerant is then distributed through capillary tubes to the evaporator plates. The refrigerant is warmed by the water cascading over the evaporator plates and begins to boil off and become a gas. The refrigerant travels through the heat exchange area of the suction line where any remaining liquid refrigerant boils off and returns to the compressor as a low pressure, low temperature gas, and the cycle starts again.

During the freezing cycle, the hot gas solenoid valve is CLOSED and the water inlet solenoid valve is CLOSED.

When the ice cubes are partially formed, the cube size control will sense the temperature at which it is preset to CLOSE. This will complete the electrical circuit to the timer. The timer then controls the remainder of the freezing cycle.

The timer will keep the icemaker operating in the freezing cycle for a selected length of time. This will give the ice cubes time to fully form. After that selected length of time, the timer will switch the icemaker into the harvest cycle, through the contacts of the timer assembly microswitch.

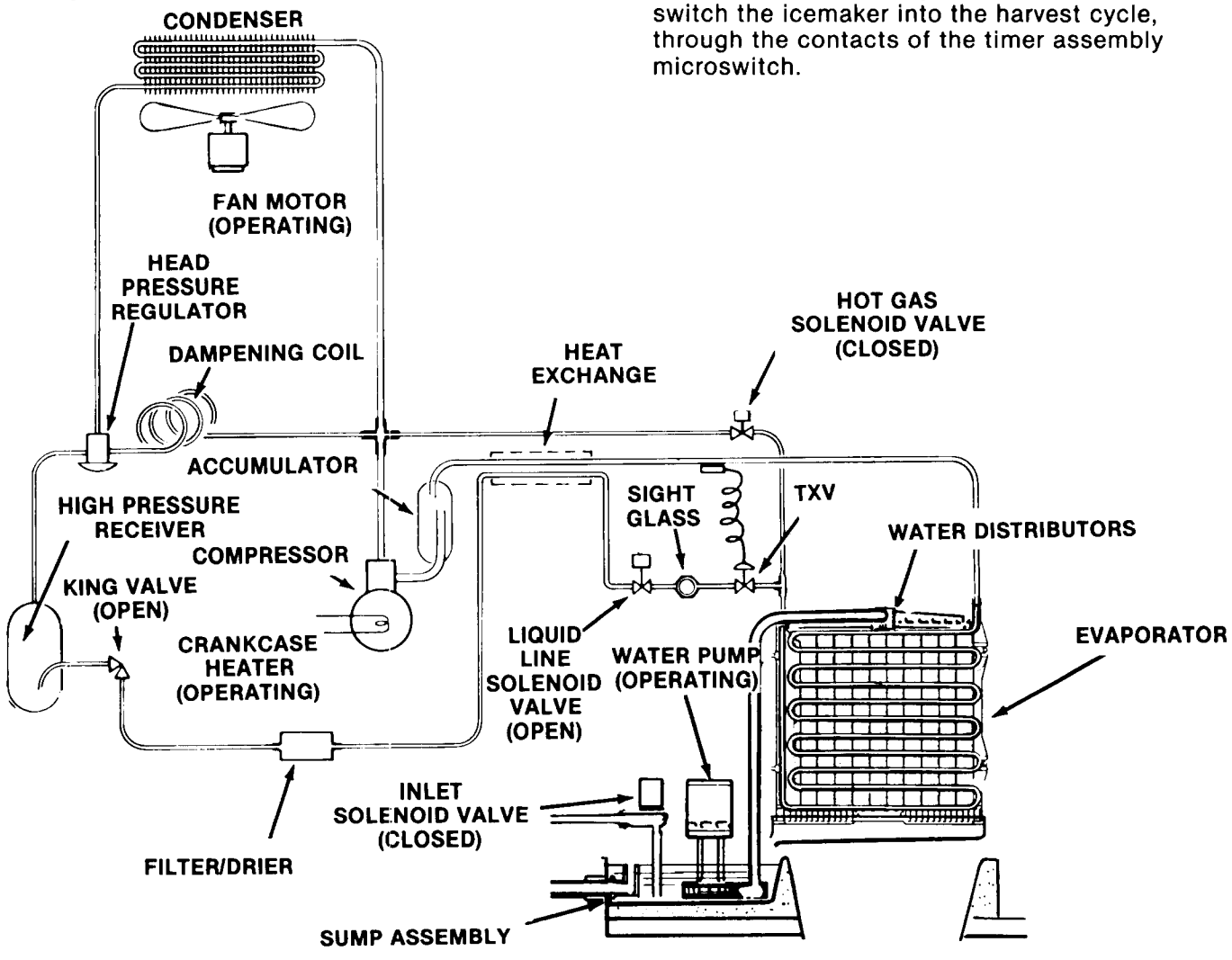

Freezing Cycle

CM650R OPERATION

HARVEST CYCLE

When the timer switches the icemaker into the harvest cycle, high pressure, high temperature gaseous refrigerant being discharged from the compressor is diverted from the condenser through the hot gas solenoid valve into the evaporator plates. During this cycle, the gaseous high pressure, high temperature refrigerant circulates from the compressor through the evaporator plates and back again, bypassing the condenser, and the thermostatic expansion valve. In the electrical circuit, both the compressor and the water pump are operating and the hot gas solenoid valve is energized and OPEN and the water inlet solenoid valve is OPEN.

The finished ice cubes are released from the sides of the evaporator plates, by the warming effect of the hot gas flowing through the evaporator plates and the water cascading over the ice cubes. The released ice cubes drop into the ice storage bin below.

At the end of the harvest cycle, the timer cam will push the actuator arm of the microswitch IN. If the bin thermostat is still CLOSED, a whole new cycle will begin. If the bin thermostat is OPEN, the liquid line solenoid valve will close, shutting off refrigerant flow to the evaporator and allowing the compressor to pump any refrigerant left in the evaporators into the high pressure receiver. When the evaporator pressure is lowered to approximately 3 PSIG, the low pressure switch opens, shutting off the compressor, remote fan and water pump.

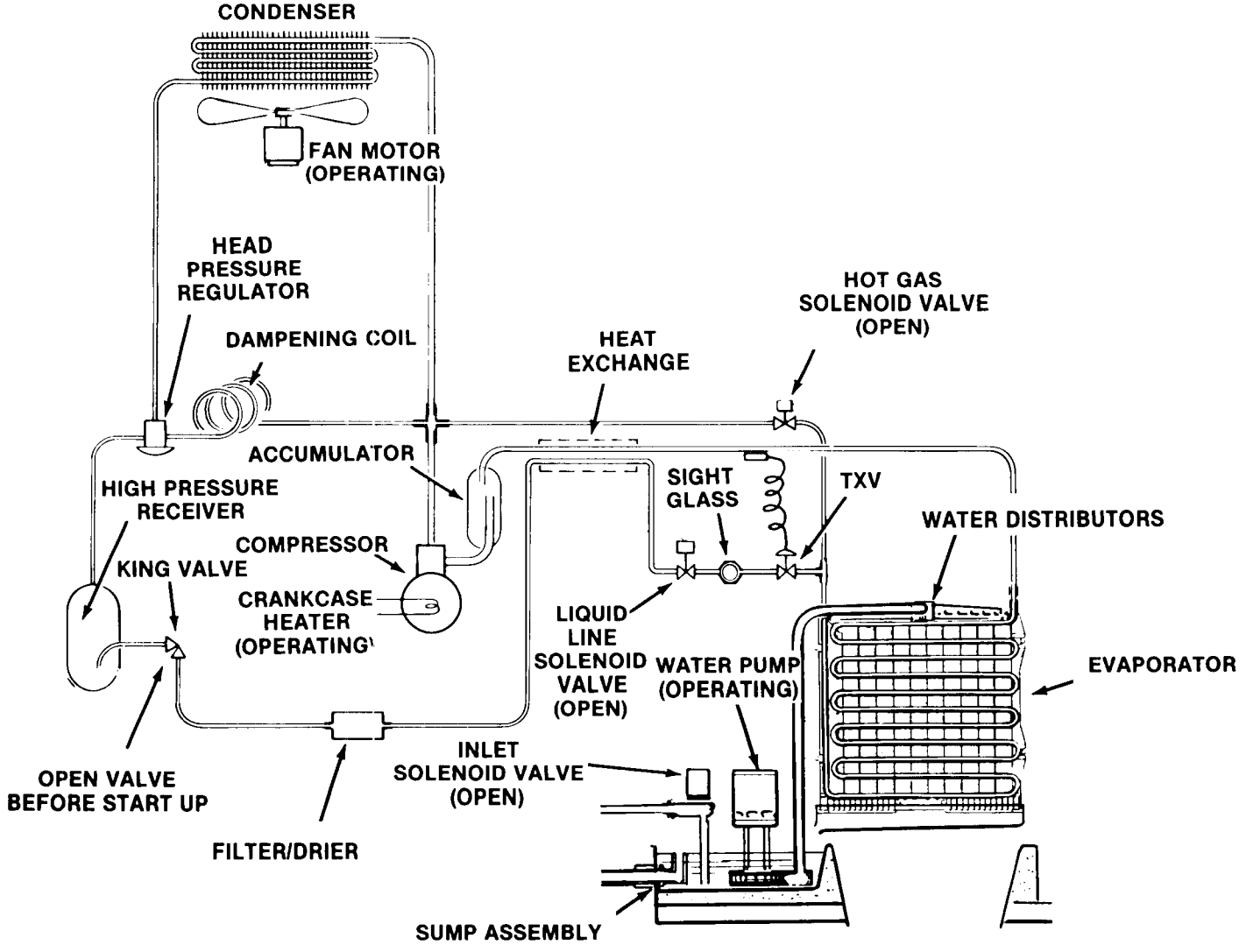

Harvest Cycle

CM650R OPERATION - ELECTRICAL SEQUENCE

The following charts illustrate which switches and which components are ON or OFF during a particular phase of the icemaking cycle.

Refer to the wiring diagram for a reference. Remember, the wiring diagram shows the unit as it is in the Timed Freeze Cycle.

BEGINNING FREEZE

ELECTRICAL COMPONENTS (LOADS)	ON	OFF
Crankcase Heater	X	
Compressor	X	
Fan Motor	X	
Hot Gas Valve		X
Inlet Water Valve		X
Liquid Line Valve	X	
P.C. Board Relay Coil	X	
Timer		X
Water Pump	X	

SWITCHES	ON	OFF
Bin Thermostat	X	
Cube Size Thermostat		X
Toggle	X	
L.P. Control	X	
H.P. Control	X	
Timer Micro Switch N.C.		X
Timer Micro Switch N.O.	X	
High Temp Switch	X	

At the beginning of the cycle, the timer is not turning, but the icemaker is refrigerating the water, starting to turn the water into ice.

CM650R OPERATION - ELECTRICAL SEQUENCE
TIMED FREEZE

ELECTRICAL COMPONENTS (LOADS)	ON	OFF
Crankcase Heater	X	
Compressor	X	
Fan Motor	X	
Hot Gas Valve		X
Inlet Water Valve		X
Liquid Line Valve	X	
P.C. Board Relay Coil	X	
Timer	X	
Water Pump	X	

SWITCHES	ON	OFF
Bin Thermostat	X	
Cube Size Thermostat	X	
Toggle Switch	X	
L.P. Control	X	
H.P. Control	X	
Timer Micro Switch N.C.		X
Timer Micro Switch N.O.	X	
High Temp Switch	X	

After the icemaker has cooled the water and formed some ice on the evaporator, the evaporator will have gotten cold enough to have the cube size control close. All this does is start and run the timer.

HARVEST

ELECTRICAL COMPONENTS (LOADS)	ON	OFF
Crankcase Heater	X	
Compressor	X	
Fan Motor	X	
Hot Gas Valve	X	
Inlet Water Valve	X	
Liquid Line Valve	X	
P.C. Board Relay Coil		X
Timer	X	
Water Pump	X	

SWITCHES	ON	OFF
Bin Thermostat	X	
Cube Size Thermostat		X
Toggle Switch	X	
L.P. Control	X	
H.P. Control	X	
Timer Micro Switch N.C.	X	
Timer Micro Switch N.O.		X
High Temp Switch	X	

The timer has now turned far enough so that the micro-switch plunger has dropped into the gap in the cam, this breaks the circuit to the relay in the P.C. Board - and that puts the machine into the harvest cycle, where the hot gas valve and inlet water valve have opened to harvest the ice.

CM650R OPERATION - ELECTRICAL SEQUENCE

PUMP DOWN - STAGE ONE

ELECTRICAL COMPONENTS (LOADS)	ON	OFF
Crankcase Heater	X	
Compressor	X	
Fan Motor	X	
Hot Gas Valve		X
Inlet Water Valve		X
Liquid Line Valve		X
P.C. Board Relay Coil		X
Timer		X
Water Pump	X	

SWITCHES	ON	OFF
Bin Thermostat		X
Cube Size Thermostat		X
Toggle Switch	X	
L.P. Control	X	
H.P. Control	X	
Timer Micro Switch N.C.	X	
Timer Micro Switch N.O.		X
High Temp Switch	X	

When ice is on the bin control, it will OPEN and at the end of the harvest cycle, this will initiate a pump down cycle. The liquid line valve (normally closed) will close and the compressor will pump refrigerant into the receiver.

PUMP DOWN - STAGE TWO

ELECTRICAL COMPONENTS (LOADS)	ON	OFF
Crankcase Heater	X	
Compressor		X
Fan Motor		X
Hot Gas Valve		X
Inlet Water Valve		X
Liquid Line Valve		X
P.C. Board Relay Coil		X
Timer		X
Water Pump		X

SWITCHES	ON	OFF
Bin Thermostat		X
Cube Size Thermostat		X
Toggle (Master and Compressor)	X	
L.P. Control		X
H.P. Control	X	
Timer Micro Switch N.C.	X	
Timer Micro Switch N.O.		X
High Temp Switch	X	

After the low side pressure has dropped under 3 psig, the compressor will be turned off by the low pressure control and the unit will be pumped down, OFF and in a standby mode.

CM650R SERVICE SPECIFICATIONS

In servicing a machine, it is often useful to compare that individual units operating characteristics to those of a normally operating machine. The data that follows gives those characteristics, however, be aware that these values are for NEW, CLEAN machines. USE THESE NUMBERS AS A GUIDELINE ONLY.

COMPONENT

Timer - 1 revolution of the cam, in minutes 8
Harvest Time, preset, in minutes 2¼
Inlet Water Valve, water flow in g.p.m. 3/4

	CI	CO
Cube Size Control, Reverse Acting, Temperature range (+15°F. to +2°F.)		—
Bin Thermostat, Temperature Range	38.5°-43.5°	33.5°-38.5°
Low Pressure Control,(Pump Down) psig	23	3
High Pressure Safety Switch, psig	Manual	450

The head pressure regulating valve will maintain a minimum discharge pressure during the freezing cycle.

OPERATING CHARACTERISTICS

The values listed below are representative of values seen at a wide range of air and water temperatures and are for a normal cube size.

When comparing these figures to field data, allow a variation from each end of the range given.

FREEZE CYCLE

Average Discharge Pressure ..... 280-210 PSIG
Suction Pressure at the end of the Freeze Cycle ..... 27-25 PSIG
Freeze Time ..... 14-19 Minutes

Compressor Amps	Beginning of Freeze	End of Freeze
Single Phase	9.0	6.5
Three Phase	5.5	4.0

HARVEST CYCLE

Average Discharge Pressure ..... 250-175 PSIG
Average Suction Pressure ..... 150-110 PSIG
Harvest Time, assumed to be 2-1/4 minutes.
This can be adjusted to suit local conditions.
Average Compressor Amps
Single Phase 11.5-10.5
Three Phase 8.0-6.5

TO SERVICE REFRIGERATION SYSTEM:

TORQUE REFRIGERATION ACCESS VALVE CAPS TO 60-75 INCH POUNDS.

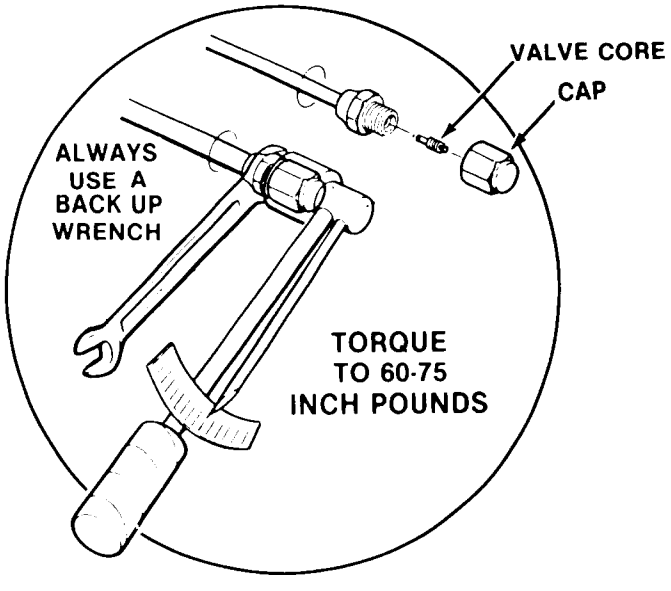

ALWAYS USE A BACK-UP WRENCH TO AVOID DAMAGE TO THE REFRIGERANT TUBING.

CM650R MAINTENANCE & CLEANING INSTRUCTIONS

A Scotsman Ice System represents a sizable investment of time and money in any company's business. In order to receive the best return for that investment, it MUST receive periodic maintenance.

It is the USER'S RESPONSIBILITY to see that the unti is properly maintained. It is always preferable; and less costly in the long run, to avoid possible down time by keeping it clean, adjusting it as needed and by replacing worn parts before they can cause failure. The following is a list of recommended maintenance that will help keep your machine running with a minimum of problems.

Maintenance and Cleaning should be scheduled at a MINIMUM of twice per year.

ICEMAKER

THE FOLLOWING MAINTENANCE SHOULD BE SCHEDULED AT LEAST TWO TIMES PER YEAR ON THIS ICEMAKER. CALL YOUR AUTHORIZED SCOTSMAN SERVICE AGENCY.

1. Check and clean or service any optional water treatment devices, if any installed.
2. Clean strainer.
3. Check that the cabinet is level, in the side-to-side and front-to-back directions.
4. Clean the water system, evaporator plate and sump assembly, using a solution of SCOTSMAN Ice Machine Cleaner. Refer to CLEANING - Icemaker.

Cleaning requirements vary according to local water conditions and individual user operation. Continuous check of the clarity of ice cubes and visual inspection of the water system parts, evaporator plates and the sump assembly before and after cleaning will indicate frequency and procedure to be followed in local areas.

5. Check that the drain trough is snug on the evaporator plate.
6. Check and tighten all bolts and screws.
7. Check for water leaks and make corrections.
8. Check the bin thermostat control bulb to test shut off. Holding ice against bin thermostat control bulb should cause the icemaker to shut off at the end of the harvest cycle.

   Within minutes after ice is removed from the bin thermostat control bulb, the icemaker will restart.

STORAGE BIN

The ice storage bin should be cleaned and sanitized once per week.

CLEANING - Icemaker

WARNING

SCOTSMAN Ice Machine Cleaner contains Phosphoric and Hydroxyacetic acids. These compounds are corrosive and may cause burns. If swallowed, DO NOT induce vomiting. Give large amounts of water or milk. Call physician immediately. In case of external contact, flush with water. KEEP OUT OF THE REACH OF CHILDREN.

1. Remove front panel.
2. Switch the compressor switch to OFF.

   Switch the master switch OFF.
3. Switch the master switch to the CLEAN position. Pour 8 ounces of Scotsman Ice Machine Cleaner into the sump filled with water.
4. Let the unit operate for 40 minutes with the compressor off, then switch the unit off.
5. Remove the front liner by removing 4 thumb screws. Remove the drain trough from one evaporator plate.
6. Switch the master switch to the CLEAN position to pump water from the sump into the bin. Continue to add fresh water to flush residual cleaner from the system. Switch unit to OFF and wipe the sump clean.
7. Wash the plastic and stainless liners of the freezer section with a solution of household bleach and water. (1 ounce of bleach in 1 gallon of water.)
8. Replace the drain trough and the front liner.

CM650R MAINTENANCE & CLEANING INSTRUCTIONS

9. Turn the master and compressor switches back on.
10. Replace front panel.
11. Check each batch of cubes until they are clear and until the acid taste has been removed from the cubes.

CAUTION

DO NOT use ice cubes produced from the cleaning solution. Be sure none remains in the bin.

12. Pour hot water into storage bin to melt the cubes and thereby clean the bin and drains with the same solution that has just cleaned the unit.
13. The unit is now ready for continued automatic operation.

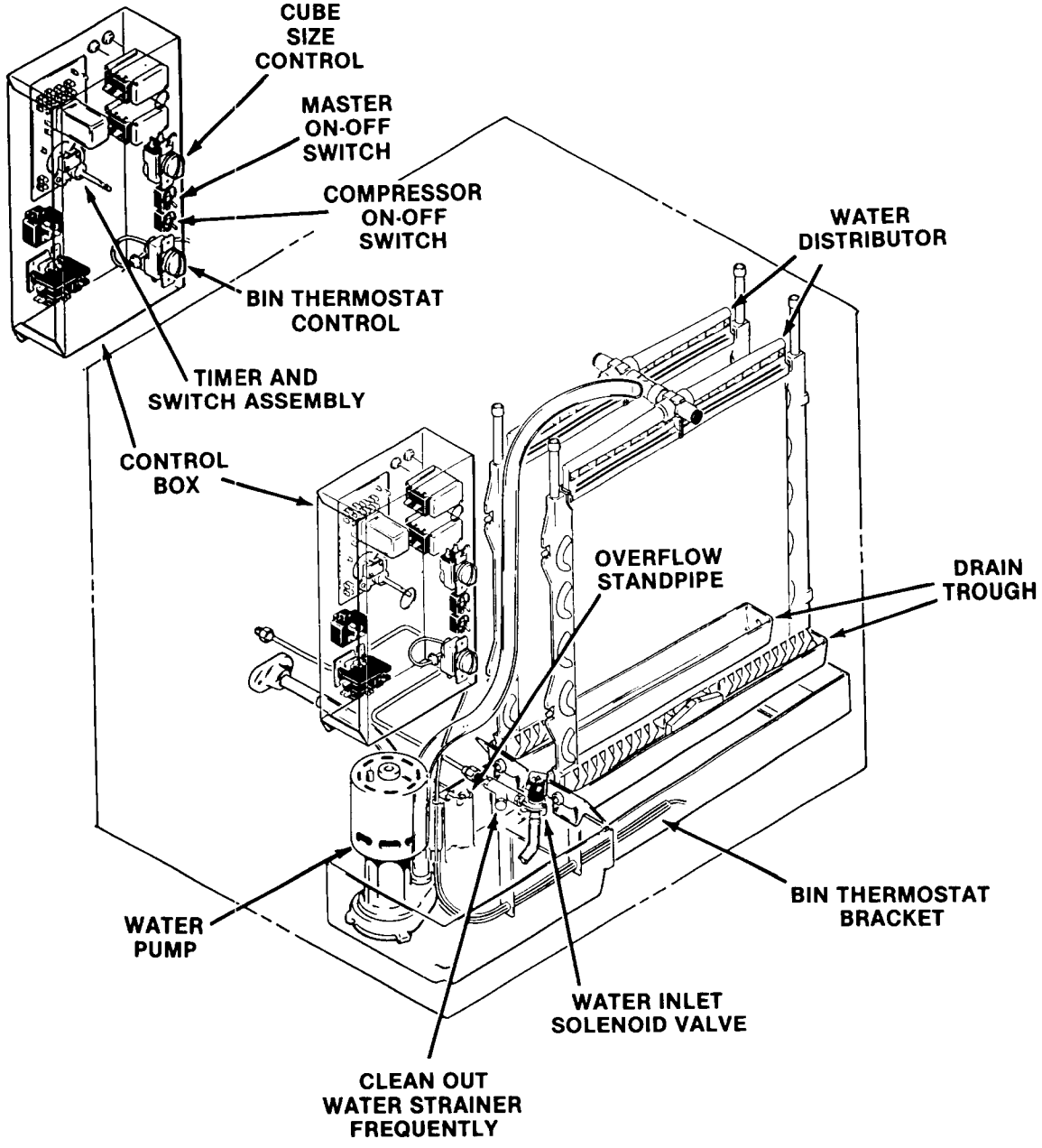

CM650R MAINTENANCE & CLEANING INSTRUCTIONS

REMOTE CONDENSER

Frequent cleaning and inspection of the condenser should be performed to maintain maximum efficiency of Icemaker. A dirty condenser or blocked air flow will greatly decrease icemaking efficiency.

1. With building source electrical power OFF to the icemaker, clean the remote condenser fins, using a vacuum cleaner, whisk broom or brush. DO NOT USE A WIRE BRUSH. Instruct customer to clean frequently.
2. Check that fan blade moves freely, is not touching any surfaces, is not bent or out of balance; and, the wire guard is properly installed and securely attached.
3. Check that the roof area immediately surrounding the remote condenser is free and clear of any debris that may collect, such as leaves, paper, trash, etc.

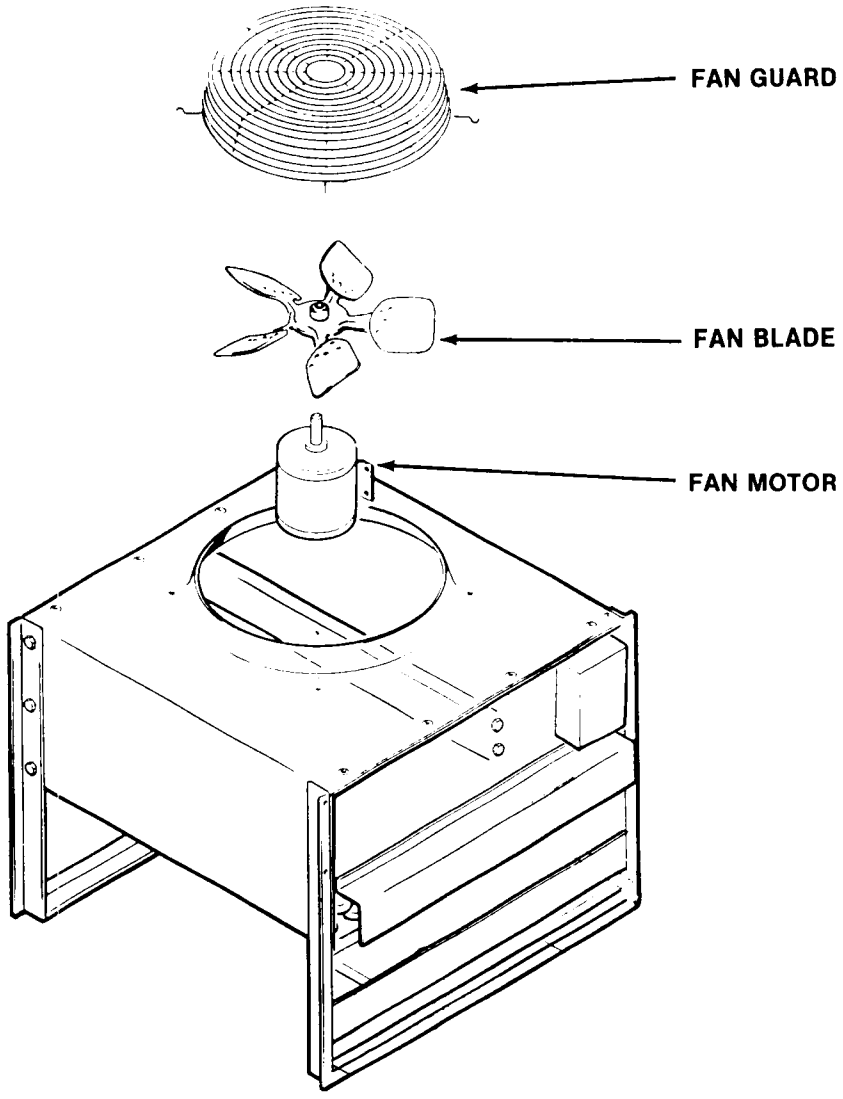

Cleaning Remote Condenser

CM650R COMPONENT DESCRIPTION

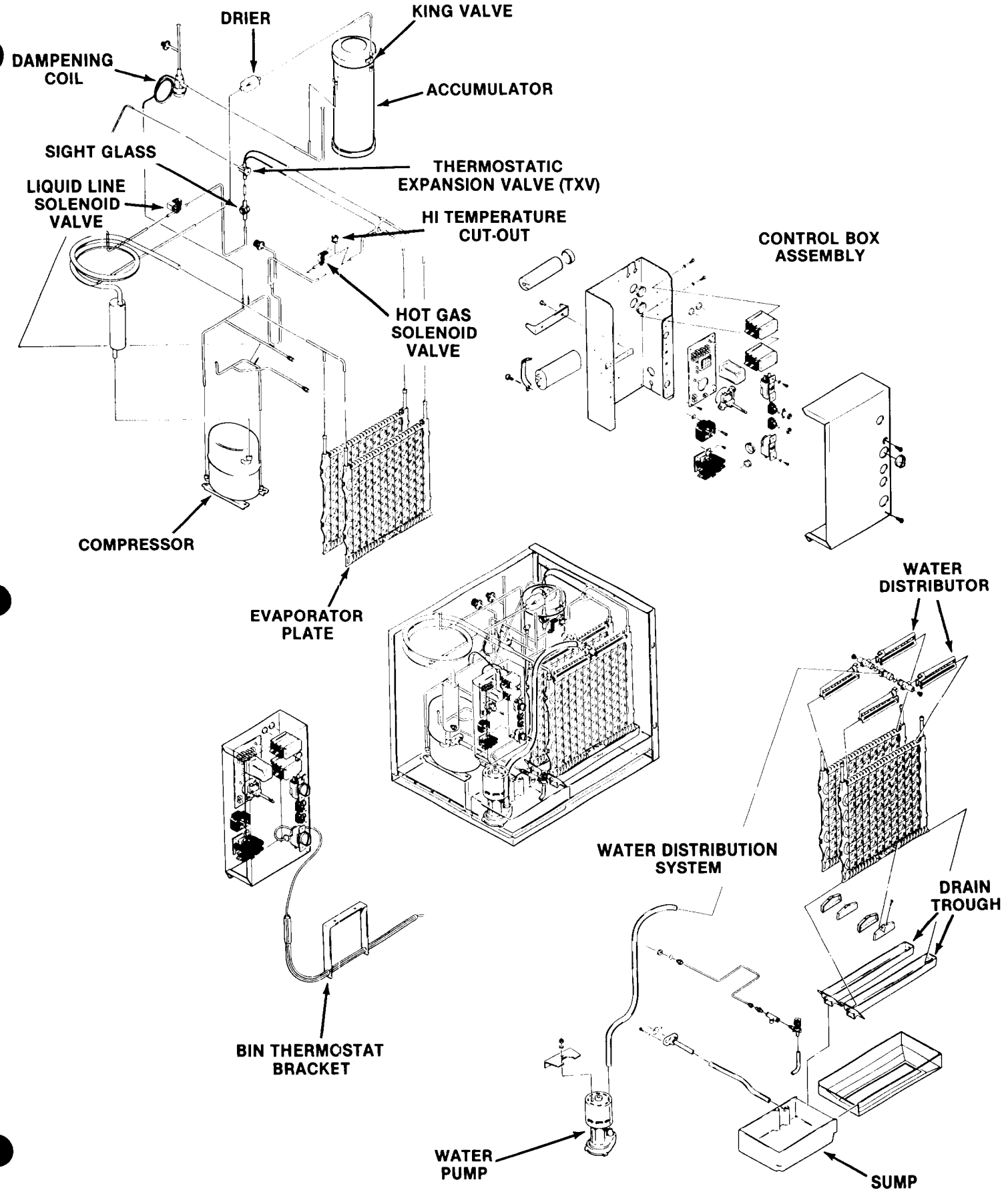

CM650R COMPONENT DESCRIPTION

BIN THERMOSTAT CONTROL

The bin thermostat control is located in the bottom of the control box. The sensing capillary tube of the control is routed from the control box through the inner left wall in the evaporator section, to the bin thermostat control bracket hanging in the ice storage bin. The bin thermostat control functions to automatically shut OFF the icemaker, when the ice storage bin is filled and ice contacts the capillary tube. It also signals the RESTART of the icemaker, when the capillary tube starts to warm up, after ice has been removed from the bin.

Bin thermostat control adjustment should ONLY be performed if premature shut off occurs or ice backs up into the freezing section of the cabinet. Adjust only in increments of one eighth turn of a screw at a time.

COMPRESSOR CONTACTOR

The compressor contactor functions to carry the compressor line current. The contactor is wired so any control in the pilot circuit, such as the bin thermostat, low pressure and high pressure controls, etc., will cause the contactor holding coil to be de-energized, when the control contact OPENS, thereby breaking the circuit to the compressor through the contactor points.

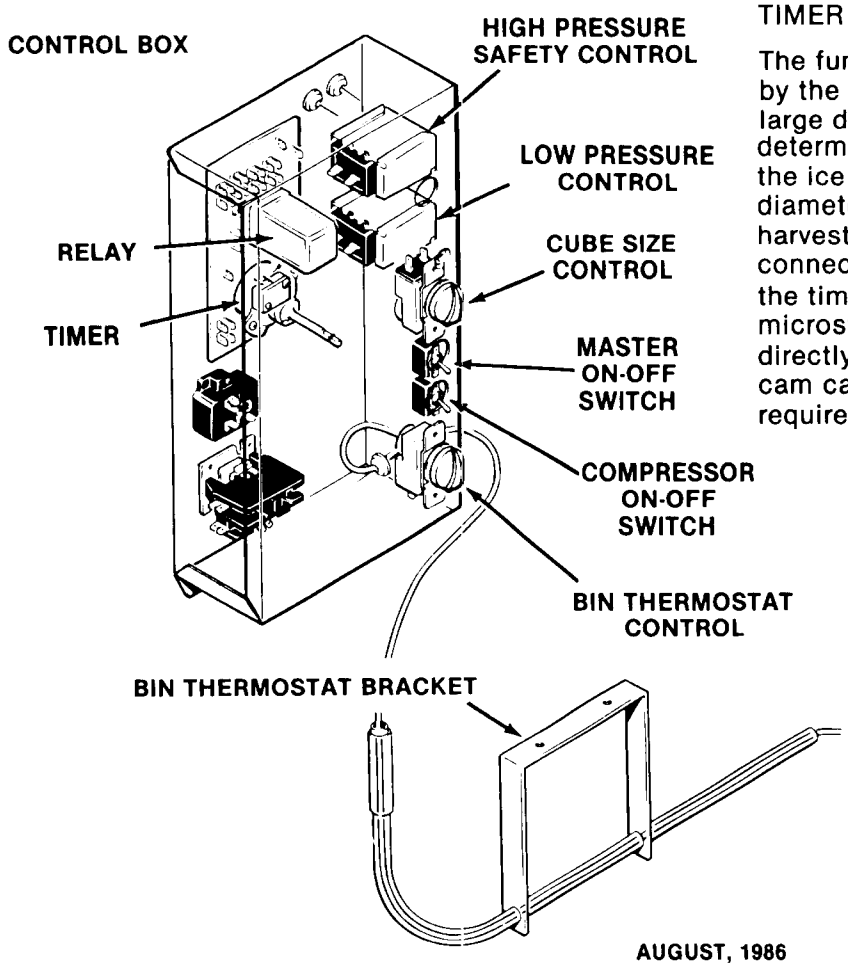

CUBE SIZE CONTROL

The temperature sensing cube size control affects the length of the freezing cycle prior to initiating the finishing timer. The cube size control closes its contacts when the evaporator reaches a preset temperature starting the finishing timer. A variation in either ambient air or incoming water temperature will affect the efficiency of the refrigeration system. This will vary the length of time it takes the evaporator to reach the temperature at which the cube size control is preset to CLOSE; which, in turn, will affect the overall cycle time.

See *Cube Size Adjustment* BEFORE attempting to adjust the control.

RELAY

The multi-function, three pole, double-throw, plug-in relay is installed directly into a receptacle on the printed circuit board in the control box. The relay functions, in part, to by-pass the bin thermostat control to prevent the icemaker from shutting OFF, when a filled-bin condition occurs, during the freezing cycle. The by-pass action serves to ensure full-sized cubes with each harvest cycle; and, to prevent short cycling on the bin thermostat control.

TIMER — Timer & Switch Assembly.

The function of the timer begins when activated by the cube size control. The outer surface, or large diameter lobe of the timer cam, determines the timer cycle for finish freezing of the ice cubes, while the inner surface, or small diameter lobe, determines the time cycle for the harvest sequence. All electrical circuitry is connected through the printed circuit board and the timer and double-throw microswitch. The microswitch is actuated by a cam assembly directly connected to the timer motor. The timer cam can be adjusted to vary the defrost time required.

CM650R COMPONENT DESCRIPTION

WATER INLET SOLENOID VALVE

The water inlet solenoid valve opens during harvest to fill the sump assembly with water. Excess water overflows through a stand pipe located at the back of the sump to flush minerals from the sump.

WATER DISTRIBUTION SYSTEM

The water distribution system functions to evenly supply water to all cells of the evaporator plates. The water pump pumps water from the sump up to the vertical tygon tube to a tee. From there water is channeled through water manifolds to four water distributors, two atop each evaporator plate, and distributed evenly down both sides of each evaporator plate. Gravity flow returns the water to the sump reservoir for recirculations.

STRAINER

In the water line before the inlet water valve, functions to trap large particles suspended in the water supply before they enter the inlet water valve. The screen is easily removed for cleaning and should be cleaned frequently.

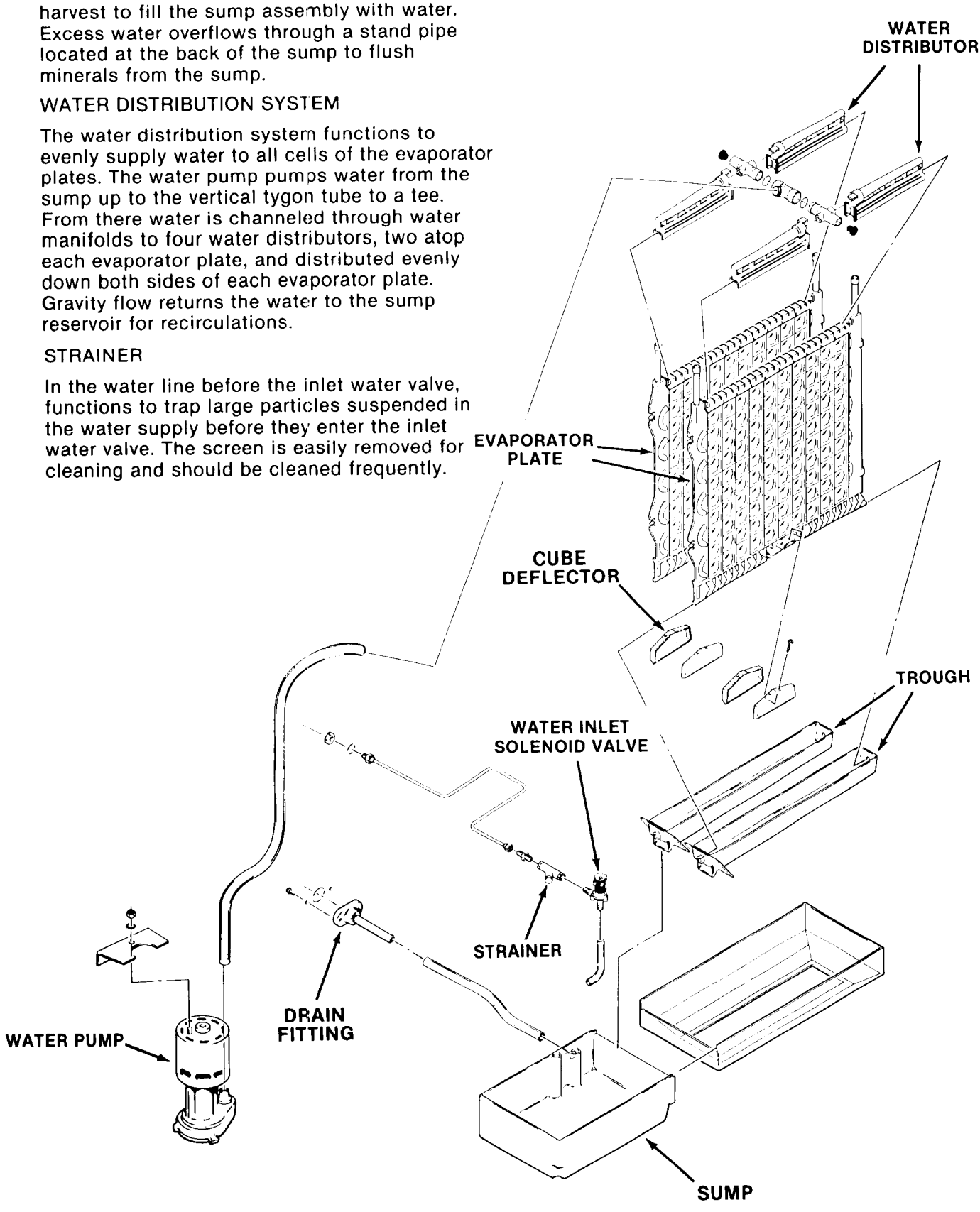

CM650R COMPONENT DESCRIPTION

HIGH PRESSURE RECEIVER

Provides storage volume for refrigerant during cross ambient operation. The high pressure receiver is sized large enough to hold the entire refrigerant charge. During cold operation there is enough liquid in the receiver to maintain a liquid seal to the liquid line.

THERMOSTATIC EXPANSION VALVE (TXV)

The thermostatic expansion valve regulates the flow of refrigerant to the evaporator, and reduces pressure of liquid refrigerant from condensing pressure to evaporating pressure.

ACCUMULATOR

The accumulator traps liquid overfeed from the evaporator during harvest and meters it into the compressor at a controlled rate.

LIQUID LINE SOLENOID VALVE

The liquid line solenoid valve provides positive shutoff of refrigerant flow for off cycle evaporator pump down.

HOT GAS SOLENOID VALVE

The hot gas solenoid valve opens during the harvest cycle, to divert the hot discharge gas from the compressor, directly into the evaporator plates assembly to release ice cubes from the ice cube molds. The hot gas solenoid valve is comprised of two parts, the body and plunger and the coil and frame assemblies. Installed in the discharge line of the compressor, the energized solenoid coil lifts the valve stem within the valve body, to cause the hot discharge gas to be diverted when the finishing timer has advanced to the start of the harvest cycle.

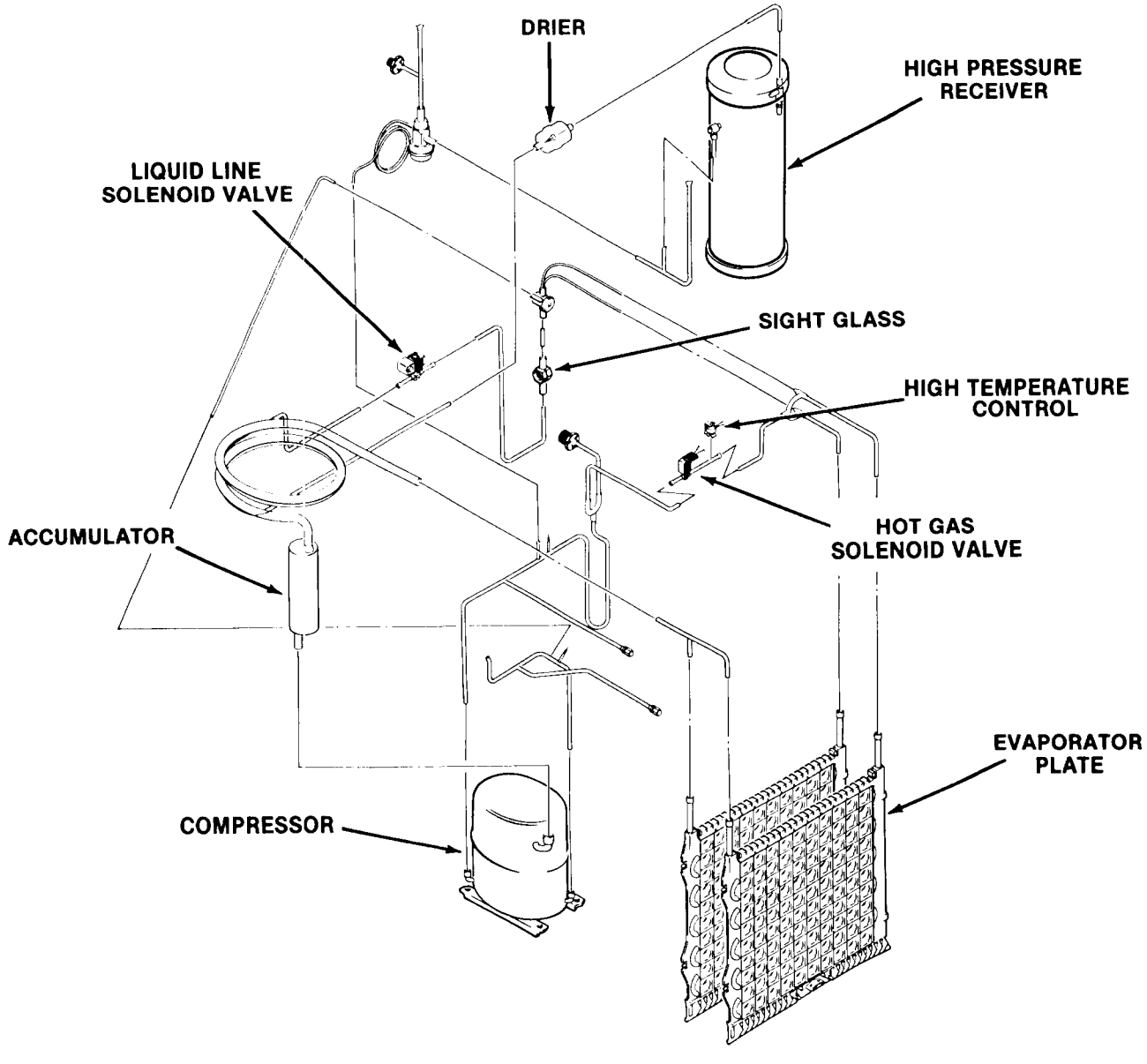

CM650R SERVICE DIAGNOSIS

The service diagnosis section is for use in aiding the serviceman in diagnosing a particular problem for pin-pointing the area in which the problem lies, thus an ever available reference for proper corrective action.

The following chart lists corrective actions for the causes of known symptoms of certain problems that can occur in the icemaking-refrigeration system.

SYMPTOM	POSSIBLE CAUSE	CORRECTION
Irregular size cubes	Some distributor holes plugged.	Clean distributor holes.
		Clean water sump.
	Shortage of water.	See Shortage of water CORRECTION.
	Unit not level.	Level cabinet, as required.
Cubes too large.	Dirty air-cooled condenser.	Clean remote condenser.
	Cube Size Control set too cold.	Rotate Cube Size Control dial toward WARMER.
	Loss of refrigerant.	Check for refrigerant leaks, correct leaks; recharge system.
Cubes too small.	Cube Size Control set too warm.	Rotate Cube Size Control dial toward COLDER.
	Moisture in refrigeration system.	Blow refrigerant charge; replace drier; evacuate system; add proper refrigerant charge.
	Shortage of water.	See shortage of water CORRECTION.
	TXV valve super heat too high.	Replace valve.
Cloudy Cubes.	Shortage of water.	See Shortage of water SYMPTOM.
	Dirty water supply.	Install water filter or treatment system.
	Accumulated impurities.	Use SCOTSMAN Ice Machine Cleaner. See Cleaning Instructions.
Shortage of water.	Short harvest cycle.	Adjust cam of timer and switch assembly.
	Water leak in sump area.	Locate leak and correct condition.
	Partial restrictions in water strainer.	Clean or replace strainer.
	Low water pressure.	Check for incorrect supply line size or blockage.
		Check for low main pressure. If low, contact water company.

CM650R SERVICE DIAGNOSIS

SYMPTOM	POSSIBLE CAUSE	CORRECTION
Decreased Ice capacity.	High head pressure, result of dirty Condenser or faulty fan Motor.	Clean remote condenser fins. Repair or replace fan motor.
	Non-condensable gas in the system	Purge the system and recharge per nameplate requirements.
	Overcharge of refrigerant	Slowly purge off to correct charge.
	Hot gas solenoid valve leaking.	Replace valve.
	Defective compressor. Check amp draw of compressor.	Replace compressor.
	Leaky inlet water valve.	Replace valve.
	High ambient temperature for condenser	If possible, reduce condenser inlet air temperature.
Poor harvests. Icemaker does not harvest.	Too short defrost time.	Check and adjust harvest cycle.
	Restriction in water inlet line.	Check strainer and inlet water valve.
	Hot gas solenoid does not open. Binds or burned out.	Replace solenoid.
	Undercharge of refrigerant.	Charge to nameplate requirements.
	Water pressure too low.	Check for 20 PSI flowing water
	Head pressure regulator valve - low head.	Replace valve.
Compressor cycles intermittently.	Low voltage.	Check for circuit overload.
		Check building supply voltage, if low, contact power company.
	Cycling on low pressure control.	Cold ambient at condenser.
		Pump down solenoid coil opens. Replace it.
Unit trips on Hi pressure cut out.	Dirty condenser.	Clean condenser with vacuum cleaner or brush. DO NOT USE A WIRE BRUSH.
	Defective fan motor.	Replace fan motor.
	Non-condensable gases in system.	Purge system and recharge per nameplate requirements.
Frost on compressor.	TXV metering too much refrigerant.	Superheat set too low. Adjust or replace valve.
Unit cycles on high-temp switch.	Hot gas valve leaks thru in freeze cycle or unit stuck in harvest.	Check hot gas valve and electrical controls for harvest cycle.

CM650R SERVICE DIAGNOSIS

SYMPTOMS	POSSIBLE CAUSE	CORRECTION
Icemaker will not operate.	Blown fuse in line.	Replace fuse and check for cause.
	Master switch in OFF position.	Set switch to ON position.
	Faulty master switch.	Replace switch.
	Timer contacts open.	Replace timer.
	Improperly wired.	Contact electrical contactor for correction.
	Out of refrigerant, off on Low pressure control.	Correct leak, recharge system.
	High pressure control tripped.	Reset, check condenser.
	Bin control open.	Check bin control Unit in coldroom or bin control defective.
	Liquid line solenoid valve not opening - keeps unit pumped down.	Repair or replace valve.
Icemaker will not go into the harvest cycle automatically.	Cube size control will not close.	Replace cube size control.
	Timer motor open.	Replace timer.
	Plug in relay contacts open.	Replace relay.
	Cube size control may not close if condensing pressure is too high.	Check condenser and discharge pressure.
Water overflows from the sump into the bin.	Restricted sump drain.	Repair drain.
	Inlet water valve lets in too much water.	Replace inlet valve.
Icemaker stays in the harvest cycle.	Plug in relay coil open.	Replace relay.
	Timer motor open or stuck.	Replace timer.
	Timer microswitch N.O. contacts. Will not close.	Replace timer.

CM650R REFRIGERANT CHARGE DIAGNOSIS

On this model, the refrigerant charge is adequate whenever the sight glass remains full of liquid refrigerant throughout the freeze cycle. HOWEVER, the condensing temperature will have a direct bearing on this. A unit with a marginal charge in summer, will be undercharged when the outside air temperature drops. The only correct and accurate way to charge this unit is to weigh in the nameplate charge.

CM650R REMOVAL AND REPLACEMENT PROCEDURES

WARNING

Be sure the electrical power supply and the water supply to the icemaker are OFF BEFORE starting any of the following REMOVAL AND REPLACEMENT procedures, as a precaution to prevent possible personal injury or damage to equipment.

For installations having stacked cubers mounted on a bin, disregard steps to remove the top panel. Access to all areas and parts can still be gained through removal of the necessary front or side panels.

REMOVAL AND REPLACEMENT OF THE BIN THERMOSTAT CONTROL

To remove the bin thermostat control:

1. Remove front panel.
2. Remove screws and the control box cover.
3. Remove wire leads from the bin thermostat control.
4. Unthread the capillary tube and remove from the bin thermostat control bracket at the bottom right side of the evaporator section.
5. Remove the two screws attaching the bin thermostat control to the side of the control box; then, carefully pull the capillary tube out of the evaporator section. Carefully remove the bin thermostat control and capillary tube from the control box.

To replace the bin thermostat control, reverse the removal procedure.

REMOVAL AND REPLACEMENT OF THE CUBE SIZE CONTROL

To remove the cube size control:

1. Remove front panel.
2. Remove cover from control box.
3. Trace capillary tube, from the cube size control to the refrigerant suction line.
4. Remove the coiled capillary tube bulb from the tube well on the suction line.
5. Remove electrical leads from the cube size control.
6. Remove screws and the cube size control.

To replace the cube size control, reverse the removal procedure.

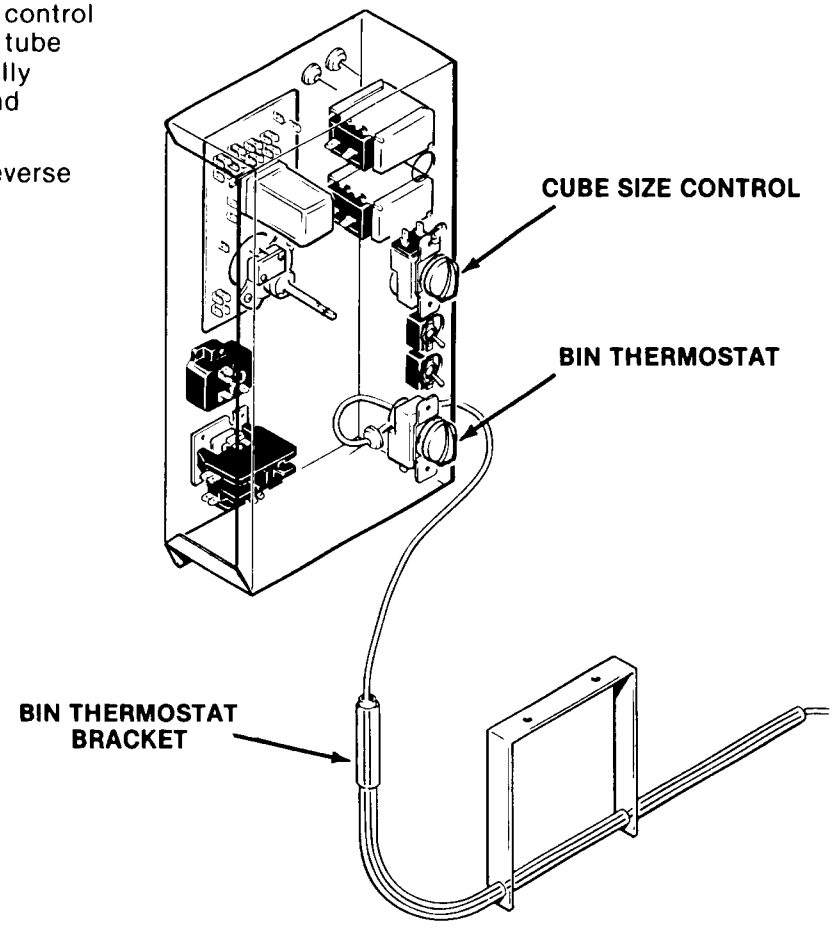

CM650R REMOVAL AND REPLACEMENT PROCEDURES

WARNING

Disconnect electrical power supply to icemaker whenever adjustment procedures are performed.

REMOVAL AND REPLACEMENT OF THE WATER DISTRIBUTOR TUBES AND MANIFOLD TUBES

To remove the water distributor tube and manifold tube:

1. Pull out to unsnap catches and remove the front panel.
2. Remove 4 thumb screws and remove the evaporator cover.
3. Slide the water distributor tube to the left about 1/8-inch along the top of the evaporator plate, until the water distributor tube can be unsnapped from the flexible notch and lifted upward to the right side.
4. Unsnap and disconnect water distributor tubes from the water manifold section.

To replace the water distributor tubes and manifold tubes, reverse the removal procedure. BE SURE the notches in the water manifold tubes properly engage the alignment keys in the tee.

BE SURE the water distributor tube is securely fastened at the notch at both sides of the evaporator plate.

Check identical attachment for the left water distributor tube and notch; also, that the distributor/manifold connections at the top center of each evaporator plate is snug against the top of the plate.

REMOVAL AND REPLACEMENT OF THE WATER PUMP ASSEMBLY

To remove the water pump assembly:

1. Pull out to unsnap catches and remove the front panel.
2. Remove the Tygon tube to the pump assembly.
3. Disconnect electrical leads from the water pump assembly.
4. Remove thumb screws and the water pump from the sump.
5. Remove one nut and mounting bracket from top of water pump.

To replace the water pump assembly, reverse the removal procedure.

REMOVAL AND REPLACEMENT OF THE INLET WATER SOLENOID VALVE ASSEMBLY

1. Shut OFF water supply to machine.
2. Remove screws and pull the water solenoid valve out to gain access.
3. Loosen and remove inlet water line fitting from the inlet water solenoid valve assembly.
4. Remove inlet water Tygon tubing from the water solenoid valve.

To replace the inlet water valve assembly, reverse the removal procedures.

CM650R REMOVAL AND REPLACEMENT PROCEDURES

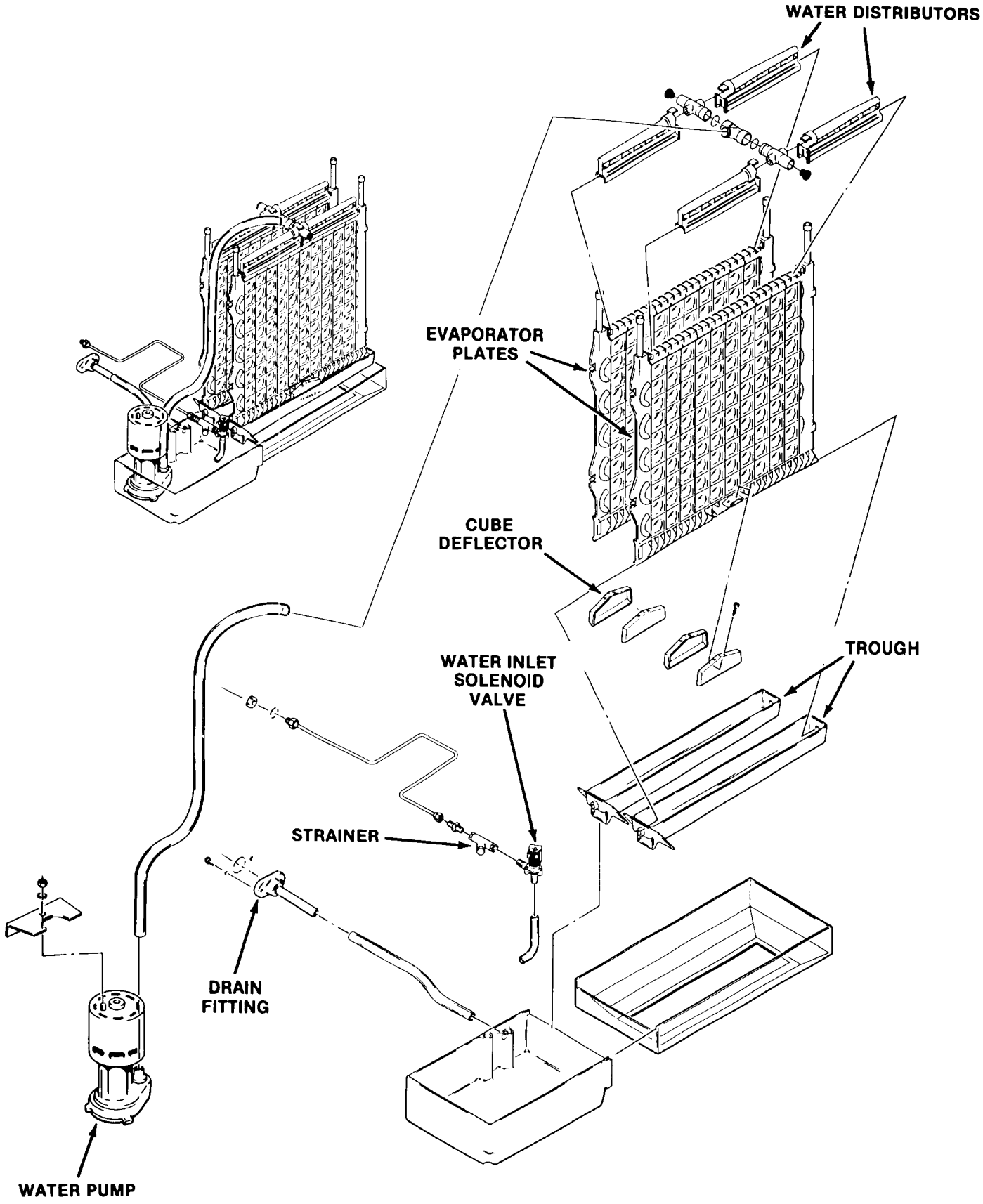

CM650R REMOVAL AND REPLACEMENT PROCEDURES

WARNING

Disconnect electrical power supply to icemaker whenever adjustment procedures are performed.

REMOVAL AND REPLACEMENT OF THE EVAPORATOR PLATE ASSEMBLY

1. Remove the front and top panels.
2. Bleed off or blow the refrigerant charge through the Schrader valve.
3. Disconnect Tygon water inlet tube(s), at the water manifold tee(s), above the evaporator plates.
4. Unsnap the sump assembly from the lower left and right attachment points on each evaporator plate.
5. Slide the water distributor tubes about 1/8-inch along the top of the evaporator plate to be removed, until the left water distributor tube can be lifted upward.
6. Lift the end of the water distributor tube and slide the distributors toward the left along the top of the evaporator plate, until the flexible right notch is cleared.
7. Unsnap and disconnect each left and right water distributor tube from the water manifold section.

CAUTION

Use EXTRA PRECAUTION to protect the plastic parts during the next step to unsolder the refrigerant lines, two places, at the top of the evaporator plate. Position wet cloths over top of plates, as well as over the plastic liner at the rear, or sides, to prevent accidental heat damage, or possible fire from torch flame.

8. Unsolder and remove the refrigerant lines at the top of the evaporator plate to be replaced.
9. Remove nuts at left of the evaporator then, loosen the braces just enough to remove the evaporator plate. Temporarily replace the braces, to support the remaining evaporator plate.

To replace the evaporator plate, reverse the removal procedures. See Nameplate. Weigh in proper charge of R-502.

Whenever a new charge of refrigerant is placed in the system, the compressor should NOT BE RUN until the crankcase heater has been on for 12 hours after re-charging.

CHARGING PROCEDURES

Particular care must be taken when recharging this remote system. No liquid refrigerant may be placed in the system at the compressor. DO NOT use the Schrader valves at the front of the machine for weighing in the charge. All liquid R-502 must be weighed into the receiver through the "front seated" King Valve.

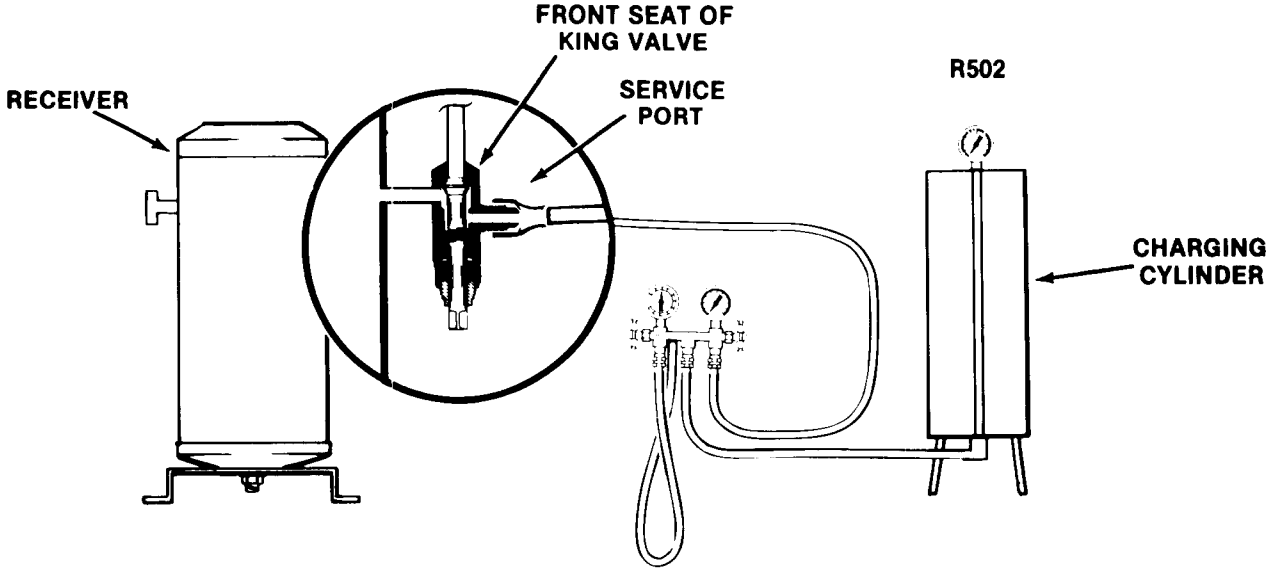

CM650R REMOVAL AND REPLACEMENT PROCEDURES

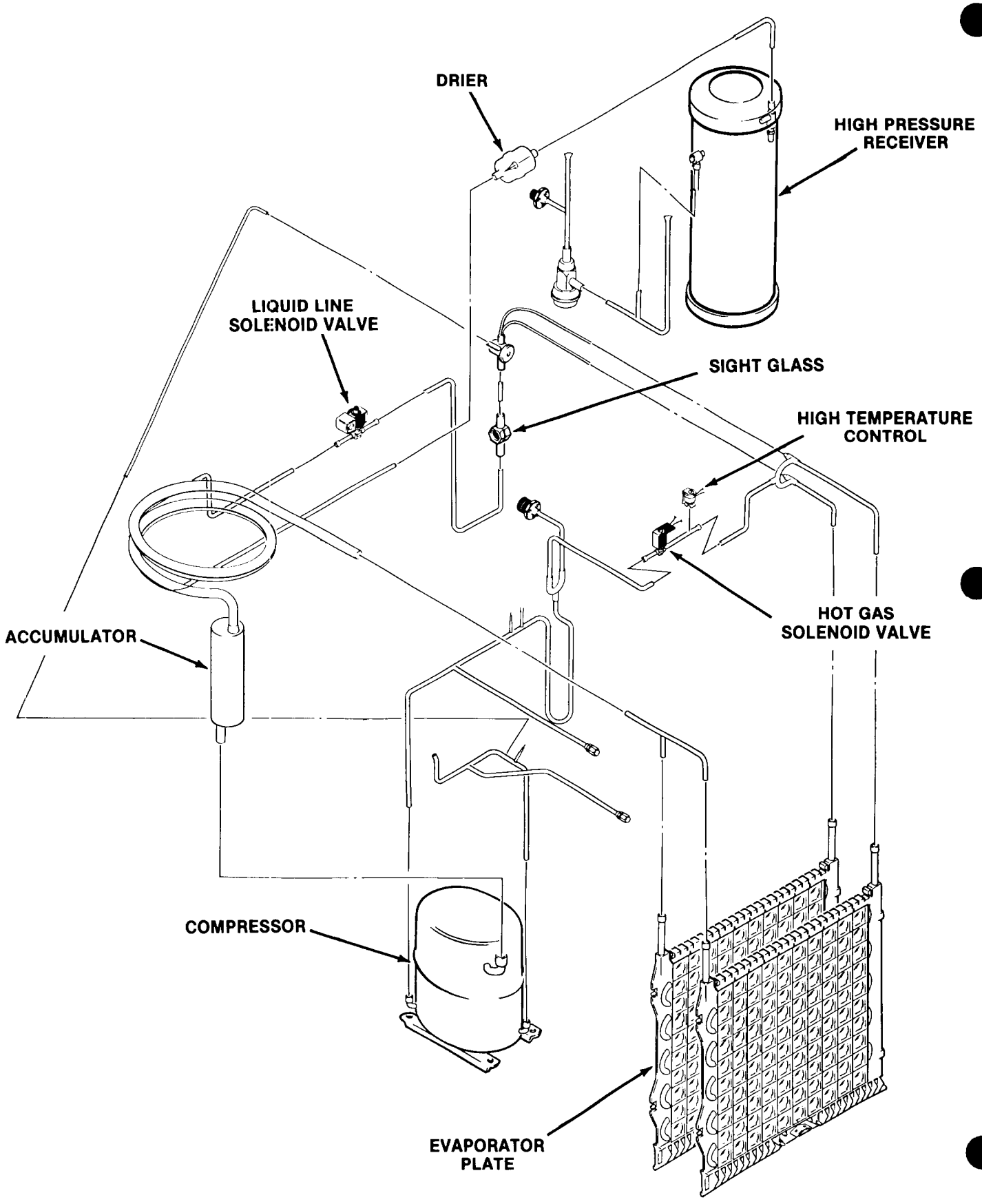

TABLE OF CONTENTS

Table of Contents 1
List of Illustrations 2
Specifications 3

SECTION I - GENERAL INFORMATION & INSTALLATION 5
I. Introduction 5
II. Unpacking and Inspection 5
III. Location and Leveling 5
IV. Electrical Connections 6
V. Water Supply and Drain Connections 9
VI. Installation - Optional 9
VII. Final Check List 9

SECTION II - OPERATING INSTRUCTIONS 10
I. Start Up 10

SECTION III - PRINCIPLES OF OPERATION - How It Works 12
I. Freezing Cycle 12
II. Harvest Cycle 13
III. Component Description 13

SECTION IV - ADJUSTMENT AND REMOVAL AND REPLACEMENT PROCEDURES 16
I. Adjustment of the Cube Size Control 16
II. Adjustment of the Timer & Switch Assembly 16
III. Adjustment of the Water Regulator Assembly — Water-Cooled 17
IV. Removal and Replacement of the Bin Thermostat Control 17
V. Removal and Replacement of the Compressor Assembly 17
VI. Removal and Replacement of the Condenser - Air-Cooled 17
VII. Removal and Replacement of the Condenser - Water-Cooled 18
VIII. Removal and Replacement of the Cube Size Control 18
IX. Removal and Replacement of the Drier 18
X. Removal and Replacement of the Evaporator Plate Assembly 19
XI. Removal and Replacement of the Fan Motor Assembly - Air-Cooled Model 20
XII. Removal and Replacement of the Inlet Water Valve Assembly 20
XIII. Removal and Replacement of the Sump Assembly 20
XIV. Removal and Replacement of the Water Distributor Tubes and Manifold Tubes ... 21
XV. Removal and Replacement of the Water Pump Assembly 21
XVI. Removal and Replacement of the Water Regulator Assembly - Water-Cooled Models 21

SECTION V - MAINTENANCE & CLEANING INSTRUCTIONS 22
I. General 22
II. Icemaker 22
III. Cleaning - Icemaker 22

TABLE OF CONTENTS (Cont'd)

SECTION VI - SERVICE DIAGNOSIS 24

I. Icemaking - Refrigeration System 24

SECTION VII - WIRING DIAGRAM .....

Wiring Diagram CM850—Air-Cooled - (115/208-220/60/3) 27

Wiring Diagram CM850—Water-Cooled (115/208/220/60/3) 28

Wiring Diagram CM850—Air-Cooled - (115/208/60/1) 29

Wiring Diagram CM850—Water-Cooled - (115/208/60/1) 30

Wiring Diagram CM850 Air-Cooled (115/230/60/1) 31

Wiring Diagram CM850 Water-Cooled (115/230/60/1) 32

SECTION VIII - THE PARTS ILLUSTRATIONS AND PARTS LIST 33

I. General 33

II. How to Use the Illustrations and Parts List 33

III. How to Order Parts of Assemblies 33

LIST OF ILLUSTRATIONS

Specifications 3

Figure 1-1. Installing the Bin Thermo Bracket and Bin Thermostat Capillary Line 6

Figure 1-2. MC850—Locational 7

Figure 1-3. Installation Practice 8

Figure 2-1. Sump Filled — Showing Water Level Line 10

Figure 2-2. Timer Cam Positions 10

Figure 2-3. Ice Cube Size and Shape 11

Figure 3-1. Freezing Cycle 12

Figure 3-2. Harvest Cycle 13

Figure 4-1. Adjustment of the Timer and Switch Assembly 19

Figure 4-2. Removal of the Water Distributor, Manifold, Tees 19

Figure 7-1. Wiring Diagram CM850—Air-Cooled (115/208-220/60/3) 27

Figure 7-2. Wiring Diagram CM850—Water-Cooled (115/208-220/60/3) 28

Figure 7-3. Wiring Diagram CM850—Air-Cooled (115/208/60/1) 29

Figure 7-4. Wiring Diagram CM850—Water-Cooled (115/208/60/1) 30

Figure 7-5. Wiring Diagram CM850—Air-Cooled (115/230/60/1) 34

Figure 7-6. Wiring Diagram CM850—Water-Cooled (115/230/60/1) 35

Figure 8-1. CM850 Cabinet 36

Figure 8-2. Major Assemblies — Air-Cooled 37

Figure 8-3. Major Assemblies — Water-Cooled 38

Figure 8-4. Evaporator Section Components and Assemblies 31

Figure 8-5. Control Box Assembly 32

CM850
SPECIFICATIONS

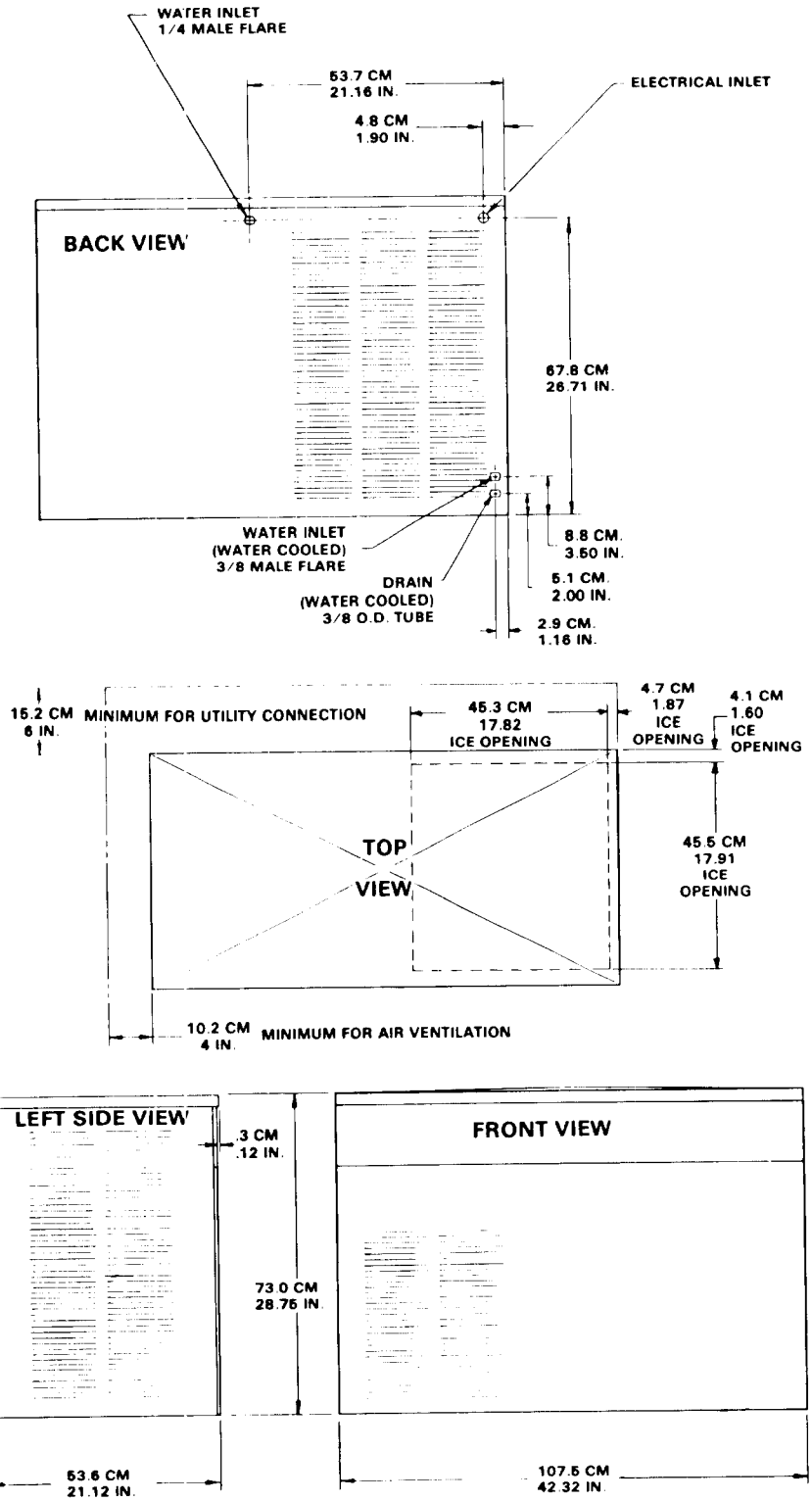

SPECIFICATIONS (CONT'D.)

MODEL CM850

Air-Cooled: Model CM850SAE

Water-Cooled: Model CM850SWE

Electrical: 230/60/1
230/50/1
208-230/60/3
208/60/1

Est. Ship Wt.: 260 lbs.

FRONT SERVICE ACCESS PANELS

OPTIONALS:

SPKCM850 - Stainless Steel Panels

B40 Bin - 350 Storage Capacity

B60 Bin - 550 lbs. Storage Capacity

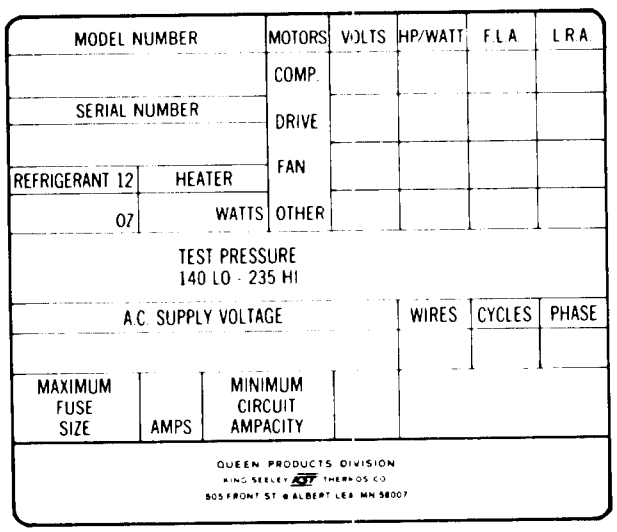

SEE NAMEPLATE, shown at left, for electrical and refrigeration specifications. NAMEPLATE located on rear service panel.

Remove Left Bottom Front Panel to locate the Model Serial Number plate, shown below, on the Chassis Front left vertical upright.

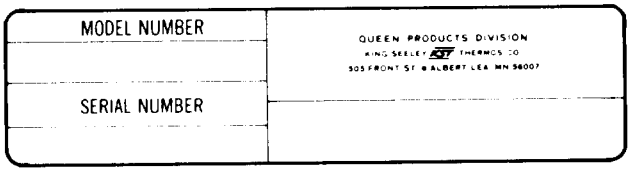

We reserve the right to make product improvements at any time. Specifications and design are subject to change without notice.

This icemaker has been engineered to our own rigid safety and performance standards. The National Sanitation Foundation (NSF) seal, signifies that it is listed with the NSF and that it complies with the materials and construction standards of the NSF. In addition, the Underwriters Laboratories, Inc., (UL) Listing Mark signifies that its construction and design have been inspected and tested by them. NSF and UL inspectors also periodically examine production icemakers at the factory, to assure continued compliance.

To retain the safety and performance built into this icemaker, it is important that installation and maintenance be conducted in the manner outlined in this manual.

SECTION I

GENERAL INFORMATION & INSTALLATION

I. INTRODUCTION

These instructions provide the specifications and the step-by-step procedures for the installation, start up and operation for the Scotsman Model CM850 Modular Cuber.

The Model CM850 Modular Cubers are quality designed, engineered and constructed, and thoroughly tested icemaking systems, providing the utmost in flexibility to fit the needs of a particular user. Separate sections detail more specifically: General Information & Installation; Start Up Operation; Principles of Operation; Adjustment and Removal and Replacement Procedures; Maintenance and Cleaning Instructions; Service Diagnosis; Wiring Diagrams and The Illustrated Assemblies and Parts List.

DESCRIPTION

An attractive horizontal cabinet of leathergrain embossed steel with high gloss, almond baked enamel finish on all panels, with a contrasting charcoal brown upper front panel. Also, an optional stainless steel panel kit is available. These removable panels allow easy access to electrical and mechanical components for cleaning and maintenance.

SEALED REFRIGERATION SYSTEM

To provide quiet efficient operation of icemaker, the compressor motor is internally spring-mounted. The compressor motor is covered by a five year parts warranty.

STORAGE BIN

Since the Model CM850, like other modular cubers in the SCOTSMAN line, does not have an attached ice storage bin, it is necessary to use an auxiliary bin.

Modular systems combinations include: B40 Ice Storage Bin with 350 pounds (lbs.) capacity or B60 with 550 pounds (lbs.) capacity.

II. UNPACKING AND INSPECTION

1. Call your authorized SCOTSMAN Distributor or Dealer, for proper installation. He's listed under ICE MAKING EQUIPMENT AND MACHINERY in the Yellow Pages of the telephone book.
2. Visually inspect the exterior of the shipping container and skid and any severe damage noted should be reported to the delivering carrier; and a concealed damage claim filed subject to internal inspection, with the carrier representative present.
3. Remove screws and shipping tape, the left Side Panel, Top and three Front Panels, from the cabinet, and inspect for any concealed damage. Notify carrier of any concealed damage claims, as stated in step 2, above.
4. Remove all internal support packing, tape and wire, if any, in machinery compartment. Remove bolts and hold down straps from the skid and base of the Cuber. RETAIN BOLTS AND SUPPORTS. See Figure 1-1.
5. Check that refrigerant lines do not rub or touch lines or other surfaces, and that fan blades, if any, move freely.
6. Check that compressor is snug on all mounting pads.
7. Use clean damp cloth or disposable paper wiper to wipe clean the exterior surfaces of the cabinet.
8. See NAMEPLATE on the top of the rear panel and check that the location source voltage corresponds with the voltage specified on the nameplate. Make certain that a Chassis-to-earth GROUND is installed.

CAUTION

Improper voltage supplied to the icemaker will void your parts replacement program. Improper grounding can cause electrical shocks and component failures.

9. Fill in all spaces in the Manufacturer's Registration Card including: Model Number and Serial Number taken from the Model-Serial Nameplate located on the left side, front part of the Chassis base, with Left Front Panel removed. Forward the completed, self addressed, registration card to the SCOTSMAN factory.

III. LOCATION & LEVELING

WARNING

This Modular Cuber is NOT designed for outdoor installations, or where air temperatures are below 50-degrees F., or above 100-degrees F., and water temperature is below 40-degrees F., or above 100-degrees F. Extended periods of operation at temperatures exceeding these limitations will constitute misuse, under the terms of the SCOTSMAN Manufacturer's limited warranty coverage.

1. Position the selected Bin in it's permanent location, which should have a minimum room temperature of 50-degrees F., and maximum room temperature of 100-degrees F. Level the bin, adjusting the leg levelers in both the front-to-rear and side-to-side directions. Select a well ventilated location for the air-cooled condenser.
2. Inspect the bin top mounting gasket, which should be flat, with no wrinkles, to provide a good water seal when the CM850 Cuber is installed on top of the bin.
3. Install the CM850 Modular Cuber on top of the selected Bin, using care to be sure a good seal is made between the two cabinets.
4. Align the two Mounting Straps, located at the bottom rear of the icemaker, with the two mounting holes at the rear of the Bin. When alignment and leveling have been completed, tighten the bolts to secure the two cabinets.
5. Remove plastic ties securing the Bin thermo Bracket in shipping position. Carefully relocate Bin Thermo Bracket and attach to lower left liner side wall using existing screws. When properly installed Bin Thermo Bracket should extend into the ice storage bin. See Figure 1-1.
6. Remove the nut & bolt securing each vertical support brace to each evaporator plate. Remove the two screws holding each vertical support brace to horizontal supports and discard the vertical support braces. See Figure 1-1.

IV. ELECTRICAL CONNECTIONS

WARNING

DO NOT operate this Modular Cuber when the water supply is shut OFF, or is BELOW the recommended 20 PSIG water pressure. If this does occur, move the Master ON-OFF toggle switch on the Control Box to OFF immediately.

SEE NAMEPLATE for current requirements to determine wire size to be used for electrical hookup. The Cuber requires a solid Chassis-to-earth ground wire. See Wiring Diagram.

Be certain the Cuber is connected to its own electrical circuit and individually fused. The maximum allowable voltage variation should not exceed ten percent of the nameplate rating, even under starting conditions. Low voltages can cause erratic operation and may be responsible for serious damage to the motor windings.

All external wiring should conform to the national, state and local electrical code requirements. Usually an electrical permit and services of a licensed electrician will be required.

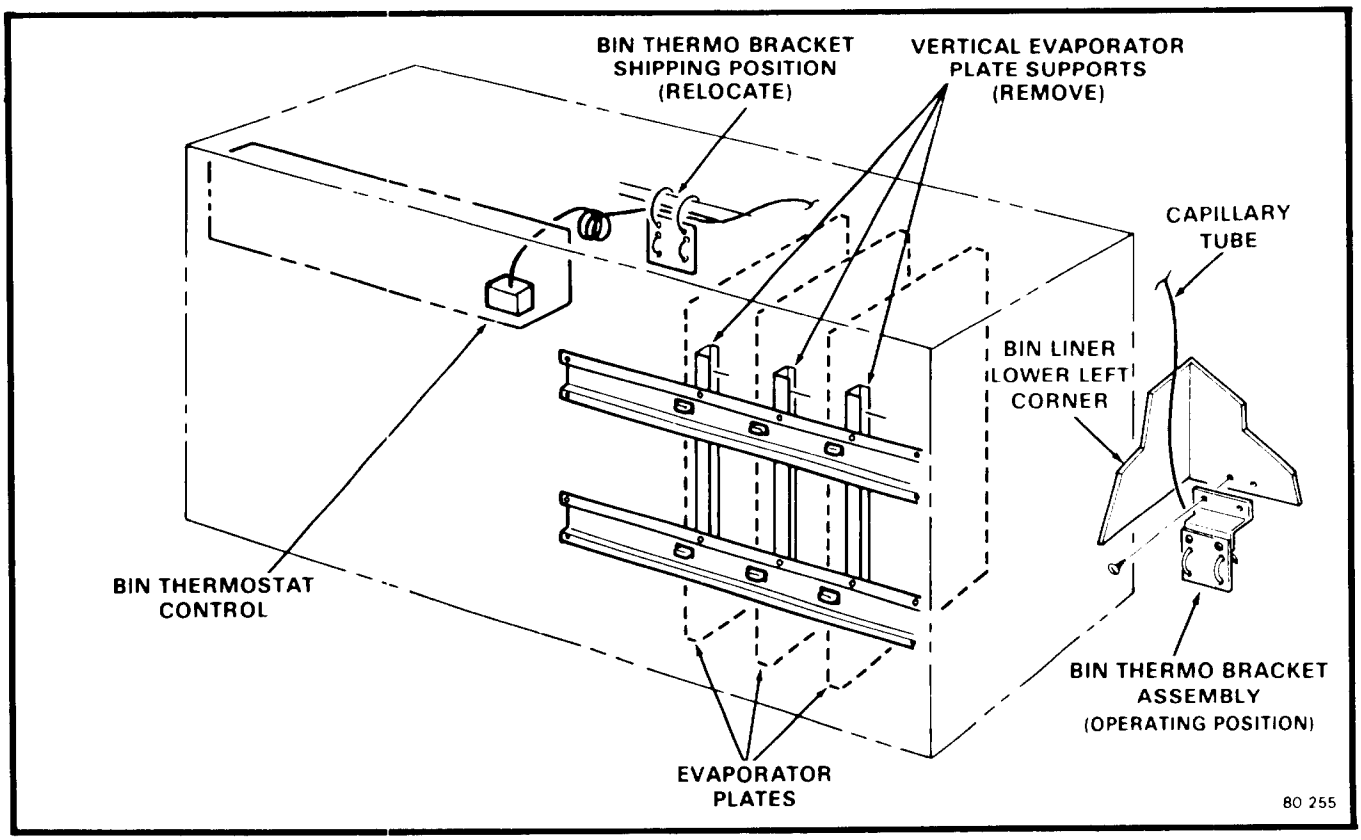

Figure 1-1. Installing the Bin Thermo Bracket and Bin Thermostat Capillary Line.

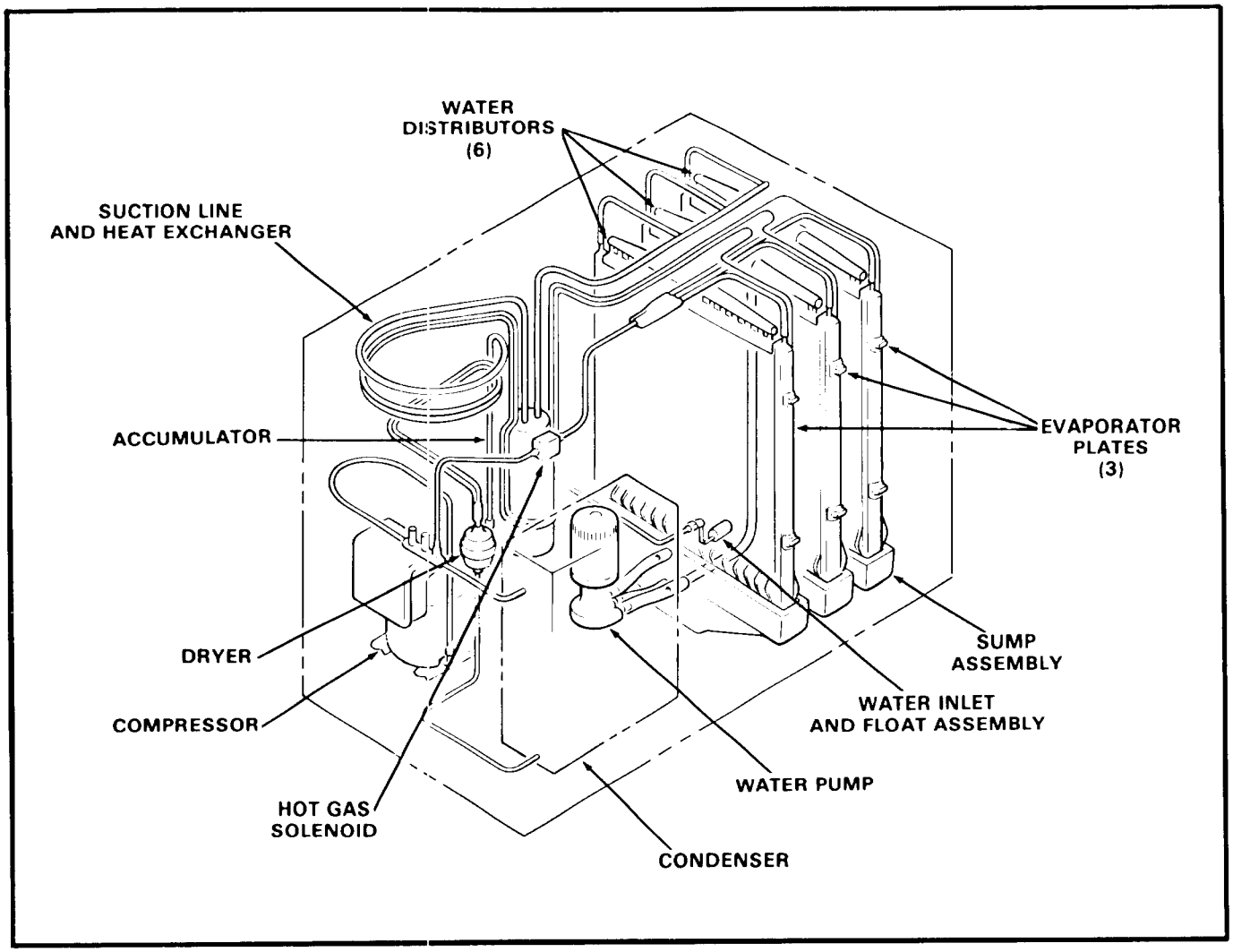

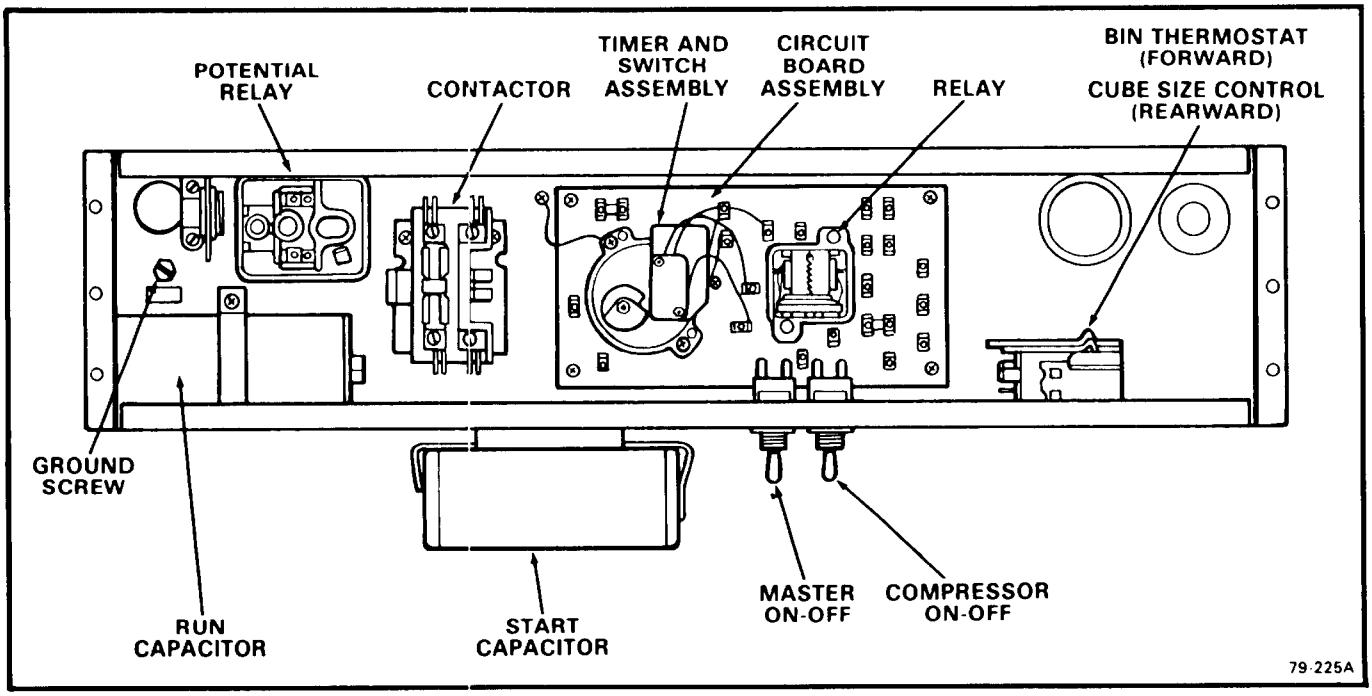

Figure 1-2. CM850 Control Box Locational.

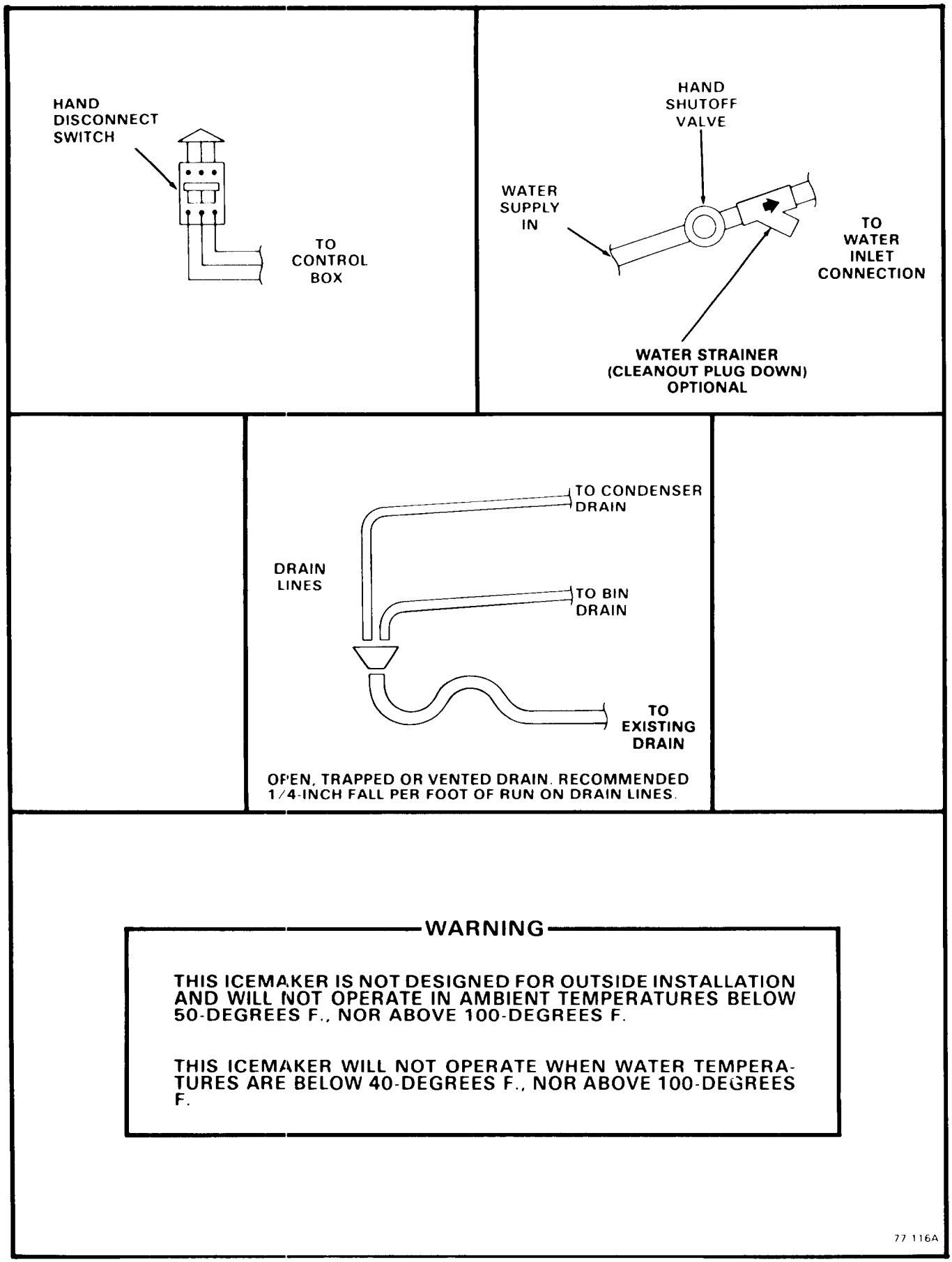

Figure 1-3. Installation Practice

V. WATER SUPPLY AND DRAIN CONNECTIONS

A. AIR-COOLED MODELS: The recommended water supply line is a 3/8-inch O.D. copper tubing. Connect to cold water supply line with standard plumbing fittings, with a shutoff valve installed in an accessible place between the water supply and the Cuber. Install the optional strainer with clean out plug down, between the shutoff valve and the Cuber. In some cases a plumbing permit and services of a licensed plumber will be required.

B. WATER-COOLED MODELS: On water-cooled models, a separate cold water supply inlet is required, to be connected to a second 3/8-inch O.D. male flare fitting at the rear of the cabinet. Additional drain lines are required to drain the water-cooled condenser.

C. DRAIN CONNECTIONS: All drains are gravity type and must have a minimum of 1/4-inch fall per foot on horizontal runs. The drains to be installed to conform with the local plumbing code. Install separate drain line for discharge water from the water-cooled condenser. Install a vertical open vent on drain line to ensure good venting. The drain receptacle should be ar open, trapped or vented construction. See Figure 1-3.

Recommended bin drain is 5/8-inch O.D. copper tubing and should be vented and run separately.

VI. INSTALLATION — OPTIONALS

Install optionals ordered with the CM850:

1. SPKCM850A — Stainless Steel Cabinet Panels.
2. B40 Bin — 350 lbs. storage capacity.
3. B60 Bin — 550 lbs. storage capacity.

VII. FINAL CHECK LIST

1. Is the Cabinet/Bin level? (IMPORTANT)
2. Is the Cuber in a room where ambient temperatures are a minimum of 50-degrees F. all year around?
3. Is there at least a six-inch clearance behind and around the cabinet for all connections and for proper air circulation?
4. All shipping tape removed from panels, doors, styrofoam blocks, etc.
5. Have all electrical and piping connections been made?
6. Has the electrical power supply wiring been properly connected, and the voltage tested and checked against the nameplate rating? Has proper Chassis-to-earth ground been installed?
7. Is the water supply line shutoff valve installed and opened and has the inlet water supply pressure been checked to ensure a minimum of 20 PSIG? And the valve closed?
8. Check to be sure the evaporator plate Vertical Support Shipping Braces have been removed.
9. Have the Compressor hold down bolts been checked to be sure the compressor is snug on the mounting pads?
10. Check all refrigerant lines and conduit lines to guard against vibration and possible failure.
11. Check the Bin Thermostat Control bulb and Bracket have been properly installed.
12. Has the Cuber and the Bin been wiped clean with clean damp cloths?
13. Has the owner/user been given the User Manual and instructed on how to operate the icemaker and the importance of periodic maintenance?
14. Has the owner/user been given the name and telephone number of the Authorized SCOTSMAN Distributor or Service Agency serving him?
15. Has the Manufacturer's Registration Card been properly filled out? Check for correct Model and Serial Numbers from nameplate, then mail the completed card to the SCOTSMAN factory.

SECTION II
OPERATING INSTRUCTIONS

I. START UP

1. Remove screws and pull the bottom of the Bottom Front Panel out slightly, and slide the top of the panel down, to clear the top from behind the upper Front Panel.
2. Remove screws and remove the upper Front Panel.
3. Check that the two toggle switches, the MASTER ON-OFF toggle switch and the COMPRESSOR ON-OFF toggle switch are in the OFF position, on the Control Box.
4. OPEN the water supply line shutoff valve.

NOTE

Observe that the inlet water can be seen flowing into the Sump Assembly. Allow water to fill the Sump, about three minutes, until the water is at a level of about one third of the diameter of the uppermost tube, in the left end of the Sump, when the Float should cause the water flow to STOP. See Figure 2-1.

5. Remove four screws on the Control Box Cover and REMOVE the Cover.
6. Rotate the shaft of the Timer and Switch Assembly CLOCKWISE to start the Timer.

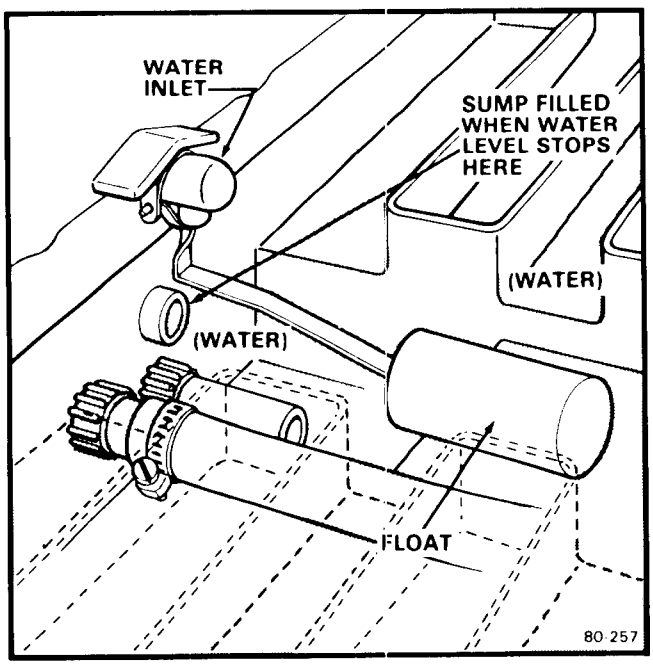

Figure 2-1. Sump Filled - Showing Water Level Line.

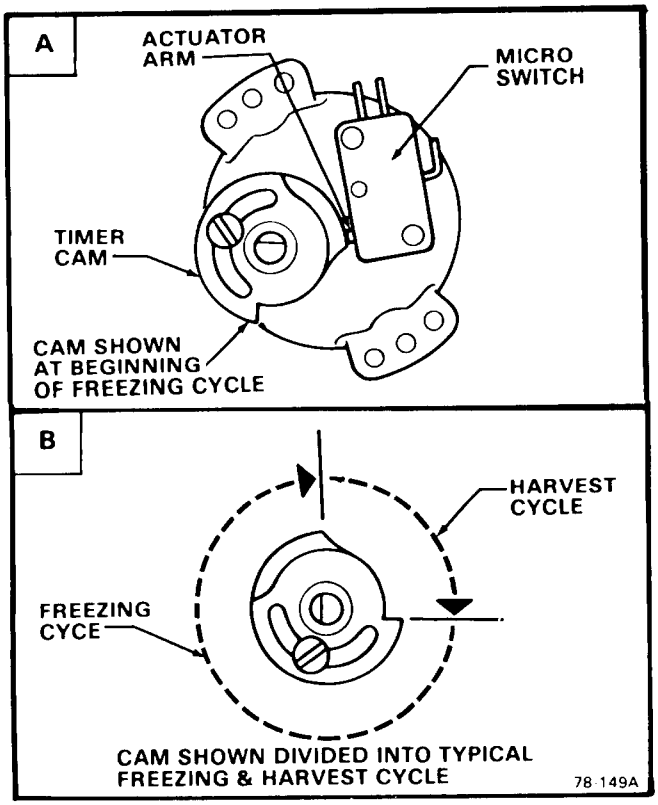

Figure 2-2. Timer Cam Positions.

NOTE

1. *See Figure 2-2 and rotate the shaft of the Timer and Switch Assembly CLOCKWISE, past the drop off and slot of the Harvest Cycle, and continue until the actuator arm of the microswitch rides up out of the slot, stop rotating the shaft with the actuator arm at the beginning of the outer cam. This is the start point of the Freezing Cycle.*
2. *When the Float has risen from water filling the Sump Assembly, the water has forced all trapped air out of the Water Pump and pump tube, thus preventing the pumping of water filled with air bubbles. DO NOT start Water Pump when the Sump Assembly is FILLING with water, WAIT until the Sump is FILLED.*

7. Move the MASTER ON-OFF toggle switch and the COMPRESSOR ON-OFF toggle switch to the ON position.
8. Check operation of the Freezing Cycle:
   a. Compressor is operating.
   b. Water Pump is operating, as seen by water moving through the Tygon tube between Evaporator Plates, up to the Water Manifold at the top of Evaporator Plates, where water is uniformly dispensed and

cascades down both sides of each Evaporator Plate and drains back into the Sump Assembly for recirculation.

c. Icemaking process begins: feeling metal parts of Evaporator Plates reveals cold temperature, very shortly ice begins to form. Tubing will become frosted at the top of the Evaporator Plates.

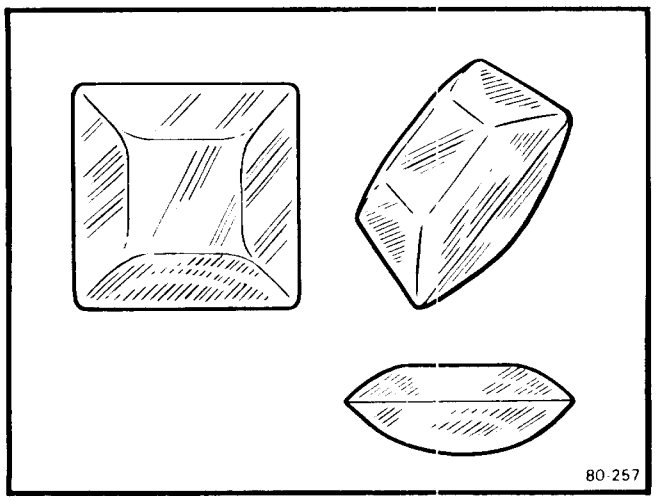

Figure 2-3. Ice Cube Size & Shape.

NOTE

Freezing time will range between 14 and 15 minutes in a 70-degree F. ambient temperature. Longer time for temperatures above 70-degrees F., and shorter time required when temperatures are below 70-degrees F. Average complete cycle range is about 17 to 21 minutes.

WARNING

DO NOT operate this icemaker when the water supply is shut OFF, or is BELOW the recommended 20 PSIG water pressure. Move the MASTER ON-OFF toggle switch to OFF immediately.

9. Observe first ice cube harvest:

A. Check size of ice cubes.

NOTE

See Figure 2-3, for representative size and shape of ice cubes made by these SCOTSMAN Evaporator Plates. Maximum capacities of ice cubes harvested, from this three-plate Evaporator Assembly, are achieved when a total BATCH OF ICE weighs 7-1/2 pounds, when harvested.

B. Check texture of ice cubes: when partially cloudy throughout, suggests icemaker is operating short of water; or, possibly an extreme problem water condition exists, wherein filtering or purifying equipment is recommended. Contact SCOTSMAN—Queen Products Division, Service Department, Albert Lea, Minnesota 56007 for further details. See SERVICE DIAGNOSIS chart, for Shortage of Water symptoms and corrections.

10. With the icemaker in the Harvest Cycle, hold ice against the Bin Thermostat Control bulb to test shutoff, which should cause the icemaker to shut OFF at the END OF THE HARVEST CYCLE.

NOTE

Within minutes after the ice is removed from the sensing bulb, the bulb will warm up and cause the icemaker to restart. This control is factory set and should not be reset until testing is performed. Normal setting is about 35-degrees F. CUT-OUT and 39-degrees F. CUT-IN.

11. Install refrigerant service gauges on the high and low side Schrader valve fittings and check the Compressor head pressure and back pressure. RETAIN Schrader valve caps.

NOTE

1. *Air-Cooled Models:*
   a. *Head pressure after 12 minutes of Freezing Cycle at 70-degrees F. ambient temperature will be about 95 to 100 PSIG.*
   b. *Head pressure after 15 minutes of Freezing Cycle at 90-degrees F. ambient temperature will be about 135 PSIG.*
   c. *The back pressure gradually pulls down to about 10 PSIG, just before the Harvest Cycle. During the Harvest Cycle the back pressure increases to about 40 PSIG.*
   d. *Higher ambient temperatures or a dirty Condenser will cause increased pressures.*
2. *Water-Cooled Models: The Water Regulator Valve is factory set at 135 PSIG. Check the gauge indication and adjust, if necessary. Back pressure will operate the same as air-cooled models.*

12. Remove refrigerant service gauges, and BE SURE to REPLACE the Schrader valve caps on Schrader valves, to prevent leaks.
13. Replace Control Box cover and all service panels.
14. Thoroughly explain to the owner/user the significant specifications of the icemaker, the start up and operation, going through the procedures in the operating instructions. Answer all questions about the icemaker by the owner; and inform the owner of the name and telephone number of the authorized SCOTSMAN Distributor, or service agency serving him.

SECTION III PRINCIPLES OF OPERATION

I. FREEZING CYCLE

Water from the sump in the reservoir of the Sump Assembly is pumped to a Water Distributor System, at the top of the Evaporator Plates. From the Water Distributors at the top of each Evaporator Plate, the water cascades by gravity over all cells of the Plates and to the Sump Assembly below, for recirculation. See Figure 3-1. At the beginning of the Freezing Cycle, the electrical circuit is completed to the Compressor and the Water Pump. The Water Pump operates continously, through both the Freezing Cycle and the Harvest Cycle.

In Water-Cooled models, water also flows through the Condenser and out the drain. While in the Condenser, water removes heat from the refrigerant and allows the refrigerant to condense from a gas to a liquid.

In the Compressor, gaseous refrigerant is compressed and discharged into the Condenser, as a high pressure, high temperature gas. The refrigerant is cooled and condensed, by either air or water, and condenses into a high pressure, medium temperature liquid. This liquid refrigerant, then passes through a small capillary tube, where the temperature and pressure of the liquid refrigerant are lowered and it next enters the Evaporator Plates. The refrigerant is warmed by the water cascading over the Evaporator Plates and begins to boil off and become a gas. The refrigerant next travels through the Accumulator, where any remaining liquid refrigerant boils off and returns to the Compressor as a low pressure, low temperature gas, and the cycle starts again.

During the Freezing Cycle, the Hot Gas Solenoid Valve is CLOSED.

When the ice cubes are partially formed, the Cube Size Control bulb located on the suction line out of the Evaporator Plates Assembly, will sense the temperature at which it is preset to CLOSE. This will complete the electrical circuit to the Timer. The Timer then controls the remainder of the Freezing Cycle.

The Timer will keep the Icemaker operating in the Freezing Cycle for a selected length of time. This will give the ice cubes time to fully form. After that selected length of time, the Timer will switch the Icemaker into the Harvest cycle, through the contacts of the Timer Assembly microswitch.

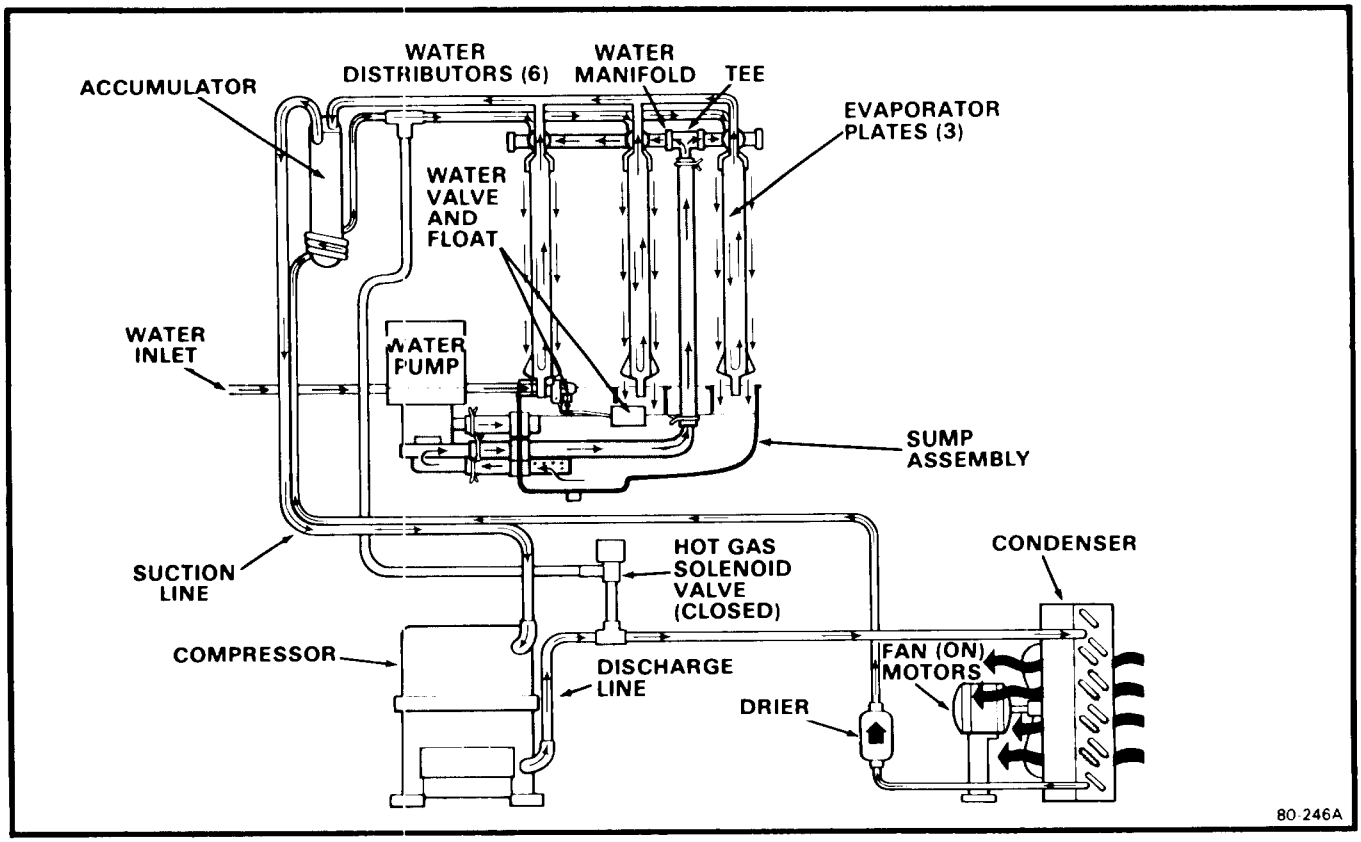

Figure 3-1. Freezing Cycle.

II. HARVEST CYCLE

When the Timer switches the Icemaker into the Harvest Cycle, high pressure, high temperature gas refrigerant being discharged from the Compressor is diverted from the Condenser through the Hot Gas Solenoid Valve into the Evaporator Plates Assembly. During this cycle, the gaseous high pressure, high temperature refrigerant circulates from the Compressor through the Evaporator Plates assembly and back again, bypassing the Condenser and the capillary tube. In the electrical circuit, both the Compressor and the Water Pump are operating and the Hot Gas Solenoid Valve is energized and OPEN. See Figure 3-2.

The finished ice cubes are released from the sides of the Evaporator Plates, by the warming effect of the hot gas flowing through the Evaporator Plate tubes and the water cascading over the ice cubes loosening from the warmed cells of the Plates. The released ice cubes drop into the ice storage bin below.

At the end of the Harvest Cycle, the Timer cam will push the actuator arm of the microswitch IN. If the Bin Thermostat is still CLOSED, a whole new cycle will begin. If the Bin Thermostat is OPEN, the icemaker will shut OFF, at this time.

III. COMPONENT DESCRIPTION

A. BIN THERMOSTAT CONTROL

The Bin thermostat Control is located in the right end of the Control Box. The sensing capillary tube of the control is routed from the rear of the Control Box through an access cutout in the inner left wall in the Evaporator section, downward to the Bin Thermo Control Bracket hanging in the ice storage Bin. The Tin Thermostat Control functions to automatically shut OFF the icemaker, when the ice storage Bin is filled and ice contacts the capillary tube. It also signals the RESTART of the icemaker, when the capillary tube starts to warm up, after ice has been removed from the Bin.

NOTE

Altitude adjustment should ONLY be performed on icemakers installed at 2000-foot level locations and ABOVE, and adjust only in increments of one-fourth turn of screw at a time.

B. COMPRESSOR START RELAY

The Compressor Start Relay functions to carry the Compressor line current. The relay is wired so any control in the pilot circuit, such as the Bin Thermostat, Low Pressure - and High Pressure Controls, etc., will cause the relay holding coil to be de-energized, when the control contact OPENS, thereby breaking the circuit to the Compressor through the relay points.

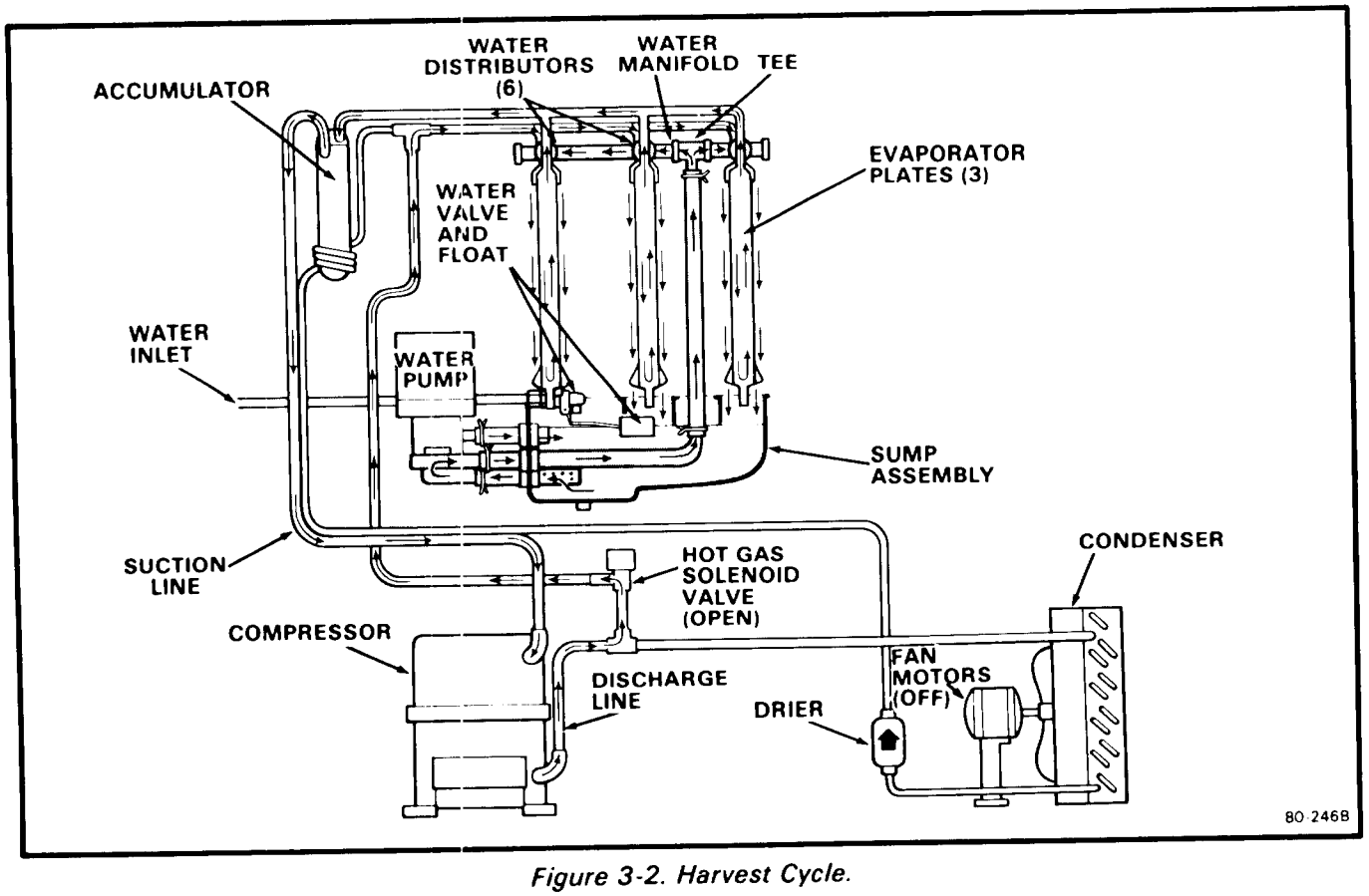

Figure 3-2. Harvest Cycle.

C. CUBE SIZE CONTROL

The temperature sensing Cube Size Control affects the length of the Freezing Cycle prior to initiating the Finishing Timer. The Cube Size Control closes its contacts when the Evaporator reaches a preset temperature, starting the Finishing Timer. A variation in either ambient air or incoming water temperature will affect the efficiency of the refrigeration system. This will vary the length of time it takes the Evaporator to reach the temperature at which the Cube Size Control is preset to CLOSE; which, in turn, will affect the overall cycle time.

NOTE

Be sure to refer to procedure IV-I, Adjustment of the Cube Size Control, BEFORE attempting to adjust the control.

D. FINISH RELAY

The multi-function, three pole, double-throw, plug-in relay is installed directly into a receptacle on the printed circuit board in the Control Box. The relay functions, in part, to by-pass the Bin Thermostat Control to prevent the Icemaker from shutting OFF, when a filled-bin condition occurs, during the Freezing Cycle. The by-pass action serves to ensure full-sized ice cubes with each Harvest Cycle; and, to prevent short cycling on the Bin Thermostat Control.

E. FINISHING TIMER - Timer & Switch Assembly

The function of the Finishing Timer begins when activated by the Cube Size Control. The outer surface, or large diameter lobe of the Timer cam, determines the Time Cycle for finish freezing of the ice cubes, while the inner surface, or small diameter lobe. determines the Time Cycle for the Harvest sequence. All electrical circuitry is connected through the printed circuit board and the Finishing Timer and shunted by the single-pole, double-throw microswitch to either the Freezing Cycle or the Harvest Cycle. The microswitch is actuated by a Cam Assembly directly connected to the Timer Motor. The Timer Cam can be adjusted to vary the defrost time, as required.

F. HIGH PRESSURE CONTROL - Water-Cooled Model

The High Pressure Control, a safety control, is factory set at 250 PSIG. The control functions as a precautionary device, to shut OFF electrical power to the Icemaker, should a loss of water occur to the water-cooled Condenser. In addition to being a manual reset Control, there is an adjusting screw for raising or lowering the CUT-IN pressure.

G. HOT GAS SOLENOID VALVE

The Hot Gas Solenoid Valve functions only during the Harvest Cycle, to divert the hot discharge gas from the Compressor, by-passing the Condenser and capillary tube, for direct flow to the Evaporator Plates Assembly to release ice cubes from the ice cube molds. The Hot Gas Solenoid Valve is comprised of two parts, the Body & Plunger and the Coil & Frame assemblies. Installed in the discharge line of the Compressor, the energized solenoid coil lifts the valve stem within the valve body, to cause the hot discharge gas to be diverted when the Finishing Timer has advanced to the start of the Harvest Cycle.

H. WATER INLET FLOAT VALVE

The Water Inlet Float Valve functions to maintain the proper operating level of water in the Sump Assembly reservoir. As water pumped from the sump cascades over the Evaporator Plates and partially freezes to the Evaporator Plates, the Water Inlet OPENS to allow replacement water to enter the Sump Assembly reservoir. When the icemaker shuts OFF, the water level rises causing the Float to shut OFF the inlet makeup water.

I. WATER DISTRIBUTION SYSTEM

The Water Distribution system functions to evenly supply water to all cells of the Evaporator Plates. the Water Pump pumps water from the Sump up the vertical Tygon tube to the Tee, from there water is channeled through Water Manifolds to six Water Distributors, two atop each Evaporator Plate, and from six holes within each Distributor, water is uniformly pressed against sheeting surfaces and to the cells of each side of the Evaporator Plates. Gravity flow returns the unfrozen excess portion of water to the Sump reservoir for recirculation.

J. WATER REGULATOR VALVE - Water-Cooled Model

The Water Regulator Valve functions to maintain a constant Compressor head pressure, by regulating the amount of inlet water flow through the Condenser, on water-cooled models. The valve operates through the refrigerant system high side pressure. Rotating the adjusting screw, located on top of the valve, can INCREASE or DECREASE the water flow through the water-cooled Condenser, which in turn, will DECREASE or INCREASE the Compressor operating head pressure.

NOTE

When installing a replacement Water Regulator Valve, be sure the replacement valve is installed with the arrow positioned in the direction of the water flow.

REFRIGERANT CHARGE

MODEL	CM850 Refrig. Chg.
Air-Cooled	5 lbs. 10 oz. R-12 (Approx.)
Water-Cooled	5 lbs. 10 oz. R-12 (Approx.)

NOTE

Always CHECK NAMEPLATE on individual Icemaker for specific refrigerant charge, BEFORE charging the refrigeration system. The above listed refrigerant charges are approximate charges for the CM850 Cubers, however it is important to CHECK NAMEPLATE for each Icemaker, especially when there are different Compressors.

SECTION IV

ADJUSTMENT, REMOVAL & REPLACEMENT

The procedures provided in this section are arranged in alphabetical order, to make specific Adjustment and Removal and Replacement information easy to locate.

Read the instructions thoroughly before performing any Adjustment or Removal and Replacement procedures.

I. ADJUSTMENT OF THE CUBE SIZE CONTROL

CAUTION

BEFORE performing actual adjustment to the Cube Size Control, check other possible causes for cube size problems, refer to Section VI, SERVICE DIAGNOSIS for problem review and analysis. DO NOT perform adjustment when a new Cube Size Control is installed, until the control bulb has been properly installed in the tube well, on the refrigerant tube of the Platen Assembly and the Icemaker has progressed through several complete freezing and harvest cycles, to observe size and quality of ice cubes and whether or not a cube size problem exists.

As a reverse acting temperature control, adjustment on the Cube Size Control is performed to cause either larger sized ice cubes or smaller sized ice cubes to be produced.

A. To Produce LARGER Sized Ice Cubes:

1. Locate the Cube Size Control, in the lower right end of the Control Box.
2. Rotate the adjusting screw one-eighth of a turn CLOCKWISE toward COLDER.
3. Observe size of ice cubes in next two ice cube harvests and repeat step 2 above, in one-eighth turn increments, until desired ice cube size is achieved.

B. To Produce SMALLER Sized Ice Cubes:

1. Locate the Cube Size Control, in the lower right end of the Control Box.
2. Rotate the adjusting screw one-eighth of a turn COUNTERCLOCKWISE toward WARMER.
3. Observe size of ice cubes in next two ice cube harvests and repeat step 2 above, in one-eighth turn increments, until desired ice cube size is achieved.

II. ADJUSTMENT OF THE TIMER & SWITCH ASSEMBLY

The Timer & Switch Assembly is factory set, so that one complete revolution of the cam on the Timer represents thirteen minutes. Four and one-half minutes comprise the freezing cycle event during cam rotation, and the final three and one-half minutes program the defrost and harvest cycle. Rotating the shaft of the Timer Cam, CLOCKWISE, will allow positioning the actuator arm of the microswitch on the cam at the selected start position for either the freezing cycle or harvest cycle, as required, during the START UP procedures and in the CLEANING instructions. Rotating the shaft COUNTER-CLOCKWISE will unscrew the shaft from the threaded stud on the Timer Cam.

To Adjust the Timer Switch Assembly:

A. HARVEST CYCLE: To start, slowly rotate the shaft of the Timer & Switch Assembly, located in the Control Box, CLOCKWISE, until the actuator arm on the microswitch drops off of the outer cam into the cam slot. An audible click can be heard, but in a noisy area, look at the cam and switch to observe the event. See Figure 4-1.

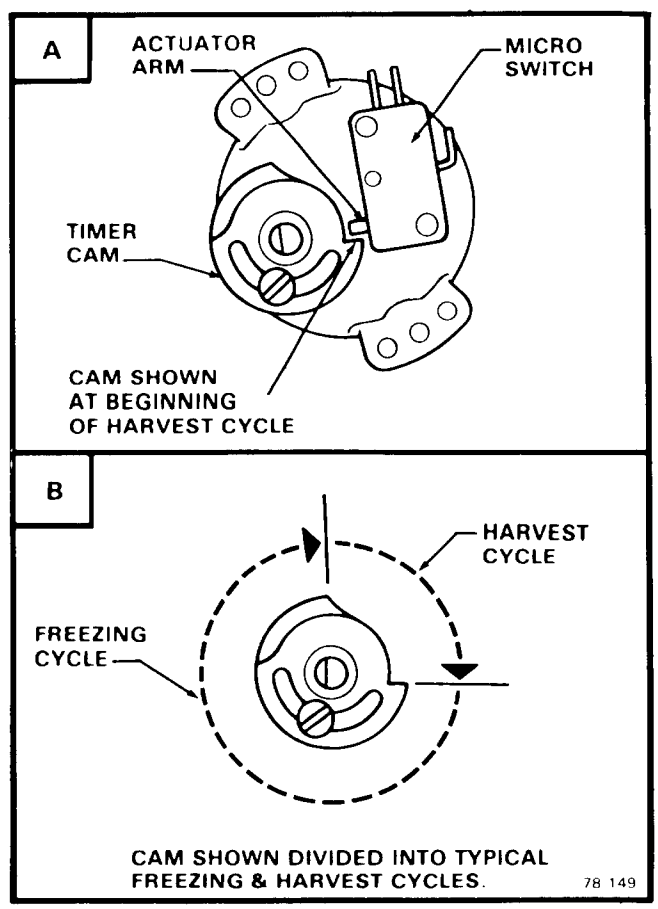

Figure 4-1. Adjustment of the Timer & Switch Assembly.

B. FREEZING CYCLE: To start, slowly rotate the shaft of the Timer & Switch Assembly, located in the Control Box, CLOCKWISE, until the actuator arm on the microswitch rides up and out of the cam slot to the start of the surface of the outer cam.

III. ADJUSTMENT OF THE WATER REGULATOR ASSEMBLY — WATER-COOLED MODELS

The correct Compressor head pressure on Water-Cooled Models is 135 PSIG. Adjusting the Water Regulator Valve increases or decreases the rate of flow of water, through the Water-Cooled Condenser; which increases or decreases the affected temperature/pressure of the Compressor head pressure. INCREASED water flow, results in DECREASED or LOWER head pressure: while, DECREASED water flow, results in INCREASED or HIGHER head pressure.

To adjust the Water Regulator Assembly:

A. To INCREASE the head pressure: Rotate the adjusting screw COUNTER-CLOCKWISE.

B. To DECREASE the head pressure: Rotate the adjusting screw CLOCKWISE.

C. Check change in Compressor head pressure, and repeat step A or B as necessary, to achieve desired operating head pressure.

WARNING

Be sure the electrical power supply and the water supply to the icemaker are OFF BEFORE starting any of the following REMOVAL AND REPLACEMENT procedures, as a precaution to prevent possible personal injury or damage to equipment.

NOTE

For installations having stacked CM850 Cubers mounted on a Bin, disregard steps to remove the Top Panel. Access to all areas and parts can still be gained through removal of the necessary Front or Side Panels.

IV. REMOVAL AND REPLACEMENT OF THE BIN THERMOSTAT CONTROL

A. To remove the Bin Thermostat Control:

1. Remove screws and all Front Panels.
2. Remove four screws at the sides of the Control Box and remove the Cover.
3. Remove two wires connecting the Bin Thermostat Control to the Control Board.
4. Unthread the capillary tube and remove from the Bin Thermo Control Bracket at the bottom rear of the Evaporator liner.
5. Remove two screws attaching the Bin Thermostat Control to the right end of the Control Box; then, carefully pull the capillary tube out of the Evaporator section, and carefully remove the Bin Thermostat Control and capillary tube from the Control Box and refrigeration section of the Cabinet.

B. To replace the Bin Thermostat Control, reverse the removal procedure.

V. REMOVAL AND REPLACEMENT OF THE COMPRESSOR ASSEMBLY

NOTE

Always install a replacement Drier, anytime the sealed refrigeration system is opened. Do not replace the Drier until all other repair or replacement has been completed.

A. To remove the Compressor Assembly:

1. Remove screws and the top and left side panels.
2. Bleed off or blow the refrigerant charge through the Schrader valve.
3. Remove the cover from the terminal box on the Compressor; then, remove three screws and electrical leads from the Compressor.
4. Unsolder the Refrigerant Tubes from the Compressor Assembly.
5. Remove four bolts and washers which secure the Compressor to the Chassis mounting base.
6. Remove the Compressor from the Cabinet.

B. To replace the Compressor Assembly, reverse the removal procedure.

VI. REMOVAL AND REPLACEMENT OF THE CONDENSER — AIR-COOLED MODELS

NOTE

Always install a replacement Drier, anytime the sealed refrigeration system is opened. Do not replace the Drier until all other repair or replacement has been completed.

A. To remove the Condenser:

1. Remove screws and the Left Side Panel and two Front Panels.
2. Bleed off or blow the refrigerant charge through the Schrader valve.
3. Unsolder and disconnect refrigerant lines from the Condenser.
4. Unsolder and remove the Drier from the refrigerant lines connecting to the Condenser.
5. Remove screws, lockwashers and the Condenser from the Chassis base.

B. To replace the Air-Cooled Condenser, reverse the removal procedure.

VII. REMOVAL AND REPLACEMENT OF THE CONDENSER WATER-COOLED MODELS

NOTE

Always install a replacement Drier, anytime the sealed refrigeration system is opened. Do not replace the Drier until all other repair or replacement has been completed.

A. To remove the Condenser:

1. Remove screws and the two Front Panels.
2. Bleed off or blow the refrigerant charge through the Schrader valve.
3. Check to be sure building source water inlet supply shutoff valve to rear of Chassis is OFF.
4. Disconnect Water-Cooled Condenser inlet water line at the Water Regulator Assembly outlet fitting.
5. Unsolder the refrigerant capillary tube distributor line at the outlet end of the Drier, the refrigerant outlet line from the bottom of the Condenser, and remove the Drier from the lines.
6. Unsolder the Compressor discharge line, at the top of the Water-Cooled Condenser.
7. Unsolder the Condenser water outlet line, at the top of the Water-Cooled Condenser.
8. Remove two screws and washers and the Water-Cooled Condenser from the Cabinet.

B. To replace the Water-Cooled Condenser, reverse the removal procedures.

VIII. REMOVAL AND REPLACEMENT OF THE CUBE SIZE CONTROL

A. To remove the Cube Size Control:

1. Remove screws and the two Front Panels and the Top Panel to gain access to the Cube Size Control.
2. Trace Capillary Tube, from the Cube Size Control, to the refrigerant suction line on the Evaporator Platen Assembly; then peel back the insulation.
3. Remove the coiled capillary tube bulb from the tube well on the suction line.
4. Remove electrical leads from the Cube Size Control.
5. Remove screws and the Cube Size Control.

B. To replace the Cube Size Control, reverse the removal procedure.

IX. REMOVAL AND REPLACEMENT OF THE DRIER

NOTE

Always install a replacement Drier, anytime the sealed refrigeration system is opened. Do not replace the Drier until all other repair or replacement has been completed.

A. To remove the Drier:

1. Remove screws and the Left Side Panel.
2. Bleed off or blow the refrigerant charge through the Schrader valve.
3. Unsolder refrigeration lines at both ends of the Drier, and remove the Drier.

B. To replace the Drier:

CAUTION

1. If the factory seal is broken on the replacement Drier, exposing it to the atmosphere more than a few minutes, the Drier will absorb moisture from the atmosphere and lose substantial ability for moisture removal.

2. Be sure the replacement Drier is installed with the arrow positioned in the direction of the refrigerant flow.

1. Remove the factory seals from the replacement Drier and install the Drier in the refrigerant lines with the arrow positioned in the direction of the refrigerant flow.
2. Solder the Drier into the lines, two places, taking precautions to NOT OVERHEAT the Drier body, during installation soldering.
3. Purge the system and check for leaks.
4. Thoroughly evacuate the system to remove moisture and non-condensables.
5. Charge the system with refrigerant, by weight. SEE NAMEPLATE.
6. Replace and attach the Left Side Panel.

X. REMOVAL AND REPLACEMENT OF THE EVAPORATOR PLATE ASSEMBLY - (THREE)

NOTE

Always install a replacement Drier, anytime the sealed refrigeration system is opened. Do not replace the Drier until all other repair or replacement has been completed.

A. To Remove the Evaporator Plate:

1. Remove screws and the three Front Panels.
2. Remove screws and the Left Side Panel.
3. Remove screws and the front Upper and Lower Freezer Liners.
4. Remove hose clamp and rubber cap from bottom of Sump Assembly and drain all water. Replace rubber cap and hose clamp.
5. Slide three hose clamps off and unclamp Tygon tubes at left end of the Sump Assembly.
6. Remove Sump Covers.
7. Disconnect Tygon water inlet tube(s), at the Water Manifold Tee(s), above the Evaporator. Plates.
8. Unsnap the Sump Assembly from the lower front and rear attachment points on each Evaporator Plate; then, CAREFULLY lower the RIGHT END of the Sump Assembly, to clear the bottom of the Plates, and work the connecting Tygon tubes OFF the LEFT end, and carefully remove the Sump Assembly so as not to split or break the plastic.
9. Slide the Water Distributor Tubes forward, about 1/8-inch along the top of the Evaporator Plate to be removed, until the rear Water Distributor Tube can be lifted upward. See Figure 4-2.
10. Lift the end of the rear Water Distributor Tube and slide the Distributors toward the rear along the top of the Evaporator Plate, until the flexible front notch is cleared.
11. Unsnap and disconnect each front and rear Water Distributor Tube from the Water Manifold section.

NOTE

If all six Water Distributor Tubes are being removed, disconnect the Water Manifold Tubes at the Tee(s) and remove the connected Water Distributors and Water Manifold Tubes as larger assemblies, from the tops of the Evaporator Plates; then, disassemble the individual parts at the workbench.

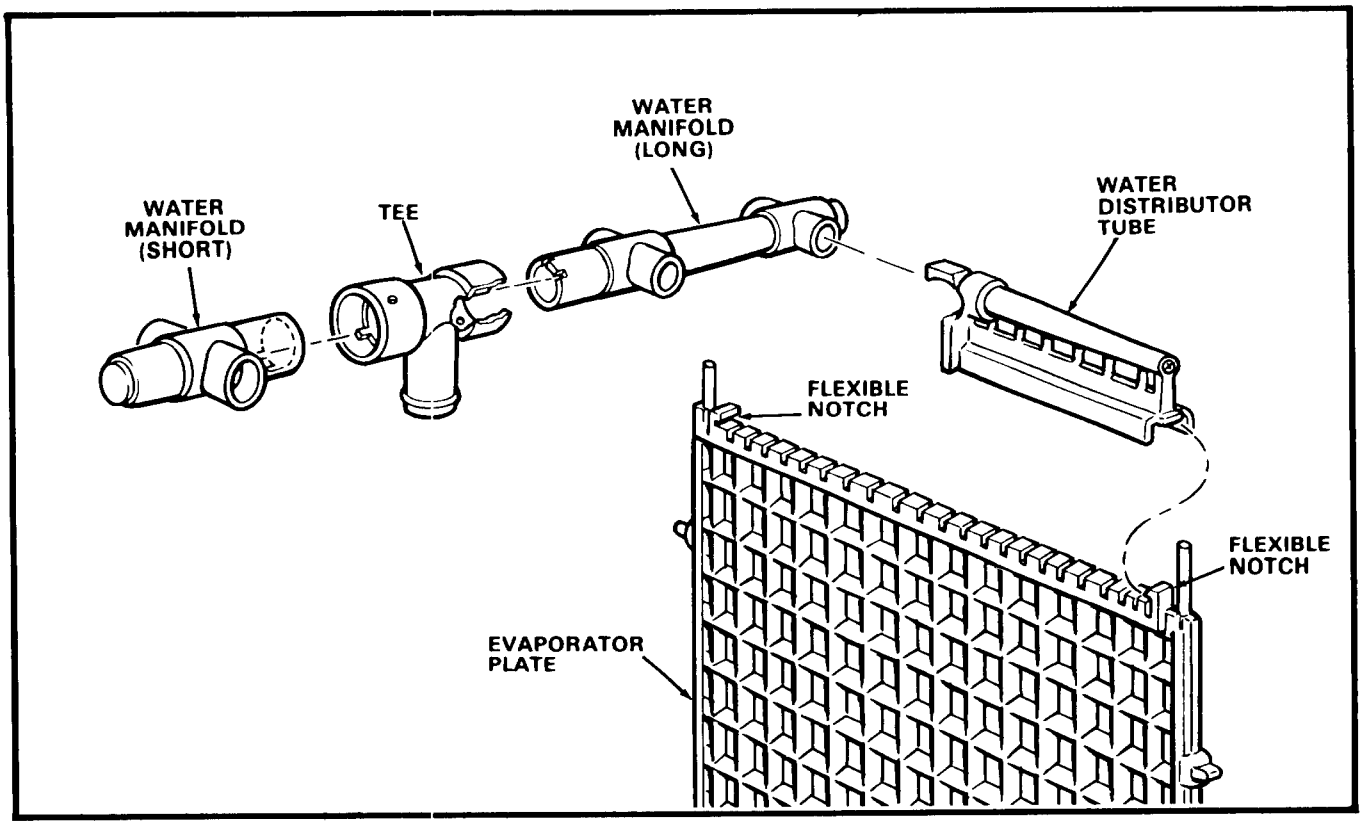

Figure 4-2. Removal of the Water Distributors, Manifold, Tees.

CAUTION

Use EXTRA PRECAUTION to protect the plastic parts during the next step to unsolder the refrigerant lines, two places, at the top of the Evaporator Plate. Position wet cloths over top of Plates, as well as over the plastic liner at the rear, or sides, to prevent accidental heat damage, or possible fire from torch flame.

12. Unsolder and remove the refrigerant lines at top front and rear of the Evaporator Plate to be replaced.
13. Remove screws at one end of the Front Braces, then, loosen the Braces just enough to remove the Evaporator Plate. Temporarily replace the Brace, to support the remaining Evaporator Plates.

B. To replace the Evaporator Plate, reverse the removal procedure.

XI. REMOVAL AND REPLACEMENT OF THE FAN MOTOR ASSEMBLY—AIR-COOLED MODELS

A. To remove the Fan Motor Assembly:

1. Remove screws and the Left Side Panel.
2. Disconnect the two electrical leads, from the Fan Motor, at the Control Box Assembly.

NOTE

BEFORE next step, measure or make accurate mental note of the distance the Fan Blades extend beyond the Fan Shroud, so during replacement the correct distance is maintained.

3. Remove screws and the Fan Motor and Bracket Assembly; remove the Fan Motor and Bracket from the Chassis base.
4. Loosen set screws on the Fan Blade and remove the Fan Blade from the Fan Motor. Mark or note position of Blade on the shaft of the Fan Motor, for replacement.
5. Remove screws and lockwashers and separate the Fan Motor from the Fan Motor Bracket.

B. To replace the Fan Motor Assembly, reverse the removal procedure.

NOTE

Be sure to replace the Fan Blade with the hub of the Fan Blade facing the Fan Motor, to ensure airflow is toward the Fan Motor; and, is set at marked location on shaft and setscrews tightened on the FLAT part of the shaft of the Fan Motor.

XII. REMOVAL AND REPLACEMENT OF THE INLET WATER VALVE ASSEMBLY

A. To remove the Inlet Water Valve Assembly:

1. Remove Sump Assembly as in paragraph IV-XIII.
2. Loosen and remove inlet water line fitting from the inlet Water Valve Assembly, at the bottom left of the LEFT END Evaporator Plate; and slide the fitting away from the connection, to gain access to the hex nut.
3. Remove the hex nut, above, to detach the inlet Water Valve Assembly from the Evaporator Plate.
4. Slide the Valve body and attached Float to the RIGHT, out of the double-D hole in the Evaporator Plate and remove the inlet Water Valve Assembly from the Plate.

B. To replace the inlet Water Valve Assembly, reverse the removal procedure. Be sure the Valve body is properly positioned in the double-D hole and stays seated until the hex nut is tightened.

XIII. REMOVAL AND REPLACEMENT OF THE SUMP ASSEMBLY

A. To remove the Sump Assembly:

1. Remove screws and the two Front Panels.
2. Remove screws and the front Upper and Lower Freezer Lines.
3. Remove hose clamp and rubber cap from bottom of Sump Assembly and drain all water. Retain rubber cap and hose clamp.
4. Slide three hose clamps off and unclamp Tygon tubes at left end of Sump Assembly.
5. Remove screws and all Sump Covers.
6. Disconnect the Tygon tube at the Water Manifold Tee above the Evaporator Plates.
7. Unsnap the Sump Assembly from the lower front and rear attachment points on each Evaporator Plate; then, CAREFULLY lower the RIGHT END of the Sump Assembly, to clear the bottom of the Plates, and work the connecting Tygon tube OFF the LEFT end, and carefully remove the Sump Assembly so as not to split or break the plastic.

8. Unscrew to disassemble three Female Tubes and O-Rings, from the outside of the Sump Assembly, connected to one Pump Pick-up Tube and two Male Tubes, installed from inside the Sump Assembly.

B. To replace the Sump Assembly, reverse the removal procedure. BE SURE the Pump Pickup Tube, lowest of three tubes, is installed with the slotted opening facing DOWN, toward bottom of Sump.

XIV. REMOVAL AND REPLACEMENT OF THE WATER DISTRIBUTOR TUBES AND MANIFOLD TUBES

A. To remove the Water Distributor Tubes and Manifold Tubes:

1. Remove screws and the two Front Panels.
2. Remove screws and the front Upper and Lower Freezer Liners.
3. Slide the Water Distributor Tube to be removed, forward about 1/8-inch along the top of the Evaporator Plate, until the rear Water Distributor Tube can be lifted upward.
4. Lift the end of the rear Water Distributor Tube and slide the Distributors toward the rear along the top of the Evaporator Plate until the flexible front notch is cleared.
5. Unsnap and disconnect each front and rear Water Distributor Tube from the Water Manifold section.

NOTE

If all six Water Distributor Tubes are being removed, disconnect the Water Manifold Tube at the Tee and remove the connected Water Distributors and Water Manifold Tubes as larger assemblies, from the tops of the Evaporator Plates; then, disassemble the individual parts at the workbench.

B. To replace the Water Distributor Tubes and Manifold Tubes, reverse the removal procedure. BE SURE the notches in the Water Manifold Tubes properly engage the alignment keys in the Tee. BE SURE each front Water Distributor Tube is securely fastened at the notch at the top front of the Evaporator Plate; and, check identical attachment for each rear Water Distributor Tube and notch; also, that the Distributor/Manifold connections at the top center of each Evaporator Plate is snug against the top of the Plate.

XV. REMOVAL AND REPLACEMENT OF THE WATER PUMP ASSEMBLY

NOTE

This procedure is written to assist the serviceman in removing and replacing the Water Pump Assembly, in an air-cooled model, when an installation is built-in; or, has limited overhead space for working from the top. In an open area, removal of the Top Panel, or Left Side Panel, will provide easier access to the Water Pump Assembly.

A. To remove the Water Pump Assembly:

1. Remove screws and Lower Front Panel.
2. Remove screws and Lower Front Freezer Liner.
3. Remove three hose clamps connecting three Tygon Tubes to the left end of the Sump Assembly.
4. Disconnect electrical leads and ground wire from the Water Pump Assembly.
5. Remove four screws and washers, attaching the Water Pump Bracket to the machine base then, work the Tygon Tube loose from the Sump Assembly and remove the Water Pump and bracket assembly.
6. Remove two screws and washers attaching the water pump assembly to the water pump bracket and separate the water pump from the bracket.

B. To replace the Water Pump Assembly, reverse the removal procedure.

XVI. REMOVAL AND REPLACEMENT OF THE WATER REGULATOR ASSEMBLY—WATER-COOLED MODELS

NOTE

Always install a replacement Drier, anytime the sealed refrigeration system is opened. Do not replace the Drier until all other repair or replacement has been completed.

A. To Remove the Water Regulator Assembly:

1. Remove screws and the Bottom Front Panel.
2. Check to be sure building source water inlet supply shutoff valve to rear of Chassis is OFF.
3. Bleed off or blow the refrigerant charge through the Schrader valve.
4. Disconnect water inlet supply line at the left bottom rear of the Chassis.
5. Disconnect water line at the inlet and outlet fittings on the Water Regulator Assembly.
6. Unsolder the Water Regulator Valve capillary tube from the Compressor refrigerant discharge line.
7. Remove two screws and the Water Regulator Assembly from the Chassis Base.

B. To replace the Water Regulator Assembly reverse the removal procedure.

SECTION V

MAINTENANCE & CLEANING INSTRUCTIONS

I. GENERAL

The periods and procedures for maintenance and cleaning are given as guides and are not to be construed as absolute or invariable. Cleaning especially will vary, depending upon local water conditions and the ice volume produced; and, each icemaker must be maintained individually, in accordance with its own particular location requirements.

WARNING

During maintenance or cleaning procedures it is sometimes necessary to operate or observe equipment with electrical power ON; extra care should be exercised to PREVENT PERSONAL INJURY.

II. ICEMAKER

THE FOLLOWING MAINTENANCE SHOULD BE SCHEDULED AT LEAST TWO TIMES PER YEAR ON THIS ICEMAKER. CALL YOUR AUTHORIZED SCOTSMAN SERVICE AGENCY.

1. Check and clean or service any optional water treatment devices, if any installed.
2. Check that the CM850 Cabinet is level, in the side-to-side and front-to-rear directions.
3. Clean the water system, Evaporator Plates and Sump Assembly, using a solution of SCOTSMAN Ice Machine Cleaner. Refer to Procedure III-III, CLEANING - Icemaker.

NOTE

Cleaning requirements vary according to local water conditions and individual user operation. Continuous check of the clarity of ice cubes and visual inspection of the water system parts, Evaporator Plates and the Sump Assembly before and after cleaning will indicate frequency and procedure to be followed in local areas.

4. Check that each Evaporator Plate Assembly is snug and secure on each wall support on the bin rear wall, in the holes of the Front Brace, and in each indent recessed in each arm of the Sump Assembly, below the bottom corners of the Evaporator Plates.
5. Check and tighten all bolts and screws.
6. Check and tighten all electrical connections.
7. Check hot gas solenoid valve for correct operation.
8. With MASTER ON-OFF toggle switch and COMPRESSOR ON-OFF toggle switch in the OFF position, clean the Condenser using vacuum cleaner, whisk broom or brush. Instruct customer to clean Condenser frequently. DO NOT USE A WIRE BRUSH.
9. Check for water leaks and make corrections.
10. Check the Bin Thermostat Control bulb to test shut off. Holding ice against Bin Thermostat Control bulb should cause the icemaker to shut off at the end of the Harvest Cycle.

NOTE

Soon after ice is removed from the Bin Thermostat Control bulb, the icemaker will restart.

III. CLEANING - Icemaker

1. Check that both toggle switches on the Control Box are in the OFF position.
2. CLOSE the shutoff valve in the water INLET line to shut OFF water supply to the icemaker.
3. Position a container for catching drain water under the rubber plug at the bottom of the Sump Assembly.
4. Remove hose clamp, the rubber plug, and drain all water from the Sump Assembly into the container.
5. Replace rubber plug and hose clamp.

WARNING

SCOTSMAN Ice Machine Cleaner contains Phosphoric and Hydroxyacetic acids. These compounds are corrosive and may cause burns, if swallowed. DO NOT induce vomiting. Give large amounts of water or milk. Call physician immediately. In case of external contact, flush with water. KEEP OUT OF THE REACH OF CHILDREN.

6. Prepare cleaning solution: Mix eight ounces of SCOTSMAN Ice Machine Cleaner with six pints of fresh, potable warm water.
7. Carefully pour the cleaning solution into the Sump Assembly.
8. Immediately move the MASTER ON-OFF toggle switch, on the Control Box, to the ON position.
9. Allow the system to operate for about thirty minutes.

NOTE

No ice cubes will be made, because the COMPRESSOR ON-OFF toggle switch is OFF.

10. At the end of thirty minutes, move the MASTER ON-OFF toggle switch on the Control Box to the OFF position.
11. Repeat steps 3, 4 and 5.
12. OPEN the shutoff valve to all inlet water to fill the Sump to operating level.
13. Move the MASTER ON-OFF toggle switch, to the ON position, and allow the system to operate ten to fifteen minutes, to flush the system.
14. Repeat steop 3, 4 and 5 to flush the system three times, after dumping the cleaning solution.
15. After flushing the system three times, check for proper water level in the Sump; then, move both toggle switches, the MASTER ON-OFF and the COMPRESSOR ON-OFF, to the ON position.

NOTE

If, after completing the cleaning and flushing procedure, inspection of the water flow, reveals that one or more Evaporator Plates does not have a full flow of water for each vertical row of cubes, shutdown the operation and remove the particular Water Distributor Tube above that portion of the Evaporator Plate indicating insufficient water flow, and remove obstruction.

CAUTION

DO NOT use ice cubes produced from the cleaning solution. Be sure none remains in the bin.

16. Add hot water to the bin to melt the ice cubes and thoroughly wash and rinse all inner surfaces in the bin.
17. Check each ice cube harvest until the ice cubes are clear and the acid taste eliminated.
18. Wash and wipe down all interior surfaces of the Evaporator section of the Cabinet, with a clean cloth, or disposable paper wipers, soaked in the cleaning solution.
19. Wipe all washed surfaces dry, including the bin, with clean dry cloths, or clean dry disposable paper wipers.
20. Replace all panels.
21. Clean and sanitize the interior bin surfaces, each week.

SECTION VI
SERVICE DIAGNOSIS

The Service Diagnosis Section is for use in aiding the serviceman in diagnosing a particular problem for pin-pointing the area in which the problem lies, thus an ever available reference for proper corrective action.

The following charts list corrective actions for the causes of known symptoms of certain problems that can occur in the Icemaking-Refrigeration System.

I. ICEMAKING - REFRIGERATION SYSTEM

SYMPTOM	POSSIBLE CAUSE	CORRECTION
Irregular size cubes some cloudy.	Some distributor holes plugged.	Clean distributor holes.
	Shortage of water.	See Shortage of water CORRECTION.
	Unit not level.	Level cabinet, as required.
Cubes too large.	Cube Size Control set too cold.	Rotate Cube Size Control dial toward WARMER.
Cubes too small.	Cube Size Control set too warm.	Rotate Cube Size Control dial toward COLDER.
	Partially restricted capillary tube.	Blow refrigerant charge; replace drier; evacuate system; add refrigerant charge.
	Moisture in system.	Same as above CORRECTION.
	Shortage of water.	See Shortage of water CORRECTION
	Loss of refrigerant.	Check for refrigerant leaks, correct leaks; recharge system.
Cloudy Cubes.	Shortage of water.	See Shortage of water SYMPTOM.
	Dirty water supply.	Install water filter or softener.
	Accumulated impurities.	Use SCOTSMAN Ice Machine Cleaner. Procedure V-III.
Shortage of water.	Water leak in sump area.	Locate leak and repair or correct condition.
	Partial restrictions in water strainer.	Clean or replace strainer.

SYMPTOM	POSSIBLE CAUSE	CORRECTION
Decreased ice capacity.	Defective Compressor.	Replace Compressor.
	High head pressure, result of dirty Condenser or faulty Fan Motor.	Clean Condenser. Repair or replace Fan Motor.
	Non-condensable gas in the system.	Purge the system and recharge per nameplate requirements.
	Poor circulation or extreme hot location.	Relocate the cabinet; or provide ventilation by cutting openings.
	Overcharge of refrigerant.	Slowly purge off to correct charge.
	Hot gas solenoid valve leaking.	Replace valve.
	Partially restricted capillary tube.	See Cubes Too Small CORRECTION.
Poor harvests.	Too short defrost time.	Check and adjust harvest cycle.
	Restriction in water inlet line.	Check strainer and flow check valve.
	Hot gas solenoid does not open. Binds or burned out.	Replace solenoid.
	Undercharge of refrigerant.	Charge to nameplate requirements.
Icemaker does not harvest.	Water pressure too low.	Check for 20 PSI flowing water.
Compressor cycles intermittently.	Low voltage.	Check for circuit overload. Check building supply voltage, if low, contact power company.
	Dirty Condenser.	Clean Condenser with vacuum cleaner or brush. DO NOT USE A WIRE BURSH.
	Air circulation blocked.	Locate cabinet with adequate air space for proper air flow.
	Defective Fan Motor.	Replace Fan Motor.
	Non-condensable gases in system.	Purge the system and recharge per nameplate requirements.
Icemaker will not operate.	Blown fuse in line.	Replace fuse and check for cause.
	Master switch in OFF position.	Set switch to ON position.
	Faulty Master switch.	Replace switch.
	Timer contacts open.	Replace Timer microswitch.

SECTION VII
WIRING DIAGRAMS

This Section is provided as an aid in understanding the electrical circuitry of the Modular Cuber:

WARNING

When conducting a continuity check of the Modular Cuber:

1. **Disconnect the main power source.**
2. **DO NOT use an incandescent lamp or jumper wire, conduct all tests with a volt-ohm-meter.**

The Wiring Diagrams in this Section are:

Figure 7-1. Wiring Diagram CM850 Air-Cooled (115/208-220/60/3).

Figure 7-2. Wiring Diagram CM850 Water-Cooled (115/208-220/60/3).

Figure 7-3. Wiring Diagram CM850 Air-Cooled (115/208/60/1).

Figure 7-4. Wiring Diagram 850 Water Cooled (115/208/60/1).

Figure 7-5. Wiring Diagram CM850 Air-Cooled (115/230/60/1).

Figure 7-6. Wiring Diagram CM850. Water Cooled (115/230/60/1).

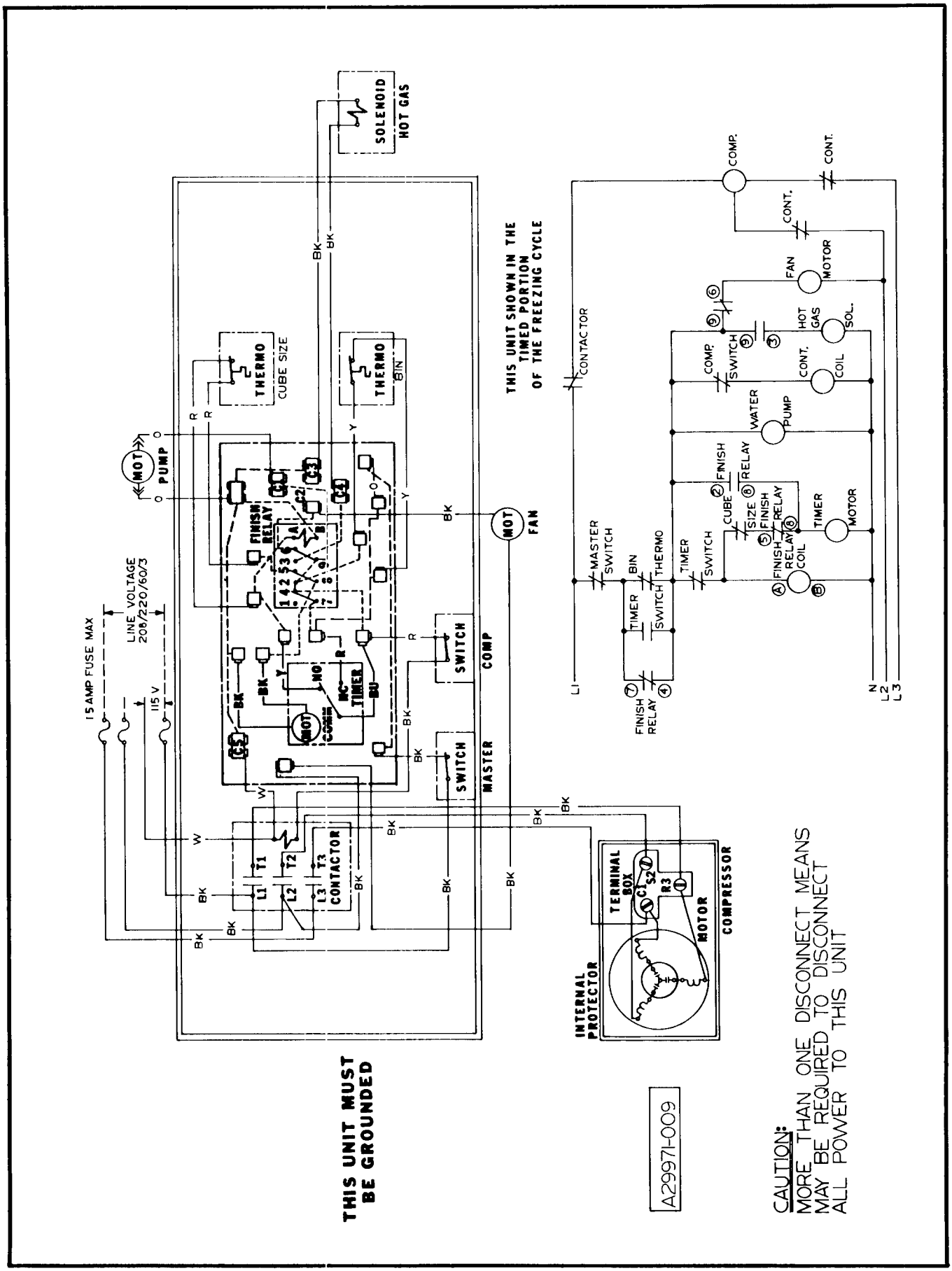

Figure 7-1. Wiring Diagram CM850—Air-Cooled (115/208-220/60/3).

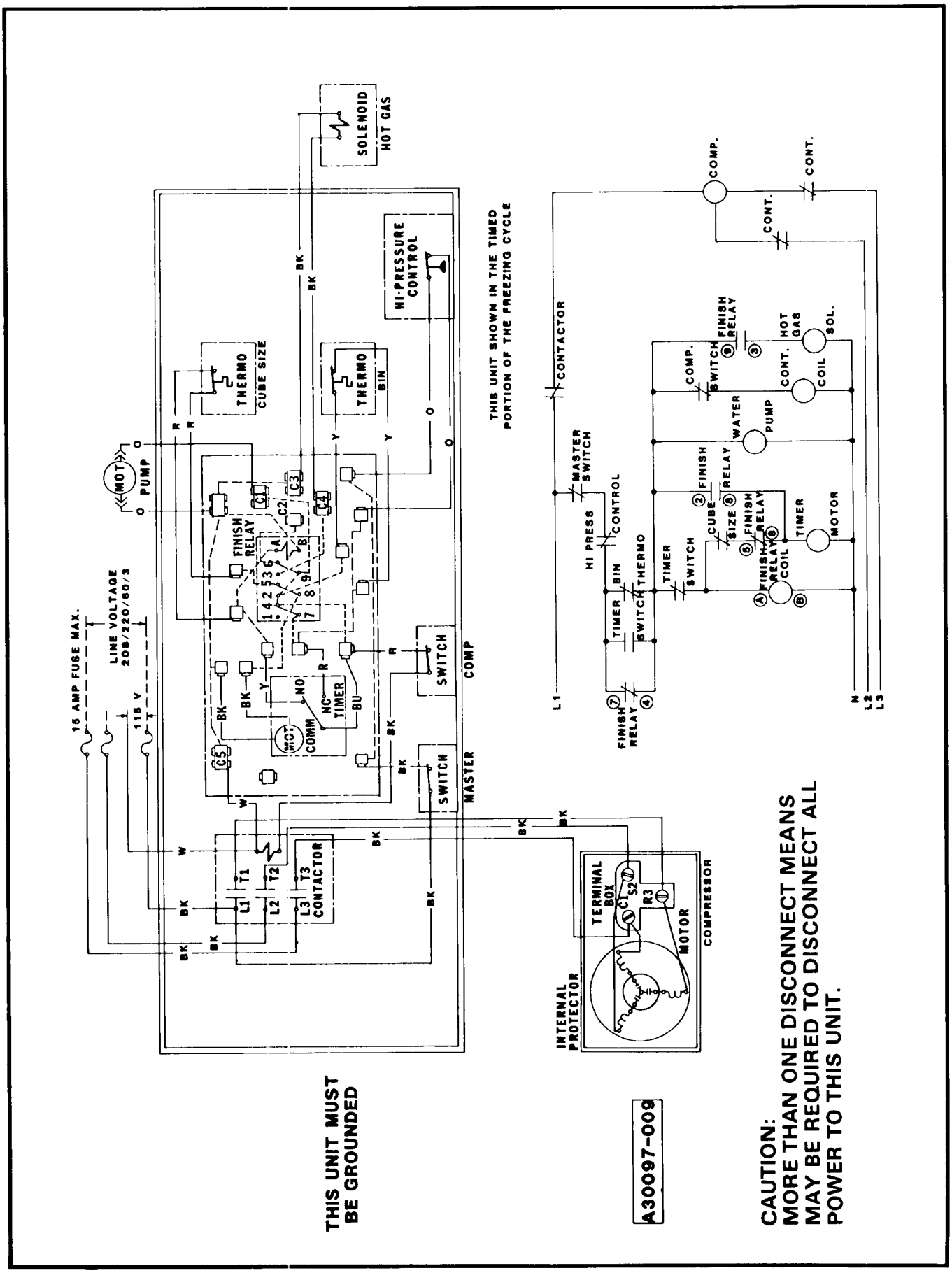

Figure 7-2. Wiring Diagram CM850—Water-Cooled (115/208-220/60/3).

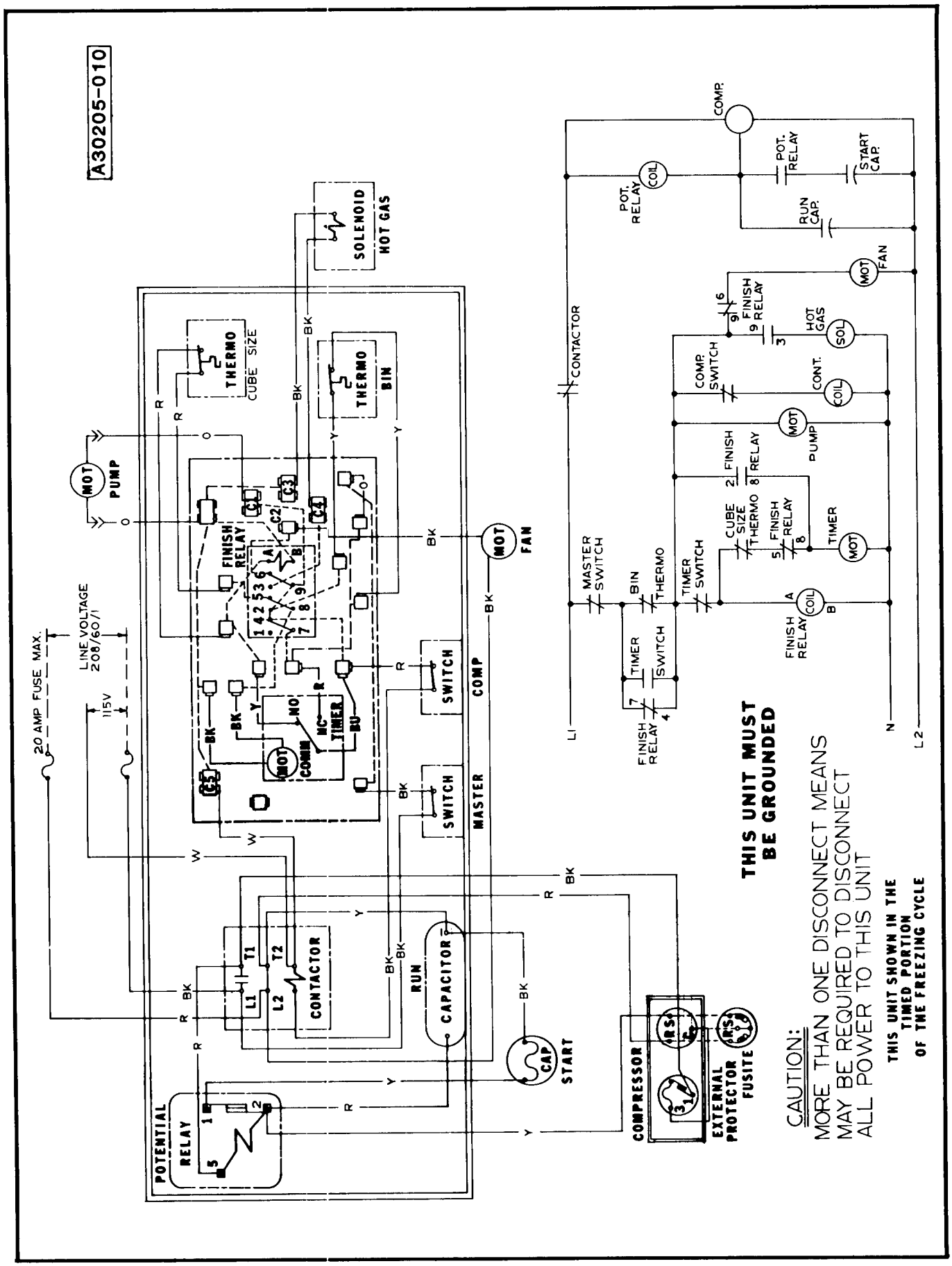

Figure 7-3. Wiring Diagram CM850—Air-Cooled (115/208/60/1).

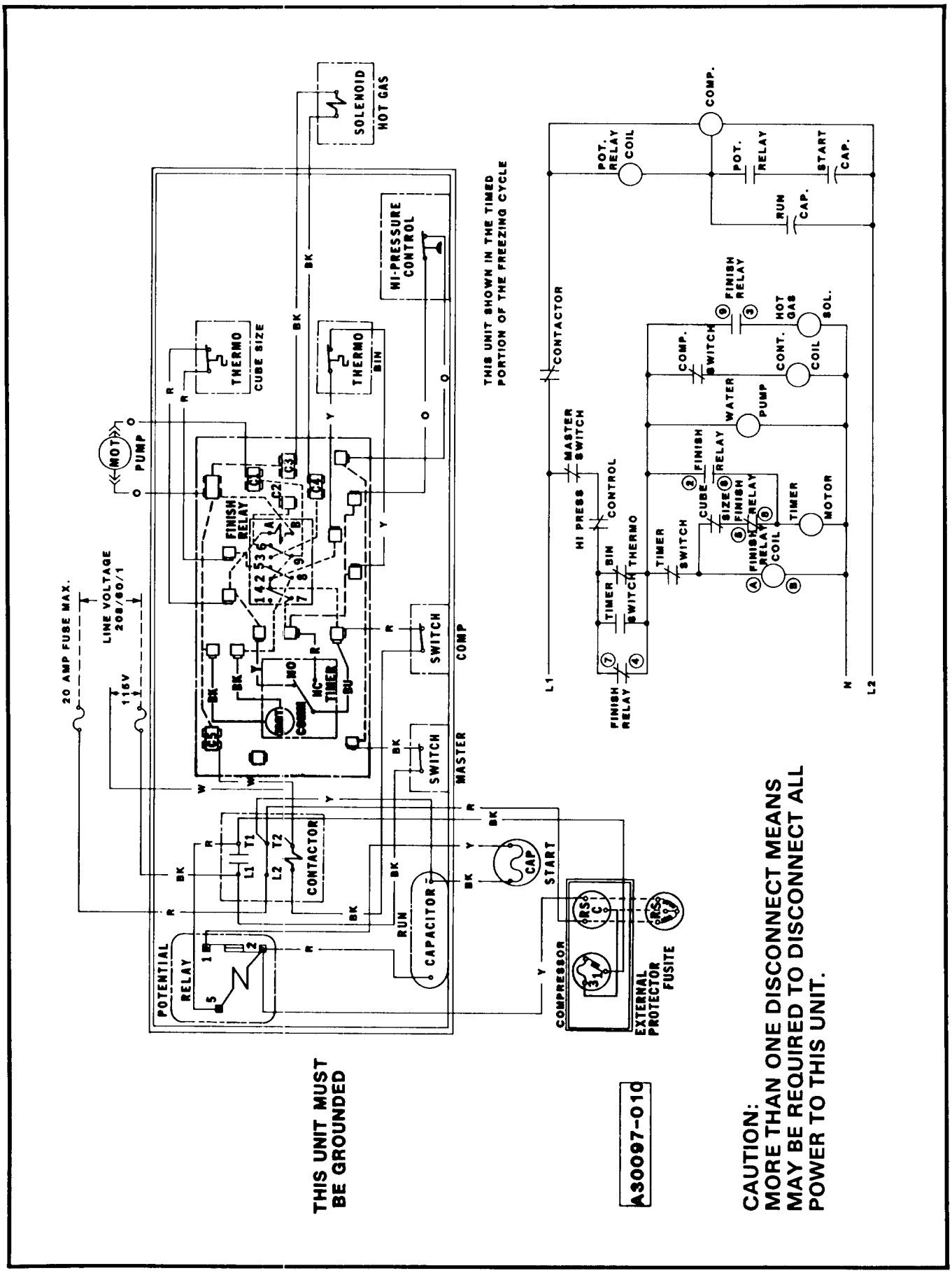

Figure 7-4. Wiring Diagram CM850—Water-Cooled (115/208/60/1).

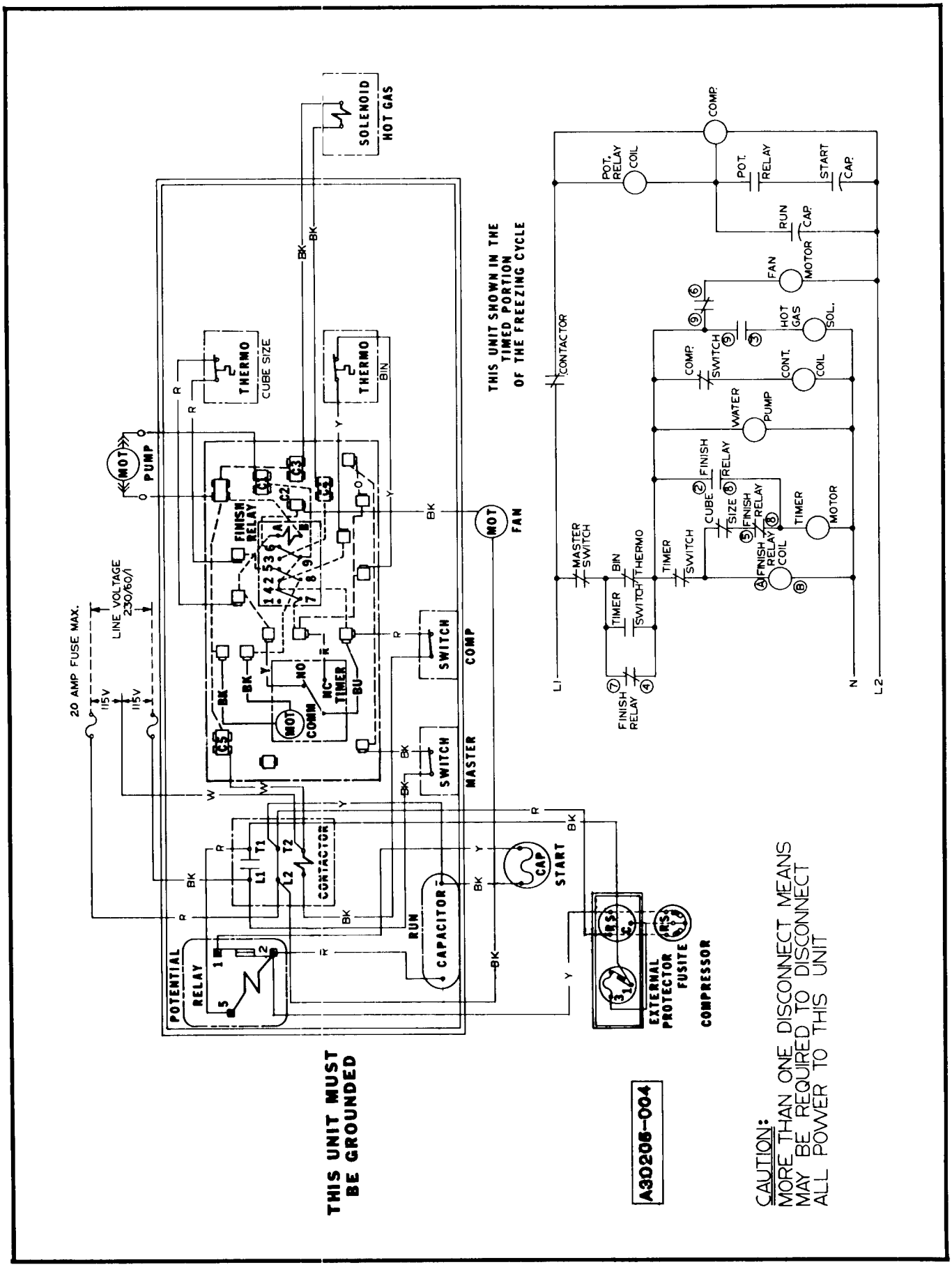

Figure 7-5. Wiring Diagram CM850—Air-Cooled (115/208-220/60/3).

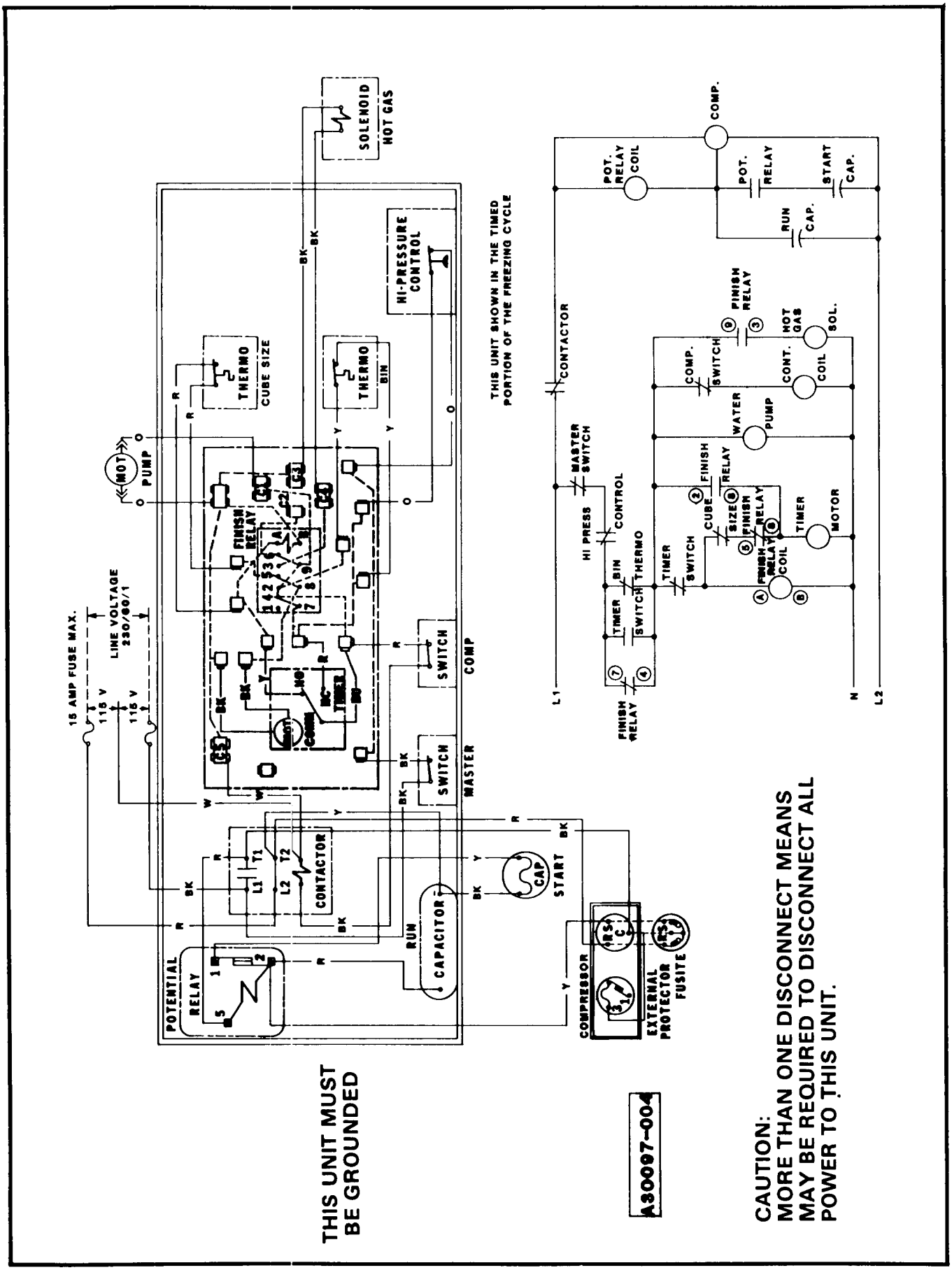

Figure 7-6. Wiring Diagram CM850—Water-Cooled (115/208-220/60/3).

SECTION VIII

THE PARTS ILLUSTRATIONS AND PARTS LISTS

I. GENERAL

This section contains the Parts Illustrations and the Parts List for each of the major assemblies in the Model CM850 Dispenser.

a *No. Number* designation, when used in the Part Number Column indicates the unit is not available from SCOTSMAN as an assembly. This designation is used only for the convenience and clarity of division in cataloging.

II. HOW TO ORDER PARTS OR ASSEMBLIES

When ordering parts or assemblies, to avoid costly delays and errors in shipment, give the part number, the complete description shown in the list, and the quantities of each part or assembly required. Also include the Model name, the serial number of the icemaker for which the part is required, and for parts which require color matching, the color of the Cabinet.

IMPORTANT

A. All Part Numbers have TEN DIGITS (spaces), required for use in the Computer System. BE SURE to fill in ALL SPACES in the CATALOG NUMBER column, on the Parts Order form.

B. Enter the QUANTITY of the Parts ordered, in the last digit column under the QUANTITY column heading, the one under the small 55 number, for parts from 1 thru 9. For 10 or more parts use two columns.

To be sure you receive the proper parts in the proper quantities. ALWAYS use the PART NUMBERS and DESCRIPTIONS given in the Parts Manuals.

Write an order for the Part. (Use SCOTSMAN Parts Order Form DN103) Be sure to include:

a. Distributor Name.
b. (Use for DROP—SHIP order ONLY.)
c. Distributor Purchase Order Number.
d. Carrier.
e. How shipped (Truck, Rail, UPS, etc.)
f. Date ordered.
g. Part Catalog Number. (use full TEN digits (spaces) listed in Parts Manual, including dashes between numbers.)
h. Description - as listed in Parts Manual.
i. Quantity - number of parts ordered. (use far right column.)

CM850

1	03-1404-14	SCREW, NO. 8 x 1-1/4
2	03-1417-02	LOCKWASHER, EXTERNAL TOOTH
3	A29953-001	PANEL, TOP (ENAMEL)
3	A29953-002	PANEL, TOP (STAINLESS STEEL)
4	A29949-001	PANEL, RIGHT SIDE (ENAMEL)
4	A29949-002	PANEL, RIGHT SIDE (STAINLESS STEEL)
5	A29983-001	PANEL, UPPER FRONT ASS'Y. (ENAMEL)
5	A29983-002	PANEL, UPPER FRONT ASS'Y. (STAINLESS STEEL)
6	A29951-001	PANEL, LOWER FRONT (ENAMEL)
6	A29951-002	PANEL, LOWER FRONT (STAINLESS STEEL)
7	A29950-001	PANEL, LEFT SIDE (ENAMEL)
7	A29950-002	PANEL, LEFT SIDE (STAINLESS STEEL)
8	A29935-001	PANEL, BACK
9	03-1404-10	SCREW, NO. 8 x 1/2 PHIL RECESS TAP S.S.
10	A29982-001	LINER LOWER FRONT ASS'Y.
11	13-0595-01	GASKET
12	02-2642-01	MOUNT, PLASTIC PLATE
13	A29976-001	LINER
14	03-1394-00	NUT, PAL
15	03-1404-09	SCREW, NO. 8 x 1/2 PHIL RECESS TAP
16	A29984-001	LINER, ASSEMBLY TOP
17	15-0667-01	LOGO PLATE

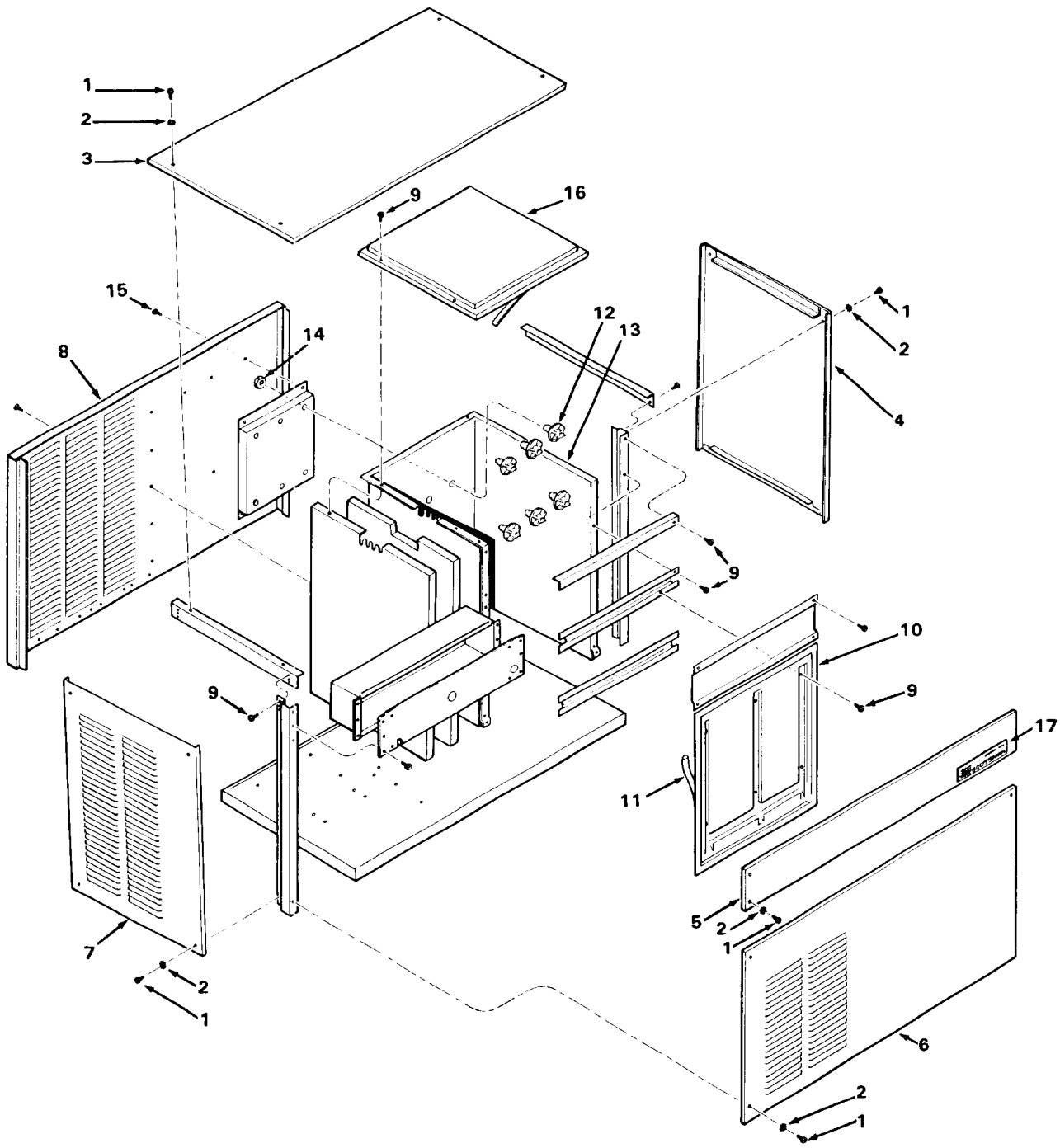

Figure 8-1. CM850 Cabinet Assembly.

MAJOR ASSEMBLY-AIR-COOLED

1	03-1405-20	SCREW, NO. 5/16-18 x 1-1/2 HEX CAP
2	03-1407-07	WASHER, 5/16 PLAIN
3	18-2300-26	SLEEVE
4	18-2300-27	GROMMET
5	18-3800-02	COMPRESSOR ASSEMBLY (230/60/1)
5	18-3800-03	COMPRESSOR ASSEMBLY (208-220/60/3)
5	18-3800-07	COMPRESSOR ASSEMBLY (208/60/1)
6	03-0571-00	SCREW, NO. 1/4-20 x 1/2 T/C HEX
7	12-1930-01	WATER PUMP ASSEMBLY (115/60/1)
8	03-0571-01	SCREW, NO. 1/4-20 x 3/4 T/C HEX
9	03-1407-05	WASHER, 1/4 PLAIN
10	02-1530-00	CLAMP, HOSE
11	13-0674-07	TUBE, POTABLE WATER
12	13-0227-00	TUBE COVERING
13	12-2135-01	HOT GAS VALVE (120/60/1)
14	A29968-020	HEAT EXCHANGER/ACCUMULATOR ASS'Y
15	13-0003-01	GROMMET
16	13-0844-01	GROMMET
17	03-0571-00	SCREW, NO. 1/4-20 x 1/2 T/C HEX
18	18-0398-01	CONDENSER
19	02-2558-01	SHROUD
20	NO NUMBER	BRACKET, DRIER
21	02-2426-02	DRIER
22	18-3732-01	FAN BLADE
23	18-5105-02	MOTOR, FAN (230/60/1)
	18-5105-05	MOTOR, FAN (208/60/1)
24	A24068-001	SPACER
25	18-0597-00	BRACKET, MOTOR MOUNT

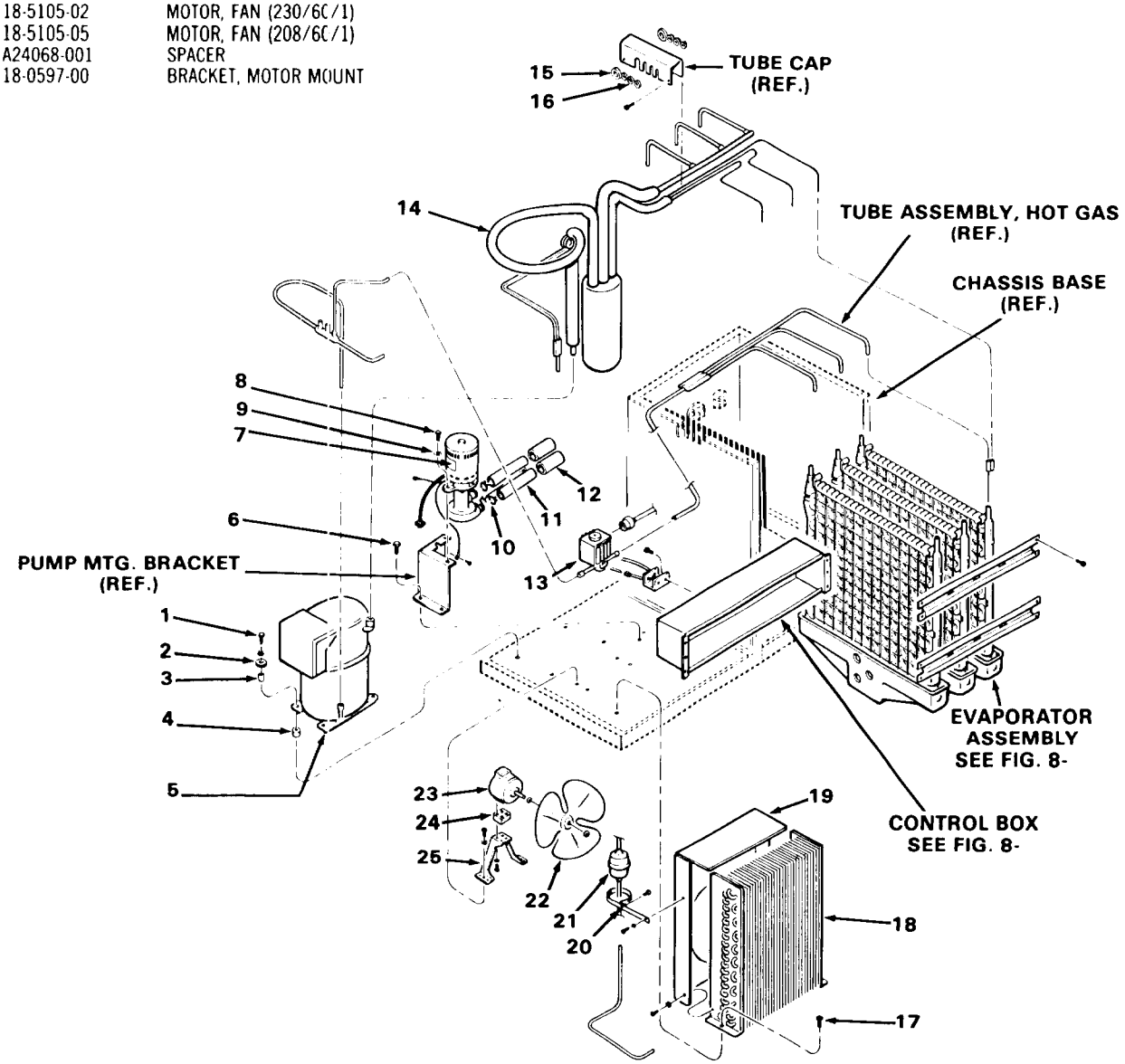

Figure 8-2. CM850 Major Assemblies—Air-Cooled.

MAJOR ASSEMBLY-WATER-COOLED

1	03-1405-20	SCREW, NO. 5/16-18 x 1-1/2 HEX CAP
2	03-1407-07	WASHER, 5/16 PLAIN
3	18-2300-26	SLEEVE
4	18-2300-27	GROMMET
5	18-3800-02	COMPRESSOR ASSEMBLY (230/60/1)
	18-3800-03	COMPRESSOR ASSEMBLY (208-220/60/3)
	18-3800-07	COMPRESSOR ASSEMBLY (208/60/1)
6	03-0571-00	SCREW, NO. 1/4-20 x 1/2 T/C HEX
7	12-1930-01	WATER PUMP ASSEMBLY (115/60/1)
8	03-0571-01	SCREW, NO. 1/4-20 x 3/4 T/C HEX
9	03-1407-05	WASHER, 1/4 PLAIN
10	02-1530-00	CLAMP, HOSE
11	13-0674-07	TUBE, POTABLE WATER
12		TUBE COVERING
13	12-2135-01	HOT GAS VALVE (120/60/1)
14	A29968-020	HEAT EXCHANGER/ACCUMULATOR ASS'Y
15	13-0003-01	GROMMET
16	13-0844-01	GROMMET
17	03-0571-00	SCREW, NO. 1/4-20 x 1/2 T/C HEX
18	03-1407-05	WASHER, 1/4 PLAIN
19	18-3306-02	CONDENSER
20	A29985-001	PIPE NIPPLE ASS'Y
21	11-0198-02	WATER REGULATOR
22	NO NUMBER	ELBOW
23	02-2628-01	RECEIVER
24	02-2426-02	DRIER

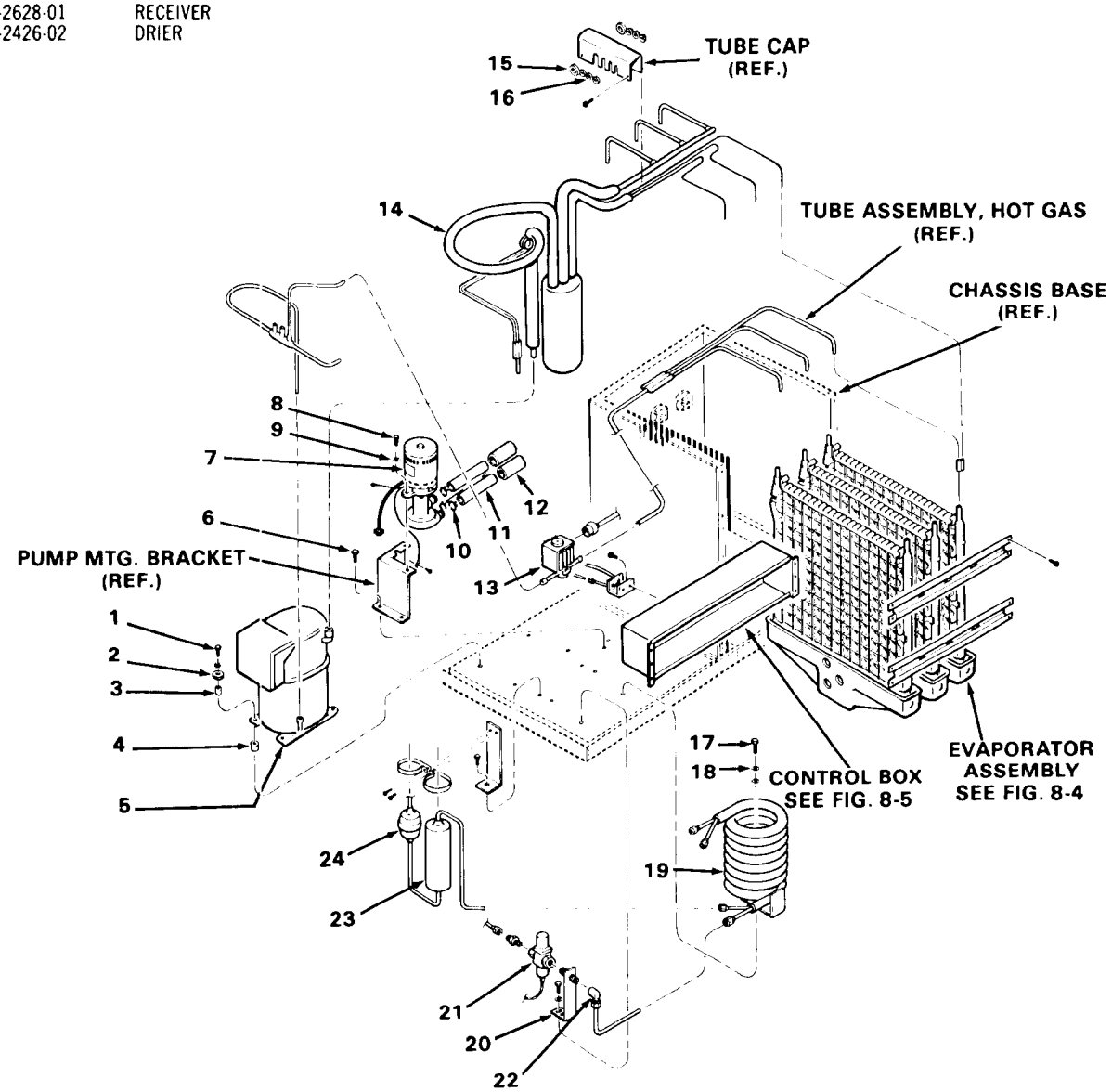

Figure 8-3. CM850 Major Assemblies—Water-Cooled.

EVAPORATOR ASSEMBLY

1	02-2527-01	TUBE, WATER DISTRIBUTER
2	02-2521-01	MANIFOLD, WATER (LONG)
3	02-2519-01	TEE
4	A29703-001	MANIFOLD, WATER (SHORT)
5	02-1530-01	CLAMP, HOSE (S.S.)
6	13-0674-07	TUBE, POTABLE WATER
7	02-2542-01	VALVE ASSEMBLY, FLOAT AND JAM NUT
8	NO NUMBER	TUBING, WATER INLET ASSEMBLY
9	03-1394-00	PAL NUT
10	A29969-001	SUMP ASSEMBLY
11	A29428-020	EVAPORATOR PLATE
12	02-2523-01	END COVER, SUMP
13	02-2520-01	COVER, SUMP
14	02-2544-01	COVER, SUMP CTR.
15	03-1404-10	SCREW, NO. 8 x 1/2 PHIL RECESS T/F TAP S.S.

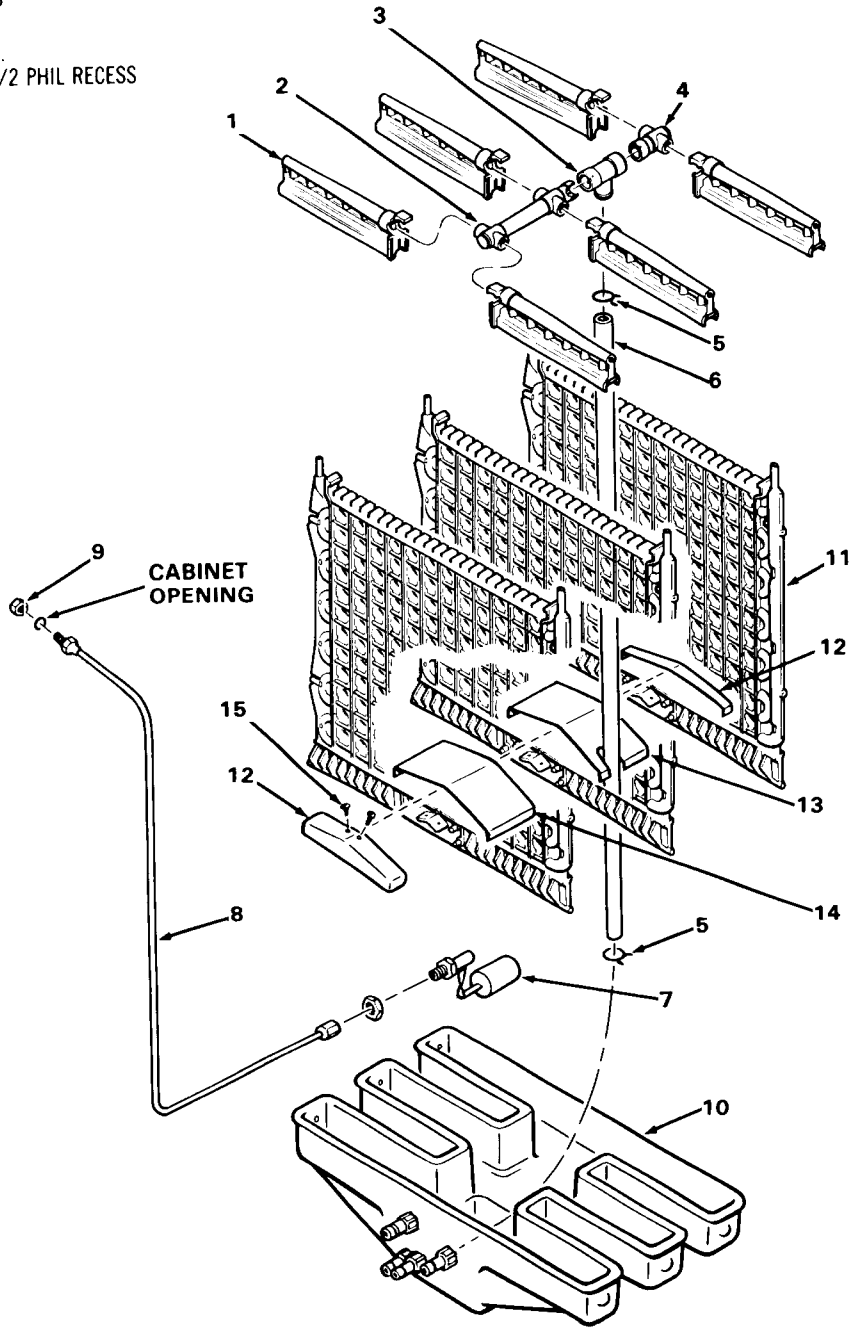

Figure 8-4. CM850 Evaporator Assembly.

CONTROL BOX ASSEMBLY

1	03-1578-01	GROUND SCREW
2	NO NUMBER	SNAP BUSHING
3	12-0426-01	SWITCH (MASTER)
4	12-0426-01	SWITCH (COMPRESSOR)
5	12-1213-13	SNAP BUSHING
6	13-0124-00	GROMMET
7	11-0351-03	CUBE SIZE CONTROL
8	11-0353-03	BIN THERMOSTAT
9	11-0388-02	HI REFRIGERANT PRESSURE CONTROL (W/C ONLY)
10	02-2242-01	7/8 INCH STAND OFF
11	12-1912-01	CIRCUIT BOARD
12	03-1403-02	SCREW, NO. 6-32 x 1/4 PHIL RECESS PAN HD
13	12-1879-02	RELAY
13	12-1879-03	RELAY (9A)
14	03-1403-02	SCREW, NO. 6-32 x 1/4 PHIL RECESS PAN HD
15	12-2107-01	TIMER & SWITCH ASSEMBLY
16	02-2242-01	STAND OFF
17	12-2037-01	CONTACTOR (10A) (4A)
17	12-0739-01	CONTACTOR (9A)
18	18-1901-15	START CAP (NOT USED ON -9)
19	18-1903-34	POT, RELAY (NOT USED ON -9)
20	NO NUMBER	BRACKET, CAP (NOT USED ON -9)
21	18-1902-34	CAPACITOR, RUN
22	03-1404-09	SCREW, NO, 8 x 1/2 PHIL RECESS T/F TAP
23	NO NUMBER	COVER, CONTROL BOX
24	03-1403-14	SCREW, NO. 8 x 3/16 PHIL RECESS PAN HD

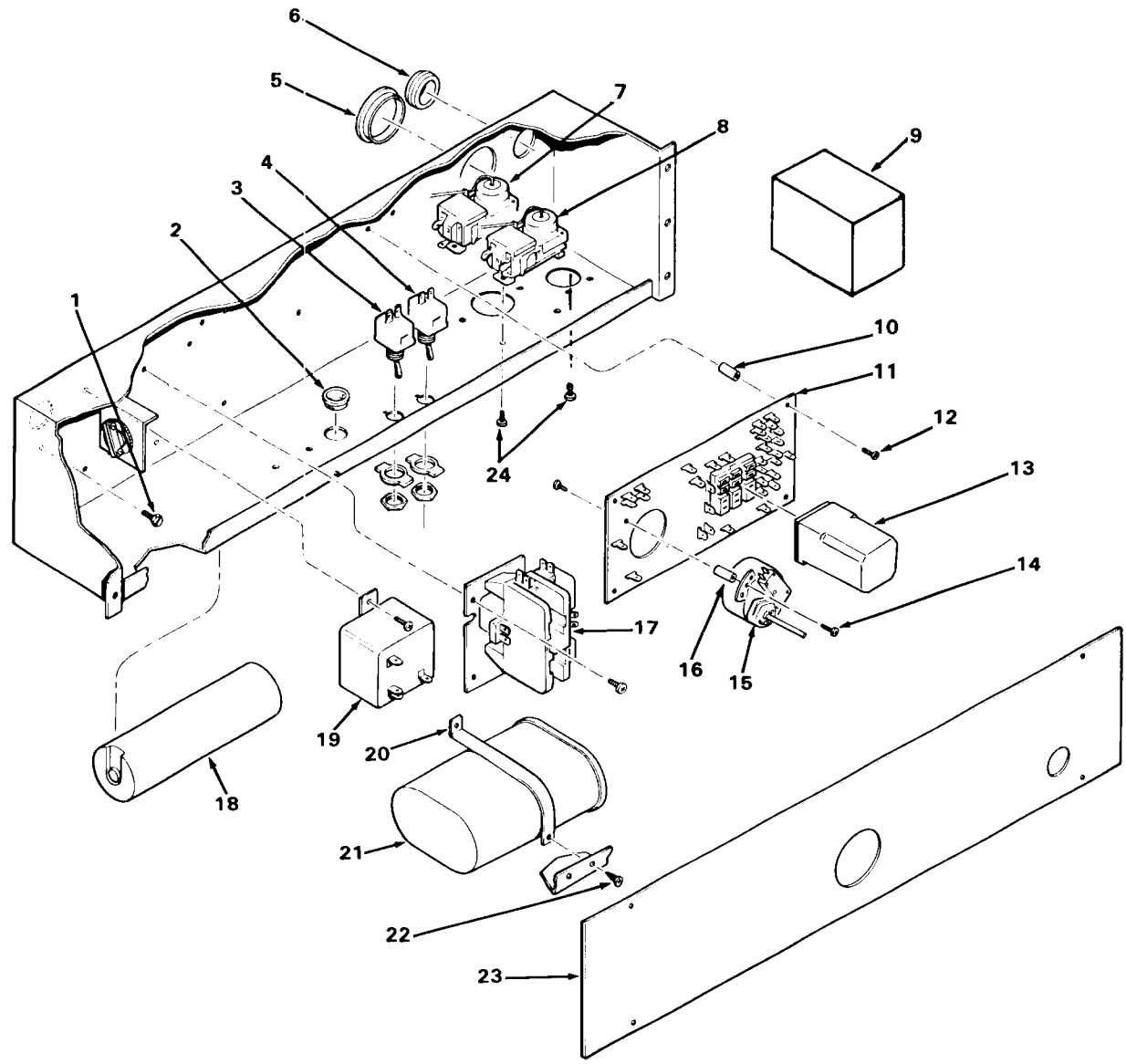

Figure 8-5. CM850 Control Box Assembly.

To the Owner or User:

The Service Manual you are reading is intended to provide you, and the maintenance or service technician, with the information needed to install, start up, clean, maintain, and service the ice system.

Refer to this table of contents to locate the information you need.

TABLE OF CONTENTS

GENERAL INFORMATION & INSTALLATION

For the Installer 2
For the Electrician 6
For the Plumber 7

OPERATION

Start-Up 9
Operation 12
Operation - Electrical Sequence 16

MAINTENANCE & CLEANING INSTRUCTIONS

Icemaker 19
Ice Storage Bin 19

COMPONENT DESCRIPTION 23

SERVICE DIAGNOSIS 25

REMOVAL AND REPLACEMENT PROCEDURES

Water Pump 28
Reservoir 28
Distributors/Water Manifolds 28
Inlet Water Valve 28
Compressor 28
Condenser 28
Hot Gas Valve 28
Water Regulating Valve 29
Thermostatic Expansion Valve 29
Fan Motor or Blade 29
Cube Size Control 30
Timer 30
Bin Thermostat 30
Relay 30

LIST OF ILLUSTRATIONS

Specifications 2
Component Location 3
Installation 4
Stacking Instructions 5
Electrical Connections 6
Water & Drain Connections 7
Final Checklist 8
Timer Cam Positions 9
Ice Cube Size & Shape 10
Cube Size Adjustment 11
Freezing Cycle 12
Harvest Cycle 14
Component Description 22
Removal and Replacement 27
Removal and Replacement - Control Box 30

PARTS LIST AND WIRING DIAGRAMS 1
(Printed in Yellow)

PARTS LIST:

Component Location 2
Exterior Cabinet 3
Air-Cooled Assembly 4
Water-Cooled Assembly 5
Water System 6
Control Box 7
BH800 8

WIRING DIAGRAMS:

CM855AE-32A (208-230/60/1) Air-Cooled 10
CM855WE-32A (208-230/60/1) Water-Cooled . 12

CM855

THIS PAGE
INTENTIONALLY
LEFT BLANK

CM855 FOR THE INSTALLER

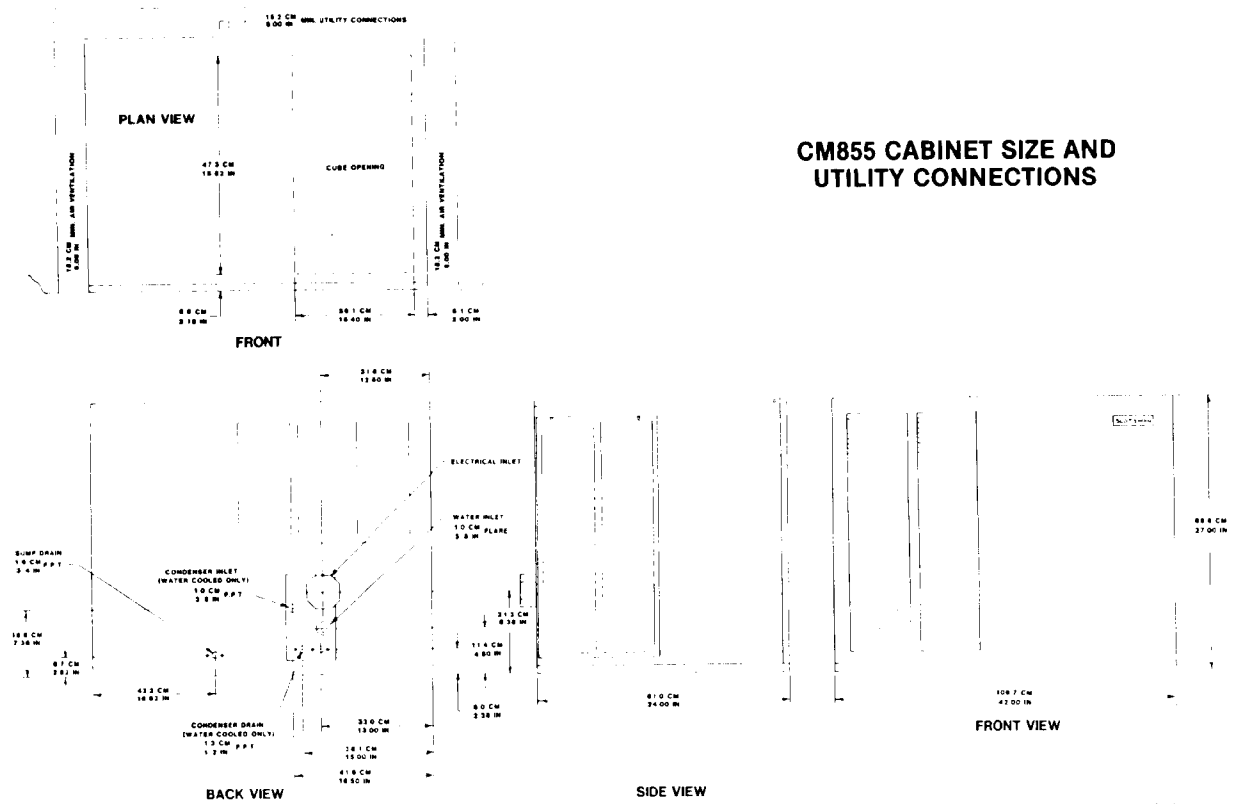

CM855 CABINET SIZE AND UTILITY CONNECTIONS

Scotsman Ice Systems are designed and manufactured with the highest regard for safety and performance. They meet or exceed the standards of U.L., NSF and CSA.

Scotsman assumes no liability or responsibility of any kind for products manufactured by Scotsman that have been altered in any way, including the use of any parts and/or other components not specifically approved by Scotsman.

Scotsman reserves the right to make design changes and/or improvements at any time. Specifications and designs are subject to change without notice.

SPECIFICATIONS

Model Number	(Height w/o bin) Dimensions H" x W" D"	Ice Type	Basic Electrical	Compressor HP	Minimum Circuit Ampacity+	Maximum Fuse Size
CM855AE-32B	27 x 42 x 24	Contour Cube	208-230/60/1	1.75	11.8	20
CM855WE-32B	same	same	208-230/60/1	same	9.8	20
CM855AE-3B	same	same	208-230/60/3	same	9.9	20
CM855WE-3B	same	same	208-230/60/3	same	7.2	15

The standard finish is enamel sandalwood.

+ The minimum circuit ampacity is the figure used to determine wire size per National Electric Code standards.

IMPORTANT OPERATING REQUIREMENTS

	MINIMUM	MAXIMUM
Air Temperatures	50°F (10°C)	100°F (38°C)
Water Temperatures	40°F (4.4°C)	100°F (38°C)
Water Pressures	20 lbs. gauge	100 lbs. gauge
Electrical Voltage Variations Voltage rating specified on nameplate	-5%	+ 10%

(when compared to voltage on nameplate)

NOTICE: Extended periods of operation exceeding the above limitations consititute misuse under the terms of the Manufacturer's Limited Warranty, and will result in a loss of warranty coverage.

REFRIGERANT - R-502

OPTIONAL S.S. - PANEL KIT SPKCM1000

Includes top, front and side panels, must be field installed.

NAMEPLATE LOCATION

See illustration page 3.

STORAGE BIN: BH800

CM855 FOR THE INSTALLER

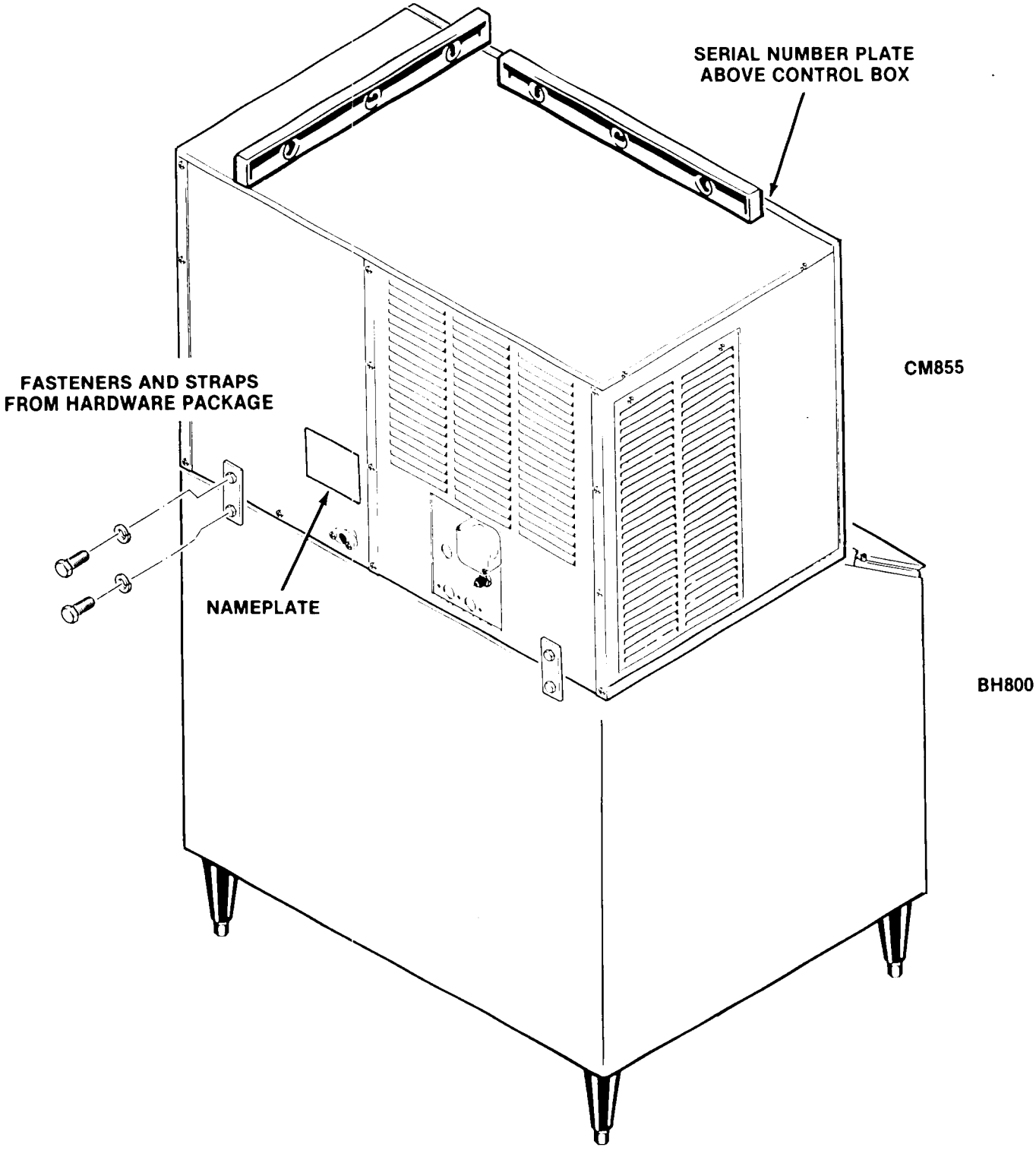

CM855 FOR THE INSTALLER

SELECT LOCATION

The first step in installing the equipment is to select the location. The purchaser of the unit will have a desired spot in mind, check out that spot to insure that it is:

- indoors, in an environment that does not exceed the air and water temperature limitations for the equipment.
- that the necessary utilities are available including the correct voltage electrical power.
- that there be space around the installed machine for service, 6 inches **minimum** left, right, and rear for air-cooled models.

STORAGE BIN

The Scotsman bin for this unit is the BH800. Other bins may be available with bin tops to vary the storage capacity. Check to be sure that they are correct for the CM855. Lay the bin on its back, using cardboard from the carton to support it, screw in the legs.

Stand the bin upright, and correct any possible small tears in the machine mounting gasket with food grade silicone sealant.

ICE MACHINE

The use of a mechanical lift is recommended for lifting the uncrated icemaker onto the bin. Place the unit directly onto the bin, align the panels so that the unit is even with the back, left, and right sides of the bin. Locate hardware package, take out two metal straps, and two mounting screws, remove galvanized bracket from left back panel, use those two cap screws and the two cap screws from the hardware package to secure the icemaker to the bin. See illustration page 5.

Remove all shipping material, note the locations of the control box, utility connection location, and the bin control bracket.

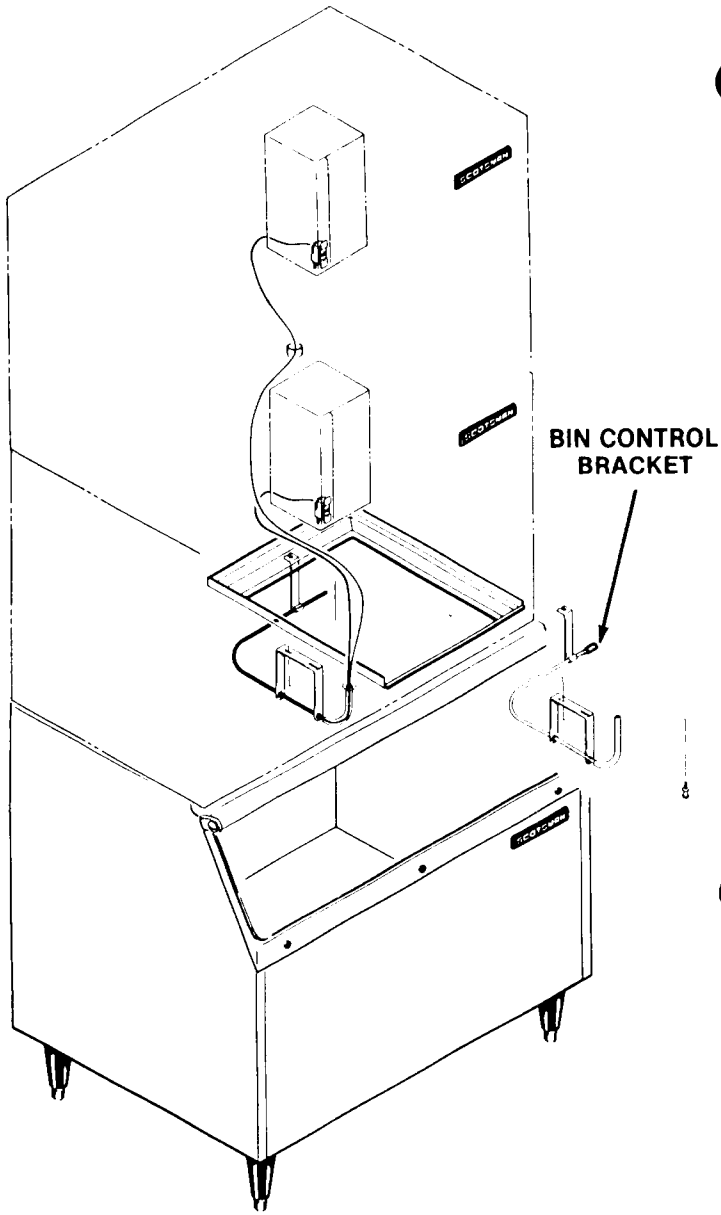

BIN CONTROL INSTALLATION

The bin control bracket is shipped in a cardboard retainer located in front of the freezing compartment. It is to be mounted to the bottom of the ice machine after it has been installed onto the bin.

Using 3 screws from the hardware package, mount the bracket to the machine. a) First install one screw at the back of the unit, and slip the bracket hanger over the head of that screw. Then b) use the remaining two screws to secure the bracket on the left of the freezing compartment.

Uncoil the bin thermostat capillary tube, and route it through the bin thermostat bracket tube, stopping at the end of the tube.

CM855 FOR THE INSTALLER

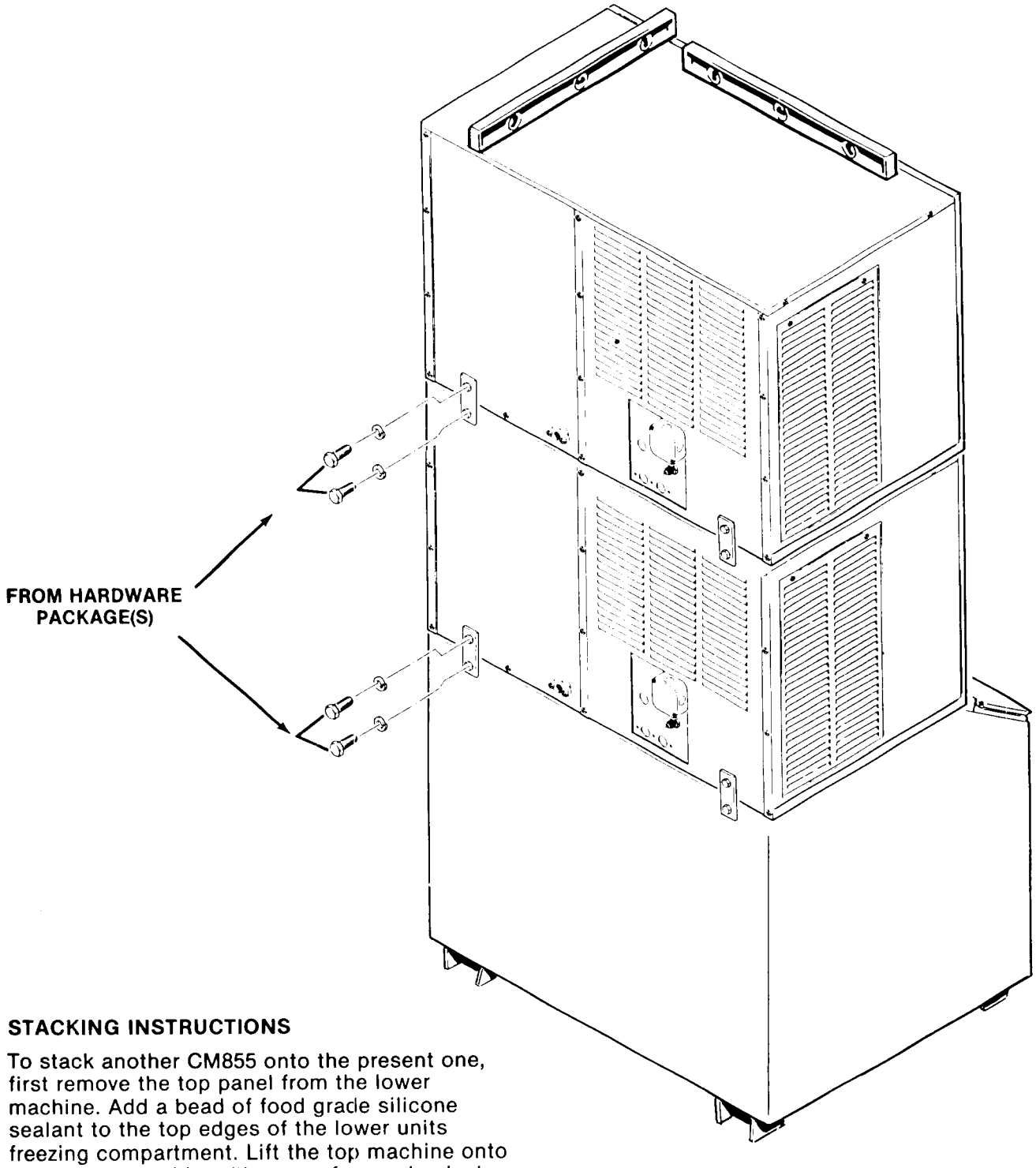

STACKING INSTRUCTIONS

To stack another CM855 onto the present one, first remove the top panel from the lower machine. Add a bead of food grade silicone sealant to the top edges of the lower units freezing compartment. Lift the top machine onto the bottom machine, (the use of a mechanical lift is recommended for this step). Align the two machines cabinets, and using the 4 bolts and two straps from the top units hardware package, fasten the two units together at the back cabinets.

CM855 FOR THE ELECTRICIAN

CONFORM TO ALL APPLICABLE CODES

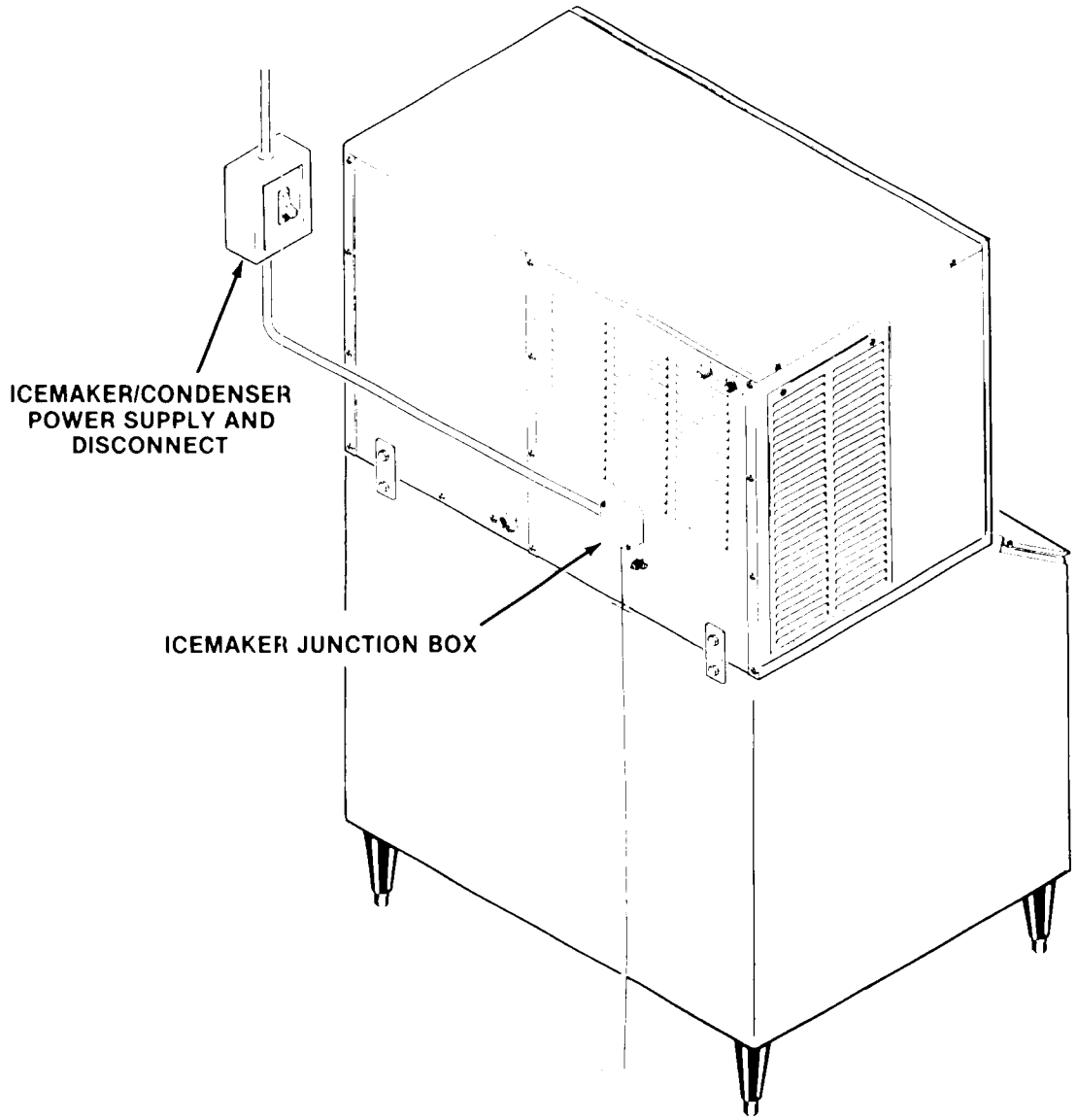

The electrical power to the unit is supplied through the junction box at the rear of the machine.

Check the nameplate for the units voltage requirements, and for the minimum circuit ampacity. The machine requires a solid chassis to earth ground wire.

The machine should be connected to its own electrical circuit so it would be individually fused. Voltage variation must remain within design limitations, even under storing conditions.

All external wiring must conform to national, state, and local electrical codes. The use of a licensed electrician is required to perform the electrical installation.

CM855 FOR THE PLUMBER

CONFORM TO ALL APPLICABLE CODES

WATER INLET

AIR-COOLED MODELS: The recommended water supply is **cold** water, 3/8" O.D. copper tubing, connected to a 3/8" male flare at the back of the cabinet. Install a hand valve near the machine to control the water supply.

WATER-COOLED MODELS: **A seperate** 3/8" O.D. copper line is recommended, with a **seperate** hand valve to control it. It is connected to a 3/8" FPT condenser inlet at the back of the cabinet. The water pressure must remain above 20 PSIG, at a maximum flow rate of 4 g.p.m.

DRAINS

AIR-COOLED MODELS: There is one 3/4" FPT sump drain at the back of the cabinet, the drain lines are gravity type, and 1/4 inch per foot fall is recommended. Insulation in high humidity areas is recommended. There must be a vent at the highest point of the drain line, and the ideal drain receptacle would be a trapped and vented floor drain. **USE ONLY RIGID TUBING.**

WATER-COOLED MODELS: Besides the above drain, **a seperate** condenser drain must be run. Connect it to the 1/2" FPT condenser drain connection at the back of the cabinet.

STORAGE BIN: **A seperate** gravity type drain needs to be run, similar to the air-cooled sump drain. Insulation of this drain line is recommended.

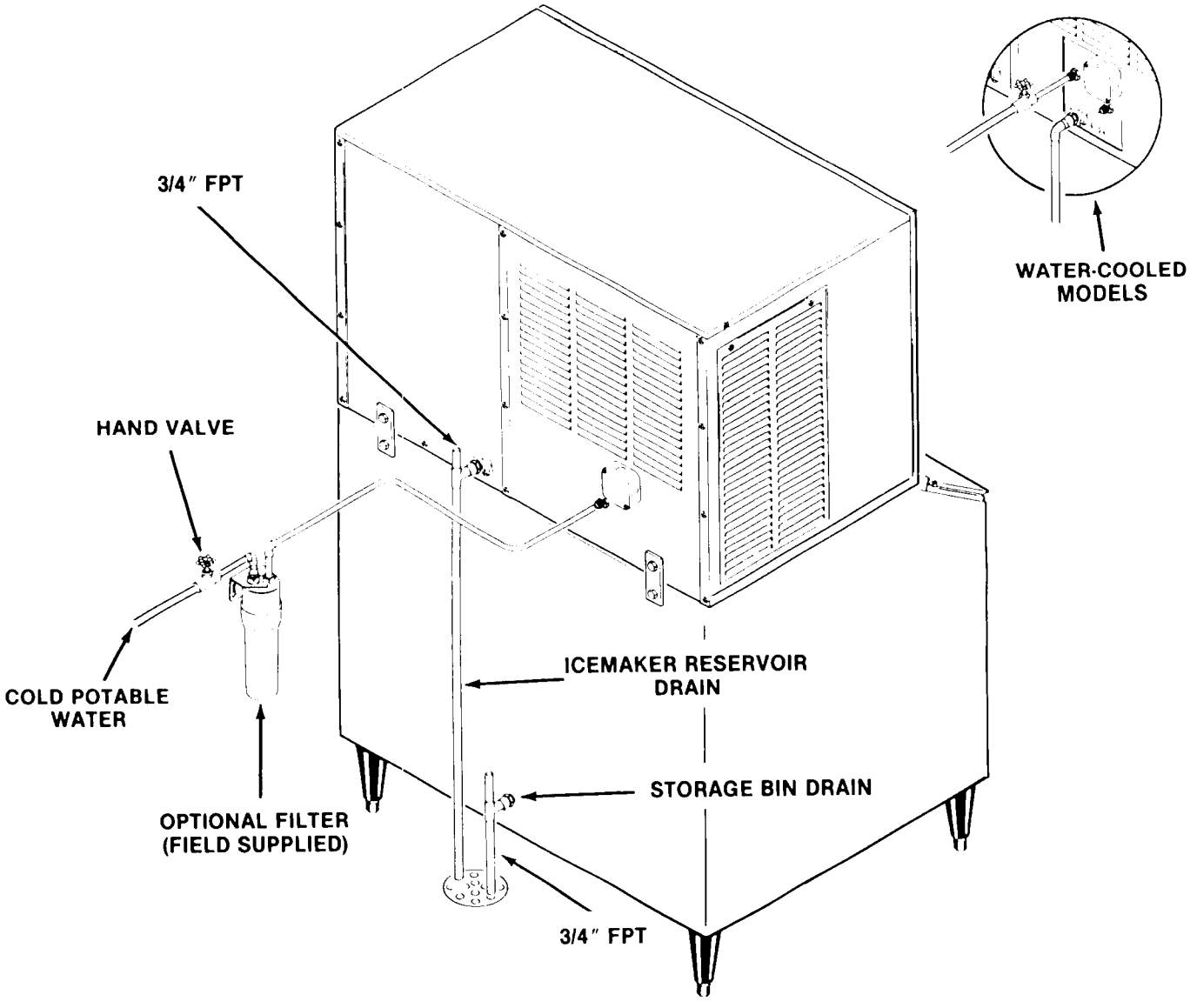

CM855 FOR THE INSTALLER

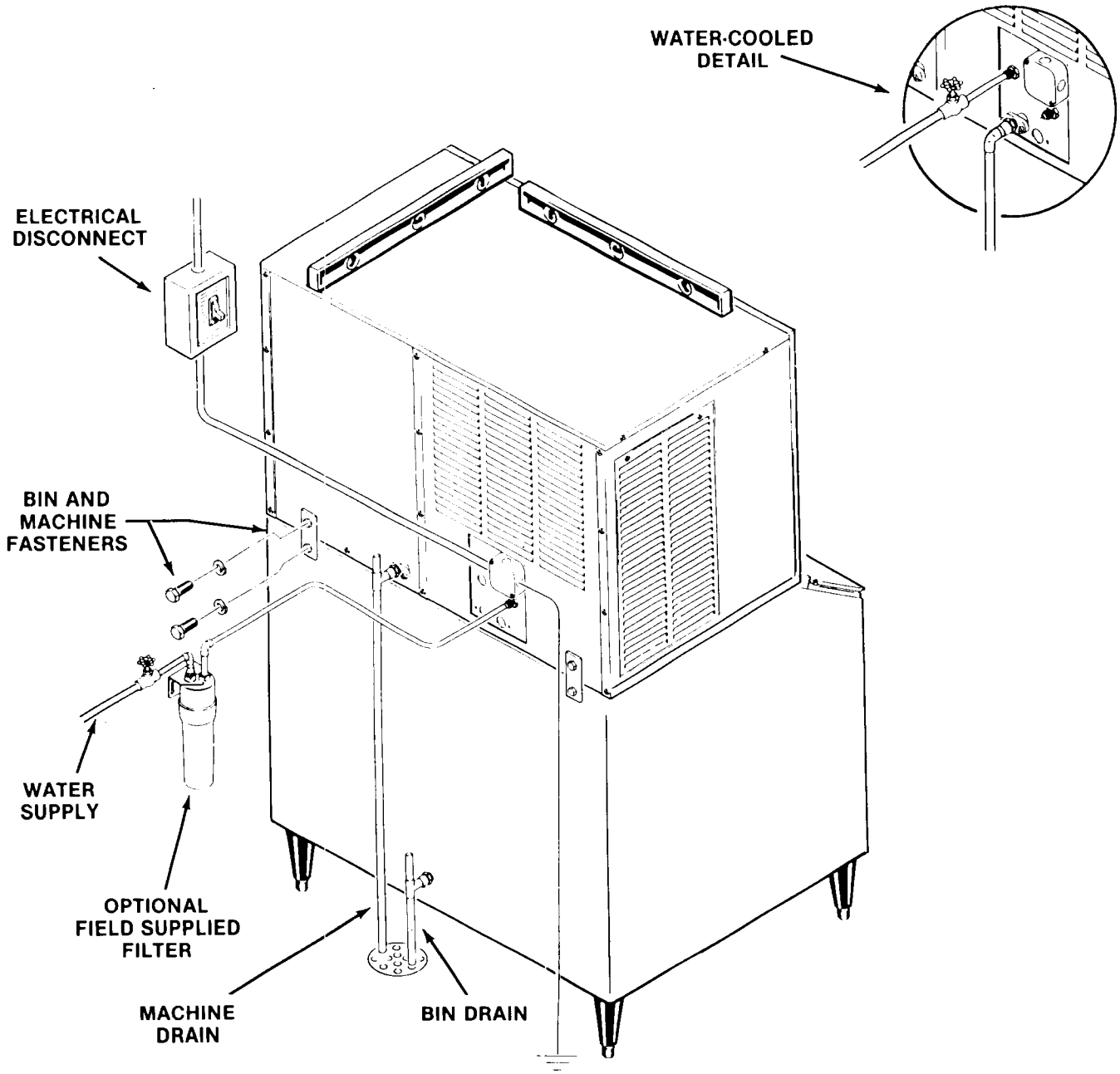

FINAL CHECKLIST

1. Is the unit in an area where the air and water temperatures will not exceed design limitations, including the heat produced by the air-cooled model?
2. Is there enough room around the unit for service, and at least 6 inches for the air-cooled model?
3. Water supply connected? Proper pressure? Drains?
4. Is the cabinet level?
5. Has all shipping material been removed?
6. Has the bin thermostat and bracket been installed?
7. Have all electrical connections been made?
8. Has the bin been cleaned and/or sanitized?
9. Has the warranty registration card been filled out and mailed in?
10. Has the owner/user been given the service manual, and instructed how to operate and maintain the equipment?
11. Has the owner/user been informed of the Scotsman Service Agency that can be contacted for service?

CM855 START UP

START-UP

1. Remove front panel by pulling out to unsnap.
2. Remove two screws and the control box cover.
3. Remove the evaporator cover.
4. Check that the two toggle switches, the MASTER ON-OFF toggle switch and the COMPRESSOR ON-OFF toggle switch are in the OFF position, on the control box.
5. OPEN the water supply line shutoff valve.
6. Inside the control box is the shaft of the timer and the switch assembly. Rotate the shaft of the timer and switch assembly clockwise to start the timer. The timer starts when the actuator arm on the microswitch drops off outer cam into cam slot. See Timer Cam Positions. An audible click can be heard, but in a noisy area, look at the cam and switch to observe the event.

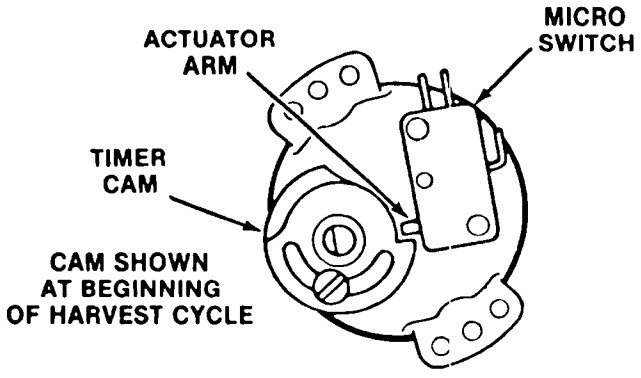

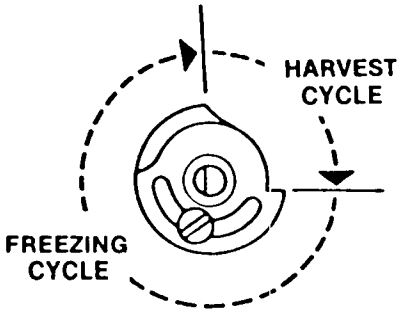

CAM SHOWN DIVIDED INTO TYPICAL FREEZING & HARVEST CYCLES

Timer Cam Positions

7. Move the master ON-OFF toggle switch, the top toggle switch, to the ON position.
8. Observe water fill cycle:

   Water pump operates and water inlet solenoid valve OPENS, incoming water flows from the valve through the tubing, the reservoir fills and excess water is overflowed through the stand pipe. This cycle will take about three minutes. Timer will close the water inlet solenoid valve and the water fill cycle is complete.

   Advancing the shaft of the timer and switch assembly into a new harvest cycle, restarts the timer and allows a check that: Water inlet solenoid valve OPENS and the reservoir overflows through the standpipe. Water inlet valve CLOSES, stopping water overflow.

   The water pump is operating, as seen by water moving through the tygon tube, up to the water distributor at the top of each evaporator plate, where water is uniformly dispensed and cascades down both sides of the evaporator plate and drains back into the sump assembly for recirculation.
9. Check that the water cascades down over each cube mold and into the sump.
10. When the second cycle is completed, move the compressor ON-OFF toggle switch, to the ON position.
11. Check operation of the freezing cycle:

    The compressor is operating.

    The icemaking process begins; feeling the metal parts of the evaporator plate reveals cold temperature, very shortly ice begins to form. Tubing will become frosted at the top of the evaporator plate.

    Freezing time will range between 10 and 20 minutes. Longer time for temperatures above 70-degrees F. and shorter time required when temperatures are below 70-degrees F. Average complete cycle time is about 16 minutes.

CM855 START UP

12. Observe second and third cube harvest.

    Check size of SCOTSMAN CONTOUR CUBE

    Unlike other SCOTSMAN cubes which are made in a definite molded shape, contour cubes are produced in indentations and many shapes and sizes of contour cubes may be produced — only ONE size and shape combination is correct.

An under-charged refrigeration system produces larger cubes at the top of the evaporator plate and smaller cubes at the bottom. Charge system per NAMEPLATE specifications.

Charge Refrigeration System with **REFRIGERANT 502 ONLY.**

In areas where extreme problem water condition exists, filtering or purifying equipment is recommended. Contact SCOTSMAN ICE SYSTEMS, Service Department, Albert Lea, Minnesota 56007 for further details.

TOO LARGE

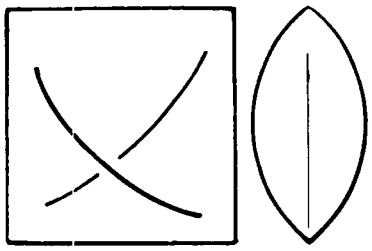

Too LARGE — may cause evaporator freeze ups. Adjust cube size control counter-clockwise to obtain smaller cubes

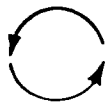

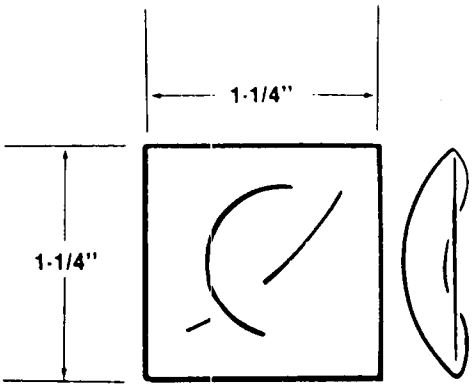

PROPER SIZE AND SHAPE

PROPER SIZE AND SHAPE of the contour cube. Icemaker operates at peak efficiency when a cube this size and shape is produced. A finely tuned system produces vertical strips of ice which easily break when they fall.

NORMAL HARVEST of cubes is the top rows of cubes first, then the lower rows.

TOO SMALL

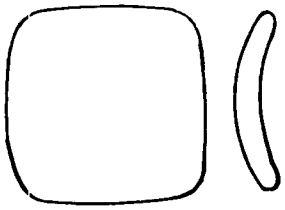

TOO SMALL. To obtain proper size cubes, adjust cube size control clockwise. May cause freeze up problems due to poor harvest.

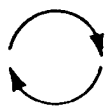

Ice Cube Size & Shape

CM855 START UP

ADJUSTMENT OF CUBE SIZE CONTROL

To produce SMALLER sized ice cubes:

Locate cube size control knob, in front of the control box.

Rotate the adjusting screw one-eighth of a turn COUNTERCLOCKWISE to WARMER.

Observe size of the ice cubes in the next two ice cube harvests and adjust in one-eighth turn or less increments, until correct ice cube is achieved.

To produce LARGER ice cubes:

Locate cube size control on the front of the control box

Rotate the adjusting screw one-eighth of a turn CLOCKWISE to COLDER.

Observe size of ice cubes in the next two cube harvests and adjust in one-eighth turn or less increments, until correct ice cube size is achieved.

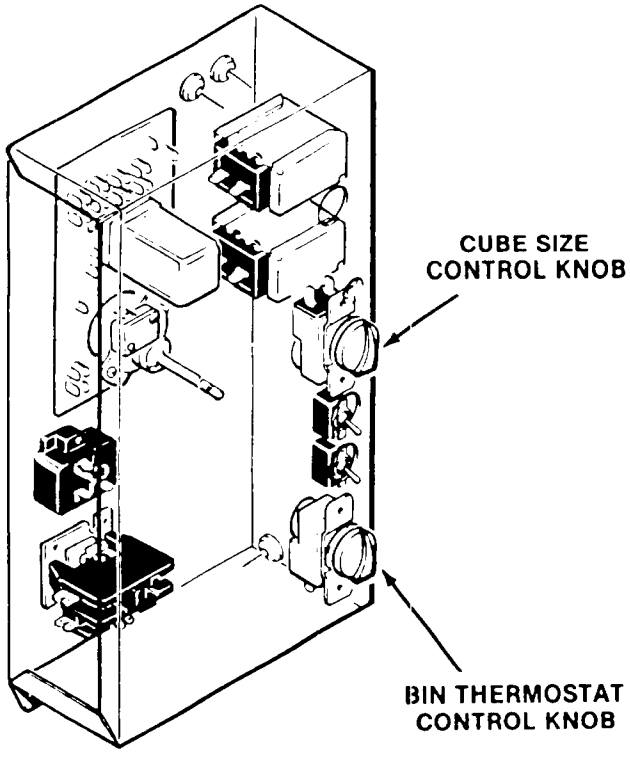

ROTATE ADJUSTMENT KNOB COUNTER-CLOCKWISE TO PRODUCE SMALLER CUBES.

ROTATE ADJUSTMENT KNOB CLOCKWISE TO PRODUCE LARGER CUBES.

BIN THERMOSTAT OPERATION

Check texture of ice cubes; when partially cloudy throughout, suggests icemaker is operating short of water; or, possibly an extreme problem water condition exists, where filtering or purifying equipment is recommended. Contact SCOTSMAN ICE SYSTEMS, Service Department, Albert Lea, Minnesota 56007 for further details. See SERVICE DIAGNOSIS chart, for shortage of water symptoms and corrections.

13. With the icemaker in the harvest cycle, hold ice against the bin thermostat control bulb to test shutoff, which should cause the icemaker to shut OFF at the END OF THE HARVEST CYCLE.

    Within minutes after the ice is removed from the sensing bulb, the bulb will warm up and cause the icemaker to restart. This control is factory set and should not be reset until testing is performed.

14. Replace control box cover and all cabinet panels and screws.

15. Thoroughly explain to the owner/user the significant specifications of the icemaker, the start up and operation, going through the procedures in the operating instructions. Answer all questions about the icemaker by the owner; and inform the owner of the name and telephone number of the authorized SCOTSMAN Distributor, or service agency serving him.

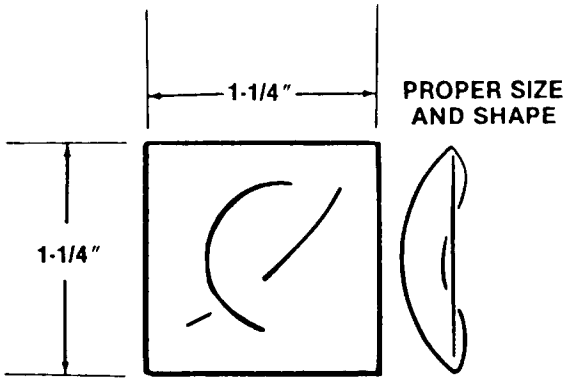

FREEZE CYCLE

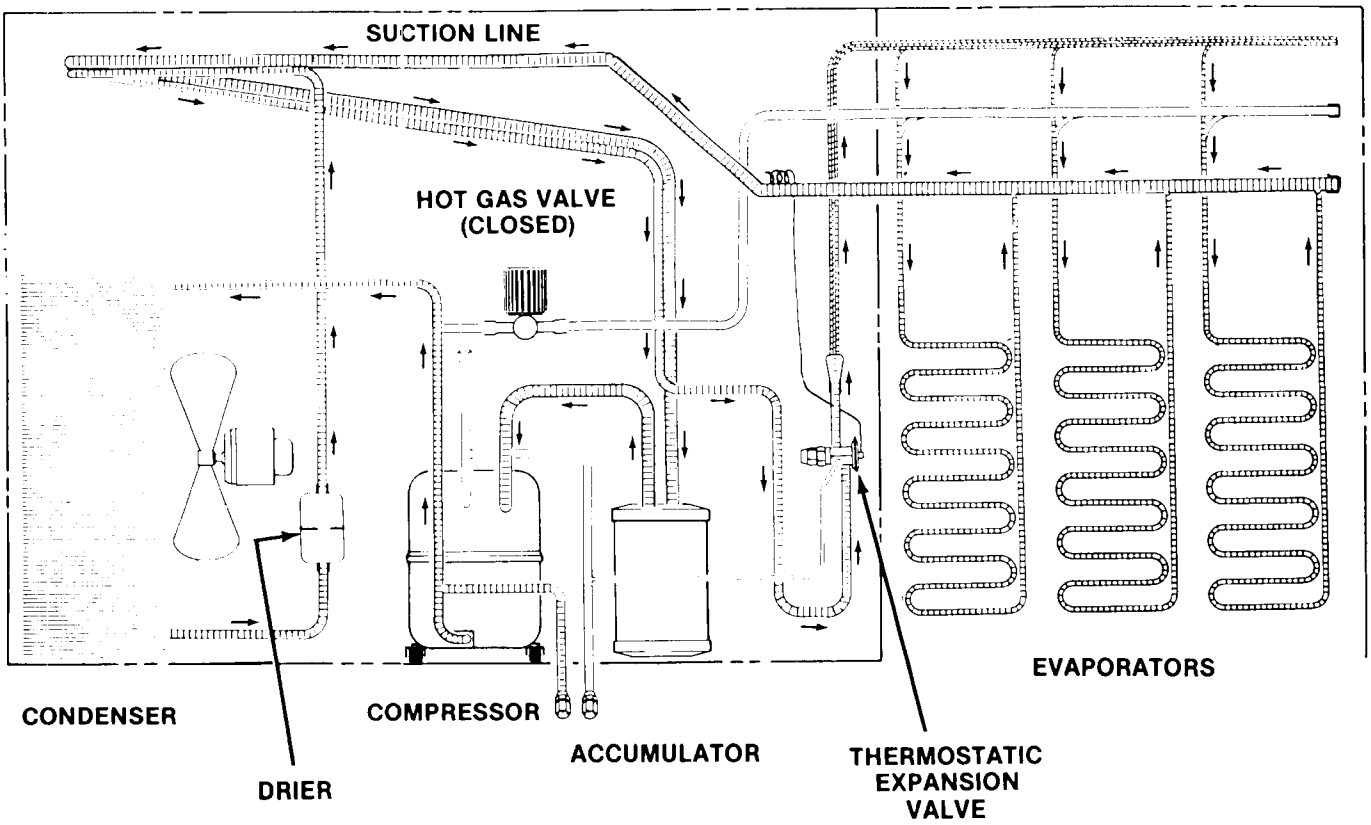

REFRIGERATION SYSTEM SCHEMATIC

REFRIGERATION DURING FREEZE:

This ice machine employs either air or water as a condensing media, the refrigeration system for either one is as follows:

At the hermetic compressor, Refrigerant 502 is compressed into a high temperature, high pressure gas. This gas contains the heat removed from the **evaporator,** as well as **compressor** motor heat. The gas moves through the **discharge** line into the **condenser,** air or water-cooled. If air-cooled, the discharge pressure will change with the heat load and the ambient air temperature. If water-cooled, the discharge pressure is controlled by the amount of water flowing through the **condenser** - which is determined by the water regulating valve. After the gas is cooled in the condenser, giving up much of its heat, the gas condenses into a high pressure liquid. This liquid travels through the **liquid line** to the metering device, a **thermostatic expansion valve.**

The thermostatic expansion valve meters how much liquid refrigerant is to be allowed into the evaporator section of the refrigeration system. This is determined by the temperature of the TXV sensing bulb, located on the **suction line** manifold, at the outlet of the **evaporators.** If the bulb senses a warm suction line, more refrigerant is allowed into the evaporator, (common at the beginning of the freeze cycle) and when the temperature begins to fall, less refrigerant is allowed through. This is why the suction side gauge pressure will decline throughout the freeze cycle. At the evaporator, the liquid refrigerant released from high pressure, boils off in the low pressure environment and absorbs heat, thus cooling the evaporator surface and anything near it, such as water.

The low pressure refrigerant vapor then is forced through the **accumulator,** where any excess liquid refrigerant is trapped, allowing only refrigerant vapor to enter the compressor suction tube, where it is recompressed into high pressure, high temperature gas again and the cycle repeats.

FREEZE CYCLE

WATER SYSTEM

A fixed charge of water had been brought into the machine during the harvest or defrost cycle.

A pump, running continuously, forces the water to the top of the evaporators, where it is distributed through manifolds, and then cascades down the evaporator surface by gravity. As it flows accross the refrigerated evaporators, some of the water will be chilled enough to change form, turn to ice, and stay frozen onto the evaporator. Most of the water returns to the reservoir, to be sucked back into the pump, and repumped over the evaporators.

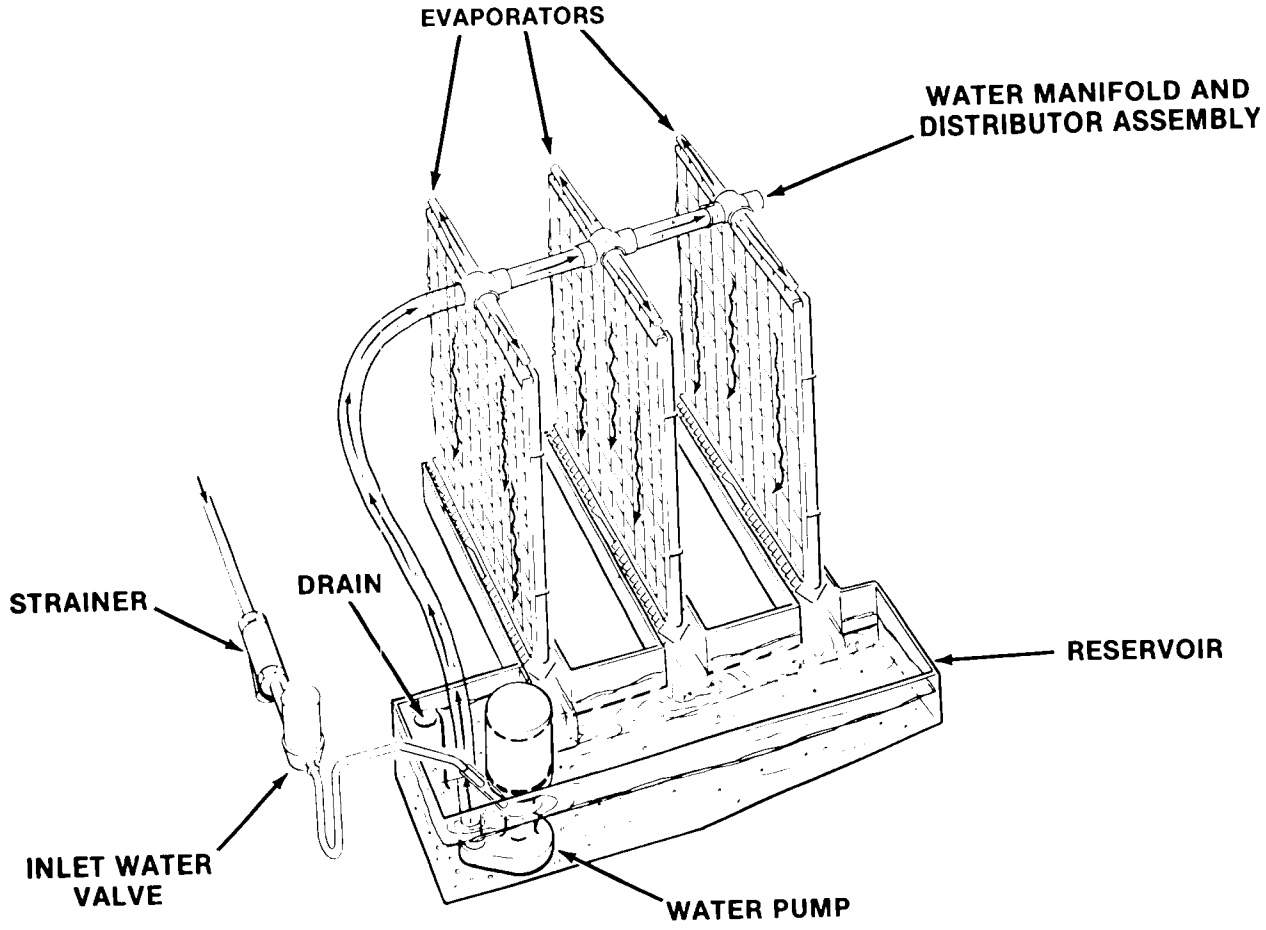

WATER FLOW SCHEMATIC

HARVEST (DEFROST) CYCLE

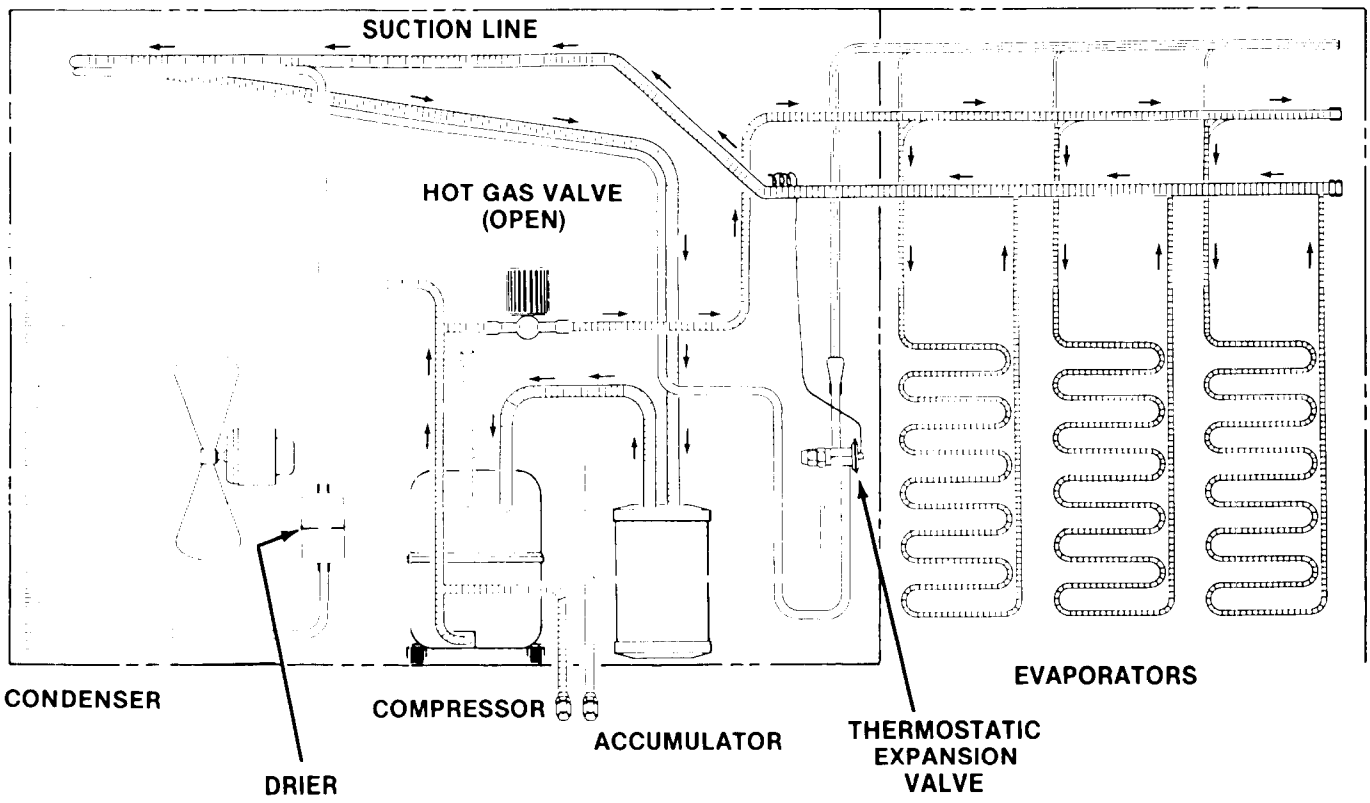

REFRIGERATION SYSTEM SCHEMATIC

REFRIGERATION SYSTEM DURING HARVEST

The refrigeration system performs the harvest of ice by use of a hot gas bypass valve. When the time comes to de-ice the evaporators, the hot gas valve is energized, and the high temperature, high pressure gas bypasses the condenser, and is allowed directly into the evaporators. The high temperature gas is cooled by the cold evaporators, so it condenses into a liquid, giving up its heat as it does so. This heat warms the evaporators, and the ice frozen onto the evaporator surface melts, releasing the frozen cubes. Ice then falls by gravity into the storage bin.

The liquid refrigerant goes through the suction line into the accumulator, where it is trapped, so that only refrigerant vapor is drawn off the top of the accumulator and back into the suction tube of the compressor.

HARVEST (DEFROST) CYCLE

WATER SYSTEM

The water in the reservoir has mostly been turned into ice during the freeze cycle, so the water level in the reservoir has gone down. During the harvest cycle, an electric water fill valve meters in a controlled amount of water into the reservoir. At the left side of the reservoir there is a stand pipe, and any excess water is drained off and out of the machine through it. The purpose of the extra water brought into the machine is to dilute the water remaining in the reservoir, and thus reduce the concentration of minerals.

The pump stays on, forcing the warm incoming water accross the evaporators to a) Assist the de-icing by warming the evaporators from the outside (as well as the refrigeration system warming it from the inside) b) Cool off the warm incoming water so that it takes less time to turn it into ice.

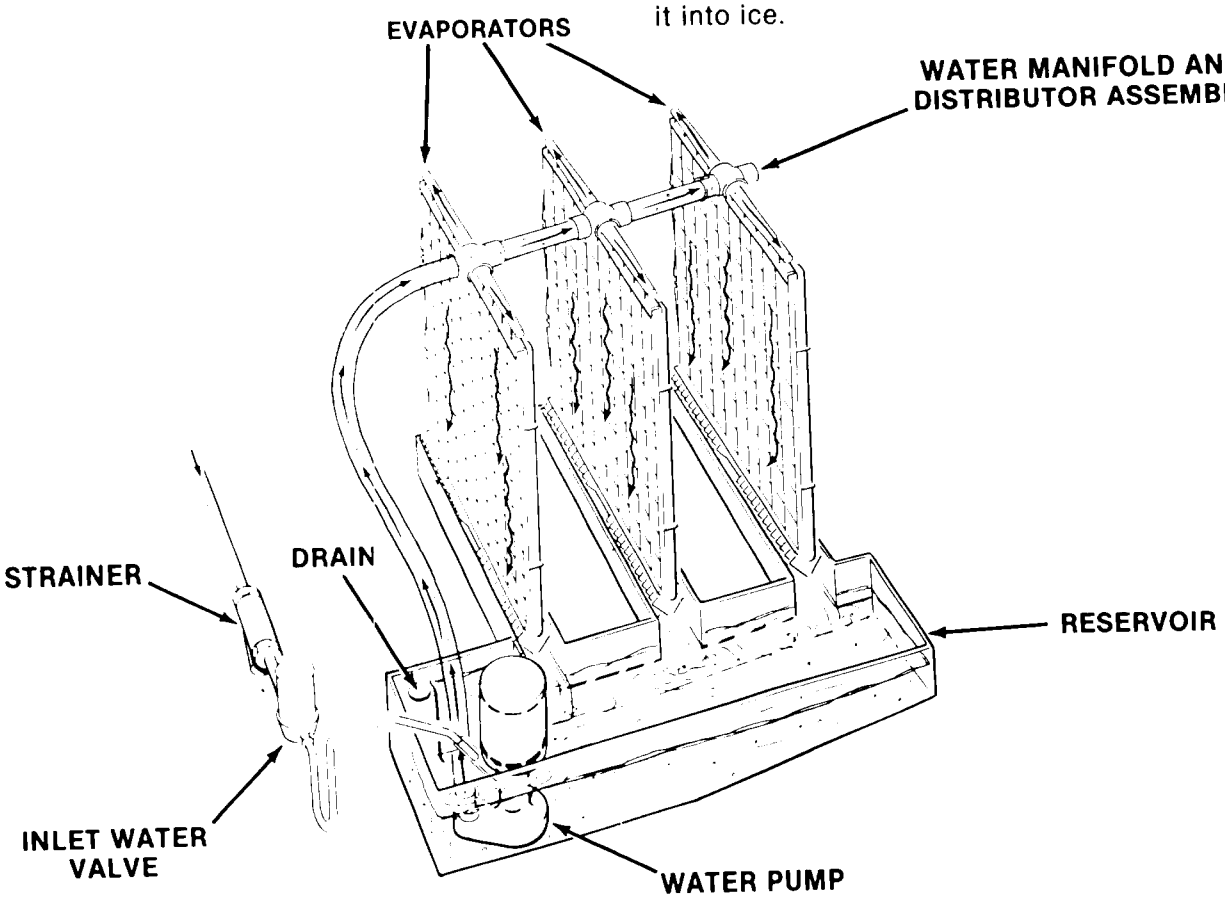

WATER FLOW SCHEMATIC

CM855 OPERATION - ELECTRICAL SEQUENCE

The following charts illustrate which switches and which components are ON or OFF during a particular phase of the icemaking cycle.

Refer to the wiring diagram for a reference. Remember, the wiring diagram shows the unit as it is in the Timed Freeze Cycle.

BEGINNING FREEZE

ELECTRICAL COMPONENTS (LOADS)	ON	OFF
Finish Relay Coil	X	
Timer Motor		X
Hot Gas Valve		X
Water Fill Valve		X
Fan Motor (Air-Cooled)	X	
Compressor Contactor Coil	X	
Pump	X	
Compressor	X	

CONTACTS (OR SWITCHES)	ON (CLOSED)	OFF (OPEN)
Finish Relay 4-7	X	
Finish Relay 8-5	X	
Finish Relay 8-2		X
Finish Relay 3-9		X
Timer NC		X
Timer NO	X	
Bin Thermostat	X	
Cube Size Control		X
High Pressure Safety	X	
High Temperature Cut-out	X	
Master Switch	X	
High Pressure Fan Control	X	
Compressor Switch	X	
Contactor Contacts	X	

At the beginning of the freeze cycle, the suction line is still warm, so the cube size control, a reverse acting thermostat, is open.

TIMED FREEZE

ELECTRICAL COMPONENTS (LOADS)	ON	OFF
Finish Relay Coil	X	
Timer Motor	X	
Hot Gas Valve		X
Water Fill Valve		X
Fan Motor (Air-Cooled)	X	X
Compressor Contactor Coil	X	
Compressor	X	

CONTACTS (OR SWITCHES)	ON (CLOSED)	OFF (OPEN)
Finish Relay 4-7	X	
Finish Relay 8-5	X	
Finish Relay 8-2		X
Finish Relay 3-9		X
Timer NC		X
Timer NO	X	
Bin Thermostat	X	
Cube Size Control	X	
High Pressure Safety	X	
High Temperature Cut-out	X	
Master Switch	X	
High Pressure Fan Control	X	X
Compressor Switch	X	
Contactor Contacts	X	

The evaporator and suction line temperatures have gone down with the build up of ice of the evaporators. The cube size control has closed, starting the timer. The fan may be off and on in low air temperatures.

HARVEST

ELECTRICAL COMPONENTS (LOADS)	ON	OFF
Finish Relay Coil		X
Timer Motor	X	
Hot Gas Valve	X	
Water Fill Valve	X	
Fan Motor (Air-Cooled)		X
Compressor Contactor Coil	X	
Compressor	X	

CONTACTS (OR SWITCHES)	ON (CLOSED)	OFF (OPEN)
Finish Relay 4-7		X
Finish Relay 8-5		X
Finish Relay 8-2	X	
Finish Relay 3-9	X	
Timer NC	X	
Timer NO		X
Bin Thermostat	X	
Cube Size Control		X
High Pressure Safety	X	
High Temperature Cut-out	X	
Master Switch	X	
High Pressure Fan Control		X
Compressor Switch	X	
Contactor Contacts	X	

The timer has advanced to the position where the microswitch plunger drops into the open area of the cam. The NO contacts open, de-energizing the relay, placing the machine in harvest: hot gas and inlet water valves on.

CM855 MAINTENANCE & CLEANING INSTRUCTIONS

A Scotsman Ice System represents a sizable investment of time and money in any company's business. In order to receive the best return for that investment, it MUST receive periodic maintenance.
It is the USER'S RESPONSIBILITY to see that the unit is properly maintained. It is always preferable, and less costly in the long run, to avoid possible down time by keeping it clean; adjusting it as needed; and by replacing worn parts before they can cause failure. The following is a list of recommended maintenance that will help keep the machine running with a minimum of problems.
Maintenance and Cleaning should be scheduled at a minimum of twice per year.

ICEMAKER

THE FOLLOWING MAINTENANCE SHOULD BE SCHEDULED AT LEAST TWO TIMES PER YEAR ON THIS ICEMAKER. CALL YOUR AUTHORIZED SCOTSMAN SERVICE AGENCY.

1. Check and clean or service any optional water treatment devices, if any.

2. Clean the water strainer.

3. On air cooled models, clean the air cooled condenser. Do not use a wire brush. Vacuum or blow out any dust in the fins of the condenser: the condenser is only clean when light can be seen through the fins.

4. Check that the cabinet is level in the side to side and front to back directions.

5. Clean the water system, evaporator plates and sump assembly, using a solution of Scotsman Ice Machine Cleaner. Refer to CLEANING - Icemaker. Cleaning requirements vary according to local water conditions and to how much the machine runs. Continuous check of the clarity and shape of the ice cubes, with a visual inspection of the water system parts, evaporator parts and the reservoir will indicate if more frequent cleaning is needed.

6. Check and tighten all bolts and screws.

7. Check for water leaks and make corrections.

8. Check that the bin thermostat operates correctly: holding ice on the thermostat control tube in the bin should cause the icemaker to shut off at the end of the harvest cycle. After the ice is removed, the icemaker should restart within a few minutes.

9. Check cube size, adjust if required.

10. Check harvest time, adjust if required.

ICE STORAGE BIN

The interior liner of the bin is in contact with a **food** product: **ice.** The storage bin must be **cleaned** regularly to maintain a **sanitary** environment. Once a week cleaning with soap and water, a hot water rinse and an air dry is a basic procedure.
Every 90 days, the liner should be sanitized with a commercial ice machine sanitizer, according to the directions of the sanitizer.

CM855 MAINTENANCE & CLEANING INSTRUCTIONS

WARNING

SCOTSMAN Ice Machine Cleaner contains Phosphoric and Hydroxyacetic acids. These compounds are corrosive and may cause burns. If swallowed, DO NOT induce vomiting. Give large amounts of water or milk. Call physician immediately. In case of external contact, flush with water. KEEP OUT OF THE REACH OF CHILDREN.

1. Empty bin of ice.
2. Pull out and remove front panel.
3. Switch both the Master and Compressor switches OFF.
4. Remove evaporator cover by lifting up and pulling out.
5. Switch the Master switch ON. Pour 8 ounces of Scotsman Ice Machine Cleaner into the reservoir. Run unit this way for 30 minutes.
6. Switch the Master switch to OFF, remove the pump hose from the evaporator water manifold, point it into the bin and switch the Master switch back to ON. This pumps the cleaning solution out of the reservoir. Add fresh water to the reservoir to thoroughly rinse the reservoir.
7. Replace pump hose.
8. Remove the control box cover, turn timer shaft clockwise until it appears as illustrated (harvest cycle.) Replace cover.

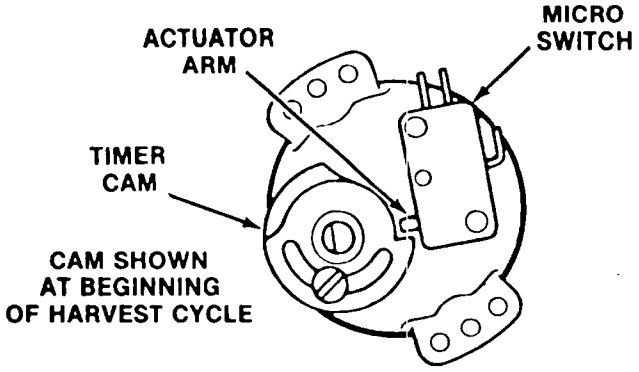

9. Switch the Compressor and Master switches ON.
10. Replace the evaporator cover and front panel.
11. Check the next batch of cubes to be sure all the cleaner is gone (no sour taste).

CAUTION

DO NOT use ice cubes produced from the cleaning solution. Be sure none remains in the bin.

12. Pour hot water into the storage bin to melt the cubes, and to also clean the bin drain.

    If necessary, the reservoir can be removed for cleaning by:

    a) Removing front panel.

    b) Switching Master switches to OFF.

    c) Removing the evaporator cover.

    d) Removing thumb screw securing pump to lower evaporator brace, unplug pump, pull it up and out of the machine. Remove hose from pump.

    e) Disconnect drain hose from left rear of reservoir, lift reservoir up and pull out off machine.

    f) Reverse to reassemble.

CM855 SERVICE SPECIFICATIONS

In servicing a machine, it is often useful to compare that individual units operating characteristics to those of a normally operating machine. The data that follows gives those characteristics; however, be aware that these values are for NEW, CLEAN machines. USE THESE NUMBERS AS A GUIDELINE ONLY.

COMPONENT

Timer - 1 revolution of the cam, in minutes 8
Harvest Time, preset, in minutes 2-1/4
Inlet Water Valve, water flow in g.p.m. 1

	CI	CO	
Cube Size Control, Reverse Acting, Temperature range	(+25°F. to 0°F.)	—	Water-Cooled
	(+12°F. to -6° F.)	—	Air-Cooled
Bin Thermostat, Temperature Range	38.5°-43.5°	33.5°-38.5°	
High Pressure Safety Switch, psig Air-cooled	Manual	450	
High Pressure Safety Switch, psig Water-cooled	Manual	350	
Fan Pressure Control, in psig Air-cooled only	210	193	

OPERATING CHARACTERISTICS

On air-cooled models during the freezing cycle, the discharge pressure will slowly decline as the unit freezes ice; and at the same time, the suction pressure will also decline, reaching it's lowest point just before freeze. Compressor amps experience a similar drop.

On water-cooled, the discharge pressure is constant, maintained during the freeze cycle by the water regulating valve at 220 PSIG. However, suction pressure and compressor amps will still decline as the machine freezes ice.

FREEZE CYCLE

Average Discharge Pressure A/C . . . 300-200 PSIG
Average Discharge Pressure W/C . . . . . 220 PSIG
Suction Pressure at the end of
the Freeze Cycle . . . . . 22-30 PSIG
Freeze Time . . . . . 15-25 Minutes
Ice Weight per cycle . . . . . 9-9.5 lbs.
Total Amps, 5 min. into Freeze 6.4-8.5
Total Amps, end of Harvest 6.6-8.6

HARVEST CYCLE

Average Discharge Pressure . . . . . 130-110 PSIG
Average Suction Pressure . . . . . 100-80 PSIG
Harvest Time, assumed to be 2-1/4 minutes. This can be adjusted to suit local conditions.

The values listed are representative of values seen at a wide range of air and water temperatures and are for a normal cube size.

When comparing these figures to field data, allow a variation from each end of the range given.

CM855 COMPONENT LOCATION AND DESCRIPTION

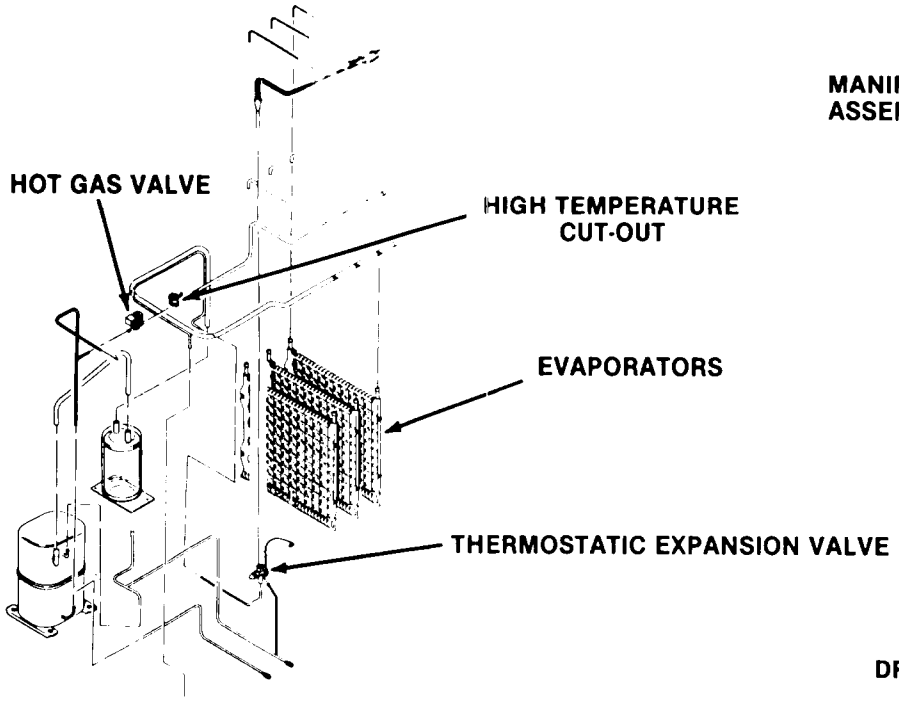

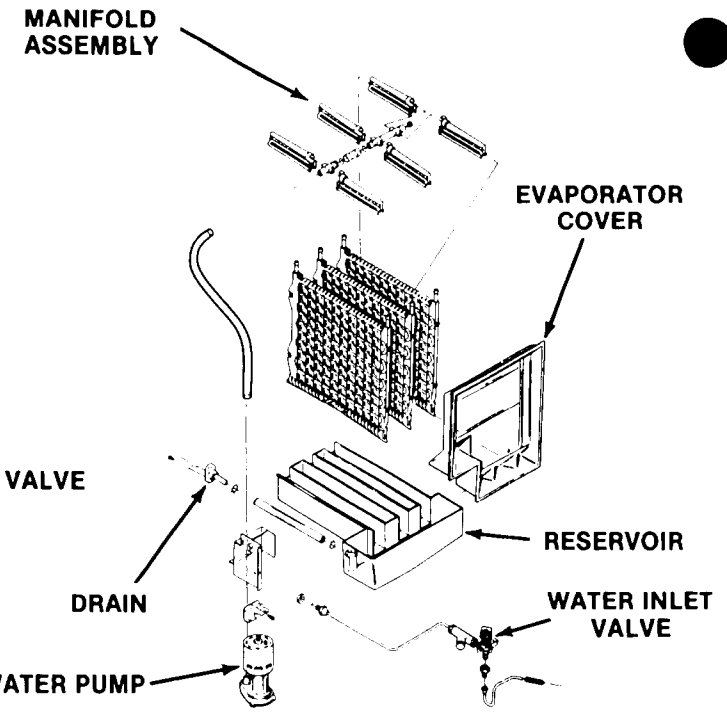

WATER AND DRAIN SYSTEM

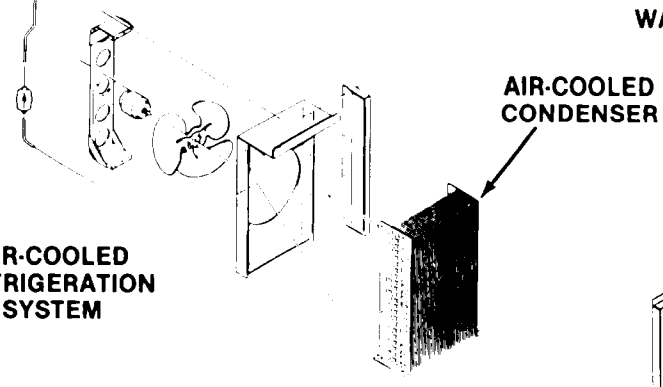

AIR-COOLED REFRIGERATION SYSTEM

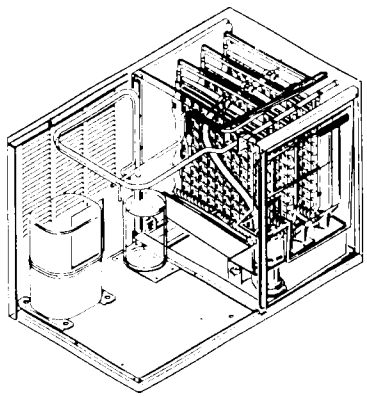

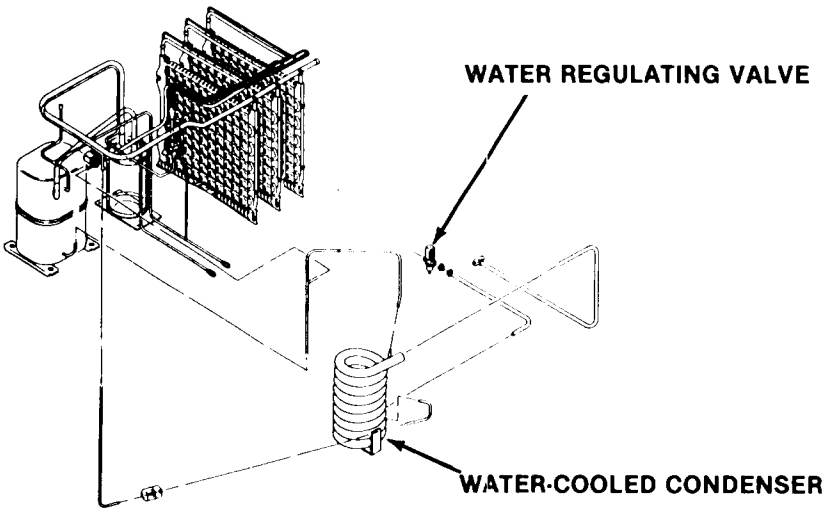

WATER-COOLED REFRIGERATION SYSTEM

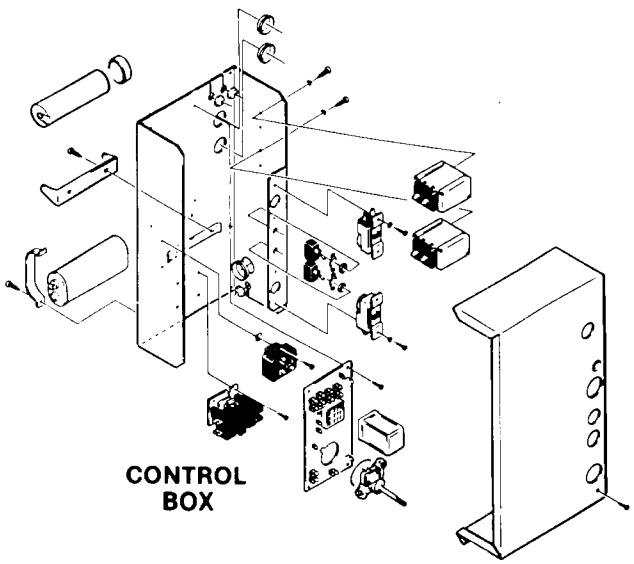

CONTROL BOX

CM855 COMPONENT LOCATION AND DESCRIPTION

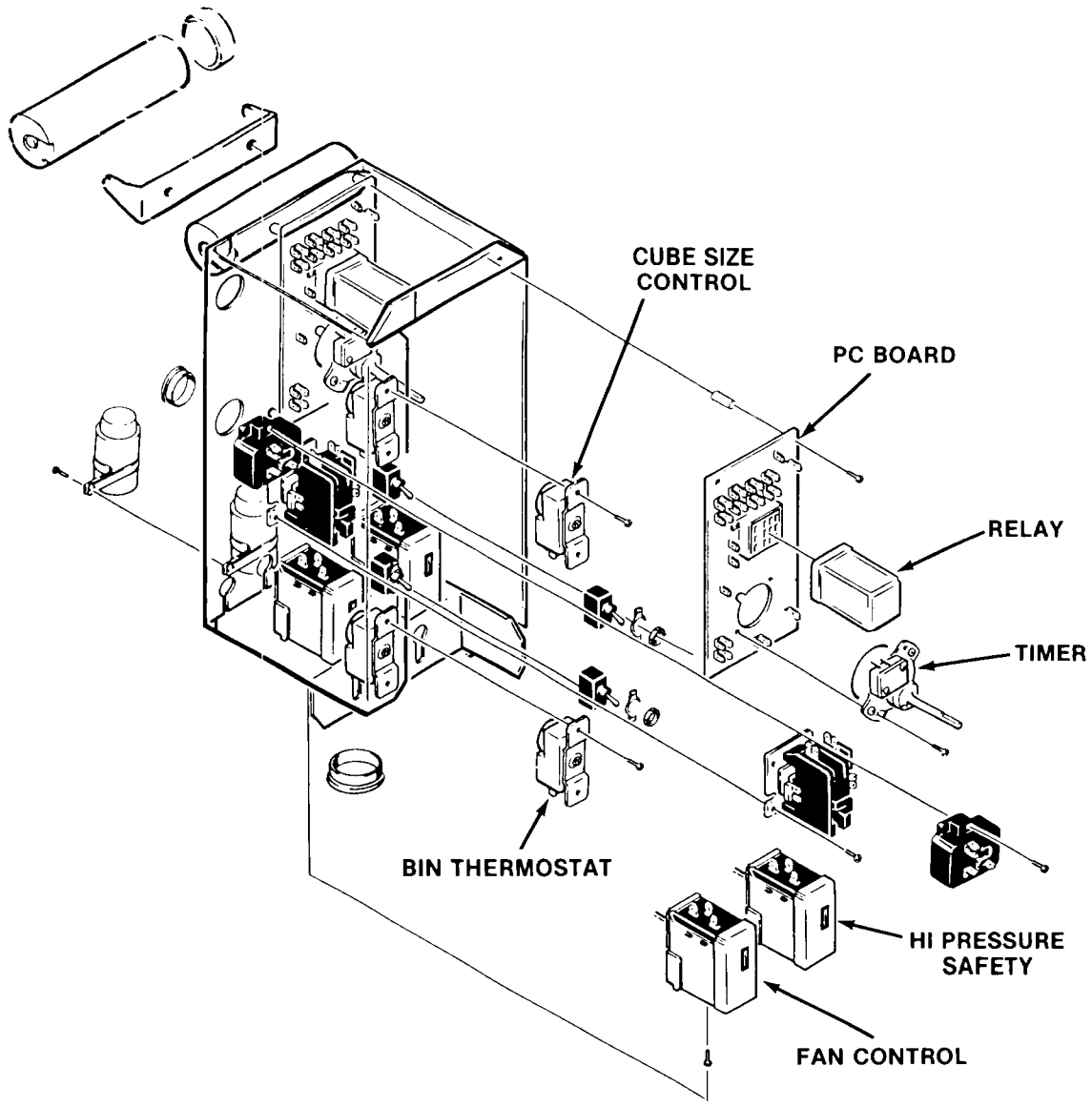

CONTROL BOX

BIN THERMOSTAT

The main control of the ice machine, opens when cold (ice on it). The unit will only turn off at the end of the first harvest cycle, after the control opens.

PC BOARD

The junction point for all of the controls.

CUBE SIZE CONTROL

A reverse acting thermostat (closes on tempeature fall). This control stabilizes the units during varying ambients. It only closes at the preset temperature the operator has it set for. The adjustment is to obtain the correct size cube.

RELAY

The machine is in FREEZE when the relay is energized, and on HARVEST when it is not energized. Plugs into the PC board.

TIMER

Harvest timer can be varied by adjusting the split cams.

HI PRESSURE SAFETY

Shuts the machine off should the high side pressure become too great. Manual reset.

FAN CONTROL

On air-cooled models, only, directly controls the fan motor. Keeps head pressure up in very cold ambients.

CM855 COMPONENT LOCATION AND DESCRIPTION

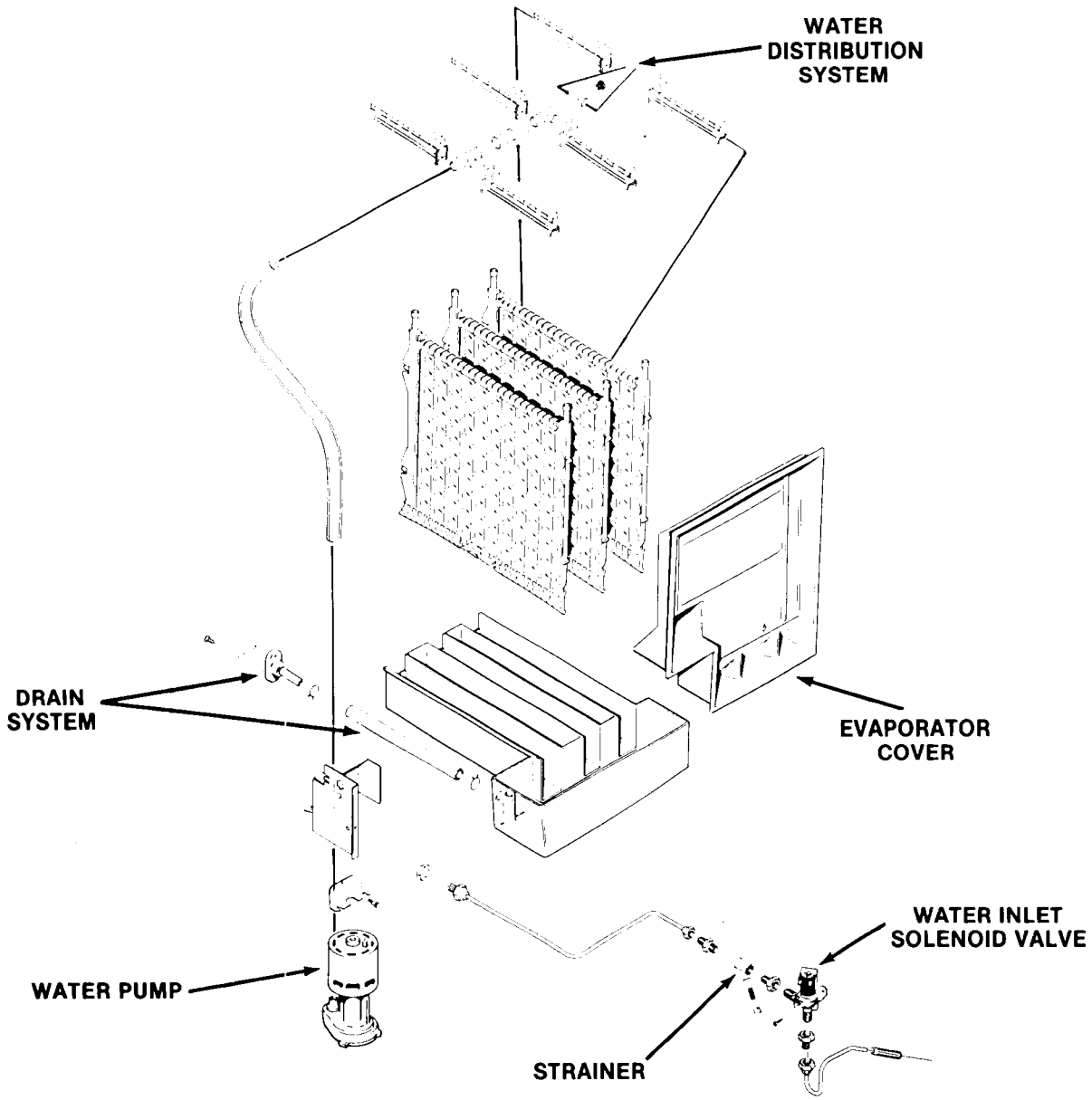

WATER INLET SOLENOID VALVE

The water inlet solenoid valve opens during harvest to fill the sump assembly with water. Excess water overflows through a stand pipe located at the back of the sump to flush minerals from the sump.

WATER PUMP

The water pump picks up water from the base of the reservoir, and forces it up to the top of the evaporators. It remains on throughout the freeze and harvest cycles.

EVAPORATOR COVER

This cover, held in place by shoulder screws, covers the freezing compartment front, keeping any ice and water from splashing the front panel and the water pump.

DRAIN SYSTEM

The drain system functions to allow the excess water brought into the machine during the harvest cycle, to be easily drained away. A standpipe in the back of the reservoir maintains the water level, and is connected to the cabinet drain fitting by tygon tubing.

WATER DISTRIBUTION SYSTEM

The water distribution system functions to evenly supply water to all cells of the evaporator plates. The water pump pumps water from the sump up to the vertical tygon tube to a tee. From there water is channeled through water manifolds to the water distributors, two atop each evaporator plate, and distributed evenly down both sides of each evaporator plate. Gravity flow returns the water to the sump reservoir for recirculation.

CM855 SERVICE DIAGNOSIS

The table below is intended as a quick reference to aid the Service Agent in determining the cause of a particular type of malfunction, as well as the recommended repair. It is not intended to be an exclusive list.

Reference to other portions of this manual, including wiring diagrams, installation, and operation are recommended to better determine the cause of a problem.

SYMPTOM	POSSIBLE CAUSE	CORRECTION
Machine does not run at all.	Master switch open, high pressure safety open.	Test and replace. Reset or replace.
	High temperature cut-out open.	Check temperature of hot gas line, check switch.
	P.C. board open.	Remove board and check.
	No power to unit.	Check electrical source.
	Bin control open.	Test and replace.
Machine runs, compressor does not.	Compressor switch open.	Test and replace.
	Compressor contactor open.	Test and replace.
	Compressor relay open.	Test and replace.
	Compressor open.	Test and replace.
Machine runs, makes no ice.	No water.	Check water supply and fill valve.
	Water, but not pumping	Check power to pump, replace pump.
	Water pumping but does not cool.	Check refrigeration system pressure, check fill valve for leak through, check condenser for clog, or poor air circulation, check compressor. Test and replace relay, must be **energized** to freeze.
Machine runs, makes ice, does not try to harvest (timer does not advance).	Cube size control open.	Test and replace control.
	Timer motor open.	Test and replace timer.
	Refrigerant charge	Test and add refrigerant. Check for leak, weigh in charge after repair.
	P.C. board open to timer.	Check and replace.
	Relay contacts 8/5 open during freeze.	Test and replace relay.

CM855 SERVICE DIAGNOSIS

SYMPTOM	POSSIBLE CAUSE	CORRECTION
Machine runs, makes and harvests ice, but very slowly; low ice capacity.	Low refrigerant charge.	Check system, repair leak weigh in charge.
	High discharge pressure due to non-condensable or over charge.	Evacuate and weigh in charge
	Extra water coming in during freeze.	Test and replace fill valve.
	Condenser dirty.	Clean.
	Low water pressure (water-cooled).	Check and repair.
	High air temperature (air-cooled).	Check temperature of air entering condenser.
Low ice capacity, machine runs fine.	Bin control shutting unit off prematurely.	Check bin control position and function.
	Water backing up into bin.	Check and clean bin drain.
	High temperature C.O. shuts unit off and on.	Check hot gas valve for leak through.
Machine makes irregular ice - Makes ice on some evaporators, or the top only.	Low water supply.	Check fill valve.
	Plugged water manifolds. TXV superheat wrong. Refrigerant charge low.	Clean machine. Adjust and replace. Adjust - check for leak, recharge.
Machine runs, makes ice, timer advances, but does not harvest.	Relay contacts 3-9 open during harvest.	Test and replace relay.
	Timer microswitch N.O. CONTACTS DO NOT open.	Test and replace timer.
	Hot gas valve coil open.	Test and replace hot gas valve.
	Hot gas valve will not open.	Test and replace hot gas valve.
	Low refrigerant charge.	Add refrigerant. Check and perform test for leaks.

CM855 REMOVAL AND REPLACEMENT PROCEDURES

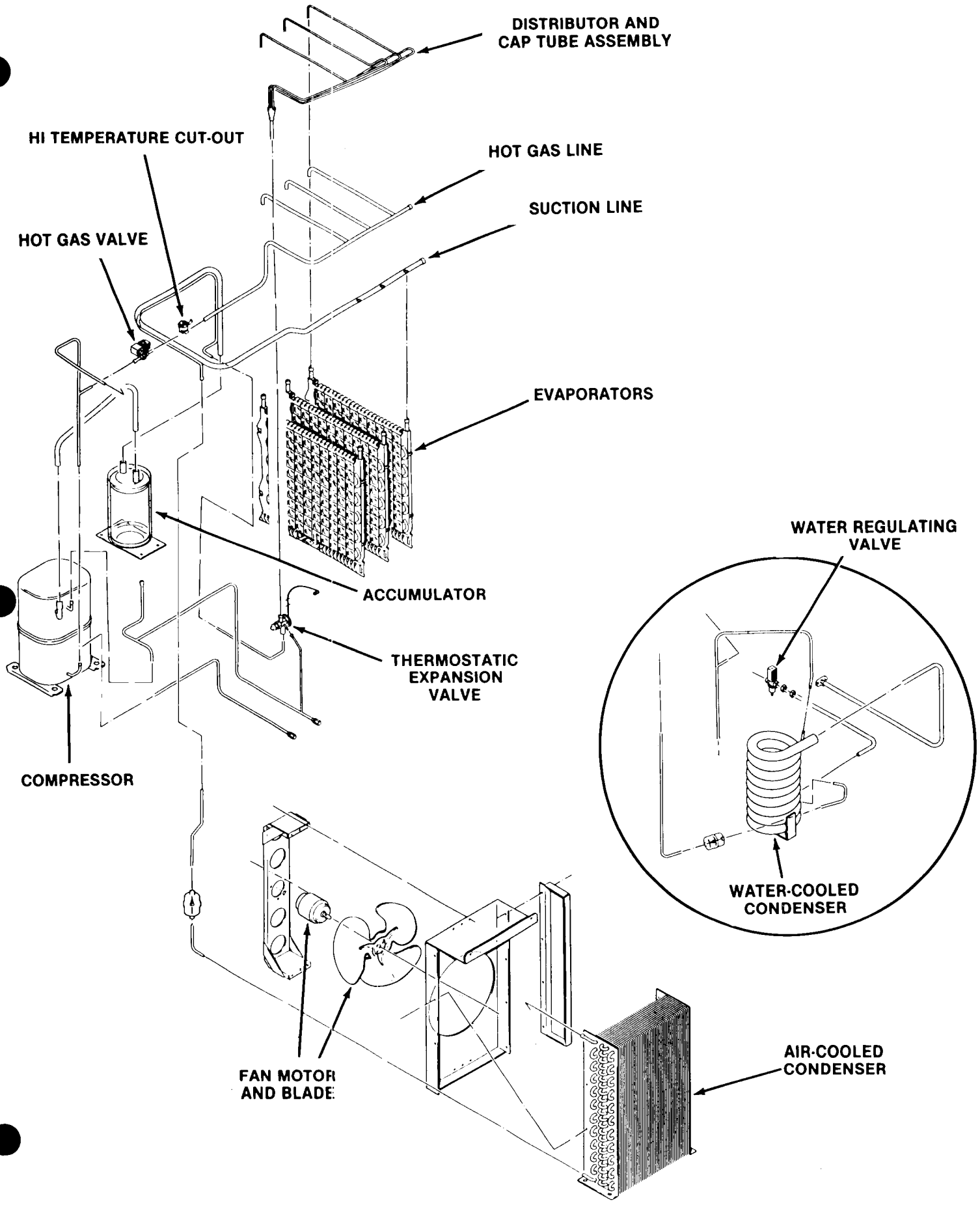

CM855 REMOVAL AND REPLACEMENT PROCEDURES

WARNING

Disconnect electric power supply to icemaker whenever replacement procedures are performed.

WATER PUMP

1. Remove front panel.
2. Lift up, and remove evaporator cover.
3. Unplug pump.
4. Remove one screw holding pump bracket to evaporator cross brace.
5. Pull pump forward and lift up.
6. Remove discharge hose from pump outlet.

Reverse to replace.

RESERVOIR

1. Perform above steps and remove water pump.
2. Use corbin clamp pliers, push hose clamp of drain hose away from reservoir fitting. Remove drain hose from reservoir.
3. Lift up, and pull forward to remove reservoir.

Reverse to replace.

DISTRIBUTORS/WATER MANIFOLDS

1. Remove front panel.
2. Remove evaporator cover.
3. Pull distributor forward and lift up in the back, after distributor comes up in back, push back and unsnap distributor from water manifolds.
4. Water manifolds can be pulled away from each other. Check "O" rings in connectors.

Reverse to replace.

INLET WATER VALVE

1. Remove front panel.
2. Unplug water valve.
3. Remove flare nut securing outlet tube to valve.
4. Remove flare nut from inlet fitting.
5. Remove two screws securing valve to bulkhead wall, and remove valve.
6. Remove brass water fitting from old valve to put on new valve.

Reverse to replace.

COMPRESSOR

1. Remove top panel (if possible), front panel, and left side service panel.
2. Disconnect electrical lines from compressor.
3. Purge system of refrigerant.
4. Remove compressor mounting bolts.
5. Cut or unsweat discharge, process, and suction lines.
6. Remove compressor from unit. Check or replace starting components.

Reverse to reassemble.

CONDENSER

AIR-COOLED

1. Remove front and top panel.
2. Disconnect fan motor from condenser.
3. Purge system of refrigerant.
4. Cut or unsweat liquid and discharge lines.
5. Unbolt and remove condenser.
6. Dismount fan shroud from condenser.

Reverse to reassemble.

WATER-COOLED

1. Shut off water.
2. Remove front panel.
3. Purge system of refrigerant.
4. Unsweat water and refrigerant lines.
5. Unbolt and remove condenser.

Reverse to reassemble.

HOT GAS VALVE

1. Remove front, left side, and top panel (if possible).
2. Unplug hot gas valve.
3. Purge system of refrigerant.
4. Cut or unsweat valve, remove from machine.
5. To replace, heat sinking the valve is **CRITICAL.** Wrap the replacement valve in wet rags, and sweat into place. Leave rags on until joints cool.

Reverse steps 3-1 to reassemble.

CM855 REMOVAL AND REPLACEMENT PROCEDURES

WARNING

Disconnect electric power supply to icemaker whenever replacement procedures are performed.

WATER REGULATING VALVE

1. Shut off water.
2. Remove front panel.
3. At the rear of the unit, unscrew water inlet connection and screws holding water regulator valve to cabinet back.
4. Purge system of refrigerant.
5. Unscrew fitting at outlet of valve.
6. Unsweat valve connection from "T" drilled hole.
7. Remove valve from machine.

Reverse to reassemble.

THERMOSTATIC EXPANSION VALVE

1. Remove front and top panel (if possible).
2. Purge system of refrigerant.
3. Cut or unsweat valve at inlet, equalizer, and outlet.
4. Remove insulation from valve bulb, remove mounting straps and valve from cabinet.
5. Place new valve bulb in same place as old valve, secure with straps, and reinsulate.
6. To replace, heat sinking the valve is **CRITICAL.** Wrap the body of the valve in wet rags and sweat into place. Leave rags on until joints cool.

Reverse to reassemble.

NOTE

Always install a replacement drier, anytime the sealed refrigeration system is opened. Do not replace the drier until all other repair or replacement has been completed.

Thoroughly evacuate the system to remove moisture and non-condensables.

FAN MOTOR OR BLADE

1. Remove left side service panel.
2. Unplug fan motor.
3. Remove fan motor bracket.
4. Remove fan blade from motor. Note location on motor shaft, and hub position.
5. To replace fan motor also, remove it from bracket.

Reverse to reassemble.

NOTE

*When replacing a refrigeration component, the exact refrigerant charge must be **weighed** or metered into a completely evacuated system, because the CM1000 is a **critically** charged system.*

CM855 REMOVAL AND REPLACEMENT PROCEDURES

WARNING

Be sure the electrical power supply circuit breaker and the inlet water supply are OFF, BEFORE starting any of the following REMOVAL AND REPLACEMENT procedures as a precaution to prevent possible personal injury or damage to equipment.

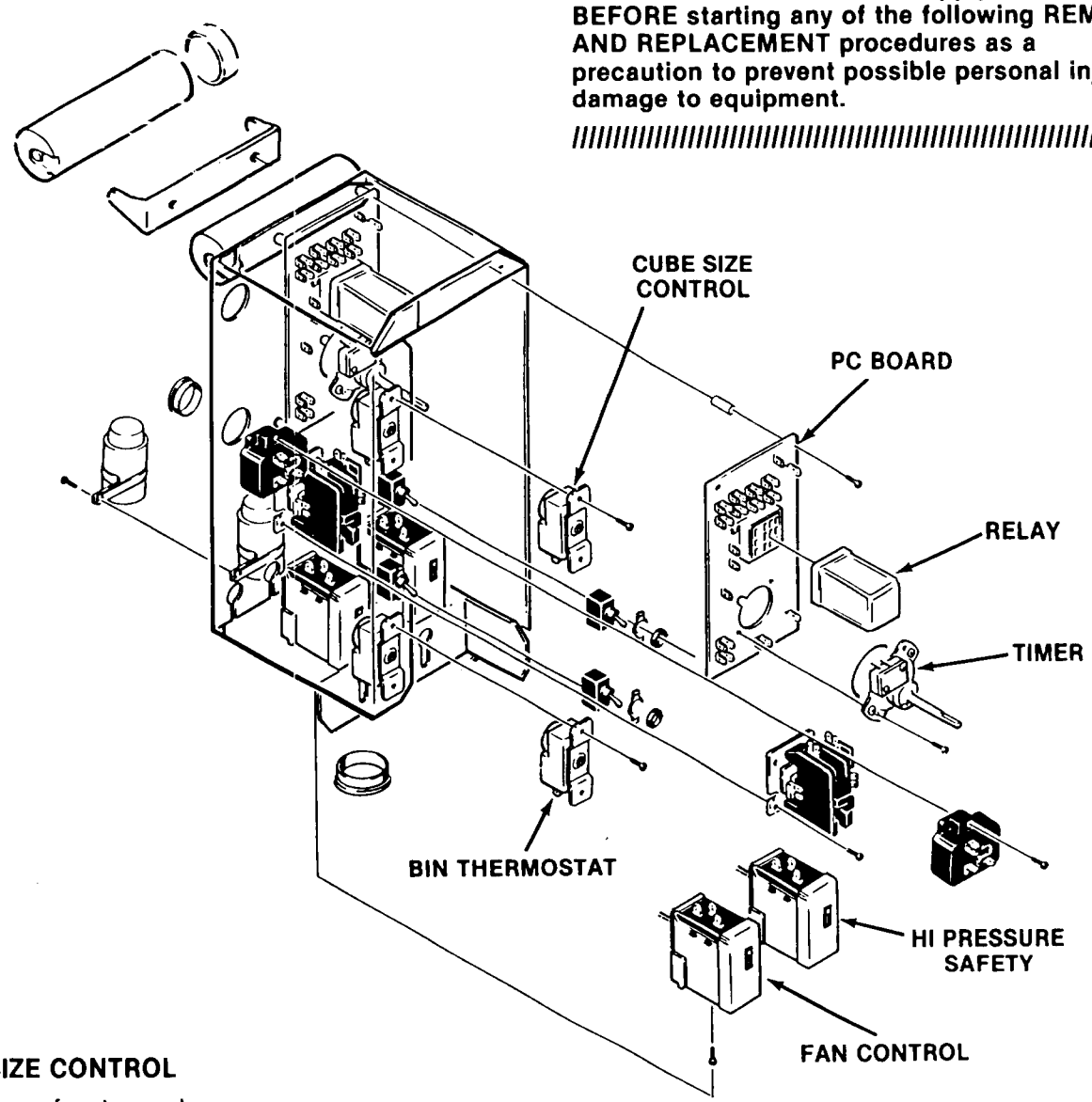

CUBE SIZE CONTROL

1. Remove front panel.
2. Remove control box cover.
3. Above control box, locate bulb well for cube size control, remove insulation and bulb from well.
4. Disconnect wires, remove knob and body of control from control box.

Reverse to reassemble.

TIMER

1. Remove front panel.
2. Remove control box cover.
3. Remove quick connects from P.C. board at posts marked "timer".
4. Unscrew timer from stand offs and remove.

Reverse to reassemble.

BIN THERMOSTAT

1. Remove front panel.
2. Pull bin control capillary out of bracket.
3. Remove control box cover
4. Disconnect wires from thermostat body, remove body from control box.

Reverse to reassemble.

RELAY

1. Relay is plugged into P.C. board.

To the Owner or User:

The Service Manual you are reading is intended to provide you, and the maintenance or service technician, with the information needed to install, start up, clean, maintain, and service the ice system.

Refer to this table of contents to locate the information you need.

TABLE OF CONTENTS

GENERAL INFORMATION & INSTALLATION

For the Installer 2
For the Electrician 10
For the Plumber 13

OPERATION

Start-Up 15
Operation 18
Operation - Electrical Sequence 23

MAINTENANCE & CLEANING INSTRUCTIONS

Icemaker 27
Ice Storage Bin 27
Remote Condenser 29

COMPONENT DESCRIPTION 31

SERVICE DIAGNOSIS 36

REMOVAL AND REPLACEMENT PROCEDURES

Water Pump 40
Reservoir 40
Distributors/Water Manifolds 40
Inlet Water Valve 40
Cube Size Control 41
Timer 41
Bin Thermostat 41
Pressure Controls 41
Compressor 42
Hot Gas Valve or Liquid Line Valve 42
Thermostatic Expansion Valve 42
Head Pressure Control Valve 42
Evaporator Plate Assembly 43

LIST OF ILLUSTRATIONS

Specifications 2
Stacking Instructions 5
Bin Control Installation 6
Component Location 7
Remote Condenser Installation 8
Coupling Instructions 9
Electrical Connections 10
Water & Drain Connections 13
Final Checklist 14
Timer Cam Positions 15
Ice Cube Size & Shape 16
Cube Size Adjustment 17
Freezing Cycle 18
Harvest Cycle 19
Pump Down 20
Water Flow Schematic 22
Maintenance & Cleaning Instructions 29
Component Description 30
Removal and Replacement 39
Removal and Replacement - Control Box 41
Removal and Replacement - Evaporator Assembly 43

PARTS LIST AND WIRING DIAGRAM 1
(Printed in Yellow)

PARTS LIST:

Component Location 2
Exterior Cabinet 3
Control Box 4
Water System 5
Refrigeration Assembly 6
Remote Condenser 8
Pre-Charged Tubing Kit 8
KCMR230 8
BH800 9

WIRING DIAGRAM:

CM855RE-32A 10

THIS PAGE
INTENTIONALLY
LEFT BLANK

CM855R FOR THE INSTALLER

CM855R CABINET SIZE AND UTILITY CONNECTIONS

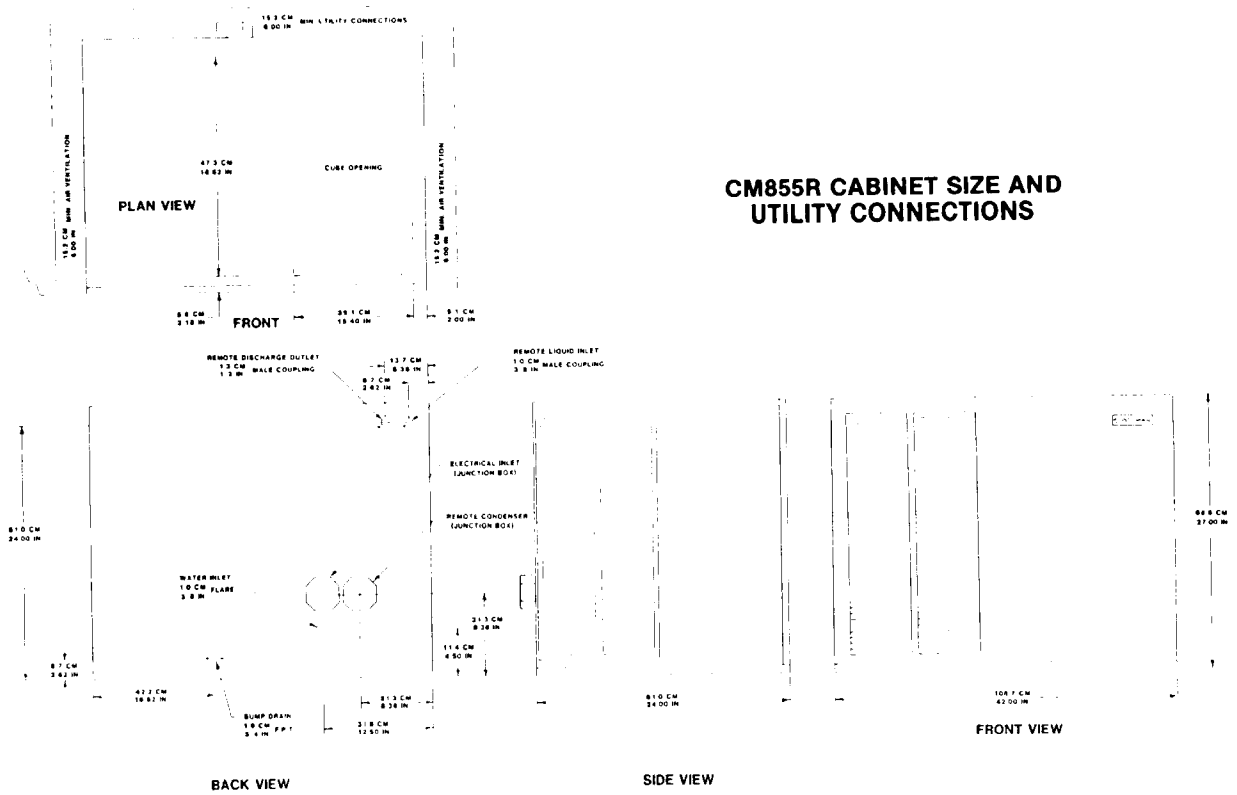

REMOTE CONDENSER

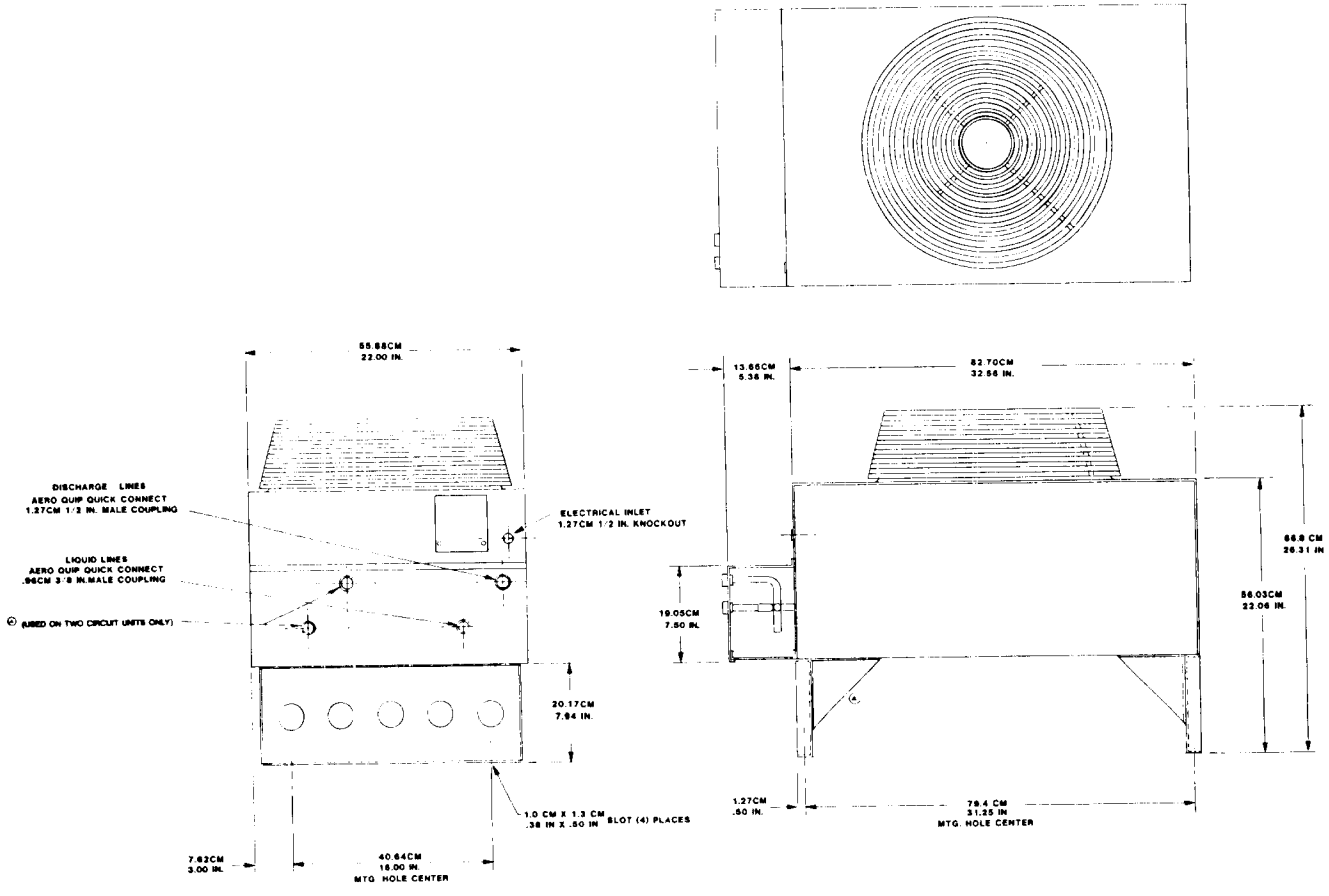

CM855R FOR THE INSTALLER

EQUIPMENT LIST:

All of the following components must be available before assembly.
Icemaker: CM855RE-32 or CM855RE-3
Ice Storage Bin: BH800E or BH800S or acceptable substitute. Legs kits included with storage bin.
Pre-charged refrigerant lines (R-502)
RT625 = 25 feet
RT640 = 40 feet
Remote Condenser, R502
RC1051-32A single pass
RC1052-32A double pass
If two CM855RE's are to be installed on one RC1052-32A condenser, a fan relay kit, KCMR230 must be used to operate the condenser fan.

NAMEPLATE

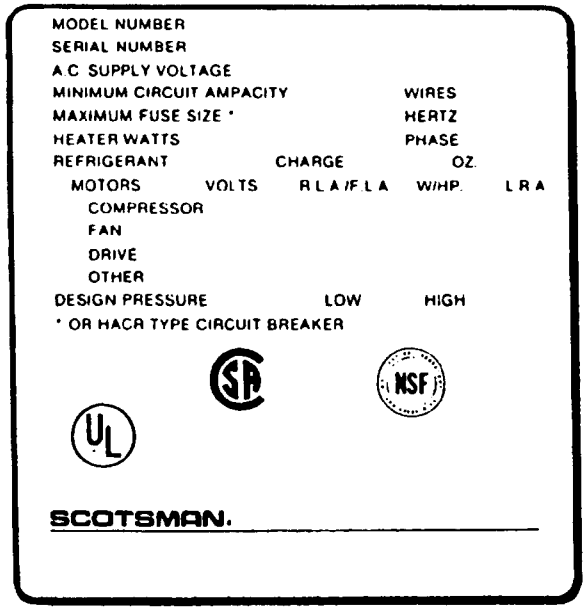

Scotsman Ice Systems are designed and manufactured with the highest regard for safety and performance. They meet or exceed the standards of U.L., N.S.F. and C.S.A.
Scotsman assumes no liability or resposibility of any kind for products manufactured by Scotsman that have been altered in any way.
Scotsman reserves the right to make changes and/or improvements at any time.
Specifications and designs are subject to change without notice.

SPECIFICATIONS: Icemaker

Model Number	(Height w/o bin) Dimensions H" x W" D"	Ice Type	Basic Electrical	Compressor HP	Minimum Circuit Ampacity+	Maximum Fuse Size
CM855RE-32B CM855RE-3B	27 x 42 x 24 same	Contour Cube Same	208-230/60/1 208-230/60/3	1.75 same	16.5 13.5	30 20

The standard finish is enamel sandalwood. The optional kit to convert the CM855 to stainless steel is: SPKCM1000.

SPECIFICATIONS: Remote Condenser

Model Number	Dimensions H" x W" x D"	Use With	Basic Electrical	Minimum Circuit Ampacity*
RC1051-32A RC1052-32A	27 13/16 x 22 x 37 1/2 same	1-CM855RE 1 or 2 CM855RE	208-230/60/1 same	2 same

The finish of the condenser is galvinized.
+ Use this value to determine wire size as per national electric code.
* The ampacity for the remote condenser is included in the icemaker's ampacity. Use this figure to determine wire size between the icemaker and the condenser fan motor, per the National Electric Code.

CM855R FOR THE INSTALLER

SPECIFICATIONS - Storage Bin

Model Number	(Height - w/o Legs) Dimensions H" x W" x D"	Uses With	Storage Capacity	Finish	Ship. Wt.
BH800E	44" x 42" x 31.5"	CM1000	800	Enamel Sandalwood	177 lbs.
BH800S	44" x 42" x 31.5"	CM1000*	800	Stainless Steel	186 lbs.

OPERATING LIMITATIONS

	MINIMUM	MAXIMUM
TEMPERATURE*		
Air Temperature	50°F (10.0°C)	100°F (38°C)
Water Temperatures	40°F (4.4°C)	100°F (38°C)
Water Pressure	20 lbs. gauge	100 lbs. gauge
Electrical Voltage Variations		
Voltage rating specified on nameplate	-5%	+ 10%

* This does not include the remote condenser. The remote condenser can operate between -20°F and 120°F.

NOTICE: Extended periods of operation exceeding the above limitations constitute misuse under the terms of the manufacturer's limited warranty, and can result in a loss of warranty.

Nameplate location: see illustration page 7.

BH800 BIN

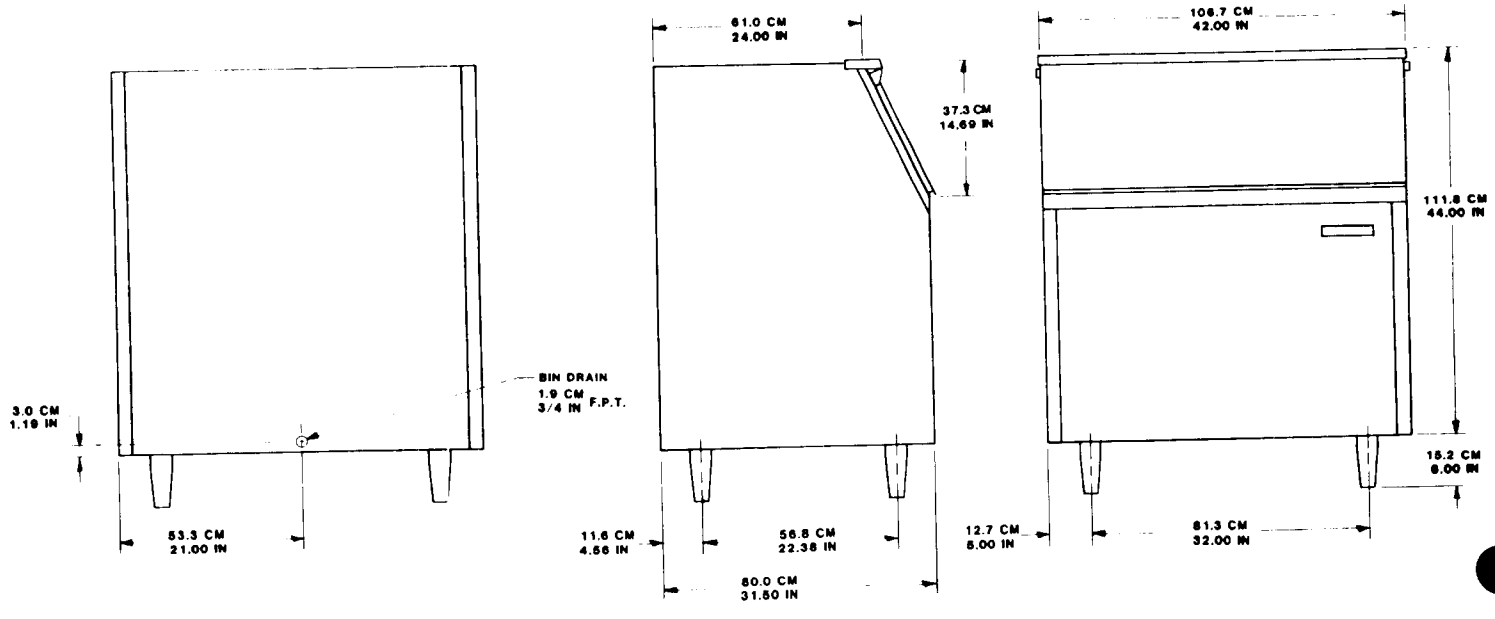

CM855R FOR THE INSTALLER

LOCATION

The first step in installing this equipment is to select the location. The purchaser of the unit will have a desired spot for it, so go over the location with the purchaser to insure that it is

- indoors - icemaker and bin.
- that the air and water temperatures do not exceed the design limitations for the equipment.
- that the necessary utilities are available - the correct voltage electrical power, the correct size water and drain lines.
- that there is some space around the unit available for servicing it and the utilities that are connected to it.
- that the distance between the icemaker and the remote condenser is less than the length of pre charged tubing on hand.

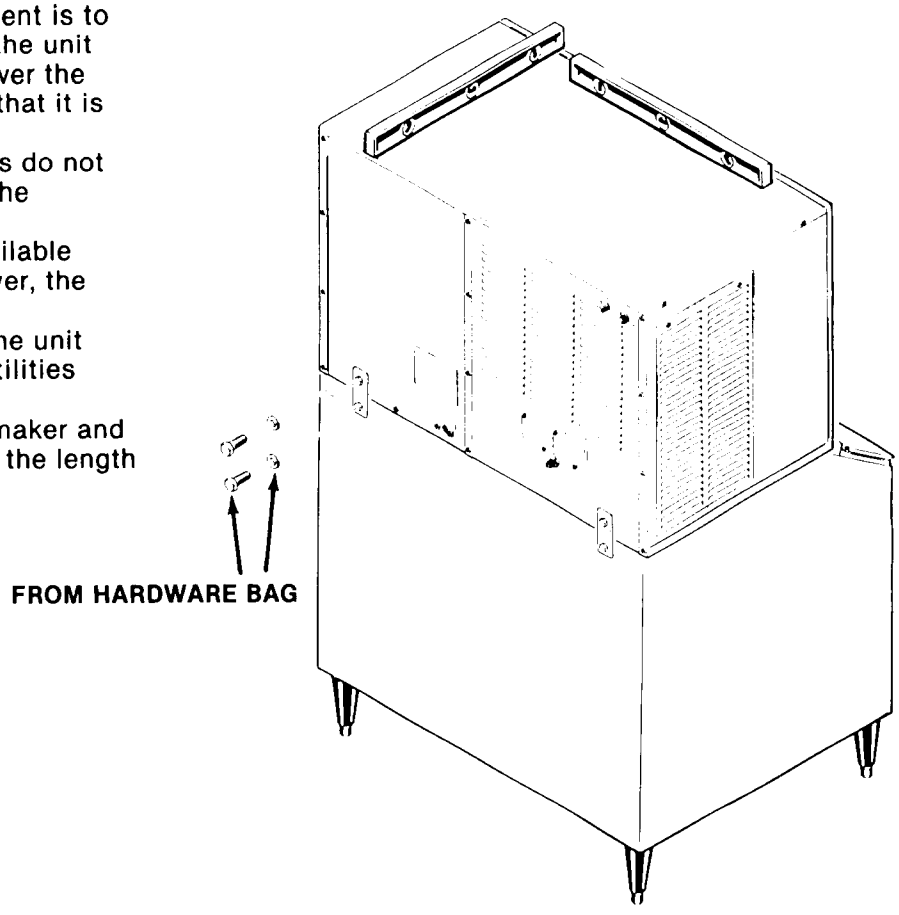

STORAGE BIN

Carefully lay the bin on its back, and install the legs (if used) into the threaded holes in the bottom of the bin. Stand the bin upright, and examine the bin top edge gasket for tears and gaps. Small gaps can be filled using food grade silicone sealant, just prior to installing the icemaker on the bin.

PLACE ICEMAKER ONTO THE BIN

The use of a mechanical lift is recommended for lifting the uncrated icemaker onto the bin. Place the unit directly onto the bin, align the panels so that the unit is even with the back, left and right sides of the bin. Locate hardware package, take out two metal straps, and 2 mounting bolts. Remove shipping channel from left back panel. Use the two cap screws from it and the two screws from the hardware package to secure the icemaker to the bin. See illustration.

STACKING INSTRUCTIONS

If two icemakers are placed on one bin, the stacking of the machine requires the following:

A. Remove the top panel from the lower unit.

B. Place a bead of food grade silastic rubber on the top edge of the lower unit freezing compartment.

C. Using a mechanical lift, lift the top machine and place it on top of the bottom unit. Align the top unit to the bottom one.

D. Using the straps and bolts from the top machine's hardware package, secure the top unit to the bottom one (see illustration).

E. Locate and discard the upper unit bin control bracket.

F. Route upper unit bin control capillary tube through the hole in the base of the upper unit, through the lower unit, and install it inside the bin control bracket **with** the lower unit bin control capillary tube.

CM855R FOR THE INSTALLER

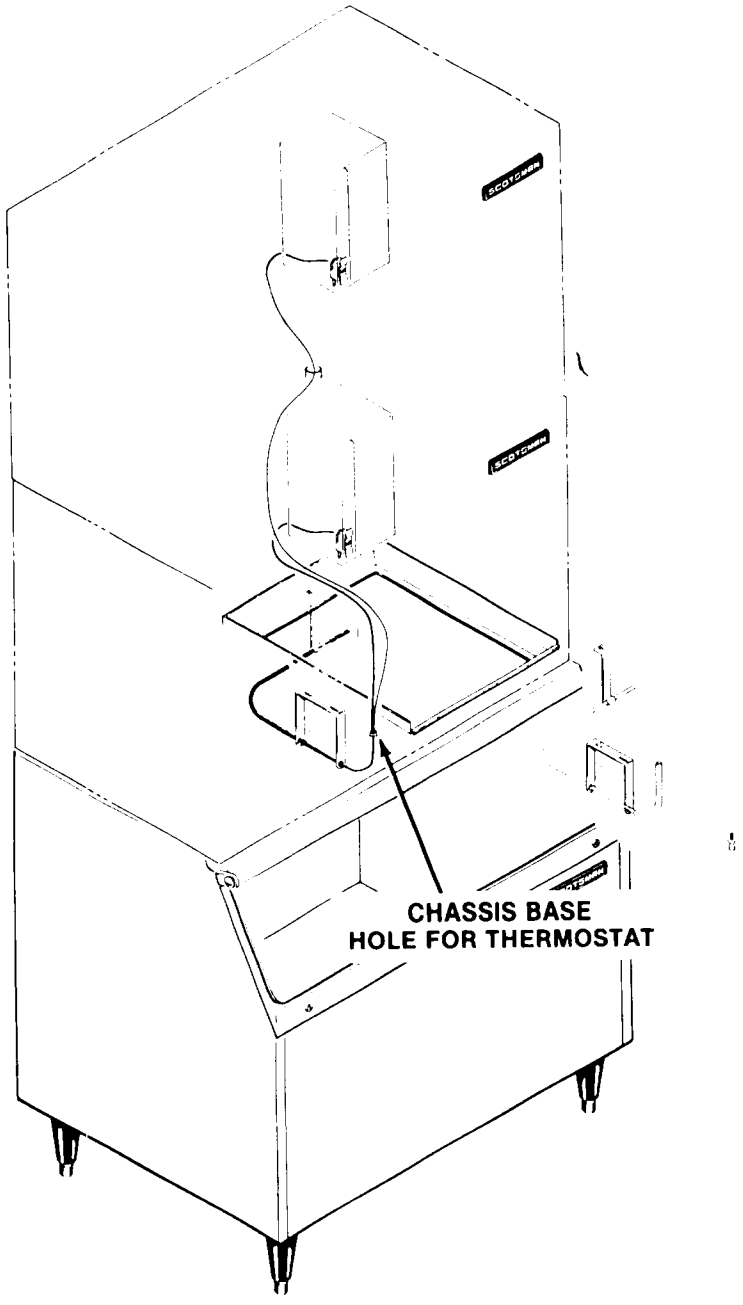

BIN CONTROL

The bin control bracket is packed for shipping in a cardboard retainer, located in front of the freezing compartment, behind the front panel. It is to be mounted onto the bottom of the icemaker **after** the unit has been installed on the bin. Discard rubber tip.

Using 3 thumbscrews from the hardware package, mount the bracket to the machine:

A. First install one screw in the hole provided at the back of the unit, and then slip the bracket hanger over the head of the screw (see illustration).

B. Use the two remaining screws to secure the bracket on the left side of the freezing compartment.

C. Uncoil and install the bin thermostat capillary tube into the bracket, stopping at the end of the tube.

CM855R FOR THE INSTALLER

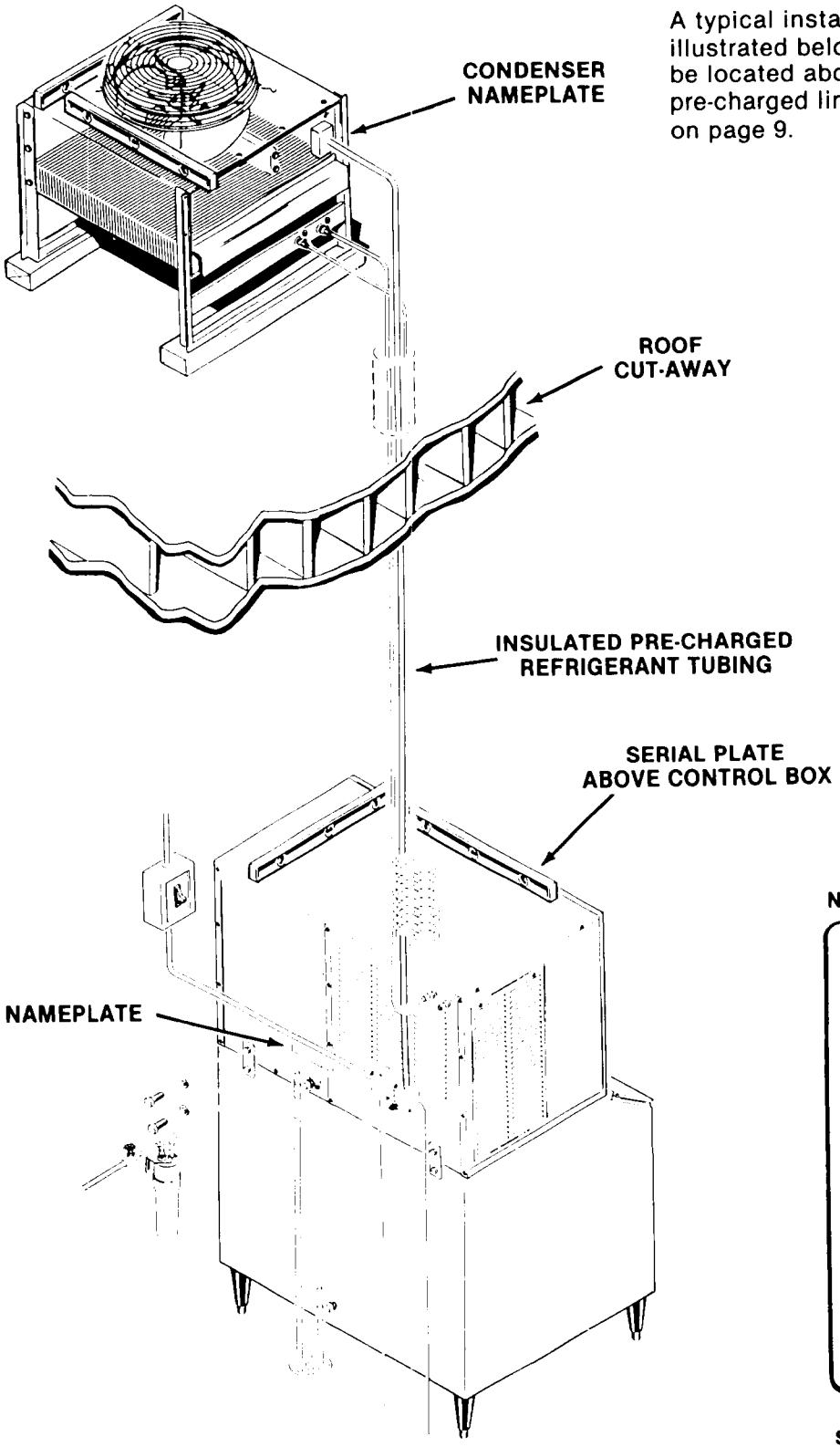

A typical installation should generally appear as illustrated below. The remote condenser must be located above the icemaker and the pre-charged lines installed per instructions on page 9.

NAME PLATE

MODEL NUMBER
SERIAL NUMBER
A.C. SUPPLY VOLTAGE
MINIMUM CIRCUIT AMPACITY WIRES
MAXIMUM FUSE SIZE * HERTZ
HEATER WATTS PHASE
REFRIGERANT CHARGE OZ.

MOTORS	VOLTS	R.L.A./F.L.A.	W/HP.	L.R.A.
COMPRESSOR				
FAN				
DRIVE				
OTHER				

DESIGN PRESSURE LOW HIGH
* OR HACR TYPE CIRCUIT BREAKER

SCOTSMAN
ALBERT LEA, MINNESOTA U.S.A.

SERIAL NUMBER PLATE

MODEL NUMBER
SERIAL NUMBER
VOLTS/HERTS/PHASE
MAXIMUM FUSE SIZE
REFRIGERANT CHARGE OZ.

CM855R FOR THE INSTALLER

REMOTE CONDENSER INSTALLATION

Location Considerations:

Limited to a 40-foot length or a 25-foot length of pre-charged refrigerant line from the rear of the icemaker chassis to the remote condenser with consideration for routing. The condenser must be above or level with the highest (if stacked) icemaker.

Best available location, protected from the extremes of dirt, dust, and sun.

Must meet local building code installation requirements. Usually the services of a licensed electrician are required.

Remote Condenser - Roof Attachment.

1. Install and attach the remote condenser to the roof of the building, using the methods and practices of building standards that conforms to and meets the local building code requirements in your area.
2. Have an electrician connect the remote condenser fan motor electrically to the CM855R at the junction box of the remote condenser and junction box of the CM855R.

PRE-CHARGED TUBING KIT ROUTING:

CAUTION

Do not connect pre-charged tubing until all routing and forming of tubing is complete. See Coupling Instructions, Pre-Charged Tubing Kit, page 9, for connecting instructions.

1. Each set of pre-charged refrigerant lines in the 25-foot length, or 40-foot length kits, consists of a 3/8-inch diameter, self-sealing LIQUID line and a 1/2-inch diameter, self-sealing DISCHARGE line. One coupling on each line is fitted with a charging port, which provides the service man with access for service gauges at the REMOTE CONDENSER location, when necessary.

NOTE

The openings in the building ceiling or wall, listed in the next step, are minimum sizes recommended, through which the pre-charged refrigerant lines may pass; and are to be considered only if they conform to and meet the local building code requirements in your area.

2. Minimum recommended sizes for openings required in a ceiling or wall for the pre-charged refrigerant lines to pass, is 1-3/4 inch diameter.

CAUTION

DO NOT KINK OR CRIMP REFRIGERANT LINES.

3. Route both refrigerant lines through the roof opening.

   Follow straight line routing, when possible.

   Retain excess pre-charged refrigerant line INSIDE the building.

4. SPIRAL the excess footage of the pre-charged refrigerant lines, in the best selected INSIDE location. See Pre-Charged Refrigerant Line Routing illustration for recommended methods of spiralling the excess refrigerant lines.

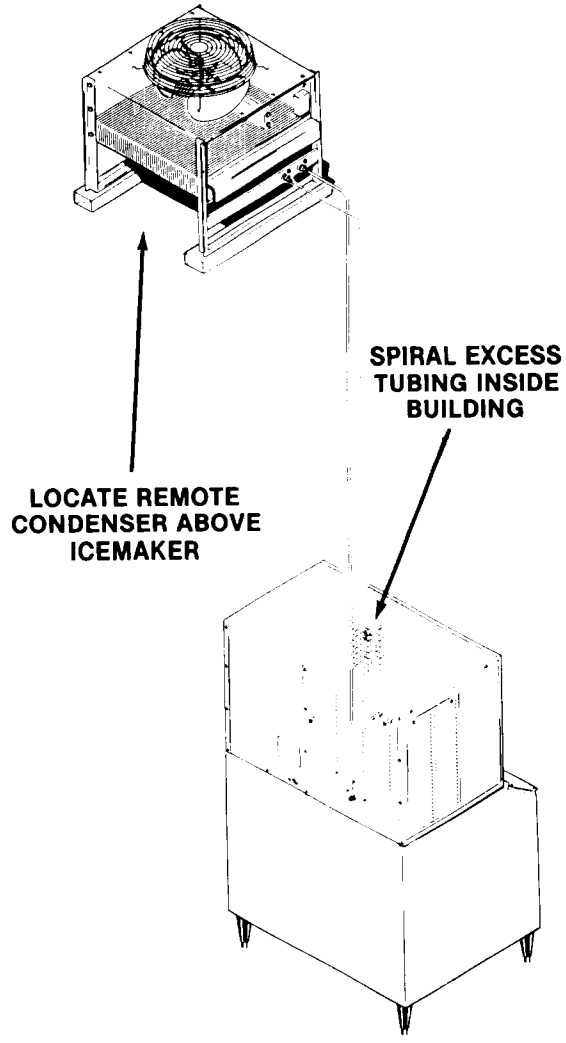

CM855R FOR THE INSTALLER

COUPLING INSTRUCTIONS, PRE-CHARGED TUBING KIT

CAUTION

The couplings on the sets of pre-charged refrigerant lines, the refrigerant fittings on the Remote Condenser, and the rear of the Icemaker Chassis are SELF-SEALING and should be connected as follows:

1. Remove protector caps and plugs and if necessary, carefully wipe coupling seats and threaded surfaces with a clean cloth to prevent the inclusion of dirt or any foreign material in the system.
2. LUBRICATE male half diaphragm and synthetic rubber seal with refrigerant oil. Thread coupling halves together by hand to insure proper mating of threads. Use proper size wrenches (on coupling body hex and on union nut) and tighten until coupling bodies "bottom" or a definite resistance is felt.
3. Using a marker or ink pen, mark a line lengthwise from the coupling union nut to the bulkhead. Then tighten an additional 1/4 turn; the misalignment of the line will show the amount the coupling has been tightened. This final 1/4 turn is necessary to insure the formation of leakproof joint.

ALWAYS USE TWO WRENCHES WHEN TIGHTENING THESE FITTINGS, ONE AS BACKUP WRENCH TO PREVENT TWISTING OF TUBING AND POSSIBLE KINKING OR LINE RUPTURE.

BE SURE to connect the ends of the pre-charged refrigerant lines, that have the charging port fittings, TO THE REMOTE CONDENSER FITTINGS. This gives the serviceman access for service gauges at the REMOTE CONDENSER location, when necessary.

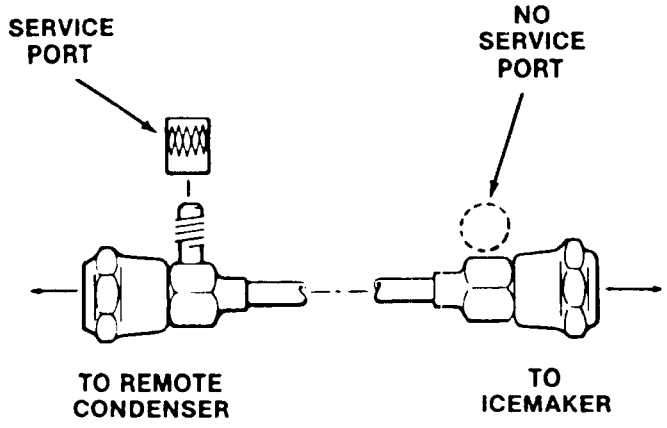

Pre-Charged Refrigerant Line Connections

4. Connect the 3/8-inch diameter refrigerant line coupling, with the SERVICE PORT fitting, to the remote condenser refrigerant fitting labeled: LIQUID LINE as detailed in Coupling Instructions.
5. Connect the 1/2-inch diameter refrigerant line coupling, with the CHARGING PORT fitting, to the Remote Condenser refrigerant fitting labeled: DISCHARGE LINE. Tighten as detailed in the Coupling Instructions.

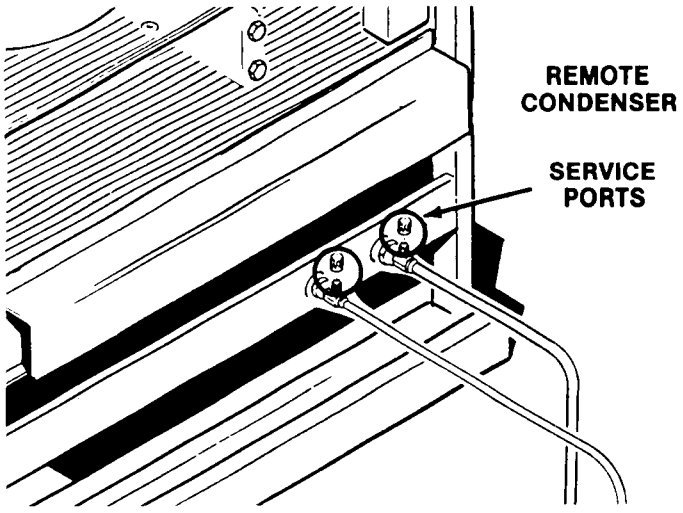

6. Connect the 3/8-inch diameter refrigerant line coupling, to the refrigerant fitting on the upper right rear of the icemaker chassis labeled: LIQUID LINE. Tighten as detailed in Coupling Instructions.
7. Connect the 1/2-inch diameter refrigerant line coupling, to the refrigerant fitting on the upper right rear of the icemaker Chassis labeled: DISCHARGE LINE. Tighten as detailed in step 4.

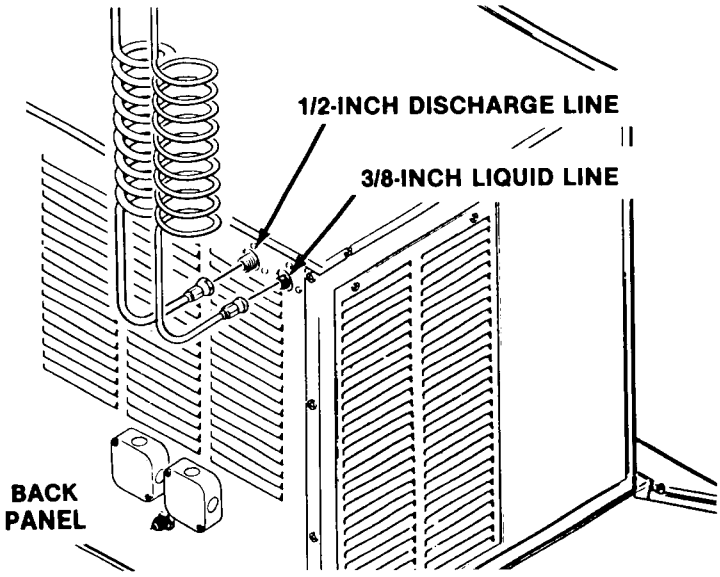

CM855R FOR THE ELECTRICIAN

CONFORM TO ALL APPLICABLE CODES

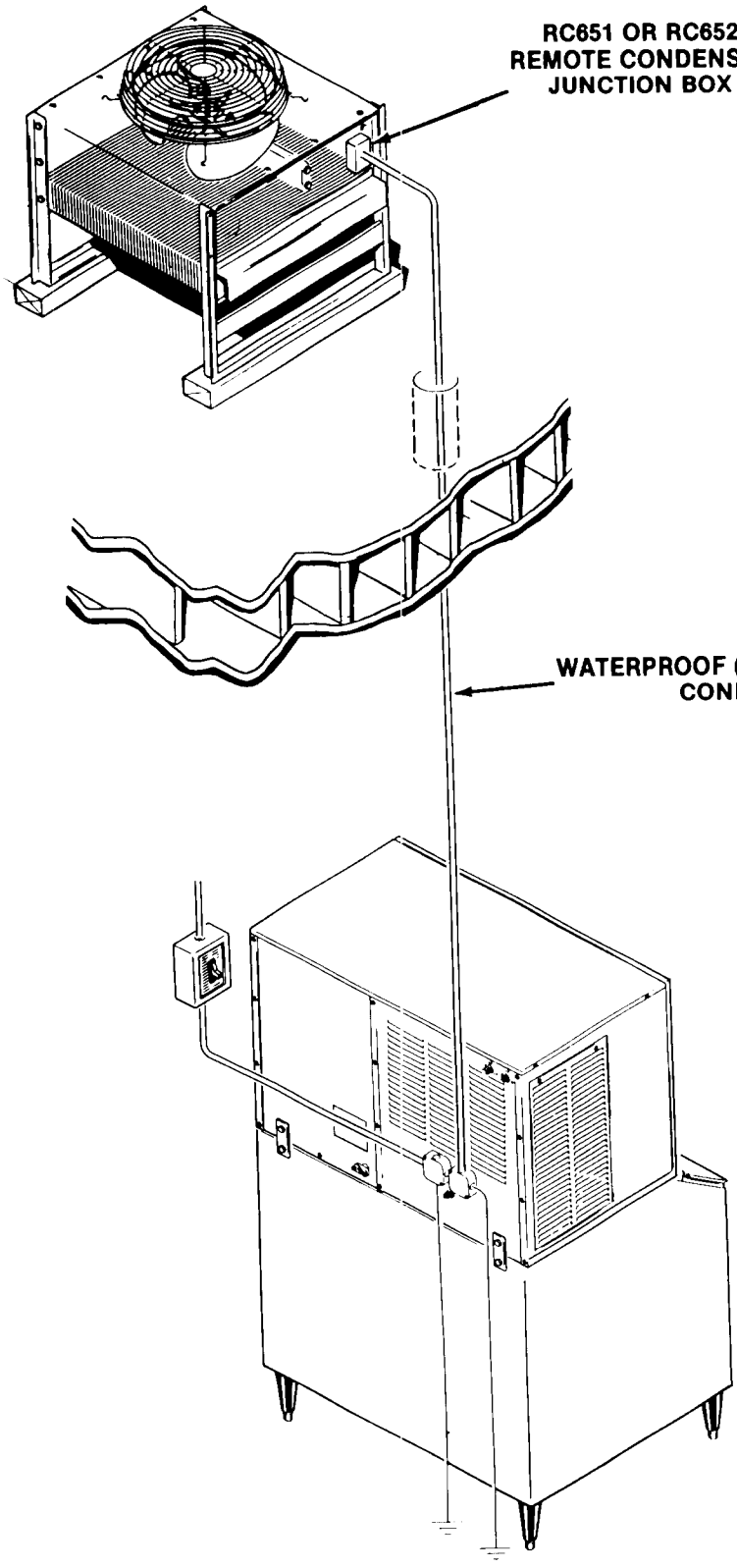

ELECTRICAL CONNECTIONS

SEE NAMEPLATE for current requirements to determine wire size to be used for electrical hookup. The cuber requires a solid chassis-to-chassis earth ground wire. See Wiring Diagram.

Be certain the cuber is connected to its own electrical circuit and individually fused. Running voltage must not be less than 95% of the lower nameplate voltage, or more than 110% of the higher nameplate voltage. Low voltages can cause erratic operation and may be responsible for serious damage to the icemaker.

Electrical connections are made at the rear of the icemaker, inside the junction box.

The remote condenser must be wired to the CM855R icemaker in accordance with local and national electrical codes with a minimum of 18 Awg wire with a ground bonding wire connected to the ground screws provided in both the condenser and machine field wiring boxes. All outdoor wiring must be in rainproof conduit.

All external wiring should conform to the national, state and local electrical code requirements. Usually an electrical permit and services of a licensed electrician will be required.

Electrically the remote condenser fan motor is connected to the CM855R at the contactor terminals for the compressor and the fan motor operates whenever the compressor operates.

CM855R FOR THE ELECTRICIAN

FAN RELAY KIT

Installation instructions for the KCMR230 Kit when using (2) CM855R Icemakers and the RC652-32B Model Condenser.

SEE NAMEPLATE for current requirements to determine wire size to be used for electrical hookup. Refer to wiring diagram.

All external wiring should conform to the national, state and local electrical code requirements. Usually an electrical permit and services of a licensed electrician will be required.

FOR CONNECTION OF TWO ICEMAKERS:

Refer to appropriate wiring diagrams and connect each icemaker to the KCMR230 terminal strip as follows:

1. Attach the KCMR230 to a permanent location, convenient for each icemaker hook up and future service. Attach a solid earth ground wire to the GROUND SCREW.
2. Route connecting wires from first ice machine lower junction box and connect to KCMR230 terminal strip connections marked: NO. 1 ICE MACHINE.
3. Route connecting wires from second ice machine lower junction box and connect to stacking kit terminal strip connections marked: NO. 2 ICE MACHINE.
4. Route connecting wires from KCMR230 terminal strip marked: TO REMOTE FAN and connect at the remote condenser junction.

CAUTION

IMPROPER VOLTAGE SUPPLED TO THE ICEMAKER WILL VOID YOUR PARTS REPLACEMENT PROGRAM.

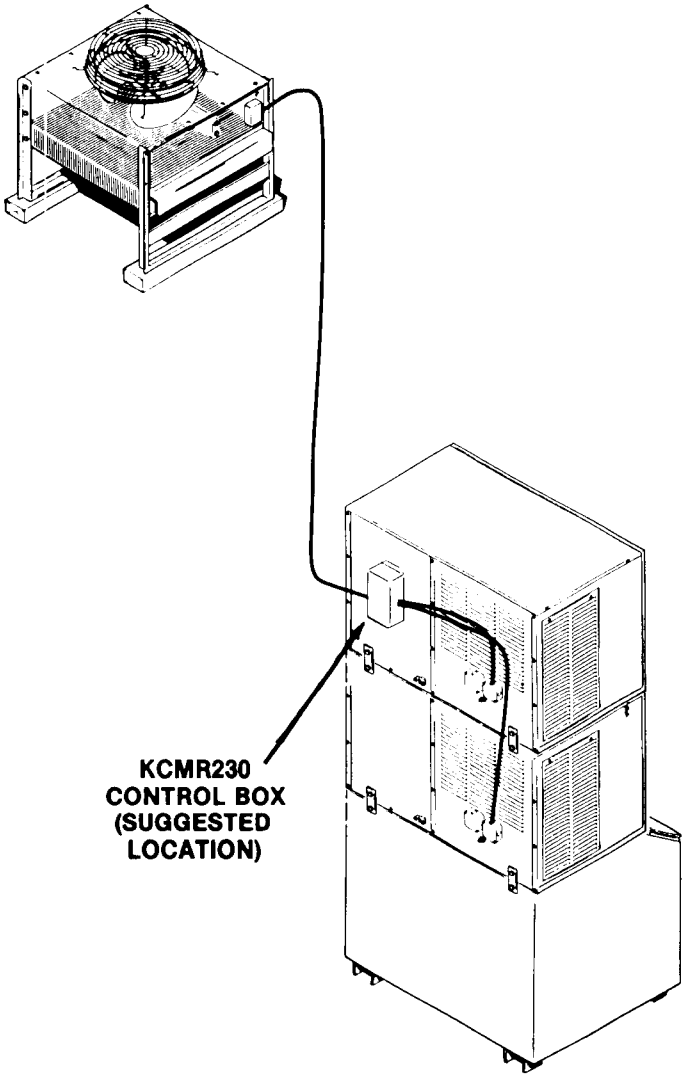

CM855R FOR THE ELECTRICIAN

5. Check phasing of the electrical circuit as follows:

A. The phasing of the wiring **MUST** now be checked, as incorrect wiring will result in a failure of the kit relay.

Below is an illustration of the KCMR230 terminal strip. Note that each terminal is marked: 1 - 2 - 3 - 4 - 5 - 6. For proper phasing:

Terminals #1 and #3 must be connected on the same side of the line (such as L1).

Terminals #2 and #4 must be connected on the same side of the line (such as L2).

B. Make the test with a volt meter as follows:

1. Switch on icemaker #1 first, then switch on icemaker #2. (The compressors must be operating for this test).
2. Test with a volt meter between terminals #2 and #4, then between terminals #1 and #3. Compare the readings obtained to the ones in the following list.

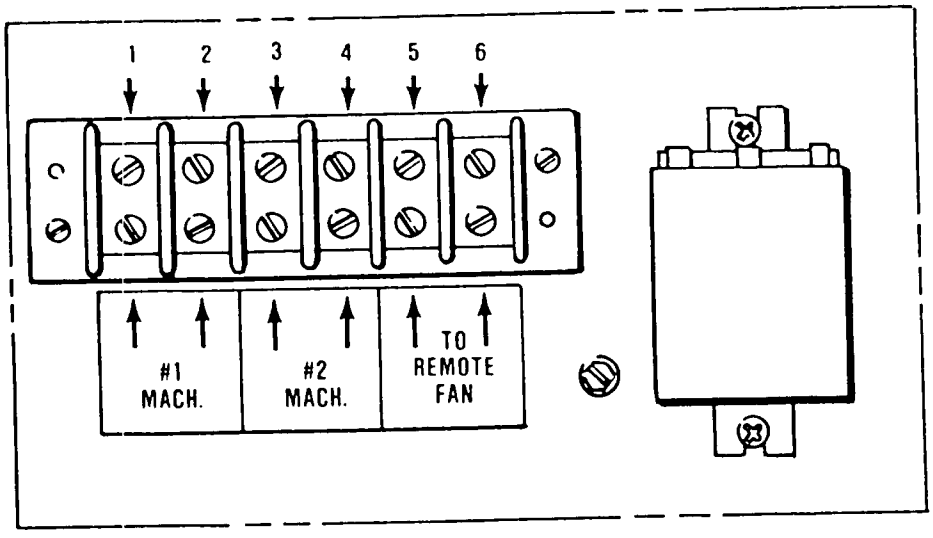

C.

	CORRECT VOLTAGE READINGS
Test terminals 1 - 2	Full voltage (208v-220v)
Test terminals 1 - 3	No voltage
Test terminals 2 - 3	Full voltage
Test terminals 2 - 4	No voltage
Test terminals 3 - 4	Full voltage
Test terminals 1 - 4	Full voltage

D. If there is full voltage where there should be no voltage, turn off icemaker #2, (both toggle switches). Then turn off icemaker #1 (both toggle switches). The connections at the KCMR230 terminal strip marked icemaker #1 must be **reversed** (put the wire that was on 1 on 2 and the wire that was on 2 on 1).

Remember to do all wiring with the electrical power to both icemakers disconnected at the source.

CM855R FOR THE PLUMBER

CONFORM TO ALL APPLICABLE CODES

WATER SUPPLY

Connect a potable water supply to the icemaker water inlet connection. The connection on the unit is a 3/8" male flare. The recommended size water line is 3/8" O.D. copper tubing. When water conditions are doubtful, a test of the water should be made by a water treatment specialist, and their recommendations for filtration and/or treatment should be followed.

DRAIN CONNECTIONS

The drains are gravity type, and must have a minimum of 1/4" fall per foot on horizontal pipe runs. The drains must be installed per local codes. A vent is recommended at the icemaker and bin drain connections. The ideal drain receptical would be a trapped and vented floor drain.

The recommended drain size is 5/8" - 3/4" rigid pipe - the bin drain must be separated from the icemaker's. The bin and icemaker drain connections are 3/4" F.P.T.

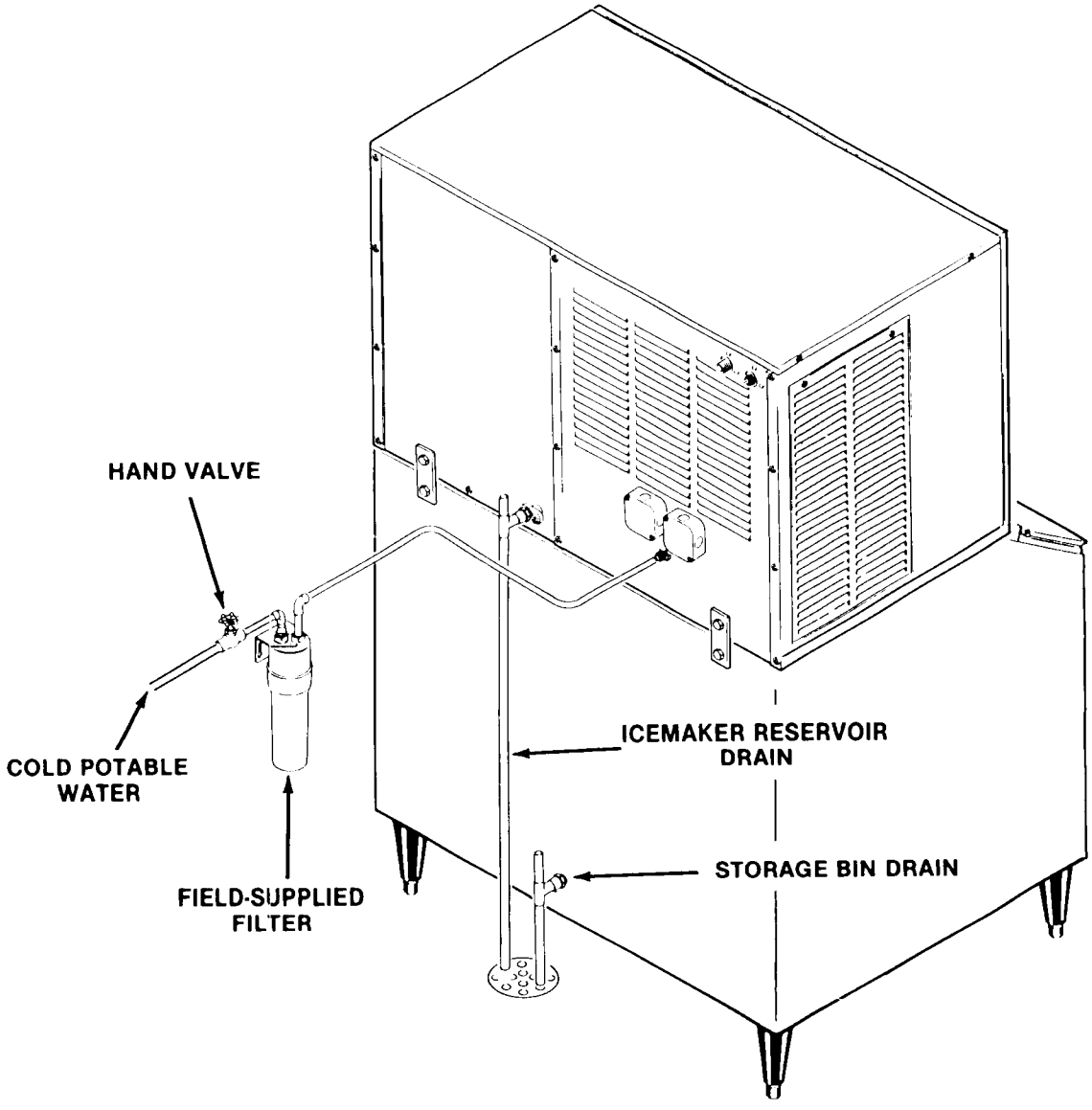

DRAIN LINES MUST SLOPE TOWARDS THE BUILDING DRAIN 1/4" PER FOOT MINIMUM.

CM855R FOR THE INSTALLER

FINAL CHECKLIST

1. Is the icemaker and bin in a place where the air and water temperatures are maintained within the manufacturer's limitations?
2. Is the remote condenser installed per local building codes on the roof, where it has adequate ventilation and minimal solar heat gain?
3. Is the icemaker installed with adequate room for machine service?
4. Has the icemaker/bin combination been leveled?
5. Has all shipping material and literature been removed from the units?
6. Has the bin thermostat **and** bracket been installed?
7. Have all electrical and water connections been made?
8. Is there a hand valve in the water line to the icemaker?
9. Has the unit been wiped clean, and the bin interior sanitized?
10. Have the remote condenser and pre-charged lines been properly installed and connected?
11. Have the connections been checked for leaks?
12. Has the electrical connection between the icemaker and the condenser been made?
13. Verify that the master switch and the Compressor switch are in the **OFF** positions.
14. Switch on the electrical power, and check the voltage.
15. Fill out the registration card, and mail it in to the factory.
16. Refer to **PRE-START INSTRUCTIONS** page 15.

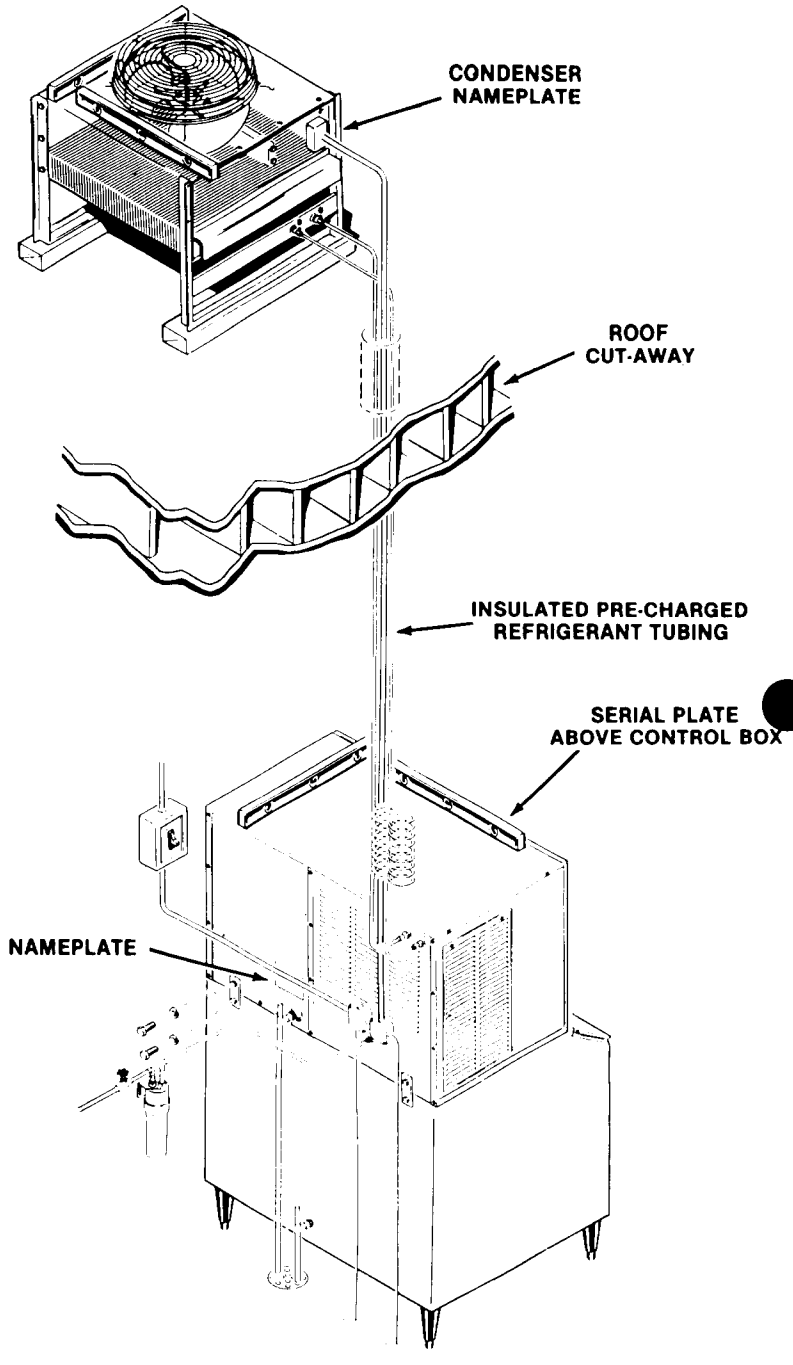

Completed Installation

CM855R START UP

PRE-START

1. Is the location of the equipment proper?
2. Is the electrical voltage correct?
3. Has power to the machine been on for at least 12 hours, and is the compressor dome warm? (Toggle switches on OFF?)
4. Has the water supply been turned on?
5. Is the icemaker level?
6. Are the refrigerant lines for the condenser properly connected and routed?
7. Are the bin thermostat controls mounted in the bracket and is the bracket in the proper mounting spot?

START-UP

1. Go through the Pre-Start check list.
2. Remove front panel by pulling out at the bottom to unsnap and lift off.
3. Remove the control box cover.
4. Remove left side service panel. Check that the King Valve is closed and the compressor is warm.
5. Rotate timer shaft clockwise until the timer cam appears the same as in the illustration.

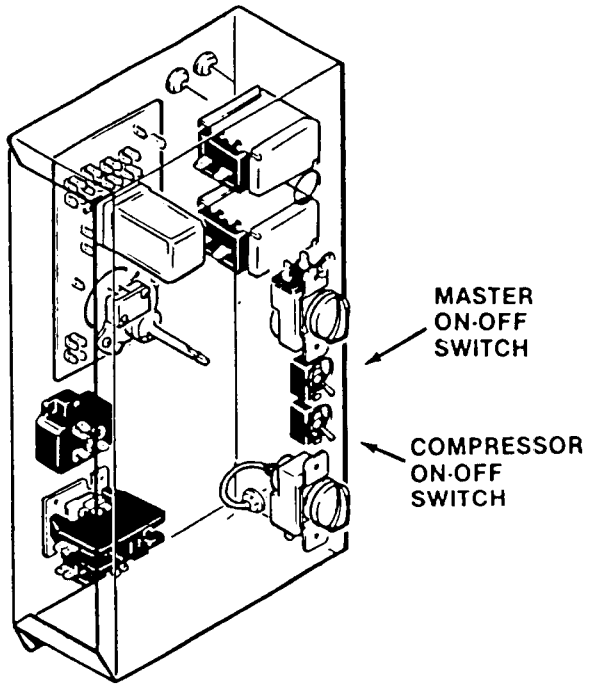

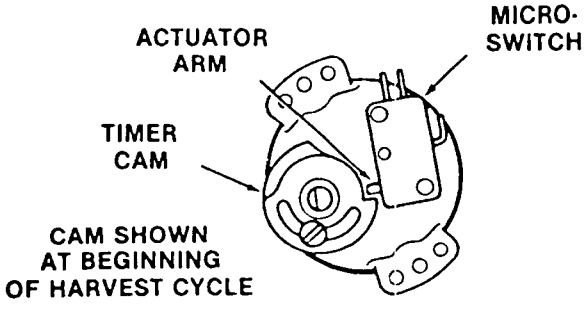

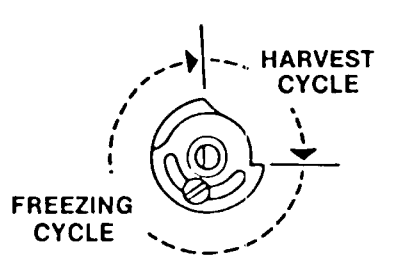

CAM SHOWN DIVIDED INTO TYPICAL FREEZING & HARVEST CYCLES

Timer Cam Positions

6. Turn the master switch to ON and observe that the inlet water solenoid opens, and water begins to enter the sump, also observe that the timer does advance in a clockwise direction.
7. The timer will move to the end of the harvest position and stop. If the sump is still not full, repeat step 5. When the sump is full the water pump will be circulating water over the evaporator plates. This water is returning to the sump and any excess will be drained out through the overflow standpipe in the sump. When the timer stops, the inlet water stops coming in, but the pump stays on.
8. Open the King Valve located on the receiver.
9. Move the compessor toggle switch to ON. Observe that the sight glass begins to fill with liquid refrigerant and stays full.
10. On the roof, observe that the condenser fan is running.
11. Now the icemaking process begins. The evaporator plates will soon begin to feel cool, and ice begins to form where the water is flowing over the metal portions of the plate.
12. Let the machine function as shipped, but observe the first harvest of cubes. ADJUSTMENTS MAY BE REQUIRED.

CM855R START UP — CUBE SIZE

13. Observe second and third cube harvest.

    Check size of SCOTSMAN CONTOUR CUBE

    Unlike other SCOTSMAN cubes which are made in a definite molded shape, contour cubes are produced in indentations and many shapes and sizes of contour cubes may be produced — only ONE size and shape combination is correct.

An under-charged refrigeration system produces larger cubes at the top of the evaporator plate and smaller cubes at the bottom. Charge system per NAMEPLATE specifications.

Charge Refrigeration System with **REFRIGERANT 502 ONLY.**

In areas where extreme problem water condition exists, filtering or purifying equipment is recommended.

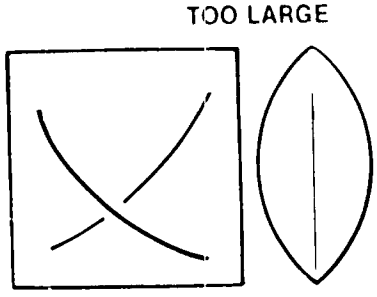

Too LARGE — may cause evaporator freeze ups. Adjust cube size control counter-clockwise to obtain smaller cubes

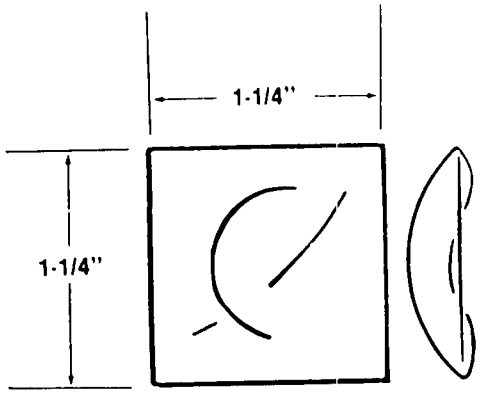

PROPER SIZE AND SHAPE of the contour cube. Icemaker operates at peak efficiency when a cube this size and shape is produced. A finely tuned system produces vertical strips of ice which easily break when they fall.

Normal harvest will be the top few rows of cubes first, then the lower rows.

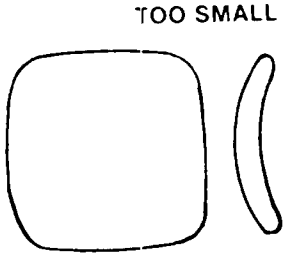

TOO SMALL. To obtain proper size cubes, adjust cube size control clockwise. May cause freeze up problems due to poor harvest.

Ice Cube Size & Shape

CM855R START UP — HARVEST TIME

14. Check the Harvest time. The correct setting is one that allows enough time for all of the ice to fall from the evaporators and to fill the sump, with water to the overflow point, plus 15-30 seconds extra time.

    To adust the timer:

A. Disconnect electrical power supply to the icemaker.

B. Loosen the screw on the timer that locks the two cams together.

C. To decrease Harvest time, rotate the shaft of the timer counter-clockwise. To increase, turn the shaft clockwise.

D. Retighten the screw to lock the two cams together again.

E. Return power to icemaker. Check cube size and Harvest time.

15. Check texture of ice cubes; when partially cloudy throughout, suggests icemaker is operating short of water; or, possibly an extreme problem water condition exists, wherein filtering or purifying equipment is recommended.

BIN THERMOSTAT OPERATION

With the icemaker in the harvest cycle, hold ice against the bin thermostat control bulb to test shutoff at the END OF THE HARVEST CYCLE. If the bin thermostat is OPEN, the liquid line solenoid valve will close, shutting off refrigeration flow to the evaporator and allowing the compressor to pump any refrigerant left in the evaporators into the high pressure receiver. When the evaporator pressure is lowered to approximately 20 PSIG, the low pressure switch opens, shutting off the compressor, remote fan and water pump.

Within minutes after the ice is removed from the sensing bulb, the bulb will warm up and cause the icemaker to restart. This control is factory set and should not be reset until testing is performed.

16. Replace control box cover and all cabinet panels and screws.

17. Thoroughly explain to the owner/user the significant specifications of the icemaker, the start up and operation, going through the procedures in the operating instructions. Answer all questions about the icemaker by the owner; and inform the owner of the name and telephone number of the authorized SCOTSMAN Distributor, or service agency serving him.

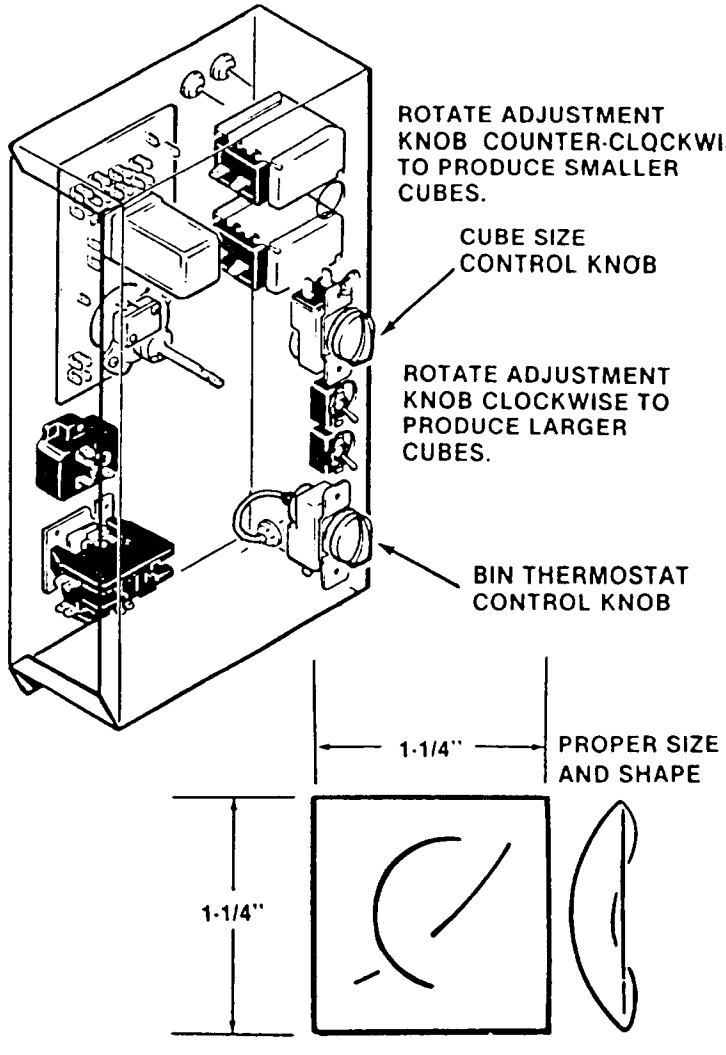

Cube Size Control Adjustment

CM855R OPERATION

REFRIGERATION SYSTEM - SCHEMATIC DIAGRAM

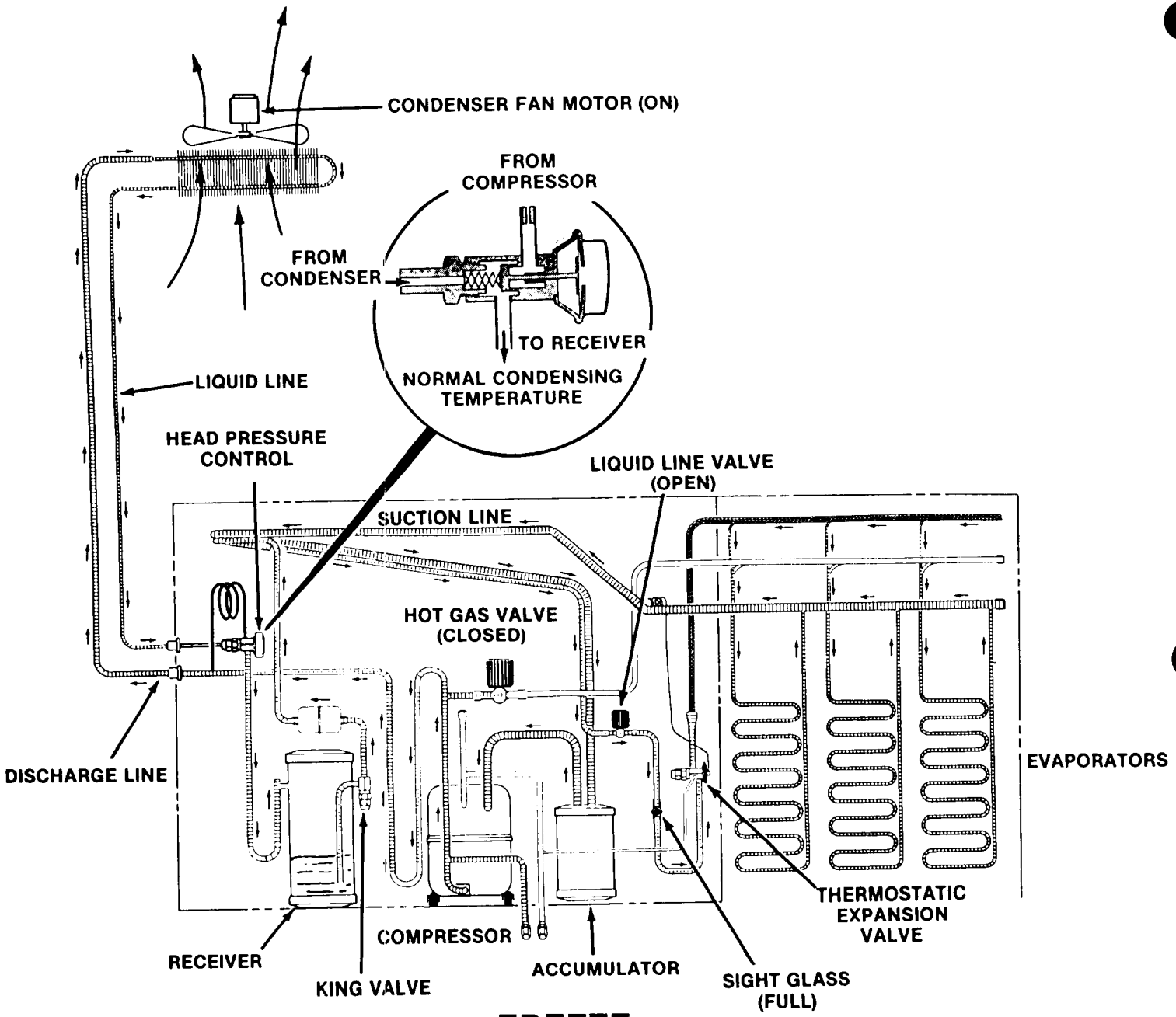

FREEZE

During the freeze cycle, at a normal condenser air temperature, the discharge gases from the compressor go through the discharge line up to the remote condenser, where the removal of heat causes the refrigerant to condense into liquid. The liquid refrigerant, still under high pressure, moves down to the ice machine, passing through the head pressure control, which is open because of the normal head pressure, and into the receiver. The receiver discharge connection picks up liquid refrigerant from near the base of the receiver and the refrigerant then moves through the liquid line solenoid valve (open at this time) up to the thermostatic expansion valve. At the TXV, the liquid refrigerant is metered into the evaporators, where the internal pressure is much reduced. This causes the refrigerant to rapidly "evaporate" or boil off, absorbing heat from the evaporators and the water being pumped over them. The refrigerant, now a low pressure gas, moves towards the compressor suction port. It goes through an accumulator in the system to insure no liquid refrigerant reaches the compressor and then to the compressor, where the cycle is repeated.

CM855R OPERATION

REFRIGERATION SYSTEM · SCHEMATIC DIAGRAM

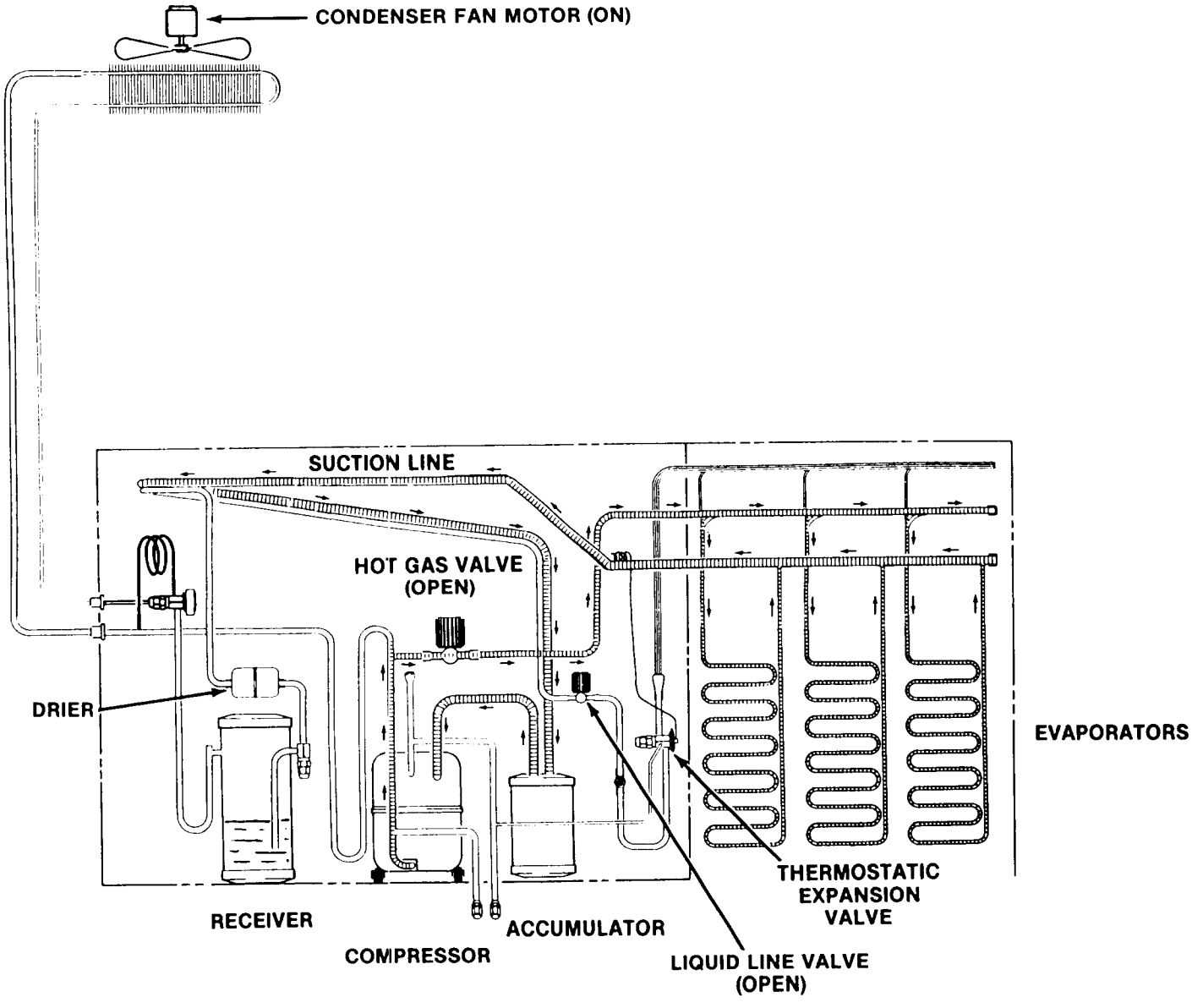

HARVEST

REFRIGERATION CYCLE, HARVEST

During the timed harvest cycle, the hot, high pressure refrigerant gases move through the discharge line, into the open hot gas valve, by-passing the remote condenser and the receiver. From the hot gas valve, the refrigerant flows into the evaporators, where the hot gases condense, giving off heat. It is this heat that, transferred to the evaporators, warms them up. That causes the ice to be released from the evaporator surface, so it falls, by gravity, into the storage bin.

After the refrigerant has gone through the evaporators, it enters the accumulator, and from there back to the compressor.

REFRIGERATION SYSTEM - SCHEMATIC DIAGRAM

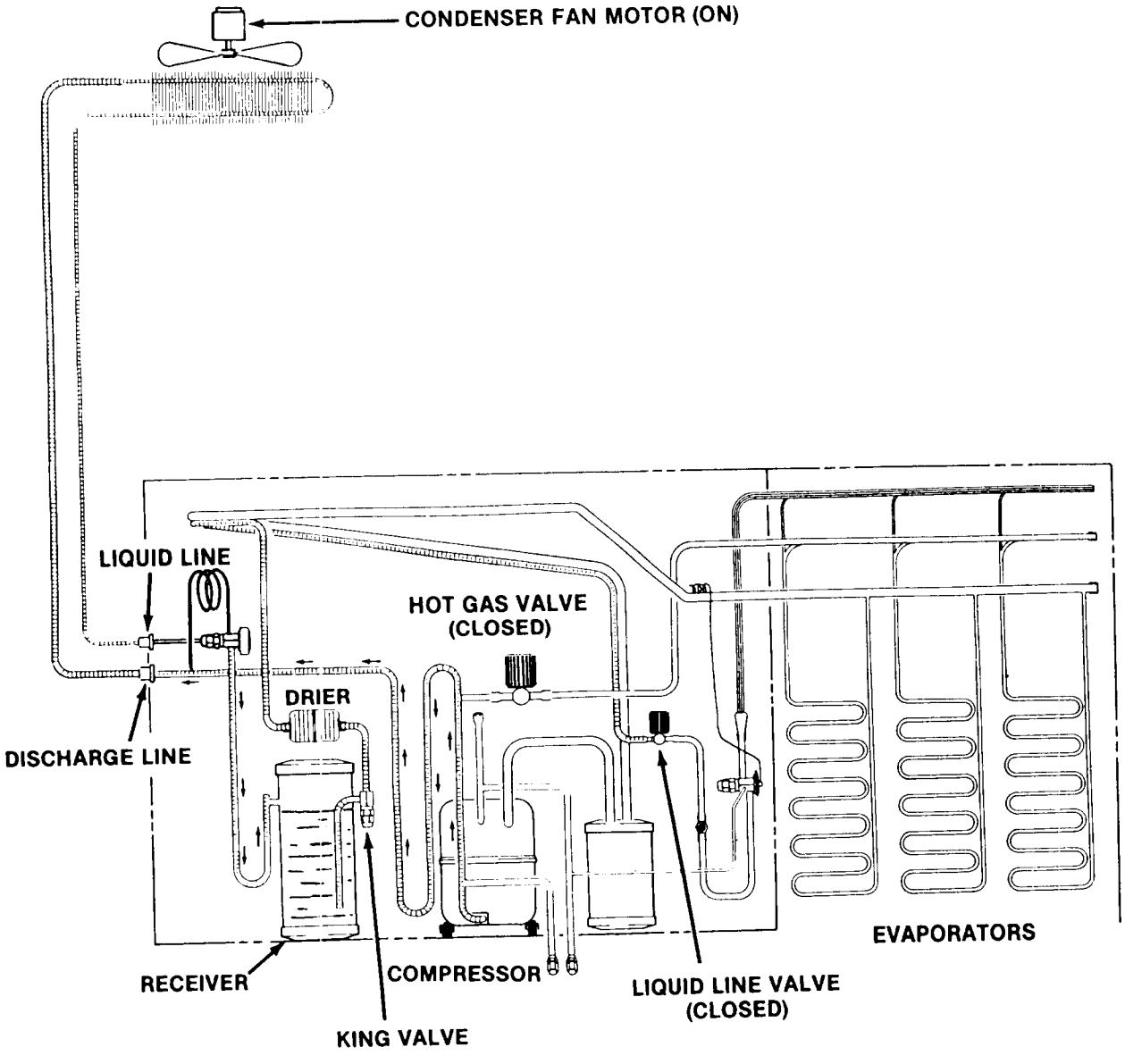

PUMP DOWN

REFRIGERATION SYSTEM, PUMP-DOWN

During the pump-down cycle (usually initiated by the bin thermostat being open, shutting the machine off) the discharge gases from the compressor follow their normal route to the remote condenser, through the head pressure control, and into the receiver. At this point the refrigerant flow is stopped by the closed liquid line valve. This action forces the refrigerant into the receiver, and keeps it out of the compressor. The pump-down continues until the low pressure control turns the compressor off.

CM855R OPERATION

REFRIGERATION SYSTEM - SCHEMATIC DIAGRAM

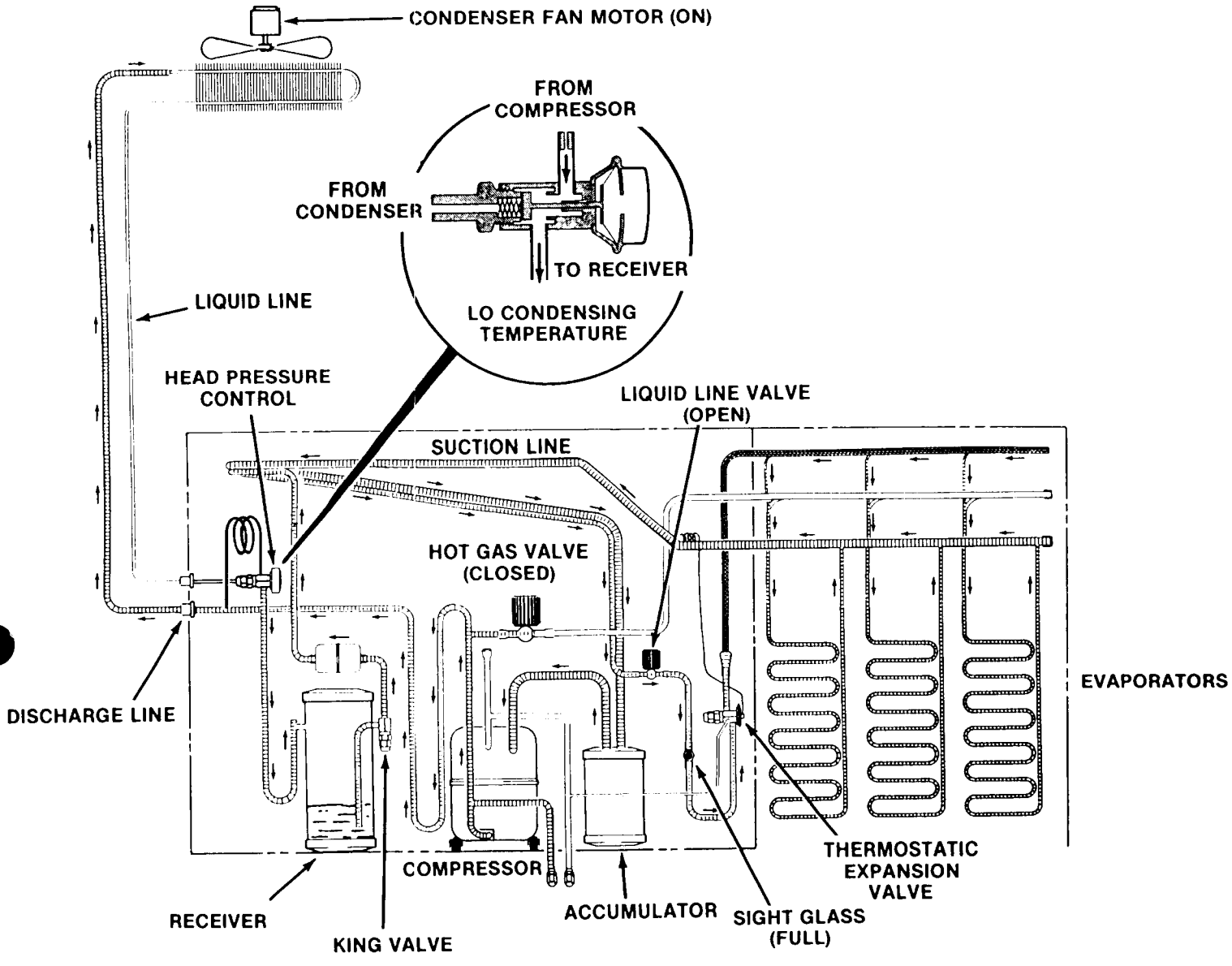

FREEZE

REFRIGERATION SYSTEM

LOW CONDENSER AIR TEMPERATURE

The freezing cycle under low condenser air temperatures is the same as the normal cycle, with the exception that the resulting low head pressures cause the head pressure control to close off the liquid line between the condenser and the receiver. This forces more refrigerant into the condenser (with a small amount of discharge gas going into the receiver to maintain pressure until the head pressure is built back up to the rated gauge pressure (220 PSIG), where the valve re-opens the passage between the condenser and the receiver.

WATER SYSTEM - SCHEMATIC DIAGRAM

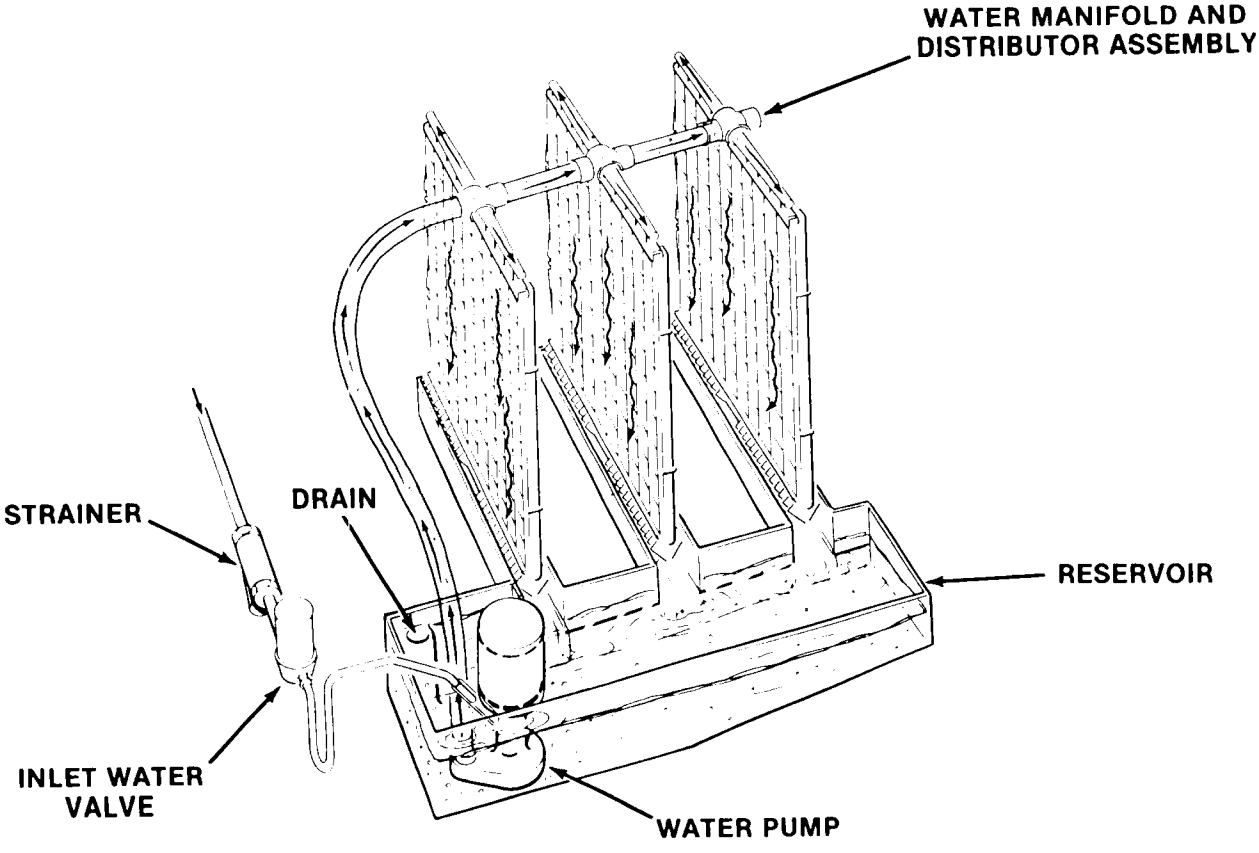

WATER FLOW SCHEMATIC

WATER SYSTEM

FREEZE

The water system during freeze consists of a fixed volume of water being continuously recirculated over the freezing surfaces of the evaporator, by means of a water pump. The pump forces the water to the top of each evaporator, from there it cascades down into the return trough the back to the reservoir where the pump is. As the unit freezes ice, the water level in the reservoir will drop.

HARVEST

The only change is that the inlet water valve has come on, letting in make-up water to fill the reservoir. Once it is full, excess water is drained out the reservoir, via a stand pipe. This excess water dilutes the possible concentration of minerals that can be expected to remain in the water after ice is formed.

CM855R OPERATION - ELECTRICAL SEQUENCE

The following charts illustrate which switches and which components are ON or OFF during a particular phase of the icemaking cycle.

Refer to the wiring diagram for a reference. Remember, the wiring diagram shows the unit as it is in the Timed Freeze Cycle.

BEGINNING FREEZE

ELECTRICAL COMPONENTS (LOADS)	ON	OFF
Crankcase Heater	X	
Compressor	X	
Fan Motor	X	
Hot Gas Valve		X
Inlet Water Valve		X
Liquid Line Valve	X	
P.C. Board Relay Coil	X	
Timer		X
Water Pump	X	

SWITCHES	ON	OFF
Bin Thermostat	X	
Cube Size Thermostat		X
Toggle	X	
L.P. Control	X	
H.P. Control	X	
Timer Micro Switch N.C.		X
Timer Micro Switch N.O.	X	
High Temp Switch	X	

At the beginning of the freeze cycle, the timer is not turning, but the icemaker is refrigerating the water, starting to turn the water into ice.

CM855R OPERATION - ELECTRICAL SEQUENCE

TIMED FREEZE

ELECTRICAL COMPONENTS (LOADS)	ON	OFF
Crankcase Heater	X	
Compressor	X	
Fan Motor	X	
Hot Gas Valve		X
Inlet Water Valve		X
Liquid Line Valve	X	
P.C. Board Relay Coil	X	
Timer	X	
Water Pump	X	

SWITCHES	ON	OFF
Bin Thermostat	X	
Cube Size Thermostat	X	
Toggle	X	
L.P. Control	X	
H.P. Control	X	
Timer Micro Switch N.C.		X
Timer Micro Switch N.O.	X	
High Temp Switch	X	

After the icemaker has cooled the water and formed some ice on the evaporator, the evaporator will have gotten cold enough to have the cube size control close. All this does is start and run the timer.

HARVEST

ELECTRICAL COMPONENTS (LOADS)	ON	OFF
Crankcase Heater	X	
Compressor	X	
Fan Motor	X	
Hot Gas Valve	X	
Inlet Water Valve	X	
Liquid Line Valve	X	
P.C. Board Relay Coil		X
Timer	X	
Water Pump	X	

SWITCHES	ON	OFF
Bin Thermostat	X	
Cube Size Thermostat		X
Toggle Switch	X	
L.P. Control	X	
H.P. Control	X	
Timer Micro Switch N.C.	X	
Timer Micro Switch N.O.		X
High Temp Switch	X	

The timer has now turned far enough so that the micro-switch plunger has dropped into the gap in the cam. This breaks the circuit to the relay in the P.C. Board - and that puts the machine into the Harvest cycle, where the hot gas valve and inlet water valve have opened to harvest the ice.

CM855R OPERATION - ELECTRICAL SEQUENCE

PUMP DOWN - STAGE ONE

ELECTRICAL COMPONENTS (LOADS)	ON	OFF
Crankcase Heater	X	
Compressor	X	
Fan Motor	X	
Hot Gas Valve		X
Inlet Water Valve		X
Liquid Line Valve		X
P.C. Board Relay Coil		X
Timer		X
Water Pump	X	

SWITCHES	ON	OFF
Bin Thermostat		X
Cube Size Thermostat		X
Toggle	X	
L.P. Control	X	
H.P. Control	X	
Timer Micro Switch N.C.	X	
Timer Micro Switch N.O.		X
High Temp Switch	X	

When ice is on the bin control, it will OPEN and at the end of the Harvest Cycle, this will initiate a pump down cycle. The liquid line valve (normally closed) will close and the compressor will pump refrigerant into the receiver.

PUMP DOWN - STAGE TWO

ELECTRICAL COMPONENTS (LOADS)	ON	OFF
Crankcase Heater	X	
Compressor		X
Fan Motor		X
Hot Gas Valve		X
Inlet Water Valve		X
Liquid Line Valve		X
P.C. Board Relay Coil		X
Timer		X
Water Pump		X

SWITCHES	ON	OFF
Bin Thermostat		X
Cube Size Thermostat		X
Toggle (Master and Compressor)	X	
L.P. Control		X
H.P. Control	X	
Timer Micro Switch N.C.	X	
Timer Micro Switch N.O.		X
High Temp Switch	X	

After the low side pressure has dropped under 20 psig, the compressor will be turned off by the low pressure control and the unit will be pumped down, OFF and in a standby mode.

CM855R SERVICE SPECIFICATIONS

In servicing a machine, it is often useful to compare that individual units operating characteristics to those of a normally operating machine. The data that follows give those characteristics. However, be aware that these values are for NEW, CLEAN machines. USE THESE NUMBERS AS A GUIDELINE ONLY.

COMPONENT

Timer - 1 revolution of the cam, in minutes 8
Harvest Time, preset, in minutes 2-1/4
Inlet Water Valve, water flow in g.p.m. 1

	CI	CO
Cube Size Control, Reverse Acting, Temperature range	(+ 15°F. to - 3°F.)	—
Bin Thermostat, Temperature Range	38.5°-43.5°	33.5°-38.5°
Low Pressure Control, (Pump Down) psig	35	20
High Pressure Safety Switch, psig	manual	400

The head pressure regulating valve will maintain a minimum discharge pressure during the freezing cycle, in excess of 200 PSIG.

OPERATING CHARACTERISTICS

The values listed below are representative of values seen at a wide range of air and water temperatures and are for a normal cube size.

FREEZE CYCLE

Average Discharge Pressure ..... 325-220 PSIG
Suction Pressure at the end of the Freeze Cycle ..... 25-21 PSIG
Freeze Time ..... 17-26 Minutes
Total Amp Draw 8-11

HARVEST CYCLE

Average Discharge Pressure ..... 200-100 PSIG
Average Suction Pressure ..... 180-130 PSIG
Harvest Time, assumed to be 2-1/4 minutes. This can be adjusted to suit local conditions.
Total Amp Draw 9-12

When comparing these figures to field data, allow a variation from each end of the range given.

TO SERVICE REFRIGERATION SYSTEM:

TORQUE REFRIGERATION ACCESS VALVE CAPS TO 60-75 INCH POUNDS.

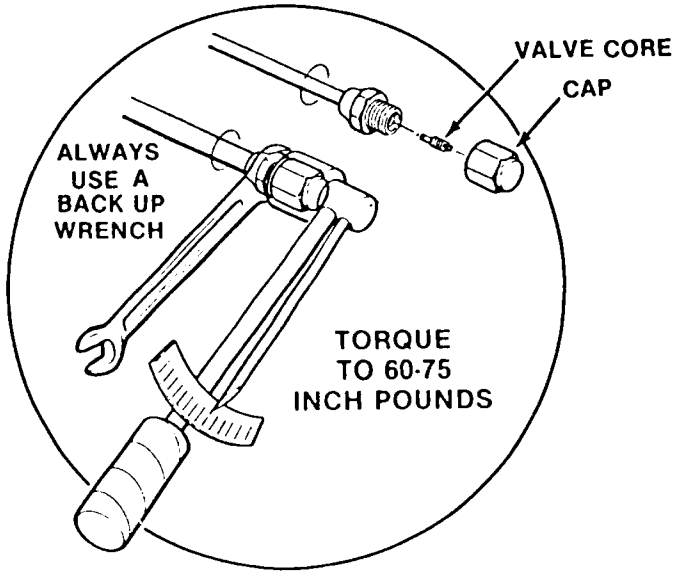

ALWAYS USE A BACK-UP WRENCH TO AVOID DAMAGE TO THE REFRIGERANT TUBING.

CM855R MAINTENANCE & CLEANING INSTRUCTIONS

A Scotsman Ice System represents a sizable investment of time and money in any company's business. In order to receive the best return for that investment, it MUST receive periodic maintenance.

It is the USER'S RESPONSIBILITY to see that the unit is properly maintained. It is always preferable; and less costly in the long run, to avoid possible down time by keeping it clean, adjusting it as needed and by replacing worn parts before they can cause failure. The following is a list of recommended maintenance that will help keep your machine running with a minimum of problems.

Maintenance and Cleaning should be scheduled at a MINIMUM of twice per year.

ICEMAKER

THE FOLLOWING MAINTENANCE SHOULD BE SCHEDULED AT LEAST TWO TIMES PER YEAR ON THIS ICEMAKER. CALL YOUR AUTHORIZED SCOTSMAN SERVICE AGENCY.

1. Check and clean or service any optional water treatment devices, if any installed.
2. Clean water strainer.
3. Check that the cabinet is level, in the side-to-side and front-to-back directions.
4. Clean the water system, evaporator plate and sump assembly, using a solution of SCOTSMAN Ice Machine Cleaner. Refer to CLEANING - Icemaker.
5. Check and tighten all bolts and screws.
6. Check for water leaks and make corrections.
7. Check the bin thermostat control bulb to test shut off. Holding ice against bin thermostat control bulb should cause the icemaker to shut off at the end of the harvest cycle.

   Within minutes after ice is removed from the bin thermostat control bulb, the icemaker will restart.
8. Check cube size, adjust if required.
9. Check harvest time, adjust if required.

Cleaning requirements vary according to local water conditions and individual user operation. Continuous check of the clarity of ice cubes and visual inspection of the water system parts, evaporator plates and the sump assembly before and after cleaning will indicate frequency and procedure to be followed in local areas.

ICE STORAGE BIN

The interior liner of the bin is in contact with a food product, ice, and should be cleaned regularly. Once a week cleaning with soap and water, and after that a hot water rinse with an air dry should be adequate. Commercial food grade sanitizers are available, and may be used.

CM855R MAINTENANCE & CLEANING INSTRUCTIONS

CLEANING - Icemaker

1. Empty bin of ice.
2. Pull out and remove front panel.
3. Switch the master switch to OFF, after the unit shuts off, switch the compressor switch to OFF.
4. Remove the evaporator cover by lifting up, and pulling out.
5. Switch the master switch to CLEAN, pour 8 oz. of Scotsman Ice Machine Cleaner into the water reservoir. Run unit for 30 minutes.

WARNING

SCOTSMAN Ice Machine Cleaner contains Phosphoric and Hydroxyacetic acids. These compounds are corrosive and may cause burns. If swallowed, DO NOT induce vomiting. Give large amounts of water or milk. Call physician immediately. In case of external contact, flush with water. KEEP OUT OF THE REACH OF CHILDREN.

6. Switch the master switch to OFF. Remove the pump hose from the evaporator water manifold, point it into the bin (or a pail) and switch the master switch to ON. This pumps the cleaning solution out of the reservoir. Add fresh water to thoroughly rinse the reservoir.
7. Replace pump hose.
8. Remove control box cover, turn timer shaft clockwise until it appears as illustrated (harvest cycle). Replace cover.

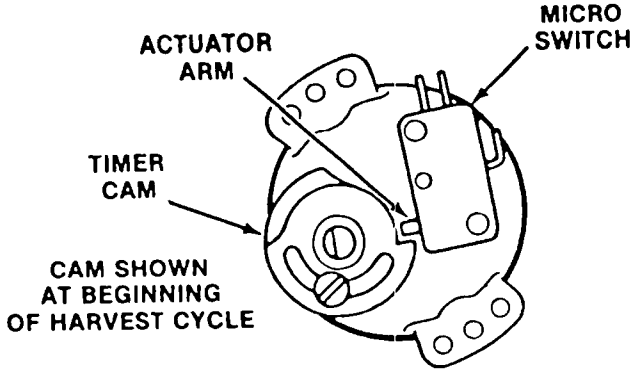

9. Switch the compressor and master switches ON.

CAUTION

DO NOT use ice cubes produced from the cleaning solution. Be sure none remains in the bin.

10. Replace the evaporator cover and front panel.
11. Check the next batch of cubes to be sure all the cleaner is gone (no sour taste).
12. Pour hot water into the storage bin to melt the cubes, and to also clean out the bin drain.

    Sanitize the bin, using an approved sanitizing solution, once per week.

    If necessary, the water reservoir can be removed for cleaning by:

    a) Removing the front panel.
    b) Switching the master switch to OFF.
    c) Removing evaporator cover.
    d) Removing thumb screw securing the pump to the lower evaporator brace, unplug pump, pull it up and out of the machine. Remove hose from pump.
    e) Disconnect drain hose from left rear of the reservoir, lift reservoir up and pull out off machine.
    f. Reverse to reassemble.

CM855R MAINTENANCE & CLEANING INSTRUCTIONS

REMOTE CONDENSER

Frequent cleaning and inspection of the condenser should be performed to maintain maximum efficiency of Icemaker. A dirty condenser or blocked air flow will greatly decrease icemaking efficiency.

1. With building source electrical power OFF to the icemaker, clean the remote condenser fins, using a vacuum cleaner, whisk broom or brush. DO NOT USE A WIRE BRUSH. Instruct customer to clean frequently.
2. Check that fan blade moves freely, is not touching any surfaces, is not bent or out of balance; and, the wire guard is properly installed and securely attached.
3. Check that the roof area immediately surrounding the remote condenser is free and clear of any debris that may collect, such as leaves, paper, trash, etc.

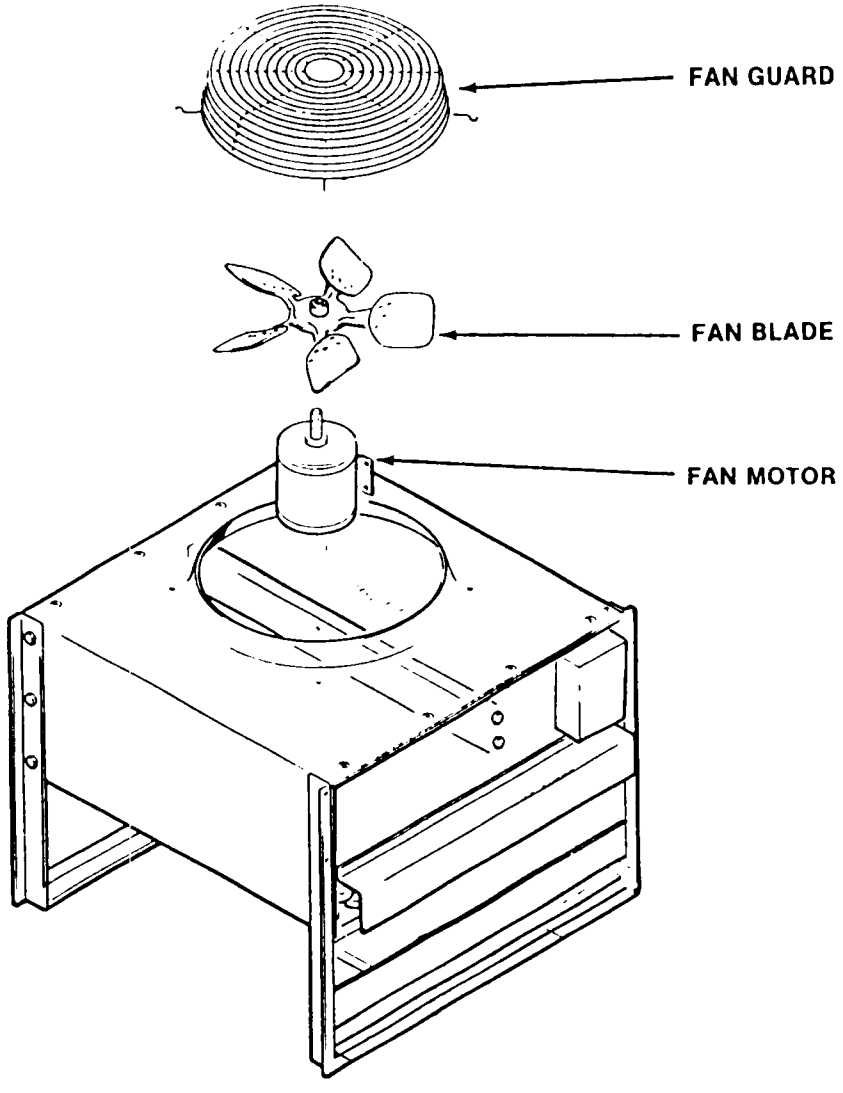

CM855R COMPONENT LOCATION AND DESCRIPTION

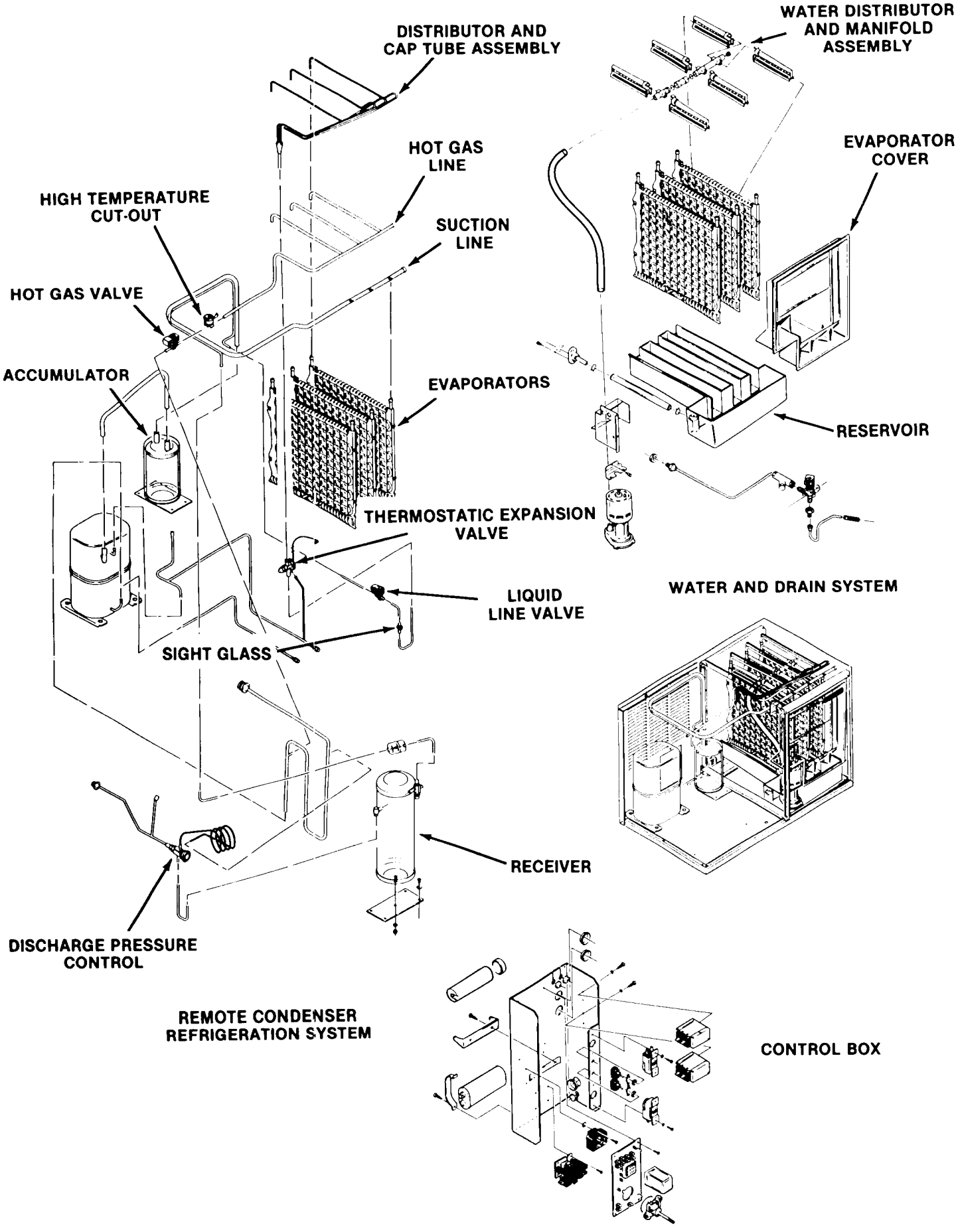

CM855R COMPONENT LOCATION AND DESCRIPTION

WATER SYSTEM

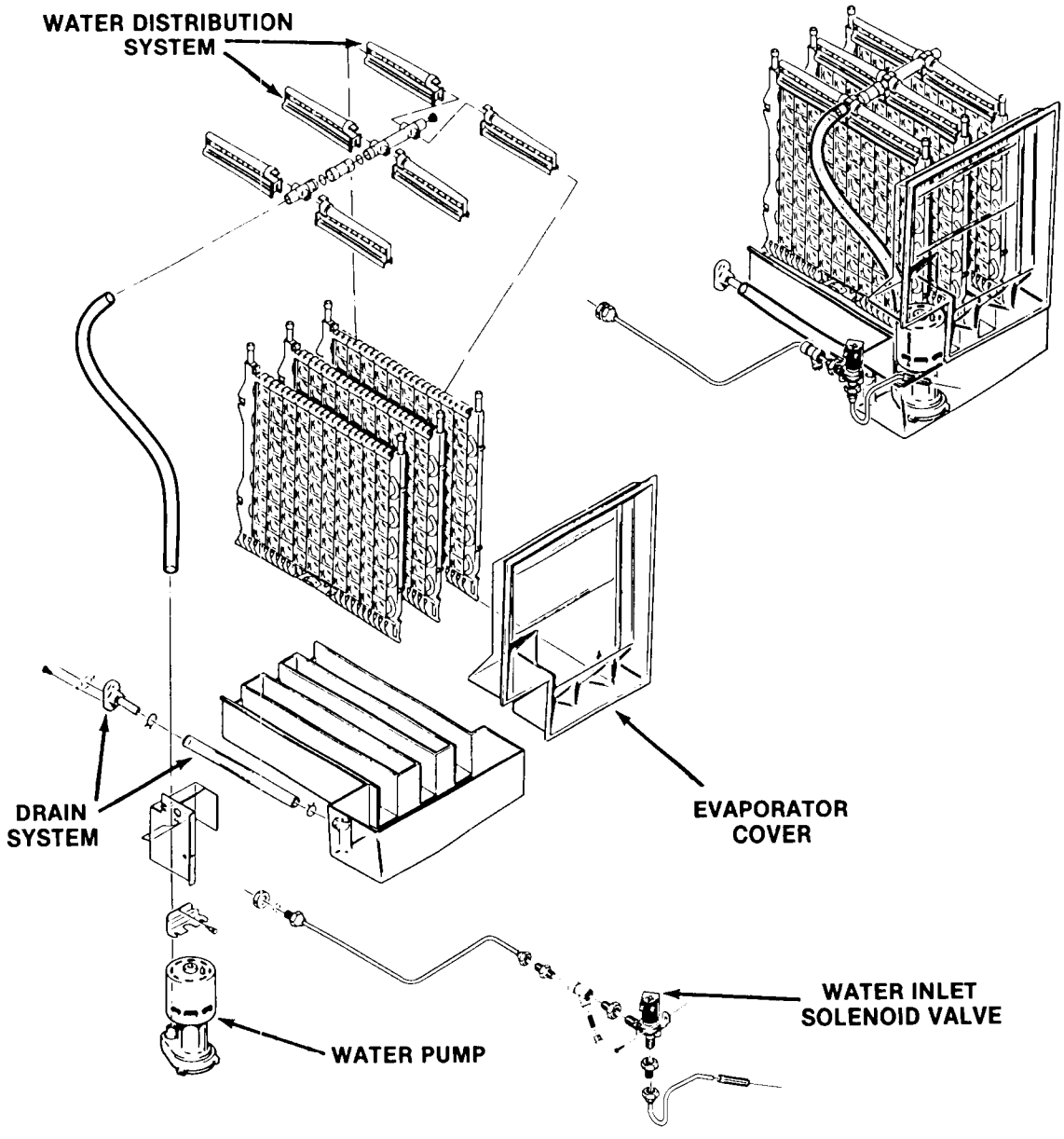

WATER INLET SOLENOID VALVE

The water inlet solenoid valve opens during harvest to fill the sump assembly with water. Excess water overflows through a stand pipe located at the back of the sump to flush minerals from the sump.

WATER PUMP

The water pump picks up water from the base of the reservoir, and forces it up to the top of the evaporators. It remains on throughout the freeze and harvest cycles.

EVAPORATOR COVER

This cover, held in place by shoulder screws, covers the freezing compartment front, keeping any ice and water from splashing the front panel and the water pump.

DRAIN SYSTEM

The drain system functions to allow the excess water brought into the machine during the harvest cycle, to be easily drained away. A standpipe in the back of the reservoir maintains the water level, and is connected to the cabinet drain fitting by tygon tubing.

WATER DISTRIBUTION SYSTEM

The water distribution system functions to evenly supply water to all cells of the evaporator plates. The water pump pumps water from the sump up to the vertical tygon tube to a tee. From there water is channeled through water manifolds to the water distributors, two atop each evaporator plate, and distributed evenly down both sides of each evaporator plate. Gravity flow returns the water to the sump reservoir for recirculation.

CM855R COMPONENT LOCATION

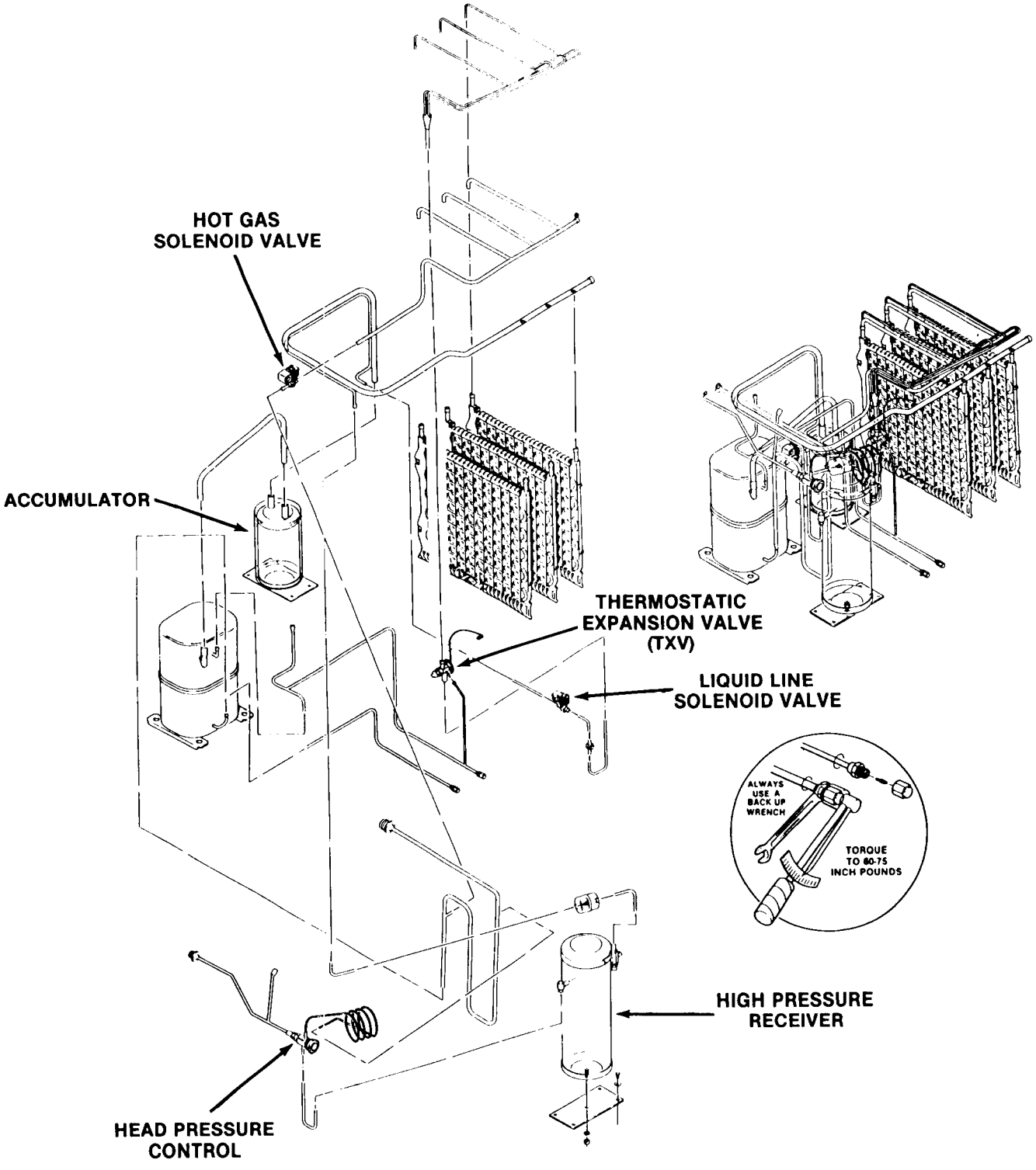

CM855R COMPONENT DESCRIPTION

REFRIGERATION SYSTEM

HIGH PRESSURE RECEIVER

Provides storage volume for refrigerant during cross ambient operation. The high pressure receiver is sized large enough to hold the entire refrigerant charge. During cold operation there is enough liquid in the receiver to maintain a liquid seal to the liquid line.

LIQUID LINE SOLENOID VALVE

The liquid line solenoid valve provides positive shutoff of refrigerant flow for off cycle evaporator pump down.

HOT GAS SOLENOID VALVE

The hot gas solenoid valve opens during the harvest cycle to divert the hot discharge gas from the compressor, directly into the evaporator plates assembly to release ice cubes from the ice cube molds. The hot gas solenoid valve is comprised of two parts, the body and plunger and the coil and frame assemblies. Installed in the discharge line of the compressor, the energized solenoid coil lifts the valve stem within the valve body, to cause the hot discharge gas to be diverted when the finishing timer has advanced to the start of the harvest cycle.

THERMOSTATIC EXPANSION VALVE (TXV)

The thermostatic expansion valve regulates the flow of refrigerant to the evaporator and reduces pressure of liquid refrigerant from condensing pressure to evaporating pressure.

ACCUMULATOR

The accumulator traps liquid overfeed from the evaporator during harvest and meters it into the compressor at a controlled rate.

HEAD PRESSURE CONTROL

This control's function is to maintain the discharge pressure during the freeze cycle. If the condenser air temperature should drop, the head pressure control will block off the liquid line, forcing more refrigeration into the condenser, until the head pressure rises to normal, then the liquid line will be opened.

CM855R COMPONENT LOCATION AND DESCRIPTION

CONTROL BOX

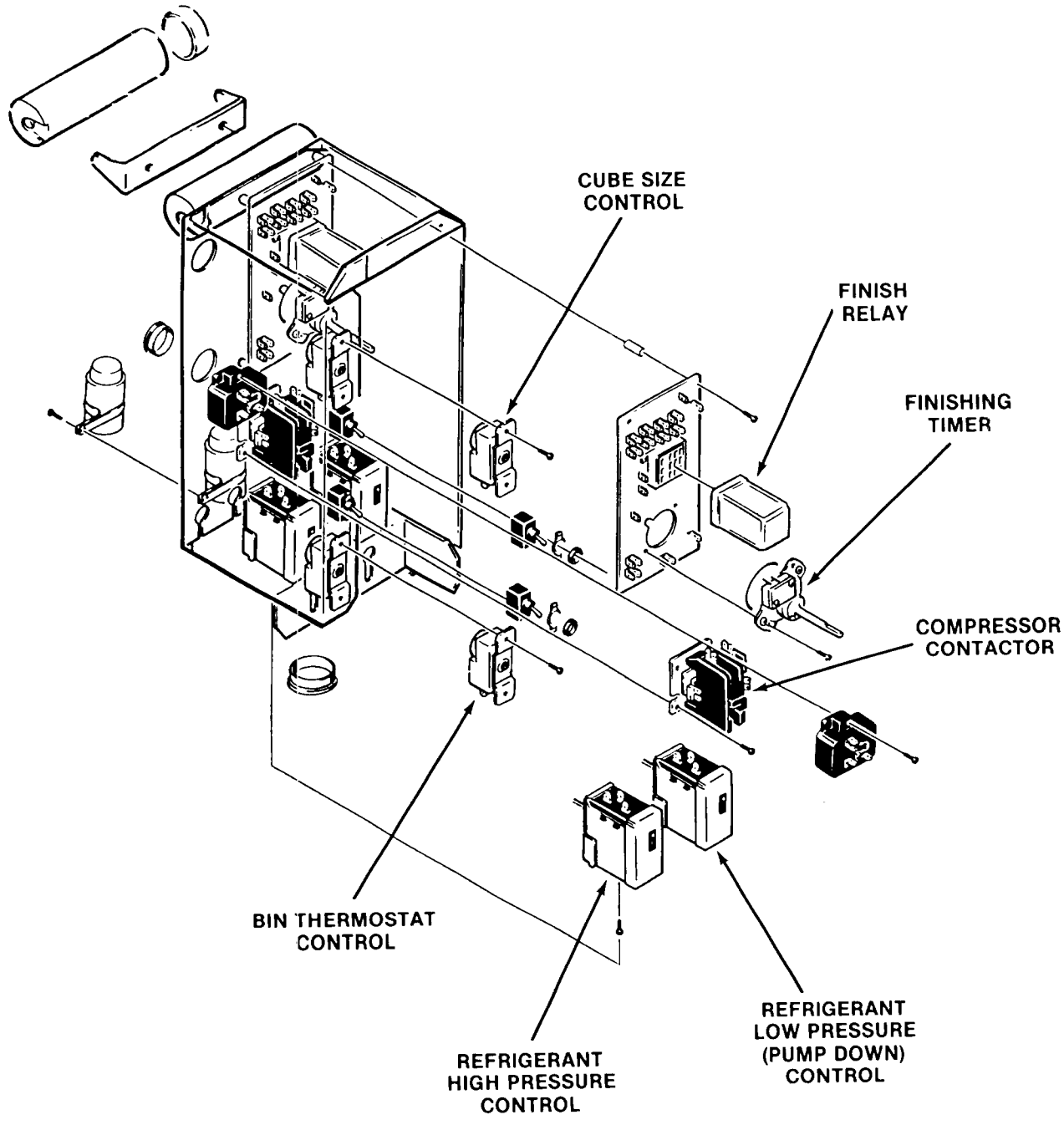

CM855R COMPONENT DESCRIPTION

BIN THERMOSTAT CONTROL

The bin thermostat control is located in the bottom of the control box. The sensing capillary tube of the control is routed from the control box through the inner left wall in the evaporator section to the bin thermostat control bracket hanging in the ice storage bin. The bin thermostat control functions to automatically shut OFF the icemaker when the ice storage bin is filled and ice contacts the capillary tube. It also signals the RESTART of the icemaker when the capillary tube starts to warm up after ice has been removed from the bin.

Bin thermostat control adjustment should ONLY be performed if premature shut off occurs or ice backs up into the freezing section of the cabinet. Adjust only in increments of one eighth turn of a screw at a time.

COMPRESSOR CONTACTOR

The compressor contactor functions to carry the compressor line current. The contactor is wired so any control in the pilot circuit such as the bin thermostat, low pressure and high pressure controls, etc., will cause the contactor holding coil to be de-energized when the control contact OPENS; thereby, breaking the circuit to the compressor through the contactor points.

REFRIGERANT HIGH PRESSURE CONTROL

The purpose of this safety control is to protect the unit from damage due to high refrigerant pressure. It also provides additional protection for the unit in high ambient temperatures. This is a manual reset control connected to the refrigeration system high-side. It is set to stop the unit completely when the high-side pressure reaches the preset limit.

REFRIGERANT LOW PRESSURE (PUMP DOWN) CONTROL

The purpose of this switch is to control the compressor. It keeps the compressor on to pump the refrigerant into the receiver after the liquid line solenoid has closed. It also provides additional protection for the unit in case low ambient temperatures exist. This is an automatic reset control connected to the refrigeration system low side. It is set to stop the compressor when the low-side pressure drops to less than 20 psig.

CUBE SIZE CONTROL

The temperature sensing cube size control affects the length of the freezing cycle prior to initiating the finishing timer. The cube size control closes its contacts when the evaporator reaches a preset temperature starting the finishing timer. A variation in either ambient air or incoming water temperature will affect the efficiency of the refrigeration system. This will vary the length of time it takes the evaporator to reach the temperature at which the cube size control is preset to CLOSE which, in turn, will affect the overall cycle time.

See *Cube Size Admustment* BEFORE attempting to adjust the control.

FINISH RELAY

The multi-function, three pole, double-throw plug-in relay is installed directly into a receptacle on the printed circuit board in the control box. The relay functions, in part, to by-pass the bin thermostat control to prevent the icemaker from shutting OFF when a filled-bin condition occurs during the freezing cycle. The by-pass action serves to ensure full-sized cubes with each harvest cycle and to prevent short cycling on the bin thermostat control.

FINISHING TIMER — Timer & Switch Assembly.

The function of the finishing timer begins when activated by the cube size control. The outer surface, or large diameter lobe of the timer cam, determines the timer cycle for finish freezing of the ice cubes while the inner surface or small diameter lobe determines the time cycle for the harvest sequence. All electrical circuitry is connected through the printed circuit board and the finishing timer and double-throw microswitch. The microswitch is actuated by a cam assembly directly connected to the timer motor. The timer cam can be adjusted to vary the defrost time required.

CM855R SERVICE DIAGNOSIS

The service diagnosis section is for use in aiding the serviceman in diagnosing a particular problem for pin-pointing the area in which the problem lies, thus an ever available reference for proper corrective action.

The following chart lists corrective actions for the causes of known symptoms of certain problems that can occur in the icemaking-refrigeration system.

ICEMAKING - REFRIGERATION SYTSTEM

SYMPTOM	POSSIBLE CAUSE	CORRECTION
Irregular size cubes	Some distributor holes plugged.	Clean distributor holes.
		Clean water sump.
	Shortage of water.	See Shortage of water CORRECTION.
	Unit not level.	Level cabinet, as required.
Cubes too large.	Dirty air-cooled condenser.	Clean remote condenser.
	Cube Size Control set too cold.	Rotate Cube Size Control dial toward WARMER.
	Loss of refrigerant.	Check for refrigerant leaks, correct leaks; recharge system.
Cubes too small.	Cube Size Control set too warm.	Rotate Cube Size Control dial toward COLDER.
	Moisture in refrigeration system.	Blow refrigerant charge; replace drier; evacuate system; add proper refrigerant charge.
	Shortage of water.	See shortage of water CORRECTION.
	TXV valve super heat too high.	Replace valve.
Cloudy Cubes.	Shortage of water.	See Shortage of water SYMPTOM.
	Dirty water supply.	Install water filter or treatment system.
	Accumulated impurities.	Use SCOTSMAN Ice Machine Cleaner. See Cleaning Instructions.
Shortage of water.	Short harvest cycle.	Adjust cam of timer and switch assembly.
	Water leak in sump area.	Locate leak and correct condition.
	Partial restrictions in water strainer.	Clean or replace strainer.
	Low water pressure.	Check for incorrect sypply line size or blockage.
		Check for low main pressure. If low, contact water company.

CM855R SERVICE DIAGNOSIS

SYMPTOM	POSSIBLE CAUSE	CORRECTION
Decreased Ice capacity.	High head pressure, result of dirty Condenser or Faulty Fan Motor.	Clean Remote Condenser Fins.
		Repair or replace Fan Motor.
	Non-condensable gas in the system.	Purge the system and recharge per nameplate requirements.
	Overcharge of refrigerant.	Slowly purge off to correct charge.
	Hot gas solenoid valve leaking.	Replace valve.
	Defective Compressor. Check amp draw of Compressor.	Replace Compressor.
	Leaky inlet water valve.	Replace valve.
	High Ambient temperature for condenser.	If possible, reduce condenser inlet air temperature.
Poor harvests. Icemaker does not harvest.	Too short defrost time.	Check and adjust harvest cycle.
	Restriction in water inlet line.	Check strainer and inlet water valve.
	Hot gas solenoid does not open. Binds or burned out.	Replace solenoid.
	Undercharge of refrigerant.	Charge to nameplate requirements.
	Water pressure too low.	Check for 20 PSI flowing water.
	Head Pressure Regulator valve - low head.	Replace valve.
Compressor cycles intermittently.	Low voltage.	Check for circuit overload.
		Check building supply voltage, if low, contact power company.
	Cycling on Low Pressure	Cold Ambient at Condenser.
	Control.	Pump down Solenoid Coil Open. Replace it.
Unit Trips on Hi Pressure Cut Out.	Dirty Condenser.	Clean Condenser with vacuum cleaner or brush. DO NOT USE A WIRE BRUSH.
	Defective Fan Motor.	Replace Fan Motor.
	Non-condensable gases in system.	Purge the system and recharge per nameplate requirements.
	Fan Relay of KCMR230 stuck.	Replace Relay.
Frost on Compressor.	TXV Metering too much Refrigerant.	Superheat set too low. Adjust or replace valve.

CM855R SERVICE DIAGNOSIS

SYMPTOM	POSSIBLE CAUSE	CORRECTION
Icemaker will not operate.	Blown fuse in line.	Replace fuse and check for cause.
	Master switch in OFF position.	Set switch to ON position.
	Faulty Master switch.	Replace switch.
	Timer contacts open.	Replace Timer.
	Improperly wired.	Contact electrical contactor for correction.
	Out of refrigerant, off on Low Pressure control.	Correct leak, recharge system
	High Pressure control tripped.	Reset, check condenser.
	Bin control open.	Check Bin Control Unit in coldroom or bin control defective.
	Liquid Line Solenoid valve not opening - keeps unit pumped down.	Repair or replace valve.
	Hi Temp Switch open.	Determine why Refrigerant Line is too hot.
Icemaker will not go into the Harvest Cycle automatically.	Cube size Control will not close.	Replace Size Control.
	Timer motor open.	Replace timer.
	Plug in relay contacts open.	Replace relay.
	Cube Size Control may not close if condensing pressure is too high.	Check condenser and discharge pressure.
Water overflows from the sump into the bin.	Restricted sump drain.	Repair drain.
	Inlet water valve lets in too much water.	Replace inlet valve.
Icemaker stays in the Harvest Cycle.	Plug in Relay Coil open.	Replace Relay.
	Timer Motor open or stuck.	Replace Timer.
	Timer Microswitch N.O. contacts will not close.	Replace Timer.

REFRIGERANT CHARGE DIAGNOSIS

On this model, the refrigerant charge is adequate whenever the sight glass remains full of liquid refrigerant throughout the Freeze Cycle. HOWEVER, the condensing temperature will have a direct bearing on this. A unit with a marginal charge in summer will be undercharged when the outside air temperature drops. The only correct and accurate way to charge this unit is to weigh in the nameplate charge.

CM855R REMOVAL AND REPLACEMENT PROCEDURES

WATER SYSTEM

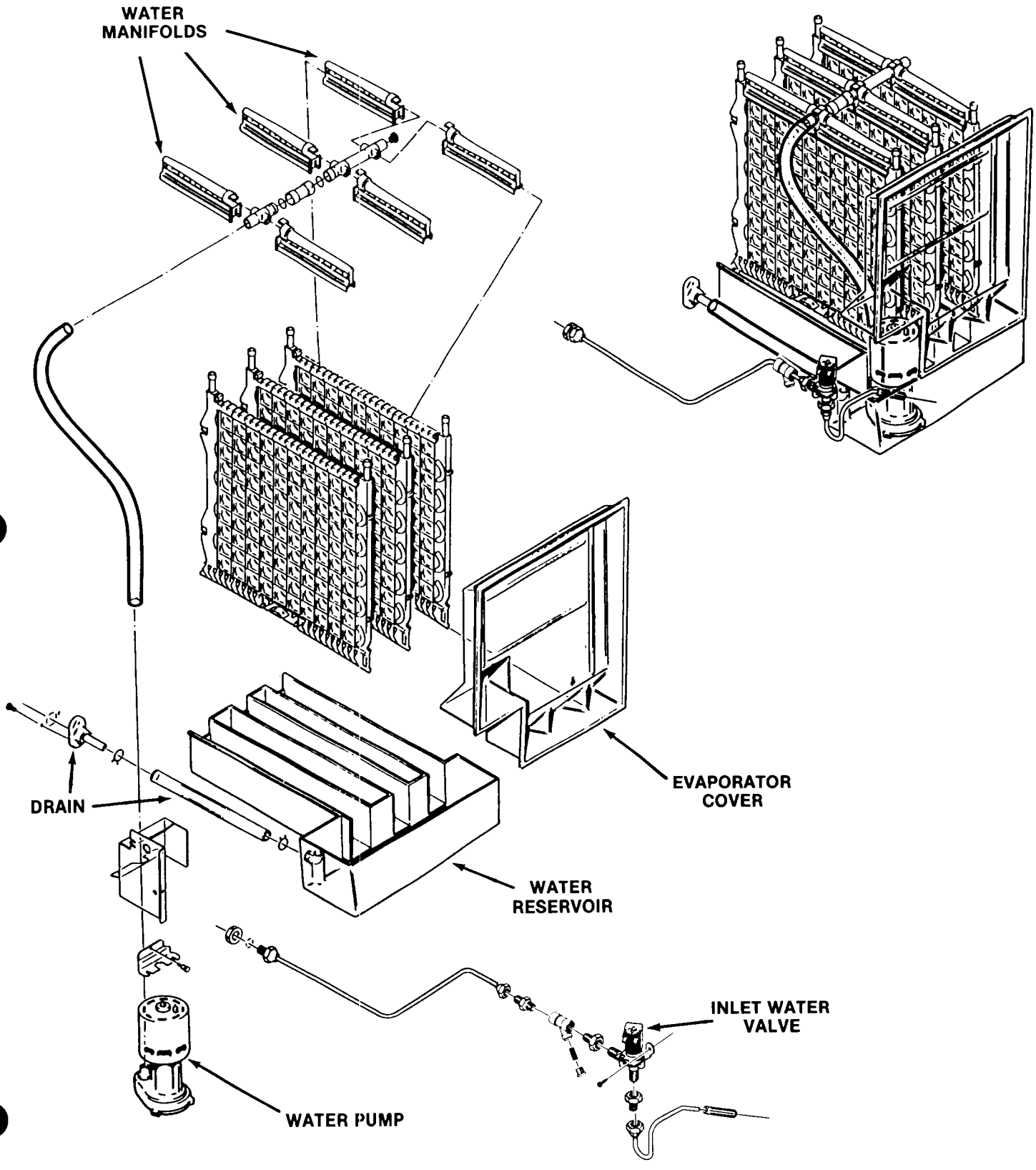

CM855R REMOVAL AND REPLACEMENT PROCEDURES

WATER PUMP

1. Remove front panel.
2. Lift up, and remove evaporator cover.
3. Unplug pump.
4. Remove one screw holding pump bracket to evaporator cross brace.
5. Pull pump forward and lift up.
6. Remove discharge hose from pump outlet.

Reverse to replace.

RESERVOIR

1. Perform above steps and remove water pump.
2. Use corbin clamp pliers, push hose clamp of drain hose away from reservoir fitting. Remove drain hose from reservoir.
3. Lift up, and pull forward to remove reservoir.

Reverse to replace.

DISTRIBUTORS/WATER MANIFOLDS

1. Remove front panel.
2. Remove evaporator cover.
3. Pull distributor forward, and lift up in the back, after distributor comes up in back, push back and unsnap distributor from water manifolds.
4. Water manifolds can be pulled away from each other. Check "O" Rings in connectors.

Reverse to replace.

INLET WATER VALVE

1. Remove front panel.
2. Unplug water valve.
3. Remove flare nut securing outlet tube to valve.
4. Remove flare nut from inlet fitting.
5. Remove 2 screws securing valve to bulkhead wall, and remove valve.
6. Remove brass water fitting from old valve to put on new valve.

Reverse to replace.

WARNING

Disconnect electrical power before beginning removal and replacement procedures.

CM855R REMOVAL AND REPLACEMENT PROCEDURES

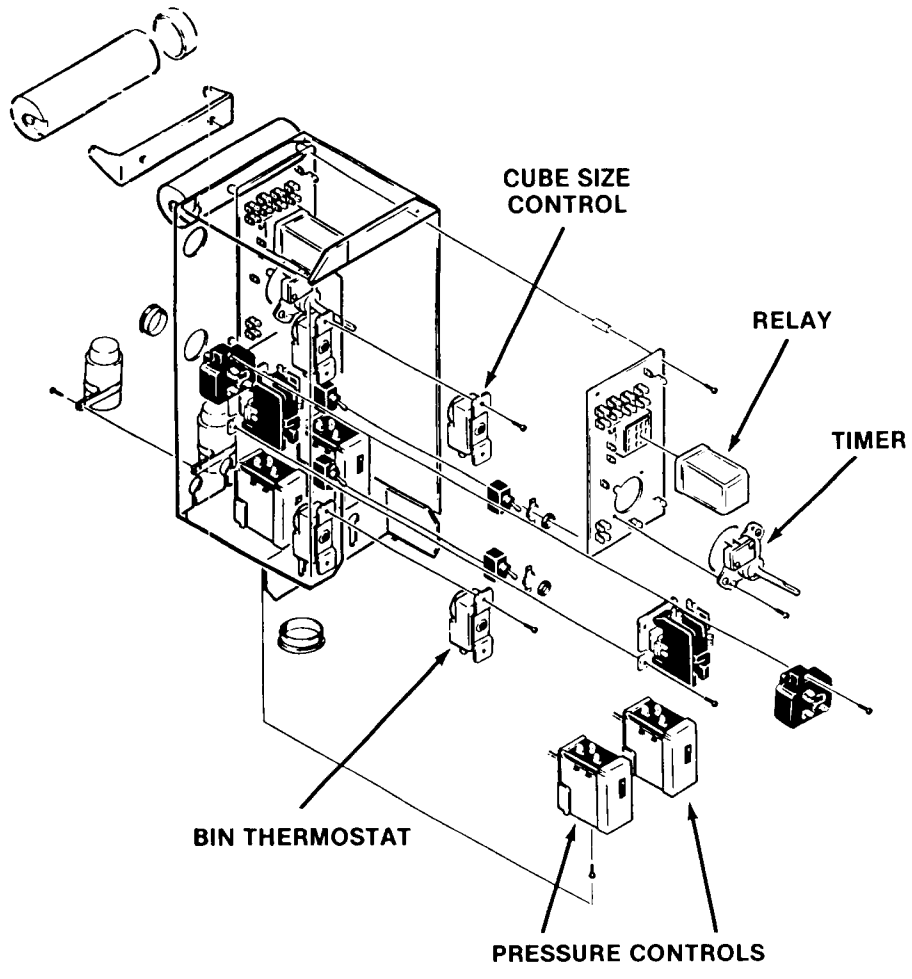

WARNING

Disconnect electrical power before proceeding with any removal.

CUBE SIZE CONTROL

1. Remove front panel.
2. Remove control box cover.
3. Above and behind control box cover, locate the bulbwell for the cube size control, remove the insulation and the bulb.
4. Disconnect wires, remove knob, and the body of the control from the control box.

Reverse to reassemble.

TIMER

1. Remove front panel.
2. Remove control box cover.
3. Remove wires from P.C. board at posts marked "timer."
4. Unscrew two screws at timer from standoffs, and remove.

Reverse to reassemble.

BIN THERMOSTAT

1. Remove front panel.
2. Pull bin control capillary out of bracket.
3. Remove control box cover.
4. Disconnect wires from thermostat.

Remove two screws, and thermostat from control box.

Reverse to reassemble.

PRESSURE CONTROLS

These are connected to the refrigeration system, and therefore the skills of that trade are required to replace them.

1. Remove front panel.
2. Remove control box cover.
3. Disconnect wires at control.
4. Purge system of refrigerant.
5. Unsweat control connection to refrigeration system, and remove control.
6. Reverse to reassemble, install new drier, evacuate and weigh in nameplate charge.

CM855R REMOVAL AND REPLACEMENT PROCEDURES

WARNING

Disconnect electrical power supply to icemaker whenever replacement procedures are performed.

COMPRESSOR

1. Remove top panel (if possible), front panel and left side service panel.
2. Disconnect electrical lines from compressor.
3. Purge system of refrigerant.
4. Remove compressor mounting bolts.
5. Cut or unsweat discharge, process, and suction lines.
6. Remove old filter drier.
7. Remove compressor from unit.

Check or replace starting components. Reverse steps to reassemble.

HOT GAS VALVE OR LIQUID LINE VALVE

1. Remove front, left side service panel, and top panel (if possible).
2. Unplug electrical connection to valve coil.
3. Purge system of refrigerant.
4. Cut out or unsweat valve, remove from machine.
5. To replace, heat sinking of the valve body is **critical.** Wrap the replacement valve in wet rags, and sweat it into place (make sure arrow on valve points in direction of refrigerant flow). Reverse steps 1-3 to reassemble.

THERMOSTATIC EXPANSION VALVE

1. Remove front and top panel (if possible).
2. Purge system of refrigerant.
3. Cut out or unsweat at inlet, equalizer, and outlet.
4. Remove insulation from valve bulb, remove mounting strap and valve from unit.
5. Place new valve bulb in the same place as the old, secure with straps, and reinsulate.
6. When replacing the valve, heat sinking or protecting the valve from damage is **critical.** Wrap the body of the valve in wet rags and sweat into place. Leave the rags on until the joints cool.
7. Remove and replace drier.

HEAD PRESSURE CONTROL VALVE

1. Remove left side service panel.
2. Purge the system of refrigerant.
3. Cut out or unsweat valve.
4. Wrap the new valve in wet rags to prevent damage from heat, and sweat into place.
5. Remove and replace drier.

NOTE

Always install a replacement drier, any time the sealed refrigeration system is opened. Do not replace the drier until all other repair or replacement has been completed. Evacuate and **WEIGH IN** the nameplate charge.

CM855R REMOVAL AND REPLACEMENT PROCEDURES

REMOVAL AND REPLACEMENT OF THE EVAPORATOR PLATE ASSEMBLY

1. Remove the front and top panels.
2. Bleed off or blow the refrigerant charge through the Schrader valve.
3. Disconnect Tygon water inlet tube(s), at the water manifold tee(s), above the evaporator plates.
4. Remove reservoir and pump.
5. Slide the water distributor tubes about 1/8-inch along the top of the evaporator plate to be removed, until the left water distributor tube can be lifted upward.
6. Lift the end of the water distributor tube and slide the distributors toward the left along the top of the evaporator plate, until the flexible right notch is cleared.
7. Unsnap and disconnect each left and right water distributor tube from the water manifold section.

////////////////////// **CAUTION** //////////////////////

Use EXTRA PRECAUTION to protect the plastic parts during the next step to unsolder the refrigerant lines, two places, at the top of the evaporator plate. Position wet cloths over top of plates, as well as over the plastic liner at the rear or sides, to prevent accidental heat damage or possible fire from torch flame.

//

8. Unsolder and remove the refrigerant lines at the top of the evaporator plate to be replaced.
9. Loosen the braces just enough to remove the evaporator plate. Temporarily replace the braces to support the remaining evaporator plate(s).

Always install a replacement drier, anytime the sealed refrigeration system is opened. Do not replace the drier until all other repair or replacement has been completed.

To replace the evaporator plate, reverse the removal procedures. See Nameplate. Weigh in proper charge of R-502.

Whenever a new charge of refrigerant is placed in the system, the compressor should NOT BE RUN until the crankcase heater has been on for 12 hours after re-charging.

CHARGING PROCEDURES

Particular care must be taken when recharging this remote system. No liquid refrigerant may be placed in the system at the compressor. DO NOT use the Schrader valves at the front of the machine for weighing in the charge. All liquid R-502 must be weighed into the receiver through the "front seated" King Valve.

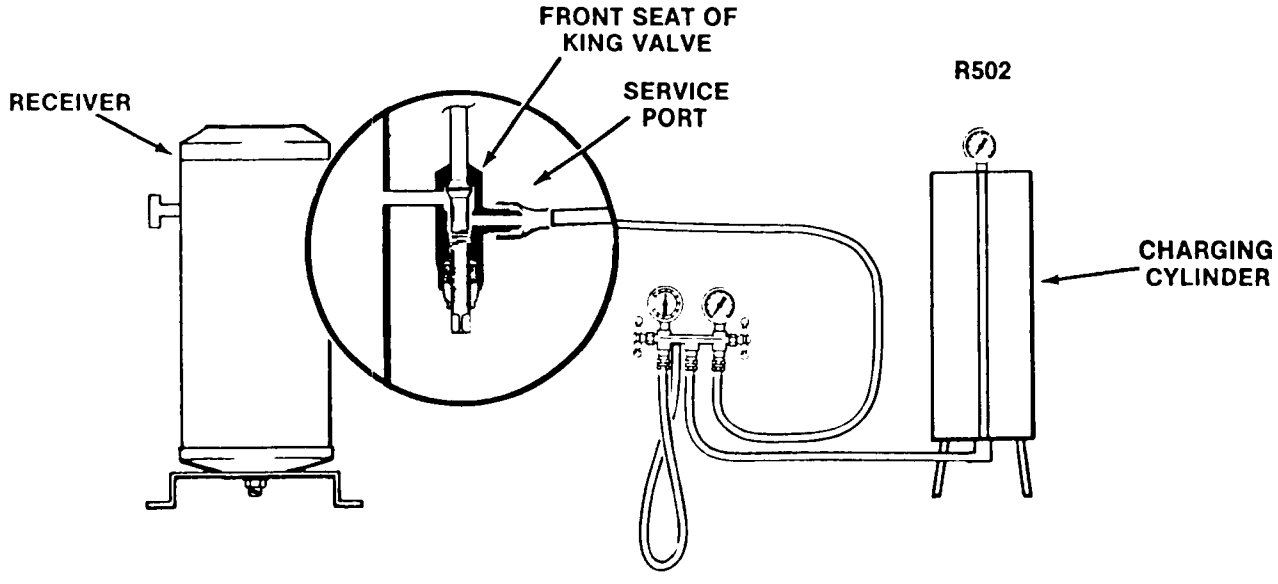

CSW1/AC50

TABLE OF CONTENTS

GENERAL INFORMATION & INSTALLATION

Introduction 2
Changing Bin Door Panel 4
Unpacking 5
Location & Leveling 5
Water Supply and Drain Connections 6
Electrical Connections 7

OPERATING INSTRUCTIONS

Icemaker Operation 8
How it Works 10
Unit Wiring Diagram 11
Operation Checklist 12

GENERAL CARE AND CLEANING

Cleaning Exterior 13
Cleaning Condenser 13
Cleaning & Sanitizing 14
Filtering and Treating Water 16
Icemaker Shutdown 16
Self-Service Checklist 17

PARTS LIST AND WIRING DIAGRAMS 1
(Printed in yellow)
How to Order Parts or Assemblies 1

PARTS LIST:

Cabinet, Liner and Door Parts 2
Major Components 3
Evaporator, Ice Cutter Grid and Pump Parts 4
Escutcheon and Control Parts 5

WIRING DIAGRAM:

CSW1/AC50 AE-1A (115/60/1) 6

LIST OF ILLUSTRATIONS

Specifications 3
Changing Bin Door Panel 4
Plumbing Connections 6
Electrical Connections 7
Wiring Diagram 11
General Care and Cleaning 13

THIS PAGE
INTENTIONALLY
LEFT BLANK

CSW1 or AC50
GENERAL INFORMATION AND INSTALLATION

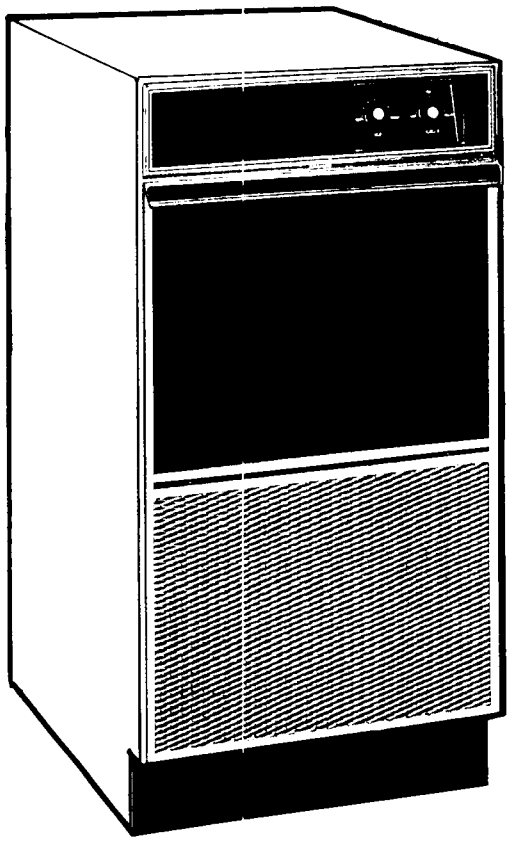

CSW1 OR AC50
SELF-CONTAINED CUBER

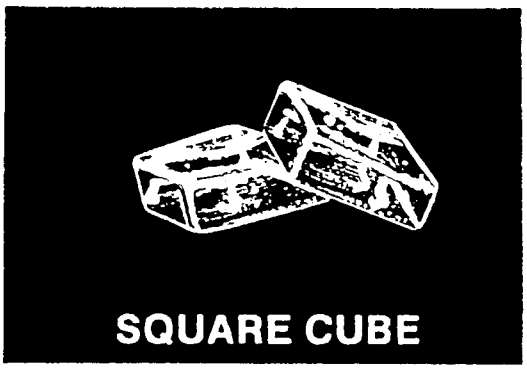

INTRODUCTION

These instructions provide the specifications and the step-by-step procedures for the installation, start up and operation for the W-Series Models CSW1 or AC50 Cuber.

The Models CSW1 or AC50 Self Contained Cubers are quality designed, engineered and constructed, and are thoroughly tested icemaking systems, providing the utmost in flexibility to fit the needs of a particular user.

CSW1 or AC50
GENERAL INFORMATION AND INSTALLATION

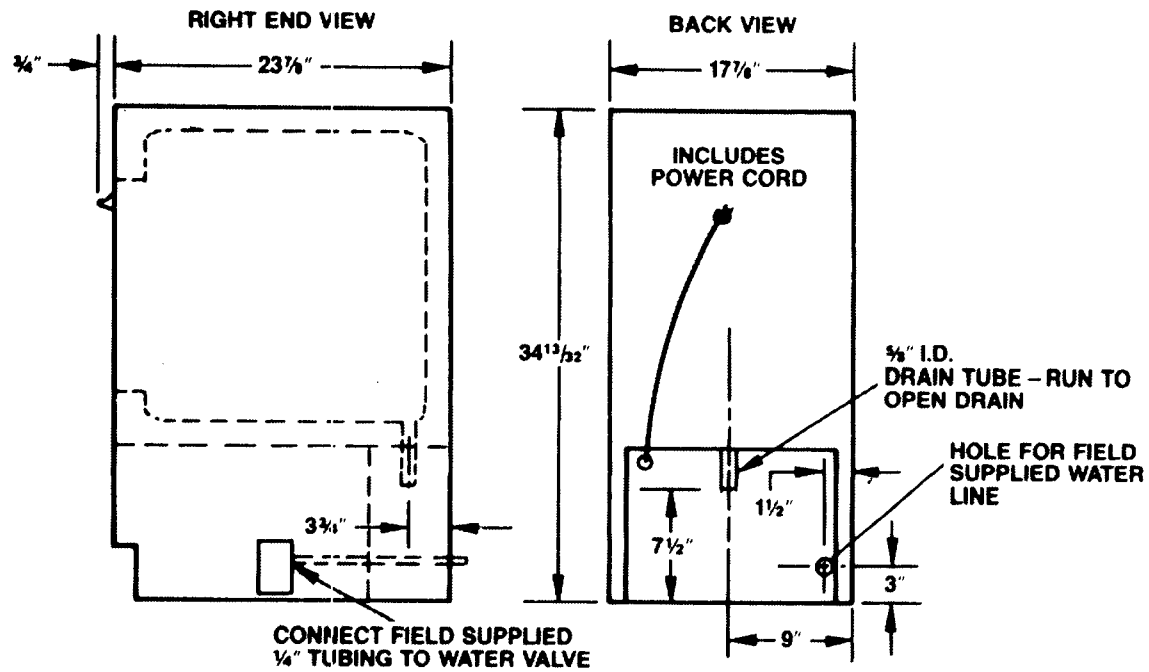

This product qualifies for the following listings:

We reserve the right to make product improvements at any time. Specifications and design are subject to change without notice.

SPECIFICATIONS

Model Number	Dimensions H" x W" x D"	Bin Cap.	Cond. Unit	Finish	Basic Electrical	Comp. H.P.	Time Delay Fuse Size Max.	Amp. (Average)	Water (In.)	Drain (In.)	Ship. Wt. (Approx. Lbs.)
CSW1AE-1A	34-13/32 x 17-7/8 x 23-7/8	35 lbs.	Air	ES	115/60/1	1/5	15	4.6	1/4	5/8	120 lbs.
AC50AE-1A	34-13/32 x 17-7/8 x 23-7/8	35 lbs.	Air	ES	115/60/1	1/5	15	4.6	1/4	5/8	120 lbs.

(ES) Sandalwood, Leathergrain embossed steel with high gloss baked enamel finish.
Use this value to determine minimum wire size as per National Electric Code Standards

IMPORTANT OPERATING REQUIREMENTS

	MINIMUM	MAXIMUM
*Air Temperatures	55°F (10.0°C)	100°F (38°C)
Water Temperatures ...	40°F (4.4°C)	100°F (38°C)
Water Pressures	20 lbs. gauge	100 lbs. gauge
Single Voltage Units ...	-10%	+10%

(Voltage rating specified on nameplate)

Extended periods of operation exceeding these limitations constitutes misuse under the terms of Scotsman Manufacturer's Limited Warranty, resulting in a loss of warranty coverage.

GRIDS FOR LARGE CUBES On Models CSW1 or AC50 to convert cube size to 1-1/4" x 1-1/4", order grid CCK-108-SG. Note: Order these special grids through the Scotsman Parts Department.

CSW1 or AC50
CHANGING THE BIN DOOR PANEL

CHANGING THE BIN DOOR PANEL

The storage bin door is designed to accept an optional decorative wood panel of your choice.

The wood panel should be no more than 1/4 inch (6mm) thick. Cut it to the same size as the production metal panel.

To change the panel:

1. Open the bin door.
2. Remove the two screws on top of the door which hold the handle.
3. Remove the handle.
4. Slide the metal panel out.
5. Break off the ribs on the door insulation to allow for the wood thickness.
6. Slide the wood panel into the door frame.
7. Replace handle and screws.

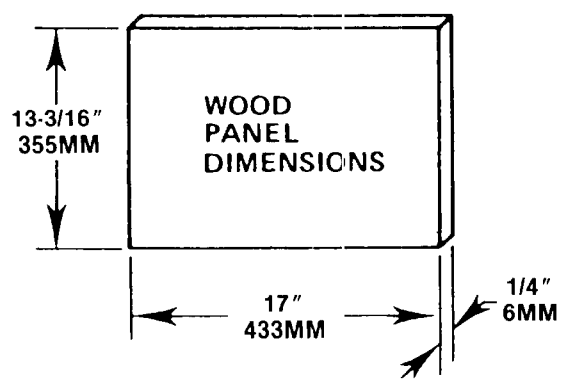

Lower Door Panel Size on "B" Models:

11⅞" high by 17" wide

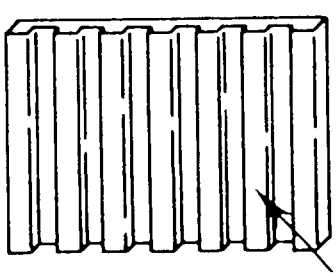

REMOVE ALL DOOR INSULATION RIBS TO ACCEPT WOOD PANEL THICKNESS

THERMOSTAT CALIBRATIONS

If icemaker is installed above two thousand feet of altitude, the bin and evaporator thermostats must be adjusted to a warmer setting. Disconnect electricity, remove thermostat and follow the directions for turning the altitude adjustment screw as shown in the label on each thermostat.

CSW1 or AC50
GENERAL INFORMATION AND INSTALLATION

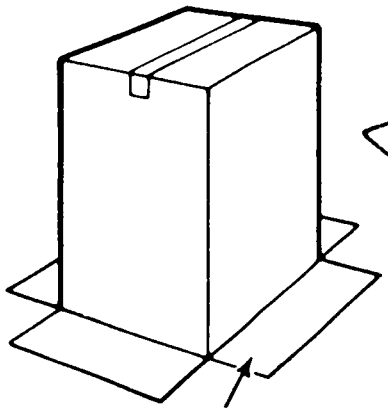

OPEN BOTTOM FLAPS

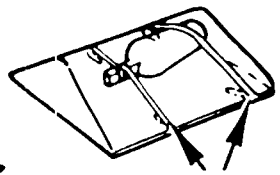

REMOVE INTERIOR PACKING

THIS UNIT MUST BE INSTALLED IN AN AREA PROTECTED FROM THE ELEMENTS, SUCH AS WIND, RAIN, WATER SPRAY OR DRIP.

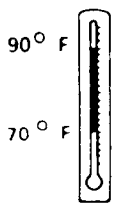

UNPACK

1. Lay carton on rear face and break open bottom flaps.
2. Set carton upright with all four flaps outward.
3. Lift container up and off of machine.
4. Remove all tape and packaging material from the outside and inside of the cabinet.
5. Remove the front grill; take out the screws securing the grill at the bottom and lift it free of cabinet.
6. Turn the fan by hand to make certain it moves freely.
7. Loosen thumb screws holding cutter grid and water pan to "thumb tight."

UTILITIES

OBSERVE LOCAL CODES

Each installation is unique but will require:

1. A cold water inlet of 1/4" OD soft copper tubing and a shut-off valve.
2. Either a gravity drain system or a sump pump to lift the water to an existing drain.
3. An electrical branch circuit of 115 Volt, 60 Hz, 1 phase, with a 15 Amp delayed action fuse.

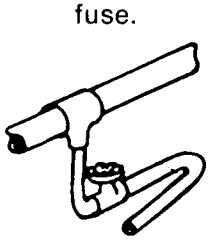

WATER

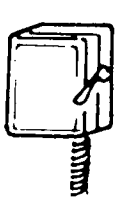

ELECTRICITY

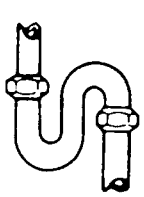

DRAIN

LOCATE UNIT

1. Place unit so the front side will be completely unobstructed, to provide proper air flow.
2. Area should be well ventilated with temperature above 55°F and below 110°F. Best results are obtained between 70°F and 90°F.
3. Provision for electricity, water and drain connections should be determined.
4. The unit may be closed in on the top and three sides, but the front **MUST BE** unobstructed for air circulation and proper operation. Installation should be such that the cabinet can be moved forward for servicing, if necessary.

LEVEL UNIT

1. After placing unit in position, check to make certain the unit is level side to side and front to back.
2. Accurate leveling is essential for proper operation.
3. Unit should be shimmed so that it is solid as well as level. The shims should be of hard permanent type material such as masonite.
4. If required by sanitation code, seal the cabinet to the floor with an approved caulking compound.

CSW1 or AC50
FOR THE PLUMBER

CONNECT TO WATER

OBSERVE LOCAL CODES

1. Use 1/4" OD soft copper tubing for the cold water supply.
2. Provide a convenient manual shut-off valve in the water line.
3. Position the tubing so it can enter the access hole located in the right-hand rear of the cabinet. The tubing should extend beyond the cabinet front when the cabinet is pushed back into position.

NOTE: Always purge the water line before making the final connection to the inlet of the water valve to prevent possible water valve malfunction.

After the cabinet is in place, bend the tubing to meet the connection at the water valve. The garden hose threaded compression fitting is found in the parts bag. This joint provides a convenient disconnect for service. Be sure the tubing is clear of compressor, to prevent rattle.

CONNECT THE DRAIN

OBSERVE LOCAL CODES

1. The unit is provided with a gravity drain.
2. The ideal installation has a standpipe (1-1/4" minimum) installed directly below the outlet of the drain tube.
3. It may be desirable to insulate drain line thoroughly up to drain inlet.

SUMP PUMP (To be purchased locally - not available from Scotsman)

1. When a drain connection below the level of the unit is not available, a sump pump may be used to lift the water to an available drain.
2. Install sump pump on floor behind icemaker with discharge tube to the rear. Run bin drain directly into sump pump as shown in the illustration.

NOTE: Electric connection to sump pump should be from a circuit that remains energized continually.

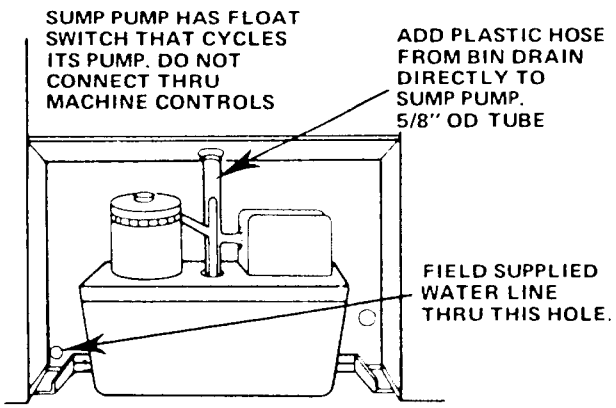

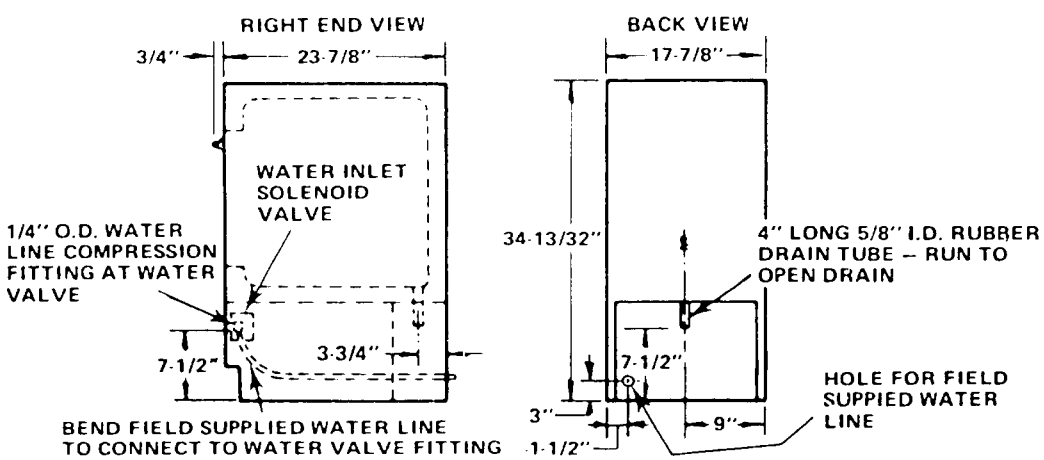

CSW1 or AC50
FOR THE ELECTRICIAN

ELECTRICAL REQUIREMENTS

A 115 Volt, 60 Hz, AC only, 15 Amp fused electrical supply is required (time delay fuse or circuit breaker is recommended). It is recommended that a separate circuit, serving only this appliance, be provided. **DO NOT** use an extension cord.

ELECTRICAL GROUND IS REQUIRED ON THIS APPLIANCE.

RECOMMENDED GROUNDING METHOD

DO NOT, UNDER ANY CIRCUMSTANCES, REMOVE THE POWER SUPPLY CORD GROUND PRONG.

For your personal safety, this appliance must be grounded. This appliance is equipped with a power supply cord having a 3-prong grounding plug. To minimize possible shock hazard, the cord must be plugged into a mating 3-prong grounding type wall receptacle, grounded in accordance with the National Electrical Code and local codes and ordinances. If a mating wall receptacle is not available, it is the personal responsibility and obligation of the customer to have a properly grounded 3-prong wall receptacle installed by a qualified electrician.

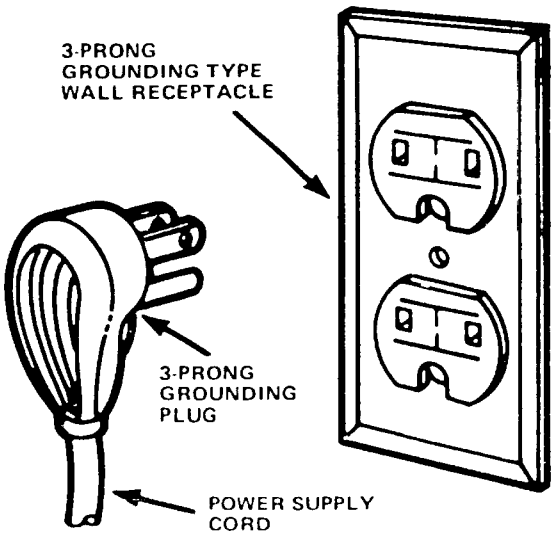

CSW1 or AC50
OPERATING INSTRUCTIONS

BEFORE OPERATING THE ICEMAKER

It is your responsibility to make sure that the icemaker:

- has been installed where it is protected from the elements
- is located so that the front is not blocked to restrict incoming or discharge air flow.
- is properly leveled.
- is located in a well ventilated area with temperatures above 55°F (13°C) and below 110°F (43°C). Best results are obtained at temperatures between 70°F (21°C) and 90°F (32°C).
- is properly connected to a water supply and drain.
- is properly connected to electricity. A 115 Volt, 60 Hz., 15 amp fused electrical supply is required. NOTE: Time delay fuse or circuit breaker is recommended.
- is properly electrically grounded.
- is not operated by anyone unable to use it properly.
- is used only for the job it was designed to perform.
- is properly maintained.

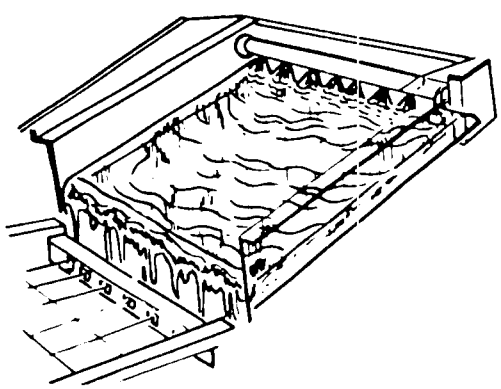

ICEMAKER OPERATION

How it makes ice:

1. Water is constantly circulated over a freezing plate. As the water freezes into ice the minerals in the water are rejected. This produces a clear sheet of ice with a low mineral content.

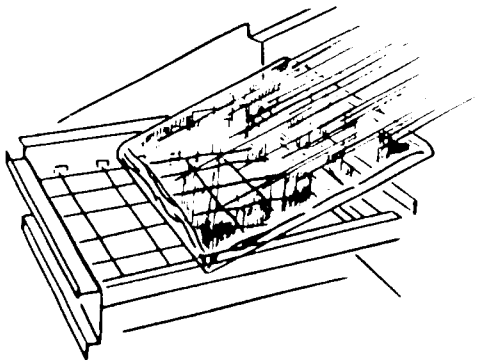

2. When the desired thickness is reached, the ice sheet is released and slides on to a cutter grid. The grid divides the sheet into individual cubes.
3. The water containing the rejected minerals is drained after each freezing cycle.
4. Fresh water enters the machine for the next ice making cycle.

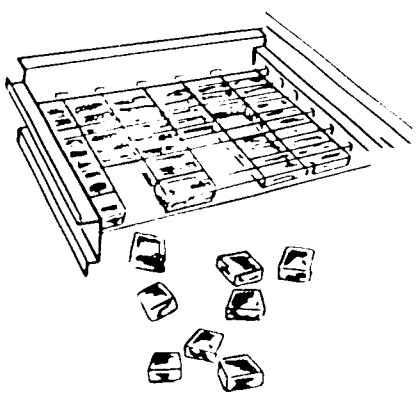

5. Cubes fall into the storage bin. When the bin is full the icemaker shuts off automatically and restarts when more ice is needed.

CSW1 or AC50
OPERATING INSTRUCTIONS

TO OPERATE THE ICEMAKER:

1. Select ice thickness. The icemaker has been pre-set to produce ice approximately 1/2″ thick, while operating in a room ambient of 70°F (21°C).

   Operation in different ambient temperatures may require readjusting the control toward "THICK" or "THIN."

   Best operation will be obtained with ice 1/2″ to 5/8″ thick.

   If operating in a warm room ambient (above 90°F [32°C] **DO NOT** set control to maximum thickness or the unit may malfunction.

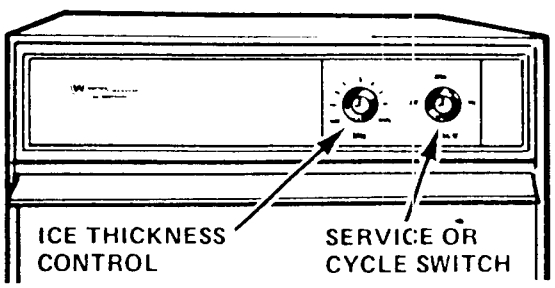

2. To start the normal ice making cycle, turn service or cycle switch to "ON."
3. To stop icemaker operation, turn service or cycle switch to "OFF."
4. The "CLEAN" setting is used whenever solutions are circulated through the icemaker for cleaning. Only the water pump operates at this setting.

CSW1 or AC50
OPERATING INSTRUCTIONS

HOW IT WORKS

- Compressor runs
- Condenser fan runs
- Water pump runs (circulates water)
- Cutter grid is warm to touch

WHEN THE DESIRED ICE SLAB THICKNESS IS REACHED THE HARVEST CYCLE BEGINS AND THE FOLLOWING HAPPENS:

- Evaporator thermostat is satisfied
- Condenser fan stops or turns very slowly
- Water pump stops
- Hot gas solenoid opens
- Water inlet valve opens
- Excess water is flushed out of the drain pan
- Cutter grid is warm to the touch

NOTE: Normal harvest cycle takes 60 to 120 seconds.

MACHINE RESUMES FREEZING AFTER SLAB IS RELEASED FROM EVAPORATOR AND THE CUTTING PROCESS BEGINS.

WHEN THE STORAGE BIN IS FILLED, BIN THERMOSTAT OPENS.

- Cutter grid remains on

THINGS TO REMEMBER

- Water enters only during the defrost cycle. Therefore the first cycle will be completed without water in the system.
- As the room and water temperatures vary, so will the amount of ice produced. This means that higher operating temperatures will result in reduced ice production.
- The unit will shut off when ice in the storage bin touches the bin thermostat well and will automatically cycle to keep the bin full.
- The storage bin is not refrigerated and some meltage will occur. This, too, varies with the room temperature.
- The unit needs good air circulation to perform efficiently. Keep the front grill and the condenser clean.
- The water system, including filter screen in the water inlet solenoid valve, needs to be cleaned periodically for good circulation. Instructions are located on the inner door panel.

OPERATING INSTRUCTIONS

- For complete operating information, refer to the Use and Care Guide
- Before starting, wash out interior of cabinet with a Baking Soda solution (2 tablespoons soda to a quart of warm water). Rinse thoroughly.
- Make certain the water is turned on.
- Turn switch to the "ON" position.

IMPORTANT:
Allow unit to run for 3 hours before expecting ice and for 24 hours before trying to set the thickness control.

If installed above 2,000 feet altitude, see thermostat adjustments.

CSW1 or AC50
OPERATING INSTRUCTIONS

UNIT WIRING DIAGRAM

This model operates at 115 volts except for the cutter grid circuit which operates at 8.5 volts at 1 amp.

The compressor runs at all times except when the bin thermostat becomes satisfied and opens up. This de-energizes the system except for the transformer and cutter grid.

Under normal operating conditions, when the evaporator reaches the preset temperature (+ 10° to -3° F, depending on thickness of ice) the evaporator thermostat opens, terminating operation of the fan motor and pump motor. The hot gas solenoid and the water valve solenoid are energized at this time and remain so until the evaporator reaches 38 + 2° F.

DANGER: ELECTRIC SHOCK HAZARD
DISCONNECT POWER BEFORE SERVICING UNIT
MAXIMUM FUSE SIZE - 15 AMPS

NOTE: CONTACTS SHOWN IN FREEZING CYCLE

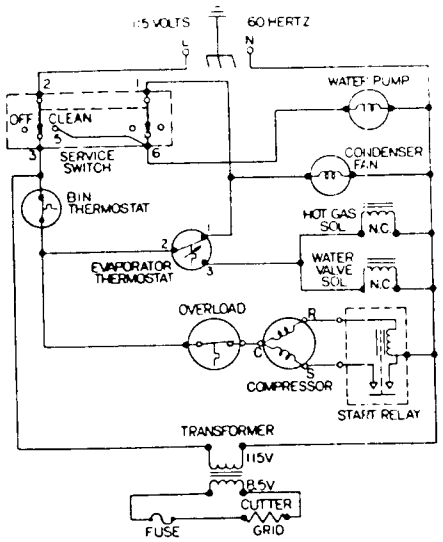

YOUR UNIT MAY OR MAY NOT BE EQUIPPED WITH A CUTTER GRID FUSE.

COLOR CHART	
R	RED
BK	BLACK
BU	BLUE
W	WHITE
Y	YELLOW
O	ORANGE

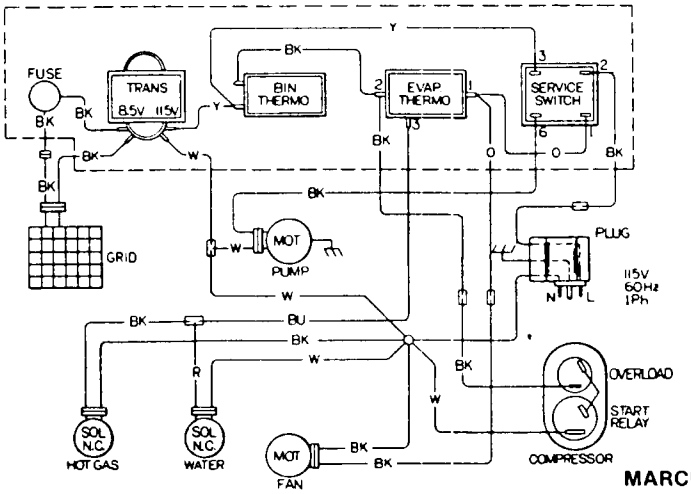

CUBELET CUTTER GRIDS

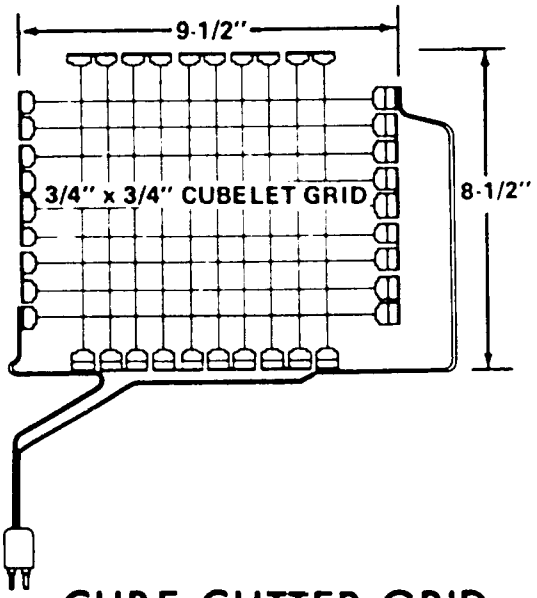

CUBE CUTTER GRID

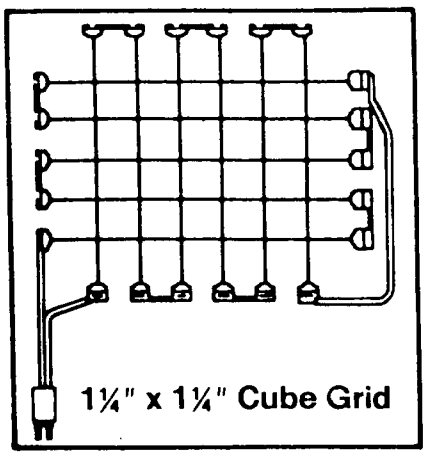

CSW1 or AC50
OPERATING INSTRUCTIONS

CHECK OPERATION

- Start the unit by turning the service switch to "ON" and opening the line water valve.
- NOTE: Left is "OFF" — Middle is "ON" — Right is "CLEAN." In "CLEAN" position, only the pump operates.
- Check condenser fan to make sure it is revolving.
- Water will not enter pump pan until freezing plate gets cold and machine goes into a harvest cycle.
- Check for even water flow over freezing plate. Unit must be level for proper operation.
- Check for desired cube thickness and after 24 hours adjust if necessary. Maximum ice yield will be obtained with ce thickness at 1/2″ to 5/8″.
- Replace grill.

CSW1 or AC50
GENERAL CARE AND CLEANING

GENERAL CARE AND CLEANING

Periodically inspect and clean the icemaker to keep it operating at peak efficiency and to prevent premature failure of system components.

Both the ice making system and the air cooled condenser need to be cleaned regularly.

CLEANING EXTERIOR SURFACES:

Wash the exterior enamel surfaces and gaskets with warm water and mild soap or detergent. Rinse and dry. Regular use of a good household appliance cleaner and wax will help protect the finish.

NOTE: Do not use harsh or abrasive cleaners on enamel surfaces as they may scratch the finish.

CLEANING THE CONDENSER:

A dirty or clogged condenser:

- prevents proper air flow.
- reduces ice making capacity.
- causes higher than recommended operating temperatures which may lead to component failure.

TO CLEAN:

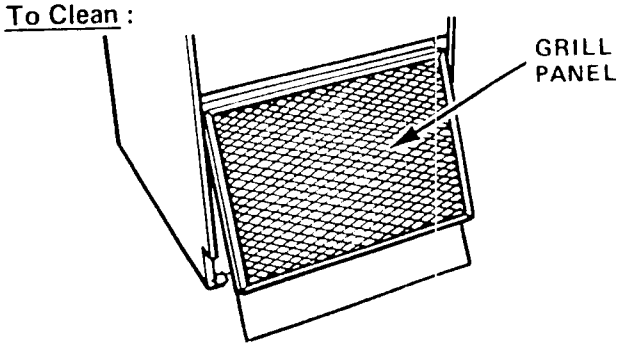

1. Disconnect electrical power supply to the machine or place the service switch in the "OFF" position. The condenser fan should not operate while removing dirt from the condenser.
2. Remove the two screws from the bottom of the grilled front panel.

CAUTION: Switch must be in "OFF" position to keep condenser fan from rotating. Do not touch condenser fins. They are sharp. Refrigerant tubing gets very hot during normal operation. Be careful.

3. Pull forward and down to remove the panel.

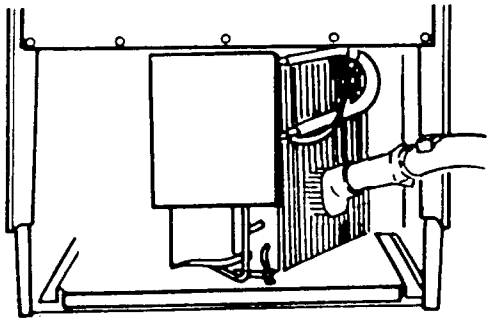

4. Remove dirt and lint from the condenser fins with a soft brush and then use a vacuum cleaner to remove the dirt from the unit compartment.

CAUTION: Condenser fins are sharp and can bend easily. Use care when brushing the condenser to keep from bending the fins. Condenser tubing gets hot enough during normal operation to burn your hand. Use care and do not touch the tubing.

5. Replace the grilled front panel and screws.

CSW1 or AC50
CLEANING AND SANITIZING THE ICE MAKING SYSTEM

ICE MAKING SYSTEM:

The minerals rejected from the circulating water during the freezing cycle will eventually form a hard scaly deposit in the water system which prevents a rapid release of the ice.

Clean ice and water system periodically to remove mineral scale build-up. Frequency of cleaning depends on water hardness. With soft water, cleaning may not be required for several years. With hard water (15 to 20 grains/gal.) cleaning may be required as frequently as every six months.

TO CLEAN AND SANITIZE, FOLLOW THIS PROCEDURE.*

*Approved by the National Sanitation Foundation.

1. Place cycle or service switch in "OFF" position.

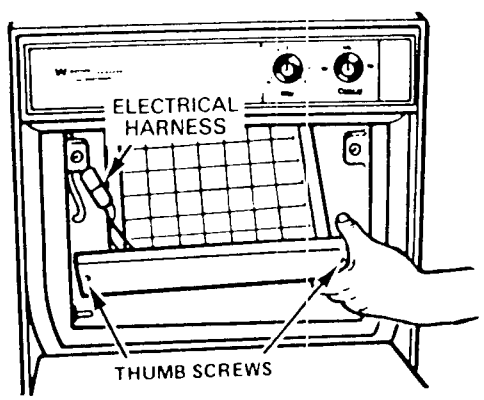

2. Remove the two thumb screws and slide the ice cutter grid out of the two slots near the water pan.
3. Unplug the electrical harness.

Any ice on the grid should be melted under running warm water. Attempting to pick the ice slab off the grid may stretch and damage grid wires.

4. Remove all ice from the storage bin and the freezing plate.
5. Drain the water pan by removing the drain plug and then replace the plug.

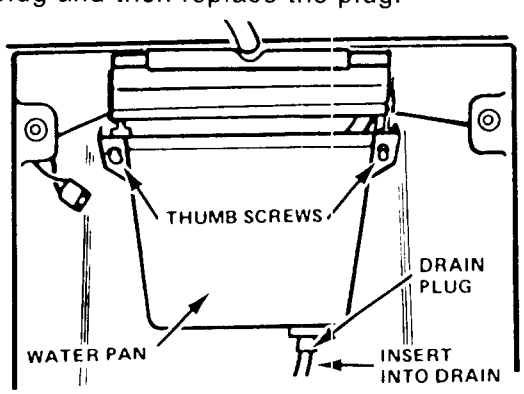

WARNING: Most ice machine cleaners are citric or phosphoric acid which can cause irritation even after dilution. In case of contact with eyes, flush eyes thoroughly with fresh water and contact a physician immediately. In case of contact with skin, rinse will with water. If **swallowed,** give large amounts of water and contact a physician immediately. Do not induce vomiting. KEEP OUT OF REACH OF CHILDREN.

6. Pour 1/2 gallon (1.9 L) of hot tap water into the water pan and turn the service or cycle switch to "CLEAN." This warms up the system to make the cleaning solution more effective. Let circulate for five minutes. While tap water is circulating, prepare cleaning solution. Mix:
   6 oz. (170g) powdered citric, or phosphoric acid into
   1/2 gallon (1.9L) hot water

(Citric and phosphoric acid crystals are available from many pharmacies or scientific supply houses.)

Commercial Ice Machine cleaners (liquid) are also available from your dealer or refrigeration parts supply stores. Mix according to instructions on label (total quantity 1/2 gallon [1.9L]).

7. Turn Service or Cycle switch to "OFF" and drain tap water.
8. Turn the switch to "CLEAN" and slowly pour the hot cleaning solution into the water pan. (If the solution foams while pouring, wait until foaming stops.) Then add the balance of the solution.

Allow solution to circulate until the scale has dissolved (15 to 30 minutes). Severe scale build-up may require repeated cleaning with a fresh quantity of cleaning solution.

To clean scale off the side flanges of the freezing plate, use rubber gloves and scrub with a plastic scrubby or non-soap filled stainless steel pad dipped in cleaning solution.

9. Drain the cleaning colution. Using the rubber gloves, remove the drain plug and set the switch to "OFF."
10. Replace the plug and add 1/2 gallon (1.9 L) of fresh water. Set switch to clean, circulate five minutes, drain. Repeat rinsing process.

CSW1 or AC50
CLEANING AND SANITIZING THE ICE MAKING SYSTEM

REMOVAL AND CLEANING OF INTERIOR COMPONENTS:

DO NOT OPERATE UNIT WITH PANELS REMOVED.

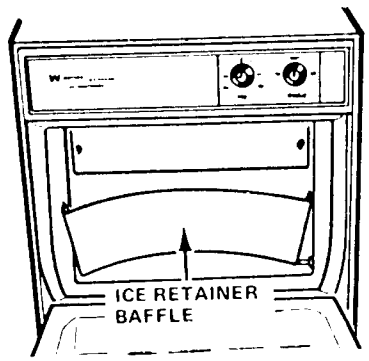

1. Remove ice retainer baffle by flexing it and then slide it off the studs.

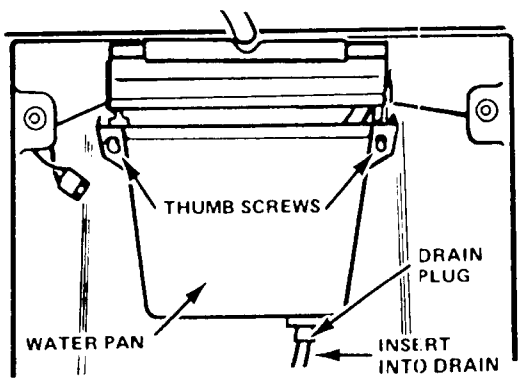

2. Remove the water pan by unscrewing the two thumb screws.
3. Remove the hose from the water pump. Clean the water inlet hose hanging in the water pan.

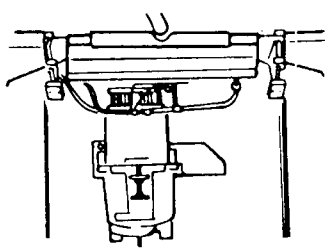

4. Remove the water distributor from the freezing plate. It is held in place by rubber end caps. Remove the inlet hose and clean all water distributor holes and the small orifice in the inlet side of the distributor. When replacing the distributor, make sure the end caps are located in the evaporator flange detents and that the water distributor holes face down.
5. Wash the interior components you have just removed with mild soap or detergent and warm water. Rinse in clean water. Sanitize in a solution of 1/4 oz. (8 ml) of chlorine laundry bleach mixed with 1 gallon (3.8 L) warm water.

NOTE: Do not wash plastic parts in dishwasher. Plastic parts can not withstand temperatures above 145° (63° C).

6. Wash the storage bin, door, gasket, and ice scoop with mild soap or detergent and warm water. Rinse with clean water. Sanitize with the chlorine bleach and water solution.
7. Replace the interior components: water distributor, hoses, water pan, and ice retainer.
8. Check the following:

- Hose from water valve is in water pan.
- Rubber drain plug is in water pan.
- Water distributor is seated and holes are facing down.
- Hose is reconnected to pump and water distributor.
- Hose from water pan is inserted into storage bin drain opening.

9. Reconnect electrical harness. Replace cutter grid.

CSW1 or AC50
CLEANING AND SANITIZING THE ICEMAKING SYSTEM

REPLACING THE CUTTER GRID FUSE:

Disconnect the power cord. Open the bin. Remove the electrical control panel cover by removing the two screws located underneath and lifting off. The fuse is located on the left front with an arrow pointing to it.

To remove, push in and twist fuse. Replace with the same size fuse, 2.8 amps.

NOTE: Fuses with other amp ratings may not fit and will not provide adequate protection.

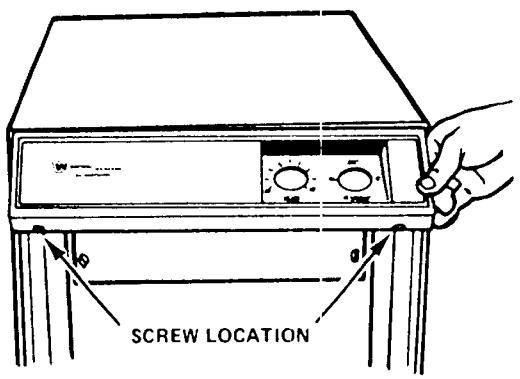

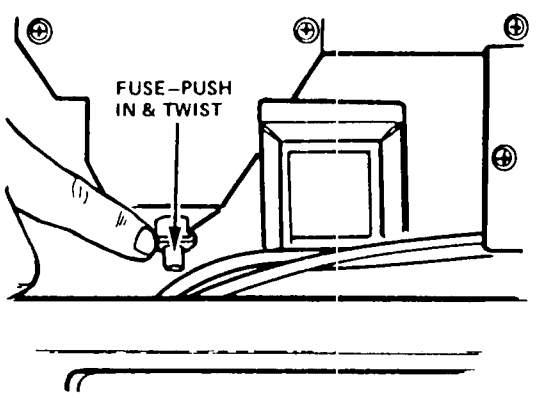

CHANGING THE BIN DOOR PANEL

The storage bin door is designed to accept an optional metal or decorative wood panel of your choice. An optional metal panel may be substituted directly for the factory panel providing it is between .020" and .040" thick and cut to the same size (17" X 13-3/16"/433mm x 335 mm) as the factory panel.

TO CHANGE THE PANEL:

1. Open the bin door and remove the two screws on top of the door which holds the handle.
2. Remove the handle.
3. Slide the factory metal panel out.
4. Slide the optional metal panel into the door frame and replace the handle and screws.

NOTE: A brushed chrome door panel is available that you can order from your dealer as part No. 755340.

You can also have a decorative wood panel to match existing cabinets. The panel should be 1/4" x 17" x 13-3/16" (6mm x 433mm x 355mm).

To change a wood panel, follow the procedure 1 through 3 and continue as follows:

5. Break off the ribs on the door insulation to allow for the wood thickness.
6. Slide the wood panel into the door frame.
7. Replace the handle and screws.

FILTERING AND TREATING WATER

In most areas it will be beneficial to filter or treat the water being supplied to the ice machine. It can improve the reliability of the machine, reduce water system maintenance and produce the best quality of ice.

The installation of a polyphosphate feeder will generally reduce scale build-up and the ice machine will require less frequent cleaning.

Municipal water systems are generally treated with chlorine to maintain a safe potable water supply. Activated carbon filters will sufficiently remove the residual chlorine from the water to reduce surface staining on stainless steel materials in the ice machine.

TO SHUT DOWN THE ICEMAKER

1. Turn icemaker to "OFF."
2. Remove all ice from storage bin.
3. Shut off the water supply.
4. Remove front grill.
5. Disconnect the inlet and outlet lines to water valve. Allow these lines to drain and then reconnect to the valve.
6. Replace front grill and screws.
7. Remove water from drain lines and drain water pan if the unit will be subjected to freezing temperatures during shut down.
8. Before using again, clean and sanitize the icemaker and storage bin.

OILING:

All components of the icemaker are permanently lubricated at the factory. They should not require any additional oiling throughout the normal life of the machine.

CSW1 or AC50
BEFORE CALLING FOR SERVICE...

SELF-SERVICE CHECK LIST

Performance problems often result from little things you can find and fix yourself.

1. Unit does not run:
   - Service or Cycle switch must be in "ON" position.
   - Check to see that power cord is plugged in.
   - Check for blown fuse or tripped circuit breaker in electrical supply to machine.
   - Room temperature must be above 55°F. (13°C). Otherwise, bin thermostat may sense cold room temperature and shut off even though bin is not full of ice. Also, unit may not restart once it does shut off.
2. Unit runs but produces no ice:
   - Service or Cycle switch must be in "ON" position.
   - Check water supply to make sure it is open.
   - Check to see if grid fuse is blown.
   - If ice machine is operated at an elevation of 2,000 feet or more above sea level, both the bin thermostat and the ice thickness thermostat need to be recalibrated. See Installation Instructions.
3. Unit runs but produces very little ice:
   - Room temperature may be extremely high, over 90°F, (32°C). In this case, it is normal for ice production to be low.
   - Dirt or lint may be blocking the air flow through the finned condenser. Condenser needs to be cleaned.
   - Check to see if the unit has a scale build-up in water and freezing system. Clean, if necessary.
4. Grid is not cutting ice sheets:
   - Check the grid harness plug to make sure the connection is secure.
   - Check grid fuse.
5. Taste in ice cubes:
   - There may be an unusually high mineral content in water supply. Water may need to be filtered or treated.
   - Do not store any foods in the ice bin.
   - Packaging material not all removed.

A more detailed "Trouble Diagnosis Chart" and other technical information is shipped with each unit and is located in the unit compartment section.

Service repair and replacement parts manuals may be ordered directly from:

Scotsman Ice Systems
505 Front Street
Albert Lea, MN 56007
Telephone 507-373-3961
TWX 910-565-2173

Specify the model number of the ice machine when ordering.

CSW2

TABLE OF CONTENTS

GENERAL INFORMATION & INSTALLATION
Introduction 2
Unpacking 4
Select Location 4
Cutter Grid, Cube Deflector, Bin Level Control 6
Electrical Connections 7
Plumbing Installation 8
Final Checklist 9

OPERATING INSTRUCTIONS
Start-Up 10
How It Works 10
Freezing Cycle (Refrigerant) 12
Harvest Cycle (Refrigerant) 13
Simple Problem Checklist
'BEFORE' Service Call 14

MAINTENANCE & CLEANING INSTRUCTIONS
General 17
Icemaker 17
Cleaning the Condenser 17
General Care & Cleaning 18
Cleaning Icemaker 19
Cleaning & Sanitizing 19

SERVICE DIAGNOSIS 21

ADJUSTMENT PROCEDURES
Storage Bin Thermostat 24
Ice Slab "Thickness" 24
Float Valve Assembly 24

REMOVAL AND REPLACEMENT PROCEDURES
Cutter Grid 25
Evaporator 27
Ice Thickness Control 27
Water Regulator Valve Assembly 27
Water Distributor 28
Bin Thermostat Control 28
Float Valve Assembly 28
Expansion Valve 29
Slide-Out Chassis 29
Drier 30
Compressor Assembly 30
Condenser, Air-Cooled 30
Condenser, Water-Cooled 31
Water Pump 31
High Pressure Safety Control
(Water-Cooled) 31
Hot Gas Harvest Solenoid Coil 31
Hot Gas Harvest Valve 32
Receiver 32
Fan Motor Assembly 32

LIST OF ILLUSTRATIONS

Specifications 3
Unpacking Machine 4
Icemaker Location Considerations 4
CSW2 - Component Location 5
Installation, Electrical 7
Installation, Water 8
Final Checklist Illustration 9
Operation Illustration 11
Freezing Cycle (Water Schematic) 15
Harvest Cycle (Water Schematic) 15
Cleaning Water System 18
Thickness Adjustment 24
Float Valve Assembly 24
Cutter Grid Wire Replacement Tools 25
Cutter Grid 25
Cutter Grid Wiring Schematic
3/4" x 3/4" 25
Cutter Grid Wiring Schematic
1-1/4" x 1-1/2" 25
Transformer 26

PARTS LIST AND WIRING DIAGRAMS
(Printed in Blue)
PARTS LIST:
Cabinet Assembly 1
Terminal Box Assembly 3
Major Component Assembly 4
Air-Cooled Assembly 5
Water-Cooled Assembly 6
Liner Assembly 7
Ice Cutter Grid Assembly 8
Ice Thickness Control Assembly 9

WIRING DIAGRAMS:
CSW2 AE-1A (115/60/1) 13
CSW2 WE-1A (115/60/1) 14

THIS PAGE
INTENTIONALLY
LEFT BLANK

GENERAL INFORMATION AND INSTALLATION

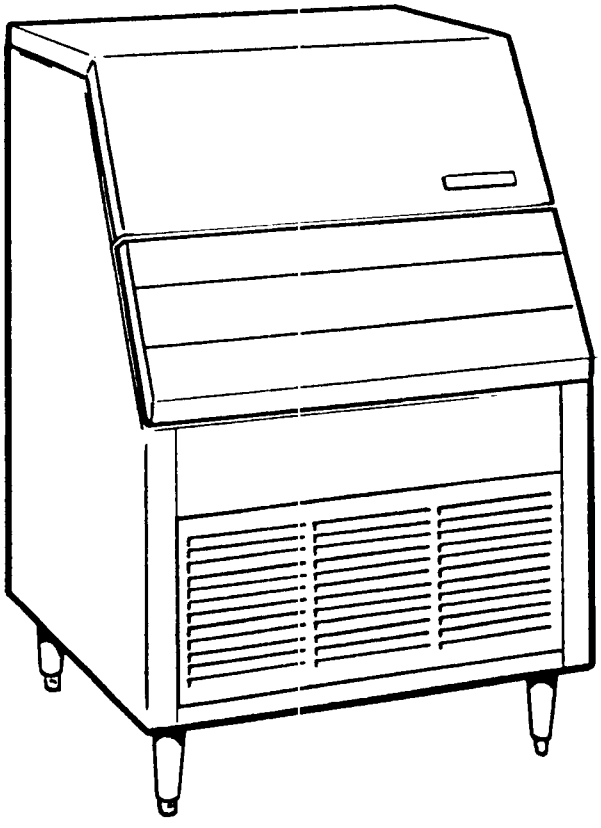

CSW2
Self Contained Cuber

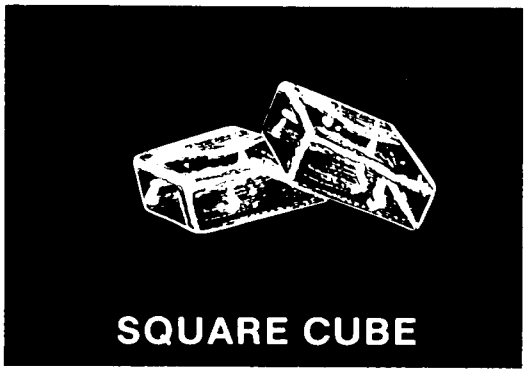

INTRODUCTION

These instructions provide the specifications and the step-by-step procedures for the installation, start up and operation for the W-Series Model CSW2 Cuber.

The Model CSW2 Self Contained Cubers are quality designed, engineered and constructed, and are thoroughly tested icemaking systems, providing the utmost in flexibility to fit the needs of a particular user.

CSW2
GENERAL INFORMATION AND INSTALLATION

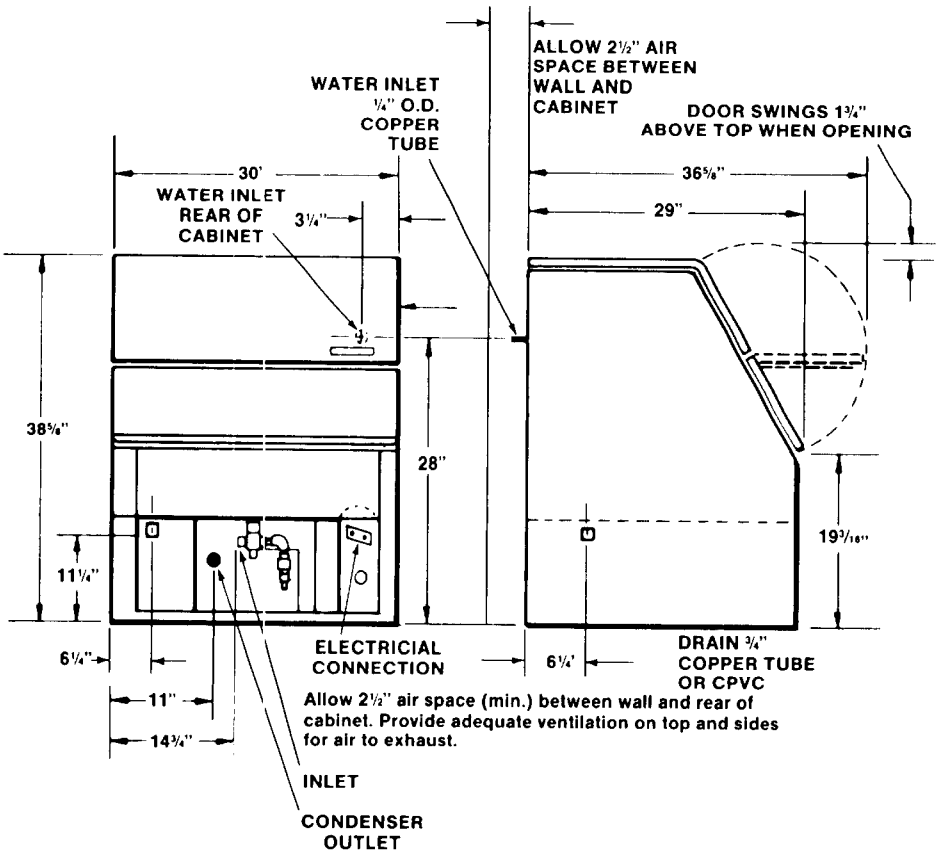

This product qualifies for the following listings:

We reserve the right to make product improvements at any time. Specifications and design are subject to change without notice.

SPECIFICATIONS

Model Number	(Height - w/o Legs) Dimensions H" x W" x D"	Bin Cap.	Cond. Unit	Finish	Basic Electrical	Comp. H.P.	Time Delay Fuse Size Max.	Amp. (Average)	Water (In.)	Drain (In.)	Ship. Wt. (Approx. Lbs.)
CSW2AE-1A	38⅝ x 30 x 29	111 lbs	Air	ES	115/60/1	⅓	15	8.5	¼	¾	240 lbs
CSW2WE-1A	38⅝ x 30 x 29	111 lbs	Water	ES	115/60/1	⅓	15	8.5	¼ - ⅜	¾ - ½	240 lbs

IMPORTANT OPERATING REQUIREMENTS

	MINIMUM	MAXIMUM
*Air Temperatures	55° F (10.0° C)	100° F (38° C)
Water Temperatures	40° F (4.4° C)	100° F (38° C)
Water Pressures	20 lbs. gauge	100 lbs. gauge
Single Voltage Units	-10%	+10%

(Voltage rating specified on nameplate)

Extended periods of operation exceeding these limitation constitutes misuse under the terms of Scotsman Manufacturer's Limited Warranty, resulting in a loss of warranty coverage.

KLP2E-Black enamel finish legs are optional.

KBC1-Optional bin caster kit, two standard and two locking 3-1/2" dia. wheel casters. Lifts bin 4-7/16" off of floor.

GRIDS FOR LARGE CUBES On Model CSW2 to convert cube size to 1-1/4" x 1-1/2", order grid CCK-153-SG. Note: Order these special grids through the Scotsman Parts Department.

GENERAL INFORMATION AND INSTALLATION

UNPACK

THIS ITEM IS HEAVY, WHEN HANDLING USE PROPER EQUIPMENT AND CARE TO PROTECT IT, YOURSELF, STAIRS AND FLOORS.

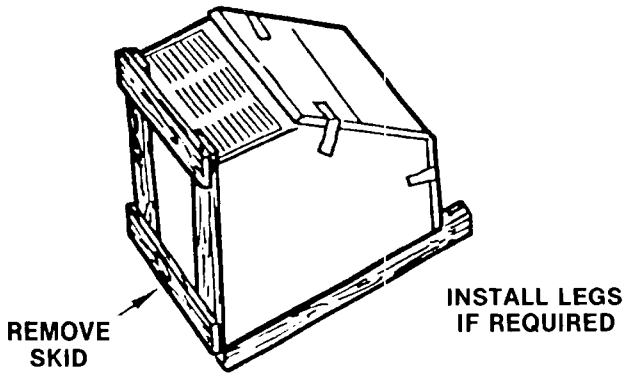

1. Carefully lay machine on its back using 2-1/4" high blocking or corner posts to prevent damage to water line.
2. Remove wooden skid.
3. Install legs if required.
4. Carefully set machine in upright position.
5. Remove exterior tape.
6. Raise storage bin door and remove two screws holding top.
7. Lift top at front edge. Top may be removed by pulling forward from hinges.
8. Remove all shipping tape and packaging from interior.
9. Check water pump pan for foreign objects or loose parts.
10. Examine carefully for concealed damage. Report immediately to carrier any damage found. Save carton and have carrier examine product and submit written report.

SELECT LOCATION

THIS UNIT MUST BE INSTALLED IN AN AREA PROTECTED FROM THE ELEMENTS, SUCH AS WIND, RAIN, WATER, SPRAY OR DRIP.

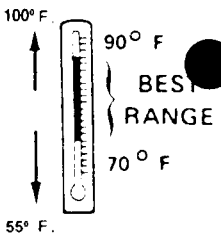

1. Locate in a well-ventilated area above 55° F. Best ice yield is obtained between 70° F. and 90° F.; higher or lower temperatures will reduce ice yield.
2. CAUTION: Do not install in areas where freezing temperatures may occur.
3. If air cooled icemaker is installed in a closed room 260° C.F.M. of air must be exchanged through the room to maintain the room air at 10° F. warmer than the available ambient air temperature.
4. For water cooled icemaker, water supply temperatures above 80° F. will result in extreme condenser water usage.
5. Leveling is important to obtain proper drainage of the storage bin; it also assures even water flow over the freezing plate and proper release of the ice slab during the harvest cycle. Level units without leveling legs with plywood or masonite shims.
6. Adjust the leveling legs (optional accessories) until the unit is level and all four legs are in solid contact with the floor.
7. When legs are used, floor must support approximately 75 lbs. per leg. (75 lbs. per sq. inch.).

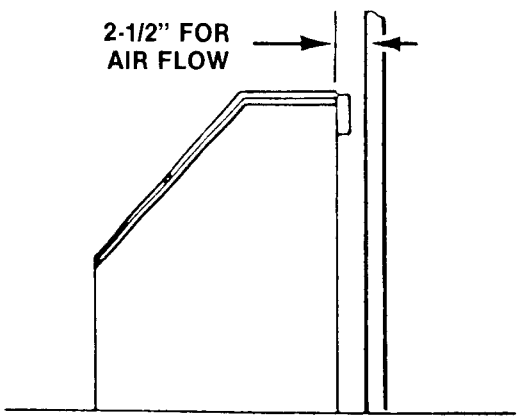

8. Legs may be used and can be ordered from your Authorized Ice Machine Dealer using KLP2E. When installing icemaker without optional leg kit, installation must conform to local, state and national health and building codes.

GENERAL INFORMATION AND INSTALLATION

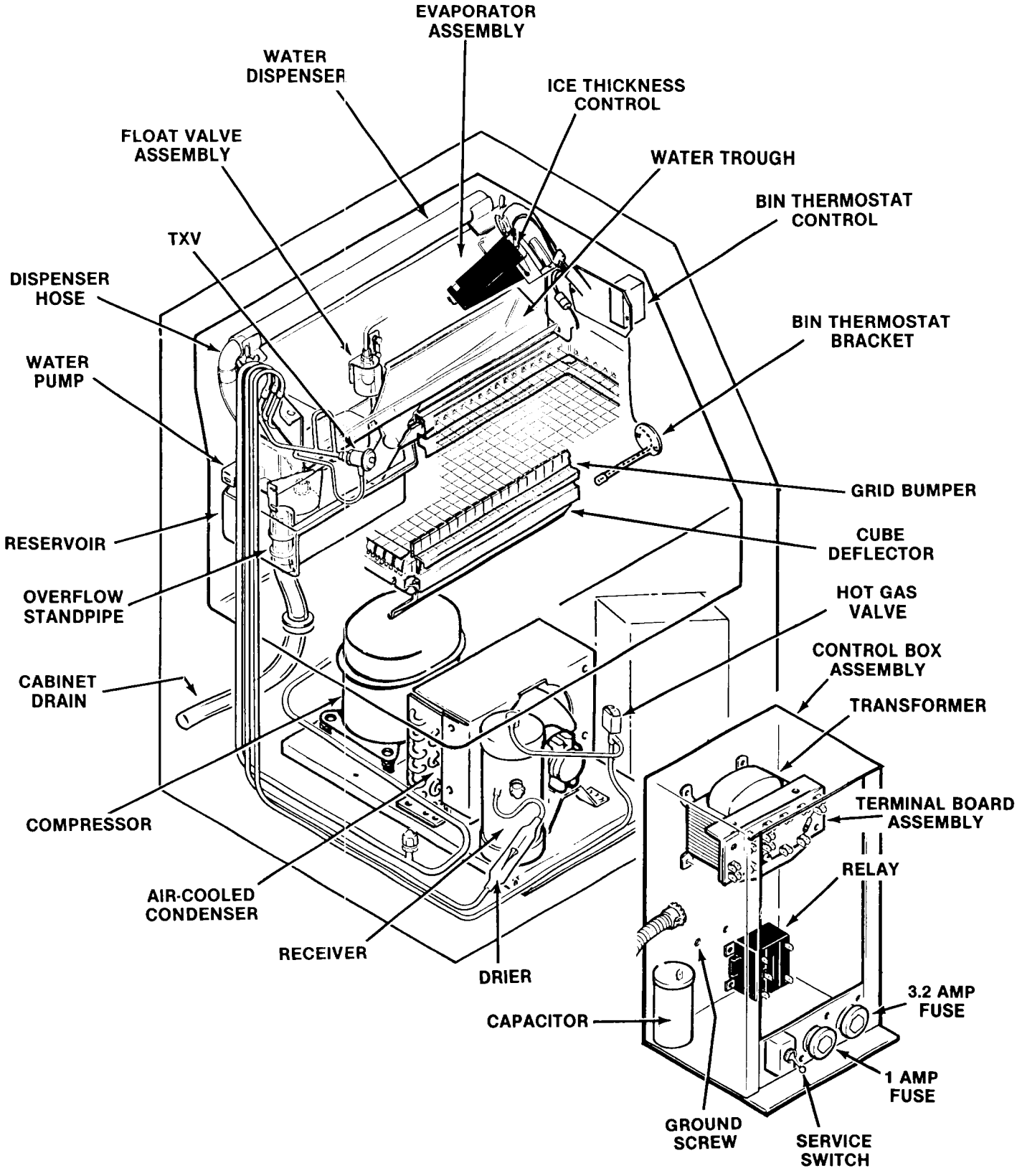

CSW2 - Component Location

GENERAL INFORMATION AND INSTALLATION

CUTTER GRID

Cutter grids are factory installed. Use following procedure if changing grids is necessary.

1. Install the cutter grid by locating the cutouts in the back edge of the cutter grid over the mounting studs in the sides of the storage bin. These studs are located just below the lower edge of the freezing plate. The top edge of the cutter grid and the grid gasket must be positioned over the top lip of the water trough.
2. The front edge of the cutter grid positions over two additional studs in the walls of the liner. Drop down into place.
3. Connection of the grid plug to the harness receptacle completes the installation of the cutter grid.

INSTALL CUBE DEFLECTOR

To install cube deflector to bottom front edge of cutter grid:

a. Slide rubber ice slab bumper toward center of grid.
b. Snap cube deflector over bottom edge of cutter grid.
c. Slide rubber ice slab bumper back against cube deflector.

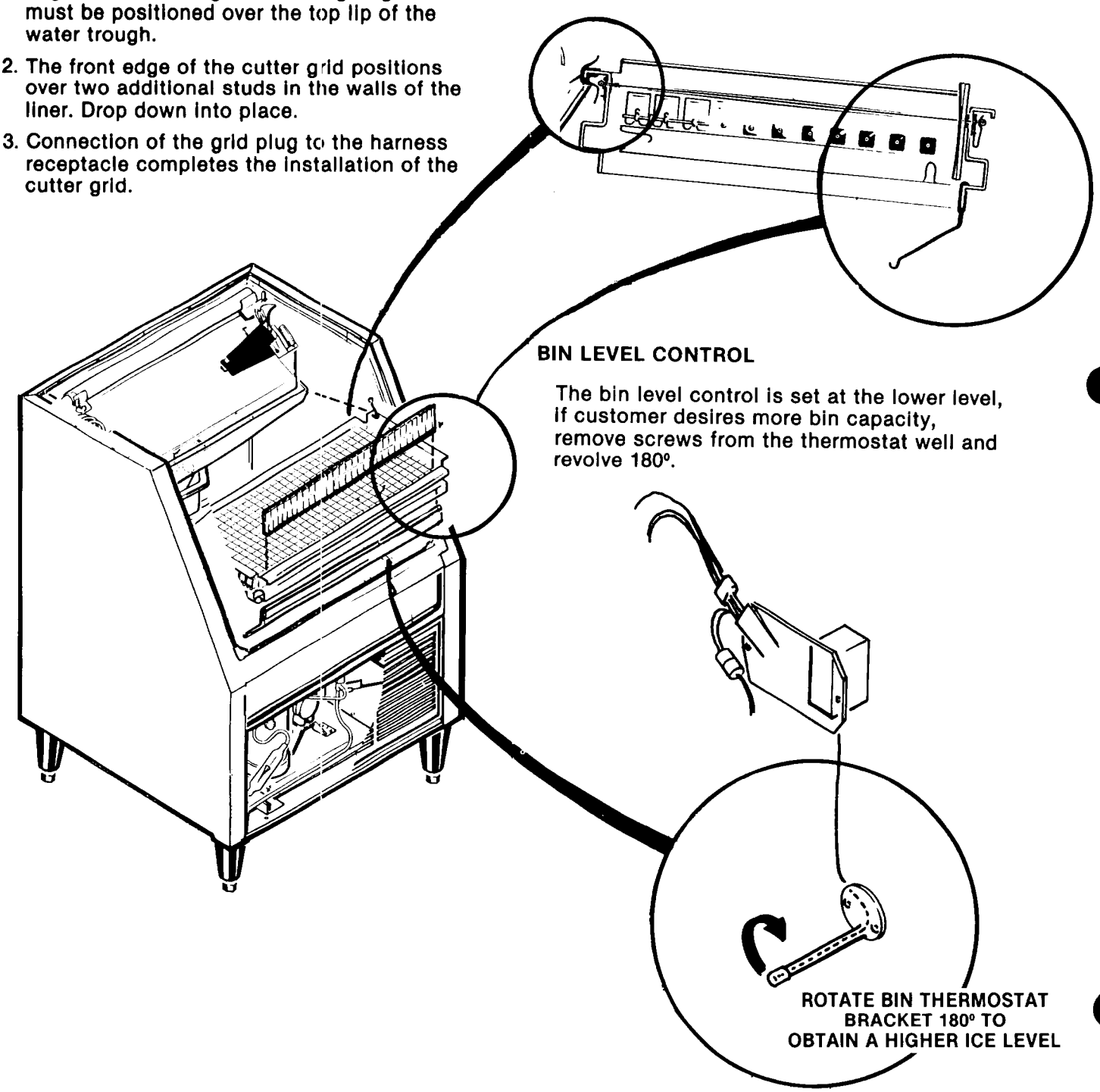

BIN LEVEL CONTROL

The bin level control is set at the lower level, if customer desires more bin capacity, remove screws from the thermostat well and revolve 180°.

ROTATE BIN THERMOSTAT BRACKET 180° TO OBTAIN A HIGHER ICE LEVEL

GENERAL INFORMATION AND INSTALLATION

FOR THE ELECTRICIAN

CONFORM TO ALL APPLICABLE CODES

It is the personal responsibility and obligation of the customer to contact a qualified installer to assure that the electrical installation is adequate and is in conformace with the National Electrical Code and local codes and ordinances.

Be certain the cuber is connected to its own electrical circuit and individually fused. Voltage variation should not exceed ten percent of the nameplate ratings, even under starting conditions. Low voltages can cause erratic operation and may be responsible for serious damage to the icemaker.

The electrical connection to the ice cube maker must supply 115 volts, 60Hz alternating current. This connection should enter the motor compartment through the back of the unit and should be brought forward to the front of the cabinet.

SEE NAMEPLATE for current requirements to determine wire size to be used for electrical hookup. The cuber requires a solid chassis-to-earth ground wire. See Wiring Diagram.

NOTE: A separate circuit must be used with 15 ampere time delay fuses.

INSTALL ELECTRICAL WIRING

USE COPPER WIRE ONLY

WIRING— 115 V, 60 Hz (cycles) 15 Amp, Phase-Use Delayed Action Fuse

1. Remove grill by removing screws at top edge.
2. Remove electrical box cover and connect ground wire to green screw tagged "Ground" and electrical supply line to terminal board screws.

INSTALL GROUNDING WIRE

USE COPPER WIRE ONLY

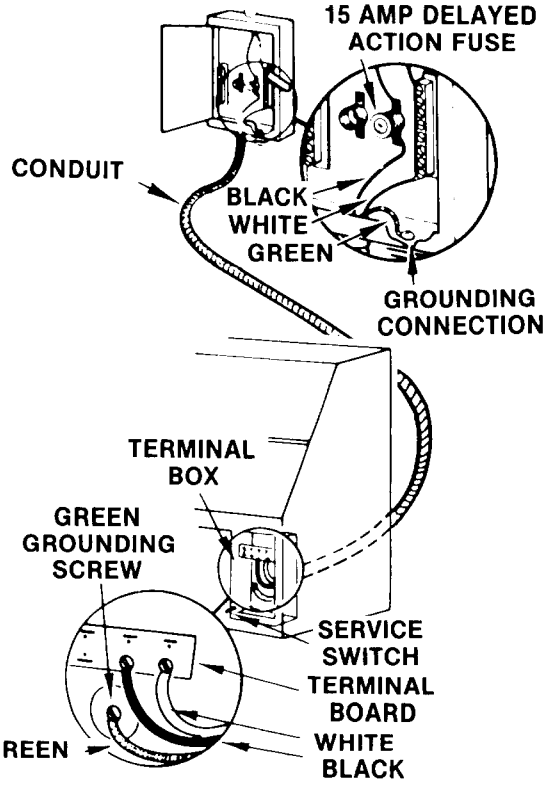

ELECTRICAL GROUND IS REQUIRED ON THIS APPLIANCE.

1. Permanently ground this appliance in accordance with the National Electrical Code and local codes and ordinances. Ground must be continuous.
2. Use a conductor of the appropriate size from the appliance green grounding screw to a grounded connection in the service panel or a properly driven and electrically grounded rod.
3. Replace electrical box cover.

GENERAL INFORMATION AND INSTALLATION

FOR THE PLUMBER

OBSERVE LOCAL CODES

INSTALL DRAIN

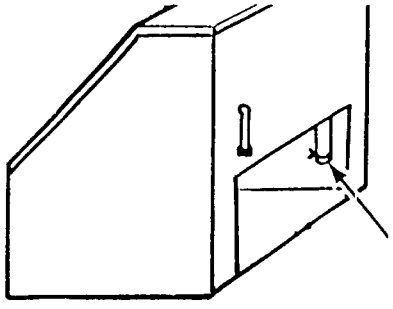

DRAIN-¾" O.D., or larger, Tubing or Pipe

1. The drain line must maintain a gradual slope to an open drain receptacle. Any rise in the drain line will cause an air lock and prevent the water from draining from the storage bin. Installation of an air vent in the drain line will eliminate the possibility of an air lock forming.
2. If a suitable drain to which the drain line can be run is not available, a small sump pump may be used to lift the drain water to an existing drain. Order the sump pump from your refrigeration supply house.

Install the sump pump on the floor behind the ice cube maker with the discharge to the rear of the ice cube maker. It will fit into the cavity in the back of the cabinet. Wire the sump pump into the terminal board of the ice cube maker, or to a convenient outlet.

Run the drain from the cabinet directly into the sump pump with a 5/8" o.d. tube or hose.The outlet of the pump must have an air break into the sewer line and be properly trapped in keeping with local sanitation requirements.

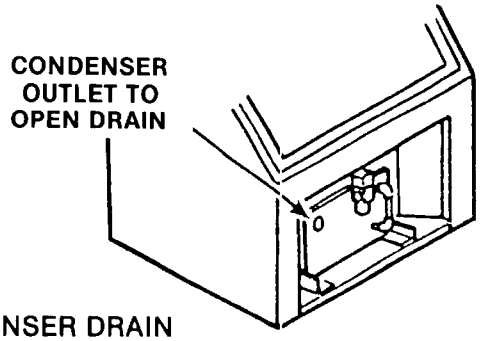

CONDENSER DRAIN

Needed on Water-Cooled Models

1. ½" galvanized pipe or copper tubing must be used to extend the condenser outlet to an open type drain.
2. Adequate flow rate must be maintained through the condenser. Runs over 40 ft. will require using larger pipe size.

INSTALL WATER SUPPLY

NOTE: Water treatment may be advisable because poor quality water can cause marginal operation or malfunction and increase cleaning frequency and maintenance costs. Contact your local commercial ice machine dealer for recommendations.

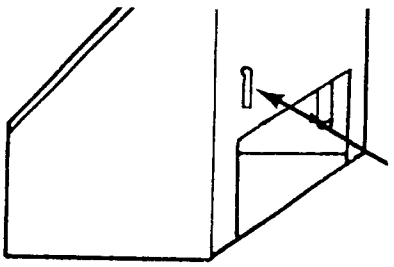

COLD WATER SUPPLY-¼" O.D. Soft Copper Tubing With Shut-Off Valve

1. A shut-off valve should be provided in the water supply line at a convenient location near the ice maker. The supply line must be adequately sized to compensate for the length of the run.

Supply runs over 10 ft. should be made with 3/8" o.d. copper tubing. Runs of 10 ft. or less may be made with 1/4 " o.d. copper tubing.

NOTE: Always flush out water lines before connecting to prevent foreign matter from entering the float valve.

2. Connect supply line to ¼" o.d. water line at rear of ice maker.
3. Water is controlled in pump reservoir by float valve. Make sure float valve opens and closes.
4. Water pressure must be 20 to 100 psi. If the pressure exceeds 100 psi, a regulator will have to be installed. The unit will operate in pressures below 20 psi; however, it may produce cloudy ice.

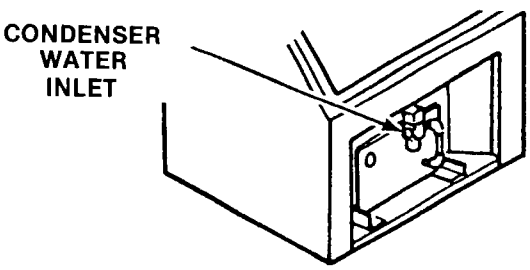

CONDENSER WATER INLET

Needed on Water-Cooled Models

1. Use a 3/8" I.P.S. independent cold water supply to the water cooled condenser inlet for proper condenser operation. Runs over 40 ft. will require using larger pipe size.

GENERAL INFORMATION AND INSTALLATION

FINAL CHECK LIST

1. Is the cabinet/bin level? (IMPORTANT)
2. Is the cuber in a location where ambient temperatures are a minimum of 55-degrees F. all year around and do not exceed a maximum of 100° F?
3. Is there at least a 2-1/2" clearance behind and around the cabinet for all connections and for proper air circulation?
4. Have all electrical and piping connections been made?
5. Has the electrical power supply wiring been properly connected, and the voltage tested and checked against the nameplate rating? Has proper chassis-to-earth ground been installed?
6. Is the water supply line shutoff valve installed and opened and has the inlet water supply pressure been checked to ensure a minimum of 20 psig?
7. Have the compressor holddown bolts been checked to be sure the compressor is snug on the mounting pads?
8. Check all refrigerant lines and condult lines to guard against vibration and possible failure.
9. Has the cuber and the bin been wiped clean with clean damp cloths?
10. Has the owner/user been given the User's Instructions and instructed on how to operate the icemaker and the importance of periodic maintenance?
11. Has the owner/user been given the name and telephone number of the Authorized Scotsman Distributor or Service Agency serving him?
12. Has the Manufacturer's Registration Card been properly filled out? Check for correct Model and Serial Numbers from nameplate, then mail the completed card to the SCOTSMAN factory.

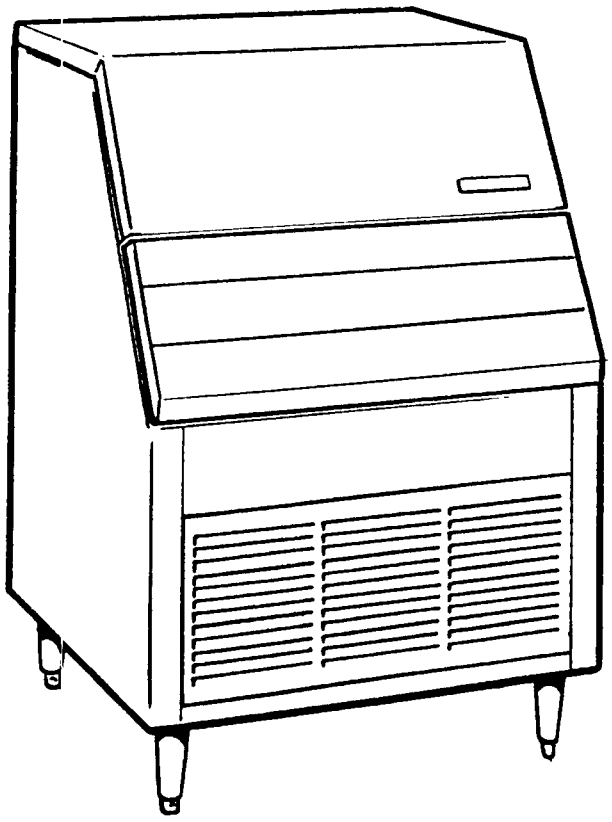

OPERATING INSTRUCTIONS

OPERATING INSTRUCTIONS STARTING

After the electricity and water to the ice cube maker have been turned on, move the switch down to "on" position. NOTE: Up is "clean", middle is "off", and down is "on". This will start ice cube maker. Additional water will be admitted automatically to the water pan when the evaporator temperature has lowered sufficiently to start freezing water to the evaporator, thus lowering the water level causing the float to open.

CHECK OPERATION

1. Start the unit by opening water valve and turning the service switch to "ON".
2. NOTE: down is "ON", middle is "OFF", and up is "CLEAN". In "CLEAN" position, only the water pump operates.
3. Check water level in pump pan. When not running, water level should be 2-1/4" deep.
4. Check for even water flow over freezing plate. Unit must be level for proper operation.
5. Check freezing plate to make sure it is getting cold.
6. Check for desired cube thickness and adjust if necessary. Maximum capacity will be obtained with ice thickness 1/2" to 5/8",
7. When slab has been harvested, observe ice cutting action of the grid. The slab should slowly "sink" into the warm wires.
8. Replace all panels.
9. Store ice scoop in a clean place.

HOW IT WORKS

WITH SERVICE SWITCH IN "ON" POSITION

1. Compressor runs.
2. Condenser fan runs.
3. Water pump runs.
4. Thickness control motor runs.
5. Cutter grid warm to touch.

WHEN DESIRED ICE SLAB THICKNESS IS REACHED, HARVEST CYCLE BEGINS WITH FOLLOWING RESULTS:

1. Thickness control arm raises, closing contacts Common to "N.C." which energizes coil of relay.
2. Compressor keeps running.
3. Condenser fan stops. (air cooled). Condenser water valve closes tightly (water cooled).
4. Water pump stops.
5. Water siphons from pan and refills.
6. Thickness control motor stops.
7. Hot gas solenoid valve is energized and opens.
8. Cutter grid warm to touch.

THE ICE SLAB SLIDES DOWN TO CUTTER GRID. THICKNESS CONTROL ARM FALLS CLOSING CONTACTS COMMON TO "N.O." WHICH DE-ENERGIZES COIL OF RELAY. MACHINE THEN GOES BACK INTO FREEZE CYCLE WHILE SLAB IS BEING CUT INTO CUBES ON CUTTER GRID.

THE MACHINE THEN GOES BACK INTO FREEZE CYCLE WHILE SLAB IS BEING CUT INTO CUBES ON CUTTER GRID.

WHEN STORAGE BIN GETS FULL, BIN THERMOSTAT TURNS MACHINE OFF.

1. Cutter grids remain on (warm to touch).
2. Thickness control motor on.

OPERATING INSTRUCTIONS

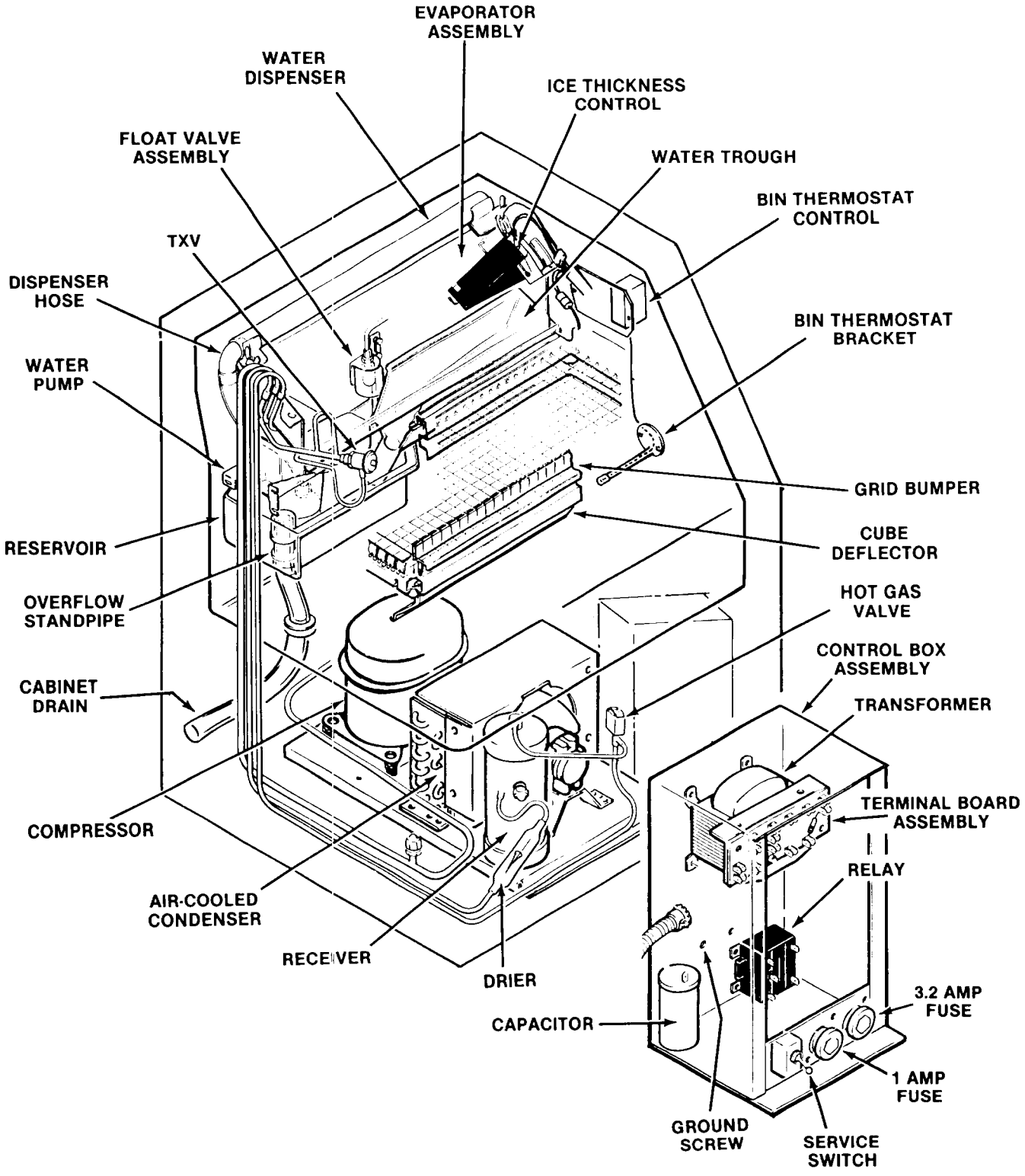

GENERAL OPERATION

FREEZING CYCLE

Water from the sump in the reservoir of the sump assembly is pumped to the water distributor system, at the top of the evaporator plate. From the water distributor at the top of the evaporator plate, the water cascades by gravity over the plate and to the sump assembly below for recirculation. At the beginning of the freezing cycle, the electrical circuit is completed to the compressor and the water pump. The water pump operates continuously through the freezing cycle.

In the compressor, gaseous refrigerant is compressed and discharged into the condenser, as a high pressure, high temperature gas. The refrigerant is cooled by either air or water, and condenses into a high pressure, medium temperature liquid and into the receiver. This liquid refrigerant is then metered through the thermostatic expansion valve where the temperature and pressure of the liquid refrigerant are lowered and enters the evaporator plates. The refrigerant is warmed by the water cascading over the Evaporator plate and begins to evaporate off and become gas. The refrigerant next travels through the heat exchange area of the suction line where any remaining liquid refrigerant evaporates off and returns to the compressor as a low pressure, low temperature gas, and the cycle starts again.

During the freezing cycle, the hot gas solenoid valve is CLOSED.

When the ice slab is formed, the ice thickness control will sense the thickness at which it is preset to CLOSE. This will complete the electrical circuit to the relay, ending the freeze cycle.

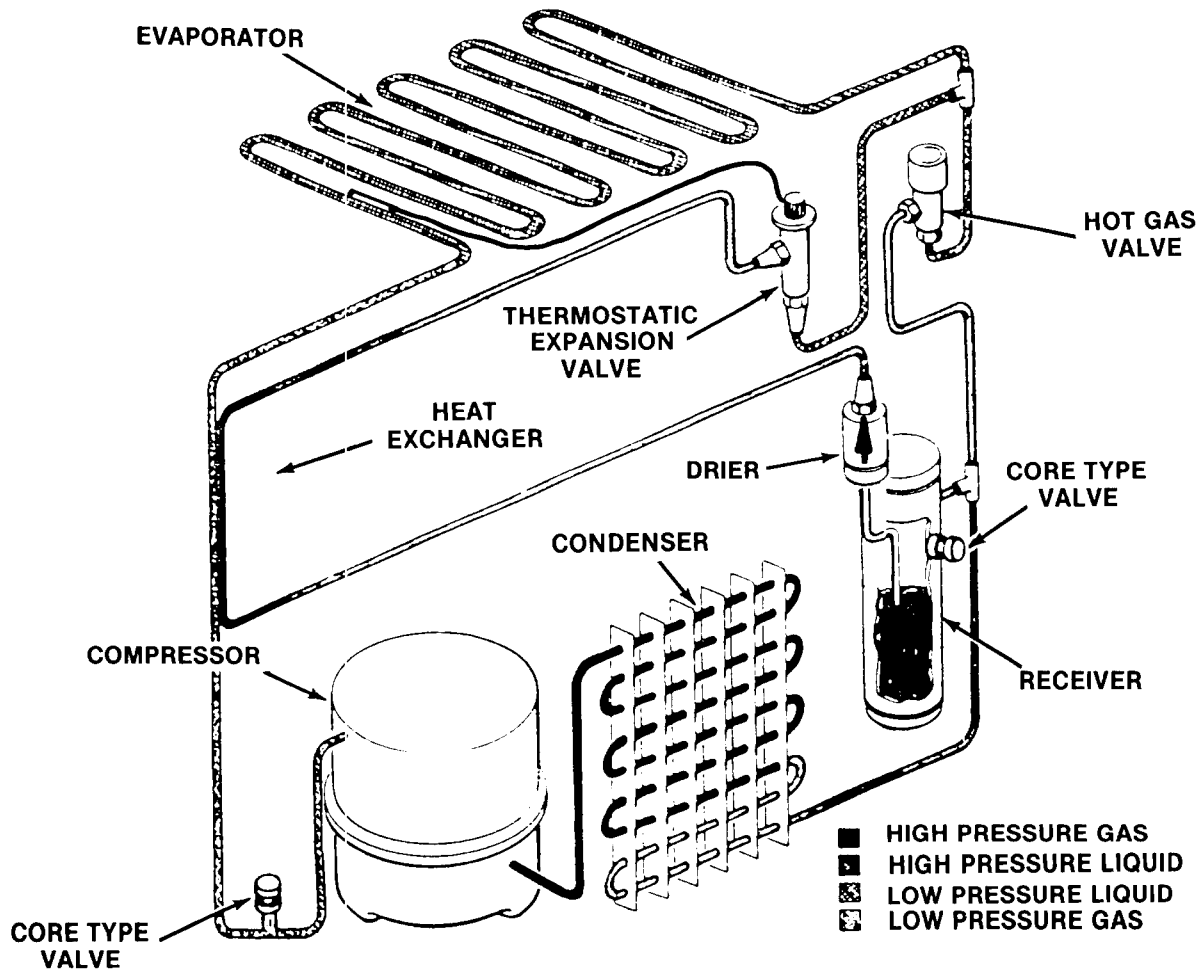

GENERAL OPERATION

HARVEST CYCLE

When the thickness control switches the Icemaker into the harvest cycle, high pressure, high temperature liquid refrigerant being discharged from the condenser through the hot gas solenoid valve into the evaporator plate. During this cycle, the refrigerant bypasses the expansion valve.

The thickness switch snaps from normally open to closed for slab release. The thickness motor, the pump, and the condenser fan, stop. A circuit is completed to the hot gas solenoid. To insure sufficient hot gas to release the slab, the compressor continues to run even though the fan stopped.

Hot refrigerant from the condenser is fed to the freezing plate and releases the ice slab. The slab of ice slides down onto a cutter grid and the slab is cut into cubes by the warm, low voltage cutter grid wires while the unit automatically goes into another freezing cycle.

The cubes fall down into the collecting bin. It is insulated but not refrigerated. This keeps the ice from freezing in to a lump, controls melting of the accumulating ice and assures a periodic replacement of the old ice with fresh new ice.

When the slab slides off the evaporator, the thickness switch will return to the normally open contact and a new slab begins to form.

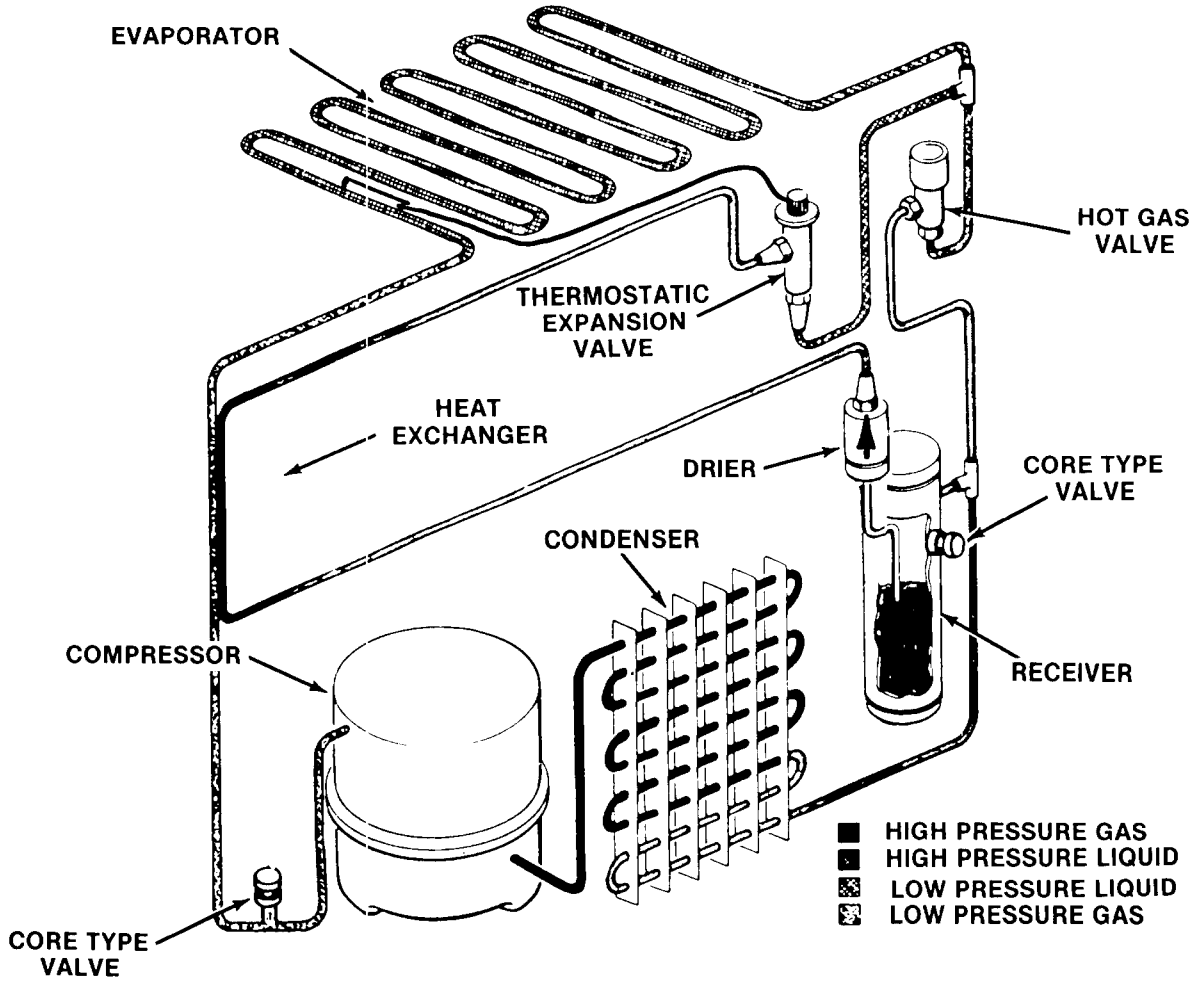

OPERATING INSTRUCTIONS

IF THE MACHINE DOES NOT PRODUCE ICE

Check the following before calling a service technician:

A. Unit runs but produces no ice...

1. Check water supply valve to make sure it is open.
2. Service switch must be in "On" position.

B. Unit runs but produces very little ice...

1. Operating in extremely high room temperatures (normal for ice production to be low).
2. Lint blocking air flow through finned condenser. (Clean.) Check for objects around unit which would obstruct normal air flow. (Remove.)
3. Low water pressure to water cooled condenser.

C. Unit does not run...

1. Check for blown fuse in electrical supply to machine. NOTE: The fusestats in the machine compartment are to protect the low voltage grid transformer.
2. Service switch must be in "On" position.
3. Room temperature too low. (Must be above 55°F.) Unit may be shut down even though bin is not full.

D. Grid not cutting ice sheets...

1. Check grid transformer fusestats on machine compartment electrical control box.

PRIMARY TRANSFORMER

If the fuse needs to be replaced, replace it with a 1.0 amp time delay fusestat.

SECONDARY TRANSFORMER

If the fuse needs to be replaced, the same 3.2 amp time delay fusestat must be used. Fusestats rated below 3.2 amps will fail. REPLACE FINGER TIGHT ONLY.

2. Check for good electrical connection (grid plug to harness).

CSW2

WATER SCHEMATIC

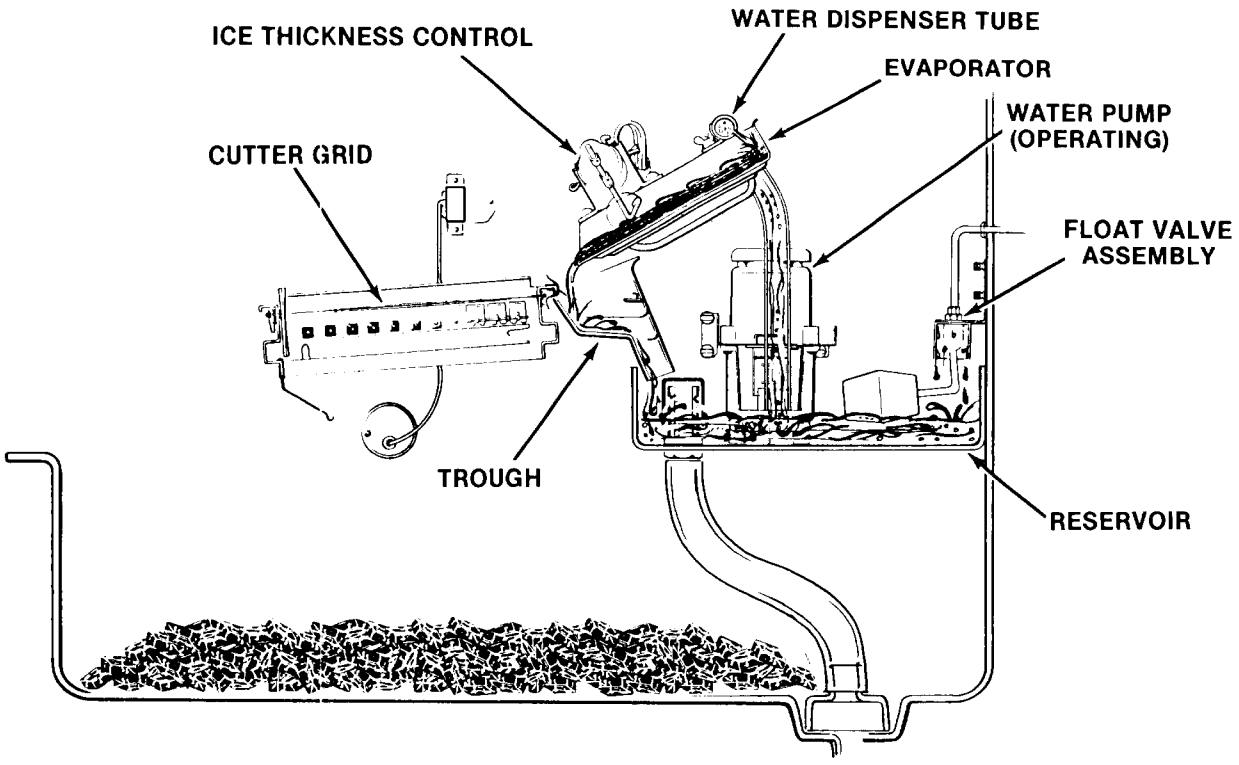

FREEZING CYCLE

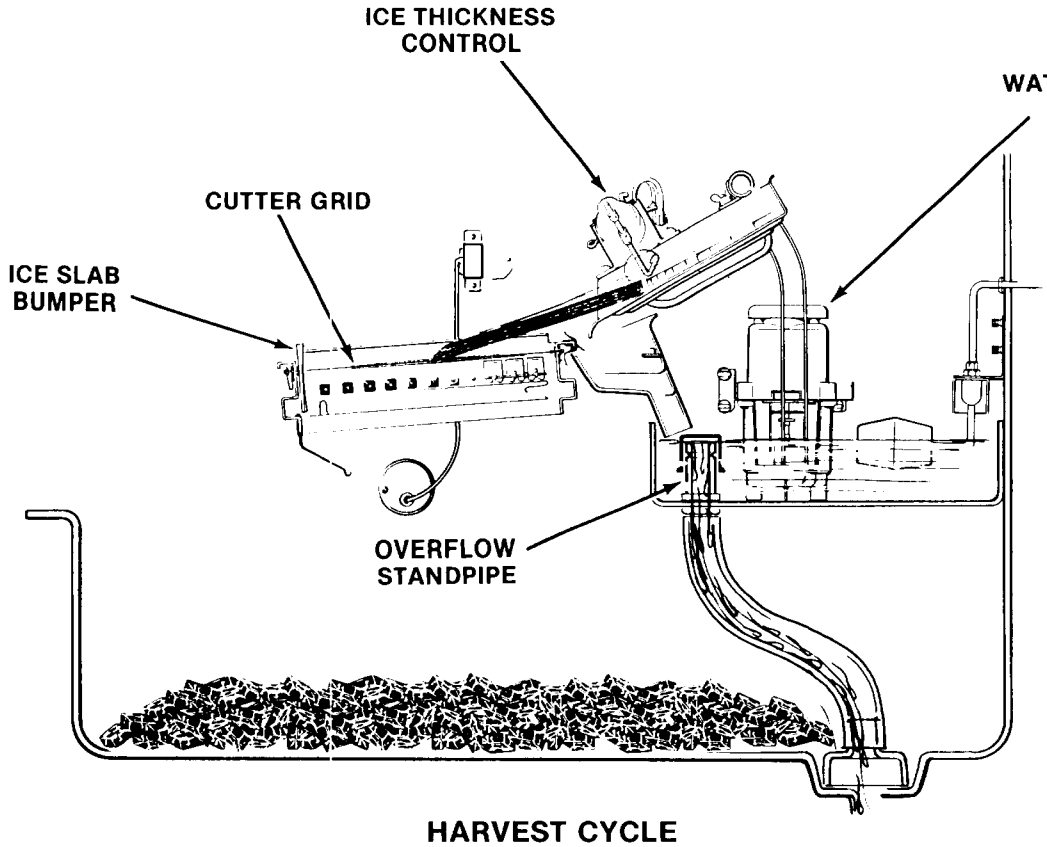

HARVEST CYCLE

MAINTENANCE AND CLEANING INSTRUCTIONS

GENERAL

The periods and procedures for maintenance and cleaning are given as guides and are not to be construed as absolute or invariable. Cleaning especially will vary, depending upon local water conditions and the ice volume produced; and each icemaker must be maintained individually, in accordance with its own particular location requirements.

ICEMAKER

THE FOLLOWING MAINTENANCE SHOULD BE SCHEDULED AT LEAST TWO TIMES PER YEAR ON THIS ICEMAKER. CALL YOUR AUTHORIZED SCOTSMAN SERVICE AGENCY.

1. Check and clean or service any optional water treatment devices, if any installed.
2. Check the CSW2 cabinet is level, in the side-to-side and front-to-back directions.
3. Clean the water system, evaporator plate and sump assembly, using a solution of SCOTSMAN Ice Machine Cleaner. Refer to CLEANING.

Cleaning requirements vary according to local water conditions and individual user operation. Continuous check of the clarity of ice cubes and visual inspection of the water system parts, evaporator plate and the sump assembly before and after cleaning will indicate frequency and procedure to be followed in local areas.

4. Check that the grid assembly is snug and secure.
5. Check and tighten all bolts and screws.
6. Check and tighten all electrical connections.
7. Check hot gas solenoid valve for correct operation.
8. With ON-OFF toggle switch in the OFF position, clean the condenser using vacuum cleaner, whisk broom or brush. Instruct customer to clean condenser frequently. DO NOT USE A WIRE BRUSH.
9. Check for water leaks and make corrections.
10. Check the bin thermostat control bulb to test shut off. Holding ice against bin thermostat control bulb well should cause the icemake to shut off.

    Within minutes after ice is removed from the bin thermostat control bulb well, the icemaker will restart.

CLEANING THE CONDENSER

Water Cooled Models

During normal operation scale deposits form on the inside walls of the water cooled condenser. The scale acts as an insulator which then requires larger amounts of water for the unit to function. This scale must be removed periodically by circulating scale dissolving chemicals. The frequency of cleaning will depend on local water conditions and how rapidly the scale deposits form. Removing scale from the condenser should be performed by your icemaker dealer.

Air Cooled Models

A dirty or clogged condenser prevents proper air flow which reduces ice capacity and subjects components in the unit compartment to higher than normal pressures and temperatures. This can cause machine malfunction and early component failure.

Access to the Condenser

Remove the two screws on the grilled front panel then pull forward and disengage from the base of the machine.

CAUTION: Disconnect electrical supply to machine before removing unit compartment panel to keep condenser fan blades from rotating. Avoid contact with air cooled condenser fins which may be sharp. Avoid contact with refrigerant tubing which can become hot during normal operation.

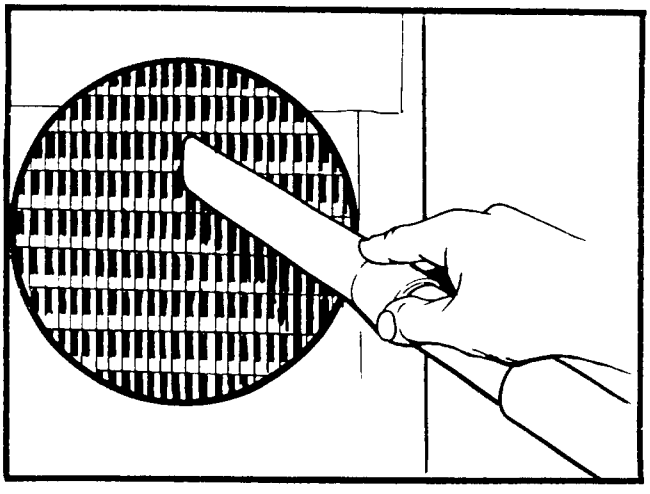

Use a vacuum cleaner and stiff brush to remove the dirt and accumulated lint from the air cooled condenser fins. Do not use a wire brush. Removing the bolts from the fan motor bracket will allow the fan assembly to be removed for better accessibility to the condenser. Care should be used to prevent damage to the blades of the fan.

MAINTENANCE AND CLEANING INSTRUCTIONS

CLEANING INFORMATION

It is recommended that the ice maker's water system be cleaned occasionally. Water treatment may also be used to help combat the lime and mineral deposits.

SERVICE SWITCH

The service switch, located in back of the front panel, has three positions. The "On" position is for the normal ice making cycle. The "Off" position shuts the entire machine off. The "Clean" position is used whenever solutions are circulated through the water system for cleaning. At this position only the water pump is operative.

CAUTION: Condenser fan blades will rotate with the switch in the "On" position. Always disconnect power supply to the machine before placing switch in the "On" position. Replace the grilled front panel and then reconnect power supply to the machine.

FILTERING & TREATING WATER

In some areas it may be beneficial to filter or treat the water being supplied to the ice machine to reduce water system maintenance (see Cleaning & Sanitizing the Ice Making System) and to produce the best type of ice.

For information on filtering and treating the water see your commercial icemaker dealer.

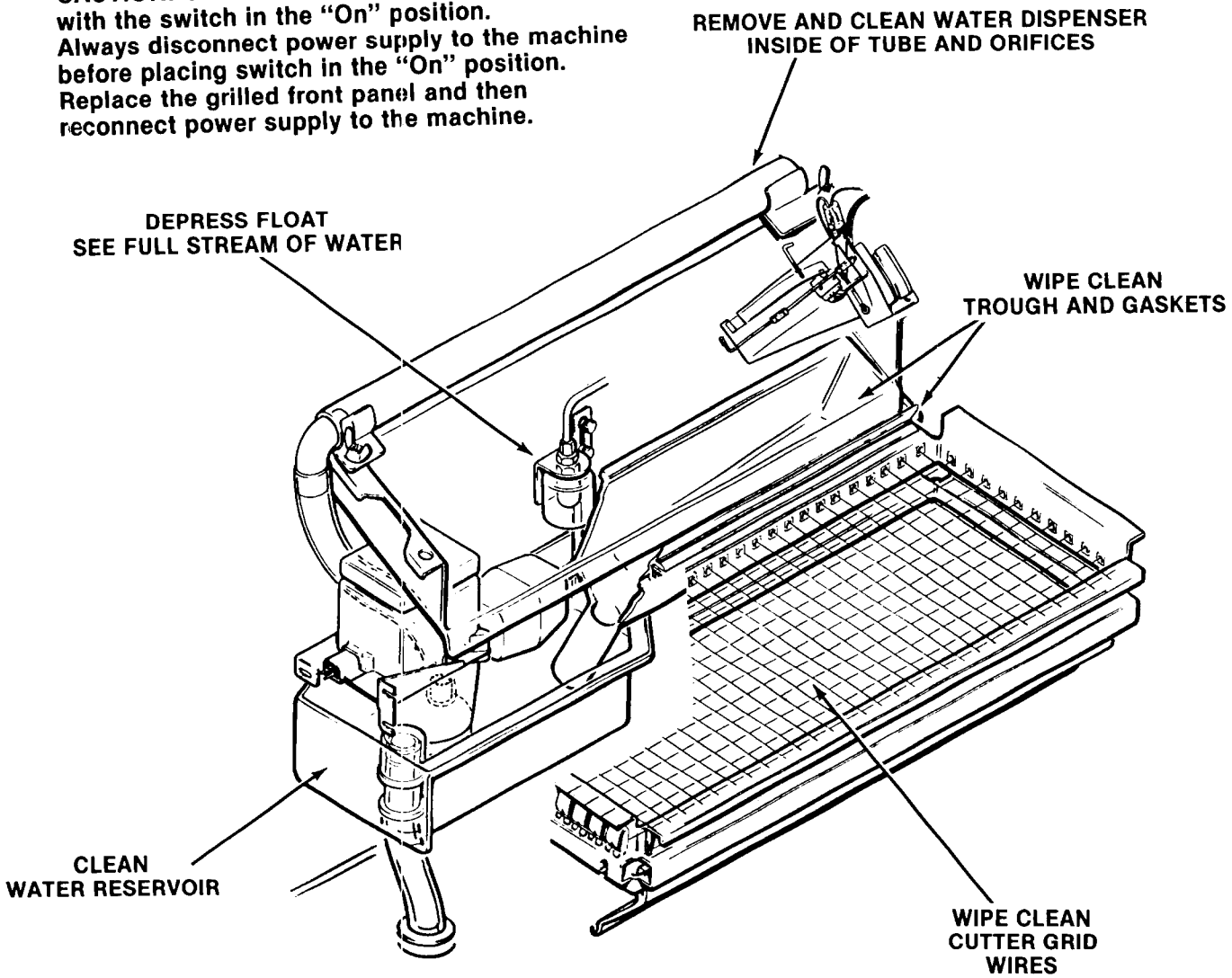

Cleaning Water System

CSW2
CLEANING INSTRUCTIONS

WARNING

SCOTSMAN Ice Machine Cleaner contains Phosphoric and Hydroxyacetic acids. These compounds are corrosive and may cause burns. If swallowed, DO NOT induce vomiting. Give large amounts of water or milk. Call physician immediately. In case of external contact, flush with water. KEEP OUT OF THE REACH OF CHILDREN.

CLEANING INSTRUCTIONS

A. Remove the grill and shut machine "off" with master switch. Remove the door, and top panel and the cutter grid.

B. Prepare cleaning solution. Mix eight ounces of SCOTSMAN Ice Machine Cleaner with six-pints of fresh warm water.

C. Turn the master switch to the clean position. One application will make the machine sanitary. Additional applications may be necessary to remove all scale and provide the best machine function. Some areas (flanges of the freezing plate) do not receive enough contact with the cleaning solution to free them of scale. Some abrasive action from a non-metallic sponge may increase contact. In addition, the water pump may require additional cleaning for its best function. The water pan and pump can be removed and disassembled as necessary.

D. Follow cleaning with two clean water rinses; circulate each rinse for five minutes.

E. Remove the splash baffle at the lower end of the freezing plate by lifting and pushing backward off the pivot pins. Remove the plastic water trough by pressing its end flanges inward off the tabs.

F. Place removed grid, splash baffle, and water trough in the mild laundry bleach sanitizing solution (100 ppm available chlorine - approximately 1/4 gallon, see bleach container) for five minutes and rinse in clear water.

G. Sanitize ice storage areas by washing with the mild laundry bleach sanitizing solution and rinse (ice storage area, door baffle, door and top panel.).

H. Replace splash baffle, water trough, and grid. Set service switch to "on" (Down position) and replace front panel.

CAUTION

If any acid solution contacts the skin or eyes, rinse the area immediately with clear water or the solution may burn the skin.

Do not allow the acid solution to circulate any longer than is necessary to clean the water system, as it may gradually attack the metal.

Do not use abrasives such as steel wool or emery cloth to clean the freezer plate.

AFTER CLEANING TREATMENT

After the water system has been cleaned, it would be advisable to apply a Dow Corning product called "Slipicone" to the evaporator plate. This will retard future build-up and coat the evaporator with a slippery surface for better ice slab release.

CSW2
SERVICE DIAGNOSIS

The service diagnosis is for use in aiding the serviceman in diagnosing a particular problem for pin-pointing the area in which the problem lies, thus an ever available reference for proper corrective action.

The following chart lists corrective actions for the causes of known symptoms of certain problems that can occur in the icemaking-refrigeration system.

ICEMAKING - REFRIGERATION SYSTEM

SYMPTOM	POSSIBLE CAUSE	CORRECTION
Compressor won't run; no ice in bin.	Located in cold area.	Move to warmer area (above 55° F.).
	Power disconnected.	Connect power.
	Broken wire or loose connection.	Locate and repair.
	Defective relay.	Replace relay.
	Service switch in "off" position.	Move operating rod to "on" position.
	Low voltage.	Check or restore voltage.
	Bin thermostat contacts open.	Replace bin thermostat.
	Master switch in "clean" position.	Push switch to "on" position.
	Defective compressor overload.	Replace overload.
	Defective compressor motor.	Replace compressor.
Compressor runs; no ice in bin.	Water supply shut off or float valve failure	Restore water supply.
	Ice thickness control switch stuck closed.	Repair or replace.
	Hot gas solenoid stuck "open".	Repair or replace solenoid.
	Inoperative refrigeration system.	Repair sealed system.
	Excessive use of ice cubes.	Advise customer.
	Cutter grid circuit open.	Check fuse and other parts of circuit.
	Incorrect wiring.	Check against wiring diagram.
Compressor runs continuously; bin full of ice.	Bin thermostat out of calibration.	Recalibrate or replace.
	Bin thermostat contacts stuck shut.	Replace thermostat.
	Incorrect wiring.	Check against wiring diagram.

SERVICE DIAGNOSIS

SYMPTOM	POSSIBLE CAUSE	CORRECTION
Low ice yield.	Located in cold area.	Move to warmer area above 55° F. (for best results, 70° to 90°).
	Float set too high.	Lower float.
	Water falling on ice cubes.	Check water system components and see that they are in proper place.
	Bin thermostat out of calibration.	Recalibrate or replace.
	Evaporator ice thickness control set to produce too thin or too thick ice cubes.	Move adjusting screw to setting to produce 1/2" to 5/8" cube.
	Hot gas solenoid stuck partially open.	Repair or replace solenoid.
	Insufficient refrigeration.	Check and repair sealed system.
	Not enough water being circulated over evaporator plate.	Check for restriction in water lines. Check water pump and motor.
	Located in hot area.	Move to cooler area.
Excessive water dripping on ice cubes.	Sump Water overflowing.	Check overflow tube for restrictions. Overflow hose not inserted in liner drain.
	Water return trough out of position.	Install correctly.
	Water tube from water return trough not in the sump.	Locate tube properly.
	Ice jam on cutter grid causing water to "bridge" and drop in bin.	Check cutter grid circuit. Check for mineral deposit on evaporator plate.
	Water deflector out of position.	Install properly.
	Water line leak at water valve.	Tighten connection to stop leak.
Mineral deposit on evaporator.	High mineral content in water	See cleaning instructions.
Ice cubes too thin.	Evaporator ice thickness control set for thin ice.	Turn thickness adjusting screw clockwise until cube of desired thickness is obtained.
	Not enough water being circulated over evaporator.	Check for restriction in water lines. Check water pump, motor and distributor tube.
	Evaporator thermostat Expansion Valve bulb on wrong side of shim on evaporator clamp.	Shim must be between evaporator bracket and thermostat feeler tube.

SERVICE DIAGNOSIS

SYMPTOM	POSSIBLE CAUSE	CORRECTION
Ice cubes too thick.	Evaporator ice thickness control set at or beyond maximum thickness.	Turn thickness adjusting screw counterclockwise until cube of desired thickness is obtained.
Condenser fan won't run during ice-making cycle.	Fan blade binding on shroud.	Adjust shroud to clear fan blade.
	Open circuit in wiring.	Locate and repair (see wiring diagram).
	Defective evaporator thermostat.	Replace thermostat.
	Fan blade dirty causing it to trip on internal overload.	Clean blade.
	Defective motor.	Replace motor.
Water pump won't run.	Pump binding in housing.	Locate and remove cause of bind.
	Open circuit in wiring.	Locate and repair (see wiring diagram).
	Defective motor.	Replace motor.
Water tank empty.	Complete water line restriction.	Check for closed shut-off valve or water line restrictions.
	Water float valve stuck shut.	Repair or replace valve.
	Water inlet screen plugged.	Remove screen and clean.
Milky ice cubes.	Water hardness in excess of 15 grains.	Advise customer that water softener may be required.
	Insufficient water supply in sump.	Consult local water treatment authorities for advice.
	Foods stored in ice bin.	Advise customer to refrain from storing food, etc. in ice bin.
	Packaging material not all removed.	Remove all packaging material.

ADJUSTMENT PROCEDURES

STORAGE BIN THERMOSTAT

The thermostat sensing bulb is inserted in a tube well for protection. The well extends into the ice storage area. When ice has accumulated and filled the bin, it will touch the well. The cold temperature will be felt by the sensing tube inside the well. This will cause the thermostat to be satisfied and open the circuit to the ice-making components, except the grid and the thickness control motor. The thermostat opens or cuts out at 36°F and recloses at or cuts in at about 42°. You can test it by holding a handfull of ice against the well. In a short time the thermostat should open and shut off the unit.

The thermostat in the 110 lb. cuber is offset in the well cover plate. In original production the well is at the 6 o'clock position in the cover. By rotating the cover 180°, the position of the well will be at the 12 o'clock position, raising its height about 1-1/2. This will allow an additional 1-1/2 inches of ice to accumulate in the bin. (See Bin Level Control in the General Information Section.) The bin thermostat is mounted behind a cover plate on the side of the liner. The thermostat is factory calibrated for sea level operation. Recalibration of this thermostat is unnecessary unless the ice cuber is located in an area above 2000 feet above sea level.

CAUTION: Whenever the control setting is changed to a colder position, be sure that the unit will cycle off by holding some ice against the thermostat well. Failure to do so can cause damage to the unit.

ICE SLAB "THICKNESS" ADJUSTMENT

Increase the thickness of the slab by turning the evaporator thermostat adjusting screw clockwise. The thickness may be reduced by turning the adjusting screw counterclockwise.

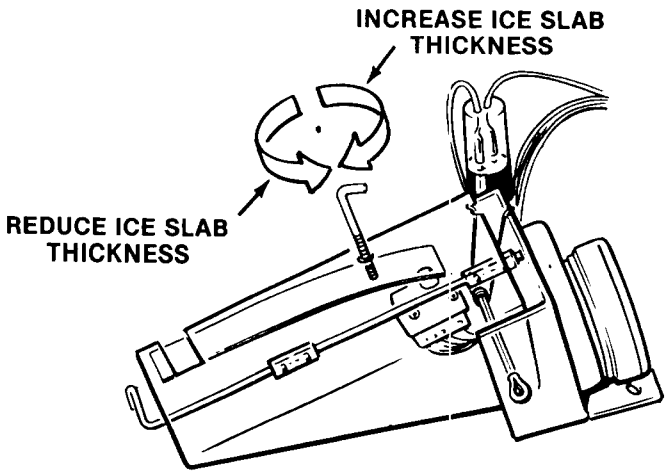

Ice Slab "Thickness" Adjustment

ADJUSTMENT OF THE FLOAT VALVE ASSEMBLY

To adjust the water level in the reservoir.

1. Loosen the wing nuts which attach the float valve bracket and the float valve to the chassis.
2. Move the float valve UP or DOWN to properly position the float valve at the correct water line level. The proper water level is just below the top of the overflow standpipe, 2-1/4" depth water.
3. When proper water level within the reservoir is adjusted, re-tighten screws attaching the float valve bracket to the chassis.

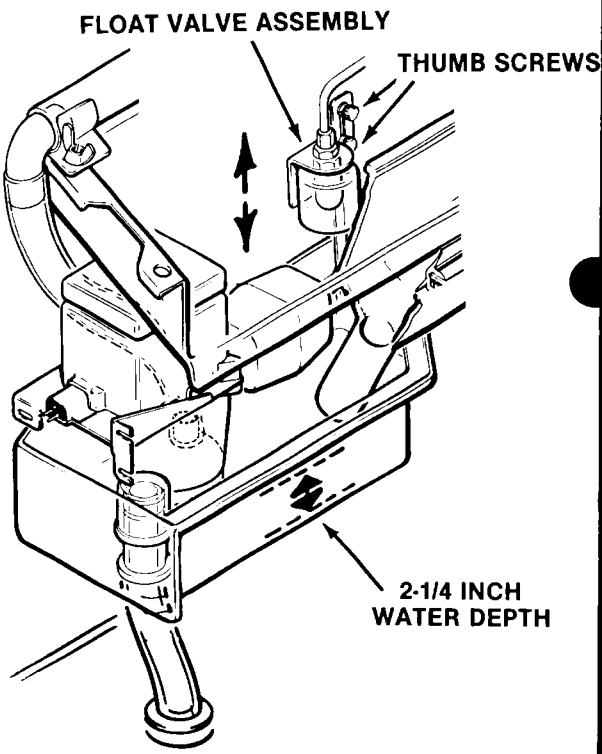

Float Valve Assembly Adjustment

REMOVAL AND REPLACEMENT PROCEDURES

REMOVAL AND REPLACEMENT OF THE CUTTER GRID

Low line voltage or a poor electrical connection at one of the pins connecting the cutter wires will slow down the cutting process and result in the next ice slab being formed before the first slab is completely cut into cubes. A fustat is in the low voltage circuit to the grid. Check the fuse on any cutting problem.

The heat input of the cutter grid is so designed that the ice slab will cut through in 80% of the time required to produce another slab of the same thickness.

Prolonged usage of improper service techniques may cause a cutter wire to break. In addition, certain types of water may cause the silver plated pins to become coated with lime, scale or corrosion. This results in a poor electrical connection.

The entire set of wires in the cutter grid should be replaced whenever failure occurs. Partial replacement is no more than an invitation to a repeat service call. Always examine insulators for cracks and connecting pins for corrosion and scale. Make sure spring clips exert proper tension on the cutter wire.

WARNING

Be sure the electrical power supply to the icemaker is OFF before proceeding with the removal procedures.

1. Disconnect the electrical supply to the icemaker at the circuit breaker or fuse box.
2. Close the inlet water valve to the icemaker.
3. Lift ice access door, remove two screws and pull forward to remove door, front and top panel assembly.
4. Unplug grid harness from back corner of grid assembly.
5. Lift up and pull cutter grid forward to remove cutter grid.

To replace cutter wires use tool No. 12913. Use of this tool allows the spring clips to be compressed without deforming and loss of tension, and reduces the time required to replace all the wires in the grid assembly.

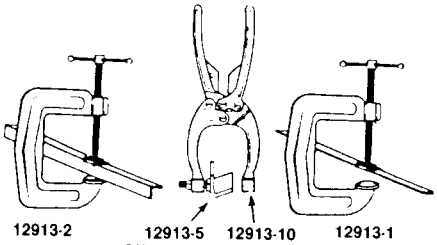

Cutter Grid Wire Replacement

1. Mark the location of the terminals where the grid harness connects. Also mark which set of wires the silver plated pins connect. The fastest way to remove the old wires is to cut each individual wire.
2. Insert the new wires into the side having insulators only and position the silver plated connecting pins. After these are all in position, clamp tool No. 12913-1 over these wires to keep them securely in their proper location.

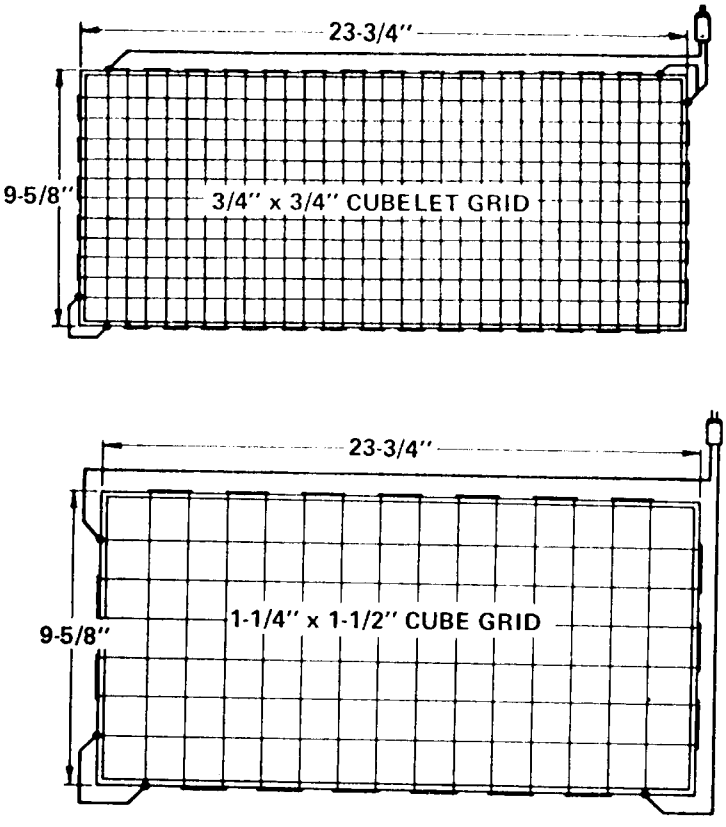

Cutter Grid Wire Schematic

REMOVAL AND REPLACEMENT PROCEDURES

3. Turn the grid assembly over to the opposite side and place all insulators and spring clips in position. Clamp tool No. 12913-2 over the radius end of the spring clip. NOTE: This tool keeps the spring clip and insulator in position while depressing the clip with tool No. 12913-10.
4. Using tool No. 12913-10, depress two spring clips at a time and insert the connecting pins through the loops on the end of the grid wire. NOTE: At the same time reconnect the grid wire harness at the proper terminals. If any doubt exists as to the proper location of the harness connection or pin location, refer to Wiring Diagrams.
5. Be sure all wires have proper tension when the clips are released, as a loose wire will give a poor electrical circuit. When reusing old connecting pins, make sure the silver plating is in good condition and not corroded, as this also causes a poor electrical circuit.

To replace the cutter grid and the wire, reverse the removal procedure.

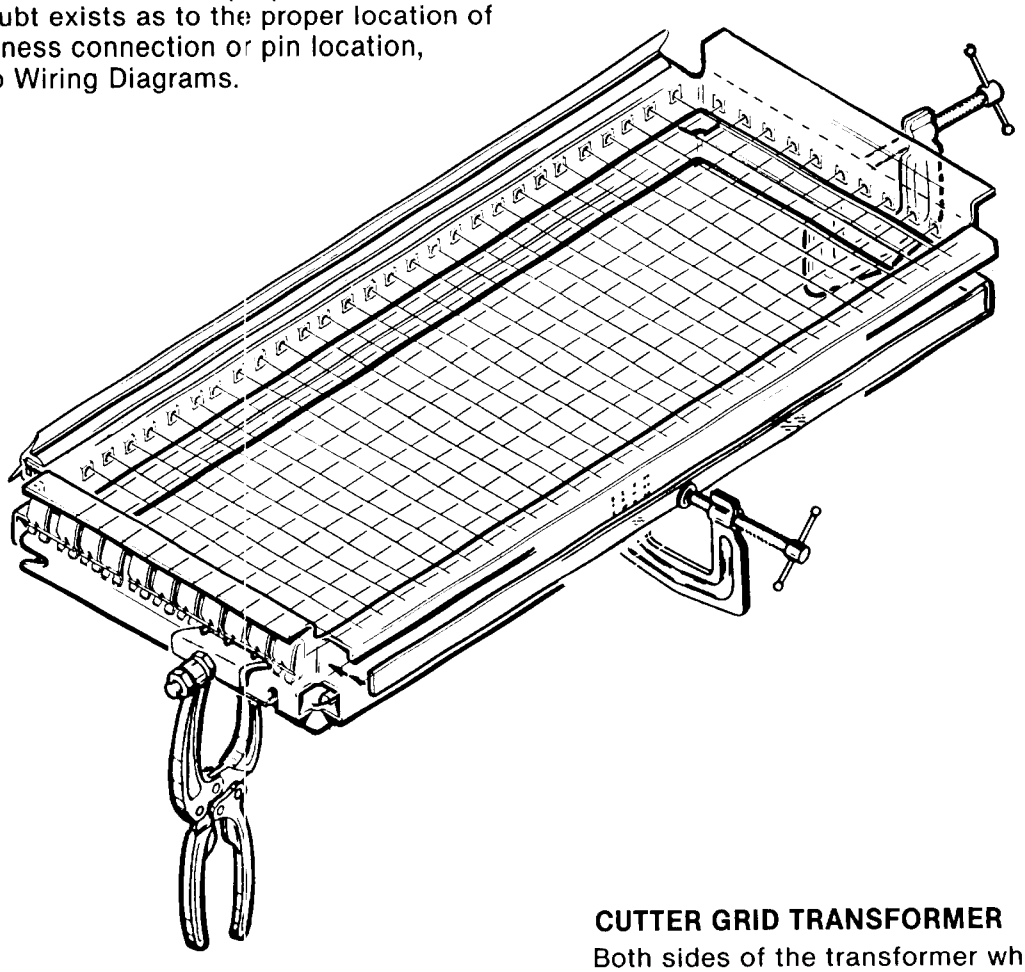

CUTTER GRID TRANSFORMER

Both sides of the transformer which feeds the cutter grid are fused with Fustats. The icemaker must be electrically disconnected before testing. The primary coil of the transformer may be checked for continuity by disconnecting the respective leads from the terminal board. The primary side of the transformer is fused with a 1 amp fustat. The secondary side of the transformer is fused with a 3.2 amp fustat.

The secondary transformer voltage varies from model to model. Typical voltage

Model CSW2	21.0 Volt Output

REMOVAL AND REPLACEMENT PROCEDURES

REMOVAL AND REPLACEMENT OF THE EVAPORATOR

Deep depressions, or a pitted or scaled plate, will cause problems with the release of ice slab during the defrost or release cycle. Scale that has formed due to impurities in the water can be cleaned. (See section on Cleaning the Water System.) However, a pitted plate, or one that has depressions caused by some foreign object striking the surface, may require replacement to alleviate the above condition.

//////////////////// WARNING ////////////////////

Be sure the electrical power supply to the icemaker is OFF before proceeding with the removal procedures.

//

1. Disconnect the electrical supply to the icemaker at the circuit breaker or fuse box.
2. Close the inlet water valve to the icemaker.
3. Lift ice access door, remove two screws and pull forward to remove door, front and top panel assembly.
4. Remove cutter grid. See Cutter Grid removal procedures.
5. Lift up and remove water trough.
6. Remove two wing nuts and remove water distributor by lifting up and unplugging water supply tubing.
7. Bleed off or blow the refrigerant charge through the Schrader valve.
8. Loosen the evaporator from the evaporator mount and unsolder the tubing connected to the evaporator.
9. Dismount the expansion valve sensing bulb from the suction line.
10. Carefully unsolder the valve from the connecting tubing. Use a heat shield to avoid overheating the storage bin in or next to the valve.

NOTE: Solder used to connect the tubing to the evaporator is a soft solder and has a lower melting point.

To replace the evaporator, reverse the removal procedure.

REMOVAL AND REPLACEMENT OF THE ICE THICKNESS CONTROL

The thickness sensing control affects the length of the freezing cycle. The thickness control closes its contacts when the ice slab reaches a preset thickness. A variation in either ambient air or incoming water temperature will affect the efficiency of the refrigeration system. This will vary the length of time it takes the ice slab to reach the thickness at which the thickness control is preset to CLOSE: which, in turn, will affect the overall cycle time.

See thickness control adjustment BEFORE attempting to adjust the control.

//////////////////// WARNING ////////////////////

Be sure the electrical power supply to the icemaker is OFF before proceeding with the removal procedures.

//

1. Disconnect the electrical supply to the icemaker at the circuit breaker or fuse box.
2. Close the inlet water valve to the icemaker.
3. Open ice access door, remove 2 screws and pull forward and up to remove ice access door, front and top panel assembly.
4. Remove two hex acorn nuts and lift the Ice Thickness Control and remove the control.
5. Disconnect electrical leads from the Ice Thickness Control and remove the control.

To replace the Ice Thickness Control, reverse the removal procedure.

REMOVAL AND REPLACEMENT OF THE WATER REGULATOR VALVE ASSEMBLY — WATER-COOLED MODELS

To remove the water regulator assembly refer to slide out chassis procedure and complete all steps.

1. Close the inlet water valve to the icemaker.
2. Bleed off or blow the refrigerant charge through the Schrader valve.
3. Unsolder the water regulator valve capillary tube from the discharge line process header.
4. Disconnect the water inlet and outlet lines from the water regulator valve.
5. Remove the screws from the valve bracket to the machine base and remove the water regulator valve.
6. To replace the water regulator assembly, reverse the removal procedure.

REMOVAL AND REPLACEMENT PROCEDURES

NOTE

Always install a replacement drier, anytime the sealed refrigeration system is opened. Do not replace the drier until all other repair or replacement has been completed.

NOTE

Thoroughly evacuate the system to remove moisture and non-condensables.

7. Refer to name plate specifications and recharge refrigeration system by weight.

REMOVAL AND REPLACEMENT OF THE WATER DISTRIBUTOR

WARNING

Be sure the electrical power supply to the icemaker is OFF before proceeding with the removal procedures.

1. Disconnect the electrical supply to the icemaker at the circuit breaker or fuse box.
2. Close the inlet water valve to the icemaker.
3. Lift ice access door, remove two screws and pull forward to remove door, front and top panel assembly.
4. Remove two wing nuts and remove water distributor by lifting up and unplugging water supply tubing.

To replace the water distributor, reverse the removal procedure.

REMOVAL AND REPLACEMENT OF THE BIN THERMOSTAT CONTROL

To remove the bin thermostat control:

1. Remove the two front screws from the front panel and lift and remove panel.
2. Remove screws, cover plate and the bin thermostat well.
3. Remove the bin thermostat capillary tube from the bin thermostat well.
4. Remove screws and the bin thermostat control.
5. Remove electrical leads.

To replace the bin thermostat control, reverse the removal procedure.

REMOVAL AND REPLACEMENT OF THE FLOAT VALVE ASSEMBLY

WARNING

Be sure the electrical power supply to the icemaker is OFF before proceeding with the removal procedures.

1. Disconnect the electrical supply to the icemaker at the circuit breaker or fuse box.
2. Close the inlet water valve to the icemaker.
3. Lift ice access door, remove two screws and pull forward to remove door, front and top panel assembly.
4. Remove cutter grid. See Cutter Grid removal procedures.
5. Lift up and remove water trough.
6. Disconnect water inlet line from float valve assembly.
7. Remove two thumbscrews from water valve and remove valve.

To replace the Float Valve Assembly, reverse the removal procedures.

To adjust the water level in the reservoir.

1. Loosen the wing nuts which attach the float valve bracket and the float valve to the chassis.
2. Move the float valve UP or DOWN to properly position the float valve at the correct water line level. The proper water level is just below the top of the overflow standpipe, 2-1/4" depth water.
3. When proper water level within the reservoir is adjusted, re-tighten screws attaching the float valve bracket to the chassis.

REMOVAL AND REPLACEMENT PROCEDURES

EXPANSION VALVE REPLACEMENT

The expansion valve performs one very simple function - it supplies the evaporator the right amount of refrigerant under all load conditions.

The remote bulb senses the temperature of the refrigerant in the coil outlet of the evaporator. It varies the amount of refrigerant fed through the valve. This will maintain a 3 degree F. to 10 degree F. temperature difference between the inlet and outlet of the evaporator. This temperature difference is referred to as "superheat".

Moisture in the system, an incorrect charge of refrigerant or improper position or loose bulb can cause symptoms which may appear as a malfunctioning expansion valve. Eliminate these possibilities before assuming the valve needs replacing.

In evaluating the performance of the valve:

A. It must bleed enough refrigerant to the evaporator plate so that an even slab is formed. A hollow or shallow spot in the center of the ice slab indicates that not enough refrigerant is getting to the evaporator.

1. Expansion valve with a high superheat setting.
2. Moisture freezing in valve orifice, causing a partial restriction.
3. Partially restricted valve (foreign material).
4. Improper positioned valve sensing bulb.

B. The valve must prevent liquid refrigerant from proceeding past the remote bulb of the valve. It can do this by modulating toward the closed position as its bulb senses the cold refrigerant.

C. The valve will modulate to keep suction pressure fairly steady during the freeze cycle. Fluctuating suction pressure during the cycle indicates the valve is "hunting". Abnormal fluctuation can cause the freeze cycle to be longer than normal. It is often caused by the improper mounting of the sensing bulb. Mount it on the side of the suction line.

////////////////////// **WARNING** //////////////////////

Be sure the electrical power supply to the icemaker is OFF before proceeding with the removal procedures.

//

1. Disconnect the electrical supply to the icemaker at the circuit breaker or fuse box.
2. Close the inlet water valve to the icemaker.
3. Lift ice access door, remove two screws and pull forward to remove door, front and top panel assembly.
4. Dismount the expansion valve sensing bulb from the suction line.
5. Blow or bleed off refrigerant charge at the process valve.
6. Carefully unsolder the valve from the connecting tubing. Use a heat shield to avoid overheating the storage bin in or next to the valve.

NOTE

Always install a replacement drier, anytime the sealed refrigeration system is opened. Do not replace the drier until all other repair or replacement has been completed.

To replace the Expansion valve, reverse the removal procedures.

SLIDE-OUT CHASSIS PROCEDURE

////////////////////// **WARNING** //////////////////////

Be sure the electrical power supply to the icemaker is OFF before proceeding with the removal procedures.

//

1. Disconnect the electrical supply to the icemaker at the circuit breaker or fuse box.
2. Close the inlet water valve to the icemaker.
3. Remove two screws and front louvered panel.
4. Blow or bleed off refrigerant charge at the process valve.
5. Unsolder lines connected to the Hot Gas Valve at the receiver and at the bottom of the hot gas valve.
6. Unsolder suction line located at the front of the chassis.
7. Cut the tubing connected to the drier.

NOTE

Always install a replacement drier, anytime the sealed refrigeration system is opened. Do not replace the drier until all other repair or replacement has been completed.

REMOVAL AND REPLACEMENT PROCEDURES

NOTE

Thoroughly evacuate the system to remove moisture and non-condensables.

8. Unbolt chassis from the frame and slide the chassis out.

To replace the Slide Out Chassis, reverse the removal procedures.

REMOVAL AND REPLACEMENT OF THE DRIER

WARNING

Be sure the electrical power supply to the icemaker is OFF before proceeding with the removal procedures.

1. Disconnect the electrical supply to the icemaker at the circuit breaker or fuse box.
2. Close the inlet water valve to the icemaker.
3. Remove two screws and front louvered panel assembly.
4. Bleed off or blow the refrigerant charge through the process valve.
5. Cut the refrigerant lines at both ends of the drier, and remove the drier.

Always install a replacement drier, anytime the sealed refrigeration system is opened. Do not replace the drier until all other repair or replacement has been completed.

To replace the drier:

CAUTION

If the factory seal is broken on the replacement drier, exposing it to the atmosphere more than a few minutes, the drier will absorb moisture from the atmosphere and lose substantial ability for moisture removal.

Be sure the replacement drier is installed with the arrow positioned in the direction of the refrigerant flow.

1. Remove the factory seals from the replacement drier and install the drier in the refrigerant lines with the arrow positioned in the direction of the refrigerant flow.
2. Solder the drier into the lines, two places, taking precautions to NOT OVERHEAT the drier body, during installation soldering.
3. Purge the system and check for leaks.
4. Thoroughly evacuate the system to remove moisture and non-condensables.
5. Charge the system with refrigerant, by weight. SEE NAMEPLATE.

REMOVAL AND REPLACEMENT OF THE COMPRESSOR ASSEMBLY

COMPRESSOR (CHECKING)

A. Voltage must be within 10% of rated voltage at compressor terminals during starting phase.
B. Use an ohm meter to check the windings.
C. Connect starting cord to compressor. If compressor does not start and an audible "hum" heard, compressor is "stuck" and should be replaced.
D. If compressor starts, check for loose wiring, defective relay, bin thermostat, or pressure control.

To remove compressor refer to SLIDE-OUT CHASSIS PROCEDURE and remove chassis from cabinet.

1. Disconnect the electrical leads connected to the compressor.
2. Unsolder the suction line and discharge line from the compressor.
3. Remove four bolts, lockwashers and washers which secure the compressor to the chassis mounting base.
4. Remove the compressor from the chassis.

NOTE

Always install a replacement drier, anytime the sealed refrigeration system is opened. Do not replace the drier until all other repair or replacement has been completed.

NOTE

Thoroughly evacuate the system to remove moisture and non-condensables.

6. When recharging the system with refrigerant, always check the nameplate for the specified refrigerant charge.

To replace the compressor assembly, reverse the removal procedure.

REMOVAL AND REPLACEMENT OF THE CONDENSER - AIR-COOLED MODELS

1. Refer to the Slide-Out Chassis procedure and remove the chassis from the cabinet.
2. Unsolder and disconnect refrigerant lines from the condenser.
3. Cut and remove the drier from the refrigerant lines connecting to the condenser.

REMOVAL AND REPLACEMENT PROCEDURES

4. Remove screws, lockwashers and the condenser from the chassis base.

Always install a replacement drier, anytime the sealed refrigeration system is opened. Do not replace the drier until all other repair or replacement has been completed.

To replace the air-cooled condenser, reverse the removal procedure.

REMOVAL AND REPLACEMENT OF THE CONDENSER - WATER-COOLED MODELS

1. Refer to the Slide-Out Chassis procedure and remove the chassis from the cabinet.
2. Unsolder the refrigerant lines at the water-cooled condenser.
3. Unsolder the water lines at the water-cooled condenser.
4. Remove two screws and washers and the water-cooled condenser from the cabinet.

Always install a replacement drier, anytime the sealed refrigeration system is opened. Do not replace the drier until all other repair or replacement has been completed.

To replace the water-cooled condenser, reverse the removal procedures.

REMOVAL AND REPLACEMENT OF THE WATER PUMP

1. Disconnect electrical power to the cuber.
2. Remove front panel assembly by removing (2) two screws.
3. Remove the cutter grid and water trough.
4. Remove (2) two thumb screws and remove sump assembly.
5. Remove (3) hex nuts and the pump and motor assembly from the liner. Removal of the water pump unplugs the pump from the wiring harness.

To replace the water pump, reverse removal procedures.

REMOVAL AND REPLACEMENT OF THE HIGH PRESSURE SAFETY CONTROL (WATER-COOLED MODELS)

WARNING

Be sure the electrical power supply to the icemaker is OFF before proceeding with the removal procedures.

1. Disconnect the electrical supply to the icemaker at the circuit breaker or fuse box.
2. Close the inlet water valve to the icemaker.
3. Remove two screws and remove the front louvered panel.
4. Remove screws and remove the control box cover.
5. Bleed off or blow the refrigerant charge at the process valve.
6. Disconnect the electrical leads connected to the High Pressure Safety Control.
7. Remove screws and remove the High Pressure Safety Control from the control box.
8. Unsolder the High Pressure Safety Control tubing and remove the control.

NOTE

Always install a replacement drier, anytime the sealed refrigeration system is opened. Do not replace the drier until all other repair or replacement has been completed.

NOTE

Thoroughly evacuate the system to remove moisture and non-condensables.

To replace the High Pressure Safety Control, reverse the removal procedure.

REMOVAL AND REPLACEMENT OF THE HOT GAS VALVE COIL

WARNING

Be sure the electrical power supply to the icemaker is OFF before proceeding with the removal procedures.

1. Disconnect the electrical supply to the icemaker at the circuit breaker or fuse box.
2. Close the inlet water valve to the icemaker.
3. Remove two screws and front lower panel.
4. Remove screws and the control box cover.
5. Unplug electrical leads connected to the coil.
6. Remove screws and remove the valve body from the control box.
7. Unsnap clamp from the top of the coil and remove the coil from the valve.

To replace the Hot Gas Valve Coil, reverse the removal procedure.

REMOVAL AND REPLACEMENT PROCEDURES

REMOVAL AND REPLACEMENT OF THE HOT GAS VALVE

WARNING

Be sure the electrical power supply to the icemaker is OFF before proceeding with the removal procedures.

1. Disconnect the electrical supply to the icemaker at the circuit breaker or fuse box.
2. Close the inlet water valve to the icemaker.
3. Remove two screws and front lower panel.
4. Remove screws and the control box cover.
5. Unplug electrical leads connected to the coil.
6. Remove screws and remove the valve from the control box.
7. Unsnap clamp from the top of the coil and remove the coil from the valve.
8. Bleed off or blow refrigerant charge through the process valve.
9. Unsolder the tubing connections to valve and remove the valve.

NOTE

Always install a replacement drier, anytime the sealed refrigeration system is opened. Do not replace the drier until all other repair or replacement has been completed.

NOTE

Thoroughly evacuate the system to remove moisture and non-condensables.

To replace the Hot Gas Valve, reverse removal procedures.

REMOVAL AND REPLACEMENT OF THE RECEIVER

1. Refer to the Slide-Out Chassis procedure and perform steps to remove the chassis.
2. Unsolder all refrigerant lines connected to the receiver.
3. Unbolt and remove receiver from the chassis.

NOTE

Always install a replacement drier, anytime the sealed refrigeration system is opened. Do not replace the drier until all other repair or replacement has been completed.

NOTE

Thoroughly evacuate the system to remove moisture and non-condensables.

To replace the receiver, reverse the removal procedures.

REMOVAL AND REPLACEMENT OF THE FAN MOTOR ASSEMBLY — AIR-COOLED MODELS

WARNING

Be sure the electrical power supply to the icemaker is OFF before proceeding with the removal procedures.

NOTE

Before beginning this procedure, observe the fan blade position on the shaft of the fan motor and mark the fan blade so it will be correctly positioned during reassembly. Direction of air flow should be toward the fan motor.

To remove the fan motor assembly:

1. Disconnect the electrical supply to the icemaker at the circuit breaker or fuse box.
2. Remove screws and the lower front panel. Remove screws and the top panel.
3. Disconnect the electrical lead from the fan motor at the compressor control box.
4. Remove two screws securing the motor bracket to the chassis base and remove the fan motor and motor bracket from the chassis.
5. Remove the nut from the end of the fan motor shaft and remove the fan blade.
6. Remove four screws securing the fan motor to the motor bracket and separate the motor from the bracket.

To replace the fan motor assembly, reverse the removal procedure.

CABINET ASSEMBLY

ITEM NUMBER	PART NUMBER	DESCRIPTION
1	0755535	Panel, Exterior Top
2	0654067	Clip, Tubular
3	0837577	Nameplate Escutcheon
4	0780003	Insert, Nameplate
5	0654068	Clip, Tubular
6	0577337	Cover, Hinge Rod
7	0577338	Spacer, Hinge Rod
8	0681228	Screw, #10-32 x 5/8
9	0562308	Hinge, Storage Door (2)
10	0599474	Panel, Exterior Storage Door
11	0596561	Bumper, Rubber
12	0681476	Clip, Tubular
13	0585293	Panel, Front
14	0593842	Washer, Rubber
15	0577329	Gasket
16	0487322	Speednut
17	0598399	Hose, Drain
18	0596727	Clamp
19	0596097	Grommet
20	0587863	Grommet
21	0598402	Hose Drain
22	0598371	Cover Drain
23	0598401	Gasket Drain
24	0598394	Grommet, Tubing
25	0596671	Screw
26	0562427	Panel, Interior Storage Door
27	0562305	Rod, Hinge
28	0681228	Screw, #10-32 x 5/8
29	0562307	Hinge, Upper Panel (2)
30	0680988	Screw
31	0577339	Spacer, Hinge Rod (2)
32	0596671	Screw
33	0585227	Bracket (2)
34	0681228	Screw, #10-32 x 5/8
35	0596671	Screw
36	0562312	Panel, Interior Top
37	0755542	Gasket
38	0587100	Scoop, Ice Cube
39	0585563	Bracket
40	0681228	Screw, #10-32 x 5/8

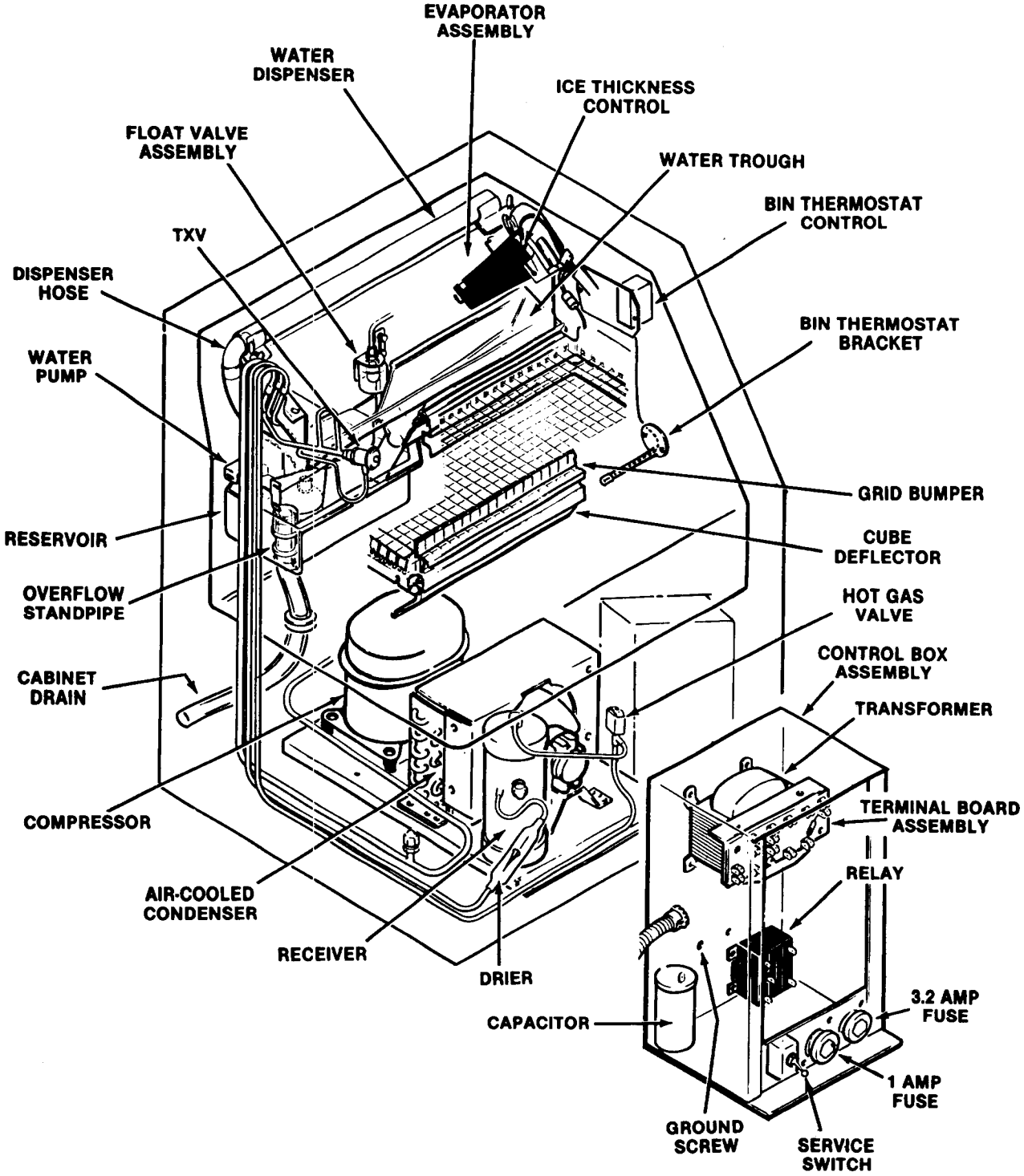

CSW2 - Component Location

CSW2
THE PARTS ILLUSTRATIONS AND PARTS LISTS

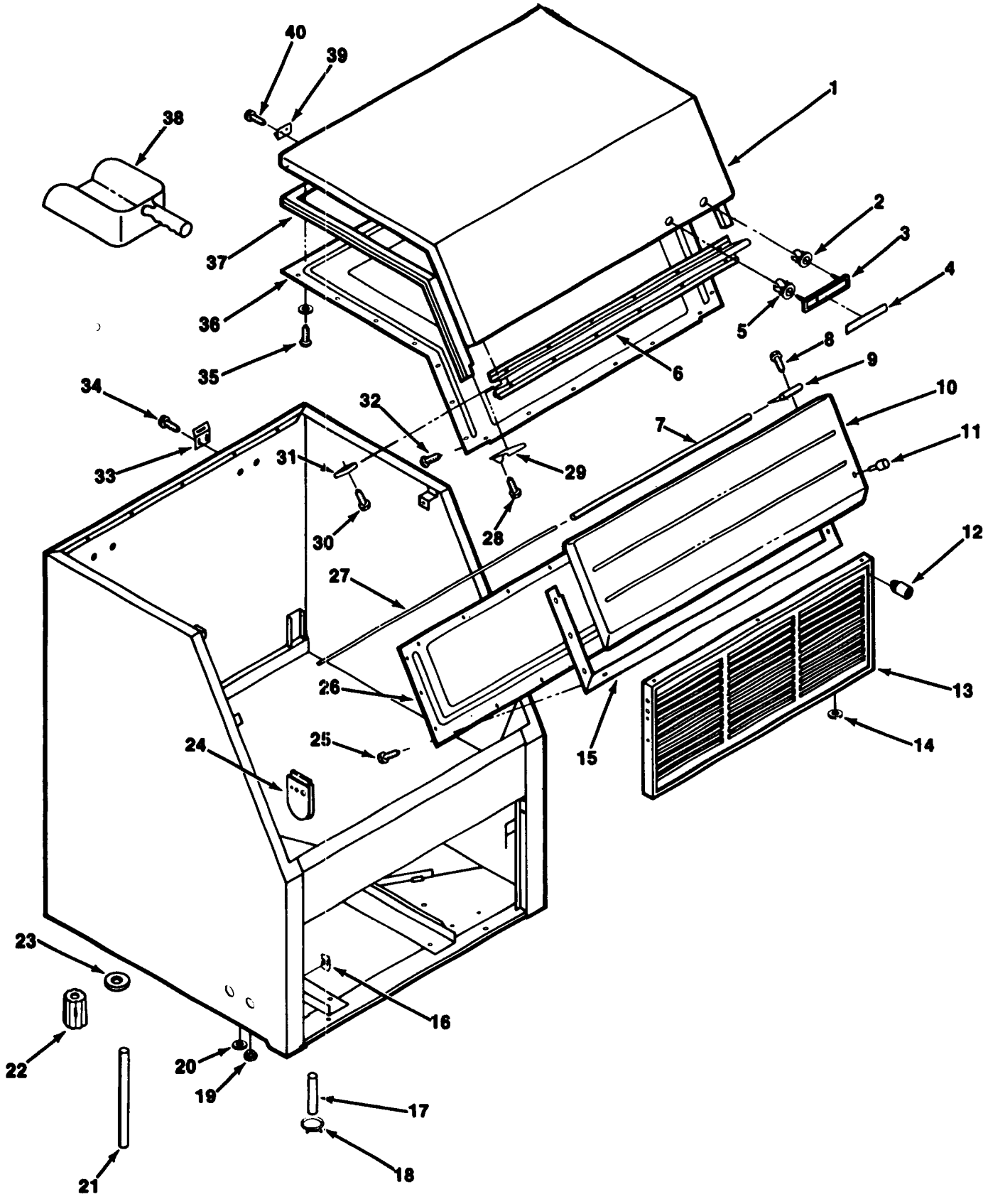

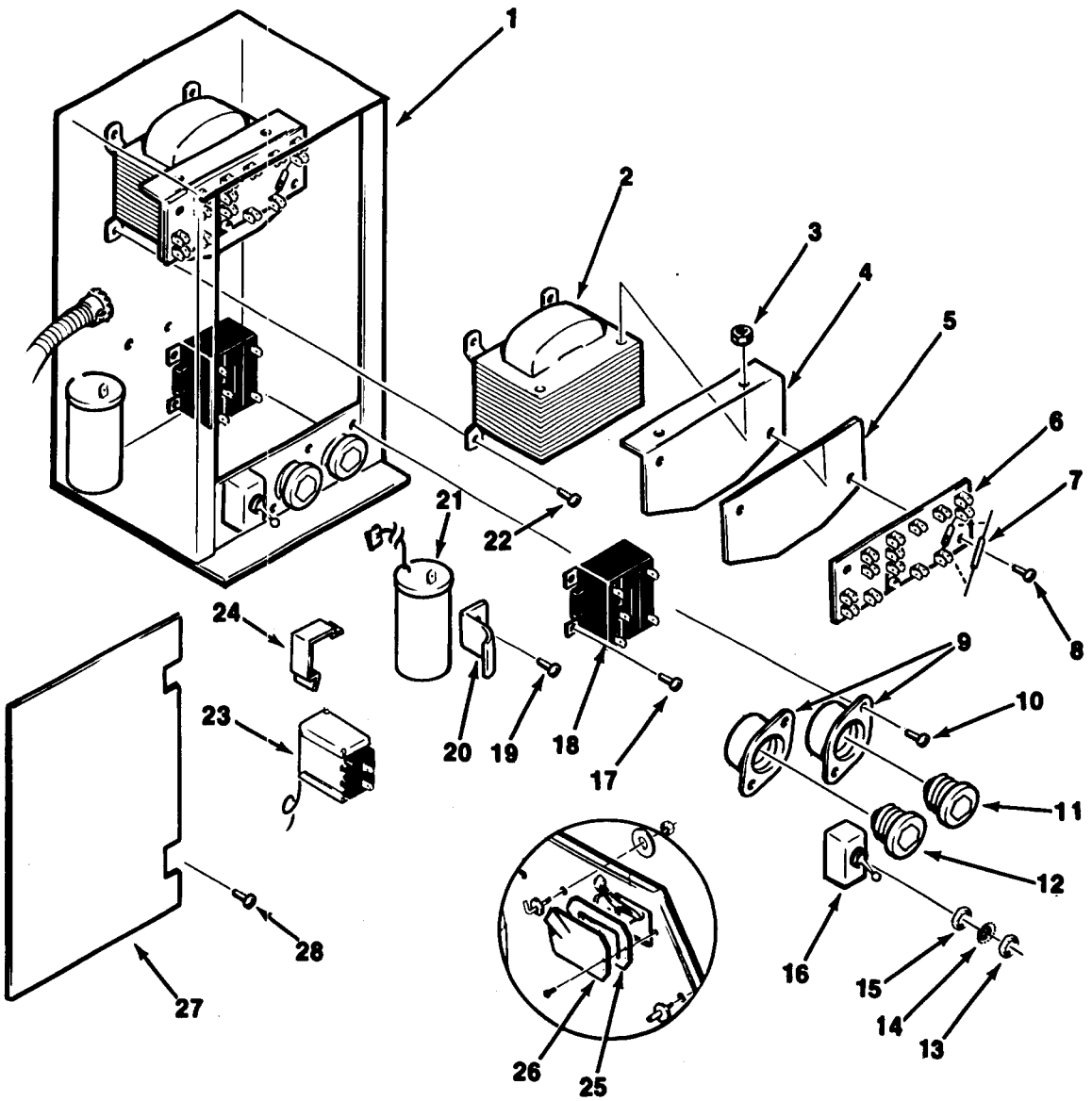

TERMINAL BOX ASSEMBLY

ITEM NUMBER	PART NUMBER	DESCRIPTION
1	*No Number*	Shell, Terminal Box
2	0598276	Transformer
3	0595176	Nut, #8-32
4	0564724	Bracket, Terminal
5	0572027	Protector, Transformer
6	0598409	Board, Terminal
7	0598412	Resistor
8	0680968	Screw
9	12-2275-02	Receptacle
10	0680604	Screw
11	12-2276-04	Fusestat (3.2 Amp)
12	12-2276-02	Fusestat (1.0 Amp)
13	0596021	Nut
14	0596022	Lockwasher
15	0596021	Nut
16	0560940	Switch, Service
17	0595354	Screw
18	0598411	Relay, Defrost Control
19	0595354	Screw
20	0560767	Clamp, Capacitor
21	0598216	Capacitor
22	0595354	Screw
23	0572847	Switch, High Pressure (Water-Cooled Only)
24	0596216	Clip (Water-Cooled Only)
25	0598467	Plate
26	0562262	Gasket
27	0585270	Cover, Control Box
28	0680968	Screw

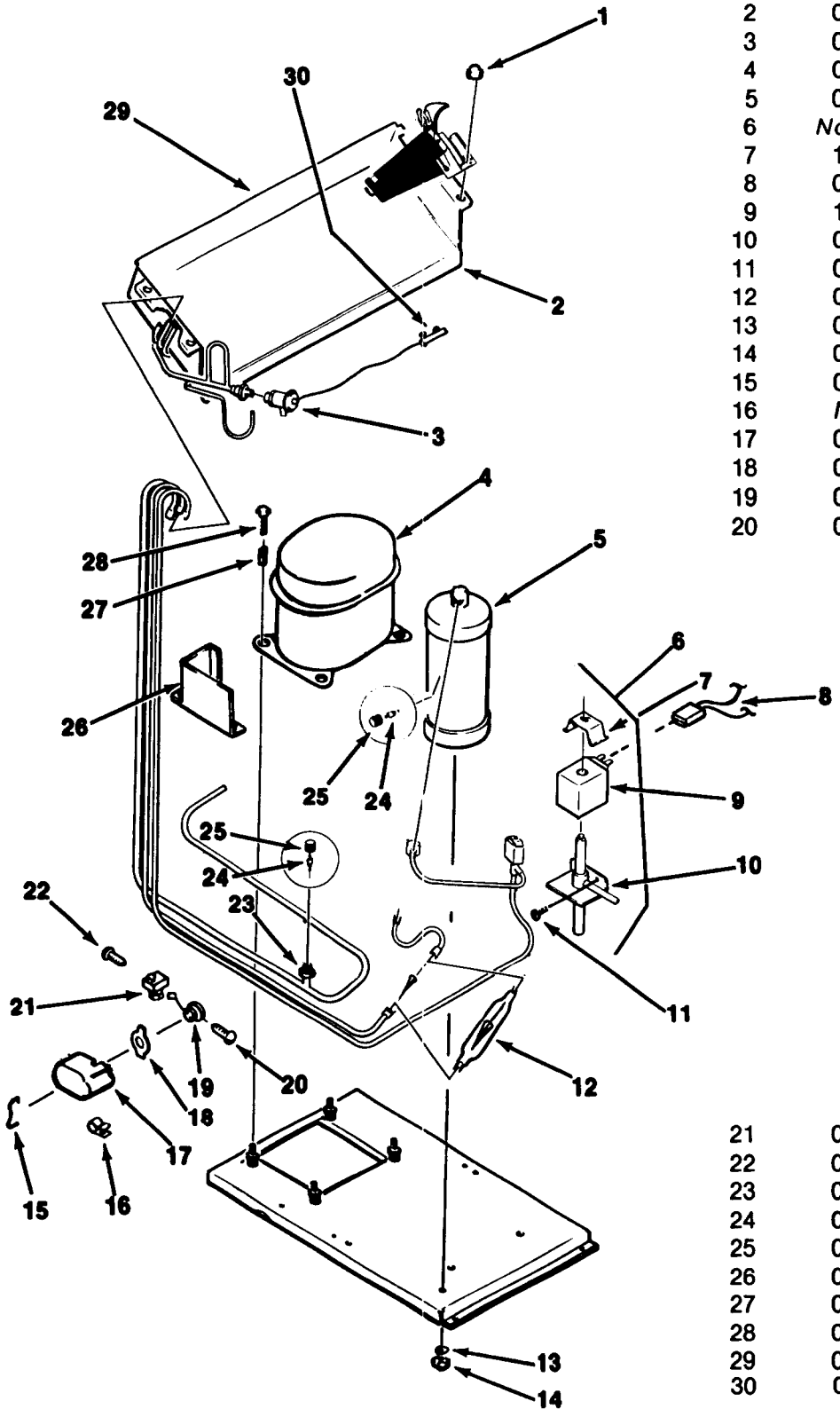

REFRIGERATION SYSTEM

ITEM NUMBER	PART NUMBER	DESCRIPTION
1	0595181	Nut, Cap (2)
2	0681584	Nut, Wing (2)
3	0757353	Valve, Expansion
4	0780038	Compressor
5	0572803	Tank Receiver
6	*No Number*	Hot Gas Defrost Valve
7	12-2009-01	Clamp
8	0598509	Harness, Solenoid Valve
9	12-2008-01	Coil, Solenoid Valve
10	0598502	Body Solenoid Valve
11	0681058	Screw
12	0572801	Drier
13	0681467	Washer
14	0595172	Nut, 3/8-16
15	0560850	Strap, Bale
16	*No Number*	Clamp, Wire
17	0589230	Cover, Terminal
18	0560851	Pring, Overload
19	0598210	Overload
20	0595036	Screw, 6-32 x 1/4
21	0598215	Relay, Starting
22	0595036	Screw, 6-32 x 1/4
23	0561955	Valve, Body
24	0561958	Core, Valve
25	0561957	Cap, Valve
26	0598218	Protector, Wire
27	0583536	Sleeve
28	0681342	Screw
29	0780099	Evaporator Ass'y.
30	0593496	Clip-Capillary Bulb

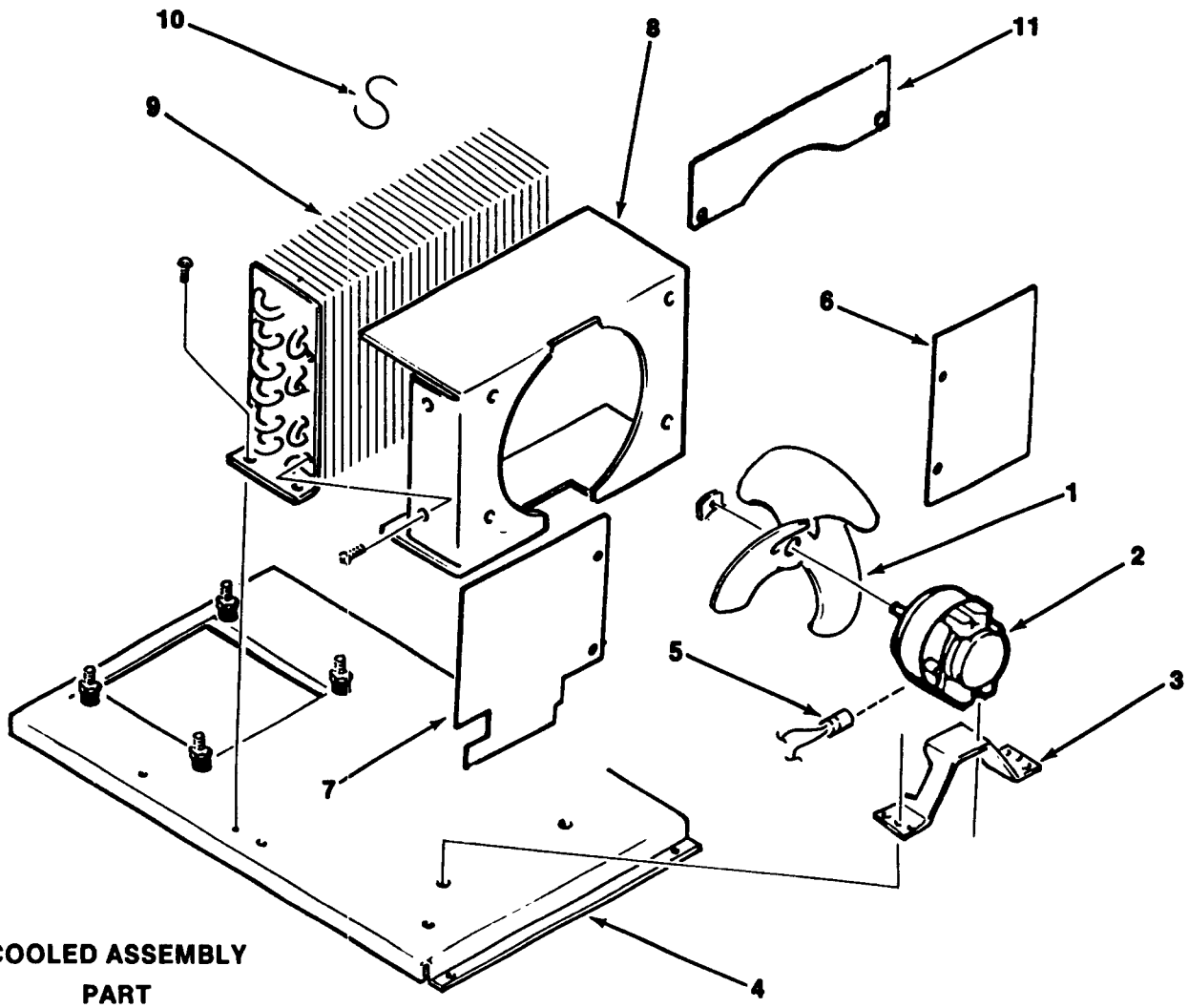

AIR-COOLED ASSEMBLY

ITEM NUMBER	PART NUMBER	DESCRIPTION
1	0560842	Blade, Fan
		Attaching Parts, Index 1 and 2
	059380	Nut, Speed
2	12-1575-01	Motor, Fan
		Attaching Parts, Index 2 and 3
	0680811	Screw
3	0560839	Bracket, Fan Motor
		Attaching Parts, Index 3 and 4
	0680439	Screw
4	*No Number*	Plate, Base
5	0598570	Harness, Fan Motor
6	0560844	Baffle (Right)
7	0577025	Baffle (Left)
8	0560837	Shroud
		Attaching Parts, Index 8 and 9
	0681233	Screw, #10-12 x 1/2
9	0560834	Condenser
		Attaching Parts, Index 9 and 4
	0681305	Screw, 1/4-20 x 1/2
	0595380	Nut, Speed
10	0564433	Clip
11	0560846	Baffle (Top)

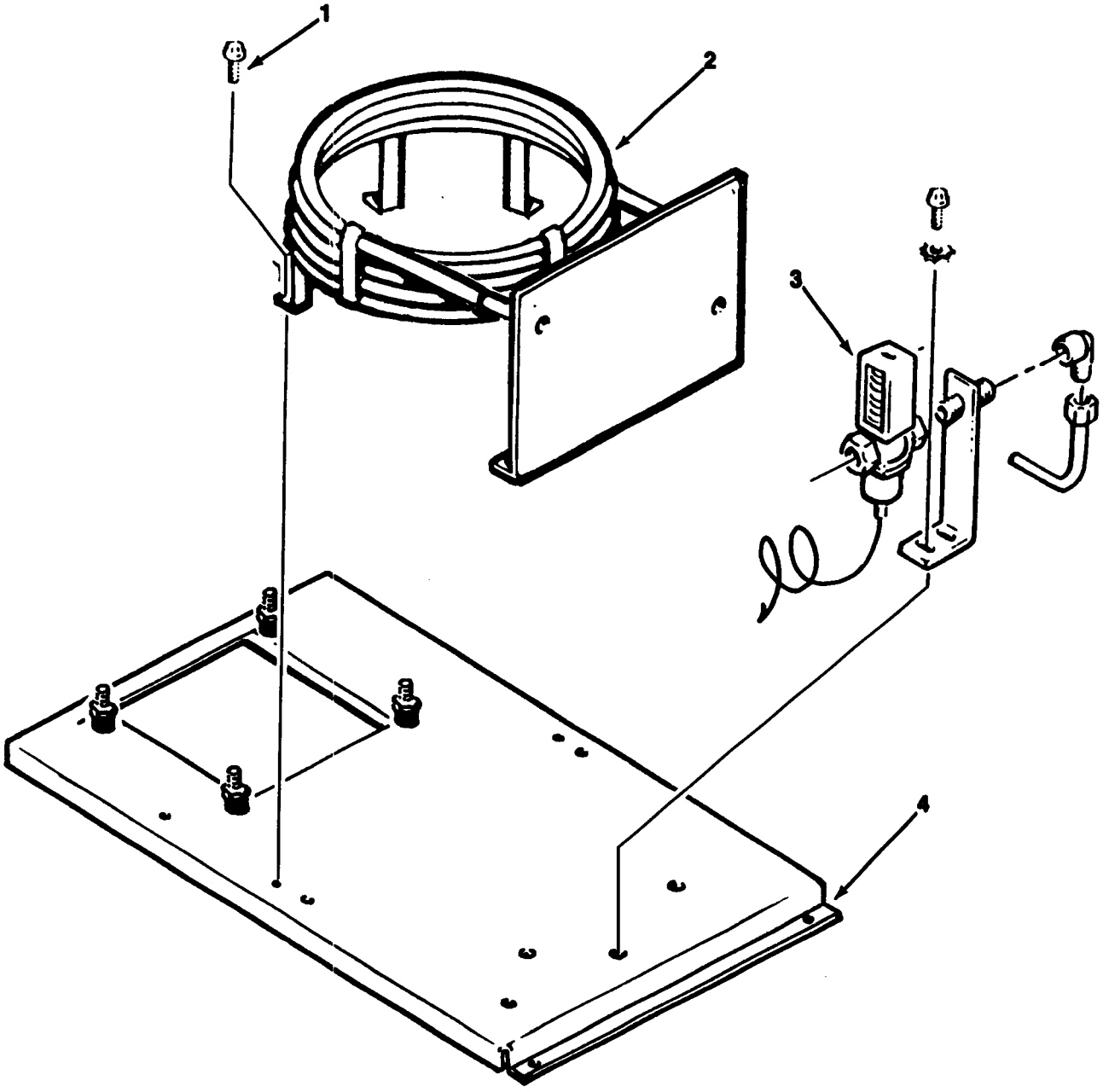

WATER-COOLED ASSEMBLY

ITEM NUMBER	PART NUMBER	DESCRIPTION
1	0681305	Screw, 1/4-20 x 1/2
2	0598050	Condenser
3	0585386	Water Valve
4	*No Number*	Base Plate

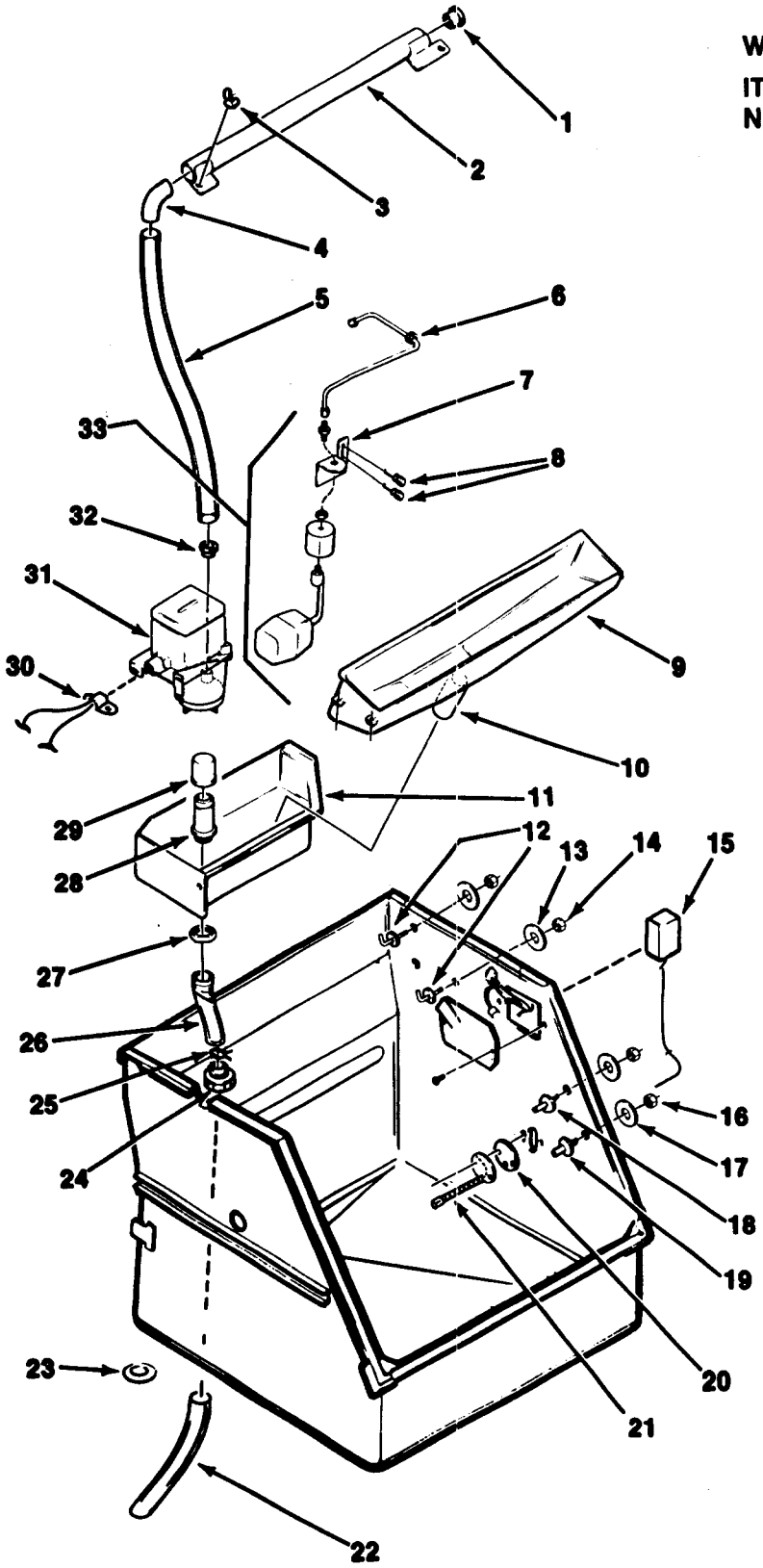

WATER SYSTEM — STORAGE BIN

ITEM NUMBER	PART NUMBER	DESCRIPTION
1	0583481	Seal, Dispenser
2	0562280	Dispenser, Water
3	0681584	Nut, Wing (2)
4		Elbow
5	0756276	Hose, Dispenser
6	*No Number*	Grommet
7	0587675	Bracket, Float Valve
8	*No Number*	Thumbscrews
9	0593069	Trough, Water
10	0568379	Tubing, Plastic
11	0585148	Pan, Water
12	0598478	Stud (2)
13	0585231	Washer, Stud
14	03-1406-08	Nut, 1/4-20
15	0593201	Thermostat, Bin Control
16	03-1406-08	Nut, 1/4-20
17	0585231	Washer, Stud
18	0598397	Stud (2)
19	0598476	Stud (2)
20	0562262	Gasket, Thermostat Well
21	0562251	Well, Thermostat
22	0598402	Hose Drain
23	0598401	Gasket Drain
24	0598371	Cover Drain
25	0596727	Clamp
26	0598399	Hose, Drain
27	0583266	Nut
28	0577430	Tube, Siphon
29	0562296	Cap, Siphon
30	0569434	Plub, Pump
31	0756782-20	Pump, Water
32	0587556	Flow Washer Pump Inlet
33	0593654	Float Valve Assembly

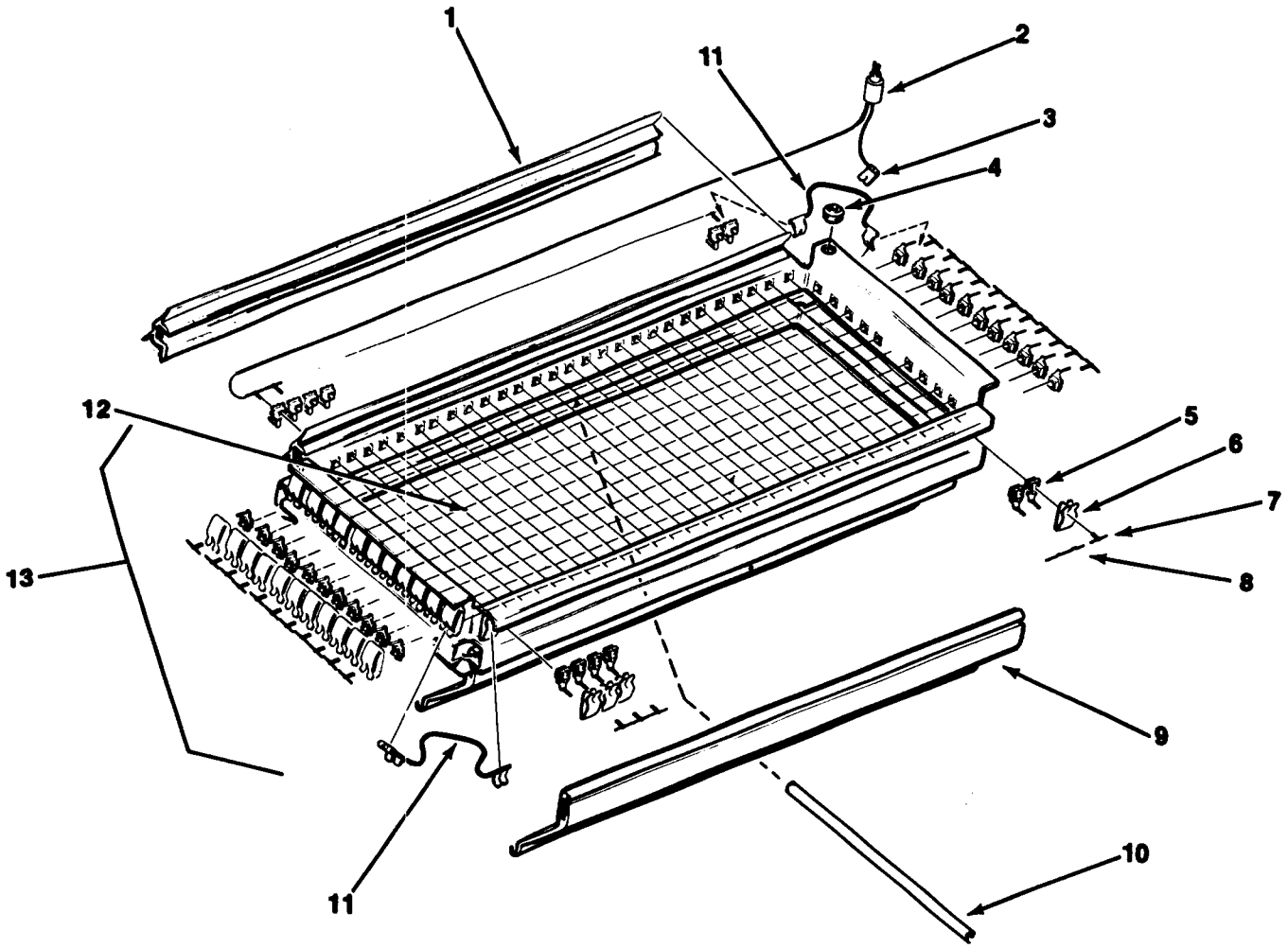

ICE CUTTER GRID ASSEMBLY

ITEM NUMBER	PART NUMBER	DESCRIPTION
1	0563425	Baffle, Splash
2	0585536	Plug Assembly (3/4"Cube)
3	*No Number*	Clip, Terminal
4	0680634	Bushing, Strain Relief
5	0598277	Insulator, Grid (1-1/4" Cube) (40) ea. (3/4" Cube) (80) ea.
6	0564072	Clip, Grid Wire (1-1/4" Cube) (40) ea. (3/4" Cube) (80) ea.
7	0587112	Pin, Cutter Wire
8	0587111	Pin, Cutter Wire (3/4" Cube) (38) ea.
9	0577026	Deflector, Cube
10	0562575	Brace, Grid Frame (3/4" Cube Only)
11	0587102	Wire, Connector Grid (3/4" Cube)
12	0588114	Kit, Cutter Wire (1-1/4" Cube)
	0588115	Kit, Cutter Wire (3/4" Cube)
13	CCK154CG	Complete Grid Ass'y. (3/4" x 3/4")
	CCK153SG	Complete Grid Ass'y. (1-1/4" x 1-1/2")

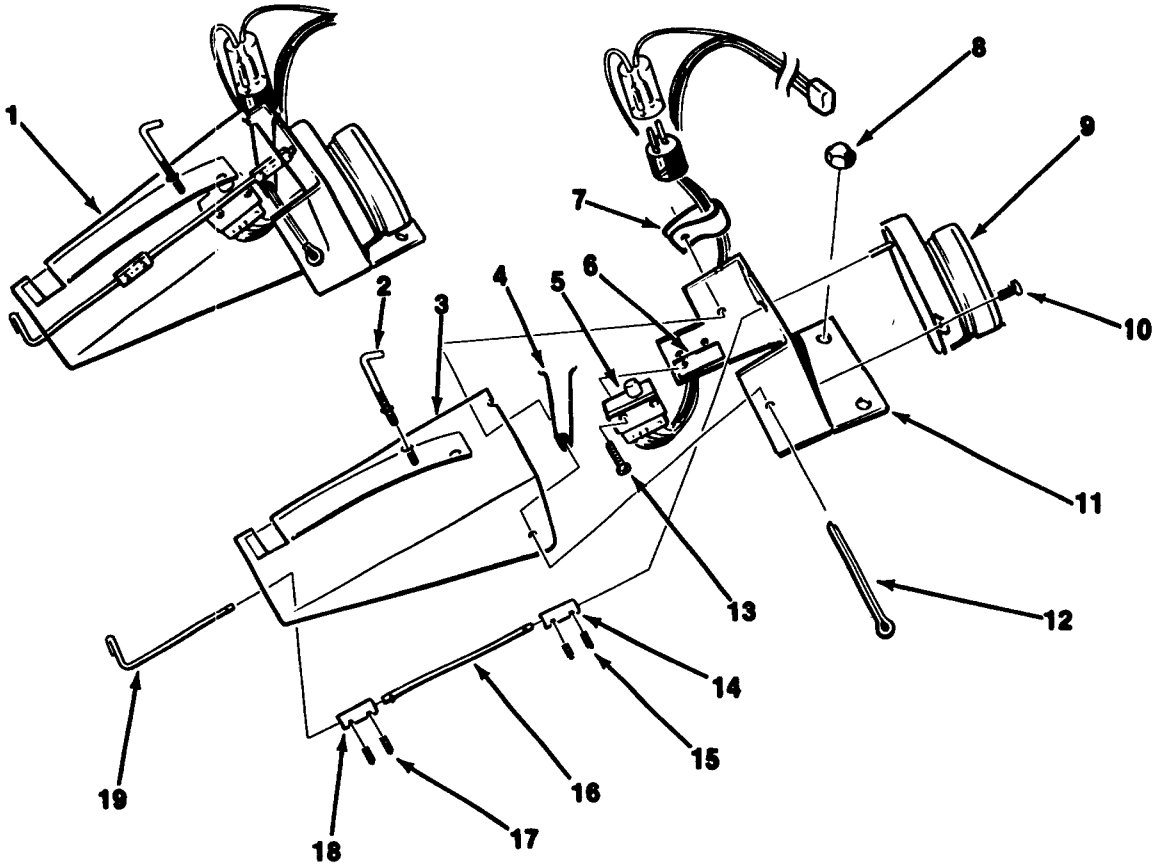

ICE THICKNESS CONTROL ASSEMBLY

ITEM NUMBER	PART NUMBER	DESCRIPTION
1	0598369	Control, Ice Thickness
2	0751991	Screw, Adjusting
3	0587293	Bracket, Shaft
4	0560861	Spring, Hold Down
5	0587889	Harness, Switch
6	0587996	Spacer
7	0596338	Clamp, Wire
8	0595181	Nut, Cap (2)
9	0577540	Motor, Control
10	0680854	Screw, 4-40 x 3/8
11	0607811	Bracket, Motor
12	0680668	Cotter, Pin
13	0681433	Screw, 4-40 x 3/4
14	0572489	Coupling, (2)
15	0595330	Setscrew, 6-32 x 3/16
16	0607816	Shaft, Flexible
17	0595330	Setscrew
18	0585508	Coupling
19	0585507	Shaft, Formed End

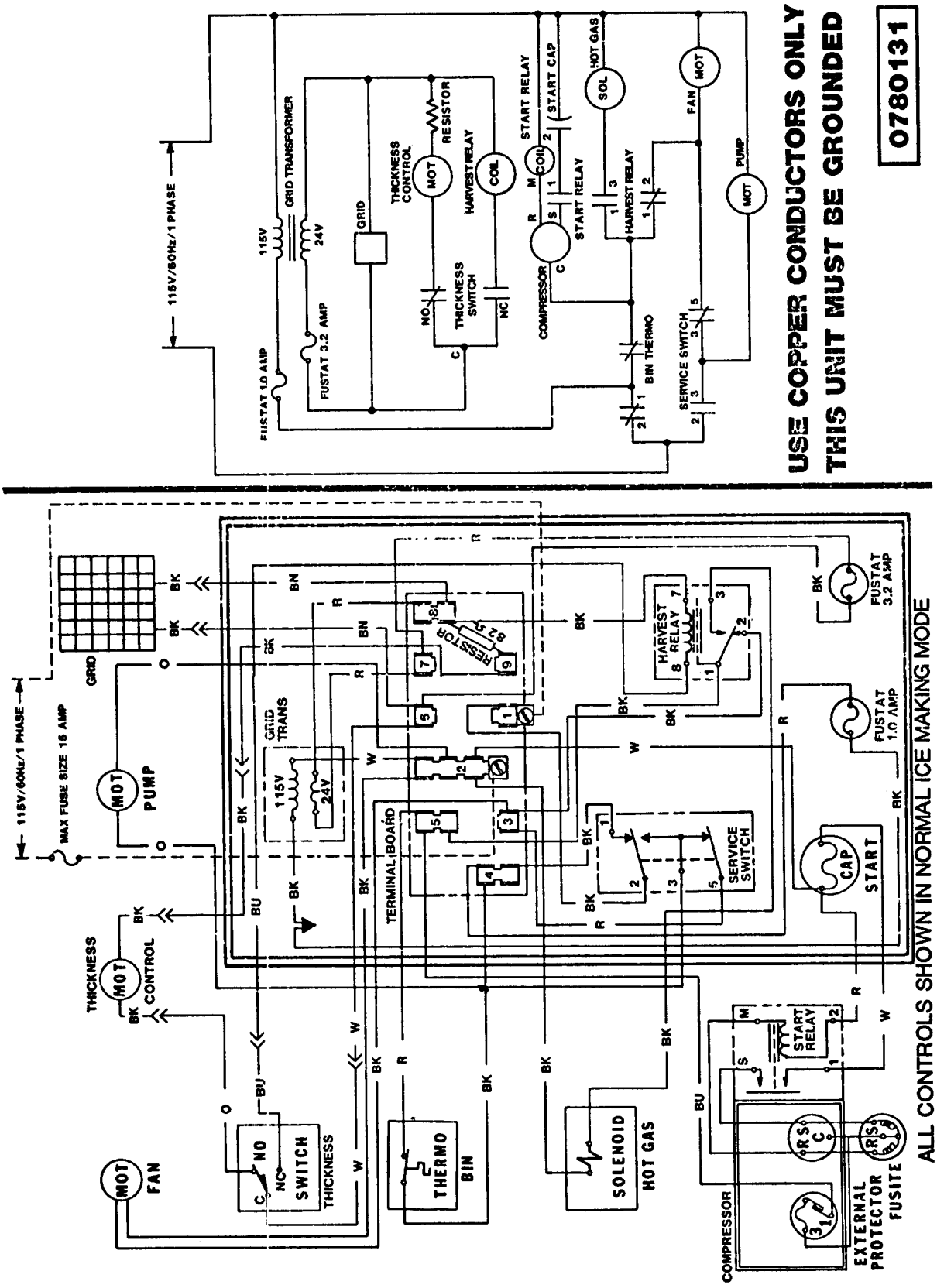

Wiring Diagram, CSW2 AE-1A (115/60/1) Air-Cooled

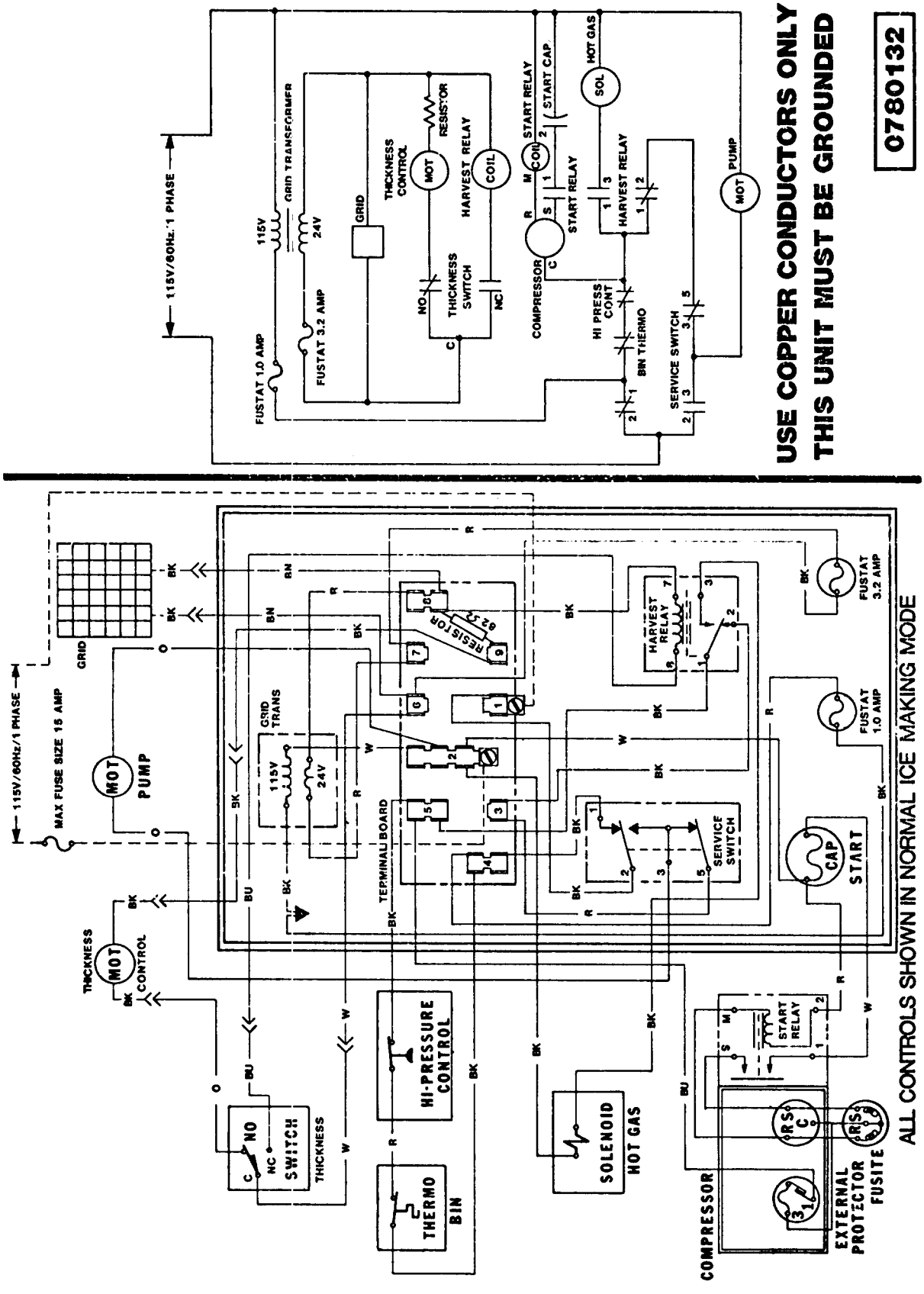

Wiring Diagram, CSW2 WE-1A (115/60/1) Water-Cooled

CSW3

TABLE OF CONTENTS

GENERAL INFORMATION & INSTALLATION
Introduction 2
Unpacking 4
Select Location 4
Electrical Connections 6
Plumbing Installation 7
Final Checklist 8

OPERATING INSTRUCTIONS
Start-Up 10
How It Works 10
Freezing Cycle 12
Harvest Cycle 13
Simple Problem Checklist
'BEFORE' Service Call 14

MAINTENANCE & CLEANING INSTRUCTIONS
General 16
Icemaker 16
Cleaning the Condenser 16
General Care & Cleaning 16
Cleaning Icemaker 16
Cleaning & Sanitizing 17

SERVICE DIAGNOSIS 20

ADJUSTMENT PROCEDURES
Storage Bin Thermostat 22
Ice Slab "Thickness" 22
Float Valve Assembly 22

REMOVAL AND REPLACEMENT PROCEDURES
Cutter Grid 23
Evaporator 25
Ice Thickness Control 25
Water Regulator Valve, Water-Cooled 25
Water Distributor 26
Bin Thermostat Control 26
Float Valve Assembly 26
Expansion Valve 27
Slide-Out Chassis 28
Drier 30
Compressor Assembly 30
Condenser, Air-Cooled 30
Condenser, Water-Cooled 31
Water Pump 31
High Pressure Safety Control
(Water-Cooled) 31
Hot Gas Harvest Solenoid Coil 32
Hot Gas Harvest Valve 32
Receiver 32
Fan Motor Assembly Air-Cooled 33

LIST OF ILLUSTRATIONS

Specifications 3
Unpacking Machine 4
Icemaker Location Considerations 4
CSW3 - Component Location 5
Installation, Water & Electrical 7
Operation Illustration 11
Freezing Cycle 12
Harvest Cycle 13
Cleaning Water System 18
Thickness Adjustment 22
Float Valve Assembly 22
Cutter Grid Wire Replacement Tools 23
Cutter Grid 23
Cutter Grid Wiring Schematic
3/4" x 3/4" 23
Cutter Grid Wiring Schematic
1-1/4" x 1-1/2" 24

PARTS LIST AND WIRING DIAGRAMS
(Printed in Blue)
PARTS LIST:
Cabinet Assembly 1
Control Box Assembly 3
Ice Cutter Grid Assembly 5
Major Component Assembly 7
Air-Cooled Assembly 9
Water-Cooled Assembly 9
Liner Assembly 11

WIRING DIAGRAMS:
CSW3 AE-1A (115/60/1) 13
CSW3 WE-1A (115/60/1) 14

THIS PAGE
INTENTIONALLY
LEFT BLANK

CSW3
GENERAL INFORMATION AND INSTALLATION

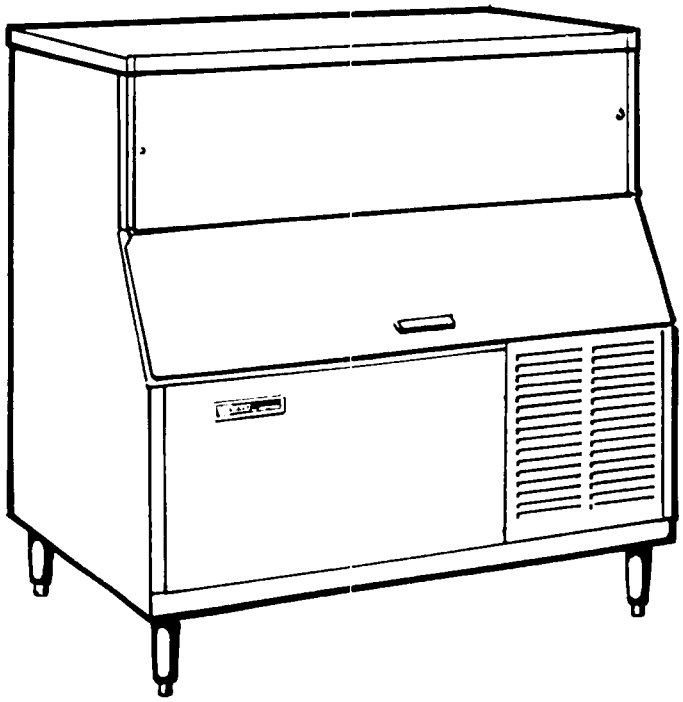

CSW3
Self-Contained Cuber

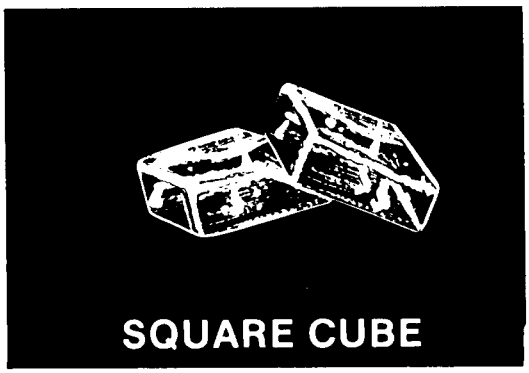

INTRODUCTION

The Model CSW3 Self Contained Cubers are quality designed, engineered and constructed, and are thoroughly tested icemaking systems, providing the utmost in flexibility to fit the needs of a particular user.

These instructions provide the specifications and the step-by-step procedures for the installation, start up and operation for the W-Series Model CSW3 Cuber.

CSW3

GENERAL INFORMATION AND INSTALLATION

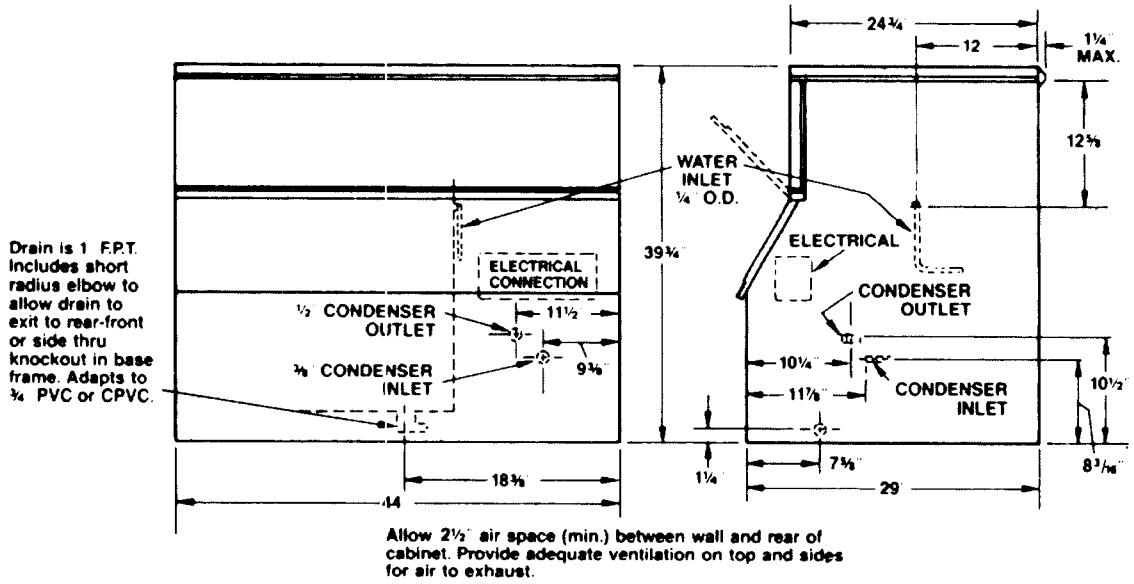

This product qualifies for the following listings:

We reserve the right to make product improvements at any time. Specifications and design are subject to change without notice.

SPECIFICATIONS

Model Number	(Height - w/o Legs) Dimensions H" x W" x D"	Bin Cap.	Cond. Unit	Finish	Basic Electrical	Comp. H.P.	Time Delay Fuse Size Max.	Amp. (Average)	Water (In.)	Drain (In.)	Ship. Wt. (Approx. Lbs.)
CSW3AE-1A	39¾ x 44 x 29	242 lbs.	Air	ES	115/60/1	½	20	10.0	¼	¾	330 lbs.
CSW3WE-1A	39¾ x 44 x 29	242 lbs.	Water	ES	115/60/1	½	20	10.0	¼ - ⅜	¾ - ½	330 lbs.

IMPORTANT OPERATING REQUIREMENTS

	MINIMUM	MAXIMUM
*Air Temperatures	55° F (10.0° C)	100° F (38° C)
Water Temperatures	40° F (4.4° C)	100° F (38° C)
Water Pressures	20 lbs. gauge	100 lbs. gauge
Single Voltage Units	-10%	10%

(Voltage rating specified on nameplate)

Extended periods of operation exceeding these limitations constitutes misuse under the terms of Scotsman Manufacturer's Limited Warranty, resulting in a loss of warranty coverage.

KLP2E-Black enamel finish legs are optional.

KBC1-Optional bin caster kit, two standard and two locking 3-1/2" dia. wheel casters. Lifts bin 4-7/16" off of floor.

GRIDS FOR LARGE CUBES On Model CSW3 to convert cube size to 1-1/4" x 1-1/2", order grid CCK-151-SG. Note: Order these special grids through the Scotsman Parts Department.

REFRIGERANT **R-12**

GENERAL INFORMATION AND INSTALLATION

UNPACK

THIS ITEM IS HEAVY, WHEN HANDLING USE PROPER EQUIPMENT AND CARE TO PROTECT IT, YOURSELF, STAIRS AND FLOORS.

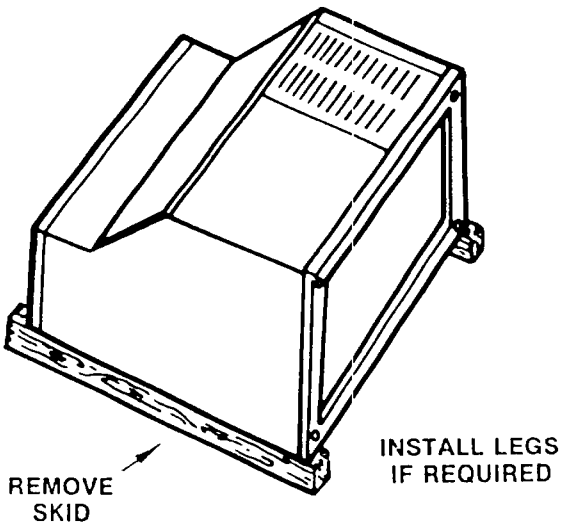

1. Remove staples at bottom of carton. Lift and remove carton.

CAUTION

Skid base is not bolted to the bottom of the icemaker.

2. Carefully tilt cabinet to remove the skid.
3. **IF LEGS ARE TO BE INSTALLED**
   A. Carefully lay machine on its back using blocks to prevent damage.
   B. Screw the legs into the tapped holes in the base. Be sure that the legs are seating tightly against the frame.

   Carefully lay machine on its back using 2-1/4" high blocking or corner posts to prevent damage to water line.
4. Carefully set machine in upright position.
5. Remove exterior tape.
6. Raise storage bin door. Remove front panel by removing two screws and lifting panel off. Top may also be removed by pulling forward.
7. Remove all shipping tape and packaging from interior.
8. Check water pump pan for foreign objects or loose parts.
9. Examine carefully for concealed damage. Report immediately to carrier any damage found. Save carton and have carrier examine product and submit written report.

SELECT LOCATION

THIS UNIT MUST BE INSTALLED IN AN AREA PROTECTED FROM THE ELEMENTS, SUCH AS WIND, RAIN, WATER, SPRAY, OR DRIP.

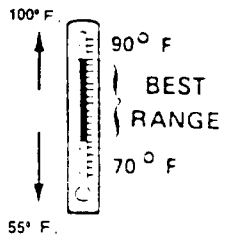

1. Locate in a well-ventilated area above 55° F. Best ice yield is obtained between 70° F. and 90° F.; higher or lower temperatures will reduce ice yield.
2. CAUTION: Do not install in areas where freezing temperatures may occur.
3. If air cooled icemaker is installed in a closed room 350° C.F.M. of air must be exchanged through the room to maintain the room air at 10° F. warmer than the available ambient air temperature.
4. For water cooled icemaker, water supply temperatures above 80° F. will result in extreme condenser water usage.
5. Leveling is important to obtain proper drainage of the storage bin; it also assures even water flow over the freezing plate and proper release of the iceslab during the harvest cycle. Level units without leveling legs with plywood or masonite shims.
6. Adjust the leveling legs (optional accessories) until the unit is level and all four legs are in solid contact with the floor.
7. When legs are used, floor must support approximately 130 lbs. per leg (130 lbs. per sq. inch.).

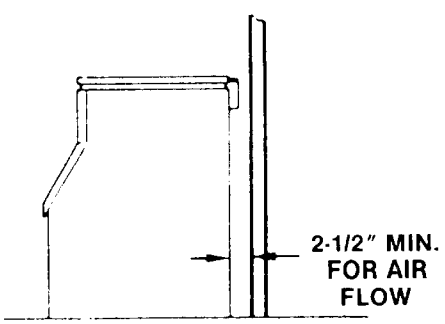

8. When installing icemaker without optional leg kit, installation must conform to local, state and national health and building codes. Legs may be used and can be ordered from your Authorized Ice Machine Dealer using KLP2E.

GENERAL INFORMATION AND INSTALLATION

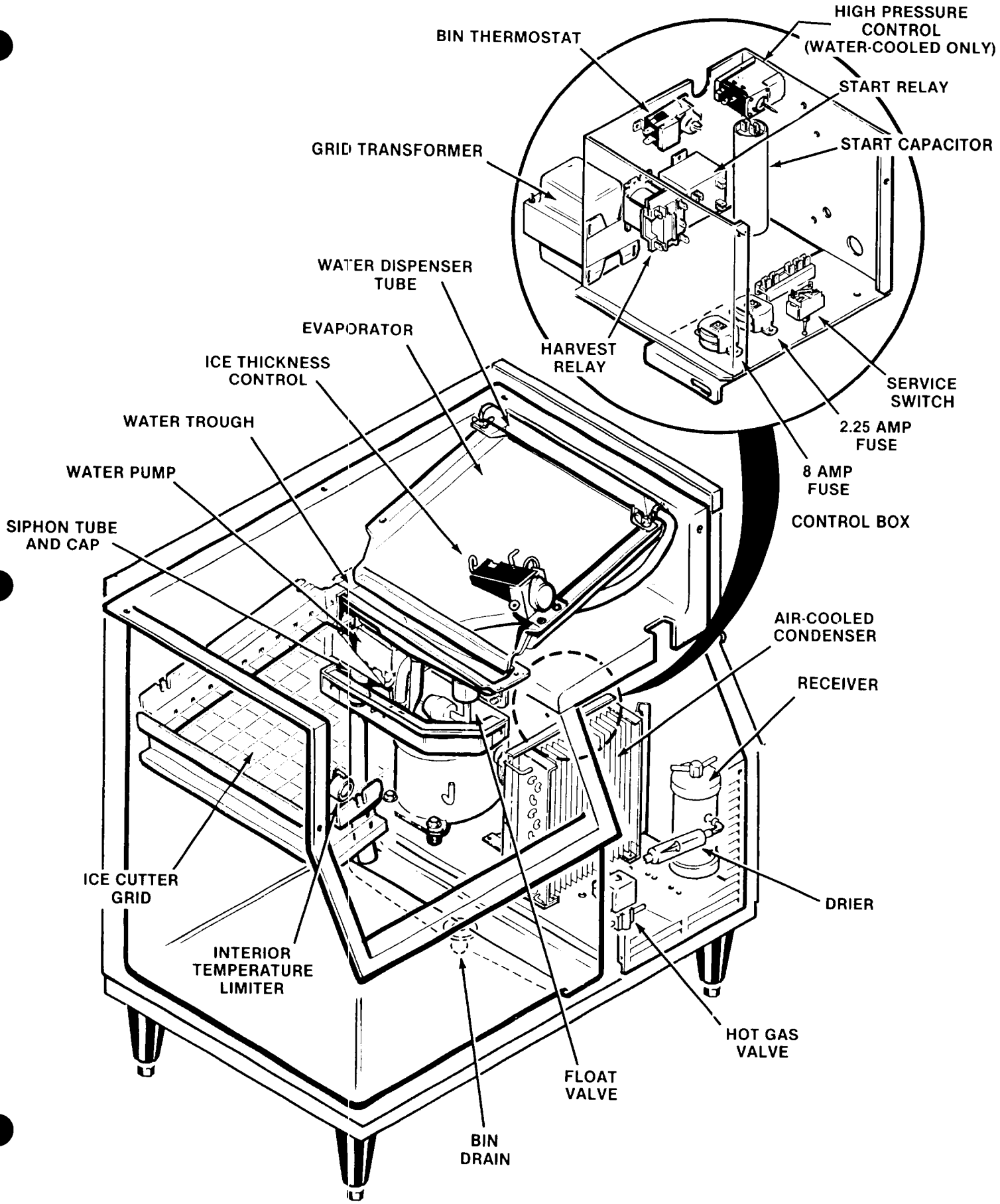

GENERAL INFORMATION AND INSTALLATION

FOR THE ELECTRICIAN

CONFORM TO ALL APPLICABLE CODES

It is the personal responsibility and obligation of the customer to contact a qualified installer to assure that the electrical installation is adequate and is in conformance with the National Electrical Code and local codes and ordinances.

Be certain the cuber is connected to its own electrical circuit and individually fused. Voltage variation should not exceed ten percent of the nameplate ratings, even under starting conditions. Low voltages can cause erratic operation and may be responsible for serious damage to the icemaker.

The electrical connection to the ice cube maker must supply 115 volts, 60Hz alternating current. This connection should enter the motor compartment through the back of the unit and should be brought forward to the front of the cabinet.

SEE NAMEPLATE for current requirements to determine wire size to be used for electrical hookup. The cuber required a solid chassis-to-earth ground wire. See Wiring Diagram.

NOTE: A separate circuit must be used with 20 ampere time delay fuses.

INSTALL ELECTRICAL WIRING

USE COPPER WIRE ONLY

WIRING — 115 V, 60Hz (cycles) 20 Amp, Phase — Use Delayed Action Fuse

1. Remove grill by removing screws at top edge.
2. Remove electrical box cover and connect ground wire to green screw tagged "Ground" and electrical supply line to terminal board screws.

Refer to Wiring Diagram located on Control Box cover and connect per electrical codes.

INSTALL GROUNDING WIRE

USE COPPER WIRE ONLY

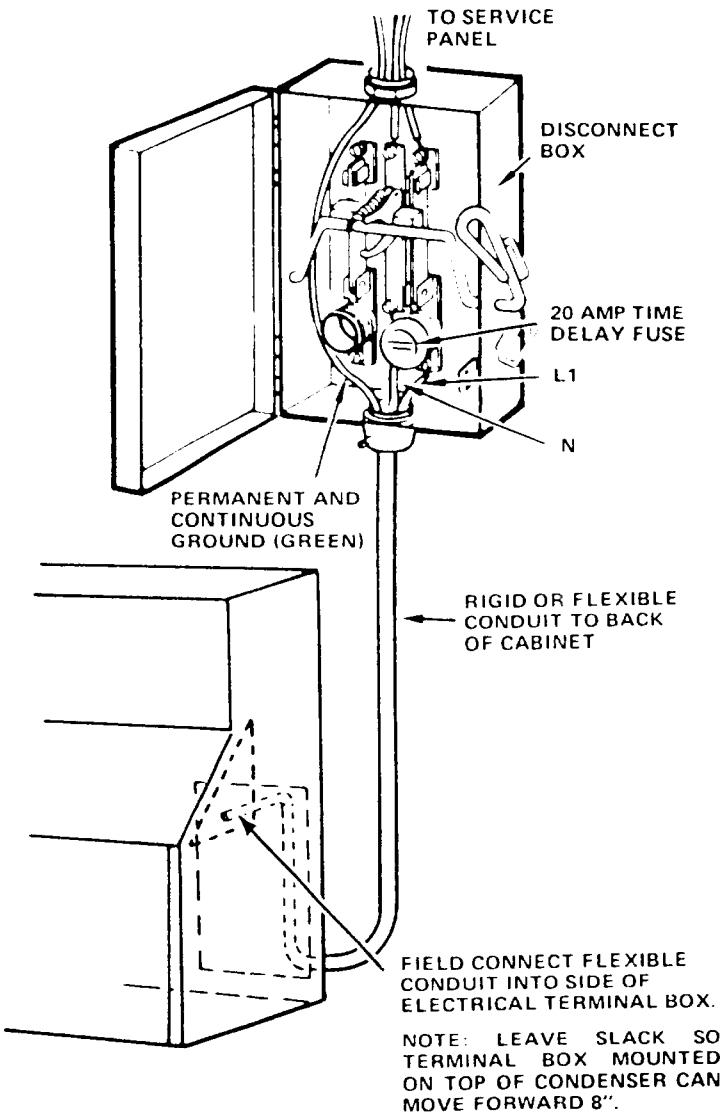

ELECTRICAL GROUND IS REQUIRED ON THIS APPLIANCE.

1. Permanently ground this appliance in accordance with the National Electrical Code and local codes and ordinances. Ground must be continuous.
2. Use a conductor of the appropriate size from the appliance green grounding screw to a grounded connection in the service panel or a properly driven and electrically grounded rod.
3. Replace electrical box cover.

GENERAL INFORMATION AND INSTALLATION

FOR THE PLUMBER

OBSERVE LOCAL CODES

INSTALL DRAIN

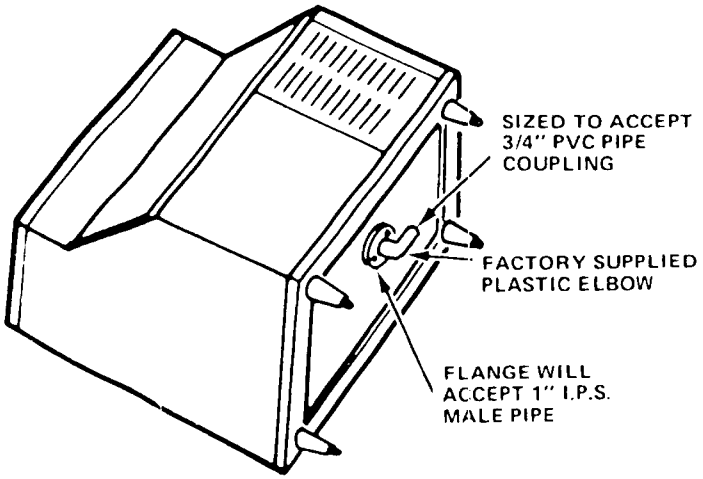

FOR DRAINAGE USE - 3/4" O.D., or larger, Tubing or Pipe

1. The drain line must maintain a gradual slope to an open drain receptacle. Any rise in the drain line will cause an air lock and prevent the water from draining from the storage bin. Installation of an air vent in the drain line will eliminate the possibility of an air lock forming.

CONDENSER DRAIN

Water-Cooled Models Only

1. 1/2" galvanized pipe or copper tubing must be used to extend the condenser outlet to an open type drain.
2. Adequate flow rate must be maintained through the condenser. Runs over 40 ft. will require using larger pipe size.

INSTALL WATER SUPPLY

NOTE: Water treatment may be advisable because poor quality water can cause marginal operation or malfunction and increase cleaning frequency and maintenance costs. Contact your local commercial ice machine dealer for recommendations.

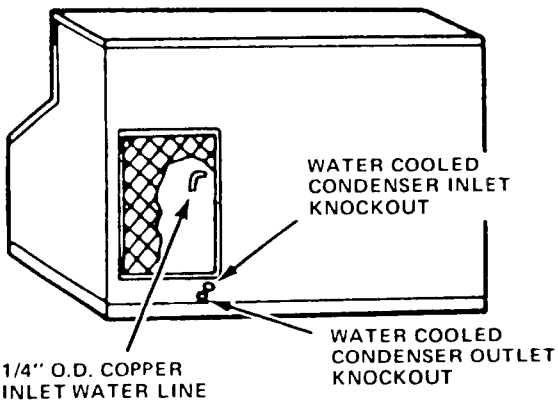

COLD WATER SUPPLY-1/4" O.D. Soft Copper Tubing With Shut-Off Valve

1. A shut-off valve should be provided in the water supply line at a convenient location near the ice maker. The supply line must be adequately sized to compensate for the length of the run.

Supply runs over 10 ft. should be made with 3/8" o.d. copper tubing. Runs of 10 ft. or less may be made with 1/4" o.d. copper tubing.

NOTE: Always flush out water lines before connecting to prevent foreign matter from entering the float valve.

2. Connect supply line to 1/4" o.d. water line at rear of ice maker.
3. Water level is controlled in pump reservoir by the float valve. Make sure float valve opens and closes.
4. Water pressure must be 20 to 100 psi. If the pressure exceeds 100 psi, a regulator will have to be installed. The unit will operate in pressures below 20 psi; however, it may produce cloudy ice.

CONDENSER WATER INLET

Water-Cooled Models Only

1. Use a 3/8" I.P.S. independent cold water supply to the water cooled condenser inlet for proper condenser operation. Runs over 40 ft. will require using larger pipe size. Install a hand shutoff valve between the water source and the water-cooled condenser connection at the icemaker.

GENERAL INFORMATION AND INSTALLATION

FINAL CHECK LIST

1. Is the cabinet/bin level? (IMPORTANT)
2. Is the cuber in a location where ambient temperatures are a minimum of 55-degrees F. all year around and do not exceed a maximum of 100° F?
3. Is there at least a 2-1/2" clearance behind and around the cabinet for all connections and for proper air circulation?
4. Have all electrical and piping connections been made?
5. Has the electrical power supply wiring been properly connected, and the voltage tested and checked against the nameplate rating? Has proper chassis-to-earth ground been installed?
6. Is the water supply line shutoff valve installed and opened and has the inlet water supply pressure been checked to ensure a minimum of 20 psig?
7. Have the compressor holddown bolts been checked to be sure the compressor is snug on the mounting pads?
8. Check all refrigerant lines and conduit lines to guard against vibration and possible failure.
9. Has the cuber and the bin been wiped clean with clean damp cloths?
10. Has the owner/user been given the User's Instructions and instructed on how to operate the icemaker and the importance of periodic maintenance?
11. Has the owner/user been given the name and telephone number of the Authorized Scotsman Distributor or Service Agency serving him?
12. Has the Manufacturer's Registration Card been properly filled out? Check for correct Model and Serial Numbers from nameplate, then mail the completed card to the SCOTSMAN factory.



GENERAL INFORMATION AND INSTALLATION

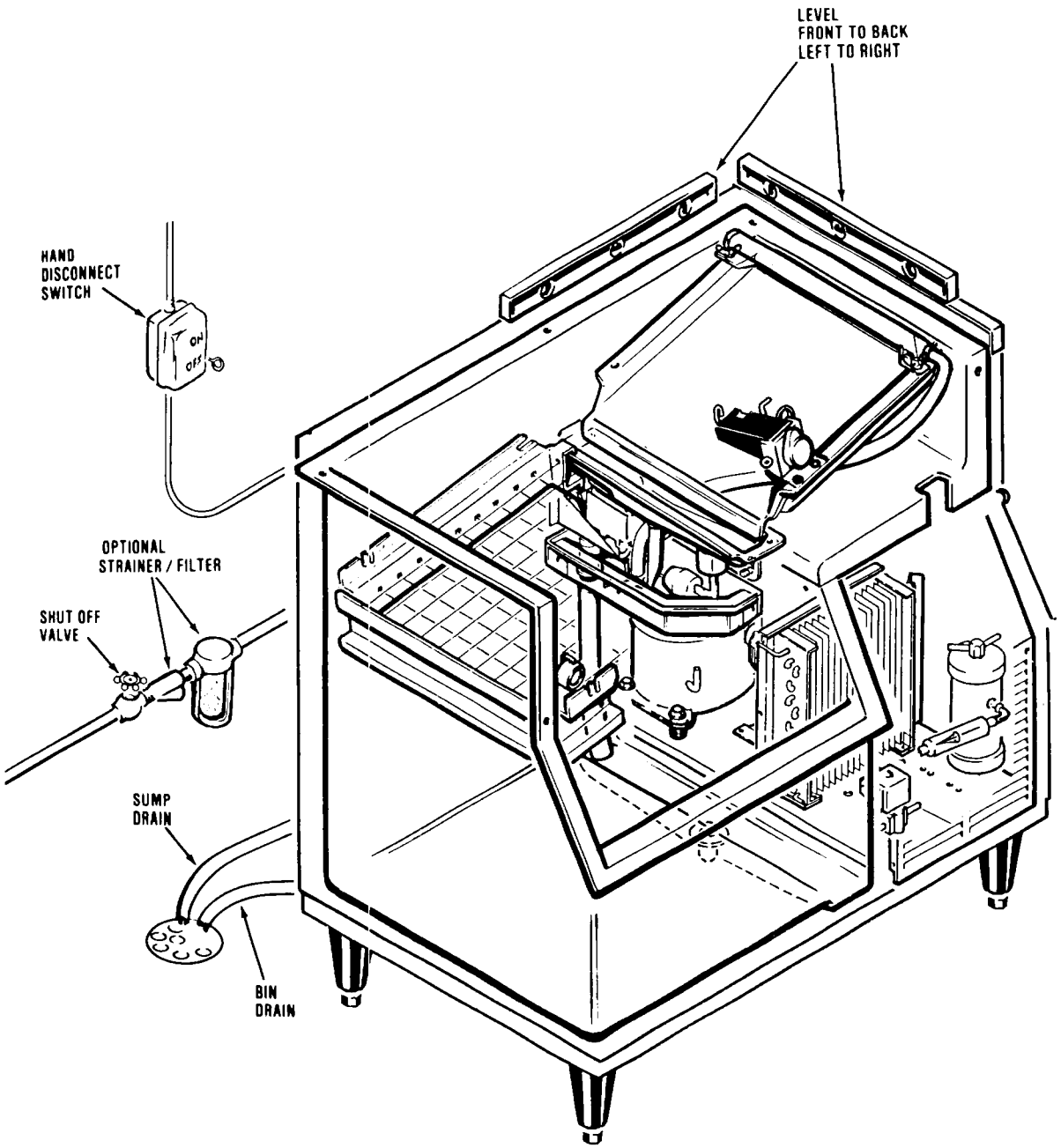

OPERATING INSTRUCTIONS

OPERATING INSTRUCTIONS
STARTING

After the electricity and water to the ice cube maker have been turned on, move the switch to "on" position. This will start ice cube maker. Additional water will be admitted automatically to the water pan when the evaporator temperature has lowered sufficiently to start freezing water to the evaporator, thus lowering the water level causing the float to open.

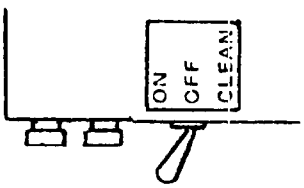

CHECK OPERATION

1. Start the unit by opening water valve and turning the service switch to "ON".
2. NOTE: To the right is "CLEAN", middle is "OFF" and to the left is "ON". In "CLEAN" position, only the water pump operates.
3. Check water level in pump pan. When not running, water level should be 2-1/4" deep.

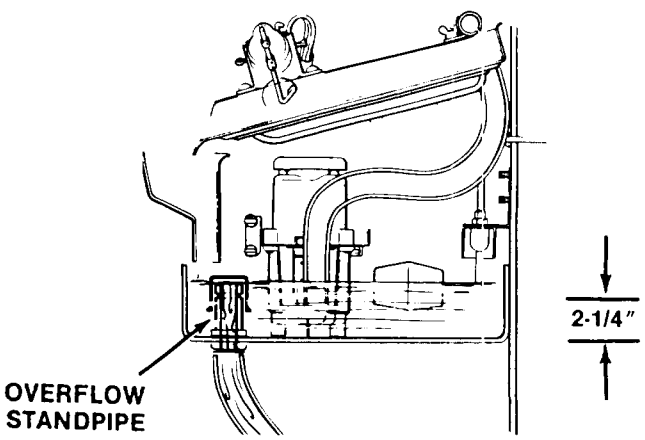

4. Check for even water flow over freezing plate. Unit must be level for proper operation.
5. Check freezing plate to make sure it is getting cold.
6. Check for desired cube thickness and adjust if necessary. Maximum capacity will be obtained with ice thickness 1/2" to 5/8"
7. When slab has been harvested, observe ice cutting action of the grid. The slab should slowly "sink" into the warm wires.
8. Replace all panels.
9. Store ice scoop in a clean place.

HOW IT WORKS

WITH SERVICE SWITCH IN "ON" POSITION

1. Compressor runs.
2. Condenser fan runs.
3. Water pump runs.
4. Thickness control motor runs.
5. Cutter grid warm to touch.

WHEN DESIRED ICE SLAB THICKNESS IS REACHED, HARVEST CYCLE BEGINS WITH FOLLOWING RESULTS:

1. Thickness control arm raises, closing contacts Common to "N.C." which energizes coil of relay.
2. Compressor keeps running.
3. Condenser fan stops. (air cooled). Condenser water valve closes tightly (water cooled).
4. Water pump stops.
5. Water siphons from pan and refills.
6. Thickness control motor stops.
7. Hot gas solenoid valve is energized and opens.
8. Cutter grid warm to touch.

ICE SLAB SLIDES DOWN TO CUTTER GRID. THICKNESS CONTROL ARM FALLS CLOSING CONTACTS COMMON TO "N.O." WHICH DE-ENERGIZES COIL OF RELAY.

MACHINE THEN GOES BACK INTO FREEZE CYCLE WHILE SLAB IS BEING CUT INTO CUBES ON CUTTER GRID

WHEN STORAGE BIN GETS FULL, BIN THERMOSTAT TURNS MACHINE OFF.

1. Thickness control motor on.

OPERATING INSTRUCTIONS

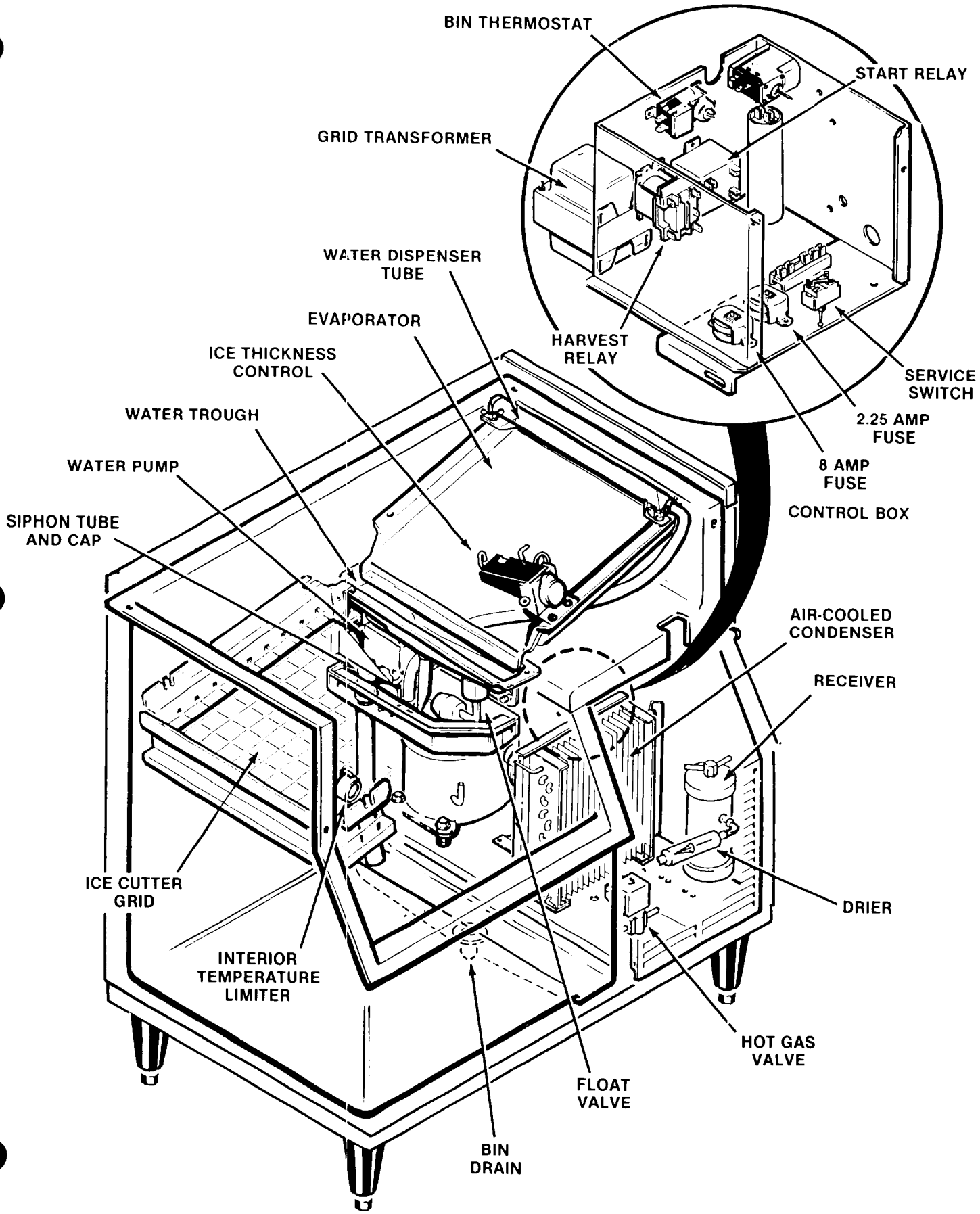

GENERAL OPERATION

FREEZING CYCLE

Water from the sump in the reservoir of the sump assembly is pumped to the water distributor system at the top of the evaporator plate. From the water distributor at the top of the evaporator plate, the water cascades by gravity over the plate and to the sump assembly below for recirculation. At the beginning of the freezing cycle, the electrical circuit is completed to the compressor and the water pump.

In the compressor, gaseous refrigerant is compressed and discharged into the condenser, as a high pressure, high temperature gas. The refrigerant is cooled by either air or water, and condenses into a high pressure, medium temperature liquid and into the receiver. This liquid refrigerant is then metered through the termostatic expansion valve where the temperature and pressure of the liquid refrigerant are lowered and enteres the evaporator plates. The refrigerant is warmed by the water cascading over the Evaporator plate and begins to evaporate off and become gas. The refrigerant next travels through the heat exchange area of the suction line where any remaining liquid refrigerant evaporates off and returns to the compressor as a low pressure, low temperature gas, and the cycle starts again.

During the freezing cycle, the hot gas solenoid valve is CLOSED.

When the ice slab is formed, the ice thickness control will sense the thickness at which it is preset to CLOSE. This will complete the electrical circuit to the relay, ending the freeze cycle.

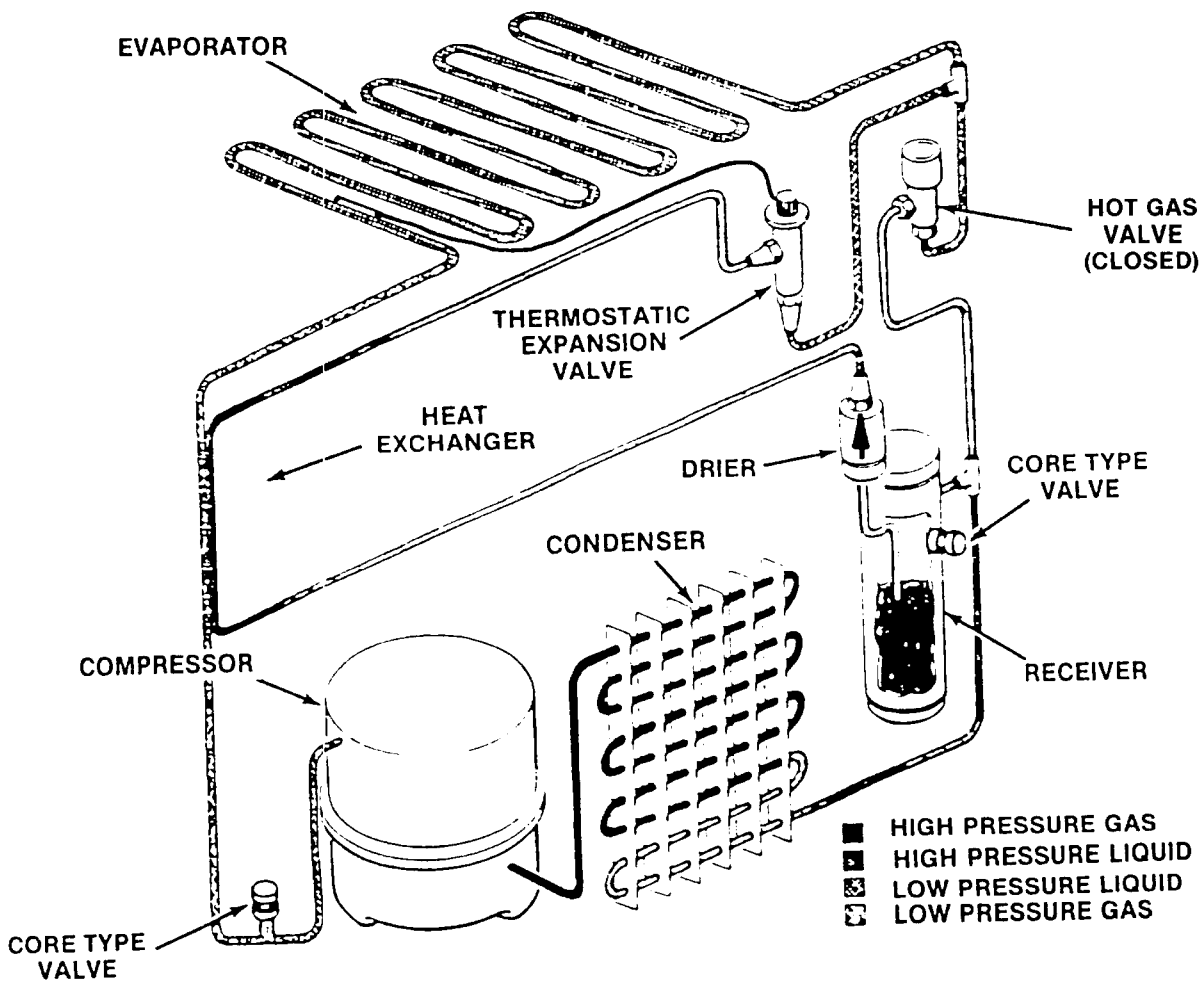

GENERAL OPERATION

HARVEST CYCLE

When the thickness control switches the Icemaker into the harvest cycle, high pressure, high temperature liquid refrigerant being discharged from the condenser through the hot gas solenoid valve into the evaporator plate. During this cycle, the refrigerant bypasses the expansion valve.

The thickness switch snaps from normally open to closed for slab release. The thickness motor, the pump, and the condenser fan, stop. A circuit is completed to the hot gas solenoid. To insure sufficient hot gas to release the slab, the compressor continues to run even though the fan stopped.

Hot refrigerant from the condenser is fed to the freezing plate and releases the ice slab. The slab of ice slides down onto a cutter grid and the slab is cut into cubes by the warm, low voltage cutter grid wires while the unit automatically goes into another freezing cycle.

The cubes fall down into the collecting bin. It is insulated but not refrigerated. This keeps the ice from freezing in to a lump, controls melting of the accumulating ice and assures a periodic replacement of the old ice with fresh new ice.

When the slab slides off the evaporator, the thickness switch will return to the normally open contact and a new slab begins to form.

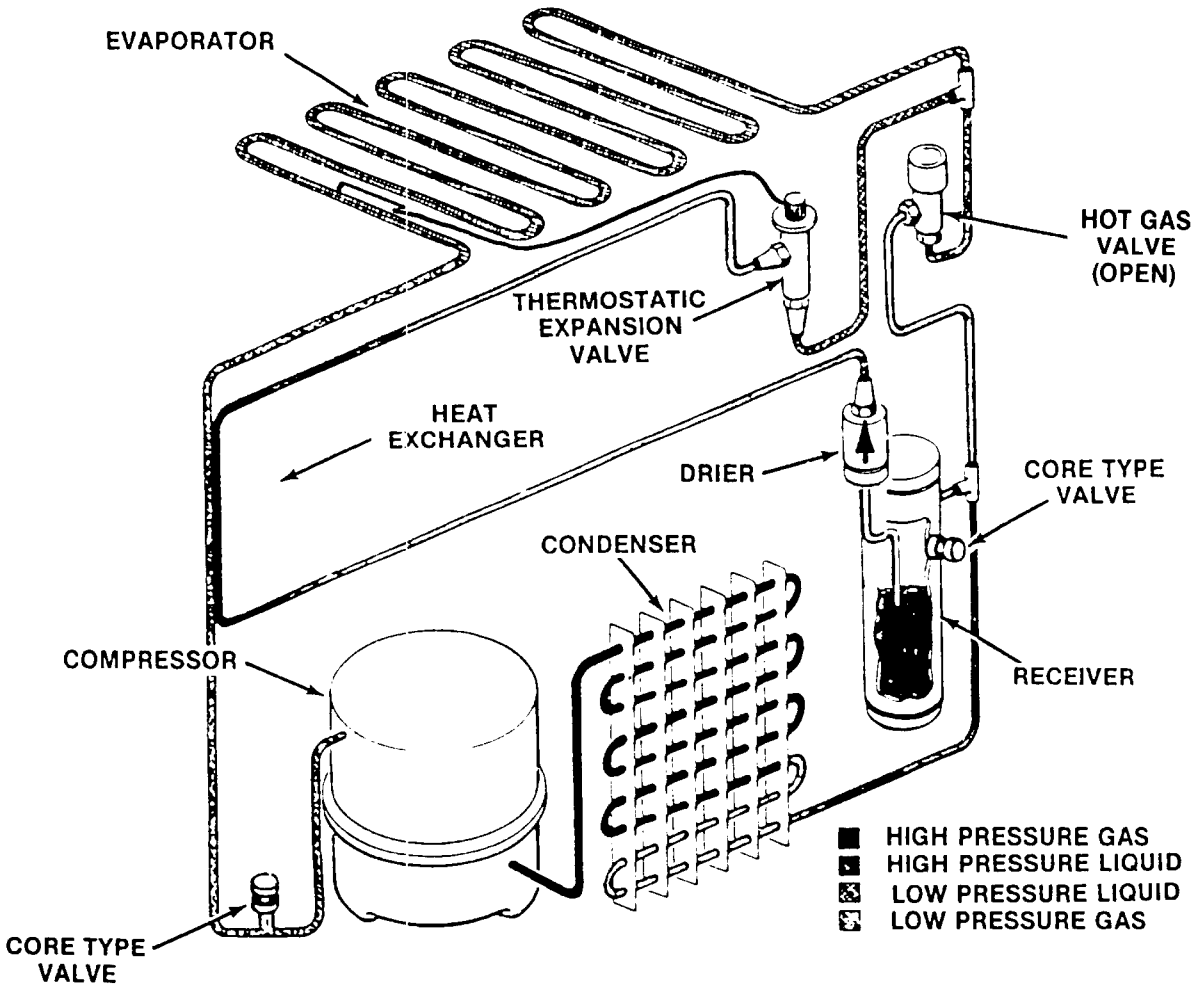

OPERATING INSTRUCTIONS

IF THE MACHINE DOES NOT PRODUCE ICE

Check the following before calling a service technician:

A. Unit runs but produces no ice...

1. Check water supply valve to make sure it is open.
2. Service switch must be in "On" position.

B. Unit runs but produces very little ice...

1. Operating in extremely high room temperatures (normal for ice production to be low).
2. Lint blocking air flow through finned condenser. (Clean.) Check for objects around unit which would obstruct normal air flow. (Remove.)
3. Low water pressure to water cooled condenser.

C. Unit does not run...

1. Check for blown fuse in electrical supply to machine. NOTE: The fusestats in the machine compartment are to protect the low voltage grid transformer.
2. Service switch must be in "on" position.
3. Room temperature too low. (Must be above 55° F.) Unit may be shut down even though bin is not full.

D. Grid not cutting ice sheets...

1. Check grid transformer fusestats on machine compartment electrical control box.

PRIMARY TRANSFORMER

If the fuse needs to be replaced, replace it with a 1.0 amp time delay fusestat.

SECONDARY TRANSFORMER

If the fuse needs to be replace, the same 5.0 amp time delay fusestat must be used.

REPLACE FINGER RIGHT ONLY.

2. Check for good electrical connection (grid plug to harness).

CSW3
WATER SCHEMATIC

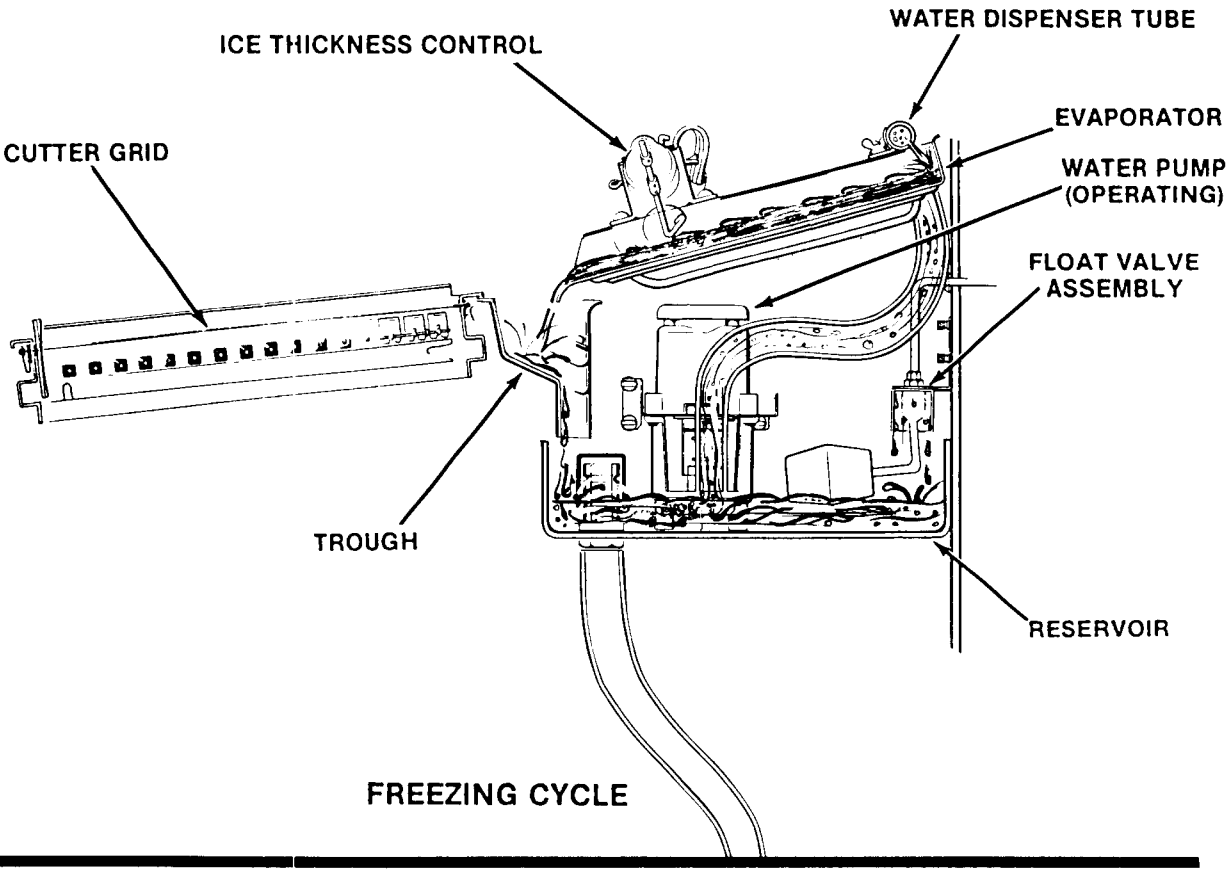

FREEZING CYCLE

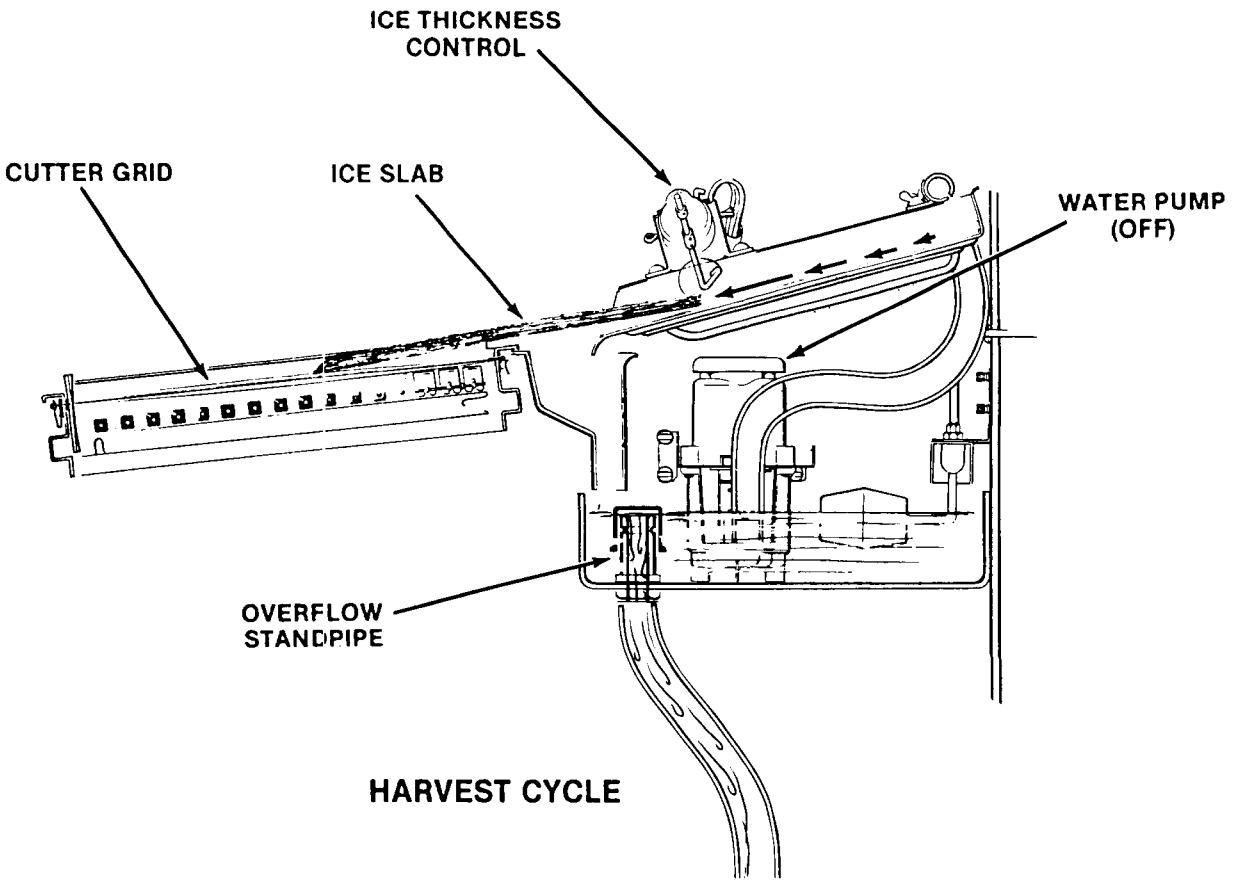

HARVEST CYCLE

MAINTENANCE AND CLEANING INSTRUCTIONS

GENERAL

The periods and procedures for maintenance and cleaning are given as guides and are not to be construed as absolute or invariable. Cleaning especially will vary, depending upon local water conditions and the ice volume produced; and each icemaker must be maintained individually, in accordance with its own particular location requirements.

ICEMAKER

THE FOLLOWING MAINTENANCE SHOULD BE SCHEDULED AT LEAST TWO TIMES PER YEAR ON THIS ICEMAKER. CALL YOUR AUTHORIZED SCOTSMAN SERVICE AGENCY.

1. Check and clean or service any optional water treatment devices, if any installed.
2. Check the CSW3 cabinet is level, in the side-to-side and front-to-back directions.
3. Clean the water system, evaporator plate and sump assembly, using a solution of SCOTSMAN Ice Machine Cleaner. Refer to CLEANING.

Cleaning requirements vary according to local water conditions and individual user operation. Continuous check of the clarity of ice cubes and visual inspection of the water system parts, evaporator plate and the sump assembly before and after cleaning will indicate frequency and procedure to be followed in local areas.

4. Check that the grid assembly is snug and secure.
5. Check and tighten all bolts and screws.
6. Check and tighten all electrical connections.
7. Check hot gas solenoid valve for correct operation.
8. With ON-OFF toggle switch in the OFF position, clean the condenser using vacuum cleaner, whisk broom or brush. Instruct customer to clean condenser frequently. DO NOT USE A WIRE BRUSH.
9. Check for water leaks and make corrections.
10. Check the bin thermostat control bulb to test shut off. Holding ice against bin thermostat control bulb well should cause the icemaker to shut off.

    Within minutes after ice is removed from the bin thermostat control bulb well, the icemaker will restart.

CLEANING THE CONDENSER

Water Cooled Models

During normal operation scale deposits form on the inside walls of the water cooled condenser. The scale acts as an insulator which then requires larger amounts of water for the unit to function. This scale must be removed periodically be circulating scale dissolving chemicals. The frequency of cleaning will depend on local water conditions and how rapidly the scale deposits form. Removing scale from the condenser should be performed by your icemaker dealer.

Air Cooled Models

A dirty or clogged condenser prevents proper air flow which reduces ice capacity and subjects components in the unit compartment to higher than normal pressures and temperatures. This can cause machine malfunction and early component failure.

Access to the Condenser

Remove the two screws on the grilled front panel then pull forward and disengage from the base of the machine.

CAUTION: Disconnect electrical supply to machine before removing unit compartment panel to keep condenser fan blades from rotating. Avoid contact with air cooled condenser fins which may be sharp. Avoid contact with refrigerant tubing which can become hot during normal operation.

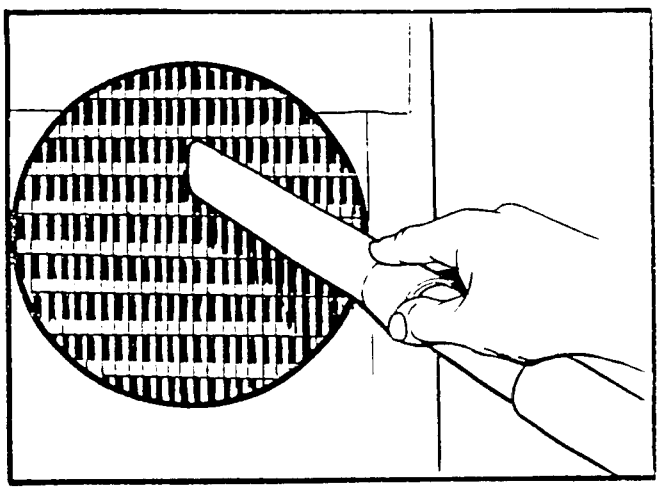

Use a vacuum cleaner and stiff brush to remove the dirt and accumulated lint from the air cooled condenser fins. Do not use a wire brush. Removing the bolts from the fan motor bracket will allow the fan assembly to be removed for better accessibility to the condenser. Care should be used to prevent damage to the blades of the fan.

CLEANING INSTRUCTIONS

CLEANING AND SANITIZING THE ICE MAKING SYSTEM

Most of the impurities are rejected from the circulating water as it freezes into ice. Some of these impurities collect on the freezing mechanism and in the water system, forming a hard, scaly deposit. This scale can prevent the ice slab from rapidly sliding off onto the cutter grid. Because of this, the water and icemaking system needs to be cleaned and sanitized periodically. The frequency of cleaning depends on local water conditions.

You can easily clean and sanitize the icemaker, following the directions given. If you prefer, your Authorized Ice Machine Dealer can do the job for you.

NOTE: During cleaning, you will need to remove and reinstall some interior parts. Be careful to avoid any sharp edges and corners.

Follow this National Sanitation Foundation approved procedure to clean the unit:

1. You will need **both** cleaning and sanitizing solutions. Prepare as follows:

Sanitizing Solution —

Mix 1/4 oz. (7 mL) chlorine bleach to one gallon (3.8 L) of water. This makes a sanitizing solution of 100ppm.

Cleaning Solution —

////////////////////// WARNING //////////////////////

SCOTSMAN Ice Machine Cleaner contains Phosphoric and Hydroxyacetic acids. These compounds are corrosive and may cause burns. If swallowed, DO NOT induce vomiting. Give large amounts of water or milk. Call physician immediately. In case of external contact, flush with water. KEEP OUT OF THE REACH OF CHILDREN.

//

Prepare cleaning solution: Mix eight ounces of SCOTSMAN Ice Machine Cleaner with six pints of fresh, potable warm water.

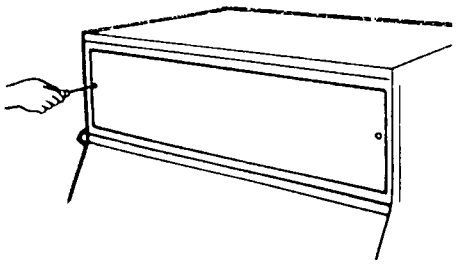

Remove two screws and lift off the top front panel.

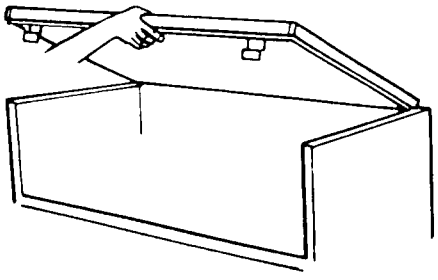

Lift up the top panel and pull forward to release the rear retainer brackets.

Raise up the storage bin door and remove two screws in the louvered front panel. Remove the louvered front panel for access to the service switch.

2. If the ice machine is operating:

   A. Shut off the water supply to the machine.

   B. Gently raise up on the arm of the ice thickness control to release the ice slab from the freezing plate. Discard the ice.

   C. Place the service switch in the "off" position.

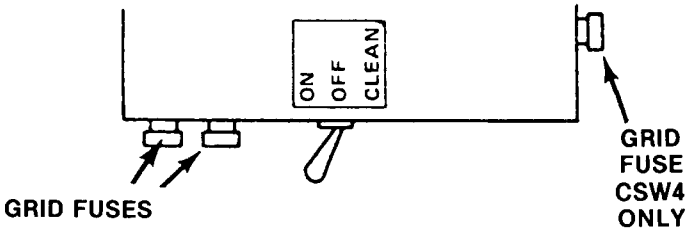

3. If the machine is not operating:

   A. Set service switch to "clean" position. Let the reservoir pan refill.

   B. Shut off the water supply to the machine.

   C. Set service switch to "off" position.

CLEANING INSTRUCTIONS

4. Remove all ice from the storage bin and cutter grid. If ice is difficult to remove from the grid, wait until grid is removed from the machine. Then melt the ice with water. Pulling the ice slab off the grid may stretch or break grid wires. A broken wire in the cutter grid will cause the cutter grid to fail.

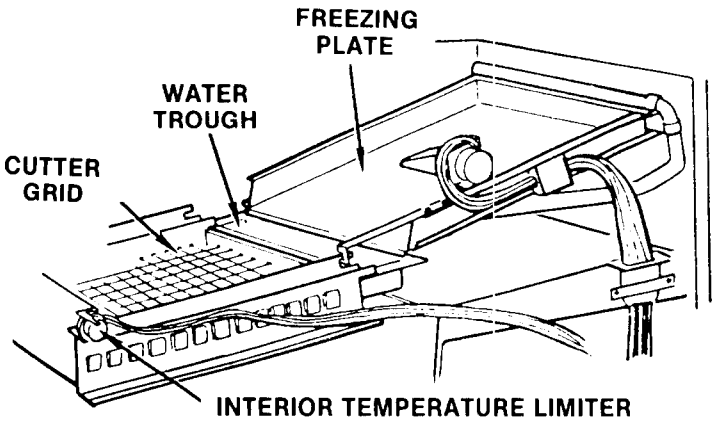

5. Set service switch to "clean" position. Pour hot water into the water trough until the water level is above the lower pump housing. Let water circulate for several minutes to warm up the system. Set service switch to "off." Water will siphon out of the reservoir pan.
6. Set the service switch to "clean." **Slowly** pour the heated cleaning solution (prepared in Step 1) into the water trough until the level in the reservoir pan is above the lower pump housing. If the solution starts to foam, stop pouring until it subsides. Then pour the rest of the solution. Do not overfill or the cleaning solution will siphon out!

Let the solution circulate until the scale on the freezing plate and water system has dissolved (generally about 20 to 30 minutes).

When the system is clean place the service switch in "off" position. The cleaning solution will siphon out.

NOTE: Repeat cleaning with fresh solution if scale deposits have not dissolved in 20 to 30 minutes.

Use a stainless steel sponge or pad dipped in cleaning solution to scrub any scale deposits that remain on side flanges.

CAUTION: Wear rubber gloves to avoid skin irritation.

7. Turn on the water supply to ice maker. Set service switch to "clean." Let fresh water circulate for 10 minutes.
8. Set service switch to "off." Water will siphon to the drain. When the reservoir has filled with water, place the service switch in the "clean" position. Let water circulate for 10 more minutes.
9. Set service switch to "off." Let water siphon out to drain.
10. Remove the ice cutter grid — note that the water trough rests on the top of the grid frame.

    A. Unplug the electrical connection.
    B. Remove the plastic clip retainer which prevents the grid clip from sliding.
    C. Slide the grid clip to the right off the stud on the front support rod.
    D. Lower the grid and remove from the remaining studs.

    If any ice remains on the cutter grid, wash it off with running water. Do not physically pull it off. The grid wires will stretch and fail prematurely.

    E. Soak the entire grid in cleaning solution to soften any scale accumulation. Use a toothbrush and gently clean the connecting pins and grid wires.
11. Remove the water distributor, water trough and water reservoir pan. Wash with warm water and detergent. Rinse with fresh water and with sanitizing solution.

IMPORTANT: Do not wash plastic parts in a dish washer. The extremely high temperature will cause the plastic parts to warp.

12. Remove the vinyl hoses and the plastic cover in the right side of the bin bottom. Wash with warm water and mild detergent, rinse with fresh water and with sanitizing solution.
13. Wash the interior of the ice machine and the ice storage bin with mild detergent and warm water. Rinse with fresh water. Rinse the surfaces with sanitizing solution.

CAUTION: Do not use petroleum based solvents to clean interior surfaces. They can cause damage to the surface.

14. Replace all parts, including the cutter grid.

NOTE: The grid frame must be positioned under the lip of the water trough and connected to the electrical plug.

15. Place service switch in the "on" position to resume ice making operation.
16. Replace cover and unit compartment panel.
17. Replace top and front panel.
18. Wash and sanitize the ice scoop. Provide a clean location for storage. It is not a good idea to leave the scoop in the storage bin.

MAINTENANCE AND CLEANING INSTRUCTIONS

FILTERING AND TREATING WATER

In most areas it will be beneficial to filter or treat the water supply to the ice machine to:

- Improve the reliability of the machine; reduce water system maintenance.
- Produce the best quality of ice.

The installation of a polyphosphate feeder will generally reduce scale accumulation and the ice machine will require less frequent cleaning.

Municipal water systems are generally treated with chlorine to maintain a safe potable water supply. Activated carbon filters will sufficiently remove the residual chlorine from the water to reduce surface staining of stainless steel materials in the ice machine.

For information on filtering and treating the water, see your Authorized Ice Machine Dealer.

OILING

All components of the ice maker are permanently lubricated at the factory. They should not require any additional oiling throughout the normal life of the machine.

WINTER SHUT DOWN

The ice cube maker is to be shut off for several months, remove all ice from the bin. Clean the ice maker as outlined under "Cleaning and Sanitizing the Ice Making System."

Water and drain lines, including the water cooled condenser, must be blown out if the unit will be subjected to freezing temperatures during shutdown. Failure to do so may cause the lines to freeze and rupture. Disconnect electricity to the machine and leave the bin door cracked open to allow air to circulate.

CSW3
SERVICE DIAGNOSIS

The service diagnosis is for use in aiding the serviceman in diagnosing a particular problem for pin-pointing the area in which the problem lies, thus an ever available reference for proper corrective action.

The following chart lists corrective actions for the causes of known symptoms of certain problems that can occur in the icemaking-refrigeration system.

ICEMAKING - REFRIGERATION SYSTEM

SYMPTOM	POSSIBLE CAUSE	CORRECTION
Compressor won't run; no ice in bin.	Located in cold area.	Move to warmer area (above 55° F.).
	Located in hot area. Power disconnected.	Move to cooler area. Connect power.
	Broken wire or loose connection.	Locate and repair.
	Defective relay.	Replace relay.
	Service switch in "off" position.	Move operating rod to "on" position.
	Low voltage.	Check or restore voltage.
	Bin thermostat contacts open.	Replace bin thermostat.
	Master switch in "clean" position.	Push switch to "on" position.
	Defective compressor overload.	Replace overload.
	Defective compressor motor.	Replace compressor.
Compressor runs; no ice in bin.	Water supply shut off or float valve failure	Restore water supply.
	Ice thickness control switch stuck closed.	Repair or replace.
	Hot gas solenoid stuck "open".	Repair or replace solenoid.
	Inoperative refrigeration system.	Repair sealed system.
	Excessive use of ice cubes.	Advise customer.
	Cutter grid circuit open.	Check fuse and other parts of circuit.
	Incorrect wiring.	Check against wiring diagram.
Compressor runs continuously bin full of ice.	Bin thermostat out of calibration.	Recalibrate or replace.
	Bin thermostat contacts stuck shut.	Replace thermostat.
	Incorrect wiring.	Check against wiring diagram.

SERVICE DIAGNOSIS

SYMPTOM	POSSIBLE CAUSE	CORRECTION
Low ice yield.	Located in cold area.	Move to warmer area above 55° F. (for best results, 70° to 90°).
	Float set too high.	Lower float.
	Water falling on ice cubes.	Check water system components and see that they are in proper place.
	Bin thermostat out of calibration.	Recalibrate or replace.
	Evaporator ice thickness control set to produce too thin or too thick ice cubes.	Move adjusting screw to setting to produce 1/2" to 5/8" cube.
	Defective Interior Temperature Limiter Control.	Replace control.
	Hot gas solenoid stuck partially open.	Repair or replace solenoid.
	Insufficient refrigeration.	Check and repair sealed system.
	Not enough water being circulated over evaporator plate.	Check for restriction in water lines. Check water pump and motor.
	Located in hot area.	Move to cooler area.
Excessive water dripping on ice cubes.	Sump Water overflowing.	Check overflow tube for restrictions. Overflow hose not inserted in liner drain.
	Water return trough out of position.	Install correctly.
	Water tube from water return trough not in the sump.	Locate tube properly.
	Ice jam on cutter grid causing water to "bridge" and drop in bin.	Check cutter grid circuit. Check for mineral deposit on evaporator plate.
	Water deflector out of position.	Install properly.
	Water line leak at water valve.	Tighten connection to stop leak.
Mineral deposit on evaporator.	High mineral content in water	See cleaning instructions.
Ice cubes too thin.	Evaporator ice thickness control set for thin ice.	Turn thickness adjusting screw clockwise until cube of desired thickness is obtained.
	Not enough water being circulated over evaporator.	Check for restriction in water lines. Check water pump, motor and distributor tube.
	Evaporator thermostat Expansion Valve bulb on wrong side of shim on evaporator clamp.	Shim must be between evaporator bracket and thermostat feeler tube.

SERVICE DIAGNOSIS

SYMPTOM	POSSIBLE CAUSE	CORRECTION
Ice cubes too thick.	Evaporator ice thickness control set at or beyond maximum thickness.	Turn thickness adjusting screw counterclockwise until cube of desired thickness is obtained.
Condenser fan won't run during ice-making cycle.	Fan blade binding on shroud.	Adjust shroud to clear fan blade.
	Open circuit in wiring.	Locate and repair (see wiring diagram).
	Fan blade dirty causing it to trip on internal overload.	Clean blade.
	Defective motor.	Replace motor.
Water pump won't run.	Pump binding in housing.	Locate and remove cause of bind.
	Open circuit in wiring.	Locate and repair (see wiring diagram).
	Defective motor.	Replace motor.
Water tank empty.	Complete water line restriction.	Check for closed shut-off valve or water line restrictions.
	Water float valve stuck shut.	Repair or replace valve.
	Water inlet screen plugged.	Remove screen and clean.
Milky ice cubes.	Water hardness in excess of 15 grains.	Advise customer that water softener may be required.
	Insufficient water supply in sump.	Consult local water treatment authorities for advice.
	Foods stored in ice bin.	Advise customer to refrain from storing food, etc. in ice bin.
	Packaging material not all removed.	Remove all packaging material.

ADJUSTMENT PROCEDURES

STORAGE BIN THERMOSTAT

The thermostat sensing bulb is inserted in a tube well for protection. The well extends into the ice storage area. When ice has accumulated and filled the bin, it will touch the well. The cold temperature will be felt by the sensing tube inside the well. This will cause the thermostat to be satisfied and open the circuit to the ice-making components. The thermostat opens or cuts out at 36°F. and recloses at or cuts in at about 42°F. You can test it by holding a handfull of ice against the well. In a short time the thermostat should open and shut off the unit.

The thermostat is factory calibrated for sea level operation.

Recalibration of this thermostat is unnecessary unless the ice cuber is located in an area above 2000 feet above sea level.

CAUTION: Whenever the control setting is changed to a colder position, be sure that the unit will cycle off by holding some ice against the thermostat well. Failure to do so can cause damage to the unit.

ICE SLAB "THICKNESS" ADJUSTMENT

Increase the thickness of the slab by turning the evaporator thermostat adjusting screw clockwise. The thickness may be reduced by turning the adjusting screw counterclockwise.

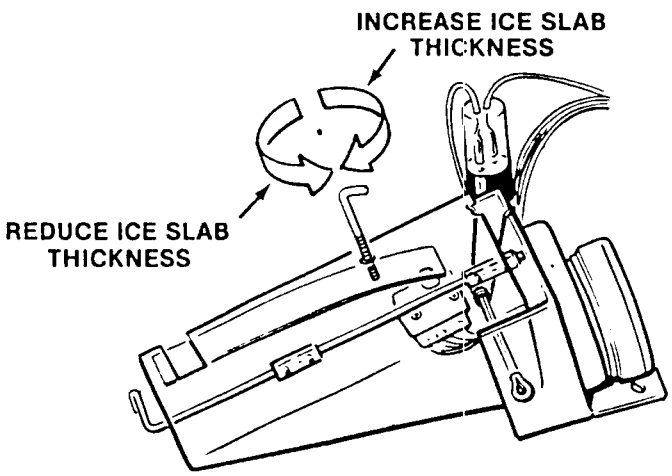

Ice Slab "Thickness" Adjustment

ADJUSTMENT OF THE FLOAT VALVE ASSEMBLY

To adjust the water level in the reservoir.

1. Loosen the wing nuts which attach the float valve bracket and the float valve to the chassis.
2. Move the float valve UP or DOWN to properly position the float valve at the correct water line level. The proper water level is just below the top of the overflow standpipe, 2-1/4" depth water.
3. When proper water level within the reservoir is adjusted, re-tighten screws attaching the float valve bracket to the chassis.

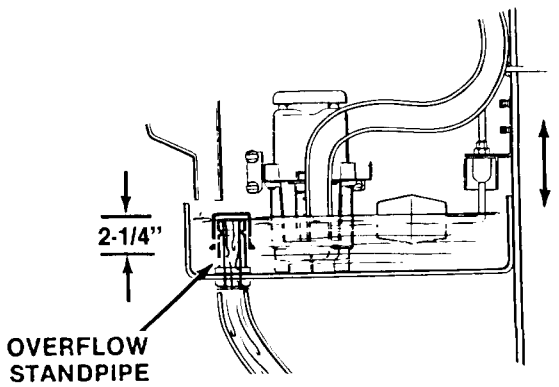

Float Valve Assembly Adjustment

REMOVAL AND REPLACEMENT PROCEDURES

REMOVAL AND REPLACEMENT OF THE CUTTER GRID

Low line voltage or a poor electrical connection at one of the pins connecting the cutter wires will slow down the cutting process and result in the next ice slab being formed before the first slab is completely cut into cubes. A fustat is in the low voltage circuit to the grid. Check the fuse on any cutting problem.

The heat input of the cutter grid is so designed that the ice slab will cut through in 80% of the time required to produce another slab of the same thickness.

Prolonged usage of improper service techniques may cause a cutter wire to break. In addition, certain types of water may cause the silver plated pins to become coated with lime, scale or corrosion. This results in a poor electrical connection.

The entire set of wires in the cutter grid should be replaced whenever failure occurs. Partial replacement is no more than an invitation to a repeat service call. Always examine insulators for cracks and connecting pins for corrosion and scale. Make sure spring clips exert proper tension on the cutter wire.

////////////////////// **WARNING** //////////////////////

Be sure the electrical power supply to the icemaker is OFF before proceeding with the removal procedures.

//

If any ice remains on the cutter grid, wash it off with running water. Do not physically pull it off. The grid wires will stretch and fail prematurely.

1. Disconnect the electrical supply to the icemaker at the circuit breaker or fuse box.
2. Close the inlet water valve to the icemaker.
3. Remove screws and remove the front & top panels.

   Lift up on the top panel and pull forward to release the rear retainer brackets.

   Raise up the ice access bin door and remove screws and remove the louvered front panel.
4. Remove the ice cutter grid - note that the water trough rests on the top of the grid frame.

   A. Unplug the electrical connection.

   B. Remove the plastic clip retainer which prevents the grid clip from sliding.

   C. Slide the grid clip to the right off the stud on the front support rod.

   D. Lower the grid and remove from the remaining studs.

CUTTER GRID WIRES

To replace cutter wires use tool No. 12913. Use of this tool allows the spring clips to be compressed without deforming and loss of tension, and reduces the time required to replace all the wires in the grid assembly.

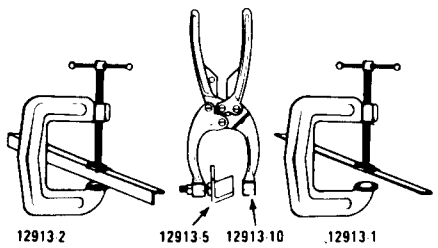

CUTTER GRID WIRE REPLACEMENT TOOL
ROBINAIR PART 12913 (COMPLETE)

1. Mark the location of the terminals where the grid harness connects. Also mark which set of wires the silver plated pins connect. The fastest way to remove the old wires is to cut each individual wire.
2. Insert the new wires into the side having insulators only and position the silver plated connecting pins. After these are all in position, clamp tool No. 12913-1 over these wires to keep them securely in their proper location.

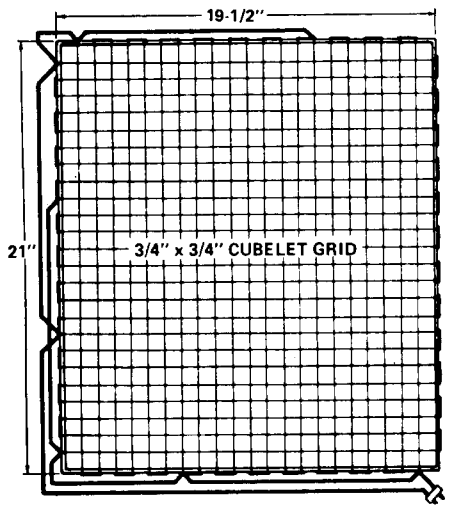

REMOVAL AND REPLACEMENT PROCEDURES

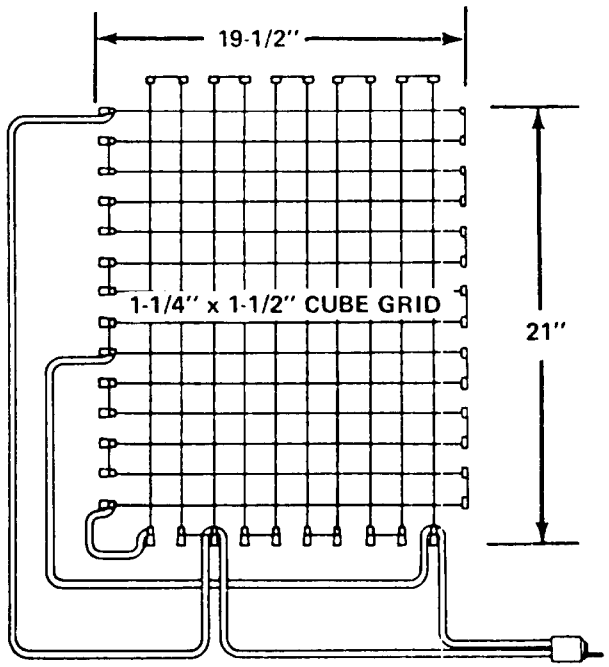

3. Turn the grid assembly over to the opposite side and place all insulators and spring clips in position. Clamp tool No. 12913-2 over the radius end of the spring clip. NOTE: This tool keeps the spring clip and insulator in position while depressing the clip with tool No. 12913-10.
4. Using tool No. 12913-10, depress two spring clips at a time and insert the connecting pins through the loops on the end of the grid wire. NOTE: At the same time reconnect the grid wire harness at the proper terminals. If any doubt exists as to the proper location of the harness connection or pin location, refer to Wiring Diagrams.
5. Be sure all wires have proper tension when the clips are released, as a loose wire will give a poor electrical circuit. When reusing old connecting pins, make sure the silver plating is in good condition and not corroded, as this also causes a poor electrical circuit.

To replace the cutter grid and the wire, reverse the removal procedure.

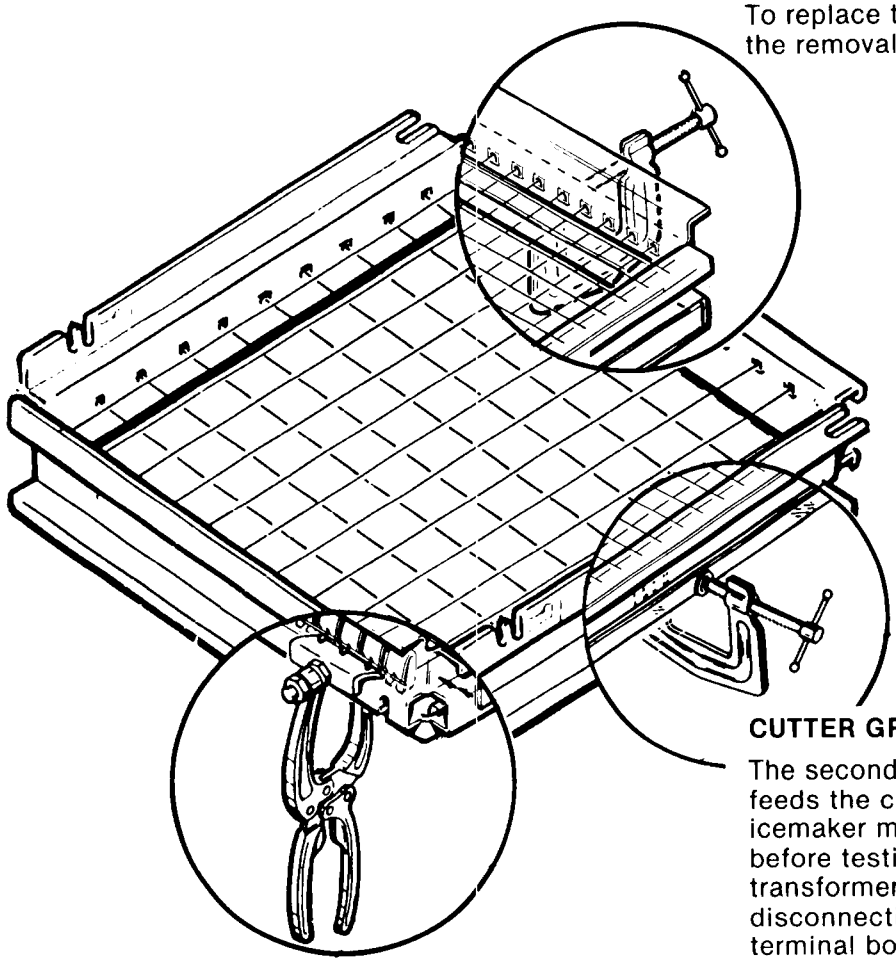

CUTTER GRID TRANSFORMER

The secondary side of the transformer which feeds the cutter grid is fused with a Fustat. The icemaker must be electrically disconnected before testing. The primary coil of the transformer may be checked for continuity by disconnecting the respective leads from the terminal board.

The secondary transformer voltage varies from model to model. Typical voltages are:

Model CSW3 Volt Output 14.25 VAC

REMOVAL AND REPLACEMENT PROCEDURES

REMOVAL AND REPLACEMENT OF THE EVAPORATOR

Deep depressions, or a pitted or scaled plate, will cause problems with the release of ice slab during the defrost or release cycle. Scale that has formed due to impurities in the water can be cleaned. (See section on Cleaning the Water System.) However, a pitted plate, or one that has depressions caused by some foreign object striking the surface, may require replacement to alleviate the above condition.

WARNING

Be sure the electrical power supply to the icemaker is OFF before proceeding with the removal procedures.

1. Disconnect the electrical supply to the icemaker at the circuit breaker or fuse box.
2. Close the inlet water valve to the icemaker.
3. Remove screws and remove the top front panel.

   Lift up the top panel and pull forward to release the rear retainer brackets.
4. Remove cutter grid. See Cutter Grid removal procedures.
5. Lift up and remove water trough.
6. Remove two wing nuts and remove water distributor by lifting up and unplugging water supply tubing.
7. Bleed off or blow the refrigerant charge through the Process valve.
8. Loosen the evaporator from the evaporator mount and unsolder the tubing connected to the evaporator.
9. Dismount the expansion valve sensing bulb from the suction line.
10. Carefully unsolder the valve from the connecting tubing. Use a heat shield to avoid overheating the storage bin in or next to the valve.

NOTE: Solder used to connect the tubing to the evaporator is a soft solder and has a lower melting point.

To replace the evaporator, reverse the removal procedure.

REMOVAL AND REPLACEMENT OF THE ICE THICKNESS CONTROL

The thickness sensing control affects the length of the freezing cycle. The thickness control closes its contacts when the ice slab reaches a preset thickness. A variation in either ambient air or incoming water temperature will affect the efficiency of the refrigeration system. This will vary the length of time it takes the ice slab to reach the thickness at which the thickness control is preset to CLOSE: which, in turn, will affect the overall cycle time.

See thickness control adjustment BEFORE attempting to adjust the control.

WARNING

Be sure the electrical power supply to the icemaker is OFF before proceeding with the removal procedures.

1. Disconnect the electrical supply to the icemaker at the circuit breaker or fuse box.
2. Close the inlet water valve to the icemaker.
3. Remove screws and remove the top front panel.

   Lift up the top panel and pull forward to release the rear retainer brackets.
4. Remove hex acorn nuts and lift the Ice Thickness Control and remove the control.
5. Disconnect electrical leads from the Thickness Control and remove the control.

To replace the Ice Thickness Control, reverse the removal procedure.

REMOVAL AND REPLACEMENT OF THE WATER REGULATOR VALVE ASSEMBLY — WATER-COOLED MODELS

To remove the water regulator assembly refer to slide out chassis procedure and complete all steps.

1. Close the inlet water valve to the icemaker.
2. Bleed off or blow the refrigerant charge through the Process valve.
3. Unsolder the water regulator valve capillary tube from the discharge line process header.
4. Disconnect the water inlet and outlet lines from the water regulator valve.
5. Remove the screws from the valve bracket to the machine base and remove the water regulator valve.
6. To replace the water regulator assembly, reverse the removal procedure.

REMOVAL AND REPLACEMENT PROCEDURES

NOTE

Always install a replacement drier, anytime the sealed refrigeration system is opened. Do not replace the drier until all other repair or replacement has been completed.

NOTE

Thoroughly evacuate the system to remove moisture and non-condensables.

7. Refer to name plate specifications and recharge refrigeration system by weight.

REMOVAL AND REPLACEMENT OF THE WATER DISTRIBUTOR

//////////////////// WARNING ////////////////////

Be sure the electrical power supply to the icemaker is OFF before proceeding with the removal procedures.

//

1. Disconnect the electrical supply to the icemaker at the circuit breaker of fuse box.
2. Close the inlet water valve to the icemaker.
3. Remove screws and remove the top front panel.

   Lift up the top panel and pull forward to release the rear retainer bracket.
4. Remove two wing nuts and remove water distributor by lifting up and unplugging water supply tubing.

To replace the water distributor, reverse the removal procedure.

REMOVAL AND REPLACEMENT OF THE BIN THERMOSTAT CONTROL

To remove the bin thermostat control:

1. Remove the screws from the front panel and lift and remove panel.
2. Remove screws on the control box cover and remove control box cover.
3. Remove the bin thermostat capillary tube from the bin thermostat well.
4. Remove screws and the bin thermostat control from the control box.
5. Remove electrical leads.

To replace the bin thermostat control, reverse the removal procedure.

REMOVAL AND REPLACEMENT OF THE FLOAT VALVE ASSEMBLY

//////////////////// WARNING ////////////////////

Be sure the electrical power supply to the icemaker is OFF before proceeding with the removal procedures.

//

1. Disconnect the electrical supply to the icemaker at the circuit breaker or fuse box.
2. Close the inlet water valve to the icemaker.
3. Remove screws and remove the top front panel.

   Lift up on the top panel and pull forward to release the rear retainer brackets.
4. Disconnect water inlet line from float valve assembly.
5. Remove two thumbscrews from water valve and remove valve.

To replace the Float Valve Assembly, reverse the removal procedures.

To adjust the water level in the reservoir.

1. Loosen the wing nuts which attach the float valve bracket and the float valve to the chassis.
2. Move the float valve UP or DOWN to properly position the float valve at the correct water line level. The proper water level is just below the top of the overflow standpipe, 2-1/4" depth water.
3. When proper water level within the reservoir is adjusted, re-tighten screws attaching the float valve bracket to the chassis.

REMOVAL AND REPLACEMENT PROCEDURES

EXPANSION VALVE REPLACEMENT

The expansion valve performs one very simple function - it supplies the evaporator the right amount of refrigerant under all load conditions.

The remote bulb senses the temperature of the refrigerant in the coil outlet of the evaporator. It varies the amount of refrigerant fed through the valve. This will maintain a 3 degree F. to 10 degree F. temperature difference between the inlet and outlet of the evaporator. This temperature difference is referred to as "superheat".

Moisture in the system, an incorrect charge of refrigerant or improper position or loose bulb can cause symptoms which may appear as a malfunctioning expansion valve. Eliminate these possibilities before assuming the valve needs replacing.

In evaluating the performance of the valve:

A. It must bleed enough refrigerant to the evaporator plate so that an even slab is formed. A hollow or shallow spot in the center of the ice slab indicates that not enough refrigerant is getting to the evaporator.
   1. Expansion valve with a high superheat setting.
   2. Moisture freezing in valve orifice, causing a partial restriction.
   3. Partially restricted valve (foreign material).
   4. Improper positioned valve sensing bulb.

B. The valve must prevent liquid refrigerant from proceeding past the remote bulb of the valve. It can do this by modulating toward the closed position as its bulb senses the cold refrigerant.

C. The valve will modulate to keep suction pressure fairly steady during the freeze cycle. Fluctuating suction pressure during the cycle indicates the valve is "hunting". Abnormal fluctuation can cause the freeze cycle to be longer than normal. It is often caused by the improper mounting of the sensing bulb. Mount it on the side of the suction line.

////////////////////// **WARNING** //////////////////////

Be sure the electrical power supply to the icemaker is OFF before proceeding with the removal procedures.

//

1. Disconnect the electrical supply to the icemaker at the circuit breaker or fuse box.
2. Close the inlet water valve to the icemaker.
3. Remove screws and remove the top front panel.

   Lift up on the top panel and pull forward to release the rear retainer brackets.
4. Dismount the expansion valve sensing bulb from the suction line.
5. Blow or bleed off refrigerant charge at the process valve.
6. Carefully unsolder the valve from the connecting tubing. Use a heat shield to avoid overheating the assemblies in or next to the valve.

NOTE

Always install a replacement drier, anytime the sealed refrigeration system is opened. Do not replace the drier until all other repair or replacement has been completed.

To replace the Expansion valve, reverse the removal procedures.

REMOVAL AND REPLACEMENT PROCEDURES

SLIDE-OUT CHASSIS PROCEDURE

WARNING

Be sure the electrical power supply to the icemaker is OFF before proceeding with the removal procedures.

1. Disconnect the electrical supply to the icemaker at the circuit breaker or fuse box.
2. Close the inlet water valve to the icemaker.
3. Remove two screws and remove the ice access door.
4. Remove two screws and lift up and pull out to remove the front louvered panel.
5. Blow or bleed off refrigerant charge at the process valve.
6. Unsolder line connected to the hot gas valve.
7. Unsolder line connected to the drier.
8. Unsolder the suction line at the joint above the process valve.
9. Remove control box cover and disconnect the inline electrical connections.
10. Remove the screw below the control box, which fastens the control box to the retainer wall of the chassis.
11. Carefully pull the bin thermostat capillary tube from the bin thermostat bracket.
12. Remove the screw at the front of the slide-out chassis.
13. Pull forward on the slide-out chassis and remove the slide-out chassis and the control box from the unit.
14. Charge the ice machine with the nameplate refrigerant charge.
15. To replace the Slide-Out Chassis, reverse the removal procedure.

NOTE

Always install a replacement drier, anytime the sealed refrigeration system is opened. Do not replace the drier until all other repair or replacement has been completed.

NOTE

Thoroughly evacuate the system to remove moisture and non-condensables.

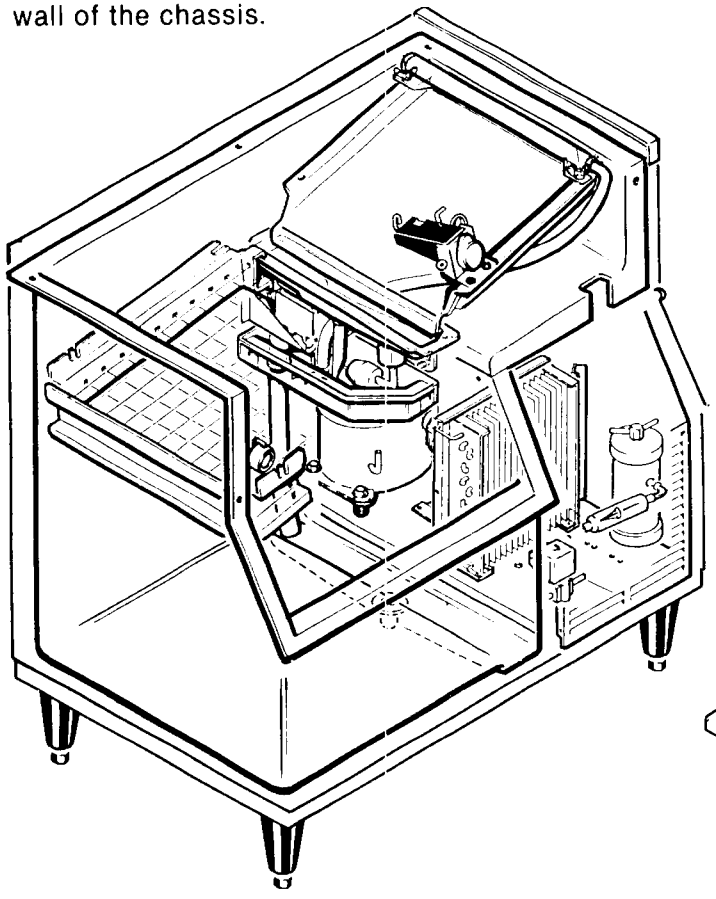

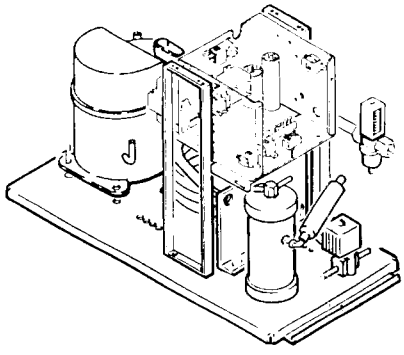

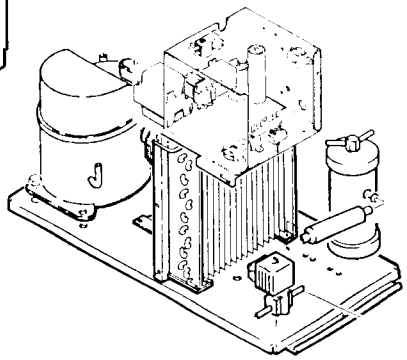

REMOVAL AND REPLACEMENT PROCEDURES

REMOVAL AND REPLACEMENT OF THE DRIER

//////////////////// WARNING ////////////////////

Be sure the electrical power supply to the icemaker is OFF before proceeding with the removal procedures.

//

1. Disconnect the electrical supply to the icemaker at the circuit breaker or fuse box.
2. Close the inlet water valve to the icemaker.
3. Remove two screws and front louvered panel assembly.
4. Bleed off or blow the refrigerant charge through the process valve.
5. Cut the refrigerant lines at both ends of the drier, and remove the drier.

Always install a replacement drier, anytime the sealed refrigeration system is opened. Do not replace the drier until all other repair or replacement has been completed.

To replace the drier:

CAUTION

If the factory seal is broken on the replacement drier, exposing it to the atmosphere more than a few minutes, the drier will absorb moisture from the atmosphere and lose substantial ability for moisture removal.

Be sure the replacement drier is installed with the arrow positioned in the direction of the refrigerant flow.

1. Remove the factory seals from the replacement drier and install the drier in the refrigerant lines with the arrow positioned in the direction of the refrigerant flow.
2. Solder the drier into the lines, two places, taking precautions to NOT OVERHEAT the drier body, during installation soldering.
3. Purge the system and check for leaks.
4. Thoroughly evacuate the system to remove moisture and non-condensables.
5. Charge the system with refrigerant, by weight. SEE NAMEPLATE.

REMOVAL AND REPLACEMENT OF THE COMPRESSOR ASSEMBLY

COMPRESSOR (CHECKING)

A. Voltage must be within 10% of rated voltage at compressor terminals during starting phase.
B. Use an ohm meter to check the windings.
C. Connect starting cord to compressor. If compressor does not start and an audible "hum" heard, compressor is "stuck" and should be replaced.
D. If compressor starts, check for loose wiring, defective relay, bin thermostat, pressure control, capacitor, overload.

To remove compressor refer to SLIDE-OUT CHASSIS PROCEDURE and remove chassis from cabinet.

1. Disconnect the electrical leads connected to the compressor.
2. Unsolder the suction line and discharge line from the compressor.
3. Remove four bolts, lockwashers and washers which secure the compressor to the chassis mounting base.
4. Remove the compressor from the chassis.

NOTE

Always install a replacement drier, anytime the sealed refrigeration system is opened. Do not replace the drier until all other repair or replacement has been completed.

NOTE

Thoroughly evacuate the system to remove moisture and non-condensables.

6. When recharging the system with refrigerant, always check the nameplate for the specified refrigerant charge.

To replace the compressor assembly, reverse the removal procedure.

REMOVAL AND REPLACEMENT OF THE CONDENSER — AIR-COOLED MODELS

1. Refer to the Slide-Out Chassis procedure and remove the chassis from the cabinet.
2. Unsolder and disconnect refrigerant lines from the condenser.
3. Cut and remove the drier from the refrigerant lines connecting to the condenser.

4. Remove screws, lockwashers and the condenser from the chassis base.

Always install a replacement drier, anytime the sealed refrigeration system is opened. Do not replace the drier until all other repair or replacement has been completed.

To replace the air-cooled condenser, reverse the removal procedure.

REMOVAL AND REPLACEMENT OF THE CONDENSER — WATER-COOLED MODELS

1. Refer to the Slide-Out Chassis procedure and remove the chassis from the cabinet.
2. Unsolder the refrigerant lines at the water-cooled condenser.
3. Unsolder the water lines at the water-cooled condenser.
4. Remove two screws and washers and the water-cooled condenser from the cabinet.

Always install a replacement drier, anytime the sealed refrigeration system is opened. Do not replace the drier until all other repair or replacement has been completed.

To replace the water-cooled condenser, reverse the removal procedures.

REMOVAL AND REPLACEMENT OF THE WATER PUMP

1. Disconnect electrical power to the cuber.
2. Remove screws and remove the top front panel.

   Lift up on the top panel and pull forward to release the rear retainer brackets.
3. Remove the cutter grid and water trough.
4. Remove (2) two thumb screws and remove sump assembly.
5. Remove (3) hex nuts and the pump and motor assembly from the liner. Removal of the water pump unplugs the pump from the wiring harness.

To replace the water pump, reverse removal procedures.

REMOVAL AND REPLACEMENT OF THE HIGH PRESSURE SAFETY CONTROL (WATER-COOLED MODELS)

WARNING

Be sure the electrical power supply to the icemaker is OFF before proceeding with the removal procedures.

1. Disconnect the electrical supply to the icemaker at the circuit breaker or fuse box.
2. Close the inlet water valve to the icemaker.
3. Remove two screws and remove the front louvered panel.
4. Remove screws and remove the control box cover.
5. Bleed off or blow the refrigerant charge at the process valve.
6. Disconnect the electrical leads connected to the High Pressure Safety Control.
7. Remove screws and remove the High Pressure Safety Control from the control box.
8. Unsolder the High Pressure Safety Control tubing and remove the control.

NOTE

Always install a replacement drier, anytime the sealed refrigeration system is opened. Do not replace the drier until all other repair or replacement has been completed.

NOTE

Thoroughly evacuate the system to remove moisture and non-condensables.

To replace the High Pressure Safety Control, reverse the removal procedure.

REMOVAL AND REPLACEMENT PROCEDURES

REMOVAL AND REPLACEMENT OF THE HOT GAS HARVEST SOLENOID COIL

WARNING

Be sure the electrical power supply to the icemaker is OFF before proceeding with the removal procedures.

1. Disconnect the electrical supply to the icemaker at the circuit breaker or fuse box.
2. Close the inlet water valve to the icemaker.
3. Remove two screws and front lower panel.
4. Remove screws and the control box cover.
5. Unplug electrical leads connected to the coil.
6. Unsnap clamp from the top of the coil and remove the coil from the valve.

To replace the Hot Gas Harvest Solenoid Coil, reverse the removal procedure.

REMOVAL AND REPLACEMENT OF THE HOT GAS HARVEST VALVE

WARNING

Be sure the electrical power supply to the icemaker is OFF before proceeding with the removal procedures.

1. Disconnect the electical supply to the icemaker at the circuit breaker or fuse box.
2. Close the inlet water valve to the icemaker.
3. Remove two screws and right front panel.
4. Remove screws and the control box cover.
5. Unplug electrical leads connected to the coil.
6. Remove screws and remove the valve body from the slide out chassis.
7. Unsnap clamp from the top of the coil and remove the coil from the valve.
8. Bleed off or blow refrigerant charge through the process valve.
9. Unsolder the tubing connections to valve and remove the valve.

NOTE

Always install a replacement drier, anytime the sealed refrigeration system is opened. Do not replace the drier until all other repair or replacement has been completed.

NOTE

Thoroughly evacuate the system to remove moisture and non-condensables.

To replace the Hot Gas Harvest, reverse removal procedures.

REMOVAL AND REPLACEMENT OF THE RECEIVER

1. Refer to the Slide-Out Chassis procedure and perform steps to remove the chassis.
2. Unsolder all refrigerant lines connected to the receiver.
3. Unbolt and remove receiver from the chassis.

NOTE

Always install a replacement drier, anytime the sealed refrigeration system is opened. Do not replace the drier until all other repair or replacement has been completed.

NOTE

Thoroughly evacuate the system to remove moisture and non-condensables.

To replace the receiver, reverse the removal procedures.

REMOVAL AND REPLACEMENT PROCEDURES

REMOVAL AND REPLACEMENT OF THE FAN MOTOR ASSEMBLY — AIR-COOLED MODELS

WARNING

Be sure the electrical power supply to the icemaker is OFF before proceeding with the removal procedures.

NOTE

Before beginning this procedure, observe the fan blade position on the shaft of the fan motor and mark the fan blade so it will be correctly positioned during reassembly. Direction of air flow should be toward the fan motor.

To remove the fan motor assembly:

1. Disconnect the electrical supply to the icemaker at the circuit breaker or fuse box.
2. Remove screws and remove the top front panel.

   Lift up on the top panel and pull forward to release the rear retainer brackets.

   Raise up the ice access bin door and remove screws and remove the louvered front panel.
3. Disconnect the electrical lead from the fan motor.
4. Remove two screws securing the motor bracket to the chassis base and remove the fan motor and motor bracket from the chassis.
5. Remove the nut from the end of the fan motor shaft and remove the fan blade.
6. Remove four screws securing the fan motor to the motor bracket and separate the motor from the bracket.

To replace the fan motor assembly, reverse the removal procedure.

THE PARTS ILLUSTRATIONS AND PARTS LISTS

GENERAL

This section contains the Parts Illustrations and the Parts List for each of the major assemblies in the Model CSW3 Self-Contained Cuber.

A *No Number* designation, when used in the Part Number Column indicates the unit is not available from SCOTSMAN as an assembly. This designation is used only for the convenience and clarity of division in cataloging.

HOW TO ORDER PARTS OR ASSEMBLIES

When ordering parts or assemblies, to avoid costly delays and errors in shipment, give the part number, the complete description shown in the list, and the quantities of each part or assembly required. Also include the Model name, the serial number of the icemaker for which the part is required, and for parts which require color matching, the color of the Cabinet.

All Part Numbers have TEN DIGITS (spaces), required for use in the Computer System. BE SURE to fill in ALL SPACES in the CATALOG NUMBER column, on the Parts Order form.

Enter the QUANTITY of the Parts ordered, in the last digit column under the QUANTITY column heading, the one under the small 55 number, for parts from 1 thru 9. For 10 or more parts use two columns.

To be sure you receive the proper parts in the proper quantities, ALWAYS use the PART NUMBERS and DESCRIPTIONS given in the Parts Manuals.

Write an order for the Part. (Use SCOTSMAN Parts Order Form (DN103). Be sure to include:

- ☐ Distributor Name.
- ☐ (Use for DROP-SHIP order ONLY.)
- ☐ Distributor Purchase Order Number.
- ☐ Carrier.
- ☐ How shipped (Truck, Rail, UPS, etc.)
- ☐ Date ordered.
- ☐ Part Catalog Number. (Use full TEN digits (spaces) listed in Parts Manual, including dashes between numbers.)
- ☐ Description - as listed in Parts Manual.
- ☐ Quantity - number of parts ordered. (Use far right column.)

WIRING DIAGRAMS

This section is provided as an aid in understanding the electrical circuitry of the Self-Contained Cuber.

WARNING

When conducting a continuity check of the modular cuber:

1. **Disconnect the main power source.**
2. **DO NOT use an incandescent lamp or jumper wire, conduct all tests with a volt-ohm-meter.**

The wiring diagram in this Section is:

CSW3AE-1A 115/60/1 - Air Cooled
CSW3WE-1A 115/60/1 - Water-Cooled

CSW3
THE PARTS ILLUSTRATION AND PARTS LISTS

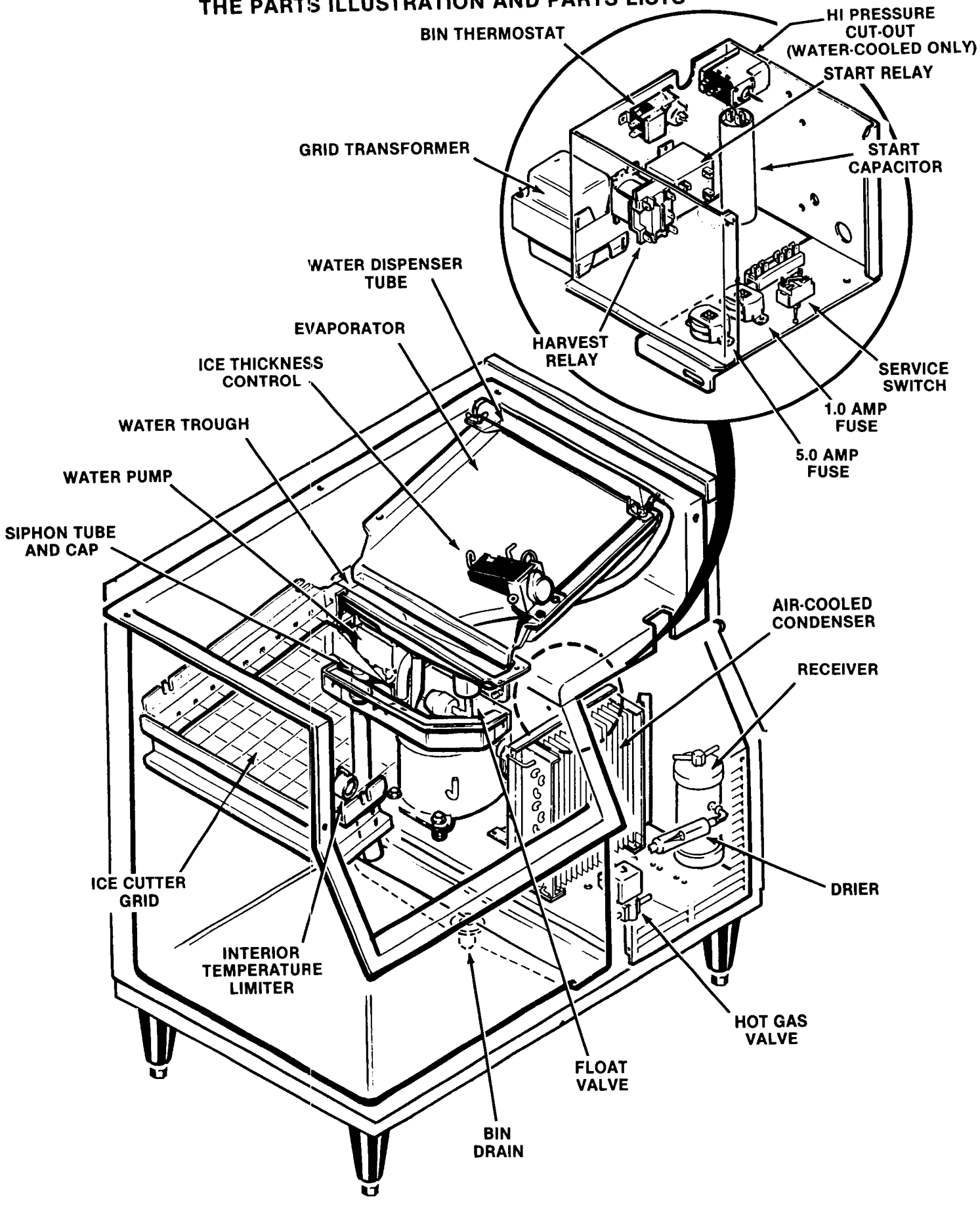

CSW3
THE PARTS ILLUSTRATION AND PARTS LISTS

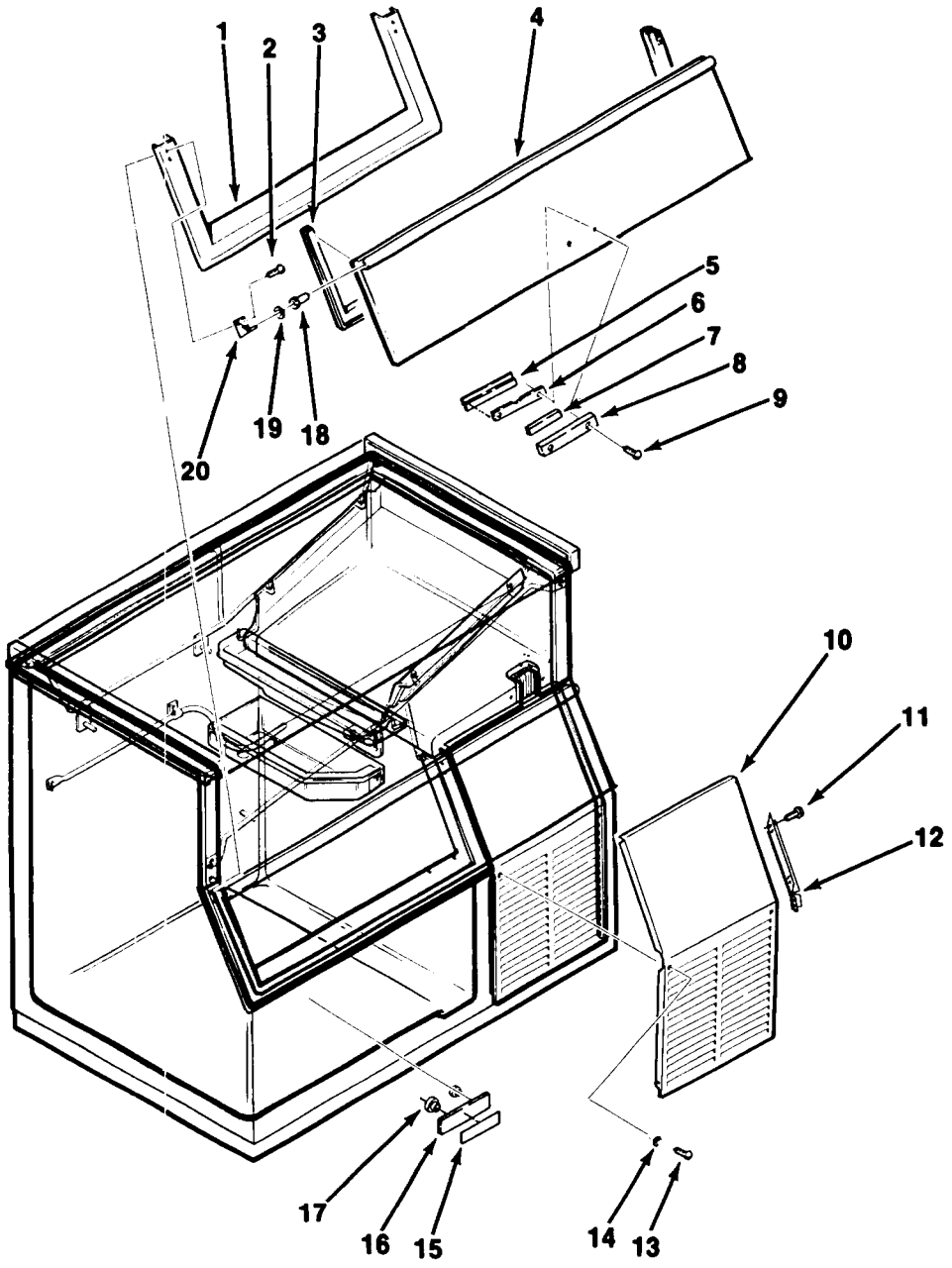

CABINET ASSEMBLY

ITEM NUMBER	PART NUMBER	DESCRIPTION
1	0756126	Collar Assembly
2	0681612	Screw, No. 8 Truss
3	0756061	Panel Gasket
4	0780027	Ice Access Door Complete, Enamel
5	0587640	Backing Plate
6	0755099	Tap Plate
7	0512312	Magnet
8	0780025	Cover, Magnet Enamel
9	0681567	Screw, No. 6 x 1-2/4
10	0756161	Front Grill, Enamel
11	0595431	Screw, 8-15 x 3/8
12	0757458	Grill Support
13	0681615	Screw, No. 10 Pan
14	0681039	Lockwasher
15	0780003	Escutcheon Insert
16	0837577	Escutcheon Nameplate
17	0654067	Sealing Clip, Large
	0654068	Sealing Clip, Small
18	0756129	Door Bearing
19	0681610	Nylon Washer
20	0756134	Door Hinge (2)

CSW3
THE PARTS ILLUSTRATION AND PARTS LISTS

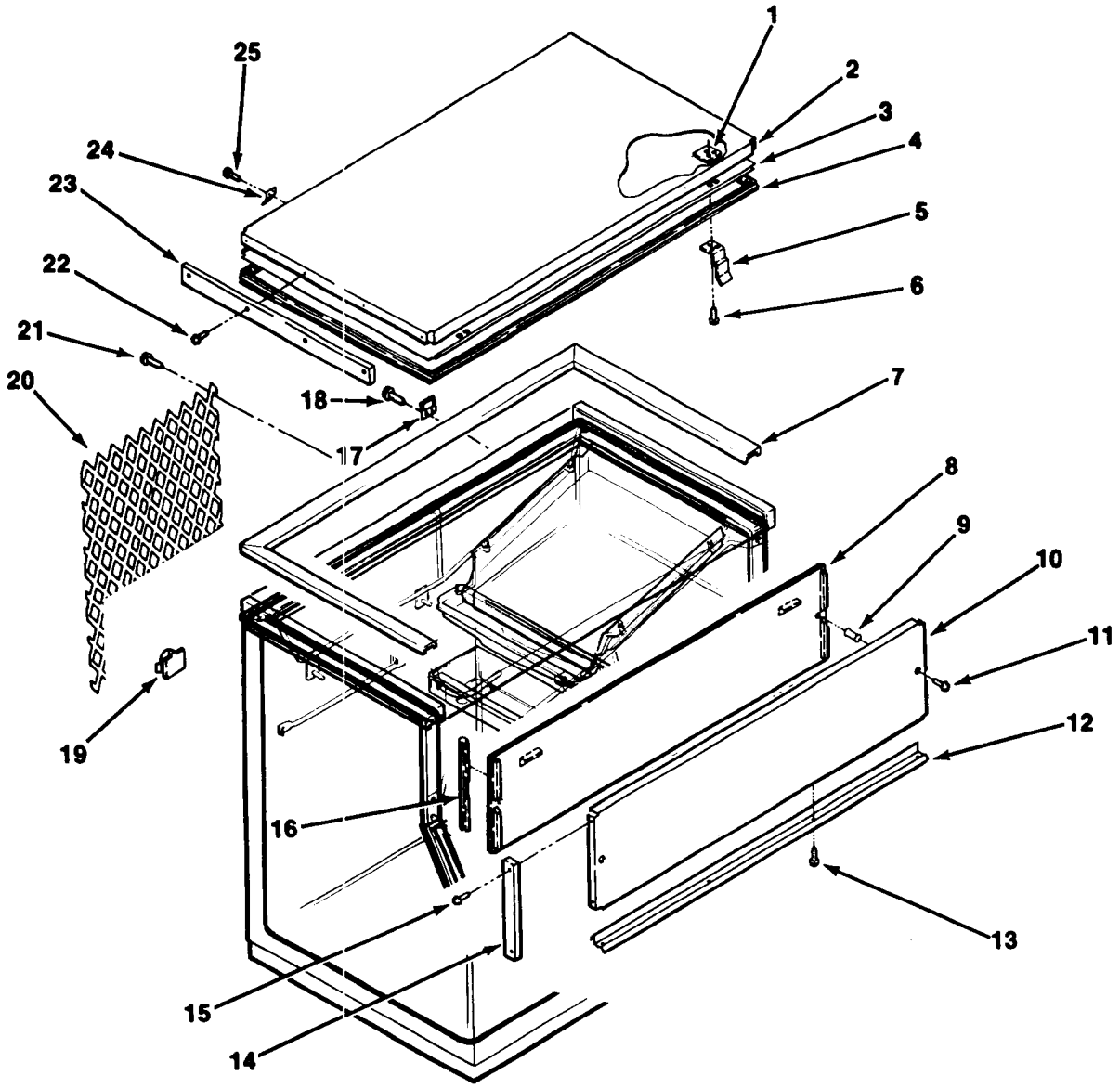

CABINET ASSEMBLY

ITEM NUMBER	PART NUMBER	DESCRIPTION	ITEM NUMBER	PART NUMBER	DESCRIPTION
1	0756089	Top Cover Plate, Magnet	14	0780021	Cap End, Enamel (2)
2	0756267	Bin Top, Enamel	15	0681148	Screw
3	0751439	Inner Panel	16	0756221	Panel, Gasket
4	0751440	Bin Top Gasket	17	0585227	Rear Hinge
5	0751523	Bracket, Locking Top	18	0681528	Screw, 10-32 x 1/2
6	0681087	Screw (10)	19	0596744	Wire Retainer
7	0780013	Collar, Enamel	20	0756191	Rear Grill
8	0756777	Interior Panel	21	0681410	Screw (18)
9	0755795	Panel Sleeve (2)	22	0681148	Screw (8)
10	0755059	Outer Panel, Enamel	23	0780020	Cap, End, Enamel (2)
11	0681581	Screw	24	0585563	Top Hinge
12	0756162	Front Panel Shield, Enamel	25	0681528	Screw, 10-32 x 1/2
13	0681347	Screw			

CSW3
THE PARTS ILLUSTATION AND PARTS LISTS

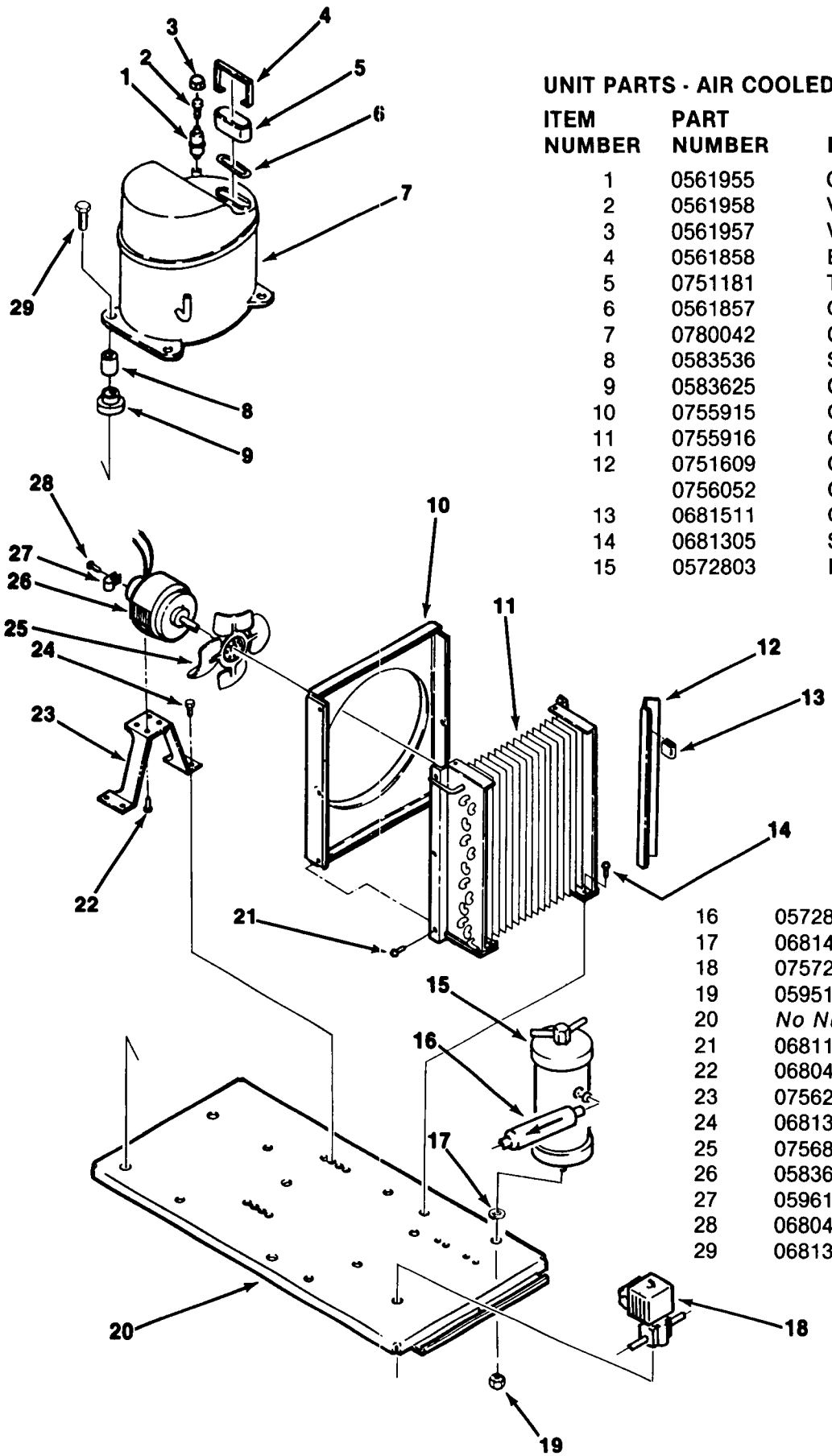

UNIT PARTS - AIR COOLED

ITEM NUMBER	PART NUMBER	DESCRIPTION
1	0561955	Charging Valve
2	0561958	Valve Core
3	0561957	Valve Cap
4	0561858	Bale Strap
5	0751181	Terminal Cover
6	0561857	Cover Gasket
7	0780042	Compressor
8	0583536	Sleeve, Grommet (4)
9	0583625	Grommet (4)
10	0755915	Condenser Shroud
11	0755916	Condenser
12	0751609	Condenser Baffle, Right Side
	0756052	Condenser Baffle, Left Side
13	0681511	Clip
14	0681305	Screw, 1/4-20 x 1/2
15	0572803	Receiver Assembly
16	0572801	Drier
17	0681467	Washer, Lock
18	0757239	Hot Gas Solenoid
19	0595172	Nut (1)
20	*No Number*	Unit Base
21	0681167	Screw, 8-32 x 3/8 (6)
22	0680439	Screw, 8-36 x 1/2
23	0756201	Fan Motor Bracket
24	0681305	Screw, 1/4-20 x 1/2
25	0756898	Fan Blade
26	0583647	Fan Motor
27	0596171	Wire Clamp
28	0680439	Screw, 8-32 x 1/2
29	0681342	Screw (4)

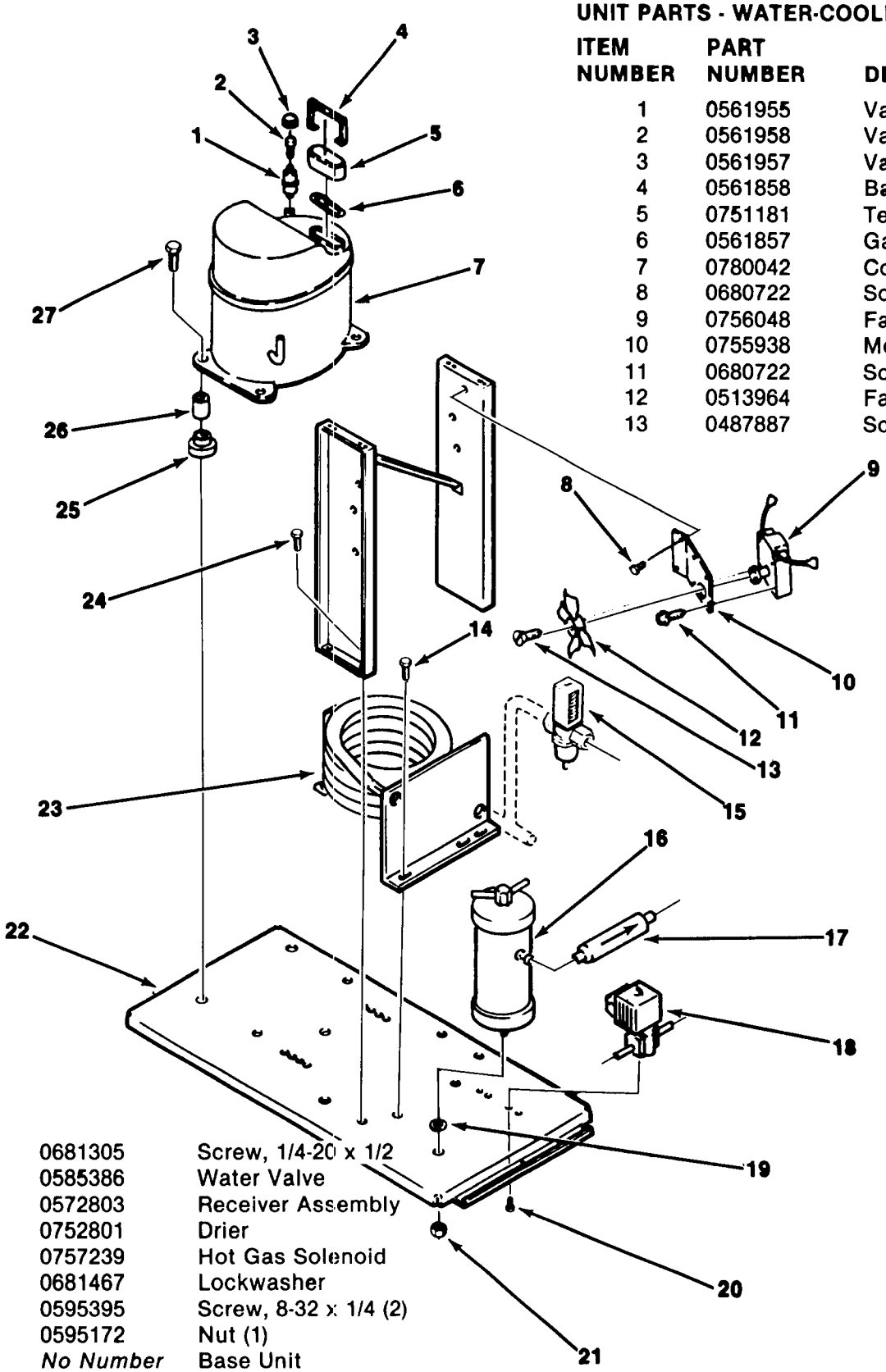

UNIT PARTS - WATER-COOLED

ITEM NUMBER	PART NUMBER	DESCRIPTION
1	0561955	Valve Body
2	0561958	Valve Core
3	0561957	Valve Cap
4	0561858	Bale Strap
5	0751181	Terminal Cover
6	0561857	Gasket Cover
7	0780042	Compressor
8	0680722	Screw (4)
9	0756048	Fan Motor
10	0755938	Motor Bracket
11	0680722	Screw (4)
12	0513964	Fan Blade
13	0487887	Screw (4)
14	0681305	Screw, 1/4-20 x 1/2
15	0585386	Water Valve
16	0572803	Receiver Assembly
17	0752801	Drier
18	0757239	Hot Gas Solenoid
19	0681467	Lockwasher
20	0595395	Screw, 8-32 x 1/4 (2)
21	0595172	Nut (1)
22	*No Number*	Base Unit
23	0585121	Condenser
24	0681305	Screw
25	0583625	Grommet (4)
26	0583536	Sleeve, Grommet (4)
27	0681342	Screw (4)

CSW3
THE PARTS ILLUSTRATION AND PARTS LISTS

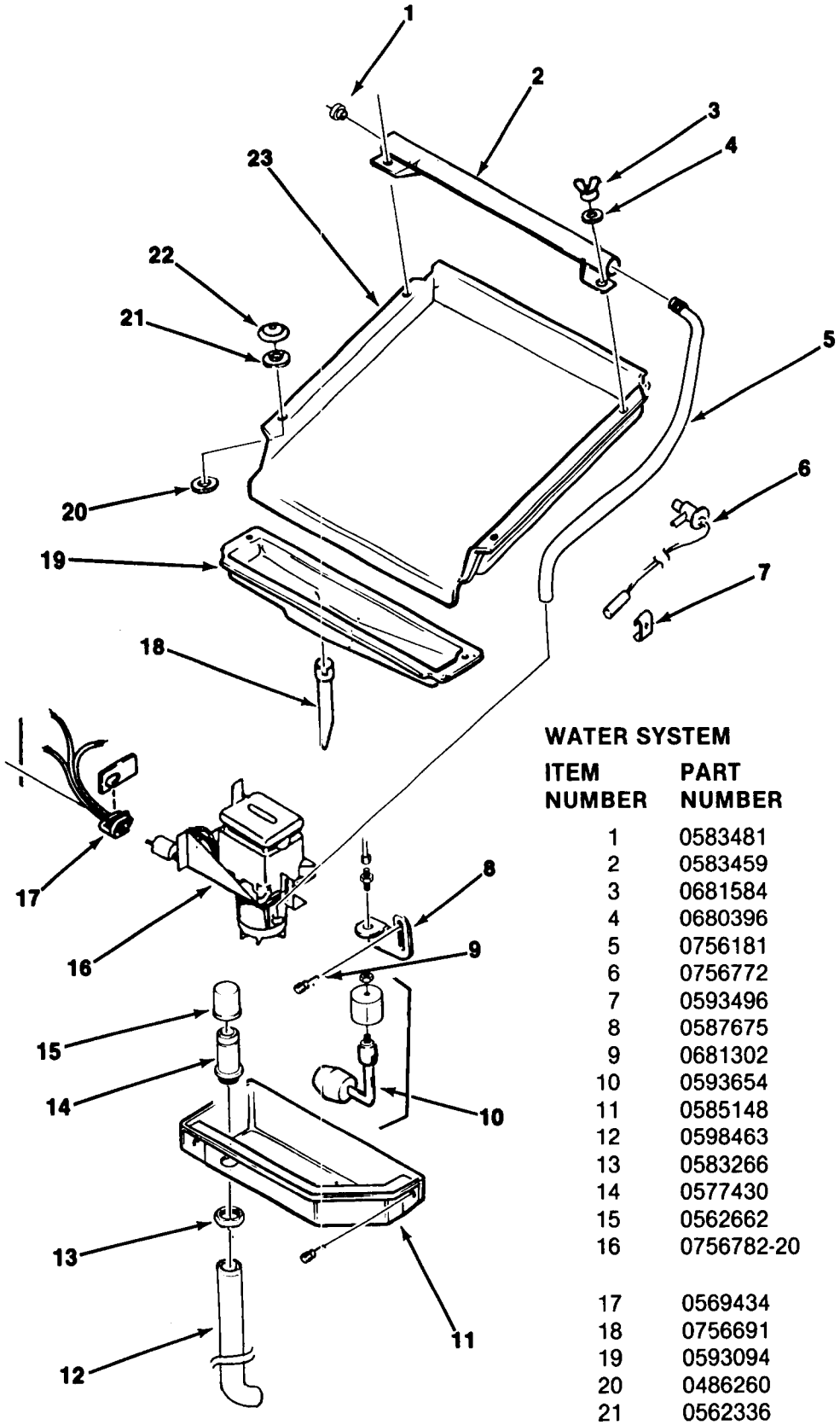

WATER SYSTEM

ITEM NUMBER	PART NUMBER	DESCRIPTION
1	0583481	Dispenser Seal
2	0583459	Water Dispenser
3	0681584	Wing Nut, 8-32
4	0680396	Washer, 5/8 x 3/16 x .020
5	0756181	Dispenser Hose
6	0756772	Thermo Expansion Valve
7	0593496	Capillary Clip
8	0587675	Float Valve Bracket
9	0681302	Thumb Screw (2)
10	0593654	Float Valve
11	0585148	Water Pan
12	0598463	Siphon Hose
13	0583266	Siphon Tube Nut
14	0577430	Siphon Tube
15	0562662	Siphon Cap
16	0756782-20	Water Pump Assembly (Complete)
17	0569434	Plug, Water Pump
18	0756691	Stand Pipe
19	0593094	Water Trough
20	0486260	Washer
21	0562336	Cup Washer
22	0595181	Cap Nut (3)
23	0780101	Evaporator

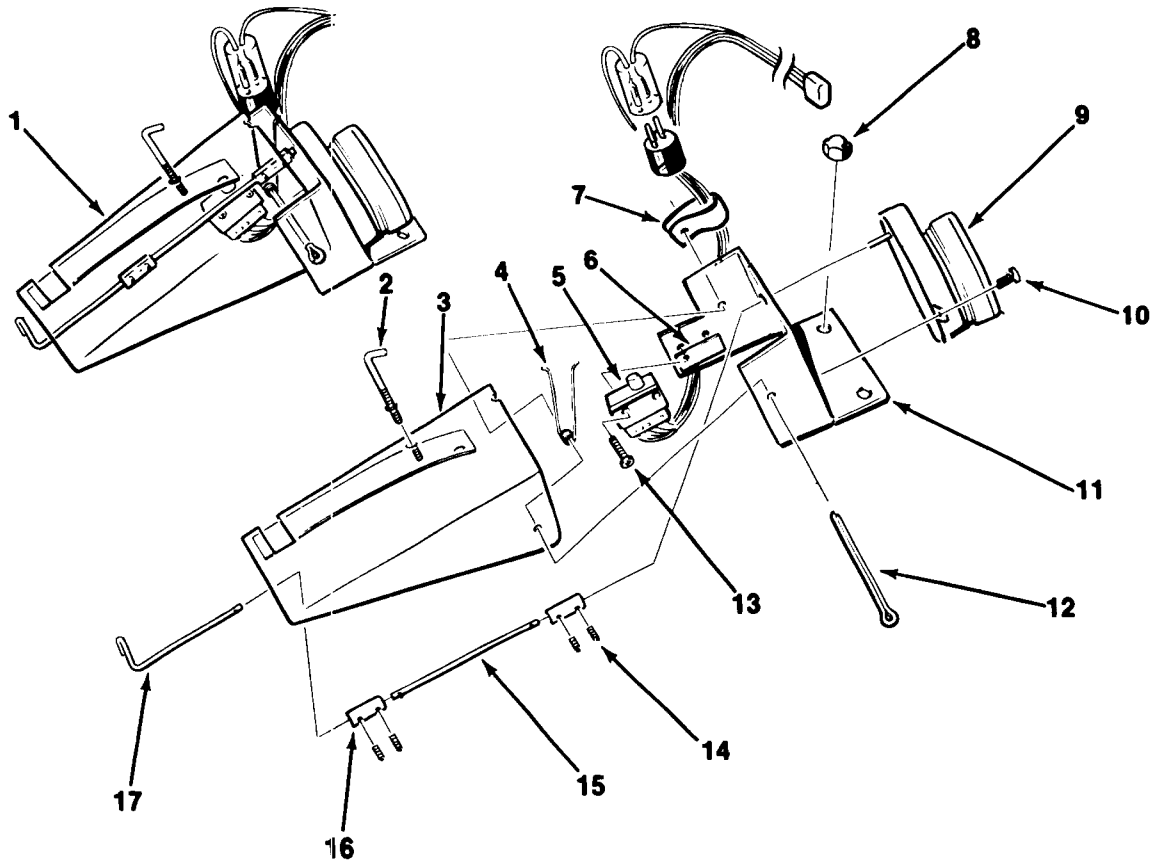

ICE THICKNESS CONTROL ASSEMBLY

ITEM NUMBER	PART NUMBER	DESCRIPTION
1	0598369	Control, Ice Thickness (Complete)
2	0751991	Screw, Adjusting
3	0587293	Bracket, Shaft
4	0560861	Spring, Hold Down
5	0587889	Harness, Switch
6	0587996	Spacer
7	0596338	Clamp, Wire
8	0595181	Nut, Cap (2)
9	0577540	Motor, Control
10	0680854	Screw, 4-40 x 3/8
11	0607811	Bracket, Motor
12	0680668	Cotter, Pin
13	0681433	Screw, 4-40 x 3/4
14	0595330	Setscrew, 6-32 x 3/16 (4)
15	0607816	Shaft, Flexible
16	0585508	Coupling (2)
17	0585507	Shaft, Formed End

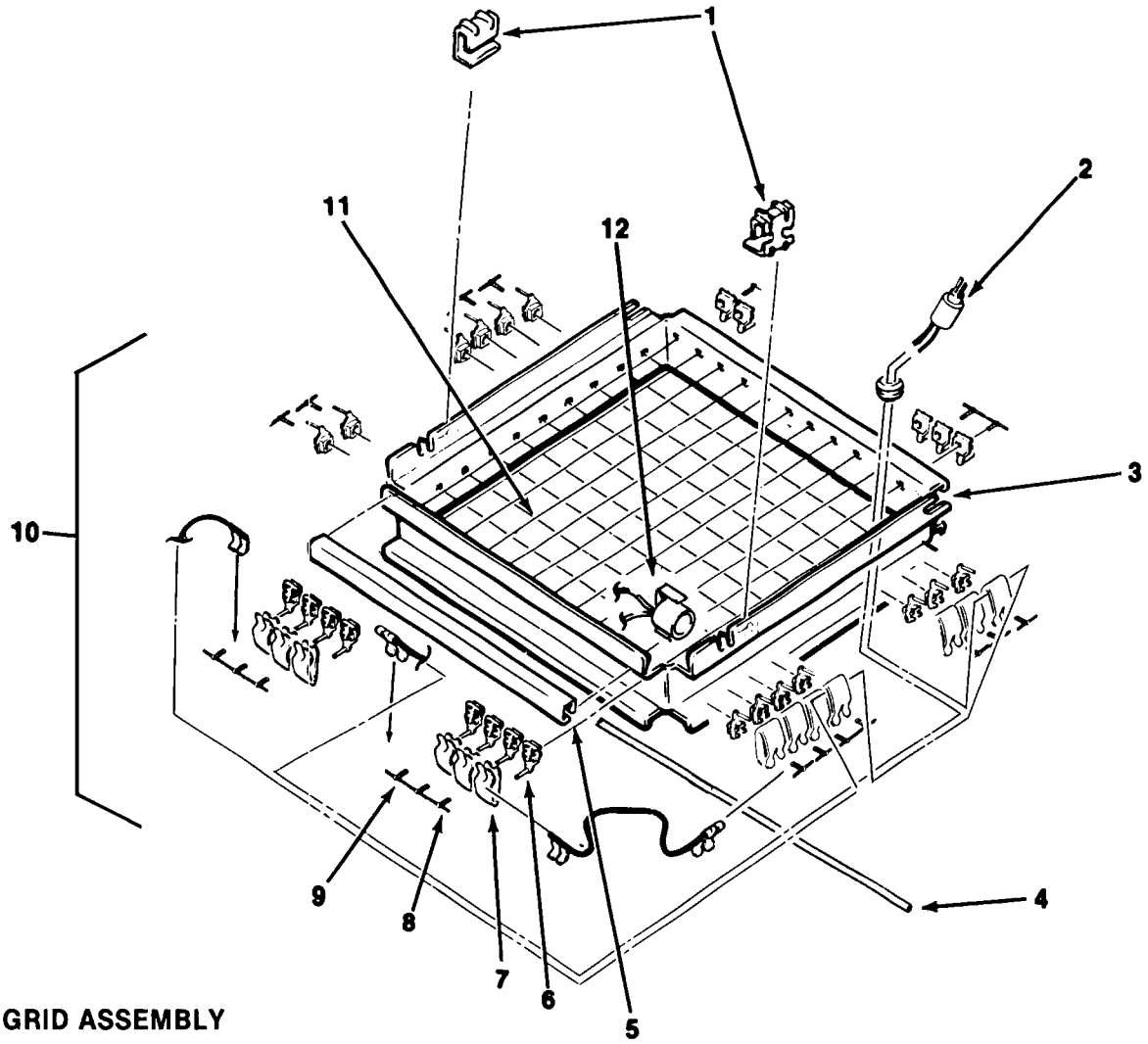

CUTTER GRID ASSEMBLY

ITEM NUMBER	PART NUMBER	DESCRIPTION
1	0756058	Grid Clip
2	0757044	Grid Connecting Harness 3/4" Grid
	0757045	Grid Connecting Harness 1-1/4" Grid
3	*No Number*	Cutter Grid Frame
4	*No Number*	Brace, Grid Frame
5	0751954	Ice Slab Deflector
6	0598277	Grid Insulator 3/4" Grid (90)
		Grid Insulator 1-1/4" Grid (48)
7	0564072	Tension Clip 3/4" Grid (45)
		Tension Clip 1-1/4" Grid (24)
8	0587112	Cutter Wire Pin (4)
9	0587111	Cutter Pin Wire, 3/4" Grid (43)
	0587424	Cutter Pin Wire, 1-1/4" Grid (13)
	0587423	Cutter Pin Wire, 1-1/2" Grid (9)
10	CCK152CG	Grid Assembly Complete 3/4" x 3/4"
	CCK151SG	Grid Assembly Complete 1-1/2" x 1-1/4"
11	0569969	Grid Cutter Wire Kit 3/4" Grid
	0569968	Grid Cutter Wire Kit 1-1/4" Grid
12	0757255	Interior Temperature Limiter

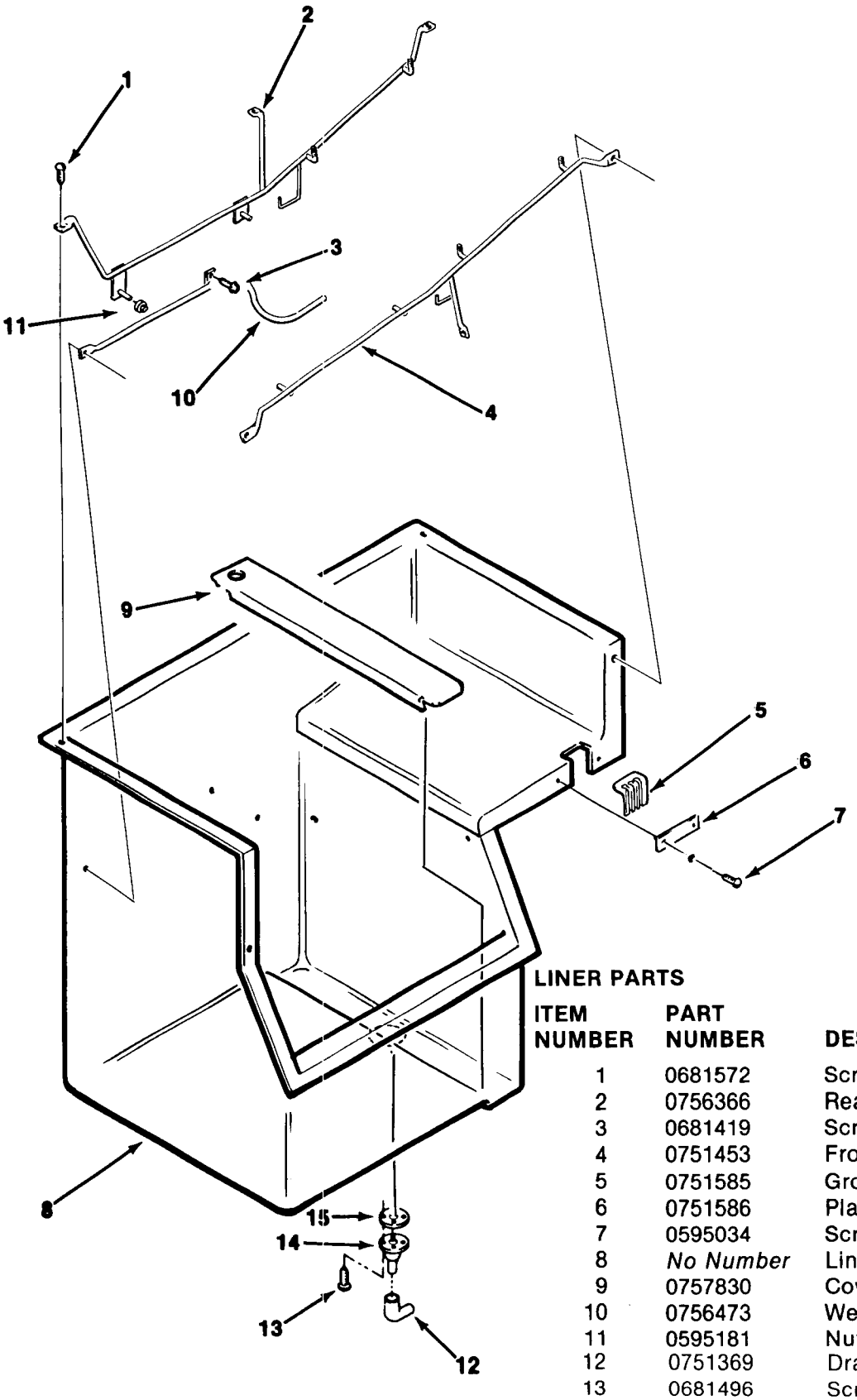

LINER PARTS

ITEM NUMBER	PART NUMBER	DESCRIPTION
1	0681572	Screw, 1/4-20 x 1/2 (6)
2	0756366	Rear Support
3	0681419	Screw, Thumb
4	0751453	Front Support
5	0751585	Grommet, Tubing
6	0751586	Plate Mounting
7	0595034	Screw (2) Support, Mounting
8	*No Number*	Liner (Not a Serviceable Part)
9	0757830	Cover, Drain
10	0756473	Well, Thermostat
11	0595181	Nut, Mounting
12	0751369	Drain Elbow
13	0681496	Screw, 12-24 x 3/4 (4)
14	0751260	Bin Drain
15	0751258	Drain Gasket

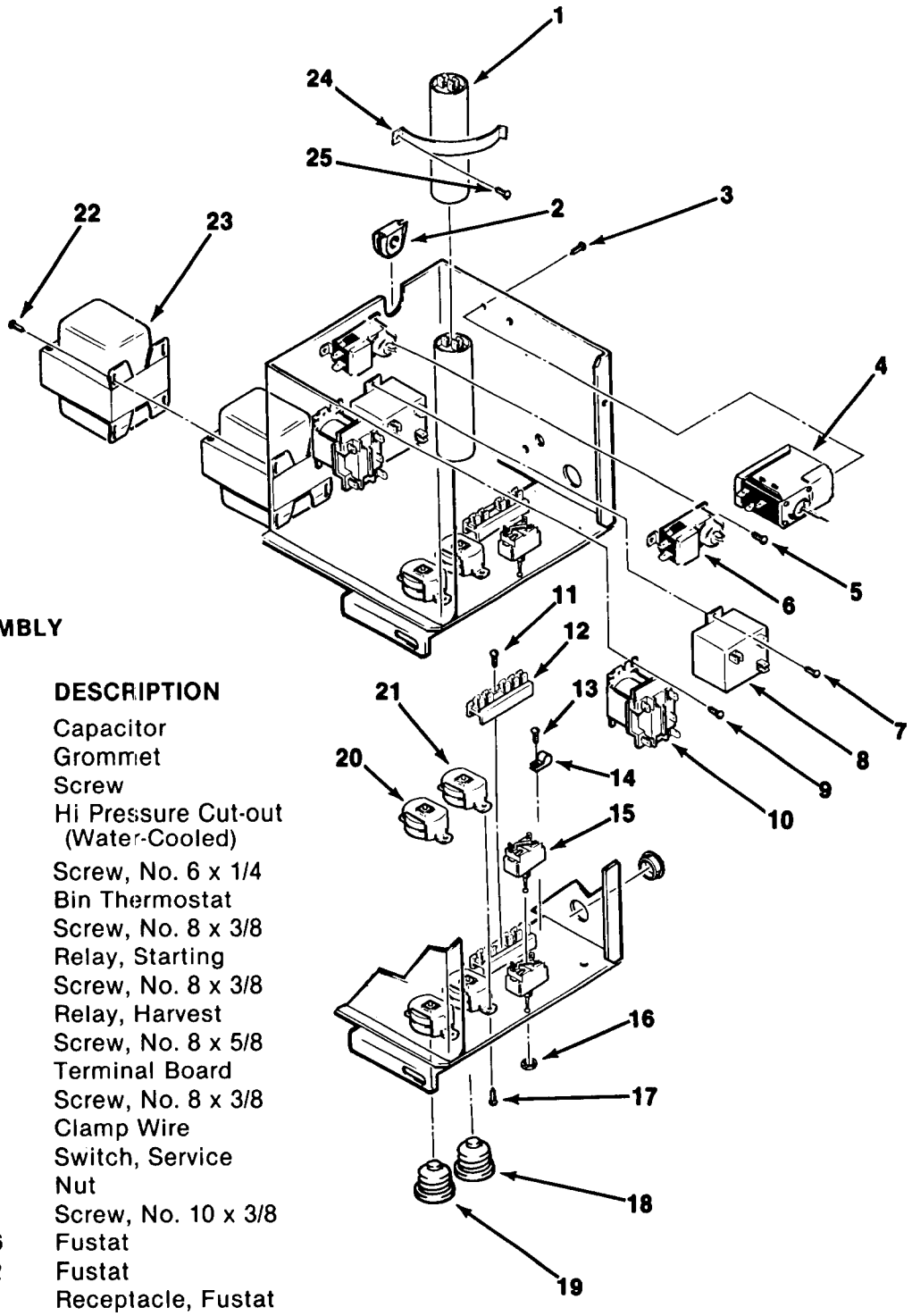

CONTROL BOX ASSEMBLY

ITEM NUMBER	PART NUMBER	DESCRIPTION
1	0572805	Capacitor
2	0573333	Grommet
3	03-1403-02	Screw
4	0751698	Hi Pressure Cut-out (Water-Cooled)
5	0680722	Screw, No. 6 x 1/4
6	0593328	Bin Thermostat
7	0681167	Screw, No. 8 x 3/8
8	0572809	Relay, Starting
9	0681167	Screw, No. 8 x 3/8
10	0583095	Relay, Harvest
11	0680603	Screw, No. 8 x 5/8
12	0756195	Terminal Board
13	0681167	Screw, No. 8 x 3/8
14	0596276	Clamp Wire
15	0560940	Switch, Service
16	0596201	Nut
17	0680604	Screw, No. 10 x 3/8
18	12-2276-06	Fustat
19	12-2276-02	Fustat
20	12-2275-01	Receptacle, Fustat
21	12-2275-03	Receptacle, Fustat
22	0681167	Screw, No. 8 x 3/8
23	0755722	Transformer
24	0560767	Clamp, Capacitor
25	0680428	Screw No. 8 x 3/4

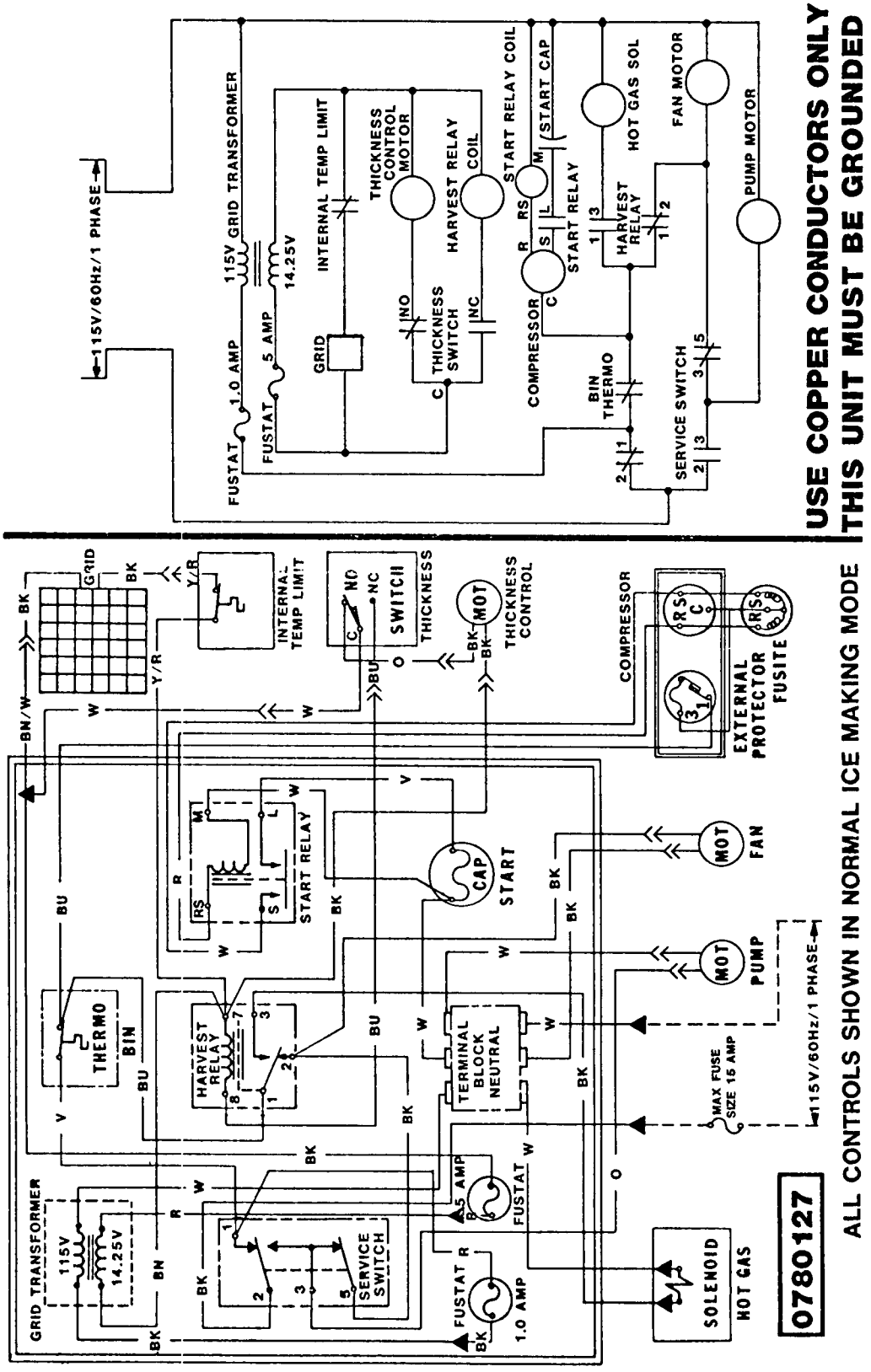

Wiring Diagram, CSW3 AE-1A (115/60/1) Air-Cooled

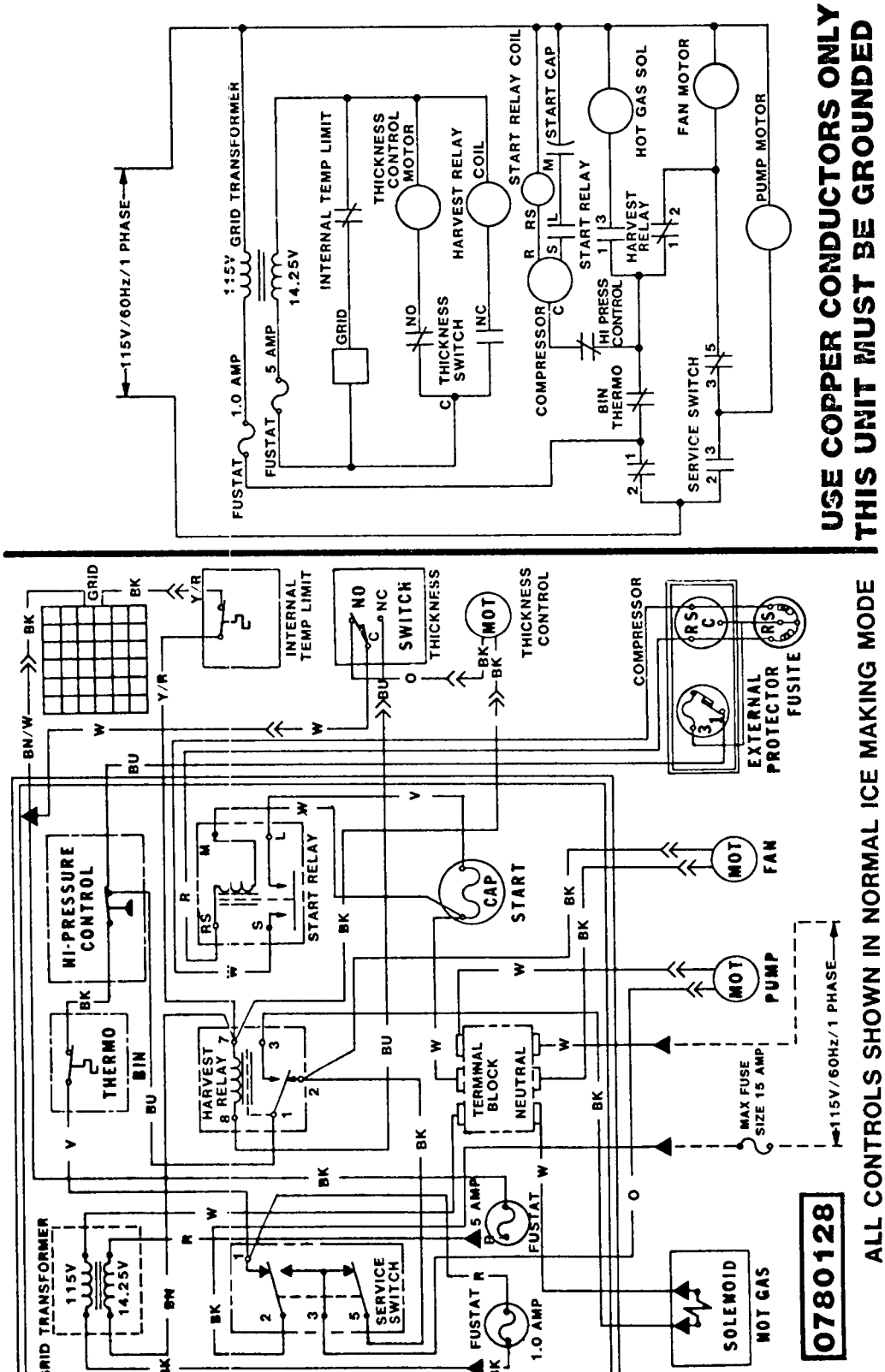

Wiring Diagram, CSW3 WE-1A (115/60/1) Water-Cooled

CSW4

TABLE OF CONTENTS

GENERAL INFORMATION & INSTALLATION
Introduction 2
Unpacking 4
Select Location 4
Electrical Connections 6
Plumbing Installation 7
Final Checklist 8

OPERATING INSTRUCTIONS
Start-Up 10
How It Works 10
Freezing Cycle 12
Harvest Cycle 13
Simple Problem Checklist 'BEFORE' Service Call 14

MAINTENANCE & CLEANING INSTRUCTIONS
General 16
Icemaker 16
Cleaning the Condenser 16
Cleaning & Sanitizing 17
Operating Characteristics 20

SERVICE DIAGNOSIS 21

ADJUSTMENT PROCEDURES
Storage Bin Thermostat 24
Ice Slab "Thickness" 24
Float Valve Assembly 24

REMOVAL AND REPLACEMENT PROCEDURES
Cutter Grid 25
Evaporator 27
Ice Thickness Control 27
Water Regulator Valve, Water-Cooled 27
Water Distributor 28
Bin Thermostat Control 28
Float Valve Assembly 28
Expansion Valve 29
Slide-Out Chassis 30
Drier 31
Compressor Assembly 31
Condenser, Air-Cooled 31
Condenser, Water-Cooled 32
Water Pump 32
High Pressure Safety Control (Water-Cooled) 32
Hot Gas Harvest Solenoid Coil 33
Hot Gas Harvest Valve 33
Receiver 33
Fan Motor Assembly Air-Cooled 34

LIST OF ILLUSTRATIONS

Specifications 3
Unpacking Machine 4
Icemaker Location Considerations 4
CSW4 Component Location 5
Installation Electrical 6
Installation Water 7
General Information and Installation 9
Operation Illustration 11
Freezing Cycle 12
Harvest Cycle 13
Water Schematic 15
Cleaning Water System 18
Thickness Adjustment 24
Float Valve Assembly 24
Cutter Grid Wire Replacement Tools 25
Cutter Grid Wiring Schematic 3/4" x 3/4" 25
Cutter Grid Wiring Schematic 1-1/4" x 1-1/2" 26
Cutter Grid 26

PARTS LIST AND WIRING DIAGRAMS (Printed in Blue)

PARTS LIST:
Cabinet Assembly 1
Control Box Assembly 3
Ice Cutter Grid Assembly 5
Major Component Assembly 7
Air-Cooled Assembly 9
Water-Cooled Assembly 9
Liner Assembly 11

WIRING DIAGRAMS:
CSW4 AE-1A (115/60/1) 13
CSW4 WE-1A (115/60/1) 14

THIS PAGE
INTENTIONALLY
LEFT BLANK

CSW4
GENERAL INFORMATION AND INSTALLATION

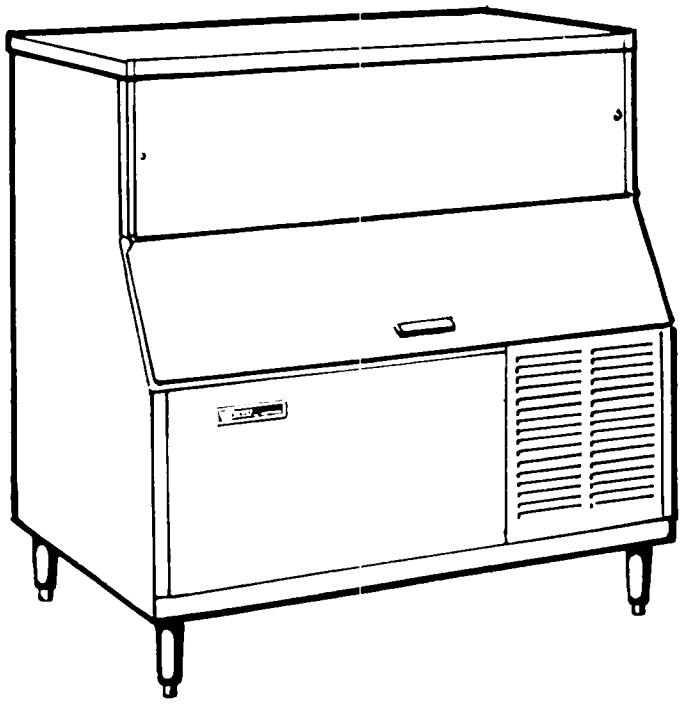

CSW4
Self-Contained Cuber

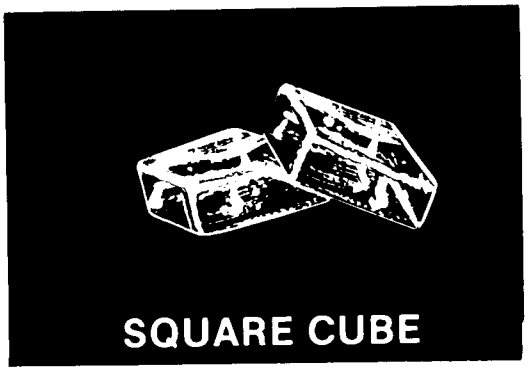

INTRODUCTION

The Model CSW4 Self Contained Cubers are quality designed, engineered and constructed, and are thoroughly tested icemaking systems, providing the utmost in flexibility to fit the needs of a particular user.

These instructions provide the specifications and the step-by-step procedures for the installation, start up and operation for the W-Series Model CSW4 Cuber.

CSW4
GENERAL INFORMATION AND INSTALLATION

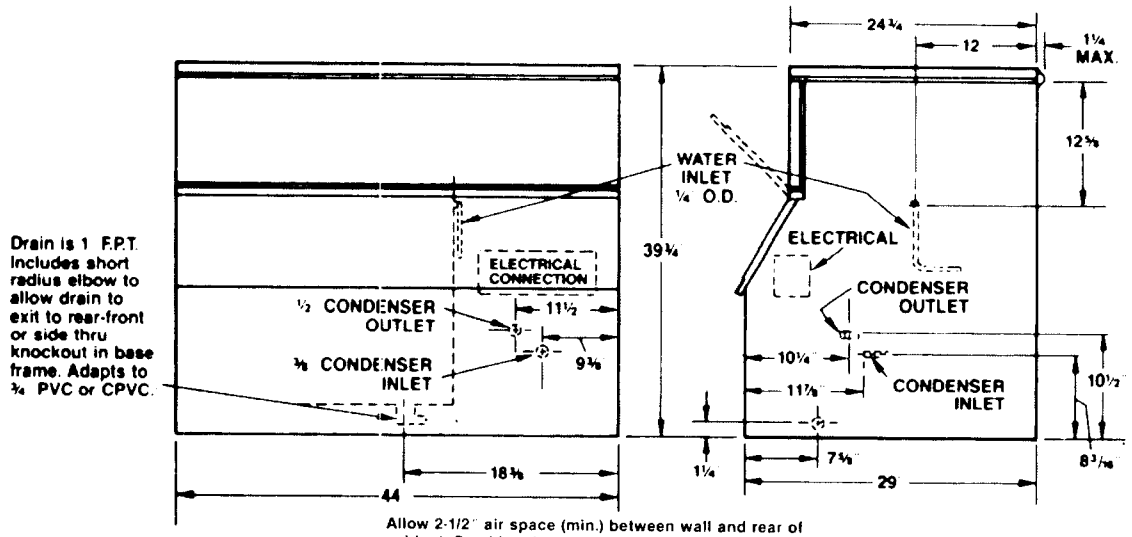

Allow 2-1/2" air space (min.) between wall and rear of cabinet. Provide adequate ventilation on top and sides for air to exhaust.

This product qualifies for the following listings:

We reserve the right to make product improvements at any time. Specifications and design are subject to change without notice.

SPECIFICATIONS

Model Number	(Height - w/o Legs) Dimensions H" x W" x D"	Bin Cap.	Cond. Unit	Finish	Basic Electrical	Comp. H.P.	Time Delay Fuse Size Max.	Amp. (Average)	Water (In.)	Drain (In.)	Ship. Wt. (Approx. Lbs.)
CSW4AE-1A	39¼ x 44 x 29	242 lbs	Air	ES	115/60/1	¾	20	12.5	¼	¾	330 lbs.
CSW4WE-1A	39¼ x 44 x 29	242 lbs	Water	ES	115/60/1	¾	20	12.5	¼ - ⅜	¾ - ½	330 lbs.

IMPORTANT OPERATING REQUIREMENTS

	MINIMUM	MAXIMUM
*Air Temperatures	55° F (10.3° C)	100° F (38° C)
Water Temperatures	40° F (4.4° C)	100° F (38° C)
Water Pressures	20 lbs. gauge	100 lbs. gauge
Single Voltage Units	-10%	10%

(Voltage rating specified on nameplate)

Extended periods of operation exceeding these limitations constitutes misuse under the terms of Scotsman Manufacturer's Limited Warranty, resulting in a loss of warranty coverage.

KBC1-Optional bin caster kit, two standard and two locking 3-1/2" dia. wheel casters. Lifts bin 4-7/16" off of floor.

GRIDS FOR LARGE CUBES On Model CSW4 to convert cube size to 1-1/4" x 1-1/2", order grid CCK-151-SG. Note: Order these special grids through the Scotsman Parts Department.

REFRIGERANT **R502**

CSW4
GENERAL INFORMATION AND INSTALLATION

UNPACK

THIS ITEM IS HEAVY, WHEN HANDLING USE PROPER EQUIPMENT AND CARE TO PROTECT IT, YOURSELF, STAIRS AND FLOORS.

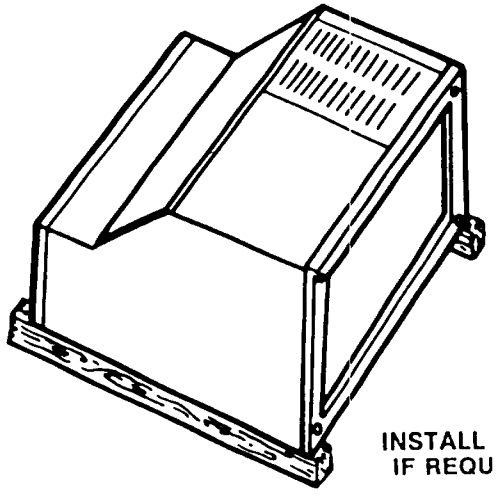

INSTALL LEGS IF REQUIRED

1. Remove staples at bottom of carton. Lift and remove carton.

CAUTION

Skid base is not bolted to the bottom of the icemaker.

2. Carefully tilt cabinet to remove the skid.
3. **IF LEGS ARE TO BE INSTALLED**
   A. Carefully lay machine on its back using blocks to prevent damage (As illustrated).
   B. Screw the legs into the tapped holes in the base. Be sure that the legs are seating tightly against the frame.
4. Carefully set machine in upright position.
5. Remove exterior tape.
6. Raise storage bin door. Remove front panel by removing two screws and lifting panel off. Top may also be removed by pulling forward.
7. Remove all shipping tape and packaging from interior.
8. Check water pump pan for foreign objects or loose parts.
9. Examine carefully for concealed damage. Report immediately to carrier any damage found. Save carton and have carrier examine product and submit written report.

SELECT LOCATION

THIS UNIT MUST BE INSTALLED IN AN AREA PROTECTED FROM THE ELEMENTS, SUCH AS WIND, RAIN, WATER, SPRAY, OR DRIP.

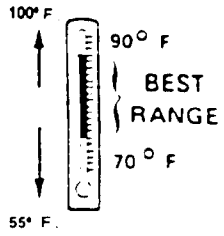

1. Locate in a well-ventilated area above 55° F. Best ice yield is obtained between 70° F. and 90° F.; higher or lower temperatures will reduce ice yield.
2. CAUTION: Do not install in areas where freezing temperatures may occur.
3. If air cooled icemaker is installed in a closed room 350° C.F.M. of air must be exchanged through the room to maintain the room air at 10° F. warmer than the available ambient air temperature.
4. For water cooled icemaker, water supply temperatures above 80° F. will result in extreme condenser water usage.
5. Leveling is important to obtain proper drainage of the storage bin; it also assures even water flow over the freezing plate and proper release of the ice slab during the harvest cycle. Level units without leveling legs with plywood or masonite shims.
6. Adjust the leveling legs until the unit is level and all four legs are in solid contact with the floor.
7. When legs are used, floor must support approximately 130 lbs. per leg (130 lbs. per sq. inch.).
8. When installing icemaker without leg kit, installation must conform to local, state and national health and building codes.

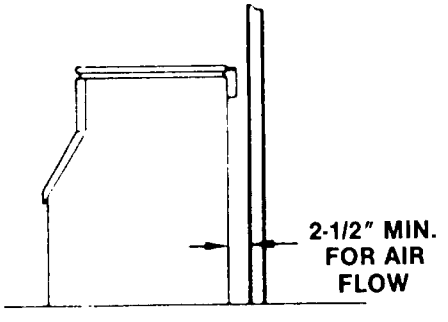

9. Allow 2-1/2" air space (min.) between wall and rear of cabinet. Provide adequate ventilation on top and sides for air to exhaust.

CSW4
GENERAL INFORMATION AND INSTALLATION

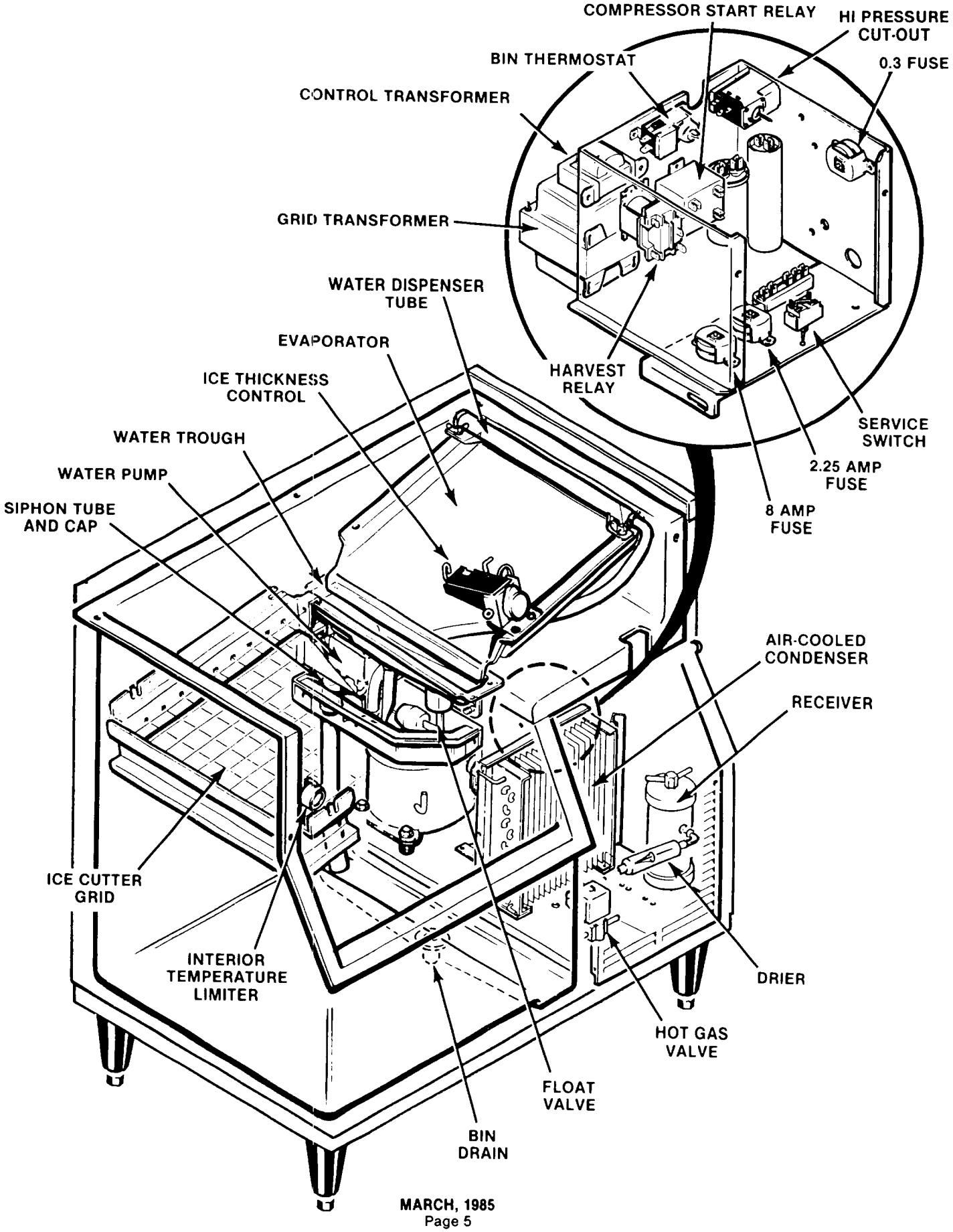

CSW4
GENERAL INFORMATION AND INSTALLATION

FOR THE ELECTRICIAN

CONFORM TO ALL APPLICABLE CODES

It is the personal responsibility and obligation of the customer to contact a qualified installer to assure that the electrical installation is adequate and is in conformance with the National Electrical Code and local codes and ordinances.

Be certain the cuber is connected to its own electrical circuit and individually fused. Voltage variation should not exceed ten percent of the nameplate ratings, even under starting conditions. Low voltages can cause erratic operation and may be responsible for serious damage to the icemaker.

The electrical connection to the ice cube maker must supply 115 volts, 60Hz alternating current. This connection should enter the motor compartment through the back of the unit and should be brought forward to the front of the cabinet.

SEE NAMEPLATE for current requirements to determine wire size to be used for electrical hookup. The cuber required a solid chassis-to-earth ground wire. See Wiring Diagram.

NOTE: A separate circuit must be used with a 20 ampere time delay fuse.

INSTALL ELECTRICAL WIRING

USE COPPER WIRE ONLY

WIRING — 115 V, 60Hz (cycles) 20 Amp, Phase — Use Delayed Action Fuse

1. Remove grill by removing screws at top edge.
2. Remove rear grill by removing four screws.
3. Remove electrical box cover and connect ground wire to green screw tagged "Ground" and electrical supply line to terminal board screws.

Refer to Wiring Diagram located on Control Box cover and connect per electrical codes.

INSTALL GROUNDING WIRE

USE COPPER WIRE ONLY

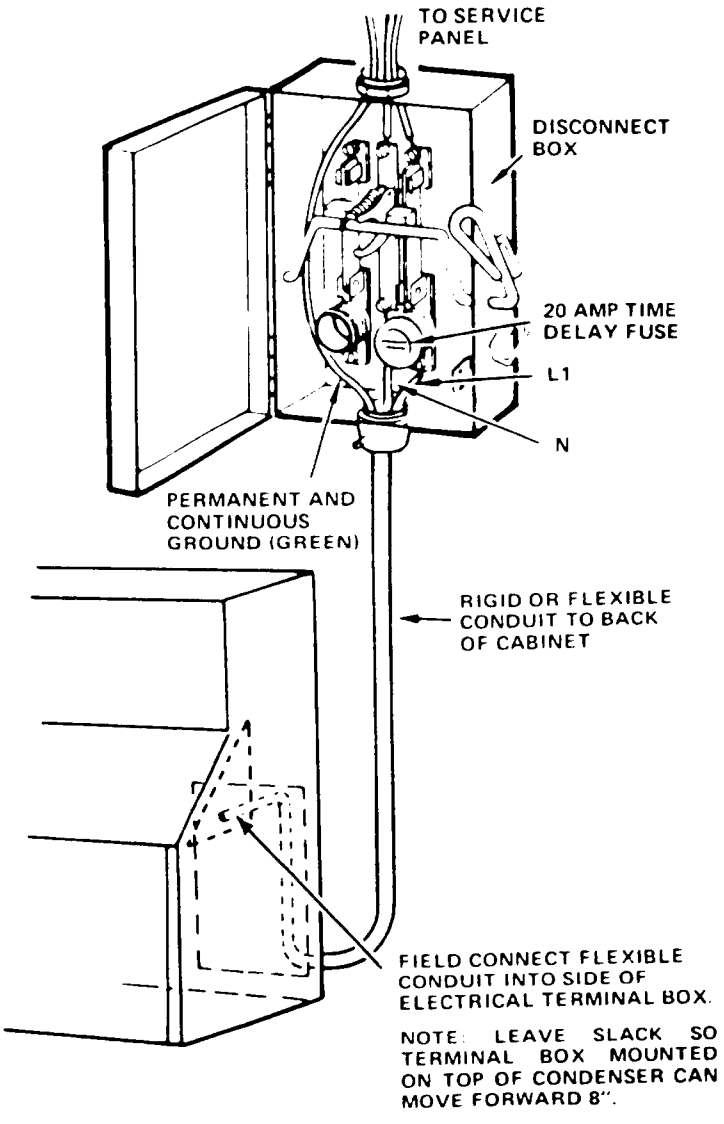

ELECTRICAL GROUND IS REQUIRED ON THIS APPLIANCE.

1. Permanently ground this appliance in accordance with the National Electrical Code and local codes and ordinances. Ground must be continuous.
2. Use a conductor of the appropriate size from the appliance green grounding screw to a grounded connection in the service panel or a properly driven and electrically grounded rod.
3. Replace electrical box cover.

CSW4
GENERAL INFORMATION AND INSTALLATION

FOR THE PLUMBER

OBSERVE LOCAL CODES

INSTALL DRAIN

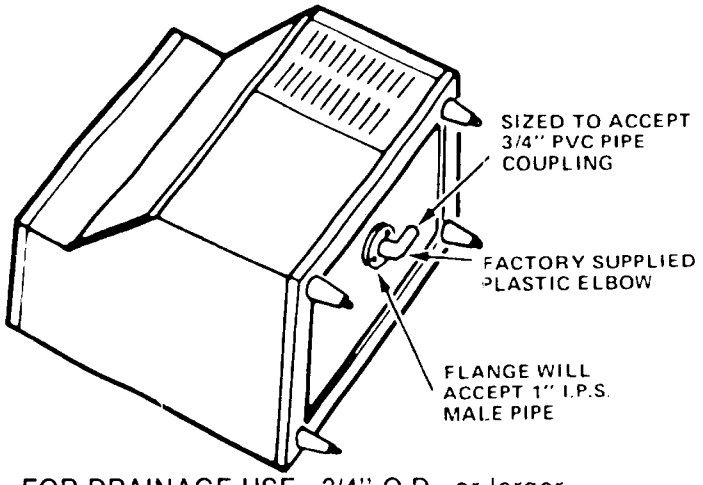

FOR DRAINAGE USE - 3/4" O.D., or larger, Tubing or Pipe

1. The drain line must maintain a gradual slope to an open drain receptacle. Any rise in the drain line will cause an air lock and prevent the water from draining from the storage bin. Installation of an air vent in the drain line will eliminate the possibility of an air lock forming.

CONDENSER DRAIN
Water-Cooled Models Only

1. 1/2" galvanized pipe or copper tubing must be used to extend the condenser outlet to an open type drain.
2. Adequate flow rate must be maintained through the condenser. Runs over 40 ft. will require using larger pipe size.

INSTALL WATER SUPPLY

NOTE: Water treatment may be advisable because poor quality water can cause marginal operation or malfunction and increase cleaning frequency and maintenance costs. Contact your local commercial ice machine dealer for recommendations.

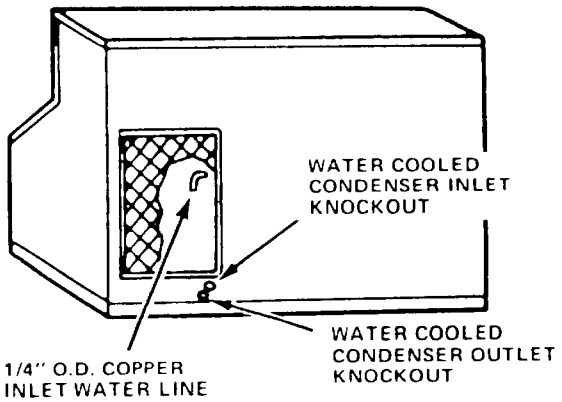

COLD WATER SUPPLY-1/4" O.D. Soft Copper Tubing With Shut-Off Valve

1. A shut-off valve should be provided in the water supply line at a convenient location near the ice maker. The supply line must be adequately sized to compensate for the length of the run.

Supply runs over 10 ft. should be made with 3/8" o.d. copper tubing. Runs of 10 ft. or less may be made with 1/4" o.d. copper tubing.

NOTE: Always flush out water lines before connecting to prevent foreign matter from entering the float valve.

2. Remove rear grill by removing four screws.
3. Connect supply line to 1/4" o.d. water line at rear of ice maker.
4. Water level is controlled in pump reservoir by the float valve. Make sure float valve opens and closes.
5. Water pressure must be 20 to 100 psi. If the pressure exceeds 100 psi, a regulator will have to be installed. The unit will operate in pressures below 20 psi; however, it may produce cloudy ice.

CONDENSER WATER INLET
Water-Cooled Models Only

1. Use a 3/8" I.P.S. independent cold water supply to the water cooled condenser inlet for proper condenser operation. Runs over 40 ft. will require using larger pipe size. Install a hand shutoff valve between the water source and the water-cooled condenser connection at the icemaker.

CSW4
GENERAL INFORMATION AND INSTALLATION

FINAL CHECK LIST

1. Is the cabinet/bin level? (IMPORTANT)
2. Is the cuber in a location where ambient temperatures are a minimum of 55-degrees F. all year around and do not exceed a maximum of 100° F?
3. Is there at least a 2-1/2" clearance behind and around the cabinet for all connections and for proper air circulation?
4. Have all electrical and piping connections been made?
5. Has the electrical power supply wiring been properly connected, and the voltage tested and checked against the nameplate rating? Has proper chassis-to-earth ground been installed?
6. Is the water supply line shutoff valve installed and opened and has the inlet water supply pressure been checked to ensure a minimum of 20 psig?
7. Have the compressor holddown bolts been checked to be sure the compressor is snug on the mounting pads?
8. Check all refrigerant lines and conduit lines to guard against vibration and possible failure.
9. Has the cuber and the bin been wiped clean with clean damp cloths?
10. Has the owner/user been given the User's Instructions and instructed on how to operate the icemaker and the importance of periodic maintenance?
11. Has the owner/user been given the name and telephone number of the Authorized Scotsman Distributor or Service Agency serving him?
12. Has the Manufacturer's Registration Card been properly filled out? Check for correct Model and Serial Numbers from nameplate, then mail the completed card to the SCOTSMAN factory.

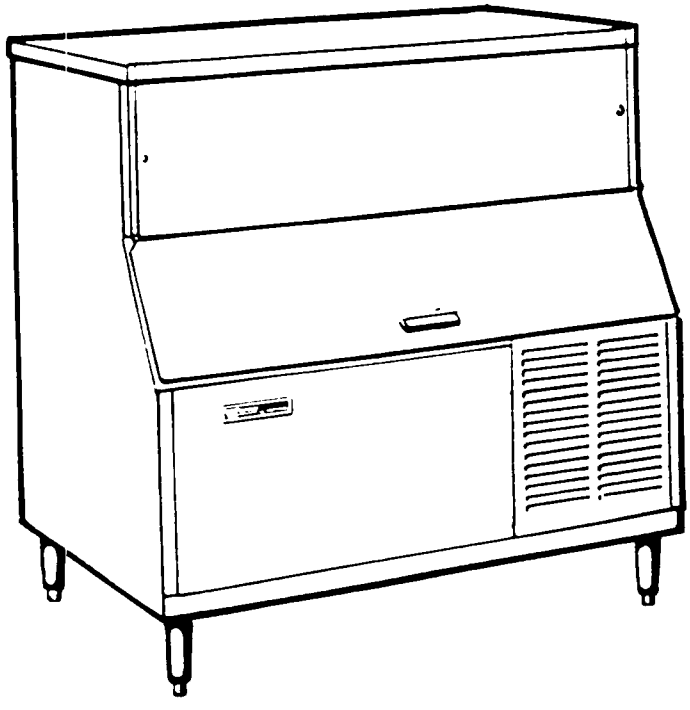

CSW4
GENERAL INFORMATION AND INSTALLATION

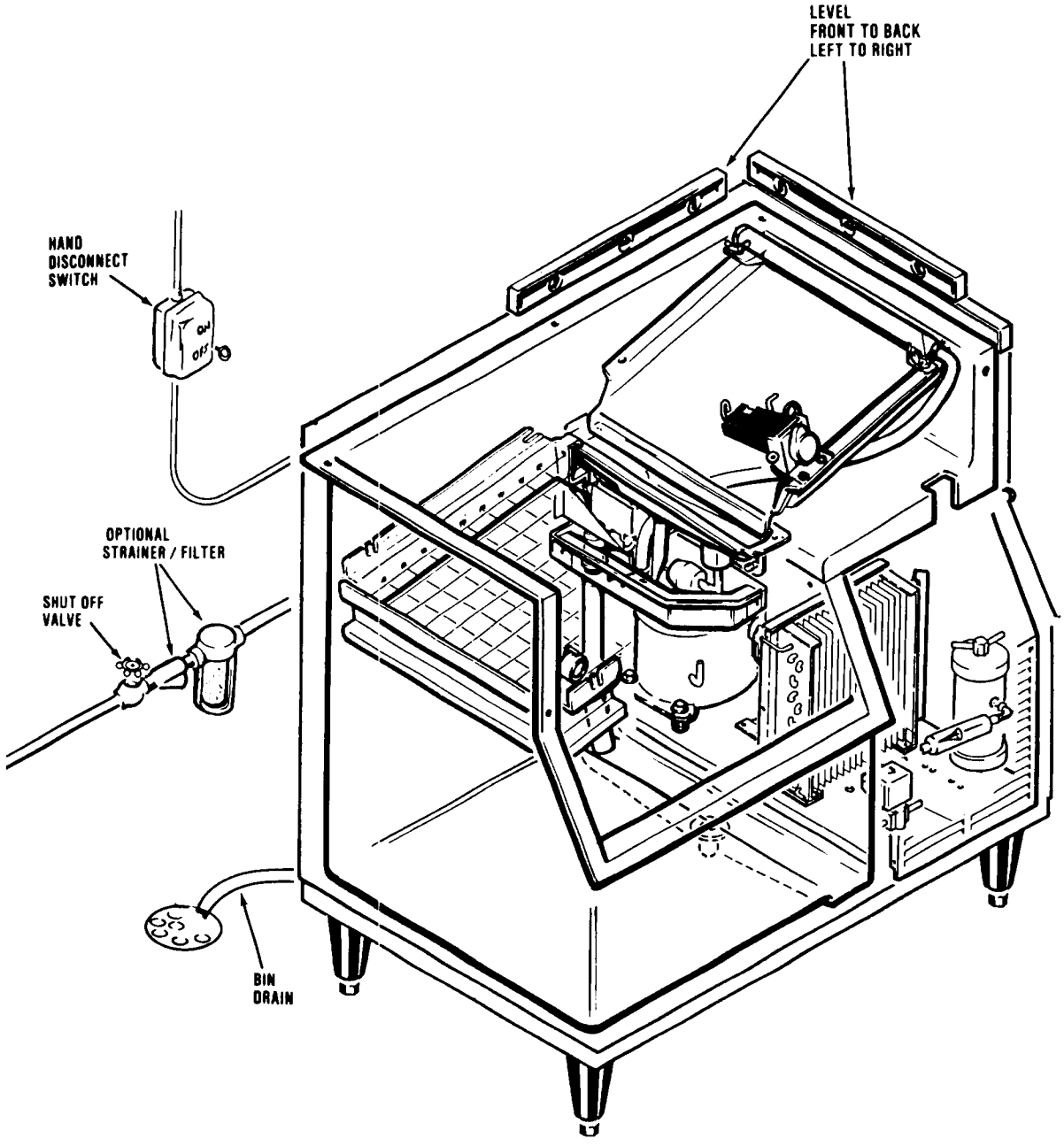

CSW4
OPERATING INSTRUCTIONS

OPERATING INSTRUCTIONS
STARTING

After the electricity and water to the ice cube maker have been turned on, move the switch to "on" position. This will start ice cube maker. Additional water will be admitted automatically to the water pan when the evaporator temperature has lowered sufficiently to start freezing water to the evaporator, thus lowering the water level causing the float to open.

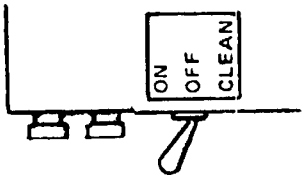

CHECK OPERATION

1. Start the unit by opening water valve and turning the service switch to "ON".
2. NOTE: To the right is "CLEAN", middle is "OFF" and to the left is "ON '. In "CLEAN" position, only the water pump operates.
3. Check water level in pump pan. When not running, water level should be 2-1/4" deep.

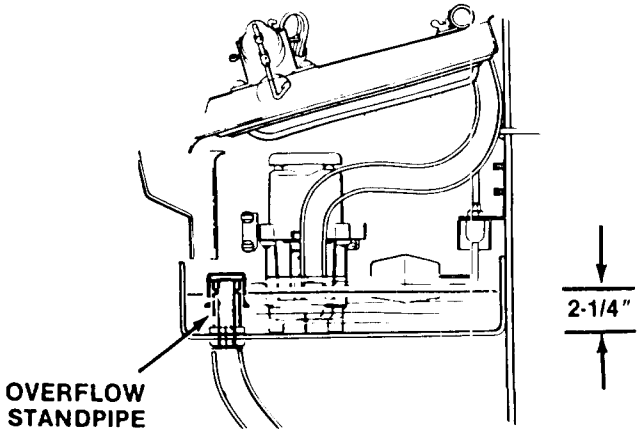

4. Check for even water flow over freezing plate. Unit must be level for proper operation.
5. Check freezing plate to make sure it is getting cold.
6. Check for desired cube thickness and adjust if necessary. Maximum capacity will be obtained with ice thickness 1/2" to 5/8".
7. When slab has been harvested, observe ice cutting action of the grid. The slab should slowly "sink" into the warm wires.
8. Replace all panels.
9. Store ice scoop in a clean place.

HOW IT WORKS

WITH SERVICE SWITCH IN "ON" POSITION

1. Compressor runs.
2. Condenser fan runs.
3. Water pump runs.
4. Thickness control motor runs.
5. Cutter grid warm to touch.

WHEN DESIRED ICE SLAB THICKNESS IS REACHED, HARVEST CYCLE BEGINS WITH FOLLOWING RESULTS:

1. Thickness control arm raises, closing contacts Common to "N.C." which energizes coil of relay.
2. Compressor keeps running.
3. Condenser fan stops. (air cooled). Condenser water valve closes tightly (water cooled).
4. Water pump stops.
5. Water siphons from pan and refills.
6. Thickness control motor stops.
7. Hot gas solenoid valve is energized and opens.
8. Cutter grid warm to touch.

ICE SLAB SLIDES DOWN TO CUTTER GRID. THICKNESS CONTROL ARM FALLS CLOSING CONTACTS COMMON TO "N.O." WHICH DE-ENERGIZES COIL OF RELAY.

MACHINE THEN GOES BACK INTO FREEZE CYCLE WHILE SLAB IS BEING CUT INTO CUBES ON CUTTER GRID

WHEN STORAGE BIN GETS FULL, BIN THERMOSTAT TURNS MACHINE OFF.

1. Thickness control motor on.

OPERATING INSTRUCTIONS

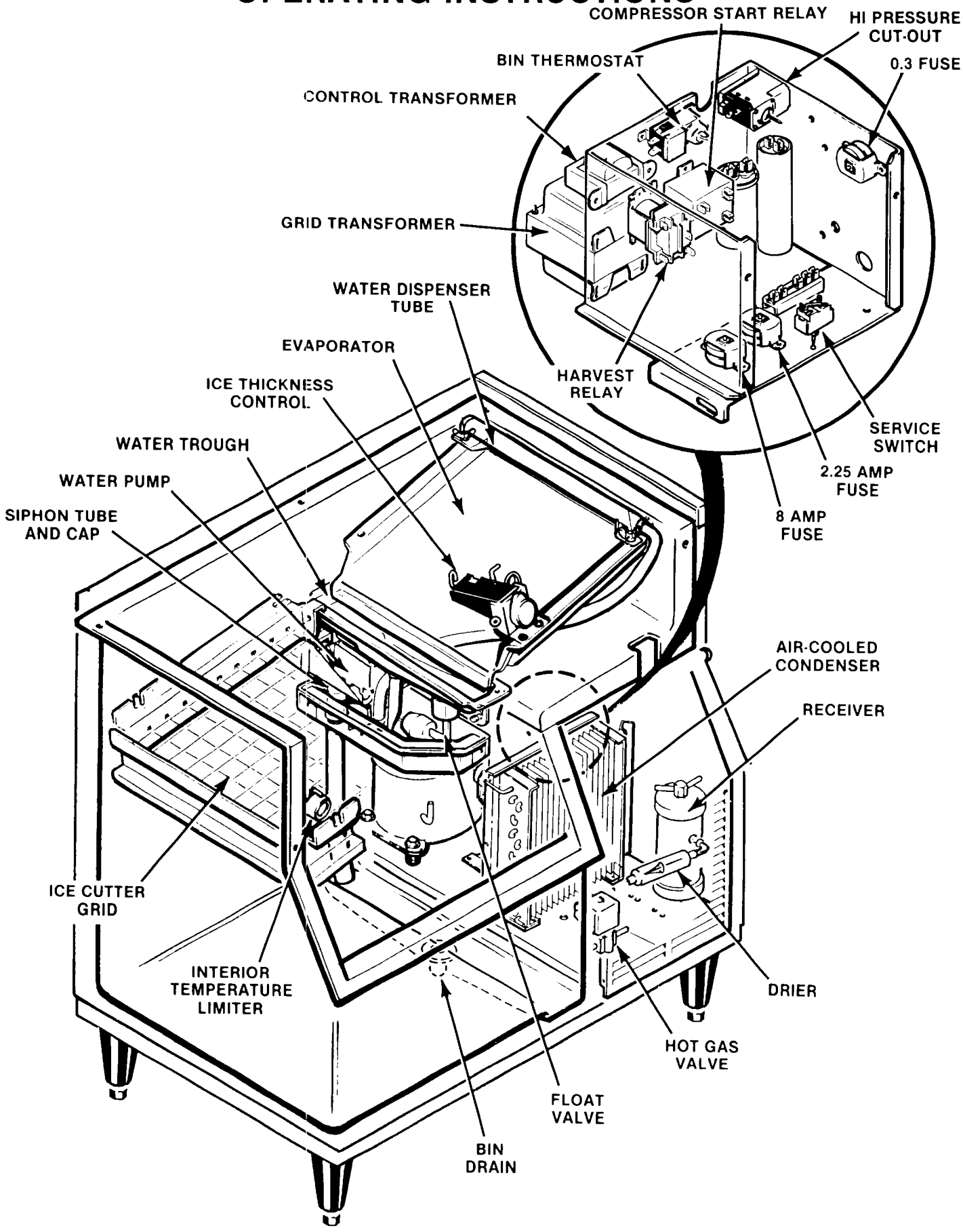

CSW4
GENERAL OPERATION

FREEZING CYCLE

Water from the sump in the reservoir of the sump assembly is pumped to the water distributor system at the top of the evaporator plate. From the water distributor at the top of the evaporator plate, the water cascades by gravity over the plate and to the sump assembly below for recirculation. At the beginning of the freezing cycle, the electrical circuit is completed to the compressor and the water pump.

In the compressor, gaseous refrigerant is compressed and discharged into the condenser, as a high pressure, high temperature gas. The refrigerant is cooled by either air or water, and condenses into a high pressure, medium temperature liquid and into the receiver. This liquid refrigerant is then metered through the termostatic expansion valve where the temperature and pressure of the liquid refrigerant are lowered and enteres the evaporator plates. The refrigerant is warmed by the water cascading over the Evaporator plate and begins to evaporate off and become gas. The refrigerant next travels through the heat exchange area of the suction line where any remaining liquid refrigerant evaporates off and returns to the compressor as a low pressure, low temperature gas, and the cycle starts again.

During the freezing cycle, the hot gas solenoid valve is CLOSED.

When the ice slab is formed, the ice thickness control will sense the thickness at which it is preset to CLOSE. This will complete the electrical circuit to the relay, ending the freeze cycle.

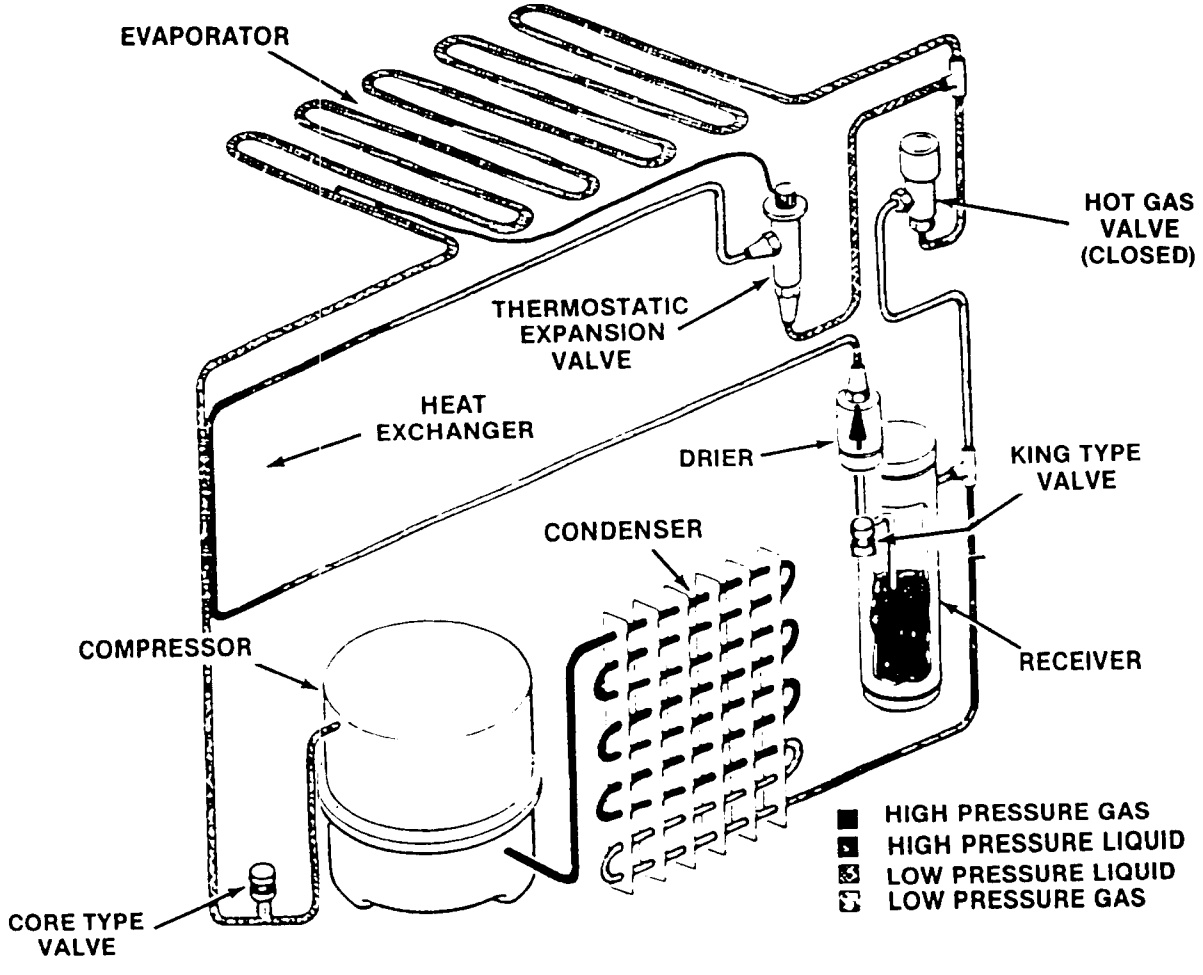

CSW4
GENERAL OPERATION

HARVEST CYCLE

When the thickness control switches the Icemaker into the harvest cycle, high pressure, high temperature liquid refrigerant being discharged from the condenser through the hot gas solenoid valve into the evaporator plate. During this cycle, the refrigerant bypasses the expansion valve.

The thickness switch snaps from normally open to closed for slab release. The thickness motor, the pump, and the condenser fan, stop. A circuit is completed to the hot gas solenoid. To insure sufficient hot gas to release the slab, the compressor continues to run even though the fan stopped.

Hot refrigerant from the condenser is fed to the freezing plate and releases the ice slab. The slab of ice slides down onto a cutter grid and the slab is cut into cubes by the warm, low voltage cutter grid wires while the unit automatically goes into another freezing cycle.

The cubes fall down into the collecting bin. It is insulated but not refrigerated. This keeps the ice from freezing in to a lump, controls melting of the accumulating ice and assures a periodic replacement of the old ice with fresh new ice.

When the slab slides off the evaporator, the thickness switch will return to the normally open contact and a new slab begins to form.

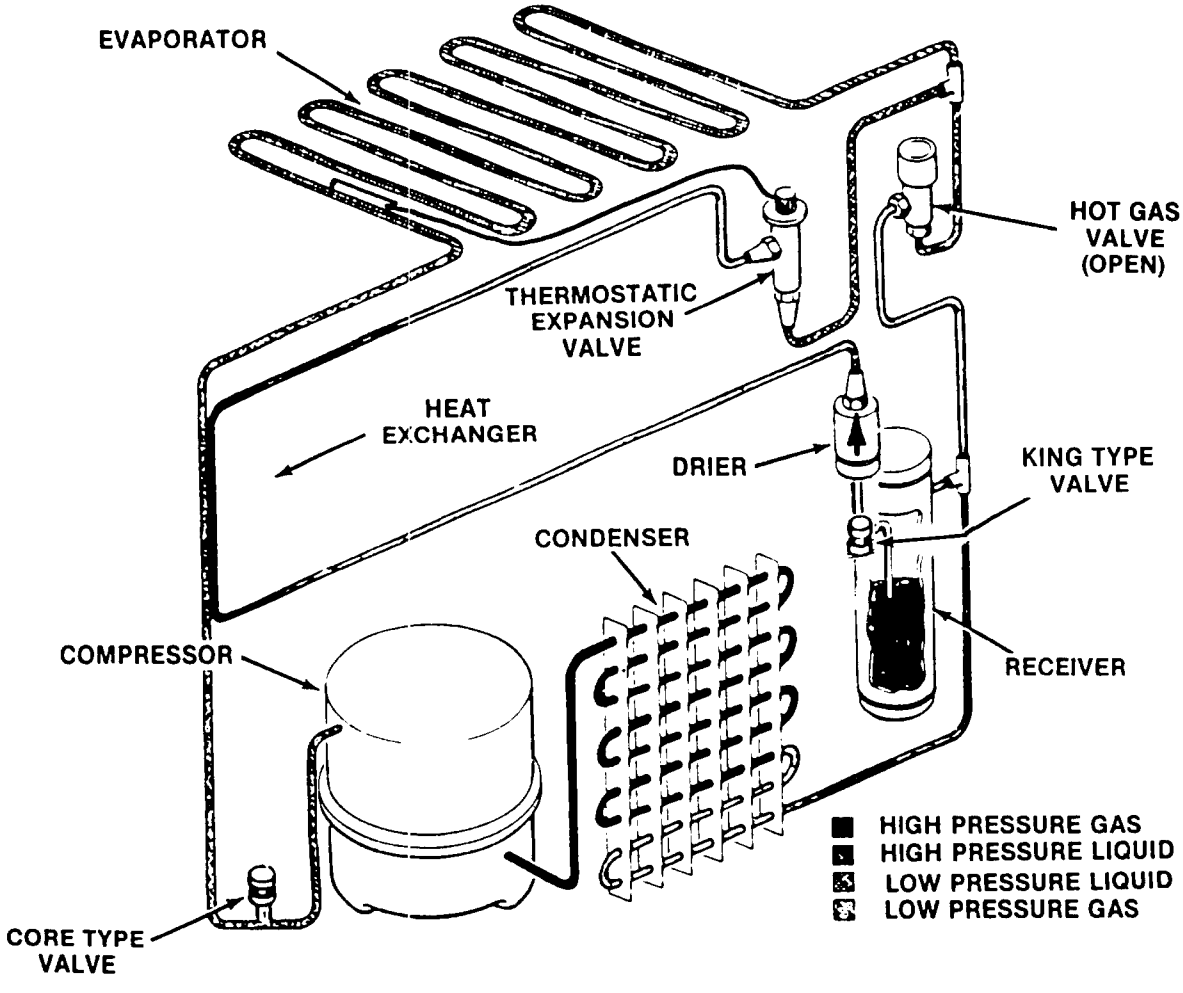

CSW4
OPERATING INSTRUCTIONS

IF THE MACHINE DOES NOT PRODUCE ICE

Check the following before calling a service technician:

A. Unit runs but produces no ice...

1. Check water supply valve to make sure it is open.
2. Service switch must be in "On" position.

B. Unit runs but produces very little ice...

1. Operating in extremely high room temperatures (normal for ice production to be low).
2. Lint blocking air flow through finned condenser. (Clean.) Check for objects around unit which would obstruct normal air flow. (Remove.)
3. Low water pressure to water cooled condenser.

C. Unit does not run...

1. Check for blown fuse in e ectrical supply to machine. NOTE: The fuses in the machine compartment are to protect the low voltage transformers.
2. Service switch must be in "on" position.
3. Room temperature too low. (Must be above 55° F.) Unit may be shut down even though bin is not full.
4. High pressure control is open due to:
   Air-cooled - clogged condenser
   Water-cooled - no water to condenser

NOTE: This control is an automatic reset, it opens at:
Air-cooled - 400 PSIG
Water-cooled - 320 PSIG

and closes at:
Air-cooled - 335 PSIG
Water-cooled - 265 PSIG

D. Grid not cutting ice sheets...

1. Check grid transformer fusestats on machine compartment electrical control box.

PRIMARY TRANSFORMER GRID ASSEMBLY

If the fuse needs to be replaced, replace it with a 2.25 amp time delay fuse.

SECONDARY TRANSFORMER GRID ASSEMBLY

If the fuse needs to be replaced, the same 8.0 amp time delay fuse must be used.

PRIMARY TRANSFORMER CONTROL CIRCUIT

If the fuse needs to be replaced, the same 0.3 amp time delay fuse must be used.
REPLACE FINGER TIGHT ONLY.

2. Check for good electrical connection (grid plug to harness).

CSW4
WATER SCHEMATIC

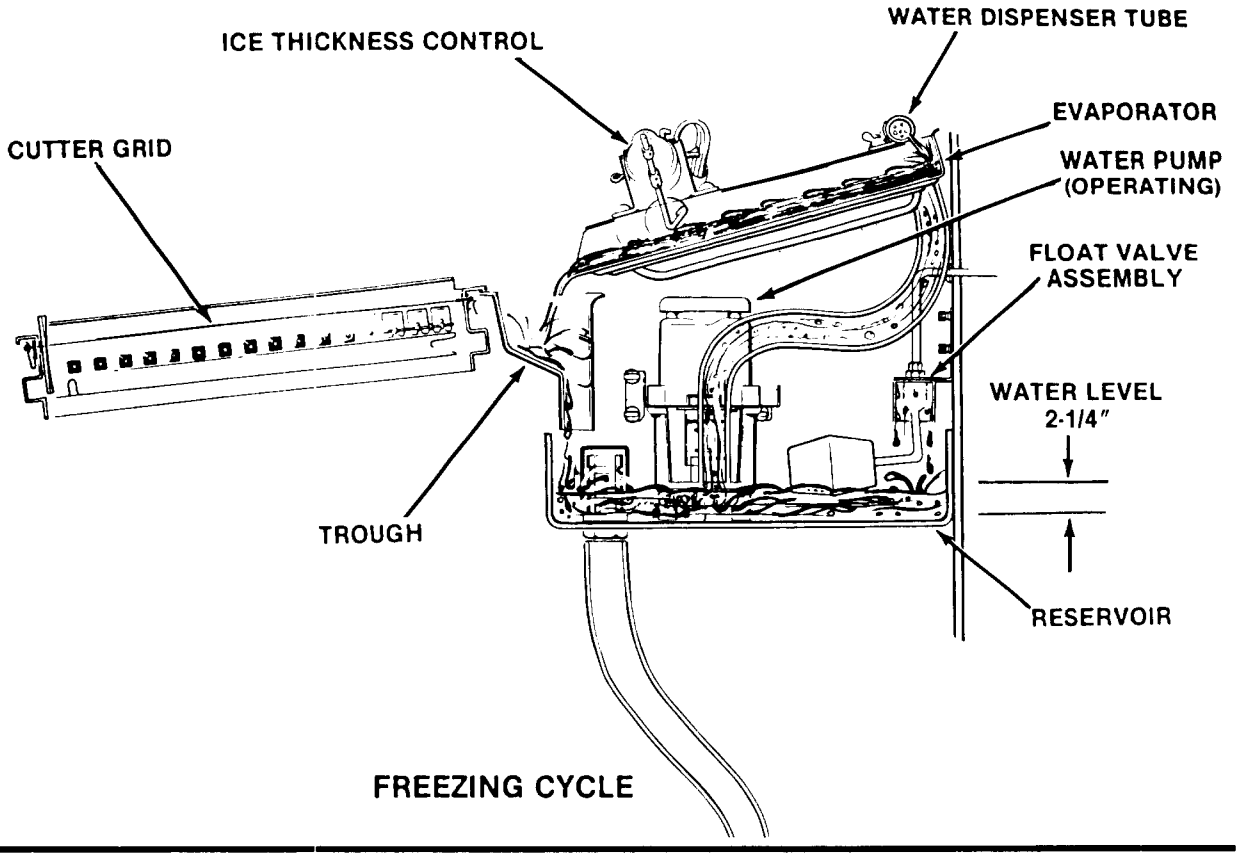

FREEZING CYCLE

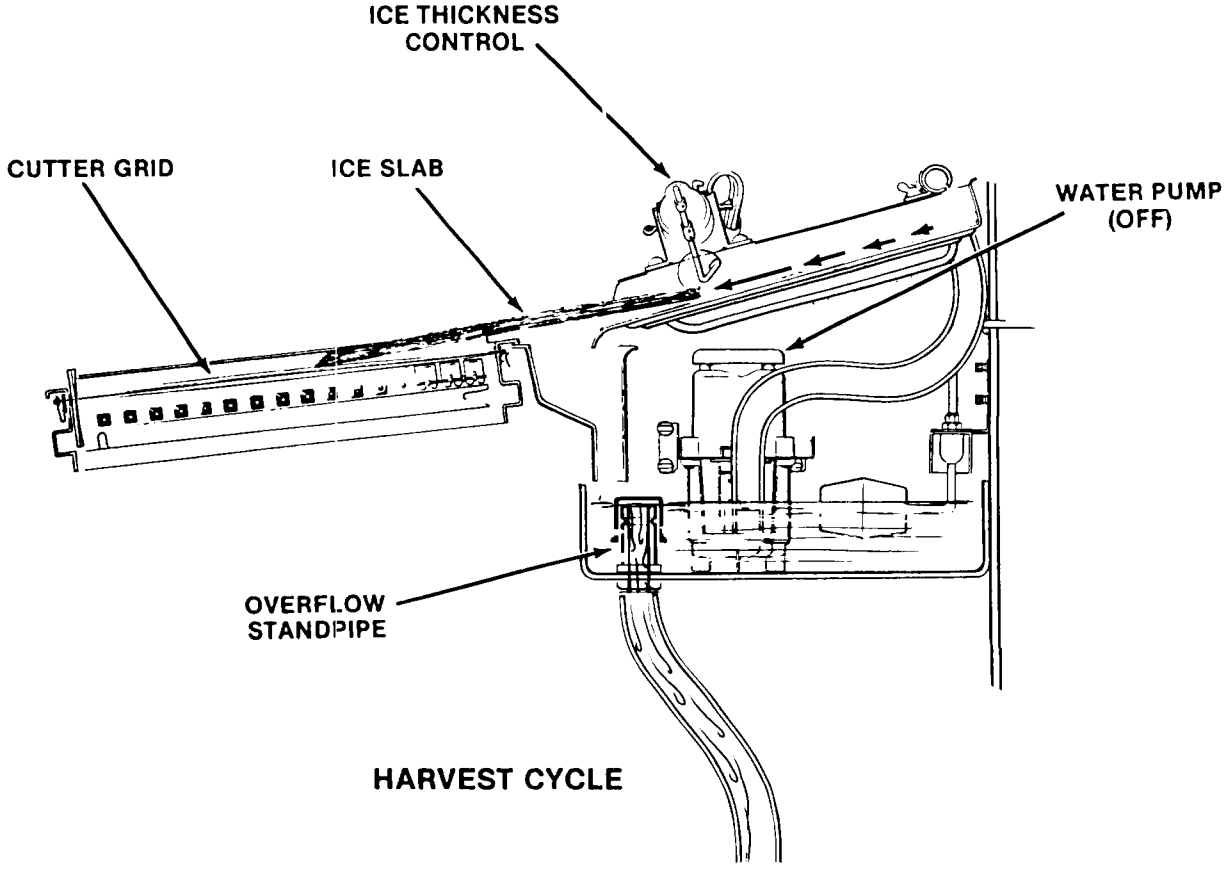

HARVEST CYCLE

CSW4
MAINTENANCE AND CLEANING INSTRUCTIONS

GENERAL

The periods and procedures for maintenance and cleaning are given as guides and are not to be construed as absolute or invariable. Cleaning especially will vary, depending upon local water conditions and the ice volume produced; and each icemaker must be maintained individually, in accordance with its own particular location requirements.

ICEMAKER

THE FOLLOWING MAINTENANCE SHOULD BE SCHEDULED AT LEAST TWO TIMES PER YEAR ON THIS ICEMAKER. CALL YOUR AUTHORIZED SCOTSMAN SERVICE AGENCY.

1. Check and clean or service any optional water treatment devices, if any installed.
2. Check the CSW4 cabinet is level, in the side-to-side and front-to-back directions.
3. Clean the water system, evaporator plate and sump assembly, using a solution of SCOTSMAN Ice Machine Cleaner. Refer to CLEANING.

Cleaning requirements vary according to local water conditions and individual user operation. Continuous check of the clarity of ice cubes and visual inspection of the water system parts, evaporator plate and the sump assembly before and after cleaning will indicate frequency and procedure to be followed in local areas.

4. Check that the grid assemb y is snug and secure.
5. Check and tighten all bolts and screws.
6. Check and tighten all electrical connections.
7. Check hot gas solenoid valve for correct operation.
8. With ON-OFF toggle switch in the OFF position, clean the condenser using vacuum cleaner, whisk broom or brush. Instruct customer to clean condenser frequently. DO NOT USE A WIRE BRUSH.
9. Check for water leaks and make corrections.
10. Check the bin thermostat control bulb to test shut off. Holding ice against bin thermostat control bulb well should cause the icemaker to shut off.

    Within minutes after ice is removed from the bin thermostat control bulb well, the icemaker will restart.

CLEANING THE CONDENSER

Water Cooled Models

During normal operation scale deposits form on the inside walls of the water cooled condenser. The scale acts as an insulator which then requires larger amounts of water for the unit to function. This scale must be removed periodically be circulating scale dissolving chemicals. The frequency of cleaning will depend on local water conditions and how rapidly the scale deposits form. Removing scale from the condenser should be performed by your icemaker dealer.

Air Cooled Models

A dirty or clogged condenser prevents proper air flow which reduces ice capacity and subjects components in the unit compartment to higher than normal pressures and temperatures. This can cause machine malfunction and early component failure.

Access to the Condenser

Remove the two screws on the grilled front panel then pull forward and disengage from the base of the machine.

CAUTION: Disconnect electrical supply to machine before removing unit compartment panel to keep condenser fan blades from rotating. Avoid contact with air cooled condenser fins which may be sharp. Avoid contact with refrigerant tubing which can become hot during normal operation.

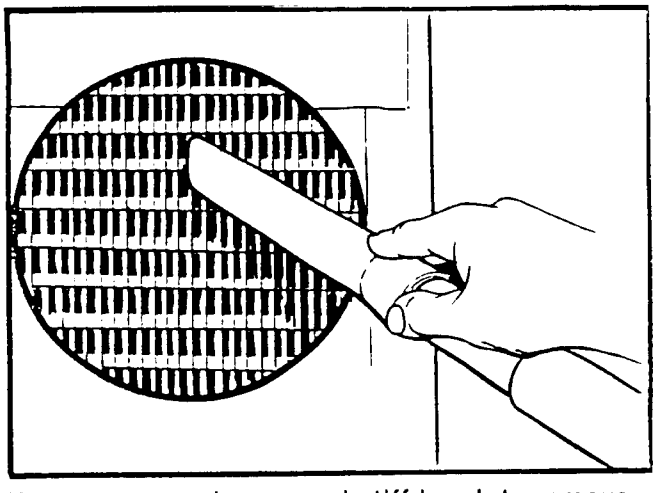

Use a vacuum cleaner and stiff brush to remove the dirt and accumulated lint from the air cooled condenser fins. Do not use a wire brush. Removing the bolts from the fan motor bracket will allow the fan assembly to be removed for better accessibility to the condenser. Care should be used to prevent damage to the blades of the fan.

CSW4
CLEANING INSTRUCTIONS

CLEANING AND SANITIZING THE ICE MAKING SYSTEM

Most of the impurities are rejected from the circulating water as it freezes into ice. Some of these impurities collect on the freezing mechanism and in the water system, forming a hard, scaly deposit. This scale can prevent the ice slab from rapidly sliding off onto the cutter grid. Because of this, the water and icemaking system needs to be cleaned and sanitized periodically. The frequency of cleaning depends on local water conditions.

You can easily clean and sanitize the icemaker, following the directions given. If you prefer, your Authorized Ice Machine Dealer can do the job for you.

NOTE: During cleaning, you will need to remove and reinstall some interior parts. Be careful to avoid any sharp edges and corners.

Follow this approved procedure to clean the unit:

1. You will need **both** cleaning and sanitizing solutions. Prepare as follows:

Sanitizing Solution —

Mix 1/4 oz. (7 mL) chlorine bleach to one gallon (3.8 L) of water. This makes a sanitizing solution of 100ppm.

Cleaning Solution —

WARNING

SCOTSMAN Ice Machine Cleaner contains Phosphoric and Hydroxyacetic acids. These compounds are corrosive and may cause burns. If swallowed, DO NOT induce vomiting. Give large amounts of water or milk. Call physician immediately. In case of external contact, flush with water. KEEP OUT OF THE REACH OF CHILDREN.

Prepare cleaning solution: Mix eight ounces of SCOTSMAN Ice Machine Cleaner with six pints of fresh, potable warm water.

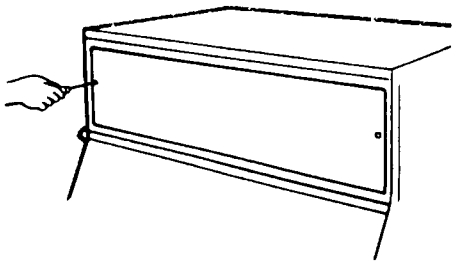

Remove two screws and lift off the top front panel.

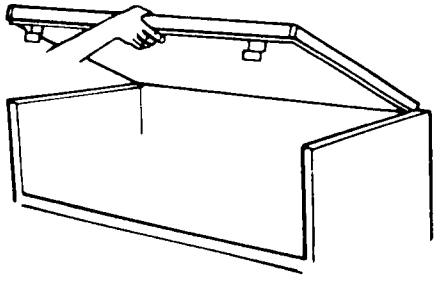

Lift up the top panel and pull forward to release the rear retainer brackets.

Raise up the storage bin door and remove two screws in the louvered front panel. Remove the louvered front panel for access to the service switch.

2. If the ice machine is operating:

   A. Shut off the water supply to the machine.

   B. Gently raise up on the arm of the ice thickness control to release the ice slab from the freezing plate. Discard the ice.

   C. Place the service switch in the "off" position.

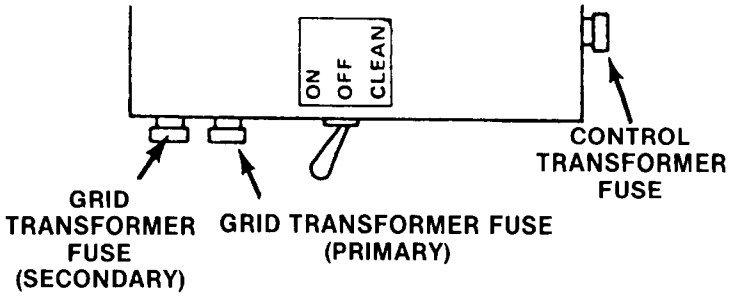

3. If the machine is not operating:

   A. Set service switch to "clean" position. Let the reservoir pan refill.

   B. Shut off the water supply to the machine.

   C. Set service switch to "off" position.

CSW4
CLEANING INSTRUCTIONS

4. Remove all ice from the storage bin and cutter grid. If ice is difficult to remove from the grid, wait until grid is removed from the machine. Then melt the ice with water. Pulling the ice slab off the grid may stretch or break grid wires. A broken wire in the cutter grid will cause the cutter grid to fail.

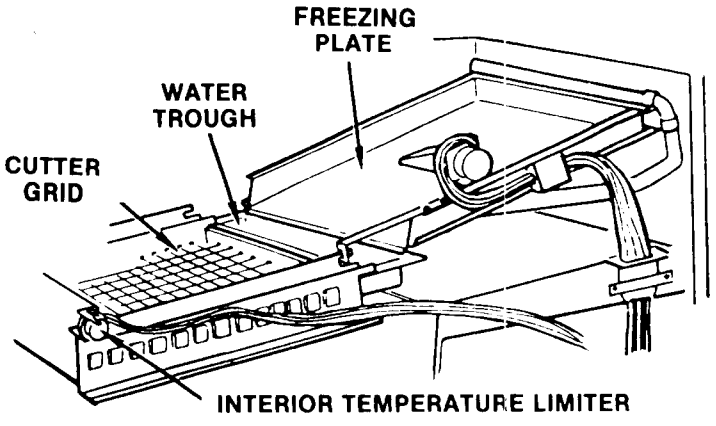

5. Set service switch to "clean" position. Pour hot water into the water trough until the water level is above the lower pump housing. Let water circulate for several minutes to warm up the system. Set service switch to "off." Water will siphon out of the reservoir pan.
6. Set the service switch to "clean." **Slowly** pour the heated cleaning solution (prepared in Step 1) into the water trough until the level in the reservoir pan is above the lower pump housing. If the solution starts to foam, stop pouring until it subsides. Then pour the rest of the solution. Do not overfill or the cleaning solution will siphon out!

Let the solution circulate until the scale on the freezing plate and water system has dissolved (generally about 20 to 30 minutes).

When the system is clean place the service switch in "off" position. The cleaning solution will siphon out.

NOTE: Repeat cleaning with fresh solution if scale deposits have not dissolved in 20 to 30 minutes.

Use a stainless steel sponge or pad dipped in cleaning solution to scrub any scale deposits that remain on side flanges.

CAUTION: Wear rubber gloves to avoid skin irritation.

7. Turn on the water supply to ice maker. Set service switch to "clean." Let fresh water circulate for 10 minutes.
8. Set service switch to "off." Water will siphon to the drain. When the reservoir has filled with water, place the service switch in the "clean" position. Let water circulate for 10 more minutes.
9. Set service switch to "off." Let water siphon out to drain.
10. Remove the ice cutter grid — note that the water trough rests on the top of the grid frame.

    A. Unplug the electrical connection.
    B. Remove the plastic clip retainer which prevents the grid clip from sliding.
    C. Slide the grid clip to the right off the stud on the front support rod.
    D. Lower the grid and remove from the remaining studs.

    If any ice remains on the cutter grid, wash it off with running water. Do not physically pull it off. The grid wires will stretch and fail prematurely.

    E. Soak the entire grid in cleaning solution to soften any scale accumulation. Use a toothbrush and gently clean the connecting pins and grid wires.
11. Remove the water distributor, water trough and water reservoir pan. Wash with warm water and detergent. Rinse with fresh water and with sanitizing solution.

IMPORTANT: Do not wash plastic parts in a dish washer. The extremely high temperature will cause the plastic parts to warp.

12. Remove the vinyl hoses and the plastic cover in the right side of the bin bottom. Wash with warm water and mild detergent, rinse with fresh water and with sanitizing solution.
13. Wash the interior of the ice machine and the ice storage bin with mild detergent and warm water. Rinse with fresh water. Rinse the surfaces with sanitizing solution.

CAUTION: Do not use petroleum based solvents to clean interior surfaces. They can cause damage to the surface.

14. Replace all parts, including the cutter grid.

NOTE: The grid frame must be positioned under the lip of the water trough and connected to the electrical plug.

15. Place service switch in the "on" position to resume ice making operation.
16. Replace cover and unit compartment panel.
17. Replace top and front panel.
18. Wash and sanitize the ice scoop. Provide a clean location for storage. It is not a good idea to leave the scoop in the storage bin.

CSW4
MAINTENANCE AND CLEANING INSTRUCTIONS

FILTERING AND TREATING WATER

In most areas it will be beneficial to filter or treat the water supply to the ice machine to:

- Improve the reliability of the machine; reduce water system maintenance.
- Produce the best quality of ice.

The installation of a polyphosphate feeder will generally reduce scale accumulation and the ice machine will require less frequent cleaning.

Municipal water systems are generally treated with chlorine to maintain a safe potable water supply. Activated carbon filters will sufficiently remove the residual chlorine from the water to reduce surface staining of stainless steel materials in the ice machine.

For information on filtering and treating the water, see your Authorized Ice Machine Dealer.

OILING

All components of the ice maker are permanently lubricated at the factory. They should not require any additional oiling throughout the normal life of the machine.

WINTER SHUT DOWN

If the ice cube maker is to be shut off for several months, remove all ice from the bin. Clean the ice maker as outlined under "Cleaning and Sanitizing the Ice Making System."

Water and drain lines, including the water cooled condenser, must be blown out if the unit will be subjected to freezing temperatures during shutdown. Failure to do so may cause the lines to freeze and rupture. Disconnect electricity to the machine and leave the bin door cracked open to allow air to circulate.

CSW4
OPERATING CHARACTERISTICS

A clean normal operating unit will have certain operating characteristics. The following values are representative of values seen at a wide range of air and water temperatures, and are for a slab thickness of 1/2". When comparing the figures to field data, allow a variation from each end of the range given.

FREEZE CYCLE

	High Ambient	Low Ambient
Average Discharge Pressure		
Air-Cooled	280 PSIG	170 PSIG
Water-Cooled	220 PSIG	220 PSIG
Suction Pressure at the end of the freeze cycle	28 PSIG	15 PSIG
Freeze Cycle Time	37 minutes	20 minutes

AUTOMATIC RESET HIGH PRESSURE CONTROL

Opens at:
- Air-Cooled - 400 PSIG
- Water-Cooled - 320 PSIG

and closes at:
- Air-Cooled - 335 PSIG
- Water-Cooled - 265 PSIG

CSW4
SERVICE DIAGNOSIS

The service diagnosis is for use in aiding the serviceman in diagnosing a particular problem for pin-pointing the area in which the problem lies, thus an ever available reference for proper corrective action.

The following chart lists corrective actions for the causes of known symptoms of certain problems that can occur in the icemaking-refrigeration system.

ICEMAKING - REFRIGERATION SYSTEM

SYMPTOM	POSSIBLE CAUSE	CORRECTION
Compressor won't run; no ice in bin.	Located in cold area.	Move to warmer area (above 55° F.).
	Located in hot area. Power disconnected.	Move to cooler area. Connect power.
	Broken wire or loose connection.	Locate and repair.
	Defective relay.	Replace relay.
	Service switch in "off" position.	Move operating rod to "on" position.
	Low voltage.	Check or restore voltage.
	Bin thermostat contacts open.	Replace bin thermostat.
	Master switch in "clean" position.	Push switch to "on" position.
	Defective compressor overload.	Replace overload.
	Defective compressor motor.	Replace compressor.
Compressor runs; no ice in bin.	Water supply shut off or float valve failure	Restore water supply. Repair or replace float valve.
	Ice thickness control switch stuck closed.	Repair or replace.
	Hot gas solenoid stuck "open".	Repair or replace solenoid.
	Inoperative refrigeration system.	Repair sealed system.
	Excessive use of ice cubes.	Advise customer.
	Cutter grid circuit open.	Check fuse and other parts of circuit.
	Incorrect wiring.	Check against wiring diagram.
Compressor runs continuously; bin full of ice.	Bin thermostat out of calibration.	Recalibrate or replace.
	Bin thermostat contacts stuck shut.	Replace thermostat.
	Incorrect wiring.	Check against wiring diagram.

CSW4
SERVICE DIAGNOSIS

SYMPTOM	POSSIBLE CAUSE	CORRECTION
Low ice yield.	Located in cold area.	Move to warmer area above 55° F. (for best results, 70° to 90°).
	Float set too high.	Lower float.
	Water falling on ice cubes.	Check water system components and see that they are in proper place.
	Bin thermostat out of calibration.	Recalibrate or replace.
	Evaporator ice thickness control set to produce too thin or too thick ice cubes.	Move adjusting screw to setting to produce 1/2" to 5/8" cube.
	Defective Interior Temperature Limiter Control.	Replace control.
	Hot gas solenoid stuck partially open.	Repair or replace solenoid.
	Insufficient refrigeration.	Check and repair sealed system.
	Not enough water being circulated over evaporator plate.	Check for restriction in water lines. Check water pump and motor.
	Located in hot area.	Move to cooler area.
Excessive water dripping on ice cubes.	Sump Water overflowing.	Check overflow tube for restrictions. Overflow hose not inserted in liner drain.
	Water return trough out of position.	Install correctly.
	Water tube from water return trough not in the sump.	Locate tube properly.
	Ice jam on cutter grid causing water to "bridge" and drop in bin.	Check cutter grid circuit. Check for mineral deposit on evaporator plate.
	Water deflector out of position.	Install properly.
	Water line leak at water valve.	Tighten connection to stop leak.
Mineral deposit on evaporator.	High mineral content in water	See cleaning instructions.
Ice cubes too thin.	Evaporator ice thickness control set for thin ice.	Turn thickness adjusting screw clockwise until cube of desired thickness is obtained.
	Not enough water being circulated over evaporator.	Check for restriction in water lines. Check water pump, motor and distributor tube.

CSW4
SERVICE DIAGNOSIS

SYMPTOM	POSSIBLE CAUSE	CORRECTION
Ice cubes too thick.	Evaporator ice thickness control set at or beyond maximum thickness.	Turn thickness adjusting screw counterclockwise until cube of desired thickness is obtained.
Condenser fan won't run during ice-making cycle.	Fan blade binding on shroud.	Adjust shroud to clear fan blade.
	Open circuit in wiring.	Locate and repair (see wiring diagram).
	Fan blade dirty causing it to trip on internal overload.	Clean blade.
	Defective motor.	Replace motor.
Water pump won't run.	Pump binding in housing.	Locate and remove cause of bind.
	Open circuit in wiring.	Locate and repair (see wiring diagram).
	Defective motor.	Replace motor.
Water sump empty.	Complete water line restriction.	Check for closed shut-off valve or water line restrictions.
	Water float valve stuck shut.	Repair or replace valve.
	Water inlet screen plugged.	Remove screen and clean.
Milky ice cubes.	Water hardness in excess of 15 grains.	Advise customer that water softener may be required.
	Insufficient water supply in sump.	Consult local water treatment authorities for advice.
	Foods stored in ice bin.	Advise customer to refrain from storing food, etc. in ice bin.
	Packaging material not all removed.	Remove all packaging material.
Uneven ice slab thickness on evaporator.	Incorrect water flow rate.	Check pump and tubing.
	Incorrect super heat of TXV.	Check expansion valve - see page 29
	Hot gas valve leaks through.	Check hot gas valve.
	Low refrigerant charge.	Check refrigerant charge.

CSW4
ADJUSTMENT PROCEDURES

STORAGE BIN THERMOSTAT

The thermostat sensing bulb is inserted in a tube well for protection. The well extends into the ice storage area. When ice has accumulated and filled the bin, it will touch the well. The cold temperature will be felt by the sensing tube inside the well. This will cause the thermostat to be satisfied and open the circuit to the ice-making components. The thermostat opens or cuts out at 36°F. and recloses at or cuts in at about 42°F. You can test it by holding a handfull of ice against the well. In a short time the thermostat should open and shut off the unit.

The thermostat is factory calibrated for sea level operation.

Recalibration of this thermostat is unnecessary unless the ice cuber is located in an area above 2000 feet above sea level.

CAUTION: Whenever the control setting is changed to a colder position, be sure that the unit will cycle off by holding some ice against the thermostat well. Failure to do so can cause damage to the unit.

ICE SLAB "THICKNESS" ADJUSTMENT

Increase the thickness of the slab by turning the evaporator thermostat adjusting screw clockwise. The thickness may be reduced by turning the adjusting screw counterclockwise.

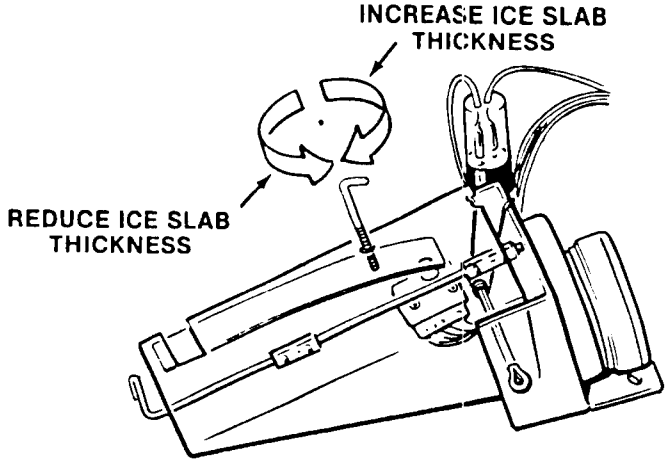

Ice Slab "Thickness" Adjustment

ADJUSTMENT OF THE FLOAT VALVE ASSEMBLY

To adjust the water level in the reservoir.

1. Loosen the wing nuts which attach the float valve bracket and the float valve to the chassis.
2. Move the float valve UP or DOWN to properly position the float valve at the correct water line level. The proper water level is just below the top of the overflow standpipe, 2-1/4" depth water.
3. When proper water level within the reservoir is adjusted, re-tighten screws attaching the float valve bracket to the chassis.

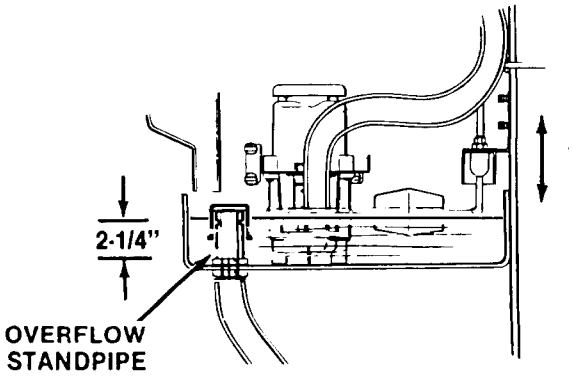

Float Valve Assembly Adjustment

REMOVAL AND REPLACEMENT PROCEDURES

REMOVAL AND REPLACEMENT OF THE CUTTER GRID

Low line voltage or a poor electrical connection at one of the pins connecting the cutter wires will slow down the cutting process and result in the next ice slab being formed before the first slab is completely cut into cubes. Fustats are in the low voltage circuit to the grid. Check the fuses on any cutting problem.

The heat input of the cutter grid is so designed that the ice slab will cut through in 80% of the time required to produce another slab of the same thickness.

Prolonged usage of improper service techniques may cause a cutter wire to break. In addition, certain types of water may cause the silver plated pins to become coated with lime, scale or corrosion. This results in a poor electrical connection.

The entire set of wires in the cutter grid should be replaced whenever failure occurs. Partial replacement is no more than an invitation to a repeat service call. Always examine insulators for cracks and connecting pins for corrosion and scale. Make sure spring clips exert proper tension on the cutter wire.

////////////////////// **WARNING** //////////////////////

Be sure the electrical power supply to the icemaker is OFF before proceeding with the removal procedures.

//

If any ice remains on the cutter grid, wash it off with running water. Do not physically pull it off. The grid wires will stretch and fail prematurely.

1. Disconnect the electrical supply to the icemaker at the circuit breaker or fuse box.
2. Close the inlet water valve to the icemaker.
3. Remove screws and remove the front & top panels.

   Lift up on the top panel and pull forward to release the rear retainer brackets.

   Raise up the ice access bin door and remove screws and remove the louvered front panel.
4. Remove the ice cutter grid - note that the water trough rests on the top of the grid frame.

   A. Unplug the electrical connection.

   B. Remove the plastic clip retainer which prevents the grid clip from sliding.

   C. Slide the grid clip to the right off the stud on the front support rod.

   D. Lower the grid and remove from the remaining studs.

CUTTER GRID WIRES

To replace cutter wires use tool No. 12913. Use of this tool allows the spring clips to be compressed without deforming and loss of tension, and reduces the time required to replace all the wires in the grid assembly.

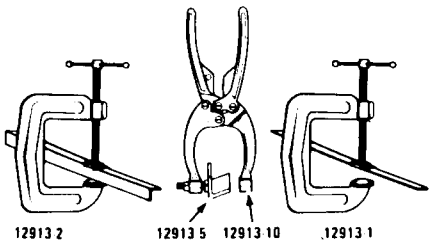

CUTTER GRID WIRE REPLACEMENT TOOL
ROBINAIR PART 12913 (COMPLETE)

1. Mark the location of the terminals where the grid harness connects. Also mark which set of wires the silver plated pins connect. The fastest way to remove the old wires is to cut each individual wire.
2. Insert the new wires into the side having insulators only and position the silver plated connecting pins. After these are all in position, clamp tool No. 12913-1 over these wires to keep them securely in their proper location.

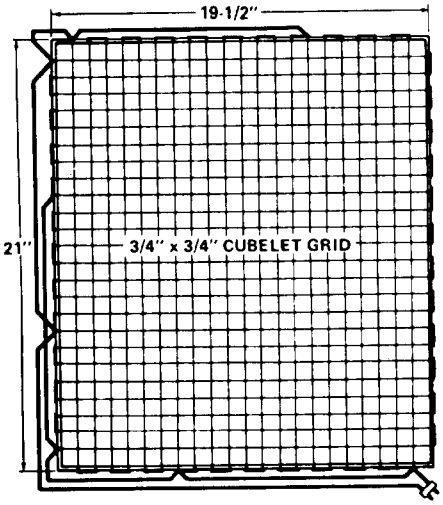

REMOVAL AND REPLACEMENT PROCEDURES

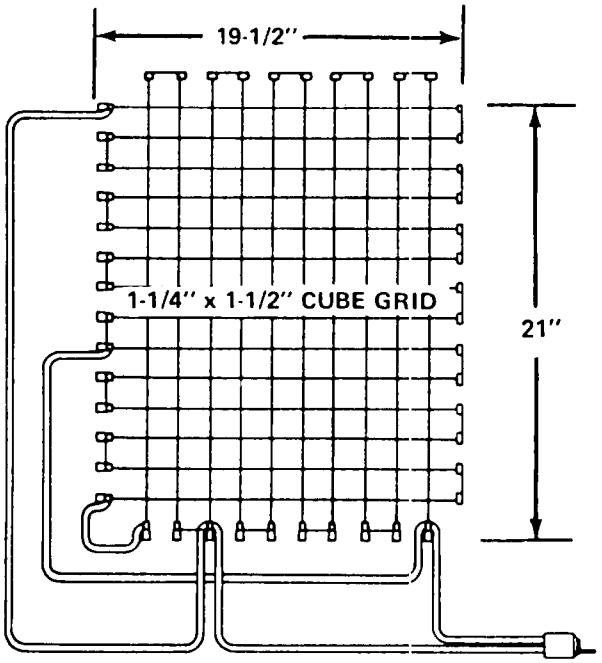

3. Turn the grid assembly over to the opposite side and place all insulators and spring clips in position. Clamp tool No. 12913-2 over the radius end of the spring clip. NOTE: This tool keeps the spring clip and insulator in position while depressing the clip with tool No. 12913-10.
4. Using tool No. 12913-10, depress two spring clips at a time and insert the connecting pins through the loops on the end of the grid wire. NOTE: At the same time reconnect the grid wire harness at the proper terminals. If any doubt exists as to the proper location of the harness connection or pin location, refer to Wiring Diagrams.
5. Be sure all wires have proper tension when the clips are released, as a loose wire will give a poor electrical circuit. When reusing old connecting pins, make sure the silver plating is in good condition and not corroded, as this also causes a poor electrical circuit.

To replace the cutter grid and the wire, reverse the removal procedure.

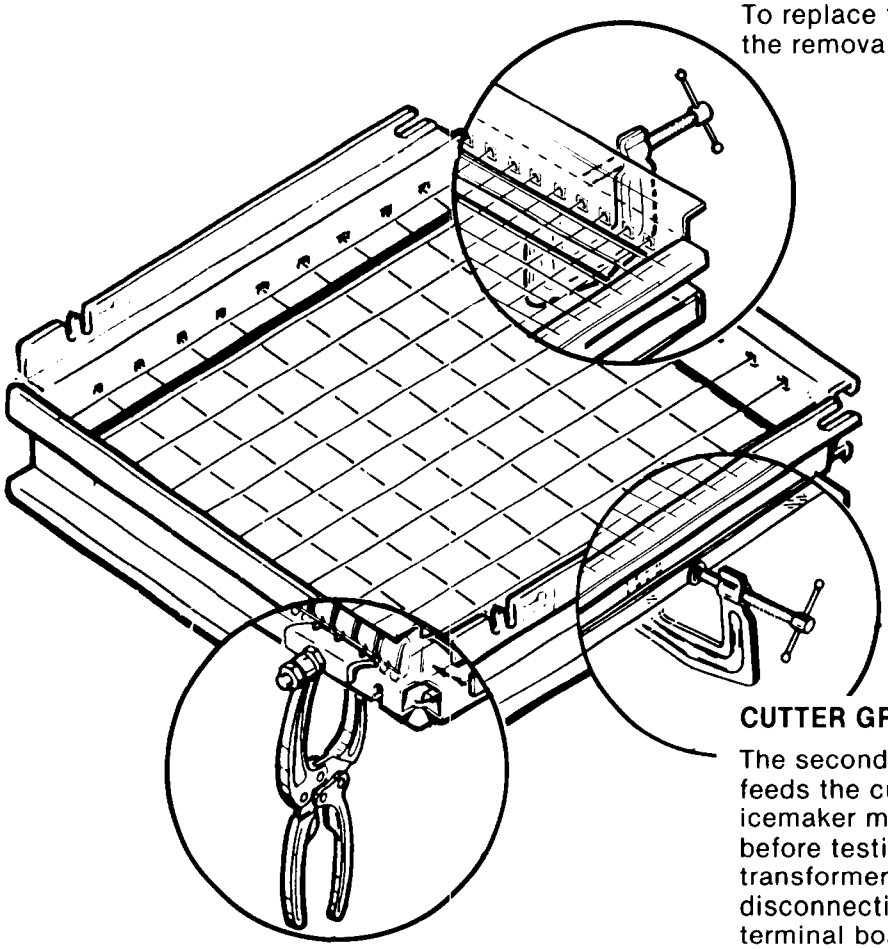

CUTTER GRID TRANSFORMER

The secondary side of the transformer which feeds the cutter grid is fused with a Fustat. The icemaker must be electrically disconnected before testing. The primary coil of the transformer may be checked for continuity by disconnecting the respective leads from the terminal board.

The secondary transformer voltage varies from model to model. Typical voltages are:

Model CSW4 Volt Output 20.0 VAC

CSW4
REMOVAL AND REPLACEMENT PROCEDURES

REMOVAL AND REPLACEMENT OF THE EVAPORATOR

Deep depressions, or a pitted or scaled plate, will cause problems with the release of ice slab during the defrost or release cycle. Scale that has formed due to impurities in the water can be cleaned. (See section on Cleaning the Water System.) However, a pitted plate, or one that has depressions caused by some foreign object striking the surface, may require replacement to alleviate the above condition.

////////////////////// **WARNING** //////////////////////

Be sure the electrical power supply to the icemaker is OFF before proceeding with the removal procedures.

//

1. Disconnect the electrical supply to the icemaker at the circuit breaker or fuse box.
2. Close the inlet water valve to the icemaker.
3. Remove screws and remove the top front panel.

   Lift up the top panel and pull forward to release the rear retainer brackets.
4. Remove cutter grid. See Cutter Grid removal procedures.
5. Lift up and remove water trough.
6. Remove two wing nuts and remove water distributor by lifting up and unplugging water supply tubing.
7. Bleed off or blow the refrigerant charge through the Process valve.

NOTE: Solder used to connect the tubing to the evaporator is a soft solder and has a low melting point.

8. Loosen the evaporator from the evaporator mount and unsolder the tubing connected to the evaporator.
9. Dismount the expansion valve sensing bulb from the suction line.
10. Carefully unsolder the valve from the connecting tubing. Use a heat shield to avoid overheating the storage bin and the valve.

To replace the evaporator, reverse the removal procedure.

REMOVAL AND REPLACEMENT OF THE ICE THICKNESS CONTROL

The thickness sensing control affects the length of the freezing cycle. The thickness control closes its contacts when the ice slab reaches a preset thickness. A variation in either ambient air or incoming water temperature will affect the efficiency of the refrigeration system. This will vary the length of time it takes the ice slab to reach the thickness at which the thickness control is preset to CLOSE: which, in turn, will affect the overall cycle time.

See thickness control adjustment BEFORE attempting to adjust the control.

////////////////////// **WARNING** //////////////////////

Be sure the electrical power supply to the icemaker is OFF before proceeding with the removal procedures.

//

1. Disconnect the electrical supply to the icemaker at the circuit breaker or fuse box.
2. Close the inlet water valve to the icemaker.
3. Remove screws and remove the top front panel.

   Lift up the top panel and pull forward to release the rear retainer brackets.
4. Remove hex acorn nuts and lift the Ice Thickness Control.
5. Disconnect electrical leads from the Thickness Control and remove the control.

To replace the Ice Thickness Control, reverse the removal procedure.

REMOVAL AND REPLACEMENT OF THE WATER REGULATOR VALVE ASSEMBLY — WATER-COOLED MODELS

To remove the water regulator assembly refer to slide out chassis procedure and complete all steps.

1. Close the inlet water valve to the icemaker.
2. Bleed off or blow the refrigerant charge through the Process valve.
3. Unsolder the water regulator valve capillary tube from the discharge line.
4. Disconnect the water inlet and outlet lines from the water regulator valve.
5. Remove the screws from the valve bracket to the machine base and remove the water regulator valve.
6. To replace the water regulator assembly, reverse the removal procedure.

REMOVAL AND REPLACEMENT PROCEDURES

NOTE

Always install a replacement drier, anytime the sealed refrigeration system is opened. Do not replace the drier until all other repair or replacement has been completed.

NOTE

Thoroughly evacuate the system to remove moisture and non-condensables.

7. Refer to name plate specifications and recharge refrigeration system by weight.

REMOVAL AND REPLACEMENT OF THE WATER DISTRIBUTOR

////////////////////// **WARNING** //////////////////////

Be sure the electrical power supply to the icemaker is OFF before proceeding with the removal procedures.

//

1. Disconnect the electrical supply to the icemaker at the circuit breaker of fuse box.
2. Close the inlet water valve to the icemaker.
3. Remove screws and remove the top front panel.

   Lift up the top panel and pull forward to release the rear retainer bracket.
4. Remove two wing nuts and remove water distributor by lifting up and unplugging water supply tubing.

To replace the water distributor, reverse the removal procedure.

REMOVAL AND REPLACEMENT OF THE BIN THERMOSTAT CONTROL

To remove the bin thermostat control:

1. Remove the screws from the front panel and lift and remove panel.
2. Remove screws on the control box cover and remove control box cover.
3. Remove the bin thermostat capillary tube from the bin thermostat well.
4. Remove screws and the bin thermostat control from the control box.
5. Remove electrical leads.

To replace the bin thermostat control, reverse the removal procedure.

REMOVAL AND REPLACEMENT OF THE FLOAT VALVE ASSEMBLY

////////////////////// **WARNING** //////////////////////

Be sure the electrical power supply to the icemaker is OFF before proceeding with the removal procedures.

//

1. Disconnect the electrical supply to the icemaker at the circuit breaker or fuse box.
2. Close the inlet water valve to the icemaker.
3. Remove screws and remove the top front panel.

   Lift up on the top panel and pull forward to release the rear retainer brackets.
4. Disconnect water inlet line from float valve assembly.
5. Remove two thumbscrews from water valve and remove valve.

To replace the Float Valve Assembly, reverse the removal procedures.

To adjust the water level in the reservoir.

1. Loosen the wing nuts which attach the float valve bracket and the float valve to the chassis.
2. Move the float valve UP or DOWN to properly position the float valve at the correct water line level. The proper water level is just below the top of the overflow standpipe, 2-1/4" depth water.
3. When proper water level within the reservoir is adjusted, re-tighten screws attaching the float valve bracket to the chassis.

EXPANSION VALVE REPLACEMENT

The expansion valve performs one very simple function - it supplies the evaporator the right amount of refrigerant under all load conditions.

The remote bulb senses the temperature of the refrigerant in the coil outlet of the evaporator. It varies the amount of refrigerant fed through the valve. This will maintain a 3 degree F. to 10 degree F. temperature difference between the inlet and outlet of the evaporator. This temperature difference is referred to as "superheat".

Moisture in the system, an incorrect charge of refrigerant or improper position or loose bulb can cause symptoms which may appear as a malfunctioning expansion valve. Eliminate these possibilities before assuming the valve needs replacing.

In evaluating the performance of the valve:

A. It must bleed enough refrigerant to the evaporator plate so that an even slab is formed. A hollow or shallow spot in the center of the ice slab may indicate that not enough refrigerant is getting to the evaporator.
   1. Expansion valve with a high superheat setting.
   2. Moisture freezing in valve orifice, causing a partial restriction.
   3. Partially restricted valve (foreign material).
   4. Improper positioned valve sensing bulb.

B. The valve must prevent liquid refrigerant from proceeding past the remote bulb of the valve. It can do this by modulating toward the closed position as its bulb senses the cold refrigerant.

C. The valve will modulate to keep suction pressure fairly steady during the freeze cycle. Fluctuating suction pressure during the cycle indicates the valve is "hunting". Abnormal fluctuation can cause the freeze cycle to be longer than normal. It is often caused by the improper mounting of the sensing bulb. Mount it on the side of the suction line.

////////////////////// **WARNING** //////////////////////

Be sure the electrical power supply to the icemaker is OFF before proceeding with the removal procedures.

//

1. Disconnect the electrical supply to the icemaker at the circuit breaker or fuse box.
2. Close the inlet water valve to the icemaker.
3. Remove screws and remove the top front panel.

   Lift up on the top panel and pull forward to release the rear retainer brackets.
4. Dismount the expansion valve sensing bulb from the suction line.
5. Blow or bleed off refrigerant charge at the process valve.

NOTE: Solder used to connect the tubing to the valve is a soft solder and has a low melting point.

6. Carefully unsolder the valve from the connecting tubing. Use a heat shield to avoid overheating the assemblies in or next to the valve.

NOTE

Always install a replacement drier, anytime the sealed refrigeration system is opened. Do not replace the drier until all other repair or replacement has been completed.

To replace the Expansion valve, reverse the removal procedures.

CSW4
REMOVAL AND REPLACEMENT PROCEDURES

SLIDE-OUT CHASSIS PROCEDURE

WARNING

Be sure the electrical power supply to the icemaker is OFF before proceeding with the removal procedures.

1. Disconnect the electrical supply to the icemaker at the circuit breaker or fuse box.
2. Close the inlet water valve to the icemaker.
3. Remove two screws and remove the ice access door.
4. Remove two screws and lift up and pull out to remove the front louvered panel.
5. Blow or bleed off refrigerant charge at the process valve.
6. Unsolder line connected to the hot gas valve.
7. Unsolder line connected to the drier.
8. Unsolder the suction line at the joint above the process valve.
9. Remove control box cover and disconnect the inline electrical connections.
10. Remove the screw below the control box, which fastens the control box to the retainer wall of the chassis.
11. Carefully pull the bin thermostat capillary tube from the bin thermostat bracket.
12. Remove the screw at the front of the slide-out chassis.
13. Pull forward on the slide-out chassis and remove the slide-out chassis and the control box from the unit.
14. To replace the Slide-Out Chassis, reverse the removal procedure.

NOTE

Always install a replacement drier, anytime the sealed refrigeration system is opened. Do not replace the drier until all other repair or replacement has been completed.

NOTE

Thoroughly evacuate the system to remove moisture and non-condensables.

15. Charge the ice machine with the nameplate refrigerant charge.

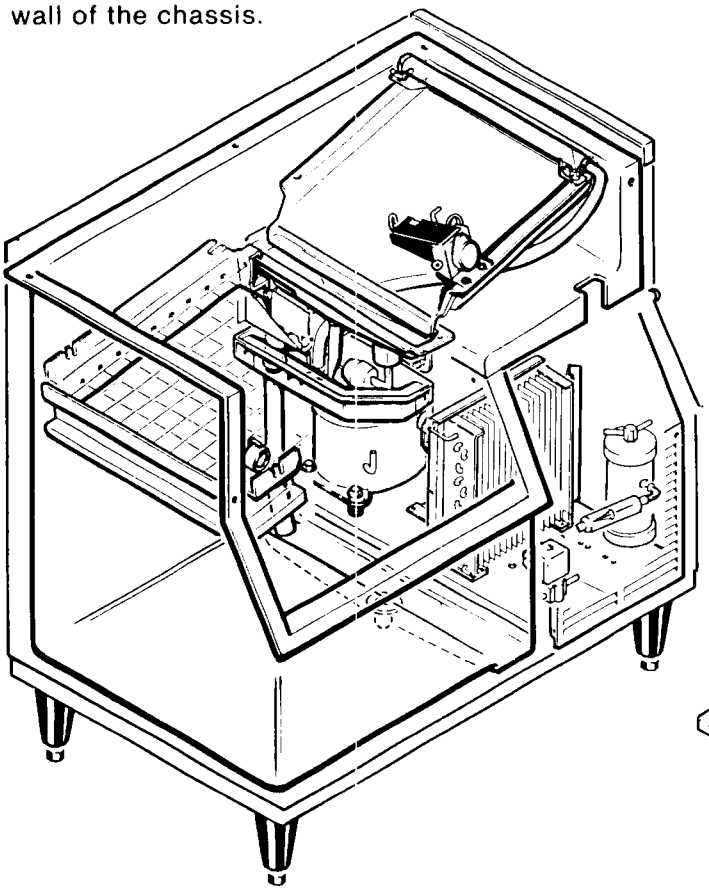

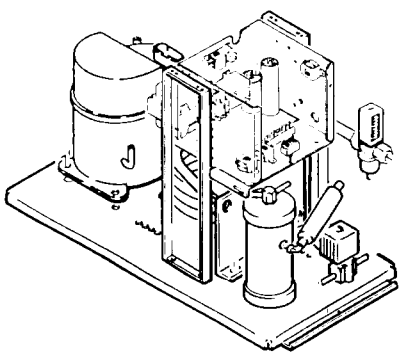

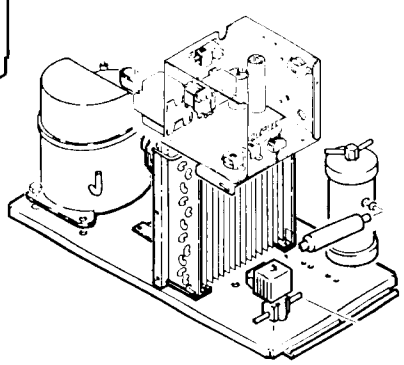

REMOVAL AND REPLACEMENT PROCEDURES

REMOVAL AND REPLACEMENT OF THE DRIER

////////////////////// WARNING //////////////////////

Be sure the electrical power supply to the icemaker is OFF before proceeding with the removal procedures.

//

1. Disconnect the electrical supply to the icemaker at the circuit breaker or fuse box.
2. Close the inlet water valve to the icemaker.
3. Remove two screws and front louvered panel assembly.
4. Bleed off or blow the refrigerant charge through the process valve.
5. Cut the refrigerant lines at both ends of the drier, and remove the drier.

Always install a replacement drier, anytime the sealed refrigeration system is opened. Do not replace the drier until all other repair or replacement has been completed.

To replace the drier:

CAUTION

If the factory seal is broken on the replacement drier, exposing it to the atmosphere more than a few minutes, the drier will absorb moisture from the atmosphere and lose substantial ability for moisture removal.

Be sure the replacement drier is installed with the arrow positioned in the direction of the refrigerant flow.

1. Remove the factory seals from the replacement drier and install the drier in the refrigerant lines with the arrow positioned in the direction of the refrigerant flow.
2. Solder the drier into the lines, two places, taking precautions to NOT OVERHEAT the drier body, during installation soldering.
3. Purge the system and check for leaks.
4. Thoroughly evacuate the system to remove moisture and non-condensables.
5. Charge the system with refrigerant, by weight. SEE NAMEPLATE.

REMOVAL AND REPLACEMENT OF THE COMPRESSOR ASSEMBLY

COMPRESSOR (CHECKING)

A. Voltage must be within 10% of rated voltage at compressor terminals during starting phase.
B. Use an ohm meter to check the windings.
C. Connect starting cord to compressor. If compressor does not start and an audible "hum" heard, compressor is "stuck" and should be replaced.
D. If compressor starts, check for loose wiring, defective relay, bin thermostat, pressure control, capacitor, overload.

To remove compressor refer to SLIDE-OUT CHASSIS PROCEDURE and remove chassis from cabinet.

1. Disconnect the electrical leads connected to the compressor.
2. Unsolder the suction line and discharge line from the compressor.
3. Remove four bolts, lockwashers and washers which secure the compressor to the chassis mounting base.
4. Remove the compressor from the chassis.

NOTE

Always install a replacement drier, anytime the sealed refrigeration system is opened. Do not replace the drier until all other repair or replacement has been completed.

NOTE

Thoroughly evacuate the system to remove moisture and non-condensables.

6. When recharging the system with refrigerant, always check the nameplate for the specified refrigerant charge.

To replace the compressor assembly, reverse the removal procedure.

REMOVAL AND REPLACEMENT OF THE CONDENSER — AIR-COOLED MODELS

1. Refer to the Slide-Out Chassis procedure and remove the chassis from the cabinet.
2. Unsolder and disconnect refrigerant lines from the condenser.
3. Cut and remove the drier from the refrigerant lines connecting to the condenser.

4. Remove screws, lockwashers and the condenser from the chassis base.

Always install a replacement drier, anytime the sealed refrigeration system is opened. Do not replace the drier until all other repair or replacement has been completed.

To replace the air-cooled condenser, reverse the removal procedure.

REMOVAL AND REPLACEMENT OF THE CONDENSER — WATER-COOLED MODELS

1. Refer to the Slide-Out Chassis procedure and remove the chassis from the cabinet.
2. Unsolder the refrigerant lines at the water-cooled condenser.
3. Unsolder the water lines at the water-cooled condenser.
4. Remove two screws and washers and the water-cooled condenser from the cabinet.

Always install a replacement drier, anytime the sealed refrigeration system is opened. Do not replace the drier until all other repair or replacement has been completed.

To replace the water-cooled condenser, reverse the removal procedures.

REMOVAL AND REPLACEMENT OF THE WATER PUMP

1. Disconnect electrical power to the cuber.
2. Close the inlet water valve to the icemaker.
3. Remove screws and remove the top front panel.

   Lift up on the top panel and pull forward to release the rear retainer brackets.
4. Remove the cutter grid and water trough.
5. Remove (2) thumb screws and remove sump assembly.
6. Remove (3) hex nuts and the pump and motor assembly from the liner. Removal of the water pump unplugs the pump from the wiring harness.

To replace the water pump, reverse removal procedures.

REMOVAL AND REPLACEMENT OF THE HIGH PRESSURE SAFETY CONTROL (WATER-COOLED MODELS)

////////////////////// **WARNING** //////////////////////

Be sure the electrical power supply to the icemaker is OFF before proceeding with the removal procedures.

//

1. Disconnect the electrical supply to the icemaker at the circuit breaker or fuse box.
2. Close the inlet water valve to the icemaker.
3. Remove two screws and remove the front louvered panel.
4. Remove screws and remove the control box cover.
5. Bleed off or blow the refrigerant charge at the process valve.
6. Disconnect the electrical leads connected to the High Pressure Safety Control.
7. Remove screws and remove the High Pressure Safety Control from the control box.
8. Unsolder the High Pressure Safety Control tubing and remove the control.

NOTE

Always install a replacement drier, anytime the sealed refrigeration system is opened. Do not replace the drier until all other repair or replacement has been completed.

NOTE

Thoroughly evacuate the system to remove moisture and non-condensables.

To replace the High Pressure Safety Control, reverse the removal procedure.

REMOVAL AND REPLACEMENT PROCEDURES

REMOVAL AND REPLACEMENT OF THE HOT GAS HARVEST SOLENOID COIL

WARNING

Be sure the electrical power supply to the icemaker is OFF before proceeding with the removal procedures.

1. Disconnect the electrical supply to the icemaker at the circuit breaker or fuse box.
2. Close the inlet water valve to the icemaker.
3. Remove two screws and front lower panel.
4. Remove screws and the control box cover.
5. Unplug electrical leads connected to the coil.
6. Unsnap clamp from the top of the coil and remove the coil from the valve.

To replace the Hot Gas Harvest Solenoid Coil, reverse the removal procedure.

REMOVAL AND REPLACEMENT OF THE HOT GAS HARVEST VALVE

WARNING

Be sure the electrical power supply to the icemaker is OFF before proceeding with the removal procedures.

1. Disconnect the electical supply to the icemaker at the circuit breaker or fuse box.
2. Close the inlet water valve to the icemaker.
3. Remove two screws and right front panel.
4. Remove screws and the control box cover.
5. Unplug electrical leads connected to the coil.
6. Remove screws and remove the valve body from the slide out chassis.
7. Unsnap clamp from the top of the coil and remove the coil from the valve.
8. Bleed off or blow refrigerant charge through the process valve.
9. Unsolder the tubing connections to valve and remove the valve.

NOTE

Always install a replacement drier, anytime the sealed refrigeration system is opened. Do not replace the drier until all other repair or replacement has been completed.

NOTE

Thoroughly evacuate the system to remove moisture and non-condensables.

To replace the Hot Gas Harvest, reverse removal procedures.

REMOVAL AND REPLACEMENT OF THE RECEIVER

1. Refer to the Slide-Out Chassis procedure and perform steps to remove the chassis.
2. Unsolder all refrigerant lines connected to the receiver.
3. Unbolt and remove receiver from the chassis.

NOTE

Always install a replacement drier, anytime the sealed refrigeration system is opened. Do not replace the drier until all other repair or replacement has been completed.

NOTE

Thoroughly evacuate the system to remove moisture and non-condensables.

To replace the receiver, reverse the removal procedures.

REMOVAL AND REPLACEMENT OF THE FAN MOTOR ASSEMBLY — AIR-COOLED MODELS

WARNING

Be sure the electrical power supply to the icemaker is OFF before proceeding with the removal procedures.

NOTE

Before beginning this procedure, observe the fan blade position on the shaft of the fan motor and mark the fan blade so it will be correctly positioned during reassembly. Direction of air flow should be toward the fan motor.

To remove the fan motor assembly:

1. Disconnect the electrical supply to the icemaker at the circuit breaker or fuse box.
2. Remove screws and remove the top front panel.

   Lift up on the top panel and pull forward to release the rear retainer brackets.

   Raise up the ice access bin door and remove screws and remove the louvered front panel.
3. Disconnect the electrical lead from the fan motor.
4. Remove two screws securing the motor bracket to the chassis base and remove the fan motor and motor bracket from the chassis.
5. Remove the nut from the end of the fan motor shaft and remove the fan blade.
6. Remove four screws securing the fan motor to the motor bracket and separate the motor from the bracket.

To replace the fan motor assembly, reverse the removal procedure.

THE PARTS ILLUSTRATIONS AND PARTS LISTS

GENERAL

This section contains the Parts Illustrations and the Parts List for each of the major assemblies in the Model CSW4 Self-Contained Cuber.

A *No Number* designation, when used in the Part Number Column indicates the unit is not available from SCOTSMAN as an assembly. This designation is used only for the convenience and clarity of division in cataloging.

HOW TO ORDER PARTS OR ASSEMBLIES

When ordering parts or assemblies, to avoid costly delays and errors in shipment, g ve the part number, the complete description shown in the list, and the quantities of each part or assembly required. Also include the Model name, the serial number of the icemaker for which the part is required, and for parts which require color matching, the color of the Cabinet.

All Part Numbers have TEN DIGITS (spaces), required for use in the Computer System. BE SURE to fill in ALL SPACES in the CATALOG NUMBER column, on the Parts Order form.

Enter the QUANTITY of the Parts ordered, in the last digit column under the QUANTITY column heading, the one under the small 55 number, for parts from 1 thru 9. For 10 or more parts use two columns.

To be sure you receive the proper parts in the proper quantities, ALWAYS use the PART NUMBERS and DESCRIPTIONS given in the Parts Manuals.

Write an order for the Part. (Use SCOTSMAN Parts Order Form (DN103). Be sure to include:

- ☐ Distributor Name.
- ☐ (Use for DROP-SHIP order ONLY.)
- ☐ Distributor Purchase Order Number.
- ☐ Carrier.
- ☐ How shipped (Truck, Rail, UPS, etc.)
- ☐ Date ordered.
- ☐ Part Catalog Number. (Use full TEN digits (spaces) listed in Parts Manual, including dashes between numbers.)
- ☐ Description - as listed in Parts Manual.
- ☐ Quantity - number of parts ordered. (Use far right column.)

WIRING DIAGRAMS

This section is provided as an aid in understanding the electrical circuitry of the Self-Contained Cuber.

WARNING

When conducting a continuity check of the modular cuber:

1. **Disconnect the main power source.**
2. **DO NOT use an incandescent lamp or jumper wire, conduct all tests with a volt-ohm-meter.**

The wiring diagram in this Section is:

CSW4AE-1A 115/60/1 - Air Cooled
CSW4WE-1A 115/60/1 - Water-Cooled

CSW4
THE PARTS ILLUSTRATION AND PARTS LISTS

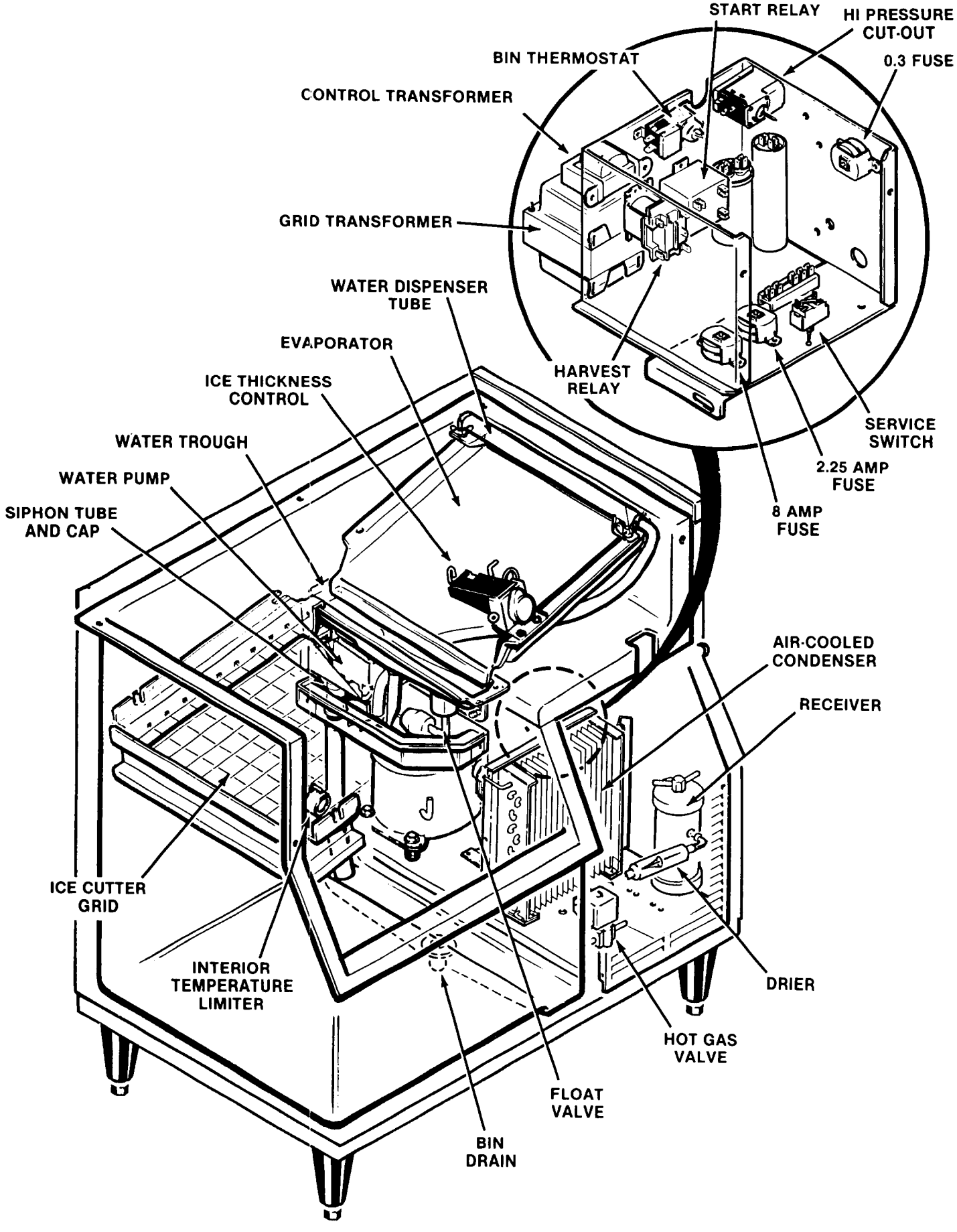

CSW4
THE PARTS ILLUSTRATION AND PARTS LISTS

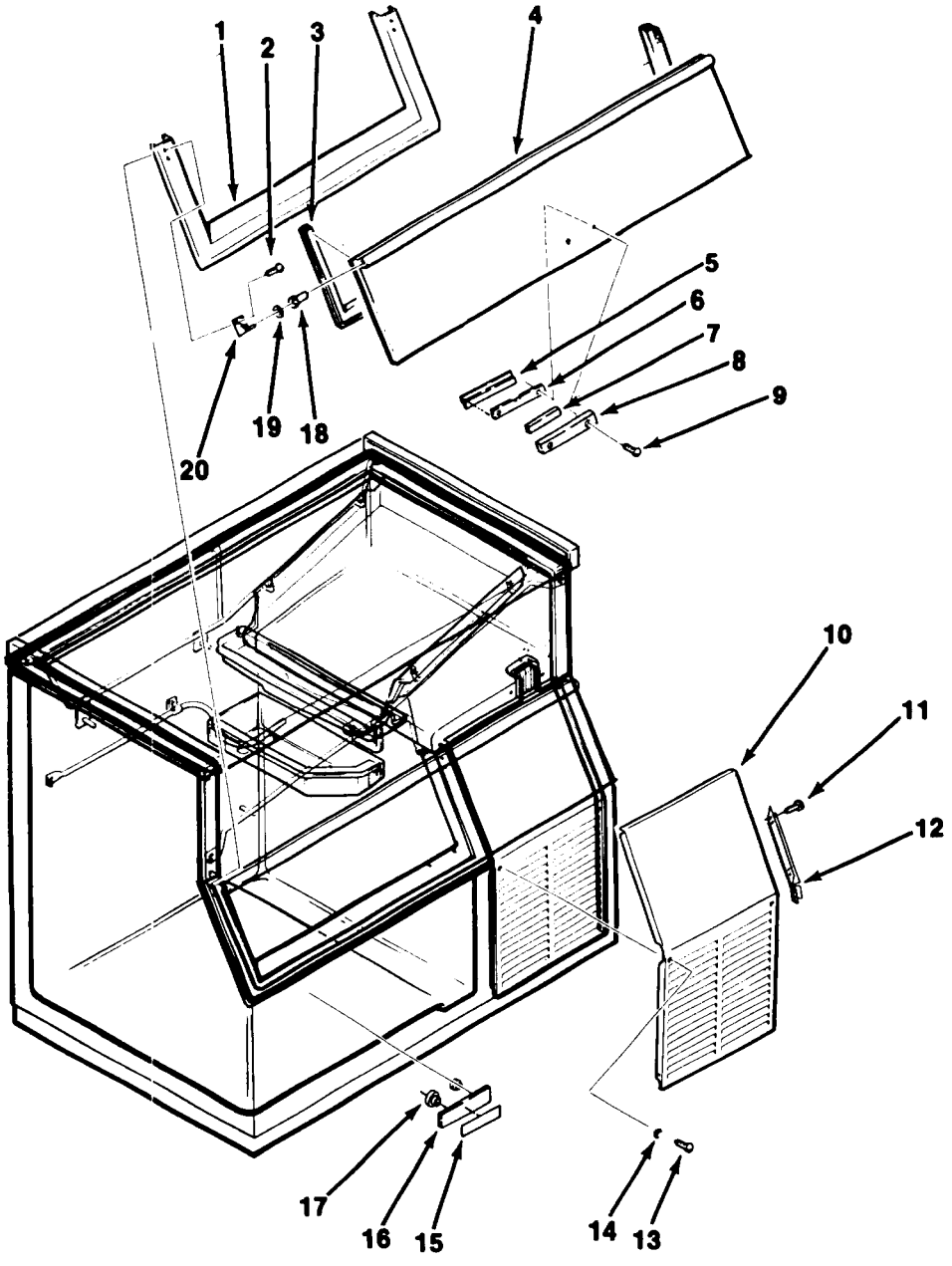

CABINET ASSEMBLY

ITEM NUMBER	PART NUMBER	DESCRIPTION
1	0756126	Collar Assembly
2	0681612	Screw, No. 8 Truss
3	0756061	Panel Gasket
4	0780027	Ice Access Door Complete, Enamel
5	0587640	Backing Plate
6	0755099	Tap Plate
7	0512312	Magnet
8	0780025	Cover, Magnet Enamel
9	0681567	Screw, No. 6 x 1-2/4
10	0756161	Front Grill, Enamel
11	0595431	Screw, 8-15 x 3/8
12	0757458	Grill Support
13	0681615	Screw, No. 10 Pan
14	0681039	Lockwasher
15	0780003	Escutcheon Insert
16	0837577	Escutcheon Nameplate
17	0654067	Sealing Clip, Large
	0654068	Sealing Clip, Small
18	0756129	Door Bearing
19	0681610	Nylon Washer
20	0756134	Door Hinge (2)

CSW4
THE PARTS ILLUSTRATION AND PARTS LISTS

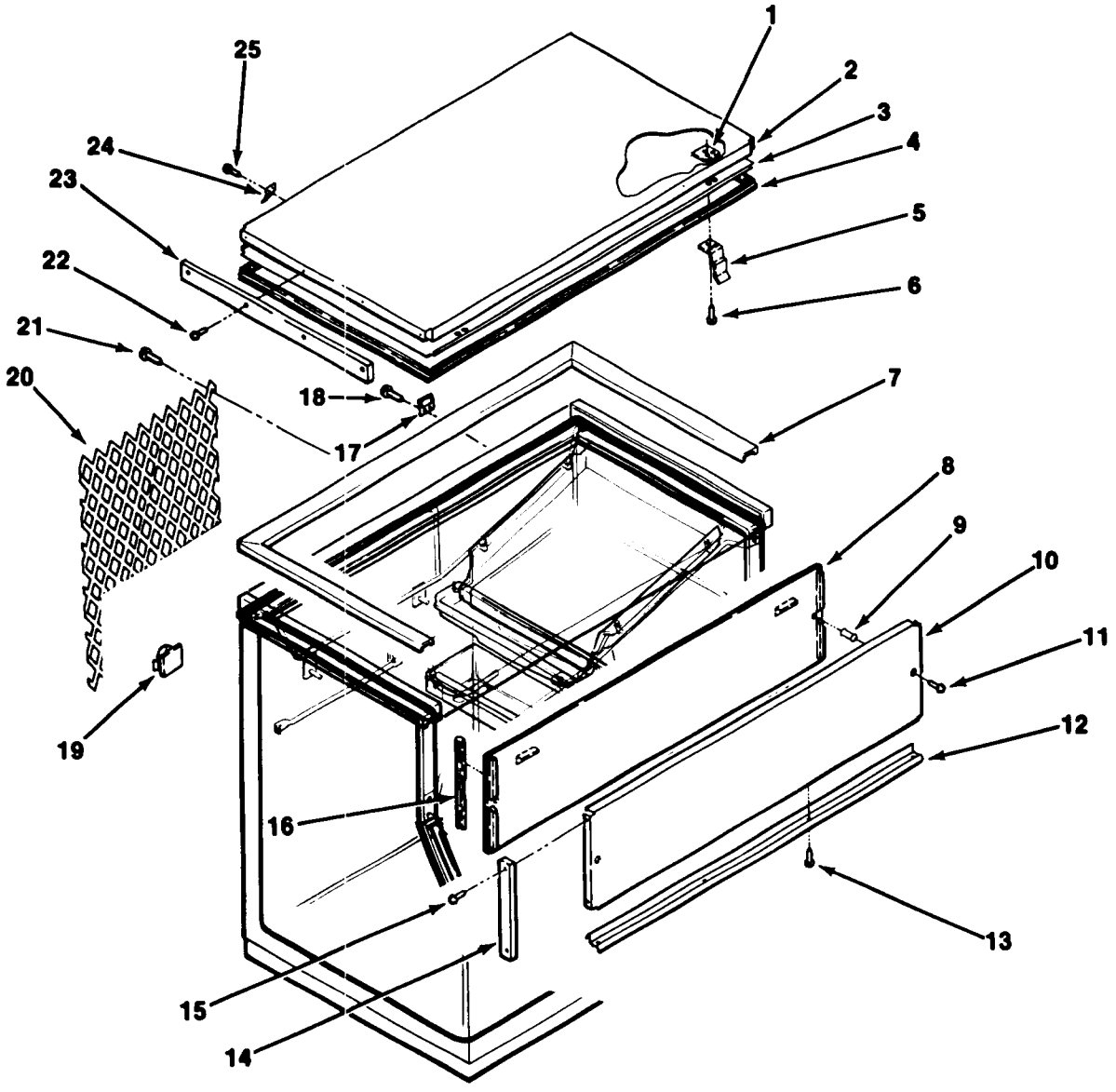

CABINET ASSEMBLY

ITEM NUMBER	PART NUMBER	DESCRIPTION
1	0756089	Top Cover Plate, Magnet
2	0756267	Bin Top, Enamel
3	0751439	Inner Panel
4	0751440	Bin Top Gasket
5	0751523	Bracket, Locking Top
6	0681087	Screw (10)
7	0780013	Collar, Enamel
8	0756777	Interior Panel
9	0755795	Panel Sleeve (2)
10	0755059	Outer Panel, Enamel
11	0681581	Screw
12	0756162	Front Panel Shield, Enamel
13	0681347	Screw
14	0780021	Cap End, Enamel (2)
15	0681148	Screw
16	0756221	Panel, Gasket
17	0585227	Rear Hinge
18	0681528	Screw, 10-32 x 1/2
19	0596744	Wire Retainer
20	0756191	Rear Grill
21	0681410	Screw (18)
22	0681148	Screw (8)
23	0780020	Cap, End, Enamel (2)
24	0585563	Top Hinge
25	0681528	Screw, 10-32 x 1/2

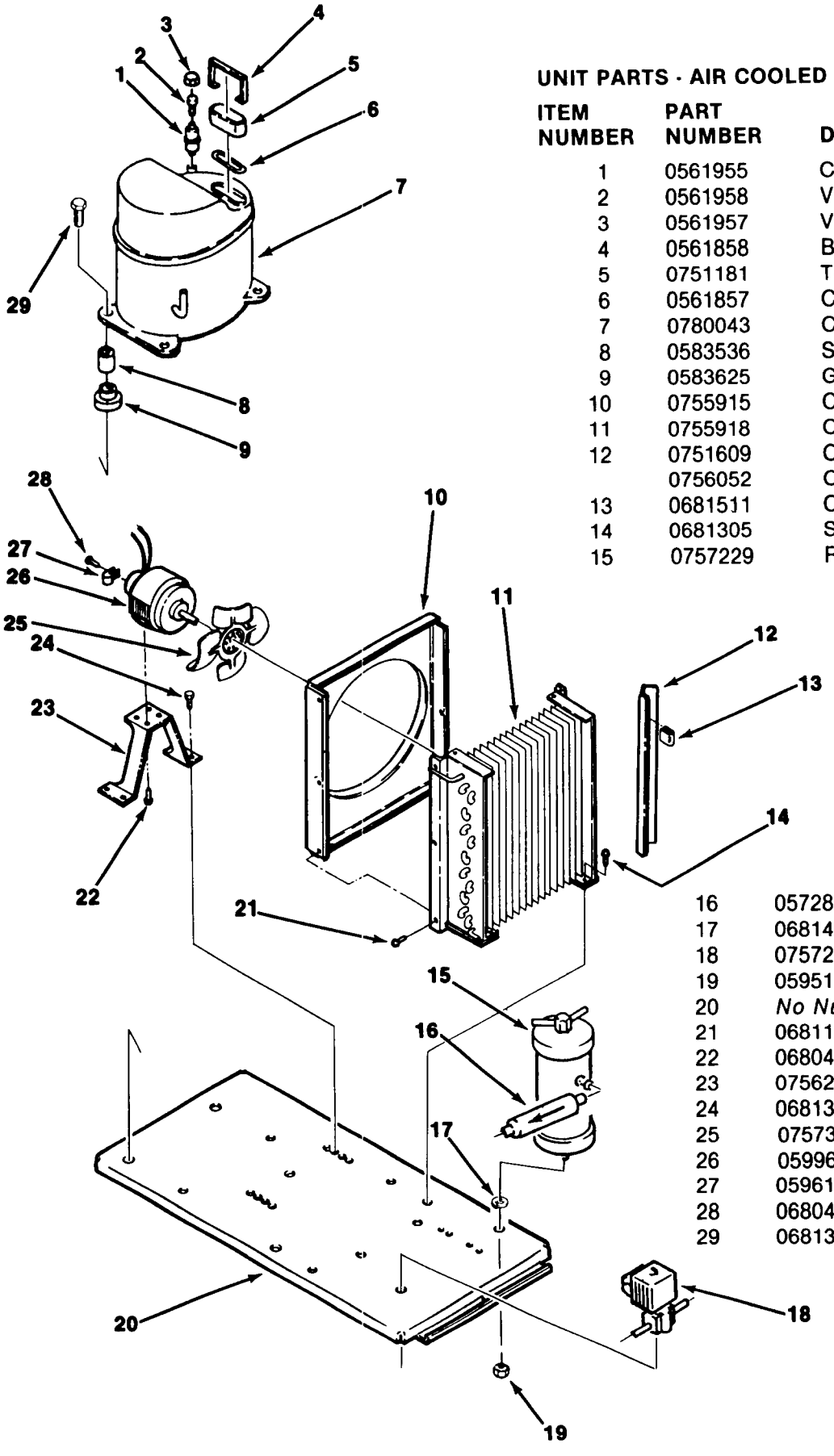

UNIT PARTS - AIR COOLED

ITEM NUMBER	PART NUMBER	DESCRIPTION
1	0561955	Charging Valve
2	0561958	Valve Core
3	0561957	Valve Cap
4	0561858	Bale Strap
5	0751181	Terminal Cover
6	0561857	Cover Gasket
7	0780043	Compressor
8	0583536	Sleeve, Grommet (4)
9	0583625	Grommet (4)
10	0755915	Condenser Shroud
11	0755918	Condenser
12	0751609	Condenser Baffle, Right Side
	0756052	Condenser Baffle, Left Side
13	0681511	Clip
14	0681305	Screw, 1/4-20 x 1/2
15	0757229	Receiver Assembly
16	0572801	Drier
17	0681467	Washer, Lock
18	0757239	Hot Gas Solenoid
19	0595172	Nut (1)
20	*No Number*	Unit Base
21	0681167	Screw, 8-32 x 3/8 (6)
22	0680439	Screw, 8-36 x 1/2
23	0756201	Fan Motor Bracket
24	0681305	Screw, 1/4-20 x 1/2
25	0757361	Fan Blade
26	0599607	Fan Motor
27	0596171	Wire Clamp
28	0680439	Screw, 8-32 x 1/2
29	0681342	Screw (4)

CSW4
THE PARTS ILLUSTRATION AND PARTS LISTS

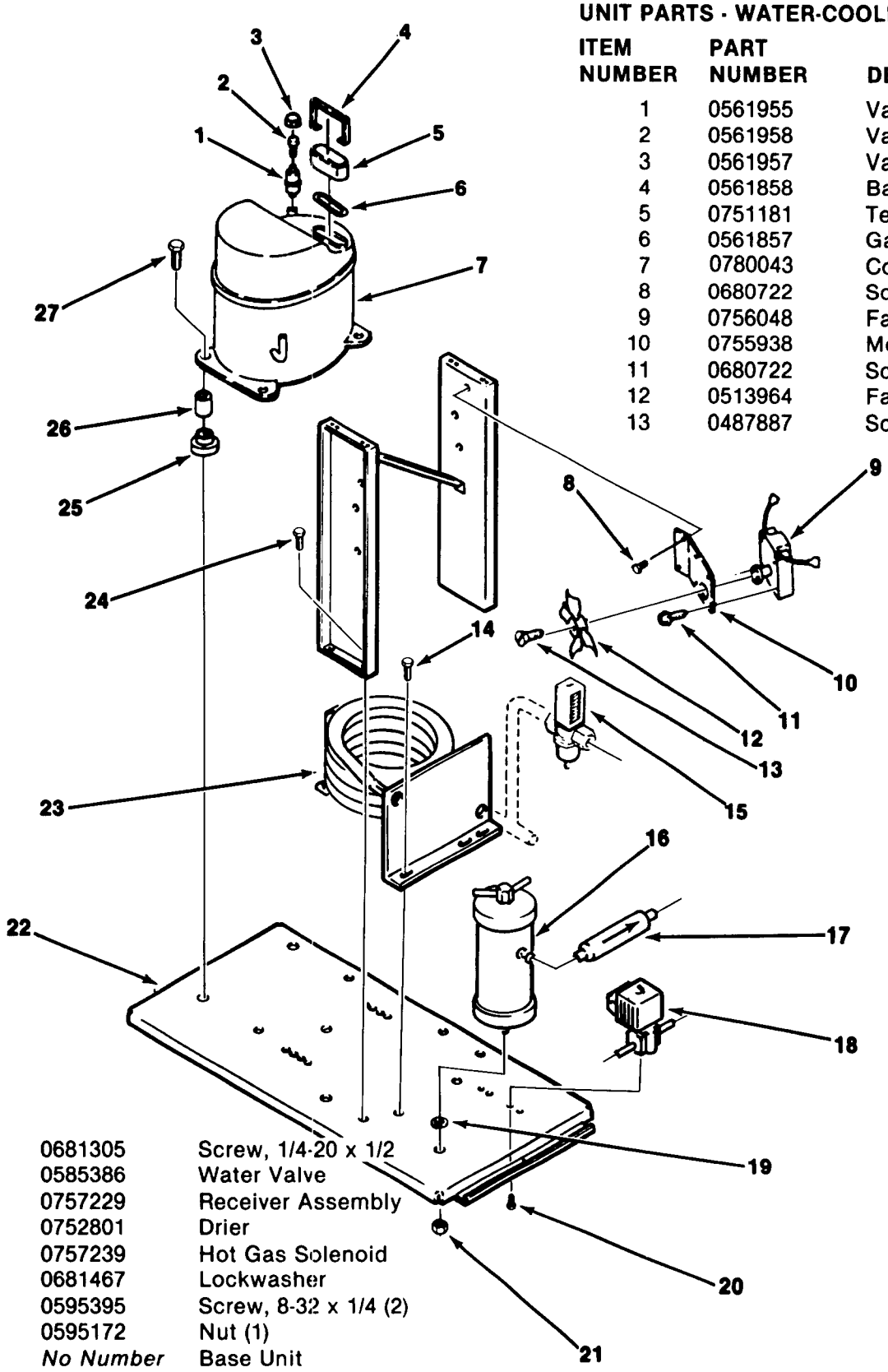

UNIT PARTS - WATER-COOLED

ITEM NUMBER	PART NUMBER	DESCRIPTION
1	0561955	Valve Body
2	0561958	Valve Core
3	0561957	Valve Cap
4	0561858	Bale Strap
5	0751181	Terminal Cover
6	0561857	Gasket Cover
7	0780043	Compressor
8	0680722	Screw (4)
9	0756048	Fan Motor
10	0755938	Motor Bracket
11	0680722	Screw (4)
12	0513964	Fan Blade
13	0487887	Screw (4)
14	0681305	Screw, 1/4-20 x 1/2
15	0585386	Water Valve
16	0757229	Receiver Assembly
17	0752801	Drier
18	0757239	Hot Gas Solenoid
19	0681467	Lockwasher
20	0595395	Screw, 8-32 x 1/4 (2)
21	0595172	Nut (1)
22	*No Number*	Base Unit
23	0757363	Condenser
24	0681305	Screw
25	0583625	Grommet (4)
26	0583536	Sleeve, Grommet (4)
27	0681342	Screw (4)

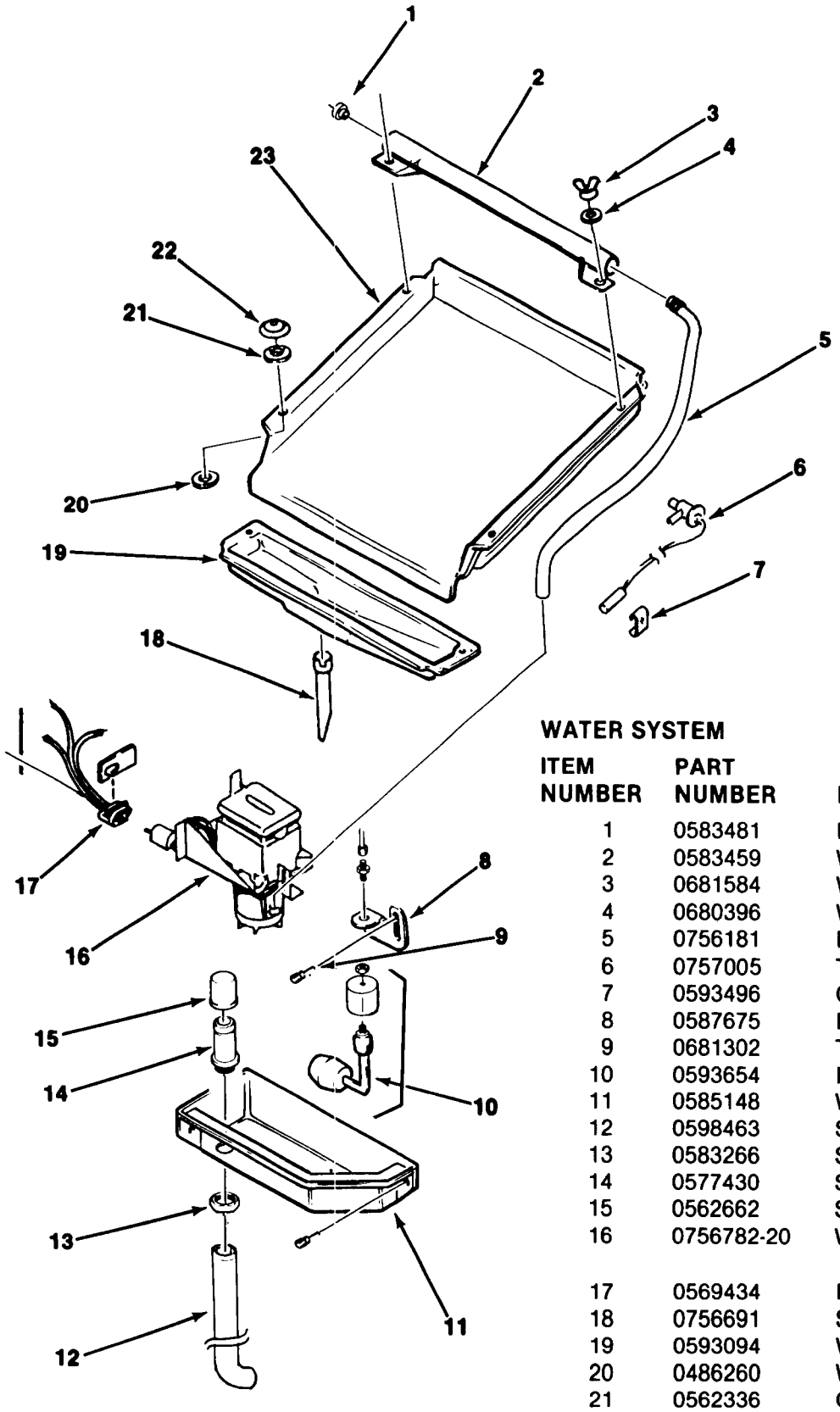

WATER SYSTEM

ITEM NUMBER	PART NUMBER	DESCRIPTION
1	0583481	Dispenser Seal
2	0583459	Water Dispenser
3	0681584	Wing Nut, 8-32
4	0680396	Washer, 5/8 x 3/16 x .020
5	0756181	Dispenser Hose
6	0757005	Thermo Expansion Valve
7	0593496	Capillary Clip
8	0587675	Float Valve Bracket
9	0681302	Thumb Screw (2)
10	0593654	Float Valve
11	0585148	Water Pan
12	0598463	Siphon Hose
13	0583266	Siphon Tube Nut
14	0577430	Siphon Tube
15	0562662	Siphon Cap
16	0756782-20	Water Pump Assembly (Complete)
17	0569434	Plug, Water Pump
18	0756691	Stand Pipe
19	0593094	Water Trough
20	0486260	Washer
21	0562336	Cup Washer
22	0595181	Cap Nut (3)
23	0780101	Evaporator

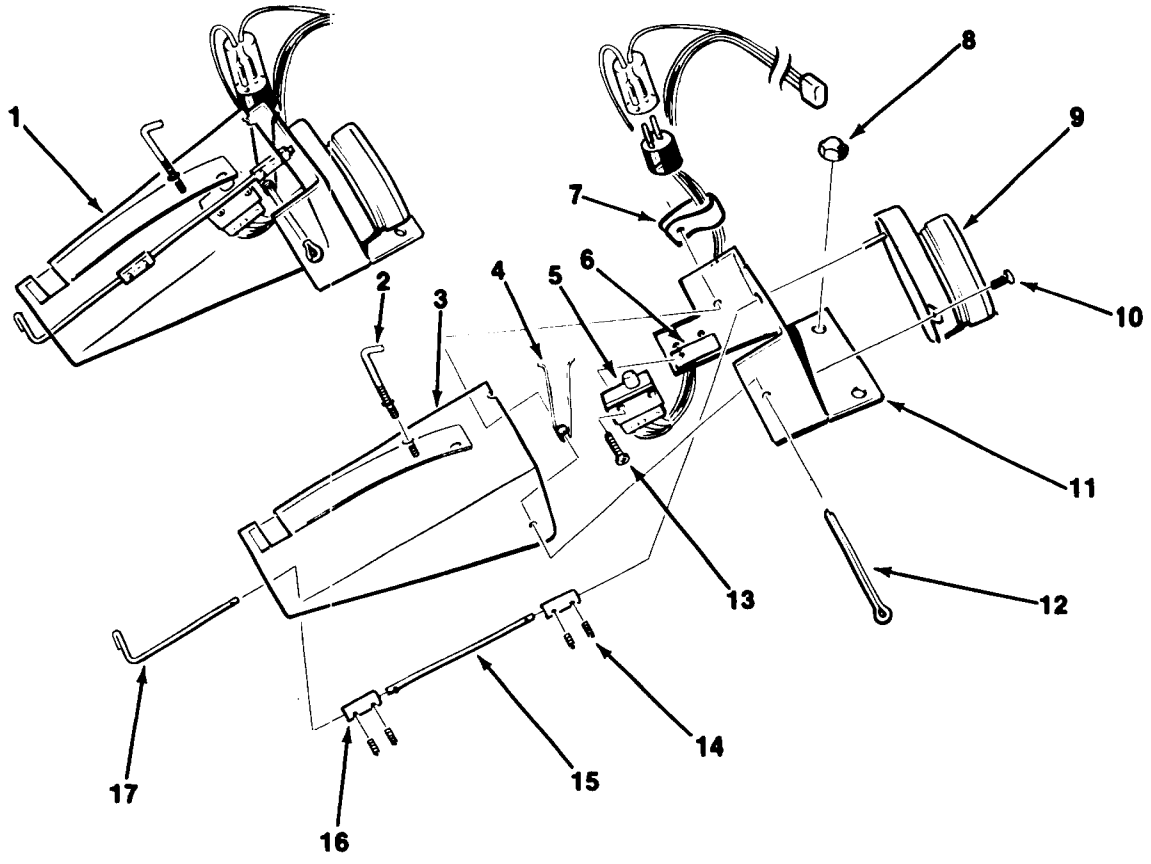

ICE THICKNESS CONTROL ASSEMBLY

ITEM NUMBER	PART NUMBER	DESCRIPTION
1	0598369	Control, Ice Thickness (Complete)
2	0751991	Screw, Adjusting
3	0587293	Bracket, Shaft
4	0560861	Spring, Hold Down
5	0587889	Harness, Switch
6	0587996	Spacer
7	0596338	Clamp, Wire
8	0595181	Nut, Cap (2)
9	0577540	Motor, Control
10	0680854	Screw, 4-40 x 3/8
11	0607811	Bracket, Motor
12	0680668	Cotter, Pin
13	0681433	Screw, 4-40 x 3/4
14	0595330	Setscrew, 6-32 x 3/16 (4)
15	0607816	Shaft, Flexible
16	0585508	Coupling (2)
17	0585507	Shaft, Formed End

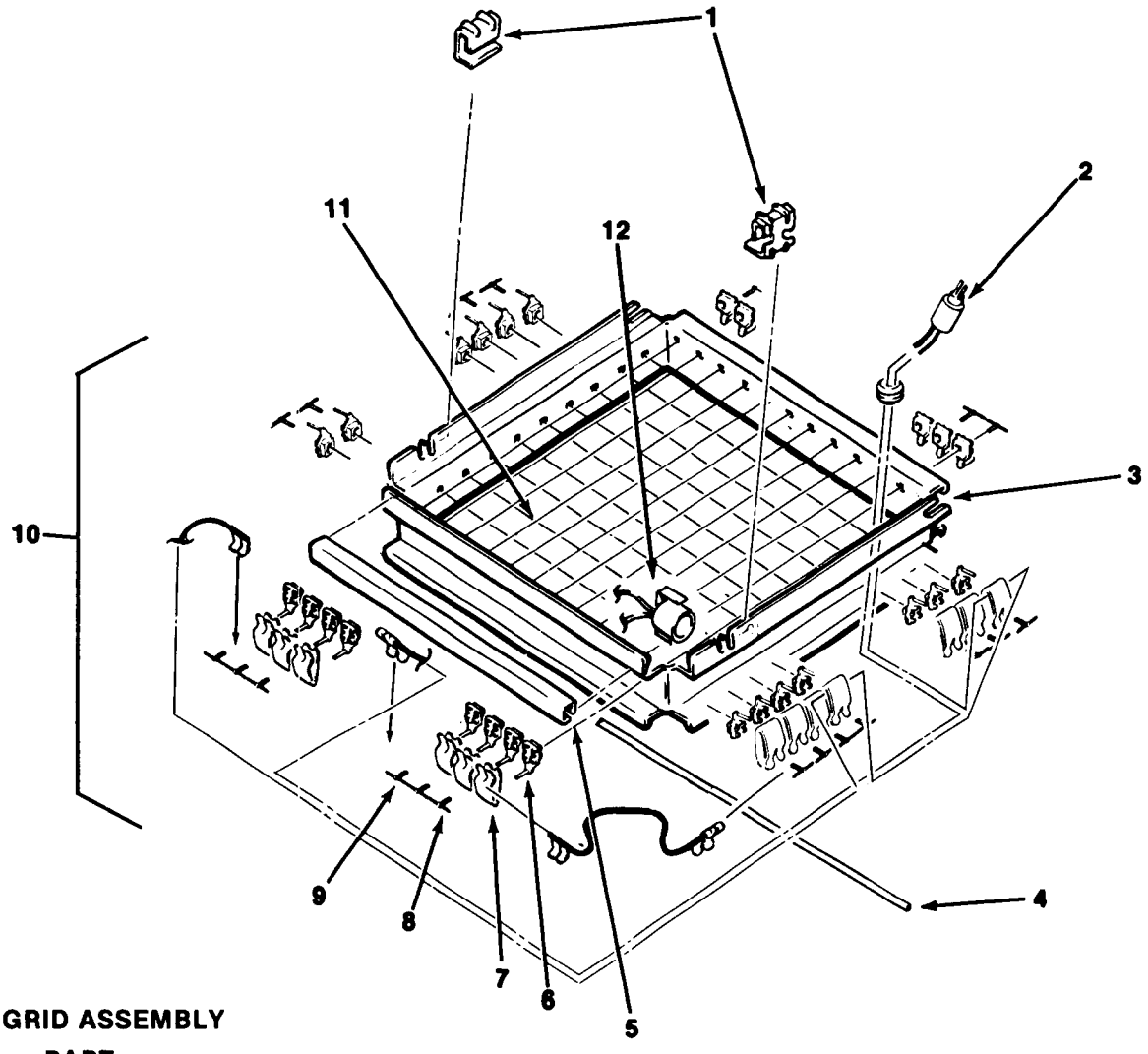

CUTTER GRID ASSEMBLY

ITEM NUMBER	PART NUMBER	DESCRIPTION
1	0756058	Grid Clip
2	0757044	Grid Connecting Harness 3/4" Grid
	0757045	Grid Connecting Harness 1-1/4" Grid
3	*No Number*	Cutter Grid Frame
4	*No Number*	Brace, Grid Frame
5	0751954	Ice Slab Deflector
6	0598277	Grid Insulator 3/4" Grid (90)
		Grid Insulator 1-1/4" Grid (48)
7	0564072	Tension Clip 3/4" Grid (45)
		Tension Clip 1-1/4" Grid (24)
8	0587112	Cutter Wire Pin (4)
9	0587111	Cutter Pin Wire, 3/4" Grid (43)
	0587424	Cutter Pin Wire, 1-1/4" Grid (13)
	0587423	Cutter Pin Wire, 1-1/2" Grid (9)
10	CCK152CG	Grid Assembly Complete 3/4" x 3/4"
	CCK151SG	Grid Assembly Complete 1-1/2" x 1-1/4"
11	0569969	Grid Cutter Wire Kit 3/4" Grid
	0569968	Grid Cutter Wire Kit 1-1/4" Grid
12	0757255	Interior Temperature Limiter

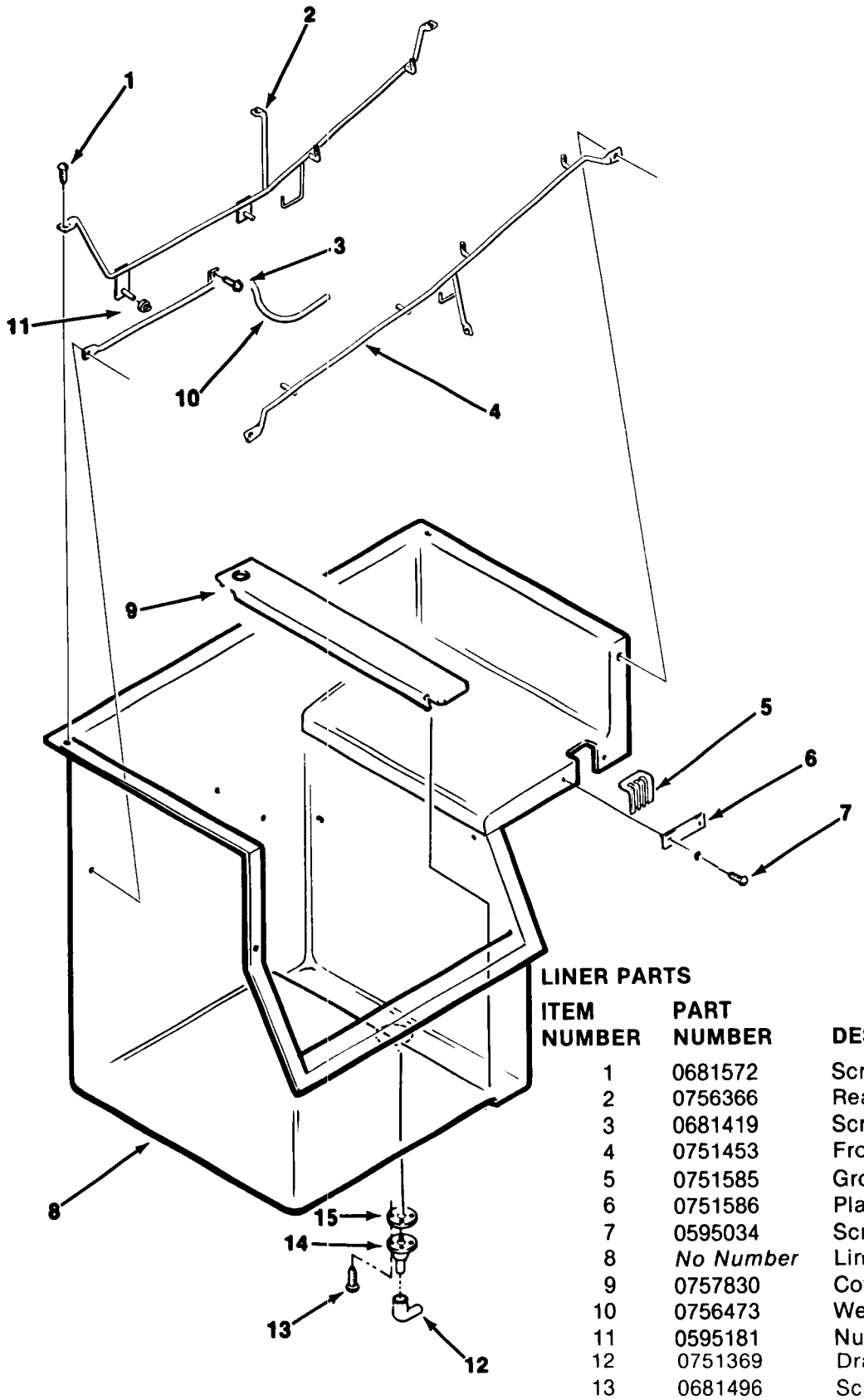

LINER PARTS

ITEM NUMBER	PART NUMBER	DESCRIPTION
1	0681572	Screw, 1/4-20 x 1/2 (6)
2	0756366	Rear Support
3	0681419	Screw, Thumb
4	0751453	Front Support
5	0751585	Grommet, Tubing
6	0751586	Plate Mounting
7	0595034	Screw (2) Support, Mounting
8	*No Number*	Liner (Not a Serviceable Part)
9	0757830	Cover, Drain
10	0756473	Well, Thermostat
11	0595181	Nut, Mounting
12	0751369	Drain Elbow
13	0681496	Screw, 12-24 x 3/4 (4)
14	0751260	Bin Drain
15	0751258	Drain Gasket

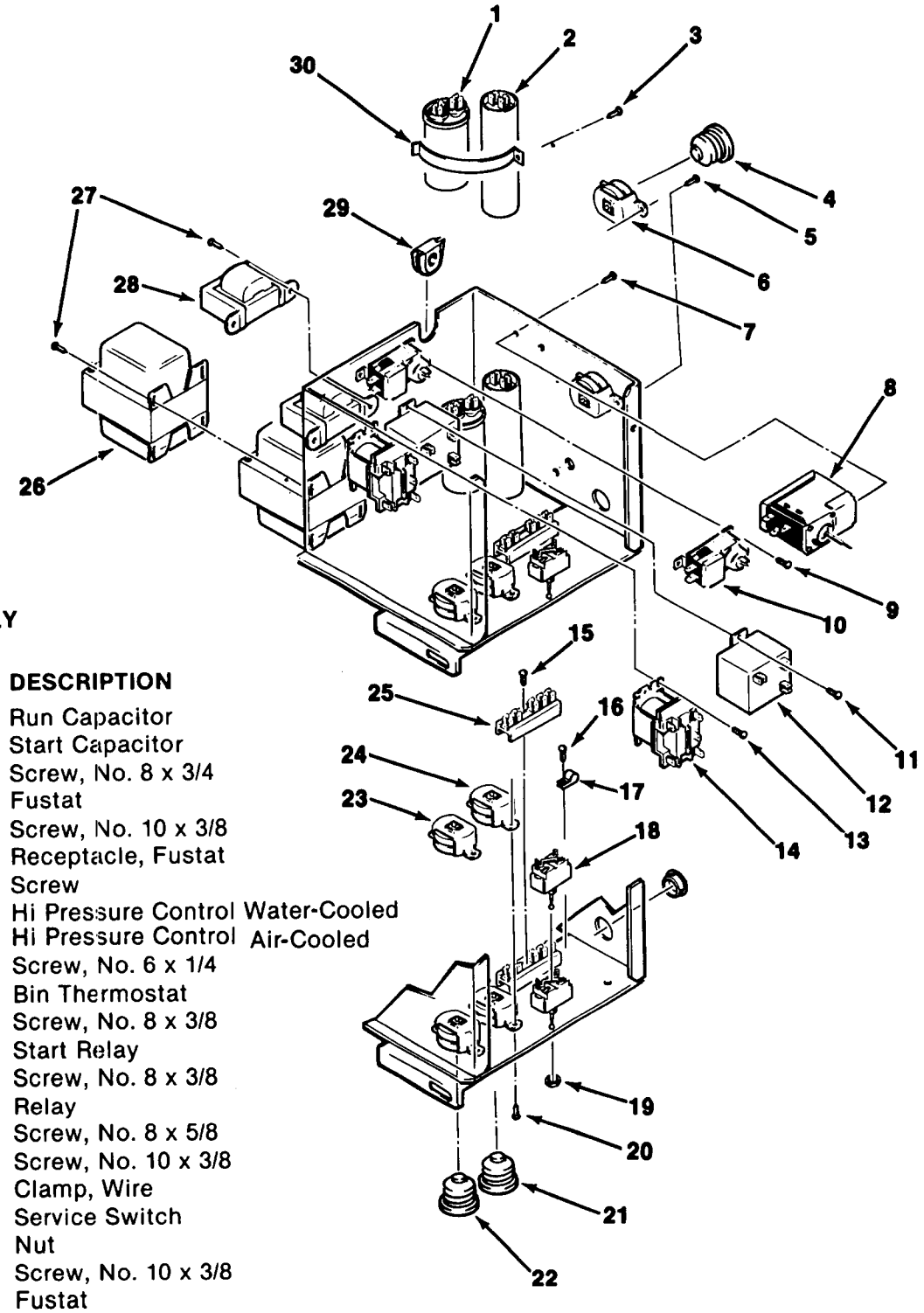

CONTROL BOX ASSEMBLY

ITEM NUMBER	PART NUMBER	DESCRIPTION
1	0599224	Run Capacitor
2	0751320	Start Capacitor
3	0680428	Screw, No. 8 x 3/4
4	12-2276-01	Fustat
5	0681187	Screw, No. 10 x 3/8
6	12-2275-01	Receptacle, Fustat
7	03-1403-02	Screw
8	0756013	Hi Pressure Control Water-Cooled
	0756045	Hi Pressure Control Air-Cooled
9	0680722	Screw, No. 6 x 1/4
10	0593328	Bin Thermostat
11	0681167	Screw, No. 8 x 3/8
12	0751318	Start Relay
13	0681167	Screw, No. 8 x 3/8
14	0583095	Relay
15	0680603	Screw, No. 8 x 5/8
16	0681187	Screw, No. 10 x 3/8
17	0596276	Clamp, Wire
18	0560940	Service Switch
19	0596021	Nut
20	0680604	Screw, No. 10 x 3/8
21	12-2276-07	Fustat
22	12-2276-03	Fustat
23	12-2275-02	Receptacle, Fustat
24	12-2275-04	Receptacle, Fustat
25	0751127	Terminal Board
26	0755920	Transformer
27	0681167	Screw, No. 8 x 3/8
28	0587314	Transformer
29	0573333	Grommet
30	0751591	Clamp, Capacitor

CSW4
WIRING DIAGRAMS

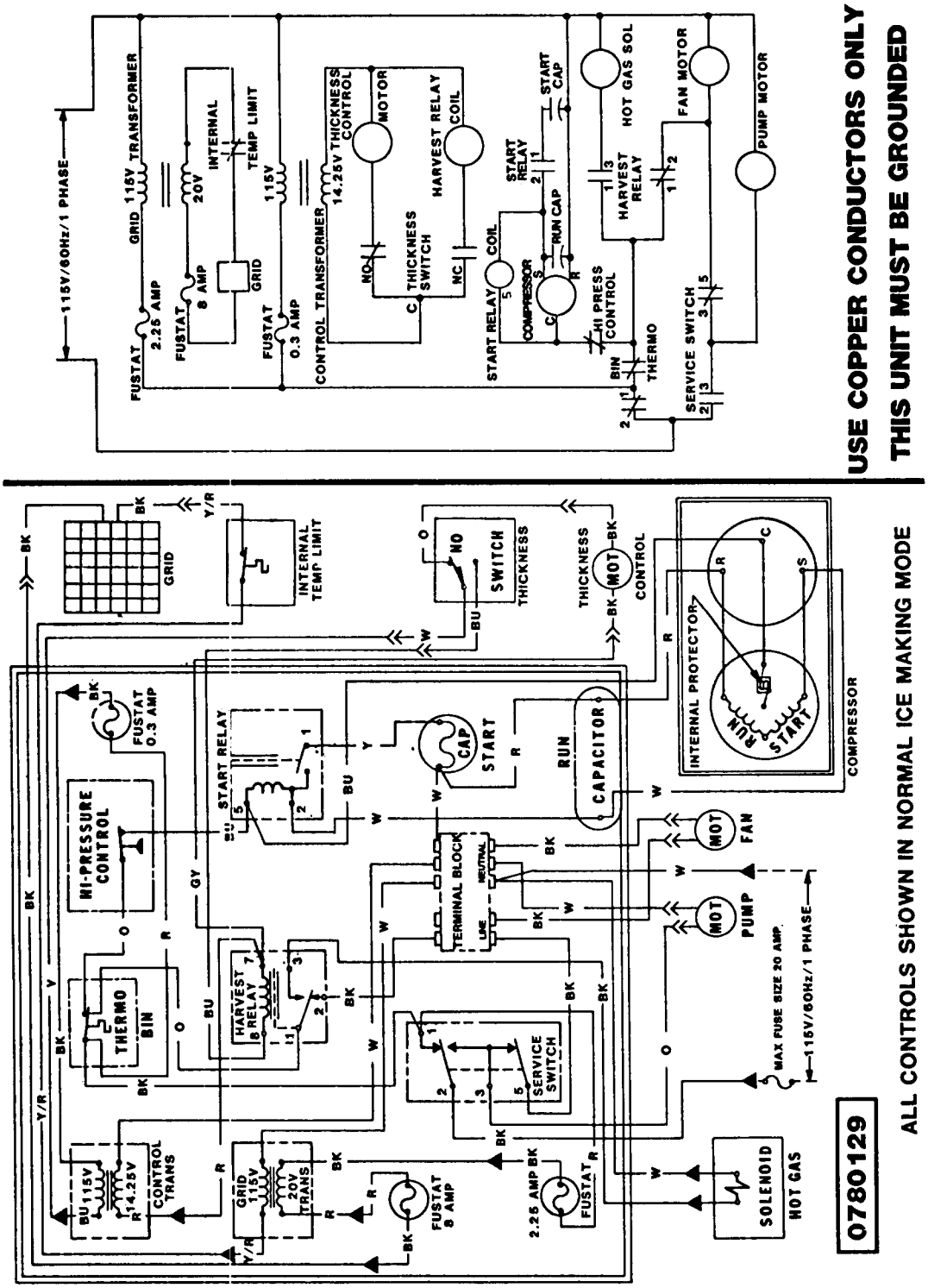

USE COPPER CONDUCTORS ONLY

THIS UNIT MUST BE GROUNDED

0780129

ALL CONTROLS SHOWN IN NORMAL ICE MAKING MODE

TABLE OF CONTENTS

WARRANTY 1
TO THE USER 2
TABLE OF CONTENTS 3
SPECIFICATIONS 4
DIMENSIONS 5
DIMENSIONS FOR BUILT-IN INSTALLATIONS 6
INSTALLATION INSTRUCTIONS ..... 7,8&9
INSTALLATION OF DRAINWATER PUMP MODELS ..... 10 & 11
CLEANING INSTRUCTIONS 12

EXPLODED VIEWS

BIN INSERT 13
WATER PUMP 14
CONTROL BOX 15
CABINET 16
INTERNAL COMPONENTS 17

WIRING DIAGRAMS

WIRING DIAGRAM 18
WIRING DIAGRAM (WITH DRAINWATER PUMP) 19

MAINTENANCE INSTRUCTIONS

CABINET REMOVAL 20
TIMER MOTOR 21
BIN THERMOSTAT REPLACEMENT 21
WATER PUMP REPLACEMENT 22
ADJUSTING CUBE SIZE CONTROL 22
INLET WATER SOLENOID REPLACEMENT 22
INSTRUCTIONS FOR CHANGING DECORATOR PANELS 23

SERVICE INFORMATION

SERVICEMAN'S INFORMATION 24
SERVICE ANALYSIS 25-27
ACCESSORY PARTS 28

THIS PAGE
INTENTIONALLY
LEFT BLANK

THIS PAGE
INTENTIONALLY
LEFT BLANK

TO THE USER

Your Scotsman Home Ice Cube Machine is a product carefully engineered and quality constructed to provide you with many years of faithful performance and a minimum of maintenance costs.

Produced by the world's leading manufacturer of automatic ice making equipment, your Scotsman Ice Cube Machine incorporates the same reliable systems already proven over years of actual operation by thousands of users.

Many of you will have an opportunity to see and use clear, solid, slow melting Scotsman Cubes for the first time. You will quickly compare the clear, glass-like quality of your Scotsman cubes to the type produced by your home refrigerator, freezer. By comparison, cubes made in trays in your refrigerator are very white or cloudy, they also melt faster than clear ice.

A brief explanation shows why.

First, all water contains some mineral deposits such as iron, calcium, etc. In various degrees. These deposits do not freeze. Therefore, when you freeze water in refrigerator trays, these minerals do not freeze but are trapped inside the ice cubes, contributing to their cloudiness.

In your Scotsman Home Ice Cube Machine the water to make ice is continually moved or circulated by a small electric pump that sprays the water under gentle pressure into the inverted cube molds. As water hits these cold refrigerated molds, only the water freezes, building gradually into a full cube. The minerals or impurities fall back down into a reservoir or sump area where they are flushed down the drain at the end of each freezing or ice making cycle.

This manual also contains information regarding the various working systems and helpful hints on the care and maintenance of your ice machine.

We would like to suggest you take the time now to briefly review this manual, and if you have any further questions regarding the care or operation of your ice machine, contact:

CONSUMER SERVICE DEPARTMENT
SCOTSMAN ICE SYSTEMS
Albert Lea, Minnesota 56007
Phone: 507/373-3961

P.S. Whenever writing, please be sure to include the model and serial numbers of your ice cube machine.

SCOTSMAN®

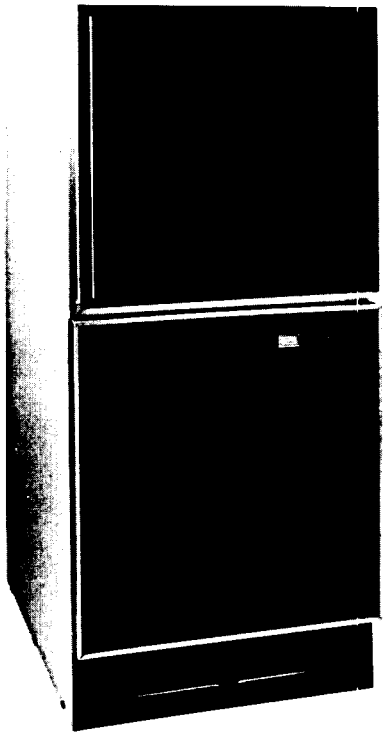

MODELS DC30A & SM18A HOME ICE CUBE MACHINE

SPECIFICATIONS

Size: 15" wide 20-1/2" deep 33-1/8" high.

Weight: 85 pounds

Cabinet: Steel

Finish: Baked on enamel

Color: Appliance White/ Sandalwood
Storage Bin: Polyethylene

Door: Swings to right

Door Latch: Magnetic Gasket 4 Sides

Lower Compartment Panel:
Removable by pulling outward at top.

Power Rating	5.0 Amperes
Wire Size:	18 Gauge
Fuse Size – Maximum:	15 Amperes
Refrigerant Metering Device:	Capillary Tube
Cubes per Harvest:	8
Harvest Means:	Hot Gas
Compressor Make:	Danfoss
Compressor Specs:	1/8 H.P. 115/60/1
Refrigerant Charge:	5-1/2 oz. R-12.

Requirements:
Power: 115 volts - 60 Hertz Single Phase
Water: 1/4" cold water line
Drain: Required for water Outlet.

Daily Ice Capacity is directly related to inlet water temperature, ambient temperature, and age of machine. Under normal conditions the unit will make up to 30 pounds of ice in 24 hours.

To keep your SCOTSMAN HOME ICE CUBE MACHINE performing at it's maximum capacity, it is necessary to perform periodic maintenance as outlined on page 12 of this manual. **The unit should be cleaned at least twice a year. Some water conditions will require more frequent cleaning.**

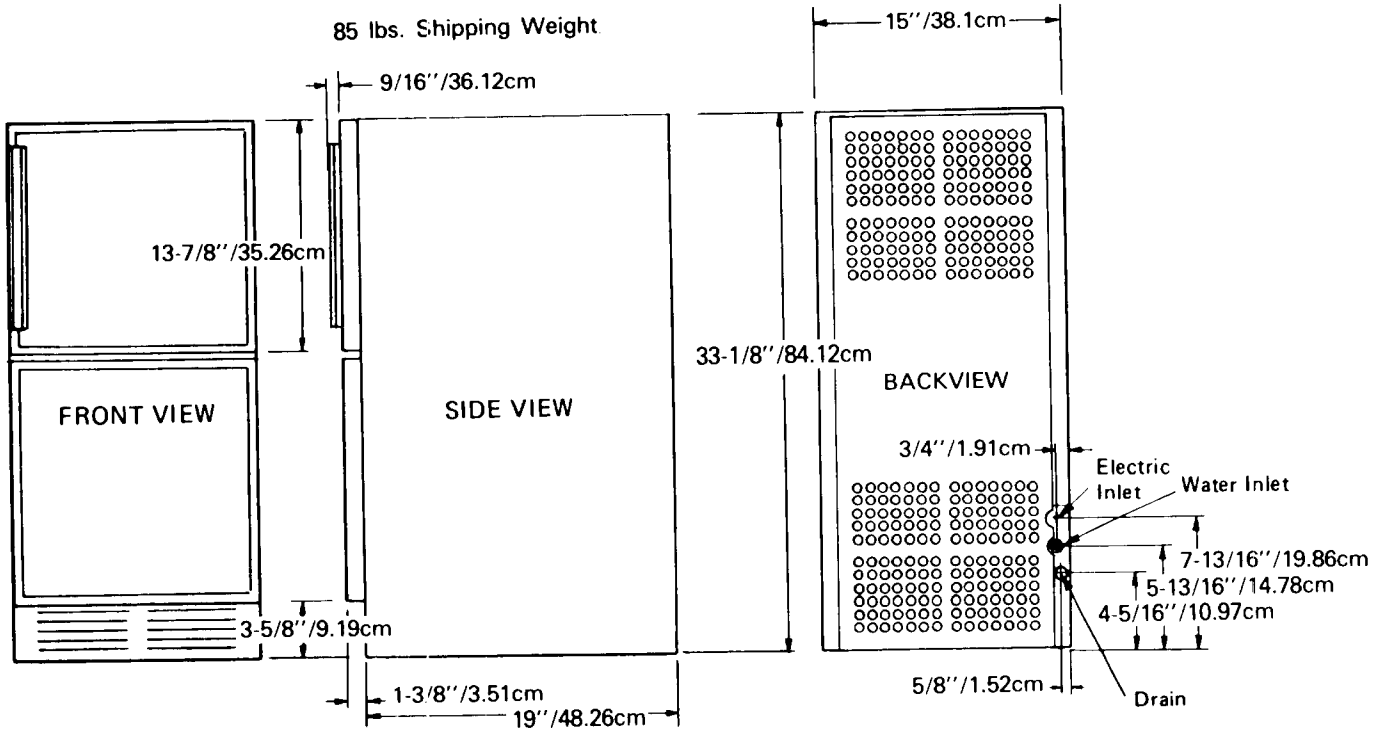

DIMENSIONAL DRAWING FOR BUILT-IN INSTALLATIONS

NOTE: AS SOME SERVICE PROCEDURES REQUIRE ACCESS TO THE ENTIRE UNIT, IT IS **IMPORTANT** TO ALLOW ENOUGH SPACE TO REMOVE THE MACHINE FROM THE INSTALLATION. PLEASE KEEP THIS IN MIND WHILE INSTALLING YOUR HOME ICE CUBE MACHINE.

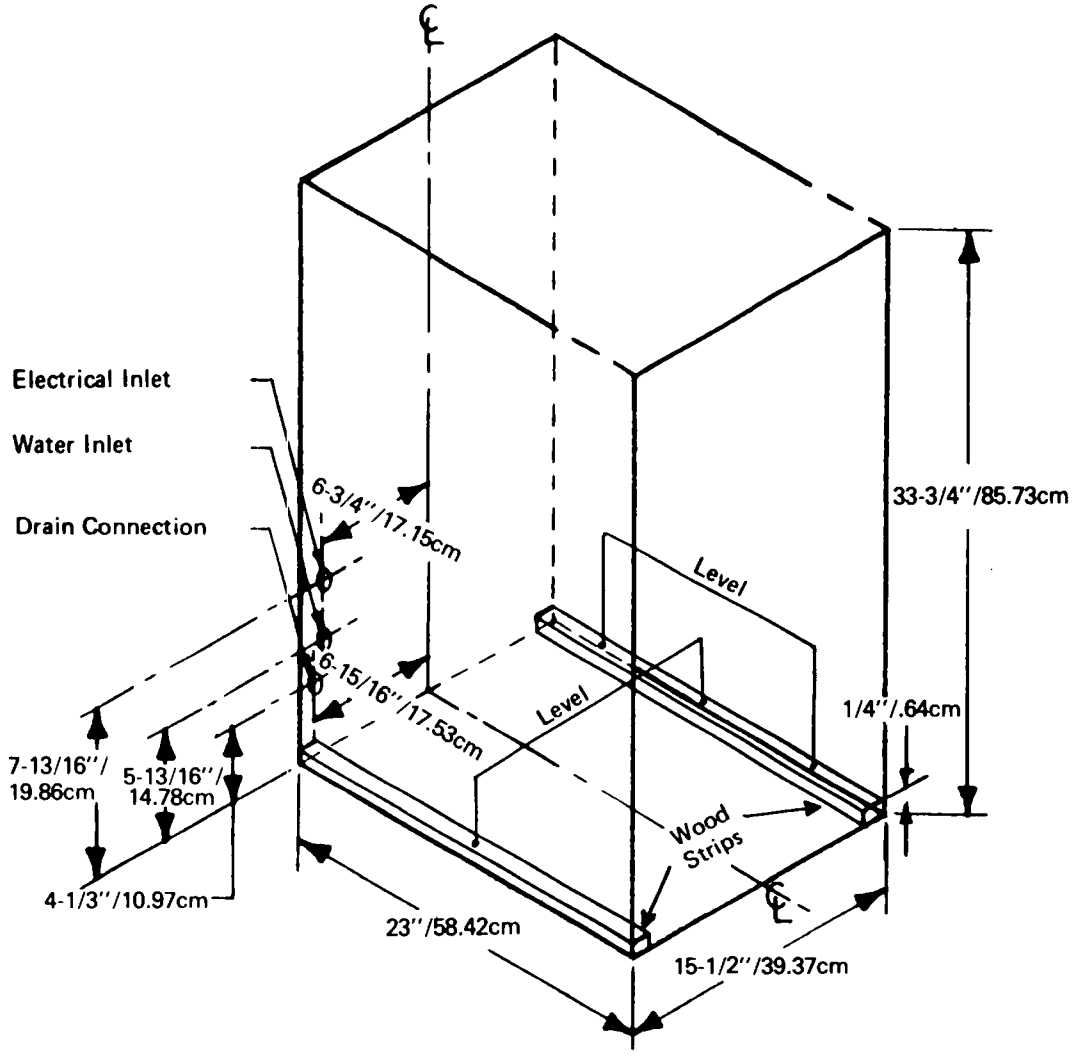

To recess the ice machine into a cabinet, provide an opening 33-3/4 inches high, 15-1/2 inches wide and 23 inches deep.

The above dimensions allow 4 inches at the back of the ice machine for electric cord, water line and drain line.

Requirements: For either recessed or freestanding installation.
Power: 115 volts, 60 cycle, single phase.
Water: 1/4 inch flare connector provided on the Ice Machine.

Drain: Installation of an adequate drain is necessary. See pages 9, 10 and 11 for complete instructions.

INSTALLATION INSTRUCTIONS

STEP ONE — LOCATION

Place the unit on a solid, level floor or base with access to electrical power, a water supply and a drain. Level, if necessary, as shown in the drawing for built-in installations. The bottom of the unit must be 1/4" above the floor or floor covering in front of the cabinet, wall, etc. Adequate space must be left at the sides and top of the opening for removal of the unit.

STEP TWO -- ELECTRICAL POWER SUPPLY

The ice machine should be on a separate electrical circuit. It is suggested an electrician be contacted to insure this circuit has a **MAXIMUM FUSING OF 15 AMPS** and is properly grounded. Low voltage from overload circuits can cause premature failure of cuber electrical components. A solid ground wire from cuber frame or grounding screw to an "earth" ground should also be installed.

NOTE: FAILURE TO GROUND THE UNIT PROPERLY MAY RESULT IN AN ELECTRICAL SHOCK HAZARD WHICH COULD CAUSE SEVERE OR FATAL SHOCK INJURY.

STEP THREE — WATER SUPPLY

A 1/4 inch flare connector is provided at the front of the ice machine for the cold water supply. The supply line should not be smaller than 1/4 inch O.D. copper. A shut off valve conveniently located in the water line is recommended. The water supply line should be directed thru the opening in the back of the ice machine marked "Potable Water Inlet."

For under counter installation, allow approximately 19 inches of 1/4 inch water line and 12 inches of drain line (measured from the back of the ice maker) to direct thru the openings at the rear. Final connections are to be made after ice machine is in position.

NOTE: DO NOT USE A SELF-PIERCING TAP LINE VALVE. THIS TYPE OF VALVE DOES NOT PROVIDE SUFFICIENT WATER VOLUME OR PRESSURE FOR PROPER OPERATION AND THE SMALL OPENING PLUGS RAPIDLY WITH MINERAL DEPOSITS.

STRAINERS AND FILTERS

Scotsman recommends the installation of a Water Strainer, Part Number 16-0162-00, on all units. Use two fittings, Part Number 16-0621-03, to install strainer. Local water conditions may require the use of an adequate filter in the water supply line to prevent extensive damage caused by sediment build-up. Unit or component failure due to the lack of proper strainer of filter installation is not eligible for warranty coverage.

NOTE: EXCESSIVE NOISE DURING THE HARVEST CYCLE IS USUALLY CAUSED BY HIGH WATER PRESSURE. THIS SITUATION CAN BE CORRECTED BY THE INSTALLATION OF A WATER PRESSURE REGULATOR, PART NUMBER 11-0200-00. USE TWO FITTINGS, PART NUMBER 16-0621-03.

STEP FOUR — DRAIN INSTALLATION

Where a drain exists which is not higher than the opening in the back of the ice machine labeled "Condenser Drain", a gravity drain is adequate. At no time can the drain tube be raised higher than the cabinet hole. If the drain tube is run thru the floor behind the unit, provide a 7/8" hole at least 2-1/2 inches behind the back panel of the machine. This will prevent a kink from forming in the line. Proper drain installation requires the use of 5/8" OD copper tube or 5/8" I.D. flexible plastic tubing. It is important to insure that the plastic tubing does not kink. Allow 1/4" pitch per foot on drain lines over 4 feet long. DO NOT plump the drain line into the sewer in any air tight manner. It is extremely important to provide an air gap betwen the unit drain and any external drain. This prevents sewer gas from backing into the unit and also eliminates most air locks. An air lock or improper drain installation will cause water to back up into the bin and melt the ice stored there.

NOTE: IF A GRAVITY DRAIN IS NOT AVAILABLE, USE THE SPK18H CONDENSATE PUMP KIT. COMPLETE INSTRUCTIONS FOR THIS INSTALLATION ARE INCLUDED WITH THE KIT.

IMPORTANT NOTE

The Ice Machine is equipped with an air cooled condenser which is designed to "breath" through the front of the unit. Cool air is drawn into the right side of the kickplate and the warm air is exhausted through the left side. If the kickplate is blocked in any way or if the condenser is dirty, ice production will be drastically reduced. It is extremely important to clean the condenser regularly and insure adequate air space in front of the kickplate. Unit or component failures due to a dirty condenser or blocked kickplate are not eligible for warranty coverage.

START-UP PROCEDURE

WARNING: NEVER RUN THE UNIT WITHOUT THE WATER TURNED ON. THIS COULD DAMAGE THE MACHINE.

1. Turn on the cold water supply to the machine.
2. Turn on the electrical power.
3. Push the lever of the Off-On switch to your right. The machine will now automatically produce ice in about thirty minutes.

The normal storage bin capacity is 26 pounds of ice (about 700 cubes) or when the cubes touch the thermostat capillary tube on the right hand side of the bin. The bin is considered full when cubes are ten inches above the bottom of the bin. When the machine is initially installed, the unit will operate continuously for approximately 36 to 48 hours or until the ice storage bin has been filled. Once the storage bin has been filled, the unit will cycle on the bin control to maintain a full bin of ice.

DRAIN INSTALLATION

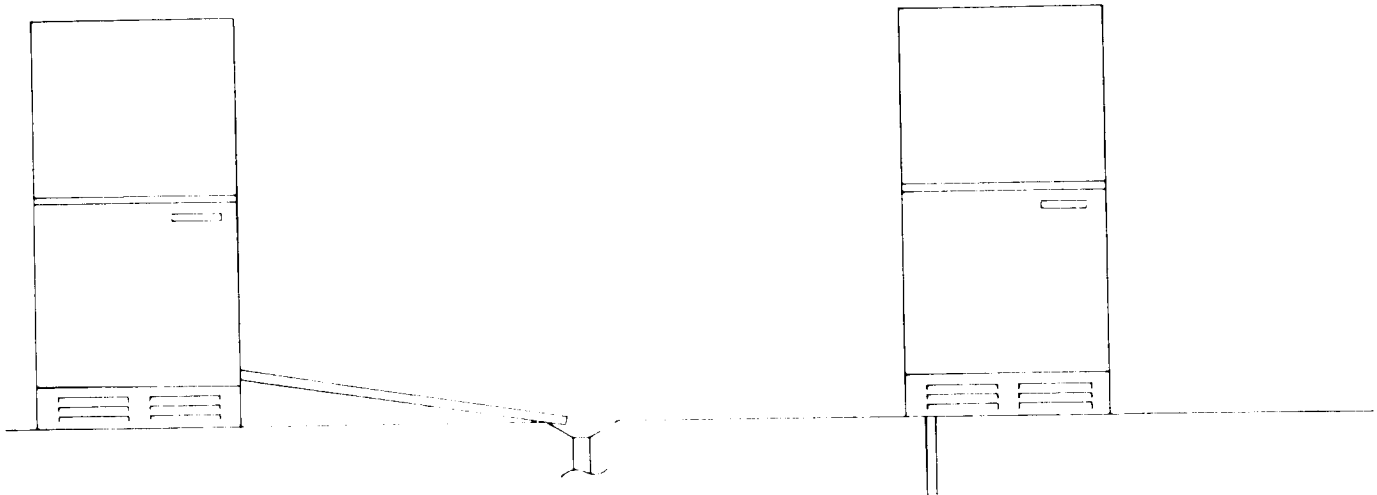

NOTE: THE INSTALLATION SHOWN BELOW IS ONLY ACCEPTABLE WHEN THE SPK-18H PUMP IS USED. THIS PUMP IS AVAILABLE FACTORY INSTALLLED OR AS A KIT FOR FIELD INSTALLATION.

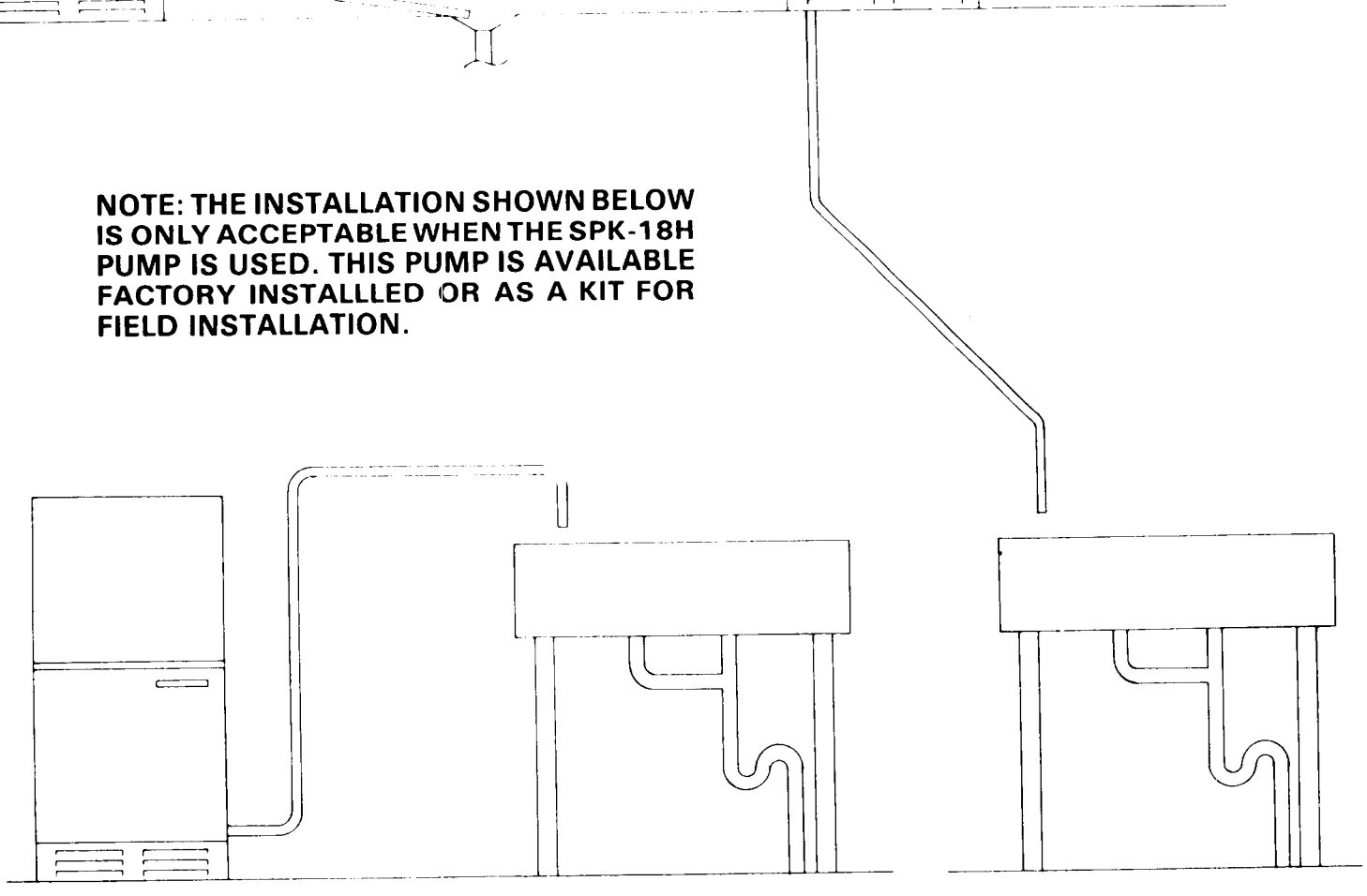

NOTE: SCOTSMAN DOES NOT SUGGEST THE INSTALLATION OF ANY DRAIN LINE RUN DIRECTLY OUTSIDE TO A LAWN, DRIVEWAY, FLOWER BED, ETC. CONNECT THE UNIT DRAIN TO AN EXISTING DRAIN LINE ACCORDING TO THE DRAIN INSTALLATION INSTRUCTIONS.

INSTALLATION INSTRUCTIONS

(With Drain Water Pump)

The Model SM18PA-1 or DC30PA Home Ice Maker is equiped with a condensate pump. THIS MAKES YOUR ICE MAKER ADAPTABLE TO INSTALLATIONS WHERE A GRAVITY DRAIN IS NOT AVAILABLE. Follow the instructions listed below carefully to insure proper operation.

1. Run the 3/8" I.D. flexible plastic tubing from the rear of the machine to your drain location.

2. Check chart below for max. length of drain line and lift.

3. Start the machine according to the instructions in the Service Manual.

4. The pump is equipped with a safety switch which will stop the ice-maker if the pump malfunctions and the reservoir is not pumped out. This safety switch is connected to the control box by the yellow cord.

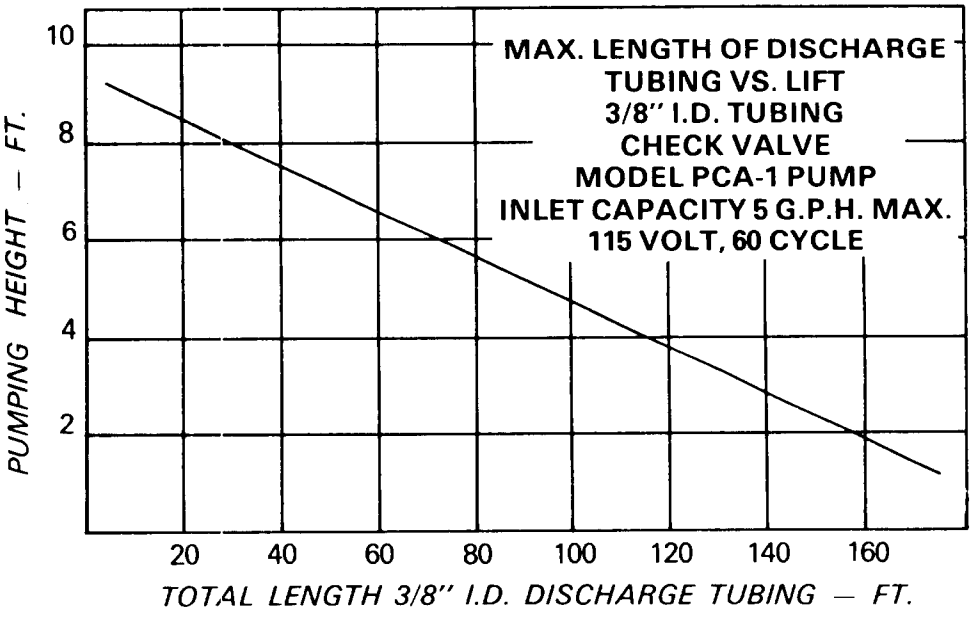

HOW TO USE THE CHART

The chart provides a simple ratio between the amount of vertical lift (head) in your installation compared to the maximum length of discharge tubing (run) needed. Figures derived assume an inlet capacity of five gallons per hour maximum. It is also assumed that 3/8" I.D. Flexible plastic tubing will be used.

NOTE: A relatively short pumping cycle is normal for a unit of this type. This in no way denotes a defective unit nor is short cycling harmful to the unit as long as the check valve is functional.

WARNING: DO NOT REMOVE FLUTED PLASTIC FITTING AND/OR CHECK VALVE FROM THE PUMP. REMOVAL OF EITHER WILL AUTOMATICALLY VOID THE WARRANTEE.

It can easily be seen, then, that, with a head (vertical rise) of 6', (for example) the maximum total length of discharge tubing to be used on the "run" (vertical plus horizontal) would be slightly less than 70'.

DRAINWATER PUMP INSTALLATION INSTRUCTIONS

1. Secure pump to utility bracket located in left rear corner of machine.
2. Leave original black drain tube (1-1/2" long) as is connected to brass bin drain tube.
3. Rotate original 5/8" x 5/8" plastic elbow so it points towards left rear corner of machine.
4. Leave original black drain tube (4" long) as is connected to original 5/8" x 5/8" plastic elbow.
5. Remove original 5/8" x 5/8" x 5/8" plastic tee and rotate into position shown.
6. Use original black drain tube (2" long) from end of original drain assembly and place on plastic tee and insert into pump.
7. Reconnect reservoir overflow tube to unused leg of plastic tee.
8. Attach 3/8" I.D. tygon tubing (144" long) supplied with pump kit to pump outlet port and route tubing through hole in rear of machine.

AUXILIARY SAFETY SWITCH WIRING INSTRUCTIONS

1. Disconnect electrical supply.
2. Remove Black (BLK) wire connecting on-off toggle switch to bin temperature control.
3. Connect leads from safety switch (yellow cord) to the terminals of the toggle switch and temperature control from which black wire was removed. Inspect terminals to insure proper spacing between terminals and also between terminals and control box. Adjust if necessary.

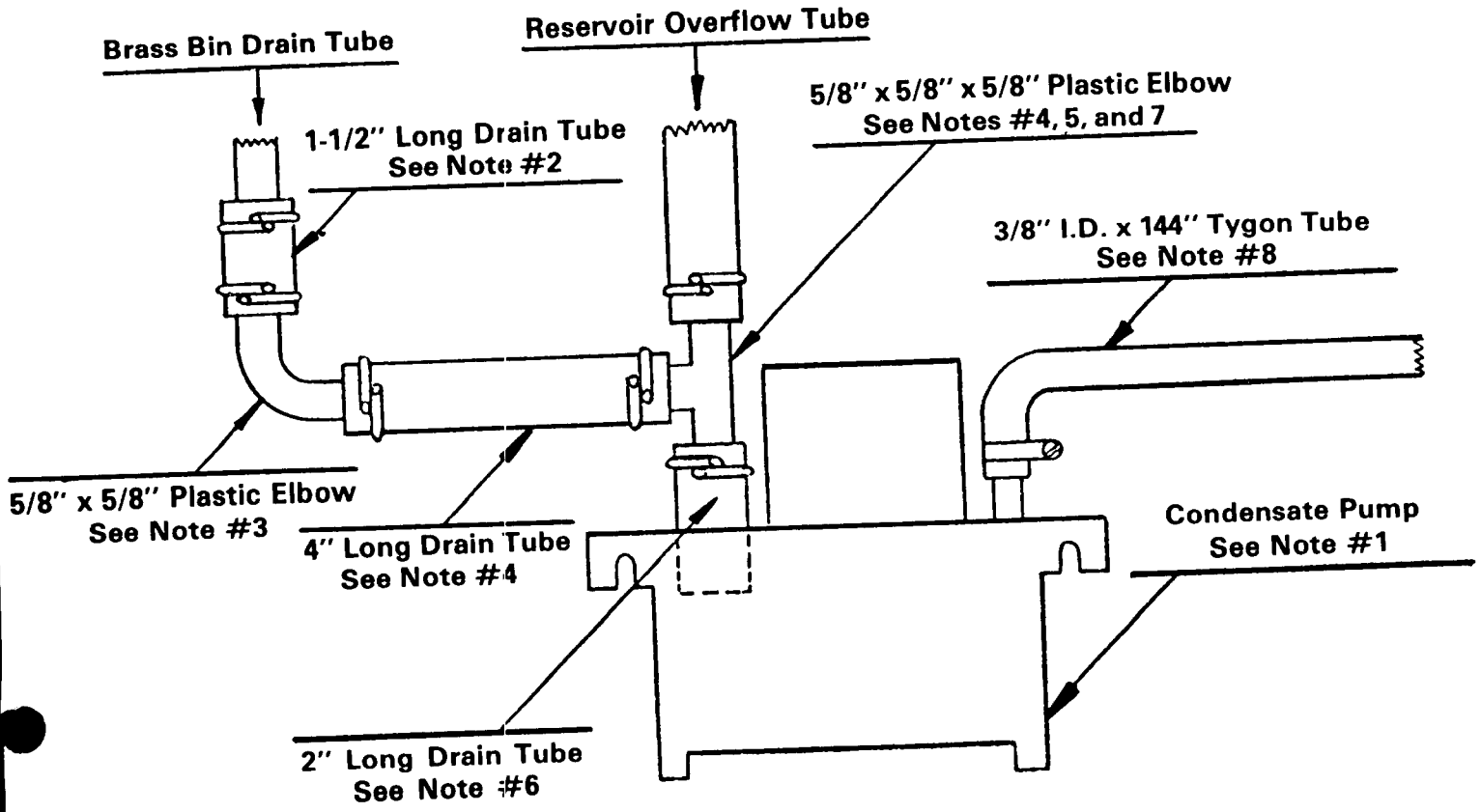

CLEANING AND CARE

Cabinet Exterior:

Clean with warm water and soap. Waxing is not required but is permissible on metal parts. Do not apply wax on the rubber gasket around the door opening or on plastic parts.

Machine Compartment:

IT IS VERY IMPORTANT TO CLEAN THE CONDENSER REGULARLY. A DIRTY OR BLOCKED CONDENSER WILL DRASTICALLY REDUCE ICE PRODUCTION.

Do not attempt to clean this area unless the off-on switch is turned off — lever pushed to the left. Use a vacuum cleaner to remove dust from the front of the condenser. DO NOT REMOVE THE COVER ON THE CONTROL BOX UNLESS THE POWER SUPPLY IS DISCONNECTED. **NOTE:** Failure to disconnect the electrical power prior to removing the control box cover may result in severe or fatal shock injury.

Storage Bin:

Use only warm water and soap. The chemicals in some cleaning agents will damage plastic.

Freezing Unit and Water System:

All water contains some minerals and impurities, scale, iron, etc. Cleaning schedule should be timed accordingly. The following procedure should be used to clean the interiors of the freezer, tanks and water lines.

1. Remove all cubes from the storage bin.

2. With the unit operating and the water spraying from the jets behind the plastic curtain (freezing cycle), slowly pour three (3) ounces of Scotsman Ice Machine Cleaner into the trough or reservoir below the jets.

3. Let the machine operate in the normal manner for one hour, then wait for a harvest cycle (when cubes fall out of the freezer and into the storage bin.)

At this time turn the machine off.

4. Pour a gallon of warm water over the cubes that have been made during the cleaning cycle. This will melt the cubes and clean the drain.

5. Dispose of any surplus cubes that are left in the storage bin.

6. Use a gallon or more of clean, cold water and flush out the interior surfaces of the freezer and storage bin.

7. Wipe all interior surfaces and turn machine on for normal operation.

8. Scotsman Ice Machine Cleaner is a mild food grade acid. Ordinary care in its use is adequate. All cubes made with this solution should be discarded as they have an acidulent taste.

CAUTION: Contains phosphoric and Hydroxyacetic acids. These compounds are corrosive and may cause burns. If swallowed DO NOT induce vomiting. Give large amounts of water or milk. Call physician immediately. In case of external contact, flush with water. Keep out of reach of children.

BIN INSERT ASS'Y

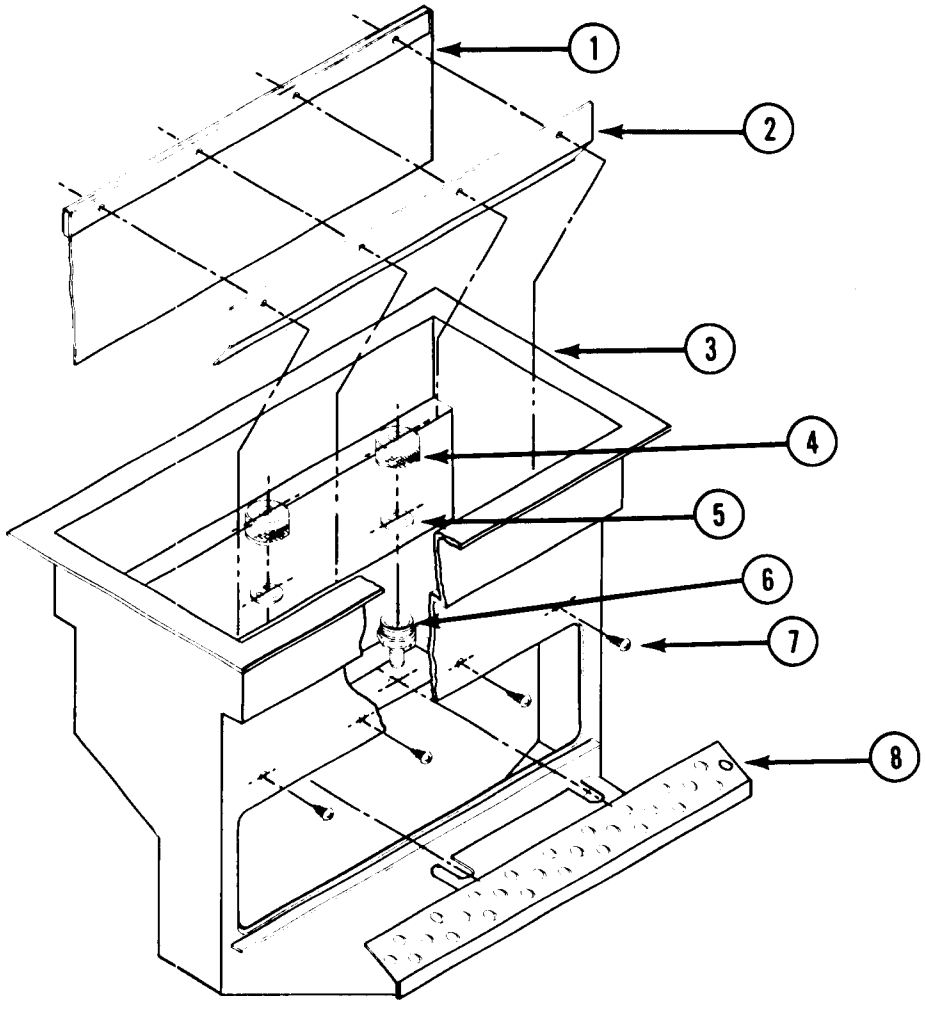

ITEM NO.	PART NO.	DESCRIPTION
1.	02-2053-01	Curtain
2.	A24155-001	Curtain Stiffner
3.	02-1923-00	Bin Insert
4.	02-1841-00	Jet Top
5.	A09543-000	Spinner
6.	02-1840-00	Spray Jet
7.	03-1404-16	Screws
8.	A22518-000	Cube Chute

WARNING: When removing jet top (4), be careful not to drop the small spinner (5). If dropped into the sump, the spinner may damage the water pump.

NOTE: The unit will not make ice properly if the spinners are not in place.

A-22536-21 WATER PUMP COMPLETE

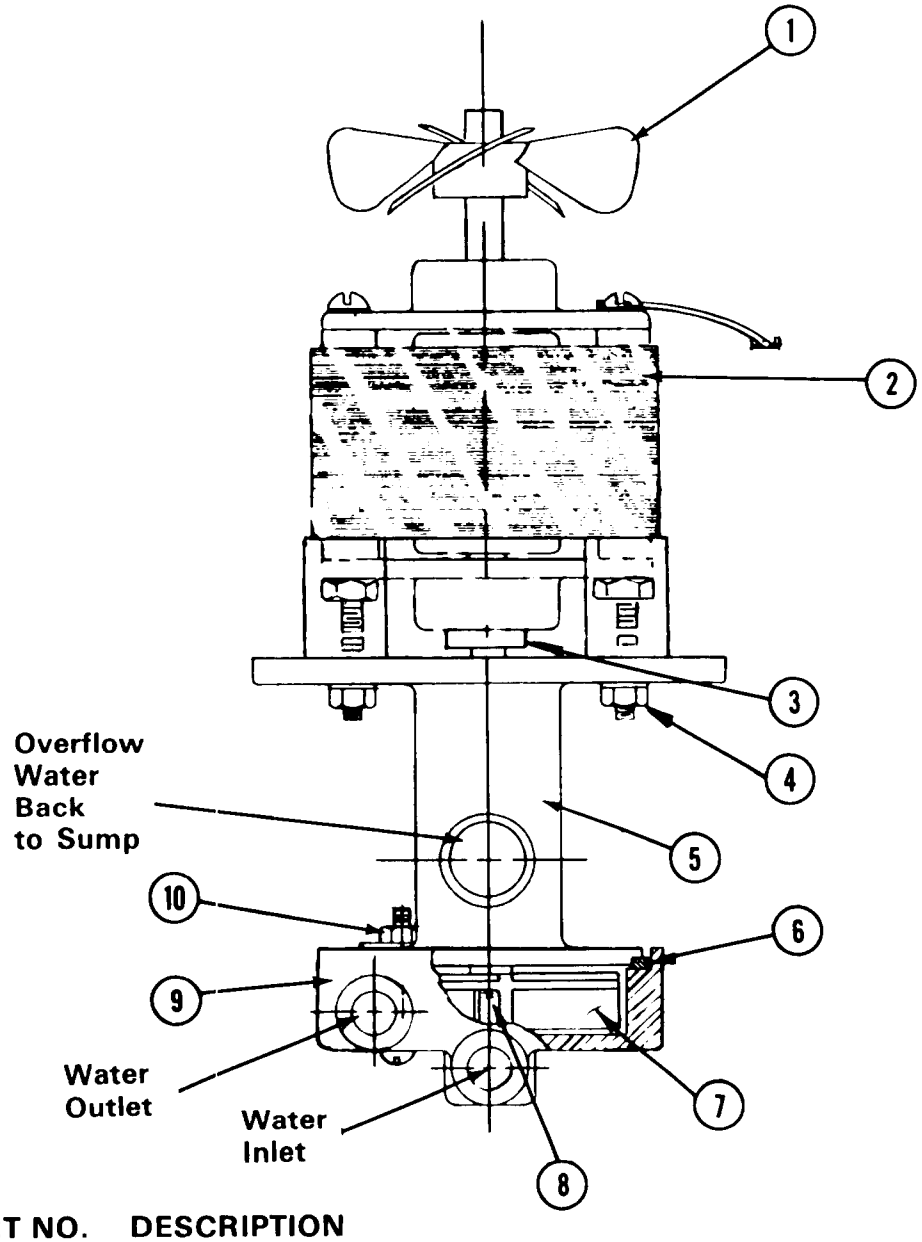

ITEM NO.	PART NO.	DESCRIPTION
1.	02-1719-00	Fan Blade
2.	12-1714-01	Motor
3.	13-0690-00	Rubber Washer
4.	03-1417-14	Lockwasher
	03-1406-02	Nut
5.	02-1711-00	Water Pump Body
6.	13-0617-07	O-Ring
7.	02-1712-00	Impeller
8.	03-1417-14	Lockwasher
	03-1403-05	Screw
9.	02-1710-00	Pump Base
10.	03-1403-60	Screw
	03-1408-23	Washer
	03-1406-02	Nut

ITEM NO.	PART NO.	DESCRIPTION
*11.	13-0687-00	Gasket, Water Pump (Installed Between Pump & Bin)
*12.	13-0688-01	Water Tube, order Feet Required
*13.	13-0688-01	Water Tube, order Feet Required
*14.	13-0688-02	Water Tube, order Feet Required

*Not Shown

CABINET PARTS

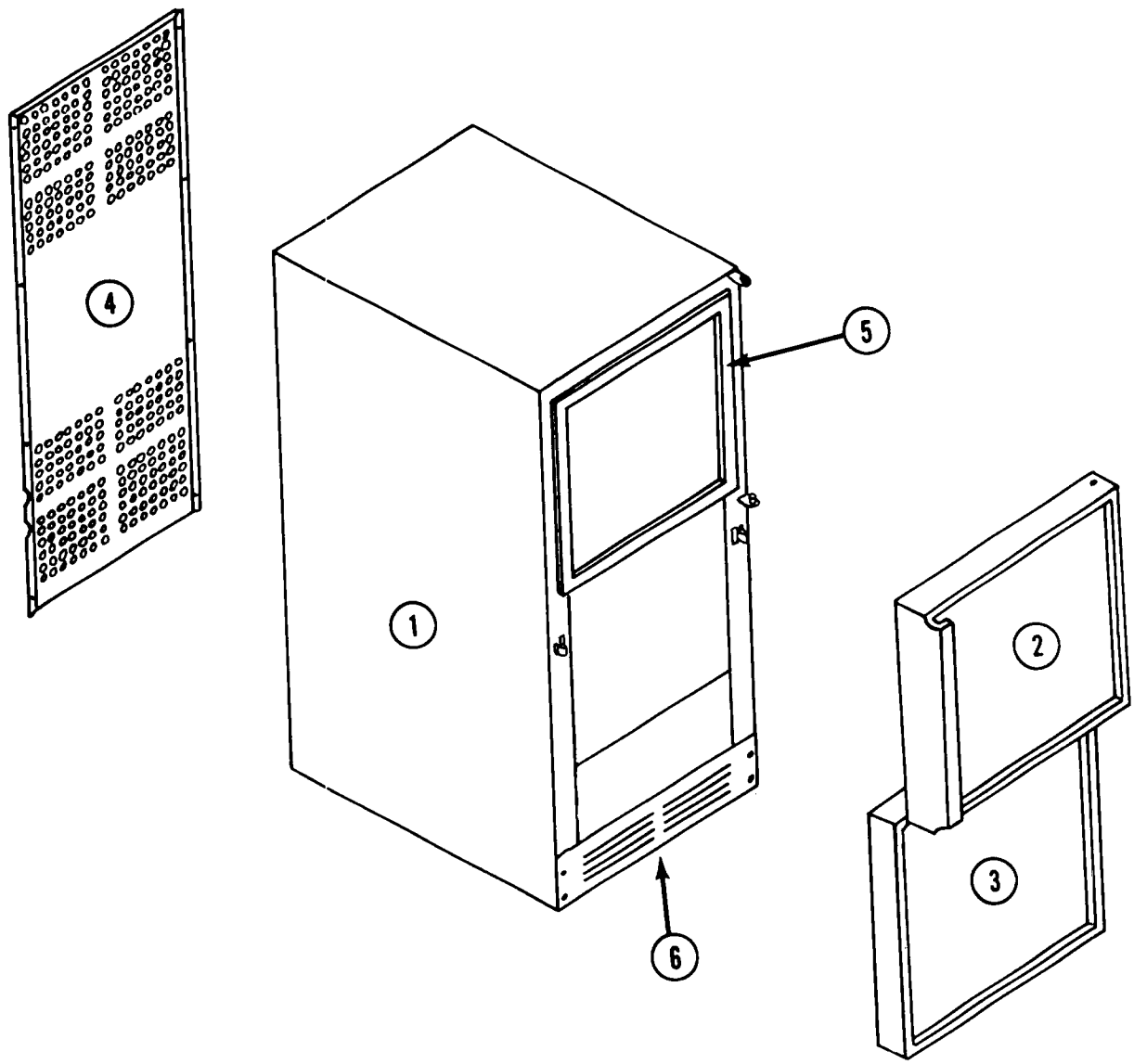

ITEM NO.	PART NO.	DESCRIPTION
1.	A18592-022	Cabinet Assembly (White)
	A18592-020	Cabinet Assembly (Sandal Wood)
2.	A24289-001	Access Door Complete
3.	A23586-001	Front Service Door
4.	A18595-000	Rear Service Panel
5.	13-0634-00	Gasket (magnetic)
6.	02-2243-01	Kick Plate

CONTROL BOX ASSEMBLY
(115/60/1)

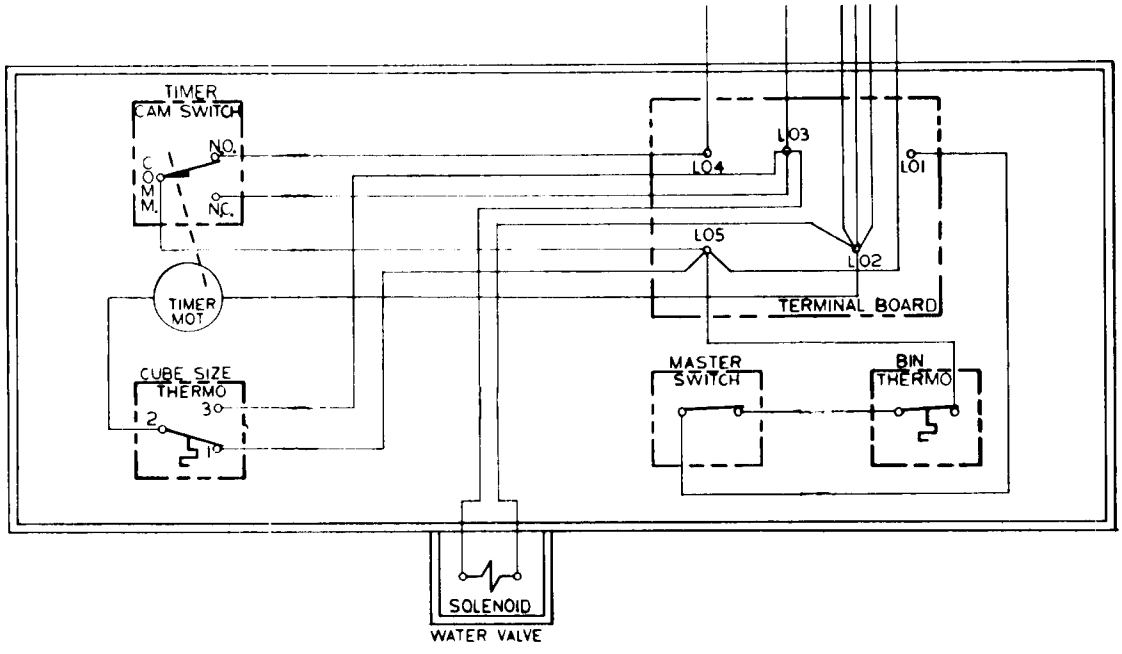

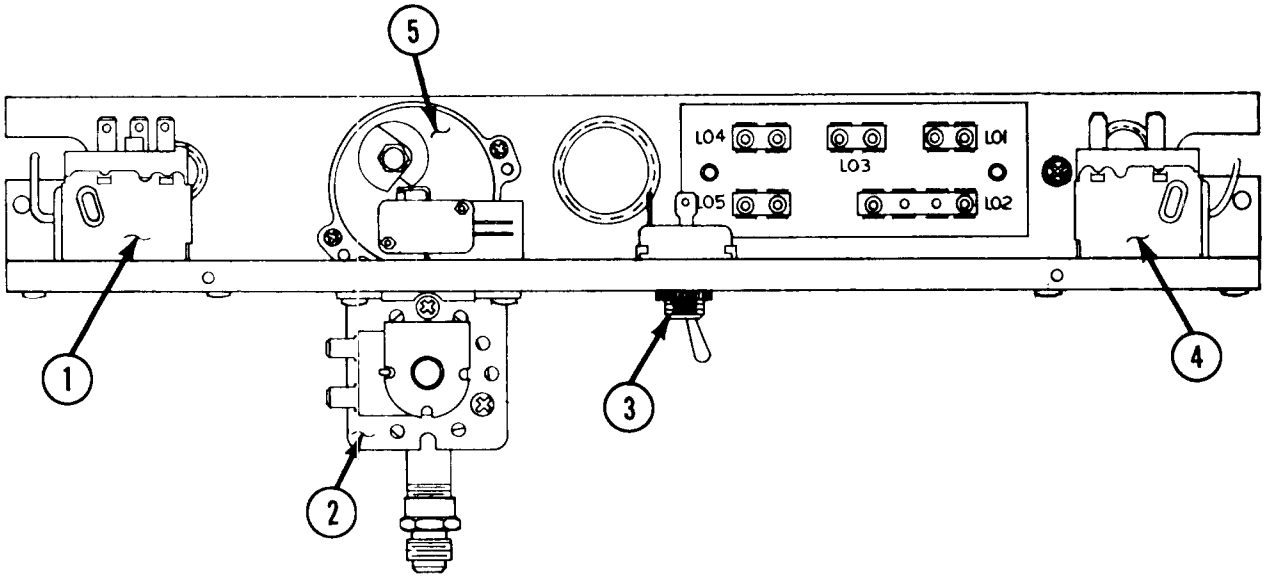

ITEM NO.	PART NO.	DESCRIPTION
1.	11-0395-01	Cube Size Control
2.	12-1646-02	Water Solenoid
	16-0672-01	Nylon Valve Fitting
3.	12-0426-01	Master Switch
4.	11-0366-00	Bin Thermostat
5.	12-1980-01	Timer

INTERNAL COMPONENTS

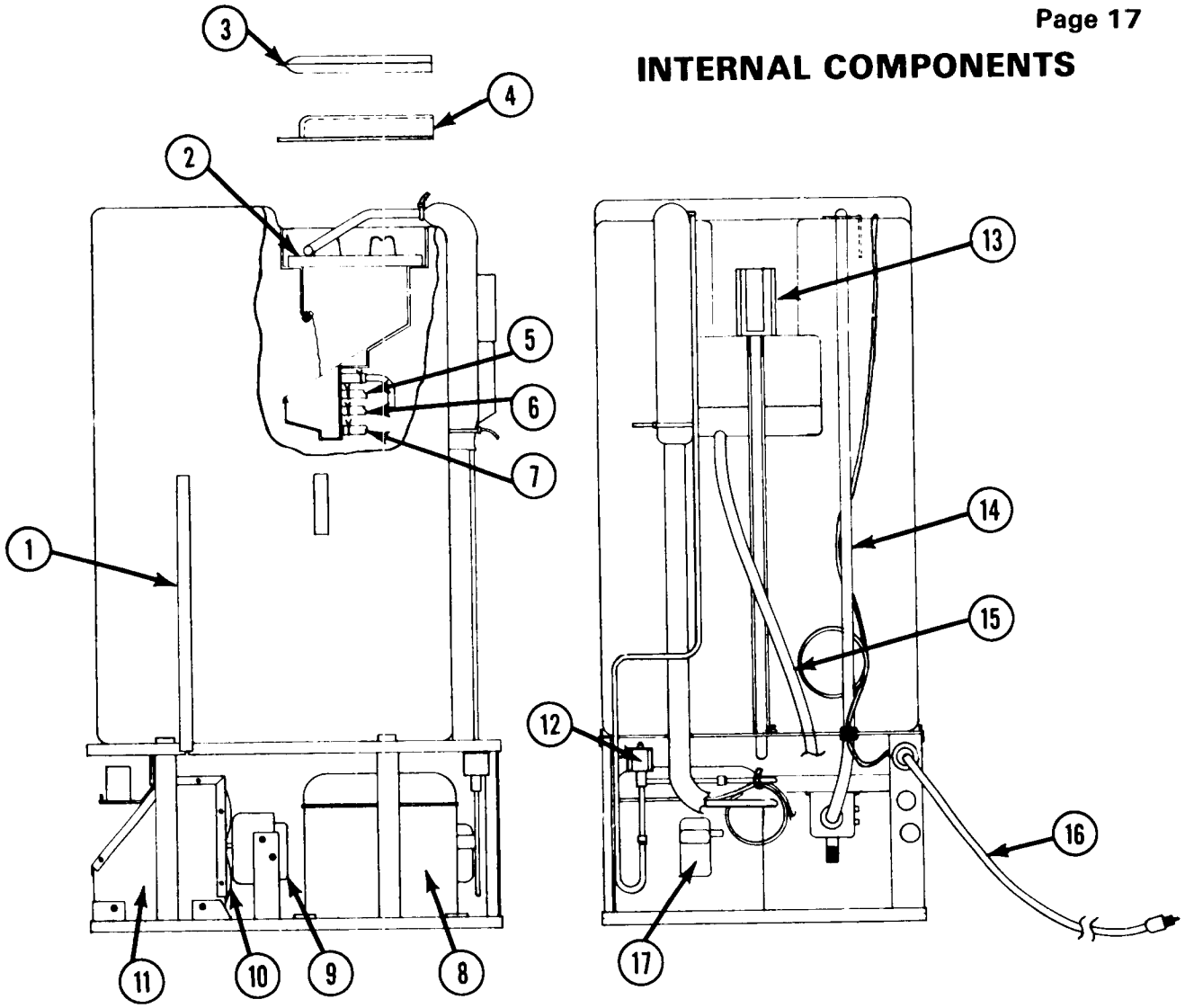

ITEM NO.	PART NO.	DESCRIPTION
1.	02-1634-01	Storage Bin
2.	A26115-020	Evaporator
	A26127-020	Evaporator Assembly Complete (Includes evaporator, cap. tube and suction line).
3.	A19588-000	Insulation
4.	02-2274-01	Cover
5.	13-0688-02	Water Tube (Order Number of Feet Required)
6.	13-0688-01	Water Tube (Order Number of Feet Required)
7.	13-0688-01	Water Tube (Order Number of Feet Required)
8.	18-2150-01	Compressor
9.	12-2015-01	Fan Motor
10.	18-3710-01	Fan Blade
11.	18-3708-01	Condenser
12.	12-2008-01	Hot Gas Valve Coil
	12-2009-01	Hot Gas Valve Clamp
	12-2010-01	Hot Gas Valve Body
13.	A22536-021	Water Pump
14.	13-0674-01	Tubing (order number of feet required)
15.	13-0674-04	Tubing (order number of feet required)
16.	12-1638-07	Electrical Cord
17.	18-2150-21	Starting Device
	18-2150-24	Cover
	02-1918-00	Drier (Not Shown)

WIRING DIAGRAM
(SM18A AND DC30A)
(115/60/1)

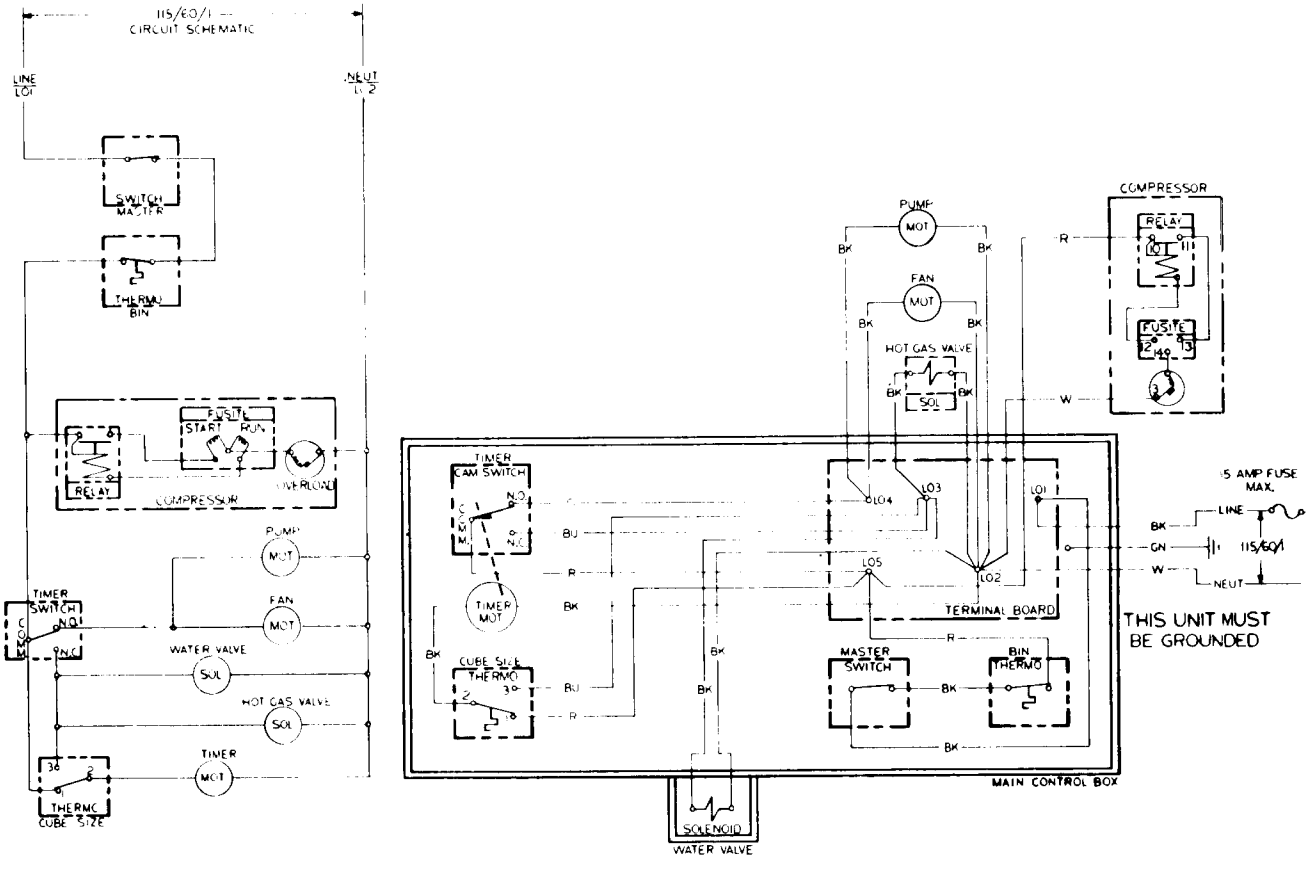

ALL CONTROLS SHOWN IN TIMED PORTION OF FREEZING CYCLE

A26304-001

WIRING DIAGRAM
FOR DRAINWATER PUMP MODEL
(SM18PA AND DC30PA)
(115/60/1)

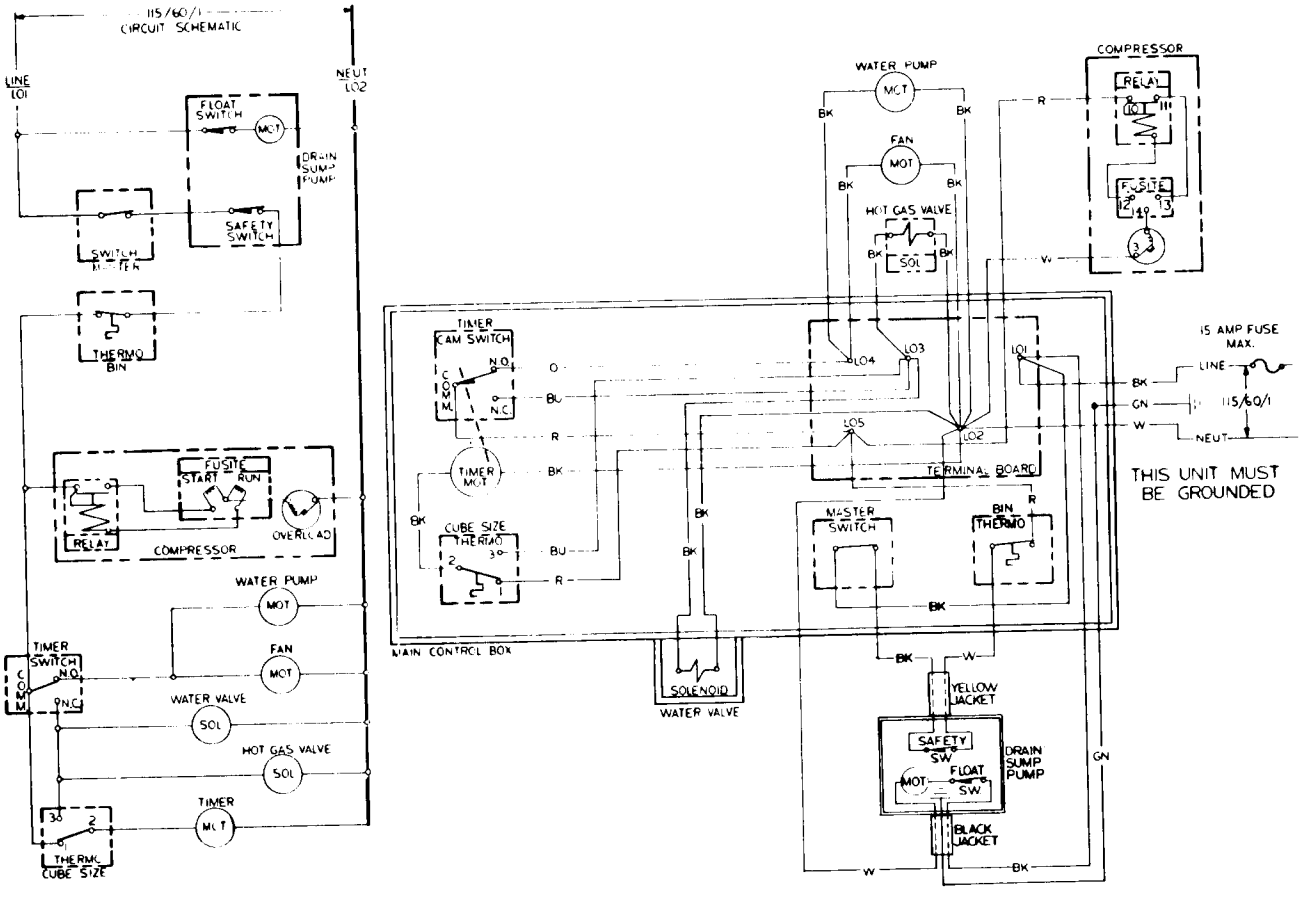

ALL CONTROLS SHOWN IN TIMED PORTION OF FREEZING CYCLE

A26304-091

MAINTENANCE INSTRUCTIONS

WARNING: DISCONNECT ELECTRICAL AND WATER SUPPLY BEFORE SERVICING MACHINE. FAILURE TO DISCONNECT ELECTRICAL POWER MAY RESULT IN SEVERE OR FATAL SHOCK INJURY.

Cabinet Removal.

1. Remove lower door by pulling forward at both top corners.

2. Remove upper door by taking out the hinge screw at the top right hand corner and lifting up and forward.

3. Remove 8 screws (2 on each side) from under the door gasket. It is not necessary to remove the gasket from the cabinet.

4. Remove the 4 screws in the kickplate.

5. Remove the 9 screws in the back panel. Also remove the 4 screws in the brace behind the water pump.

6. Remove the 6 screws (3 on each side) from the lower edge of the cabinet.

7. Remove the cabinet by lifting straight up.

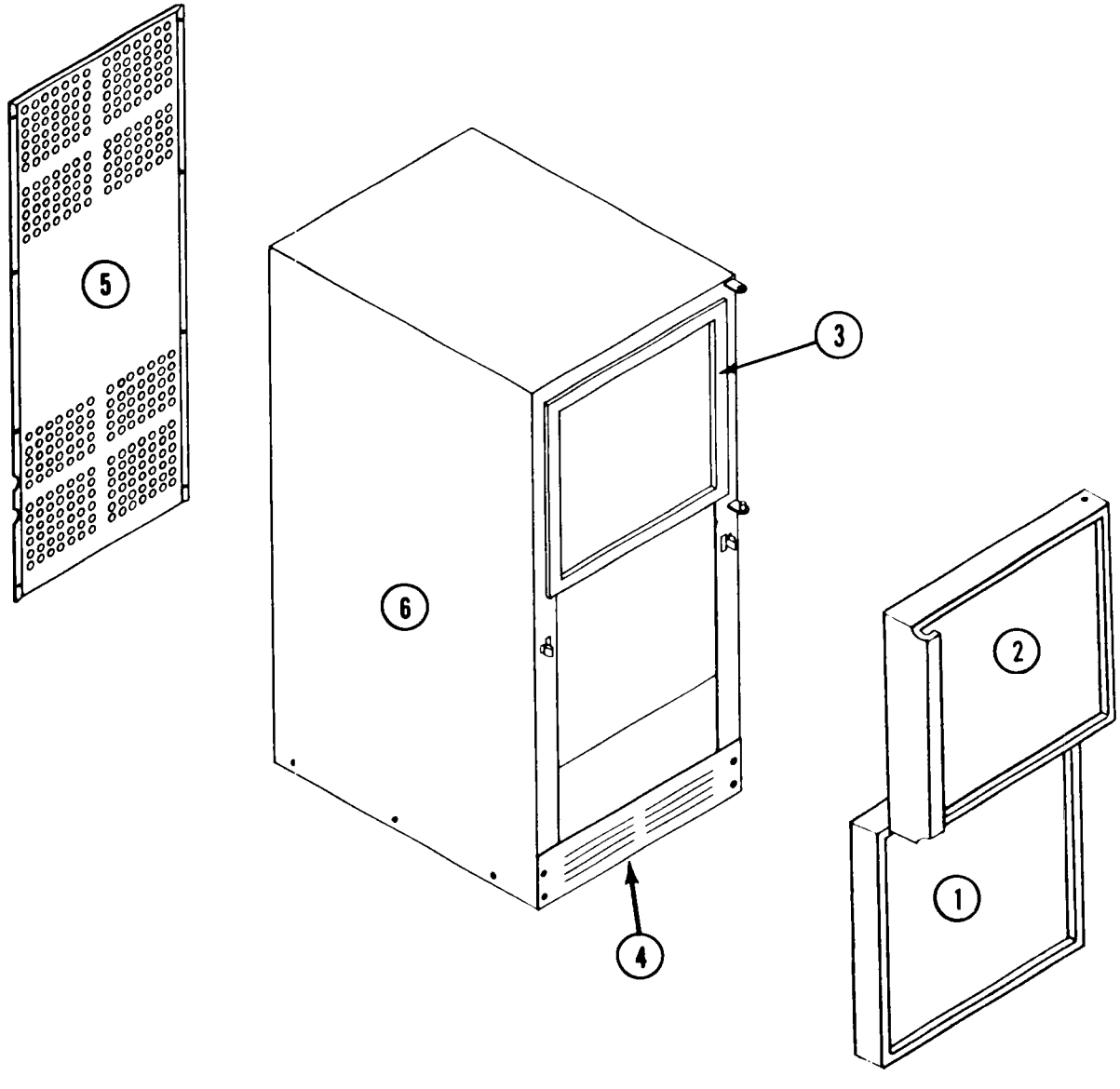

TIMER MOTOR REPLACEMENT

WARNING: DISCONNECT THE ELECTRICAL SUPPLY BEFORE SERVICING MACHINE. FAILURE TO DISCONNECT ELECTRICAL POWER PAY RESULT IN SEVERE OR FATAL SHOCK INJURY.

1. Remove lower service panel.

2. Push the toggle switch to the "OFF" position.

3. Remove the control box cover.

4. Remove mounting screws from timer.

5. Remove the electrical connections from the malfunctioning timer and replace them on the new part.

6. Mount the new timer motor in the control box.

7. Check the timer motor for proper operation.

NOTE: THE TIMER MOTOR **WILL NOT** RUN UNTIL THE CUBE SIZE CONTROL, PART NUMBER 11-0395-01, SUPPLIES POWER TO IT DURING THE LATTER PART OF THE FREEZING CYCLE. (SEE SERVICEMAN'S INFORMATION).

BIN THERMOSTAT REPLACEMENT

WARNING: DISCONNECT THE ELECTRICAL POWER BEFORE SERVICING MACHINE. FAILURE TO DISCONNECT ELECTRICAL POWER MAY RESULT IN SEVERE OR FATAL SHOCK INJURY.

1. Follow steps 1 thru 7 for cabinet removal.

2. Remove the two pieces of tape-on insulation from the capillary tube on the right hand side of the bin.

3. Push the end of the capillary tube through the hole into the bin.

4. Pull the tube out of the bin through the forward hole.

5. Remove the mounting screw holding the thermostat to the control box.

6. Remove the spade connections and replace them on the new control.

7. Remount the new thermostat in the control box and position the capillary tube.

8. Re-assemble the machine and check the operation of the thermostat by placing an ice cube against the capillary tube. Holding ice against the capillary tube will shut the unit off. Warming the capillary tube with your hand will turn the unit back on.

NOTE: The capillary tube should run parallel and 1/4" away from the bin wall for proper operation.

IMPORTANT: The bin thermostat is not eligible for warranty replacement if the capillary tube has been cut.

WATER PUMP REPLACEMENT

WARNING: DISCONNECT ELECTRICAL SUPPLY BEFORE SERVICING MACHINE. FAILURE TO DISCONNECT ELECTRICAL POWER MAY RESULT IN SEVERE OR FATAL SHOCK INJURY.

1. Follow steps 1 thru 7 for Cabinet Removal.

2. Remove 3 hose clamps and hoses from behind bin insert.

3. Remove the 2 screws which hold the water pump in place.

4. Lift out.

4. Cut the wire leads as close to the pump body as possible. Lift out the pump.

5. To install the replacement pump, follow previous steps in reverse. WARNING: Do not kink the three water tubes. Any obstruction will cause rapid failure of motor.

6. Cut replacement wires approximately 6 inches from motor and use wire nuts to reconnect.

ADJUSTING CUBE SIZE CONTROL

1. TO INCREASE CUBE SIZE, turn the adjustment knob clockwise. This will set the control to activate the timer at a colder evaporator temperature which will lengthen the freezing cycle and produce a larger cube.

2. TO DECREASE CUBE SIZE, turn the adjustment knob counter-clockwise. This will set the control to activate the timer at a warmer evaporator temperature which will shorten the freezing cycle and produce a smaller cube.

3. The adjustment knob should be turned a few degrees in the desired direction and the results check on the next batch of ice.

INLET WATER SOLENOID REPLACEMENT

WARNING: DISCONNECT ELECTRICAL AND WATER SUPPLY BEFORE SERVICING MACHINE. FAILURE TO DISCONNECT ELECTRICAL POWER MAY RESULT IN A SEVERE OR FATAL SHOCK INJURY.

1. Disconnect the electrical leads by removing the plug from the solenoid.

2. Remove the water inlet line and water tubing from the valve.

3. Remove mounting screws and solenoid from unit.

4. Reverse the previous steps to replace the valve.

INSTRUCTIONS FOR CHANGING DECORATOR PANELS

1. Door must be removed from machine prior to disassembly.

2. To simplify reassembly and protect door from damage, place tape around back side of door as indicated by drawing. Do not remove tape until door has been reassembled and is ready to be reinstalled on the machine.

3. Remove two screws from back of panel "A". Do not remove two lower screws E. Lower panels do not have screw E.

4. Lift handle from door applying even pressure on both sides exercising care so that handle is removed perpendicular to sides "B". DO NOT FOLD SIDES OF DOOR DOWN. DO NOT DISASSEMBLE DOOR PAST THIS POINT.

5. Set handle aside being careful not to misplace corner gussets "C".

6. Insert 1/4" thick decorator panel into channel in front of door "D". Panel size: Upper panel 13-7/16 x 14-5/8. Lower panel 14-5/8 x 14-5/8. Note the vinyl wood grain panel can be replaced with stainless steel or other metal panel by simply sliding the original panel out and replacing with new panel. In the case of the lower service door, the rubber like sealant must be removed from panel.

7. Reassemble door in reverse manner removing tape AFTER two screws "A" have been replaced.

8. Re-install door on machine.

NOTE: Lower door is disassembled in same manner.

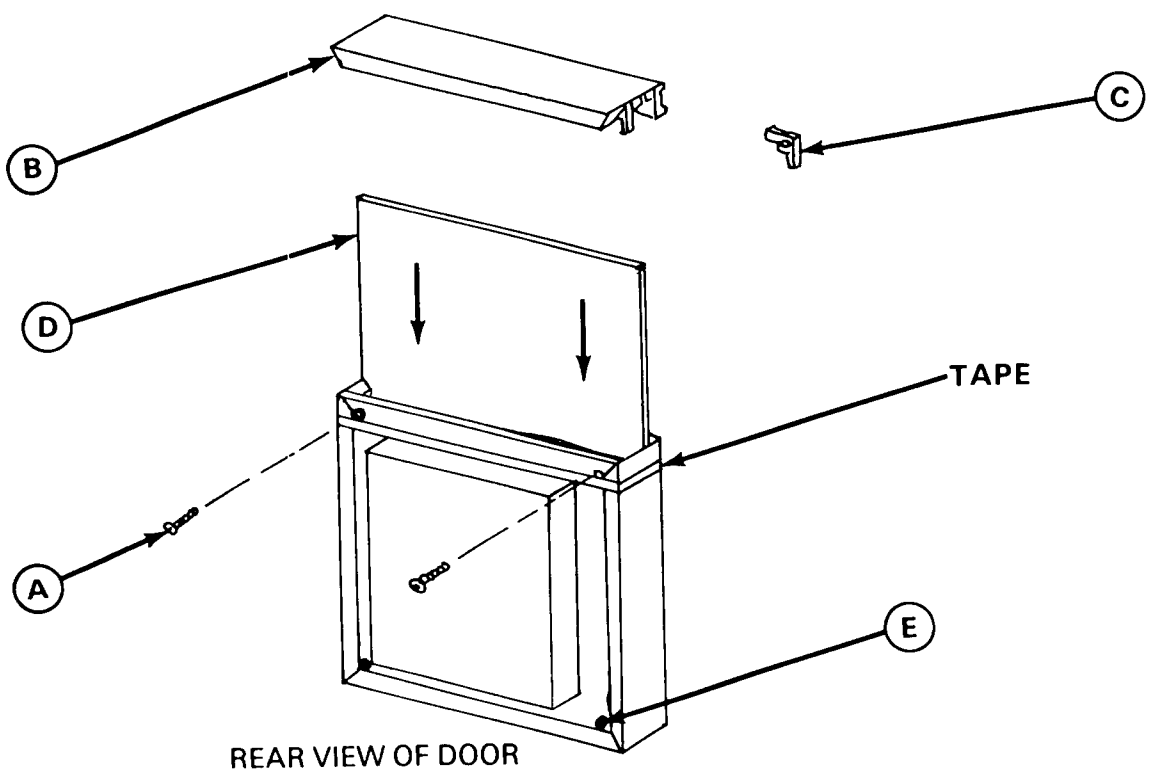

REAR VIEW OF DOOR

SERVICEMAN'S INFORMATION

The DC30A and SM18A are AIR-COOLED. They are designed to operate in a wide range of ambient conditions through the combined reactions of the CUBE SIZE CONTROL and TIMER. This is explained below.

1. The CUBE SIZE CONTROL senses evaporator temperature. At the start of a freezing cycle, the evaporator is warm and the CUBE SIZE CONTROL is open so power IS NOT supplied to the TIMER MOTOR. This means that the unit is making ice but the TIMER MOTOR IS NOT running.

2. During the latter part of the freezing cycle, the CUBE SIZE CONTROL senses the desired temperature, and closes the circuit to the TIMER MOTOR.

3. Once the TIMER MOTOR is energized, it will complete the ice making cycle and initiate the harvest or defrost cycle according to the position of the cam.

4. The cubes are harvested or defrosted by re-directing the flow of the hot refrigerant gas through the evaporator. The warm evaporator ejects the cubes and resets the CUBE SIZE CONTROL in proper position to start the next ice making cycle.

5. When the TIMER MOTOR rotates to the end of the defrost or harvest cycle, the CUBE SIZE CONTROL takes over the electrical circuit and power is cut to the TIMER MOTOR. The TIMER MOTOR IS NOW DE-ACTIVATED AND DOES NOT run until the CUBE SIZE CONTROL again activates it during the latter part of the freezing cycle.

6. See ADJUSTING CUBE SIZE CONTROL for complete instructions.

SERVICE ANALYSIS

SYMPTOM	POSSIBLE CAUSE	CORRECTION
Machine does not make ice.	Fuse in Power Line Blown	Check fuses in the house fuse box. Other loads on the same line may have caused fuse to blow. Use a 15 amp circuit and fuse.
	On-Off Switch in Off Position	The lever of the switch should be pushed to your left for "on" position.
	Water Supply Turned Off	Slightly loosen water connection in the front of the machine. If no water is present the water supply has been turned off.
	Timer does not run.	Check cam for rotation of clock.
	Wiring broken or connection off	Check electrical circuitry.
	Compressor does not run	Any of the following may be the cause. Starting relay, overload, or defective compressor.
	Water pump not operating	Clean or replace pump.
	Bin thermostat not operating correctly	Check thermostat by warming with hand and cooling with ice cube. Replace if necessary.
Low ice capacity.	High Room or Water Temperature	Provide ventilation to the unit. Decrease temperature as much as possible. If water supply pipe to the machine is very warm have plumber check installation.
	Unit connected to hot water line	Connect to cold water line.
	High head pressure	Dirty condenser. Clean.
	Leaky water valves	Clean, repair or replace valves.
Cubes too large.	Timer too slow or stops	Replace timer motor.
	Cube Size control set improperly	Check and adjust for proper operation.
	Timer switch defective	Replace switch.
	Cam on timer loose	Tighten cam locking nut.

SERVICE ANALYSIS

SYMPTOM	POSSIBLE CAUSE	CORRECTION
Machine noisy during harvest cycle.	Excessive incoming water pressure	Install pressure regulator in incoming water line. Set water pressure at 25 pounds.
Cubes cloudy.	Spray Jets Dirty	Clean (see page 12).
	Shortage of Water	Check water supply for partially closed valves or supply line, low water pressure, (See instructions under "Cuber Runs Short of Water") or plastic curtain not hanging properly.
	Machine not level	Level.
	Dirty water supply	Connect water supply to water softener and/or filter.
	Accumulation of dirt in water system	Clean with Scotsman Ice Machine Cleaner.
Cubes too small.	Restricted Capillary Tube	Purge and recharge. If necessary replace capillary tube.
	Moisture and air in system	Purge - recharge - replace drier. Use 2-831 drier.
	Shortage of water	Check water supply (See if Cuber runs out of water).
	Shortage of refrigerant	Charge unit properly. (See serial number plate for correct charge).
	Cube size control set improperly	Check and adjust for proper operation.
Cuber runs short of water.	Water sprays out curtains	Clean spray jets. Be sure plastic curtain hangs properly.
	Water valves leaking	Check and repair valves if necessary.
	Water leaking from pump hoses	Check clamp and hoses. Replace if necessary.
Compressor cycles intermittently.	Low voltage	Minimum voltage to be 10% less than normal rating.
	Air in the system	Purge and recharge.

SERVICE ANALYSIS

SYMPTOM	POSSIBLE CAUSE	CORRECTION
Cubes pile up in freezer.	Curtain or cube chute out of place or improperly installed.	Check position of curtain and chute. Correct or replace.
Poor harvest cycle.	Too short defrost time	Check timer - replace if necessary. Adjust timer switch.
	Restriction of incoming water	Clean water lines.
	Water valve sticking, not opening, or out of adjustment.	Clean, replace or adjust valve.
	Air vent holes in ice cups plugged	Clean small holes in top of the cups. See page 12 on cleaning.
Excessive bin meltage.	Drain line plugged	Clear line of obstruction.
	Drain not installed properly. Line does not have proper gravity flow so water backs up into bin.	See instructions for proper installation procedure.

ACCESSORY PARTS AVAILABLE

NOTE: TWO 1/4" PIPE THREAD X 1/4" COMPRESSION FITTINGS ARE REQUIRED FOR INSTALLATION. P/N 16-0621-03.

Water Pressure Regulator Part No. 11-0200-00.

Installation of a pressure regulator in the incoming water line will minimize any objectional or excessive noise emitted during the harvest cycle. This valve comes preset from the factory at 25 lbs.

Water Strainer Part No. 16-0162-00.

Installation of a water strainer in an easily accessible area will greatly simplify service if a machine is installed on a water supply system that may have sand or sediment in the water. The machine comes equipped with a strainer screen in the water solenoid valve which is adequate for the majority of installations, however, if sand or sediment could be a problem, installation of this water strainer from a service standpoint is highly recommended. The diagram below shows the direction of water flow. The cleaning plug must be in a downward position slanting up into the incoming water. Notice the arrow stamped on each strainer to show correct flow direction.

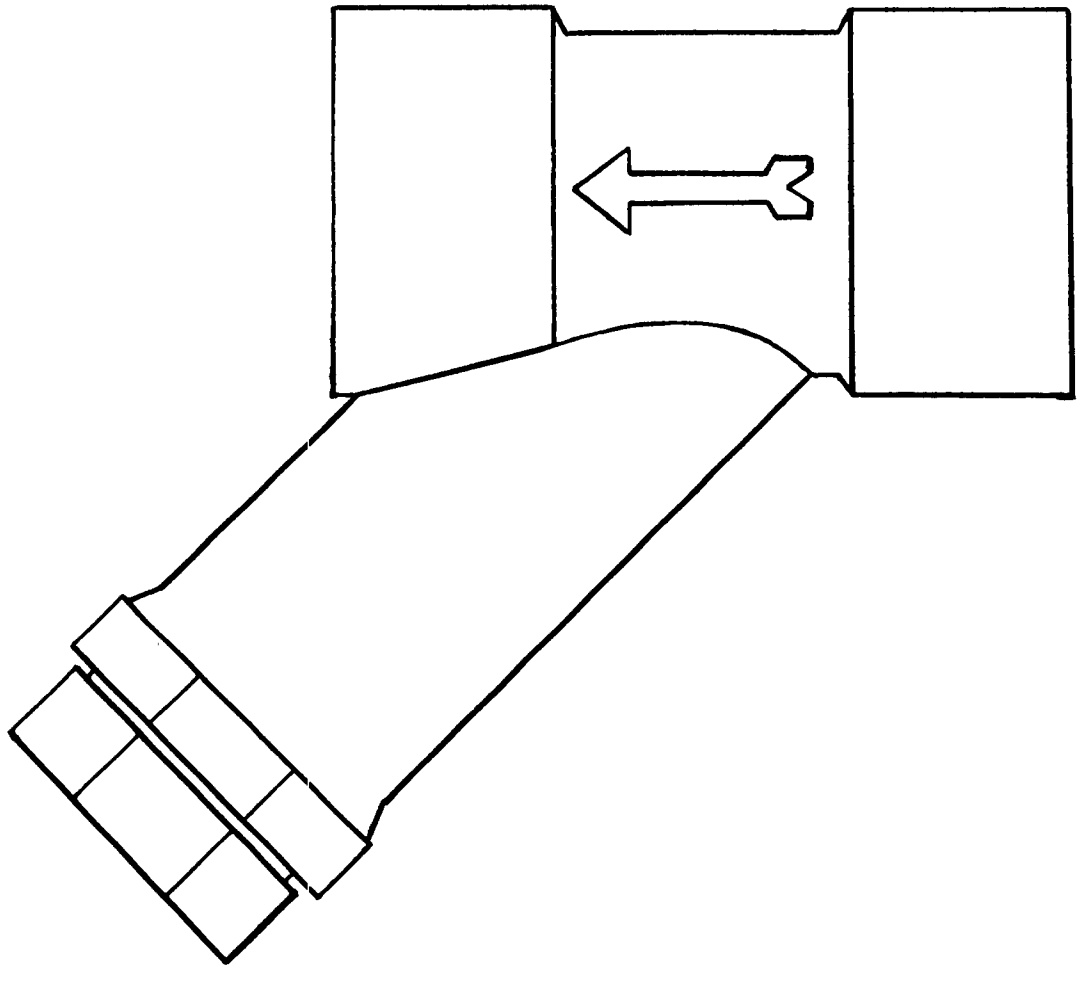

TABLE OF CONTENTS

Foreward 1
Table of Contents 2
SPECIFICATIONS 3
Ice Making Capacity 4
Appearance & Dimensions 5
Mechanical Specifications 6
Complete Cabinet Layout 7
INSTALLATION
Preparation For Installation 8
Installation. 9,10
Refrigeration Cycle 11
Water Schematic 12
Wiring Diagram 13
Final Check List 14
SERVICE
Starting Machine - Refrigerant Charge 15
Water System, Electrical System 16
Chassis Assy. 17
Freezer, Torque Tube & Gear Reducer Assy. 18
Freezer Assembly 19
Gear Reducer Assy. 20
Reservoir Assy. 21
Assy. Parts & Service Panels 22
Service 23,24
Maintenance Instructions 25
Service Analysis 26,27
Parts List 28

THIS PAGE
INTENTIONALLY
LEFT BLANK

THIS PAGE
INTENTIONALLY
LEFT BLANK

SPECIFICATIONS

SCOTSMAN Model DF-4 Super Flakers are designed for the small user of flaked ice. It is the finest Ice Maker on the market today. It will work 24 hours a day for you, or only as needed. It produces the highest quality ice available at any price.

Approximately 100 pounds of SCOTSMAN crushed ice is available each 24 hours to the storage bin for immediate use.

SCOTSMAN Super Flakers are easily installed requiring only standard water, drain and electrical connections.

ATTRACTIVE COMPACT CABINET. Top and front panels of stainless steel. Grey hammerloid finish on balance of cabinet. Has removable panels for easy access to mechanical parts.

SEALED REFRIGERATION SYSTEM. Provides quiet, efficient operation of the machine. Compressor motor is spring mounted for quiet operation. Compressor motor is covered by a full 5-Year Warranty.

HOW IT WORKS. An exclusive patented ice-making system, wherin water in the constant level float reservoir is fed to the bottom end of the freezing cylinder. Ice from the refrigerated walls of this cylinder is extruded past the ice breaker at the top of the cylinder through a side opening by means of a stainless steel auger driven by a gear motor.

SCOTSMAN Model DF-4 is completely automatic. A manual switch behind the lower front service door starts the machine, and from then on, produce flakes automatically. When the storage bin fills, the machine automatically shuts off and starts up again when ice is taken from the storage compartment.

SCOTSMAN®

SUPER FLAKER
DF-4
SERIES
Storage Type

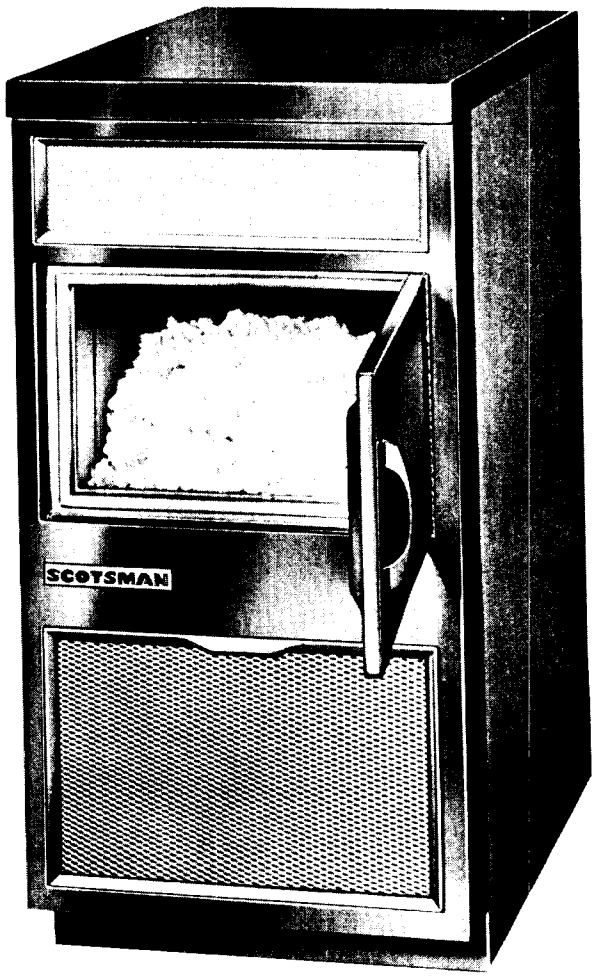

ice making capacity

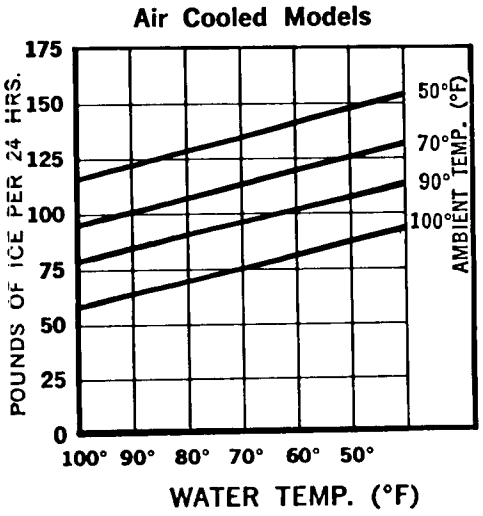

SPECIFICATIONS

SUPER FLAKER MODEL DF-4H

Daily capacity up to lbs.
Self-contained 35 lb. capacity storage bin
Air cooled condenser
⅛ HP. compressor
Standard 115 V, 60 cy, 1 ph, AC
¼" water inlet SAE Flare
⅝" OD bin drain
Removable top 1 ⅝" high—
Use for under counter installation

Hammerloid grey exterior on sides
Stainless steel finish top and front
Stainless steel bin

Height	36"
Width	18"
Depth	24 ⅜"
Approximate shipping weight	168 lbs
Approximate net weight	148 lbs.

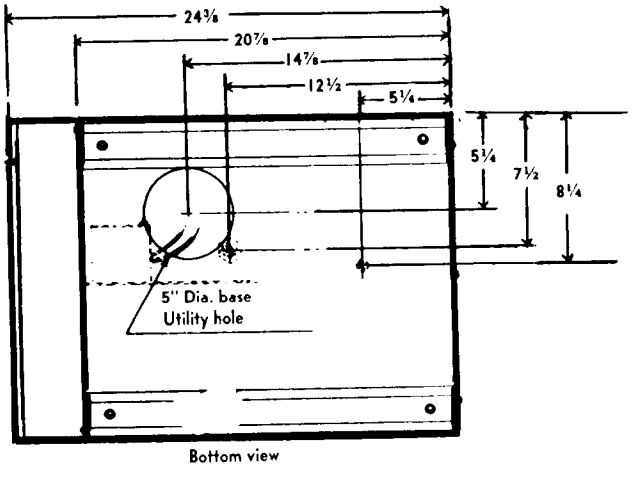

Bottom view

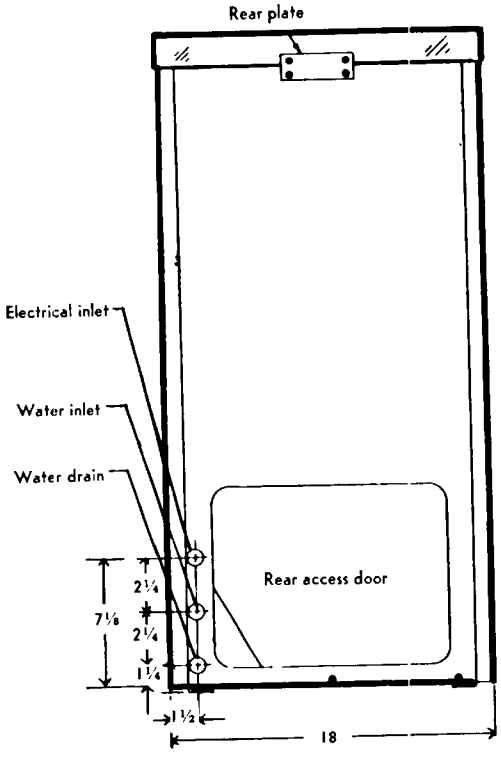

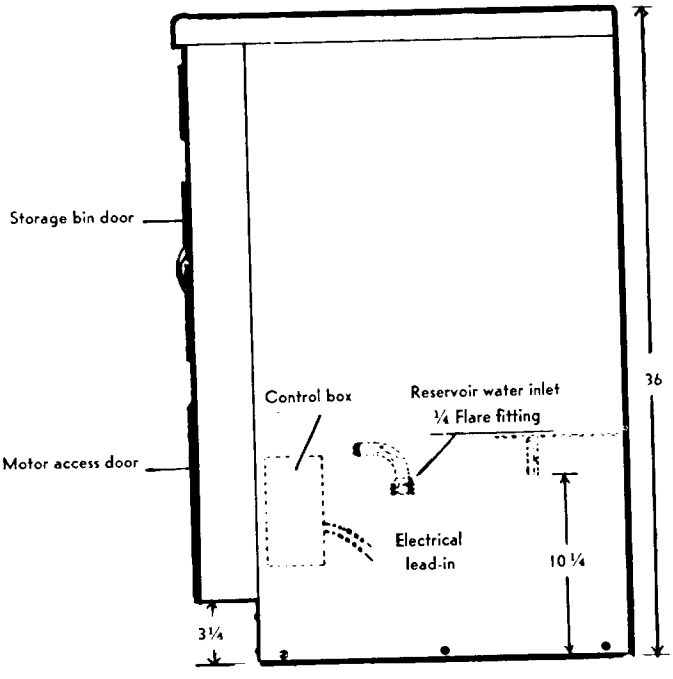

MECHANICAL SPECIFICATIONS

	Model DF-4
Compressor	1/8 H.P. Current Draw 2.2 Amps.
Condenser	Air-Cooled
Refrigerant	16 oz. R-12
Refrigerant Control	Capillary Tube
Power Consumption	4.9 Amps. Total
Current	115V, 60 Cycle, 1 Ph.
Worm Gear Motor	1/15 H.P. 115/60/1 Current Draw 2.2 Amps.
Worm - R.P.M.	6.5 R.P.M.
Water Consumption - Freezer	3 qts. per hr.
Water Consumption - Total	3 qts. per hr.
DIMENSIONS	
Depth	24 3/8"
Width	18"
Height	36"
SHIPPING WEIGHT	
Uncrated	148 lbs.
Crated	168 lbs.

COMPLETE CABINET LAYOUT

DF-4 FLAKER

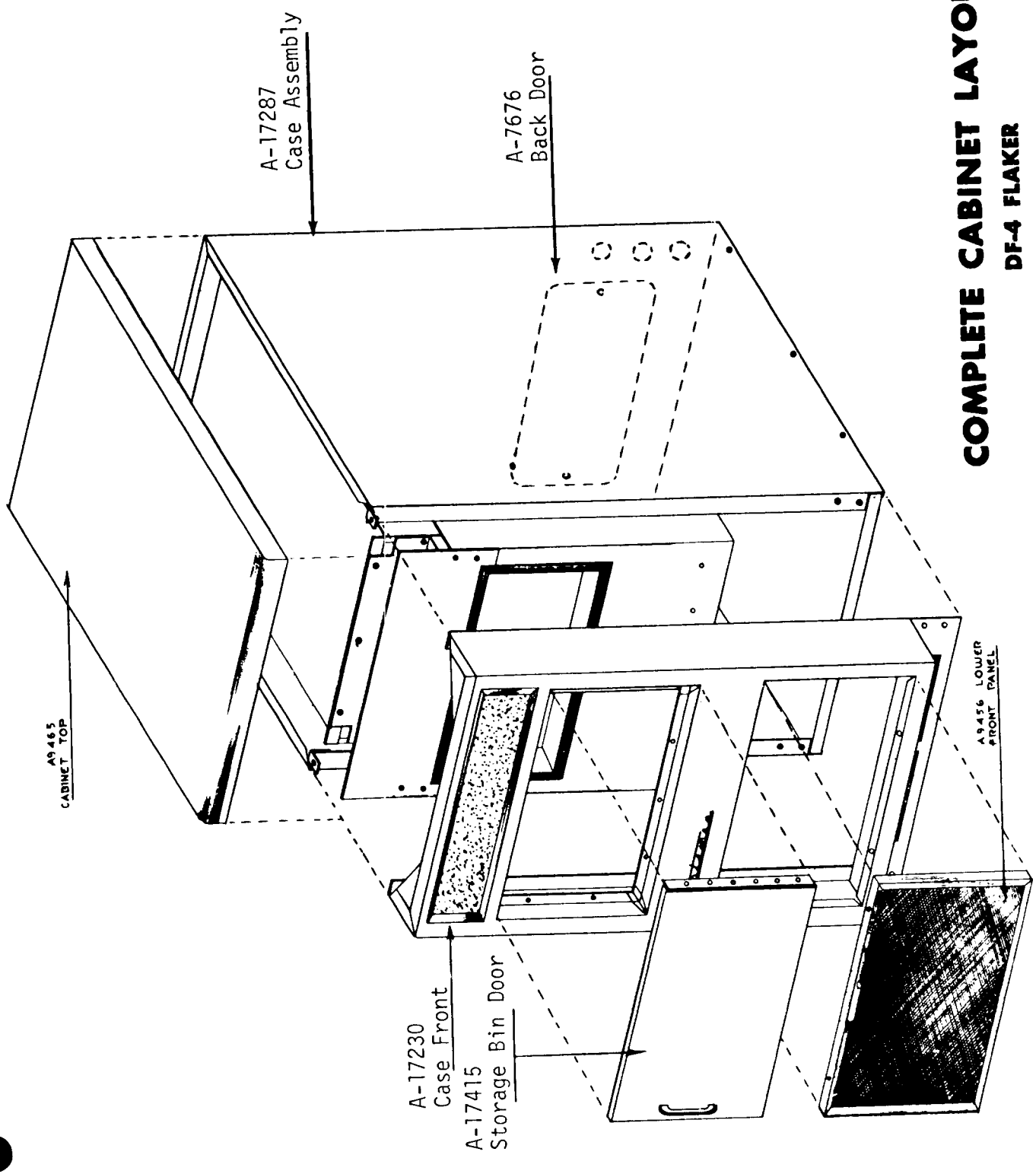

SCOTSMAN SUPER FLAKERS

PREPARATION FOR INSTALLLATION

1. Inspect complete unit cabinetry for shipping damage. Notify carrier of concealed damage claims.

2. Remove all service doors and panels.

3. Remove water reservior paper packing around float ball. Make sure plastic overflow standpipe is securely in place.

4. Open electrical control box and prepare for hook up, use knock outs, cord connectors etc. Then check unit nameplate voltage against building source voltage and make sure they correspond. Caution--Improper voltage supplied to units will void your warranty protection.

5. Select unit location prior to hook up of water drain and electricals in accordance with local and national codes. Minimum room temperatures is 50^{0} Fahrenheit. On air cooled models, select well ventilated location.

6. Remove warranty card and Users manual from storage bin, then wipe bin clean with damp cloth.

7. Fill out warranty card completely including model and serial numbers as taken from aluminum plate found behind front service panel and forward to Scotsman Factory using self mailing card.

INSTALLATIONS

UNDER BAR INSTALLATIONS: Locate so proper circulation can be attained around the unit and behind it at least four inches.

KITCHEN INSTALLATIONS: As a rule, the kitchen is not the most practical place to install an air-cooled condensing unit, as grease is almost always present and makes cleaning of the condensing unit difficult. Do not locate near range or steam table or other heating devices that may be used in the kitchen.

STOREROOM INSTALLATIONS: Locate machine in the coolest place. Locate machine in a dry place. Keep away from furnace and boiler room. Keep away from service chutes and run-aways; also coal or other dust of any kind. If there is any chance of basement flooding, block the machine up enough to eliminate any possible damage to the machine.

WATER SUPPLY: The recommended water supply line is 1/4 inch OD copper tubing. Connect to cold water supply line with regular plumbing fittings, with a shut-off valve installed in an accessible place between supply line and machine.

The water supply line connects to the 1/4 inch flare fitting on the machine. Water supply must be installed to conform with local code. In some cases a licensed plumber and/or a plumbing permit will be required.

DRAIN: The recommended drain from the bin is 5/8 inch OD copper tubing. Must be run to an open trapped and vented drain. If drain is a long run, allow a 1/4 inch pitch per foot. Drain must be installed to conform with local code.

INSTALLATION

ELECTRICAL CONNECTIONS:

DF-4

115 Volts, 60 Cycle, 1 Phase

15 Amp. Circuit

Be certain that the Super Flaker is on its own circuit and individually fused. The maximum allowable voltage variation should not exceed 10 percent of the nameplate rating even under starting conditions. Low voltage can cause erratic operation and may be responsible for serious damage to the overload switch and motor windings.

All external wiring should conform to the National Underwriters and local Electrical Code requirements. Usually an electrical permit and the service of a licensed electrician will be required.

ELECTRICAL INSTALLATION:

Compressor	H.P.	1/8
	Voltage	115
	Amp Rating	2.2
	Cycle	60
	Phase	Single
Gear Motor	H.P.	1/15
	Voltage	115
	Amp. Rating	2.2
	Cycle	60
	Phase	Single

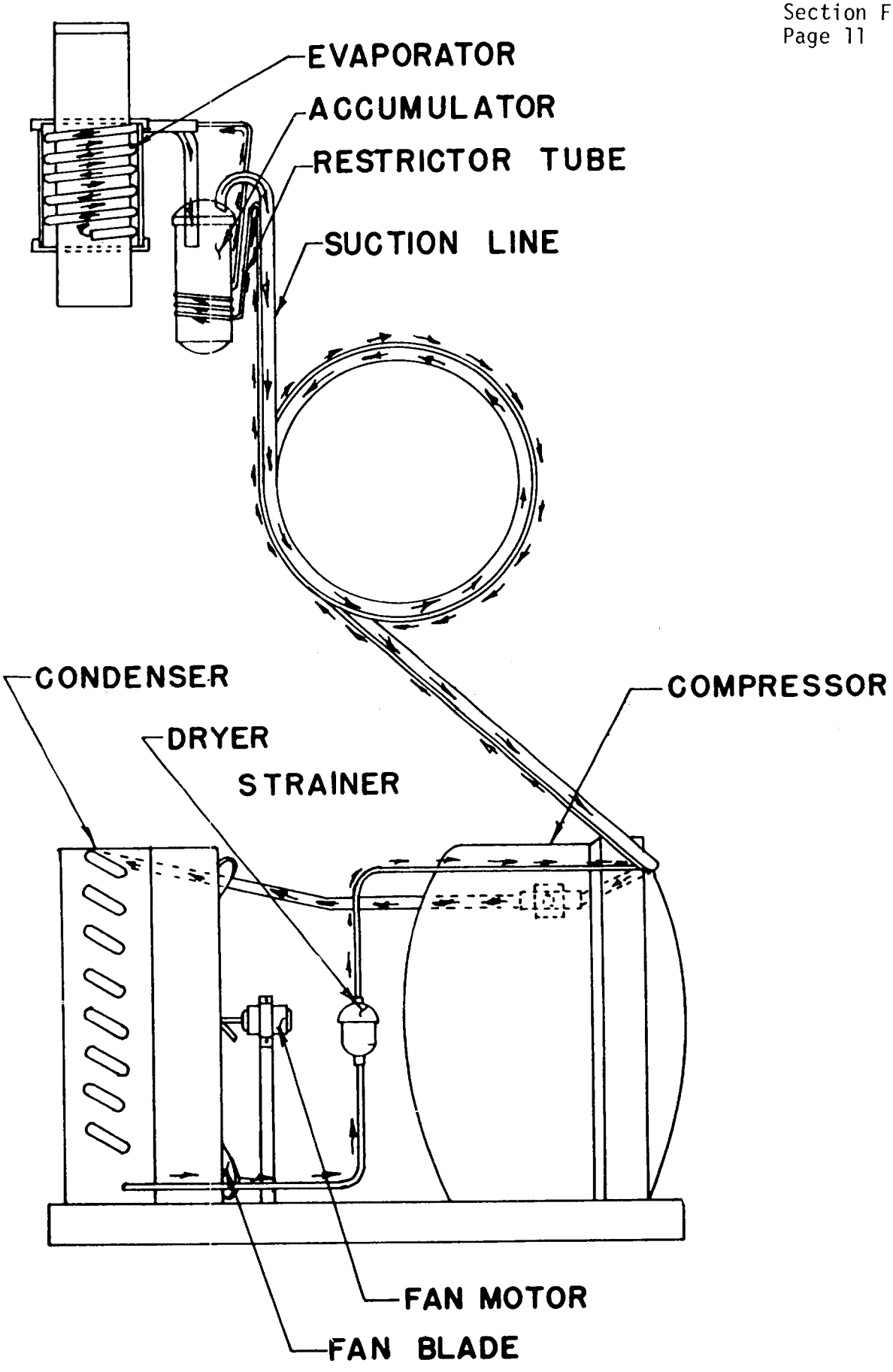

REFRIGERATION CYCLE

DF-4 FLAKER

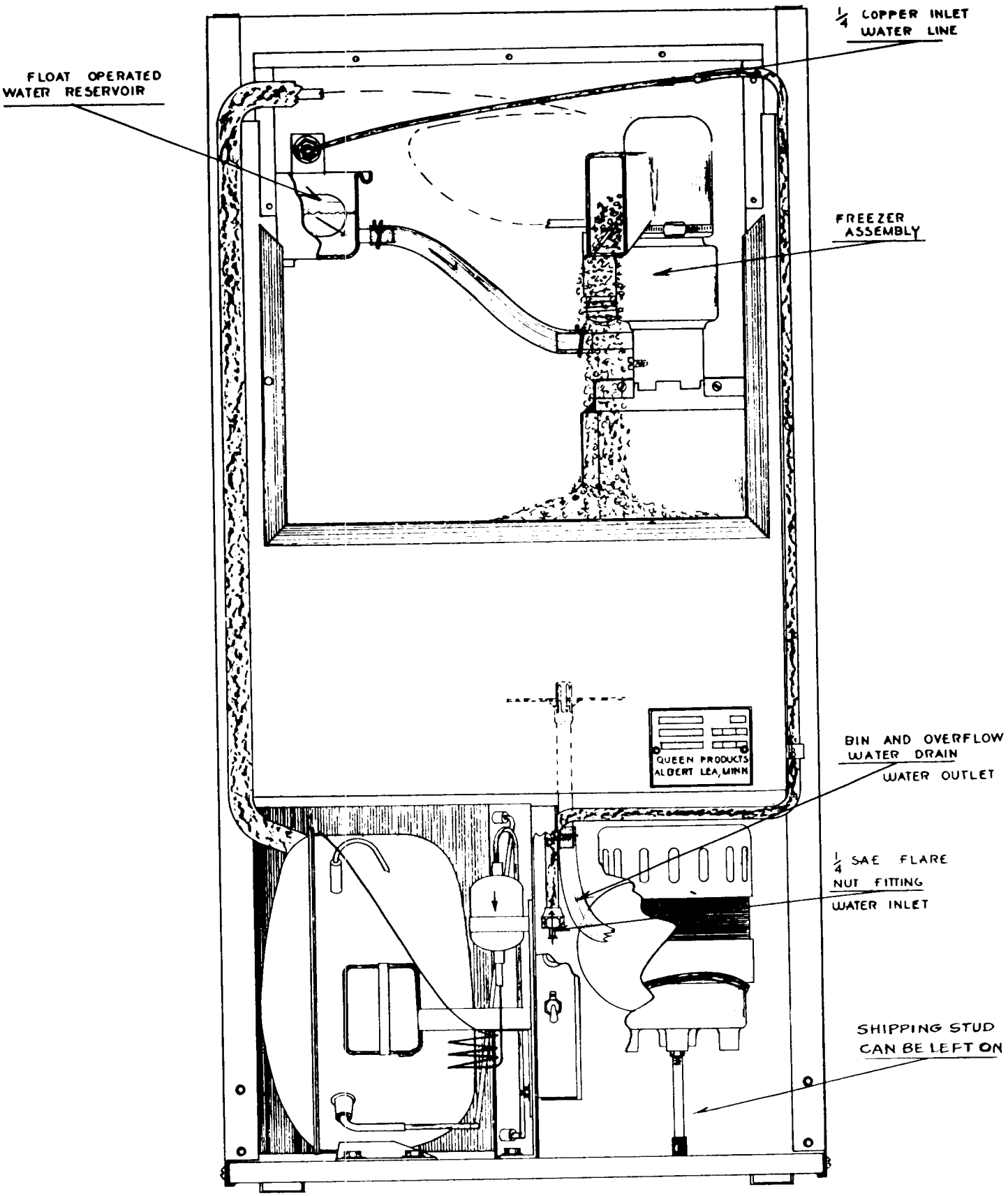

WATER SCHEMATIC

DF-4 FLAKER

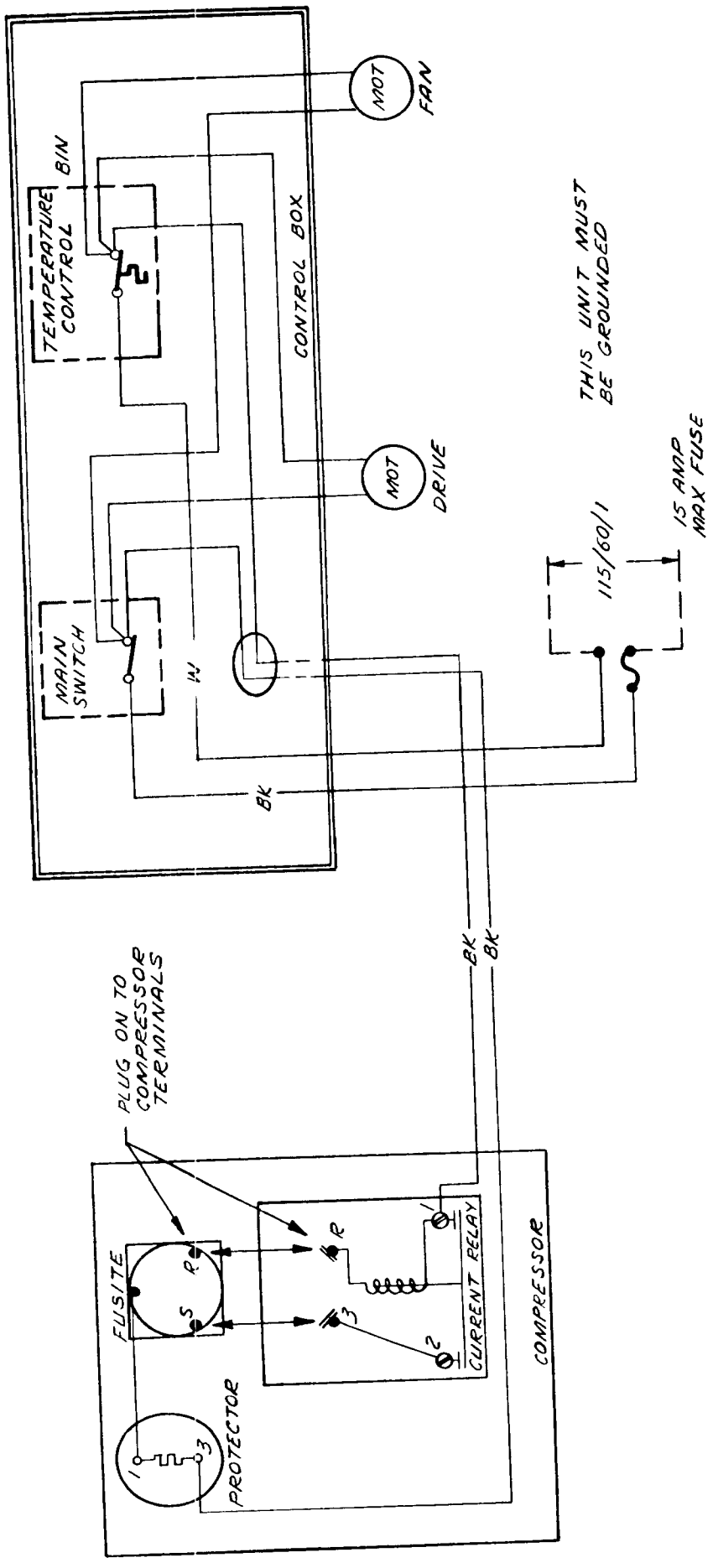

WIRING DIAGRAM

DF4 - 1 FLAKER

FINAL CHECK LIST

1. Is the unit level? (IMPORTANT)
2. Have all electrical and piping connections been made?
3. Has the voltage been tested and checked against the nameplate rating?
4. All panels secured and in place?
5. Is the water supply valve open and the electric power on?
6. Is the water reservoir filled and shut off? All packing removed?
7. Have unit and bin wiped clean?
8. Has owner been given the Operating Instruction Sheet, and has he been instructed on how to operate the machine.
9. Have the installation and warranty cards been filled out? This is the owner's protection.
10. Check all refrigerant and conduit lines to guard against vibration and possible failure.
11. Installed in a well ventilated room where ambient temperatures do not fall below 50° Fahrenheit.
12. Is unit installed with a minimum 4" air space around back?

SERVICE

STARTING THE MACHINE: When the machine is placed and inspected as per instructions and all plumbing and electrical connections are completed and tested, turn on the water supply. Check on the float operation and water level in the water reservoir. Be sure the water reservoir is filled before starting the machine. When level should be 1/4 inch below the reservoir overflow.

When this is completed, turn on the manual switch, located inside lower front panel of the cabinet and the machine is in automatic operation. In two to three minutes ice will start dropping off the worm shaft and out the ice chute. Let the machine operate for at least 30 minutes and check for any excess noise other than the normal compressor noise. Test the ice storage control bulb by holding a handful of ice around the bulb until the machine shuts off. One minute should be normal for the control to function. Within minutes after the ice is removed, the bulb will warm up and the machine will automatically start up. The control is factory set and should not be reset until this test is made. Normal setting of this control should be approximately 35 degrees cut-out and 45 degrees cut-in.

Explain the machine to the owner, showing him how the machine works and go over the owner's instruction manual with him. Answer all the owner's questions about the machine, and do not leave with any doubt in the owner's mind about the machine, how to operate it or where to reach you should he need service on the machine. Call back the next day to check the machine again and answer any other questions the owner may have.

REFRIGERANT CHARGE: The below refrigerant charge is approximate. When charging, set at 125 PSI head pressure and charge so that the frost line extends out of the evaporator and into the accumulator after fifteen minutes of operation. Factory charge is 16 ounces of R-12 refrigerant.

suction 10-12 psi

*NOTE: Since the Models DF4 do not have service valves on them, we suggest the use of one of the many popular line piercing valves for charging and purging.

SERVICE

WATER SYSTEM:A water level is maintained in the water reservoir by a float operated valve. Water is piped from the water reservoir to the freezing chamber by a gravity feed line maintaining an equal water level. A removable overflow pipe is installed in the water reservoir for cleaning the reservoir as well as preventing damage should the inlet water valve fail.

The water reservoir is equipped with a 2 inch air gap to prevent back shiphoning and meet all health codes.

The water level in the water reservoir is adjusted by bending the float rod. The water level should be set 1/4 inch below the overflow pipe.

ELECTRICAL SYSTEM: The Super Flaker Model DF-4 is designed to work on standard voltage-115/60/1.

Special voltage requirements are available on special order. Therefore, always check nameplate for this information before checking electrical supply.

Nameplate voltage should not vary more than plus or minus 10 percent.

The electrical circuit consists of condensing unit, gear motor, storage bin thermostat, ON and OFF switch.

A. CONDENSING UNIT: The starting capacitor and starting relay are housed and fastened to the motor compressor.

B. GEAR MOTOR: 1/15 H.P. electric motor mounted on gear case. Through gear train, drives output shaft at 6.5 R.P.M. This power is transmitted to the freezer assembly worm shaft by a drive shaft encased in a torque tube. Gear motor is lifetime lubricated, requires no further greasing.

C. STORAGE BIN THERMOSTAT: Ranco control located in control box. Factory settings 35^{0} cut-out, 45^{0} cut-in. This control shuts off complete machine when ice in storage bin builds up to control bulb.

D. ON-OFF SWITCH: An on-off switch is located in control box with bin thermostat. Manually flip switch to "on" position. Automatic operation takes over.

DF-4 H
CHASSIS ASSEMBLY

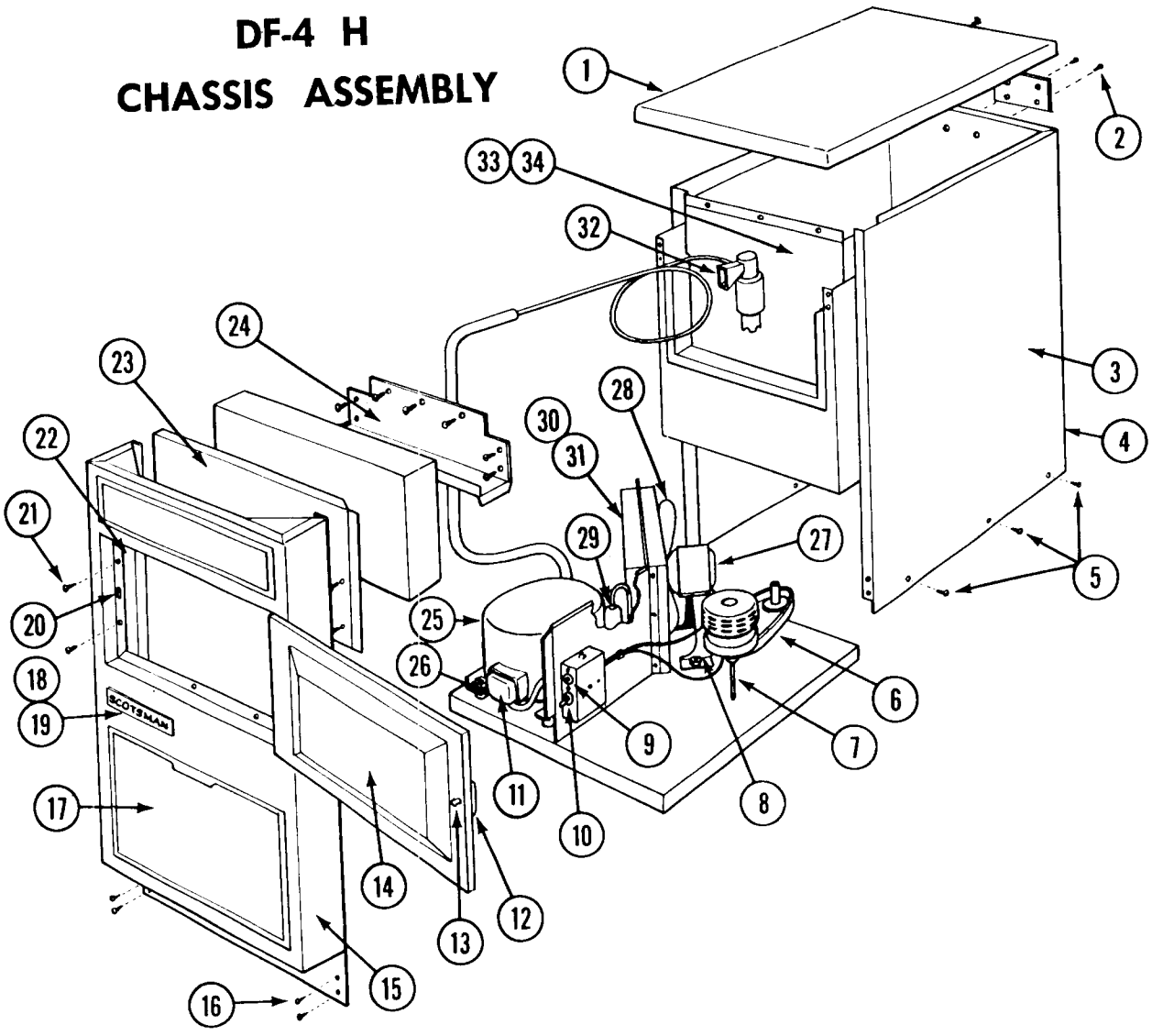

ITEM NO.	PART NO.	NAME
1.	A-9465	Cabinet top
2.	3-124	Screws
3.	A-17287	Case Assy.
4.	A-7676	Back Door
5.	3-04	10--24--5/16 Screws (9)
6.	A-16906-1	Gear Reducer
7.	A-15449	Gear Motor Support
8.	18-422	Fan Motor Bracket
9.	11-311	Temperature Control
10.	12-426	Toggle Switch
11.	18-406	Relay
12.	15-339	Handle
13.	A-10103	Door Strike
14.	A-17415	Door Assy., Bin
15.	A-17320	Case Front Assy.
16.	3-753	Screws (4 reqd.)
17.	A-9456	Screened Door
18.	15-156-1	Emblem

ITEM NO.	PART NO.	NAME
19.	3-271	Speed Nut (2 reqd.)
20.	2-836	Door Catch
21.	3-633	Screws (10 reqd.)
22.	13-615	Door Gasket
23.	A-9443	Top Front
24.	A-9444	Top Storage Front
25.	18-400-1	Compressor
26.	18-407	Protector
27.	18-421-1	Fan Motor
28.	18-420	Fan Blade
29.	2-831	Drier
30.	18-423	Condensor
31.	A-17441	Condensor Shroud
32.	A-17119	Freezer Assy.
33.	A-17288	Storage Bin Assy.
34.	A-9442	Insulation Layout
35.	A-17328	Bin Baffle

DF-4 H
FREEZER, TORQUE TUBE AND GEAR REDUCER ASSEMBLY

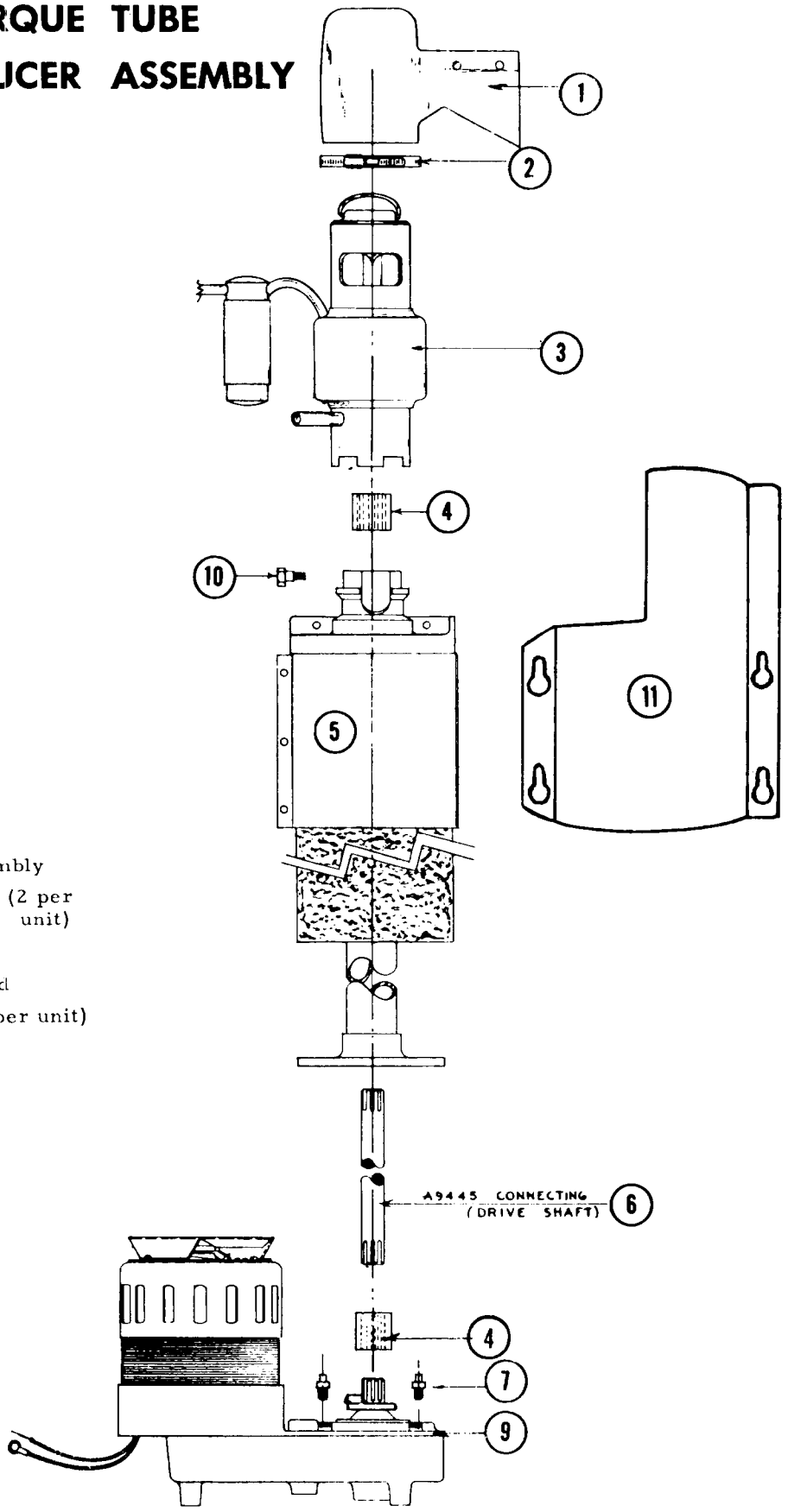

ITEM NO.	PART NO.	NAME
1.	13-239	Rubber Spout
2.	2-706-1	Spout Clamp
3.	A-17119	Freezer Assembly
4.	A-10503	Spline Adapter (2 per unit)
5.	A-11942-1	Torgue Tube
6.	A-9445	Connecting Rod
7.	3-1107	Cap Screw (3 per unit)
9.	A-16906-1	Gear Reducer
10.	A-10256	Shoulder Bolt
11.	A-17328	Bin Baffle

Only things left in Stock are Bearings + Seals

DF-4 B & H Models
FREEZER ASSEMBLY

ITEM NO.	PART NO.	NAME
1.	3-553	Snap Ring
2.	A-7701	Cap
3.	3-758	Cap Screw
4.	A-7[illegible]	Washer
5.	2-647	Top Bearing
6.	2-380	'O' Ring
7.	A-94[illegible]	Breaker
8.	2-852	Worm Shaft
9.	A-17102	Evaporator Assy
10.	3-679	Lockwasher
11.	3-732	Screws
12.	[illegible]	Seal A18945-02-1300-01
13.	2-117	Bearing
	A-17112	Freezer Complete

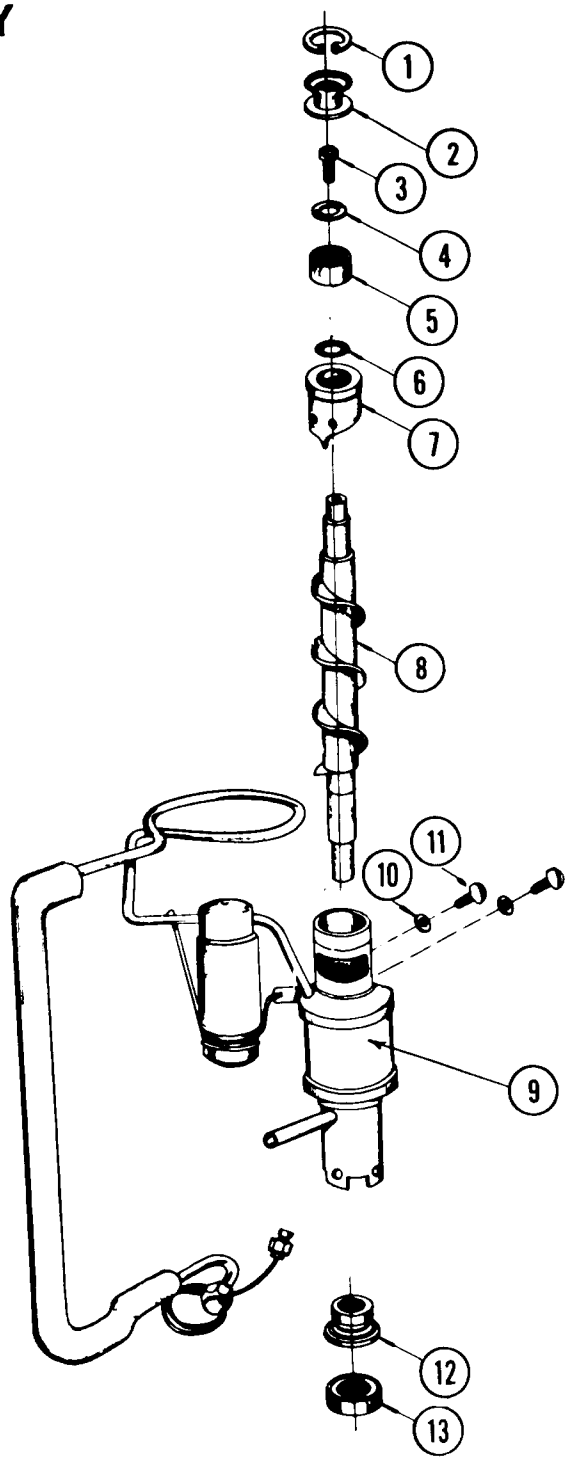

DF-4
GEAR MOTOR ASSEMBLY
For use on all models thru "H"

Same as 12-1003-1

Interchangeable with 12-590-1
First used Jan., 1963

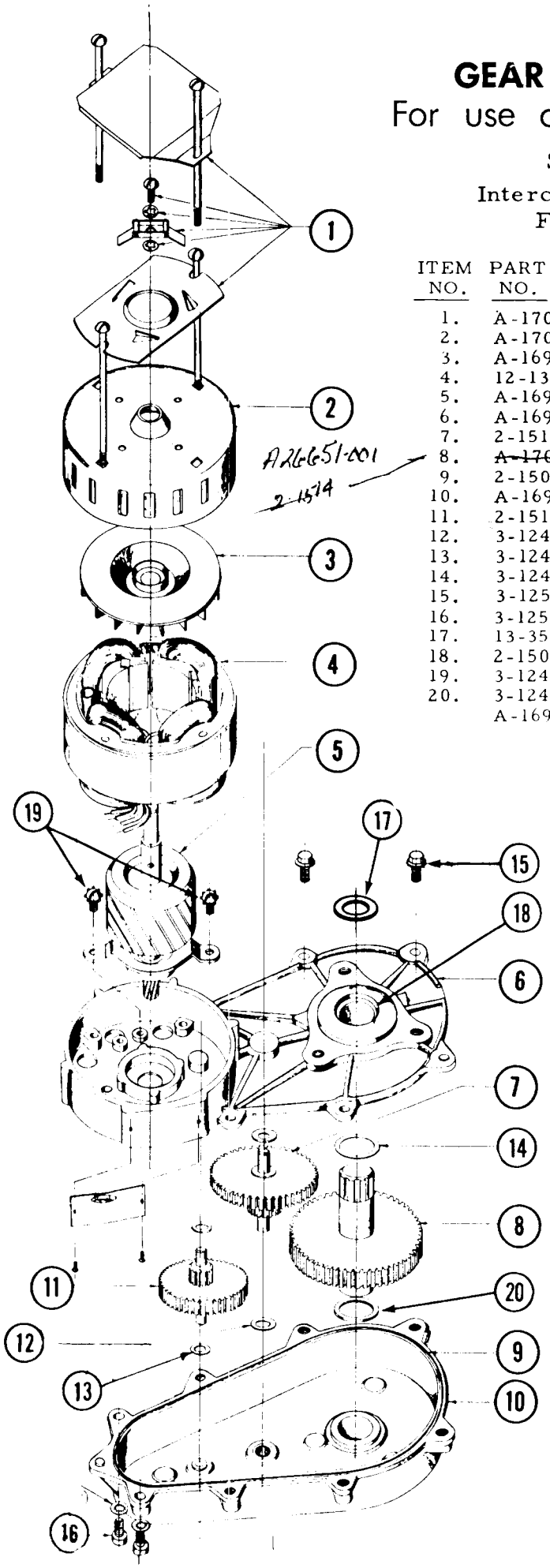

ITEM NO.	PART NO.	NAME
1.	A-17057	Anti-Reverse Mechanism
2.	A-17047	Motor Housing Ass'y
3.	A-16915	Cooling Fan Assembly
4.	12-1343-1	Stator Assembly
5.	A-16934	Motor Shaft Ass'y
6.	A-16925	Gear Case Cover
7.	2-1510	Gear & Pinion Ass'y
8.	~~A-17014~~	Gear & Output Shaft Ass'y
9.	2-1505	'O' Ring
10.	A-16919	Gear Case Ass'y
11.	2-1511	Gear & Pinion Ass'y
12.	3-1242	Washer (3)
13.	3-1241	Washer (3)
14.	3-1244	Washer
15.	3-1251	Screw
16.	3-1252	Screws
17.	13-351	Shaft Seal
18.	2-1504	Grease Seal
19.	3-1245	Screws
20.	3-1240	Washer
	A-16906-1	Gear Reducer Complete

NOTE: Use parts listed above on 12-1003-1 reducer.

DF-4 H

RESERVOIR ASSEMBLY

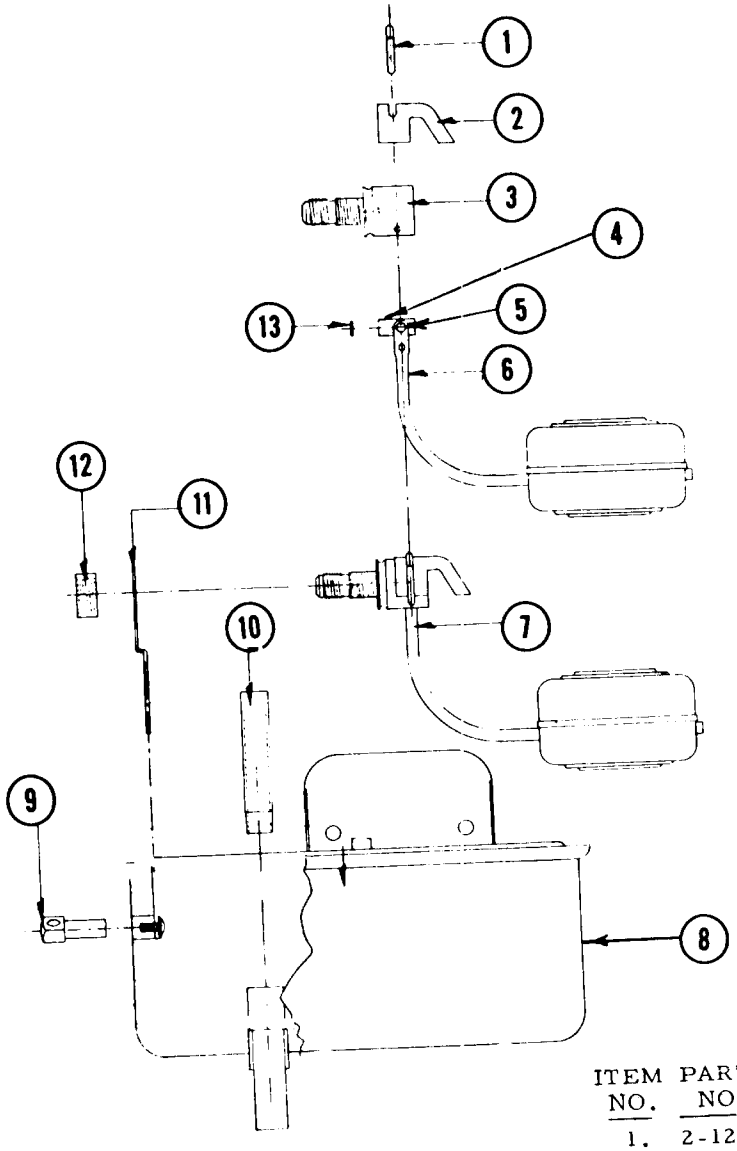

ITEM NO.	PART NO.	NAME
1.	2-1259	Valve Pin
2.	2-1320	Water Deflector
3.	S-8770	Inlet Valve
4.	A-5777	Valve Seat Holder
5.	3-1001	Rivet
6.	A-12067	Float Assembly (with arm)
7.	S-8138	Inlet Valve Assembly
8.	A-17294	Reservoir Body Ass'y
9.	A-8055	Bracket Nut
10.	S-6715	Stand Pipe
11.	A-12869	Bracket
12.	S-7044	Nut
13.	S-6947	Valve Seat (rubber)
	A-17293	Reservoir Complete

ASSEMBLY PARTS & SERVICE PANELS

DF-4 FLAKER

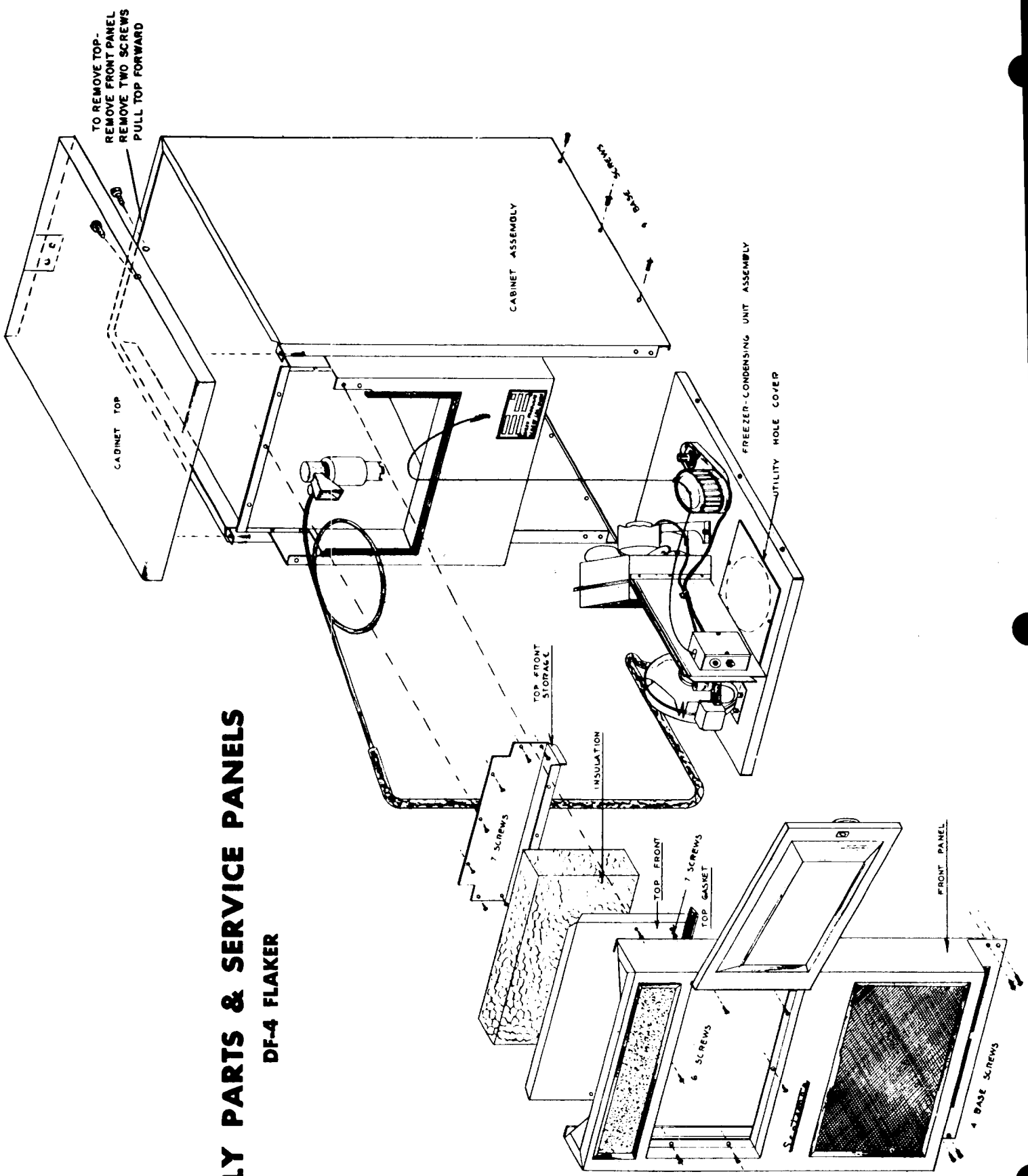

REMOVAL & INSTALLATION OF CABINET PARTS

CABINET TOP (HOOD)

1. To remove cabinet top, it is first necessary to have access to cabinet back. See below.
2. Remove two stainless steel screws from rear bracket to cabinet.
3. Pull forward and up on entire hood, this disengages lip on edges of cabinet.

CABINET FRONT LOWER SERVICE DOOR

1. Front door pulls out.

CABINET FRONT TOP DOOR

1. Door is permanent, non-removable

ICE STORAGE DOOR

1. Remove one piece hingepin.
2. Door will now come off.

FRONT CABINET

1. Remove all screws at bottom and sides, of ice storage door frame.
2. Remove 4 screws at bottom front, under lip or 90° edge.
3. Frame will now lift out.
4. See Page 22.

SERVICE

FREEZER ASSEMBLY & DRIER

1. Note first, page 22 titled, assembly parts and service panels for order of removal of cabinet parts.
2. Remove entire front cabinet frame, following instructions listed under removal of that frame.
3. Next remove top front panel, this is the painted panel directly above top door opening, has 7 sheet metal screws holding on.
4. Now remove stainless steel panel directly behind painted panel. Thispanel has 7 screws securing it also.
5. Work area and freezer assembly suction line are now open.
6. Remove 6 screws, 3 on either side of base and pull forward to expose motor compressor, suction and discharge line connections to compressor.
7. Purge off Freon refrigerant by cutting sweat copper line connection to suction side. Next, after all gas has escaped, plug off line with plastic cap or similar sealer. Do not pinch off since replacement line will have to be sweat on over this tube stub.
8. Cut off liquid line just below strainer drier, cap it off for replacement later.
9. Next on the freezer assembly proper, remove spring clamp on water inlet tube to bottom of freezer.
10. Now remove hex headed bolt at bottom end of freezer. This holds freezer base in torque tube.
11. Jar freezer lightly and lift straight up and out of torque tube. Pull out of cabinet.
12. Replace in reverse of above steps, when sweating new stuction line unto compressor stub, insert a tee in this line with a 1/4" SAE flare fitting on it to facilitate charging unit and also gauge connection.

1. Refer to Mechanical Schematic, Page 17.

MOTOR COMPRESSOR

1. Refer to page 22 "Assembly Parts and Service Panels."
2. First remove 3 screws on either side of cabinet base.
3. Remove cabinet front panel frame.
4. Pull base assembly out to expose motor compressor.
5. Cut suction line to purge off regrigerant, then also cut off discharge line, cap both ends off.
6. Remove electrical relay from clamps holder. This relay is manually pushed on, pull off same way.
7. Loosen 4 bolts holding compressor to base and remove.
8. Install new compressor in reverse of above procedure.
9. Record both old and new compressor serial numbers and report to SCOTSMAN Factory to continue 5 year warranty protection.

TO REMOVE FREEZER WORM SHAFT ONLY

1. Turn unit off and open storage bin door.
2. Remove ice in bin and squeeze open clamp at water inlet at base of freezer.
3. Remove shoulder bolt from freezer barrel, jar freezer slightly with hand.
4. Lift freezer out of torque tube holder. Spline adaptor must be taken off end of shaft.
5. Remove hose clamp holding rubber spout in freezer top.
6. Remove rubber spout.
7. Remove two slotted brass screws holding breaker into barrel.
8. Pull up on wire lifter ring, this takes entire breaker, worm shaft and top half of seal up out of barrel.
9. Replace in reverse of above.

TO REPLACE BOTTOM BEARING OR WATER SEAL.

1. Follow steps listed in removing worm shaft, tap slightly from top, bearing and lower half of water seal will drop out.

STORAGE BIN THERMOSTAT

1. Disconnect electrical supply.
2. Remove bin thermostat bulb from bin location along with its capillary tube.
3. Remove thermostat cover, disconnect two leads.
4. Remove control box cover.
5. Replace with new control and reassemble in reverse of above.
6. CAUTION: Always check new control power element charge before installation to assure receiving an operative control A handful of ice on' bulb will register an audible 'click' at cut-off.

WATER RESERVOIR

1. Turn off water supply and drain reservoir.
2. Remove 1/4 inch copper inlet water line.
3. Remove 1/2 inch plastic feed line to freezer.
4. Lift out reservoir.
5. To replace, reverse procedure.

MANUAL ON AND OFF SWITCH

1. Remove front service door.
2. Remove two screws holding switch box to panel.
3. Disconnect electrical leads from switch.
4. Remove switch.
5. To replace, reverse procedure.

MAINTENANCE INSTRUCTION - FLAKER

THE FOLLOWING MAINTENANCE MUST BE ACCOMPLISHED TWO TIMES PER YEAR ON ALL SCOTSMAN SUPER FLAKERS.

1. Check and clean water strainers and float valve. Depress Reservoir Float valve to insure full stream of water.
2. Check water level and machine level. Keep water level below overflow, but as high as possible and still not run out of spout opening with machine off. Water droplets should come out of spout with ice at all times. Adjust as required.
3. Clean reservoir and interior of freezer assembly using SCOTSMAN Ice Machine Cleaner.

   A. 1. Remove ice from storage bin.
      2. Remove baffle that surrounds Freezer Unit.
      3. Mix 4 oz. SCOTSMAN Cleaner & ½ pint of hot water. Pour this cleaning solution into Reservoir.
      4. Make ice on this solution for at least 15 minutes
      5. Wash and rinse Reservoir with clean hot water.
      6. Let unit run for an additional 15 minutes to flush out cleaning solution. Check ice for taste--must taste sweet.
      7. Flush storage bin with hot water. Thoroughly wash and rinse all surfaces within the Storage Bin. Destroy any ice made.
      8. Replace Baffle around Freezer Unit.
      9. Replace Service Door. Unit is ready for normal operation.

   B. If heavy mineral deposits on auger and walls, or sediment at inlet to freezer are encountered, clean by pouring strong solution (½ acid-½ water) into reservoir and operate drive motor only for agitation. Allow ½ hour or longer as required. Drain by disconnecting tygon at water inlet to freezer.

NOTE: Cleaning requirements vary according to local water conditions. Visual inspection of the auger before and after cleaning will indicate best procedure to be followed in local areas.

4. Check top bearing of freezing tube. Pry upward around edge of stamped brass cap. If moisture is around bearing, wipe up and remove grease. Add new grease. Use Beacon No. 325 or equal.
5. Clean air cooled condenser. Inform customer to clean frequently. Always shut off machine when cleaning.
6. Oil condenser fan motor when possible.
7. Check for refrigerant leaks and proper frost line. Should frost out of accumulator at least one-half way to compressor, and in some areas back to service valve.
8. Check for water leaks. Tighten drain line connections. Run water down bin drain line to make sure it is open.
9. Check quality of ice. Ice should be wet when formed, but will cure rapidly to normal hardness in the bin.
10. Check Thermostat for proper cut off. Bin thermostat should be set at 10 differential and should keep entire machine off at least twenty minutes in high ambients (longer in low) during normal operation.

SERVICE ANALYSIS

SYMPTOM	POSSIBLE CAUSE	CORRECTION
Unit will not run	Blown Fuse	Replace fuse and check for cause of blown fuse.
	Thermostat set too high	Adjust thermostat. Set 35°out 45° cut in
	Loose electrical connection	Check wiring.
	Switch in OFF position	Turn switch to ON.
	Inoperative master switch	Replace switch
Compressor cycles intermittently	Low voltage	Check for overloading.
	Dirty condenser	Clean.
	Air circulation blocked	Move unit to correct.
	Inoperative condenser motor	Replace.
	Non-Condensable gases in system.	Purge off.
Making wet ice	Surrounding air temperature	Correct or move unit
	Under or over-charge of refrigerant	Recharge with proper amount.
	High water level in water reservoir	Lower to 1/4 inch below over-flow pipe
	Faulty compressor	Repair or replace.
Low ice production	Loss of refrigerant. Under or over-charge of refrigerant	Check and recharge with correct amount of refrigerant.
	Dirty or plugged condenser.	Clean condenser.
	Low water level in water reservoir	Adjust to 1/4 inch below overflow.
	Partial restriction in capillary tube or drier	Moisture in system. Over-charge of oil system. Remove charge and drier. Replace and recharge system.
	Inlet water strainer partially plugged	Remove screen and clean.
	Corroded or stained worm shaft due to water condition	Remove worm shaft and clean.
Machine runs but makes no ice	Loss or under-charge of refrigerant	Check for leaks and recharge.
	Drive motor, or gear reducer inoperative	Check. Repair and replace.
	Water not entering freezing chamber	Plugged strainer or supply line. Check and clean. Air lock in gravity feed line. Check and remove air lock.

SERVICE ANALYSIS

SYMPTOM	POSSIBLE CAUSE	CORRECTION
Unit won't start up	Moisture in system	Check and remove charge and drier. Replace and recharge.
	Blown fuse	Replace fuse
	Defective manual overload switch	Replace switch.
Water leaks	Defective water seal	Replace.
	Gravity feed line leaking	Check hose clamp.
	Storage bin drain & connecting fittings	Check and repair.
	Water level in reservoir too high	Adjust to 1/4 inch below overflow pipe.
Excessive noise or chattering	Mineral or scale deposit on auger and inner freezing chamber walls	Remove and manually polish auger, polish inner chamber walls of freezer barrel. For lighter concentrations use Scotsman Ice Machine Cleaner periodically.
	Low suction pressure	Add gas to raise suction pressure.
	Intermittent water supply	Check & clean water supply line. Check gravity feed line for air lock. Remove air lock.
	Water level in reservoir too low	Adjust to 1/4 inch below over-flow pipe.
	Gear motor loose on mounting	Tighten
Machine continues to run with full storage bin	Storage bin thermostat not properly set	Reset or replace. 35° cut out 45° cut in.

DF4-1 FLAKER PARTS LIST

*18-400-1	Compressor115/60.1 1/8 H.P.
18-423	Air Cooled Condenser
18-420	Fan Blades
18-422	Fan Motor Bracket
18-421-1	Fan Motor
A-16906-1	Gear Motor
2-831	Drier
13-239	Spout (Rubber)
2-706-1	Spout Clamp
3-1107	Mounting Lugs
A-17119	Freezer Assembly Complete
A-7701	Freezer Cap
A9413	Ice Breaker
3-758	Freezer Cap Screw
3-553	Retainer Ring
A-7699	Cap Screw Washer
2-1300	Water Seal
2-386	O-Ring- For Ice Breaker
2-417	Bearing (Lower)
2-832	Worm Shaft
2-547	Top Bearing
A-11942-1	Torque Tube Assembly
*18-400	Pancake type compressor was used up to model DF4B
*18-400-1	Used since then, started about January 1965
A-10256	Shoulder Bolt-Freezer
11-311	Temperature Control
12-426	Toggle Switch
A-17102	Freezer Assembly Shell Less Internal Parts
A9445	Connecting Rod
A-10503	Spline Adaptor
A6448	Drain Strainer
A10103	Door Strike
A-17415	Door Assembly (Access)
13-615	Rubber Door Gasket
15-339	Handle
2-836	Door Catch
15-156-1	Emblem
A-17287	Case Assembly
A17230	Case Front Assembly (Less Door)
A9465	Cabinet Top Assembly
1-453	Carton
A-17288	Storage Bin
A-7676	Rear Service Door
A-17293	Reservoir Assembly
S-6715	Reservoir Standpipe
S8138	Water Inlet Valve
A-12067	Float Ball With Arm
13-598	Grommet=Bin Thermostat Bulb

TABLE OF CONTENTS

	Table of Contents	i
	List of Illustrations	iii
	List of Charts	iv
	Specifications	v
SECTION I-	GENERAL INFORMATION & INSTALLATION	1-1
I.	Introduction	1-1
II.	Unpacking and Inspection	1-1
III.	Location and Leveling	1-2
IV.	Electrical Connections	1-2
V.	Water Supply and Drain Connections	1-2
VI.	Final Check List	1-4
SECTION II.-	START UP OPERATION	2-1
I.	Start Up	2-1
SECTION III.-	PRINCIPLES OF OPERATION - How it Works	3-1
I.	Icemaker	3-1
II.	Electrical/Refrigeration	3-1
III.	Carbonation	3-2
IV.	Carbonator Tank	3-2
V.	Liquid Level Control	3-2
VI.	Pressure Type Dispensing Heads	3-2
VII.	Touch-O-Matic™ Faucet Assembly	3-3
VIII.	Facts About CO^2	3-3
SECTION IV.-	ADJUSTMENT AND REMOVAL AND REPLACEMENT PROCEDURES	4-1
I.	Adjustment of the Bin Thermostat Control	4-1
II.	Adjustment of the CO^2 Gas Pressure	4-2
III.	Adjustment of the Drink Dispenser Faucets	4-2
IV.	Adjustment of the Leg Levelers	4-2

TABLE OF CONTENTS (Cont'd)

V. Adjustment of the Water Regulator Assembly 4-3

VI. Adjustment of the Water Reservoir Float 4-3

VII. Removal & Replacement of the Auger, Water Seal, Bearings and Coupling 4-3

VIII. Removal & Replacement of the Carbonator Tank Assembly 4-4

IX. Removal & Replacement of a CO^2 Gas Cylinder (Drum) 4-5

X. Removal & Replacement of the Cold Plate Bin Assembly 4-5

XI. Removal & Replacement of the Compressor Assembly 4-5

XII. Removal & Replacement of the Condenser - Air Cooled Models 4-6

XIII. Removal & Replacement of the Condenser - Water-Cooled Models 4-6

XIV. Removal & Replacement of the Drier 4-6

XV. Removal & Replacement of the Drivemotor Assembly 4-7

XVI. Removal & Replacement of the Fan Motor Assembly - Air-Cooled Models 4-7

XVII. Removal & Replacement of the Freezer Assembly 4-7

XVIII. Removal & Replacement of the Limit Box Assembly 4-8

XIX. Removal and Replacement of the Pressure Plate Assembly, Spout Assembly and Spout Casting 4-9

XX. Removal & Replacement of the Pump, Motor & Bracket Assembly 4-9

XXI. Removal & Replacement of the Pump Motor 4-10

XXII. Removal & Replacement of the Pump 4-10

XXIII. Removal & Replacement of the Touch-O-Matic$^{T.M.}$ Faucet Assembly 4-11

XXIV. Removal & Replacement of the Touch-O-Matic$^{T.M.}$ Faucet Coil, Plunger, Spring, O-Ring 4-12

XXV. Removal & Replacement of the Water Regulator - Assembly Water-Cooled Models 4-12

XXVI. Removal & Replacement of the Water Reservoir Assembly 4-13

SECTION V.- MAINTENANCE & CLEANING INSTRUCTIONS 5-1

I. General 5-1

II. Icemaker 5-1

III. CO^2 GAS - How to Locate & Stop Leaks 5-2

IV. Faucet Assembly 5-2

V. CLEANING - Icemaker 5-2

VI. CLEANING - Faucet Assembly 5-3

TABLE OF CONTENTS (Cont'd)

SECTION VI.- SERVICE DIAGNOSIS 6-1

I. Icemaking - Refrigeration System 6-1

II. Carbonation System 6-3

III. Dispensing System 6-5

SECTION VII. WIRING DIAGRAMS 7-1

Wiring Diagram DSF-450 Air-Cooled Model 7-2

Wiring Diagram DSF-450 Water-Cooled Model 7-3

Wiring Diagram DSF-650 Air-Cooled Model 7-4

Wiring Diagram DSF-650 Water Cooled Model 7-5

SECTION VIII.- THE PARTS ILLUSTRATIONS AND PARTS AND PARTS LISTS 8-1

I. General 8-1

II. How to Use The Illustrations and Parts Lists 8-1

III. How to Order Parts or Assemblies 8-1

LIST OF ILLUSTRATIONS

Specifications - Models DSF-450 and DSF-650 v

Figure 1-1. Installation Practice 1-3

Figure 2-1. Post Mix Dispenser System Schematic 2-2

Figure 4-1. Adjustment of the Temperature Control 4-1

Figure 4-2. Removal of the Freezer Assembly 4-8

Figure 4-3. Removal of the Limit Switch, Pressure Plate, Spout and Spout Casting 4-8

Figure 4-4. Removal of the Pump, Motor & Bracket Assembly 4-9

Figure 4-5. Removal of the Touch-O-Matic$^{T.M.}$ Solenoid Parts 4-11

Figure 4-6. Removal of the Water Reservoir Assembly 4-13

Figure 7-1. Wiring Diagram - DSF-450 Air-Cooled 7-2

Figure 7-2. Wiring Diagram - DSF-450 Water-Cooled 7-3

Figure 7-3. Wiring Diagram - DSF-650 Air-Cooled 7-4

Figure 7-4. Wiring Diagram - DSF-650 Water-Cooled 7-5

LIST OF ILLUSTRATIONS (Cont'd)

Figure 8-A. DSF-450/650 Icemaker/Drink Dispenser Flow Chart 8-2
Figure 8-1. DSF-450/650 Cabinet 8-3
Figure 8-2. Major Assemblies - Air-Cooled 8-7
Figure 8-3. Major Assemblies - Water-Cooled 8-12
Figure 8-4. Fan Motor & Mounting Bracket Assembly 8-18
Figure 8-5. Water Regulator Assembly 8-19
Figure 8-6. Pump, Motor & Bracket Assembly 8-20
Figure 8-7. Carbonator Tank Assembly 8-21
Figure 8-8. Freezer Assembly - DSF-450 8-23
Figure 8-9. Freezer Assembly - DSF-650 8-26
Figure 8-10. Drivemotor Assembly - DSF-450 1/10 H.P. 8-29
Figure 8-11. Drivemotor Assembly - DSF-650 1/4 H.P. 8-33
Figure 8-12. Control Box Assembly - DSF-450 8-36
Figure 8-13. Control Box Assembly - DSF-650 8-38
Figure 8-14. Dispensing Tower Assembly 8-41
Figure 8-15. Touch-O-Matic™ Faucet Assembly 8-43

LIST OF CHARTS

Chart 3-1. Effect of Temperature 3-4
Chart 3-2. Effect of Pressure 3-4

This icemaker has been engineered to our own rigid safety and performance standards. The National Sanitation Foundation (NSF) seal, signifies that it is listed with the NSF and that it complies with the materials and construction standards of the NSF. In addition, the Underwriters Laboratories, Inc., (UL) Listing Mark and the Canadian Standards Association (CSA) Monogram, both signify that its construction and design have been inspected and tested by them. NSF, UL and CSA inspectors also periodically examine production icemakers at the factory, to assure continued compliance.

To retain the safety and performace built into this icemaker, it is important that installation and maintenance be conducted in the manner outlined in this manual.

SPECIFICATIONS
MODELS DSF-450 and DSF-650

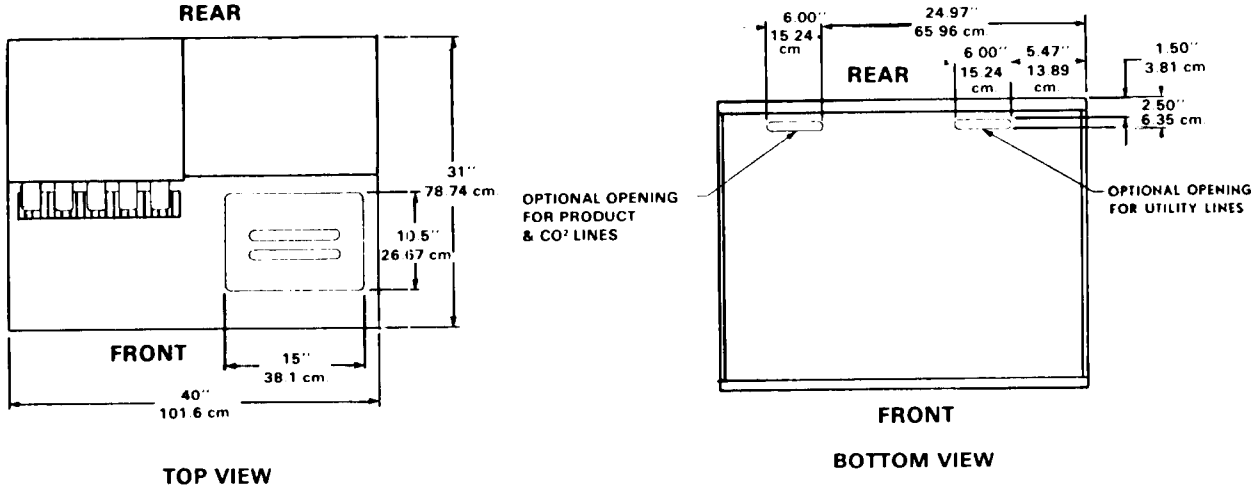

TOP VIEW

BOTTOM VIEW

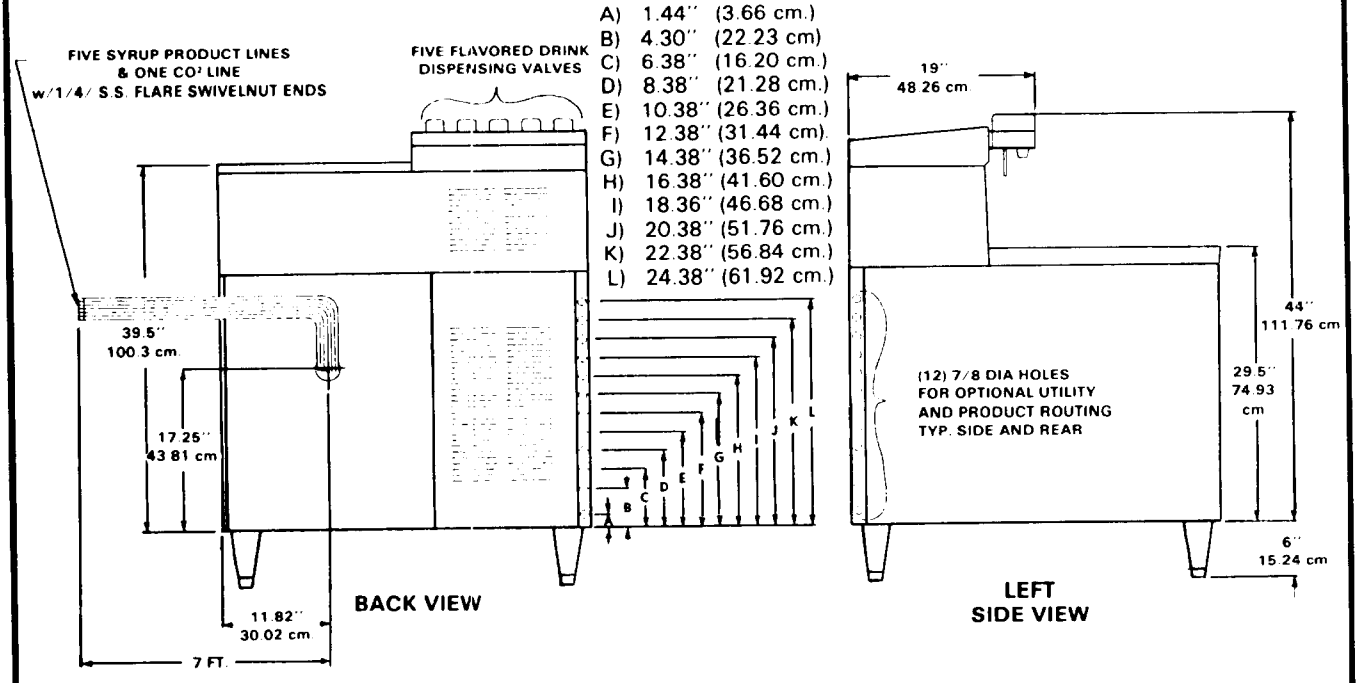

BACK VIEW

LEFT
SIDE VIEW

SPECIFICATIONS (Cont.)

MODEL DSF-450

Bin Storage: 215 lbs. SS bin
Air Cooled: Model DSF450AE-1
Water Cooled: Model DSF450WE-1
Electrical: 115/60/1
Est. Ship. Wt.: 470 lbs.

MODEL DSF-650

Bin Storage: 215 lbs. SS bin
Air Cooled: Model DSF-650AE-1
Water Cooled: Model DSF650WE-1
Electrical: 115/60/1
Est. Ship. Wt.: 510 lbs.

FEATURES ON BOTH MODELS

DRINK HEADS

5 Electric McCann's valves give:
- 4 Carbonated flavors
- 1 Non-carbonated flavor
- 1 Carbonated water
- 1 Non-carbonated water

Adjustable Brix

SANITARY COLD PLATE

Sealed Cold Plate System
Solid Aluminum Cold Plate Construction
7 Circuit Cold Plate cools 5 syrups,
1 Carbonated Water, 1 Plain Water.

QUICK-DISCONNECT LINES

6 service lines at back of unit
connect quickly to syrup and gas.
Lines are 7 ft. long.

FINISH

Charcoal Brown Enamel Base
Stainless Steel Tops and Console
For Stainless Steel Base order Panel Kit SPKDSF-650.

CARBONATION SYSTEM

Consists of Carbonator, Water Pump, Pump Motor, Cold Plate and all internal connecting lines.

TWO YEAR PARTS WARRANTY

FRONT SERVICE ACCESS PANEL

OPTIONAL LEG KIT

KLP2E - 6" metal legs, Black Enamel
KLP2S - 6" metal legs, Nickel Plated

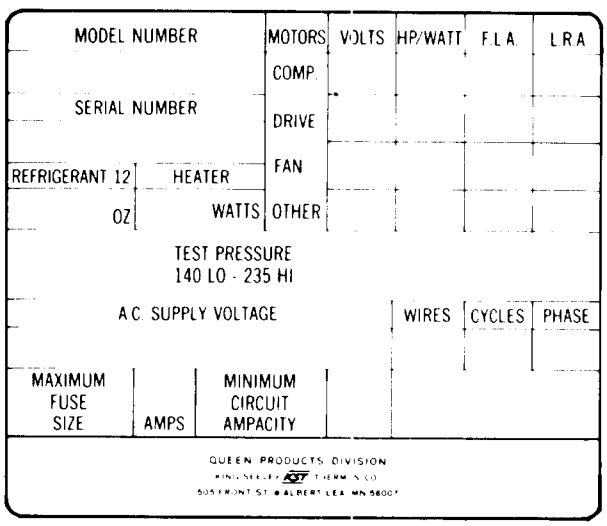

SEE NAMEPLATE for electrical and refrigeration specifications. Remove Left Side Panel, locate NAMEPLATE on rear upright mounting bracket of Chassis. Shown at left.

Remove Left Front Door, to locate Model/Serial Number NAMEPLATE, on left upper front frame of Chassis, near the Control Box. Shown below.

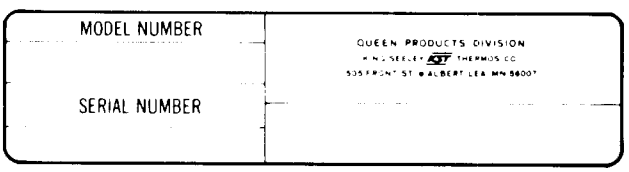

We reserve the right to make product improvements at any time. Specifications and design are subject to change without notice.

SECTION I

GENERAL INFORMATION & INSTALLATION

I. INTRODUCTION

This manual provides the specifications and the step-by-step procedures for the installation, startup and operation, and the maintenance for the SCOTSMAN Model DSF-450 and DSF-650 Icemaker/Post Mix Drink Dispensers. Separate sections detail more specifically: General Information & Installation; Start Up Operation; Principles of Operation; Adjustment and Removal and Replacement Procedures; Maintenance and Cleaning Instructions; Service Diagnosis; Wiring Diagrams; and, the Illustrated Assemblies and Parts Lists.

Because both Models of these Icemaker/Drink Dispensers are identical in physical size and dimensions; equipment, except Freezer and Drivemotor; and in operation except production capacities as noted, all instructions and procedures apply equally to both Models, with a very few exceptions. In the few instances where there are vital technical differences between the two models, separate, well identified procedures and data are detailed, so there should be no confusion or error, in following instructions in any sections of this manual.

The Model DSF-450 and DSF-650 Icemaker/Drink Dispensers, are quality designed and constructed, and thoroughly tested icemaking and post-mix drink dispensing systems, providing the utmost in flexibility to fit the needs of a particular user.

Hood top panels are separated and removable to allow use of various syrup dispensing heads and accessories, as required.

A seven circuit Cold Plate, designed and constructed as the integral bottom of the Bin, allows use of five syrup flavors, plus cold sweet water and carbonated water circuits.

A complete built-in carbonated water system, includes a Carbonator Pump and Carbonator Tank with line connections to the Cold Plate.

All internal lines are connected prior to shipment from the factory. Six flexible tube assemblies are provided, five for connections to five syrup tanks and one for connections to the CO^2 High Pressure Gauge or CO^2 line from that gauge.

DESCRIPTION

An attractive compact cabinet of Charcoal Brown enamel base, up-to-date styling with removable panels and doors for easy access to internal lines, connections and mechanical parts. A Hood Assembly of stainless steel, attractively designed for front or back counter installation.

SEALED REFRIGERATION SYSTEM

To provide quiet efficient operation of the Icemaker, the Compressor Motor is internally spring-mounted, the Carbonator Pump is rubber-mounted and the Freezer Assembly is powered by a direct-drive, gear motor, Drivemotor Assembly

SELF-CONTAINED STORAGE BIN

These Icemaker/Drink Dispensers store their own ice supply in a heavily insulated, stainless steel ice storage Bin, with a handy Ice Access Door opening in the Hood Counter.

STANDARD OVERALL DIMENSIONS

The standard overall dimensions of the Cabinet depth, counter top height, etc., allows the automatic Icemaker/Drink Dispensers to be installed in harmony with the existing counter equipment.

II. UNPACKING AND INSPECTION

1. Call your authorized Scotsman distributor or dealer, for proper installation. He's listed under ICE MAKING EQUIPMENT and MACHINERY in the yellow pages of the telephone book.
2. Visually inspect the exterior of the shipping crate and any severe damage noted should be reported to the delivering carrier; and a concealed damage claim filed subject to inspection with carrier representative present.
3. Using nail puller, remove nails driven through the sides of the crate into the bottom skid.
4. Remove four (4) bolts from underside of the skid, which secure the skid to the base of the Cabinet.

5. Remove screws and tape, and all service panels and doors from the Cabinet.
6. Remove all internal support packing, tape and wires in machinery compartment.
7. When ordered, remove the optional leg package wired to inner machinery compartment. Install the legs in the Cabinet base sockets.
8. Check that refrigerant lines do not rub or touch lines or other surfaces, and that fan blades, if any, move freely.
9. Check that the Compressor is snug on mounts.
10. SEE NAMEPLATE on the lower part of the left rear upright mounting bracket of the Chassis, and check that the location source voltage corresponds with the voltage specified on the nameplate.

CAUTION

Improper voltage supplied to the Icemaker/Drink Dispenser will void your parts replacement program.

III. LOCATION AND LEVELING

1. Position the Cabinet in the selected permanent location.

NOTE

Prior consideration for location site shall include:

1. *Minimum room temperature 50-degrees F. and maximum room temperature 100-degrees F.*
2. *Water inlet temperatures: Min. 40-degrees F. and max. 100-degrees F.*
3. *Well ventilated location for Air-Cooled model, advising user to frequently clean Condenser, located directly behind front service door.*
4. *CONVENIENCE: Placed for practical, efficient use in a back bar or front bar location; or, fit into a standard soda fountain line up, or as an individual counter unit with double function providing flaked ice, as well as carbonated beverages.*
5. *SERVICE ACCESS: Adequate space for all service connections, located at the left rear corner of the Cabinet. A six-inch minimum clearance at rear and front louvered doors, for routing cooling air drawn into and exhausted out of the compartment to maintain proper condensing operation on Air-Cooled models.*

2. Level the Cabinet in both the left-to-right and front-to-rear directions. The optional leveling legs can be adjusted with an open end wrench.

IV. ELECTRICAL CONNECTIONS

SEE NAMEPLATE for current requirements to determine wire size to be used for electrical hookup. The DSF-450 and DSF-650 Icemaker/Drink Dispensers require a solid earth ground wire. See wiring diagram.

Be certain the Icemaker/Drink Dispenser is connected to its own electrical circuit and individually fused. The maximum allowable voltage variation should not exceed ten percent of the nameplate rating, even under starting conditions. Low voltages can cause erratic operation and may be responsible for serious damage to the overload switch and motor windings.

All external wiring should conform to the National State and local electrical code requirements. Usually an electrical permit and services of a licensed electrician will be required.

V. WATER SUPPLY AND DRAIN CONNECTIONS

A. AIR-COOLED MODELS: The recommended water supply line is a 3/8-inch O.D. copper tubing. A 3/8-inch flare fitting is provided at the water inlet. Connect to cold water supply line with standard plumbing fittings, with a shutoff valve installed in an accessible place between the water supply and the Cabinet.

A wire mesh strainer is provided on the inlet connections of the pump, as a protection a-against large particles of rust, scale, etc., which may be loosened in the water pipe at the time of installation. This strainer will not prevent fine particles from damaging the pump; therefore, it is recommended a good filter be installed during any installation, and that it is absolutely essential when the water supply contains solids.

CAUTION

Maximum water supply pressure differential must be at least 20 psi below CO^2 operating pressure. If water supply pressure differential exceeds 20 psi. the carbonator may flood. So, install a water pressure regulator in the water supply line and adjust the water pressure as required.

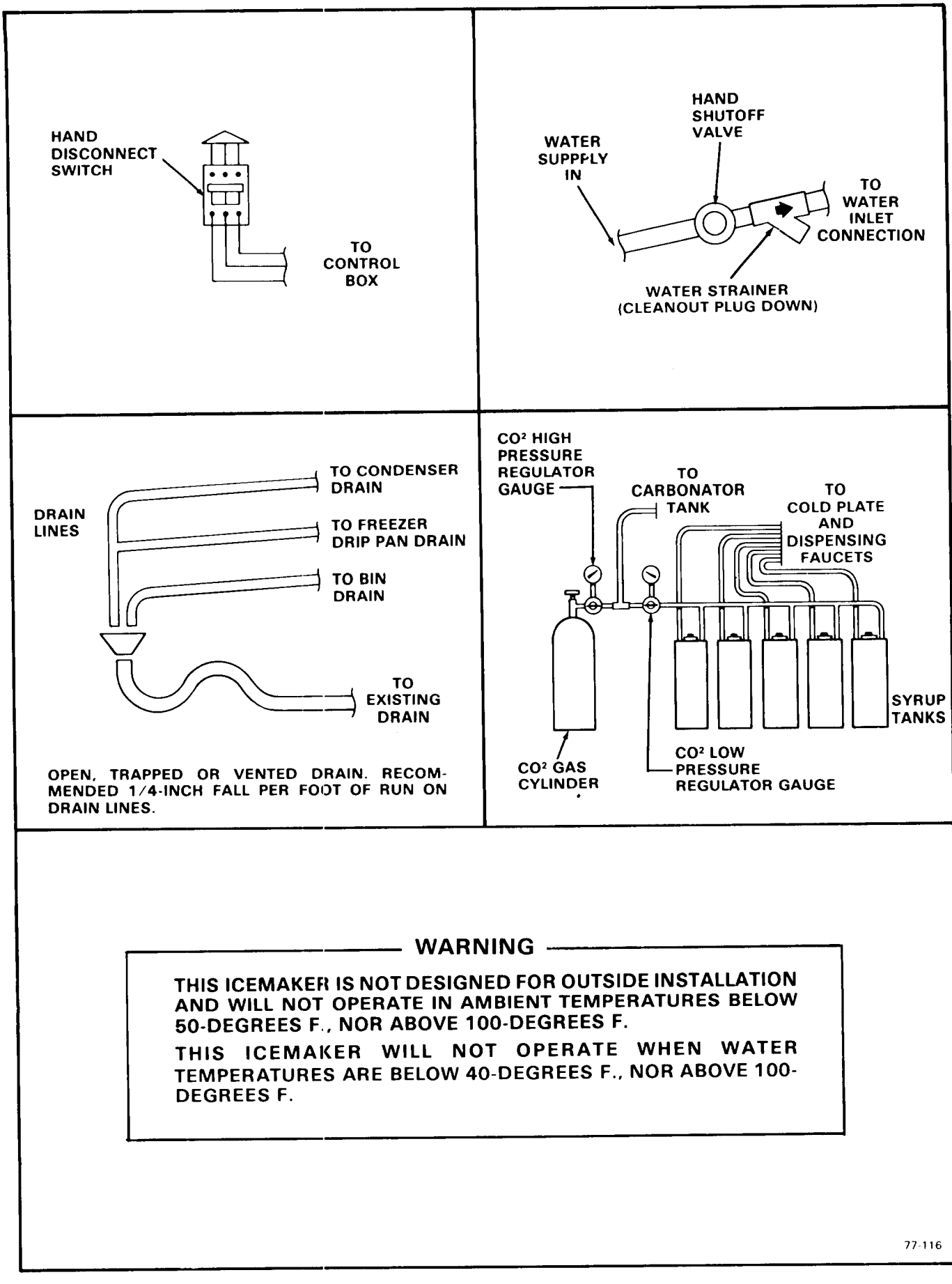

Figure 1-1. Installation Practice

WARNING

To prevent damage to the freezer mechanism, DO NOT operate this unit when the water supply is OFF, or is BELOW recommended water pressure. Position the master switch to the OFF position, until proper water supply is resumed.

The icemaker in this Cabinet will not operate when water supply temperatures are below 40-degrees F. or above 100-degrees F.

B. WATER-COOLED MODELS: On Water-cooled models a separate connection to the Condenser is required. A 3/8-inch flare fitting is provided at the water inlet and a 3/8-inch O.D. copper drain line is provided.

NOTE

The CAUTION and WARNING, in the text above for the Air-Cooled models, both apply for the Water-Cooled models. In both type installations, water supply must be installed to conform with local plumbing codes. In some cases, a plumbing permit and services of a licensed plumber will be required.

C. DRAIN CONNECTIONS: All drains are gravity type and must be 1/4-inch pitch per foot on horizontal runs. The drains to be installed to conform with the local code. Drain receptacle should be an open, trapped or vented construction.

Storage bin drain is 5/8-inch O.D. copper tubing and should be vented and run separately. See Specifications, page v.

VI. FINAL CHECK LIST

1. Is the Dispenser level? (IMPORTANT)
2. Have all electrical and piping connections been made?
3. Has the voltage been tested and checked against the nameplate rating?
4. Is the water supply line shut off valve and the the electric power on?
5. Is the water reservoir filled and shut off? Correct water level should be 3/8-inch below the raised molded line, on the side of the body of the Water Reservoir.
6. Have the Cabinet and Bin been wiped clean?
7. Have the Compressor hold down nuts been checked to be sure the Compressor is snug on the mounting pads?
8. Has the owner been given the User Manual and instructed on how to operate the Icemaker/Drink Dispenser?
9. Has the registration card been filled out? Check for correct model and serial numbers from serial plate on the Dispenser, then mail the completed card to the SCOTSMAN factory.
10. Check all refrigerant lines and conduit lines to guard against vibration or rubbing and possible failure.
11. Is there at least six inches clearance behind and around the Cabinet for proper air circulation?
12. Is the Cabinet in a room where ambient temperatures are a minimum of 50-degrees F. year around?
13. Has water supply pressure been checked to ensure a minimum of 20 psi?
14. Has the owner been given the name and telephone number of the authorized SCOTSMAN Service Agency serving him?

SECTION II
START UP OPERATION

I. START UP

1. Remove screws and the Left Front Door. Left Side Panel. Left Rear Door, Ice Access Door, and pull and unsnap the Hood Panel.
2. OPEN the water supply line shut off valve.
3. Observe the water filling operation:
   a. Water flows into Water Reservoir.
   b. Float moves up as water rises.
   c. Water flows through water feed line to bottom of Freezer Assembly.
   d. Float stops water flow, when water level reaches 3/8-inch below the molded horizontal line, on the body of the Water Reservoir.
4. Connect all lines from the Cold Plate at the bottom rear of the Cabinet, to the proper fittings on the syrup tanks, CO^2 Cylinder, CO^2 High Pressure Regulator and CO^2 Low Pressure Regulator. See Post Mix Dispenser System schematic.
5. CLOSE the water supply line shut off valve.
6. Rotate the Cylinder Valve on the CO^2 gas cylinder COUNTERCLOCKWISE to OPEN.
7. Adjust the CO^2 High Pressure Regulator Gauge and set at 100 PSIG.
8. Slowly open the CO^2 Low Pressure Regulator Gauge and set about 15 to 20 PSIG.
9. Check all syrup line fittings to Cold Plate, Dispensing Faucet connections, etc., with bubble soap and correct any leaks.
10. OPEN the Soda Water faucet for one-half minute to blow all air out of the Carbonator.
11. CLOSE the faucet.
12. OPEN the water supply line shut off valve.
13. Move the upper, manual ON-OFF toggle switch, on the front of the Control Box to the ON position and start the motor and pump for Carbonator.
14. Check all internal water connections for leaks.
15. When the Pump stops, OPEN the Soda Water faucet and hold open until a full stream of water is obtained.
16. Draw several glasses of water and observe the Water Pump operation.

NOTE

The Pump will operate after about 14 ounces of carbonated water have been drawn. The Carbonator will operate satisfactorily on CO^2 gas pressures from 80 to 120 PSIG. For maximum CO^2 gas economy, set the High Pressure Regulator Gauge at 80 PSIG; or, adjust to suit requirements of the faucets used.

17. Move the lower, manual ON-OFF toggle switch, on the front of the Control Box, to the ON position, to start the automatic icemaker operation.
18. After two or three minutes of operation, observe that flaked ice begins dropping off the Auger and out the Ice Spout.
19. Let the system operate for about 30 minutes or until ice covers the Bin bottom. Check for any excess noise in Carbonator, or in Icemaker, beyond normal Compressor noises:
   a. Fan noises, when Air-Cooled: Blades touch other surfaces; Blades Bent, out-of-balance.
   b. Vibrating type, from touching lines.
   c. Chattering: Lack of water in Freezer. Lack of water in Pump.
   d. Compressor loose at one or more hold-down bolts.

WARNING

DO NOT operate the Icemaker when the water supply is shut OFF, or is BELOW the recommended water pressure. Move the lower, manual ON-OFF toggle switch, on the front of the Control Box, to the OFF position immediately.

20. Hold a handful of ice around the ice storage Control Bulb to test shutoff. Less than one minute is normal for Bulb shutoff function to cause the Compressor to stop.

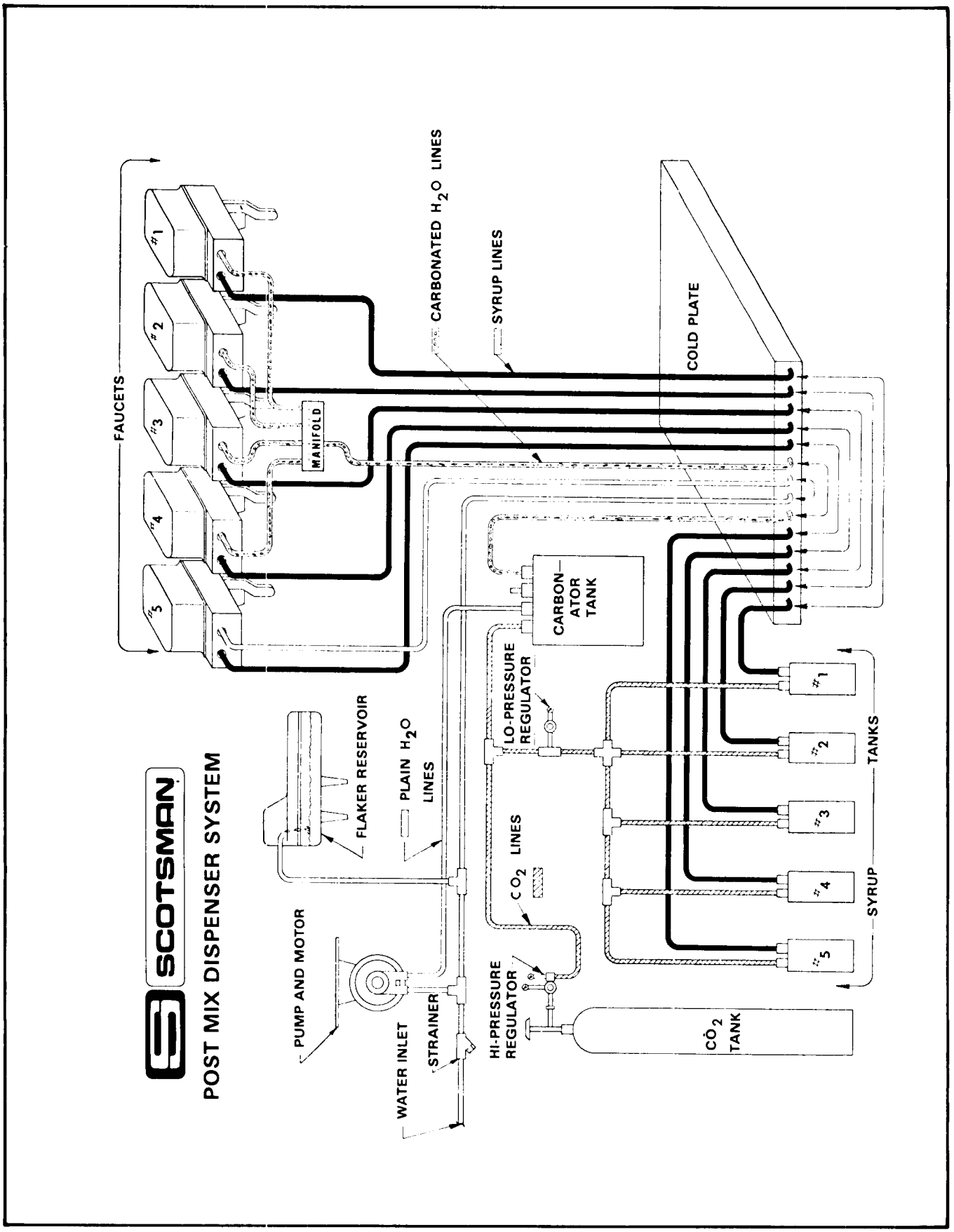

Figure 2-1. Post Mix Dispenser System Schematic

NOTE

Within minutes after the ice is removed from the Bulb, the bulb will warm up and cause the Icemaker to restart. This control is factory set and should not be reset until this testing is performed. Normal setting: about 35-degrees F. CUT-OUT and 45-degrees F. CUT-IN, to prevent short cycling.

21. Check manual reset Low Pressure Control setting.

NOTE

This safety device, inside the Control Box, is set at 0 psi to 4 psi, to prevent cutting off when the Compressor first starts up and still provide safety in case of interruption in water supply, shortage of refrigerant, low ambient temperature, or any other cause of abnormal low suction pressures.

22. Adjust dispenser drink heads to give correct proportions of dispensed syrup and carbonated water. Refer to paragraph V-IV Faucet Assembly maintenance procedure.

23. Thoroughly explain to the owner, the significant specifications of the Dispenser, the start up and operation, going through the procedures in the User Manual operating instructions. Answer all questions about the Dispenser, by the owner; and, inform the owner of the name and telephone of the authorized SCOTSMAN Service Agency serving him.

SECTION III

PRINCIPLES OF OPERATION
How It Works

This Section of the manual details the general and specific HOW IT WORKS principles of operation, for each significant area in the DSF-450/650 Icemaker/Drink Dispenser. Included are descriptions of how the Icemaker works, the Electrical and Refrigeration Systems, as well as the Carbonation System and the key components important in the understanding of top operation requirements for good and consistent dispensing of carbonated water and drinks. Because of its importance, the last part of this Section presents significant facts about CO^2 gas, such as its properties, factors which govern CO^2 gas, the effects of pressure, how to control and produce uniform beverages. This essential information is herein documented, as a reliable reference for the operator, to expand and strengthen his knowledge in all phases of the Icemaker/Drink Dispenser operation.

I. ICEMAKER

The water supply enters at the Cabinet fitting, flows through the Strainer at the Pump and on to the Water Reservoir. The Water Reservoir functions to maintain a constant water level inside the Freezer Assembly. Water from the Reservoir enters at the bottom of the Freezer Assembly and is changed into ice by low temperatures inside the Freezer.

A stainless steel Auger within the Freezer is powered by the Drivemotor, a direct-drive gearmotor, and the rotating Auger carries the ice upward to the Ice Breaker where it is extruded into flaked ice through the Ice Spout and into the Ice Storage Bin.

Moving the manual ON-OFF toggle switch, located on the lower half of the front of the Control Box, to the ON position starts the automatic and continuous ice making process. When the Ice Storage Bin has been filled with ice up to the level of the Thermostatic Control Bulb, the sensing bulb shuts off the icemaking process. As the ice is removed from the Ice Storage Bin, the Thermostatic Control Bulb warms up, restarting the automatic icemaking process. Factory settings are 35-degrees F. CUT-OUT and 45-degrees F. CUT-IN.

Altitude correction begins at 2000 feet. CUT-IN and CUT-OUT screws should be adjusted equally, not more than one-fourth turn at a time.

II. ELECTRICAL/REFRIGERATION

The DSF-450 and DSF-650 Icemaker/Drink Dispensers are designed to operate on standard electrical supply 115 volts, 60 Hertz, single phase. Special voltage requirements are available on special order. Therefore, always CHECK NAMEPLATE for electrical information BEFORE proceeding with electrical connections to the Icemaker/Drink Dispenser.

Cold ambient temperatures and interruptions in water supply are conditions that can cause excessively hard ice and overloads within the Freezer Assembly, which is directly transmitted to the Drivemotor and in turn, will cause speed reduction or ultimate freezup. When the Drivemotor is slowed down to a pre-determined RPM, a speed sensing switch mounted on top of the motor is designed to open the electrical circuit to the Compressor. The Compressor stops operating, no more ice is produced, and the Drivemotor continues to operate rotating the Auger to clear the overload and gradually build up to full speed. At a pre-determined higher RPM Drivemotor speed, the speed sensing switch closes the electrical circuit to the Compressor, causing the normal ice making process to resume. Refer to specific details on DSF-450 and DSF-650 Drivemotors in paragraph V-II-9, on centrifugal sensing switch operation.

A Limit Switch Assembly is mounted on top of the Ice Spout and is actuated by movement of the spring-operated Pressure Plate inside the Ice Spout. The Limit Switch acts as a backup safety switch, should the Thermostatic Control Bulb fail and cause ice to jam up in the Ice Spout, and the microswitch will shut off the condensing unit only, when actuated.

There are two safety controls in the Control Box on the Water-Cooled models and one safety control in the Control Box for the Air-Cooled models. The Low Pressure Control, a manual reset, non-adjustable control, is used on both models and is set to electrically open at 0 to 4 PSIG to stop the entire icemaker. On the Water-Cooled models only, a manual reset, high head pressure control is factory set to stop the entire icemaker, should the head pressure reach 250 PSIG.

On Water-Cooled models, correct head pressure is 135 PSIG. Adjustments can be made on the Water Regulator Assembly valve. On Air-cooled models, the head pressure is normal about 130

PSIG, however, it will vary depending upon ambient air temperature.

Suction pressure should be 15 PSIG with proper refrigerant charge and the frost line should extend out from the Compressor about eight inches. Suction pressure will vary about two PSIG plus or minus, depending upon ambient temperatures and incoming water supply temperatures to the Freezer Assembly. When charging the system with refrigerant, on Water-Cooled Models, set the Compressor head pressure at 135 PSIG, and charge with refrigerant so the frost line extends out of the Compressor at least eight inches, after 15 minutes of operation, for best capacity and performance.

MODEL	DSF-450 Refrig. Chg.
Air-Cooled	20 oz. R-12 (approx.)
Water-Cooled	18 oz. R-12 (approx.)
MODEL	**DSF-650 Refrig. Chg.**
Air-Cooled	27 oz. R-12 (approx.)
Water-Cooled	23 oz. R-12 (approx.)

III. CARBONATION

In these SCOTSMAN Dispensers, CO^2 gas pressure is supplied by the CO^2 gas cylinder and is present throughout the system to the Carbonator Tank and keeps the water carbonated. Without adequate cooling, however, carbonation escapes rapidly after the water leaves the Carbonator Tank. Soft drinks should be dispensed at 40-degrees F., or colder. The colder the water, the greater the carbonation. Cooling with ice at 32-degrees F. can be reached and held without danger of freezing, as is true with mechanical refrigeration systems. Thus, less CO^2 gas is used to achieve the same degree of carbonation in a drink.

IV. CARBONATOR TANK

Incoming water is filtered to remove foreign particles or odors from the water depending upon local water conditions. It is recommended that a good water filter be installed.

From the Carbonator Pump the water is pumped to the Carbonator Tank at high pressure. The water inlet to the Carbonator Tank is a Check Valve; therefore, the water enters the Tank only when the Pump is operating and the water pressure is above CO^2 pressure in the Carbonator Tank. A water jet breaks up the water into fine spray, as it enters the Tank. The CO^2 atmosphere inside the Tank mixes with the water to produce carbonated water. The CO^2 gas from the CO^2 Cylinder enters the Tank through a Check Valve.

The carbonated water leaves the Carbonator Tank, to be chilled in the stainless steel coils in the Cold Plate, prior to being delivered to the Dispensing Faucets for use as cabonated water or mixing with syrup as carbonated drinks.

CO^2 gas from the CO^2 Cylinder is routed to two places. First, to the Carbonator Tank where it is mixed with water to produce soda or carbonated water. Second, it is routed to each of the Syrup Tanks, where the CO^2 gas pressure is used to force the syrup in the Tanks through the syrup lines, the stainless steel syrup cooling coils in the Cold Plate and on to the Dispensing Faucets, where it is mixed with the carbonated water to provide carbonated soft drinks.

V. LIQUID LEVEL CONTROL

The water level inside of the Carbonator Tank and the switching of the Pump is controlled by electrodes in the Tank and the Liquid Level Control.

The solid state control supplies a low voltage circuit through the Carbonator Tank. The control is highly sensitive and will operate with very pure water, even distilled water.

At start up, the pump motor relay contacts in the Liquid Level Control are closed and the Pump is in operation. As the Water rises in the Carbonator Tank, it comes in contact with the Low-Level Electrode. Nothing happens, since the wire from the Electrode connects to an open switch or contact on a relay in the Liquid Level Control. As the water continues to rise, it contacts the High-Level Electrode.

At this instant, an electrical circuit is completed from the common electrode, the body of the Tank, through the water to the High-Level Electrode, through the electronic control and back to the common electrode. The completion of this circuit indirectly energizes the relay which opens the pump motor circuit and closes a circuit to the electrode. Now as carbonated water is used and the water level drops and breaks contact with the High-Level Electrode, the Pump will remain OFF, since the relay electrode contacts provide a circuit between the High-Level and Low-Level Electrodes. As the carbonated water level continues to drop, it breaks contact with the Low-Level Electrode, which indirectly de-energizes the relay and the Pump operates and begins filling the Carbonator Tank. This cycle continues over and over again, always maintaining a carbonated water level, between the tips of the two Electrodes.

VI. PRESSURE TYPE DISPENSING HEADS

Pressure Type Dispensing Systems require a CO^2 High Pressure Regulator Gauge to control

pressure to the Carbonator Tank and a CO^2 Low Pressure Regulator Gauge to control pressure to the syrup tanks forcing syrup through lines, via the Cold Plate, to the Dispensing Heads. Normal low pressure setting is 15 to 20 PSIG.

The system is automatic in operation and requires no attention except maintaining the CO^2 supply and periodic servicing of water supply line filter.

WARNING

1. **Insufficient water supply will cause noisy operation and eventual damage to the Pump. If the Strainer and Filter are clear and the water supply line valves open, a noisy Pump operation indicates insufficient water supply.**
2. **To prevent water line freeze up, should the installation be idle and exposed to freezing temperatures, disconnect the water supply line and blow all water out of the carbonation system.**

VII. TOUCH-O-MATIC$^{T.M.}$ FAUCET ASSEMBLY

When the operator presses a glass, or container, against the main actuating lever of the faucet, the lever activates an electrical switch causing the solenoid coil, or coils, to become energized and the plunger(s) to be electromagnetically raised. Raising the plunger(s) allows the syrup and water, which are under pressure, to flow through their respective orifices and into the spout.

In the spouts, the various liquids are completely mixed under ideal flow conditions, to result in an homogeneous product having a minimum amount of foam. The faucet block, in which all this action takes place, is transparent, which allows visual observation of the operation. Also, visual inspection is thus provided to determine where any obstruction or problem might be located.

VIII. FACTS ABOUT CO^2

CHEMICAL GAS: Carbonic Anhydride, Carbonic Gas, or Carbon Dioxide, as it is variously termed, has the chemical symbol CO^2. It is under normal conditions a colorless, odorless gas, one and one-half times heavier than air. Chemically, it is the combustion product of the element Carbon. It occurs in nature as the result of all types of combustion.

Carbonated Water has been found in natural springs in many parts of the world. Such springs have been known for centuries and have been highly regarded for beverage purposes.

Many of the desirable characteristics of carbonated beverages are due to the carbonic gas contained in them. It is therefore, most important to determine the proper amount of carbonation such beverages should contain, and having done that, to provide the necessary control to insure uniformity of the product in this respect at all times.

PROPERITES:

Color	None
Odor	Pungent
Latent Heat	120 BTU/16. at 0° F.
Critical Pressure	1,055 lbs. sq. in.
Critical Temperature	87.8° F.
Pressure in drums at 70°	839 lbs. sq. in.
1 lb. CO^2	8.50 Cu. Ft. at atmospheric pressure and 50° F.
Solid CO^2 (Dry Ice)	110° F.

GOVERNING FACTORS: Carbonated water is largely a mechanical mixture of CO^2 and water and the term, Carbonated Water, is usually understood to mean water that contains gas to its capacity.

This capacity varies with pressure and temperature. The amount of gas water will absorb increases directly with the pressure. The amount of gas water will absorb also increases as the temperature decreases.

Therefore, any measure of the actual gas content of carbonated water will depend on the two factors - pressure and temperature.

The unit of measure that has been adopted as standard is: the volume.

One volume, is the amount of gas that water will absorb at atmospheric pressure and at 60-degrees Fahrenheit. A volume of gas occupies the same space as does the water by which it is absorbed.

The pressure gauge on the carbonator, or on the regulator, or on the volume testing apparatus, does not show atmospheric pressure. This means that zero on the gauge, is atmospheric pressure, which is about 15 PSI at sea level. Chart 3-1, shows the effect of temperature change on the amount of gas water will absorb.

The pressure is constant, namely, atmospheric or zero pounds gauge. As the temperature of the water is lowered, the amount of gas it will absorb increases, until after 60-degrees F. it is one volume. See Chart 3-1, noting that from 60-degrees F. to 150-degrees F. the slope of the curve changes gradually. However, from 60-degrees F. to 32-degrees F. the curve changes more abruptly; then, for each 10-degrees difference in temperature, a decided increase in gas absorption is apparent, until 32-degrees F., or slightly above the freezing point, where 1.7

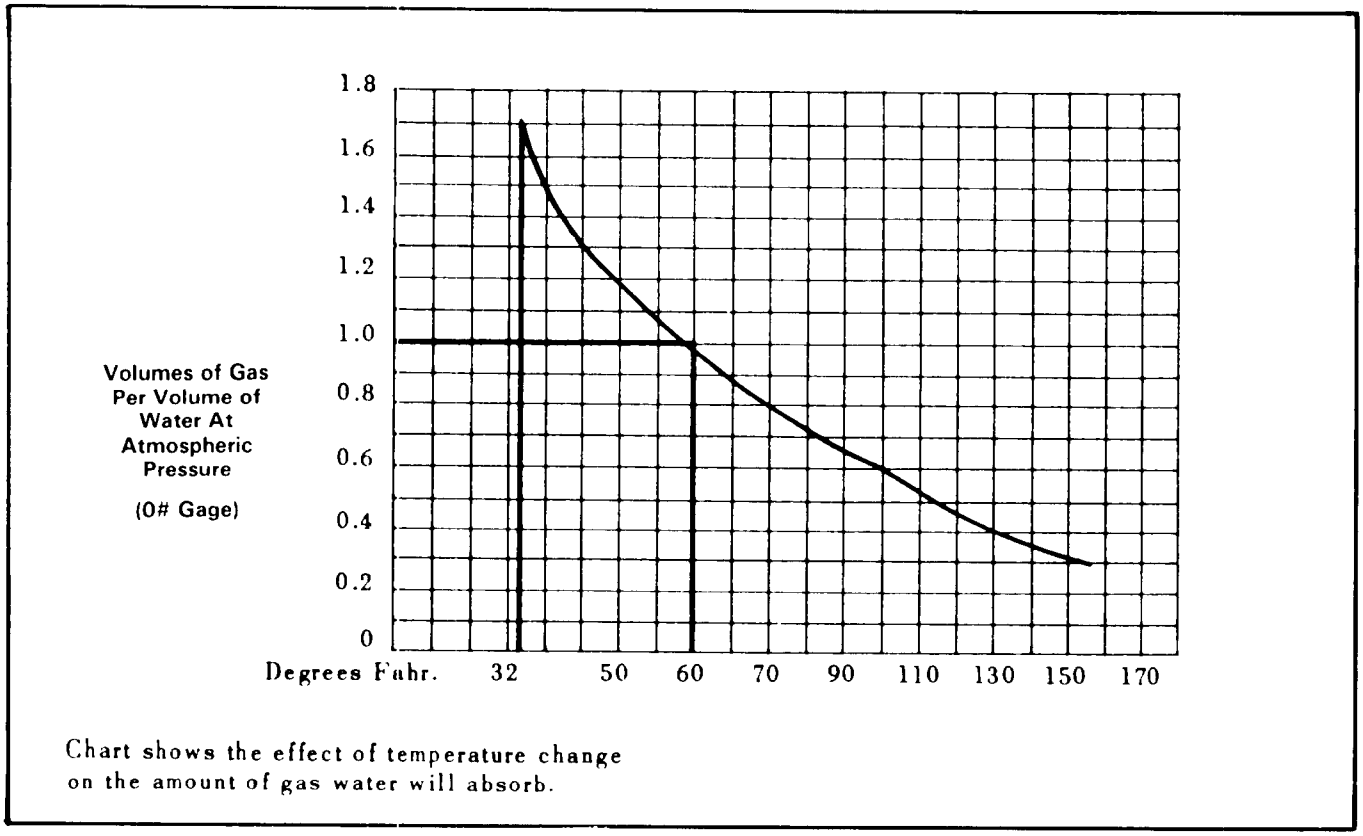

Chart 3-1. Effect of Temperature

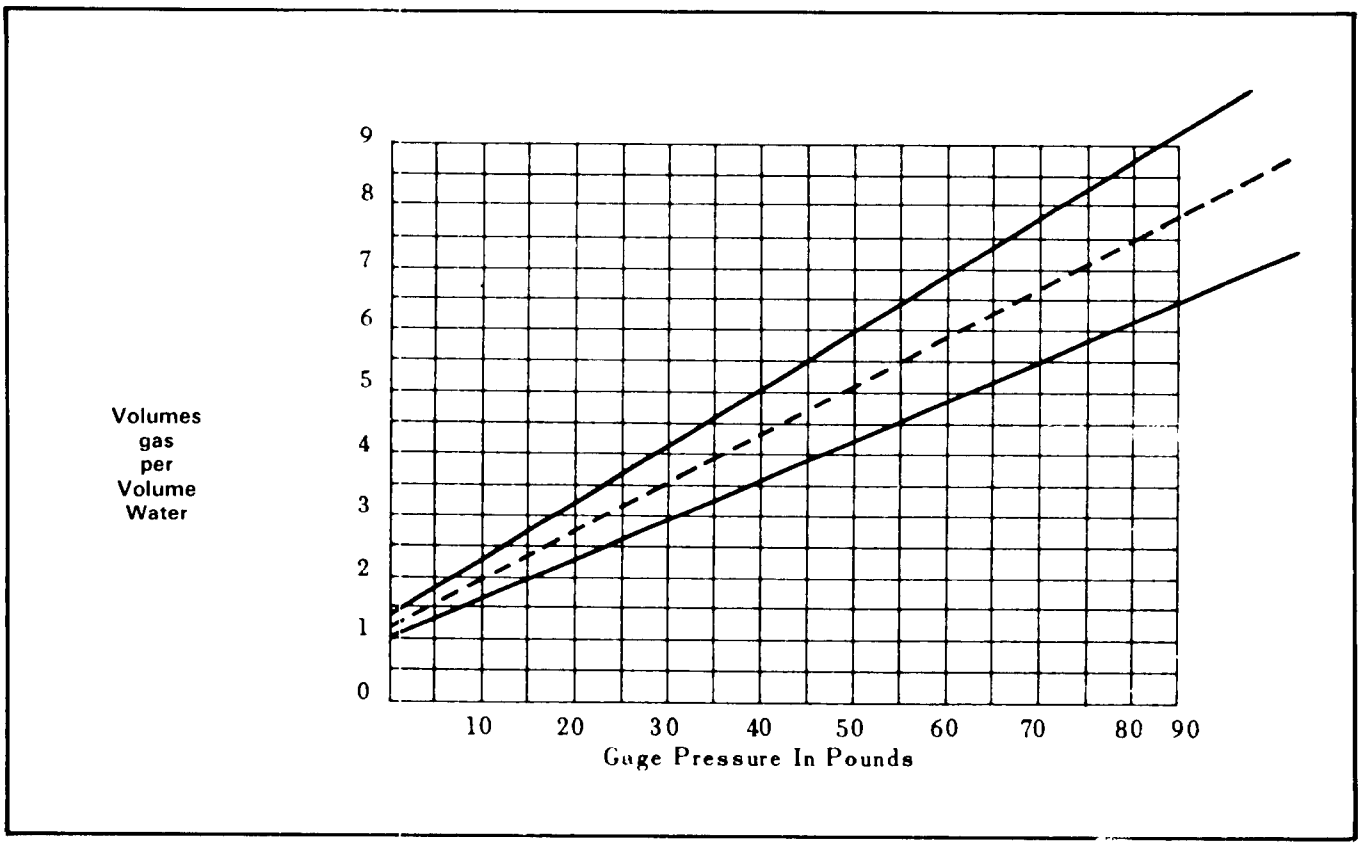

Chart 3-2. Effect of Pressure

volumes of gas is absorbed by the water at atmospheric pressure. From this curve, it will be apparent that the cooler water is, the more gas it will absorb.

EFFECT OF PRESSURE: Chart 3-2 shows the effect of increasing pressures, temperature being constant, on the amount of gas that water will absorb. Note that the chart is a straight line, of the same slope throughout, indicating that as the pressure is increased, the gas volumes increase. Furthermore, the gas volume increase is directly proportional to the pressure.

To illustrate: at zero pounds gauge and 60-degrees F., water will absorb one volume of gas, at 15 pounds increase in pressure, water at 60-degrees F. will absorb one additional volume of gas. If the temperature of the water is 45-degrees F., then, for every 15 pounds increase in pressure, the water will absorb 1.3 volumes of gas.

FOR UNIFORM BEVERAGE - Control Carbonation: Carbonation is an important taste ingredient of your beverage. One of the vital attributes of any beverage is uniform taste, drink after drink. There are four elements that influence the taste of a beverage:

1. FLAVOR
2. SWEETNESS
3. CARBONATION
4. TEMPERATURE

All but the final temperature of your drink are susceptible to direct control at your location. Flavor and sweetness standards should be and probably are definitely established by means of exact formulas.

Carbonation standards should also be established for each flavor in your line—Sparkling water, ginger ales, and other mixers should be in the High Carbonation bracket - the ideal to be sought for is the highest carbonation practically obtainable.

Cola drinks, root beer and other low acid drinks are in the next bracket, usually carbonated to three or three and one-half volumes.

Some bottlers prefer fruit drinks, especially Orange, at a lower carbonation. Determine a standard of carbonation for each flavor that you consider best for your market.

Set up definite instructions for maintaining these standards, just as you maintain standard formulas for the sugar flavor, acid and other ingredients.

FLAVOR	CARBONATION STANDARD
Root Beer	3-1/2 Volumes

Having determined the carbonation standards, it is important that all concerned know how to control the factors that will enable you to maintain them.

HOW TO PRODUCE UNIFORM BEVERAGES: Bottlers know the importance of developing the proper formula for a beverage. They fully realize that for any bottled beverage to achieve popular favor, it must be right in flavor, in taste, and in gas content.

The development of the proper formula for a beverage is, of course, an essential step in establishing that beverage in popular favor. To keep its popularity, the beverage must be the same from day-to-day and month-to-month. The formula must be followed exactly and the beverage produced in just the same manner.

This means that perfect control of variable factors is necessary to assure uniformity.

The number of volumes of gas in a finished beverage has a definite relationship to the taste of the beverage. Correct carbonation means a sparkling, pungent, thirst-quenching beverage that completely satisfies the consumer. Low carbonation leaves the beverage with a flat, insipid taste which is unsatisfactory. Finished beverages should be checked at frequent intervals to assure proper carbonation in the drink.

The amount of sugar in a beverage determines, with a given acid content, its sweetness. The sugar also has another important function in the beverage. Sugar makes the body of the beverage and body is a necessary background for any flavor. A change in the body changes the taste of the beverage even though the same flavor is used. High quality extracts are, of course, a necessity.

Control of sugar content of the beverage is very important. It depends on the Beaume of syrup used and the throw used. Variation in syrup density changes the finished beverage if the throw remains the same. Variation in the throw will also change the beverage if the syrup density is unchanged. By checking the Beaume of the finished beverage a control is established where it does the most good.

Uniform finished beverages can be made only by positive control over such variable factors in beverage production.

Check the density of your syrup with a Beaume scale.

Check the actual throw in the dispensed drink by measuring individual sample drinks.

Check the final result by using the finished drink tester on the complete beverage.

Check the carbonation in the finished beverage.

KNOW YOUR WATER: Water that is satisfactory for drinking purposes is generally satisfactory for carbonating. There are very few exceptions to this rule.

The water used for carbonating must be clean. That means free from suspended matter of all kinds, including water organisms which may be too small to see, except under a microscope.

All water should be properly filtered and it is advisable to use an activated carbon unit after the filter. The ideal set up is to follow the activaated carbon unit with a paper filter. This will prevent particles of the carbon passing through, with the water.

Chemical composition of the water does not affect carbonation within the limits of potable water. If enough material were in solution to interfere with carbonation, it would not be possible to use the water for drinking purposes.

Organic matter in solution, can cause trouble if present in excessive quantities, but this trouble is removed by activated carbon.

It may be necessary to treat water chemically in some cases. Hardness can be removed by chemical treatment and that is sometimes advisable to prevent scale formation on machinery, particularly on soaker parts. Alkalinity can be reduced by chemical treatment and that is advisable if the alkalinity is high enough to affect the taste of the water, or if it is sufficient to neutralize too much of the acid in the beverage. If objectionable material is present in the raw water, that may require chemical treatment.

Such treatment, properly handled, does not affect carbonation and it does not change the necessity for proper filtration. Chemical treatment should be followed by filtration.

AIR - FOE OF CARBONATION AND HOW TO COMBAT IT: Too much air in the water interferes with proper carbonation and also causes the CO^2 gas to leave the water more quickly when the bottle of finished beverage is opened. It is therefore important to reduce the amount of air present to the minimum.

Some air is present in the raw water supply. More may be added in the mechanical handling of the water. When such water reaches the carbonator, the CO^2 gas tends to drive it out of the water. If steps are not taken to remove it, this air will accumulate in the carbonator and much of it will be carried through in the water and into the finished beverage. That is why all liquid carbonators have an automatic air snift.

PRESSURE AND COOLING CONDITIONS: Two conditions must be maintained in order to induce and hold carbonic gas in water. They are:

1. Pressure
2. Adequate refrigeration or cooling.

Most of the cold drinks served at a soda fountain are carbonated. Therefore, nothing is more important to the successful operation of a fountain than cold, properly carbonated water to make drinks sparkling, full flavored and fully satisfying in quality.

Water is carbonated by combining it with carbonic acid gas, CO^2. This is done in a sealed chamber by forcing gas from a drum through a pressure regulating valve into the water in this chamber. As the carbonated water is used from this chamber, it is replaced by a high pressure water pump. The operation of this pump is controlled by an automatic switch device which senses the water level.

CO^2 GAS DRUMS: Drums, also called Tanks, for carbonic acid gas are made of drawn steel tubing and are built to withstand great pressure. As delivered, they contain liquid gas reduced to liquid form by tremendous compression.

Each Drum or Tank is equipped with a safety valve set to blow out before internal pressure can explode the drum itself. Once this valve pops off, the contents of a drum will escape. Drums, therefore, should always be stored in a cool place to keep the liquid from expanding and increasing pressure inside the gas drum.

Drums are classified by weight. As a rule, drums are of two sizes: 20-lb. drums and 50-lb. drums. These weights refer to the compressed liquid contents and are in addition to the tare weight, usually indicated on the head of each drum.

SECTION IV

ADJUSTMENT AND REMOVAL AND REPLACEMENT PROCEDURES

The procedures provided in this Section are arranged in alphabetical order, to make specific Adjustment and Removal and Replacement information easy to locate.

Read the instructions thoroughly before performing any Adjustment or Removal and Replacement Procedures.

WARNING

The adjusting screws on the Temperature Control device have very sensitive response to adjustment. DO NOT attempt to adjust the screw until after thoroughly reading and understanding the following instructions. Over-adjusting or erratic guessing, can foul the instrument and cause ultimate delay and part replacement, WHICH COULD HAVE BEEN PREVENTED.

I. ADJUSTMENT OF THE BIN THERMOSTAT CONTROL

The control for the Bin thermostat is the Temperature Control, located in the upper part of the Control Box Assembly,

See Figure 4-1 for location and direction of rotation, clockwise (CW) or counterclockwise (CCW), of the adjusting screws on the Temperature Control, in the particular Control Box the adjustment is to be performed.

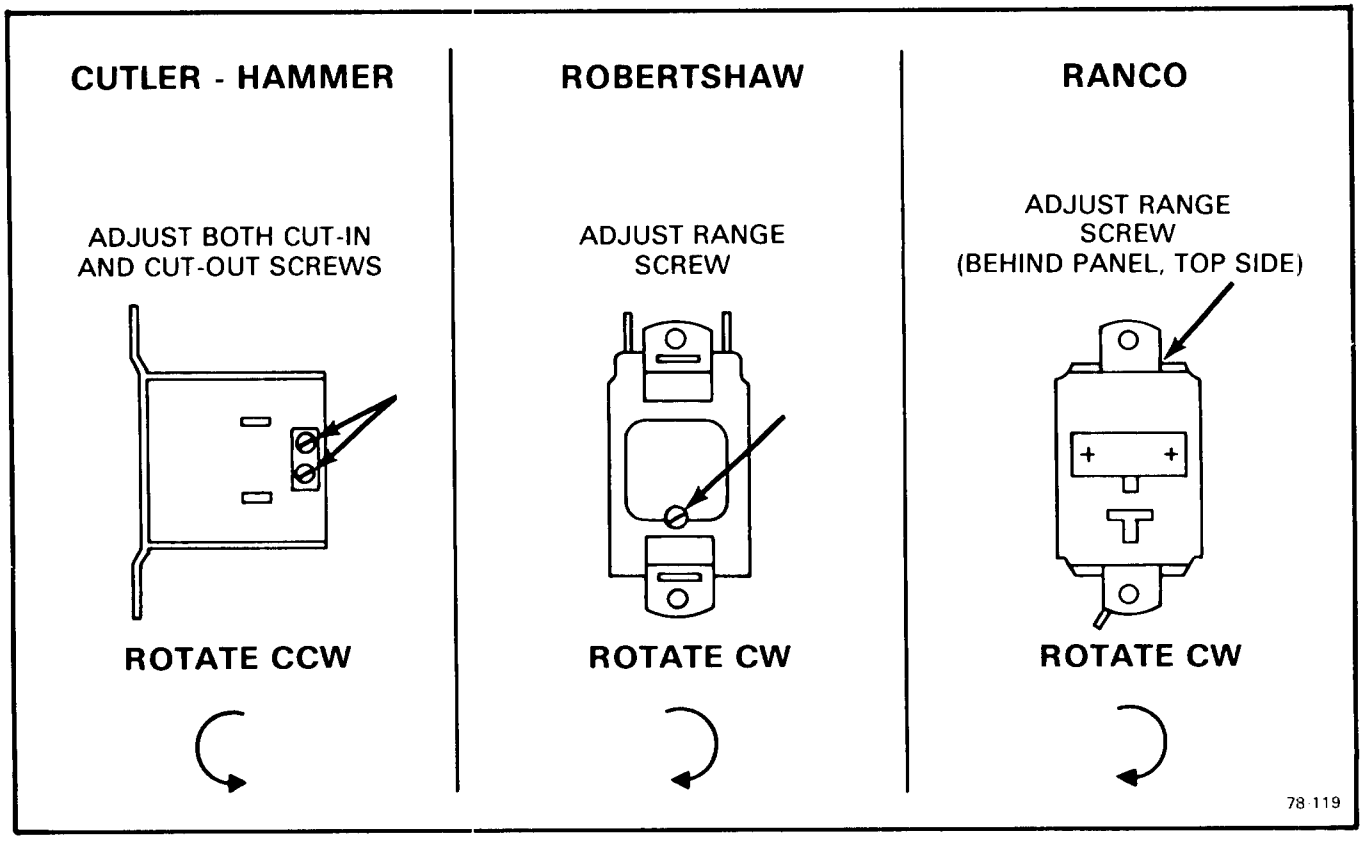

Figure 4-1. Adjustment of the Temperature Control

To Adjust the Bin Thermostat Control:

A. Hold a handful of ice against the Capillary Bulb in the Ice Storage Bin.

B. Slowly rotate in the appropriate direction, the adjusting screw on the Temperature Control device, in the Control Box Assembly, until the Icemaker shuts OFF.

C. Remove ice from the Capillary Bulb; then, place warm hand on the Capillary Bulb to restart the Icemaker.

D. Place handful of ice against the Capillary Bulb and observe that the Icemaker should shut OFF within ten seconds, usually less.

II. ADJUSTMENT OF CO^2 GAS PRESSURE

Two areas of CO^2 gas pressure require checks and adjustments to properly maintain the correct amounts and pressures for best soda dispensing operation. The CO^2 High Pressure, through the CO^2 High Pressure Regulator, for the Carbonator Tank operation, and the CO^2 Low Pressure Regulator for the CO^2 gas pressure, used to force syrup from syrup tanks to the Dispensing Faucet. When either pressures are above or below normal operating pressures, adjust as detailed in the following procedures.

To Adjust the CO^2 Gas Pressure:

A. CO^2 High Pressure - TO INCREASE:

Rotate the Adjusting Key on the CO^2 High Pressure Regulator CLOCKWISE, and observe the indicator needle on the Gauge moving to an increased pressure indication.

NOTE

CO^2 gas pressures from 80 to 120 PSIG will provide satisfactory Carbonator operation. When rotating the Adjusting Key does not increase pressure, rotate the Regulator Outlet Valve COUNTERCLOCKWISE to OPEN, and observe the indicator needle on the Gauge moving to an increased pressure indication. When no increase in pressure occurs with this adjustment, the CO^2 Gas Cylinder must be EMPTY. Replace the empty CO^2 Gas Cylinder with a FULL CO^2 Gas Cylinder.

B. CO^2 High Pressure - TO DECREASE:

Reverse the TO INCREASE procedure above.

C. CO^2 Low Pressure - TO INCREASE:

Rotate the Adjusting Key on the CO^2 Low Pressure Regulator CLOCKWISE, and observe the indicator needle on the Gauge moving to an increased pressure indication.

NOTE

CO^2 gas pressures from 15 to 20 PSIG will provide satisfactory pressures to force syrup from the syrup tanks to the Dispensing Faucet. When rotating the Adjusting Key does not increase pressure, rotate the Regulator Outlet Valve COUNTERCLOCKWISE to OPEN, and observe the indicator needle on the Gauge moving to an increased pressure indication. When no increase in pressure occurs with this adjustment, the CO^2 Gas Cylinder must be EMPTY. Replace the empty CO^2 Gas Cylinder with a FULL CO^2 Gas Cylinder.

D. CO^2 Low Pressure - TO DECREASE:

Reverse the TO INCREASE procedure above.

III. ADJUSTMENT OF THE DRINK DISPENSER FAUCETS.

The Metering Screws for syrup and water are located on the rear underside of the Faucet, behind the Pouring Spout. The Metering Screw for WATER is located on the LEFT, and is marked W. The Metering Screw for SYRUP is located on the RIGHT, and is marked S.

The Metering Screws have sensitive adjustment, therefore, rotate no more than one-eighth of a turn at a time.

To Adjust the Drink Dispenser Faucet:

A. To INCREASE Flow: Rotate appropriate Metering Screw OUT or COUNTERCLOCKWISE, one-eighth of a trun.

B. To DECREASE Flow: Rotate appropriate Metering Screw IN or CLOCKWISE, one-eighth of a turn.

IV. ADJUSTMENT OF THE LEG LEVELERS

When the Icemaker/Drink Dispenser is ordered with the optional Leg Levelers, the Cabinet must be leveled in the front-to-rear and side-to-side directions. This adjustment should be performed during initial installation of the Cabinet and anytime the Cabinet is moved from the original location to another site.

A. Using an open-end wrench, and a carpenter's bubble level, rotate the threaded Leveler in each Leg to RAISE or LOWER the Cabinet until the Cabinet is level in the front-to-rear direction.

B. Repeat step A, for leveling in the side-to-side direction.

C. Recheck both the front-to-rear and the side-to-side leveling and repeat adjustments, as necessary.

V. ADJUSTMENT OF THE WATER REGULATOR ASSEMBLY

The correct head pressure on Water-Cooled models is 135 PSIG. Adjustments can be performed on the Water Regulator Assembly to increase or decrease the head pressure.

To Adjust the Water Regulator Assembly:

A. To INCREASE the Head Pressure: Rotate the adjusting Screw, on the Water Regulator Assembly IN or CLOCKWISE.

B. To DECREASE the Head Pressure: Rotate the adjusting Screw, on the Water Regulator Assembly OUT or COUNTERCLOCKWISE.

VI. ADJUSTMENT OF THE WATER RESERVOIR FLOAT

The correct water level in the Water Reservoir should be 3/8-inch below the raised molded line, on the side of the body of the Water Reservoir. When the water line level is above or below the raised molded line, adjustment can be performed to raise or lower the water level by bending the metal arm of the Float, inside the Water Reservoir.

To Adjust the Water Reservoir Float:

A. To RAISE the Water Level: Hold one end of the metal arm of the Float and slightly bend the Float UP.

B. To LOWER the Water Level: Hold one end of the metal arm of the Float and slightly bend the Float DOWN.

C. To Perform MAJOR Adjustment:

When repair or replacement has been performed and the water level line between the Water Reservoir and the Spout Opening on top of the Freezer Assembly has been substantially altered:

1. Remove the two Screws and Lockwashers which attach the Reservoir Bracket and Water Reservoir to the vertical upright panel of the Chassis.
2. Move the Reservoir Bracket UP or DOWN, to align with the appropriate set of holes in the panel, that will properly position the Water Reservoir at the correct water line level, even with one-inch below the Spout opening.
3. Attach the Reservoir Bracket and Water Reservoir to the Panel, with the Screws and Lockwashers removed in step 1.

WARNING

Be sure the electrical power supply and the water supply are OFF, before starting any of the following REMOVAL AND REPLACEMENT procedures, as a precaution to prevent possible personal injury or damage to equipment.

VII. REMOVAL AND REPLACEMENT OF THE AUGER, WATER SEAL, BEARINGS AND COUPLING.

A. To Remove the Auger, Water Seal, Bearings, and Coupling:

1. Remove screws and the Left Side Panel and the Left Rear Door.
2. Pull to unsnap each end of the Hood Panel from the Hood Assembly.
3. Remove three screws, located behind the upper part of the left side opening of the Hood Assembly, which attach the Dispensing Tower to the Hood Assembly.
4. Slide the Dispensing Tower toward the rear about one-half inch to disengage the slots, lift the Dispensing Tower off of the Hood Assembly and lay the Tower, with product lines attached, over the back of the Hood Assembly, out of the way.
5. Remove the Insulation Strap, the Insulatin Clip and separate the two-piece Insulation from the top of the Freezer Assembly.
6. Perform the steps in procedures IV-XVIII and IV-XIX to remove the Limit Box, Pressure Plate Assembly, Spout Assembly and Spout Casting.
7. Remove two Screws, Washers and the Spout Plate from Ice Breaker.
8. Grasp the wire Cap Hook at the top of the Freezer Assembly and pull out the Auger and attached Cap, Ice Breaker, upper Bearing and O-Rings, at the top of the Auger; and, the top half of the Water Seal at the bottom of the Auger.

NOTE

When the Auger cannot be pulled out, proceed to step 16 and 17, to gain access to the bottom of the Auger. Then, with a rawhide mallet or placing a piece of wood on the bottom end of the Auger, tap the bottom of the Auger to break it loose and pull the Auger out, as in step 8 above.

9. Remove the Cap Hook from the Ice Breaker.
10. Remove the Retaining Ring and the Cap.
11. Remove the Cap Screw and Washer and remove the Ice Breaker from the Auger.
12. Clean away the old grease from the top of the Auger, the Ice Breaker, Cap, Cap Screw and Washer, and the O-Ring and Retaining Ring.
13. Inspect the O-Ring at the top of the Ice Breaker and the O-Ring at the bottom inside of the Ice Breaker, for cuts, tears and general worn condition to determine replacement.
14. Inspect the Bearing pressed into the top of the Ice Breaker; and, if it is to be replaced, remove the Retaining Ring and press the Bearing out of the Ice Breaker.
15. Slide the upper half of the Water Seal off of the bottom of the Auger.

NOTE

1. *Any time the Auger is removed for replacement, or, for the inspection and replacement of the Bearings or Coupling, use extra care in handling the Water Seal parts, so no dirt or foreign matter are deposited on the surfaces of the Seal.*
2. *If there is any doubt about the effectiveness of Water Seal or O-Ring, REPLACE THEM. A dirty, worn or faulty Water Seal or O-Ring will cause a leak and ultimately require a second, time consuming removal and replacement procedure to be performed, that COULD HAVE BEEN PREVENTED.*

16. Remove four screws and lockwashers which attach the Freezer Assembly to the Adaptor on the Drivemotor Assembly.
17. Raise the Freezer Assembly off of the Adaptor, to gain access to the Bearing and Retainer; then, temporarily secure the Freezer Assembly out of the way to allow room to work. Be careful not to damage the gasket.
18. Using a suitable length and size wooden dowel or stick inserted through the top of the open Freezer Assembly, tap the lower half of the Water Seal and the lower Bearing in the Retainer, out the bottom of the Freezer Assembly.
19. Inspect the lower half of the Water Seal. If reusable, use care to protect it from dirt, etc. prior to replacement procedure.
20. Inspect the lower Bearing in the Retainer; and, if the Bearing is to be replaced, press the Bearing out of the Retainer.
21. Reach through the Adaptor and remove the Coupling on the Drive motor for inspection.
22. Check the Coupling for cracks, chipping and excessive wear.

B. To replace the Auger, Water Seal, Bearings, and Coupling, reverse the removal procedures.

NOTE

1. *When installing the Retainer assembled with Bearing, in the bottom of the Freezer Assembly, some Retainers will insert as a slip fit, and some will have to be forced into place because of very tight fit. Carefully tap a piece of wood positioned across the bottom of the Retainer, to evenly seat the Retainer in the chamber of the Freezer.*
2. *After assembling the parts on the upper end of the Auger and BEFORE installing the Cap and Cap Hook, apply an ample coating of Beacon-325 grease, P/N 19-0309-01, to the upper part of the Ice Breaker, to cover the Retaining Ring and the Cap Screw and Washer. Then, install the Cap and Cap Hook in place.*

VIII. REMOVAL AND REPLACEMENT OF THE CARBONATOR TANK ASSEMBLY

A. To Remove the Carbonator Tank Assembly:

1. Remove screws, the Left Side Panel and Left Rear Door.
2. Slowly pull the ring and lift the body of the Relief Valve, on the top of the Carbonator Tank, and bleed off CO^2 gas pressure.
3. Tag and disconnect three product lines at the top of the Carbonator Tank Assembly.
4. Remove screws and the Control Box Cover.
5. Tag or identify for replacement, then disconnect, three electrical leads from the Carbonator Electrode that are attached to terminals on the Liquid Level Control inside of the Control Box
6. Remove four screws which attach the Carbonator Tank Assembly to the rear upright mounting bracket of the Chassis; then, lower the Carbonator Tank Assembly from the horizontal mounting

bracket and remove the Tank out the rear of the Dispenser.

B. To replace the Carbonator Tank Assembly, reverse the removal procedure.

IX. REMOVAL AND REPLACEMENT OF A CO^2 GAS CYLINDER (DRUM)

A. To Remove a CO^2 Gas Cylinder (EMPTY):

1. CLOSE CO^2 Gas Cylinder Head Valve.
2. CLOSE CO^2 Regulator Outlet Valve.
3. Disconnect CO^2 Regulator from the CO^2 Gas Cylinder. Gauge should drop to ZERO.
4. Install Outlet Cap on threaded outlet of the CO^2 Gas Cylinder.
5. Remove EMPTY CO^2 Gas Cylinder.

B. To replace a CO^2 Gas Cylinder (FULL):

1. Install FULL, replacement CO^2 Gas Cylinder in the position and location of the removed EMPTY Cylinder.
2. Check that Head Valve of Replacement CO^2 Gas Cylinder is tightly CLOSED.
3. Remove Outlet Cap from outlet of the replacement CO^2 Cylinder.
4. Install good or new fiber washer and attach the CO^2 Regulator Coupling Nut to the threaded outlet of the replacement CO^2 Gas Cylinder.
5. SLOWLY open the CO^2 Gas Cylinder Head Valve.
6. SLOWLY open the CO^2 Regulator Valve and observe increasing pressure on Gauge, stopping at desired working high pressure: 80 to 120 PSIG.
7. Perform checks:
   a. CO^2 Regulator Coupling Nut is tightly connected to CO^2 Gas Cylinder.
   b. New or good fiber washer used.
   c. Water back-pressure Check Valve is functioning properly.
   d. When in doubt, apply soap lather to check connections for gas leaks.
   e. When leak occurs at either end of a hose, cut off the defective end and refasten hose with clamps. Otherwise, REPLACE HOSE.

   Keep CO^2 gas supply ON at all times to ensure uniform well-carbonated water.

X. REMOVAL AND REPLACEMENT OF THE COLD PLATE BIN ASSEMBLY

A. To Remove the Cold Plate Bin Assembly:

1. Remove screws and all side, front and rear doors and panels.
2. Tag and disconnect all product lines connected at the rear of the Cold Plate.
3. Remove 29 screws and lift away from the Dispenser Chassis, the entire Hood Assembly and Dispensing Tower, with product lines attached.
4. Carefully lift the Cold Plate Bin Assembly straight up until the front bottom edge just clears the top of theChassis; then, tilt the top of the Bin toward the rear, moving the bottom of the Bin slightly forward and lift out of the Chassis.

B. To replace the Cold Plate Bin Assembly, reverse the removal procedure.

XI. REMOVAL AND REPLACEMENT OF THE COMPRESSOR ASSEMBLY

NOTE

Always install a replacement Drier, any time the sealed refrigeration system is opened. Do not replace the Drier until all other repair or replacement has been completed.

A. To remove the Compressor Assembly:

1. Remove screws and the Left Side Panel and the Left Rear Door.
2. Remove two screws and the Cover from the Compressor Junction Box.
3. Disconnect the electrical leads at the Compressor Junction Box, that originate in the Control Box.
5. Unsolder the suction line from the Compressor.
6. Unsolder the discharge line from the Compressor.
7. Unsolder the process header tube from the Compressor and retain for installation on the Replacement Compressor.
8. Remove four bolts, lockwashers and washers which secure the Compressor to the Chassis mounting base.
9. Slide the Compressor and remove through the left side opening of the Cabinet.

NOTE

Thoroughly evacuate the system to remove moisture and non-condensables.

B. To replace the Compressor Assembly, reverse the removal procedure.

XII. REMOVAL AND REPLACEMENT OF THE CONDENSER - AIR-COOLED MODELS

NOTE

Always install a replacement Drier, any time the sealed refrigeration system is opened. Do not replace the Drier until all other repair or replacement has been completed.

A. To Remove the Condenser:

1. Remove screws and the Left Front Door.
2. Remove screws and the Left Side Panel.
3. Bleed off or blow the refrigerant charge through the Schrader valve.
4. Remove one screw and disconnect the Drier Brace and Drier from the Condenser Shroud.
5. Unsolder and disconnect the Condenser inlet tube at the Condenser.
6. Unsolder and disconnect the Condenser outlet tube at the Condenser.
7. Remove three screws, lockwashers and washers securing the Condenser to the Chassis Base.
8. Remove the Condenser out through the front opening of the Cabinet.

NOTE

Thoroughly evacuate the system to remove moisture and non-condensables.

B. To replace the Condenser, reverse the removal procedure.

XIII. REMOVAL AND REPLACEMENT OF THE CONDENSER - WATER-COOLED MODELS

NOTE

Always install a replacement Drier, any time the sealed refrigeration system is opened. Do not replace the Drier until all other repair or replacement has been completed.

A. To Remove the Condenser:

1. Remove screws and the Left Front Door and the Left Side Panel.
2. Bleed off or blow the refrigerant charge through the Schrader valve.
3. Unsolder the refrigerant inlet and outlet lines from the Condenser.
4. Disconnect the water inlet and outlet lines from the Condenser.
5. Remove two bolts, lockwashers and washers which secure the Condenser to the Chassis mounting base.
6. Remove the Condenser from the Cabinet.

NOTE

Thoroughly evacuate the system to remove moisture and non-condensables.

B. To replace the Condenser, reverse the removal procedure.

XIV. REMOVAL AND REPLACEMENT OF THE DRIER

NOTE

Always install a replacement Drier, any time the sealed refrigeration system is opened. Do not replace the Drier until all other repair or replacement has been completed.

A. To Remove the Drier:

1. Remove screws and the Left Front Door.
2. Remove screws and the Left Side Panel.
3. Remove screw and Drier Brace attaching the Drier to the Condenser shroud on Air-Cooled models; and, the Chassis base on Water-Cooled models.
4. Bleed off or blow the refrigerant charge through the Schrader valve.
5. Unsolder refrigeration lines at top and bottom of Drier, remove the Drier and separate the Drier from the Drier Brace.

B. To Replace the Drier:

CAUTION

1. If the factory seal is broken on the replacement Drier, exposing it to the atmosphere more than a few minutes, the Drier will absorb moisture

from the atmosphere and lose substantial ability for moisture removal.

2. Be sure the replacement Drier is installed with the arrow positioned in the direction of the refrigerant flow.

---

1. Remove the factory seals from the replacement Drier and install the Drier in the refrigerant lines with the arrow positioned in the direction of the refrigerant flow.
2. Install the Drier Brace on the Drier.
3. Solder the Drier into the lines, two places.
4. Purge the system and check for leaks.
5. Thoroughly evacuate the system to remove moisture and non-condensables.
6. Charge the system with refrigerant, by weight. SEE NAMEPLATE.
7. Replace the Left Front Door and the Left Side Panel and attach both with screws removed earlier.

XV. REMOVAL AND REPLACEMENT OF THE DRIVEMOTOR ASSEMBLY

A. To Remove the Drivemotor Assembly:

1. Perform all steps in procedure IV-XVII to gain access for removal of the Drivemotor Assembly.
2. Remove two bolts, lockwashers and washers which attach the Drivemotor to the horizontal mounting bracket at the rear of the Chassis.
3. Lift the Drivemotor from the bracket and out the rear of the Dispenser.

B. To replace the Drivemotor Assembly, reverse the removal procedure.

XVI. REMOVAL AND REPLACEMENT OF THE FAN MOTOR ASSEMBLY - AIR-COOLED MODELS

NOTE

Before beginning this procedure, observe the Fan Blade position on the shaft of the Fan Motor and mark the Fan Blade so it will be correctly positioned during reassembly. Direction of air flow should be toward the Fan Motor.

A. To Remove the Fan Motor Assembly:

1. Remove screws and the Left Front door.
2. Remove screws and the Left Side Panel.
3. Disconnect the electrical lead from the Fan Motor.
4. Remove two screws securing the Motor Bracket to the Chassis Base and remove the Fan Motor and Motor Bracket out through the left side opening of the Chassis.
5. Remove the nut from the end of the Fan Motor shaft and remove the Fan Blade.
6. Remove four screws securing the Fan Motor to the Motor Bracket and separate the Motor from the Bracket.

B. To replace the Fan Motor Assembly, reverse the removal procedure.

XVII. REMOVAL AND REPLACEMENT OF THE FREEZER ASSEMBLY

NOTE

1. *The Cabinet may have to be removed from its permanent location, especially if located in a corner, in order to have access to the left side and rear of the Chassis.*
2. *In addition to shutting OFF electrical power and inlet water to the Dispenser, be sure to disconnect the inlet water line at the Pump body BEFORE moving the Dispenser from the permanent location.*
3. *Always install a replacement Drier, any time the sealed refrigeration system is opened. Do not replace the Drier until all other repair or replacement has been completed.*

A. To Remove the Freezer Assembly, see Figure 4-2:

1. Remove screws and all side, front and rear doors and panels.
2. Tag and disconnect all lines at the rear of the Cold Plate that connect to the Dispensing Tower.
3. Remove 29 screws and lift away from the Dispenser Chassis, the entire Hood Assembly and Dispensing Tower, with product lines attached.
4. Refer to prodecures IV-XVIII and IV-XIX and remove the Limit Box Assembly, Pressure Plate Assembly, Spout Assembly, and the Spout Casting.
5. Remove Corbin clamp and Tygon tube from the Freezer Assembly that connects to the Water Reservoir Assembly.
6. Bleed off or blow the refrigerant charge through the Schrader valve.

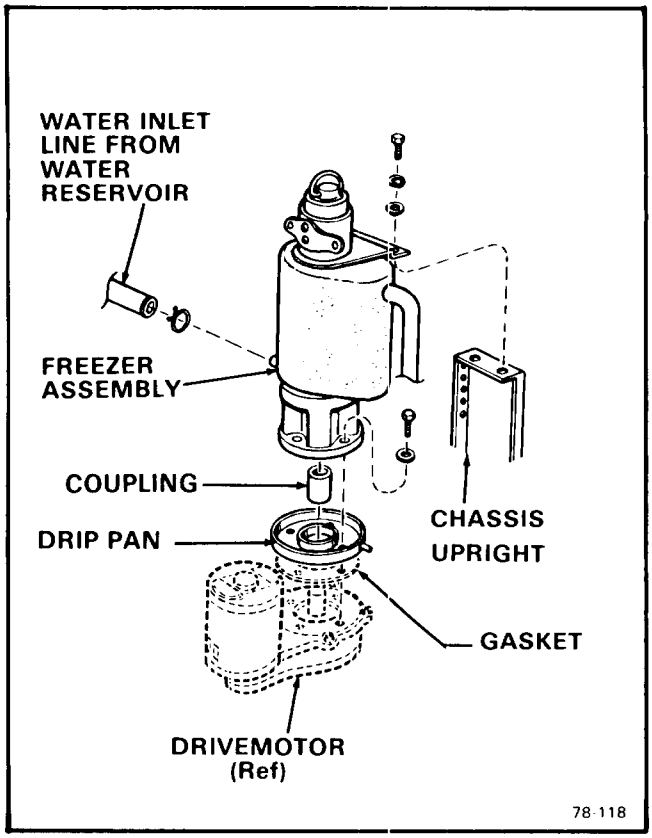

Figure 4-2. Removal of the Freezer Assembly

7. Unsolder the suction line from the Compresor.
8. Unsolder the capillary line at the Drier.
9. Remove two screws and lockwashers which attach the Freezer Assembly to the upper framework of the Chassis, just below area of the Spout Casting location.
10. Remove four screws, lockwashers and washers which attach the bottom of the Freezer Assembly to the Adaptor on the Drivemotor Assembly.
11. Lift the Freezer Assembly up and off of the Adaptor and Drivemotor Assembly.

B. To replace the freezer Assembly, reverse the removal procedure.

NOTE

Thoroughly evacuate the system to remove moisture and non-condensables

XVIII. REMOVAL AND REPLACEMENT OF THE LIMIT BOX ASSEMBLY

A. To Remove the Limit Box Assembly, see Figure 4-3:

1. Pull to unsnap each end of the Hood Panel and remove the Panel from the Hood Assembly.
2. Remove three screws, located behind the upper part of the left side opening of the Hood Assembly, which attach the Dispensing Tower to the Hood Assembly.
3. Slide the Dispensing Tower toward the rear about one-half inch to disengage the slots, lift the Dispensing Tower off of the Hood Assembly and lay the Tower, with product lines attached, on the front apron of the Dispenser.
4. Remove the Insulation Strap, the Insulation Clip and the two-piece Insulation at the top of the Freezer Assembly.
5. Remove the nut that attaches the Limit Box to the Spout Casting and slide the Limit Box away from the Freezer to disengage from the two tabs, part of the Pressure Plate Assembly.
6. Remove two screws and the Cover from the Limit Box.
7. Disconnect two electrical leads from terminals inside the Limit Box and remove the Limit Box from the Spout Casting.

B. To replace the Limit Box Assembly, reverse the removal procedure.

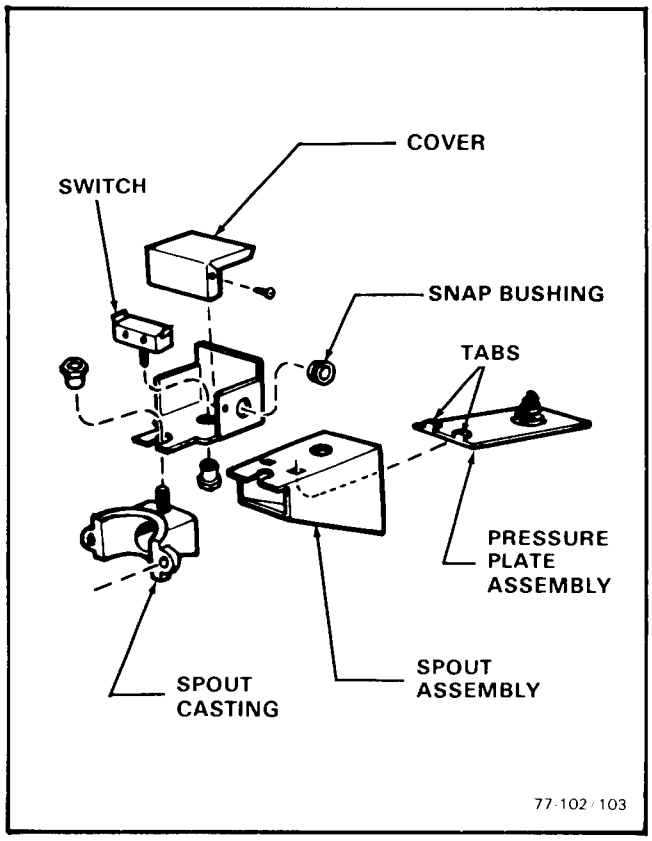

Figure 4-3. Removal of the Limit Switch, Pressure Plate, Spout and Spout Casting

XIX. REMOVAL AND REPLACEMENT OF THE PRESSURE PLATE ASSEMBLY, SPOUT ASSEMBLY AND SPOUT CASTING.

A. To Remove the Pressure Plate Assembly, Spout Assembly and Spout Casting, see Figure 4-3:

1. Perform steps 1 through 5 of procedure IV-XVIII-A above.
2. Reach through the right side opening of the Hood Assembly and into the Spout and remove the Pressure Plate Assembly.
3. Grasp the Spout Assembly and work back and forth slightly and pull the Spout Assembly off of the Spout Casting and out through the inner wall of the Ice Storage Bin.
4. Remove two screws and lockwashers and separate the Spout Casting and Spout Grommet from the Freezer. Retain the Grommet for replacement procedure.

B. To Replace the Pressure Plate Assembly, Spout Assembly and Spout Casting reverse the removal procedure.

XX. REMOVAL AND REPLACEMENT OF THE PUMP, MOTOR AND BRACKET ASSEMBLY

A. To Remove the Pump, Motor and Bracket Assembly, see Figure 4-4:

1. Remove Screws and the Left Front Door.
2. Remove screws and the Left Side Panel.

CAUTION

BEFORE removing the three water lines in the next step, SLOWLY unscrew the connection of the line from the Pump to the Carbonator Tank, which is under pressure, and carefully bleed off the water pressure.

3. Disconnect the three water lines connected to the pump.
4. Loosen two screws on the cover plate to the elecrical connections, located on the end of the Motor, toward the front of the Chassis.
5. Rotate the cover plate to OPEN.

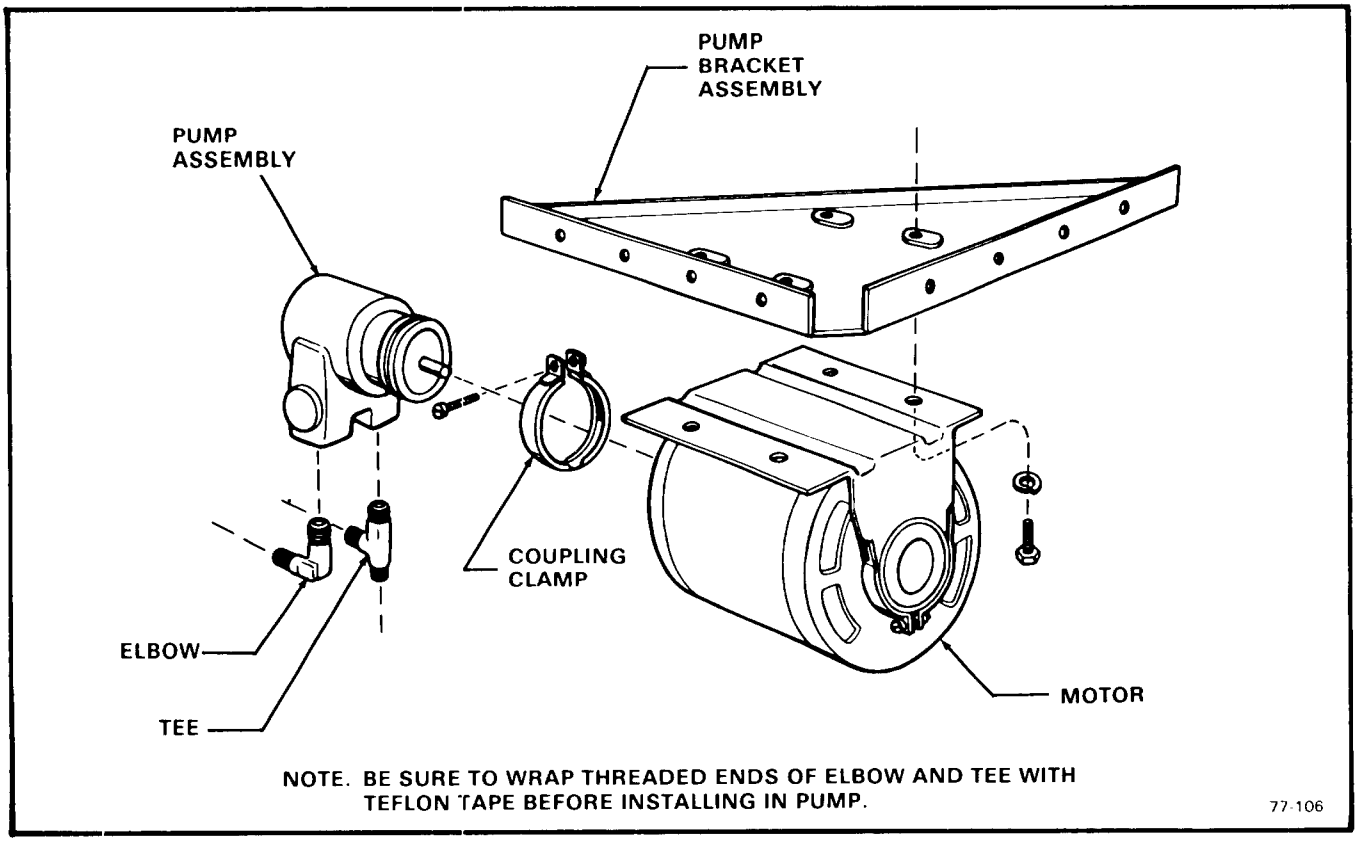

Figure 4-4. Removal of the Pump, Motor and Bracket Assembly

6. Disconnect the two electrical leads from terminals on the Motor.
7. CLOSE the cover plate.

CAUTION

BEFORE the next step, be prepared to support the Pump and Motor, and the mounting Bracket, or have an assistant helping during the removal, to prevent dropping the Motor and causing possible personal injury or damage to equipment.

8. Remove four screws attaching the Bracket to the front of the Chassis Frame.
9. Remove four screws attaching the mounting Bracket to the left side of the Chassis Frame; then, carefully remove the Pump, and mounting Bracket through the front opening of the Chassis.
10. Remove four bolts and washers and separate the Pump and Motor from the mounting Bracket.

B. To replace the Pump, Motor and Bracket Assembly, reverse the removal procedure.

XXI. REMOVAL AND REPLACEMENT OF THE PUMP MOTOR

A. To Remove the Pump Motor, see Figure 4-4:
1. Remove screws and the Left Front Door.
2. Remove screws and the Left Side Panel.
3. Loosen two screws on the cover plate to the electrical connections, located on the end of the Motor, toward the front of the Chassis.
4. Rotate the cover plate to OPEN.
5. Disconnect the two electrical leads from the terminals on the Motor.
6. CLOSE the cover plate.
7. Remove the screw and spread the Coupling Clamp open enough to slide the Clamp off of the Motor and onto the Pump.
8. Carefully pull the Pump away from the Motor enough to disengage the connection.

CAUTION

BEFORE the next step, be prepared to support the Motor, or have an assistant helping during the removal, to prevent dropping the Motor and causing possible personal injury of damage to equipment.

9. Remove four screws attaching the mounting Bracket to the front of the Chassis Frame.
10. Remove four screws attaching the mounting Bracket to the left side of the Chassis; then, carefully remove the Motor and mounting Bracket through the front opening of the Chassis.
11. Remove four bolts and washers and separate the Motor from the mounting Bracket.

B. To replace the Pump Motor, reverse the removal procedure.

NOTE

When securing the Pump to Motor with the Coupling Clamp:

1. *Fit the Clamp over the ridges on the Pump and Motor bodies.*
2. *Be sure the screw holes in the Clamp are on top.*
3. *With the thumb and forefinger of one hand, cup the bottom of the Clamp and force the Clamp up and around the bodies of the Pump and Motor, for a close fit toward the top of the Clamp.*
4. *Tighten the Clamp Screw with a screwdriver, by hand. Tighten only until tight enough that the Pump CANNOT be rotated by hand, on the Motor. DO NOT USE POWER OR AIR TOOLS.*

A small 3/16-inch wide bladed screwdriver is large enough. Further tightening may cause loud squealing noises from the Pump or Motor during operation.

XXII. REMOVAL AND REPLACEMENT OF THE PUMP

A. To Remove the Pump, see Figure 4-4:
1. Remove screws and the Left Side Panel.

CAUTION

BEFORE removing the three water lines in the next step, SLOWLY unscrew the connection of the line from the Pump to the Carbonator Tank, which is under pressure, and carefully bleed off the water pressure.

2. Disconnect the three water lines connected to the Pump.
3. Remove the screw and the Coupling Clamp and separate the Pump from the Motor.
4. Remove the Elbow and the Tee from the Pump.

B. To Replace the Pump:
1. Using Teflon tape, wrap the threaded

end of the Elbow, that is to be connected to the Pump.

2. Similarly wrap the threaded end of the Tee, that is to be connected to the Pump.
3. Install the Elbow and the Tee in the Pump in the openings and positions shown in Figure 4-4.
4. Fit the Coupling Clamp over the end of the Pump.
5. Insert the shaft of the Pump into the slot in the Motor to install the Pump on the Motor.

NOTE

When securing the Pump to Motor with the Coupling Clamp:

1. *Fit the Clamp on the ridges on the Pump and Motor bodies.*
2. *Be sure the screw holes in the Clamp are on top.*
3. *With the thumb and forefinger of one hand, cup the bottom of the Clamp and force the Clamp up and around the bodies of the Pump and Motor, for a close fit toward the top of the Clamp.*
4. *Tighten the Clamp Screw with a screwdriver, by hand. Tighten only until tight enough that the Pump CANNOT be rotated by hand, on the Motor. DO NOT USE POWER OR AIR TOOLS.*

A small 3/16-inch wide bladed screwdriver is large enough. Further tightening may cause loud squealing noises from the Pump or Motor during operation.

6. Connect the three water lines to the Pump.
7. Replace the Left Side Panel and secure with two screws.

XXIII. REMOVAL AND REPLACEMENT OF THE TOUCH-O-MATIC[T.M.] FAUCET ASSEMBLY

CAUTION

SCOTSMAN Parts Department DOES NOT stock repair parts for soda valves. Prevent delay and problems by determining the specific valve to be replaced and order parts from:

McCANN's Engineering & Mfg. Co.
4570 Colorado Boulevard
Los Angeles, California 90039

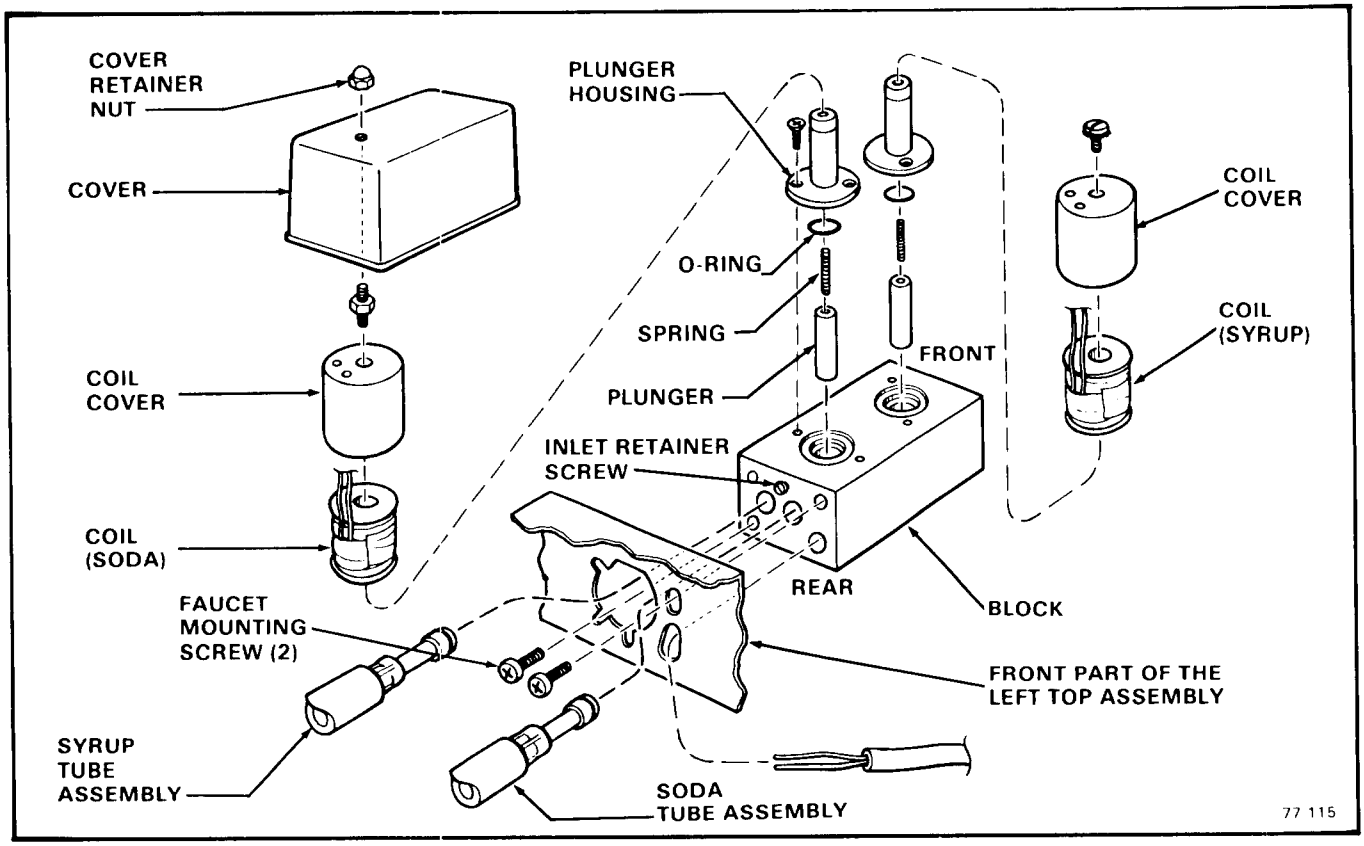

Figure 4-5. Removal of the Touch-O-Matic[T.M.] Solenoid Parts

A. To Remove the Touch-O-Matic Faucet Assembly, see Figure 4-5:

1. SLOWLY open the check valve, on top of the Carbonator Tank Assembly, and bleed off CO^2 gas pressure.
2. SLOWLY open the bleeder valve, on top of the appropriate Syrup Tank Assembly, and bleed off CO^2 gas pressure.
3. LOOSEN the inlet Retainer Screw on the rear of the transparent block and disconnect the two Tube Assemblies from the Faucet.
4. Remove the Cover Retainer Nut and lift the Cover off of the Block.
5. Tag or otherwise identify the placement of the leads of the electrical cord connected through the rear of the Block.
6. Disconnect the leads and pull the electrical cord out through the rear of the Block.
7. Remove two Faucet Mounting Screws, which attach the Faucet Assembly to the front of the Left Top Assembly and remove the Faucet Assembly.

B. To replace the Touch-O-Matic Faucet Assembly, reverse the removal procedures.

XXIV. REMOVAL AND REPLACEMENT OF THE TOUCH-O-MATIC T.M. FAUCET COIL, PLUNGER, SPRING, O-RING

A. To Remove the Coil, Plunger, Spring or O-Ring, see Figure 4-5:

CAUTION

The CAUTION in the above procedure, also applies to ordering parts for this procedure.

NOTE

There are TWO Coils in each valve. The SYRUP Coil is located in the FRONT part of the valve; and, the SODA Coil is located in the REAR of the valve.

1. For removal of SODA Coil ONLY: SLOWLY bleed off CO^2 gas pressure at the Check Valve, on top of the Carbonator Tank Assembly.

   For removal of SYRUP Coil ONLY: SLOWLY bleed off CO^2 gas pressure at the Bleeder Valve, on top of the appropriate Syrup Tank.
2. Remove the Cover Retainer Nut and lift the cover off of the transparent Block.
3. Remove the Screw and Lockwasher from the appropriate Coil Cover and lift the wired Coil and Coil Cover off of the Block.
4. Tag or otherwise identify placement of the Coil leads; then, disconnect the Coil leads and pull the Coil and leads out of the Coil Cover.
5. Remove two flat head Screws and lift the Plunger Housing off of the Block.
6. Remove the Spring, Plunger and O-Ring from the Block.
7. Inspect and replace as necessary:
   a. BLOCK - Plunger seat: Replace Block when seat is chipped or damaged.
   b. O-RING - Replace O-Ring that is cut, torn or indicates worn condition.
   c. PLUNGER - Replace Plunger, when rubber seating on bottom of Plunger is deformed.

      PLUNGER HOUSING - Clean out any dirt or foreign particles inside the Plunger Housing tube, that could restrict free travel of the Plunger.
   d. SPRING - With the Spring in the Plunger, test the feel of the spring-action. Replace broken or faulty Spring.

B. To replace the Coil, Plunger, Spring or O-Ring, reverse the removal procedures.

CAUTION

Be sure the O-Ring has been installed on the LOWER TUBE of the Plunger Housing, BELOW the mounting plate of the Plunger Housing, so the O-Ring will properly seat in the Block when installed.

NOTE

It is suggested, that when a friction or sticking problem occurs with the Plunger and no defects can be noted by visual inspection, a new Plunger and Spring be installed and the operation rechecked. In most instances, this will correct that problem.

XXV. REMOVAL AND REPLACEMENT OF THE WATER REGULATOR ASSEMBLY - WATER- COOLED MODELS.

A. To Remove the Water Regulator Assembly:

NOTE

Always install a replacement Drier, any time the sealed refrigeration system is opened. Do not replace the Drier until all other repair or replacement has been completed.

1. Remove screws and lift off the Left Front Door.
2. Bleed off or blow the refrigerant charge through the Schrader valve.
3. Unsolder the Capillary line from the Water Regulator Assembly, where connected at the process header.
4. Disconnect the water inlet line at the rear of the Water Regulator.
5. Disconnect the Condenser water inlet tube at the front of the Water Regulator.
6. Remove two screws, lockwashers and washers which attach the Water Regulator Assembly bracket to the Chassis base and remove the Water Regulator Assembly and bracket.

NOTE

Thoroughly evacuate the system to remove moisture and non-condensables.

B. To replace the Water Regulator Assembly reverse the removal procedure.

XXVI. REMOVAL AND REPLACEMENT OF THE WATER RESERVOIR ASSEMBLY

A. To Remove the Water Reseroir Assembly, see Figure 4-6:

1. Pull to unsnap each end of the Hood Panel and remove the Hood Panel from the Hood Assembly.
2. Remove three screws, located behind the upper part of the left side opening of the Hood Assembly, which attach the Dispensing Tower to the Hood Assembly.
3. Slide the Dispensing Tower toward the rear about one-half inch to disengage the slots, lift the Dispensing Tower off of the Hood Assembly and lay the Tower, with product lines attached, on the front apron of the Dispenser.

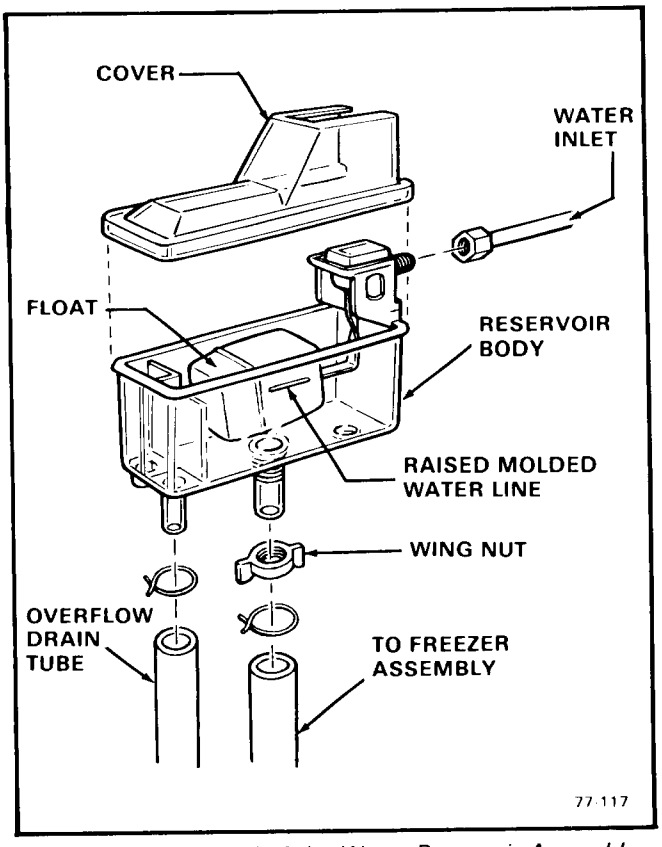

Figure 4-6. Removal of the Water Reservoir Assembly.

NOTE

Be prepared with container or rags, to catch water left in lines, when lines are disconnected in next steps, to prevent draining water on parts, components, electrical lines, etc.

4. Disconnect the water inlet tube from the Water Reservoir Assembly.
5. Remove two Corbin clamps and two tubes from the bottom of the Water Reservoir Assembly.
6. Unscrew and remove the wing nut from the bottom of the Water Reservoir Assembly.
7. Lift and remove the Water Reservoir Assembly from the mounting bracket.

B. To replace the Water Reservoir Assembly, reverse the removal procedure.

NOTE

Check that the installed replacement Water Reservoir Assembly float moves freely. Bend metal arm of float to adjust, as necessary. The correct water level in the Water Reservoir is 3/8-inch below the raised molded line, on the side of the body of the Water Reservoir.

SECTION V

MAINTENANCE & CLEANING INSTRUCTIONS

I. GENERAL

The periods and procedures for maintenance and cleaning are given as guides and are not to be construed as absolute or invariable. Cleaning especially will vary, depending upon local water conditions and the ice volume produced and dispensed; and, the dispensing of syrup and carbonated drinks must always be considered. Each Icemaker/Drink Dispenser must be maintained individually, in accordance with its own particular location requirements.

II. ICEMAKER

THE FOLLOWING MAINTENANCE SHOULD BE SCHEDULED AT LEAST TWO TIMES PER YEAR ON THIS ICEMAKER/DRINK DISPENSER. CALL YOUR AUTHORIZED SCOTSMAN SERVICE AGENCY.

1. Check and clean water line Strainers.
2. Remove cover from Water Reservoir and depress the float to ensure that a full stream of water enters the Reservoir.
3. Check that the Icemaker/Drink Dispenser cabinet is level, in side-to-side and front-to-rear directions.
4. Check that the water level in the Water Reservoir is below the overflow, but high enough that it does not run out of the spout opening.

NOTE

It is not abnormal for some water to emerge from the Ice Spout with flaked ice during normal ice production.

5. Clean the Water Reservoir and interior of the Freezer Assembly, using a solution of SCOTSMAN Ice Machine Cleaner. Refer to procedure V-V, CLEANING-Icemaker.

NOTE

Cleaning requirements vary according to local water conditions and individual user operation. Visual inspection of the Auger before and after cleaning will indicate frequency and procedure to be followed in local areas.

6. When doubtful about refrigerant charge, install refrigerant gauges on Schrader valves and perform steps 6 and 7. Check gauge for Compressor head pressure:

   AIR-COOLED MODELS: Varies between 130 to 145 PSIG.

   WATER-COOLED MODELS: Set at 135 PSIG. Adjust screw on top of Water Regulator Valve to raise or lower head pressure.
7. Check gauge for Suction line pressure:

   Varies between 12 to 16 PSIG, depending upon inlet water temperature and ambient air temperature.
8. Check Drivemotor operation:

   Normal operating temperatures are about 160-degrees F., which is hot to touch.
9. Check operation of the centrifugal sensing switch:

   DSF-450: 1/10 HP Motor.
   Switch will OPEN between 400-600 RPM and the Compressor STOPS, with the Drivemotor operating. Switch will CLOSE between 1300-1400 RPM and the Compressor will RESTART, with Drivemotor building back up to normal operating speed.

   DSF-650: 1/4 HP Motor.
   Switch will OPEN between 850-950 RPM and the Compressor STOPS, with the Drivemotor operating. Switch will CLOSE between 1100-1250 RPM and the Compressor will RESTART, with Drivemotor building back up to normal operating speed.
10. Remove the Insulation Strap and Clip, the Right and Left Spout Insulation pieces, the Retaining Ring and the Hook and Cap from the top of the Freezer Assembly.
11. Inspect the Top Bearing. If moisture is around Bearing, wipe clean of all grease

and apply a coating of Beacon No. 325 Grease. Replace parts removed in step 10.

NOTE

BEFORE next step, move the lower, manual ON-OFF toggle switch, on the front of the Control Box, to the OFF position to stop the Fan Motor and Icemaker.

12. Clean the Air-Cooled Condenser, using vacuum cleaner, whisk broom or brush. Instruct customer to clean frequently and to be sure Icemaker and Fan Motor are OFF.

13. Check that Fan Blades move freely, are not touching any surfaces and are not bent or out of balance.

14. Check for refrigerant leaks and for proper frost line, which should frost out of accumulator at least half way to the Compressor and in some areas, back to service valve.

15. Check for water leaks. Tighten drain line connections. Pour water down Bin drain to be sure that drain line is open and clear.

16. Check the quality of ice. Ice flakes should be wet when formed, but will cure rapidly to normal hardness in the Bin.

17. Check the Bin thermostatic Ice Control Bulb and the Pressure Plate and Limit Switch cutoff in the Ice Spout.

NOTE

The Limit Switch only shuts off the Compressor. The Bin Thermostat is factory set at 10-degrees F. differential and should keep the entire Icemaker system shut off at least 20 minutes in high ambient temperatures, longer in low ambient temperatures during normal operation. Settings are 35-degrees F. CUT-OUT and 45-degrees F. CUT IN.

III. CO^2 GAS - HOW TO LOCATE AND STOP LEAKS

Whenever a full CO^2 Gas Cylinder is connected to a carbonating system, open the CO^2 Gas Cylinder Head Valve until the CO^2 Regulator Gauge indicates maximum pressure, about 120 to 125 PSIG, then close the CO^2 Gas Cylinder Head Valve.

If the indicator needle on the Gauge continues to drop, there is a leak in the system. Due to some absorption of CO^2 gas in the water in the Carbonator, the indicator needle may drop a few pounds, but then the needle should stop, if there is no CO^2 gas leak.

When a CO^2 gas leak is detected by this method, proceed to locate leak position as follows:

1. Apply a shaving soap lather with a shaving brush to all joints, connections and valves. When there is a CO^2 gas leak, bubbles will appear.
2. Tighten leaky connection.
3. When CO^2 gas leak occurs at the CO^2 Gas Cylinder Head Valve, OPEN the valve all the way. Usually this closes any leak through the packing. Also tighten packing nut.

IV. FAUCET ASSEMBLY

The fastest rate of flow recommended for the Touch-O-Matic$^{J.M}$ Faucet is two ounces per second of finished drink. In other words, a six ounce finished drink should take at least three seconds to pour. When a faster rate is used, the carbonation in the drink will be reduced.

The typical blend used, is one ounce of syrup and five ounces of water for a six ounce finished drink. However, this may vary with the brand of syrup used, be sure to check with your supplier of syrup.

The flow of syrup and water can be adjusted with metering screws located on the rear underside of the Faucet, behind the Pouring Spout. The Metering Screw for WATER is located on the LEFT and is marked W. The Metering Screw for SYRUP is located on the RIGHT and is marked S.

NOTE

These Metering Screws have sensitive adjustment, therefore, rotate no more than one-eighth of a turn at a time.

1. *To INCREASE Flow: Rotate appropriate Metering Screw OUT or COUNTERCLOCKWISE one-eighth of a turn.*
2. *To DECREASE Flow: Rotate appropriate Metering Screw IN or CLOCKWISE one-eighth of a turn.*

V. CLEANING - Icemaker

1. Remove screws and the Left Front Door.

2. Move both manual ON-OFF toggle switches, on the front of the Control Box, to the OFF position.
3. Remove the Ice Access Door and all ice from the ice storage Bin.
4. CLOSE the water supply shutoff valve; or, block the float in the Water Reservoir.
5. Disconnect the tube between the Water Reservoir and the bottom of the Freezer Assembly and drain water from the Reservoir and tube. Reconnect the tube.

WARNING

SCOTSMAN Ice Machine Cleaner contains Phosphoric and Hydroxyacetic acids. These compounds are corrosive and may cause burns If swallowed, DO NOT induce vomiting. Give large amounts of water or milk. Call Physician immediately. In case of external contact flush with water. KEEP OUT OF THE REACH OF CHILDREN.

6. Prepare cleaning solution: Mix six ounces of SCOTSMAN Ice Machine Cleaner with one and one-half quarts of hot water.
7. Remove the Cover to the Water Reservoir.
8. Slowly pour the cleaning solution into the Water Reservoir.
9. Move the lower, manual ON-OFF toggle switch, on the front of the Control Box, to the ON position.
10. Continue to slowly pour the cleaning solution into the Water Reservoir, maintain level just below the Reservoir overflow.
11. Continue icemaking, using the cleaning solution, until all the solution is used up and the Water Reservoir is almost empty. DO NOT allow the icemaker to operate with empty Reservoir.
12. Move the lower, manual ON-OFF toggle switch, on the front of the Control Box to the OFF position.
13. Wash and rinse the Water Reservoir.
14. OPEN the water supply shutoff valve; or remove the block from the float in the Water Reservoir.
15. Move the lower, manual ON-OFF toggle switch, on the front of the Control Box, to the ON position.
16. Continue icemaking for at least 15 minutes, to flush out any cleaning solution. Check ice for acid taste - continue icemaking until ice tastes sweet.
17. Move the lower manual ON-OFF toggle switch, on the front of the Control Box, to the OFF position.

CAUTION

DO NOT use ice produced from the cleaning solution. Be sure none remains in the bin.

18. Remove all ice from the ice storage Bin.
19. Add hot water to the ice storage Bin and thoroughly wash and rinse all surfaces within the Bin.
20. Clean all parts removed from the Bin, the Ice Access Door, Splash Panel and Grill in accordance with the regulations of the local Health Authorities.
21. Pour hot water into drip pan each day, to keep drains open from slime build up.
22. Clean and sanitize the ice storage Bin each week. Syrup lines and tanks should be drained and sanitized twice each month.

VI. CLEANING - Faucet Assembly

The Faucet Assembly need not be disassembled in order to be cleaned. All that is required is to simply fill a spare syrup tank with your cleaning agent, approved by local Health Authorities. Connect the tank with the syrup line to the desired Faucet Assembly and flush the cleaning agent through the Faucet Assembly and syrup line system with CO^2 gas pressure. A clean water rinse may be similarly performed.

To Clean, Back Flushing:

1. Release CO^2 gas pressure on syrup tank.
2. Disconnect syrup line at some convenient point and place syrup line from Faucet Assembly in a container.
3. Remove Pouring Spout from Faucet Assembly and replace with the Back Flush Adapter.
4. Hold the Back Flush Adapter in place and energize Faucet allowing soda water to REVERSE FLOW through the syrup side, out through the disconnected syrup line and into the container.

NOTE

When the Back Flush Adapter is not available, DO NOT REMOVE the Pouring Spout. Place the palm of the hand on the Spout opening, to seal off the opening. A towel may be used for this step. Then energize the Faucet to achieve same REVERSE FLOW.

5. Remove and clean the Pouring Spout weekly.

SECTION VI
SERVICE DIAGNOSIS

The Service Diagnosis Section is for use in aiding the serviceman in diagnosing a particular problem for pin-pointing the area in which the problem lies, thus an ever available referer.ce for proper corrective action.

The following charts lists corrective actions for the causes of known symptoms of certain problems that can occur in the Icemaking - Refrigeration System, Carbonation System, Dispensing System.

I. ICEMAKING - REFRIGERATION SYSTEM

SYMPTOM	POSSIBLE CAUSE	CORRECTION
Water Leaks.	Defective water seal. Gravity feed line leaking. Water level in reservoir too high. Storage bin drain and connecting fittings.	Replace Seal. Check hose clamps. Adjust water level to 3/8-inch below reservoir overflow, then raise reservoir until water flows out freezer spout, then lower reservoir 3/4-inch. Check and repair.
Excessive noise or chattering.	Mineral or scale deposit on auger and inner freezing chamber walls. Intermittent water supply Water level in reservoir too low. Gear Reducer loose on frame Motor compressor not solid on rubber mounts. Gearmotor end-play or worn bearing.	For severe deposit, remove and manually polish auger, sand inner chamber walls of freezer barrel. For lighter concentration, use Scotsman Ice Machine Cleaner periodically. Check and clean water strainer. Check gravity feed line for air lock. Remove air lock. See CORRECTION for Water Leaks above. Tighten Gear Reducer. Repair or replace rubber mounts. Repair or replace bearing.
Making wet ice. (Ice melts too quickly, is not cold enough to properly cure in the Bin.)	Surrounding air temperature too high. Under or over-charge of refrigerant.	Correct or move cabinet. Recharge with proper amount. Should frost out of accumulator at least 8-inches. See nameplate for correct charge. See CORRECTION for Water Leaks above.

ICEMAKING - REFRIGERATION SYSTEM (Cont'd)

SYMPTOM	POSSIBLE CAUSE	CORRECTION
Making wet ice (Cont'd)	Back pressure too high.	Overcharge of refrigerant, Faulty compressor or high head pressure. Lower pressure as indicated.
	Faulty compressor or valve plate.	Repair or replace compressor or valve plate.
Low ice production.	Loss of refrigerant. Under or over-charge of refrigerant.	Check and recharge. See NAMEPLATE for correct charge.
	Drivemotor weak.	Replace Drivemotor.
	Dirty or plugged condenser.	Clean condenser.
	Low water level in water reservoir.	See CORRECTION for Water leaks above.
	Partial restriction in capillary tube or drier.	Moisture in system. Overcharge of oil in system. Remove charge by blowing back through cap tube. Replace drier and recharge.
	Inlet water strainer partially plugged.	Remove screen and clean.
	Corroded or stained auger due to water condition.	Remove auger and clean, or use Scotsman Ice Machine Cleaner. See Maintenance Section.
Gearmotor noise.	Low on oil.	Remove case cover to check for proper oil level. Top of gears should be covered. Use: Sun Oil Company Prestige 50-EP
Icemaker will not operate.	Blown fuse in line.	Replace fuse and check for cause of blown fuse.
	Bin thermostat set too high.	Adjust thermostat. Set at 35-degrees cut-out, 45-degrees cut-in.
	Loose electrical connection.	Check wiring.
	Switch in OFF position.	Set switch to ON positon.
	Inoperative master switch.	Replace switch or thermal overload.
	Off on manual-reset pressure control.	Reset.
Icemaker continues to operate with full storage bin.	Bin thermostat not properly set or is defective.	Re-set or replace bin thermostat Re-set to 35-degrees cut-out, 45-degrees cut-in.
Compressor cycles intermittently.	Low voltage.	Check for overloading.
	Dirty condenser.	Clean condenser.
	Air circulation blocked.	Remove cause or move unit.
	Inoperative condenser fan motor.	Replace motor.

ICEMAKING - REFRIGERATION SYSTEM (Cont'd)

SYMPTOM	POSSIBLE CAUSE	CORRECTION
Compressor Cycles Intermittently (cont'd)	Non-condensable gases in system.	Check for gas leaks, evacuate and recharge.
	Bin thermostat differential too small causing short cycling.	Widen differential 35-degrees cut-out, 45-degrees cut in.
	Cycling on ice spout microswitch.	Set or replace Bin thermostat.
Icemaker operates but makes no ice.	Loss or undercharge of refrigerant.	Check for leaks and recharge. See NAMEPLATE for correct charge.
	Water not entering freezing chamber.	Plugged strainer or supply line. Check and clean. Air lock in gravity feed line. Check and remove air lock.
	Moisture in system.	Check, evacuate, replace drier. Recharge. See NAMEPLATE for correct charge.
	Water seal leaking.	Replace seal.
	Water turned off while unit was operating.	Freezer inlet water line froze shut. Unit must be turned off and defrosted.
	Drivemotor or drive coupling stripped.	Repair or replace drivemotor or drive coupling.

II. CARBONATION SYSTEM

SYMPTOM	POSSIBLE CAUSE	CORRECTION
No carbonated water, pump does not operate.	Motor burnt out.	Replace pump.
	Liquid level control.	Check relay wiring, contacts.
	Bad bearings causing pump to stop.	Repair or replace motor.
	Tank electrode shorted.	Repair or replace electrode.
	Pump jammed.	Check for foreign particles in pump housing, clean or replace pump.
No carbonated water (pump operates)	Pump rotating backwards.	Reverse wiring inside motor.
	Open in transformer, relay coil, or high level electrode.	Repair or replace faulty part.
	Worn pump.	Replace pump.
	Pump check valve leaks.	Clean or replace check valve.
	Pump relay bypass valve opens too soon.	Clean; valve is adjustable, set higher; or replace bypass valve.
	Clogged filter or inlet screen.	Clean or replace filter or screen.
	Water line blocked.	Check for defective washer at fittings or plugged check valve on tank.

CARBONATION SYSTEM (Cont'd)

SYMPTOM	POSSIBLE CAUSE	CORRECTION
Flat carbonated water.	CO^2 Gas drum empty or low.	Replace CO^2 drum.
	CO^2 Gas turned OFF.	Turn CO^2 gas ON.
	Regulator set too low.	Increase pressure.
	CO^2 Gas line plugged by swollen washer.	Replace washer.
	Water pressure too high.	Adjust if possible or install water pressure regulator.
Metallic taste in Carbonated water.	Carbonated water backing up into city water line.	Clean water back-pressure check valve, replace washer.
	Carbonated water line connected by mistake to brass or copper lines.	Make proper connection using approved tubing. Use proper beverage tubings.
Carbonated water off taste.	Oil, dirt or grease inside carbonator.	Clean carbonator.
	Oil or pipe dope in water lines.	Clean and flush water lines.
	Tainted CO^2 gas.	Sniff CO^2 gas at drum head to determine if CO^2 drum should be replaced.
	Water filter needed or filter element bad.	Install a good water filter or replace filter element.
Milky carbonated water.	Air in carbonator.	Vent carbonator.
	Pump sucking air.	Check for loose fittings. Replace pump.
Gas only flows from dispenser valve.	Water Valve CLOSED.	OPEN water valve.
	Pump motor not cutting on	Check liquid level control. Check carbonator tank electrode.
Carbonator fills with water.	Water turned on before CO^2 pressure.	Shut off water supply. Empty water from tank with pump. Apply CO^2 pressure first, then water pressure.
	Water pressure too high.	Adjust if possible, or install pressure reducer.
	CO^2 gas pressure too low.	Set regulator key to deliver proper gas pressure.
	CO^2 gas drum empty.	Replace CO^2 drum.
	Open in transformer, relay coil, or high level electrode.	Repair or replace defective part.
Carbonated water backs up into city water line.	Dirty or worn back-pressure check valve.	Clean or replace valve seats.

CARBONATION SYSTEM (Cont'd)

SYMPTOM	POSSIBLE CAUSE	CORRECTION
Excessive pumping.	Closed water supply valve.	Open valve.
	Water supply (building or city) shut off.	Re-establish source.
	Automatic switch out of order.	Check switch, replace if necessary.
	Water inlet screen clogged.	Remove and clean screen.
	Pump inlet or check valve out of order.	Repair or replace.
	Swollen washers in hose couplings obstruct flow of water.	Replace washers.
	Tank electrode shorted.	Repair or replace.
Carbonator pump pounds, water running in spurts	Air in pump.	Vent pump.
	Water valve CLOSED.	OPEN water valve.
	Filter or strainer plugged.	Clean or replace filter-strainer.
	Inlet line too small.	Replace with 3/8-inch or larger copper line.

III. DISPENSING SYSTEM

SYMPTOM	POSSIBLE CAUSE	CORRECTION
Syrup or water drips through spout.	Foreign matter on plunger seat.	Operate faucet several times to flush out. Remove plunger from solenoid valve and clean valve port and plunger seat. Back flush valve.
	Nick or cut on plunger seat.	Remove plunger and replace.
	Broken or defective plunger spring.	Remove spring and replace.
Faucet continues to dispense even when lever is not actuated.	Lever is sticking.	Clean syrup from lever and lubricate with petroleum jelly.
	Electric switch defective.	Replace switch.
	Plunger stuck.	Replace spring and/or clean solenoid housing. Back flush valve.
Noisy solenoid valve.	Dirt or particles in back of plunger.	Operate faucet several times to flush out. Back flush. Remove and clean plunger and solenoid housing.

DISPENSING SYSTEM (Cont'd)

SYMPTOM	POSSIBLE CAUSE	CORRECTION
Acutation of lever results in no flow.	Defective switch. Bad solenoid coil and switch connection. Power OFF. Low voltage.	Replace switch. Check and correct connecton. Check circuit and fuse for power ON. Voltage at coil should be 100 volts on 115 VAC line. If voltmeter not available, turn off all lights and other electrically operated devices to check under best conditions at that location.
Drink too sweet, insufficient soda or water to syrup ratio (heavy drink)	Soda solenoid coil defective. Defective soda solenoid coil connection A non-carbonated faucet may be in a high carbonated faucet application. Insufficient soda flow due to low carbonator pressure. Obstruction in water and/or soda line. Water shut-off valve partially closed. Syrup pressure too high.	Replace coil. Check and correct connection. Replace with correct faucet. Check CO^2 supply pressure and replace tank if CO^2 pressure is low and/or reset regulator as required. Clean out line. Check and open freely. Check and reset low pressure regulator
Drink not sweet enough, excessive soda or water to syrup ratio (light drink)	Syrup solenoid coil defective. Defective syrup solenoid coil connection. Carbonator pressure too high. Obstruction in syrup line. Water pressure too high. Drink will also have low carbonation.	Replace coil. Check and correct connection. Check and correct pressure. Check transparent block to see if there is any obvious obstruction. Back flush. Remove and clean syrup plunger and solenoid coil housing. Add regulator in water inlet line.
Foaming of finished drink.	Over carbonation of soda. Carbonation of syrup. Dirty lines, valves, etc. Super cooled ice in drink. Product temperature too high. Pressure too high.	Reduce CO^2 pressure on carbonator. Reduce CO^2 pressure on syrup. Some root beers will foam when their CO^2 pressures are above 15 psi. Larger sized syrup may be required for long runs. Backflush. Remove and clean syrup plunger and solenoid coil housing. Use ice at about 32-degrees F. Product temperature must be below 42-degrees F. Reduce CO^2 pressure to recommended setting.

DISPENSING SYSTEM (Cont'd)

SYMPTOM	POSSIBLE CAUSE	CORRECTION
Inconsistent brixing.	Dirty lines, valves, etc.	Backflush. Remove and clean syrup plunger and solenoid coil housing.
	CO^2 supply low.	Renew CO^2 cylinder.
	Leak in CO^2 line.	Locate and correct.

NOTE: In new installations, objectional taste or odor, foaming and inconsistent brixing may be the result of contaminants such as oils or pipe sealing compounds. Thoroughly clean all lines prior to installing and back flush are required.

SECTION VII

WIRING DIAGRAMS

This Section is provided as an aid in understanding the electrical circuitry of the Icemaker/Drink Dispenser.

WARNING

When conducting a continuity check of the Icemaker/Drink Dispenser:

1. **Disconnect the main power source.**
2. **DO NOT use an incandescent lamp or jumper wire, conduct all tests with a volt-ohm-meter.**

The Wiring Diagrams in this Section are:

Figure 7-1. Wiring Diagram DSF-450 - Air-Cooled.

Figure 7-2. Wiring Diagram DSF-450 - Water Cooled.

Figure 7-3. Wiring Diagram DSF-650 - Air-Cooled.

Figure 7-4. Wiring Diagram DSF-650 - Water Cooled.

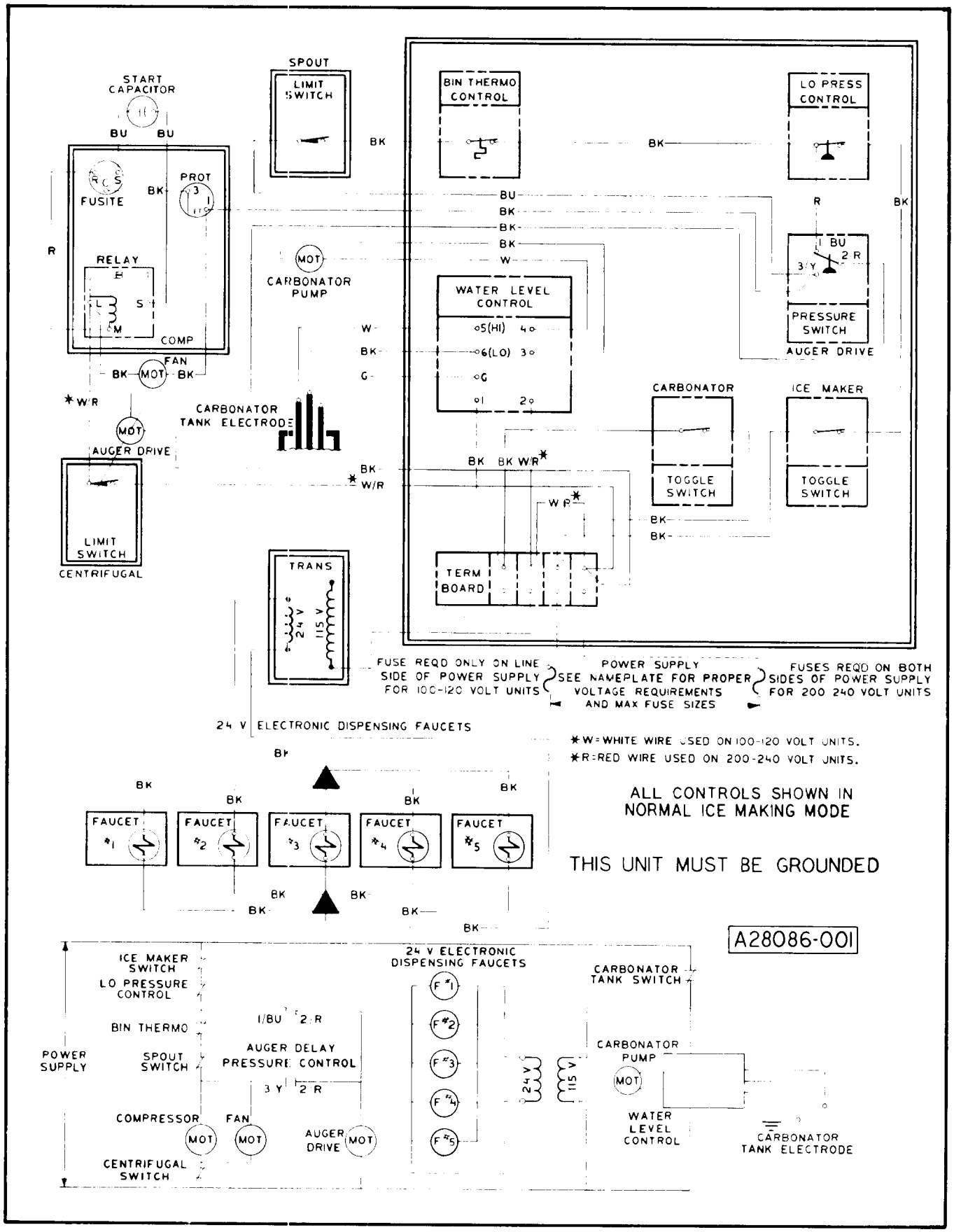

Figure 7-1. Wiring Diagram DSF-450 - Air-Cooled.

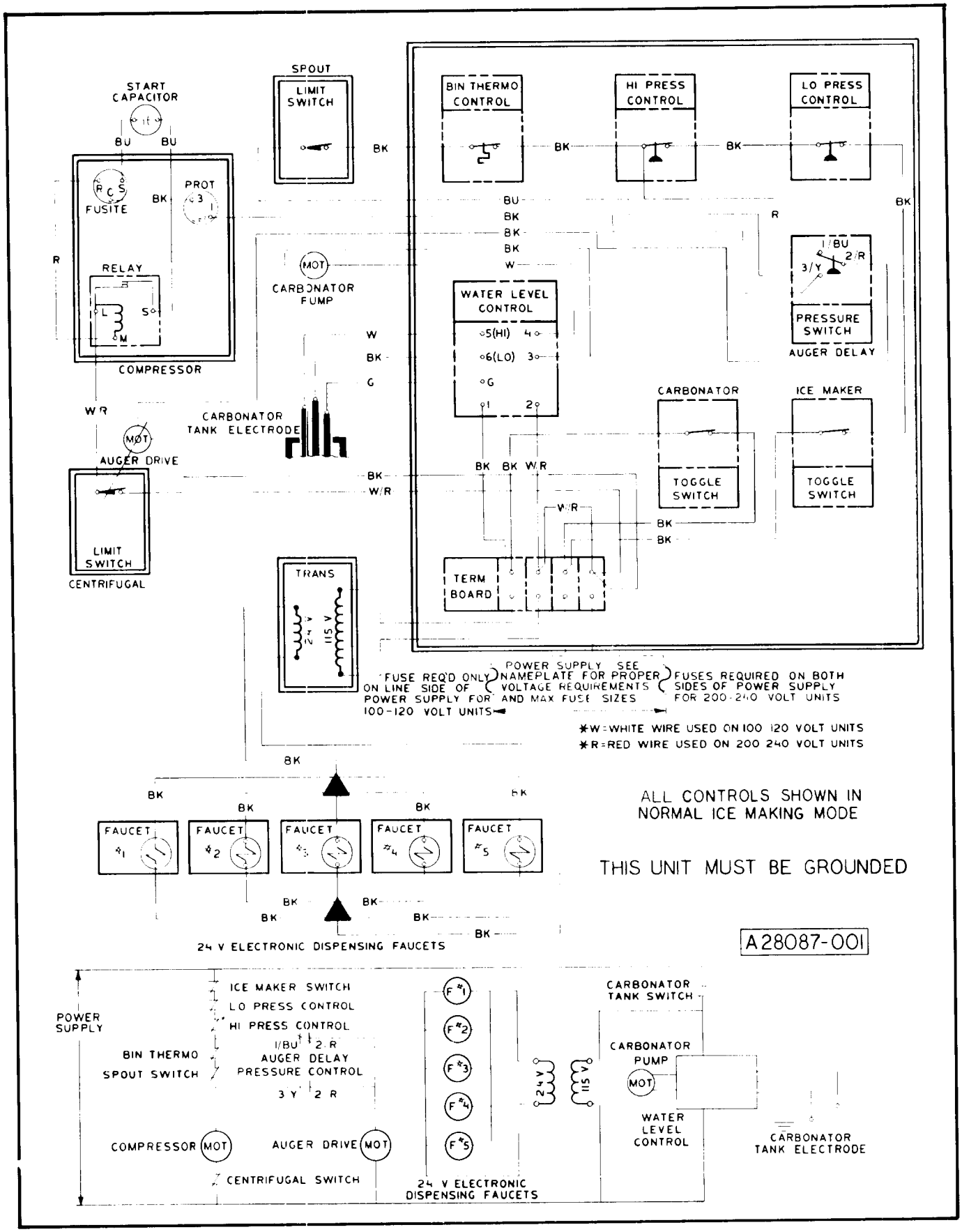

Figure 7-2. Wiring Diagram DSF-450 - Water-Cooled.

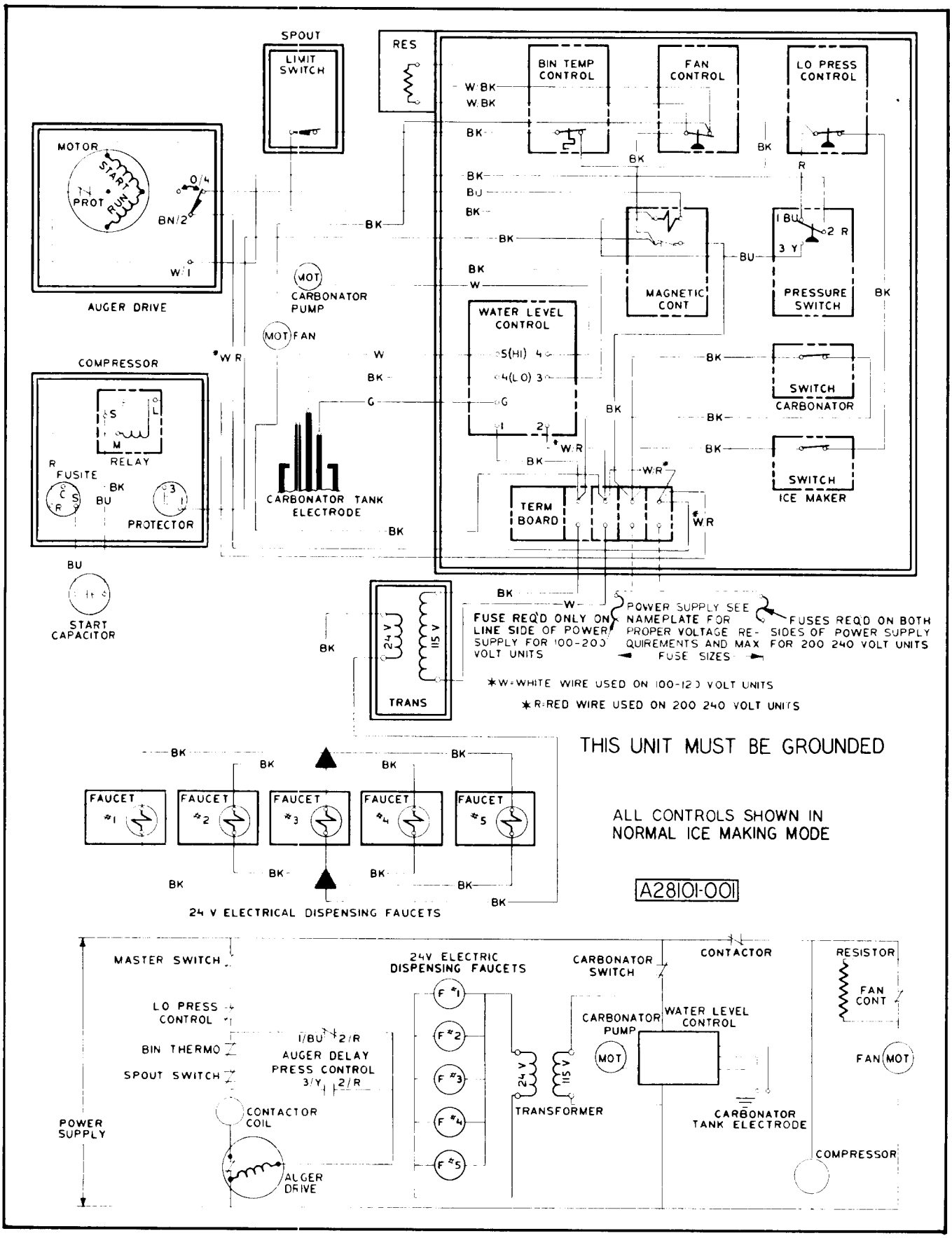

Figure 7-3. Wiring Diagram DSF-650 - Air-Cooled.

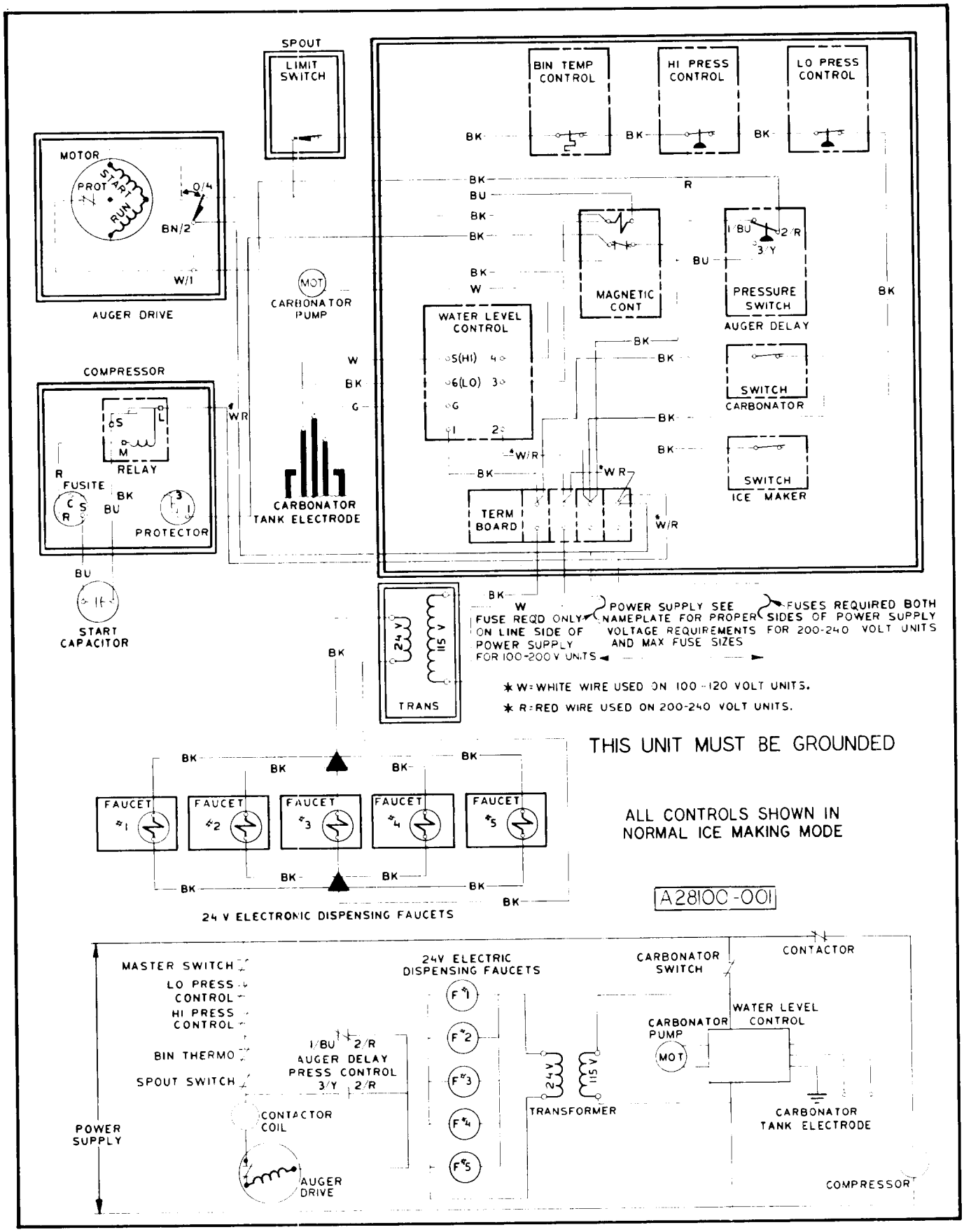

Figure 7-4. Wiring Diagram DSF-650 - Water-Cooled.

SECTION VIII

THE PARTS ILLUSTRATIONS AND PARTS LIST

I. GENERAL

This section contains the Parts Illustrations and the Parts List for each of the major assemblies in the DSF-450/650 Icemaker/Drink Dispensers.

Each Parts Illustration shows an assembly as an exploded view, with an Index Number for each part or sub-assembly, given in disassembly order. These Index Numbers key with the Parts List for the assembly and are found in the Parts List Column headed Index Number. The Description Column gives the identifying nomenclature for the item indexed. The Part Number Column gives the number of item. The Number Required Column gives the number of items required per assembly, but not necessarily the total number of parts required per Icemaker/Drink Dispenser.

All assemblies are cross-referenced both from the major assembly listing where they first appear in the Parts Listing to their break-down listing, and from the break-down listing, back to the major assembly (next higher assembly) listing.

A *No Number* designation, when used in the Part Number Column indicates the unit is not available from SCOTSMAN as an assembly. This designation is used only for the convenience and clarity of division in cataloging.

When an Index Number is followed by a letter (e.g. 1a, 1b), the letter indicates the part listed is part of the assembly indexed by the basic Index Number. The number required of the part indexed by the number and letter combination is for only one of the assemblies indexed by the basic Index Number and not necessarily the total number or parts used in the Icemaker/Drink Dispenser. Where the notation *Ref* occurs in the Number Required Column the number of the assemblies or parts required for use in the Icemaker/Drink Dispenser will be found under a previous Index Number or in the next higher assembly Parts Listing. The next higher listing Figure/Index number is shown in the Description Column immediately following the items description.

II. HOW TO USE THE ILLUSTRATIONS AND PARTS LIST

To find the part number of a required part or assembly, turn to the List of Illustrations and find the page number of the Parts Illustration of the major or sub-assembly containing the part. Turn to the indicated page and locate the part and its Index Number on the specific illustration. Find the Index Number on the required part in the Parts List to determine the complete description of the part.

III. HOW TO ORDER PARTS OR ASSEMBLIES

When ordering parts or assemblies, to avoid costly delays and errors in shipment, give the part number, the complete description shown in the list, and the quantities of each part or assembly required. Also include the Model name, the serial number of the Icemaker/Drink Dispenser for which the part is required, and for parts which require color matching, the color of the Cabinet.

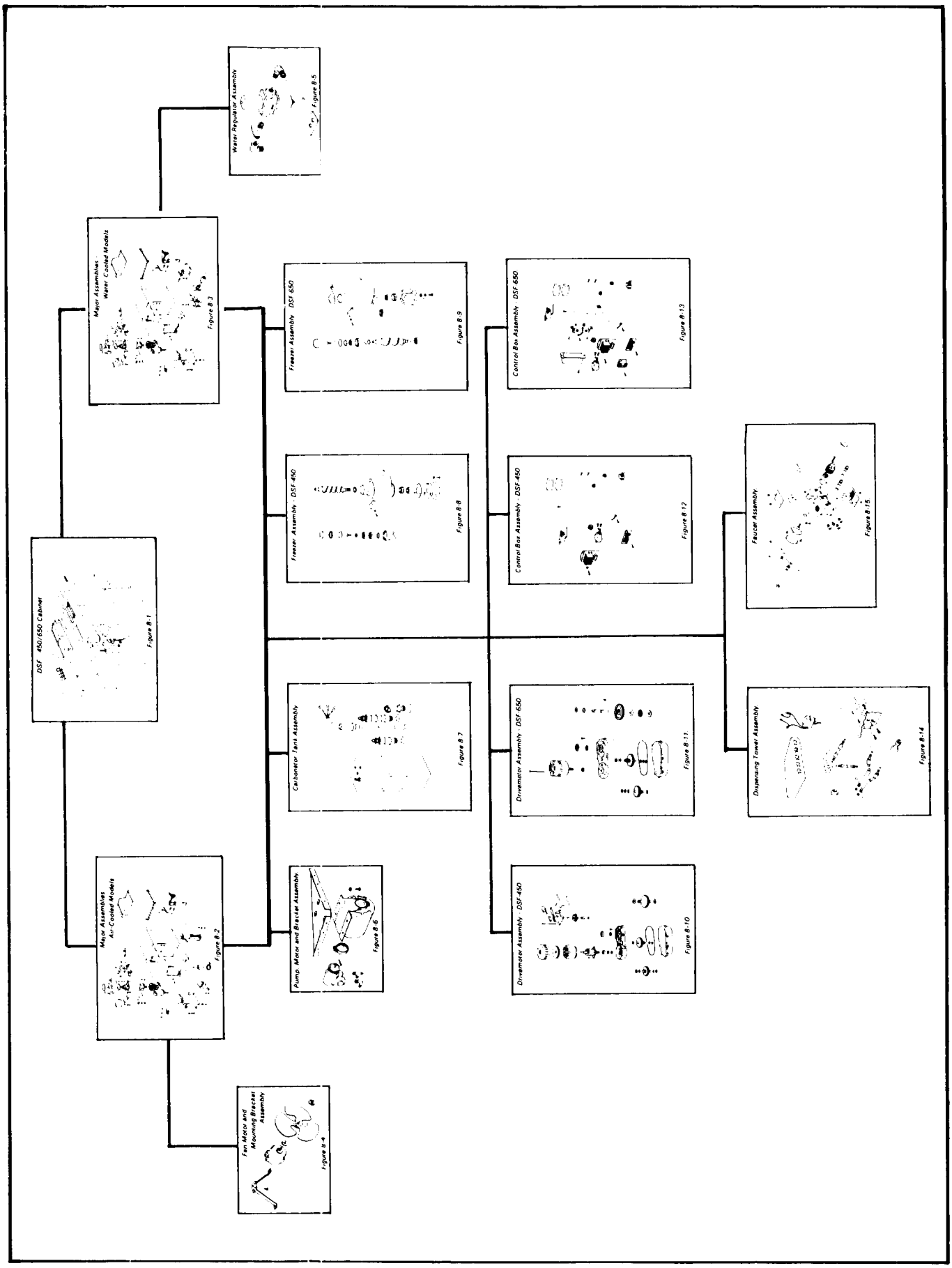

Figure 8-A. DSF-450/DSF-650 Icemaker/Drink Dispenser Flow Chart

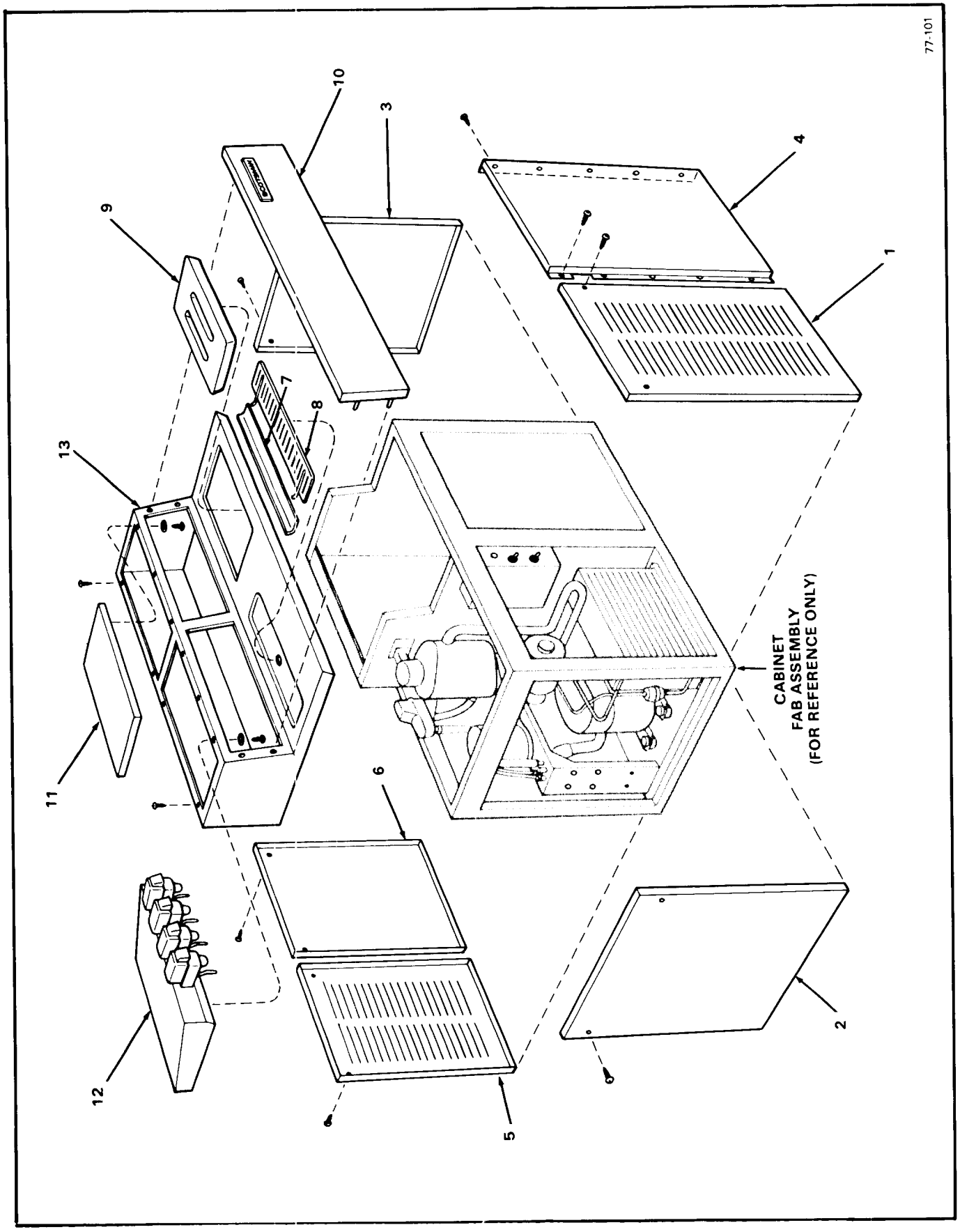

Figure 8-1. DSF-450/650 Cabinet

Figure 8-1. DSF-450/650 Cabinet

INDEX NO.	DESCRIPTION	PART NUMBER	REQ'D NUMBER
	DSF-450/650 Cabinet	No Number	1
	* * *		
1	Door, Front (C.R.S. Painted)	A27729-001	1
	Door, Front (Stainless Steel)	A27729-002	1
	attaching parts, Index 1		
	Screw, No. 8 x 3/4 S/T Flat Hd	03-1419-08	2
	Speed Nut, No. 8 J-Type	03-1423-06	2
	* * *		
2	Panel, Left Side (C.R.S. Painted)	A27728-001	1
	Panel, Left Side (Stainless Steel)	A27728-002	1
	attaching parts, Index 2		
	Screw, No. 8 x 3/4 S/T Flat Hd	03-1419-08	2
	Speed Nut, No. 8 J-Type	03-1423-06	2
	* * *		
3	Panel, Right Side (C.R.S. Painted)	A27727-001	1
	Panel, Right Side (Stainless Steel)	A27727-002	1
	attaching parts, Index 3		
	Screw, No. 8 x 3/4 S/T Flat Hd	03-1419-08	2
	Speed Nut, No. 8 J-Type	03-1423-06	2
	* * *		
4	Panel, Front (C.R.S. Painted)	A17755-009	1
	Panel, Front (Stainless Steel)	A17755-001	1
	attaching parts, Index 4		
	Screw, No. 8 x 1/2 T/F Tap	03-1404-09	10
	* * *		
5	Door, Rear (C.R.S Painted)	A17754-009	1

Figure 8-1. DSF-450/650 Cabinet (cont'd)

INDEX NO.	DESCRIPTION	PART NUMBER	REQ'D NUMBER
	Door, Rear (Stainless Steel)	A17754-001	1
	attaching parts, Index 5		
	Screw, No. 8 x 3/4 S/T Flat Hd	03-1419-08	2
	* * *		
6	Panel, Rear (C.R.S. Painted)	A27730-001	1
	Panel, Rear (Stainless Steel)	A27730-002	1
	attaching parts, Index 6		
	Screw, No. 8 x 3/4 T/F Tap	03-1404-12	2
	Speed Nut, No. 8 J-Type	03-1423-06	2
	* * *		
7	Panel, Splash	A23186-000	1
	* * *		
8	Grill	02-1955-00	1
	* * *		
9	Door, Ice Access (C.R.S. Painted)	02-2381-01	1
	Door, Ice Access (Stainless Steel)	02-2381-02	1
	* * *		
10	Panel, Hood	A17609-000	1
	* * *		
11	Top, Right - Fab Assembly	A17812-000	1
	Screw, No. 10-24 x 3/8 Pan Hd	03-1403-27	3
	Screw, No. 1/4-20 x 3/8 Hex Cap	03-1405-01	2
	Lockwasher, No. 10 External Tooth - Phosphor Bronze	03-1417-04	3
	* * *		
12	Tower Assembly, Dispensing	A27765-001	1
	(See Figure 8-14)		
	attaching parts, Index 12		
	Screw, No. 10-24 x 3/8 Pan Hd	03-1403-27	3
	Screw, No. 1/4-20 x 3/8 Hex Cap	03-1405-01	2
	Lockwasher, No. 10 External Tooth - Phosphor Bronze	03-1417-04	3
	* * *		

Figure 8-1. DSF-450/650 Cabinet (cont'd)

INDEX NO.	DESCRIPTION	PART NUMBER	REQ'D NUMBER
13	Hood - Fab Assembly	A17616-000	1
	attaching parts, Index 13		
	Screw, No. 8 x 1/2 T/F Tap	03-1404-09	16
	. . .		

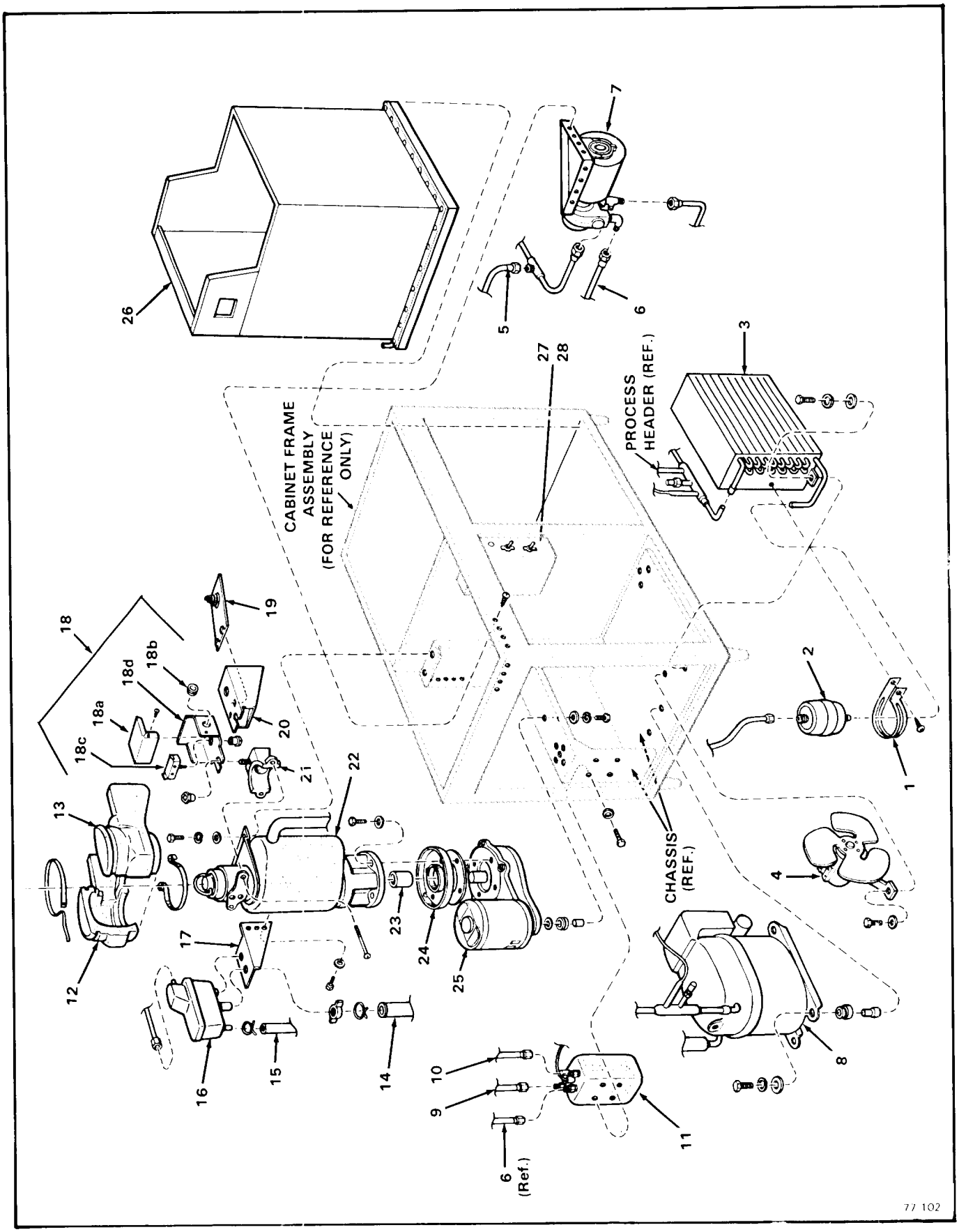

Figure 8-2. Major Assemblies - Air-Cooled Models.

Figure 8-2. Major Assemblies - Air-Cooled Models

INDEX NO.	DESCRIPTION	PART NUMBER	REQ'D NUMBER
	Major Assemblies - Air-Cooled Models	No Number	Ref
	* * *		
1	Brace, Drier	A09388-001	1
	* * *		
2	Drier	02-0544-01	1
	attaching parts, Index 1 & 2		
	Screw, No. 10 x 3/8 T/F Tap	03-1404-15	1
	(to Air-Cooled Condenser shroud)		
	* * *		
3	Condenser - Air-Cooled	18-0396-01	1
	attaching parts, Index 3		
	Screw, No. 1/4-20 x 1/2 T/C Hex Hd	03-0571-00	2
	Lockwasher, No. 1/4 External Tooth - Carbon Steel Zinc Plated	03-1417-09	2
	* * *		
4	Bracket Assembly, Fan Motor and Mounting	No Number	1
	(See Figure 8-4)		
	attaching parts, Index 4		
	Screw, No. 1/4-20 x 1/2 T/C Hex Hd	03-0571-00	2
	Lockwasher, No. 1/4 External Tooth - Carbon Steel Zinc Plated	03-1417-09	2
	* * *		
5	Tube Assembly (Water Inlet to Cold Plate)	A27737-002	1
	* * *		
6	Tube Assembly (Water Pump to Carbonator Tank)	A27737-004	1
	* * *		
7	Bracket Assembly - Pump, Motor and	No Number	1
	(See Figure 8-6)		
	attaching parts, Index 7		
	Screw, No. 10 x 3/8 T/F Tap	03-1404-15	8
	* * *		

Figure 8-2. Major Assemblies - Air-Cooled Models (cont'd).

INDEX NO.	DESCRIPTION	PART NUMBER	REQ'D NUMBER
8	Compressor	18-3900-01	1
	attaching parts, Index 8 DSF450 18-4500-00		
	Grommet	18-2200-28	4
	Sleeve, Mounting	18-2200-27	4
	Screw, No. 5/16 - 18 x 1-3/4 Hex Cap	03-1405-40	4
	Lockwasher, No. 5/16 Helical Spring	03-1410-04	4
	Washer, Special	03-1408-29	4
	* * *		
9	Tube Assembly (CO^2 Cylinder to Carbonator Tank)	A27737-001	1
	* * *		
10	Tube Assembly (Carbonator Tank to Cold Plate)	A27737-005	1
	* * *		
11	Tank, Carbonator	A27673-001	1
	(See Figure 8-7)		
	attaching parts, Index 11		
	Screw, No. 1/4-20 x 1/2 Hex Cap	03-1405-03	4
	Lockwasher, No. 1/4 External Tooth - Carbon Steel Zinc Plated	03-1417-09	4
	* * *		
12	Insulation, Spout - Left	A15081-000	1
13	Insulation, Spout - Right	A15080-000	1
	attaching parts, Index 12 & 13		
	Strap, Insulation	A08733-000	1
	Clip, Insulation	02-1438-00	1
	* * *		
14	Tube, Potable Water (Reservoir to Freezer Inlet)	13-0674-09	1
15	Tubing, Drain (Reservoir overflow to Drip Pan)	13-0079-03	1
	attaching parts, Index 14 & 15		
	Clamp (Index 14)	02-0694-00	2
	Clamp (Index 15)	02-0535-00	1
	* * *		

Figure 8-2. Major Assemblies - Air-Cooled Models (cont'd).

INDEX NO.	DESCRIPTION	PART NUMBER	REQ'D NUMBER
16	Reservoir	02-2217-01	1
	Valve Assembly, Float (not shown)	02-2217-02	1
	attaching part, Index 16		
	Wing Nut (p/o Reservoir)	No Number	1
	* * *		
17	Bracket, Reservoir	A21418-001	1
	attaching parts, Index 17		
	Screw, No. 1/4-20 x 1/2 T/C Hex Hd	03-0571-00	2
	Lockwasher, No. 1/4 External Tooth - Carbon Steel Zinc Plated	03-1417-09	2
	* * *		
18	Box Assembly, Limit	No Number	1
	attaching part, Index 18		
	Nut, No. 1/4-20	A14256-000	1
	* * *		
18a	Cover, Limit Box	A14241-000	1
18b	Bushing, Snap	12-1213-10	1
18c	Switch, w/Nut	12-1018-00	1
18d	Box, Limit w/Switch	A14975-000	1
	attaching parts, Index 18a to 18d		
	Screw, No. 4 x 3/8 T/F Tap	03-1404-01	2
	* * *		
19	Plate Assembly, Pressure	A16353-000	1
	* * *		
20	Spout Assembly	A16350-000	1
	* * *		
21	Casting, Spout	A14269-000	1
	attaching parts, Index 21		
	Screw, No. 1/4-20 x 2-1/2 Pan Hd	03-1403-55	2
	Lockwasher, No. 1/4 Internal Tooth - Phosphor Bronze	03-1417-07	2
	* * *		
22	Freezer Assembly	No Number	1
	(See Figures 8-8 & 8-9)		

Figure 8-2. Major Assemblies - Air-Cooled Models (cont'd).

INDEX NO.	DESCRIPTION	PART NUMBER	REQ'D NUMBER
	attaching parts, Index 22		
	Screw, No. 1/4-20 x 1/2 T/C Hex Hd (to upper Chassis)	03-0571-00	2
	Lockwasher, No. 1/4 External Tooth Carbon Steel Zinc Plated (to upper Chassis)	03-1417-09	2
	Washer, Plain (to upper Chassis)	03-1407-05	2
	Screw, No. 5/16-18 x 1-1/4 Hex Cap (to Drivemotor Assembly)	03-1420-03	4
	Washer, Special (to Drivemotor Assembly)	03-1408-03	4
	* * *		
23	Coupling - (DSF-450)	15-0575-01	1
	Coupling - (DSF-650)	15-0573-01	1
	* * *		
24	Pan, Drip	A24156-001	1
	* * *		
25	Drivemotor Assembly	No Number	1
	(See Figures 8-10 & 8-11)		
	attaching parts, Index 25		
	Gasket - DSF-450	13-0628-000	1
	Gasket - DSF-650	13-0704-000	1
	Grommet	13-0639-00	3
	Spacer	A24925-002	3
	Screw, No. 5/16 - 18 x 1 Hex Cap	03-1405-18	8
	Lockwasher, No. 5/16 Helical Spring	03-1410-04	3
	Washer, Special	03-1408-02	6
	* * *		
26	Bin Assembly, Cold Plate	A27512-001	1
	* * *		
27	Box Assembly, Control (not shown exploded)	No Number	1
	(See Figures 8-12 & 8-13)		
	* * *		
28	Cover, Control Box (not shown separate)	A23143-000	1
	attaching parts, Index 28 to 27		
	Screw, No. 10-24 x 1/4 Pan Hd	03-1403-25	4
	Lockwasher, No. 1/4 External Tooth - Carbon Steel Zinc Plated	03-1417-09	4
	* * *		

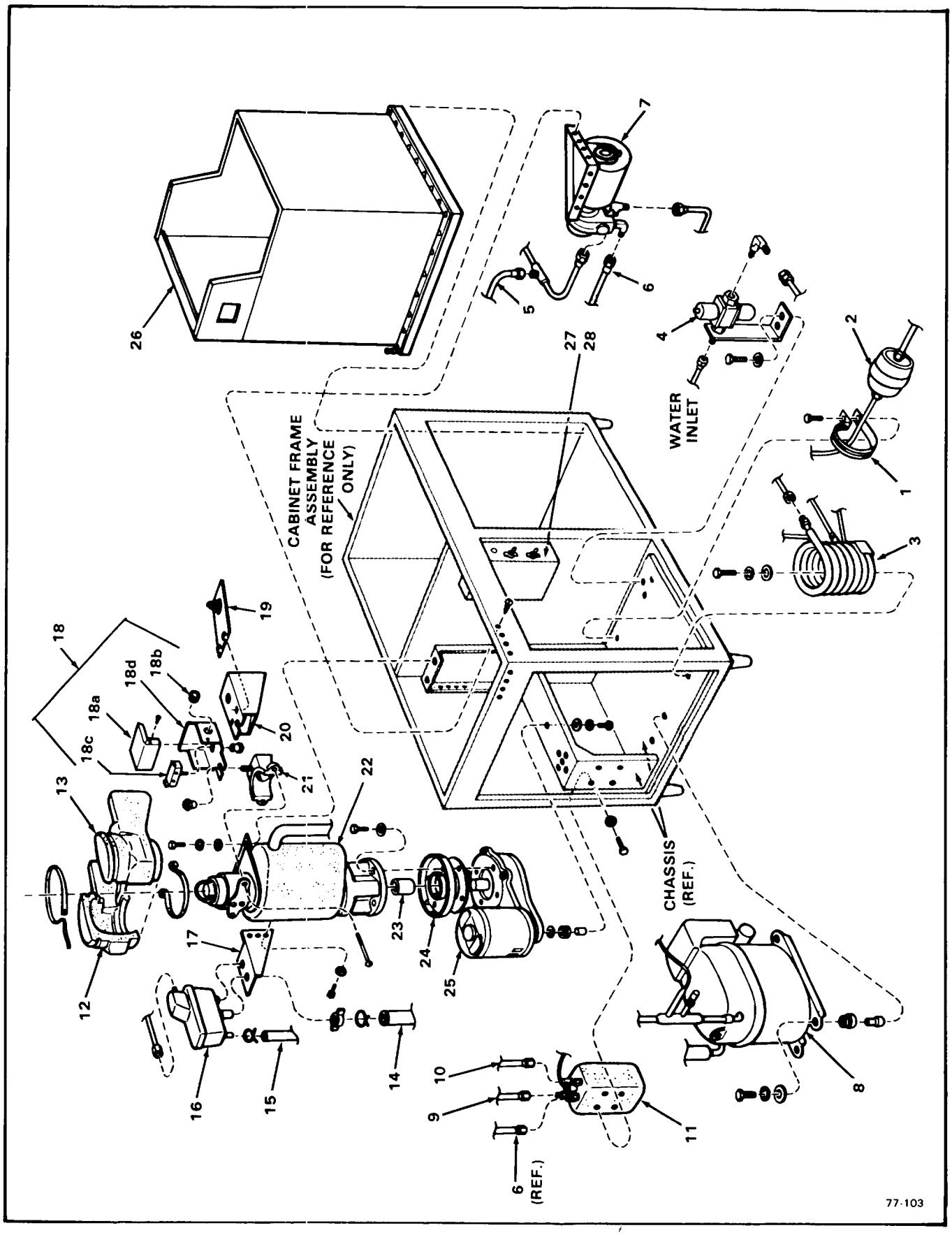

Figure 8-3. Major Assemblies - Water-Cooled Models

Figure 8-3. Major Assemblies - Water-Cooled Models

INDEX NO.	DESCRIPTION	PART NUMBER	REQ'D NUMBER
	Major Assemblies - Water-Cooled Models	No Number	Ref
	* * *		
1	Brace, Drier	A09388-001	1
	* * *		
2	Drier	02-0544-01	1
	attaching parts, Index 1 & 2		
	Screw, No. 10-16 x 1/2 T/C	03-1360-01	1
	(to Chassis base, Water-Cooled Condenser)		
	* * *		
3	Condenser - Water-Cooled	18-3305-02	
	attaching parts, Index 3		
	Screw, No. 1/4-20 x 1/2 T/C Hex Hd	03-0571-00	2
	Lockwasher, No. 1/4 External Tooth Carbon Steel Zinc Plated	03-1417-09	2
	* * *		
4	Regulator Assembly, Water	No Number	1
	(See Figure 8-5)		
	attaching parts, Index 4		
	Screw, No. 1/4-20 x 1/2 T/C Hex Hd	03-0571-00	2
	Lockwasher, No. 1/4 External Tooth Carbon Steel Zinc Plated	03-1417-09	2
	* * *		
5	Tube Assembly (Water Inlet to Cold Plate)	A27737-002	1
	* * *		
6	Tube Assembly (Water Pump to Carbonator Tank)	A27737-004	1
	* * *		
7	Bracket Assembly - Pump, Motor and	No Number	1
	(See Figure 8-6)		
	attaching parts, Index 7		
	Screw, No. 10 x 3/8 T/F Tap	03-1404-15	8
	* * *		

Figure 8-3. Major Assemblies - Water-Cooled Models (cont'd).

INDEX NO.	DESCRIPTION	PART NUMBER	REQ'D NUMBER
8	Compressor	18-3900-01	1
	attaching parts, Index 8		
	Grommet	18-2200-28	4
	Sleeve, Mounting	18-2200-27	4
	Screw, No. 5/16-18 x 1-3/4 Hex Cap	03-1405-40	4
	Lockwasher, No. 5/16 Helical Spring	03-1410-04	4
	Washer, Special	03-1408-29	4
	* * *		
9	Tube Assembly (CO^2 Cylinder to Carbonator Tank)	A27737-001	1
	* * *		
10	Tube Assembly (Carbonator Tank to Cold Plate)	A27737-005	1
	* * *		
11	Tank, Carbonator	A27673-001	1
	(See Figure 8-7)		
	attaching parts, Index 11		
	Screw, No. 1/4-20 x 1/2 Hex Cap	03-1405-03	4
	Lockwasher, No. 1/4 External Tooth - Carbon Steel Zinc Plated	03-1417-09	4
	* * *		
12	Insulation, Spout - Left	A15081-000	1
13	Insulation, Spout - Right	A15080-000	1
	attaching parts, Index 12 & 13		
	Strap, Insulation	A08733-000	1
	Clip, Insulation	03-1438-00	1
	* * *		
14	Tube, Potable Water (Reservoir to Freezer Inlet)	13-0674-09	1
15	Tubing, Drain (Reservoir overflow to Drip Pan)	13-0079-03	1
	attaching parts,Index 14 & 15		

Figure 8-3. Major Assemblies - Water-Cooled Models (cont'd).

INDEX NO.	DESCRIPTION	PART NUMBER	REQ'D. NUMBER
	Clamp (Index 14)	02-0694-00	2
	Clamp (Index 15)	02-0535-00	1
	* * *		
16	Reservoir	02-2217-01	1
	attaching part, Index 16		
	Wing Nut (p/o Reservoir)	No Number	1
	* * *		
17	Bracket, Reservoir	A21418-001	1
	attaching parts, Index 17		
	Screw, No. 1/4-20 x 1/2 T/C Hex Hd	03-0571-00	2
	Lockwasher, No. 1/4 External Tooth Carbon Steel Zinc Plated	03-1417-09	2
	* * *		
18	Box Assembly, Limit	No Number	1
	attaching part, Index 18		
	Nut, No. 1/4-20	A14256-000	1
	* * *		
18a	Cover, Limit Box	A14241-000	1
18b	Bushing, Snap	12-1213-10	1
18c	Switch w/Nut	12-1018-00	1
18d	Box, Limit w/Switch	A14975-000	1
	attaching parts, Index 18a to 18d		
	Screw, No. 4 x 3/8 T/F Tap	03-1404-01	2
	* * *		
19	Plate Assembly, Pressure	A16353-000	1
	* * *		
20	Spout Assembly	A16350-000	1
	* * *		
21	Casting, Spout	A14269-000	1
	attaching parts, Index 21		

Figure 8-3. Major Assemblies - Water-Cooled Models (cont'd).

INDEX NO.	DESCRIPTION	PART NUMBER	REQ'D NUMBER
	Screw, No. 1/4-20 x 2-1/2 Pan Hd	03-1403-55	2
	Lockwasher, No. 1/4 Internal Tooth - Phosphor Bronze	03-1417-07	2
	* * *		
22	Freezer Assembly	No Number	1
	(See Figures 8-8 & 8-9)		
	attaching parts, Index 22		
	Screw, No. 1/4-20 x 1/2 T/C Hex Hd (to upper Chassis)	03-0571-00	2
	Lockwasher, No. 1/4 External Tooth - Carbon Steel Zinc Plated	03-1417-09	2
	(to upper Chassis)		
	Washer, Plain (to upper Chassis)	03-1407-05	2
	Screw, No. 5/16-18 x 1-1/4 Hex Cap (to Drivemotor Assembly)	03-1420-03	4
	Washer, Special (to Drivemotor Assembly)	03-1408-03	4
	* * *		
23	Coupling - (DSF-450)	15-0575-01	1
	Coupling - (DSF-650)	15-0573-01	1
24	Pan, Drip	A24156-001	1
	* * *		
25	Drivemotor Assembly	No Number	1
	(See Figures 8-10 & 8-11)		
	attaching parts, Index 25		
	Gasket - DSF-450	13-0628-000	1
	Gasket - DSF-650	13-0704-000	1
	Grommet	13-0639-00	3
	Spacer	A24925-002	3
	Screw, No. 5/16-18 x 1 Hex Cap	03-1405-18	3
	Lockwasher, No. 5/16 Helical Spring	03-1410-04	3
	Washer, Special	03-1408-02	6
	* * *		
26	Bin Assembly, Cold Plate	A27512-001	1
	* * *		

Figure 8-3. Major Assemblies - Water-Cooled Models (cont'd).

INDEX NO.	DESCRIPTION	PART NUMBER	REQ'D NUMBER
27	Box Assembly, Control (not shown exploded)	No Number	1
	(See Figures 8-12 & 8-13)		
	* * *		
28	Cover, Control Box (not shown separate)	A23143-000	1
	attaching parts, Index 28 to 27		
	Screw, No. 10-24 x 1/4 Pan Hd	03-1403-25	4
	Lockwasher, No. 1/4 External Tooth - Carbon Steel Zinc Plated	03-1417-09	4
	* * *		

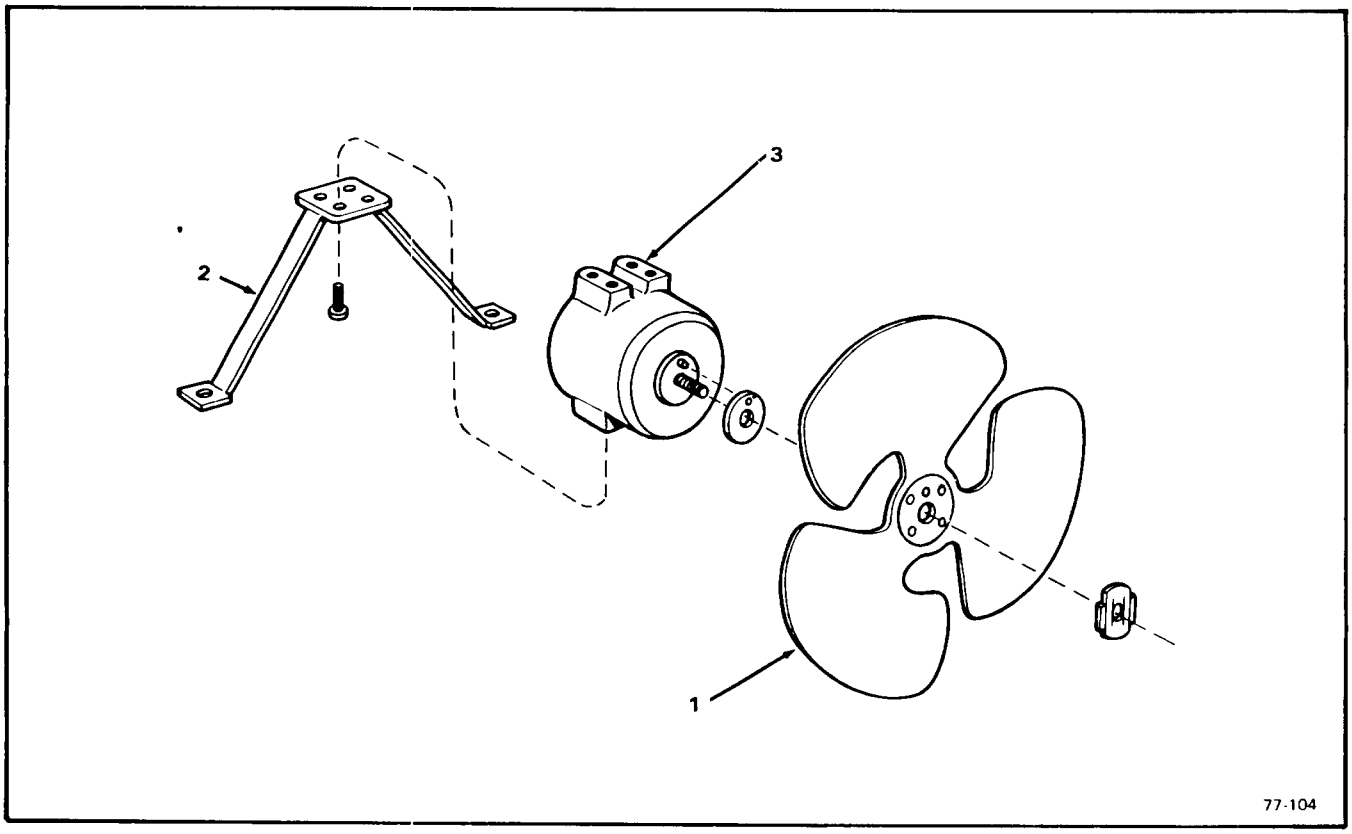

Figure 8-4. Fan Motor & Mounting Bracket Assembly

Figure 8-4. Fan Motor and Mounting Bracket Assembly

INDEX NO.	DESCRIPTION	PART NUMBER	REQ'D NUMBER
	Fan Motor and Mounting Bracket Assembly	No Number	Ref.
	(See Figure/Index 8-2/4)		
	for next higher Assembly)		
	* * *		
1	Blade, Fan	18-0363-00	1
	attaching part, Index 1 to 3		
	Pad, Vibration (p/o Fan Motor)	No Number	1
	Nut, Fan Mounting (p/o Fan Motor)	No Number	1
	* * *		
2	Bracket, Fan Mounting	A25548-001	1
	* * *		
3	Motor, Fan	12-1576-01	1
	attaching parts, Index 2 to 3		
	Screw (p/o Fan Motor)		
	* * *		

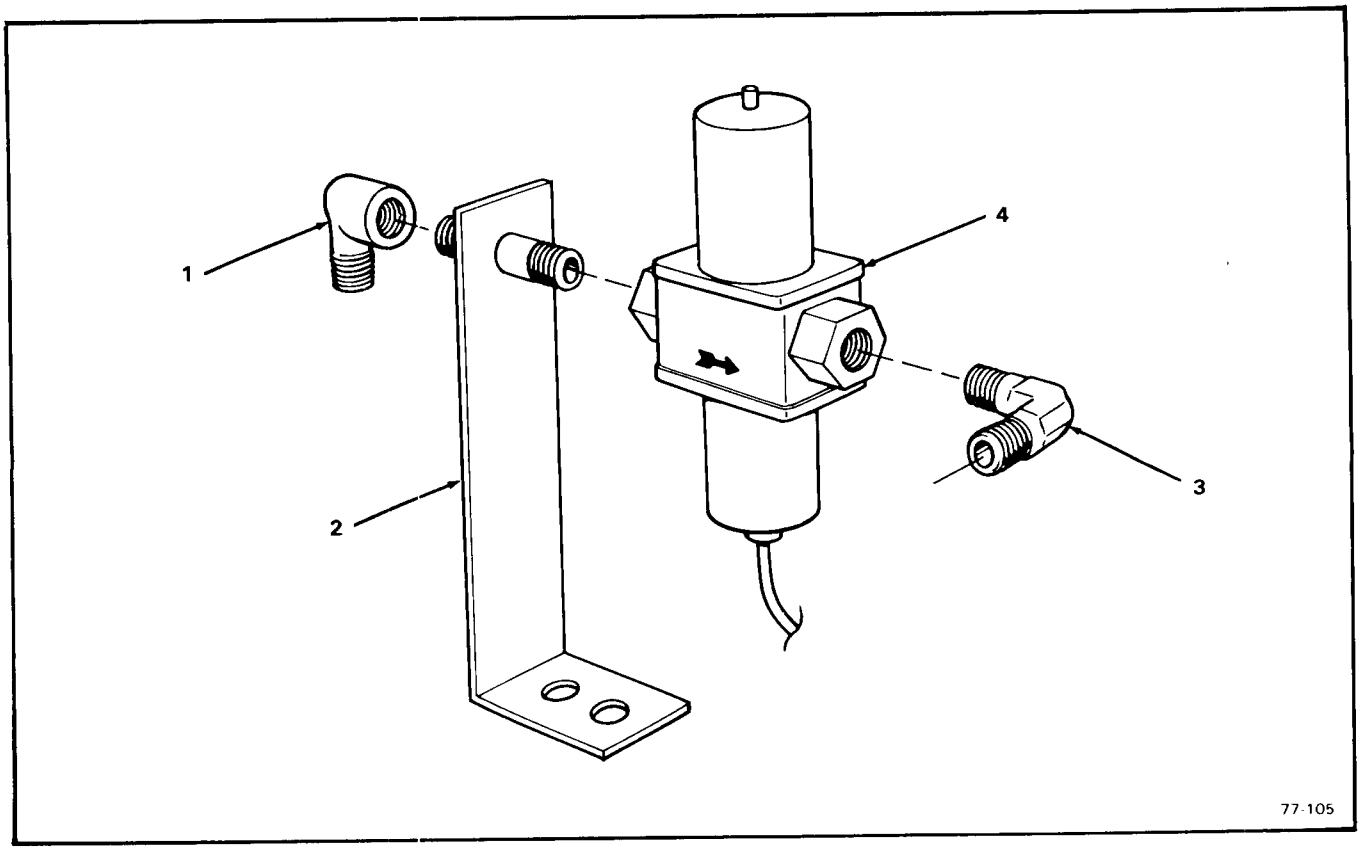

Figure 8-5. Water Regulator Assembly

Figure 8-5. Water Regulator Assembly

INDEX NO.	DESCRIPTION	PART NUMBER	REQ'D NUMBER
	Water Regulator Assembly (See Figure/Index 8-3/4 for next higher Assembly) * * *	No Number	Ref.
1	Elbow, 3/8 FPT x 3/8 Flare Brass * * *	16-0477-000	1
2	Nipple Assembly, Pipe (w/Bracket) * * *	A15924-000	1
3	Elbow, 3/8 NPT x 3/8 Flare Brass * * *	16-0401-00	1
4	Valve, Water Regulator * * *	11-0198-02	1

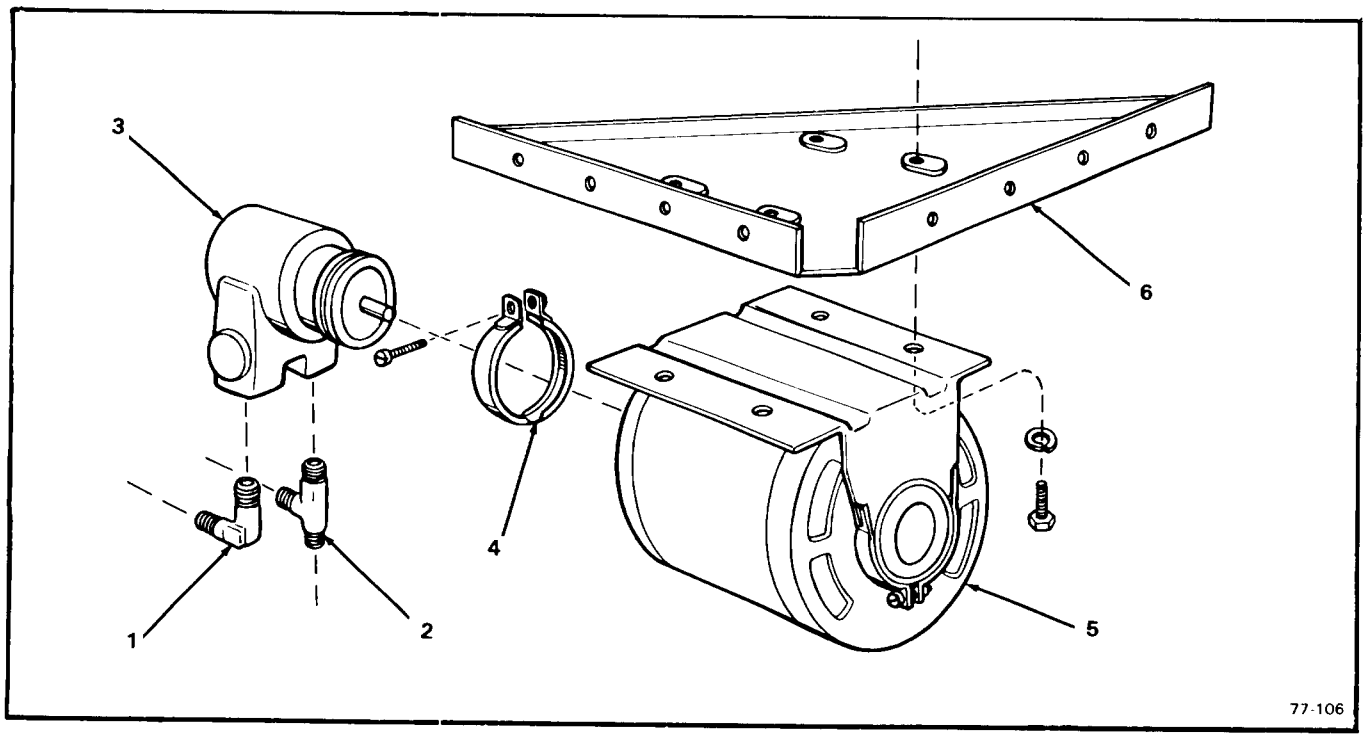

Figure 8-6. Pump, Motor & Bracket Assembly

Figure 8-6. Pump, Motor and Bracket Assembly

INDEX NO.	DESCRIPTION	PART NUMBER	REQ'D NUMBER
	Pump, Motor and Bracket, Assembly	No Number	Ref.
	(See Figure/Index 8-2/7 and 8-3/7 for next higher Assembly)		
	* * *		
1	Elbow - 3/8 MPS x 1/4 Flare Brass	16-0401-01	1
	* * *		
2	Tee - 3/8 Flare x 3/8 NPT x 3/8 Flare Brass	16-0648-02	2
	* * *		
3	Pump Assembly (V-Band, Ring Mtd.)	02-1526-00	1
	attaching parts, Index 3 to 5		
4	Clamp, Coupling	02-1527-00	1
	Screw, No. 10-24 x 1-1/4 Fil. Hd (p/o Clamp)	No Number	1
	* * *		
5	Motor (1/4 HP 115/60/1)	12-1339-01	1
	* * *		
6	Bracket Assembly, Pump	A19160-000	1
	attaching parts, Index 5 to 6		
	Screw, No. 1/4-20 x 1/2 Hex Cap	03-1405-03	4
	Lockwasher, No. 1/4 Helical Spring	03-1410-03	4
	* * *		

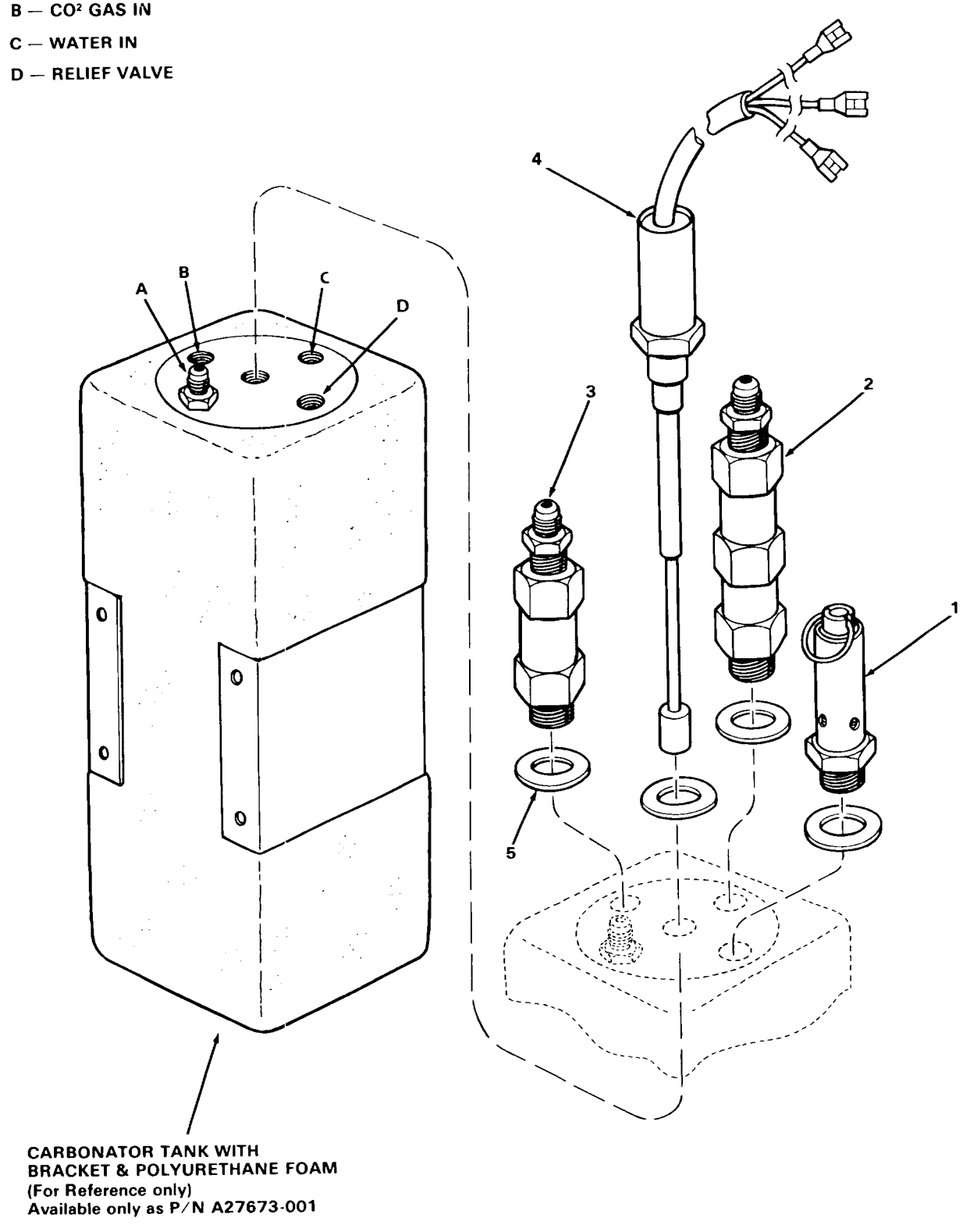

Figure 8-7. Carbonator Tank Assembly

Figure 8-7. Carbonator Tank Assembly

INDEX NO.	DESCRIPTION	PART NUMBER	REQ'D NUMBER
	Carbonator Tank Assembly (See Figure/Index 8-2/11 and 8-3/11 for next higher Assembly) * * *	A27673-001	Ref
1	Valve, Relief * * *	02-1916-03	1
2	Valve, Double Check (Water) * * *	02-1916-04	1
3	Valve, Gas Check * * *	02-1916-05	1
4	Electrode * * *	02-1916-07	1
5	Gasket (Used with Index 1, 2, 3, & 4) * * *	02-1916-02	4

X

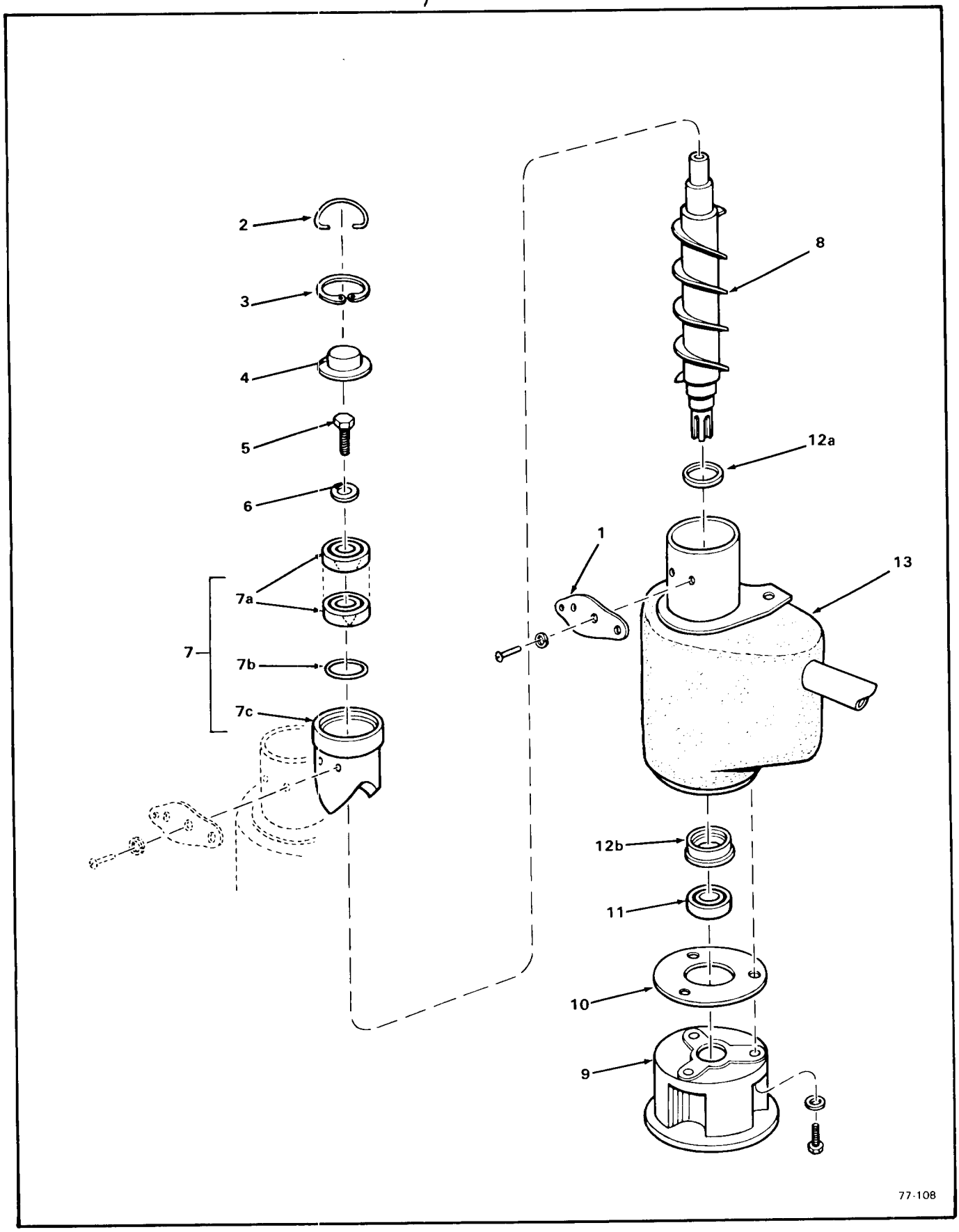

Figure 8-8. Freezer Assembly - DSF-450

Figure 8-8. Freezer Assembly - DSF-450

INDEX NO.	DESCRIPTION	PART NUMBER	REQ'D NUMBER
	Freezer Assembly - DSF-450	No Number	Ref
	(See Figure/Index 8-2/22 and 8-3/22		
	for next higher Assembly)		
	* * *		
1	Plate, Casting	A18430-000	1
	attaching parts, Index 1, 7 & 14		
	Screw, No. 1/4-20 x 1/2 Pan Hd	03-1403-48	2
	Lockwasher, No. 1/4 Helical Spring	03-1410-03	2
	* * *		
2	Hook, Cap	A08162-000	1
	* * *		
3	Ring, Lock	03-1558-03	1
	* * *		
4	Cap	A07701-000	1
	* * *		
5	Screw, Cap	03-0758-00	1
6	Washer	A07699-000	1
	* * *		
7	Bearing Assembly, Breaker and	A14678-001	1
7a	Bearing (matched set of two)	02-1412-00	1
7b	O-Ring	13-0617-16	1
7c	Breaker, Ice (Order P/N A14678-001)	No Number	Ref.
	* * *		
8	Auger	02-1538-00	1
	* * *		
9	Adaptor	08-0595-01	1
	attaching parts, Index 9, 10, 11, 12 to 13		
	Screw, No. 5/16-18 x 7/8 Hex Cap	03-1405-42	3
	Lockwasher, No. 5/16 Helical Spring	03-1410-04	3
	* * *		

Figure 8-8. Freezer Assembly - DSF-450 (cont'd).

INDEX NO.	DESCRIPTION	PART NUMBER	REQ'D NUMBER
10	Gasket	03-1505-00	1
	* * *		
11	Bearing	02-0417-00	1
	* * *		
12	Seal, Water	A18945-000	1
12a	Seal, Upper (Fits on Index 8)	No Number	Ref
12b	Seal, Lower (Fits on top of Index 11)	No Number	Ref
	* * *		
13	Freezer - (Repair Assembly)	A27827-020	1
	* * *		

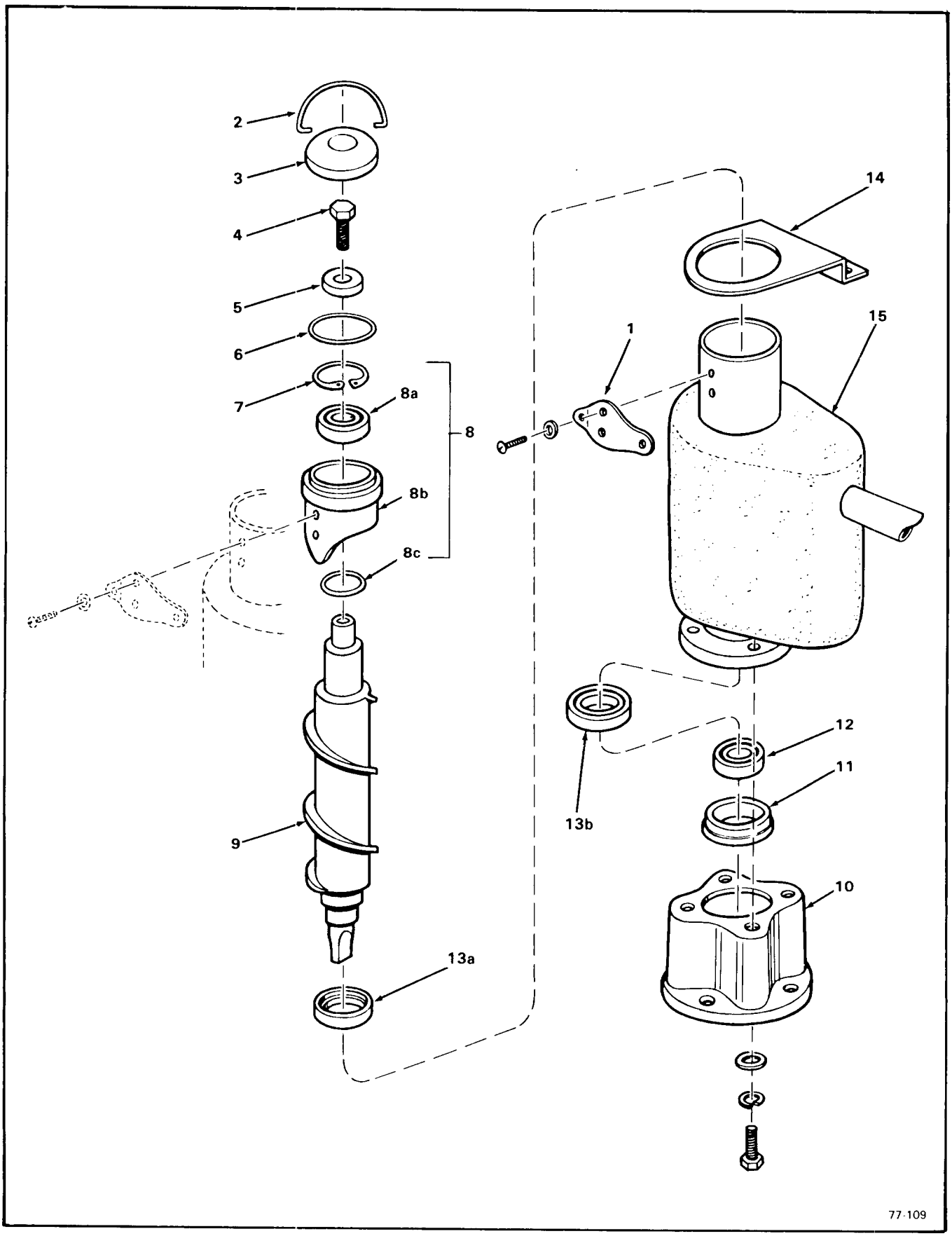

Figure 8-9. Freezer Assembly - DSF-650

Figure 8-9. Freezer Assembly - DSF-650

INDEX NO.	DESCRIPTION	PART NUMBER	REQ'D NUMBER
	Freezer Assembly - DSF-650	No Number	Ref.
	(See Figure/Index 8-2/22 and 8-3/22		
	for next higher Assembly)		
	* * *		
1	Plate, Spout	A18431-001	1
	attaching parts, Index 1, 9 & 15		
	Screw, No. 1/4-20 x 1/2 Pan Hd	03-1403-48	2
	Lockwasher, No. 1/4 Helical Spring	03-1410-03	2
	* * *		
2	Hook	A08582-000	1
	* * *		
3	Cap	A08581-000	1
	* * *		
4	Screw, No. 1/2-20 x 1 Hex Cap	03-1405-36	1
5	Washer, Brass 17/32 I.D. x 1-5/8 O.D. x 5/16	A06273-000	1
	* * *		
6	O-Ring (Fits into outside groove, Index 8)	13-0617-20	1
	* * *		
7	Ring, Internal Retaining	03-1558-04	1
	* * *		
8	Breaker Assembly, Ice	A26704-001	1
8a	Bearing (Top)	02-0646-00	1
8b	O-Ring	13-0617-15	1
8c	Breaker, Ice (Order P/N A26704-001)	No Number	Ref.
	* * *		
9	Auger	02-0617-00	1
	* * *		
10	Adaptor	02-1620-00	1
	attaching parts, Index 10, 11, 12, 13 to 15		
	Screw, No. 5/16-18 x 1-1/4 Hex Cap	03-1405-41	4

Figure 8-9. Freezer Assembly - DSF-650 (cont'd).

INDEX NO.	DESCRIPTION	PART NUMBER	REQ'D NUMBER
	Lockwasher, No. 5/16 Helical Spring	03-1410-04	4
	Washer, Special	03-1408-03	4
	* * *		
11	Retainer, Bearing	A10591-000	1
	* * *		
12	Bearing (Lower)	02-0619-00	1
	* * *		
13	Seal, Water	A22569-000	2
13a	Seal, Upper (Fits on Index 9)	No Number	Ref
13b	Seal, Lower (Fits on top of Index 11 & 12)	No Number	Ref
	* * *		
14	Support, Freezer	A20987-000	1
	* * *		
15	Freezer - (Repair Assembly)	A27659-020	1
	* * *		

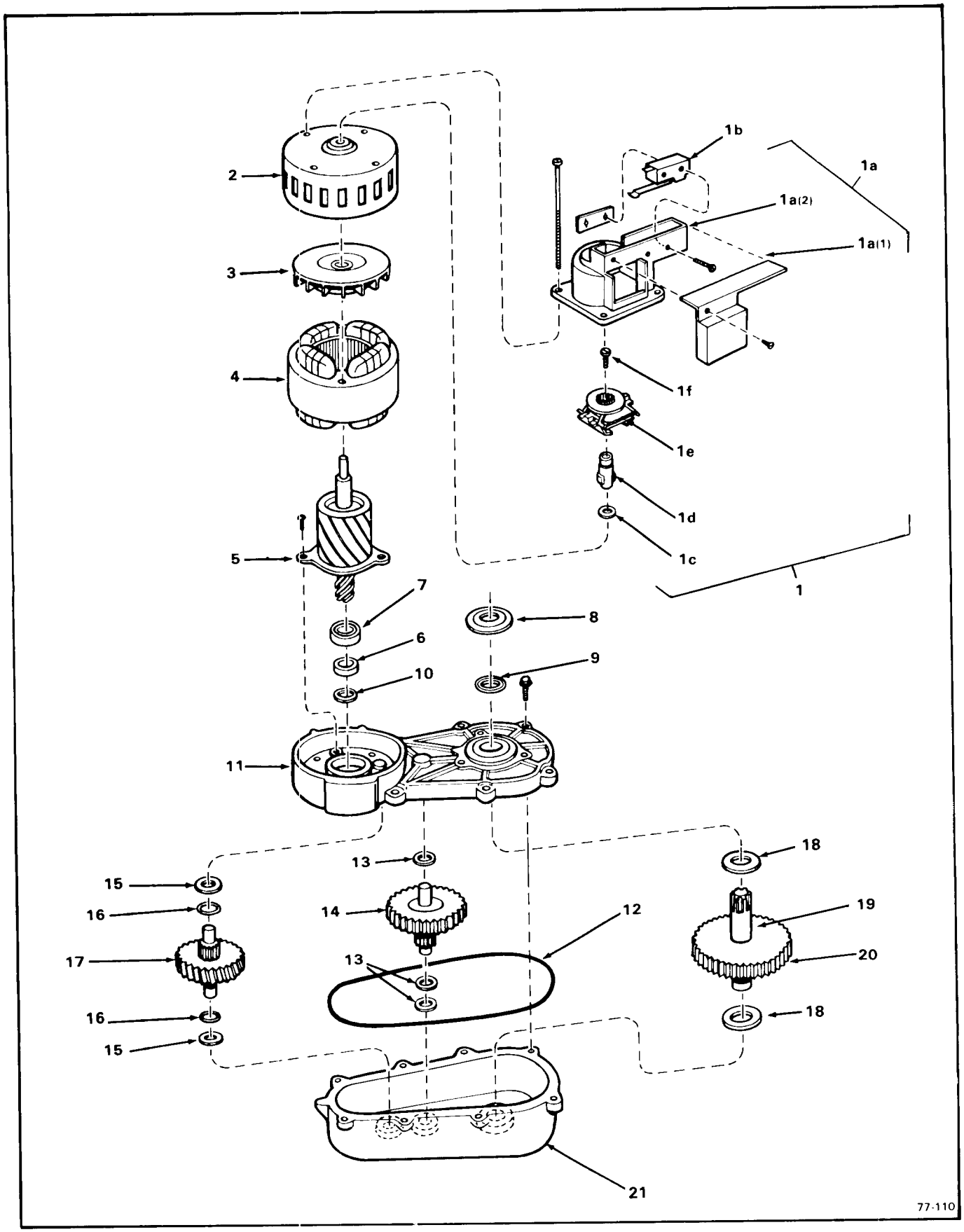

Figure 8-10. Drivemotor Assembly - DSF-450 1/10 H.P.

Figure 8-10. Drivemotor Assembly - DSF-450 (cont'd).

INDEX NO.	DESCRIPTION	PART NUMBER	REQ'D NUMBER
	Drivemotor Assembly - DSF-450 (1-10 H.P.)	A25995-021	Ref.
	(See Figure/Index 8-2/25 and 8-3/25		
	for next higher Assembly)		
	* * *		
1	Kit, Centrifugal Switch	A27894-001	1
	attaching parts, Index 1, 2, & 4 to 11		
	Screw, Motor - No. 10-32 x 5-3/32 Pan Hd	03-1403-43	4
	* * *		
1a	Kit, Centrifugal Switch Housing	A27895-001	1
1a(1)	Cover, Switch Case	No Number	1
1a(2)	Case, Switch Mounting	No Number	1
	attaching parts, Index 1a(1) to 1a(2)		
	Screw, No. 6-32 x 1 Pan Hd	03-1403-09	2
	* * *		
1b	Switch	12-2059-01	1
	attaching parts, Index 1b to 1a(2)		
	Screw, No. 6-32 x 1 Pan Hd	03-1403-09	2
	Nut, Speed	03-0886-00	2
	* * *		
1c	Washer, Special	03-1408-06	1
	* * *		
1d	Extension, Shaft	02-2371-00	1
1e	Actuator, Centrifugal	12-2060-01	1
	attaching parts, Index 1d to 1e		
1f	Screw, No. 10-32 x 1-5/8 Pan Hd	03-1403-77	1
	* * *		
2	Housing Assembly, Motor ✓	A17047-002 ~~000~~	1
	* * *		
3	Fan, Cooling ✓	A16915-000	1

Figure 8-10. Drivemotor Assembly - DSF-450 (cont'd).

INDEX NO.	DESCRIPTION	PART NUMBER	REQ'D NUMBER
	attaching parts, Index 3 to 4		
	Setscrew	03-1246-00	2
	* * *		
4	Stator Assembly (115/60/1)	12-1400-01	1
	* * *		
5	Kit, Rotor and First Gear	A26454-001	1
	(Includes Bearing, Index 7 and Washer, Index 16)		
6	Ring, Slinger	13-0617-04	1
7	Bearing, Rotor	02-1501-00	1
	attaching parts, Index 5, 6, 7 to 10		
	Screw, No. 10-32 x 5/16 Machine (W/LW)	03-1245-00	2
	* * *		
8	Shed, Water	13-0709-01	1
	* * *		
9	Seal, Grease	02-1503-00	1
	* * *		
10	Seal, Grease	02-1504-00	1
	* * *		
11	Kit, Gear Case Cover	A16920-021	1
	(Includes Grease Seals, Index 9 and 10)		
	attaching part, Index 11 thru 20 to 21)		
	Screw, No. 1/4-20 x 5/8 Flange	03-1251-00	6
	Screw, No. 1/4-20 x 3/4 Flange	03-1252-00	2
	* * *		
12	O-Ring	02-1505-00	1
	* * *		
13	Washer, Special	03-1408-06	1
	* * *		
14	Third Pinion Assembly, Second Gear and	12-1521-00	1
	* * *		

Figure 8-10. Drivemotor Assembly - DSF-450 (cont'd).

INDEX NO.	DESCRIPTION	PART NUMBER	PART NUMBER
15	Washer, Special	03-1408-20	2
	* * *		
16	Washer, Special	03-1408-19	2
	* * *		
17	Second Pinion Assembly, First Gear and	02-2224-01	1
	* * *		
18	Washer, Special	03-1408-21	2
	* * *		
19	Key	03-1475-01	1
	* * *		
20	Shaft Assembly, Gear and Output	A26650-001	1
	* * *		
21	Kit, Gear Case	A24184-001	1
	(Includes Index 9 thru 13, 16 and gear lube)		
	* * *		

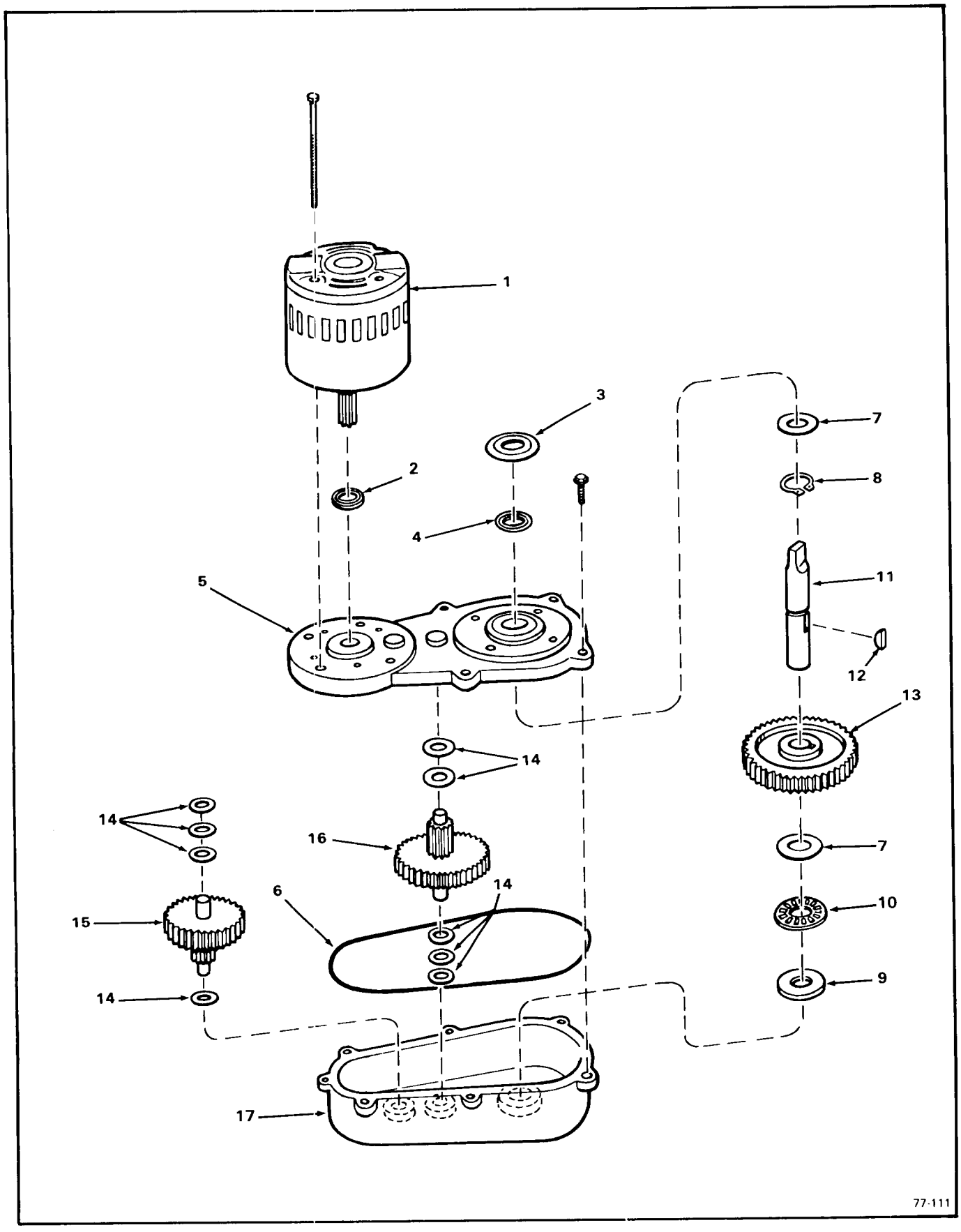

Figure 8-11. Drivemotor Assembly - DSF-650 1/4 H.P.

Figure 8-11. Drivemotor Assembly - DSF-650

INDEX NO.	DESCRIPTION	PART NUMBER	REQ'D NUMBER
	Drivemotor Assembly - DSF-650 (1/4 H.P.)	A22750-021	Ref
	(See Figure/Index 8-2/25 and 8-3/25		
	for next higher Assembly		
	* * *		
1	Motor, Drive 115/60/1 (1/4 H.P. Split Phase)	A26455-001	1
	attaching part, Index 1 to 5		
	Screw, Motor (p/o Index 1)	No Number	4
	* * *		
2	Seal, Oil	02-1606-00	1
	* * *		
3	Shed, Water	13-0709-02	1
	* * *		
4	Seal, Oil	02-1607-00	1
	* * *		
5	Cover Assembly, Gear Case	A22200-000	1
	attaching parts, Index 5 to 17		
	Screw, No 5/16 x 1 Flange	03-1251-01	6
	* * *		
6	O-Ring	A26103-001	1
	* * *		
7	Race, Thrust	02-1681-00	2
	* * *		
8	Ring, Retaining	03-1363-00	1
	* * * *		
9	Race, Thrust	02-1679-00	1
	* * *		
10	Bearing	02-1680-00	1
	* * *		
11	Shaft, Output	02-1652-00	1

Figure 8-11. Drivemotor Assembly DSF-650 (cont'd).

INDEX NO.	DESCRIPTION	PART NUMBER	REQ'D NUMBER
	attaching part, Index 11 to 13		
12	Key (No. 91 Woodruff, Nickel Steel)	03-1364-00	1
	* * *		
13	Gear, Output	02-1653-00	1
	* * *		
15	Washer, Special (.515 I.D. x 875 O.D. x .028 Steel)	03-1408-24	9
	* * *		
15	Second Pinion Assembly, First Gear and	02-1603-00	1
	* * *		
16	Third Pinion Assembly, Second Gear and	02-1604-00	1
	* * *		
17	Case Assembly, Gear	A22199-000	1
	* * *		

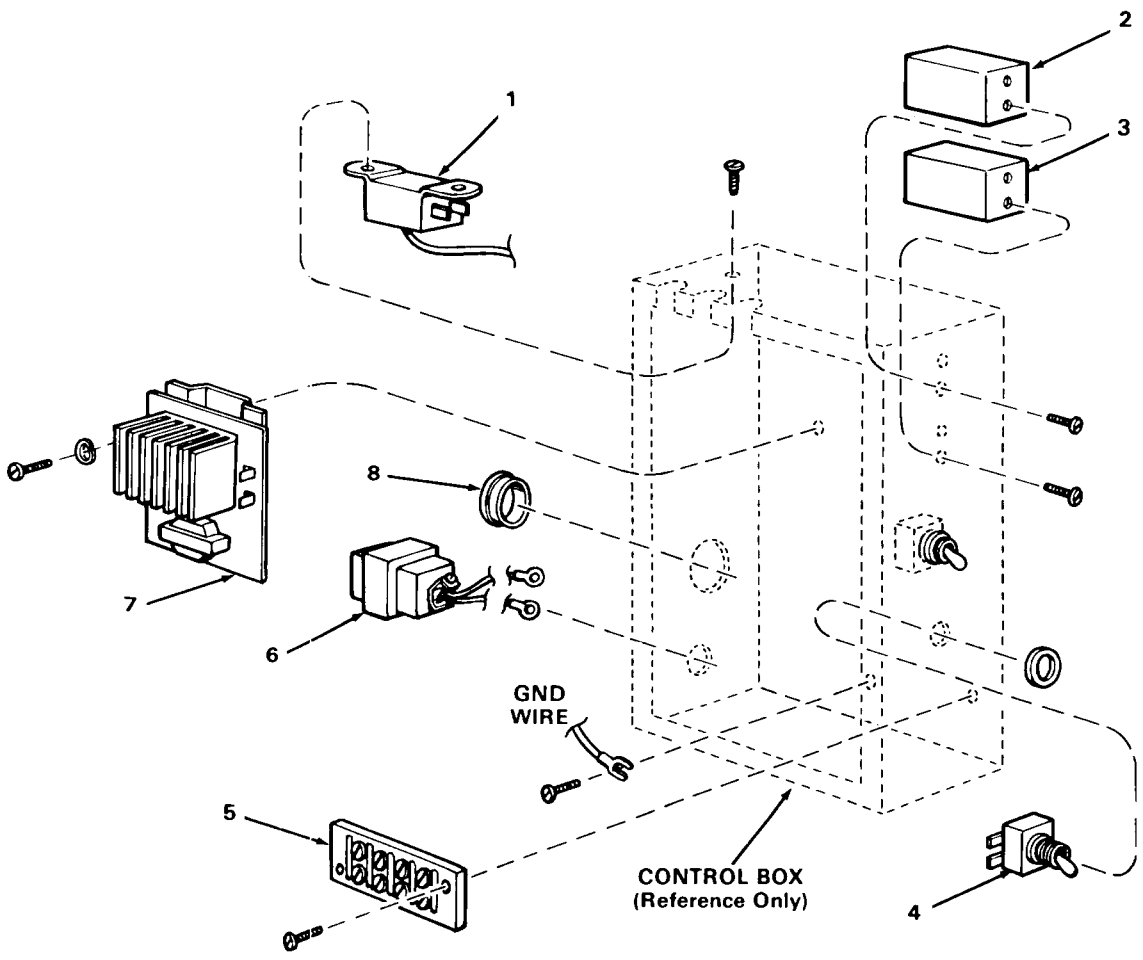

Figure 8-12. Control Box Assembly - DSF-450

Figure 8-12. Control Box Assembly - DSF-450

INDEX NO.	DESCRIPTION	PART NUMBER	REQ'D NUMBER
	Control Box Assembly - DSF-450	No Number	1
	(See Figure/Index 8-2/27 and 8-3/27		
	for next higher Assembly)		
	* * *		
1	Control, Temperature	11-0354-00	1
	attaching parts, Index 1		
	Screw, No. 8-32 x 3/8 Pan Hd	13-1403-17	2
	* * *		
2	Control, Lo-Pressure	11-0358-01	1
	attaching parts, Index 2		
	Screw, No. 6-32 x 1/4 Pan Hd	03-1403-02	2
	* * *		
3	Control, Hi-Pressure (Water-Cooled Model)	11-0388-02	1
	attaching parts, Index		
	Screw, No. 6-32 x 1/4 Pan Hd	03-1403-02	2
	* * *		
4	Switch, Toggle	12-0426-01	2
	* * *		
5	Board, Terminal	12-0813-01	1
	attaching parts, Index 5		
	Screw, No. 10-24 x 3/4 Pan Hd	03-1403-31	2
	* * *		
6	Transformer	12-1809-00	1
	* * *		
7	Control, Water Level	11-0384-01	1
	attaching parts, Index 7		
	Screw, No. 8-32 x 3/8 Pan Hd	03-1403-17	1
	Lockwasher, No. 8 Internal Tooth - Phosphor Bronze	03-1417-02	1
	* * *		
8	Bushing, Snap	12-1213-12	1
	* * *		

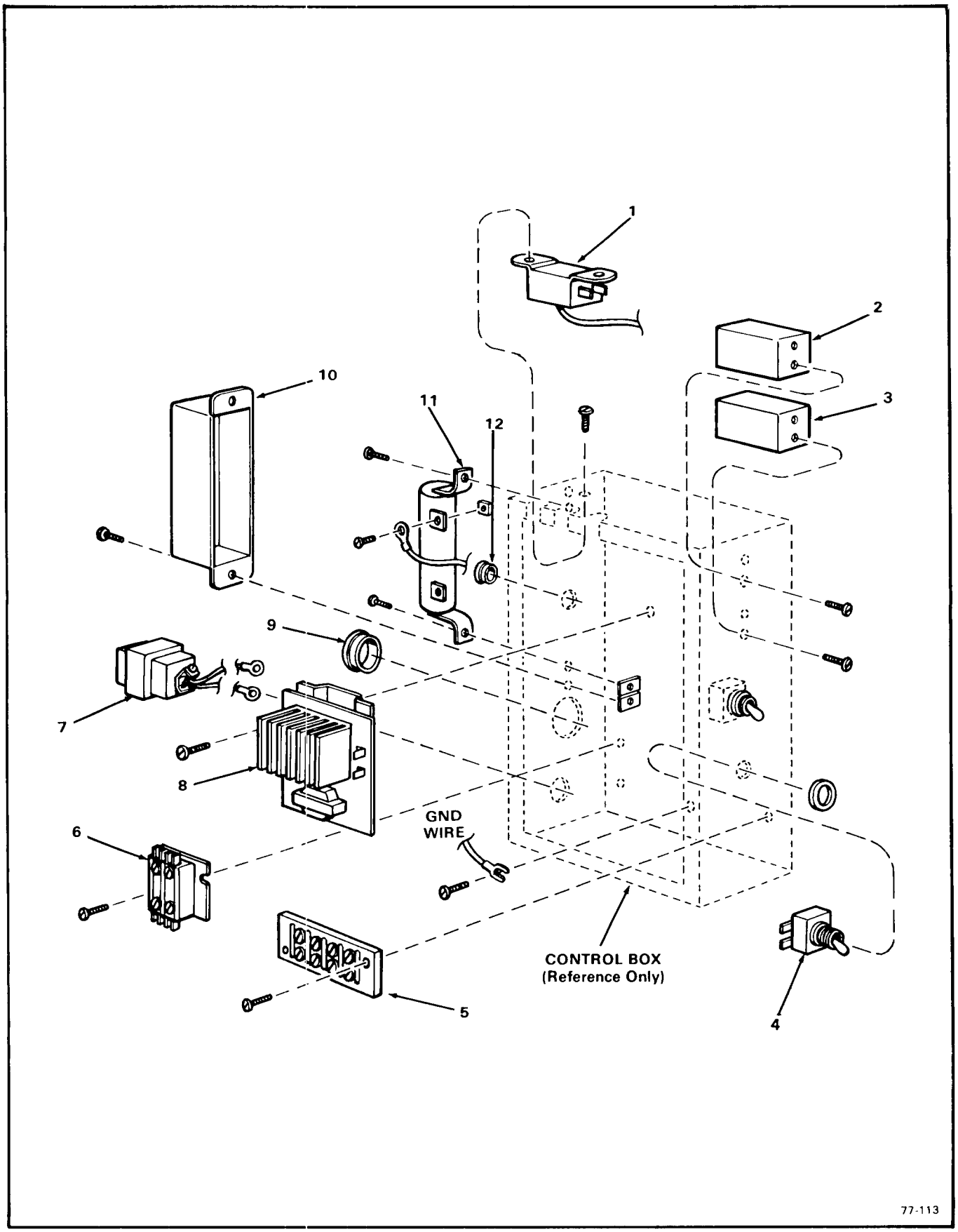

Figure 8-13. Control Box Assembly - DSF-650

Figure 8-13. Control Box Assembly - DSF-650

INDEX NO.	DESCRIPTION	PART NUMBER	REQ'D NUMBER
	Control Box Assembly - DSF-650	No Number	1
	(See Figure/Index 8-2/27 and 8-3/27		
	for next higher Assembly)		
	* * *		
1	Control, Temperature	11-0354-00	1
	attaching parts, Index 1		
	Screw, No. 8-32 x 3/8 Pan Hd	03-1403-17	2
	* * *		
2	Control, Lo-Pressure	11-0358-01	1
	attaching parts, Index 2		
	Screw, No. 6-32 x 1/4 Pan Hd	03-1403-02	2
	* * *		
3	Control, Fan Pressure (Air-Cooled Model)	11-0362-01	1
	Control, Hi-Pressure (Water-Cooled Model)	11-0388-02	1
	attaching parts, Index 3		
	Screw, No. 6-32 x 1/4 Pan Hd	03-1403-02	2
	* * *		
4	Switch, Toggle	12-0426-01	2
	* * *		
5	Board, Terminal	12-0813-01	1
	attaching parts, Index 5		
	Screw, No. 10-24 x 3/4 Pan Hd	03-1403-31	2
	* * *		
6	Contactor	12-2041-01	1
	attaching parts, Index 6		
	Screw, No. 8-32 x 1/2 Pan Hd	03-1403-18	2
	* * *		
7	Transformer	12-1809-00	1
	* * *		

Figure 8-13. Control Box Assembly - DSF-650 (cont'd).

INDEX NO	DESCRIPTION	PART NUMBER	PART NUMBER
8	Control, Water Level	11-0384-01	1
	attaching parts, Index 8		
	Screw, No. 8-32 x 3/8 Pan Hd	03-1403-17	1
	Lockwasher, No. 8 Internal Tooth - Phosphor Bronze	03-1417-02	1
	* * *		
9	Bushing, Snap	12-1213-12	1
	* * *		
10	Cover, Resistor (Air-Cooled Model)	A14384-000	1
	attaching parts, Index 9		
	Screw No. 8 x 3/8 T/F Tap	03-1404-08	2
11	Resistor - 30 watt (Air-Cooled Model)	12-0474-00	1
	attaching parts, Index 11		
	Screw, No. 8-32 x 3/8 Pan Hd	03-1403-17	2
	Speed Nut, No. 8-32	03-1421-04	2
	attaching parts, electrical leads to Index 11 terminals		
	Screw, No. 6-32 x 3/8 Pan Hd	03-1403-04	2
	Speed Nut, No. 6-32	03-1421-02	2
	* * *		
12	Bushing, Snap	12-1213-04	1
	* * *		

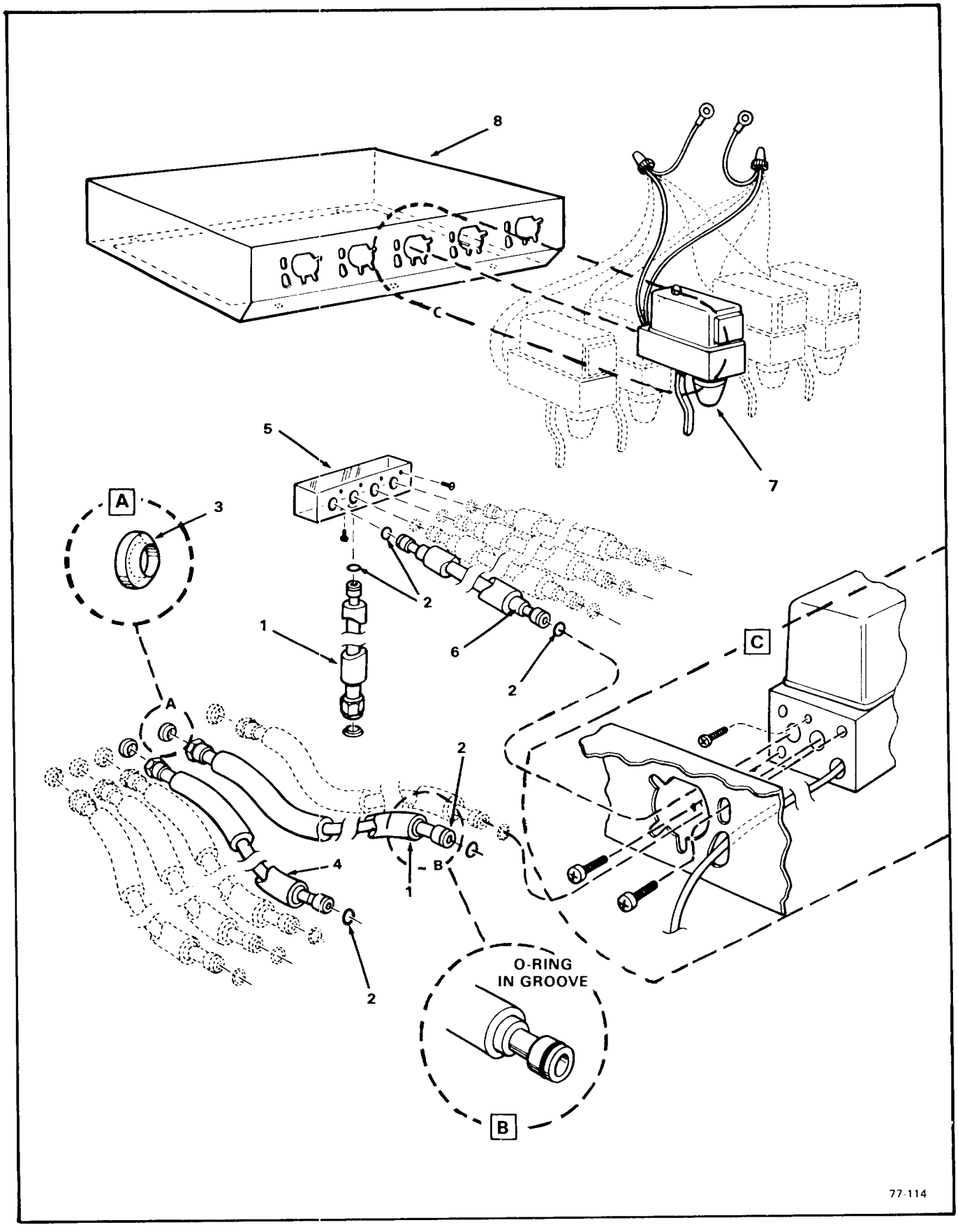

Figure 8-14. Dispensing Tower Assembly

Figure 8-14. Dispensing Tower Assembly

INDEX NO.	DESCRIPTION	PART NUMBER	REQ'D NUMBER
	Dispensing Tower Assembly	A27765-001	Ref
	See Figure/Index 8-1/12		
	for next higher Assembly)		
	* * *		
1	Tube Assembly (54-inches long)	A27739-003	2
	* * *		
2	O-Ring	13-0617-32	15
	* * *		
3	Washer	02-1249-00	18
	* * *		
4	Tube Assembly (48-inches long)	A27739-002	5
	* * *		
5	Manifold	02-2417-01	1
	* * *		
6	Tube Assembly (10-inches long)	A27740-001	4
	* * *		
7	Faucet - Single Lever, Carbonated Flavor	02-1205-16	3
	(See Figure 8-15)		
	(Faucet No. 1, No. 2, No. 3)		
	Faucet - Two Levers, Carbonated Flavor & Soda	02-1205-17	1
	(Faucet No. 4)		
	Faucet - Two Levers, Non-Carbonated Flavor & Plain Water	02-1205-19	1
	(Faucet No. 5)		
	attaching parts, Index 7 to 8		
	Screw, Faucet Mounting (p/o Index 7)	No Number	10
	* * *		
8	Top Assembly, Left	A17827-001	1
	* * *		

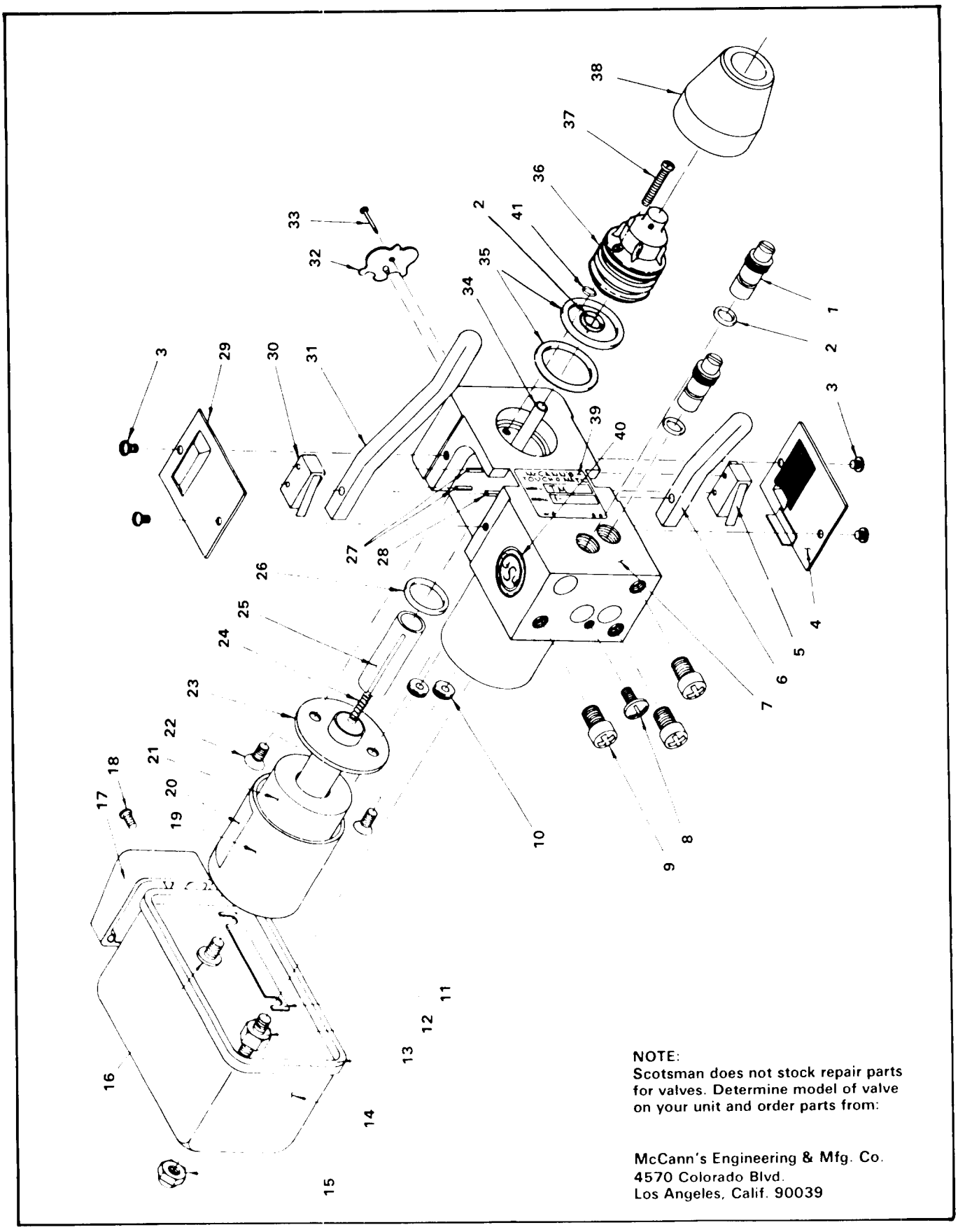

Figure 8-15. Touch-O-Matic™ Faucet Assembly

Figure 8-15. Touch-O-Matic[T.M.] Faucet Assembly

INDEX NO.	DESCRIPTION	PART NUMBER	REQ'D NUMBER
	Touch-O-Matic[T.M.] Faucet Assembly	No Number	Ref.
	(See Figure/Index 8-14/7		
	for next higher Assembly)		
	* * *		
1	Stem, Metering	1	
2	O-Ring, Metering Stem	2	
3	Screw, Side Plate	3	
4	Plate, Right Side	152	
5	Switch Assembly (3 Wires)	82	
6	Lever, Short	160	
7	Block, 20-1000	01-0001	
	Block, 20-2000	01-0002	
	Block, 20-4000	01-0003	
	Block, 20-1100 - 20-4100	01-0004	
	Block, 20-2100 - 20-3100	01-0005	
8	Screw, Inlet Retainer	5	
9	Screw, Faucet Mounting	6	
10	Grommet, Coil Housing	7	
11	Strap, Grounding	8	
	Lockwasher in place of Part No. 8 on	1508	
	12 V.D.C. and 20-4000		
12	Stud, Cover Mounting Short	9	
13	Cover, Gasket	10	
14	Cover (With Medallion Holes)	11	
15	Nut, Cover Retainer	13	
16	Screw, Coil Housing	14	
17	Medallion (Specify Flavor)	15	
18	Screw, Medallion Retainer	16	
19	Cover, Coil	17	
20	Label (Specify Voltage) Coil	20	

Figure 8-15. Touch-O-Matic$^{T.M.}$ Faucet Assembly (cont'd).

INDEX NO.	DESCRIPTION	PART NUMBER	REQ'D NUMBER
21	Coil (115 V.A.C.)	22	
	Coil (12 V.A.C)	24	
	Coil (12 V.D.C.)	29	
	Coil (24 V.A.C.)	23	
22	Screw, Plunger Housing Retainer	31	
23	Housing, Plunger	32	
24	Spring, Plunger	38	
25	Plunger, Touch-O-Matic$^{T.M.}$	39	
26	O-Ring, Plunger Housing	40	
27	Roll Pin, Switch	41	
28	Roll Pin, Lever	42	
29	Plate, Left Side	151	
30	Switch Assembly, 2 Wires, Standard	137	
	Switch Assembly, 2 Wires, Special	138	
31	Lever, Long	159	
32	Crest, McCANN'S	49	
33	Pin, Crest Retainer	50	
34	Tube, Syrup	09-0017	
	Tube, Jet	89	
35	Diffuser, O-Ring	52	
36	Diffuser	09-0018	
37	Screw, Diffuser Retainer	54	
38	Spout, Pouring, Red	09-0013	
38	Spout, Pouring, Black	09-0015	
38	Spout, Pouring, Clear	09-0014	
39	Gasket	149	

TABLE OF CONTENTS

	Table of Contents	1
	List of Illustrations	1
	Specifications	2
SECTION I -	GENERAL INFORMATION & INSTALLATION	3
I.	Introduction	3
II.	Unpacking and Inspection	3
III.	Location and Leveling	3
IV.	Tubing Connections	4
V.	Bin Thermo Bracket Installation	5
VI.	Electrical Connections	6-8
VII.	Final Check List	8
SECTION II -	OPERATING INSTRUCTIONS	9
I.	Start Up	9
SECTION III -	PRINCIPLES OF OPERATION	10
I.	General	10
SECTION IV -	ADJUSTMENT AND REMOVAL AND REPLACEMENT PROCEDURES	11
I.	Adjustment for the Diverter Rotor	11
II.	Adjustment of the Diverter Rotor Rotation Alignment	11
III.	Adjustment of the Transport Tube Safety Switch	12
IV.	Removal and Replacement of the Diverter Body	12
V.	Removal and Replacement of the Gearmotor and Diverter Rotor	12
SECTION V -	MAINTENANCE & CLEANING INSTRUCTIONS	13
I.	General	13
II.	Cleaning	13
III.	Sanitizing	13-14
SECTION VI -	SERVICE DIAGNOSIS	15
I.	Extruded Cube Ice Diverter	15
SECTION VII -	WIRING DIAGRAMS	16
SECTION VIII -	THE PARTS ILLUSTRATIONS AND PARTS LIST	17
I.	General	17
II.	How to Use the Illustrations and Parts List	17
III.	How to Order Parts of Assemblies	17

LIST OF ILLUSTRATIONS

	Specifications	2
Figure 1-1.	Installing Tube and Clamps	4
Figure 1-2.	Installation Layout - Examples	7
Figure 7-1.	Wiring Diagram - DVK905-1B	16
Figure 8-1.	DVK905-1B - Major Assemblies	18
Figure 8-00	How to Use the Illustrated Parts List	22

THIS PAGE
INTENTIONALLY
LEFT BLANK

SPECIFICATIONS

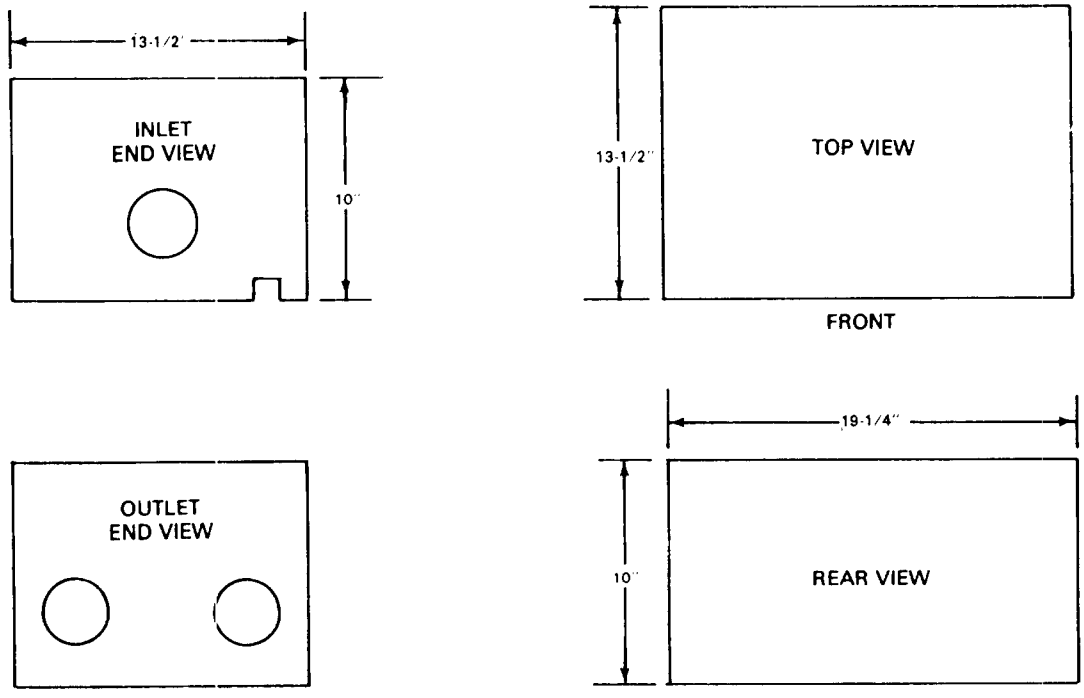

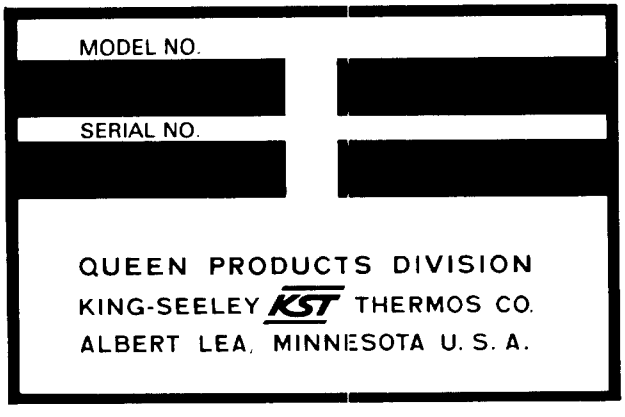

MODEL DVK905-1B
Electrical: 115/60/1
24-volt control circuit

Est. Ship. Wt.: 33 lbs.

TOP & SIDE SERVICE ACCESS

SEE NAMEPLATE, shown at left, for electrical specifications. NAMEPLATE located on one of the enclosure sides. The NAMEPLATE also has the Model/Serial numbers.

We reserve the right to make product improvements at any time. Specifications and design are subject to change without notice.

SECTION I

GENERAL INFORMATION & INSTALLATION

I. INTRODUCTION

These instructions provide the specifications and the step-by-step procedures for the installation, start up and operation for the SCOTSMAN Model DVK905-1B Extruded Cube Ice Diverter.

The Model DVK905-1B Extruded Cube Ice Diverters are quality designed, engineered and constructed, and thoroughly tested ice diverting systems, providing the unique capability of alternately supplying ice to two separate locations.

One of the outstanding features of these diverters is the special priority circuit, so the user can switch the priority of ice delivery from one location to the other location. The priority is controlled by a manually operated slide switch on the outlet end of the diverter. When that need is filled, the bin thermostat will signal the diverter rotor to operate and divert the supply of ice to the other location.

DESCRIPTION

The relatively small box-like enclosure, with compact dimensions, allows the Ice Diverter Assembly to easily be installed on the top panel of the EC900, or in a space of small requirements.

II. UNPACKING AND INSPECTION

1. Call your authorized SCOTSMAN Distributor or Dealer for proper installation. He's listed under ICE MAKING EQUIPMENT & MACHINERY in the yellow pages of the telephone book.
2. Visually inspect the exterior of the shipping container and any severe damage noted should be reported to the delivering carrier; and a concealed damage claim filed subject to internal inspection, with carrier representative present.
3. Remove screws and shipping tape and the top and side panels and inspect for any concealed damage. Notify carrier of any concealed damage claims, as stated in Step 2 above.
4. Remove all internal support packing, tape, etc. from within the enclosure.
5. Check that all attaching hardware is snug tight and has not become loosened during shipment.
6. Check the contents of the carton shipped inside the enclosure, which should contain:
   a. Temperature Control Cover with Temperature Control attached inside, two screws, one Grommet and one Bushing.
   b. One Thermo Bracket Assembly.
   c. Two Hose Clamp Assemblies
   d. One Hose Clamp
   e. Six Screws.
   f. Two Grommets.
7. SEE NAMEPLATE ON Diverter Box left side, and check that the local source voltage corresponds with the voltage specified on the nameplate.

CAUTION

Improper voltage supplied to the Ice Diverter Assembly will void your parts replacement program.

8. Remove the Manufacturer's Registration Card from the front of the Manual and fill in all spaces including Model Number and Serial Number taken from the nameplate. Forward the completed, self-addressed registration card to the SCOTSMAN factory.

III. LOCATION AND LEVELING

WARNING

This Diverter Assembly is NOT designed for outdoor installations where air temperatures are below 50 degrees F., or above 100 degrees F. Extended periods of operation at temperatures exceeding these limitations will constitute misuse, under the terms of the SCOTSMAN Manufacturer's Limited warranty, resulting in LOSS of warranty coverage.

1. Remove four angle mounting brackets shipped inside diverter cabinet and attach one to each corner of the cabinet using existing screws.

NOTE

1. *Minimum room temperature 50-degrees F., and maximum room temperature 100-degrees F.*
2. *Location within six feet of EC900.*
3. *Allows comfortable curves without low areas.*

2. Position the Diverter in the selected permanent location and level the diverter in both left-to-right and front-to-rear directions adding metal shims as required. Using suitable bolts attach the diverter to its permenant location.

WARNING

Be sure the routing and positioning of the transport tube eliminates undesirable inclines, U-shape bends, and flat horizontal lengths where there would be the chance of an accumulation of backed up ice and non-moving sections of meltage water. Poor layout in routing transport tube can cause delay in ice delivery to dispenser or bin, as well as excess meltage; and worse, an ice back up situation severe enough to force the transport tube loose from the diverter or extruder breaker and possible damage to the equipment. See the illustrations showing examples of typical layouts and installation in Figures 1-1 and 1-2.

IV. TUBING CONNECTIONS

1. Route the 110 inch length one-inch I.D. Nylobrade tubing from the spout of the EC900 Icemaker to the inlet end of the Diverter, using open curves, no kinking, and use only an efficient, yet ample length of the tubing.

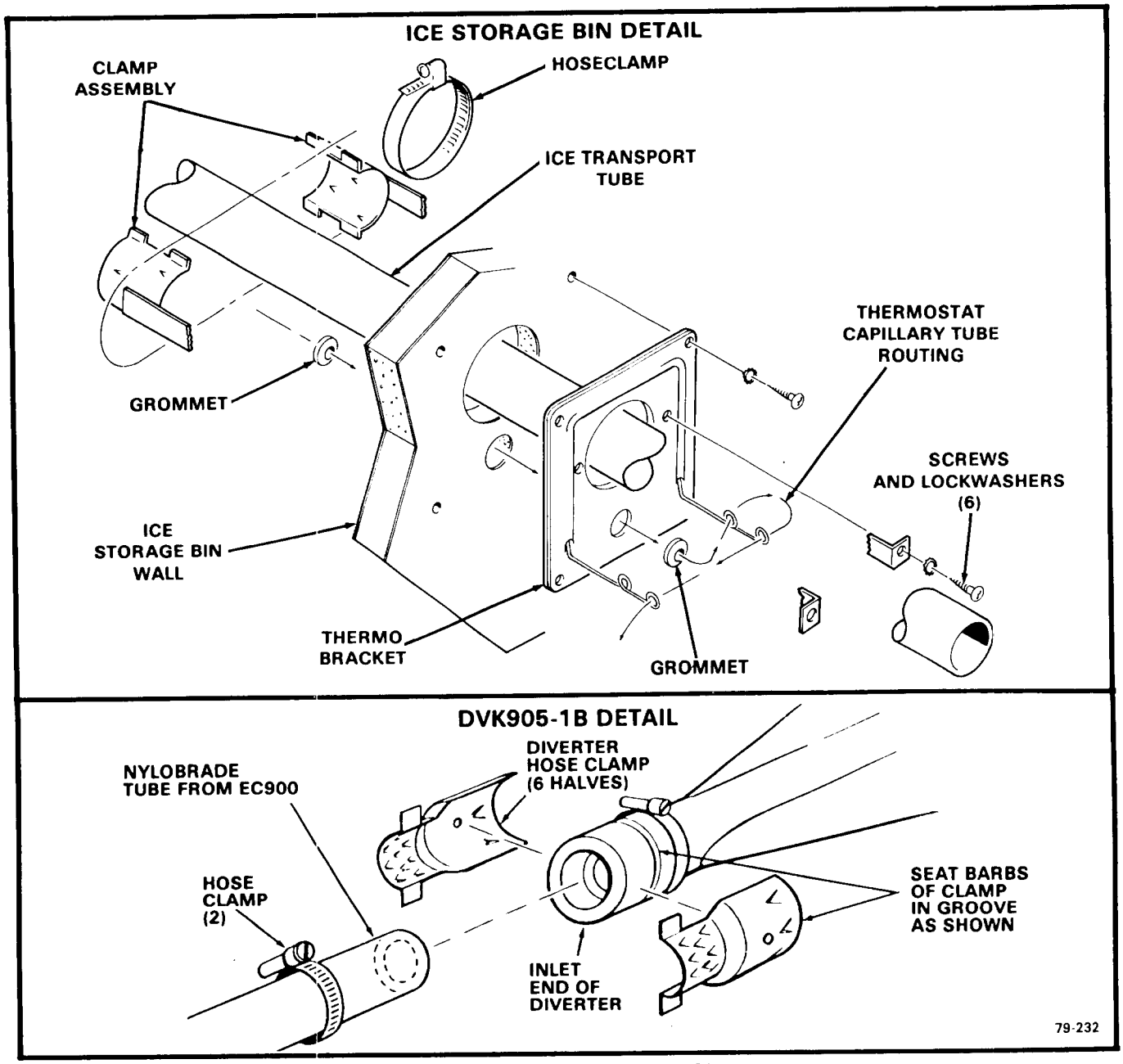

Figure 1-1. Installing Tube and Clamps.

2. Loosen and slide two hose clamps over the free end of the Nylobrade tubing. See Figure 1-1. DVK905-1B detail.
3. Cut the measured new end of the Nylobrade tubing *square and even* and *insert the tubing to the bottom shoulder*, inside the INLET end of the Diverter.
4. Install the two-part metal clamp device on INLET end of the Diverter, with the barbs on the inner surface of the large end positioned within the ring depression on the diverter body and the opposite end of the clamp parts on the Nylobrade tubing.
5. Slide one hose clamp into position over the large end of the two-part clamp, and the other hose clamp over the smaller end of the two-part clamp.
6. Position the hose clamp at the smaller end in the clamp parts: Tighten both clamps to a snug tightness. DO NOT over-tighten.

NOTE

The two-part metal clamp is designed so the barbs on the inner surface of the smaller end will just dig in the Nylobrade tubing enough to securely hold the tubing, and also the design prevents over-tightening.

7. Similarly cut the end of a length of the same size Nylobrade tubing and repeat steps 4, 5 and 6 on each of the OUTLET ends of the Diverter.
8. Route each Nylobrade tube to the associated bin or dispenser, avoiding undue heated areas and support tubing to prevent trapping water in horizontal areas of tubing.

CAUTION

HEED THE FOLLOWING PRECAUTIONS WHEN INSTALLING NYLOBRADE ICE TRANSPORT TUBING:

1. **Use only one-inch I.D. Nylobrade tubing.**
2. **Use only one continuous length of Nylobrade tubing for each point-to-point tubing run. DO NOT install spliced tubing. This can cause ice jamming problems.**
3. **Cut ends of Nylobrade tubing square and even and remove all shavings.**
4. **Support all Nylobrade tubing to prevent low spots and trapping water.**
5. **DO NOT use any substitute tubing.**
6. **Install tubing so all meltage water will drain to one end of the tubing or to the other end.**
7. **DO NOT install tubing in areas where ambient temperatures are below 40 degrees F. or above 100 degrees F.**

9. Install tubing insulation of one and one-half inch I.D. Armoflex, or equivalent, around the lengths of routed Nylobrade tubing. (Half-inch wall thickness insulation.)
10. Install drain line on the drain fitting provided on the Diverter Assembly drain pan.
11. Cut the Nylobrade tubing to the required length at the associated ice storage bin and dispenser, and secure in place with clamps provided.

V. BIN THERMO BRACKET

A. To install Bin Thermo Bracket: Refer to Figure 1-1 Installing Tubes and Clamps.

1. Using the bin thermo bracket as a template drill or cut a 1-7/16 inch diameter hole through the left end wall of the Bin, centered 2-1/2 inches below the top center of the wall.
2. Inside the Bin, align the hole in the Thermostat Bracket with the hole prepared in above step, and attach the Bracket to the inner wall, using four screws.
3. Insert the two-piece Hose Clamp Assembly through the hole in the Thermostat Bracket and Bin, so the clamping parts are outside of the Bin; then, attach he Clamp parts inside the Bin, using two screws.
4. Position the Bin Control Assembly housing immediately below the hole prepared in step 1 above, on the outside of the Bin, securing with two screws.
5. Carefully route the capillary tube through the open hole in the Bin wall and thread the tube through the two loops in the wire Bulb Holder, nearest to the wall; then, bend a U-turn in the tube and thread it through the second set of loops, extending the end of the tube at least an inch beyond the last loop of the Bulb Holder
6. Dress the tube neatly, to take up excess slack back to the Bin Control Thermostat housing and carefully coil the excess tubing out of the way.
7. Slide a hose clamp over the end of the Nylobrade transport tube and insert the end of the tube through the hole in the Bin wall, loosely fitting the hose clamp around the two-piece Hose Clamp Assembly holding the tube.
8. Adjust the end of the Nylobrade transport tube, inside the Bin, to extend away from the inner wall just beyond the end of the Bulb Holder; then, tighten the hose clamp

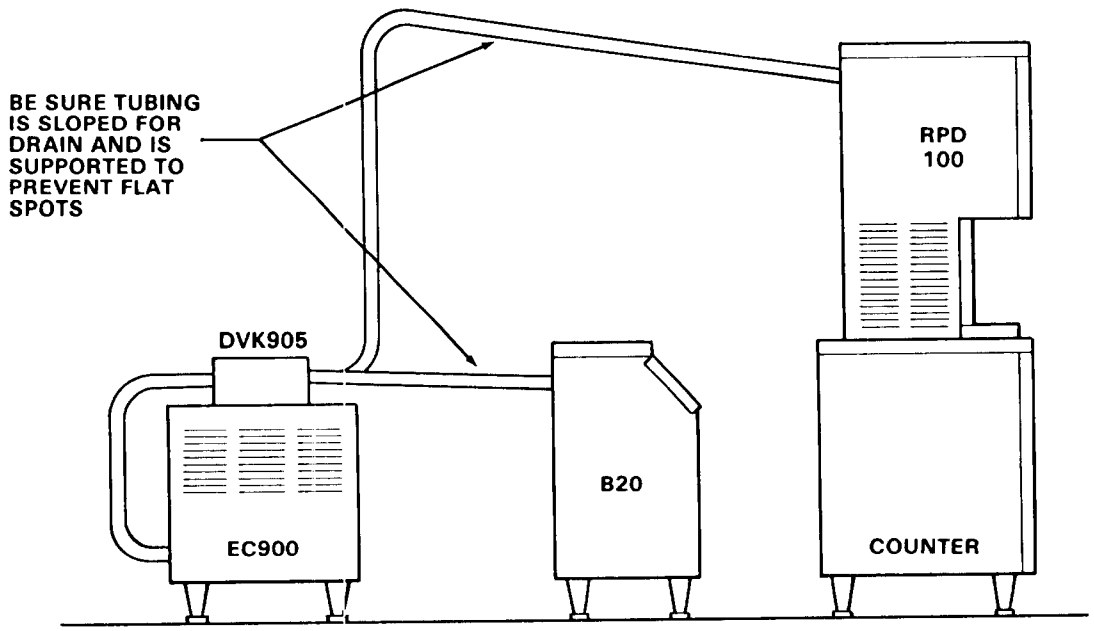

DIVERTER ASSEMBLY INSTALLED ON TOP OF EC900

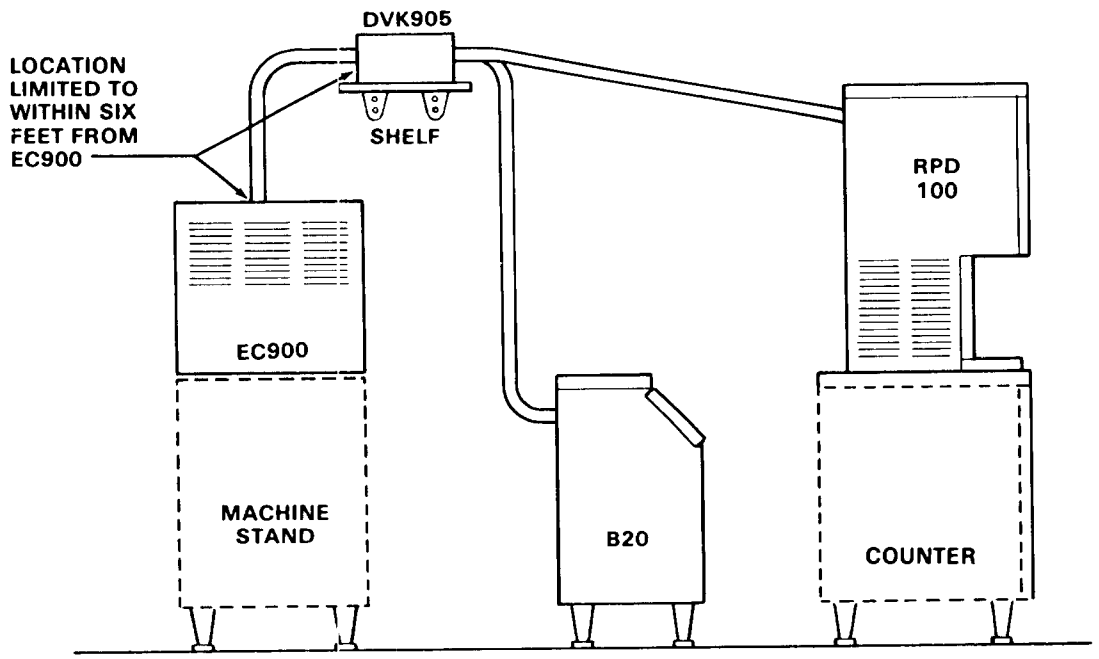

DIVERTER ASSEMBLY INSTALLED IN REMOTE LOCATION

Figure 1-2. Installation Layout - Examples.

1. Drill or cut a 1-7/16 inch diameter hole through the RPD100 left side panel, or rear panel, six inches below the top of the panel and three inches from the edge of the panel next to the left rear corner post.

CAUTION

Strictly observe the following instructions in the use and handling of SCOTSMAN approved nylon reinforced ice transport tubing, see Figure 1-2:

1. **Use only SCOTSMAN approved nylon reinforced one inch I.D. transport tubing available in 25, 50 and 100 foot lengths, from your authorized SCOTSMAN dealer.**
2. **DO NOT splice tubing.**
3. **DO NOT route tubing from above the Dispenser down to the base and back up to the ice storage bin level. This U-shape in tubing forms a trap, or low section in the tubing that will fill with water which cannot be drained.**
4. **Route all transport tubing to allow meltage water to drain either to the RPD100, the EC900, or in both directions.**

2. Insert the end of the Nylobrade transport tubing through the hole prepared in Step 1 above; then, guide the end of the tubing under the Saddle, through the two U-clamps, with the end of the tubing extending about one inch beyond the last U-clamp. Excess tubing should be cut off, square and even.

3. RPD100 (Up to S/N 532982-09S ONLY)

   Remove the two thumbscrews from the Bin Control Thermostat and the two wingnuts from the Bulb Holder Assembly; then lift the two parts from the Saddle and carefully unwind the capillary tube for removal. Do not kink the tube or use excess pulling or bending.

   RPD100 (S/N 532983-09S and above ONLY)

   Remove the two wingnuts and the Bulb Holder Assembly from the saddle.

4. Carefully uncoil the capillary tube of the Bin Control Thermostat to be installed; then, position about two and one-half to four inches of the end of the capillary tube along the rear of the bottom, notched crosspiece of the Bulb Holder, from the right end.

5. Diagonally wind the capillary tube, from right to left, over to the left vertical part of the assembly. If it appears the capillary tube will be too short, skip a notch or two when winding the tube.

6. Position and install both parts, the Bulb Holder and the Bin Control Thermostat in place on the Saddle and secure with the thumbscrews and wingnuts removed earlier.

CAUTION

Dress the capillary tube neatly against the Bulb Holder, to be sure no part of the capillary tube extends below the bottom crosspiece of the Bulb Holder, and that the end of the capillary tube, or any part, sticks out behind the Bulb Holder, which could cause ice to be held against the tube and give a false indication of a filled bin.

7. Route the three wires, Yellow, Orange, Blue, from the right-hand side of the OUTLET end of the Diverter box, along the Nylobrade Transport tube, on the same side, to the RPD100, wired as Bin-1, and connect to Bin Control Thermostat terminals as follows:

   Yellow to Terminal - 2

   Orange to Terminal - 1

   Blue to Terminal - 3.

8. Route the three wire leads, Brown. Red, White-Violet, from the left-hand side of the OUTLET end of the Diverter box, along the Nylobrade transport tube, on the same side to the RPD100, wired as Bin -2, and connect to Bin Control Thermostat terminals as follows:

   Brown to Terminal -2

   Red to Terminal -3

   White-Violet to Terminal -1.

VII. FINAL CHECK LIST

1. Is the Ice Diverter Assembly level? (IMPORTANT)
2. Have all electrical and tubing connections been made, including proper grounding wire?
3. Has the voltage been tested and checked against the wiring diagram?
4. Has all attaching hardware been checked to be sure all connections are snug and properly secured?
5. Has the owner/user been given the installation and operating instructions on how to operate the Ice Diverter Assembly?
6. Is the Ice Diverter Assembly in a room or space where ambient temperatures are a minimum of 50 degrees F. all year around?
7. Has all Nylobrade transport tubing been checked for proper support to prevent low water-trapping spots, kinking, proper incline for drain, and that tubing insulation is properly installed?
8. Has the owner been given the name and telephone number of the authorized SCOTSMAN Distributor, or Service Agency serving him?

SECTION II

OPERATING INSTRUCTIONS

I. START UP

1. Move the slide switch, on the OUTLET end of the Diverter housing toward the Nylobrade transport tube supplying the Bin with the priority.
2. Move both manual ON-OFF toggle switches on the EC900 to the ON position, to start the automatic icemaking operation.
3. Within two or three minutes of operation, flaked ice will begin dropping into the extruder feeder hose from the ice spout at the upper end of the freezer assembly.
4. Within the next two minutes or so, squared broken cubed ice should be emerging from the breaker end of the extruder assembly and into the Nylobrade ice transport tube connected to the INLET end of the Ice Diverter Assembly.

NOTE

During the next phase, the time required will vary from installation to installation, and from individual bin location to bin location. This time period is the length of time required to transport ice from the outlet of the extruder breaker to the Ice Diverter Assembly and from there to the bin.

5. Observe the time required for ice to be transported from the extruder breaker to the dispenser for your future reference. That is, how long in minutes it takes for the first ice to be deposited in the dispenser.
6. Let the icemaking process continue without interruption until the Priority bin is filled up to the bin thermostat.
7. Check that after ice contacts the priority bin thermostat the diverter assembly is activated and directs ice flow to alternate bin.
8. Remove an amount of ice from the priority bin thermostat to warm the sensing bulb, this action will signal the diverter to direct ice flow from the alternate bin back to the priority bin and filling will continue until priority bin is full.
9. Observe that after priority bin is full diverter is activated directing ice flow to alternate bin.
10. Ice flow will continue to be supplied to the alternate location until ice contacts the alternate bin thermostat and stops the atuomatic icemaking process. Both bins are full.
11. Moving the slide switch located on the discharge end of the DVK905-1B will reverse priority to alternate location.
12. If priority switching does not operate as outlined refer to: Service Diagnosis Section.

SECTION III

PRINCIPLES OF OPERATION

How It Works

I. GENERAL

The following text describes the sequential series of events as they occur within the priority circuit and the effects on the ice supply to two separate locations, designated as Bin-1 and Bin-2.

A. PRIORITY IS BIN-1.

The Priority Switch is positioned toward Bin-1, reference Wiring Diagram, which indicates the priority of ice supply is transported to Bin-1. The contacts 2-3 of Bin-1, Bin Control thermostat are CLOSED and Relay C is activated which CLOSES contacts 5-7 of that Relay completing the circuit to the Bin Control Contactor Coil in the EC900. The EC900 Extruded Cuber continues to supply and transport ice to the DVK905-1B Diverter, with the rotor positioned to Bin-1, until Bin-1 is filled with ice; which OPENS contacts 2-3 and CLOSES contacts 2-1 of the Bin Control Thermostat. Relay C is deactivated which OPENS contacts 5-7 of that relay and Relay B is activated which CLOSES contacts 5-7 of that relay which continues to supply power to the Bin Control Contactor Coil in the EC900.

With contacts 2-3 of Bin 2 Bin Control Thermostat CLOSED, Bin-2 is signalling for ice and the circuit is made thru the NO contacts of Cam Switch 2 to the Relay A Coil, CLOSING contacts 5-7 of that Relay, which activates the Rotor to rotate one-half revolution. This rotation of the Rotor diverts the supply of ice from Bin-1 to Bin-2, this action also OPENS Cam Switch 2 NO contact and CLOSES the NC contact deactivating Relay A Coil which OPENS that contacts 5-7 STOPPING the Diverter Motor.

When Bin-2 is filled with ice, contacts 2-3 OPEN and contacts 2-1 of Bin-2 Bin Control Thermostat CLOSE, which signals the Rotor to rotate one-half revolution and divert ice to the priority Bin-1; or, if both bins are filled with ice, both Bin Control Thermostats have contacts 2-1 CLOSED; this condition deactivates Relay B and Relay C which OPENS contacts 5-7 in each removing power to the Bin Control Contactor Coil in the EC900 which will SHUT OFF the EC900 icemaking process, and the Rotor will not rotate.

B. PRIORITY IS BIN-2.

The Priority Switch is positioned toward Bin-2, reference Wiring Diagram, which indicates the priority of ice supply is to Bin-2. The contacts 2-3 of Bin-2, Bin Control Thermostat are CLOSED and Relay B is activated which CLOSES contacts 5-7 of that Relay completing the circuit to the Bin Control Contactor Coil in the EC900. The EC900 Extruded Cuber continues to supply and transport ice to the DVK905-1B Diverter, with the rotor positioned to Bin-2, until Bin-2 is filled with ice; which OPENS contacts 2-3 and CLOSES contacts 2-1 of the Bin Control Thermostat. Relay B is deactivated which OPENS contacts 5-7 of the relay and Relay C is activated which CLOSES contacts 5-7 of that relay which continues to supply power to the bin Control Contactor Coil in the EC900 unless Bin is full and contacts 2-3 OPEN.

With contacts 2-3, of Bin-1 Bin Control Thermostat CLOSED, Bin-1 is signalling for ice and circuit is made to the relay coil CLOSING contacts 5-7 of that relay, which activates the rotor to rotate one-half revolution. This rotation of the rotor diverts the supply of ice from Bin-2 to Bin-1 thru the NC contacts of Cam Switch 2.

When Bin-1 is filled with ice, contacts 2-3 OPEN and contact 2-1 of Bin-1 Bin Control Thermostat CLOSE, which signals the rotor to rotate one-half revolution and divert ice to the Bin-2; or, if both bins are filled with ice, both Bin Control Thermostats have contacts 2-1 CLOSED, the condition deactivates Relay B and Relay C which OPENS contacts 5-7 in each removing power to the Bin Control Contactor Coil in the EC900 which will SHUT OFF the EC900 icemaking process and the Rotor will not rotate.

SECTION IV
ADJUSTMENT AND REMOVAL AND REPLACEMENT

The procedures provided in this Section are arranged in alphabetical order, to make specific Adjustment and Removal and Replacement information easy to locate.

Read the instructions thoroughly before performing any Adjustment or Removal and Replacement Procedures.

WARNING

Be sure the electrical power supply is OFF, before starting any of the following REMOVAL AND REPLACEMENT procedures, as a precaution to prevent possible personal injury or damage to equipment.

I. ADJUSTMENT FOR THE DIVERTER ROTOR

NOTE

When the Diverter Rotor is removed and the same Diverter Rotor is reinstalled, normally no adjusting is required. The following procedure should be performed when a replacement Diverter Rotor is being installed; or when the setscrews on the Adjusting Pad have somehow become changed from the original settings.

1. With the replacement Diverter Rotor installed and all parts reassembled, as detailed in procedure IV-V, measure the space between the two Delrin bushings. The acceptable space is SEVEN to TEN thousandths of an inch.
2. TO INCREASE SPACE: When the space is LESS than SEVEN thousandths of an inch, rotate each of the three adjusting setscrews on the Adjusting Pad, OUT or COUNTER-CLOCKWISE, one-fourth of a turn.
3. TO DECREASE SPACE: When the space is MORE than TEN thousandths of an inch, rotate each of the three adjusting setscrews on the Adjusting Pad, IN or CLOCKWISE one-fourth of a turn.
4. Repeat steps 2 and 3, as necessary to result in the acceptable SEVEN to TEN thousandths inch clearance.

II. ADJUSTMENT OF THE DIVERTER ROTOR ROTATION ALIGNMENT

NOTE

Normally, this adjustment is not required, as it is performed at the factory. When a replacement rotor is installed and the rotor alignment checked visually, by looking into the INLET end of the Diverter Body, if there is an over-rotation or under-rotation, of about 1/16-inch or so observed, adjustment is necessary to prevent the possibility of ice backing up, jamming and forcing the Nylobrade tube off of the INLET end of the Diverter Body.

1. Remove screws and the OUTLET end Panel.
2. Remove INLET tube and clear all ice from the Diverter.
3. Loosen both screws on the Cam Switch Bracket.

NOTE

Moving the Cam Switch Bracket UP, in its slot, will cause the microswitch to rotate the Diverter Rotor slightly in the CLOCKWISE direction. Moving the bracket DOWN, results in COUNTERCLOCK-WISE direction rotation of the Diverter Rotor, as viewed from the OUTLET, or motor end, of the Diverter Body.

4. Scribe or mark a reference line at the center of the slot in the bracket; then, rotate the bracket about 1/16-inch in the direction required to correct the alignment error. Tighten screws.

NOTE

Moving the Cam Switch Bracket causes a converse movement of the actuator arm on the microswitch, which must be adjusted in the OPPOSITE direction the bracket was rotated. The actuator arm requires travel space equal to about half the distance between the space from the inner surface to the outer surface of the Cam.

5. Loosen the screw on the microswitch, nearest the roller, and rotate the switch in the OPPOSITE direction the bracket was rotated, about 1/16-inch, or less.
6. Depress the actuator arm and let loose, observing amount and location of travel in relation to its position to the cam. Also, listen for the audible clicks as switch OPENS AND CLOSES. When the clicks occur about midway between the actuator arm travel, caused by the cam, tighten screws.
7. Repeat steps 3 through 5 to achieve the correct rotation alignment of the rotor and the associated adjustment to the actuator arm of the microswitch.

III. ADJUSTMENT OF THE TRANSPORT TUBE SAFETY SWITCH

NOTE

The three Safety Switches, one located at the INLET end and two located at the OUTLET end of the Diverter Body, must be checked and adjusted every time the Transport Tube is installed at any of the three openings in the Diverter Body. The Safety Switch is installed with the actuator arm fully depressing the microswitch, to keep the circuit CLOSED; so, if there is an ice backup in the tube and it forces the tube OFF of the Diverter Body, the actuator arm is released, the circuit then OPENS, shutting OFF the EC900 icemaking process.

1. Remove screws and the top panel.
2. Bend the metal actuator arm of the microswitch so the arm keeps the microswitch FULLY depressed, while the tip of the actuator arm presses against the Nylobrade Transport Tube.
3. Make sure the tube clamps will not prevent the switch from opening, when the Nylobrade Tube is pushed off the end of the Diverter Body.

IV. REMOVAL AND REPLACEMENT OF THE DIVERTER BODY

A. To remove the Diverter Body:

1. Remove screws and the Diverter Box Top and End panels.
2. Loosen screws on the two hose clamps on each of the three, two-part Diverter Hose Clamps, securing Nylobrade tubing to the ends of the Diverter Body; then, slide the hose clamps off onto the Nylobrade tubing.
3. Separate and remove the two-part Diverter Hose Clamps from the Diverter Body, and remove the ends of the Nylobrade tubing from the three tube insert openings of the Diverter Body.
4. Disconnect electrical leads and remove screws and nuts from each of three Switches attached to flanges on the Diverter Body and remove the three Switches and Switch Brackets.
5. Remove four screws, lockwashers and nuts attaching the Motor Mounting Bracket to the end of the Diverter Body; disconnect electrical leads from the Gearmotor at the Terminal Board, two places, and electrical leads from the two switches on the bottom of the Cam Switch Bracket; then, slide the Gearmotor, Motor Mounting Bracket and attached Diverter Rotor out and remove the whole assembly from the Diverter Body.
6. Remove the Diverter Body from the three vertical brackets on the Base Pan Assembly.

B. To replace the Diverter Body, reverse the removal procedures.

V. REMOVAL AND REPLACEMENT OF THE GEARMOTOR AND DIVERTER ROTOR

A. To remove the Gearmotor and Diverter Rotor:

1. Remove screws and the Diverter Box Top and End panels.
2. Disconnect electrical leads from the Gearmotor at the Terminal Board, two places, and electrical leads from the two switches on the bottom of the Cam Switch Bracket.
3. Remove four screws, lockwashers and nuts attaching the Motor Mounting Bracket to the end of the Diverter Body; then, slide the Gearmotor, Motor Mounting Bracket and attached Diverter Rotor out and remove the whole assembly from the Diverter Body.

NOTE

The Diverter Rotor will usually remain INSIDE the Diverter Body, but can easily be removed. If it is removed along with the Gearmotor shaft, proceed with step 4.

4. Carefully pull and work loose the Diverter Rotor from the roll pin and shaft of the Gearmotor; then, remove Roll Pin from the shaft.

CAUTION

DO NOT disturb the three adjusting screws on the Adjusting Pad during removal in the next step or during the replacement procedures. The adjusting screws are factory adjusted and the settings should not be altered.

5. Slide off the Adjusting Pad and the two Delrin Bushings.
6. Loosen the setscrew and remove the Cam from the end shaft of the Gearmotor, opposite of the Roll Pin end.
7. Remove two screws and separate the Cam Switch Bracket, with two attached Switches, from the Gearmotor.

B. To replace the Gearmotor and Diverter Rotor, reverse the removal procedures. Refer to procedure IV-I, for adjustments when installing a replacement Diverter Rotor.

SECTION V

MAINTENANCE & CLEANING INSTRUCTIONS

I. GENERAL

The periods and procedures for maintenance and cleaning are given as guides and are not to be construed as absolute or invariable. Cleaning especially will vary, depending upon local water conditions and the ice volume produced; and, each Icemaker must be maintained individually, in accordance with its own particular location requirements.

The DVK905-1B in its function is only in contact with ice, unlike icemakers, such a the associated EC900, which has local inlet water entering the system for purposes of icemaking and for acting as a heat removal medium in the water-cooled models. The DVK905-1B then, is not exposed to the general and normal degree of maintenance and cleaning required by icemakers. At the end of the first year of service, or before, when schedules appear better, the Diverter Rotor should be removed and the Rotor as well as the interal surfaces of the Diverter Body inspected. At that time both parts should be cleaned using a solution of SCOTSMAN Ice Machine Cleaner. Refer to procedure V-II, CLEANING.

II. CLEANING

NOTE

Following the first cleaning of the Diverter Rotor and the Diverter Body, inspection of the parts before and after cleaning will assist in determining how often cleaning may be necessary. Cleaning requirements vary according to local water conditions and individual user operation.

1. Refer to procedure IV-IV to remove the parts and procedure IV-V-A-4 for removing the Diverter Rotor from the shaft of the Gearmotor.

WARNING

SCOTSMAN Ice Machine Cleaner contains Phosphoric and Hydroxyacetic acids. These compounds are corrosive and may cause burns if swallowed. DO NOT induce vomiting. Give large amount of water or milk. Call Physician immediately. In case of external contact flush with water. KEEP OUT OF THE REACH OF CHILDREN.

2. Prepare cleaning solution: Mix six ounces of SCOTSMAN Ice Machine Cleaner with one and one-half quarts of hot water.
3. Immerse the parts in the cleaning solution and scrub the parts with a brush, using a bottle brush for internal parts. Do not use a wire brush.
4. Wash the parts off in clean hot water and allow to drain.
5. Pour the cleaning solution into the Base Pan and check that the drain and drain hose properly drain the solution and are clean and clear of obstruction. Wash the Base Pan with hot water to rinse away the cleaning solution.
6. Refer to procedure V-III for sanitizing procedures.
7. Replace the cleaned and sanitized Diverter Rotor and Diverter Body in the reverse order of removal.

III. SANITIZING

Sanitizing is an important phase of the icemaking and dispensing operation. the following sanitizing procedures should be performed after every repair or replacement of parts in the DVK905-1B in or through which ice is transported or water may be drained. Additional requirements for performing the sanitizing procedure should be followed in accordance with the requirements of local Health Authorities.

NOTE

Contact your local Health Authorities and obtain their approval of the sanitizer you intend to use when sanitizing the DVK905-1B.

Prior to performing the sanitizing procedure, it is assumed the cleaning procedure has been performed up through step V-II-5.

WARNING

Read WARNING thoroughly BEFORE preparing sanitizing solution, in next step.

1. STERILAX 3-Q SANITIZING TABLETS

DANGER: KEEP OUT OF REACH OF CHILDREN. Tablets may be harmful or fatal if swallowed. May cause skin irritation or eye damage. Avoid prolonged skin contact. Do not get in eyes. In case of contact, flush with plenty of water. If irritation persists get medical attention. Avoid contamination of food.

FIRST AID: If tablets are swallowed drink promptly a large quantity of milk, egg whites or gelatin solution. Avoid alcohol.

NOTE TO PHYSICIAN: Probable mucusal damage may contraindicate the use of gastric lavage. Measures against circulator shock, respiratory depression and convulsion may be needed.

Rinse empty carton container thoroughly with water and discard. Always follow your health department regulation.

2. MIKRO-QUAT

DANGER: Causes high damage and skin irritation. Do not get into eyes, or on skin, or on clothing. Protect eyes when handling concentrated product. Harmful if swallowed. Avoid contamination of food.

FIRST AID: In case of contact, immediately flush eyes or skin with plenty of water for at least 15 minutes. For eyes, call a physician. Remove and wash contaminated clothing before reuse. If swallowed, drink promptly a large quantity of milk, egg whites or gelatin solution, or if these are not available, drink a large quantity of water. Call physician immediately.

1. Prepare one gallon of sanitizing solution composed of 450 PPM active quaternary ammonium germicide solution, using a quaternary ammonium sanitizing solution.

NOTE

Carefully follow directions and observe all precautions on the container of the compound.

*Three *Sterilax 3-Q sanitizing tablets per gallon of water; or, 2/3-ounce of *Mikro-Quat per gallon of water will yield a solution of about 450 PPM active quaternary.*

EXCEPTION: Preparation of the sanitizing solution specifically for the DVK905-1B parts, would of course not be required on occasions when the cleaning and sanitizing of the EC900 is scheduled simultaneously. The sanitizing solution prepared for the EC900 is of a volume sufficient to also include proper sanitizing of the DVK905-1B parts.

2. Immerse the parts in the sanitizing solution and wash the parts, flushing the solution thoroughly in, over and through all parts and surfaces of the DVK905-1B parts being sanitized.

3. Allow the parts to drain and air dry.

4. Replace the sanitized parts in the reverse order of removal.

**Sterilax 3-Q sanitizing tablets are distributed by Pittsburgh Chemical Laboratory, Inc., Pittsburg, PA 15222, and may be obtained through most restaurant supply houses.*

**Mikro-Quat is manufactuered by Economics Laboratory, Inc., Osborn Building, St. Paul, MN 55102, and may be obtained from them through their Magnus Division, The Klenzade Division, or from restaurant supply houses.*

SECTION VI
SERVICE DIAGNOSIS

The Service Diagnosis Section is for use in aiding the serviceman in diagnosing a particular problem for pin-pointing the area in which the problem lies, thus an ever available reference for proper corrective action.

The following charts list corrective actions for the causes of known symptoms of certain problems that can occur in the Extruded Cube Ice Diverter.

I. EXTRUDED CUBE ICE DIVERTER

SYMPTOM	POSSIBLE CAUSE	CORRECTION
EC900 does not shut off when ice contacts Bin Thermostat bulb (Other bin EMPTY).	Ice being diverted to wrong bin: 1. Nylobrade tube connected to wrong OUTLET end of Diverter Body. 2. Improper wiring connections to terminals of Bin Thermostat. 3. Rotor installed 180-degrees out of correct position. 4. No power to Rotor Motor. Defective brake on Rotor Motor.	1. Reverse Nylobrade tube connections at OUTLET end of Diverter Body. 2. Check Wiring Diagram, then rewire terminals. 3. Remove Rotor, reverse position, re-install. 4. Check power source to DVK905 and correct problem: not plugged in; need fuse replaced. Replace gearmotor.
Diverter Rotor Motor does not operate.	Faulty Relay B or C.	Replace Relay.
Diverter Rotor Motor operates continuously.	Faulty Relay B or C.	Replace Faulty Relay.
Both bins signal for ice, EC900 does not operate.	One or more hose safety switches not properly adjusted. Ice backup pushed hose off of Diverter Body, or EC900 Extruder, caused by restriction, or kink or too sharp bend in tubing; or, EC900 Spout switch tripped; or improper adjustment on Cam switch of Diverter. Defective Transformer in EC900.	Check all switches and bend switch arm to actuate switch. Check and remove restriction. Correct sharp bend or replace tubing. Check EC900 Spout switch position or replace defective switch. Check and adjust Cam switch on Diverter, be sure Rotor stops in correct unobstructed position for ice flow. Replace Transformer.

SECTION VII

WIRING DIAGRAMS

This Section is provided as an aid in understanding the electrical circuitry of the DVK905-1B.

The Wiring Diagrams in this section are:

Figure 7-1. Wiring Diagram - DVK905-1B.

WARNING

When conducting a continuity check of the DVK905-1B:

1. **Disconnect the main power source.**
2. **DO NOT use an incandescent lamp or jumper wire, conduct all tests with a volt-ohm-meter.**

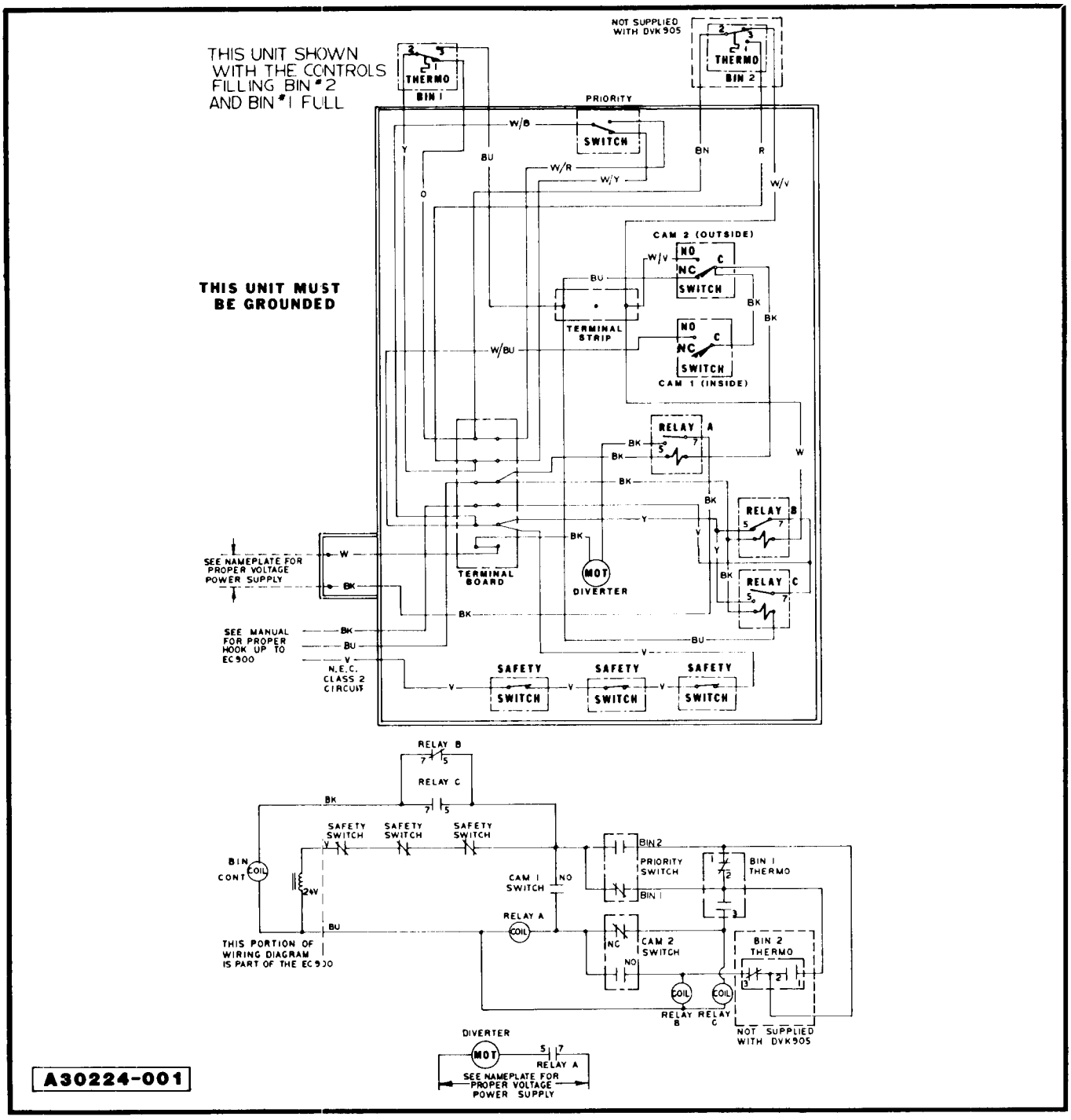

Figure 7-1. Wiring Diagram — DVK905-1B.

SECTION VIII
THE PARTS ILLUSTRATIONS AND PARTS LISTS

I. GENERAL

This section contains the Parts Illustrations and the Parts List for each of the major assemblies in the DVK905-1B Extruded Cube Ice Diverter.

Each Parts Illustration shows an assembly as an exploded view, with an Index Number for each part or sub-assembly, given in disassembly order. These Index Numbers key with the Parts List for the assembly and are found in the parts List Column headed Index Number. The Description Column gives the identifying nomenclature for the item indexed. The Part Number Column gives the number of item. The Number Required Column gives the number of items required per assembly, but not necessarily the total number of parts required per Diverter.

All assemblies are cross-referenced both from the major assembly listing where they first appear in the Parts Listing to their break-down listing, and from the break-down listing, back to the major assembly (next higher assembly) listing.

A *No Number* designation, when used in the Part Number Column indicates the unit is not available from SCOTSMAN as an assembly. This designation is used only for the convenience and clarity of division in cataloging.

When an Index Number is followed by a letter (e.g. la, lb), the letter indicates the part listed is part of the assembly indexed by the basic Index Number. The number required of the part indexed by the number and letter combination is only one of the assemblies indexed by the basic Index Number and not necessarily the total number or parts used in the Diverter. Where the notation *Ref* occurs in the Number Required Column the number of the assemblies or parts under a previous Index Number or in the next higher assembly Parts Listing. The next higher listing Figure/Index number is shown in the Description Column immediately following the items description.

II. HOW TO USE THE ILLUSTRATIONS AND PARTS LIST

To find the part number of a required part or assembly, turn to the List of Illustrations and find the page number of the Parts illustration of the major or sub-assembly containing the part. Turn to the indicated page and locate the part and its Index Number on the specific illustration. Find the Index Number on the required part in the Parts List to determine the complete description of the part.

III. HOW TO ORDER PARTS OR ASSEMBLIES

When ordering parts or assemblies, to avoid costly delays and errors in shipment, give the part number, the complete description shown in the list, and the quantities of each part or assembly required. Also include the Model name, the serial number of the Diverter for which the parts is required, and for parts which required color matching, the color of the Cabinet. See Figure 8-00, at the end of the Section for detailed ordering instructions.

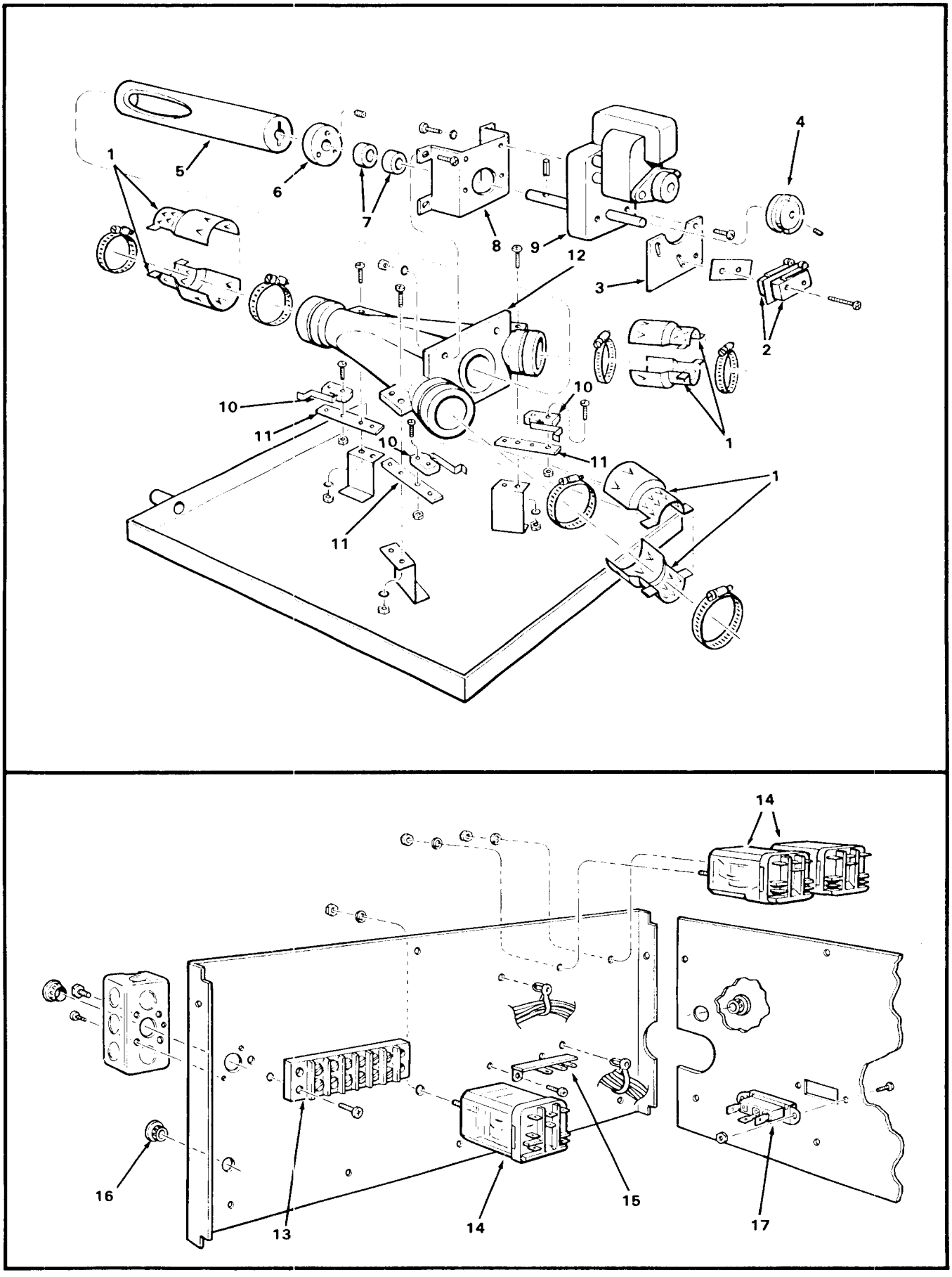

Figure 8-1. DVK905-1B — Major Assemblies.

INDEX NO.	DESCRIPTION	PART NUMBER	REQ'D NUMBER
	Major Assemblies - DVK905-1B	No Number	Ref.
	* * *		
1	Clamp, Hose - Diverter	A28252-001	6
	attaching parts, Index 1		
	Clamp, Hose	02-0179-02	6
	* * *		
2	Switch	12-1614-01	2
	Pad Insulation	No Number	2
	attaching parts, Index 2		
	Screw, No. 4-40 x 1-1/4 Phil Recess Pan Hd	03-1403-63	2
	Nut, No. 4-40	03-1406-14	2
	* * *		
3	Bracket, Cam Switch	A29516-001	1
	attaching part, Index 3		
	Screw, No. 8 x 1/4 T/F Tap	No Number	2
	* * *		
4	Cam	A28258-001	1
	attaching part, Index 4		
	Setscrew	03-0431-05	1
	* * *		
5	Rotor, Diverter	A28762-001	1
	attaching part, Index 5		
	Pin, Spring	03-0774-12	1
	* * *		
6	Pad, Adjusting	A28781-001	1
	adjusting screws (SEE NOTE at end of Parts List)		
	Setscrew, No. 10-24 x 3/8	03-0431-08	3
	* * *		
7	Bushing - Delrin	A28782-001	2
	* * *		
8	Bracket, Motor Mounting	A28783-001	1
	attaching parts, Index 8 to 12		
	Screw, No. 8-32 x 5/8 Phil Recess Pan Hd	03-1403-20	4
	Washer, No. 8 Plain	03-1407-02	4
	Lockwasher, No. 8 Helical Spring	No Number	4
	Nut, No. 8-32	03-1406-03	4

INDEX NO.	DESCRIPTION	PART NUMBER	REQ'D NUMBER
	attaching parts, Index 8 to 9		
	Screw, No. 8-32 x 1/4 Phil Recess Pan Hd	03-1403-15	4
	Lockwasher, No. 8 Helical Spring	No Number	4
	* * *		
9	Gearmotor	12-2110-01	1
	* * *		
10	Switch, Forming	A28242-001	3
11	Bracket, Switch	No Number	3
	attaching parts, Index 10 to 11		
	Screw, No. 4-40 x 1-1/4 Phil Recess Pan Hd	03-1403-63	2 (6)
	Nut, No. 4-40	03-1406-14	2 (6)
	attaching parts, Index 11 to 12		
	Screw, No. 8-32 x 3/8 Phil Recess Pan Hd.	03-1403-17	2 (6)
	Lockwasher, No. 8 Internal Tooth	03-1417-02	2 (6)
	Nut, No. 8-32	03-1406-03	2 (6)
	* * *		
12	Body, Diverter	A29249-001	1
	* * *		
13	Strip, Terminal	12-0813-03	1
	attaching part, Index 13		
	Screw, No. 8-32 x 5/8 Phil Recess Pan Hd	03-1403-20	2
	* * *		
14	Relay	12-2091-02	3
	attaching part, Index 14		
	Lockwasher, No. 6	03-1410-01	3
	Nut, No. 6-32	03-1406-01	3
	* * *		
15	Strip, Solder Terminal	12-2160-01	1
	attaching parts, Index 15		
	Screw, No. 6-32 x 3/8 Phil Recess Pan Hd	03-1403-04	2
	* * *		

INDEX NO.	DESCRIPTION	PART NUMBER	REQ'D NUMBER
16	Bushing	12-1213-02	1
	* * *		
17	Switch — (SPDT)	12-2054-01	1
	attaching parts, Index 18		
	Screw, No. 6-32 x 3/8 Phil Recess Pan Hd	03-1403-04	2
	Nut, No. 6-32	03-1406-01	1
	* * *		
	NOTE: Temperature Control Assembly consists of: Cover, Grommet, Bushing, 4 Screws	A29611-001	1
	Control, Temperature (included in A29611-001).	No Number	
	* * *	11-0412-01	1
	NOTE: Adjust three setscrews in Adjusting Pad until Rotor is just ahead of ridge, inside body, for uniform ice flow.		

2. Loosen and slide two hose clamps over the free end of the Nylobrade tubing. See Figure 1-1. DVK905-1B detail.
3. Cut the measured new end of the Nylobrade tubing *square and even* and *insert the tubing to the bottom shoulder*, inside the INLET end of the Diverter.
4. Install the two-part metal clamp device on INLET end of the Diverter, with the barbs on the inner surface of the large end positioned within the ring depression on the diverter body and the opposite end of the clamp parts on the Nylobrade tubing.
5. Slide one hose clamp into position over the large end of the two-part clamp, and the other hose clamp over the smaller end of the two-part clamp.
6. Position the hose clamp at the smaller end in the clamp parts: Tighten both clamps to a snug tightness. DO NOT over-tighten.

NOTE

The two-part metal clamp is designed so the barbs on the inner surface of the smaller end will just dig in the Nylobrade tubing enough to securely hold the tubing, and also the design prevents over-tightening.

7. Similarly cut the end of a length of the same size Nylobrade tubing and repeat steps 4, 5 and 6 on each of the OUTLET ends of the Diverter.
8. Route each Nylobrade tube to the associated bin or dispenser, avoiding undue heated areas and support tubing to prevent trapping water in horizontal areas of tubing.

CAUTION

HEED THE FOLLOWING PRECAUTIONS WHEN INSTALLING NYLOBRADE ICE TRANSPORT TUBING:

1. **Use only one-inch I.D. Nylobrade tubing.**
2. **Use only one continuous length of Nylobrade tubing for each point-to-point tubing run. DO NOT install spliced tubing. This can cause ice jamming problems.**
3. **Cut ends of Nylobrade tubing square and even and remove all shavings.**
4. **Support all Nylobrade tubing to prevent low spots and trapping water.**
5. **DO NOT use any substitute tubing.**
6. **Install tubing so all meltage water will drain to one end of the tubing or to the other end.**
7. **DO NOT install tubing in areas where ambient temperatures are below 40 degrees F. or above 100 degrees F.**

9. Install tubing insulation of one and one-half inch I.D. Armoflex, or equivalent, around the lengths of routed Nylobrade tubing. (Half-inch wall thickness insulation.)
10. Install drain line on the drain fitting provided on the Diverter Assembly drain pan.
11. Cut the Nylobrade tubing to the required length at the associated ice storage bin and dispenser, and secure in place with clamps provided.

V. BIN THERMO BRACKET

A. To install Bin Thermo Bracket: Refer to Figure 1-1 Installing Tubes and Clamps.

1. Using the bin thermo bracket as a template drill or cut a 1-7/16 inch diameter hole through the left end wall of the Bin, centered 2-1/2 inches below the top center of the wall.
2. Inside the Bin, align the hole in the Thermostat Bracket with the hole prepared in above step, and attach the Bracket to the inner wall, using four screws.
3. Insert the two-piece Hose Clamp Assembly through the hole in the Thermostat Bracket and Bin, so the clamping parts are outside of the Bin; then, attach he Clamp parts inside the Bin, using two screws.
4. Position the Bin Control Assembly housing immediately below the hole prepared in step 1 above, on the outside of the Bin, securing with two screws.
5. Carefully route the capillary tube through the open hole in the Bin wall and thread the tube through the two loops in the wire Bulb Holder, nearest to the wall; then, bend a U-turn in the tube and thread it through the second set of loops, extending the end of the tube at least an inch beyond the last loop of the Bulb Holder
6. Dress the tube neatly, to take up excess slack back to the Bin Control Thermostat housing and carefully coil the excess tubing out of the way.
7. Slide a hose clamp over the end of the Nylobrade transport tube and insert the end of the tube through the hole in the Bin wall, loosely fitting the hose clamp around the two-piece Hose Clamp Assembly holding the tube.
8. Adjust the end of the Nylobrade transport tube, inside the Bin, to extend away from the inner wall just beyond the end of the Bulb Holder; then, tighten the hose clamp

TABLE OF CONTENTS

Table of Contents i

List of Illustrations iii

Specifications iv

Section I. GENERAL INFORMATION & INSTALLATION 1-1

I Introduction 1-1

II Unpacking and Inspection 1-1

III Location and Leveling 1-2

IV Electrical Connections 1-3

V Water Supply and Drain Connections 1-3

VI Ice Transport Tube Installation 1-3

VII Installation - Optional Kits 1-4

VII Final Check List 1-4

Section II - START UP OPERATION 2-1

I Start Up 2-1

Section III - PRINCIPLES OF OPERATION - How It Works 3-1

I Icemaker/Extruder 3-1

II Electrical/Refrigeration 3-2

Section IV - ADJUSTMENT AND REMOVAL AND REPLACEMENT 4-1

I Adjustment of the Bin Thermostat Control 4-1

II Adjustment of the Leg Levelers 4-2

III Adjustment of the Water Regulator Assembly 4-2

IV Adjustment of the Water Reservoir Float 4-2

V Removal & Replacement of the Auger, Water Seal, Bearings & Coupling 4-2

VI Removal & Replacement of the Compressor 4-3

VII Removal & Replacement of the Condenser - Air-Cooled Models 4-4

TABLE OF CONTENTS (Cont'd.)

VIII Removal & Replacement of the Condenser - Water-Cooled Models 4-4
IX Removal & Replacement of the Drier 4-4
X Removal & Replacement of the Drivemotor Assembly 4-5
XI Removal & Replacement of the Extruder Assembly - Auger - Breaker 4-5
XII Removal & Replacement of the Fan Motor Assembly - Air-Cooled Models 4-5
XIII Removal & Replacement of the Freezer Assembly 4-6
XIV Removal & Replacement of the Spout Assembly 4-7
XV Removal & Replacement of the Water Pressure Control 4-7
XVI Removal & Replacement of the Water Regulator Assembly Water-Cooled Models 4-8
Removal & Replacement of the Water Reservoir Assembly 4-8

Section V - MAINTENANCE & CLEANING INSTRUCTIONS 5-1
I General 5-1
II Icemaker 5-1
III Cleaning 5-2
IV Sanitizing 5-3

Section VI - SERVICE DIAGNOSIS 6-1
I Icemaking - Refrigeration System 6-1
II Extruder Mounting Assembly 6-3

Service VII - WIRING DIAGRAMS 7-1
Wiring Diagram - Air-Cooled Model - EC900A-2A & EC900A-7A 7-2
Wiring Diagram - Water-Cooled Model - EC900W-2A & EC900W-2A 7-3

TABLE OF CONTENTS (Cont'd.)

Wiring Diagram - Air-Cooled Model - EC900A-3A 7-4
Wiring Diagram - Water-Cooled Model - EC900W-3A 7-5

SectionVIII THE PARTS ILLUSTRATIONS AND PARTS LISTS 8-1
I General 8-1
II How to Use the Illustrations and Parts Lists 8-1
III How to Order Parts or Assemblies 8-1

LIST OF ILLUSTRATIONS

Specifications v
Figure1-1 Installation Practice 1-6
1-2 Examples of Ice Transport Tube Routing 1-7
2-1 Water Schematic 2-1
3-1 Refrigeration Cycle 3-1
4-1 Adjustment of the Temperature Control 4-1
4-2 Removal of the Extruder Assembly - Auger Breaker 4-6
4-3 Removal of the Freezer Assembly 4-7
4-4 Removal of the Spout Assembly 4-7
4-5 Removal of the Water Reservoir Assembly 4-8
7-1 Wiring Diagram - Air-Cooled Model - EC900A-2A 7 EC900A-7A 7-2
7-2 Wiring Deagram - Water-Cooled Model - EC900A-2W & EC900W-7A 7-3
7-3 Wiring Diagram - Air-Cooled Model - EC900A-3A 7-4
7-4 Wiring Diagram - Water-Cooled Model - EC900W-3A 7-5
8-A EC900 Extruder Cuber Flow Chart 8-2
8-1 EC900 Extruder Cuber Cabinet 8-3
8-2 Major Assemblies - Air-Cooled 8-5

LIST OF ILLUSTRATIONS (Cont'd.)

8-3 Major Assemblies - Water-Cooled 8-11
8-4 Compressor Assembly 8-17
8-5 Extruder Assembly 8-18
8-6 Spout Assembly 8-20
8-7 Freezer Assembly 8-22
8-8 Drivemotor Assembly 8-25
8-9 Control Box Assembly 8-28
8-00 How to Use the Illustrated Parts List 8-31

This icemaker has been engineered to our own rigid safety and performance standards. The National Sanitation Foundation (NSF) seal, signifies that it is listed with the NSF and that it complies with the materials and construction standards of the NSF. In addition, the Underwriters Laboratories, Inc., (UL) Listing Mark and the Canadian Standards Association (CSA) Monogram, both signifv that its construction and design have been inspected and tested by them. NSF, UL and CSA inspectors also periodically examine production icemakers at the factory, to assure continued compliance.

To retain the safety and performance built into this icemaker, it is important that installation and maintenance be conducted in the manner outlined in this manual.

SPECIFICATIONS
MODEL EC900

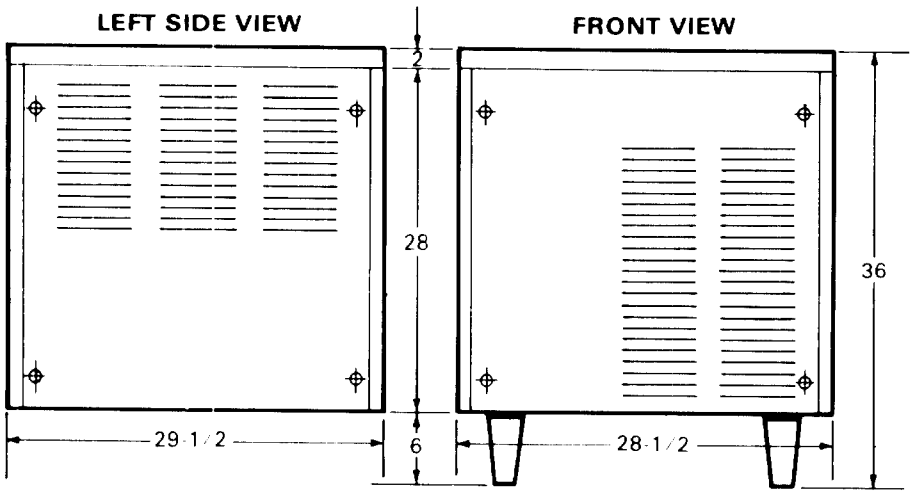

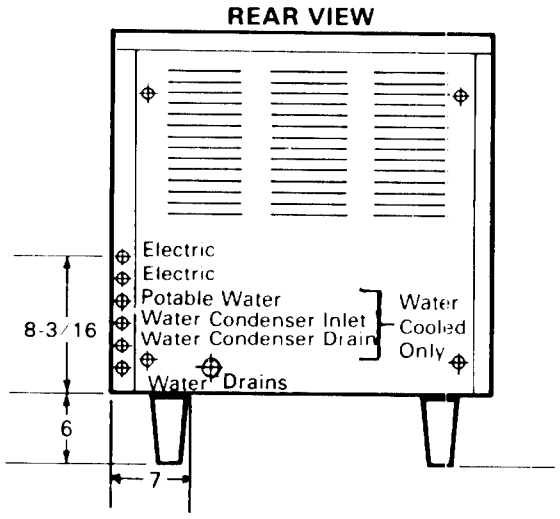

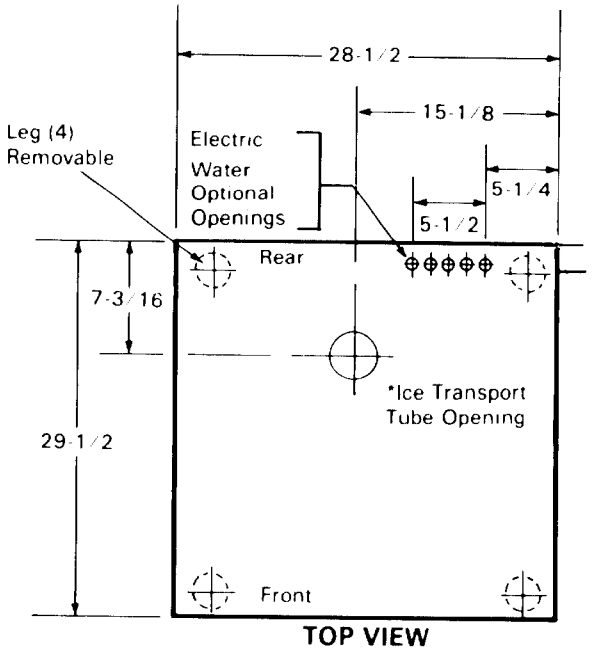

SPECIFICATIONS (Cont'd.)

MODEL EC900

Air-Cooled: EC900A-2A
EC900A-3A
EC900A-7A

Water-Cooled: EC900W-2A
EC900W-3A
EC900W-7A

Electrical: 208-240/60/3
208/60/1
230/60/1

Est. Ship. Wt: Air-Cooled 347 lbs.
Water-Cooled 332 lbs.

EASY ACCESS SERVICE PANELS

OPTIONAL LEG KIT

KLP2E - 6-inch metal legs, Black Enamel
KLP2S - 6-inch metal legs. Nickel Plated

OPTIONAL PANELS KIT

SPK-EC-900 - Stainless Steel Panels for use with the EC900.

MODEL NUMBER		MOTORS	VOLTS	HP/WATT	F.L.A.	L.R.A.
		COMP.				
SERIAL NUMBER		DRIVE				
		FAN				
REFRIGERANT 12	HEATER					
OZ.	WATTS	OTHER				
TEST PRESSURE 140 LO - 235 HI						
A.C. SUPPLY VOLTAGE			WIRES	CYCLES	PHASE	
MAXIMUM FUSE SIZE	AMPS	MINIMUM CIRCUIT AMPACITY				

SEE NAMEPLATE for electrical and refrigeration specifications. Locate the NAMEPLATE on the lower, left part of the Rear Panel. Shown at left.

Remove Front Panel to locate the Model/Serial Number plate, shown below on the front of the chassis base, left of the Control Box.

MODEL NUMBER	
SERIAL NUMBER	

We reserve the right to make product improvements at any time. Specifications and design are subject to change without notice.

SECTION I
GENERAL INFORMATION & INSTALLATION

I. INTRODUCTION

This manual provides the specifications and the step-by-step procedures for the installation, start-up, operation, and the maintenance and cleaning for the SCOTSMAN Model EC900 Extruder Cuber.

The Model EC900 Extruder Cubers are quality designed, engineered and constructed, and thoroughly tested icemaking and ice transporting systems, providing the utmost in flexibility to fit the needs of a particular user. Separate sections detail more specifically: General Information & Installation; Start-Up Operation; Principles of Operation; Adjustment and Removal and Replacement Procedures; Maintenance and Cleaning Instructions; Service Diagnosis; Wiring Diagrams; and, the Illustrated Assemblies and Parts Lists.

DESCRIPTION

An attractive compact cabinet of leathergrain embossed steel, with charcoal brown baked enamel high glossy finish. Also, an optional stainless steel panel kit is available. These removable panels allow easy access to electrical and mechanical components for cleaning and maintenance.

SEALED REFRIGERATION SYSTEM

To provide quiet efficient operation of the Icemaker, the Compressor motor is internally spring-mounted. The Compressor motor is covered by a five year parts warranty. The Freezer Assembly is powered by a direct-drive, gear motor, Drivemotor Assembly. The Extruder Assembly is powered by a one-half horsepower electric motor, which belt-drives a gear reducer that is directly coupled to the Extruder.

ASSOCIATED DISPENSER, BINS, DIVERTER

The Model RPD100 Sanitary Ice Dispenser is an associated piece of equipment for ice storage and automatic dispensing and can be installed directly on top of the EC900; or, at a remote location or in another room, with ice transported to it through continuous Nylon reinforced tubing.

Since the EC900 Extruder Cubers are continuous flow type icemakers and do not have their own attached ice storage bins, it is necessary to use an auxiliary bin, such as the bins listed below, except of course, when used with the RPD-100 noted above.

Use Bins: B20, B40, B60, B80, B90, B120, B500 B750. Also refer to Specification sheets for associated accessories and extent of installation combinations possible.

The Model DVK900 Ice Diverter Assembly is designed to be used with the EC900, for providing the capability of alternately supplying ice to two separate locations. Utilizing a special priority circuit with controls, indicator lamps and switches, the Diverter allows the user to select the priority of ice demand to be given to one location. When that need is filled, the bin thermostat signals the Diverter Rotor to operate and divert the supply of ice to the other location.

A bin thermostat temperature control device is shipped with the EC900 to provide the necessary shut-off and start-up demands from the bin to the EC900 icemaker controls. Within the control panel attached to the rear of the EC900 control box, a terminal block is provided for connecting the temperature control from any associated bin or dispenser.

II. UNPACKING AND INSPECTION

1. Call your authorized SCOTSMAN Distributor or Dealer, for proper installation. He's listed under ICEMAKING EQUIPMENT and MACHINERY in the yellow pages of the telephone book.
2. Visually inspect the exterior of the shipping container and skid, and any severe damage noted, should be reported to the delivering carrier; and, a concealed damage claim filed subject to internal inspection, with carrier representative present.
3. BEFORE removal of any panels or packing, carefully lay the cabinet on its back and remove the shipping bolts and the shipping base or skid.
4. When ordered, install the optional leg levelers in the cabinet base sockets; then, raise the cabinet to the upright position.

5. Remove screws and shipping tape, and all doors and service panels from the cabinet, and inspect for any concealed damage. Notify carrier of any concealed damage claims, as stated in step 2 above.
6. Remove all internal support packing tape and wires, if any, in machinery compartment.
7. Check that refrigerant lines do not rub or touch lines or other surfaces, and that fan blades, if any, move freely.
8. Check that the Compressor is snug on all mounting pads.
9. Remove water strainer from shipping envelope, for installation in water supply line.
10. Use clean damp cloth or disposable paper wiper to wipe clean the exterior surfaces of the cabinet.
11. See NAMEPLATE on the rear service panel, near the left rear corner of the cabinet and check that the location source voltage corresponds with the voltage specified on the nameplate.

CAUTION

Improper voltage supplied to the Icemaker will void your parts replacement program.

12. Remove the Manufacturer's Registration Card from the front of the User's Manual and fill in all spaces including: Model Number and Serial Number taken from the aluminum plate located at the front center of the Chassis base, with Front Panel removed. Forward the completed, self addressed, registration card to the SCOTSMAN Factory.

III. LOCATION AND LEVELING

WARNING

This Extruder Cuber is NOT designed for outside installations where air temperatures are below 50-degrees F., or above 100-degrees F., and the water temperature is below 40-degrees F., or above 100-degrees F. Extended periods of operation at temperatures exceeding these limitations will constitute misuse, under the terms of the SCOTSMAN Manufacturer's limited warranty coverage.

1. Position the Cabinet in the selected permanent location.

NOTE

Prior consideration for location site shall include:

1. *Minimum room temperature 50-degrees F. and maximum room temperature 100-degrees F.*
2. *Water inlet temperatures: Minimum 40-degrees F. and Maximum 100-degrees F.*
3. *Well ventilated location for Air-Cooled model, advising user to frequently clean Condenser, located directly behind front service panel.*
4. *SERVICE ACCESS: Adequate space for all service connections, through the rear of the cabinet. A six-inch minimum clearance at rear, left and front louvered panels for routing cooling air drawn into and exhausted out of the compartment to maintain proper condensing operation on Air-Cooled models.*

2. Level the Cabinet in both the left-to-right and front-to-rear directions. The optional leveling legs can be adjusted with an open-end wrench.

NOTE

When installing the EC900 on the floor without legs, the base shall be secured to the floor and properly sealed to prevent contaminants and vermin from entering through the base of the Cuber. The following procedure is recommended and the sealant can be a food grade caulking material, or SCOTSMAN Sealant P/N 19-0529-00 or 19-0529-01.

a. *Position EC900 in selected site location; then, with a marking pen, trace the outline of the Cuber base on the floor.*
b. *Remove the Cuber temporarily and proceed to lay a one-fourth inch bead of sealing or caulking compound on the floor, just INSIDE the above traced outline.*
c. *Carefully position the Cuber over the traced outline and sealant bead and gently lower the Cuber in place, checking to ensure there is a continuous and proper seal around the entire base of the Cuber.*
d. *BEFORE the sealant sets-up or hardens, check the front-to-rear and left-to-right leveling of the Cuber and, if required, add shims to achieve proper leveling.*
e. *When necessary, recaulk any areas opened by the shim or leveling process, performed step d above.*

IV. ELECTRICAL CONNECTIONS

See NAMEPLATE for current requirements to determine wire size to be used for electrical hookup. The Extruder Cuber requires a solid earth ground wire. See wiring diagram.

Be certain the Extruder Cuber is connected to its own electrical circuit and individually fused. The maximum allowable voltage variation should not exceed ten percent of the nameplate rating, even under starting conditions. Low voltages can cause erratic operation and may be responsible for serious damage to the overload switch and motor windings.

All external wiring should conform to the national, state and local electrical code requirements. Usually an electrical permit and services of a licensed electrician will be required.

V. WATER SUPPLY AND DRAIN CONNECTIONS

A. AIR-COOLED MODELS: The recommended water supply line is a 1/4-inch O.D. copper tubing. Connect to cold water supply line with standard plumbing fittings, with a shutoff valve installed in an accessible place between the water supply and the Cabinet.

A wire mesh strainer is provided and must be installed, with the cleanout plug down. Locate the strainer in the water supply line, next to the Cabinet with the arrow on the strainer, in the direction of the water flow. The strainer protects against large particles of rust, scale, etc., which may be loosened in the water supply pipe line at the time of installation.

In some cases, a plumbing permit and services of a licensed plumber will be required.

WARNING

To prevent damage to the freezer mechanism, DO NOT operate this unit when the water supply is OFF, or is below 20 PSI, the recommended water pressure. Position the master switch to the OFF position, until proper water supply is resumed.

The Icemaker in this Cabinet will NOT operate when water supply temperatures are below 40-degrees F. or above 100-degrees F.

B. WATER-COOLED MODELS: On Water-Cooled models a separate connection, to the Condenser is required. A 3/8-inch O.D. copper tubing is provided for a separate water inlet line to be connected and a separate drain line to be connected.

NOTE

The WARNING, in the text above for the Air-Cooled models equally applies for the Water-Cooled models. In both type installations, water supply must be installed to conform with local plumbing codes. In come cases, a plumbing permit and services of a licensed plumber will be required.

C. DRAIN CONNECTIONS: All drains are gravity type and must be 1/4-inch fall per foot on horizontal runs. The drains to be installed to conform with local code. The drain receptacle should be an open, trapped or vented construction.

Connect a drain line to 7/16-inch I.D. tube from the Freezer drip pan, a drain line from the Reservoir overflow, both to drain into the Extruder drain pan, which has a drain out the rear of the Cabinet. Connect a separate drain line to 3/8-inch O.D. drain tube from the Water-Cooled Condenser, on Water-Cooled models.

WARNING

This Extruder Cuber will NOT operate when water supply temperature is below 40-degrees F., or above 100-degrees F.; and, requires 20 PSI flowing water pressure, without interruption.

VI. ICE TRANSPORT TUBE INSTALLATION

A. RPD100 DISPENSER MOUNTED ON TOP OF EC900:

1. Remove the rear and side panels from both the EC900 and the RPD100. Remove and discard the Top Panel from the EC900.

NOTE

A drip pan is provided with the EC900, for use when the RPD100 is mounted on top of the EC900. The drip pan will catch any dripping from drink heads, or the water spout, when the RPD100 Sink Assembly is removed. With attaching screws removed, the drip pan can be slid to the rear to provide access to the EC900 from the top for service requirements. The drip pan is not required when the Top Panel is installed on the EC900.

2. Position and attach the RPD100 to the top of the EC900 following the detailed installation procedures in the RPD100 instructions.
3. Install the 110-inch long, one-inch I.D. Nylon-reinforced P.V.C. ice transport tubing on the outlet end of the EC900 Extruder Breaker, and secure with the clamps provided.

CAUTION

Use extra care when routing the ice transport tubing, see Figure 1-2, in the next steps to:

1. **Avoid any kinking or restrictions of any kind to tubing, and, that all curves or bends in tube routing have the largest possible radius. Minimum recommended bend radius is six and one-half inches.**
2. **Be sure to route tubing away from all moving parts, such as pulleys and belts. Ties may be required to ensure that tubing does not contact any moving parts.**
3. **Use only tubing approved by SCOTSMAN for use with the EC900, and also use only hose clamp provided.**

4. Route the ice transport tube up through the gusset in the rear, left-hand corner of the EC900, through the hole in the base and mounting pan of the RPD100, continuing up through the hole in the foam insulation and out into the bin.
5. Guide the end of the tubing under the saddle, through the two U-clamps, with the end of the tubing extending about one inch beyond the last U-clamp. Excess tubing should be worked back down into the EC900 Cabinet.
6. Route electrical wiring from the bin level control of the RPD100, to the terminal block located in the small control panel on the rear of the EC900 Control Box. Refer to the wiring diagram. These wires may be routed along the ice transport tubing.

B. ICE TRANSPORTED TO BIN:

The ice transport tubing may exit from the top, rear, side or base of the EC900. When the EC900 is mounted on top of the Bin, the ice transport tube will exit through the hole in the base, see Specification page; otherwise, punch a three inch hole in other selected exit panels, to allow room for the ice transport tube and insulation covering. A smaller hole can be punched if no insulation is to be used.

Follow the precautions given in paragraph I-VI-A above, when routing the ice transport tubing; and, secure the ice transport tubing in the Bin using the clamps provided. Also, install the bin thermostat temperature control provided, and similarly route and connect the wiring to the EC900 Control Box.

VII. INSTALLATION - OPTIONAL KITS

Install kits ordered with the EC900:

1. SPKEC900 - Stainless Steel Panel Kit.
2. KTX25 - 25-foot length of Nylon reinforced, one-inch I.D. tubing for ice transporting.
3. KTX50 - 50-foot length of Nylon reinforced, one-inch I.D. tubing for ice transporting.
4. KTX100 - 100-foot length of Nylon reinforced, one-inch I.D. tubing for ice transporting.

The installation instructions for each of the above listed kits are shipped in the individual kit package.

VIII. FINAL CHECK LIST

1. Is the Cabinet level? (IMPORTANT)
2. Have all kits, if any, been installed and properly checked?
3. Have all electrical and piping connections been made?

4. Has the ice transport tubing been installed and properly routed for good drainage?
5. Has the voltage been tested and checked against the nameplate rating?
6. Is the water supply line shutoff valve installed and electrical wiring properly connected?
7. Have the Bin and Cabinet been wiped clean?
8. Have the Compressor hold down nuts been checked, to be sure the Compressor is snug on the mounting pads?
9. Has the owner/user been given the User Manual and instructed on how to operate the Icemaker?
10. Has the Manufacturer's Registration Card been properly filled out? Check for correct Model and Serial numbers from Serial nameplate, then mail the completed card to the SCOTSMAN factory.
11. Check all refrigerant lines and conduit lines, to guard against vibration or rubbing and possible failure.
12. Is there at least six inches clearance behind and around the Cabinet for proper air circulation?
13. Is the Cabinet in a room where ambient temperatures are a minimum of 50-degrees F. all year around?
14. Has the water supply pressure been checked to ensure a minimum of 20 PSI?
15. Has the owner been given name and telephone number of the authorized SCOTSMAN Service Agency serving him?

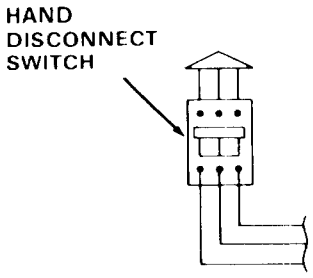

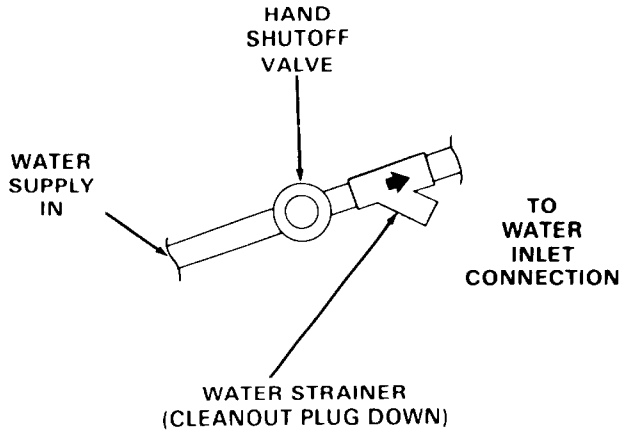

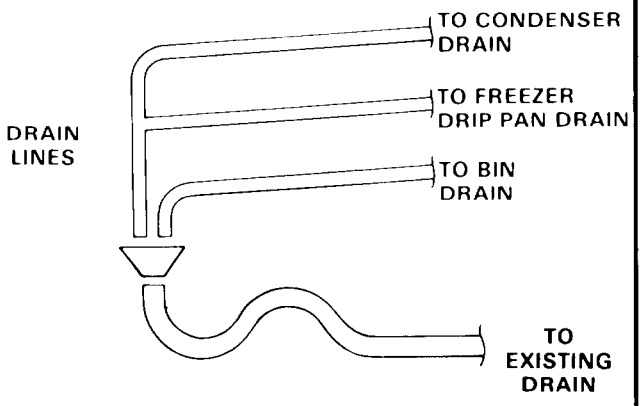

OPEN, TRAPPED OR VENTED DRAIN. RECOMMENDED 1/4-INCH FALL PER FOOT OF RUN ON DRAIN LINES.

WARNING

THIS ICEMAKER IS NOT DESIGNED FOR OUTSIDE INSTALLATION AND WILL NOT OPERATE IN AMBIENT TEMPERATURES BELOW 50-DEGREES F., NOR ABOVE 100-DEGREES F.

THIS ICEMAKER WILL NOT OPERATE WHEN WATER TEMPERATURES ARE BELOW 40-DEGREES F., NOR ABOVE 100-DEGREES F.

77 116A

Figure 1-1. Installation Practice

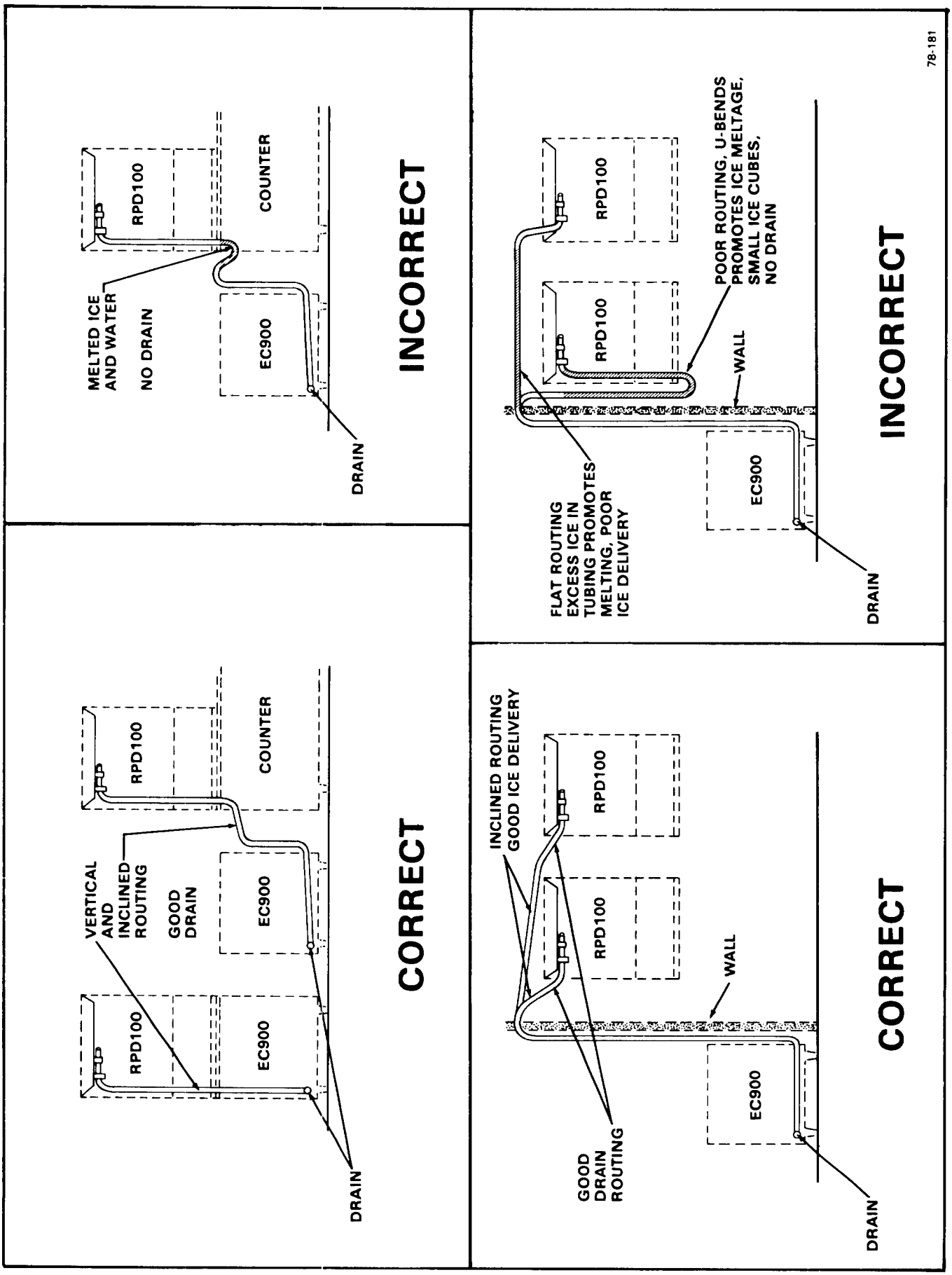

Figure 1-2. Examples of Ice Transport Tube Routing

SECTION II
START UP OPERATION

I. START UP

1. Remove screws and the Front Panel and the Left Side Panel.
2. OPEN the water supply line shutoff valve.
3. Observe the water filling operation, see Figure 2-1:
   a. Water flows into Water Reservoir.
   b. Float moves up as water rises.
   c. Water flows through water feed line to bottom of Freezer Assembly.
   d. Float stops water flow, when water level reaches 3/8-inches below the raised molded line, on the side of the body of the Water Reservoir.
4. Move the two manual ON-OFF toggle switches, on the front of the Control Box, to the ON position to start the automatic ice-maker operation.
5. Observe startup of the Compressor, Fan Motors, Freezer Assembly Drivemotor, and the Extruder which is powered by the belt-driven motor; then, check belt tightness and that it is rotating in a CLOCKWISE direction.
6. After two or three minutes of operation, observe that flaked ice will begin dropping from the ice spout at the upper end of the Freezer Assembly into the Extruder feeder hose.
7. Within the next two minutes or so, rectangular broken ice pieces should be emerging from the Breaker end of the Extruder Assembly and into the ice transport tubing that delivers the ice to the ice storage bin in the RPD100 Dispenser, or to an auxiliary Bin.

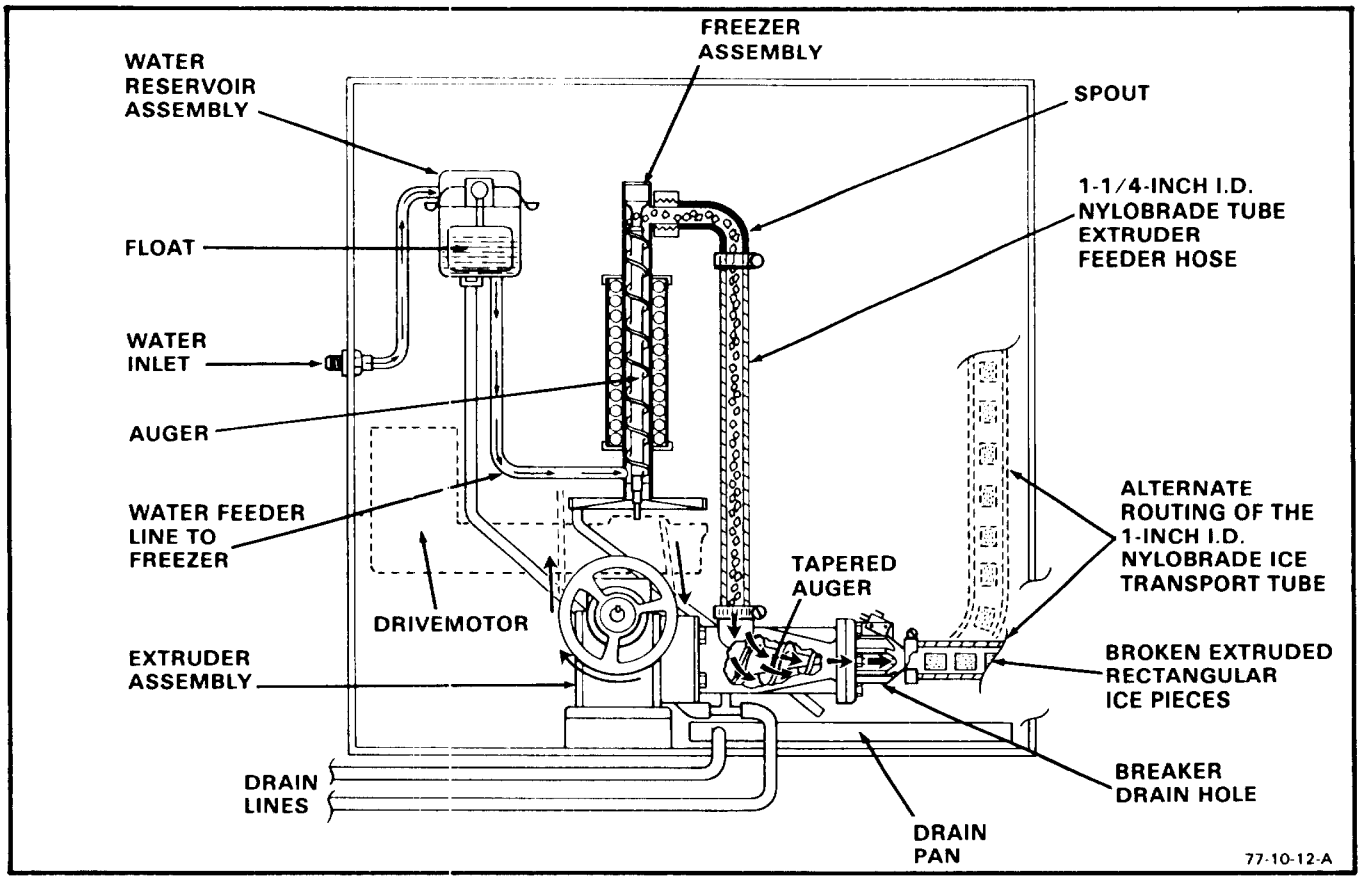

Figure 2-1. Water Schematic

NOTE

During the next phase, the time required to transport ice from the Breaker end of the Extruder Assembly, through the ice transport tubing and into the ice storage bin of the RPD100, or an auxiliary Bin, will vary according to type of installation. for example;

1. *RPD100 mounted on top of EC900: Travel time is about four to five minutes.*
2. *RPD100 or auxiliary Bin remote from EC900: Travel time equals the length of the ice transport tube, in feet, multiplied by roughly two-feet-per-minute. So, travel time through a 16-foot tube would require roughly eight minutes. These time figures are median examples, and any, or all can be increased or decreased by variation in local ambient air temperatures and water supply.*

8. Observe the time required for ice to be transported from the Extruder Breaker to the ice storage cylinder in the Dispenser, or the auxiliary Bin, for future reference. That is, how long in minutes it takes for the first ice to be deposited in the ice storage bin.

NOTE

Let the icemaking process continue without interruption, until the ice storage bin in the RPD100, or the auxiliary Bin, is filled with ice up to the bin thermostat. Check for any excess noises beyond normal Compressor noise and Extruder noise:

1. *Fan noises, when Air-Cooled: Blades touch other surfaces; blades bent, and out-of-balance.*
2. *Vibrating type: From touching lines.*
3. *Chattering: Lack of water in Freezer.*
4. *Grinding: Extruder auger bent or chipped and scraping inner walls of Extruder body.*
5. *Compressor loose at one or more hold-down bolts.*
6. *Belt too tight and screeching or too loose and slipping.*

WARNING

DO NOT operate this Icemaker when the water supply is shut OFF, or is BELOW the recommended 20 PSI water pressure. Move the manual ON-OFF toggle switch on the front of the Control Box to the OFF position immediately.

9. Hold ice against the bin control bulb, in the RPD100, or auxiliary Bin, to test EC900 icemaker shut OFF. Less than one minute is about normal for Bulb shutoff function to cause the Compressor to stop.

NOTE

Within minutes after the ice is removed from the sensing bulb, the bulb will warm up and cause the EC900 icemaker to restart. This control is factory set and should not be reset until testing is performed. Normal seting is about 35-degrees F. CUT-OUT and 45-degrees F. CUT-IN.

10. Thoroughly explain to the owner/user the significant specifications of the Icemaker, the startup and operation, going through the procedures in the operating instructions. Answer all questions about the Icemaker, by the owner; and, inform the owner of the name and telephone number of the authorized SCOTSMAN Service Agency serving him.

SECTION III
PRINCIPLES OF OPERATION
How It Works

I. ICEMAKER/EXTRUDER

The water supply flows from the building source through the inline water strainer, enters at the Cabinet fitting and on to the Water Reservoir. The Water Reservoir functions to maintain a constant water level inside the Freezer Assembly. Water from the Water Reservoir enters at the bottom of the Freezer Assembly and is changed into ice by low temperatures inside the Freezer.

A stainless steel Auger within the Freezer is powered by the Drivemotor Assembly, a direct-drive gearmotor, and the rotating Auger carries the ice upward to the flared end of the Auger, see Figure 3-1, where excess water is pressed out of the ice, as it is extruded or flaked out through the Ice Spout, through the short one and one-fourth inch I.D. Nylobrade tubing and into the inlet of the Extruder chamber.

After the Bin Control has been wired into the EC900 Control Panel, the 24-volt circuit is complete through the contactor coil and the Extruder safety spout switch. Then, by moving the two manual ON-OFF toggle switches, on the front of the Control Box, to the ON position, the automatic and continuous icemaking process begins.

A continuous supply of flaked ice, from the spout of the Freezer Assembly, is delivered through the short Extruder feeder hose to the Extruder Assembly. A stainless steel tapered Auger compresses the flaked ice within the tapered brass chamber of the Extruder, where water forced out of the compressed ice is drained out the bottom of the chamber. The ice is extruded through a three-fourths inch square hole in a continuous square shaft of ice and afterward into the Breaker, where it is broken off into rectangular pieces.

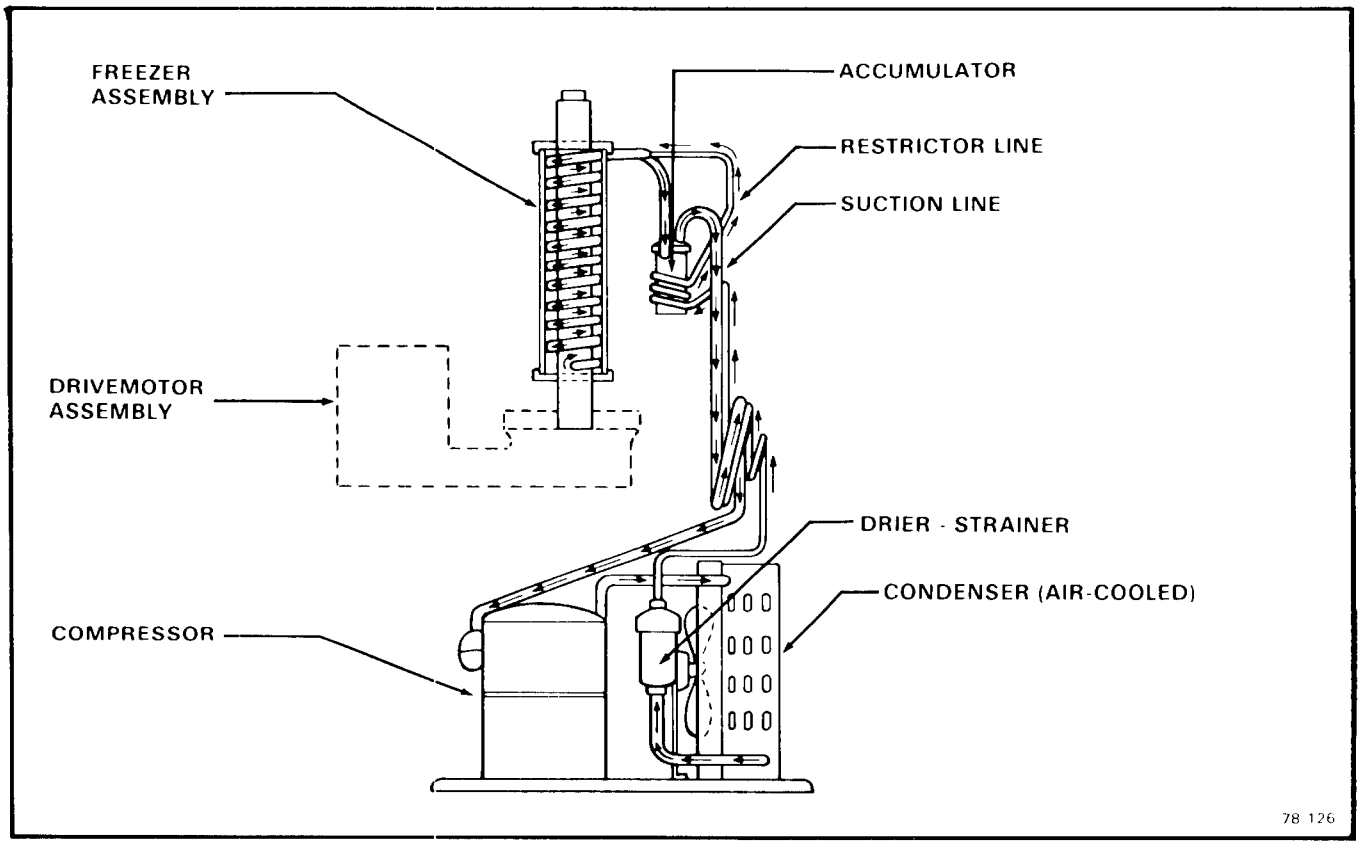

Figure 3-1. Refrigeration Cycle

Powered by the one-half horsepower motor and a continuous supply of flaked ice from the Freezer Assembly, the Extruder Assembly produces rectangular broken ice pieces, plus the power to transport the ice from the outlet of the Breaker through a one-inch I.D. Nylobrade transport tube to the ice storage bin of the RPD100, or to an auxiliary Bin.

When the ice storage bin has been filled with ice, up to the level of the Bin Control Bulb, the sensing bulb shuts off the icemaking process. As the ice is removed from the ice storage bin, the Bin Control Bulb warms up, restarting the automatic icemaking process in the EC900.

Factory settings are 35-degrees F. CUT-OUT and 45-degrees F. CUT-IN.

Altitude adjustment should ONLY be performed on icemakers installed at 2000-feet level locations and ABOVE, and adjust only in increments of one-fourth turn of screw at a time.

II. ELECTRICAL/REFRIGERATION

The EC900 Extruder Cubers are designed to operate on 230 volts, 60 Hertz, single phase. Special voltage requirements are available on special order. Therefore, always CHECK NAMEPLATE for electrical information BEFORE proceeding with electrical wiring connections to the Icemaker.

Cold ambient temperatures and interruptions in water supply are conditions that can cause excessively hard ice and overloads within the Freezer Assembly, which is directly transmitted to the Drivemotor; and in turn, will cause speed reduction or ultimate freezeup.

When the Drivemotor is slowed to a predetermined RPM, a sensing switch mounted on top of the motor is designed to open the electrical circuit to the Compressor. The Compressor stops operating, no more ice is produced, and the Drivemotor continues to operate rotating the Auger to clear the overload and gradually build up to full speed.

At a pre-determined higher RPM Drivemotor speed, the speed sensing switch closes the electrical circuit to the Compressor, causing the normal icemaking process to resume. Refer to specific details in paragraph V-II-9, on centrifugal sensing switch operation.

A Spout Switch is mounted on the side of the Ice Spout and is actuated by the movement of the spring retained spout tube against the switch actuator. The Spout Switch acts as a backup safety switch, should the Bin Control Bulb fail and cause ice to jam up in the Ice Spout. The switch will shut off the icemaker only when actuated. It is an immediate and complete shut down of the entire icemaker. The Spout switch is manually reset.

There are three safety controls in the Control Box on the Water-Cooled models and two safety controls in the Control Box for the Air-Cooled Models. On the EC900 Air-Cooled Models only, a Fan Pressure Control is added to the Control Box. The Low Pressure Control, a manual reset, non-adjustable control is used on both models and is set to electrically open at zero to four PSIG to stop the entire icemaker. The Auger Delay Switch, a single-pole, double-throw (SPDT) switch, functions as a control device to allow the gearmotor to rotate the Auger to clear the Freezing Chamber while the compressor circuit is OFF.

Refer to the appropriate Wiring Diagram and trace circuitry and control functions, as described in the following paragraph.

As shown on all SCOTSMAN wiring diagrams, the controls are in the ICEMAKING MODE. Thus, the 1-2 contacts are CLOSED. At STARTUP the 1-2 contacts are OPEN and the 3-2 contacts are CLOSED. As the icemaker begins to operate, the low side pressure starts to decrease from the stabilized or at-rest pressure. As soon as the pressure is reduced to 20 PSIG, the 3-2 contacts OPEN and the 1-2 contacts CLOSE.

This removes the operating controls, such as the Bin Thermostat, from the gearmotor circuit. If one of the operating controls OPENS, it will SHUT OFF the compressor circuit. The gearmotor will operate until the low side pressure increases to 32 PSIG. Then, the 1-2 contacts OPEN and SHUTS OFF the gearmotor, usually within one to two minutes, depending upon ambient conditions. This brief period of time allows the Auger to transport all the ice out of the freezing chamber. Consequently, when called on to STARTUP again, there is no ice load to start up against. Again, on STARTUP, the 1-2 contacts are OPEN and the 3-2 contacts are CLOSED.

On all models, a low-water pressure switch functions to discontinue the Icemaking process whenever incoming water pressure is reduced to below five PSIG. The Switch will automatically restart the Icemaking process when the water pressure is increased to 20 PSIG.

On the Water-Cooled models only, a manual reset, high head pressure control is factory set to stop the entire icemaker should the head pressure reach 250 PSIG.

On Water-Cooled models, correct head pressure is 135 PSIG. Adjustments can be made on the Water Regulator Assembly valve. On Air-Cooled models, the head pressure is normal about 130 PSIG, however, it will vary depending upon ambient air temperature.

On the Air-Cooled model only, a Fan Pressure Control maintains the head pressure between limits set on the Control. Certain low ambient conditions will cause low head pressure; which will open the Fan Pressure control, in turn, stopping the upper Fan. This reduction in air will allow the head pressure to build up and Fan to restart.

Suction pressure should be 15 PSIG with proper refrigerant charge and the frost line should extend out from the accumulator about eight inches. Suction pressure will vary about two PISG plus or minus, depending upon ambient temperatures and incoming water supply temperatures to the Freezer Assembly.

When charging the system with refrigerant, always CHECK NAMEPLATE for specific refrigerant charge for individual icemaker. On Water-Cooled Models, set the compressor head pressure at 135 PSIG. Charge with refrigerant so the frost line extends out of the Accumulator to within no closer than eight to twelve inches of the Compressor, after 15 minutes of operation, for best capacity and performance.

MODEL	EC900 Refrig. Chg.
Air-Cooled	42 oz. R-12 (Approx.)
Water-Cooled	32 oz. R-12 (Approx.)

SECTION IV

ADJUSTMENT AND REMOVAL AND REPLACEMENT

The procedures provided in this Section are arranged in alphabetical order, to make specific Adjustment and Removal and Replacement information easy to locate.

Read the instructions thoroughly before performing any Adjustment or Removal and Replacement Procedures.

I. ADJUSTMENT OF THE BIN THERMOSTAT CONTROL

The control for the Bin Thermostat is the Temperature Control, located on the upper part of the Bin section saddle in the RPD100 Dispenser, or the individual selected mounting location, in the case of an auxiliary Bin.

WARNING

The adjusting screws on the Temperature Control device have very sensitive response to adjustment. DO NOT attempt to adjust the screw until after thoroughly reading and understanding the following instructions and illustrations. Over-adjusting or erratic guessing, can foul the instrument and cause ultimate delay and part replacement, WHICH COULD HAVE BEEN PREVENTED.

See Figure 4-1 for location and direction of rotation, clockwise (CW) or counterclockwise (CCW), in the particular Temperature Control the adjustment is to be performed.

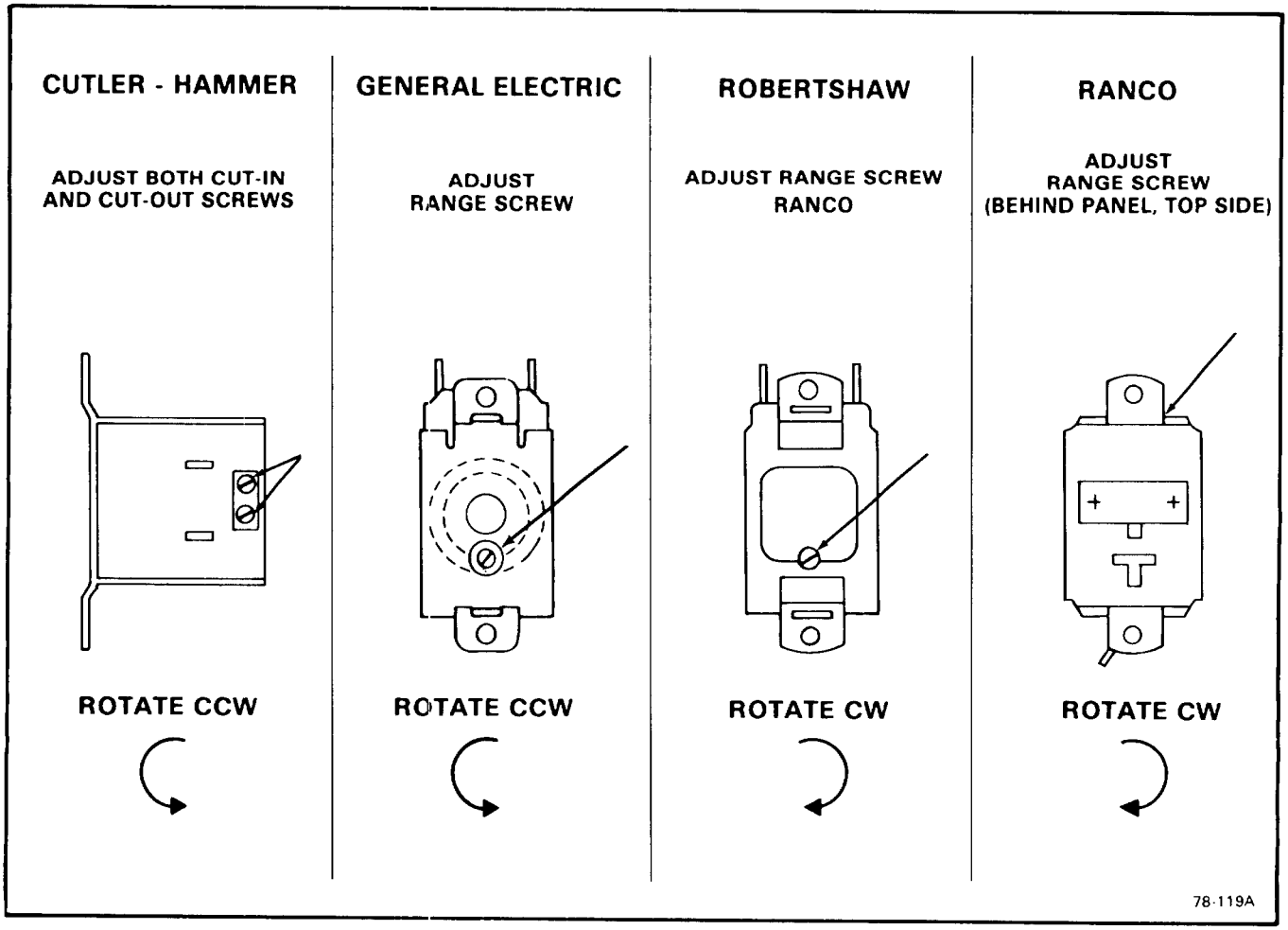

Figure 4-1. Adjustment of the Temperature Control.

II. ADJUSTMENT OF THE LEG LEVELERS

When the EC900 Extruder Cuber is ordered with the optional leg levelers, the Cabinet must be leveled in the front-to-rear and side-to-side directions. This adjustment should be performed during initial installation of the Cabinet and anytime the Cabinet is moved from the original location to another site.

A. Using an open-end wrench, and a carpenter's bubble level, rotate the threaded Leveler in each Leg to RAISE or LOWER the Cabinet until the Cabinet is level in the front-to-rear direction.

B. Repeat step A, for leveling in the side-to side direction.

C. Recheck both the front-to-rear and the side-to-side leveling and repeat adjustments, as necessary.

III. ADJUSTMENT OF THE WATER REGULATOR ASSEMBLY

The correct head pressure on Water-Cooled models is 135 PSIG. Adjustments can be performed on the Water Regulator Assembly to increase or decrease the head pressure.

To Adjust the Water Regulator Assembly:

A. To INCREASE the Head Pressure: Rotate the adjusting Screw, on the Water Regulator Assembly COUNTERCLOCKWISE.

B. To DECREASE the Head Pressure: Rotate the adjusting Screw, on the Water Regulator Assembly CLOCKWISE.

IV. ADJUSTMENT OF THE WATER RESERVOIR FLOAT

The correct water level in the Water Reservoir should be 3/8-inch below the raised molded line, on the side of the body of the Water Reservoir. When the water line level is above or below the raised molded line, adjustment can be performed to raise or lower the water level by raising or lowering the Water Reservoir in the slots on the Mounting Brackets, which in turn will adjust the action of the float.

A. To RAISE the Water Level: Loosen the two Screws which attach the Water Reservoir Assembly to the Mounting Bracket and RAISE the Water Reservoir Assembly, in the slots, the desired amount; then, tighten the Screws.

B. To LOWER the Water Level: Loosen the two Screws which attach the Water Reservoir Assembly to the Mounting Bracket and LOWER the Water Reservoir Assembly, in the slots, the desired amount; then, tighten the Screws.

WARNING

Be sure the electrical power supply and the water supply are OFF, before starting any of the following REMOVAL AND REPLACEMENT procedures, as a precaution to prevent possible personal injury or damage to equipment.

V. REMOVAL AND REPLACEMENT OF THE AUGER, WATER SEAL, BEARINGS AND COUPLING

A. To Remove the Auger, Water Seal, Bearings, and Coupling:

1. Remove screws and the Front Panel and the Left Side Panel.
2. Remove the Freezer Cap from the top of the Freezer Assembly.
3. Perform the steps in procedure IV-XIV to remove the Spout Assembly.
4. Grasp the wire Cap Hook at the top of the Freezer Assembly and pull out the Auger and attached Cap, Bearing/Retainer, Bearing and O-Rings, at the top of the Auger; and, the top half of the Water Seal at the bottom of the Auger.

NOTE

When the Auger cannot be pulled out, proceed to steps 12 and 13, to gain access to the bottom of the Auger. Then, with a rawhide mallet or placing a piece of wood on the bottom end of the Auger, tap the bottom of the Auger to break it loose and pull the Auger out, as in the step 4 above.

5. Remove the Cap Hook from the Bearing/Retainer.
6. Remove the Retaining Ring and the Cap.
7. Remove the Cap Screw and Washer and remove the Bearing/Retainer from the Auger.
8. Clean away the old grease from the top of the Auger, the Bearing/Retainer, Cap, Cap Screw and Washer, and the O-Ring and Retaining Ring.

9. Inspect the O-Ring at the top of the Bearing/Retainer and the O-Ring at the bottom outside of the Bearing/Retainer, for cuts, tears and general worn condition to determine replacement.
10. Inspect the Bearing pressed into the top of the Bearing/Retainer and, if it is to be replaced, remove the Retaining Ring and press the Bearing out of the Bearing/Retainer.
11. Slide the upper half of the Water Seal off of the bottom of the Auger.

NOTE

1. *Any time the Auger is removed for replacement, or, for the inspection and replacement of the Bearings or Coupling, use extra care in handling the Water Seal parts, so no dirt or foreign matter are deposited on the surfaces of the Seal.*
2. *If there is any doubt about the effectiveness of the Water Seal or O-Ring REPLACE THEM. A dirty, worn or faulty Water Seal or O-Ring will cause a leak and ultimately require a second, time consuming removal and replacement procedure to be performed, that COULD HAVE BEEN PREVENTED.*

12. Remove four screws and lockwashers which attach the Freezer Assembly to the Adaptor on the Drivemotor Assembly.
13. Raise the Freezer Assembly off of the Adaptor, to gain access to the Bearing and Retainer; then, temporarily secure the Freezer Assembly out of the way to allow room to work. Be careful not to damage the gasket.
14. Using a suitable length and size wooden dowel or stick inserted through the top of the open Freezer Assembly, tap the lower half of the Water Seal and the lower Bearing in the Retainer, out the bottom of the Freezer Assembly.
15. Inspect the lower half of the Water Seal. If reusable, use care to protect it from dirt, etc. prior to replacement procedure.
16. Inspect the lower Bearing in the Retainer; and, if the Bearing is to be replaced, press the Bearing out of the Retainer.
17. Reach through the Adaptor and remove the Coupling on the Drivemotor for inspection.
18. Check the Coupling for cracks, chipping and excessive wear.

B. To replace the Auger, Water Seal, Bearings, and Coupling, reverse the removal procedure.

NOTE

1. *When installing the Retainer assembled with Bearing, in the bottom of the Freezer Assembly, some Retainers will insert as a slip fit, and some will have to be forced into place because of very tight fit. Carefully tap a piece of wood positioned across the bottom of the Retainer, to evenly seat the Retainer in the chamber of the Freezer.*
2. *After assembling the parts on the upper end of the Auger and BEFORE installing the Cap and Cap Hook, apply an ample coating of Shell Alvania 3 Grease, P/N 19-0309-01, to the upper part of the Bearing/Retainer to cover the Retaining Ring and the Cap Screw and Washer. Then, install the Cap and Cap Hook in place.*

VI. REMOVAL AND REPLACEMENT OF THE COMPRESSOR ASSEMBLY

NOTE

Always install a replacement Drier, any time the sealed refrigeration system is opened. Do not replace the Drier until all other repair or replacement has been completed.

A. To Remove the Compressor Assembly:

1. Remove screws and the Right Side Panel.
2. Remove two screws and the Cover from the Compressor Junction Box.
3. Disconnect the electrical leads at the Compressor Junction Box, that originate in the Control Box.
4. Bleed off or blow the refrigerant charge through the Schrader valves.
5. Unsolder the suction line from the Compressor.
6. Unsolder the discharge line from the Compressor.
7. Unsolder the process header tube from the Compressor and retain for installation on the replacement Compressor.
8. Remove four bolts, lockwashers and washers which secure the Compressor to the Chassis mounting base.
9. Slide the Compressor and remove through the right side opening of the Cabinet.

NOTE

Thoroughly evacuate the system to remove moisture and non-condensables.

B. To replace the Compressor Assembly, reverse the removal procedure.

VII. REMOVAL AND REPLACEMENT OF THE CONDENSER — AIR-COOLED MODELS

NOTE

Always install a replacement Drier, any time the sealed refrigeration system is opened. Do not replace the Drier until all other repair or replacement has been completed.

A. To Remove the Condenser:

1. Remove screws and the Front Panel and the Right Side Panel.
2. Bleed off or blow the refrigerant charge through the Schrader valve.
3. Unsolder and disconnect the refrigerant inlet and outlet lines at the Condenser.
4. Remove three screws, lockwashers and washers securing the Condenser to the Chassis Base.
5. Remove the Condenser out through the front opening of the cabinet.

NOTE

Thoroughly evacuate the system to remove moisture and non-condensables.

B. To replace the Condenser, reverse the removal procedure.

VIII. REMOVAL AND REPLACEMENT OF THE CONDENSER—WATER-COOLED MODELS

NOTE

Always install a replacement Drier, any time the sealed refrigeration system is opened. Do not replace the Drier until all other repair or replacement has been completed.

A. To Remove the Condenser:

1. Remove screws and the Front Panel and the Right Side Panel.
2. Bleed off or blow the refrigerant charge through the Schrader valve.
3. Unsolder the refrigerant inlet and outlet lines from the Condenser.
4. Disconnect the water inlet and outlet lines from the Condenser.
5. Remove two bolts, lockwashers and washers which secure the Condenser to the Chassis mounting base.
6. Remove the Condenser from the Cabinet.

NOTE

Thoroughly evacuate the system to remove moisture and non-condensables.

B. To replace the Condenser, reverse the removal procedure.

IX. REMOVAL AND REPLACEMENT OF THE DRIER

NOTE

Always install a replacement Drier, any time the sealed refrigeration system is opened. Do not replace the Drier until all other repair or replacement has been completed.

A. To Remove the Drier:

1. Remove screws and the Front Panel.
2. Remove screw and Drier Brace attaching the Drier to the Chassis base.
3. Bleed off or blow the refrigerant charge through the Schrader valve.
4. Unsolder refrigeration lines at each end of Drier, remove the Drier and separate the Drier from the Drier Brace.

B. To replace the Drier:

CAUTION

1. If the factory seal is broken on the replacement Drier, exposing it to the atmosphere more than a few minutes, the Drier will absorb moisture from the atmosphere and lose substantial ability for moisture removal.

2. Be sure the replacement Drier is installed with the arrow positioned in the direction of the refrigerant flow.

1. Remove the factory seals from the replacement Drier and install the Drier in the refrigerant lines with the arrow positioned in the direction of the refrigerant flow.
2. Install the Drier Brace on the Drier.
3. Solder the Drier into the lines, two places.
4. Purge the system and check for leaks.
5. Thoroughly evacuate the system to remove moisture and non-condensables.
6. Charge the system with refrigerant, by weight. SEE NAMEPLATE.
7. Replace the Front Panel and attach the screws removed earlier.

X. REMOVAL AND REPLACEMENT OF THE DRIVEMOTOR ASSEMBLY

A. To Remove the Drivemotor Assembly:

1. Perform all steps in procedure IV-XIII to gain access for removal of the Drivemotor Assembly.
2. Remove bolts, lockwashers and washers which attach the Drivemotor to the Chassis base.
3. Lift the Drivemotor from the Chassis base and out of the Cabinet.

B. To replace the Drivemotor Assembly, reverse the removal procedure.

XI. REMOVAL AND REPLACEMENT OF THE EXTRUDER ASSEMBLY - AUGER AND BREAKER

A. To Remove the Extruder Assembly:

1. Remove screws and the Rear and Left Side Panels.
2. Remove hose clamp and ice transport tube from the outlet end of the Breaker.
3. Remove the hose clamp, two Extruder clamps and the Extruder Feed Hose from the top inlet of the Extruder Body.
4. Disconnect electrical leads from the terminals of the safety switch on top of the Breaker.
5. Remove four hex bolts and lockwashers and lift the Extruder Assembly off of the Extruder Mounting Plate.

NOTE

Steps 6 through 8 detail further disassembly of the Extruder Assembly for the removal of the Breaker and the Auger. See Figure 4-2.

6. Remove two screws and nuts and the safety switch from the Breaker.
7. Remove four screws and two washers and the two-part Hose Clamp Assembly and the Breaker from the outlet end of the Extruder Body.
8. Remove four screws and washers and separate the Extruder Body from the Gear Reducer.
9. Unscrew the Auger, standard thread, and remove the Auger and Mounting Pad from the Gear Reducer.

NOTE

Thoroughly inspect all parts for breaks, chipping, cracks, or excessive wear and warping. Repair or replace as necessary.

B. To replace the Extruder Assembly, reverse the removal procedure.

XII. REMOVAL AND REPLACEMENT OF THE FAN MOTOR ASSEMBLY – AIR-COOLED MODELS

NOTE

Before beginning this procedure, observe the Fan Blade position on the shaft of the Fan Motor and mark the Fan Blade so it will be correctly positioned during reassembly. Direction of air flow should be toward the Fan Motor.

A. To Remove the Fan Motor Assembly:

1. Remove screws and the Front Door and the Right Side Panel.
2. Disconnect the electrical lead from the Fan Motor.
3. Remove four screws securing the two Fan Mounting Brackets to the Condenser Shroud and remove the Fan Motor and Brackets out through the left side opening of the Chassis.
4. Remove the nut from the end of the Fan Motor shaft and remove the Fan Blade.
5. Remove four screws securing each fan Mounting Bracket, upper and lower, to the Fan Motor and separate the Motor from the Brackets.

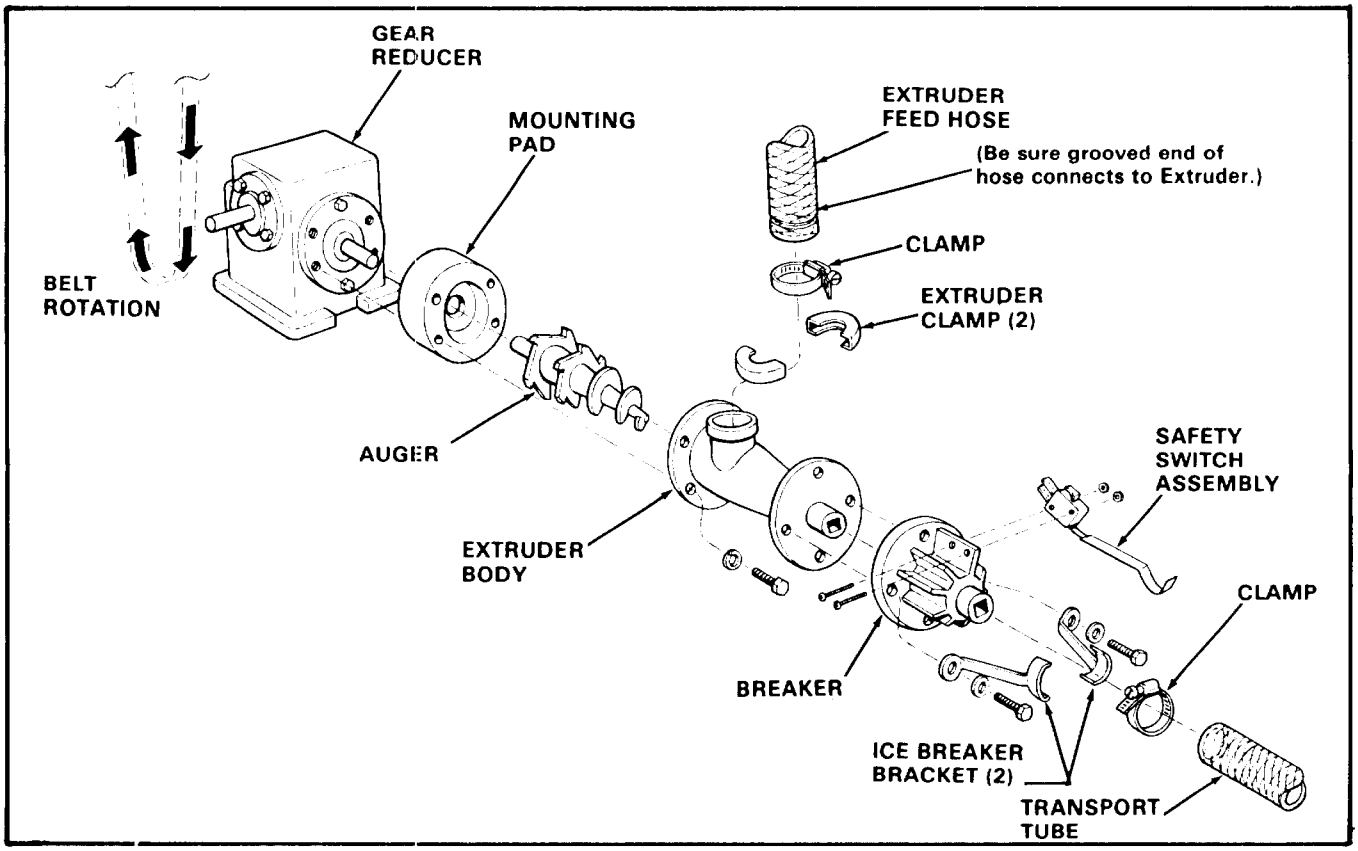

Figure 4-2. Removal of the Extruder Assembly - Auger - Breaker.

B. To replace the Fan Motor Assembly, reverse the removal procedure.

XIII. REMOVAL AND REPLACEMENT OF THE FREEZER ASSEMBLY

NOTE

1. *The Cabinet may have to be removed from its permanent location, especially if located in a corner, in order to have access to the left side and rear of the Chassis.*
2. *In addition to shutting OFF electrical power and inlet water to the icemaker, be sure to disconnect the inlet water line at the rear of the Cabinet BEFORE moving the icemaker from the permanent location.*
3. *Always install a replacement Drier, anytime the sealed refrigeration system is opened. Do not replace the Drier until all other repair or replacement has been completed.*

A. To Remove the Freezer Assembly, see Figure 4-3:

1. Remove screws and right side, front and rear panels.
2. Refer to procedure IV-XIV and remove the Spout Assembly.
3. Remove Corbin clamp and Tygon tube from the Freezer Assembly that connects to the Water Reservoir Assembly.
4. Bleed off or blow the refrigerant charge through the Schrader valve.
5. Unsolder the suction line from the Compressor.
6. Unsolder the capillary line at the Drier.
7. Remove four screws, lockwashers and washers which attach the bottom of the Freezer Assembly to the Adaptor on the Drivemotor Assembly.
8. Lift the Freezer Assembly up and off of the Adaptor and Drivemotor Assembly.

NOTE

Thoroughly evacuate the system to remove moisture and non-condensables.

B. To replace the Freezer Assembly, reverse the removal procedure.

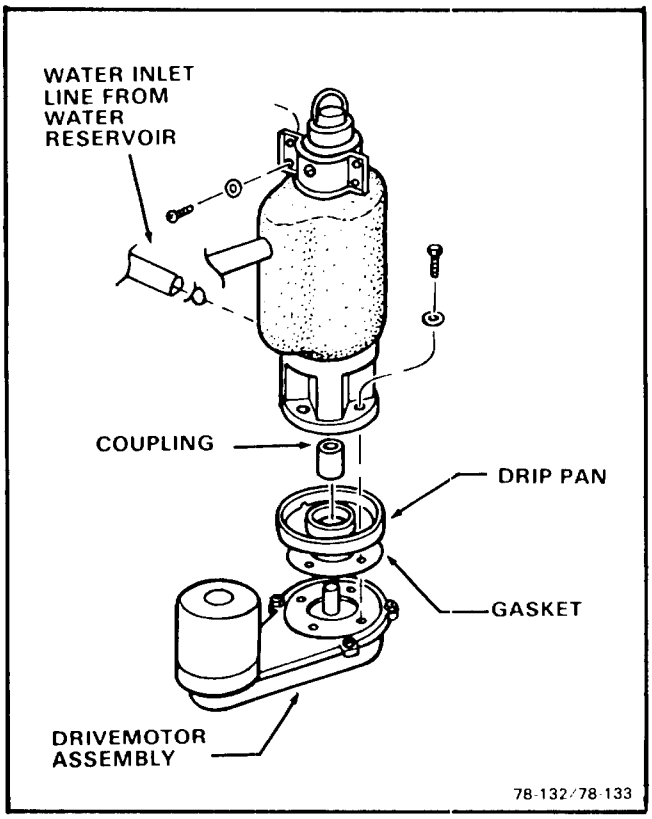

Figure 4-3. Removal of the Freezer Assembly.

XIV. REMOVAL AND REPLACEMENT OF THE SPOUT ASSEMBLY

A. To Remove the Spout Assembly, see Figure 4-4:

1. Remove screws and the Front Panel and Left Side Panel.
2. Remove the Hose Clamp and disconnect the Nylobrade tube from the end of the spout.
3. Remove the Freezer Cap from the top of the Freezer Assembly.
4. Disconnect the electrical leads from the Spout Switch.
5. Remove four screws and washers and separate the Spout Assembly from the Spout Plate on the Freezer Assembly.

NOTE

At this time, inspect the spout Gasket and retain for the replacement procedure. Replace a torn, cut or worn, defective gasket.

B. To replace the Spout Assembly, reverse the removal procedure.

XV. REMOVAL AND REPLACEMENT OF THE WATER PRESSURE CONTROL

A. To Remove the Water Pressure Control:

1. Remove screws and the Front and Rear Panels.
2. Remove screws and the Control Box Cover.
3. Disconnect the two blue electrical leads of the Water Pressure Control, from the terminals on the Auger Delay Control and the Bin Thermostat device in the Control Box Assembly.
4. Unscrew the flare nut fitting and disconnect the Water Pressure Control from the Utility Bracket and the Tee on the inlet water tubing.

NOTE

At this time, inspect the O-Ring and retain for the replacement procedure. Replace O-Ring that is cut, torn or indicates excessive wear.

B. To replace the Water Pressure Control, reverse the removal procedure.

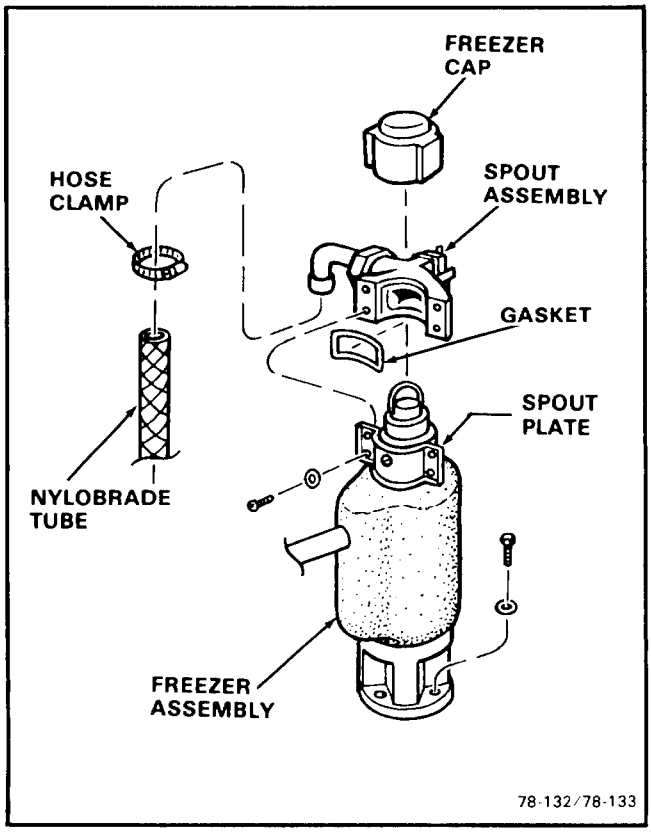

Figure 4-4. Removal of the Spout Assembly.

XVI. REMOVAL AND REPLACEMENT OF THE WATER REGULATOR ASSEMBLY — WATER-COOLED MODELS

A. To Remove the Water Regulator Assembly:

NOTE

Always install a replacement Drier, any time the sealed refrigeration system is opened. Do not replace the Drier until all other repair or replacement has been completed.

1. Remove screws and the Front Panel.
2. Bleed off or blow the refrigerant charge through the Schrader valve.
3. Unsolder the Capillary line from the Water Regulator Assembly, where connected at the process header.
4. Disconnect the water inlet line at the rear of the Water Regulator.
5. Disconnect the Condenser inlet tube at the front of the Water Regulator.
6. Remove two screws, lockwashers and washers which attach the Water Regulator Assembly bracket to the Chassis base and remove the Water Regulator Assembly and bracket.

NOTE

Thoroughly evacuate the system to remove moisture and non-condensables.

B. To replace the Water Regulator Assembly reverse the removal procedure.

XVII. REMOVAL AND REPLACEMENT OF THE WATER RESERVOIR ASSEMBLY

A. To Remove the Water Reservoir Assembly, see Figure 4-5:

1. Remove screws and the Front Panel and the Left Side Panel.

NOTE

Be prepared with container or rags, to catch water left in lines, when lines are disconnected in next steps, to prevent draining water on parts, components, electrical lines, etc.

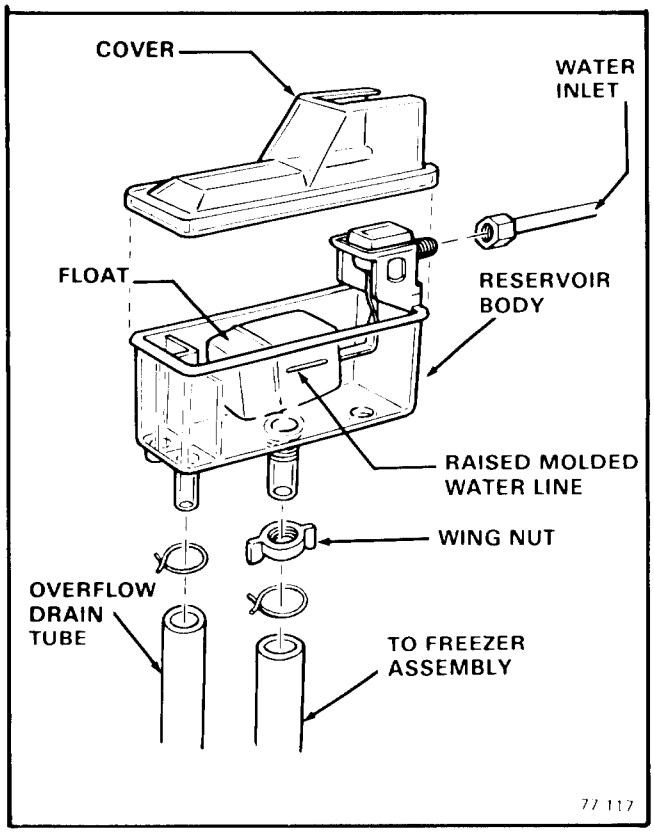

Figure 4-5. Removal of the Water Reservoir Assembly.

2. Disconnect the water inlet tube from the Water Reservoir Assembly.
3. Remove two Corbin clamps and two tubes from the bottom of the Water Reservoir Assembly.
4. Unscrew and remove the wing nut from the bottom of the Water Reservoir Assembly.
5. Lift and remove the Water Reservoir Assembly from the mounting bracket.

B. To replace the Water Reservoir Assembly, reverse the removal procedure.

NOTE

Check that the installed replacement Water Reservoir Assembly float moves freely. The correct water level in the Water Reservoir is 3/8-inch below the raised molded line, on the side of the body of the Water Reservoir.

SECTION V
MAINTENANCE & CLEANING INSTRUCTIONS

I. GENERAL

The periods and procedures for maintenance and cleaning are given as guides and are not to be construed as absolute or invariable. Cleaning especially will vary, depending upon local water conditions and the ice volume produced and, each Icemaker must be maintained individually, in accordance with its own particular location requirements.

II. ICEMAKER

THE FOLLOWING MAINTENANCE SHOULD BE SCHEDULED AT LEAST TWO TIMES PER YEAR ON THIS ICEMAKER. CALL YOUR AUTHORIZED SCOTSMAN SERVICE AGENCY.

1. Check and clean water line Strainers.
2. Remove cover from Water Reservoir and depress the float to ensure that a full stream of water enters the Reservoir.
3. Check that the Icemaker cabinet is level, in side-to-side and front-to-rear directions.
4. Check that the water level in the Water Reservoir is below the overflow, but high enough that it does not run out of the spout opening.

NOTE

It is not abnormal for some water to emerge from the Ice Spout with flaked ice during normal ice production.

5. Clean the Water Reservoir and interior of the Freezer Assembly, using a solution of SCOTSMAN Ice Machine Cleaner. Refer to procedure V-III, CLEANING-Icemaker.

NOTE

Cleaning requirements vary according to local water conditions and individual user operation. Visual inspection of the Auger before and after cleaning will indicate frequency and procedure to be followed in local areas.

6. When doubtful about refrigerant charge, install refrigerant gauges on Schrader valves and perform steps 6 and 7. Check gauge for Compressor head pressure:

   AIR-COOLED MODELS: Varies between 130 to 145 PSIG.

   WATER-COOLED MODELS: Set at 135 PSIG. Adjust screw on top of Water Regulator Valve to raise or lower head pressure.
7. Check gauge for Suction line pressure:

   Varies between 12 to 16 PISG, depending upon inlet water temperature and ambient air temperature.
8. Check Drivemotor operation:

   Normal operating temperatures are about 160-degrees F., which is hot to touch.
9. Check operation of the centrifugal sensing switch:

   EC900: 1/4 HP Motor.

   Switch will OPEN between 850-950 RPM and the Compressor STOPS, with the Drivemotor operating. Switch will CLOSE between 1100-1250 RPM and the Compressor will RESTART, with Drivemotor building back up to normal operating speed.
10. Remove the Freezer Cap, the Retaining Ring and the Hook and Cap from the top of the Freezer Assembly.
11. Inspect the Top Bearing. If moisture is around Bearing, wipe clean of all grease and apply a coating of Shell Alvania 3 Grease, Scotsman P/N 19-0309-01, 1-lb. Can. Replace parts removed in step 10.

NOTE

BEFORE next step, move both manual ON-OFF toggle switches, on the front of the Control Box, to the OFF position to stop the Fan Motor and Icemaker.

12. Clean the Air-Cooled Condenser, using vacuum cleaner, whisk broom or brush. Instruct customer to clean frequently and to be sure Icemaker and Fan Motor are OFF.
13. Check that Fan Blades move freely, are not touching any surfaces and are not bent or out of balance.

14. Check for refrigerant leaks and for proper frost line, which should frost out of accumulator at least half way to the compressor and in some areas, back to service valve.
15. Check for water leaks. Tighten drain line connections. Pour water down Bin drain to be sure that drain line is open and clear.
16. Check the quality of ice. Ice should be wet when formed, but will cure rapidly to normal hardness in the Bin.
17. Check the Bin Control Bulb.

NOTE

The Bin Control is factory set at 10-degrees F. differential and should keep the entire Icemaker system shut off at least 10 minutes in high ambient temperatures, longer in low ambient temperatures during normal operation. Settings are 35-degrees F. CUT-OUT and 45-degrees. F. CUT-IN.

18. Check the Spout Switch.

NOTE

The Spout Switch is manually reset and functions as a safety switch, to automatically stop the icemaking process if the Bin Control Bulb were to fail and cause ice to jam up in the Ice Tube.

III. CLEANING - Icemaker

1. Remove screws and the Front Panel.
2. Move the two manual ON-OFF toggle switches, on the front of the Control Box, to the OFF position.
3. Remove all ice from the ice storage Bin.
4. CLOSE the water supply shutoff valve; or block the float in the Water Reservoir.
5. Disconnect the tube between the Water Reservoir and the bottom of the Freezer Assembly and drain water from the Reservoir and tube. Reconnect the tube.

WARNING

SCOTSMAN Ice Machine Cleaner contains Phosphoric and Hydroxyacetic acids. These compounds are corrosive and may cause burns if swallowed. DO NOT induce vomiting. Give large amounts of water or milk. Call Physician immediately. In case of external contact flush with water. KEEP OUT OF THE REACH OF CHILDREN.

6. Prepare cleaning solution: Mix four ounces of SCOTSMAN Ice Machine Cleaner with three quarts of hot water.
7. Remove the Cover to the Water Reservoir.
8. Disconnect the Extruder feeder hose at the Extruder and place the end of the hose in a container to catch ice made from the cleaning solution, in the next steps.
9. Slowly pour the cleaning solution into the Water Reservoir.
10. Move the two manual ON-OFF toggle switches, on the front of the Control Box, to the ON position.
11. Continue to slowly pour the cleaning solution into the Water Reservoir, maintain level just below the Reservoir overflow.
12. Continue icemaking, using the cleaning solution, until all the solution is used up and the Water Reservoir is almost empty. DO NOT allow the icemaker to operate with empty Reservoir.
13. Move the two manual ON-OFF toggle switches, on the front of the Control Box to the OFF position.
14. Wash and rinse the Water Reservoir.
15. Reconnect the Extruder feeder hose at the Extruder.
16. Refer to RPD100 instructions and perform cleaning and sanitizing in the RPD100 to be sure complete cleaning and sanitizing have been performed. Refer to SANITIZING procedure V-IV in this section and perform sanitizing of the EC900.
17. OPEN the water supply shutoff valve; or remove the block from the float in the Water Reservoir.
18. Move the two manual ON-OFF toggle switches, on the front of the Control Box, to the ON position.
19. Continue icemaking for at least 15 minutes, to flush out any cleaning solution. Check ice for acid taste - continue icemaking until ice tastes sweet.
20. Move the two manual ON-OFF toggle switches, on the front of the Control Box, to the OFF position.

CAUTION

DO NOT use ice produced from the cleaning solution. Be sure none remains in the bin.

21. Remove all ice from the ice storage bin.
22. Add hot water to the ice storage Bin and thoroughly wash and rinse all surfaces within the Bin.
23. Clean and sanitize the ice storage Bin each week.

IV. SANITIZING

Sanitizing is an important phase of the ice-making and dispensing operation. The following sanitizing procedure should be performed after every repair or replacement of parts in the EC900, in or through which ice is formed or transported and water is drained. Additional requirements for performing the sanitizing procedure should be followed in accordance with the requirements of the Local Health Authorities.

NOTE

Contact your Local Health Authorities and obtain their approval of the sanitizer you intend to use when sanitizing the EC900.

Prior to performing the sanitizing procedure, it is assumed the Front Panel and Left Side Panel have been removed and the cleaning procedure performed up through step V-III-15.

WARNING

Read WARNING thoroughly BEFORE preparing sanitizing solution, in next stop.

1. STERILEX 3-Q SANITIZING TABLETS

DANGER: KEEP OUT OF REACH OF CHILDREN. Tablets may be harmful or fatal if swallowed. May cause skin irritation or eye damage. Avoid prolonged skin contact. Do not get in eyes. In case of contact, flush with plenty of water. If irritation persists get medical attention. Avoid contamination of food.

FIRST AID: If tablets are swallowed drink promptly a large quantity of milk, egg whites or gelatin solution. Avoid alcohol.

NOTE TO PHYSICIAN: Probable mucosal damage may contraindicate the use of gastric lavage. Measures against circulator shock, respiratory depression and convulsion may be needed.

Rinse empty carton container thoroughly with water and discard. Always follow your health department regulations.

2. MIKRO-QUAT

DANGER: Causes high damage and skin irritation. Do not get into eyes, on skin, or on clothing. Protect eyes when handling concentrated product. Harmful if swallowed. Avoid contamination of food.

FIRST AID: In case of contact, immediately flush eyes or skin with plenty of water for at least 15 minutes. For eyes, call a physician. Remove and wash contaminated clothing before reuse. If swallowed, drink promptly a large quantity of milk, egg whites or gelatin solution, or if these are not available, drink a large quantity of water. Call physician immediately.

1. Move the two manual ON-OFF toggle switches, on the front of the Control Box, to the OFF position.
2. Remove all ice from the ice storage bin.
3. CLOSE the water supply shutoff valve; or block the float in the Water Reservoir.
4. Disconnect the tube between the Water Reservoir and the bottom of the Freezer Assembly and drain water from the Reservoir and tube. Reconnect the tube.
5. Prepare one gallon of sanitizing solution composed of 450 PPM active quaternary ammonium germicide solution, using a quaternary ammonium sanitizing solution.

NOTE

Carefully follow directions and observe all precautions on the container of the compound.

*Three *Sterilax 3-Q sanitizing tablets per gallon of water; or, 2/3-ounce of *Mikro-Quat per gallon of water will yield a solution of about 450 PPM active quaternary.*

6. Remove the lid to the Reservoir and place the lid in the container of sanitizing solution.
7. Slowly pour the sanitizing solution into the Water Reservoir, to just below the Reservoir overflow.
8. Move the two manual ON-OFF toggle switches, on the front of the Control Box, to the ON positon.
9. Continue to slowly pour the sanitizing solution into the Water Reservoir, maintain level just below the Reservoir overflow.
10. Continue icemaking, using the sanitizing solution, until the one gallon of solution is used up, in about 15 minutes time.

NOTE

The last part of the sanitizing solution should be rapidly poured into the Water Reservoir, to cause a small amount of the solution flow into the overflow pipe.

11. Remove the lid of the Reservoir from the container used for the sanitizing solution; then, rinse the lid in clear water and replace the lid on the Water Reservoir.
12. When the last of the sanitizing solution in the Water Reservoir recedes, OPEN the water supply shutoff valve, or remove the block from the float in the Water Reservoir.

13. Continue icemaking with tap water for 30 minutes.
14. Remove all ice from the ice storage bin in the RPD100 or the auxiliary Bin, rinse the bin with clear tap water and drain off all liquid.
15. Replace all panels.
16. Clean and sanitize interior ice storage bin, parts and surfaces each week.

* Sterilax 3-Q sanitizing tablets are distributed by Pittsburgh Chemical Laboratory, Inc., Pittsburgh, PA 15222, and may be obtained through most restaurant supply houses.

* Mikro-Quat is manufactured by Economics Laboratory, Inc., Osborn Building, St. Paul, MN 55102, and may be obtained from them through their Magnus Division, The Klenzade Division or from restaurant supply houses.

SECTION VI
SERVICE DIAGNOSIS

The Service Diagnosis Section is for use in aiding the serviceman in diagnosing a particular problem for pin-pointing the area in which the problem lies, thus an ever available reference for proper corrective action.

The following charts list corrective actions for the causes of known symptoms of certain problems that can occur in the Icemaking - Refrigeration System and in the Extruder Assembly.

I. ICEMAKING - REFRIGERATION SYSTEM

SYMPTOM	POSSIBLE CAUSE	CORRECTION
Water Leaks.	Defective water seal.	Replace Seal.
	Gravity feed line leaking.	Check hose clamps.
	Water level in reservoir too high.	Adjust water level to 3/8-inch below reservoir overflow, then raise reservoir until water flows out freezer spout, then lower reservoir 3/4-inch.
	Storage bin drain and connecting fittings.	Check and repair.
Excessive noise or chattering.	Mineral or scale deposit on auger and inner freezing chamber walls.	For severe deposit, remove and manually polish auger, sand inner chamber walls of freezer barrel.
		For lighter concentration, use Scotsman Ice Machine Cleaner periodically.
	Intermittent water supply.	Check and clean water strainer.
		Check gravity feed line for air lock.
		Remove air lock.
	Water level in reservoir too low.	See CORRECTION for Water Leaks above.
	Gear Reducer loose on frame.	Tighten Gear Reducer.
	Motor compressor not solid on rubber mounts.	Repair or replace rubber mounts.
	Gearmotor end-play or worn bearing.	Repair or replace bearing.
Making wet ice. (Ice melts too quickly, is not cold enough to properly cure in the Bin.)	Surrounding air temperature too high.	Correct or move cabinet.
	Under or over-charge of refrigerant.	Recharge with proper amount. Should frost out of accumulator at least 8-inches. See nameplate for correct charge. See CORRECTION for Water leaks above.

ICEMAKING - REFRIGERATION SYSTEM (Cont'd.)

SYMPTOM	POSSIBLE CAUSE	CORRECTION
Making wet ice (cont'd)	Back pressure too high.	Overcharge of refrigerant. Faulty compressor or high head pressure. Lower pressure as indicated.
	Faulty compressor or valve plate.	Repair or replace compressor or valve plate.
Low ice production.	Loss of refrigerant. Under or over-charge of refrigerant.	Check and recharge. See NAMEPLATE for correct charge.
	Drivemotor weak.	Replace Drivemotor.
	Dirty or plugged condenser.	Clean condenser.
	Low water level in water reservoir.	See CORRECTION for Water leaks above.
	Partial restriction in capillary tube or drier.	Moisture in system. Overcharge of oil in system. Remove charge by blowing back through cap tube. Replace drier and recharge.
	Inlet water strainer partially plugged.	Remove screen and clean.
	Corroded or stained auger due to water condition.	Remove auger and clean, or use Scotsman Ice Machine Cleaner. See Maintenance Section.
Gearmotor noise.	Low on oil.	Remove case cover to check for proper oil level. Top of gears should be covered. Use: Sun Oil Company Prestige 50-EP
Icemaker will not operate.	Blown fuse in line.	Replace fuse and check for cause of blown fuse.
	Bin thermostat set too high.	Adjust thermostat. Set at 35-degrees cut-out, 45-degrees cut-in.
	Loose electrical connection.	Check wiring.
	Switch in OFF position.	Set switch to ON position.
	Inoperative master switch.	Replace switch or thermal overload.
	Off on manual-reset pressure control.	Reset.
Icemaker continues to operate with full storage bin.	Bin thermostat not properly set or is defective.	Re-set or replace bin thermostat Re-set to 35-degrees cut-out, 45-degrees cut-in.
Compressor cycles intermittently.	Low voltage.	Check for overloading.
	Dirty condenser.	Clean condenser.
	Air circulation blocked.	Remove cause or move unit.
	Inoperative condenser fan motor.	Replace motor.

ICEMAKING - REFRIGERATION SYSTEM (Cont'd)

SYMPTOM	POSSIBLE CAUSE	CORRECTION
Compressor Cycles intermittently (cont'd)	Non-condensable gases in system.	Check for gas leaks, evacuate and recharge.
	Bin thermostat differential too small causing short cycling.	Widen differential 35-degrees cut-out, 45-degrees cut in.
	Cycling on ice spout microswitch.	Set or replace Bin thermostat.
Icemaker operates but makes no ice.	Loss or undercharge of refrigerant.	Check for leaks and recharge. See NAMEPLATE for correct charge.
	Water not entering freezing chamber.	Plugged strainer or supply line. Check and clean. Air lock in gravity feed line. Check and remove air lock.
	Moisture in system	Check, evacuate, replace drier.
		Recharge. See NAMEPLATE for correct charge.
	Water seal leaking.	Replace seal.
	Water turned off while unit was operating.	Freezer inlet water line froze shut. Unit must be turned off and defrosted.
	Drivemotor or drive coupling stripped.	Repair or replace drivemotor or drive coupling.

II. EXTRUDER MOUNTING ASSEMBLY

SYMPTOM	POSSIBLE CAUSE	CORRECTION
Excessive noise or chattering.	Mineral or scale deposit on auger and inner Extruder chamber walls.	For severe deposit, remove and manually polish auger, sand inner chamber walls of Extruder.
		For lighter concentration, use Scotsman Ice Machine Cleaner periodically.
	Gear Reducer low on oil.	Add oil to Gear Reducer.
	Loose bolts on Extruder Assembly. Pulleys loose on shafts.	Check for damage, tighten bolts. Check for damage, tighten set screws.
Extruder will not operate.	Blown fuse in line.	Replace fuse and check for cause of blown fuse.
	Bin thermostat set too high.	Adjust thermostat. Set at 35-degrees cut-out, 45-degrees cut-in.
	Loose electrical connection.	Check wiring.
	Switch in OFF position.	Set switch to ON position.
	Inoperative master switch.	Replace switch or thermal overload.

EXTRUDER MOUNTING ASSEMBLY (Cont'd)

SYMPTOM	POSSIBLE CAUSE	CORRECTION
Extruder will not operate. (Cont'd)	Off on manual-reset pressure control	Reset.
	Flaker spout switch tripped.	Reset spout switch and check operation.
	Discharge tube off of Extruder.	Replace tube and check for restrictions.
Repeated tripping of Flaker spout switch.	Extruder not operating.	Repair or replace Motor, Gear Reducer or belt.
	Low refrigerant charge.	Add refrigerant. SEE NAMEPLATE
	Corroded Flaker discharge tube.	Replace tube.
	Restriction in Extruder discharge tube.	Eliminate restriction or replace tube.
	Damaged or worn Extruder Breaker.	Replace Breaker.

SECTION VII
WIRING DIAGRAMS

This Section is provided as an aid in understanding the electrical circuitry of the Extruder Cuber.

The Wiring Diagrams in this Section are:

Figure 7-1. Wiring Diagram Air-Cooled Model— EC900A-2A & EC900A-7A.

Figure 7-2. Wiring Diagram Water-Cooled Model — EC900W2A & EC900W-7A.

Figure 7-3. Wiring Diagram Air-Cooled Model — EC900A-3A.

Figure 7-4. Wiring Diagram Water-Cooled Model — EC900W-3A.

WARNING

When conducting a continuity check of the Extruder Cuber:

1. **Disconnect the main power source.**
2. **DO NOT use an incandescent lamp or jumper wire, conduct all tests with a volt-ohm-meter.**

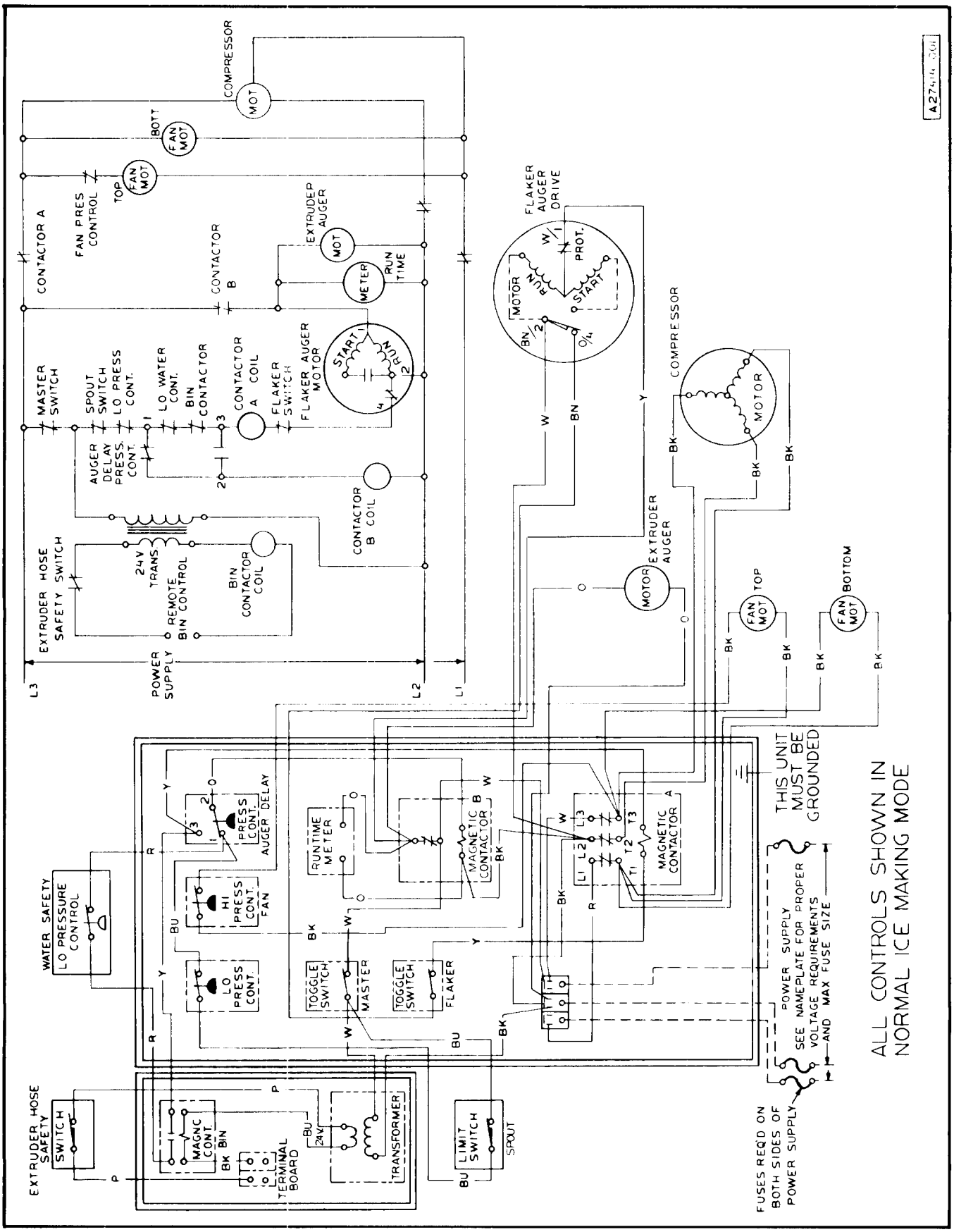

Figure 7-1. Wiring Diagram - Air-Cooled Model EC900A-2A & EC900A-7A

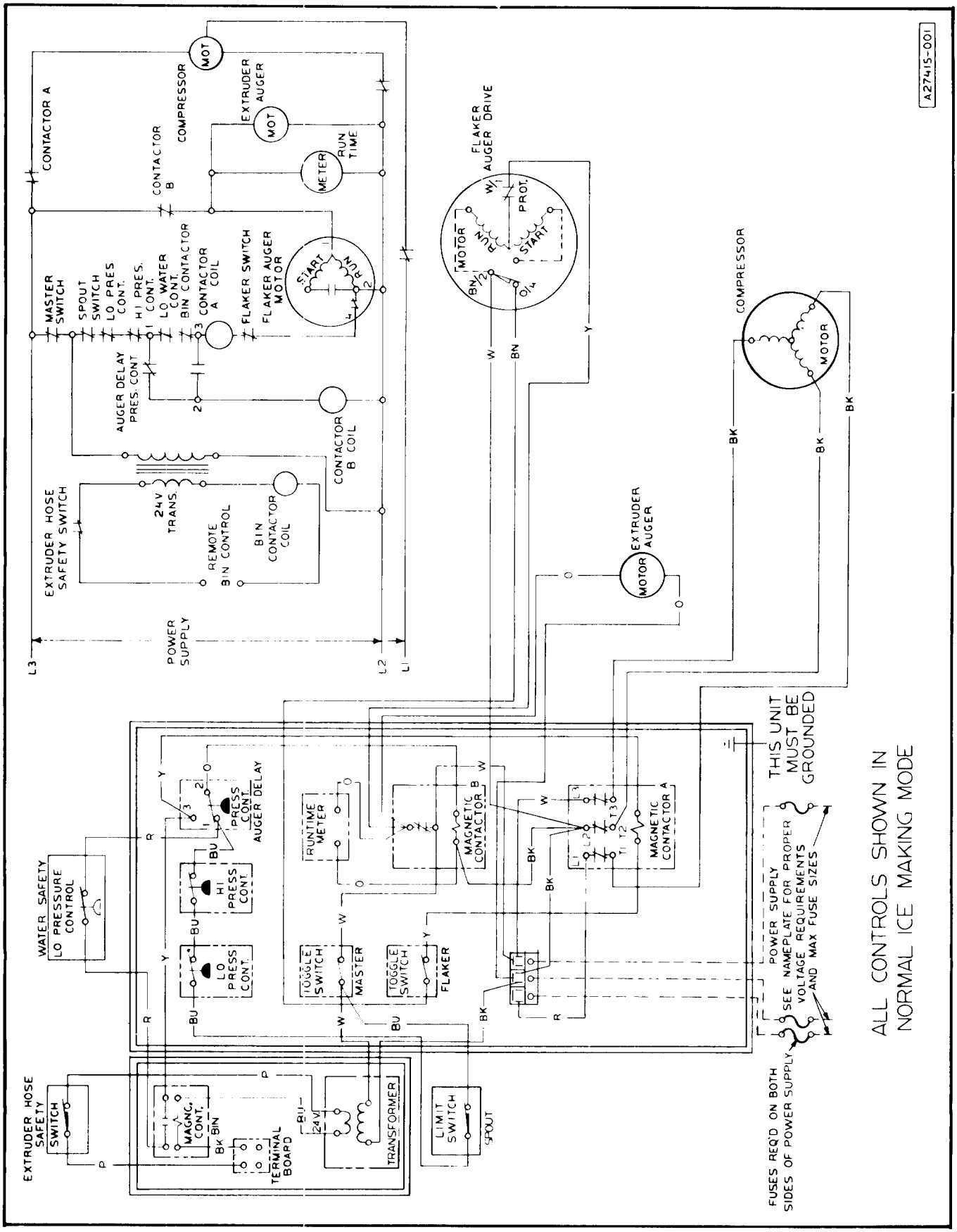

Figure 7-2. Wiring Diagram Water-Cooled EC900W-2A & EC900W-7A.

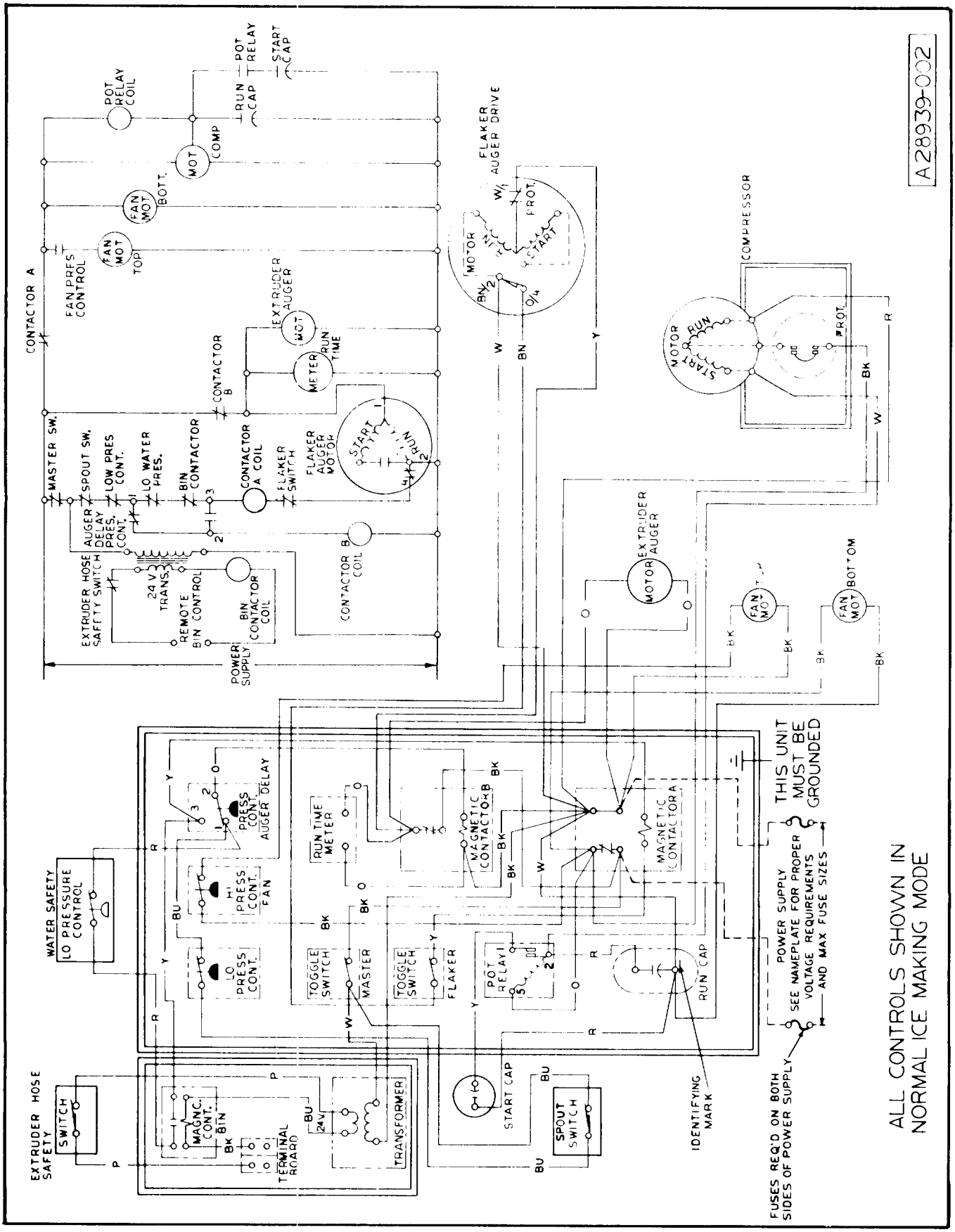

Figure 7-3. Wiring Diagram Air-Cooled EC900A-3A.

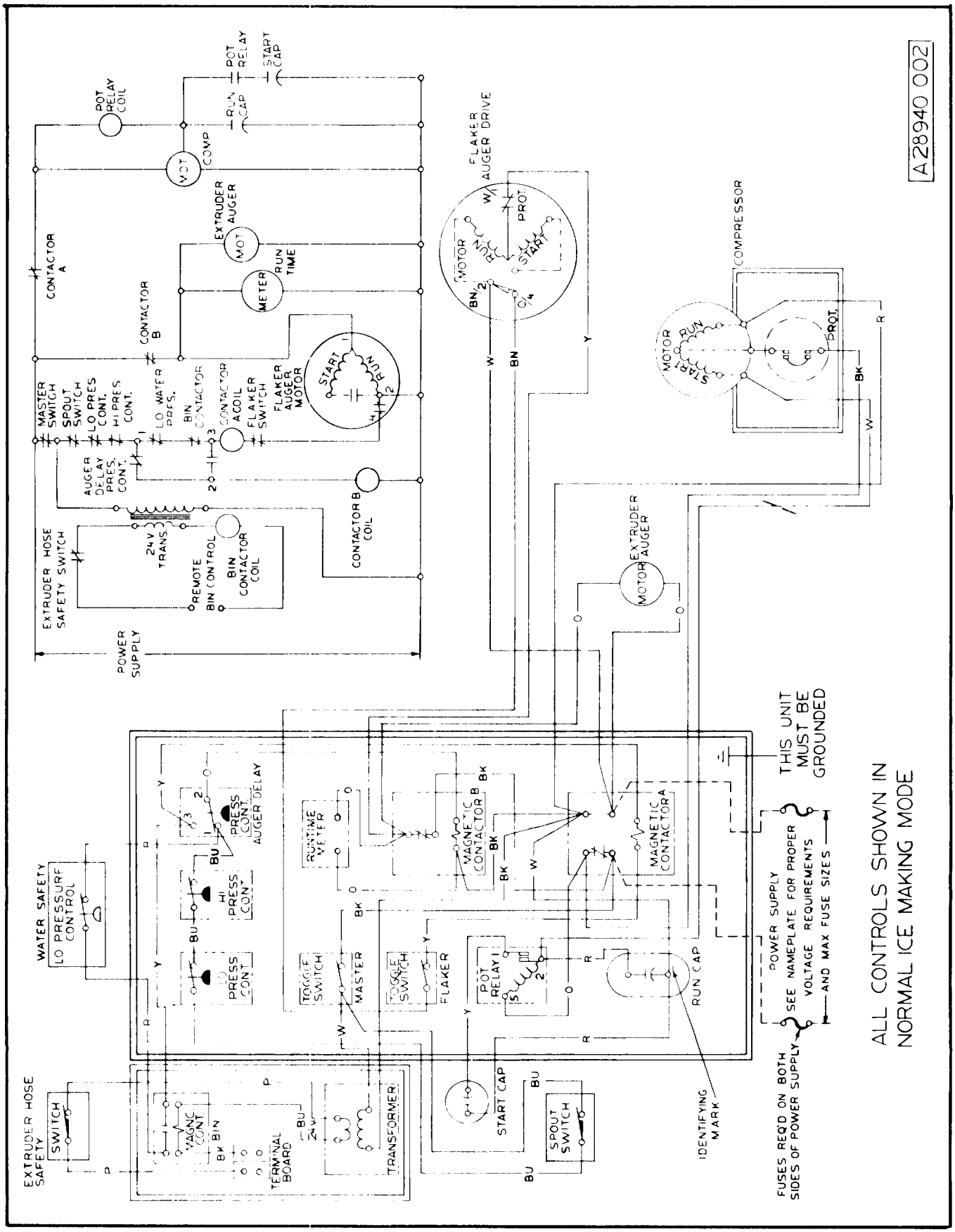

Figure 7-4. Wiring Diagram Water-Cooled EC900W-3A.

SECTION VIII
THE PARTS ILLUSTRATIONS AND PARTS LISTS

I. GENERAL

This section contains the Parts Illustrations and the Parts List for each of the major assemblies in the EC900 Extruder Cuber.

Each Parts Illustration shows an assembly as an exploded view, with an Index Number for each part or sub-assembly, given in disassembly order. These Index Numbers key with the Parts List for the assembly and are found in the Parts List Column headed Index Number. The Description Column gives the identifying nomenclature for the item indexed. The Part Number Column gives the number of item. The Number Required Column gives the number of items required per assembly, but not necessarily the total number of parts required per Cuber.

All assemblies are cross-referenced both from the major assembly listing where they first appear in the Parts Listing to their break-down listing, and from the break-down listing, back to the major assembly (next higher assembly) listing.

A *No Number* designation, when used in the Part Number Column indicates the unit is not available from SCOTSMAN as an assembly. This designation is used only for the convenience and clarity of division in cataloging.

When an Index Number is followed by a letter (e.g. 1a. 1b.), the letter indicates the part listed is part of the assembly indexed by the basic Index Number. The number required of the part indexed by the number and letter combination is for only one of the assemblies indexed by the basic Index Number and not necessarily the total number or parts used in the Cuber. Where the notation *Ref* occurs in the Number Required Column the number of the assemblies or parts required for use in the Cuber will be found under previous Index Number or in the next higher assembly Parts Listing. The next higher listing Figure/Index number is shown in the Description Column immediately following the items description.

II. HOW TO USE THE ILLUSTRATIONS AND PARTS LIST

To find the part number of a required part or assembly, turn to the List of Illustrations and find the page number of the Parts Illustration of the major or sub-assembly containing the part. Turn to the indicated page and locate the part and its Index Number on the specific illustration. Find the Index Number on the required part in the Parts List to determine the complete description of the part.

III. HOW TO ORDER PARTS OR ASSEMBLIES

When ordering parts or assemblies, to avoid costly delays and errors in shipment, give the part number, the complete description shown in the list, and the quantities of each part or assembly required. Also include the Model name, the serial number of the Cuber for which the part is required, and for parts which require color matching, the color of the Cabinet. See Figure 8-00, at the end of this section for detailed ordering instructions.

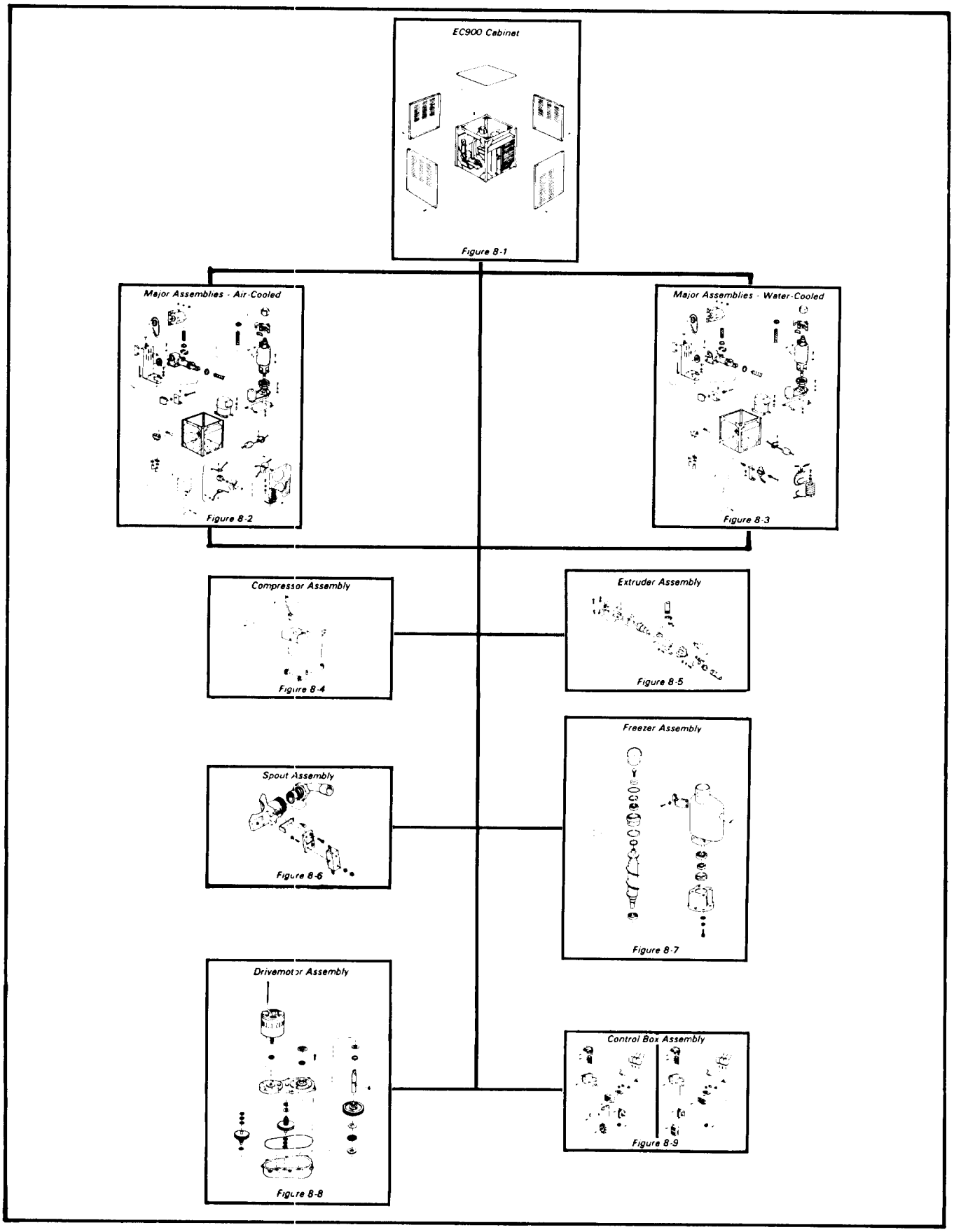

Figure 8-A. EC900 Extruder Cuber Flow Chart

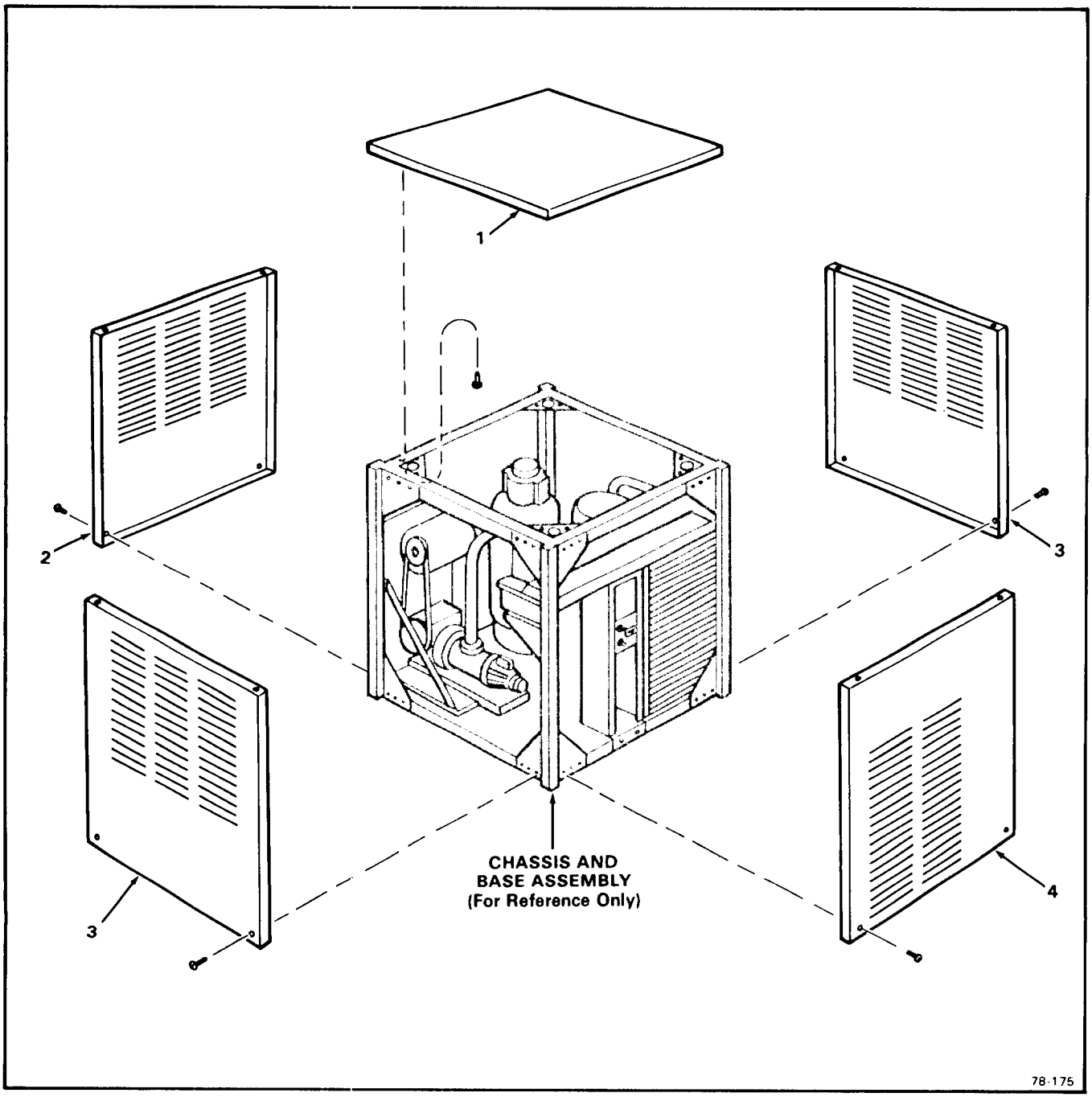

Figure 8-1. EC900 Cabinet.

Figure 8-1. EC900 Cabinet

INDEX NO.	DESCRIPTION	PART NUMBER	REQ'D. NUMBER
	EC900 Cabinet	No. Number	1
	* * *		
1	Top, Cabinet (C.R.S Painted)	A27260-001	1
	Top, Cabinet (Stainless Steel)	A27260-002	1
	attaching parts, Index 1		
	Screw, No. 5/16-18 x 1/2 Hex Cap	03-1405-15	4
	* * *		
2	Panel, Rear (C.R.S. Painted)	A27253-001	1
	Panel, Rear (Stainless Steel)	A27253-002	1
	attaching parts, Index 2		
	Lockwasher, No. 8 Countersunk External	03-1417-15	4
	Screw, No. 8 x 1-1/4 S/T Flat Hd	03-1419-24	4
	* * *		
3	Panel, Side (C.R.S. Painted) (Left & Right)	A27252-001	2
	Panel, Side (Stainless Steel) (Left & Right)	A27252-002	2
	attaching parts, Index 3		
	Lockwasher, No. 8 Countersunk External	03-1417-15	4 (8)
	Screw, No. 8 x 1-1/4 S/T Flat Hd	03-1419-24	4 (8)
	* * *		
4	Panel, Front (C.R.S. Painted)	A27254-001	1
	Panel, Front (Stainless Steel)	A27254-002	1
	attaching parts, Index 4		
	Lockwasher, No. 8 Countersunk External	03-1417-15	4
	Screw, No. 8 x 1-1/4 S/T Flat Hd	13-1419-24	4
	* * *		

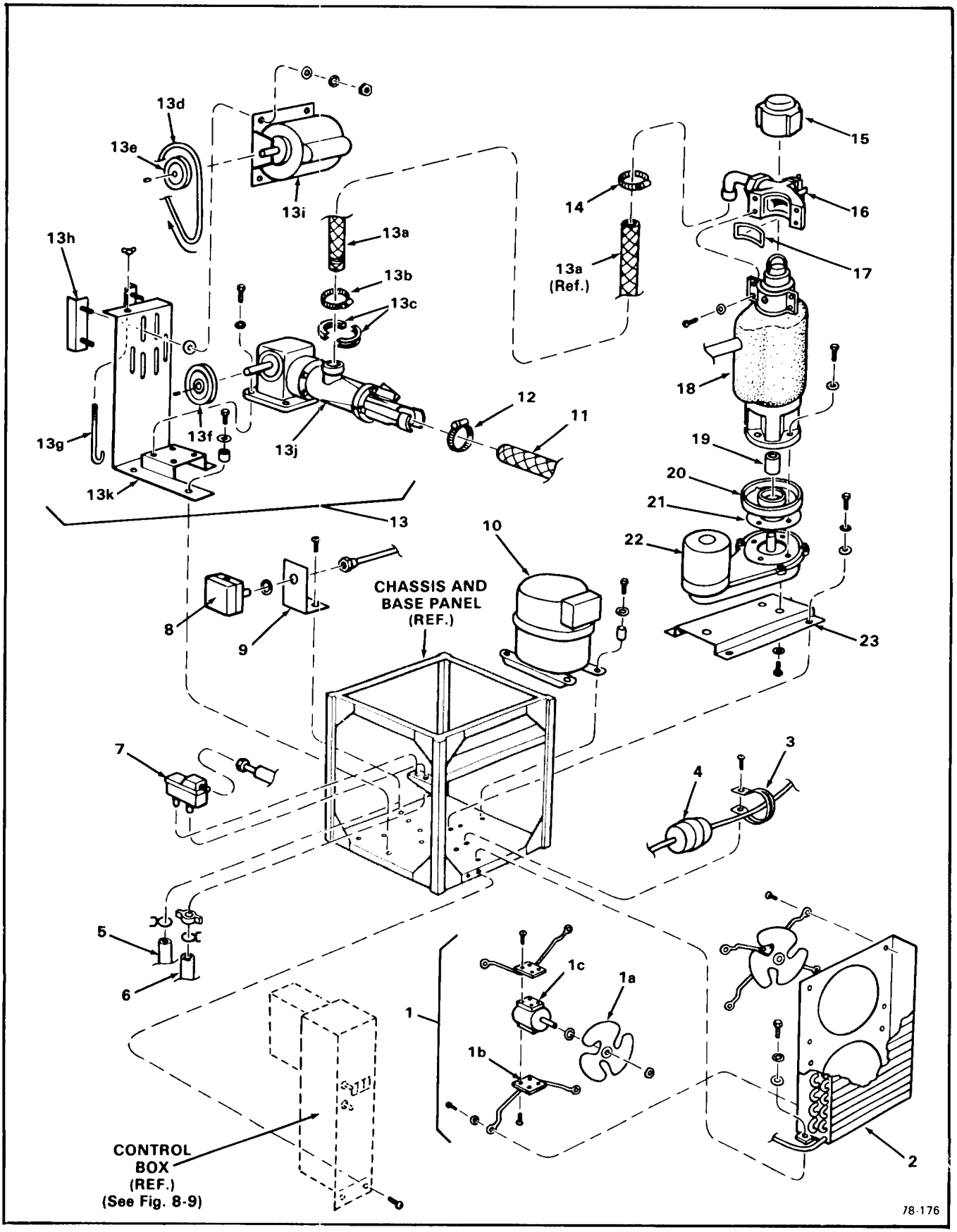

Figure 8-2, Major Assemblies - Air-Cooled

Figure 8-2, Major Assemblies - Air-Cooled

INDEX NO.	DESCRIPTION	PART NUMBER	REQ'D. NUMBER
	Major Assemblies - Air-Cooled	No Number	Ref.
	* * *		
1	Bracket Assembly, Fan Motor and Mounting	No Number	2
1a	Blade, Fan	18-0231-00	1 (2)
	Pad, Vibration (p/o Fan Motor)	No Number	1 (2)
	Nut, Fan Mounting (p/o Fan Blade)	No Number	1 (2)
1b	Bracket, Fan Mounting	02-2378-01	1 (2)
1c	Motor, Fan	12-1575-02	1 (2)
	attaching parts, Index 1c to 1b		
	Screw (p/o Fan Motor)	No. Number	4 (8)
	attaching parts, Index 1 to Condenser Shroud		
	Screw, No 8 x 3/8 T/F Tap	03-1404-08	4 (8)
	* * *		
2	Condenser - Air-Cooled	18-3714-01	1
	attaching parts, Index 2		
	Lockwasher, No. 1/4 External Tooth	03-1417-09	3
	Screw, No. 1/4-20 x 3/8 Hex Cap	03-1405-01	3
	* * *		
3	Brace, Drier	A09388-001	1
	* * *		
4	Drier	02-0544-01	1
	attaching parts, Index 3 & 4		
	Screw, No. 10-24 x 3/4 Pan Hd Mach	03-1403-31	1
	* * *		
5	Tube (Reservoir Overflow to Drip Pan)	13-0079-03	1
	(Order by foot) (28-inch lg.)		
	* * *		
6	Tube (Reservoir to Freezer Inlet)	13-0674-09	1
	(Order by foot) (20 inch lg.)		
	attaching parts, Index 5 & 6		

Figure 8-2. Major Assemblies - Air-Cooled (cont'd).

INDEX NO.	DESCRIPTION	PART NUMBER	REQ'D. NUMBER
	Clamps, Tube (Index 5)	02-0534-00	1
	Clamp, Tube (Index 6)	02-0694-00	2
	* * *		
7	Reservoir	02-2217-01	1
	Valve Assembly, Float (Not Shown)	02-2217-02	1
	attaching parts, Index 7		
	Wing Nut (p/o Reservoir)	No Number	1
	* * *		
8	Control, Lo Pressure	11-0296-00	1
	* * *		
9	Bracket, Switch - Water Pressure	A28871-001	1
	O-Ring	03-1409-21	1
	attaching parts, Index 8 & 9		
	Screw, No. 10-16 x 1/2 S/T	02-1360-00	2
	* * *		
10	Compressor (See Figure 8-4)	No Number	1
	attaching parts, Index 10		
	Grommet	18-2300-27	4
	Sleeve, Mounting	18-2300-26	4
	Lockwasher, No. 5/16 External Tooth	03-1417-12	4
	Washer, Special	03-1408-29	4
	Screw, No. 5/16-18 x 1-3/4 Hex Cap	03-1405-40	4
	* * *		
11	Tube, Nylobrade (1-inch I.D. x 110-inch lg.)	13-0816-01	1
	attaching part, Index 11		
	* * *		
12	Clamp, Hose	02-0179-02	1
	* * *		

Figure 8-2. Major Assemblies - Air-Cooled (cont'd).

INDEX NO.	DESCRIPTION	PART NUMBER	REQ'D. NUMBER
13	Mounting Assembly, Extruder	No Number	1
13a	Hose, Extruder Feed (15-inch lg.) (order by foot)	13-0805-02	1
	attaching parts, 13a to 13j		
13b	Clamp	02-0706-01	1
13c	Clamp, Extruder	02-2391-01	2
	* * *		
13d	V-Belt	13-0814-01	1
13e	Pulley - 3-1/2-inch Dia.	02-2392-01	1
13f	Pulley - 5-inch Dia.	02-2393-01	1
	Key (attaches 13f to 13j)	02-1951-01	1
13g	Bolt, Adjusting	No Number	2
	Wing Nut - 5/16-18 (attaches 13g)	No Number	2
13h	Plate	No Number	2
13i	Motor	12-2073-02	1
	attaching parts, Index 13h & 13i to 13k		
	Keeper, Fiber Washer	No Number	4
	Washer, No. 5/16 Flat	No Number	4
	Lockwasher, No. 5/16	No Number	4
	Nut, No. 5/16 - 18 Hex	No Number	4
	* * *		
13j	Extruder Assembly (See Figure 8-5)	No Number	1
	attaching parts, Index 13j to 13k		
	Lockwasher, No. 3/8 Helical Spring	No Number	4
	Bolt, No. 3/8-16 x 1-1/4 Hex	No Number	4
	* * *		
13k	Plate, Mounting	No Number	1
	attaching parts Index 13k to Base Panel		
	Grommet	18-2300-27	4
	Sleeve, Mounting	18-2300-26	4
	Lockwasher, No. 5/16 External Tooth	03-1417-12	4

Figure 8-2. Major Assemblies - Air-Cooled (cont'd).

INDEX NO.	DESCRIPTION	PART NUMBER	REQ'D. NUMBER
	Washer, Special	03-1408-29	4
	Screw, No. 5/16-18 x 1-3/4 Hex Cap	03-1405-40	4
	* * *		
14	Clamp, Hose (attaches 13a to Spout 16)	02-0179-02	1
	* * *		
15	Cap, Freezer	13-0809-01	1
	* * *		
16	Spout Assembly	No Number	1
	(See Figure 8-6)		
	attaching parts, Index 16 & 17		
17	Gasket, Spout	02-1437-00	1
	Lockwasher, No. 1/4 Internal Tooth - Phosphor Bronze	03-1417-07	4
	Screw, No. 1/4-20 x 1 Soc-Hd Cap	03-1544-03	4
	* * *		
18	Freezer Assembly	No Number	1
	(See Figure 8-7)		
	attaching parts, Index 18		
	Washer, Special	03-1408-35	3
	Lockwasher, No. 5/16 Helical Spring	03-1410-04	3
	Screw, No. 5/16-18 x 7/8 Hex Cap	03-1420-01	3
	* * *		
19	Coupling	15-0573-01	1
	* * *		
20	Pan, Drip	A24156-002	1
	* * *		
21	Gasket	13-0704-00	1
	* * *		
22	Drivemotor Assembly	A24317-022	1
	(See Figure 8-8)		

Figure 8-2. Major Assemblies - Air-Cooled (cont'd).

INDEX NO.	DESCRIPTION	PART NUMBER	REQ'D. NUMBER
	attaching parts, Index 22 to 23		
	Washer, Special	03-1408-35	3
	Lockwasher, No. 5/16 Helical Spring	03-1410-04	3
	Screw, No. 5/16 - 18 x 7/8 Hex Cap	03-1420-01	3
	* * *		
23	Plate, Motor	No Number	1
	attaching part, Index 23 to Base Panel		
	Washer, No. 1/4 Plain	No Number	4
	Lockwasher, No. 1/4 Helical Spring	No Number	4
	Screw, No. 1/4-20 x 5/8 Hex Cap	No Number	4
	* * *		
	NOTE: See Figure 8-9 for replacement parts within the Control Box Assembly.		

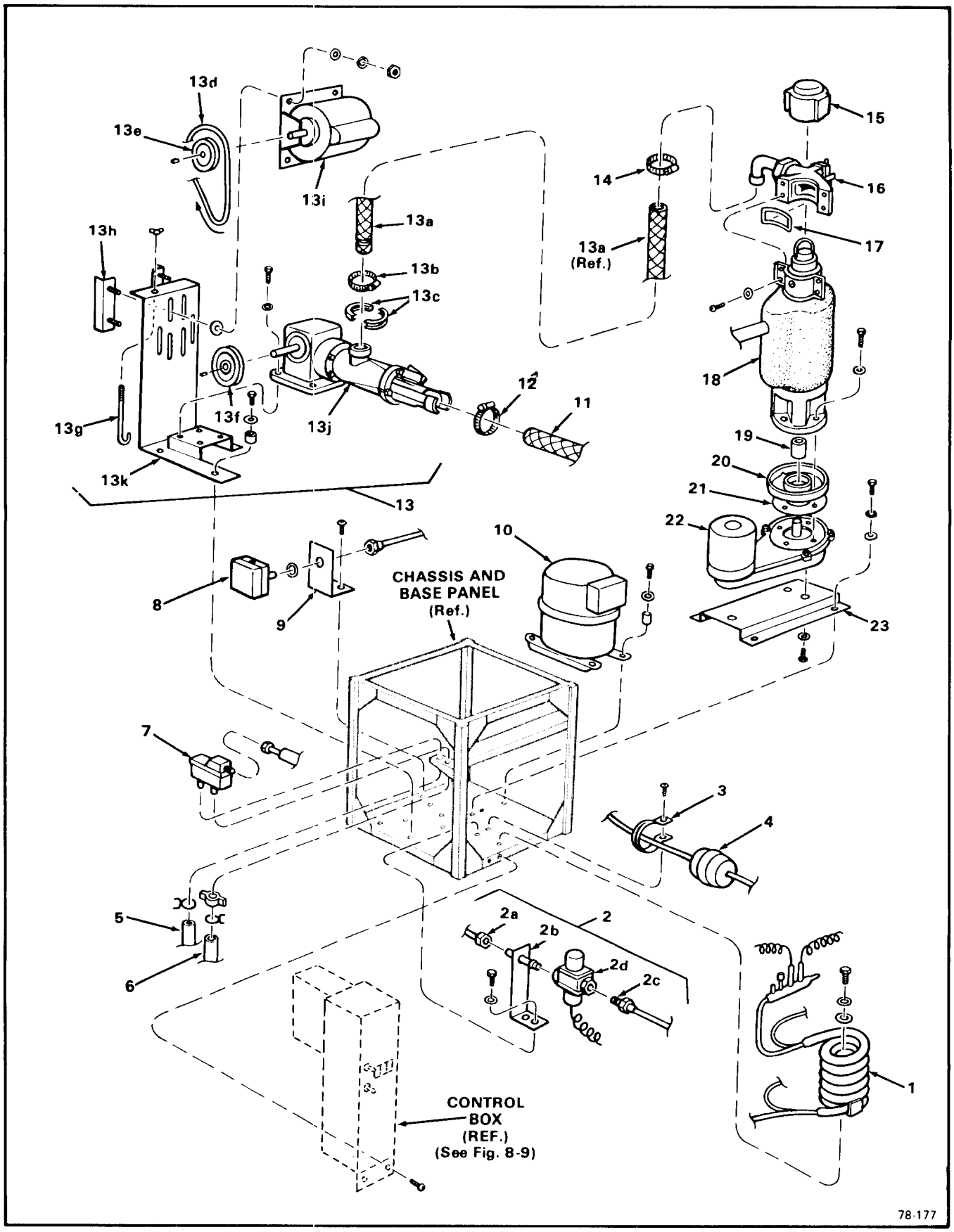

Figure 8-3. Major Assemblies - Water- Cooled

Figure 8-3. Major Assemblies - Water- Cooled

INDEX NO.	DESCRIPTION	PART NUMBER	REQ'D. NUMBER
	Major Assemblies - Water-Cooled	No Number	Ref.
	* * *		
1	Condenser - Water-Cooled	18-3306-02	1
	attaching parts, Index 1		
	Washer, No. 1/4 Plain	03-1407-05	2
	Screw, No. 1/4-20 x 3/8 Hex Cap	03-1405-01	2
	* * *		
2	Regulator Assembly, Water	No Number	1
	attaching parts, Index 2		
	Washer, No. 1/4 Plain	03-1407-05	2
	Screw, No. 1/4-20 x 3/8 Hex Cap	03-1405-01	2
2a	Union, Half - No. 5/8-18 x 3/8 Flare	16-0677-01	1
2b	Nipple Assembly, Pipe (w/Bracket)	A15924-000	1
2c	Coupling - 3/8 NPT x 3/8 Flare Brass	16-0355-00	1
2d	Valve, Water Regulator	11-0198-02	1
	* * *		
3	Brace, Drier	A09388-001	
	* * *		
4	Drier	02-0544-01	1
	attaching parts, Index 3 & 4		
	Screw, No. 10-24 x 24 Pan Hd Mach	03-1403-31	1
	* * *		
5	Tube, (Reservoir Overflow to Drip Pan)	13-0079-03	1
	(Order by foot) (28-inch lg.)		
	* * *		
6	Tube (Reservoir to Freezer Inlet) (20-inch lg.)	13-0674-09	1
	(Order by foot)		
	attaching parts, Index 5 & 6		
	Clamp, Tube (Index 5)	02-0534-00	1
	Clamp, Tube (Index 6)	02-0694-00	1
	* * *		

Figure 8-3. Major Assemblies - Water- Cooled (cont'd).

INDEX NO.	DESCRIPTION	PART NUMBER	REQ'D. NUMBER
7	Reservoir	02-2217-01	1
	Valve Assembly, Float (Not Shown)	02-2217-02	1
	attaching parts, Index 7		
	Wing Nut (p/o Reservoir)	No Number	1
	* * *		
8	Control, Lo Pressure	11-0296-00	1
	* * *		
9	Bracket, Switch - Water Pressure	A28871-001	1
	O-Ring	03-1409-21	1
	attaching parts, Index 8 & 9		
	Screw, No. 10-16 x 1/2 S/T	03-1360-00	2
	* * *		
10	Compressor (See Figure 8-4)	No Number	1
	attaching parts, Index 10		
	Grommet	18-2300-27	4
	Sleeve, Mounting	18-2300-26	4
	Lockwasher, No. 5/16 External Tooth	03-1417-12	4
	Washer, Special	03-1408-29	4
	Screw, No. 5/16-18 x 1-3/4 Hex Cap	03-1405-40	4
	* * *		
11	Tube, Nylobrade (1-inch x 110-inch lg.)	13-0816-01	1
	attaching part, Index 11		
	* * *		
12	Clamp, Hose	02-0179-02	1
	* * *		
13	Mounting Assembly, Extruder	No Number	1
13a	Hose, Extruder Feed (15-inch lg.) (Order by foot)	13-0805-02	1
	attaching parts, 13a to 13j		
13b	Clamp	02-0706-01	1

Figure 8-3. Major Assemblies - Water- Cooled (cont'd).

INDEX NO.	DESCRIPTION	PART NUMBER	REQ'D. NUMBER
13c	Clamp, Extruder	02-2391-01	2
	* * *		
13d	V-Belt	13-0814-01	1
13e	Pulley - 3-1/2-inch Dia.	02-2392-01	1
13f	Pulley - 5-inch Dia.	02-2393-01	1
	Key (attaches 13f to 13j)	02-1951-01	1
13g	Bolt, Adjusting	No Number	2
	Wing Nut - 5/16-18 (attaches 13g)	No Number	2
13h	Plate	No. Number	2
13i	Motor	12-2073-02	1
	attaching parts, Index 13h & 13i to 13k		
	Keeper, Fiber Washer	No Number	4
	Washer, No. 5/16 Flat	No Number	4
	Lockwasher, No. 5/16	No Number	4
	Nut, No. 5/16-18 Hex	No Number	4
	* * *		
13j	Extruder Assembly (See Figure 8-5)	No Number	1
	attaching parts, Index 13j to 13k		
	Lockwasher, No. 3/8 Helical Spring	No Number	4
	Bolt, No. 3/8-16 x 1-1/4 Hex	No Number	4
	* * *		
13k	Plate, Mounting	No Number	1
	attaching parts, Index 13k to Base Panel		
	Grommet	18-2300-27	4
	Sleeve, Mounting	18-2300-26	4
	Lockwasher, No. 5/16 External Tooth	13-1417-12	4
	Washer, Special	03-1408-29	4
	Screw, No. 5/16-18 x 1-3/4 Hex Cap	03-1405-40	4
	* * *		
14	Clamp, Hose (attaches 13a to Spout 16)	02-0179-02	1
	* * *		

Figure 8-3. Major Assemblies - Water- Cooled (cont'd).

INDEX NO.	DESCRIPTION	PART NUMBER	REQ'D. NUMBER
15	Cap, Freezer	13-0809-01	1
	* * *		
16	Spout Assembly	No Number	1
	(See Figure 8-6)		
	attaching parts, Index 16 & 17		
17	Gasket, Spout	02-1437-00	1
	Lockwasher, No. 1/4 Internal Tooth - Phosphor Bronze	03-1417-07	4
	Screw, No. 1/4-20 x 1 Soc - Hd. Cap	03-1544-03	4
	* * *		
18	Freezer Assembly	No Number	1
	(See Figure 8-7)		
	attaching parts, Index 18		
	Washer, Special	03-1408-35	3
	Lockwasher, No. 5/16 Helical Spring	03-1410-04	3
	Screw, No. 5/16-18 x 7/8 Hex Cap	03-1420-01	3
	* * *		
19	Coupling	15-0573-01	1
	* * *		
20	Pan, Drip	A24156-002	1
	* * *		
21	Gasket	13-0704-00	1
	* * *		
22	Drivemotor Assembly	A24317-022	1
	(See Figure 8-8)		
	attaching parts, Index 22 to 23		
	Washer, Special	03-1408-35	3
	Lockwasher, No. 5/16 Helical Spring	03-1410-04	3
	Screw, No.5/16-18 x 7/8 Hex Cap	03-1420-01	3
	* * *		

Figure 8-3. Major Assemblies - Water- Cooled (cont'd).

INDEX NO.	DESCRIPTION	PART NUMBER	REQ'D. NUMBER
23	Plate, Motor	No Number	1
	attaching part, Index 23 to Base Panel		
	Washer, No. 1/4 Plain	No Number	4
	Lockwasher, No. 1/4 Helical Spring	No Number	4
	Screw, No. 1/4-20 x 5/8 Hex Cap	No Number	4
	* * *		
	NOTE: See Figure 8-9 for replacement parts within the Control Box Assembly.		

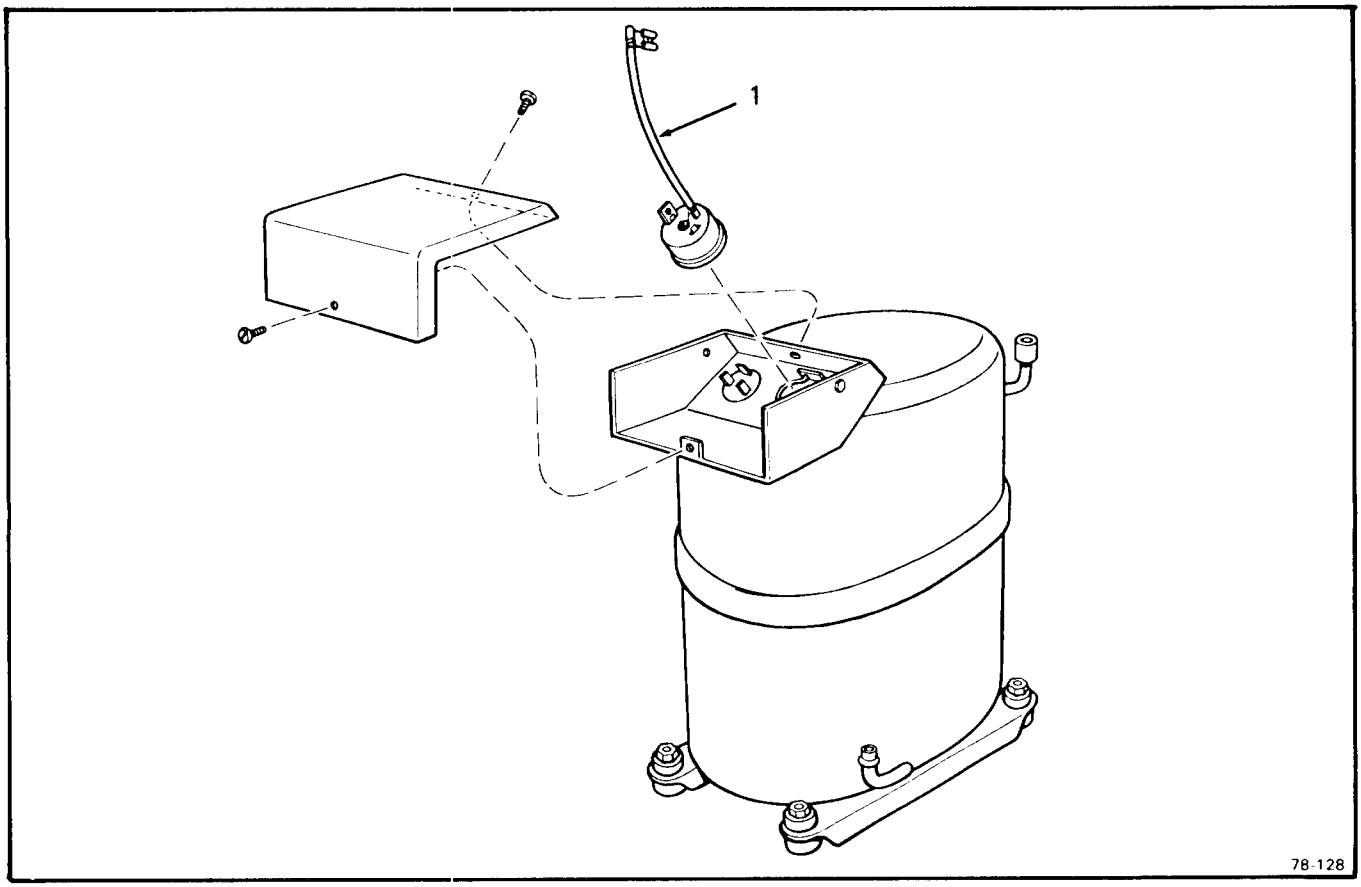

Figure 8-4. Compressor Assembly

Figure 8-4. Compressor Assembly

INDEX NO.	DESCRIPTION	PART NUMBER	REQ'D. NUMBER
	Compressor Assembly — 230/60/1	18-3800-02	Ref.
	Compressor Assembly — 208/240/60/3	18-3800-03	Ref.
	Compressor Assembly — 208/60/1	18-3800-07	Ref.
	(See Figure 8-2/10 and 8-3/10		
	for next higher Assembly)		
	* * *		
1	Overload — (230/60/1)	18-2300-25	1
	Overload — (208/60/1)	18-2300-32	1
	* * *		
	NOTE: 208-240/60/3 internally protected. No service replacement part.		

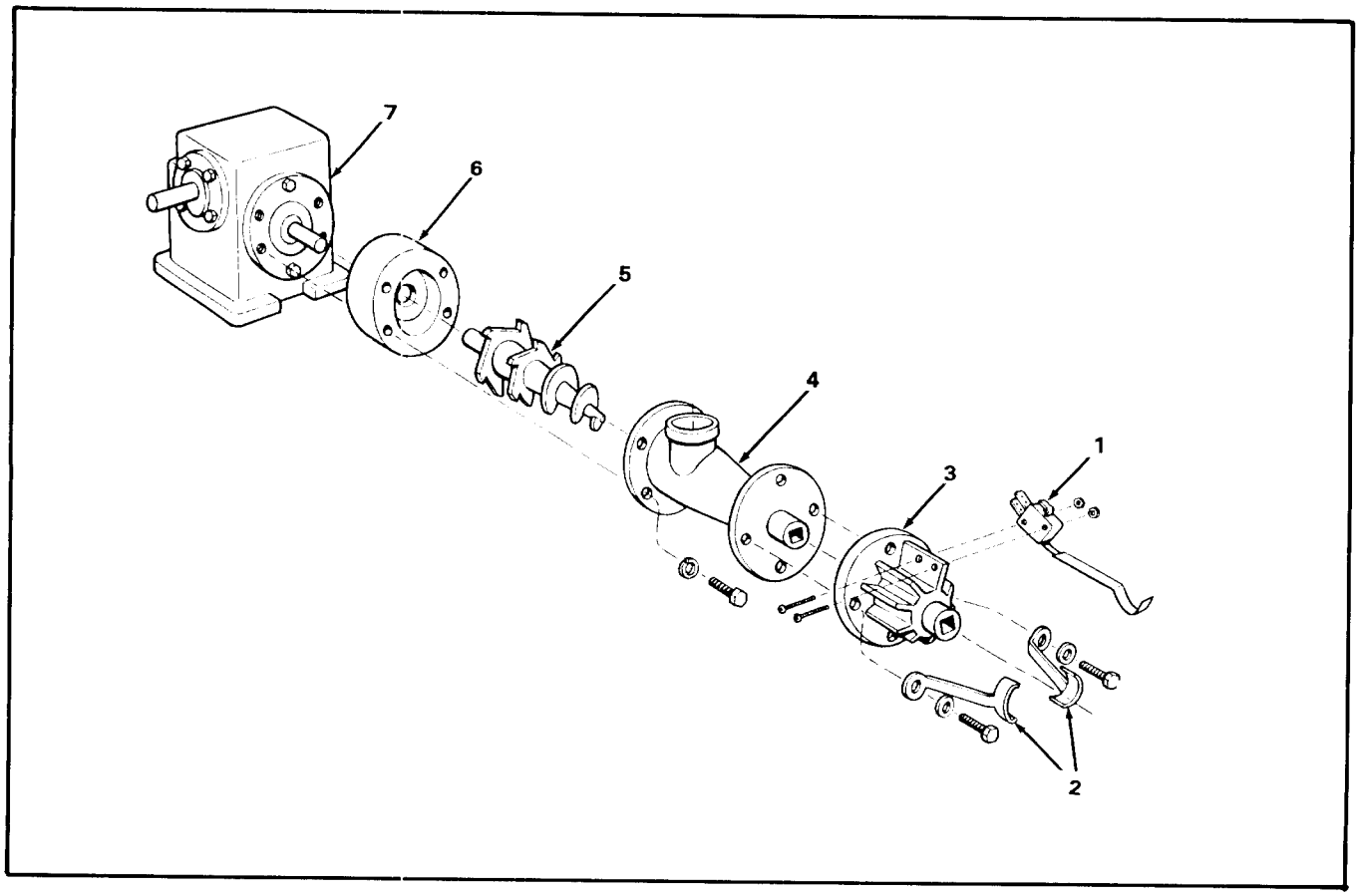

Figure 8-5. Extruder Assembly.

Figure 8-5. Extruder Assembly.

INDEX NO.	DESCRIPTION	PART NUMBER	REQ'D. NUMBER
	Extruder Assembly	No Number	1
	(See Figure 8-2/13j and 8-3/13j		
	for next higher Assembly)		
	* * *		
1	Switch, Bending	A28201-001	1
	attaching parts, Index 1 to 3		
	Washer	03-1410-01	2
	Screw, No. 4-40 x 7/8	03-1403-62	2
	Nut, No. 4-40	03-1406-14	2
	* * *		
2	Clamp Assembly, Hose	A28197-001	2
	* * *		

Figure 8-5. Extruder Assembly (Cont'd)

INDEX NO.	DESCRIPTION	PART NUMBER	REQ'D. NUMBER
3	Breaker	02-2388-01	1
	attaching parts, Index 2 & 3 to 4		
	Washer, No. 1/4	03-1407-05	2
	Screw, No. 1/4-20 x 7/8 Hex Cap	03-1405-45	4
	* * *		
4	Body, Extruder	A28959-001	1
5	Auger	A27507-001	1
6	Pad, Mounting	A27509-001	1
	attaching parts, Index 4, 5, 6 to 7		
	Washer, No. 1/4	03-1410-03	4
	Screw, No. 1/4-20 x 2-1/4 Hex Cap	03-1405-12	4
	* * *		
7	Reducer, Gear	02-2385-01	1
	* * *		

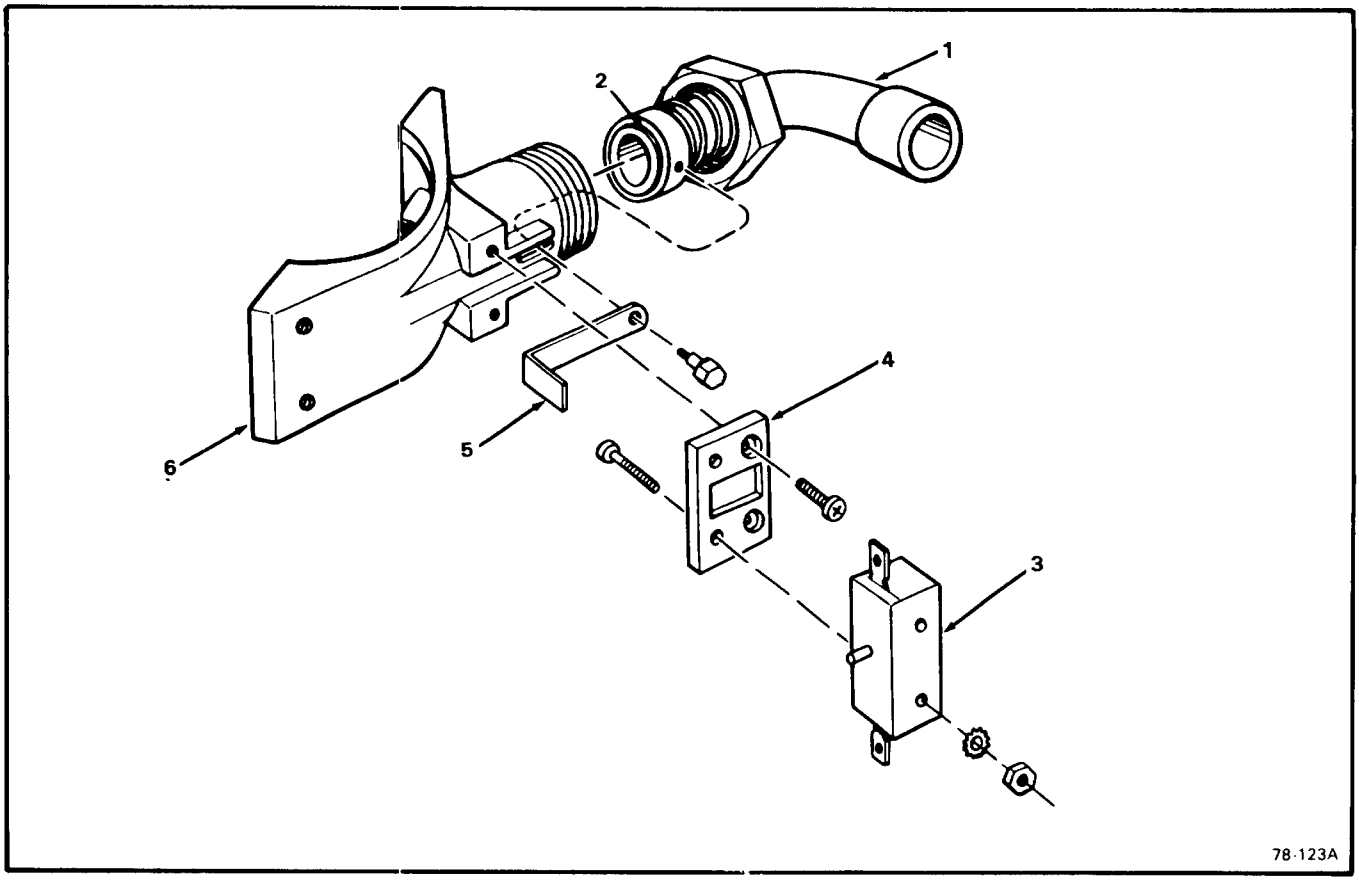

Figure 8-6. Spout Assembly.

Figure 8-6. Spout Assembly.

INDEX NO.	DESCRIPTION	PART NUMBER	REQ'D. NUMBER
	Spout Assembly	No Number	Ref.
	(See Figure/Index 8-2/16 and 8-3/16		
	for next higher Assembly)		
	* * *		
1	Tube, Ice Discharge	A26542-001	1
	* * *		
2	O-Ring	13-0617-41	1
	* * *		
3	Switch	12-1664-00	1
	attaching parts, Index 3 to 4		
	Screw, No. 6-32 x 1 Flat Hd. Mach - Phil Recess	03-1418-38	2

Figure 8-6. Spout Assembly (Cont'd)

INDEX NO.	DESCRIPTION	PART NUMBER	REQ'D. NUMBER
	Lockwasher No. 6 External Tooth - Phosphor Bronze	03-1417-01	2
	Nut, No. 6-32 Hex Mach Screw	03-1406-01	2
	* * *		
4	Barrier, Thermal	02-2377-01	1
	attaching parts, Index 4 to 6		
	Screw, No. 6-32 x 3/8 Flat Hd Mach - Phil Recess	03-1418-01	2
	* * *		
5	Actuator, Switch	A27511-001	1
	attaching parts, Index 5 to 6		
	Screw, Shoulder	A25305-001	1
	* * *		
6	Spout	A26441-001	1
	* * *		

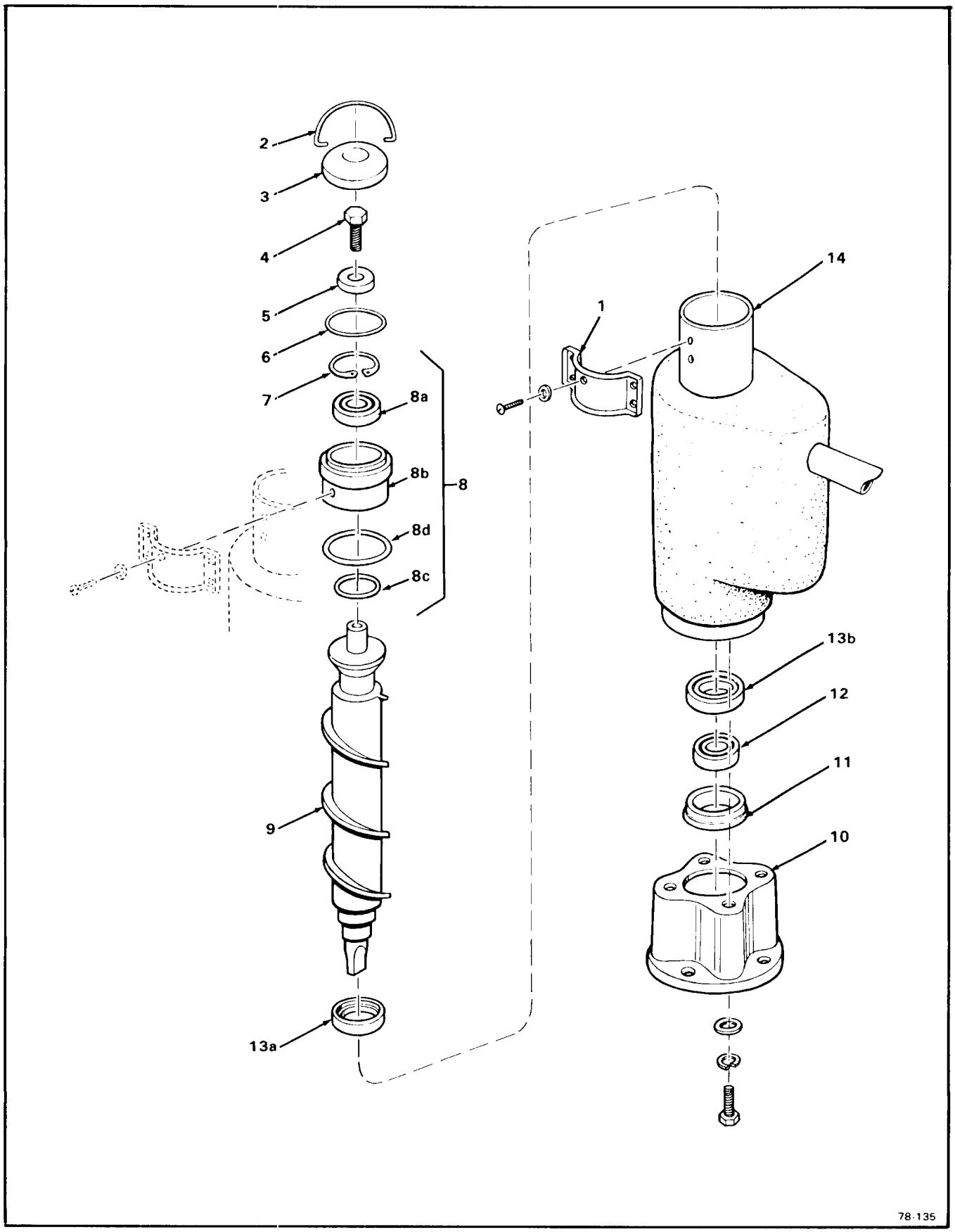

Figure 8-7. Freezer Assembly.

Figure 8-7. Freezer Assembly.

INDEX NO.	DESCRIPTION	PART NUMBER	REQ'D. NUMBER
	Freezer Assembly	No Number	Ref.
	(See Figure/Index 8-2/18 and 8-3/18		
	for next higher Assembly)		
	* * *		
1	Plate, Spout	A24928-001	1
	attaching parts, Index 1		
	Washer, Non-Metallic .250 I.D.	03-1409-20	1
	Screw, No. 1/4-20 x 3/8 Phil Recessed Hd Sealing	03-1506-03	1
	* * *		
2	Hook	A08582-000	1
	* * *		
3	Cap	A08581-000	1
	* * *		
4	Screw, No. 1/2-20 x 1 Hex Cap	03-1405-36	1
	* * *		
5	Washer, Brass 17/32 I.D. x 1-5/8 O.D. x 5/16	A06273-000	1
	* * *		
6	O-Ring (Fits into outside groove, Index 8)	13-0617-20	1
	* * *		
7	Ring, Internal Retaining	02-1558-04	1
	* * *		
8	Retainer, Top Bearing — w/Bearing	A26708-001	1
8a	Bearing (Top)	02-0646-00	1
8b	Retainer (Order P/N A26708-001)	No Number	1
8c	O-Ring - (Internal)	13-0617-15	1
8d	O-Ring - External)	13-0617-40	1
	* * *		
9	Auger	02-2048-01	1
	* * *		

Figure 8-7. Freezer Assembly (cont'd).

INDEX NO.	DESCRIPTION	PART NUMBER	REQ'D. NUMBER
10	Adaptor	02-1629-00	1
	attaching parts, Index 10, 11, 12, 13 to 14		
	Washer, Special	03-1408-03	4
	Lockwasher No. 5/16 Helical Spring	03-1410-04	4
	Screw, No. 5/16-18 x 1-1/4 Hex Cap	03-1405-41	4
	* * *		
	Gasket (Not Shown)	13-1704-00	1
	* * *		
11	Retainer, Bearing	A10591-000	1
	* * *		
12	Bearing	02-0619-00	1
	* * *		
13	Seal, Water	A22569-000	1
13a	Seal, Upper (Fits on Index 9)	No Number	Ref.
13b	Seal, Lower (Fits on top of Index 12)	No Number	Ref.
	* * *		
14	Freezer - (Repair Assembly)	A27276-020	1
	* * *		

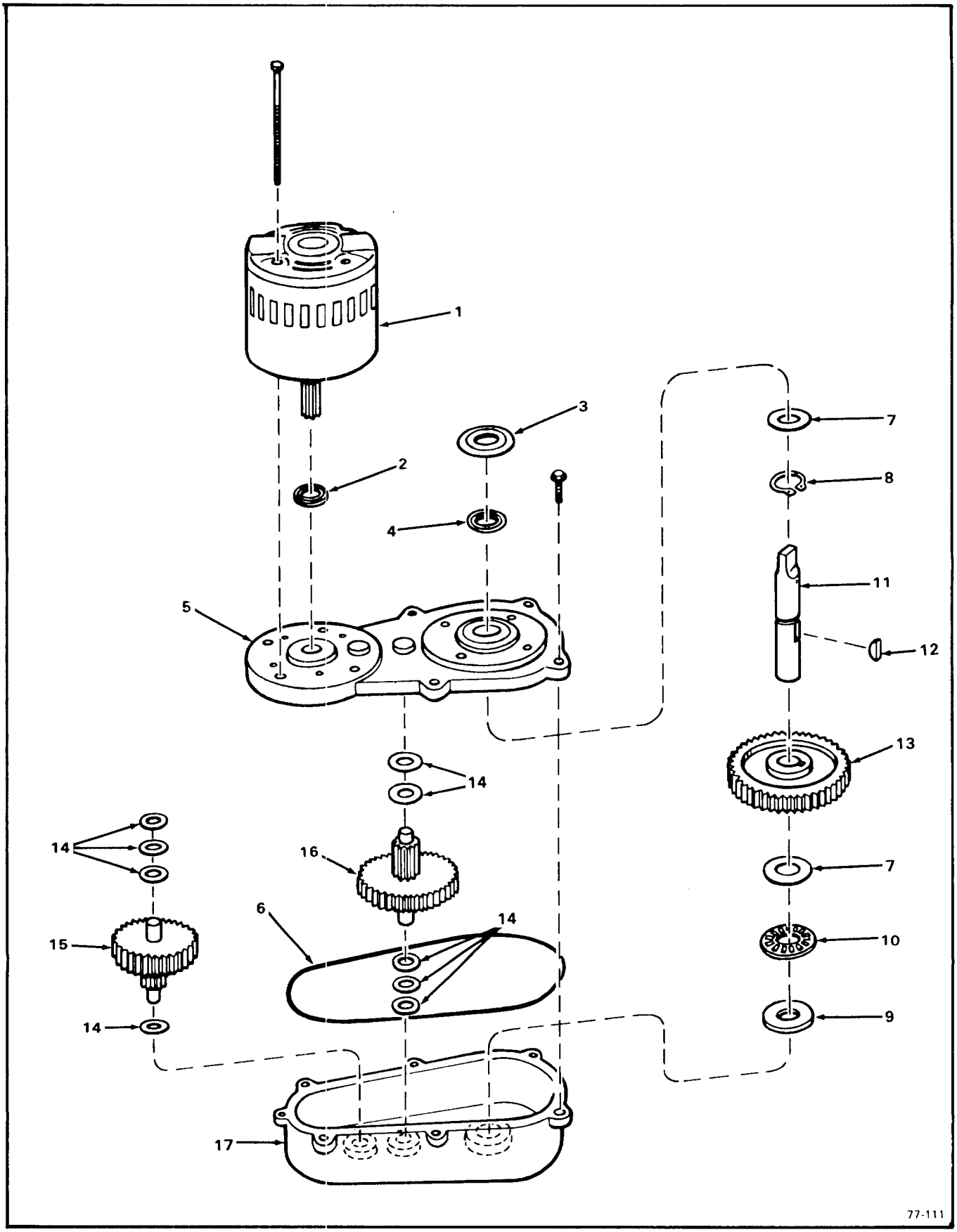

Figure 8-8. Drivemotor Assembly.

Figure 8-8. Drivemotor Assembly.

INDEX NO.	DESCRIPTION	PART NUMBER	REQ'D. NUMBER
	Drivemotor Assembly (1/4 H.P.) (12.2 R.P.M.)	A24317-022	Ref.
	(See Figure/Index 8-2/22 and 8-3/22		
	for next higher Assembly)		
	* * *		
1	Motor, Drive 115/60/1 (1/4 H.P. Split Phase)	A26455-002	1
	attaching parg, Index 1 to 5		
	Screw, Motor (p/o Index 1)	No Number	4
2	Seal, Oil	02-1606-00	1
	* * *		
3	Shed, Water	13-0709-02	1
	* * *		
4	Seal, Oil	02-1607-00	1
	* * *		
5	Cover Assembly, Gear Case	A22200-000	1
	attaching parts, Index 5 to 17		
	Screw, No. 5/16 x 1 Flange	03-1251-01	6
	* * *		
6	O-Ring	A26103-001	1
	* * *		
7	Race, Trust	02-1681-00	2
	* * *		
8	Ring, Retaining	03-1363-00	1
	* * *		
9	Race, Thrust	02-1679-00	1
	* * *		
10	Bearing	02-1680-00	1
	* * *		
11	Shaft, Output	02-1652-00	1

Figure 8-8. Drivemotor Assembly. (cont'd).

INDEX NO.	DESCRIPTION	PART NUMBER	REQ'D. NUMBER
	attaching part, Index 11 to 13		
12	Key (No. 91 Woodruff, Nickel Steel) * * *	03-1364-00	1
13	Gear, Output * * *	02-1653-00	1
14	Washer, Special (.515 I.D. x 875 O.D. x .028 Steel) * * *	03-1408-24	9
15	Second Pinion Assembly, First Gear and * * *	02-2072-00	1
16	Third Pinion Assembly, Second Gear and * * *	02-2071-00	1
17	Case Assembly, Gear * * *	A22199-000	1

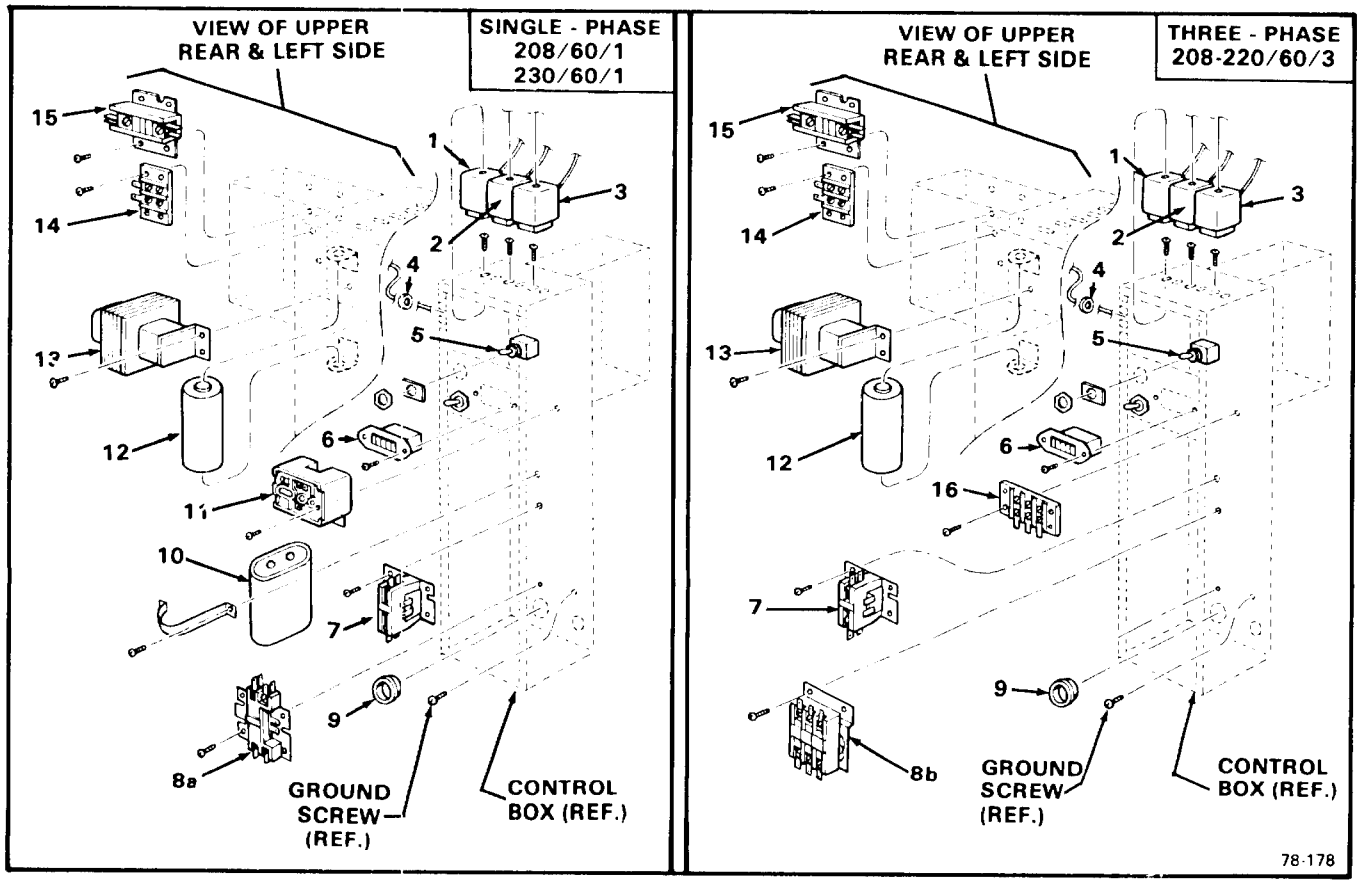

Figure 8-9. Control Box Assembly.

Figure 8-9. Control Box Assembly.

NO. INDEX	DESCRIPTION	A/C W/C	AIR-COOLED WATER-COOLED	PART NUMBER	PHASE 1 208 60	PHASE 1 230 60	PHASE 3 208 240 60
	Control Box Assembly (See Figure 8-2 and 8-3 for next higher Assembly)			No Number	1	1	1
	* * *						
1	Control, Low Pressure	(A/C)	(W/C)	11-0358-01	1	1	1
	attaching parts, Index 1						
	Screw, No. 6-32 x 1/4 Pan Hd			03-1403-02	2	2	2
	* * *						
2	Control, Fan Pressure	(A/C)		11-0403-01	1	1	1
	Control, Hi Pressure		(W/C)	11-0338-02	1	1	1

Figure 8-9. Control Box Assembly (cont'd.)

NO. INDEX	DESCRIPTION		A/C W/C	AIR-COOLED WATER-COOLED	PART NUMBER	PHASE 1 208 60	PHASE 1 230 60	PHASE 3 208 240 60
	attaching parts, Index 2							
	Screw, No. 6-32 x 1/4 Pan Hd				03-1403-02	2	2	2
	* * *							
3	Control, Auger Delay		(A/C)	(W/C)	11-0402-01	1	1	1
	attaching parts, Index 3							
	Screw, No. 6-32 x 1/4 Pan Hd				03-1403-02	2	2	2
	* * *							
4	Grommet		(A/C)	(W/C)	13-0557-00	3	3	3
	* * *							
5	Switch, Toggle		(A/C)	(W/C)	12-0426-01	2	2	2
	* * *							
6	Hourmeter		(A/C)	(W/C)	12-2058-02	1	1	1
	attaching part, Index 6							
	Screw, No. 1/4-20 x 5/8 Hex Cap				03-1405-05	2	2	2
	* * *							
7	Contactor		(A/C)	(W/C)	12-2041-04	1	1	1
	attaching parts, Index 7							
	Screw, No. 8-32 x 3/8 Pan Hd				03-1403-17	2	2	2
	* * *							
8a	Contactor		(A/C)	(W/C)	12-2048-02	1	1	—
8b	Contactor		(A/C)	(W/C)	12-0739-02	—	—	1
	attaching parts, Index 7							
	Screw, No. 8-32 x 3/8 Pan Hd	(8a)			03-1403-17	2	2	—
	Screw, No. 10-24 x 3/8 Pan Hd	(8b)			03-1403-26	—	—	2
	Speednut, No. 10-24 (Flat Type)	(8b)			03-1421-07	—	—	2
	* * *							
9	Bushing, Snap		(A/C)	(W/C)	12-1213-12	1	1	1
	* * *							
10	Capacitor, Run		(A/C)	(W/C)	18-1902-29	—	1	—
	Capacitor, Run		(A/C)	(W/C)	18-1902-34	1	—	—

Figure 8-9. Control Box Assembly (cont'd.)

NO. INDEX	DESCRIPTION	A/C W/C	AIR-COOLED WATER-COOLED	PART NUMBER	PHASE 1 208 60	PHASE 1 230 60	PHASE 3 208 240 60
	attaching parts, Index 10						
	Bracket, Capacitor			A24767-001	1	1	—
	Screw, No. 8-32 x 1-1/4 Phil Recess Pan Hd			03-1403-23	1	1	—
	* * *						
11	Relay	(A/C)	(W/C)	18-1903-29	—	1	—
	Relay	(A/C)	(W/C)	18-1903-34	1	—	—
	attaching part, Index 11						
	Screw, No. 6-32 x 3/8 Phil Recess Pan Hd			03-1403-04	1	1	—
	* * *						
12	Capacitor, Start	(A/C)	(W/C)	18-1901-15	1	1	—
	* * *						
13	Transformer	(A/C)	(W/C)	A27404-001	1	1	—
	Transformer	(A/C)	(W/C)	A27404-002	—	—	1
	attaching parts, Index 13						
	Screw, No. 10 x 3/8 T/F Tap			03-1404-15	2	2	2
	* * *						
14	Strip, Terminal			12-1444-00	1	1	1
	attaching parts, Index 14						
	Screw, No. 8 x 3/4 T/F Tap			03-1404-27	2	2	2
	* * *						
15	Contactor			12-2041-03	1	1	1
	attaching part, Index 15						
	Screw, No. 8-32 x 3/8 Pan Hd			03-1403-17	2	2	2
	* * *						
16	Block, Terminal			12-2114-01	—	—	1
	attaching parts, Index 16						
	Washer, No. 6 External Tooth - Phosphor Bronze			03-1417-01	—	—	2
	Screw, No. 6-32 x 5/8 Phil Recess Pan Hd			03-1403-58	—	—	2
	* * *						

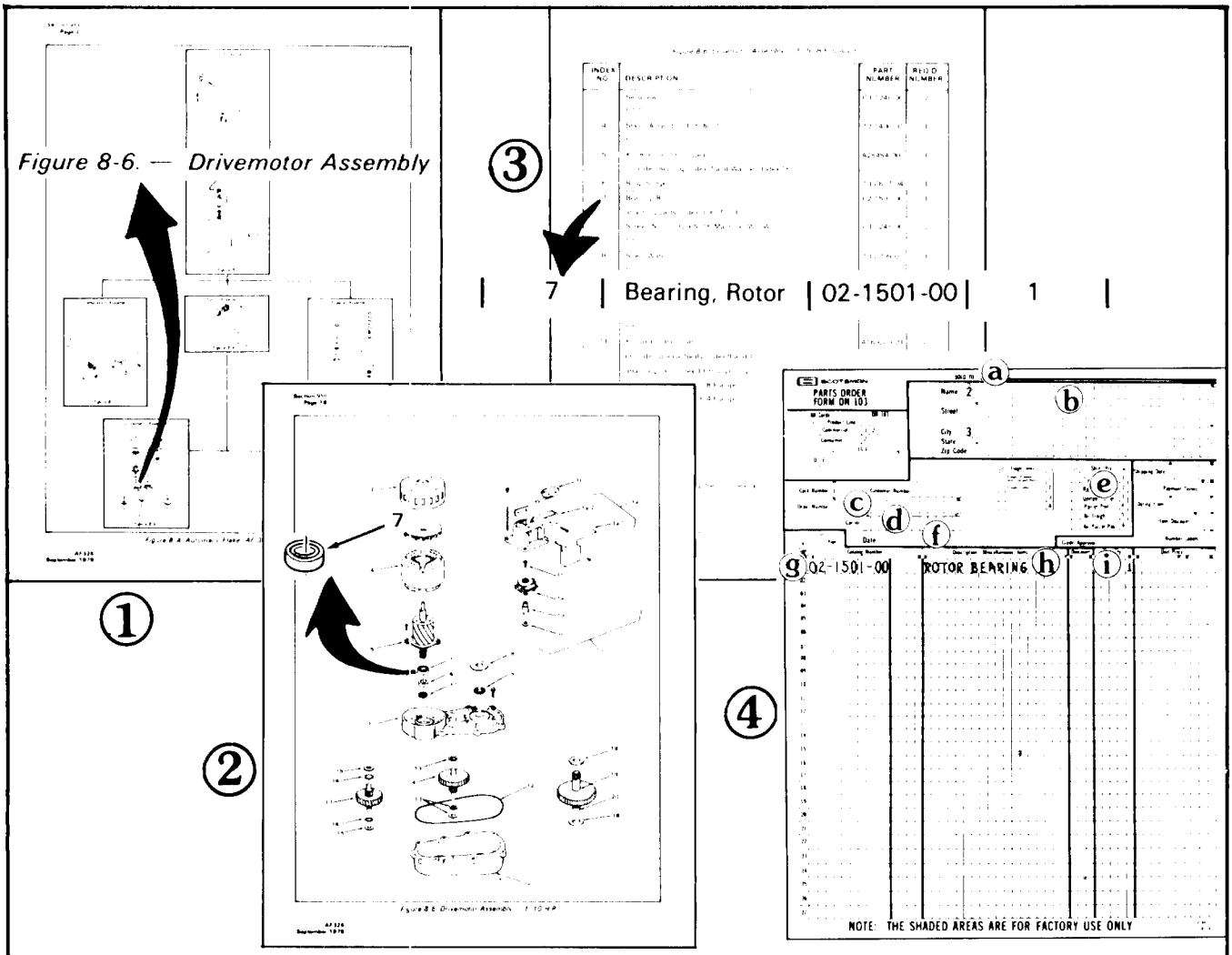

HOW TO USE A SCOTSMAN PARTS MANUAL WHEN ORDERING PARTS FOR ICE SYSTEMS PRODUCTS

IMPORTANT A. All Part Numbers have TEN DIGITS (spaces), required for use in the Computer System. BE SURE to fill in **ALL SPACES** in the CATALOG NUMBER columr, on the Parts Order form as shown above.

B. Enter the QUANTITY of the Parts ordered, in the last digit column under the QUANTITY column heading, the one under the small 55 number, for parts from 1 thru 9. For 10 or more parts use two columns.

To be sure you receive the proper parts in the proper quantities, ALWAYS use the PART NUMBERS and DESCRIPTIONS given in the Parts Manuals.

The figures above illustrate the way a Parts Manual would be used, if the Part being ordered were the ROTOR BEARING that is used in the DRIVEMOTOR ASSEMBLY of an AF325 Automatic Flaker, for example.

PROCEDURE:

1. At the beginning of Section VIII, THE PARTS ILLUSTRATIONS AND PARTS LISTS, in each Parts and Service Manual, is Figure 8-A; which, is a flow chart prepared from exploded views in Section VIII. Use the flow chart to quickly determine which Figure contains the Assembly, Component or Part.

FIGURE 1: Since the Part required in the above example is in the DRIVEMOTOR ASSEMBLY, shown as FIGURE 8-6.

2. Open the Manual to page showing FIGURE 8-6.

3. Locate the PART and its INDEX NUMBER on the exploded view illustration.

FIGURE 2: The INDEX NUMBER for the PART is 7.

4. Check the numerical sequence in the associated Parts List following the illustration.

5. LOCATE the INDEX NUMBER 7, in the INDEX NO. column, the first column on the left side of the Parts List page.

FIGURE 3: INDEX NO. 7 is listed as a BEARING, ROTOR in the DESCRIPTION column. The Part Number for the Rotor Bearing is 02-1501-00 as listed in the PART NUMBER column on the right side of the Parts List page. And, one Rotor Bearing is listed in the REQ'D NUMBER column, or that ONLY one of those parts is required for one Drivemotor Assembly.

6. Write an order for the Part. (Use SCOTSMAN Parts Order Form DN103)

FIGURE 4: a. Distributor Name.
b. (Use for DROP-SHIP order ONLY).
c. Distributor Purchase Order Number.
d. Carrier
e. How shipped (Truck, Rail, UPS, etc.)
f. Date ordered
g. Part Catalog Number
(use full TEN digits (spaces) listed in Parts Manual, including dashes between numbers.
h. Description - as listed in Parts Manual.
i. Quantity - number of parts ordered.
(use far right column)

Figure 8-00. How To Use The Illustrated Parts List.

TABLE OF CONTENTS

Table of Contents	2
General Description	3
Specifications	
Photo, Capacity, Outline Dimensions	4-5
Specifications - Mechanical	6
Installation Instructions	7
Cleaning and Maintenance Instructions	8
Wiring Diagram	
Air Cooled	9
Bin Control System	10
Ice Dispenser Control System	11
Parts List	
External Cabinet Parts	12
Internal Parts (General)	13-14
Bin Drive & Dispensing Parts	15
Bin Top & Control Box	16
Water Reservoir	17
Gearmotor	18
Freezer	19
Service Analysis	20-23
FD1 Mounted on Companion K-44D	24

THIS PAGE
INTENTIONALLY
LEFT BLANK

THIS PAGE
INTENTIONALLY
LEFT BLANK

GENERAL DESCRIPTION

This unit is a counter top or wall suspended type of dispenser which contains a complete flaked ice dispenser, storage bin, and automatic dispensing mechanism.

The primary purpose of this machine is to fill glasses with water and ice or just ice by actuating a control arm with the glass.

Scotsman Model K-44D is designed as a companion piece to be added to this machine providing four flavors of soft drinks. The drink valves mount on the right hand side over the sink. The K-44D cabinet mounts under the FD2 series machine and contains a complete refrigeration and carbonation system for soft drinks.

Variable portion or continuous flow of ice can be obtained by rotating the ice control switch. By pushing a water switch to "On", water will be dispensed with the ice as long as the glass actuator arm is depressed. Ice dispensing will stop automatically when the pre-selected portion of ice has been dispensed.

The drain grate is vinyl-coated steel wire allowing spilled ice to pass through freely.

The cabinet is stainless steel or steel with baked-on enamel. Enamel models have a wood grain upper front panel, blue control panel, stainless steel splash panel and remaining cabinet enclosure in a textured color.

The complete machine has been designed with sanitation and ease of cleaning emphasized. The storage bin is sealed, and the ice spout is automatically closed when ice is not being dispensed. The dispensing mechanism, storage bin, and parts requiring cleaning are accessable without tools.

All components are accessable through the top or front panels. On air cooled machines, there is a special removable section of the condenser shroud to facilitate cleaning of condenser.

A concealed On-Off switch is accessible at front of machine below the ice portion control and concealed by the control panel.

The bin control is a mechanical arm controlling a switch. This is backed up by a manual re-set switch to prevent damage by failure of bin controls.

SCOTSMAN

FD-1 SERIES ICEMAKER-DISPENSERS

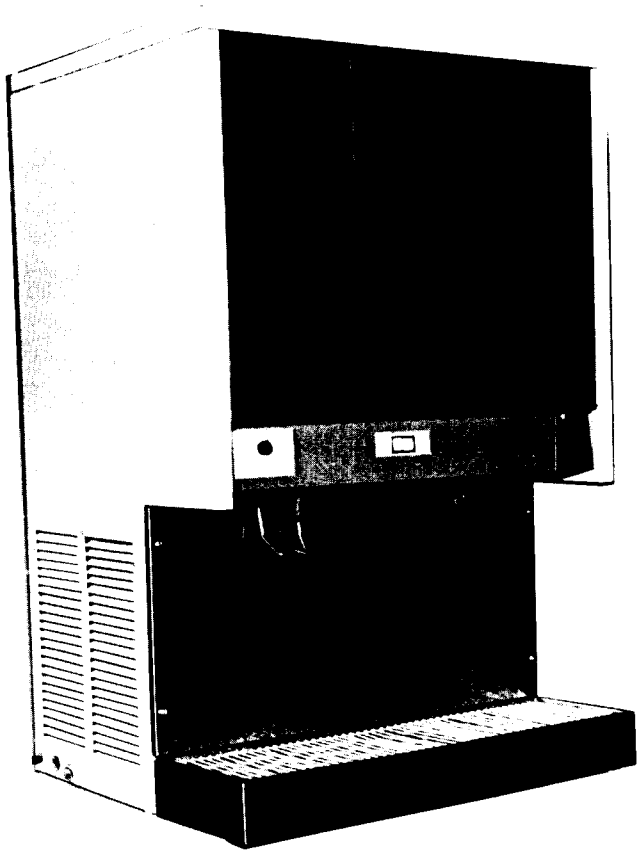

ice making capacity

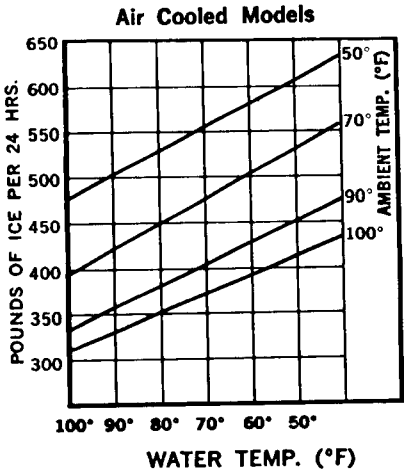

SPECIFICATIONS

PERFORMANCE DATA:

Ice Production - See Chart
Ice Storage - Approximately 20 lbs.
Ice Portion - Portion is variable from approx. 1 to 5 oz. per vend or may be positioned to continuous vend.
Vend Rate - Approximately 2.0 oz./sec.
Water Control - Water may be dispensed with all ice portion control settings.

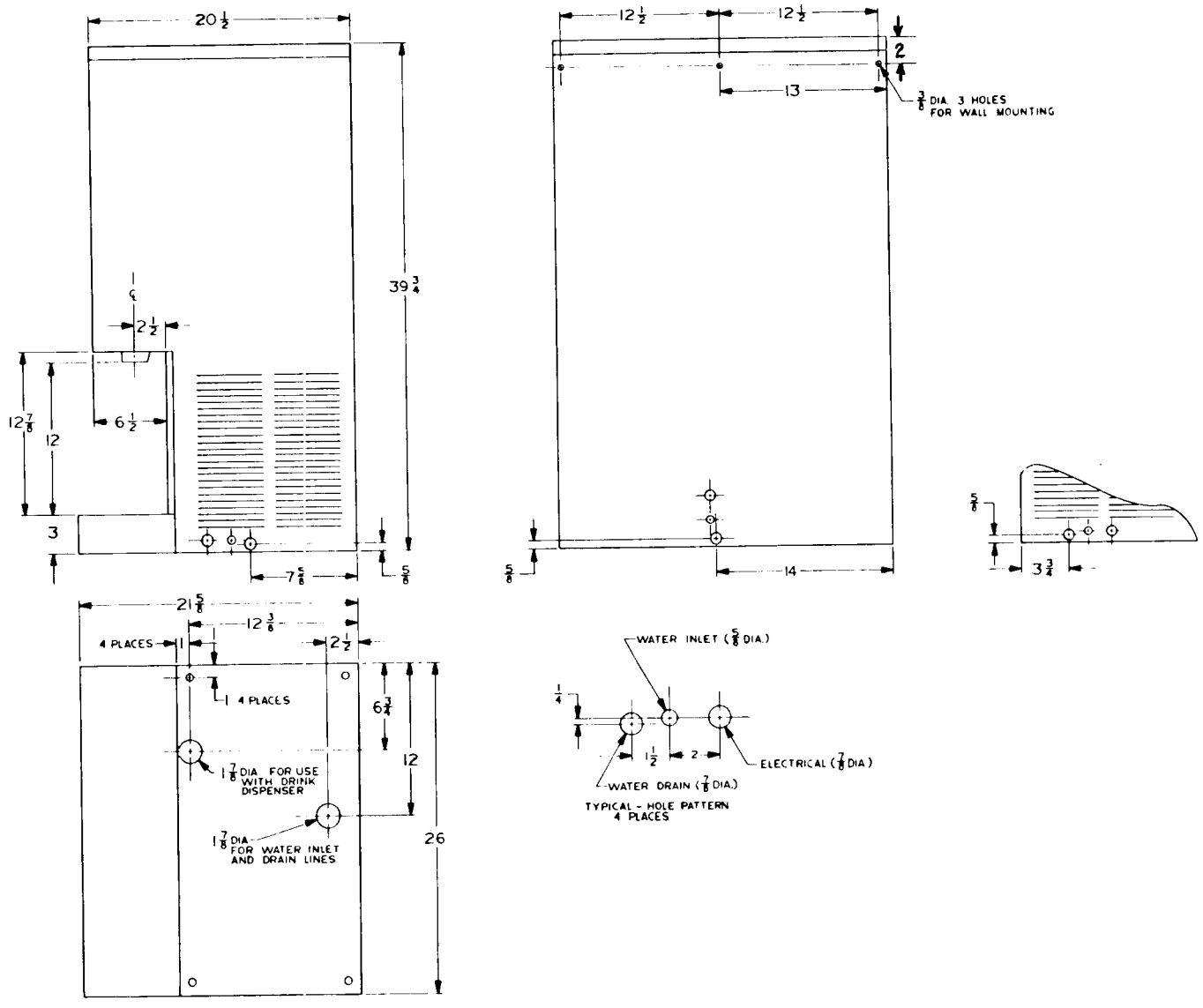

SPECIFICATIONS

Electrical

Power Supply	-	115 ± 10% Volts 60 Cy 1 Phase
Minimum Wire Size	-	#12 AWG
Maximum Fuse Size	-	20 Amp Time Delay

Plumbing

Water Inlet	-	1/4" SAE Male Flare Fitting
Water Outlet	-	Plastic Tube Accepts 5/8" O. D. Tube

Temperature Limits

100° F Maximum	-	50° F Minimum

Water Limits

100° F Maximum	-	125 PSIG Maximum
40 °F Minimum	-	20 PSIG Minimum

Compressor

Copelaweld	-	RSF2-0050-IAA-207 115 V 60 Cy 11.2 FLA 51.0 LRA 1/2 H. P.

Gear Motor (Freezer Drive)

Queen Products	-	A18380-1 115 V 60 Cy 4.0 FLA 1/10 H. P

Gear Motor (Ice Dispensing)

Merkle-Korff	-	S-418 115 V 60 Cy 3.7 FLA 200 Watt

Refrigerant Charge

Frost Line	-	6 - 8 Inches From Compressor
Approximate Charge	-	24 Oz. R12

Normal Operating Pressures

140 PSIG High Side
14.5 PSIG Low Side

INSTALLATION INSTRUCTIONS

1. Machine should have both sides open to free air for air movement in and out of the machine (air cooled models). Avoid locations with high temperatures and dirty air, such as found next to grills or in kitchens.

2. Machine may be placed on a solid countertop, other equipment manufactured by Scotsman or fastened to a wall. When wall mounting is desired, use the three mounting holes provided across the reinforcement strip on upper back of cabinet.

3. Remove cabinet top (push up on front edge), remove upper front panel (pull out along top edge) and lower front splash panel (remove 4 screws.)

4. Electrical connections and plumbing - connections may enter cabinet through the sides, back or base, whichever is convenient.

   Electrical - Terminate at control box - See wiring diagram for wire and fuse size - Voltage must be within - 10% of nameplate rating during start-up and normal running conditions. Wiring must conform to national and local Codes.

   Plumbing (water In) - Inlet fitting is 1/4" SAE male and has fasteners provided on fitting to attach to cabinet sides. Use 1/4" O. D. copper tube with separate hand shut-off valve. If local conditions warrant, install water regulator and water strainer between machine and valve.

   Plumbing (Water Out) - 5/8"O.D. drain tube must be used and connected to plastic tube inside cabinet. Drain must run to an open drain such as a floor drain or sink. Allow ample slope to assure proper drainage of machine.

5. Remove sink and grill from packaging and mount in place--fasteners are provided with sink. Place drain tube on sink drain fitting and secure with clamp. Clamp is shipped in place on drain tube.

6. Replace panels, turn on water and electrical supply, and set On-Off switch to On position.

7. Thirty minutes after the unit has been started ice can be dispensed.

CLEANING INSTRUCTIONS FOR SCOTSMAN ICE MACHINE SERIES FD1

1. Set selector switch to continuous ice and vend until bin is empty.
2. Set On-Off switch to Off position.
3. Remove cabinet top panel and front panel.
4. Remove storage bin cover and spout extension.
5. Remove inner bin and bin bottom, wash and sanitize these parts and inside of bin.
6. Turn Off water supply or block float. Drain reservoir by disconnecting tube between reservoir and freezer. After draining, reconnect tubing.
7. Set On-Off switch to On and pour cleaning fluid into reservoir. (Use 4 oz. of Scotsman cleaner and 1 qt. of hot water). Do not fill above overflow tube. Do not allow unit to operate with less than 1" of solution in reservoir.
8. While waiting for step #7 to complete, wash and sanitize sink, drain grate, glass filler lever and surrounding area in accordance with local Health Department regulations.
9. When cleaning fluid has been depleted #7, turn on water supply and let unit run for at least 15 minutes to flush out any cleaning fluid. Check ice for acid taste - run unit until ice tastes sweet.
10. Set On-Off switch to Off and melt ice in storage bin with hot water to remove ice and rinse bin parts.
11. Re-assemble all parts - unit is ready for normal operation.

MAINTENANCE INSTRUCTIONS
(Perform every 6 months)

1. Clean condenser surface of any accumulated materials.
2. Check water supply by depressing reservoir float and inspect for full stream of water, clean water strainer in supply line.
3. Oil freezer drive motor (top bearing only), bin drive motor (bottom bearing only) and condenser fan motor. Use SAE 20 oil only - Caution - do not us other types of oils, many will do more damage than good.

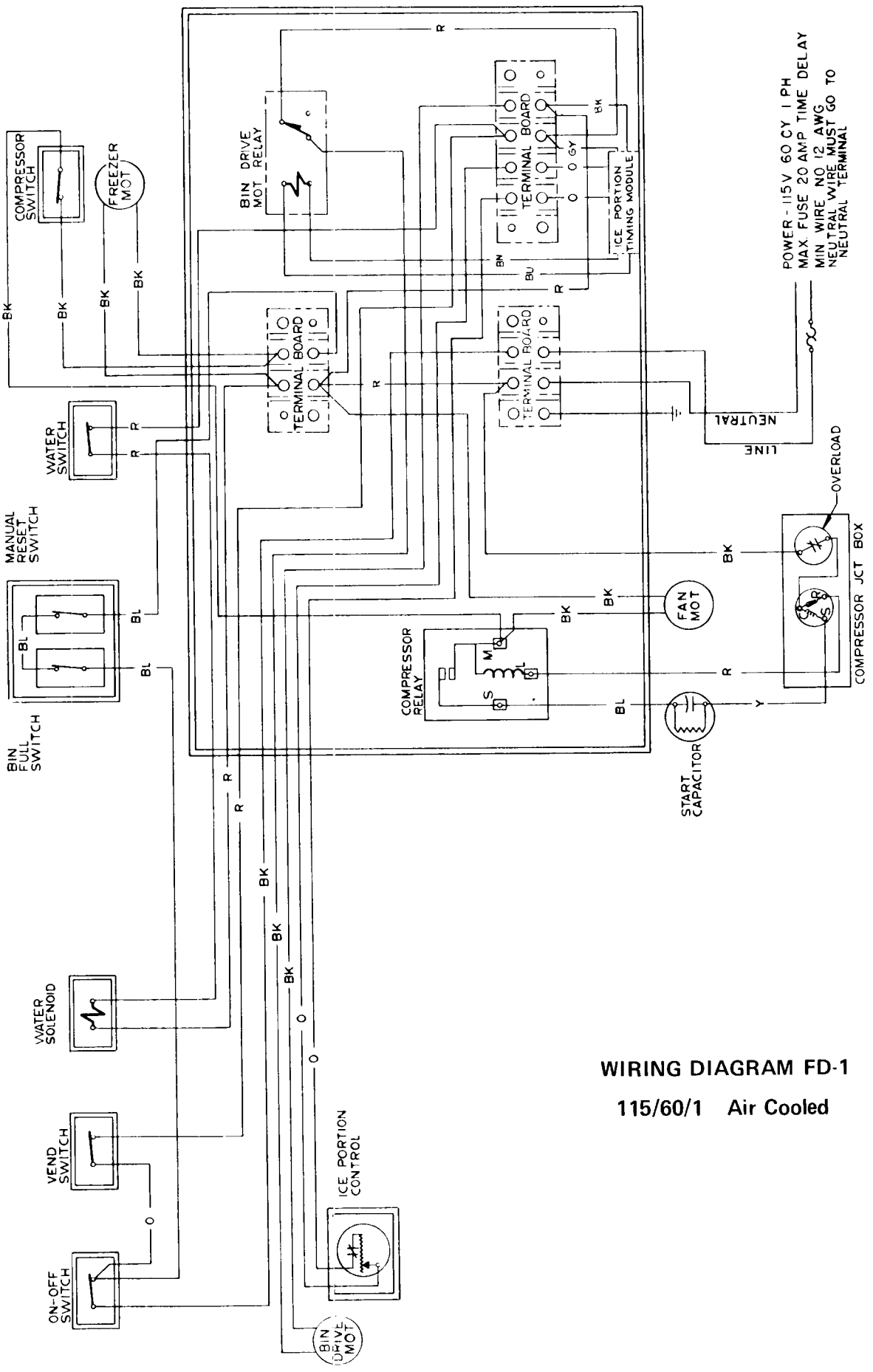

A22095-1 REV. B

WIRING DIAGRAM FD-1

115/60/1 Air Cooled

BIN CONTROL SYSTEM

There are two switches mounted in the enclosure on the bin top. One switch is actuated by the lever which is moved by the incoming ice--this switch has a large differential.

In the event this switch fails to stop the ice maker, then the incoming ice forces the lever which in turn pushes the bin switch back into the manual re-set switch. The ice maker will not start until this switch is re-set.

Continual operation of the re-set switch will result if the bin full switch is defective. If nuisance tripping of this switch occurs, the bin full switch may be moved away from the re-set switch by use of its mounting nuts. Major adjustment can be made by bending the lever to increase or decrease its angle.

The spout of the freezer has an extension that slides over the fixed spout. This removable extension has two small ears on the side. It is necessary when replacing the cover on the bin to slide this extension as far back on the freezer spout as possible. Be sure the small ears of the extension are on the outside of the cover.. When the cover has been fitted over the bin and before it is bolted down, this extension should be slid toward the cover until the ears rest against it.

To further control the compressor and to avoid the freezing and stoppage of the auger in the freezer, a control is incorporated on the gear motor drive for the freezer.

The bin controls do not energize the compressor, but only the gear motor. In turn, the gear motor operates the compressor.

A speed sensing switch mounted on top of the motor of the gear unit will stop the compressor when the RPM of the motor is less than 900. At 1200 RPM it will start the compressor.

Should the auger begin to freeze, the speed of the gear motor is reduced due to excessive load. At 900 RPM it opens the circuit to the compressor and thereby stopping the freezing. As the gear unit, only, continues to run, it will clear the auger; and when the motor speed reaches 1200 RPM, the compressor is turned on.

Any freeze-ups are thereby automatically cleared by the unit.

If the water should be shut off when the unit is running, the inlet water line will freeze shut. The control mentioned above will have no control over such a situation.

ICE DISPENSER CONTROL SYSTEM

Depressing the glass filler opens the spout and closes the vend switch. The vend switch closes the circuit to the water switch and to the water solenoid valve, if water switch is positioned to "with water". Also, the vend switch closes a circuit to the ice portion control and its timing module located in the control box. If ice control is positioned to continuous, then ice will be dispensed as long as the glass lever is depressed. If ice control is in a portion position, then only that quantity of ice will be dispensed until the glass lever is actuated another time. The portion control and timing module regulate the time period the bin drive motor is engaged. When this time period has lapsed then the normal closed relay is energized, opening the circuit to the drive motor and stopping the dispensing action. The vend switch mounting position is adjustable and must be positioned so glass lever is fully depressed before closing vend switch. This is to insure the ice spout is fully opened.

VEND SWITCH ADJUSTMENT

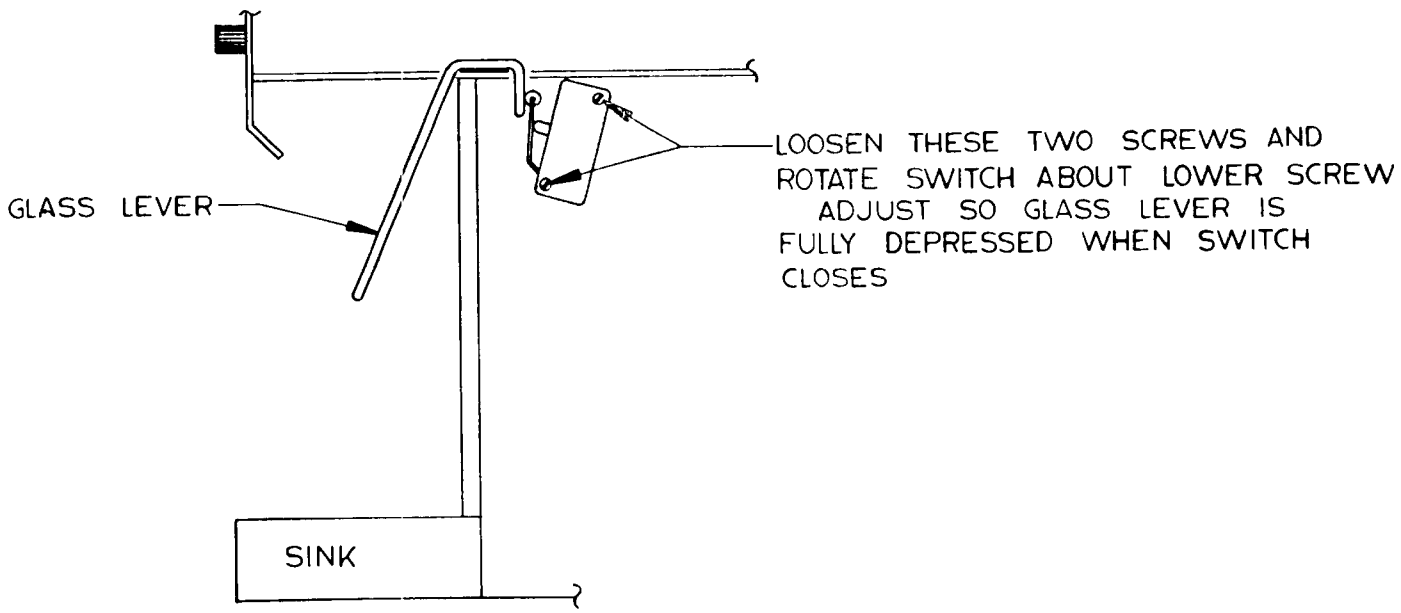

EXTERNAL CABINET PARTS

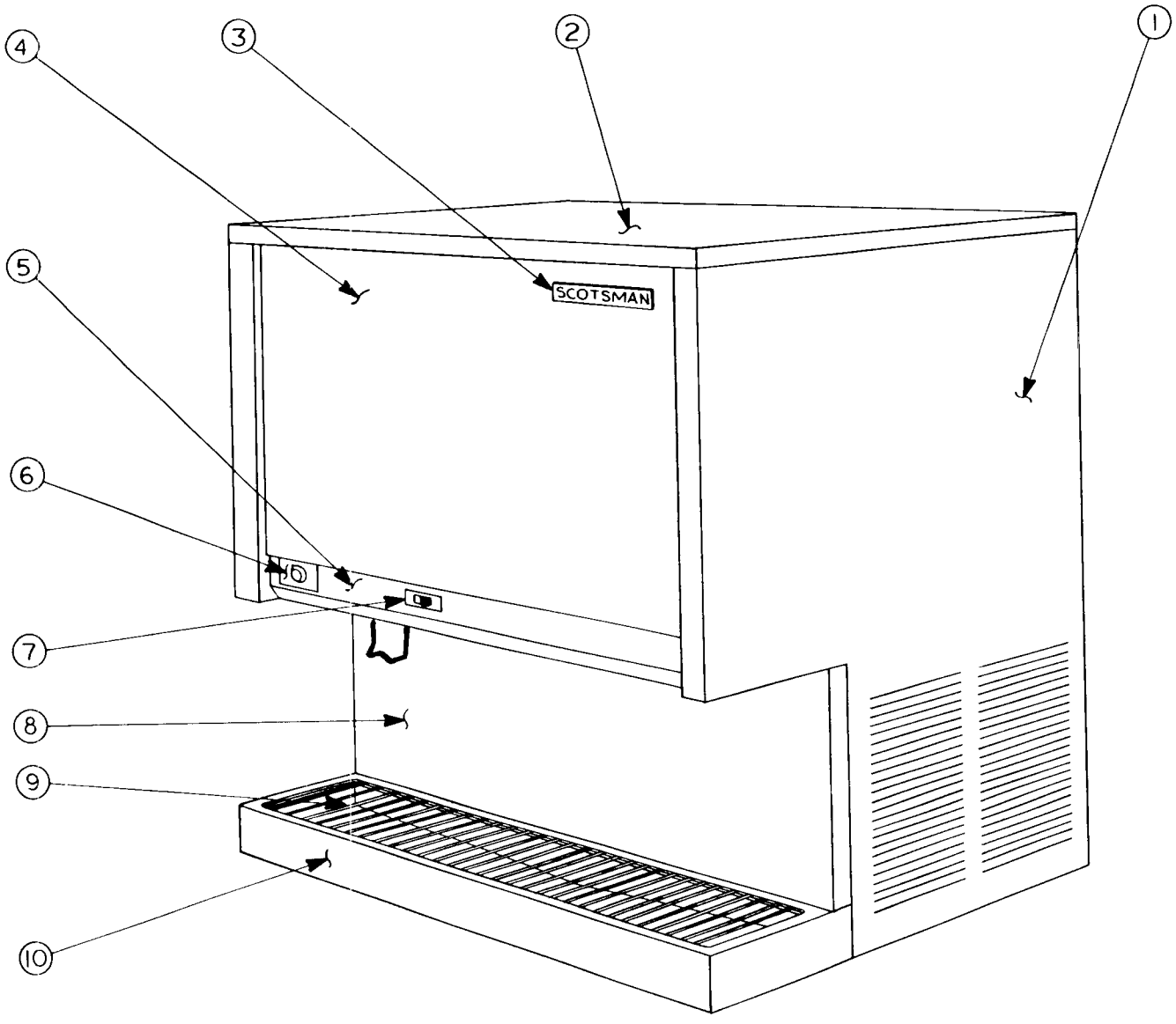

ITEM	PART NO.	DESCRIPTION
1	A19945	Cabinet Painted
	A19945-1	Cabinet SS
2	A20192	Top Panel Painted
	A20192-1	Top Panel SS
3	15-156	Emblem Scotsman
	3-271	Speed Nut
4	A21273	Front Panel Wood Grain
	A21273-1	Front Panel SS
5	A20500	Control Panel Painted
	A20500-1	Control Panel SS
6	15-521	Decal Portion Control
	12-1557	Portion Control

ITEM	PART NO.	DESCRIPTION
6	2-1810	Knob Portion Control
7	15-518	Decal Switch
	12-1337-1	Switch Water
8	A19339	Splash Panel
	3-1418-25	Screws Panel
9	2-1858	Grill
10	A23212	Sink

PANEL FASTENERS

15-411	Strike
3-1406-4	Nut
2-836	Catch

INTERNAL PARTS VIEW

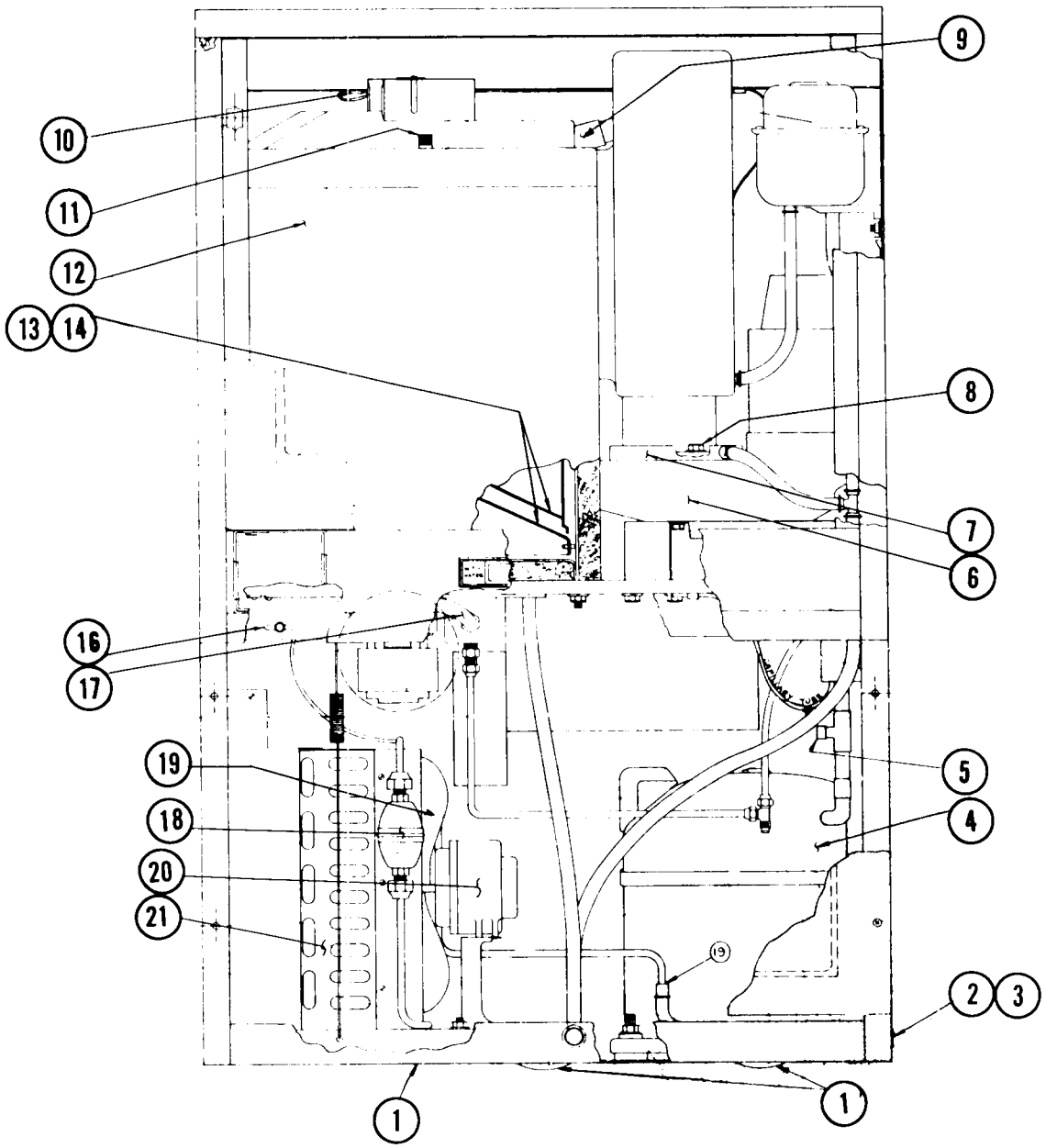

ITEM	PART NO.	DESCRIPTION	ITEM	PART NO.	DESCRIPTION
1	A22349	Plug Button	11	A21983	Nut
2	2-1875-7	Plug Button (small)	12	A21386	Bin Assembly
3	2-1875-11	Plug Button (large)	13	A19349	Inner Bin Fab Assy
4	18-2200-1	Compressor	14	A19343	Inner Bin Bottom
5	16-560	Valve Core	16	A22063	Switch Plate Assy.
	16-563	Brass Cap		3-1403-16	Screw
6	A18380-1	Gear Motor	17	A23315-1	Solenoid Assembly
7	A18153	Drip Pan Assy.	18	2-1752-1	Filter Drier
	13-628	Gasket	19	18-137-1	Fan Blade
8	3-1420-1	Screw	20	12-1576-1	Fan Motor
	3-1408-2	Washer	21	18-1927	Condenser
9	A16151	Spout Extension			
10	3-1230	Tin Clip			

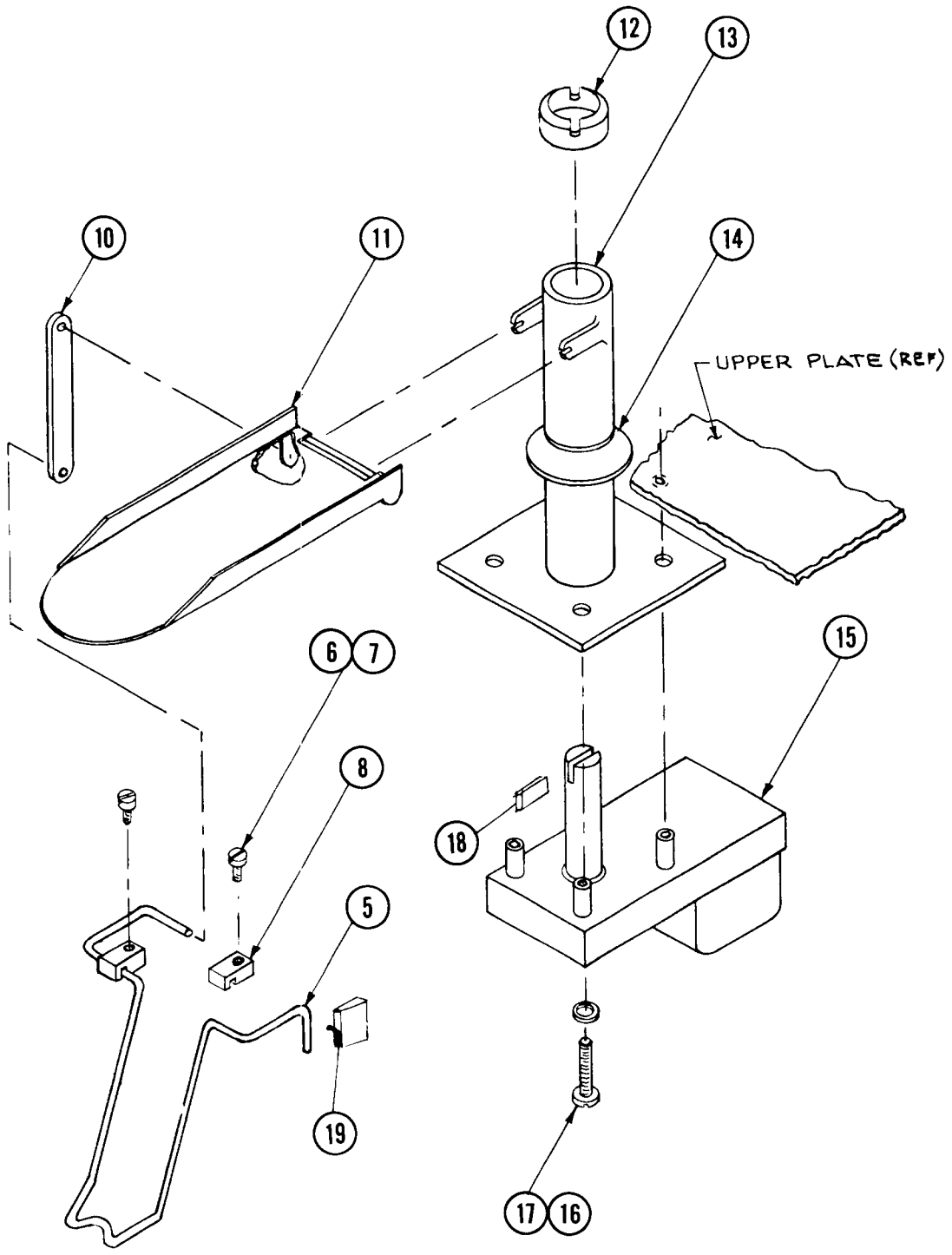

ITEM	PART NO.	DESCRIPTION
5	2-1823	Glass Filler
6	3-1403-6	Screw
7	3-1417-1	Lockwasher
8	2-1969	Linkage Clamp
10	2-1967	Linkage Connector
11	2-1970	Ice Chute
12	2-1976	Retaining Collar
13	2-1971	Bracket Gear Motor
14	13-747	Water Shed
15	12-1561	Gear Motor
16	3-1410-2	Lockwasher
17	3-1403-36	Screw
18	A20472	Slot Pin
19	12-1642	Vend Switch

BIN TOP PARTS

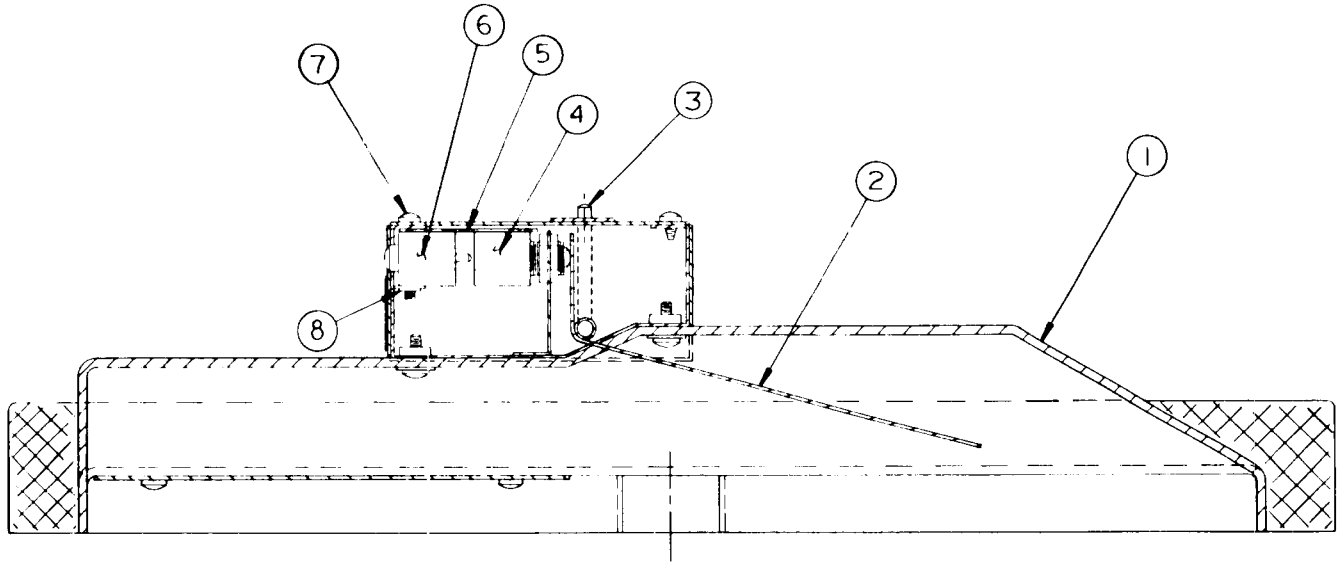

ITEM	PART NO.	DESCRIPTION	ITEM	PART NO.	DESCRIPTION
1	A20486	Top Foam Assy.	5	A21997	Electrical Insulation
2	A21995	Actuator Arm	6	12-1664	Reset Switch
3	A21982	Pin	7	3-1403-8	Screw
4	12-1018-2	Bin Full Switch	8	3-886	Twin Nut

CONTROL BOX PARTS

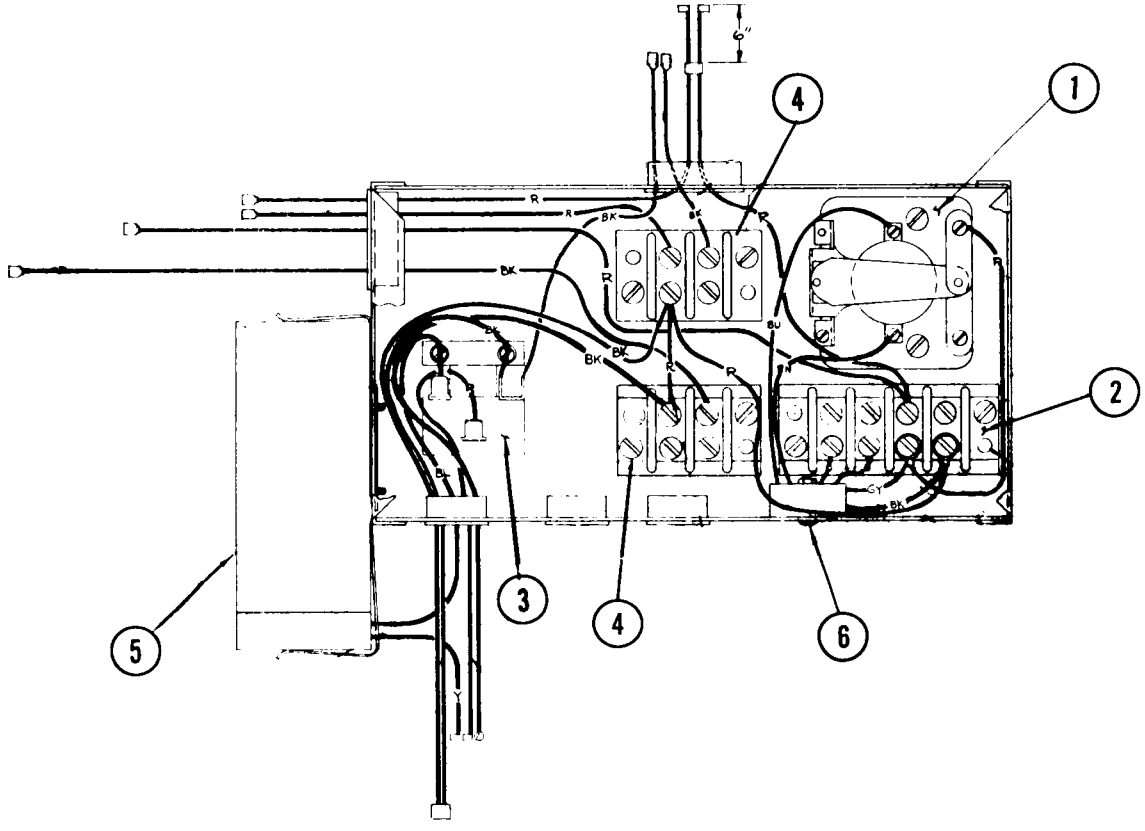

ITEM	PART NO.	DESCRIPTION	ITEM	PART NO.	DESCRIPTION
1	12-1558	Relay	4	12-813-4	Terminal Board
2	12-813-1	Terminal Board	5	18-2200-29	Compressor Capacitor (start)
3	18-220-26	Compressor Relay	6	12-1559	Timing Module

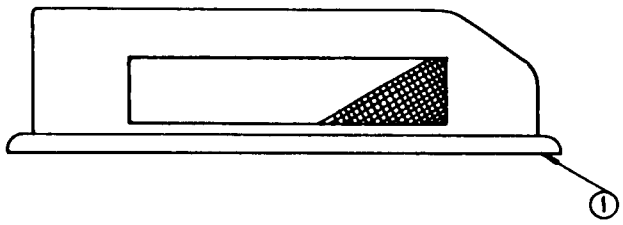

FD-1 RESERVOIR ASSEMBLY
Part No. A23410-4

ITEM	PART NO.	DESCRIPTION
1	A16012	Reservoir Cover
2	2-1259	Valve Pin
3	2-1320	Deflector
4	S8770	Inlet Valve
5	3-1001	Rivet
6	A5777	Valve Seat Holder
7	S6947	Valve Seat
8	3-1394	Nut
9	A12869	Bracket
10	S6715	Stand Pipe
11	S8138	Inlet Valve Ass'y
12	A23500	Reservoir Body
13	A8055	Bracket Nut
14	A12067	Float and Arm Ass'y
15	A18418-1	Water Deflector
	A23501	Complete (less cover)

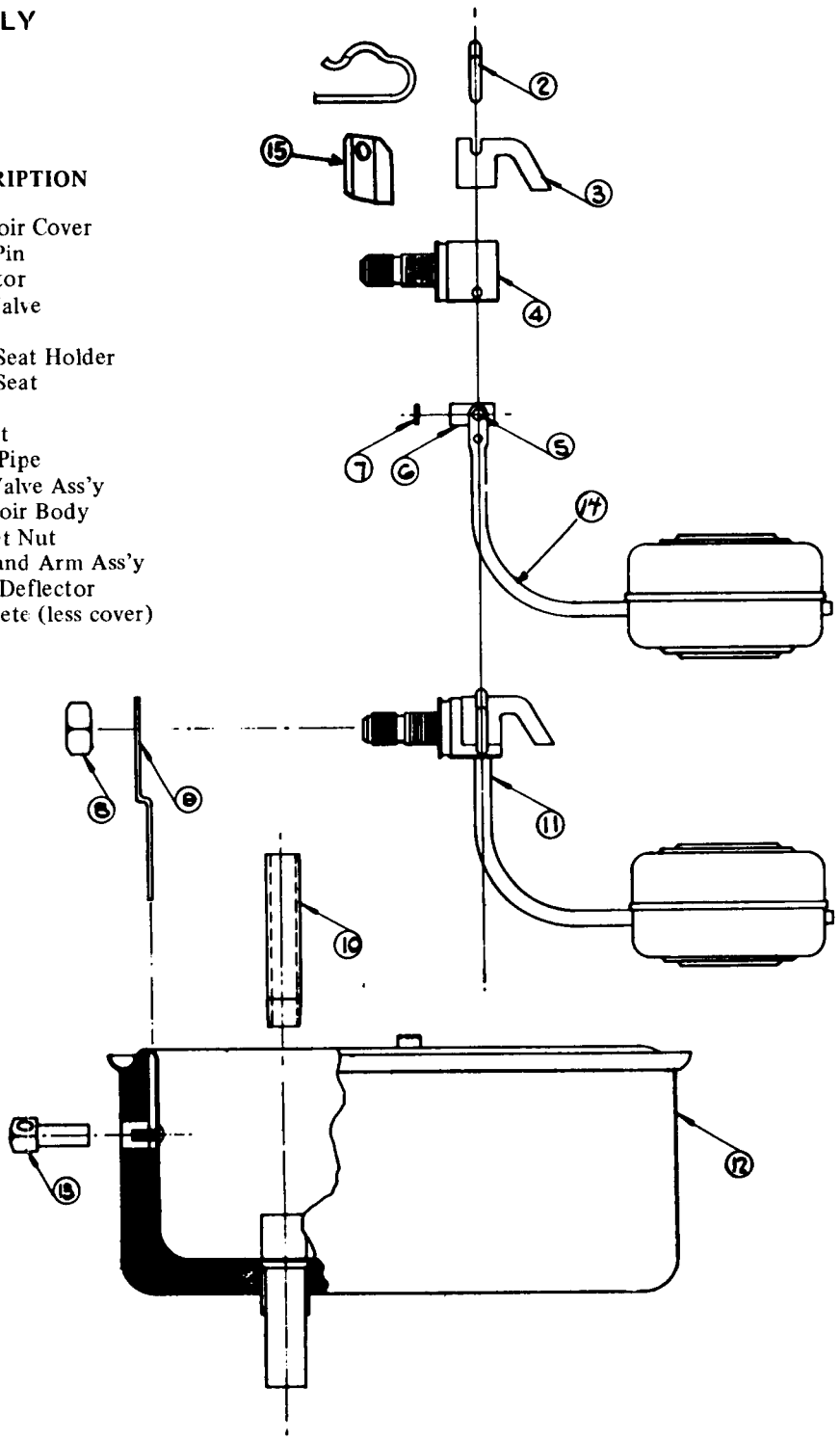

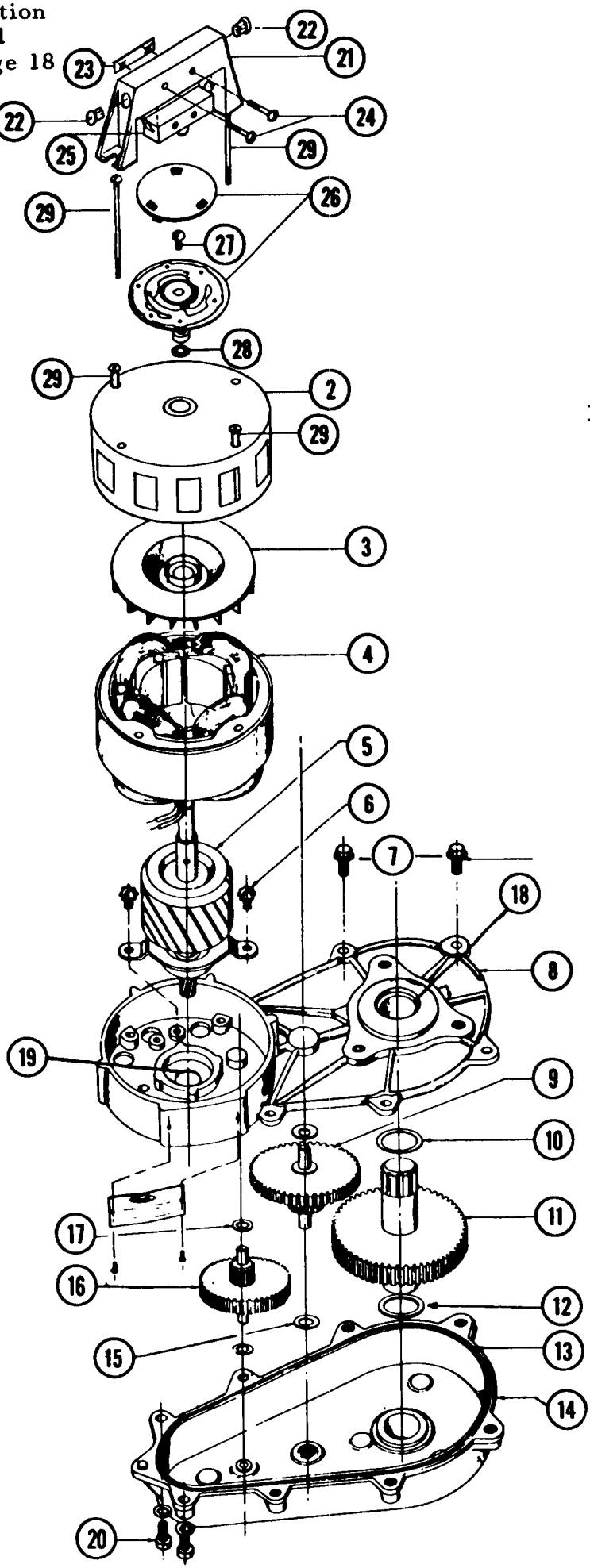

GEAR MOTOR ASSY.

ITEM	PART NO.	DESCRIPTION
2.	A-17047	Motor Housing
3.	A-16915	Cooling Fan
4.	12-1400-1	Stator Assy.
5.	A-19884-2	Rotor Assy.
6.	3-1245	Screws
7.	3-1251	Flange Screws
8.	A-16920	Gear Case Cover
9.	2-1521	Gear & Pinion
10.	3-1408-5	Washer
11.	2-1513	Gear & Output Shaft
12.	3-1408-4	Washer
13.	2-1505	"O" Ring
14.	A-16919	Gear Case Assy.
15.	3-1408-6	Washer
16.	2-1520	1st Gear & Pinion
17.	3-1408-7	Washer
18.	2-1503	Grease Seal
19.	2-1504	Grease Seal
20.	3-1252	Screw
21.	8-579	Switch Bracket
22.	12-1213-3	Snap Bushings
23.	3-886	Twin Speed Nut
24.	3-1403-10	Screws
25.	12-1644	Switch
26.	A19898	Synchro Snap Assy.
27.	3-1248-1	Screw
28.	3-1417-6	Washer
29.	3-1403-43	Motor Bolts

A-18380-1 Gear Motor Assy. Complete

Output Shaft turns at 10 RPM.

FREEZER ASSY.

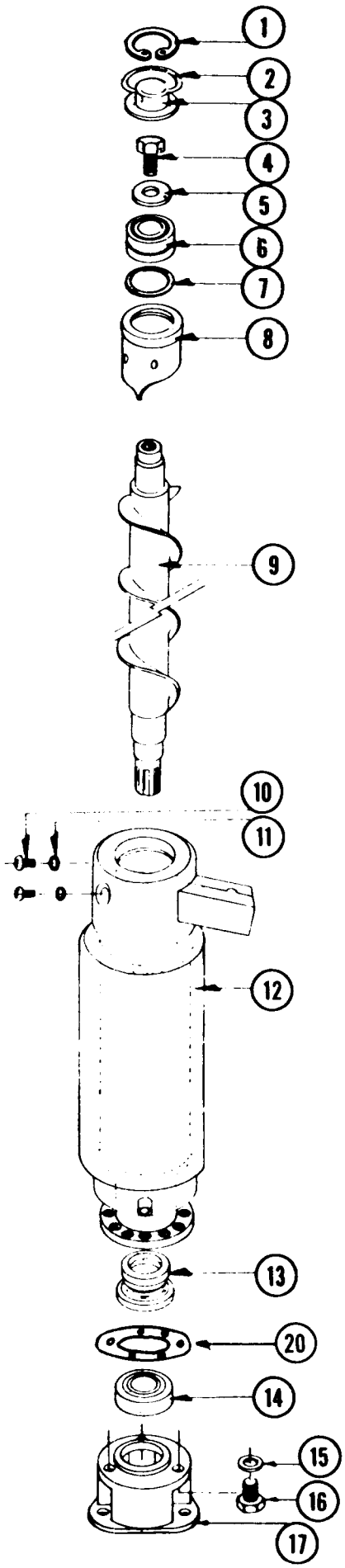

ITEM	PART NO.	DESCRIPTION
1.	3-553	Retainer Ring
2.	A-8162	Cap Hook
3.	A-7701	Cap
4.	3-758	Screw
5.	A-7699	Washer
6.	2-1412	Top Bearing-Matched set
7.	13-617-16	"O" Ring
8.	A-14591	Breaker
9.	2-1538	Auger
10.	3-1403-46	Screw
11.	3-1417-7	Washer
12.	A-20551	Evaporator Shell Includes Suction Line, No internal parts.
13.	A-18945	Water Seal
14.	2-417	Bearing, Lower
15.	3-1408-3	Washer (3 reqd)
16.	3-1405-42	Cap Screw (3 reqd)
17.	A-23073	Adapter-Amaloy
18.	2-1913	Spline Drive Coupling
19.	13-709-1	Shaft Drip Shield - rubber
20.	3-1505	Gasket
21.	A-20552	Freezer Complete with Suction Line

SERVICE ANALYSIS
ICE MAKER SECTION FD1

SYMPTOM	POSSIBLE CAUSE	CORRECTION
Water Leaks	Defective water seal	Replace.
	Gravity feed line leaking	Check hose clamps.
	Water level in reservoir too high	Adjust water level to 1/4 inch below reservoir overflow, then raise reservoir until water comes out freezer spout, then lower 3/4 inch.
Excessive noise or chattering	Mineral or scale deposit on auger and inner freezing chamber walls.	Clean per cleaning instructions with Scotsman Ice Machine Cleaner - for severe deposits remove auger and clean freezer parts manually.
	Low suction	Add gas to raise suction pressure.
	Intermittent water supply	Check and clean water strainer. Check gravity feed line for air lock.
		Remove air lock.
	Water level in reservoir too low	See "Corrections" under "Symptom" water leaks.
	Motor compressor not solid on rubber mounts	Repair or replace rubber mounts.
Gearmotor noise	Low on oil	Remove case cover to check for proper oil level. Top of gears should be covered. U Sun Oil Company, Prestig 50-EP, Scotsman #19-472

SYMPTOM	POSSIBLE CAUSE	CORRECTION
Unit will not run	Bin Reset Switch	Push to reset - continue operation - replace bin full switch.
	Blown fuse	Replace fuse and check for cause of blown fuse.
	Loose electrical connection	Check wiring.
	Inoperative master switch	Replace switch.
Compressor cycles intermittently	High or low voltage.	Check for overloading.
	Dirty condenser	Clean.
	Air circulation blocked	Remove cause or move unit to correct.
	Inoperative condenser motor	Replace.
	Non-condensable gases in system	Check for leaks, evacuate and recharge.
Making wet ice	Surrounding air temperature very high.	Correct or move unit
	Under or over-charge of refrigerant	Recharge with the proper amount.
	Faulty compressor	Replace or repair.
Low ice production	Loss of refrigerant, under or over-charge of refrigerant.	Check and recharge with proper amount of refrigerant
	Dirty or plugged condenser	Clean condenser
	Water level in water reservoir.	See "Corrections" under "Symptoms" water leaks.
	Partial restriction in capillary tube or drier	Moisture in system. Overcharge of oil in system. Remove charge and drier. Replace and recharge system.
	Inlet water strainer partially plugged.	Remove screen and clean.
	Corroded or stained worm shaft due to water condition	Remove worm shaft and clean.
Machine runs but makes no ice	Loss or under-charge of refrigerant	Check for leaks and recharge
	Water not entering freezing chamber	Plugged strainer or supply line Check and clean. Air lock in gravity feed line. Check and remove air lock.
	Moisture in system	Check and remove charge and drier. Replace and recharge.
	Water seal leaking	Replace seal.
	Water turned off while unit was operating	Inlet water line froze shut. Unit must be turned off and defrosted.

SERVICE ANALYSIS

DISPENSING MECHANISM FD1

SYMPTOM	POSSIBLE CAUSE	CORRECTION
Will not dispense	Power off	Check master switch, fuses and electrical supply to machine. Check symptoms - bin drive motor runs, bin drive motor stopped.
Bin drive motor runs (will not dispense)	Plugged spout.	Operator held full glass under spout forcing ice to jam, clear spout and instruct personnel using machine.
		Check linkage for broken or out of place parts preventing ice chute from opening 100% when glass lever is depressed.
	Vend switch adjustment	Vend switch must be positioned so it will close only when glass lever is completely depressed to prevent vending when ice chute is only partially open.
	Gear Motor	Check if output shaft turns if not, replace gearmotor.
	Inner bin does not rotate	Check keyed coupling to gear motor. Key is soft soldered in place and may be replaced.

SERVICE ANALYSIS (Continued)

Bin drive motor stopped	Drive motor burned out	Replace
	Inner bin jammed	Check assembly of inner bin bottom, may NOT be down and locked in place .
	Vend switch	Faulty - replace
		Out of adjustment - readjust
	Relay (relay has 240V holding coil - 115V coil will not work with timing module.	Relay is normally closed, may open too quickly if ice portion control or timing module is faulty.
Will not portion ice, runs continuous	Ice portion control timing module.	If components fail to open machine will vend continuously when glass lever is depressed. The timing module and ice portion control stop the vend cycle by energizing the relay which opens the circuit to the bin drive motor. It is recommended to service these two components by substitution.

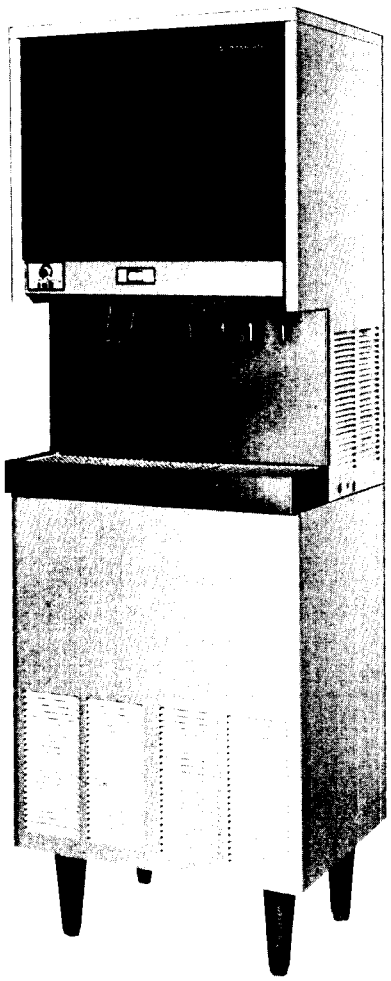

FD1

K44D

GENERAL DESCRIPTION

The K44D is a post-mix drink dispenser designed to be added under the FD1 series of ice dispensers. This converts the FD1 ice dispenser into an ice and soft drink dispenser.

This unit consists of a complete refrigeration system, carbonation system, and cooling circuits for sweet water, soda water, and four syrup flavors. A dispensing valve assembly consisting of four electric post-mix valves and connecting tubing is also available under part number KV-4E Faucet Kit.

K-44D ONLY

Textured White Exterior	
Height with legs	38 1/2"
Width	26"
Depth	19""
Approx. Ship. Weight	205 lbs.

TABLE OF CONTENTS

Foreword 1
Table of Contents 2
Photo and Ice Making Capacity 3
Specifications 4-5
General Description 6
General Information 7
Installation Instructions 8-9-10
Ice Dispenser Control System 11
Adjustment of Controls 12-13-14
Shutter and Bin Adjustment 15
Storage Bin and Dispensing Assy. 16
Bin Controls 17
Storage Bin Top Assy. 18
Dispenser Control System 19-20
Wiring Diagram 21
Reservoir Assy 22
Cabinet Panels-Chassis 23
Chassis Assembly 24-25
Gear Motor Assembly 26
Freezer Assembly 27
Service Analysis (Icemaker) 28-29
Service Analysis (Dispensing Mechanism) 30
Maintenance Instructions (Flaker) 31
Cleaning Instructions 32
Accessory Kits 33-34

THIS PAGE
INTENTIONALLY
LEFT BLANK

THIS PAGE
INTENTIONALLY
LEFT BLANK

SCOTSMAN

FD3 SERIES ICEMAKER-DISPENSERS

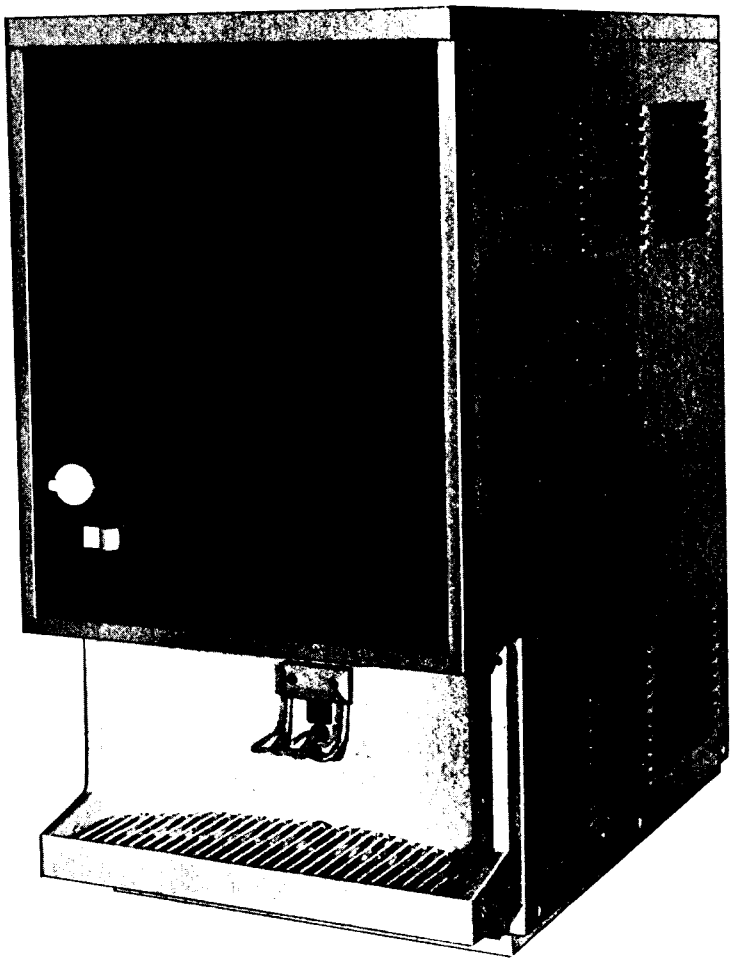

ice making capacity

Daily Ice Capacity is directly related to condenser air inlet temperature, water temperature and age of machine.

NOTE: To keep your SCOTSMAN DISPENSER preforming at it's maximum capacity it is necessary to perform periodic maintenance as outlined on page 32 of this manual.

SPECIFICATIONS

FD3 SERIES ICEMAKER-DISPENSER

CABINET

Height	28.3 inches
Depth	23.8 inches
Width	14.3 inches
Weight	150 pounds
Finish	Baked-On Enamel or stainless steel
Trim	Aluminum, anodized
Sink & Drain	Plastic

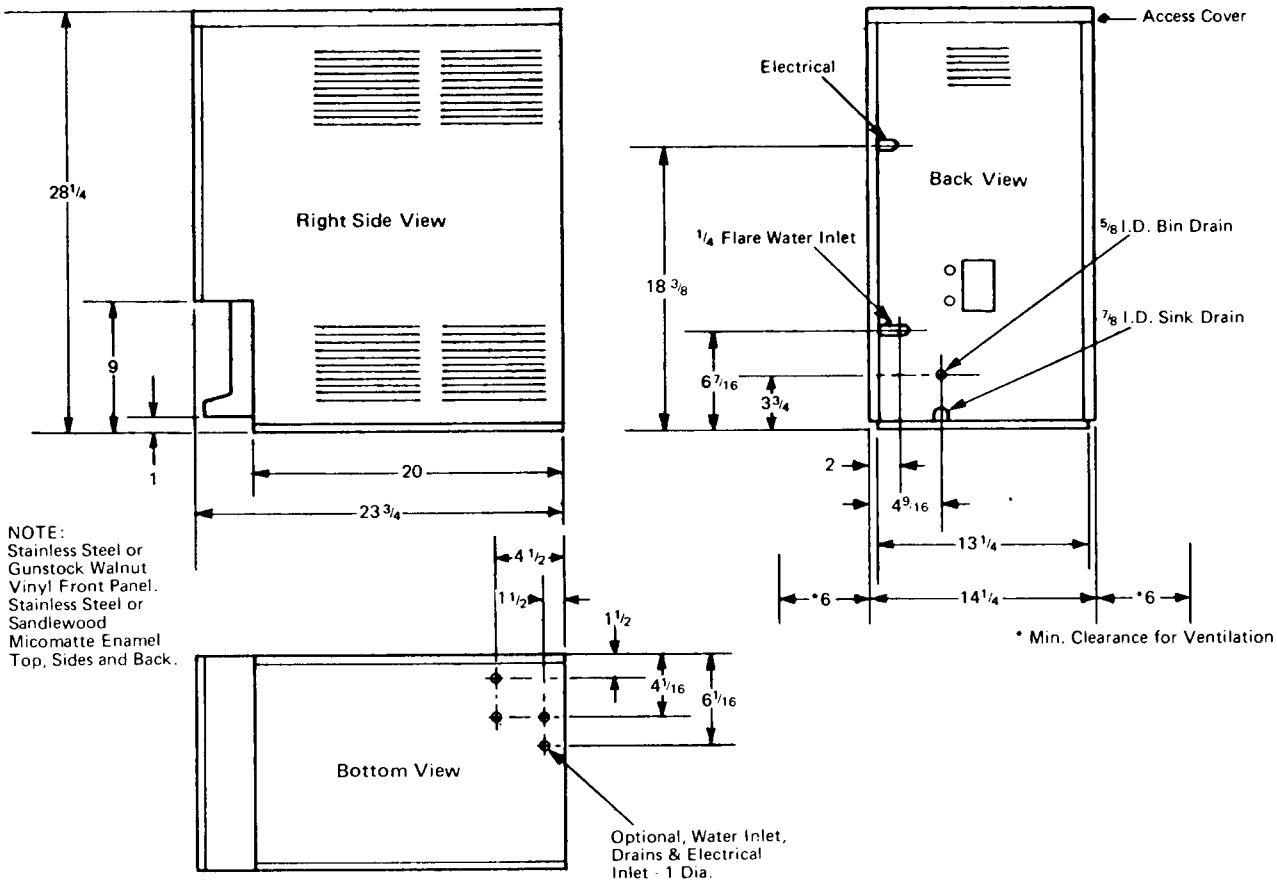

NOTE: Available with: Wall Mounting Kit
Sink Extension Kit

SPECIFICATIONS

REFRIGERATION UNIT

Compressor ..... Tecumseh
1/5 H.P.
2 pole
115 v. 60 cycle
Freezer ..... SF-75 Modified
Refrigerant ..... R-12—10 oz. charge
Ice Produced ..... .04 oz. sec. (70° ambient, 70° water)
(approximate)

DISPENSING UNIT

Bin & Dispensing Cylinder ..... Stainless Steel
Insulation ..... 1 inch Urethane
Storage Capacity ..... 8.19 pounds
Ice Spout ..... Composition (rubber)
Drive Motor ..... 86.5 watt
115 v. 60 cycle
R.P.M. 26.7
Dispensing Rate ..... .8 oz. sec.
(approximate)

PERFORMANCE DATA

Metered Ice-per vend ..... 1 or 2 oz.
Time per vend ..... 1.5 sec.
1 vend /31 sec. ..... Recovery=Discharge
Water with minimum ice ..... 1.0 oz. ice water
Water with maximum ice ..... 2.0 oz. ice water
Dispensing time (ice & water
for 10 oz. glass) ..... 4.5 sec.
Continuous ice flow ..... 1 pound in 20.8 sec.

GENERAL DESCRIPTION

This unit is a counter or table-top type of dispenser with a self-contained refrigeration unit, flaked ice freezer, storage bin and automatic dispensing mechanism.

The primary purpose of this machine is to fill water or drink glasses with water and ice or just ice by actuating a control arm with the glass.

Approximately one or two ounces or a continuous flow of ice can be obtained by properly adjusting a selector switch. By pushing a water switch to "on" water will be dispensed with the ice or as long as the glass actuator arm is energized.

The sink or area in which the ice is dispensed is constructed of plastic. The drain grill is 100% nylon coated steel wire. The cabinet is of stainless steel or steel with a baked-on enamel finish. Water lines within the cabinet are of copper or nylon and drain lines are tygon (plastic) tubing.

The complete machine has been designed with sanitation and ease of cleaning emphasized. The storage bin is sealed and the ice spout is automatically closed when ice is not being dispensed. The complete dispensing unit can be dismantled for cleaning without the need of tools. By removing two winged screws the cabinet top can be removed. Three winged bolts on the storage bin cover may be loosened and the cover can be lifted off. This exposes the entire dispensing mechanism which can be lifted out of the storage bin.

The base of the machine contains a sealing gasket which will seal the machine tight against the table or counter top, thereby, eliminating the possibility of dirt or bugs lodging under the base.

The top, back, front, sink or either side of the cabinet can be removed in a matter of minutes.

To clean the condenser or for access to the control box, the left side panel is removed.

GENERAL INFORMATION

1. The machine comes to you ready to operate except for water, electrical power and drain connections.

2. The attached information on adjustments should not be needed except in rare instances.

3. An interlock switch, located on the top frame, is held in an"on" position when the cabinet top cover is in place. When the cover is removed the power to the machine is automatically disconnected for cleaning. For electrical service the main power supply should be disconnected.

4. The unit should not be connected to a heavily fused supply line. Maximum fusing should be not more than 15 amperes. It is advisable to use a fustat, fusetron or delay type of fuse.

5. All parts of the unit can be washed with mild soap and water. This includes the stainless steel and paint parts. Care must be exercised in handling the cleaning of the various stainless steel pieces as these parts have a tendency to be more sharp at the edges than painted parts.

6. Because of the various electrical controls and wiring, care must be used in grounding this cabinet and frame work to a solid cold water line or similar ground.

7. The FD3 and FD4 are identical in outward appearance with the case assembly on. For identification purposes a decal is placed on the back panel. When a screw head appears in the upper hole it identifies the FD3 and in the lower hole the FD4.

INSTALLATION INSTRUCTIONS

1. Remove the unit from the carton and install on a table or counter with a flat, level, rigid top. Mount at a convenient height for filling glasses.

2. Avoid sliding the unit on the rubber sealing base.

3. Remove the top of the cabinet and the rear panel. Remove packing from float chamber.

4. Pull the drain from the cabinet. This may be routed through the rear panel through the hole provided in the base. It is possible to route all lines through holes which have been provided in the base.

5. The lower drain from the sink area must never be installed higher than the base of the cabinet. Consideration should be made in regard to this drain in order to get proper flow from the sink drain.

6. Water should be supplied from a 3/8" copper or equivalent pipe. Too small a water supply line will only result in an increase in time for filling glasses with water.

7. Connect power to lower terminal strip in junction box.

8. The interlock switch located at the top of the cabinet frame will be in an "ON" position when the cover is on the cabinet.

9. Replace the rear panel and the cabinet cover. The switch is used only when the machine is opened for cleaning. At such a time both the unit and dispenser are disconnected by removing the cover.

10. Thirty minutes after the unit has been started, ice can be dispensed.

NOTE: Should this unit be improperly installed with the drain favoring front of the machine, a condition would result in slushy, wet ice as the meltage water would remain in the bottom of the storage bin, and may run out the discharge spout.

WARNING: THIS MACHINE MUST NOT BE ALLOWED TO OPERATE WHEN THE WATER SUPPLY IS SHUT OFF, OR AT BELOW RECOMMENDED WATER PRESSURE. TURN MASTER SWITCH TO "OFF" POSITION WHEN WATER SUPPLY IS OFF, OR WHEN WATER PRESSURE IS BELOW RECOMMENDED OPERATING PRESSURE.

INSTALLATION PRACTICE

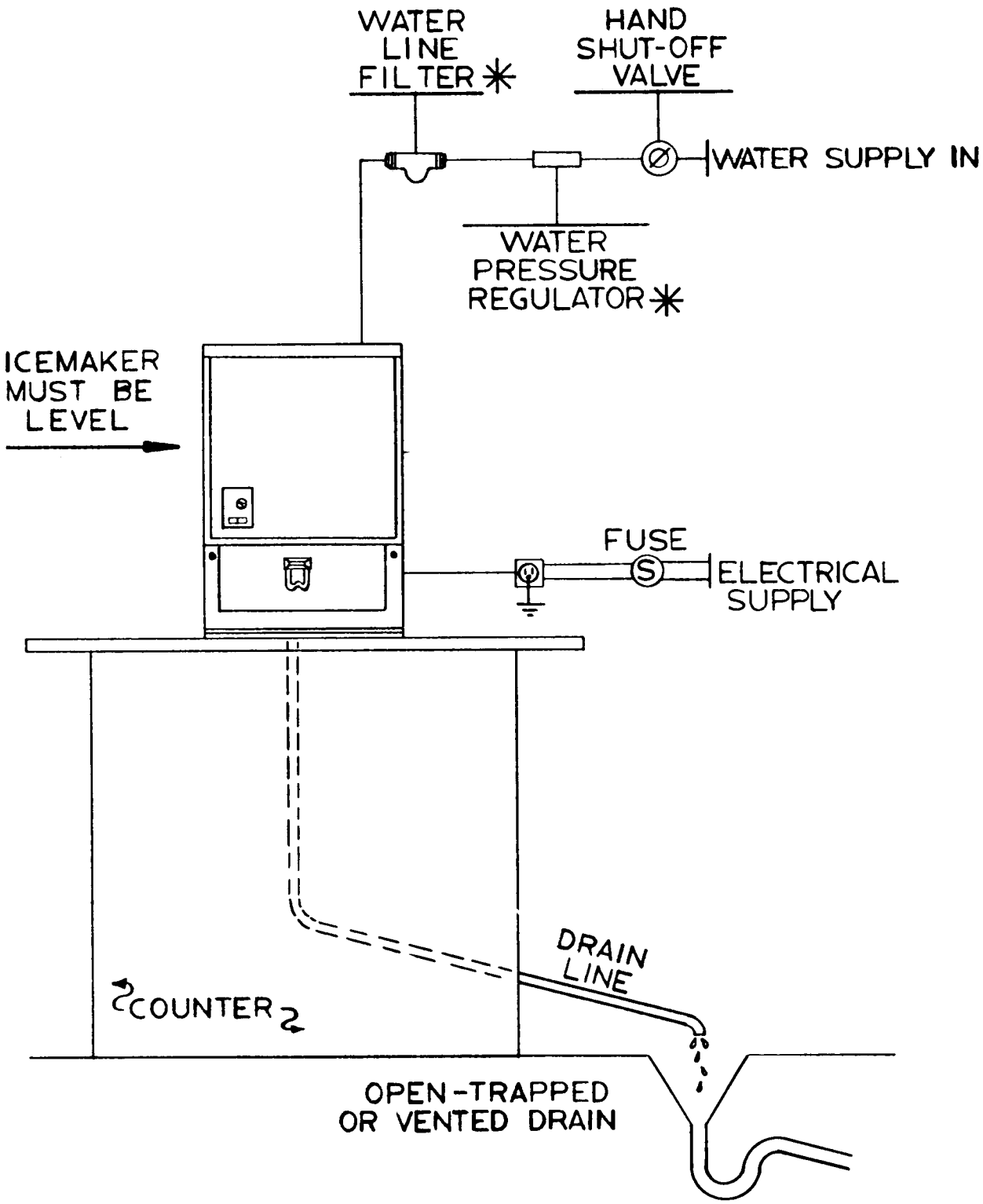

* REGULATOR AND FILTER ARE ACCESSORY ITEMS TO BE INSTALLED AS CONDITIONS WARRANT

HOOK-UP SPECIFICATIONS

ELECTRICAL:

Standard electricals are 115 volts, 60 cycle single phase current. Use No. 12 gauge wire, either in three wire cords rubber covered or thermoplastic types that incorporate a ground wire as the third wire. This unit must have a solid ground wire.

Major electrical components	H.P. Size	Amps.
1. Refrigerant Compressor	1/5	3.6
2. Freezer Gearmotor	1/15	2.2
3. Dispensing Drum Motor	1/25	2.35
TOTAL		10.15

15 amp fuse protection is required, preferable a delay type such as Fustat, Fusetron etc. All external wiring should conform to National Underwriters, as well as State and local codes. The maximum allowable voltage variation must not exceed 10 per cent of unit nameplate ratings, even under starting conditions.

Knockouts in cabinet are made for cord connectors. Supply line ties into lower terminal board of control box. Use separate circuit for icemaker only.

WATER SUPPLY:

A single cold water supply line is required. Recommended tubing size 3/8" O.D. or larger, cabinet connection is to a 1/4" S.A.E. flare tee (item No. 13 on page 26) on internal cabinet bulkhead. A water strainer with clean out feature should be installed in supply line along with a hand shut off valve.

Minimum water pressure is 20 pounds gauge, maximum pressure over 50 pound gauge may cause chattering of float ball in reservoir tank. For pressures in excess of 50 pounds, use a water pressure regulator in line. Cabinet back is slotted for supply line entrance.

WATER AND CONDENSATE DRAINS:

Two soft drains (plastic tubing) are provided, see page 24. The upper drain is 5/8" I.D. tubing, the lower drain is 7/8" I.D. tubing. Drain lines should be run to an open, trapped or vented drain in accordance with your State and local code regulations. These are gravity drains, therefore maintain at least a 1/4" pitch per foot away from unit drains. Knockouts are provided for either out the back or thru the base drain.

REFRIGERANT SYSTEM:

The standard Scotsman Flaker system is used in slightly modified form. Refrigerant 12 is pumped by compressor into the air cooled condenser, into the liquid line, thru a filter-drier and then into the capillary refrigerant control line.

Liquid refrigerant is then carried down to the bottom end of the shell and tube type evaporator (freezing cylinder) where it expands and rises to the top of evaporator. Here the vapors and gasses are returned thru an accumulator and suction line to the compressor.

Average operating head pressure is 135 lb. gauge, operating back pressure is 14 lb. gauge.

Factory charge is 10 ounces of Refrigerant 12.

Compressor is 1/5 horsepower, 2 pole, 3500 RPM by Tecumseh. Proper model number is Tecumseh AE59ZF9-46.

ICE DISPENSER CONTROL SYSTEM

The inner storage bin rotates, carrying the ice over a cutting edge located at the ice discharge spout. The ice is thereby cut off the bottom of the stored mass and falls down the spout.

When the selector switch is set at 1 oz. of ice, the dispensing bin will rotate 1/2 turn for each vend. When the selector switch is set at 2 oz. of ice, the dispensing bin will rotate one full turn.

The action is controlled by two switches mounted together with their rollers riding on a cam. They are located on the bin cover and under the drive motor bracket, see page 18. The cam has one depression for the top switch roller to fall into and two for the bottom switch roller. The top switch controls the 2 oz. vend in which the bin rotates one full turn to actuate the switch. The lower switch controls the 1 oz. vend for 1/2 a turn of the bin.

At the end of each vend it is necessary that the dispensing bin stop in the correct position. It must stop at such a time as the spout shutter, item No. 6 on page 16, which rotates with the bin, is directly over the spout. It is also at this time that one of the fins in the rotating bin is in the center and directly under the flaker freezer spout. When this timing is correct, ice that is filling the bin from the freezer will fall in both compartments of the bin; that is, on both sides of the fins. Also, by this timing the ice discharge spout is closed, which not only tends to keep dirt from entering the bin, but also sheds meltage from the bin away from the discharge spout.

The selector switch also has a continuous flow position in which ice will continue to vend as long as the control arm is held in. When released the top switch on the cam will position the shutter over the spout.

When the water switch is in an "ON" position, water will be dispensed with the ice. Water will always continue to flow as long as the actuating arm is held "IN". See page 13 for a simplified circuitry showing the operation of these switches.

CONTROL SWITCHES & CAM

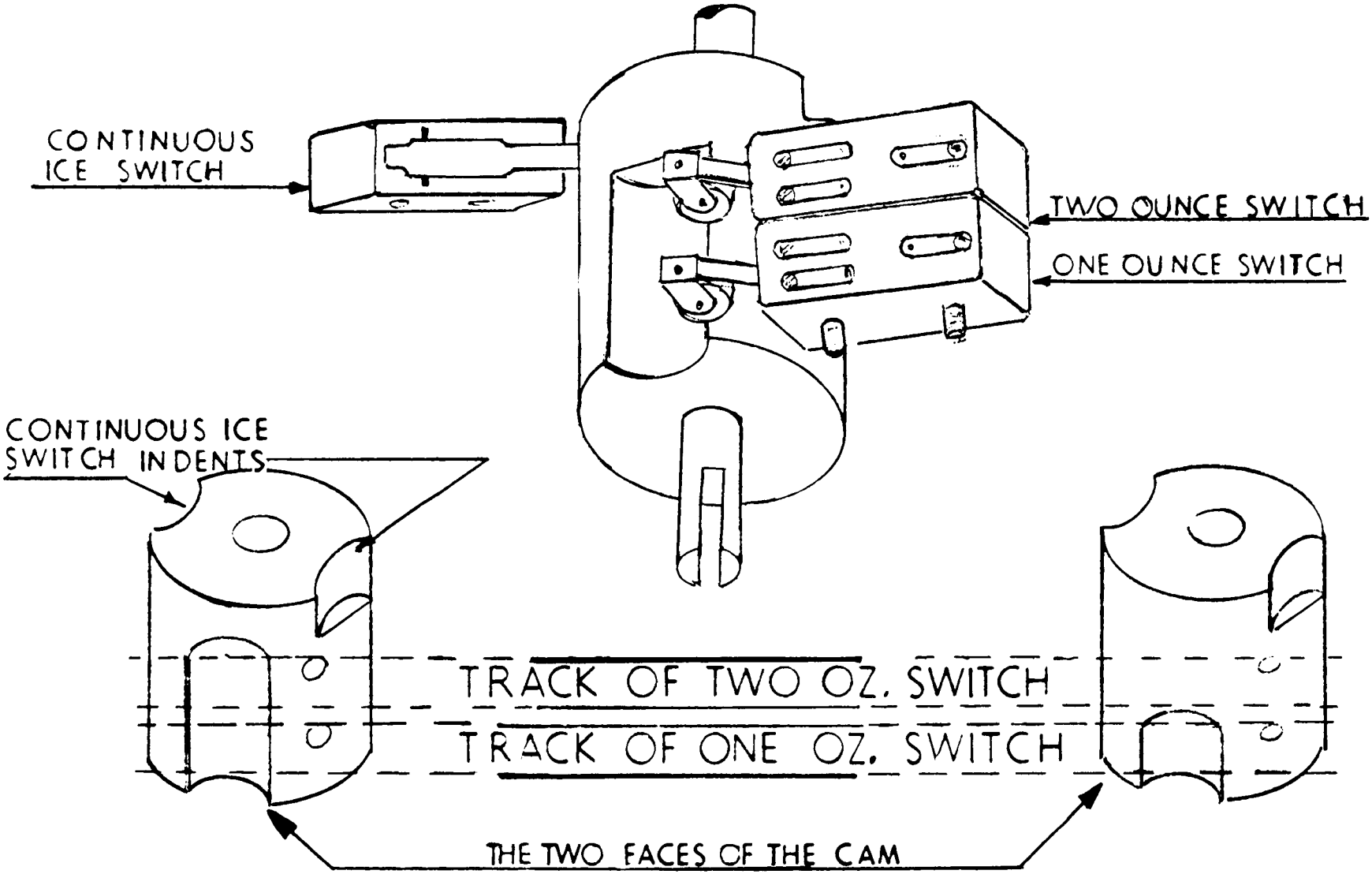

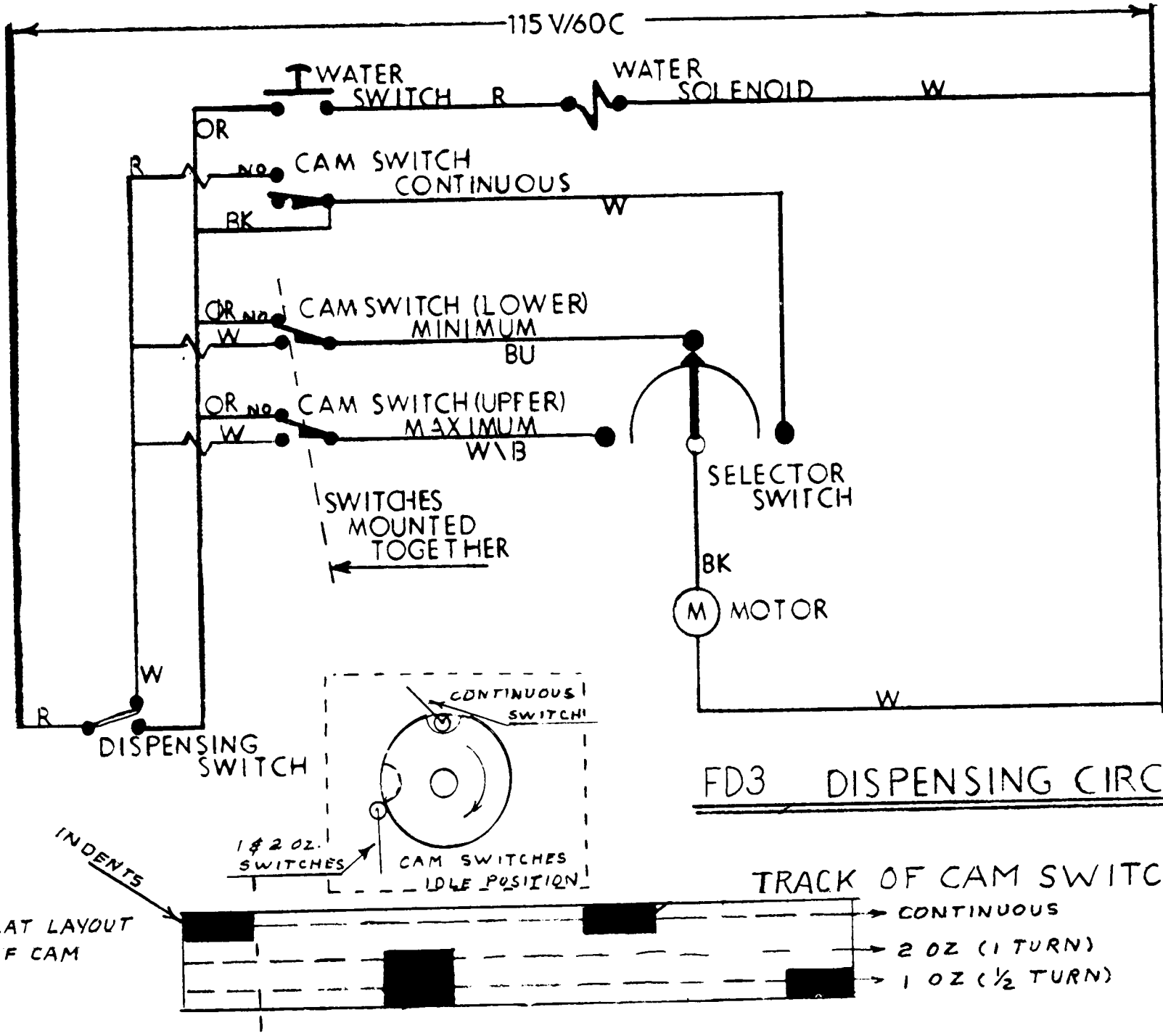

FD3 DISPENSING CIRCUIT

INSTRUCTIONS FOR SETTING CAM SWITCHES WHEN DISPENSER WILL NOT STOP OR WILL NOT DISPENSE PROPERLY. (DO NOT ADJUST CAM SWITCHES UNTIL YOU ARE SURE DISPENSER MECHANISM RUNS FREELY.

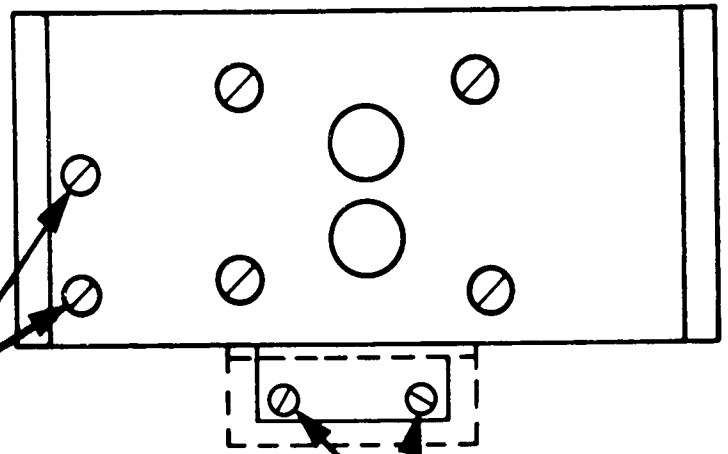

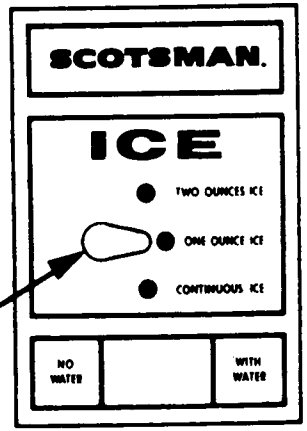

CONTINUOUS ICE SETTING INSTRUCTIONS:

1. Set selector switch to continuous ice.
2. Turn master switch on by pressing white button down.
3. Loosen two screws slightly.
4. Push screws forward slowly until dispenser motor runs continuously.
5. Pull screws back until motor stops.
6. Hold position and tighten screws snugly.

1 oz & 2 oz. ICE SWITCH SETTING INSTRUCTIONS:

1. Set selector switch to 1 oz. or 2 oz. ice.
2. Remove cam switch cover.
3. Turn master switch on by pressing white button down.
4. Loosen two screws slightly.
5. Pull back on screws until dispenser motor runs continuously.
6. Push screws forward slowly until dispenser motor stops and then push 1/32 to 1/16 further.
7. Hold position and tighten screws snugly.

SHUTTER AND BIN ASSEMBLY AND ADJUSTMENT

1. Assemble the shutter in the bin and place the tapered bottom over the shutter. The opening in this bottom (see drawing page 16) is placed over the discharge spout area. Pins in the bottom of the outer pin protrude through slots in the side of this bottom which thereby locks and holds it in place. The rotating dispensing bin is then set over this bottom.

2. Mount the cover on the bin being careful that the slots in the drive shaft are over the pin in the shaft of the dispensing bin. Bolt the cover down lightly with the three winged nuts. (Never Tight).

3. The shutter must be directly over the rubber discharge spout when the dispenser stops. The dispensing bin is timed, by construction, with the shutter, in that the fins of the bin are directly under the freezer spout when the shutter is in proper stopped position. Consequently both sides of the bin will fill with ice.

THE ADJUSTMENT

1. If shutter does not close the ice spout opening when the dispenser motor stops, be sure the cam switches are adjusted as per page 14.

2. To adjust shutter remove the bin cover and turn upside down.

3. Turn the motor until the roller of the continuous ice cam switch (the singularly mounted switch) is down in the slot of the cam. This is illustrated in the sketch of the cam and switches on page 13.

4. In this position the slot of the motor drive shaft should be in line with the plunger of the spout switch.

5. To adjust, loosen the two set screws No. 11 of cam (see section AA - page 18). Hold cam as described in above paragraph 3 and turn motor until drive shaft slot is correctly in line with spout switch plunger.

6. Tighten set screws in cam. (Do not over tighten or the plastic cam may split).

7. Rotate the motor - check the vertical position of the cam. Switch rollers must fall in the correct cam slots as indicated on page 13.

8. Hold master switch down and vend several times. Each time the dispensing motor stops the slot in the end of the drive shaft should line up with the plunger of the spout switch.

9. Place cover on storage bin. Press down on vend switch until slot in drive shaft falls over pin in rotating bin.

10. Turn down thumb screws on cover slightly (never tight).

11. Actuate the dispenser several times. Check the shutter through the rubber discharge spout. It must close discharge spout at the end of each dispense.

STORAGE BIN AND FD3 DISPENSING ASSEMBLY

ITEM NO.	PART NO.	DESCRIPTION
1.	A16098-000	Bin Cover only
2.	A20912-000	Drive Pin - Top
3.	A16005-000	Tie Bolt Bracket
4.	A21485-000	Outer Bin
5.	03-0255-00	Wing Nut
6.	A15965-000	Shutter Assembly
7.	A22479-000	Storage Bin
8.	A16129-000	Bin Bottom

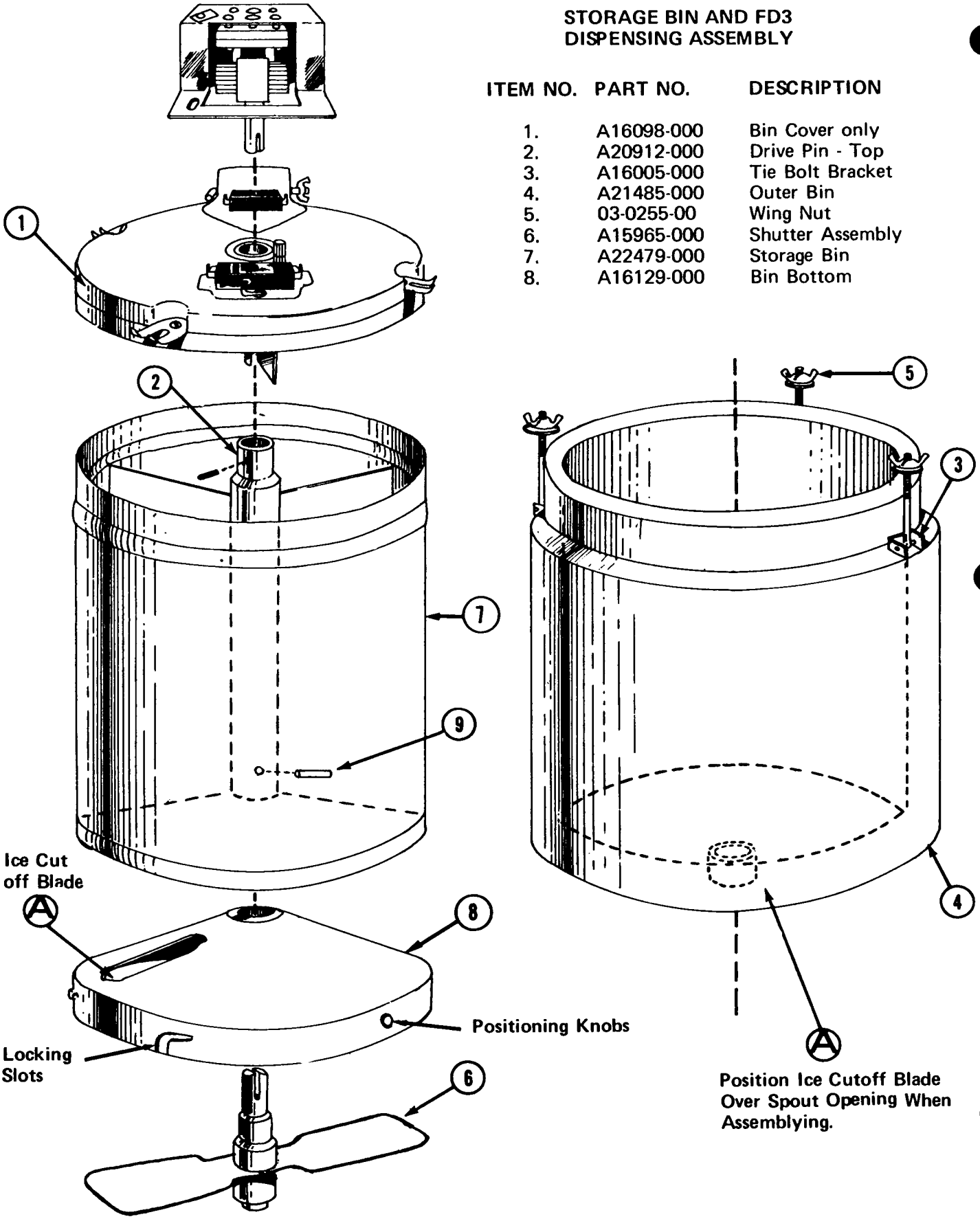

BIN CONTROLS

There are two controls located on the underside of the cover that govern the amount of ice that is in the bin. One control, that over the spout of the freezer, turns the freezer off when the bin is full of ice. This control must be in a position as illustrated in drawing page 18, Section B-B. The second control (see Section C-C page 18) hangs into the bin and holds the freezer off for a period of vends. This flipper slides upon the ice at the first ice vend and opens the switch contacts. It operates as a differential to keep the unit from starting and stopping at each vend and is a secondary means of stopping the unit should the spout switch fail.

Both of these controls can be easily removed for cleaning. The bin differential control has two fasteners securing it to the cover. They are tall round, knurled tubes which are unscrewed like a nut. Removing these two fasteners will drop the differential control from the cover.

The spout of the freezer has an extension that slides over the fixed spout. This removable extension has two small ears on the side. It is necessary when replacing the cover on the bin to slide this extension as far back on the freezer spout as possible. Be sure the small ears of the extension are on the outside of the cover. When the cover has been fitted over the bin and before it is bolted down, this extension should be slid toward the cover until the ears rest against it.

Serious damage could result if the cover is not installed properly. The small flipper over the switch button in the ice spout of this cover must definitely be forward. Check section B-B, page 18 carefully before attempting to install the cover.

To further control the compressor and to avoid the freezing and stoppage of the auger in the freezer a control is incorporated on the gear motor drive for the freezer.

The bin controls do not energize the compressor but only the gear motor. In turn the gear motor operates the compressor.

A speed sensing switch mounted on top of the motor of the gear unit will stop the compressor when the RPM of the motor is less than 900. At 1200 RPM it will start the compressor.

Should the auger begin to freeze the speed of the gear motor is reduced due to excessive load. At 900 RPM it opens the circuit to the compressor and thereby stopping the freezing. As the gear unit, only, continues to run it will clear the auger and when the motor speed reaches 1200 RPM, the compressor is turned on.

Any freeze ups are thereby automatically cleared by the unit.

If the water should be shut off when the unit is running, the inlet water line will freeze shut. The control mentioned above will have no control over such a situation.

STORAGE BIN TOP ASSEMBLY

ITEM NO.	PART NO.	DESCRIPTION
1.	A21215-000	Storage Bin Top Assembly
2.	A18468-000	Motor Mount
3.	12-0876-00	Positioning Switch (Continuous ice)
4.	A16498-000	Switch Cover
5.	A16104-000	Hinge Pin
6.	03-1229-00	Wing Nut
7.	A16499-000	Switch Cover
8.	12-1610-01	Dispenser Drive Motor
9.	02-1576-00	Cam
10.	A21207-000	Drive Shaft
11.	03-0387-00	Set Screws
12.	12-0876-00	Cam Switch (two ounces ice)
13.	12-0876-00	Cam Switch (one ounce ice)
14.	A16101-000	Cover Bushing
15.	12-1018-01	Spout Switch
16.	12-1643-00	Boot & Bushing
17.	A16010-000	Ice Control Lever
18.	A16495-000	Differential Bracket Nut
19.	12-1018-01	Differential Switch
20.	A19269-000	Differential Paddle

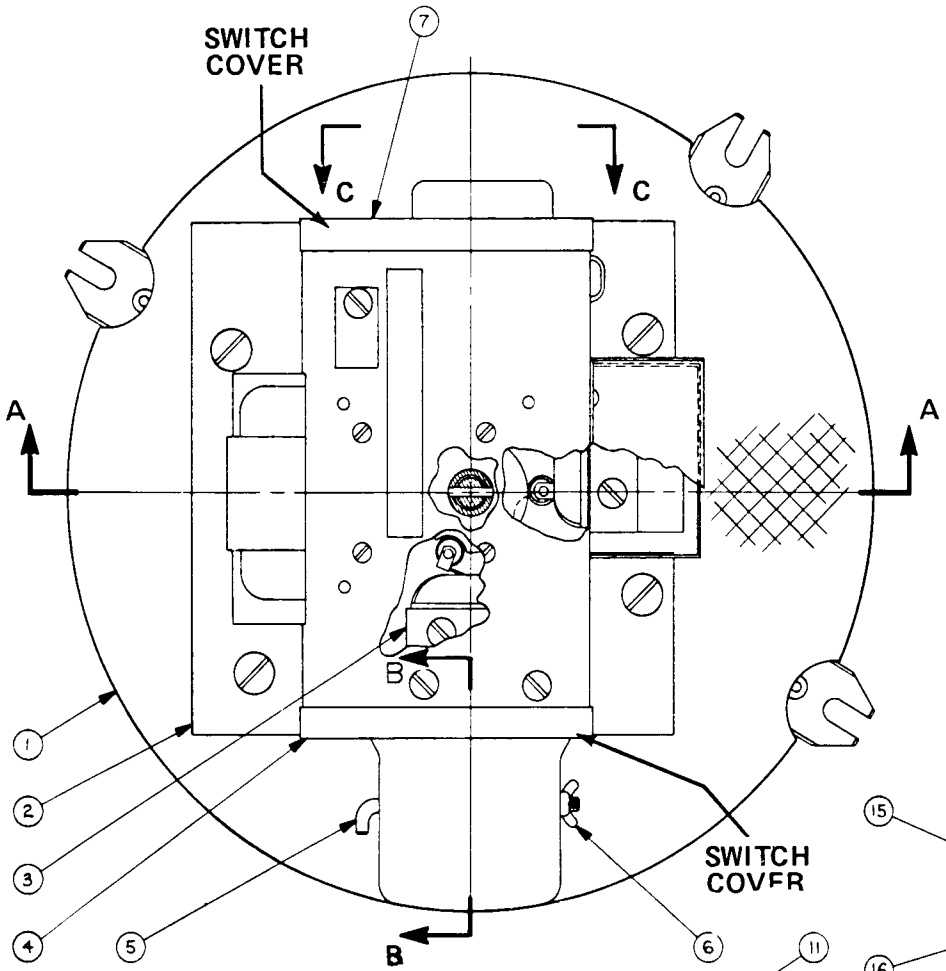

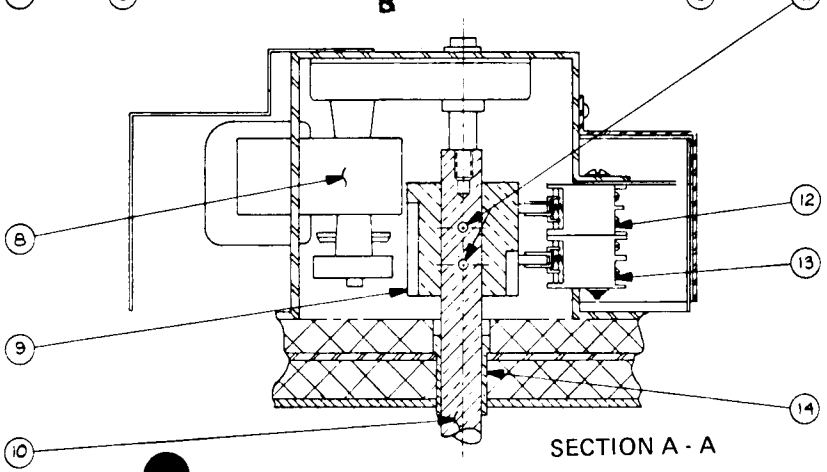

SECTION A - A

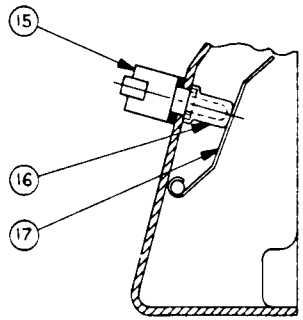

SECTION B - B

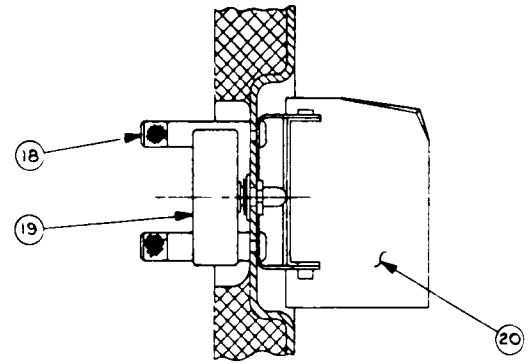

SECTION C - C

FD3 DISPENSER CONTROL SYSTEM

The control system, for the dispenser only, consist of six switches. The terminalogy and function of these switches are as follows:

DISPENSING SWITCH:

1. Located in the sink area on firewall back of the sink. It is accessible by removing the right side panel.

2. When depressed, usually by a water glass, it actuates the dispensing mechanism.

3. It is a double pole, double throw leaf type snap switch.

SELECTOR SWITCH:

1. Located on the frame back of the front panel. It is accessible by removing the front panel.

2. By its setting, it determines if one of two ounces of ice will be dispensed. In the continuous setting the dispenser is operated as long as the dispensing switch is held "IN".

3. This is a three position, 30 degree throw rotary switch.

CONTINUOUS CAM SWITCH:

1. This is the single top switch riding on the upper edge of the cam.

2. This is actually a locating switch that will always stop the dispensing mechanism when the shutter is covering the dispensing opening. When the selector switch is set for "continuous" ice, the dispenser operates as long as the dispensing switch is held in. When this dispensing switch is released, the continuous cam switch will hold the circuit on until the shutter is over the discharge spout or opening.

3. This switch is a single pole double throw roller type switch. Only two terminals, the common and normally open, are used.

MAXIMUM 1 or 2 oz. CAM SWITCH:

1. This is the top switch of the two cam switches that are mounted together. It rides on the center of the cam.

2. When the selector switch is set at 2 oz. this will control the dispensing drum to one full turn.

3. It is a single pole double throw roller type micro switch.

MINIMUM or 1 oz. CAM SWITCH:

1. This is the lower switch of the two cam switches that are mounted together. It rides on the lower edge of the cam.

2. When the selector switch is set at one ounce it will control the dispensing drum to 1/2 turn.

3. This switch is a single pole double throw roller type micro switch.

WATER SWITCH:

1. Located on the front panel.

2. When in an "ON" position, it energizes a water solenoid to dispense water with ice.

3. This is a rocker type single pole single throw switch.

Besides the two flaker control switches covered in the information on this unit, there is a master switch.

This switch is located on the top frame and is a plunger type single pole single throw switch. It is held in an "ON" position by the cabinet top. When top is removed the switch is in an open position.

WIRING DIAGRAM
FD3
115/60/1

A24968-001

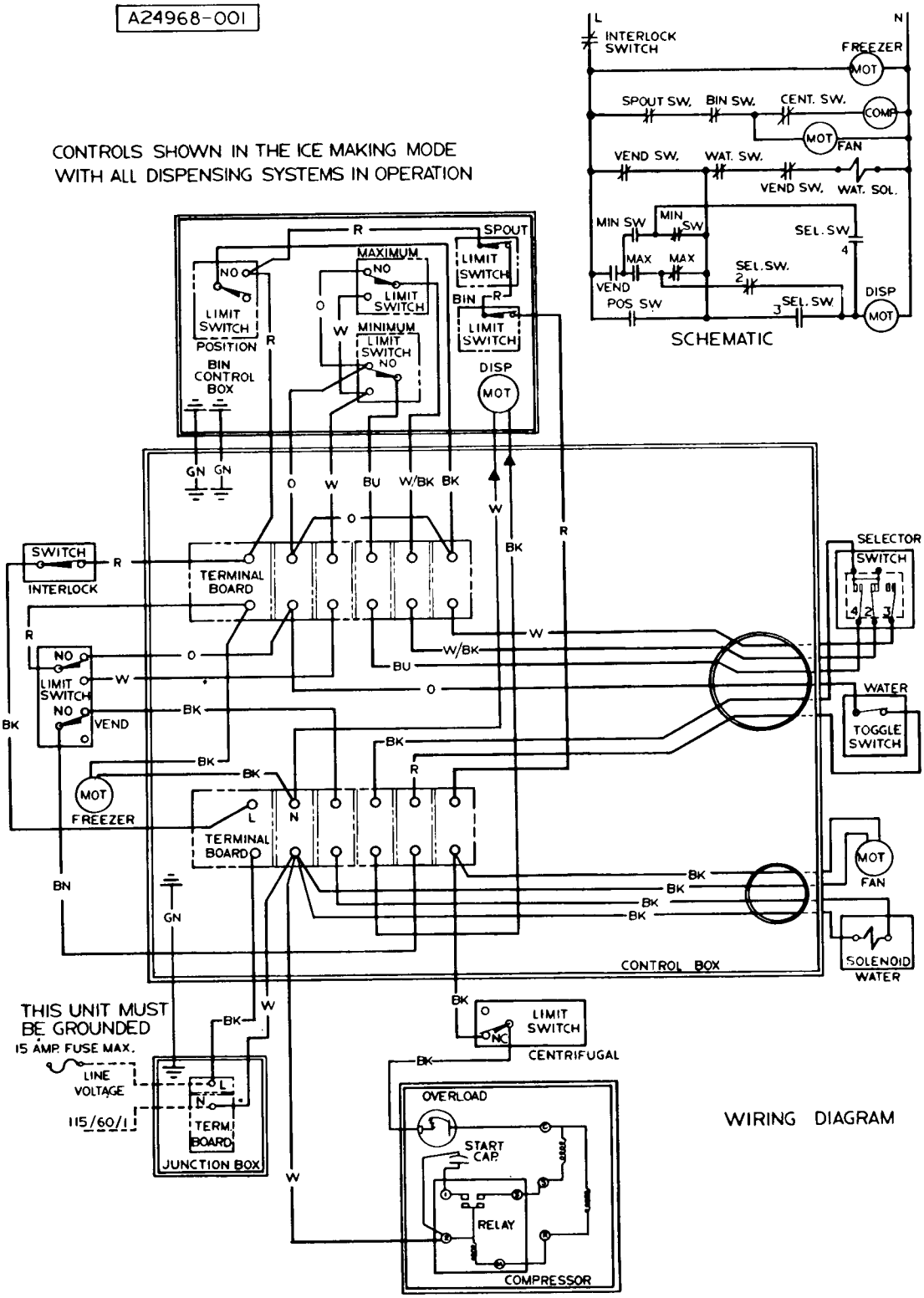

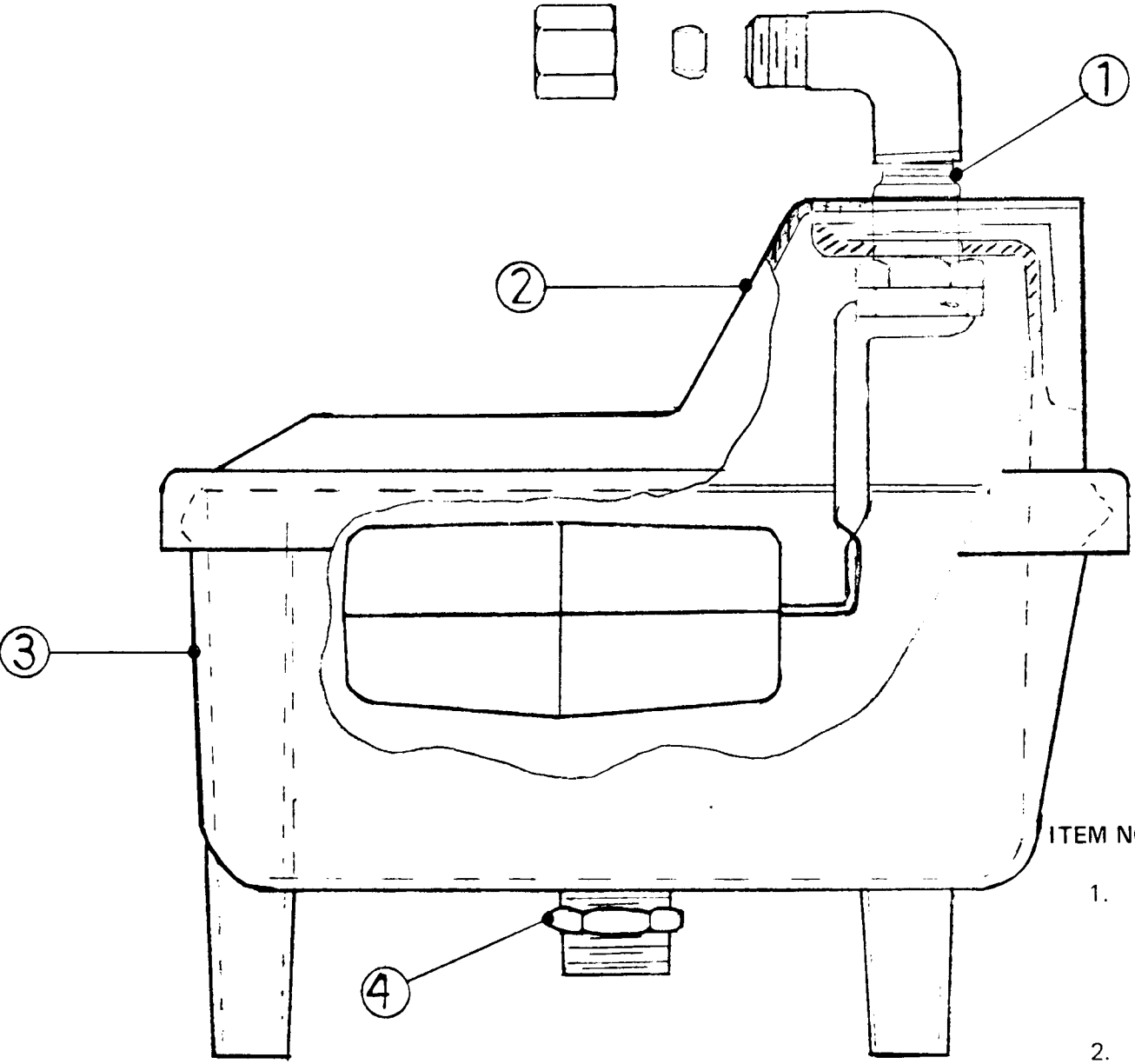

RESERVOIR ASSY. A22348-000

ITEM NO.	PART NO.	DESCRIPTION
1.	02-1793-02	Valve Assembly consisting of: Inlet Ell Straight Compression nut Compression Sleeve Valve Assembly with Float
2.	02-1793-03	Reservoir Cover
3.	02-1793-04	Reservoir Body
4.	02-1793-05	Reservoir mounting nut 3/8-18

CABINET PANELS – CHASSIS

FD3 MODELS

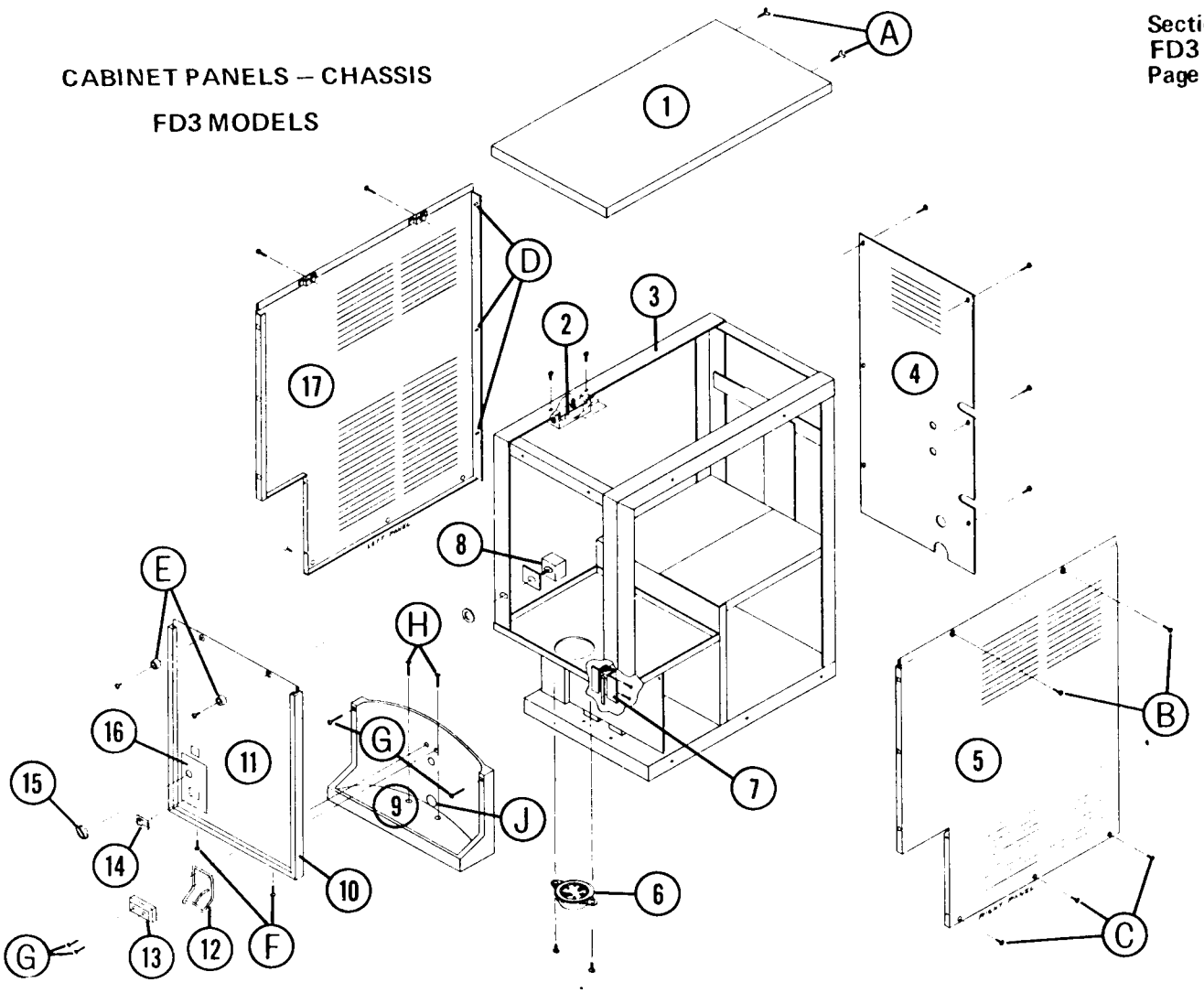

ITEM NO.	PART NO.	DESCRIPTION
1.	A19104-004	Cabinet Top–Painted
	A19104-001	Cabinet Top–Stainless Steel
2.	12-1570-00	Master (interlock) Switch
3.		Frame
4.	A21405-002	Back Panel–Painted
	A21405-001	Back Panel–Stainless Steel
5.	A21416-002	Right Side Panel–Painted
	A21416-001	Right Side Panel–Stainless Steel
6.	02-1804-00	Spout Extension
7.	12-1641-00	Vend Switch
8.	12-1540-00	Selector Switch
9.	02-1826-00	Sink
10.	15-0507-00	Moulding Trim
11.	A21425-002	Cabinet Front–Painted
	A21425-001	Cabinet Front–Stainless Steel
12.	A21554-000	Actuator Arm
13.	02-1833-00	Actuator Arm Adapter
14.	12-1877-00	Water Switch
15.	12-15566-00	Switch Knob
16.	15-0461-00	Decal
17.	A21415-002	Left Side Panel–Painted
	A21415-001	Left Side Panel–Stainless Steel
A.	03-1279-00	Wing Screw
B.	03-1418-05	Screw

REMOVING PANELS & SINK

1. To remove either side panel or front, first remove the two wing bolts in the back of cover No. 1, Item (A). Lift the back of the cover upward and push forward to release.

2. Either side panel can be taken off by removing two screws across the top (B) and three across the bottom of the panel. (C) These are the only screws that hold the panel. Pull the panel from in back of sink, then slide backward about 1/2 inch.
   There are no screws in the back of the panel, only pins that slide into holes in the frame. (D)
   The front edge of the panel merely fits under the aluminum trim.

3. The front panel is removed by unscrewing the two rubber bumpers at the top of the panel (E) and two screws under the sink top area. (F)
   The water switch (14) will snap out and the quick connects can be removed from the switch.
   The selector knob (15) just pulls off.

4. The sink (9) can be removed by removing four screws (G) on the front side of the switch and two screws in the bottom of the sink. (H)
   These screws are sealed to eliminate water leaks.
   The drain tube connection (J) is fastened to the sink rear by a hose clamp. To remove the clamp, it is necessary to remove the right side panel.

5. Remove top and left side panel to clean air cooled condenser.

CHASSIS ASSEMBLY

Right Side

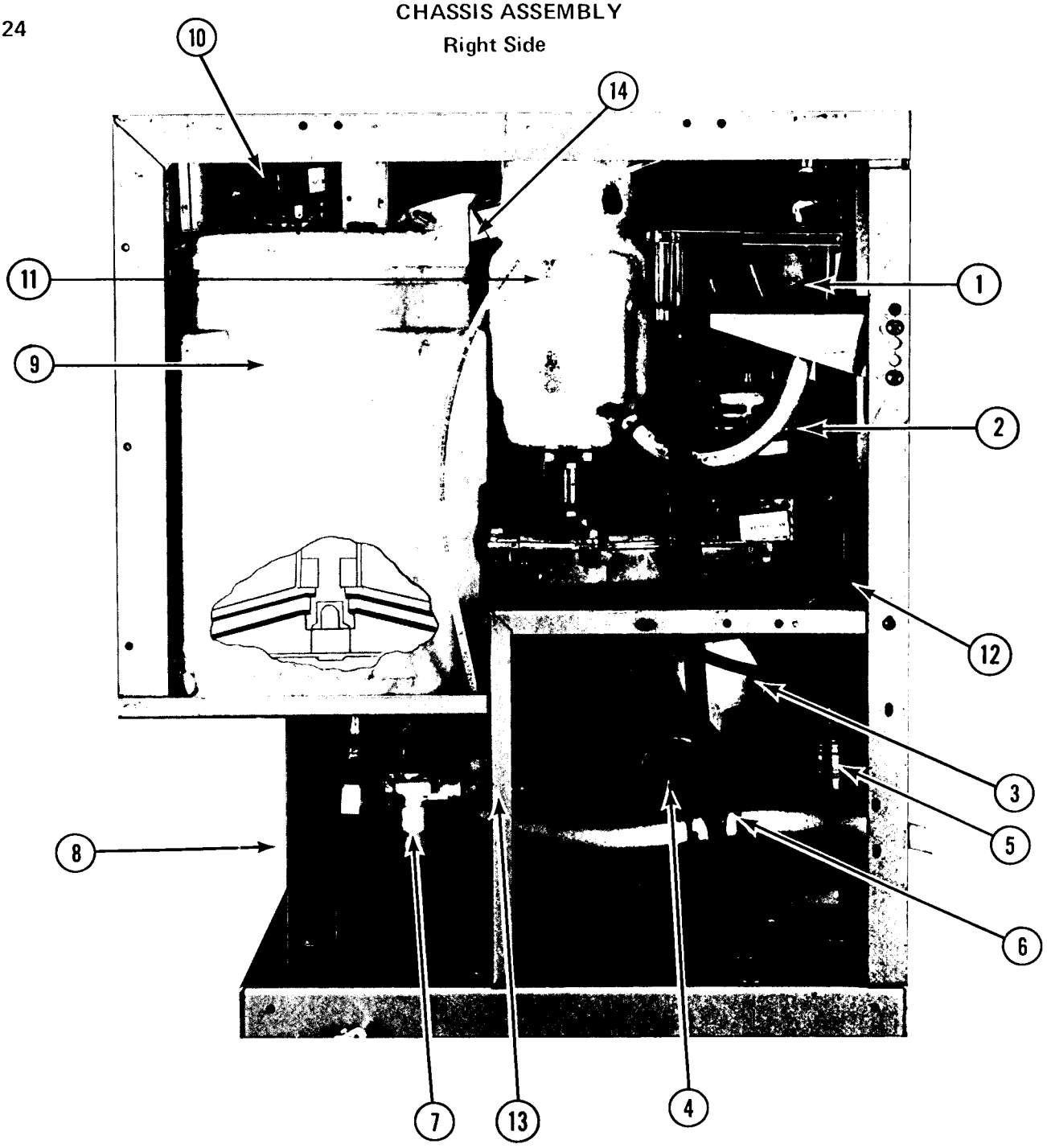

ITEM NO.	PART NO.	DESCRIPTION
1.	A22348-000	Reservoir Assembly
2.	A17905-021	Gear Motor Assembly
3.	18-0137-00	Fan Blade
4.	12-1575-01	Fan Motor
5.	02-1752-01	Drier
6.	02-1338-00	Hose Clamps
7.	A21382-000	Inlet Water Solenoid
8.	12-1641-00	Vend Switch
9.	A21485-000	Outer Bin Assembly
10.	12-1610-01	Dispensing Drive Motor Use with A21207-000 Drive Shaft
11.	A21435-020	Freezer Assembly
12.		Electrical Hook Up Box
13.		Water Supply Inlet
14.	A16151-000	Spout Extension

CHASSIS ASSEMBLY

Left Side

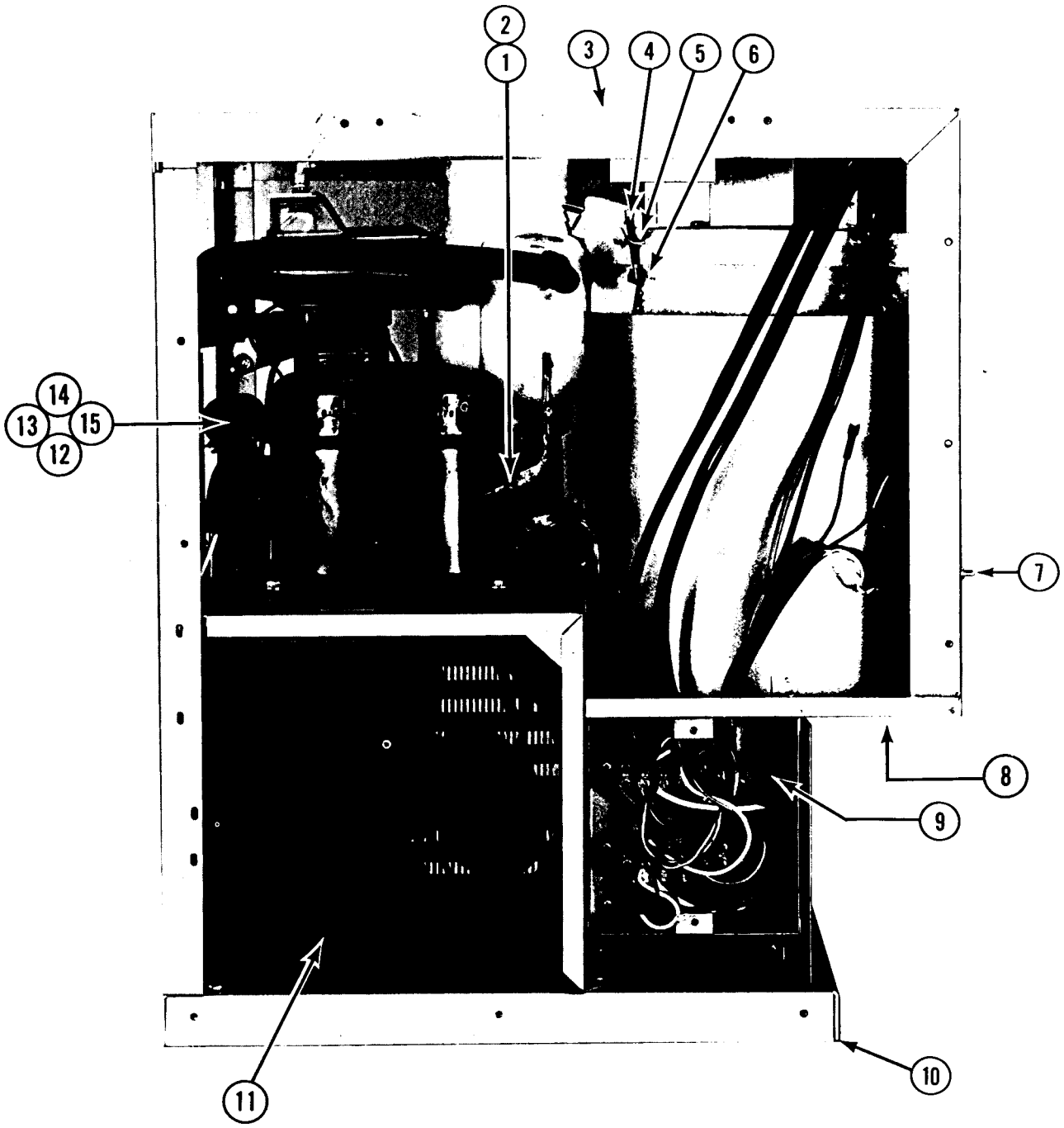

ITEM NO.	PART NO.	DESCRIPTION
1.	16-0563-00	Service Valve Cap
2.	16-0560-00	Service Valve Core
3.	12-1570-00	Safety Switch
4.	A16004-000	Tie Bolts
5.	03-0255-00	Wing Nuts
6.	03-1069-00	Cotter Pins
7.	12-1540-00	Switch
8.	02-1804-00	Plastic Spout Extension
9.	A21432-001	Wiring Panel Box
10.	13-0566-00	Base Gasket
11.	A18374-000	Condenser
12.	18-0161-01	Motor Compressor
13.	18-0161-02	Compressor Overload
14.	18-0161-03	Compressor Relay
15.	18-0161-05	Starting Capacitor (189-220)

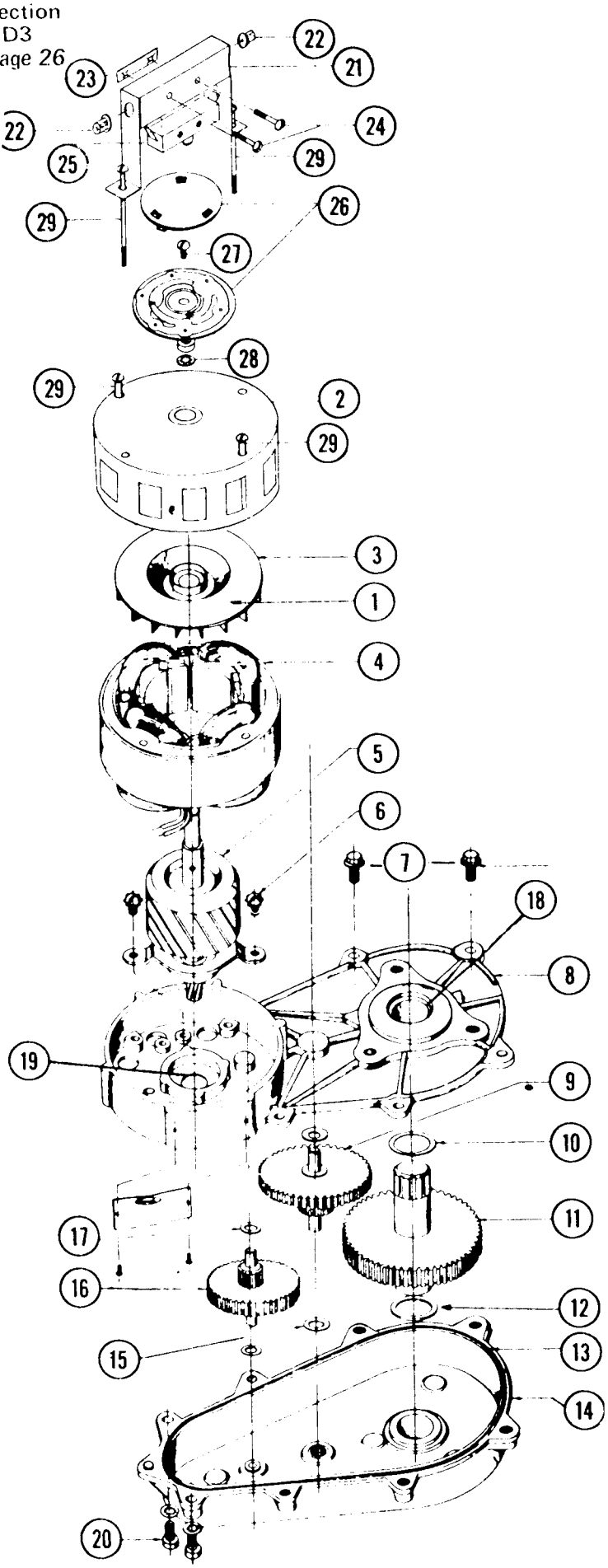

FD3 GEAR MOTOR ASSY.

ITEM NO.	PART NO.	DESCRIPTION
1.	03-1246-00	Fan Set Screw
2.	A17047-000	Motor Housing
3.	A16915-000	Cooling Fan
4.	12-1343-01	Stator Assy.
5.	A19884-01	Rotor Assy.
6.	03-1245-00	Screws
7.	03-1251-00	Falnge Screws
8.	A24184-001	Gear Case Covers (Includes Item 14)
9.	02-1510-00	Gear & Pinion
10.	03-1408-05	Washer
11.	02-1513-00	Gear & Output Shaft
12.	03-1408-04	Washer
13.	02-1505-00	"O" Ring
14.	A24184-001	Gear Case Assy. (Includes Item 8)
15.	03-1408-06	Washer
16.	02-1511-00	1st Gear & Pinion
17.	03-1408-07	Washer
18.	02-1503-00	Grease Seal
19.	02-1504-00	Grease Seal
20.	03-1252-00	Screw
21.	08-0579-00	Switch Bracket
22.	12-1213-03	Snap Bushings
23.	03-0886	Twin Speed Nut
24.	03-1403-10	Screws
25.	12-1644-00	Switch
26.	A19898-000	Synchro Snap Assy.
27.	03-1248-01	Screw
28.	03-1407-06	Washer
29.	03-1403-42	Motor Bolts
30.	A16914-00	Bearing

A-17905-21 Gear Motor Assy. Complete

Output Shaft turns at 7 RPM.

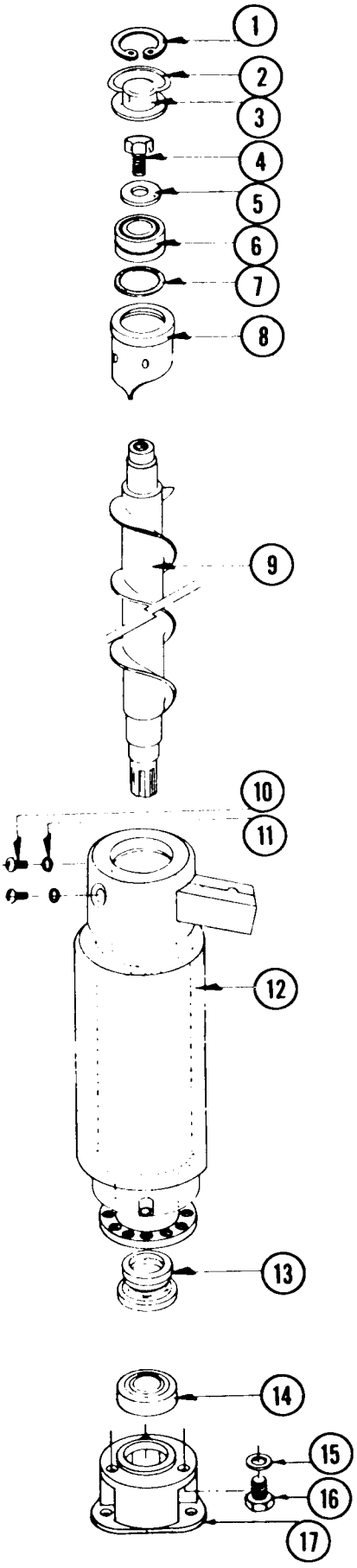

FD3 FREEZER ASSY.

ITEM NO.	PART NO.	DESCRIPTION
1.	03-0553-00	Retainer Ring
2.	A08162-000	Cap Hook
3.	A07701-000	Cap
4.	03-0758-00	Screw
5.	A07699-000	Washer
6.	02-0547-00	Top Bearing
7.	13-0617-16	"O" Ring
8.	A09413-000	Breaker
9.	02-1313-00	Auger
10.	03-1403-46	Screw
11.	03-1417-07	Washer
12.	A21434-020	Evaporator Shell Includes Suction Line, Etc.
13.	A18945-000	Water Seal
14.	02-0417-00	Bearing, Lower
15.	03-1408-03	Washer (3 reqd)
16.	03-1405-14	Cap Screw
	15-0575-01	Coupling Gasket
17.	03-1505-00	Gasket
	A23073-000	Adapter-Plastic
18.	15-0575-01	Spline Drive Coupling
19.	13-0709-01	Shaft Drip Shield - rubber
	A21435-000	Freezer Complete With Suction Line

SERVICE ANALYSIS

ICE MAKER SECTION FD3

SYMPTOM	POSSIBLE CAUSE	CORRECTION
Water Leaks	Defective water seal.	Replace.
	Gravity feed line leaking.	Check hose clamps.
	Water level in reservoir too high.	Adjust to 1/4 inch below overflow pipe.
Exeessive noise or chattering.	Mineral or scale deposit on auger and inner freezing chamber walls.	Remove and manually polish auger, polish inner chamber walls of freezer barrel.
		For lighter concentration use Scotsman Ice Machine Cleaner periodically.
	Low suction pressure.	Add gas to raise suction pressure.
	Intermittent water supply.	Check and clean water strainer. Check gravity feed line for air lock.
		Remove air lock.
	Water level in reservoir too low.	Adjust to 1/4 inch below overflow pipe.
	Gear reducer loose on frame.	Tighten bolts.
	Motor compressor not solid on rubber mounts.	Repair or replace rubber mounts.
Gearmotor noise.	Low on oil.	Remove case cover to check for proper oil level. Top of gears should be covered. Use Sun Oil Co. – Prestige 50 A.E.P.
Unit will not run.	Blown fuse.	Replace fuse and check for cause of blown fuse.
	Loose electrical connection.	Check wiring.
	Inoperative master switch.	Replace switch.
Compressor cycles intermittently.	Low voltage.	Check for overloading.
	Dirty condenser.	Clean.
	Air circulation blocked.	Move unit to correct.
	Inoperative condenser motor.	Replace.
	Non-condensable gases in system.	Purge off.

SERVICE ANALYSIS
ICE MAKER SECTION FD3

SYMPTOM	POSSIBLE CAUSE	CORRECTION
Making wet ice.	Surrounding air temperature.	Correct or move unit.
	Under or over-charge of refrigerant.	Recharge with the proper amount.
	High water level in water reservoir.	Lower to 1/4 inch below overflow pipe.
	Faulty compressor.	Replace or repair.
Low ice production.	Loss of refrigerant, under or over-charge of refrigerant.	Check and recharge with proper amount of refrigerant.
	Dirty or plugged condenser.	Clean condenser.
	Low water level in water reservoir.	Adjust to 1/4 inch below overflow pipe.
	Partial restriction in capillary tube or drier.	Moisture in system. Overcharge of oil in system. Remove charge and drier. Replace and recharge system.
	Inlet water strainer partially plugged.	Remove screen and clean.
	Corroded or stained worm shaft due to water condition.	Remove worm shaft and clean.
Machine runs but makes no ice.	Loss or under-charge of refrigerant.	Check for leaks and recharge.
	Water not entering freezing chamber.	Plugged strainer or supply line. Check and clean. Air lock in gravity feed line. Check and remove air lock.
	Moisture in system.	Check and remove charge and drier. Replace and recharge.
	Water seal leaking.	Replace seal.
	Water turned off while unit was operating.	Inlet water line froze shut. Unit must be turned off and defrosted.
Will not dispense.	Power off.	Check fuses and plug.
	Motor overload open.	See correction under motor overload.
	Cam switches improperly set.	Adjust per manual.
	Master switch open.	Cabinet cover must be on tight to keep switch on.
	Spout jammed with ice. Unit not level or holding glasses against spout.	Remove ice and clear ice under removable bottom. Check reservoir possibly too high.
	Wires off dispensing switch.	Check switch terminals.

SERVICE ANALYSIS
DISPENSING MECHANISM

SYMPTOM	POSSIBLE CAUSE	CORRECTION
Motor hot—Overload Open.	Ice under removeable bottom.	Remove ice.
	Wing nuts on cover turned down too tight.	Keep wing nuts only slightly snug — never tight.
	Shutter or rotating bin does not turn free.	Check and repair any drag.
	Ice too hard.	Raise freezer water level and check refrigerant charge.
Dispenser does not stop.	Brake on drive motor not working properly.	Brake must be free and stop the motor before 5 revolutions after the dispensing switch is released.
	Cam switches out of adjustment.	Check switches and set per manual.
Water will not dispense.	Solenoid defective.	Replace.
	Lines closed up.	Clean.
Water runs too slow.	Water line too small.	Increase size.

MAINTENANCE INSTRUCTIONS – FLAKER SECTION

THE FOLLOWING MAINTENANCE SHOULD BE SCHEDULED THREE TIMES PER YEAR.

1. Check and clean water strainers and float valve. Depress float valve to insure full stream of water.

2. Check water level and machine level. Keep water level below overflow, but as high as possible and still not run out of spout opening with machine off. Water should come out of spout with ice at all times. Adjust as required.

3. Clean reservoir and interior of freezer assembly using SCOTSMAN Ice Machine Cleaner. See cleaning instruction on next page.

   A. If machine has been cleaned regularly and no problem such as dry ice or chatter are noticed, clean by making ice from solution of 4 oz. of cleaner to 2 quarts of water.

   B. If heavy mineral deposits on auger and walls, or sediment at inlet to freezer are encountered, clean by pouring strong solution 1/2 acid – 1/2 water into reservoir and operate drive motor only for agitation. Allow 1/2 hour or longer as required. Drain by disconnecting tygon at water inlet to freezer.

NOTE: Cleaning requirements vary according to local water conditions. Visual inspection of the auger before and after cleaning will indicate best procedure to be followed in local area.

4. Check top bearing of freezing tube. Remove retainer ring around edge of stamped brass cap, pull cap off. If moisture is around bearing, wipe up and remove grease. Add new grease. Use Beacon No. 325 or equal.

5. Clean air cooled condenser. Always shut off machine when cleaning.

6. Oil condenser fan motor when possible.

7. Check for refrigerant leaks and proper frost line. Should frost out of accumulator at least one-half way to compressor, and in some areas, back to service valve.

8. Check for water leaks. Tighten drain line connections. Run water down drain line to make sure it is open.

9. Check quality of ice. Ice should be wet when formed, but will cure rapidly to normal hardness in the bin.

CLEANING INSTRUCTIONS FOR FD3

1. Set selector switch to continuous ice and vend until bin is empty.
2. Remove top cabinet cover.
3. Remove storage bin cover and spout extension.
4. Remove both ice control flippers from storage bin cover. Note positions of these parts, if parts re-assembled incorrectly damage to the machine may result.
5. Remove inner bin and bin bottom.
6. Position shutter over rubber ice spout and replace bin cover.
7. Turn OFF water supply or block float. Drain reservoir by disconnecting tube between reservoir and freezer. After draining, reconnect tubing.
8. Block main switch ON and pour cleaning solution into reservoir. (Use 4 oz. of Scotsman cleaner and 1 qt. of hot water). Do not fill above overflow tube. Do not allow unit to operate with less than 1" of solution in reservoir.
9. While waiting for Step No. 8 and/or No. 11 to complete, remove drain grate and ice vend lever from sink. Wash and sanitize these parts and parts removed from storage bin in accordance with the local health department regulations. (Step No. 8 may complete before Step No. 9).
10. Remove block from main switch. Wash and rinse reservoir, turn water on or remove float block.
11. Block main switch ON. Let unit run for at least 15 minutes to flush out any cleaning fluid. Check ice for acid taste — run until ice tastes sweet.
12. Remove block from main switch and remove bin cover. Add hot water to ice in bin, using this melt water thoroughly wash and rinse the underside of the storage bin top, shutter, rubber ice spout and all surfaces within the storage bin.
13. Using solution from Step No. 9, thoroughly wash and rinse sink.
14. Re-assemble storage bin and sink parts.
15. Replace cabinet cover. Unit is ready for normal operation.

ACCESSORY ITEM

WALL MOUNT KIT

PART NO. KWB1

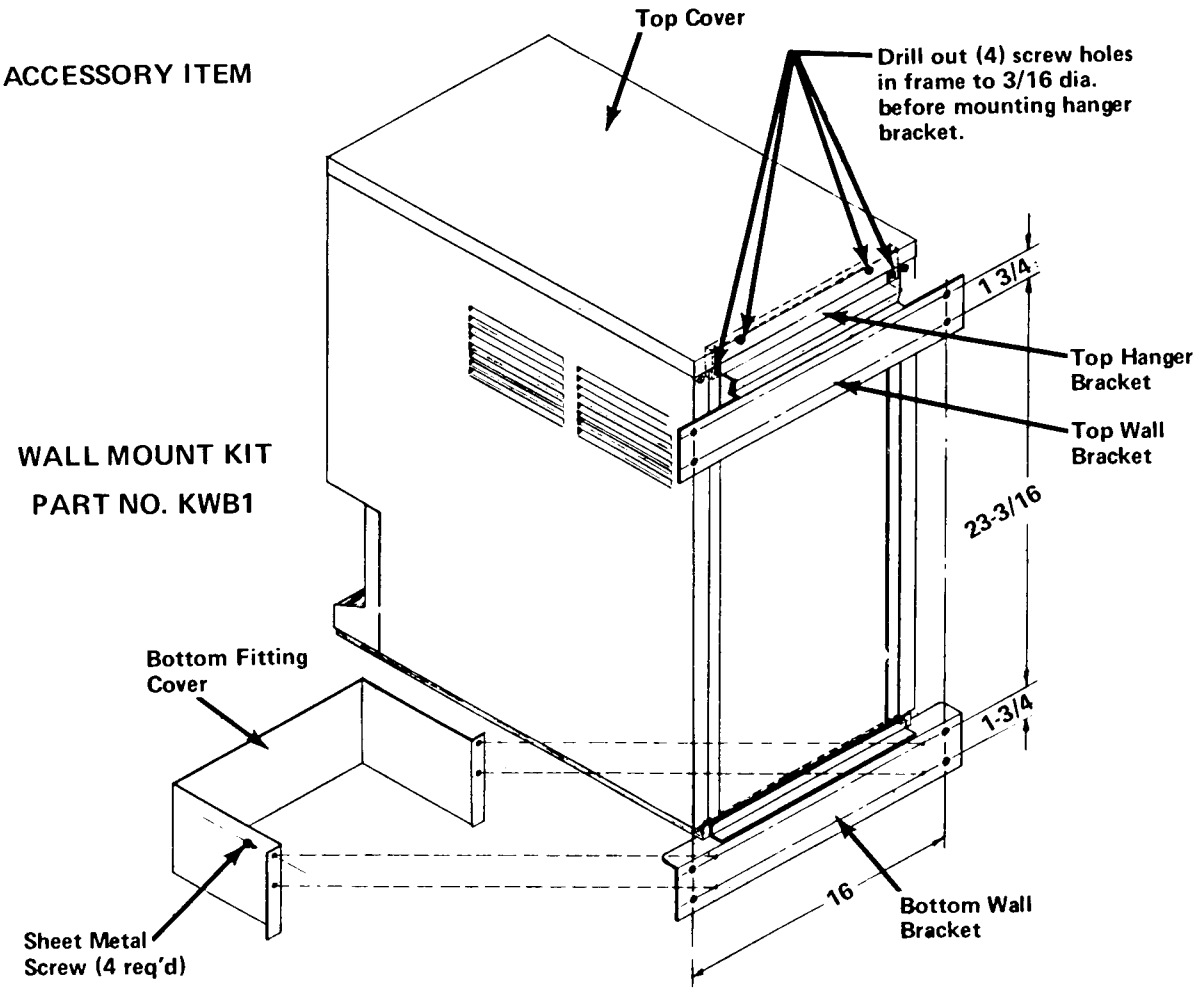

THE KIT

1. Top Case Hanger Bracket
   Attach to inside of frame of the dispenser
2. Top Wall Bracket
   Mounts to wall and engages top case hanger bracket to support dispenser.
3. Bottom Wall Bracket
   Mounts to wall and supports bottom of dispenser.
4. Bottom Fittings Cover
   Fastened to bottom wall bracket to conceal electrical and plumbing fittings from view.

TOP HANGER BRACKET:

1. Remove back cover and save four screws for mounting bracket.
2. Remove top cover.
3. Drill out four holes of weld nuts in back of frame with 3/16 dia. drill as indicated in illustration.
4. Place bracket inside of frame and fasten solidly with four screws, saved from Step 1, through drilled out holes.

TOP WALL BRACKET:

1. Position bracket in desired location.
2. Secure to wall with fasteners of any suitable type for that particular wall through the four holes in bracket. These fasteners or lag screws are not furnished. (Be sure to secure bracket rigidly to wall.)

BOTTOM WALL BRACKET:

1. Hang the dispenser on top wall bracket.
2. Position bottom bracket so that molding on dispenser base bottoms in channel of the bracket.
3. Secure bracket to wall through the four large holes with suitable fasteners. (Fasteners not furnished.)

BOTTOM FITTINGS COVER:

1. Connect water inlet, bin drain and sink drain of dispenser through bottom of case. Also run electrical cable in from bottom.
2. Secure fitting cover to bottom wall bracket with the four sheet metal screws provided in this kit.

GENERAL INFORMATION

1. The dispenser is provided with an interlock device.
2. The interlock must be closed before the dispenser will function.
3. The interlock is closed by the top cover of the dispenser. When the cover is tightly in place.
4. To place the cover in proper position, it may be necessary to bend out the back lip of the cover at the screw holes with pliers. Caution! There must be enough friction between the screw heads, (which secure the hanger bracket and the top cover to hold the cover tightly down on the case and interlock.

SINK EXTENSION KITS
KDE1 – Painted
KDE1-SS – Stainless Steel

A conversion for the FD3 dispenser to increase the distance between the discharge spout and the sink to twelve inches and to provide a faster sink drainage.

KIT:

A19720-000	Sink and Drain Assembly (4) 3-1403-29 Screws
02-1828-00	Splash Plate (6) 3-1403-7 Screws
02-1701-00	Drain Grill (6) 3-1406-1 Nuts
A21538-000	Base (2) 3-1403-6 Screws
A21538-001	Base–Stainless Steel

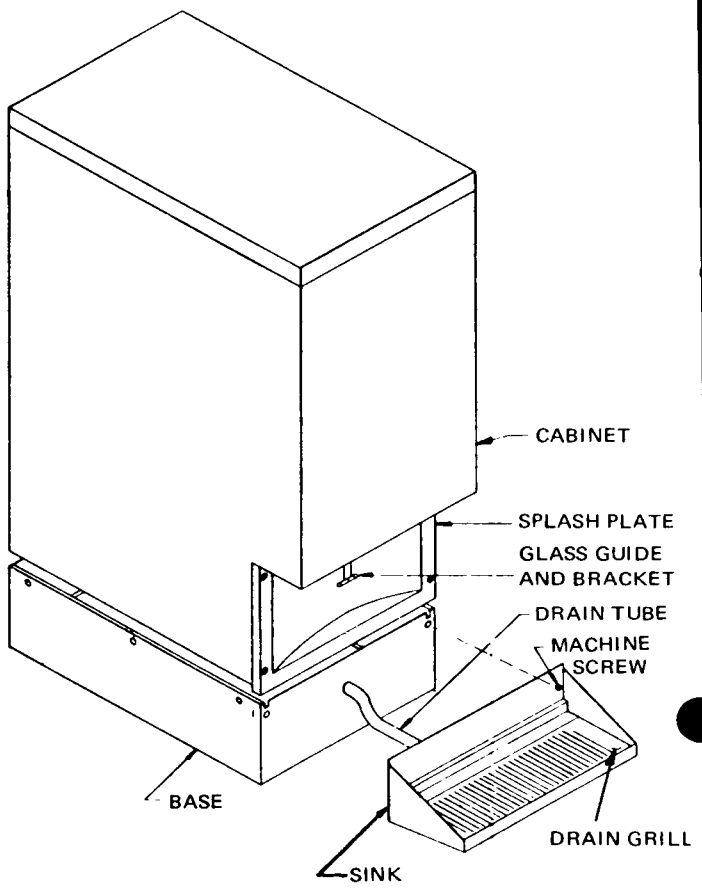

FEATURES:

By the use of the splash plate, only, and the wall bracket A19090 (another accessory), the FD3 model can be mounted on a wall over an existing sink.

As a counter-top model, the dispenser is mounted on the six-inch base, A21538. The splash plate, sink and grill replace the conventional sink on the models.

INSTALLATION:

1. Remove conventional sink from cabinet.
2. Remove glass actuator arm and holder from sink.
3. Remove drain tube from original sink.
4. Install drain tube to replacement sink.
5. Remove rubber seal from base of the dispenser.
6. Mount the dispenser on base, A21538. The flange of the dispenser base is to fit in slots provided in the base extension. Secure with the 3 screws on each side of base.
7. Mount sink in place and secure with two machine screws.
8. Install splash plate to cabinet with four machine screws, furnished. The splash plate fits over top of sink.
9. Install glass actuator arm and holder to splash plate. The plunger on the arm must operate freely through hole in splash plate.
10. Install grate.

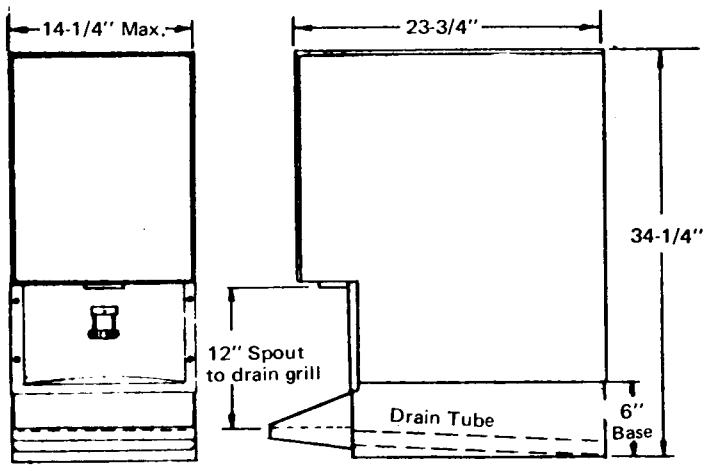

UNIT WITH SINK EXTENSION KIT

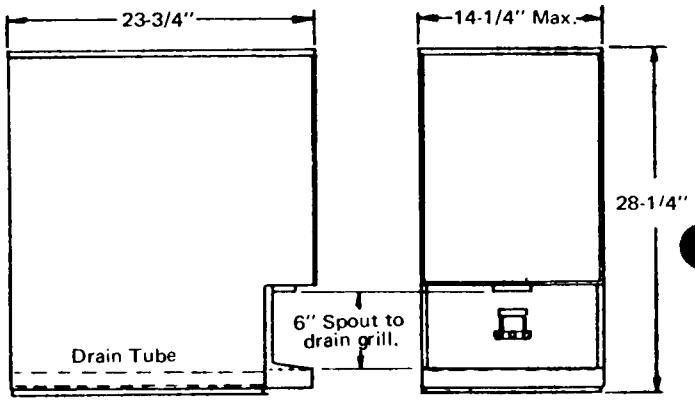

UNIT WITHOUT KIT

TABLE OF CONTENTS

Foreword 1
Table of Contents 2
Photo and Ice Making Capacity 3
Specifications 4-5
General Description 6
General Information 8
Installation Instructions 7-9-10-11
Ice Dispenser Control System 12
Adjustment of Controls 13,14-15
Shutter and Bin Adjustment 16
Storage Bin and Dispensing Assy. 17
Bin Controls 18
Storage Bin Top Assy 19
Dispenser Control System 20-21
Wiring Diagram 22
Reservoir Assy 23
Cabinet Panels-Chasis 24
Chassis Assembly 25-26-27
Gear Motor Assembly 28
Freezer Assembly 29
Service Analysis (Icemaker) 30-31
Service Analysis (Dispensing Mechanism) 32
Maintenance Instructions (Flaker) 33
Cleaning Instructions 34
Accessory Kits 35-36

THIS PAGE
INTENTIONALLY
LEFT BLANK

THIS PAGE
INTENTIONALLY
LEFT BLANK

SCOTSMAN

FD3B SERIES ICEMAKER-DISPENSERS

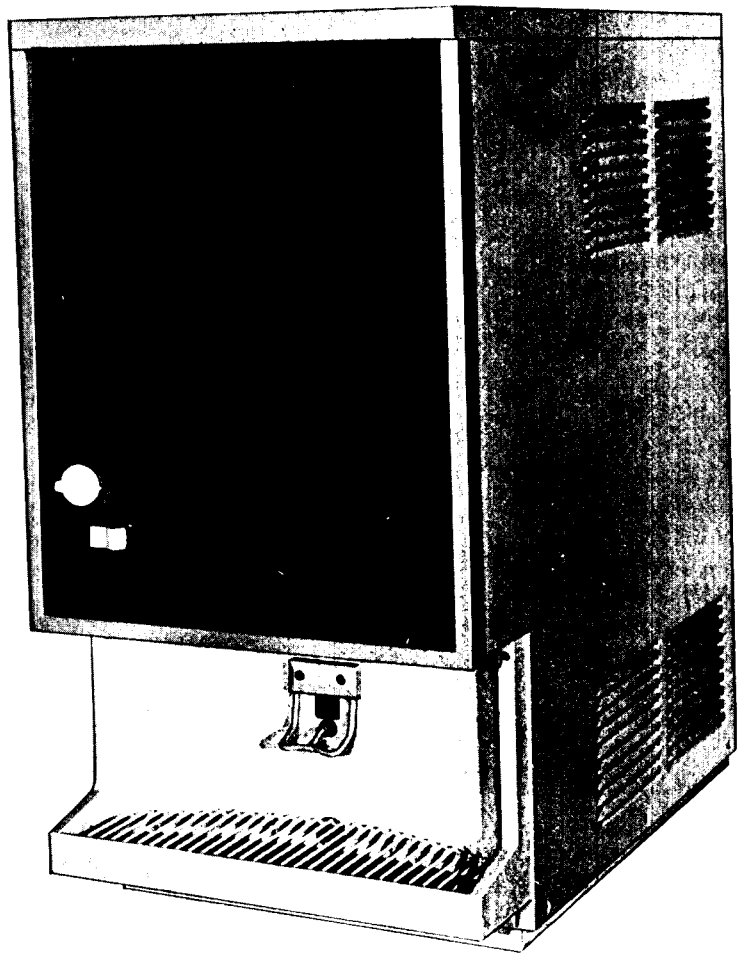

ice making capacity

Daily Ice Capacity is directly related to condenser air inlet temperature, water temperature and age of machine.

NOTE: To keep your SCOTSMAN DISPENSER performing at it's maximum capacity it is necessary to perform periodic maintenance as outlined on page 33 of this manual.

SPECIFICATIONS

FD3 SERIES ICE MAKER-DISPENSER

CABINET

Height	28.3 inches
Depth	23.8 inches
Width	14.3 inches
Weight	150 pounds
Finish	Baked-On Enamel or Stainless Steel
Trim	Aluminum, anodized
Sink & Drain	Plastic

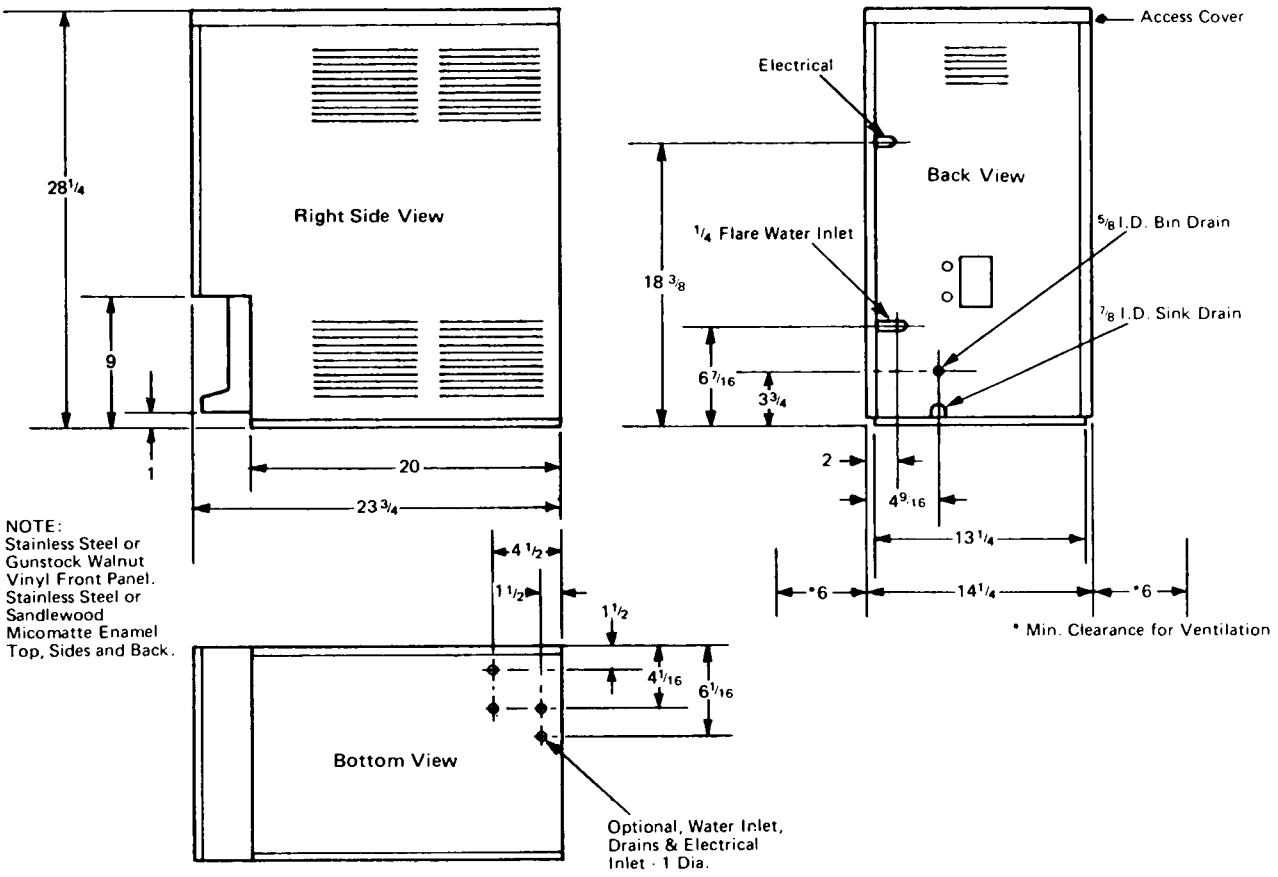

NOTE: Available with: Wall Mounting Kit
Sink Extension Kit

SPECIFICATIONS

REFRIGERATION UNIT

Compressor ..... Tecumseh
1/5 H.P.
2 pole
115 v. 60 Hertz

Freezer ..... SF-75 Modified

Refrigerant ..... R-12—10 oz. charge

Ice Produced ..... .04 oz. sec. (70° ambient,

Ice Produced ..... .04 oz. sec. (70° ambient, 70° water) (approximate)

DISPENSING UNIT

Bin & Dispensing Cylinder ..... Stainless Steel

Insulation ..... 1 inch Urethane

Storage Capacity ..... 8.19 pounds

Ice Spout ..... Composition Stainless

Drive Motor ..... 86.5 watt
115 v. 60 cycle
R.P.M. 26.7

Dispensing Rate ..... 8 oz. sec. (Approximate)

PERFORMANCE DATA APPROXIMATE

Metered Ice-per vend ..... 1 or 2 oz.

Time per vend ..... 1.5 sec.

1 vend/31 sec. ..... Recovery = Discharge

Water with minimum ice ..... 1.0 oz. ice water

Water with maximum ice ..... 2.0 oz. ice water

Dispensing time (ice & water for 10 oz. glass) ..... 4.5 sec.

Continuous ice flow ..... 1 pound in 20.8 sec.

GENERAL DESCRIPTION

This unit is a counter or table-top type of dispenser with a self-contained refrigeration unit, flaked ice freezer, storage bin and automatic dispensing mechanism.

The primary purpose of this machine is to fill water or drink glasses with water and ice or just ice by actuating a control arm with the glass.

Approximately one or two ounces or a continuous flow of ice can be obtained by properly adjusting a selector switch. By pushing a water switch to "on" water will be dispensed with the ice or as long as the glass actuator arm is energized.

The sink or area in which the ice is dispensed is constructed of plastic. The drain grill is 100% nylon coated steel wire. The cabinet is of stainless steel or steel with a baked-on enamel finish. Water lines within the cabinet are of copper or nylon and drain lines are tygon (plastic tubing.

The complete machine has been designed with sanitation and ease of cleaning emphasized. The complete dispensing unit can be dismantled for cleaning without the need of tools. By removing two winged screws the cabinet top can be removed. Three winged bolts on the storage bin cover may be loosened and the cover can be lifted off. This exposes the entire dispensing mechanism which can be lifted out of the storage bin.

The base of the machine contains a sealing gasket which will seal the machine tight against the table or counter top, thereby, eliminating the possibility of dirt or bugs lodging under the base.

The top, back, front, sink or either side of the cabinet can be removed in a matter of minutes.

To clean the condenser or for access to the control box, the left side panel is removed.

INSTALLATION LIMITATIONS

ELECTRICAL

1. Scotsman, like most manufacturers, purchases electrical motors that are rated to operate within 10% variance above or below nameplate ratings.

2. Improper voltages applied to Scotsman equipment can cause premature failures and burnouts. Failures of this type are not considered as factory fault or defect.

AMBIENT

WARNING — This machine is not designed for outdoor installations. This machine will not operate when air temperatures are below 50° F. or above 100° F.

This unit was not fabricated nor intended to be installed outdoors.

WATER

3. Scotsman Ice Systems require 20 pounds flowing water pressure to operate satisfactorily. Pressures lower than 20 pounds or interruptions in the water supply can cause serious mechanical damage to this product.

   This machine will not operate when water supply temperatures are below 40° F. or above 100° F.

GENERAL INFORMATION

1. The machine comes to you ready to operate except for water, electrical power and drain connections.

2. The attached information on adjustments should not be needed except in rare instances.

3. An interlock switch, located on the top frame, is held in an "on" position when the cabinet top cover is in place. When the cover is removed the power to the machine is automatically disconnected for cleaning. For electrical service the main power supply should be disconnected.

4. The unit should not be connected to a heavily fused supply iine. Maximum fusing should be not more than 15 amperes. It is advisable to use a fustat, fusetron or delay type of fuse.

5. All parts of the unit can be washed with mild soap and water. This includes the stainless steel and paint parts. Care must be exercised in handling the cleaning of the various stainless steel pieces as these parts have a tendency to be more sharp at the edges than painted parts.

6. Because of the various electrical controls and wiring, care must be used in grounding this cabinet and frame work to a solid cold water line or similar ground.

7. The FD3 and FD4 are identical in outward appearance with the case assembly on. For identification purposes a decal is placed on the back panel. When a screw head appears in the upper hole it identifies the FD3 and in the lower hole the FD4.

INSTALLATION INSTRUCTIONS

The following installation instructions were written for use by a authorized tradesman only, not the user or customer. We suggest you call your local authorized Scotsman Service Agency for hook-up, start-up, and check out. He's listed under "Ice Making Machinery & Equipment" in your telephone book, yellow pages.

1. Remove the unit from the carton and install on a table or counter with a flat, level, rigid top. Mount at a convenient height for filling glasses.

2. Avoid sliding the unit on the rubber sealing base.

3. Remove the top of the cabinet and the rear panel.

4. Pull the drain from the cabinet. This may be routed through the rear panel through the hole provided in the base. It is possible to route all lines through holes which have been provided in the base.

5. The lower drain from the sink area must never be installed higher than the base of the cabinet. Consideration should be made in regard to this drain in order to get proper flow from the sink drain.

6. Water should be supplied from a 3/8" copper or equivalent pipe. Too small a water supply line will only result in an increase in time for filling glasses with water.

7. Connect power to lower terminal strip in junction box.

8. The interlock switch located at the top of the cabinet frame will be in an "ON" position when the cover is on the cabinet.

9. Replace the rear panel and the cabinet cover. The switch is used only when the machine is opened for cleaning. At such a time both the unit and dispenser are disconnected by removing the cover.

10. Thirty minutes after the unit has been started, ice can be dispensed.

NOTE: Should this unit be improperly installed with the drain favoring front of the machine, a condition would result in slushy, wet ice as the meltage water would remain in the bottom of the storage bin, and may run out the discharge spout.

WARNING: THIS MACHINE MUST NOT BE ALLOWED TO OPERATE WHEN THE WATER SUPPLY IS SHUT OFF, OR AT BELOW RECOMMENDED WATER PRESSURE. TURN MASTER SWITCH TO "OFF" POSITION WHEN WATER SUPPLY IS OFF, OR WHEN WATER PRESSURE IS BELOW RECOMMENDED OPERATING PRESSURE.

INSTALLATION PRACTICE

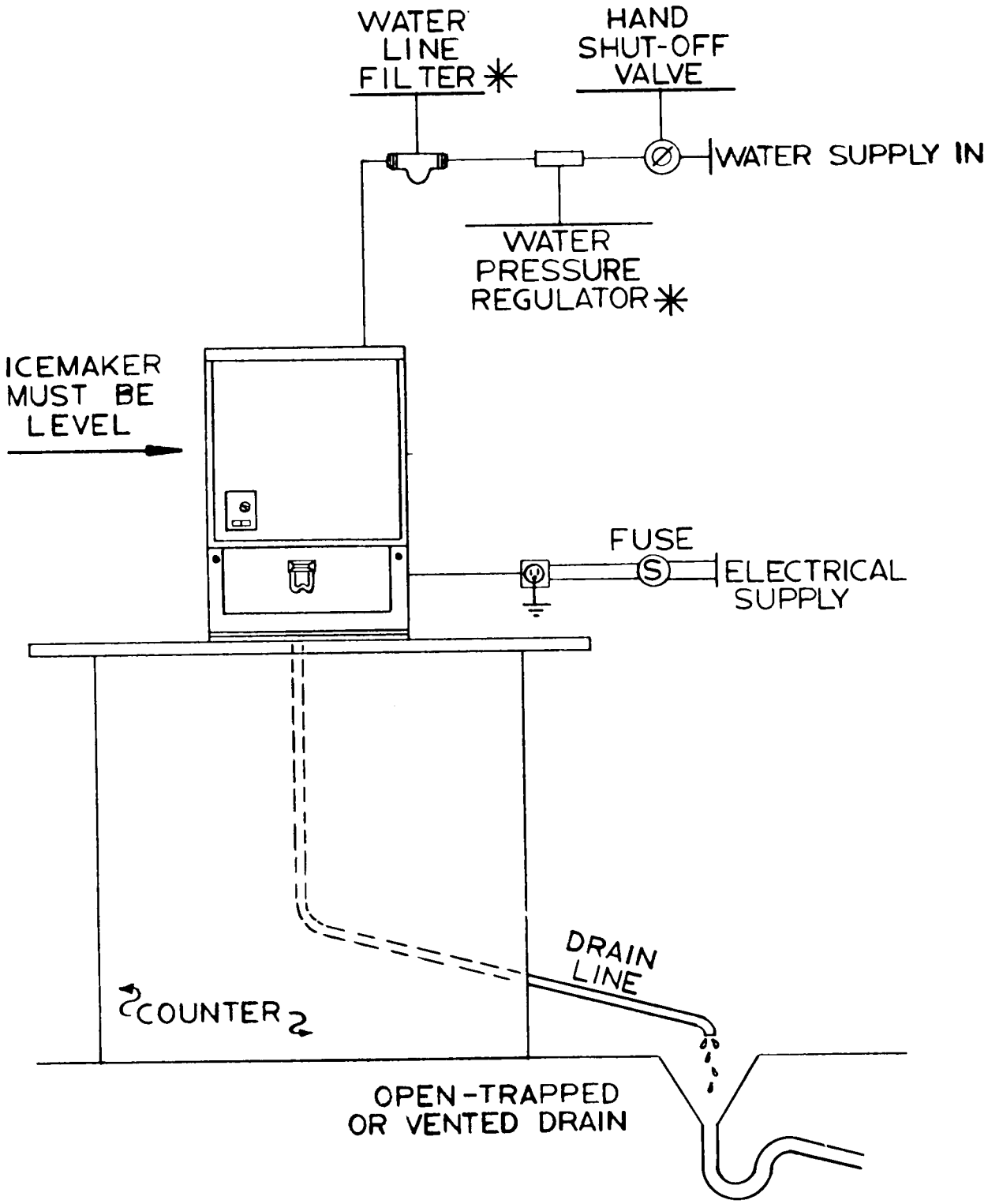

* REGULATOR AND FILTER ARE ACCESSORY ITEMS TO BE INSTALLED AS CONDITIONS WARRANT

HOOK-UP SPECIFICATIONS

ELECTRICAL:

Standard electricals are 115 volts, 60 Hertz single phase current. This unit must have a solid ground wire.

Major electrical components	H.P. Size	Amps.
1. Refrigerant Compressor	1/5	3.6
2. Freezer Gearmotor	1/10	2.2
3. Dispensing Drum Motor	1/25	2.35
TOTAL		10.15

15 amp fuse protection is required, preferable a delay type such as Fustat, Fusetron etc. All external wiring should conform to National Underwriters, as well as State and local codes. The maximum allowable voltage variation must not exceed 10 per cent of unit nameplate ratings, even under starting conditions.

Knockouts in cabinet are made for cord connectors. Supply line ties into lower terminal board of control box. Use separate circuit for icemaker only.

WATER SUPPLY:

A single cold water supply line is required. Recommended tubing size 3/8" O.D. or larger, cabinet connection is to a 1/4" S.A.E. flare tee (item No. 25 on page 27) on internal cabinet bulkhead. A water strainer with clean out feature should be installed in supply line along with a hand shut off valve.

Minimum water pressure is 20 pounds gauge, maximum pressure over 50 pound gauge may cause chattering of float ball in reservoir tank. For pressures in excess of 50 pounds, use a water pressure regulator in line. Cabinet back is slotted for supply line entrance.

WATER AND CONDENSATE DRAINS:

Two soft drains (plastic tubing) are provided, see page . The upper drain is 5/8" I.D. tubing, the lower drain is 7/8" I.D. tubing. Drain lines should be run to an open, trapped or vented drain in accordance with your State and local code regulations. These are gravity drains, therefore maintain at least a 1/4" pitch per foot away from unit drains. Knockouts are provided for either out the back or thru the base drain.

REFRIGERANT SYSTEM:

The standard Scotsman Flaker system is used in slightly modified form. Refrigerant 12 is pumped by compressor into the air cooled condenser, into the liquid line, thru a filter-drier and then into the capillary refrigerant control line.

Liquid refrigerant is then carried down to the bottom end of the shell and tube type evaporator (freezing cylinder) where it expands and rises to the top of evaporator. Here the vapors and gasses are returned thru an accumulator and suction line to the compressor.

Average operating head pressure is 135 lb. gauge, operating back pressure is 14 lb. gauge.

Factory charge is 10 ounces of Refrigerant 12.

Compressor is 1/5 horsepower, 2 pole, 3500 RPM by Tecumseh. Proper model number is Tecumseh AE3425A.

ICE DISPENSER CONTROL SYSTEM

The inner storage bin rotates, carrying the ice over a cutting edge located at the ice discharge spout. The ice is thereby cut off the bottom of the stored mass and falls down the spout.

When the selector switch is set at 1 oz. of ice, the dispensing bin will rotate 1/2 turn for each vend. When the selector switch is set at 2 oz. of ice, the dispensing bin will rotate one full turn.

The action is controlled by two switches mounted together with their rollers riding on a cam. They are located on the bin cover and under the drive motor bracket, see page . The cam has one depression for the top switch roller to fall into and two for the bottom switch roller. The top switch controls the 2 oz. vend in which the bin rotates one full turn to actuate the switch. The lower switch controls the 1 oz. vend for 1/2 a turn of the bin.

At the end of each vend it is necessary that the dispensing bin stop in the correct position. It is at this time that one of the fins in the rotating bin is in the center and directly under the flaker freezer spout. When this timing is correct, ice that is filling the bin from the freezer will fall in both compartments of the bin; that is, on both sides of the fins.

The selector switch also has a continuous flow position in which ice will continue to vend as long as the control arm is held in.

When the water switch is in an "ON" position, water will be dispensed with the ice. Water will always continue to flow as long as the actuating arm is held "IN". See page 13 for a simplified circuitry showing the operation of these switches.

CONTROL SWITCHES & CAM

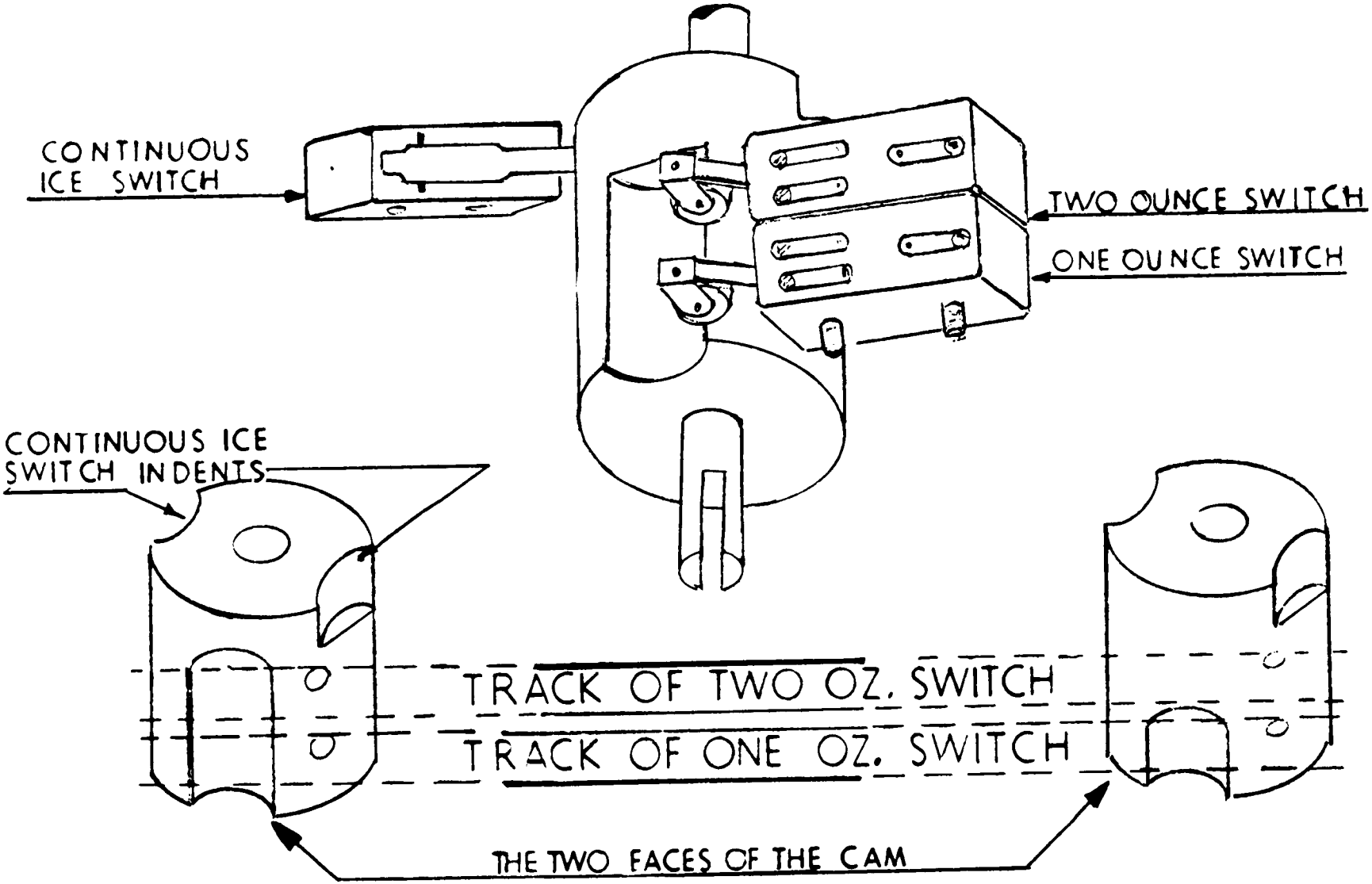

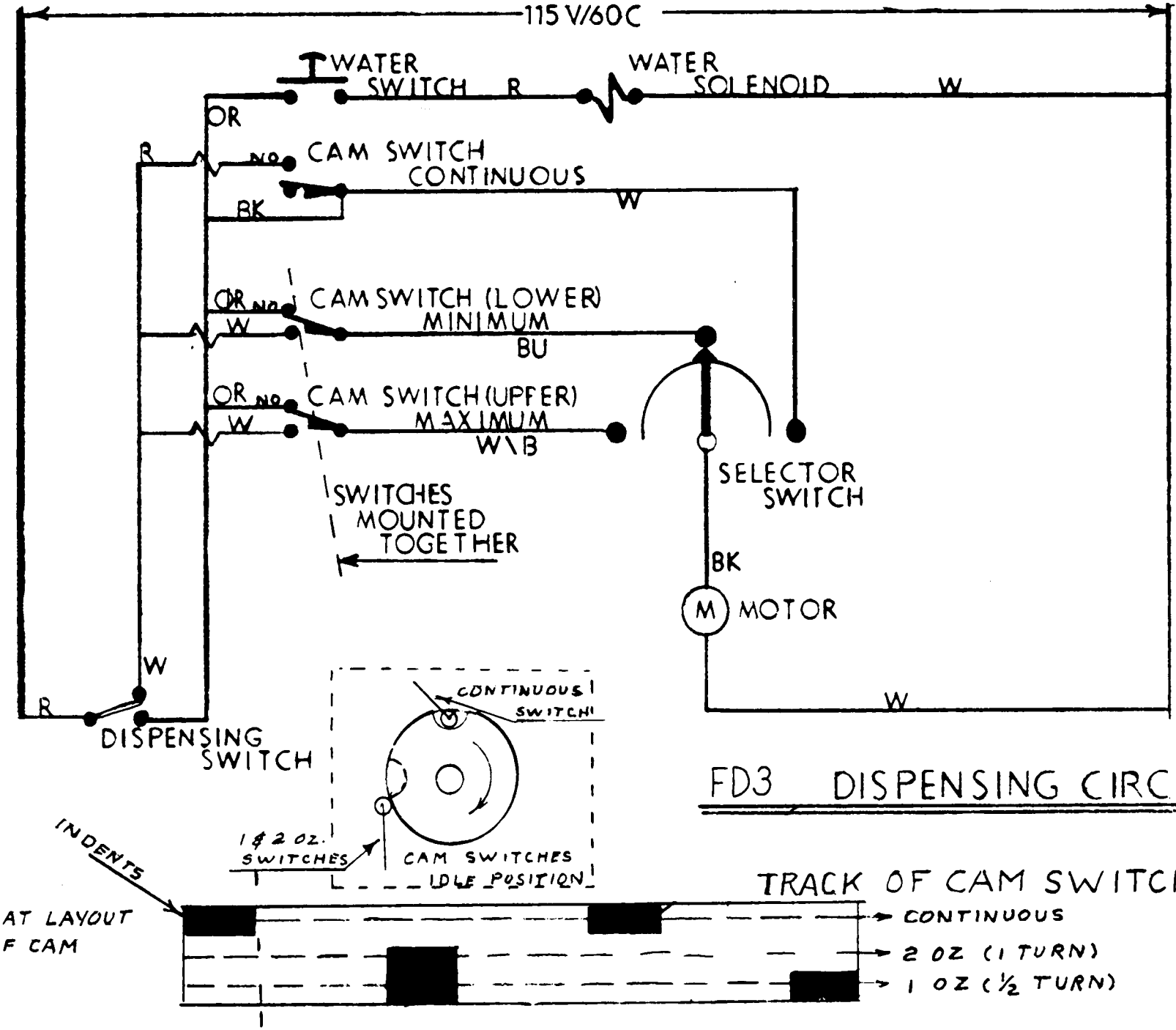

FD3 DISPENSING CIRCUIT

INSTRUCTIONS FOR SETTING CAM SWITCHES WHEN DISPENSER WILL NOT STOP OR WILL NOT DISPENSE PROPERLY. (DO NOT ADJUST CAM SWITCHES UNTIL YOU ARE SURE DISPENSER MECHANISM RUNS FREELY.

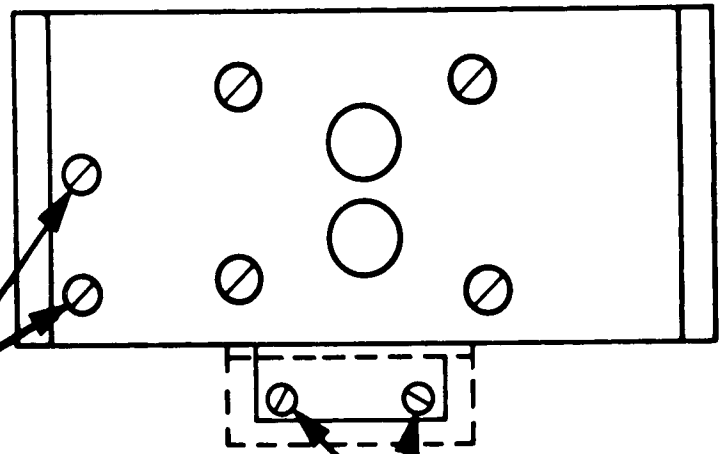

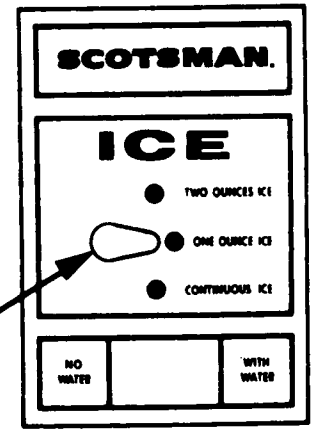

CONTINUOUS ICE SETTING INSTRUCTIONS:

1. Set selector switch to continuous ice.
2. Turn master switch on by pressing white button down.
3. Loosen two screws slightly.
4. Push screws forward slowly until dispenser motor runs continuously.
5. Pull screws back until motor stops.
6. Hold position and tighten screws snugly.

1 oz & 2 oz. ICE SWITCH SETTING INSTRUCTIONS:

1. Set selector switch to 1 oz. or 2 oz. ice.
2. Remove cam switch cover.
3. Turn master switch on by pressing white button down.
4. Loosen two screws slightly.
5. Pull back on screws until dispenser motor runs continuously.
6. Push screws forward slowly until dispenser motor stops and then push 1/32 to 1/16 further.
7. Hold position and tighten screws snugly.

BIN ASSEMBLY ADJUSTMENT

1. At the end of each vend it is necessary that the dispensing bin stop in the correct position. It must stop at such a time that one of the fins in the rotating bin is in the center and directly under the flaker freezer spout. When this timing is correct, ice that is filling the bin from the freezer will fall in both compartments of the bin that is on both sides of the fins.

2. Mount the cover on the bin being careful that the slots in the drive shaft are over the pin in the shaft of the dispensing bin. Bolt the cover down lightly with the three winged nuts. (Never Tight).

THE ADJUSTMENT

1. If the bin does not align when the dispenser motor stops, be sure the cam switches are adjusted as per page

2. To adjust remove the bin cover and turn upside down.

3. Turn the motor until the roller of the continuous ice cam switch (the singularly mounted switch) is down in the slot of the cam. This is illustrated in the sketch of the cam and switches on page 13-15.

4. In this position the slot of the motor drive shaft should be in line with the plunger of the spout switch.

5. To adjust, loosen the two set screws No. 11 of cam (see section AA - Page 19) Hold cam as described in above paragraph 3 and turn motor until drive shaft slot is correctly in line with spout switch plunger.

6. Tighten set screws in cam. (Do not over tighten or the plastic cam may split).

7. Rotate the motor - check the vertical position of the cam. Switch rollers must fall in the correct cam slots as indicated on page 13.

8. Hold master switch down and vend several times. Each time the dispensing motor stops the slot in the end of the drive shaft should line up with the plunger of the spout switch.

9. Place cover on storage bin. Press down on vend switch until slot in drive shaft falls over pin in rotating bin.

10. Turn down tumb screws on cover slightly (Never Tight).

STORAGE BIN AND FD3 DISPENSING ASSEMBLY

ITEM NO.	PART NO.	DESCRIPTION
1.	A16098-000	Bin Cover Only
2.	A20912-000	Drive Pin - Top
3.	A16005-000	Tie Bolt Bracket
4.	A26447-001	Outer Bin
5.	03-0255-00	Wing Nut
6.	A26440-001	Storage Bin
7.	A26445-001	Bin Bottom

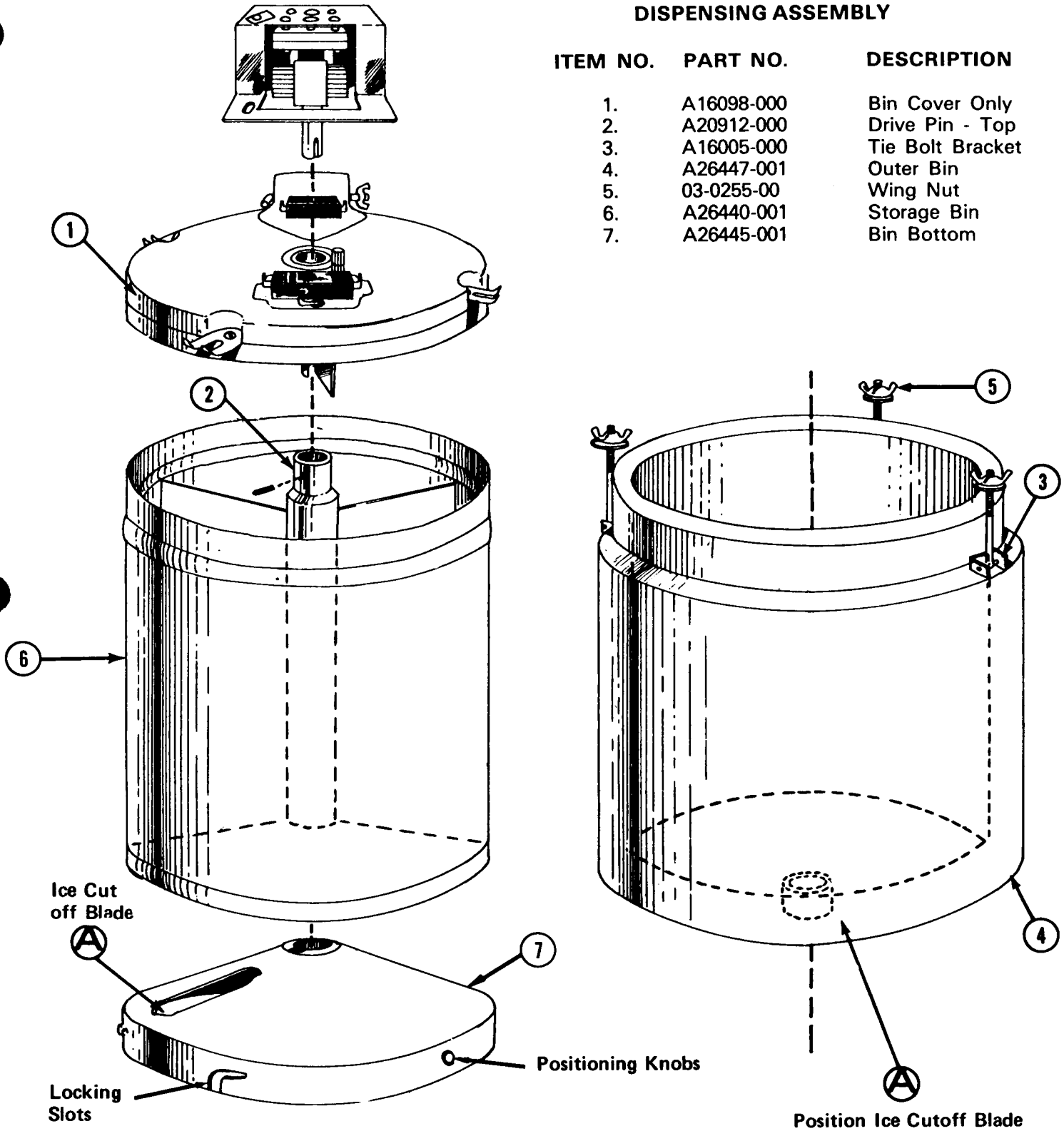

BIN CONTROLS

There are two controls located on the underside of the cover that govern the amount of ice that is in the bin. One control, that over the spout of the freezer, turns the freezer off when the bin is full of ice. This control must be in a position as illustrated in drawing page 19, Section B-B. The second control (see Section C-C page 19) hangs into the bin and holds the freezer off for a period of vends. This flipper slides upon the ice at the first ice vend and opens the switch contacts. It operates as a differential to keep the unit from starting and stopping at each vend and is a secondary means of stopping the unit should the spout fail.

Both of these controls can be easily removed for cleaning. The bin differential control has two fasteners securing it to the cover. They are tall round, knurled tubes which are unscrewed like a nut. Removing these two fasteners will drop the differential control from the cover.

The spout of the freezer has an extension that slides over the fixed spout. This removable extension has two small ears on the side. It is necessary when replacing the cover on the bin to slide this extension as far back on the freezer spout as possible. Be sure the small ears of the extension are on the outside of the cover. When the cover has been fitted over the bin and before it is bolted down, this extension should be slid toward the cover until the ears rest against it.

Serious damage could result if the cover is not installed properly. The small flipper over the switch button in the ice spout of this cover must definitely be forward. Check section B-B, page 19 carefully before attempting to install the cover.

Description of the Function of the Texas Instruments Low Pressure Control Switch When Used on 1/15 and 1/10 H.P. Gear Motors

On all Scotsman units using a 1/10 H.P. gear motor, the centrifugal switch mechanism, mounted on top of the motor, was removed and replaced, in the system, with a low pressure control switch. This is a single pole double throw(SPDT) switch manufactured by Texas Instruments. (Queen Products Part No. 11-0396-01*).

* Refer to wiring diagram, showing contacts, for description of switch function.

On all Queen Products wiring diagrams, the controls are shown in the ice making mode. Thus, the 1-3 contacts are shown as closed. On machine start up the 1-3 contacts are open and the 1-2 contacts are closed. As the unit begins to run, the low side pressure starts to fall from the stabilized or "at rest" pressure. As soon as the pressure drops to 21 Psig, the 1-2 contacts open and the 1-3 contacts close. This removes the operating controls, such as the bin thermostat, from the "gear motor circuit". If one of the operating controls opens, it will shut off the "compressor circuit". The gear motor will run until the low side pressure rises to 29 Psig. At this point the 1-3 contacts open and turns the gear motor off. This usually takes 1-3 minutes depending on ambient conditions. This length of time allows the auger to transport all the ice out of the freezing chamber. Consequently, when called on to start up again, there is no load to start up against. On start up, again, the 1-3 contacts are open and the 1-2 contacts closed.

STORAGE BIN TOP ASSEMBLY

ITEM NO.	PART NO.	DESCRIPTION
1.	A21215-000	Storage Bin Top Assembly Complete
2.	A18468-000	Motor Mount
3.	12-0876-00	Positioning Switch (Continuous ice)
4.	A16498-000	Switch Cover
5.	A16104-000	Hinge Pin
6.	03-0255-02	Wing Nut
7.	A16499-000	Switch Cover
8.	12-1610-01	Dispenser Drive Motor
9.	02-1576-00	Cam
10.	A21207-000	Drive Shaft
11.	03-0431-03	Set Screws
12.	12-0876-00	Cam Switch (two ounces ice)
13.	12-0876-00	Cam Switch (one ounce ice)
14.	A16101-000	Cover Bushing
15.	12-1018-01	Spout Switch
16.	12-1643-00	Boot — Bushing
17.	A16010-000	Ice Control Lever
18.	A16495-000	Differential Bracket Nut
19.	12-1018-01	Differential Switch
20.	A19269-000	Differential Paddle

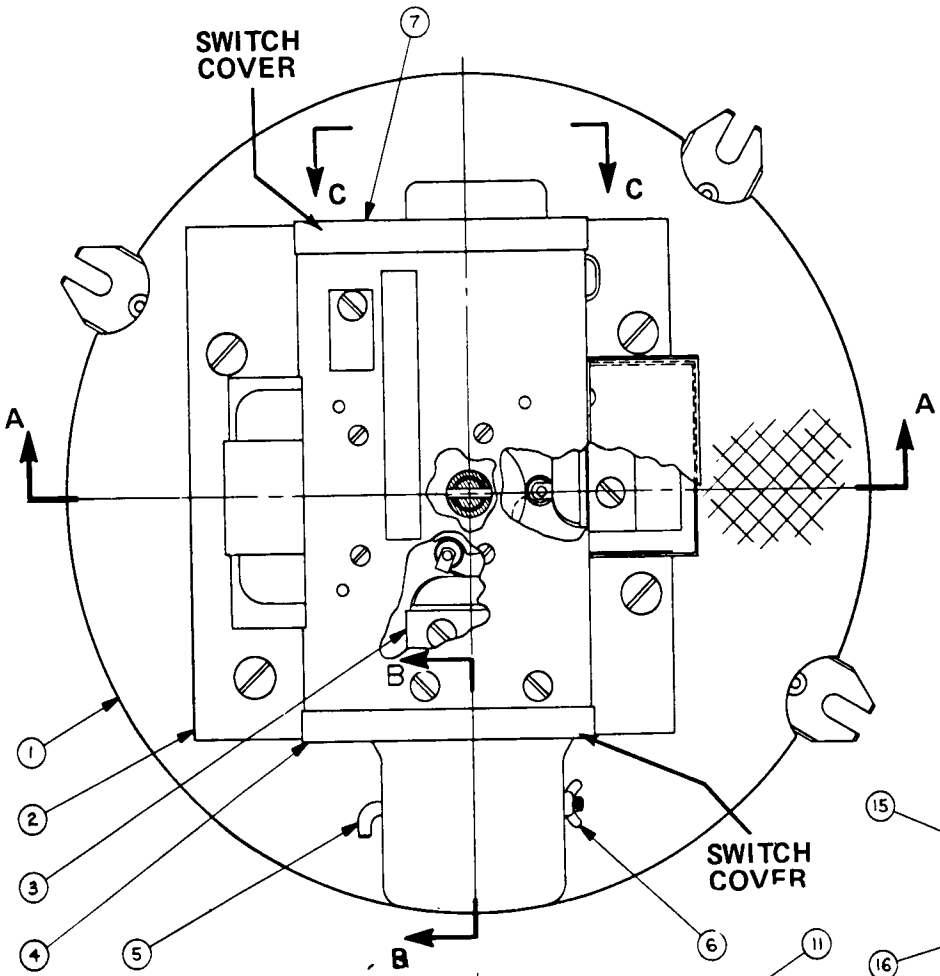

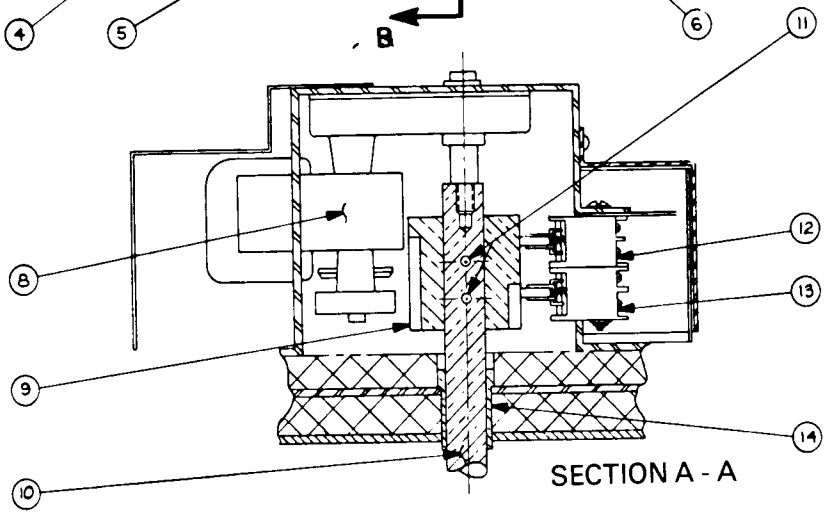

SECTION A - A

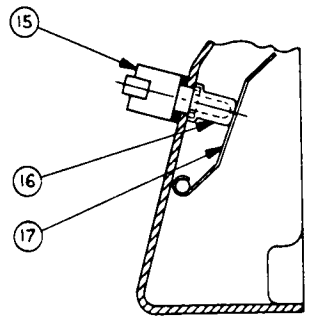

SECTION B - B

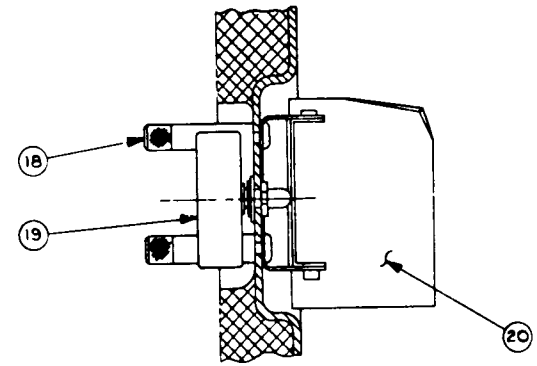

SECTION C - C

FD3 DISPENSER CONTROL SYSTEM

The control system, for the dispenser only, consist of six switches. The terminology and function of these switches are as follows:

DISPENSING SWITCH:

1. Located in the sink area on firewall back of the sink. It is accessible by removing the right side panel.

2. When depressed, usually by a water glass, it actuates the dispensing mechanism.

3. It is a double pole, double throw leaf type snap switch.

SELECTOR SWITCH:

1. Located on the frame back of the front panel. It is accessible by removing the front panel.

2. By its setting, it determines if one or two ounces of ice will be dispensed. In the continuous setting the dispenser is operated as long as the dispensing switch is held "in".

3. This is a three position, 30 degree throw rotary switch.

CONTINUOUS CAM SWITCH:

1. This is the single top switch riding on the upper edge of the cam.

2. When the selector switch is set for "continuous" ice, the dispenser operates as long as the dispensing switch is held in.

3. This switch is a single pole double throw roller type switch. Only two terminals, the common and normally open, are used.

MAXIMUM 1 or 2 oz. CAM SWITCH:

1. This is the top switch of the two cam switches that are mounted together. It rides on the center of the cam.

2. When the selector switch is set at 2 oz. this will control the dispensing drum to one full turn.

3. It is a single pole double throw roller type micro switch.

MINIMUM or 1 oz. CAM SWITCH:

1. This is the lower switch of the two cam switches that are mounted together. It rides on the lower edge of the cam.

2. When the selector switch is set at one ounce it will control the dispensing drum to 1/2 turn.

3. This switch is a single pole double throw roller type micro switch.

WATER SWITCH:

1. Located on the front panel.

2. When in an "ON" position, it energizes a water solenoid to dispense water with ice.

3. This is a rocker type single pole single throw switch.

Besides the two flaker control switches covered in the information on this unit, there is a master switch.

This switch is located on the top frame and is a plunger type single pole single throw switch. It is held in an "ON" position by the cabinet top. When top is removed the switch is in an open position.

WIRING DIAGRAM
115/60/1
Air Cooled

A26040-001

CONTROLS SHOWN IN THE ICE MAKING MODE
WITH ALL DISPENSING SYSTEMS IN OPERATION

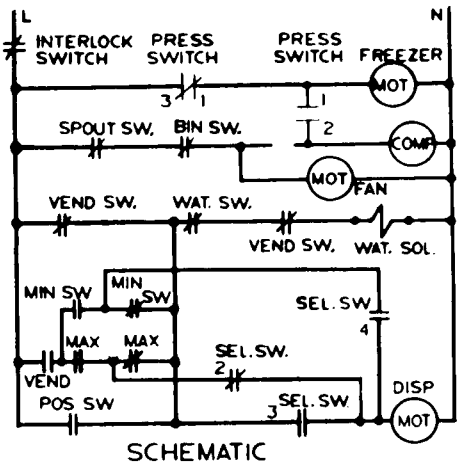

SCHEMATIC

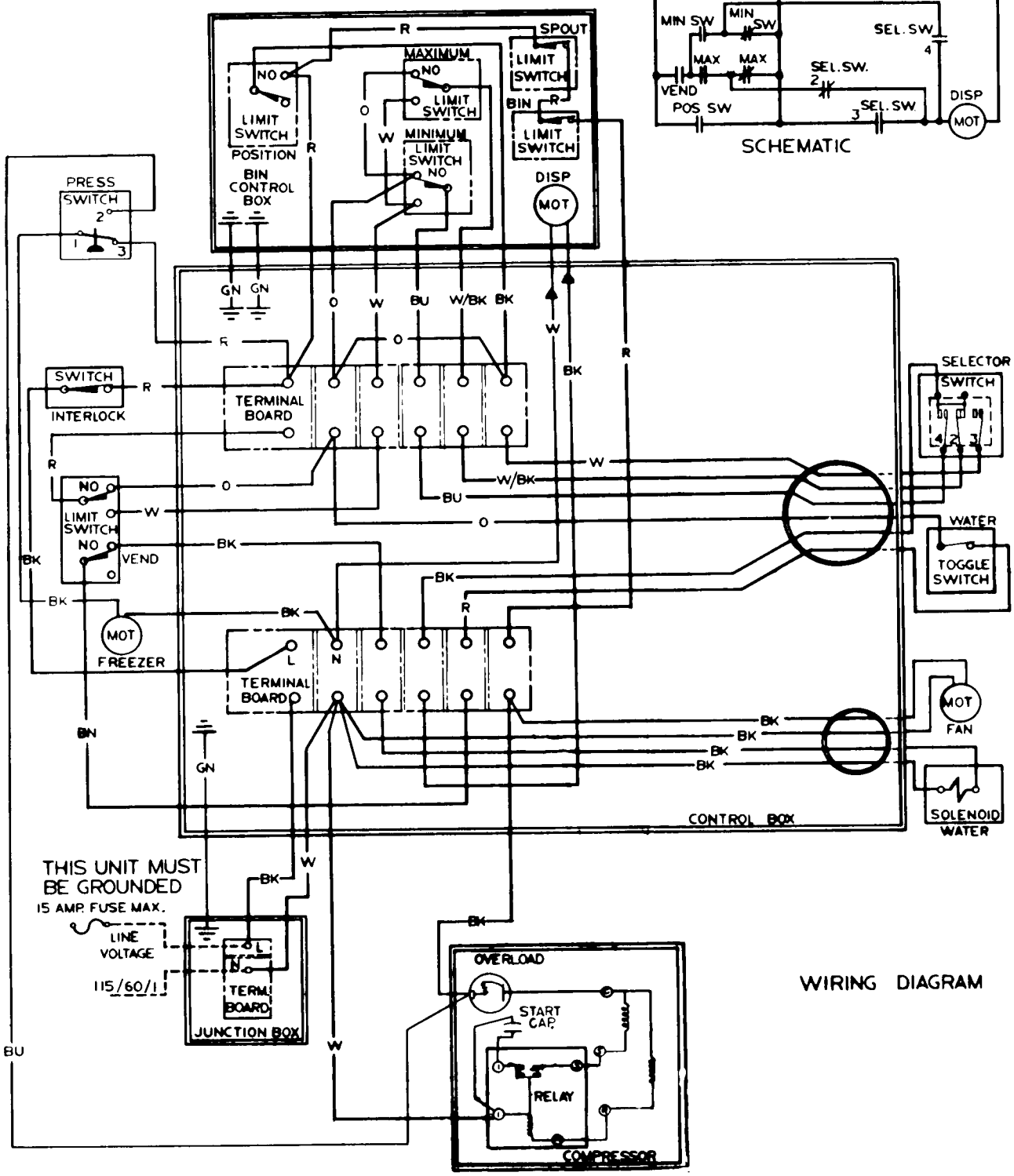

WIRING DIAGRAM

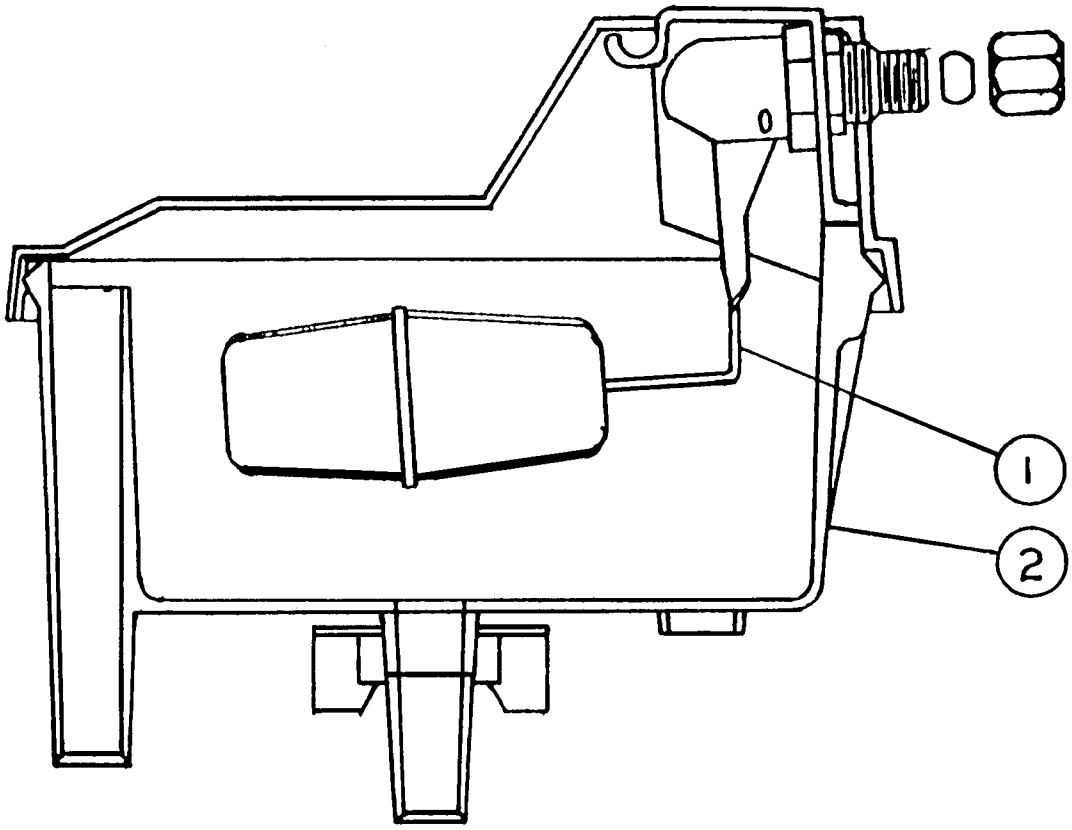

RESERVOIR ASSEMBLY

ITEM NO.	PART NO.	DESCRIPTION
1.	02-2217-02	Valve Assy.
2.	02-2217-01	Reservoir Complete

CABINET PANELS – CHASSIS

FD3 MODELS

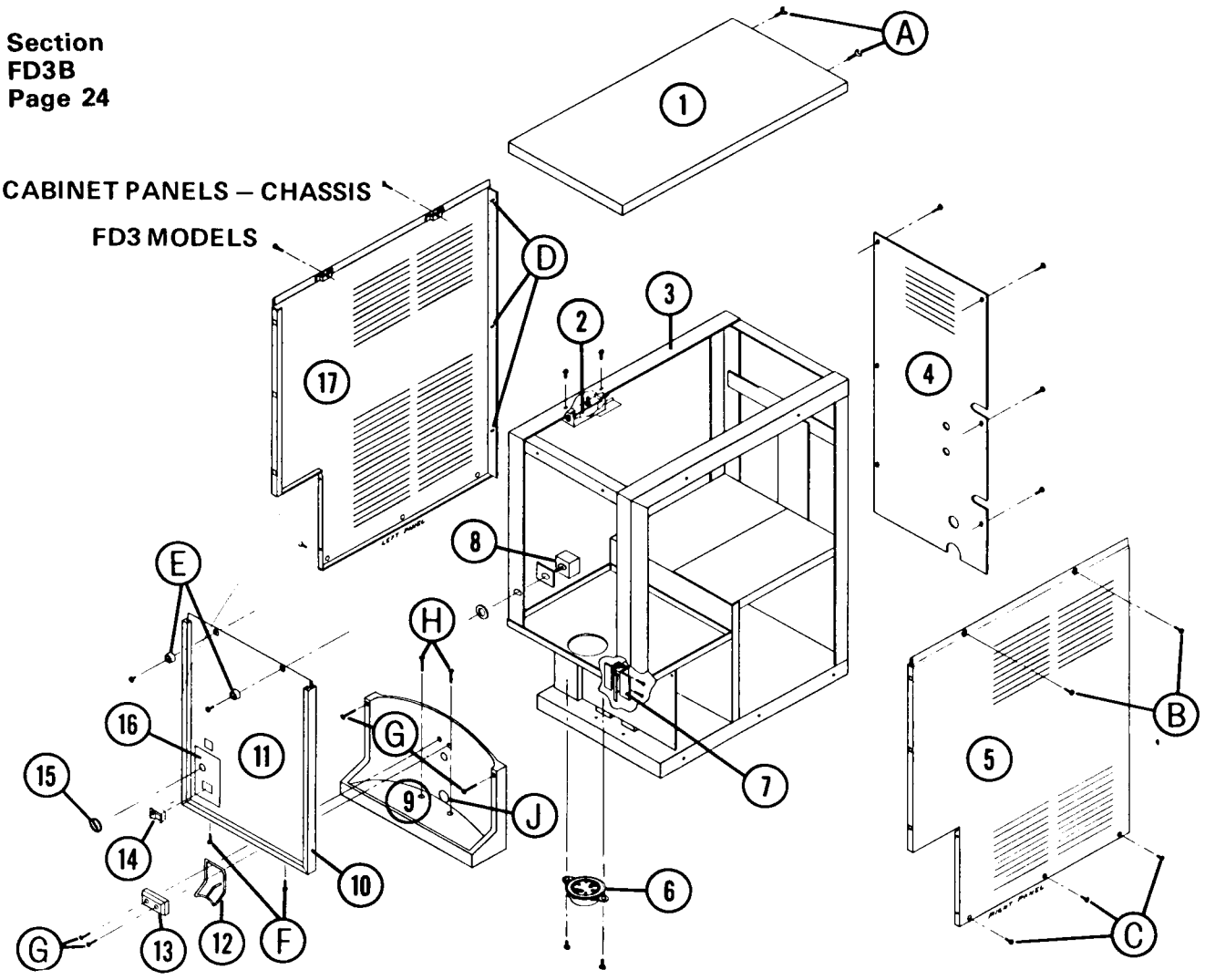

ITEM NO.	PART NO.	DESCRIPTION
1.	A19104-004	Cabinet Top—Painted
	A19104-001	Cabinet Top—Stainless Steel
2.	12-1570-00	Master (interlock) Switch
3.		Frame
4.	A21405-002	Back Panel—Painted
	A21405-001	Back Panel—Stainless Steel
5.	A21416-002	Right Side Panel-Painted
	A21416-001	Right Side Panel—Stainless Steel
6.	02-1804-00	Spout Extension
7.	12-1641-00	Vend Switch
8.	12-1540-00	Selector Switch
9.	A21429-000	Sink
10.	15-0507-00	Moulding Trim
11.	A21425-002	Cabinet Front—Painted
	A21425-001	Cabinet Front—Stainless Steel
12.	A21544-000	Actuator Arm
13.		Actuator Arm Adapter
14.	12-1377-00	Water Switch
15.	12-1566-00	Switch Knob
16.	15-0563-00	Decal
17.	A21415-002	Left Side Panel—Painted
	A21415-001	Left Side Panel—Stainless Steel
A.	03-1279-00	Wing Screw
B.	03-1418-05	Screw

REMOVING PANELS & SINK

1. To remove either side panel or front, first remove the two wing bolts in the back of cover No. 1, Item (A). Lift the back of the cover upward and push forward to release.

2. Either side panel can be taken off by removing two screws across the top (B) and three across the bottom of the panel. (C) These are the only screws that hold the panel. Pull the panel from in back of sink, then slide backward about 1/2 inch.
   There are no screws in the back of the panel, only pins that slide into holes in the frame. (D)
   The front edge of the panel merely fits under the aluminum trim.

3. The front panel is removed by unscrewing the two rubber bumpers at the top of the panel (E) and two screws under the sink top area. (F)
   The water switch (14) will snap out and the quick connects can be removed from the switch.
   The selector knob (15) just pulls off.

4. The sink (9) can be removed by removing four screws (G) on the front side of the switch and two screws in the bottom of the sink. (H)
   These screws are sealed to eliminate water leaks.
   The drain tube connection (J) is fastened to the sink rear by a hose clamp. To remove the clamp, it is necessary to remove the right side panel.

5. Remove top and left side panel to clean air cooled condenser.

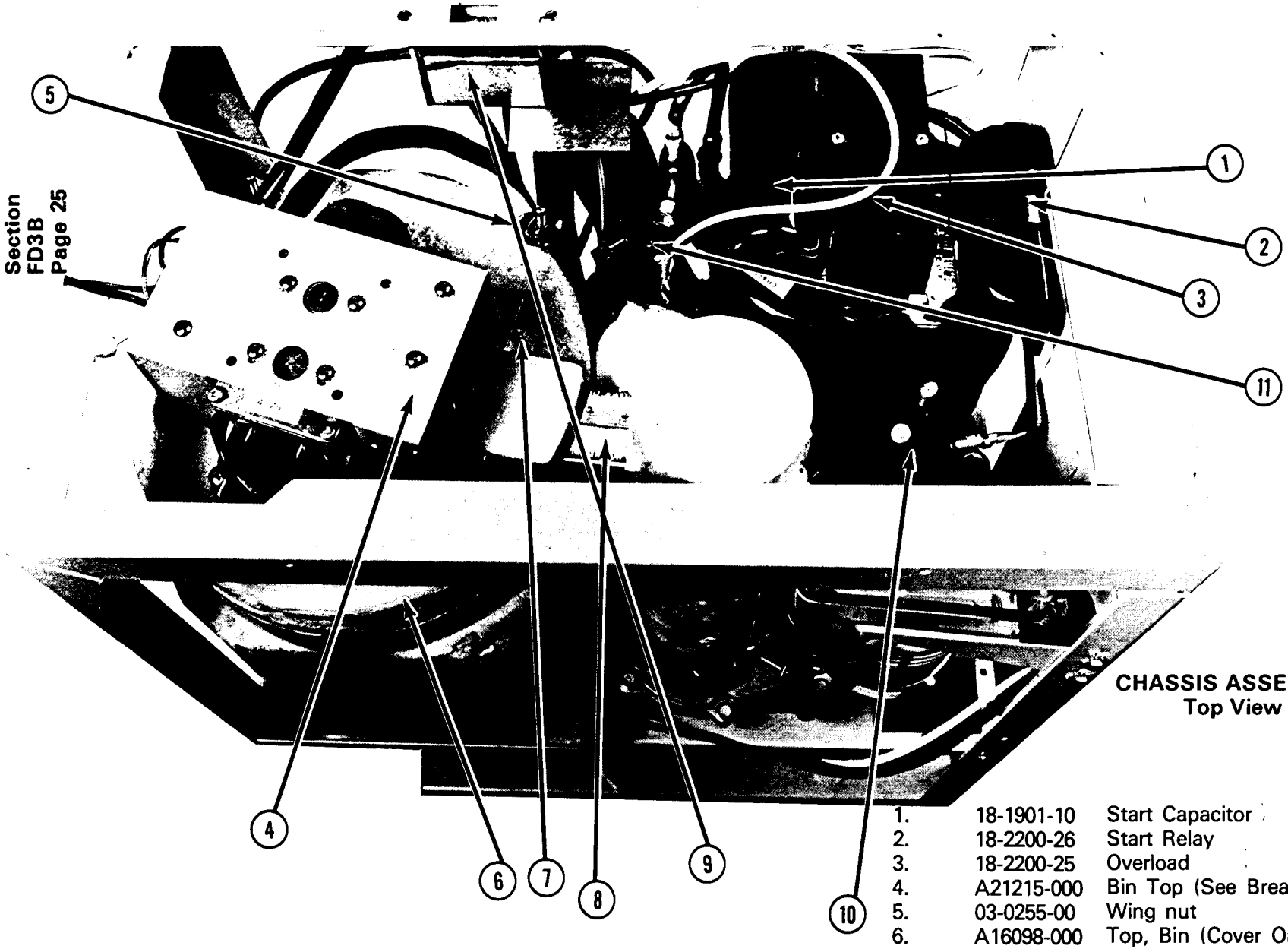

CHASSIS ASSEMBLY
Top View

1.	18-1901-10	Start Capacitor
2.	18-2200-26	Start Relay
3.	18-2200-25	Overload
4.	A21215-000	Bin Top (See Breakdown Page)
5.	03-0255-00	Wing nut
6.	A16098-000	Top, Bin (Cover Only)
7.	A16104-000	Pin
8.	A16151-000	Spout Extension
9.	12-1570-00	Interlock Switch
10.	16-0673-02	Process Header - Hi Side
11.	11-0396-01	Pressure Switch

CHASSIS ASSEMBLY

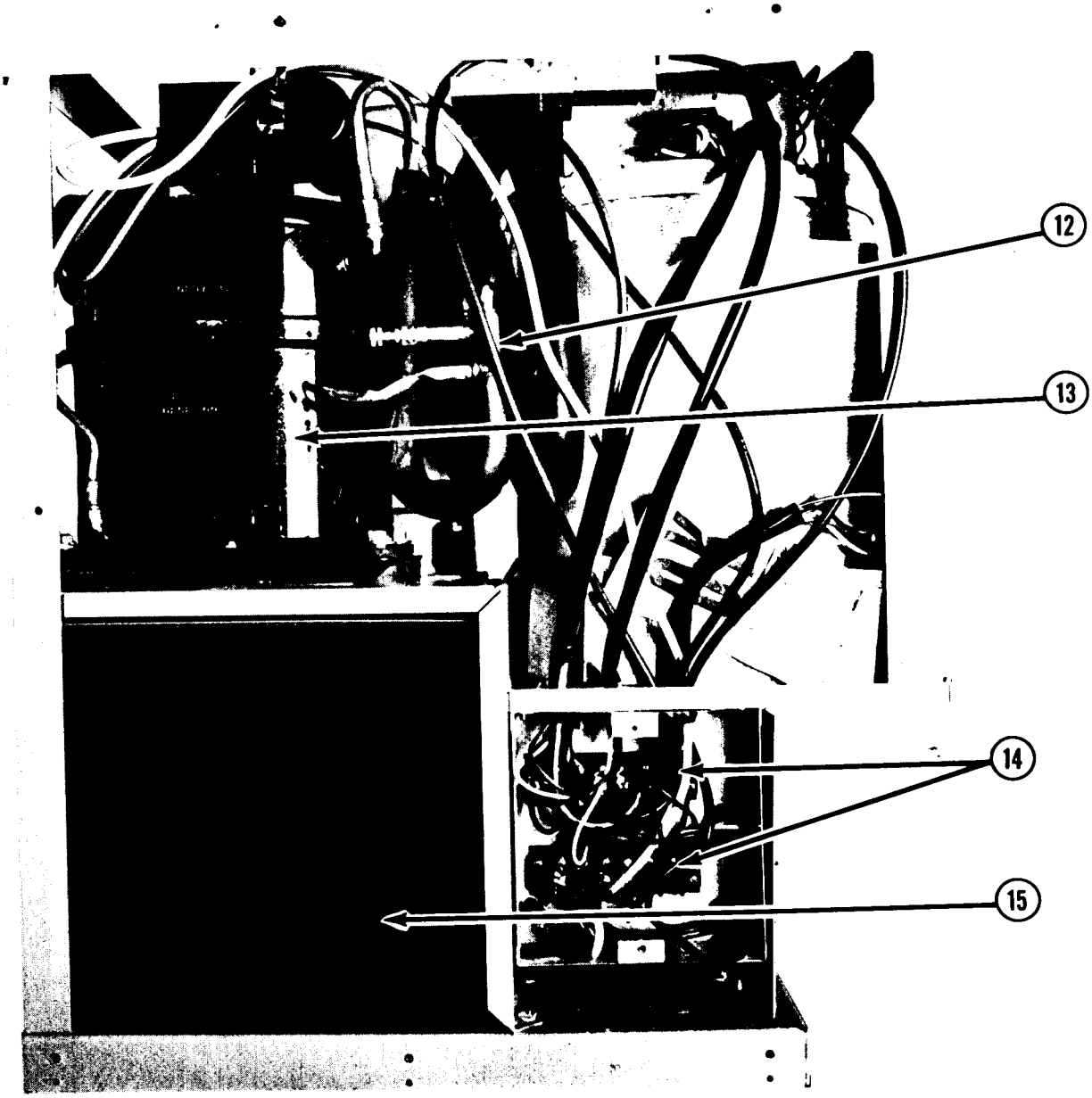

Left Side

12.	16-0673-18	Process Header - Low Side
13.	18-2200-01	Compressor
14.	12-0813-04	Terminal Strip
15.	18-1916-00	Condensor - Air Cooled

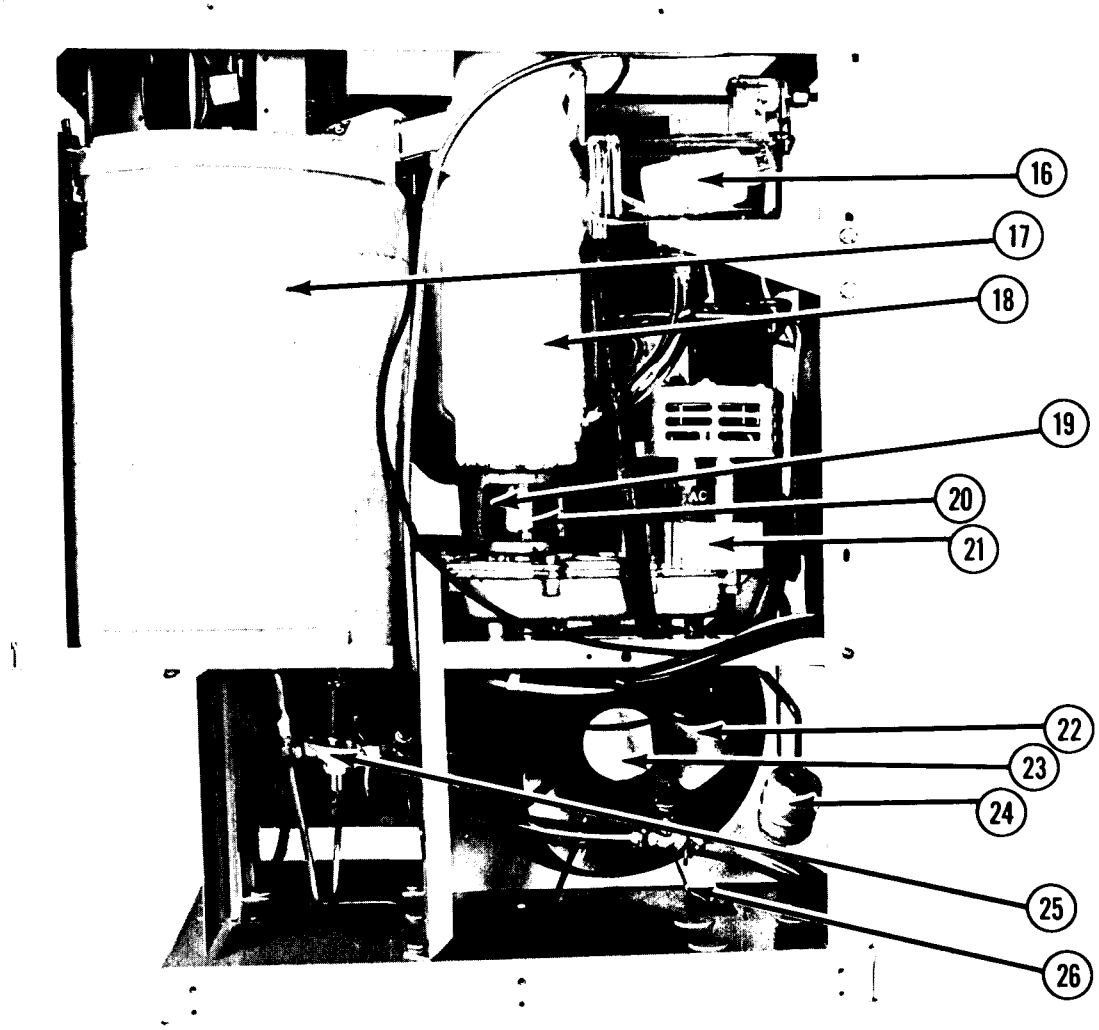

Right Side

16.	02-2217-0	Reservoir
17.	A21485-000	Storage Bin
18.		Freezer Assembly (See Breakdown Page 29)
19.	15-0575-01	Coupling
20.	08-0595-01	Adapter
21.	A25995-021	Gearmotor
22.	18-0137-01	Fan Blade
23.	12-1576-01	Fan Motor
24.	02-0831-00	Drier
25.	12-1434-04	Inlet Water Solenoid
26.	18-0422-00	Bracket-Fan Motor

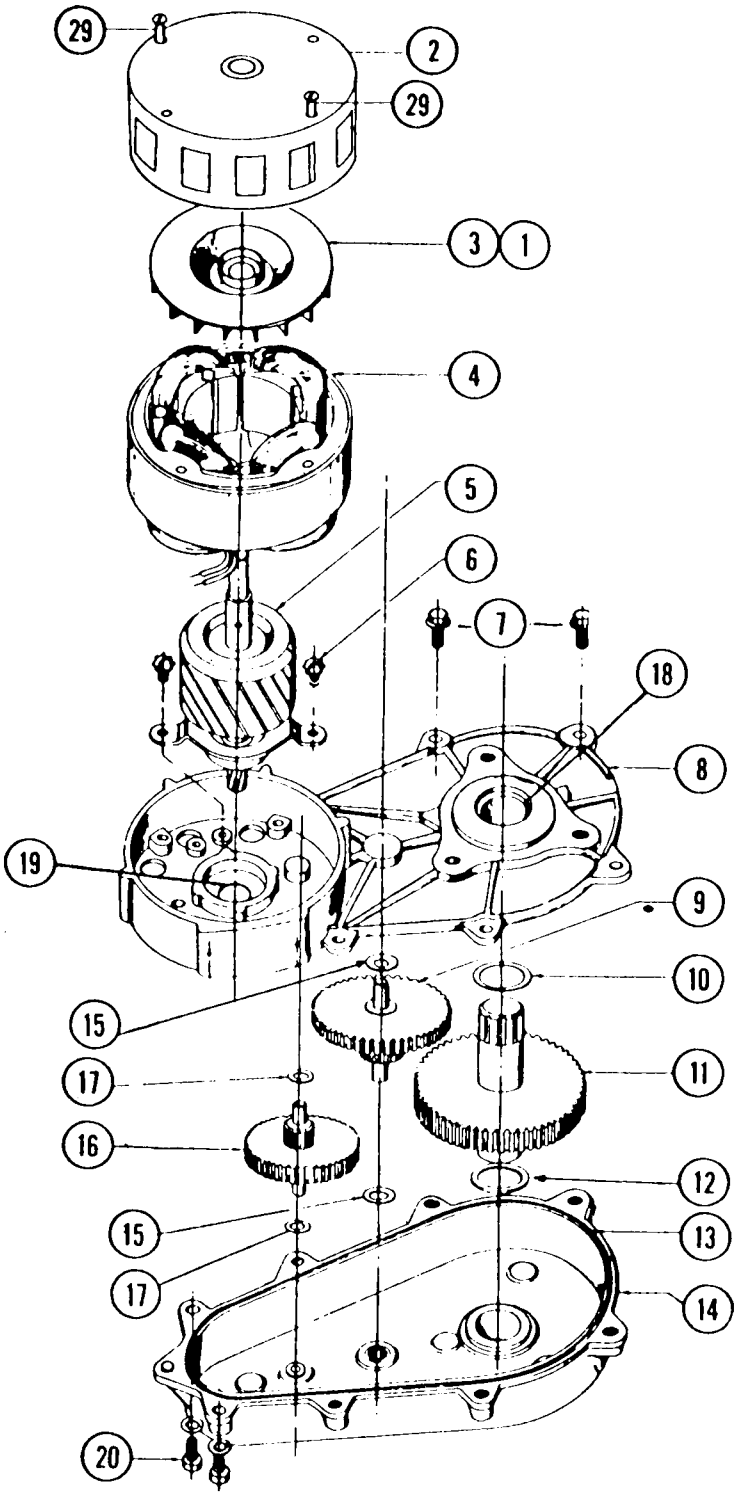

M NO.	PART NO.	DESCRIPTION
1.	03-1246-00	Set Screw (2)
2.	A17047-000	Motor Housing
3.	A16915-000	Cooling Fan
4.	12-1400-01	Stator Assy.
5.	A26454-001	Rotor Assy. w/1st Gear
6.	03-1245-00	Screws (6)
7.	03-1251-00	Flange Screws
8.	A24184-001	Gear Case Cover
9.	02-1521-00	Gear and Pinion
10.	03-1408-25	Washer
11.	A26650-001	Gear and Out put Shaft
13.	02-1505-00	"O" ring
14.	A24184-001	Gear Case Assy.
15.	03-1408-06	Washer
16.	02-2224-01	1st Gear and Pinion
17.	03-1408-20	Washer
17.	03-1407-19	Washer
18.	02-1503-00	Grease Seal
19.	02-1504-00	Grease Seal
20.	03-1252-00	Screw (2)
21.	08-0579-00	Switch Bracket
22.	03-1403-43	Motor Bolts

A25995-021 Gear Motor Assy, Complete

Output Shaft turns at 11.5 RPM

GEAR MOTOR ASSEMBLY

1/10 H.P. 115/60/1

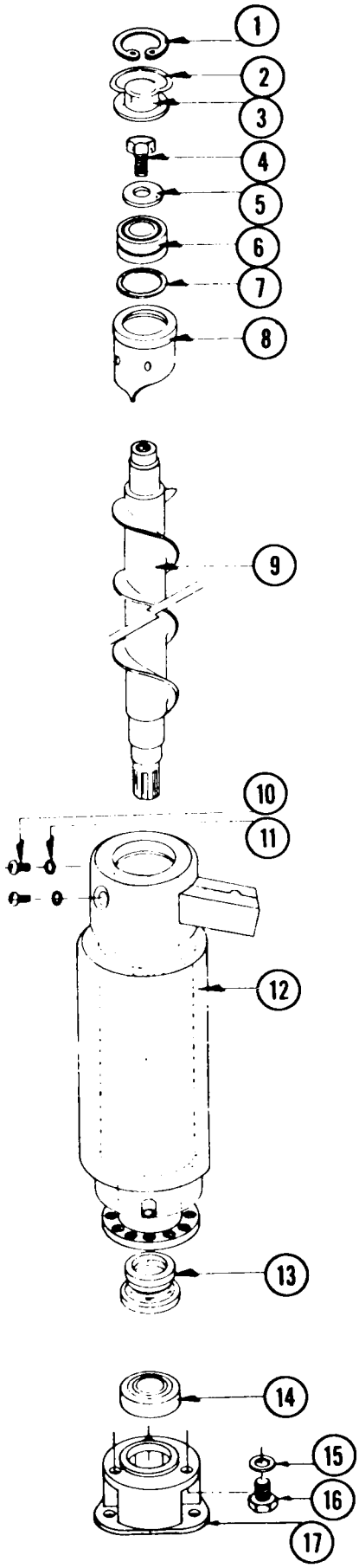

FD3 FREEZER ASSY.

ITEM NO.	PART NO.	DESCRIPTION
1.	03-1558-03	Retainer Ring
2.	A08162-000	Cap Hook
3.	A07701-000	Cap
4.	03-0758-00	Screw
	A07699-000	Washer
6.	02-0547-00	Top Bearing
7.	13-0617-16	"O" Ring
8.	A26707-001	Breaker Includes Bearing
9.	02-2046-01	Auger
10.	03-1403-46	Screw
11.	03-1417-07	Washer
12.	A26731-020	Evaporator Shell Includes Suction Line,
13.	A18945-000	Water Seal
14.	02-0417-00	Bearing, Lower
15.	03-1408-03	Washer (3 reqd)
16.	03-1405-14	Cap Screw
	15-0575-01	Coupling Gasket
17.	03-1505-00	Gasket
	08-0595-01	Adapter-Plastic
18.	15-0575-01	Spline Drive Coupling
19.	13-0709-01	Shaft Drip Shield - rubber
*20.	A18153-000	Drip Pan

* Not Shown

SERVICE ANALYSIS

ICE MAKER SECTION FD3

SYMPTOM	POSSIBLE CAUSE	CORRECTION
Water Leaks	Defective water seal. Gravity feed line leaking.	Replace. Check hose clamps.
	Water level in reservoir too high.	Adjust to 1/4 inch below overflow pipe.
Excessive noise or chattering.	Mineral or scale deposit on auger and inner freezing chamber walls.	Remove and manually polish auger, polish inner chamber walls of freezer barrel. For lighter concentration use Scotsman Ice Machine Cleaner periodically.
	Low suction pressure.	Add gas to raise suction pressure.
	Intermittent water supply.	Check and clean water strainer. Check gravity feed line for air lock. Remove air lock.
	Water level in reservoir too low.	Adjust to 1/4 inch below overflow pipe.
	Gear reducer loose on frame.	Tighten bolts.
	Motor compressor not solid on rubber mounts.	Repair or replace rubber mounts.
Gearmotor noise.	Low on oil.	Remove case cover to check for proper oil level. top of gears should be covered. Use 600 W oil.
Unit will not run.	Blown fuse.	Replace fuse and check for cause of blown fuse.
	Loose electrical connection.	Check wiring.
	Inoperative master switch.	Replace switch.
Compressor cycles intermittently.	Low voltage.	Check for overloading.
	Dirty condenser.	Clean.
	Air circulation blocked.	Move unit to correct.
	Inoperative condenser motor.	Replace.
	Non-condensable gases in system.	Purge off.

SERVICE ANALYSIS

ICE MAKER SECTION FD3

SYMPTOM	POSSIBLE CAUSE	CORRECTION
Making wet ice.	Surrounding air temperature.	Correct or move unit.
	Under or over-charge of refregerant.	Recharge with the proper amount.
	High water level in water reservoir.	Lower to 1/4 inch below overflow pipe.
	Faulty compressor.	Replace or repair.
Low ice production.	Loss of refrigerant, under or over-charge of refrigerant.	Check and recharge with proper amount of refrigerant.
	Dirty or plugged condenser.	Clean condenser.
	Low water level in water reservoir.	Adjust to 1/4 inch below overflow pipe.
	Partial restriction in capillary tube or drier.	Moisture in system. Overcharge of oil in system. Remove charge and drier. Replace and recharge system.
	Inlet water strainer partially plugged.	Remove screen and clean.
	Corroded or stained worm shaft due to water condition.	Remove worm shaft and clean.
Machine runs but makes no ice.	Loss or under-charge of refrigerant.	Check for leaks and recharge.
	Water not entering freezing chamber.	Plugged strainer or supply line. Check and clean. Air lock in gravity feed line. Check and remove air lock.
	Moisture in system.	Check and remove charge and drier. Replace and recharge.
	Water seal leaking.	Replace seal.
	Water turned off while unit was operating.	Inlet water line froze shut. Unit must be turned off and defrosted.
Will not dispense.	Power off.	Check fuses and plug.
	Motor overload open.	See correction under motor overload.
	Cam switches improperly set.	Adjust per manual.
	Master switch open.	Cabinet cover must be on tight to keep switch on.
	Spout jammed with ice. Unit not level or holding glasses against spout.	Remove ice and clear ice under removable bottom. Check reservoir possible too high.
	Wores off dispensing switch.	Check switch terminals.

SERVICE ANALYSIS

DISPENSING MECHANISM

SYMPTOM	POSSIBLE CAUSE	CORRECTION
Motor hot—Overload Open.	Ice under removeable bottom.	Remove ice.
	Wing nuts on cover turned down too tight.	Keep wing nuts only slightly snut—never tight.
	Rotating bin does not turn free.	Check and repair any drag.
	Ice too hard.	Raise freezer water level and check refrigerant charge.
Dispenser does not stop.	Brake on drive motor not working properly.	Brake must be free and stop the motor before 5 revolutions after the dispensing switch is released.
	Cam switches out of adjustment.	Check switches and set per manual
Water will not dispense.	Solenoid defective.	Replace.
	Lines closed up.	Clean.
Water runs too slow.	Water line too small.	Increase size.

MAINTENANCE INSTRUCTIONS—FLAKER SECTION

THE FOLLOWING MAINTENANCE SHOULD BE SCHEDULED THREE TIMES PER YEAR.

1. Check and clean water strainers and float valve. Depress float valve to insure full stream of water.

2. Check water level and machine level. Keep water level below overflow, but as high as possible and still not run out of spout opening with machine off. Water should come out of spout with ice at all times. Adjust as required.

3. Clean reservoir and interior of freezer assembly using SCOTSMAN Ice Machine Cleaner. See cleaning instruction on next page.

   A. If machine has been cleaned regularly and no porblem auch as dry ice or chatter are noticed, clean by making ice from solution of 4 oz. of cleaner to 2 quarts of water.

   If heavy mineral deposits on auger and walls, or sediment at inlet to freezer are encountered, clean by pouring strong solution 1/2 acid — 1/2 water into reservoir and operate drive motor only for agitation. Allow 1/2 hour or longer as required. Drain by disconnecting tygon at water inlet to freezer.

NOTE: Cleaning requirements vary according to local water conditions. Visual inspection of the auger before and after cleaning will indicate best procedure to be followed in local area.

4. Check top bearing of freezing tube. Remove retainer ring around edge of stamped brass cap, pull cap off. If moisture is around bearing, wipe up and remove grease. Add new grease. Use Beacon No. 325 or equal.

5. Clean air cooled condenser. Always shut off machine when cleaning.

6. Oil condenser fan motor when possible.

7. Check for refrigerant leaks and proper frost line. Should frost out of accumulator at least one-half way to compressor, and in some areas, back to service valve.

8. Check for water leaks. Tighten drain line connections. Run water down drain line to make sure it is open.

9. Check quality of ice. Ice should be wet when formed, but will cure rapidly to normal hardness in the bin.

CLEANING INSTRUCTIONS FOR FD3

1. Set selector switch to continuous ice and vend until bin is empty.
2. Remove top cabinet cover.
3. Remove storage bin cover and spout extension.
4. Remove both ice control flippers from storage bin cover. Note positions of these parts, if parts re-assembled incorrectly damage to the machine may result.
5. Remove inner bin and bin bottom.
6. Turn OFF water supply or block float. Drain reservoir by disconnecting tube between reservoir and freezer. After draining, reconnect tubing.
7. Block main switch ON and pour cleaning solution into reservoir. (Use 4 oz of Scotsman cleaner and 1 qt. of hot water). Do not fill above overflow tube. Do not allow unit to operate with less than 1" of solution in reservoir.
8. While waiting for Step No.7 and/or No.10 to complete, remove drain grate and ice vend lever from sink. Wash and sanitize these parts and parts removed from storage bin in accordance with the local health department regulations. (Step No. 7 may complete before Step No. 8).
9. Remove block from main switch. Wash and rinse reservoir, turn water on or remove float block.
10. Block main switch ON. Let unit run for at least 15 minutes to flush out any cleaning fluid. Check ice for acid taste — run until ice tastes sweet.
11. Remove block from main switch and remove bin cover. Add hot water to ice in bin, using this melt water thoroughly wash and rinse the underside of the storage bin top, shutter, rubber ice spout and all surfaces within the storage bin.
12. Using solution from Step No. 8, thoroughly wash and rinse sink.
13. Re-assemble storage bin and sink parts.
14. Replace cabinet cover. Unit is ready for normal operation.

ACCESSORY ITEM

WALL MOUNT KIT

PART NO. KWB1

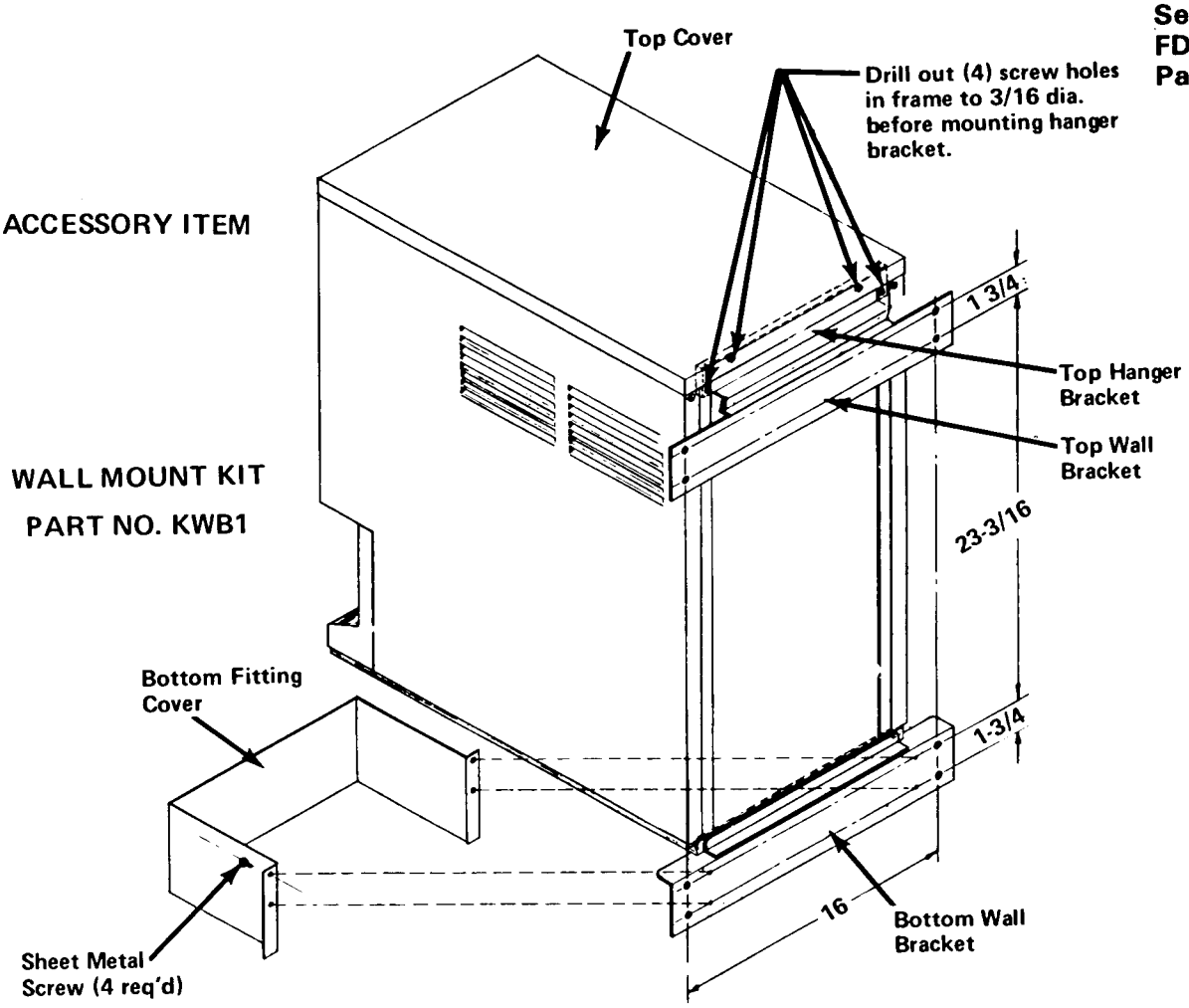

HE KIT

Top Case Hanger Bracket
Attach to inside of frame of the dispenser
Top Wall Bracket
Mounts to wall and engages top case hanger bracket to support dispenser.
Bottom Wall Bracket
Mounts to wall and supports bottom of dispenser.
Bottom Fittings Cover
Fastened to bottom wall bracket to conceal electrical and plumbing fittings from view.

OP HANGER BRACKET:

Remove back cover and save four screws for mounting bracket.
Remove top cover.
Drill out four holes of weld nuts in back of frame with 3/16 dia. drill as indicated in illustration.
Place bracket inside of frame and fasten solidly with four screws, saved from Step 1, through drilled out holes.

OP WALL BRACKET:

osition bracket in desired location.
ecure to wall with fasteners of any suitable type for that particular wall through the four holes in bracket. These fasteners or lag screws are not furnished. (Be sure to secure bracket rigidly to wall.)

BOTTOM WALL BRACKET:

1. Hang the dispenser on top wall bracket.
2. Position bottom bracket so that molding on dispenser base bottoms in channel of the bracket.
3. Secure bracket to wall through the four large holes with suitable fasteners. (Fasteners not furnished.)

BOTTOM FITTINGS COVER:

1. Connect water inlet, bin drain and sink drain of dispenser through bottom of case. Also run electrical cable in from bottom.
2. Secure fitting cover to bottom wall bracket with the four sheet metal screws provided in this kit.

GENERAL INFORMATION

1. The dispenser is provided with an interlock device.
2. The interlock must be closed before the dispenser will function.
3. The interlock is closed by the top cover of the dispenser. When the cover is tightly in place.
4. To place the cover in proper position, it may be necessary to bend out the back lip of the cover at the screw holes with pliers Caution! There must be enough friction between the screw heads, (which secure the hanger bracket and the top cover to hold the cover tightly down on the case and interlock.

Section
FD3B
Page 36 SINK EXTENSION KITS
KDE1—Painted
LDE1-SS—Stainless Steel

KIT:

A18150-000	Drain Fitting - Male
A18331-000	Drain Fitting - Female
02-1699	Sink (4) 3-1403-29 Screws
02-1828-00	Splash Plate (6) 3-1403-7 Screws
02-1701-00	Drain Grill (6) 3-1406-1 Nuts
A21538-000	Base (2) 3-1403-6 Screws
A21538-001	Base—Stainless Steel

FEATURES:

By the use of the splash plate, only, and the wall bracket A19090 (another accessory), the FD3 model can be mounted on a wall over an existing sink.

As a counter-top model, the dispenser is mounted on the six-inch base, A21538. The splash plate, sink and grill replace the conventional sink on the models.

A conversion for the FD3 dispenser to increase the distance between the discharge spout and the sink to twelve inches and to provide a faster sink drainage.

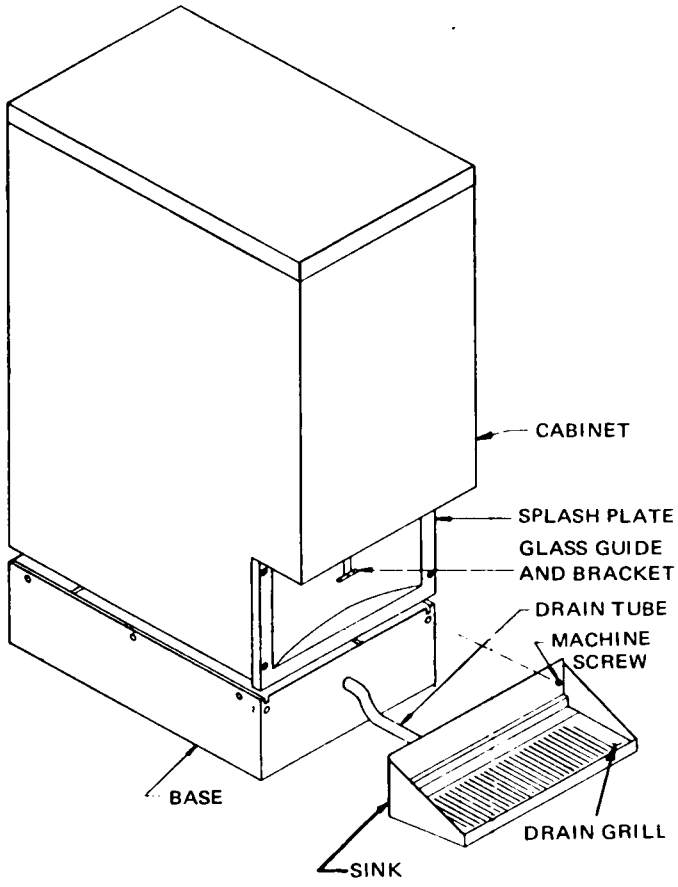

INSTALLATION:

1. Remove conventional sink from cabinet.
2. Remove glass actuator arm and holder from sink.
3. Remove drain tube from original sink.
4. Install drain tube to replacement sink.
5. Remove rubber seal from base of the dispenser.
6. Mount the dispenser on base, A21538. The flange of the dispenser base is to fit in slots provided in the base extension. Secure with the 3 screws on each side of base.
7. Mount sink in place and secure with two machine screws.
8. Install splash plate to cabinet with four machine screws, furnished. The splash plate fits over top of sink.
9. Install glass actuator arm and holder to splash plate. The plunger on the arm must operate freely through hole in splash plate.
10. Install grate.

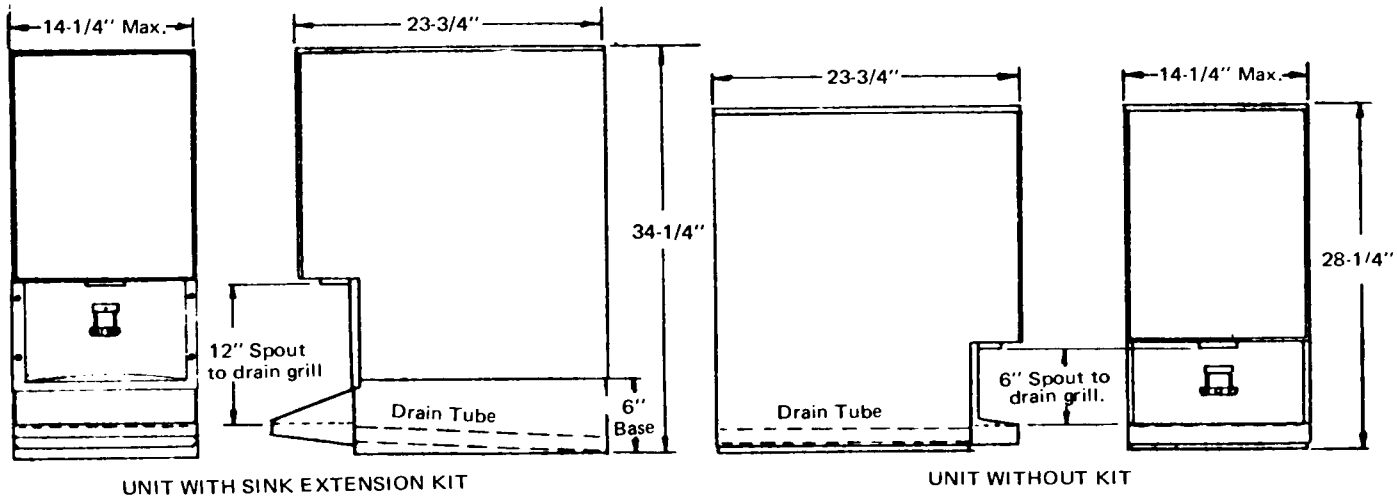

TABLE OF CONTENTS

Foreword 1
Table of Contents 2
Photo and Ice Making Capacity 3
Specifications 4-5
General Description 6
General Information 7
Installation Instructions 8-10
Ice Dispenser Control System 11
Adjustment of Controls 12-14
Shutter and Bin Adjustment 15
Storage Bin and Dispensing Assy. 16
Bin Controls 17
Storage Bin Top Assy. 18
Dispenser Control System 19-20
Wiring Diagram 21
Reservoir Assy. 22
Cabinet Panels—Chassis 23
Chassis Assembly 24
Gear Motor Assembly 25
Freezer Assembly 26
Freezer Assembly 26
Service Analysis (Icemaker) 27-28
Service Analysis (Dispensing Mechanism) 29
Maintenance Instructions (Flaker) 30
Cleaning Instructions 31
Accessory Kits 32-33

THIS PAGE
INTENTIONALLY
LEFT BLANK

THIS PAGE
INTENTIONALLY
LEFT BLANK

SCOTSMAN®

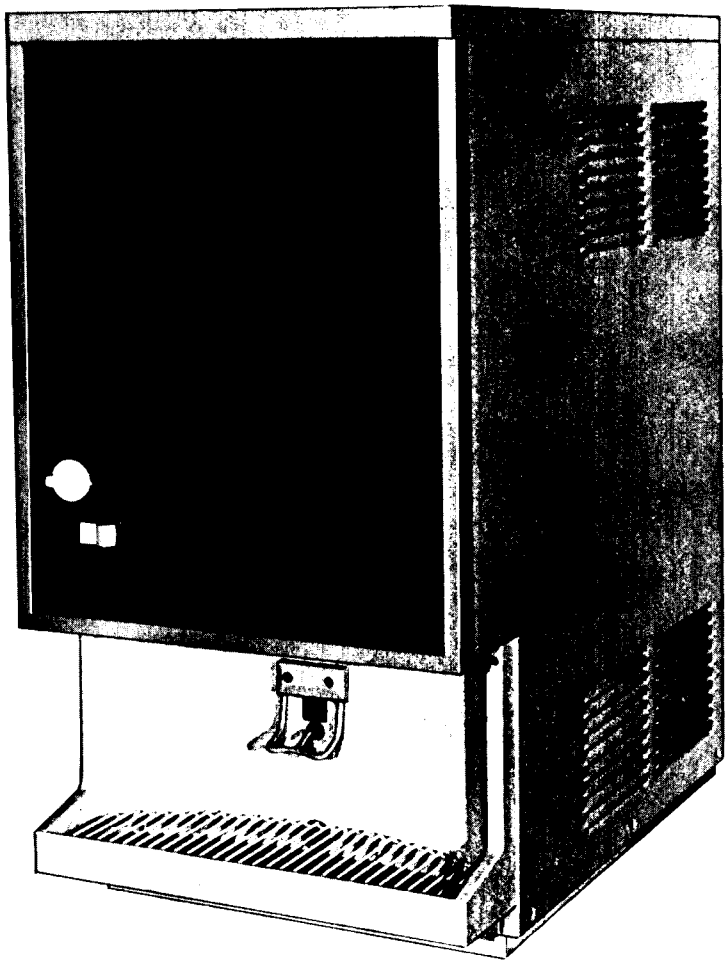

FD4 SERIES ICEMAKER-DISPENSERS

ice making capacity

Daily Ice Capacity is directly related to condenser air inlet temperature, water temperature, and age of machine.

To keep your SCOTSMAN FLAKER DISPENSER performing at it's maximum capacity, it is necessary to perform periodic maintenance as outlined on page 31 and 32 of this manual.

SPECIFICATIONS

FD4 SERIES ICEMAKER-DISPENSER CABINET

Height	28-1/4 inches
Depth	23-3/4 inches
Width	14-1/4 inches
Weight	192 pounds
Finish	Baked-On Enamel or Stainless Steel
Trim	Aluminum, anodized
Sink & Drain	Plastic

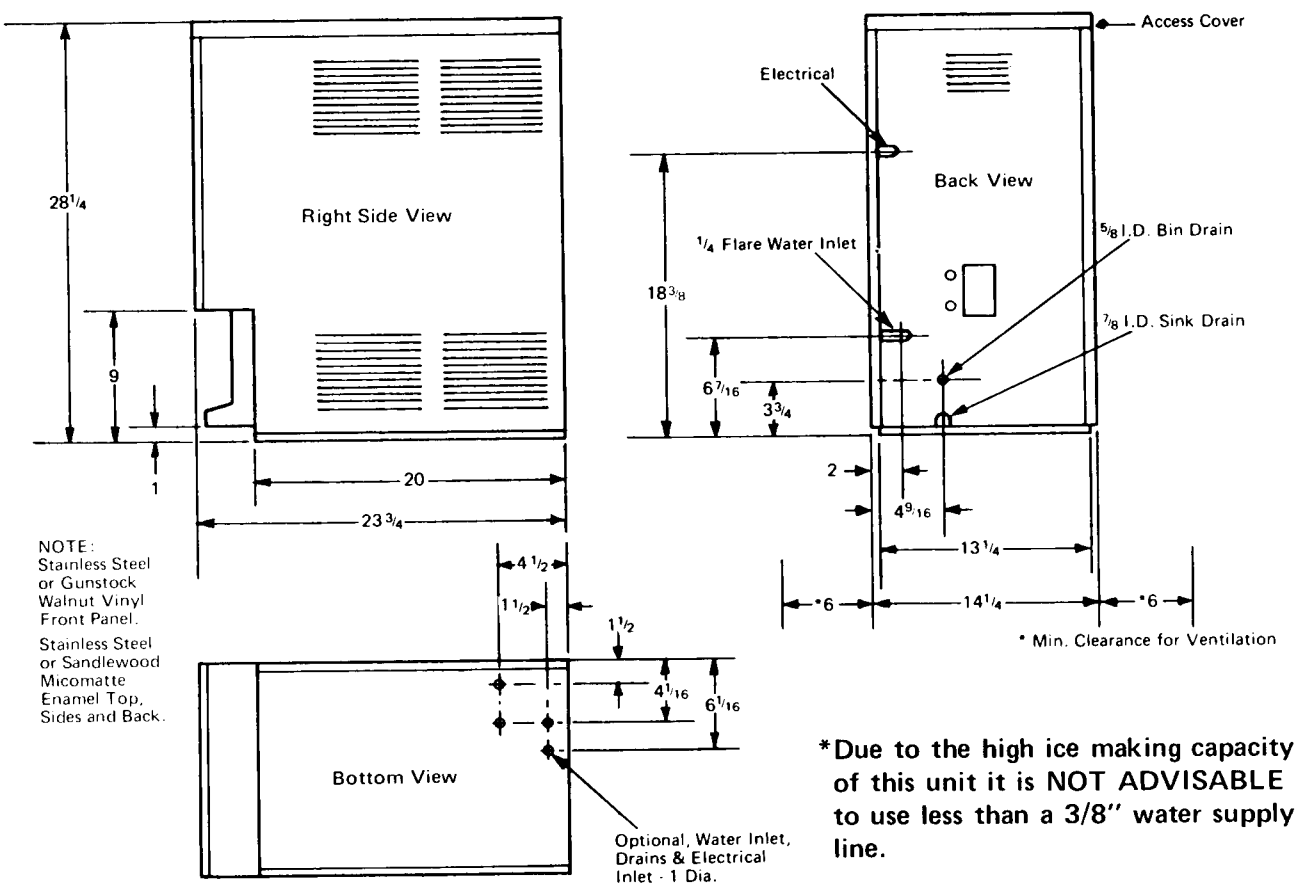

***Due to the high ice making capacity of this unit it is NOT ADVISABLE to use less than a 3/8" water supply line.**

NOTE: Available with: Wall Mounting Kit
Sink Extension Kit

SPECIFICATIONS

REFRIGERATION UNIT

Compressor ..... Copelaweld
1/2 H.P.
2 pole
115 v 60 Cycle
Freezer ..... SF-1 Modified
Refrigerant ..... R-12—16 oz. charge

DISPENSING UNIT

Bin & Dispensing Cylinder ..... Stainless Steel
Insulation ..... 1 inch Urethane
Storage Capacity ..... 8.19 pounds
Ice Spout ..... Composition (rubber)
Drive Motor ..... 86.5 watt
115 v. 60 cycle
R.P.M. 26.7
Dispensing Rate (approximate) ..... .8 oz. sec.

PERFORMANCE DATA

Metered Ice-per vend ..... 1 or 2 oz.
Time per vend ..... 1.5 sec.
1 vend/18 sec. ..... Recovery = Discharge
Water with minimum ice ..... 1.0 oz. ice water
Water with maximum ice ..... 2.0 oz. ice water
Dispensing time (ice & water for 10 oz. glass) ..... 4.5 sec.
Continuous ice flow ..... 1 pound in 20.8 sec.

GENERAL DESCRIPTION

This unit is a counter or table-top type of dispenser with a selfcontained refrigeration unit, flaked ice freezer, storage bin and automatic dispensing mechanism.

The primary purpose of this machine is to fill water or drink glasses with water and ice or just ice by actuating a control arm with the glass.

Approximately one or two ounces or a continuous flow of ice can be obtained by properly adjusting a selector switch. By pushing a water switch to "on" water will be dispensed with the ice or as long as the glass actuator arm is energized.

The sink or area in which the ice is dispensed is constructed of plastic. The drain grill is 100% nylon coated steel wire. The cabinet is of stainless steel or steel with a baked-on enamel finish. Water lines within the cabinet are of copper and drain lines are Tygon (plastic) tubing.

The complete machine has been designed with sanitation and ease of cleaning emphasized. The storage bin is sealed and the ice spout is automatically closed when ice is not being dispensed. The complete dispensing unit can be dismantled for cleaning without the need of tools. By removing two winged screws the cabinet top can be removed. Three winged bolts on the storage bin cover may be loosened and the cover can be lifted off. This exposes the entire dispensing mechanism which can be lifted out of the storage bin.

The base of the machine contains a sealing gasket which will seal the machine tight against the table or counter top, thereby, eliminating the possibility of dirt or bugs lodging under the base.

The top, back, front, sink or either side of the cabinet can be removed in a matter of minutes.

To clean the condenser or for access to the control box, the left side panel is removed.

GENERAL INFORMATION

1. The machine comes to you ready to operate except for water, electrical power and drain connections.

2. The attached information on adjustments should not be needed except in rare instances.

3. An interlock switch, located on the top frame, is held in an "on" position when the cabinet top cover is in place. When the cover is removed the power to the machine is automatically disconnected for cleaning. For electrical service the main power supply should be disconnected.

4. The unit should not be connected to a heavily fused supply line. Maximum fusing should be not more than 20 amperes. It is advisable to use a fustat, fusetron or delay type of fuse.

5. All parts of the unit can be washed with mild soap and water. This includes the stainless steel and painted parts. Care must be exercised in handling the cleaning of the various stainless steel pieces as these parts have a tendency to be more sharp at the edges than painted parts.

6. Because of the various electrical controls and wiring, care must be used in grounding this cabinet and frame work to a solid cold water line or similar ground.

7. The FD3 and FD4 are identical in outward appearance with the case assembly on. For identification purposes a decal is placed on the back panel. When a screw head appears in the upper hole it identifies the FD3 and in the lower hole the FD4.

INSTALLATION INSTRUCTIONS

1. Remove the unit from the carton and install on a table or counter with a flat, level, rigid top. Mount at a convenient height for filling glasses.

2. Avoid sliding the unit on the rubber sealing base.

3. Remove the top of the cabinet and the rear panel. Remove packing from float chamber.

4. Pull the drain from the cabinet.This may be routed through the rear panel or through the hole provided in the base. It is possible to route all lines through holes which have been provided in the base.

5. The lower drain from the sink area must never be installed higher than the base of the cabinet. Consideration should be made in regard to this drain in order to get proper flow from the sink drain.

6. Water should be supplied from a 3/8" copper or equivalent pipe. To small a water supply line will only result in an increase in time for filling glasses with water.

7. Connect power to terminal strip in junction box, Item 16 on Page 25.

8. The interlock switch located at the top of the cabinet frame will be in an "ON" position when the cover is on the cabinet.

9. Replace the rear panel and the cabinet cover. The switch is used only when the machine is opened for cleaning. At such a time both the unit and dispenser are disconnected by removing the cover.

10. Thirty minutes after the unit has been started, ice can be dispensed.

NOTE: Should this unit be improperly installed with the drain favoring front of the machine, a condition would result in slushy, wet ice as the meltage water would remain in the bottom of the storage bin, and may run out the discharge spout.

WARNING: THIS MACHINE MUST NOT BE ALLOWED TO OPERATE WHEN THE WATER SUPPLY IS SHUT OFF, OR AT BELOW RECOMMENDED WATER PRESSURE. TURN MASTER SWITCH TO "OFF" POSITION WHEN WATER SUPPLY IS OFF, OR WHEN WATER PRESSURE IS BELOW RECOMMENDED OPERATING PRESSURE.

INSTALLATION PRACTICE

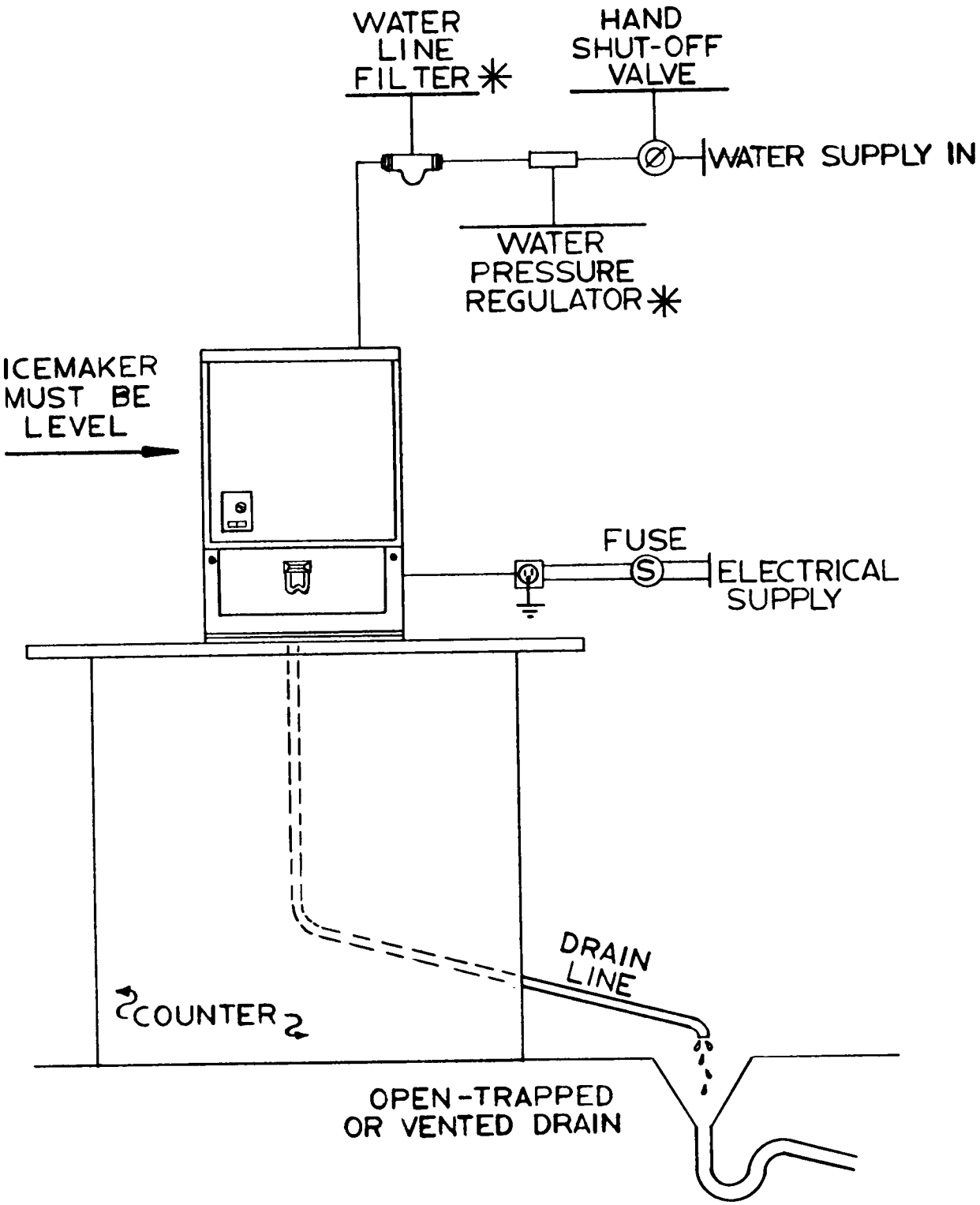

* REGULATOR AND FILTER ARE ACCESSORY ITEMS TO BE INSTALLED AS CONDITIONS WARRANT

HOOK-UP SPECIFICATIONS

ELECTRICAL:

Standard electricals are 115 volts, 60 cycle single phase current. Use No. 12 gauge wire, either in three wire cords rubber covered or thermoplastic types that incorporate a ground wire as the third wire. This unit must have a solid ground wire.

Major electrical components	H.P. Size	Amps.
1. Refrigerant Compressor	1/2	11.0
2. Freezer Gearmotor	1/10	4.0
3. Dispensing Drum Motor	1/25	2.35
Total		17.35

20 amp fuse protection is required, preferably a delay type such as Fustat, Fusetron etc. All external wiring should conform to National Underwriters, as well as State and local codes. The maximum allowable voltage variation must not exceed 10 per cent of unit nameplate ratings, even under starting conditions.

Knockouts in cabinet are made for cord connectors. Supply line ties into terminal board of control box. See item No. 16 on page 25. Use separate circuit for icemaker only.

WATER SUPPLY:

A single cold water supply line is required. Recommended tubing size 3/8" O.D. or larger, cabinet connection is to a 1/4" S.A.E. flare tee (item No. 10 on page 25) on internal cabinet bulkhead. A water strainer with clean out feature should be installed in supply line along with a hand shut off valve.

Minimum water pressure is 20 pounds gauge, maximum pressure over 50 pound gauge may cause chattering of float ball in reservoir tank. For pressures in excess of 50 pounds, use a water pressure regulator in line. Cabinet back is slotted for supply line entrance.

WATER AND CONDENSATE DRAINS:

Two soft drains (plastic tubing) are provided, see page 25. The upper drain is 5/8" I.D. tubing, the lower drain is 7/8" I.D. tubing. Drain lines should be run to an open, trapped or vented drain in accordance with your State and local code regulations. These are gravity drains, therefore maintain at least a 1/4" pitch per foot away from unit drains. Knockouts are provided for either out the back or thru the base drain.

REFRIGERANT SYSTEM:

The standard Scotsman Flaker system is used in slightly modified form. Refrigerant 12 is pumped by compressor into the air cooled condenser, into the liquid line, thru a filter-drier and then into the capillary refrigerant control line.

Liquid refrigerant is then carried down to the bottom end of the shell and tube type evaporator (freezing cylinder) where it expands and rises to the top of evaporator. Here the vapors and gases are returned thru an accumulator and suction line to the compressor.

Average operating head pressure is 135 lb. gauge, operating back pressure is 14 lb. gauge.

Factory charge is 16 ounces of Refrigerant 12.

Compressor is 1/2 horsepower, 2 pole, 3500 RPM by Copeland, Proper model number is Copelaweld: RSF2-0050-1AA-207.

ICE DISPENSER CONTROL SYSTEM

The inner storage bin rotates, carrying the ice over a cutting edge located at the ice discharge spout. The ice is thereby cut off the bottom of the stored mass and falls down the spout.

When the selector switch is set at 1 oz. of ice, the dispensing bin will rotate 1/2 turn for each vend. When the selector switch is set at 2 oz. of ice, the dispensing bin will rotate one full turn.

The action is controlled by two switches mounted together with their rollers riding on a cam. They are located on the bin cover and under the drive motor bracket, see page 19. The cam has one depression for the top switch roller to fall into and two for the bottom switch roller. The top switch controls the 2 oz. vend in which the bin rotates one full turn to actuate the switch. The lower switch controls the 1 oz. vend for 1/2 a turn to the bin.

At the end of each vend it is necessary that the dispensing bin stop in the correct position. It must stop at such a time as the spout shutter, item No. 6 page 17, which rotates with the bin, is directly over the spout. It is also at this time that one of the fins in the rotating bin is in the center and directly under the flaker freezer spout. When this timing is correct, ice that is filling the bin from the freezer will fall in both compartments of the bin; that is, on both sides of the fins. Also, by this timing the ice discharge spout is closed, which not only tends to keep dirt from entering the bin, but also shed meltage from the bin away from the discharge spout.

The selector switch also has a continuous flow position in which ice will continue to vend as long as the control arm is held in. When released the top switch on the cam will position the shutter over the spout.

When the water switch is in an "ON" position, water will be dispensed with the ice. Water will always continue to flow as long as the actuating arm is held "IN". See page 14 for a simplified circuitry showing the operation of these switches.

CONTROL SWITCHES & CAM

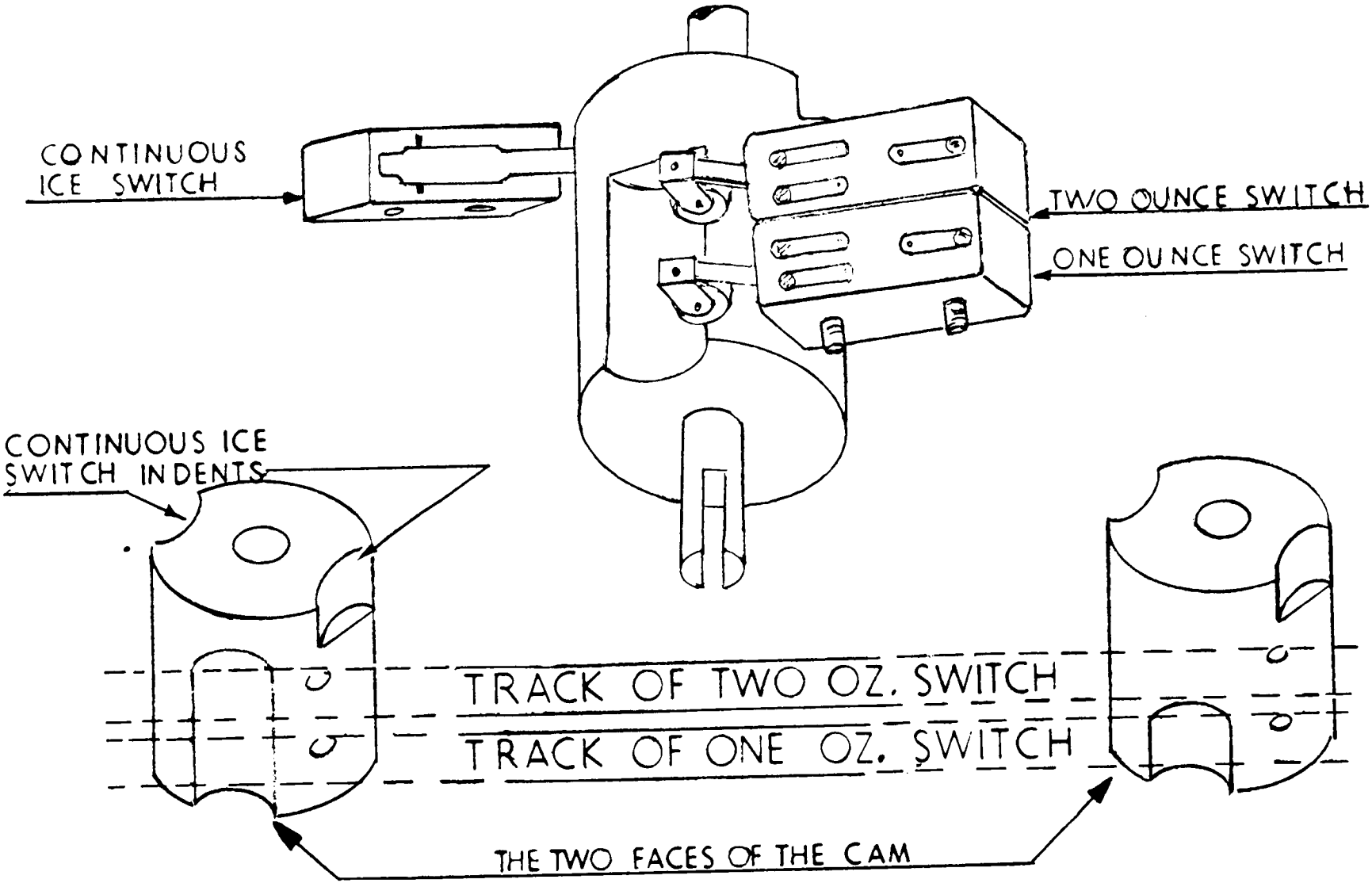

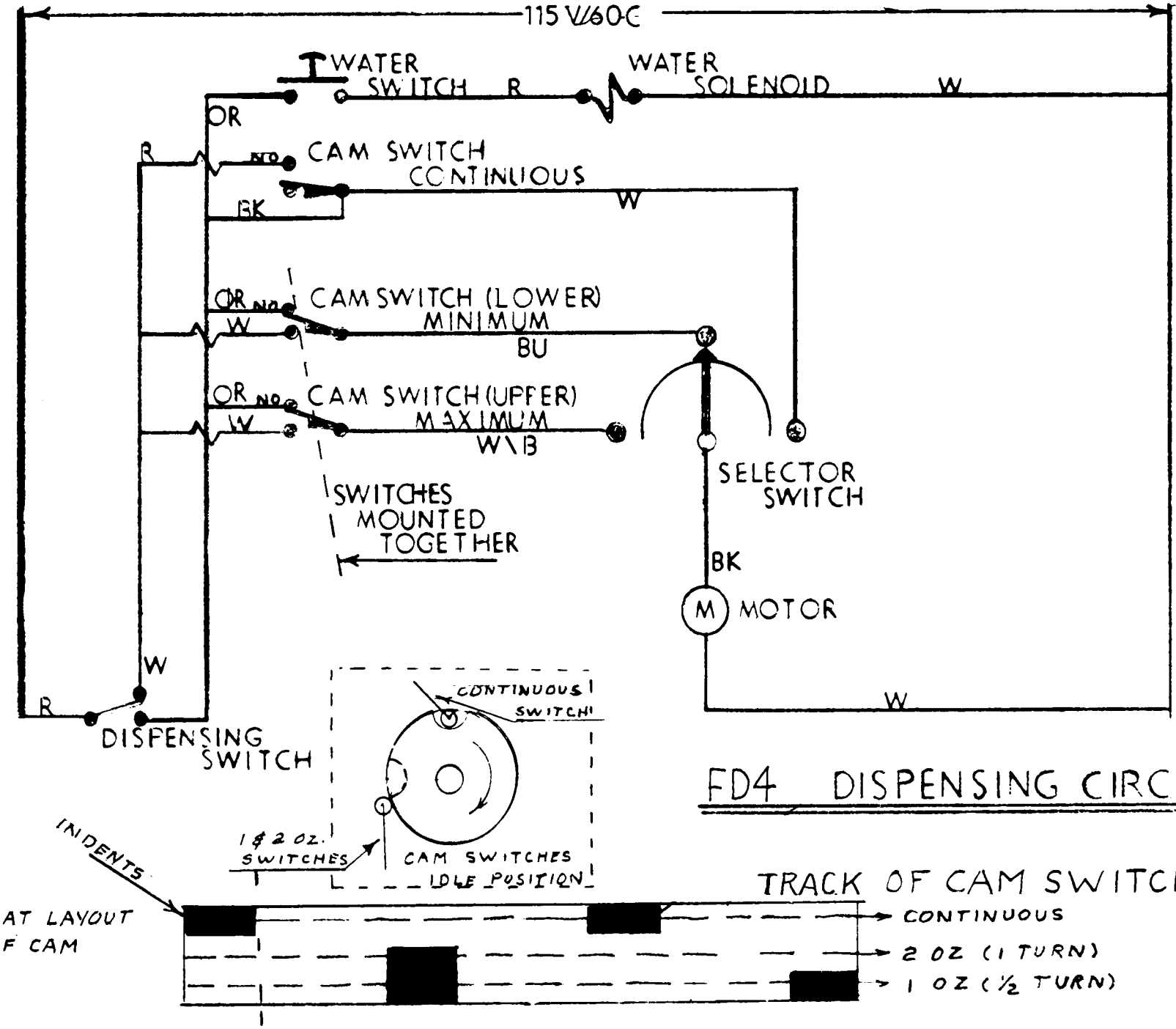

FD4 DISPENSING CIRCUIT

INSTRUCTIONS FOR SETTING CAM SWITCHES WHEN DISPENSER WILL NOT STOP OR WILL NOT DISPENSE PROPERLY. (DO NOT ADJUST CAM SWITCHES UNTIL YOU ARE SURE DISPENSER MECHANISM RUNS FREELY.

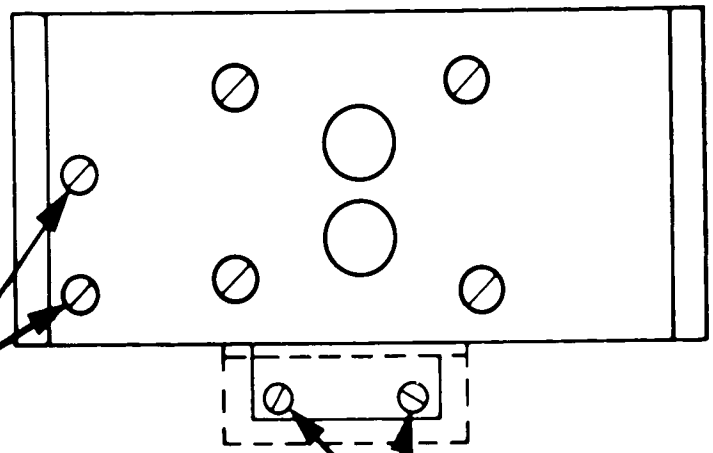

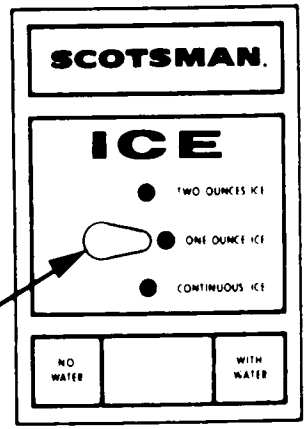

CONTINUOUS ICE SETTING INSTRUCTIONS:

1. Set selector switch to continuous ice.
2. Turn master switch on by pressing white button down.
3. Loosen two screws slightly.
4. Push screws forward slowly until dispenser motor runs continuously.
5. Pull screws back until motor stops.
6. Hold position and tighten screws snugly.

1 oz. & 2 oz. ICE SWITCH SETTING INSTRUCTIONS:

1. Set selector switch to 1 oz. or 2 oz. ice.
2. Remove cam switch cover.
3. Turn master switch on by pressing white button down.
4. Loosen two screws slightly.
5. Pull back on screws until dispenser motor runs continuously.
6. Push screws forward slowly until dispenser motor stops and then push 1/32 to 1/16 further.
7. Hold position and tighten screws snugly.

SHUTTER AND BIN ASSEMBLY AND ADJUSTMENT

1. Assemble the shutter in the bin and place the tapered bottom over the shutter. The opening in this bottom (see drawing page 17) is placed over the discharge spout area. Pins in the bottom of the outer bin protrude through slots in the side of this bottom which thereby locks and holds it in place. The rotating dispensing bin is then set over this bottom.

2. Mount the cover on the bin being careful that the slots in the drive shaft are over the pin in the shaft of the dispensing bin. Bolt the cover down lightly with the three winged nuts. (Never Tight).

3. The shutter must be directly over the rubber discharge spout when the dispenser stops. The dispensing bin is timed, by construction, with the shutter in that the fins of the bin are directly under the freezer spout when the shutter is in proper stopped position. Consequently both sides of the bin will fill with ice.

The Adjustment

1. If shutter does not close the ice spout opening when the dispenser motor stops be sure the cam switches are adjusted as per page 15.

2. To adjust shutter remove the bin cover and turn upside down.

3. Turn the motor until the roller of the continuous ice can switch (the singularly mounted switch) is down in the slot of the cam. This is illustrated in the sketch of the cam and switches on page 14.

4. In this position the slot of the motor drive shaft should be in line with the plunger of the spout switch.

5. To adjust, loosen the two set screws No. 11 of cam (see section AA - page 19). Hold cam as described in above paragraph 3 and turn motor until drive shaft slot is correctly in line with spout switch plunger.

6. Tighten set screws in cam. (Do not over tighten or the plastic cam may split).

7. Rotate the motor - check the vertical position of the cam. Switch rollers must fall in the correct cam slots as indicated on page 14.

8. Hold master switch down and vend several times. Each time the dispensing motor stops the slot in the end of the drive shaft should line up with the plunger of the spout switch.

9. Place cover on storage bin. Press down on vend switch until slot in drive shaft falls over pin in rotating bin.

10. Turn down thumb screws on cover slightly (never tight).

11. Actuate the dispenser several times. Check the shutter through the rubber discharge spout. It must close discharge spout at the end of each dispenser.

STORAGE BIN and DISPENSING ASSEMBLY

ITEM NO.	PART NO.	DESCRIPTION
1.	A16098-000	Bin Cover Only
2.	A20912-000	Drive Pin
3.	A16005-000	Tie Bolt Bracket
4.	A21485-000	Outer Bin
5.	03-0255-00	Wing Nut
6.	A22477-000	Shutter Assembly
7.	A22479-000	Storage Bin
8.	A16129-000	Bin Bottom

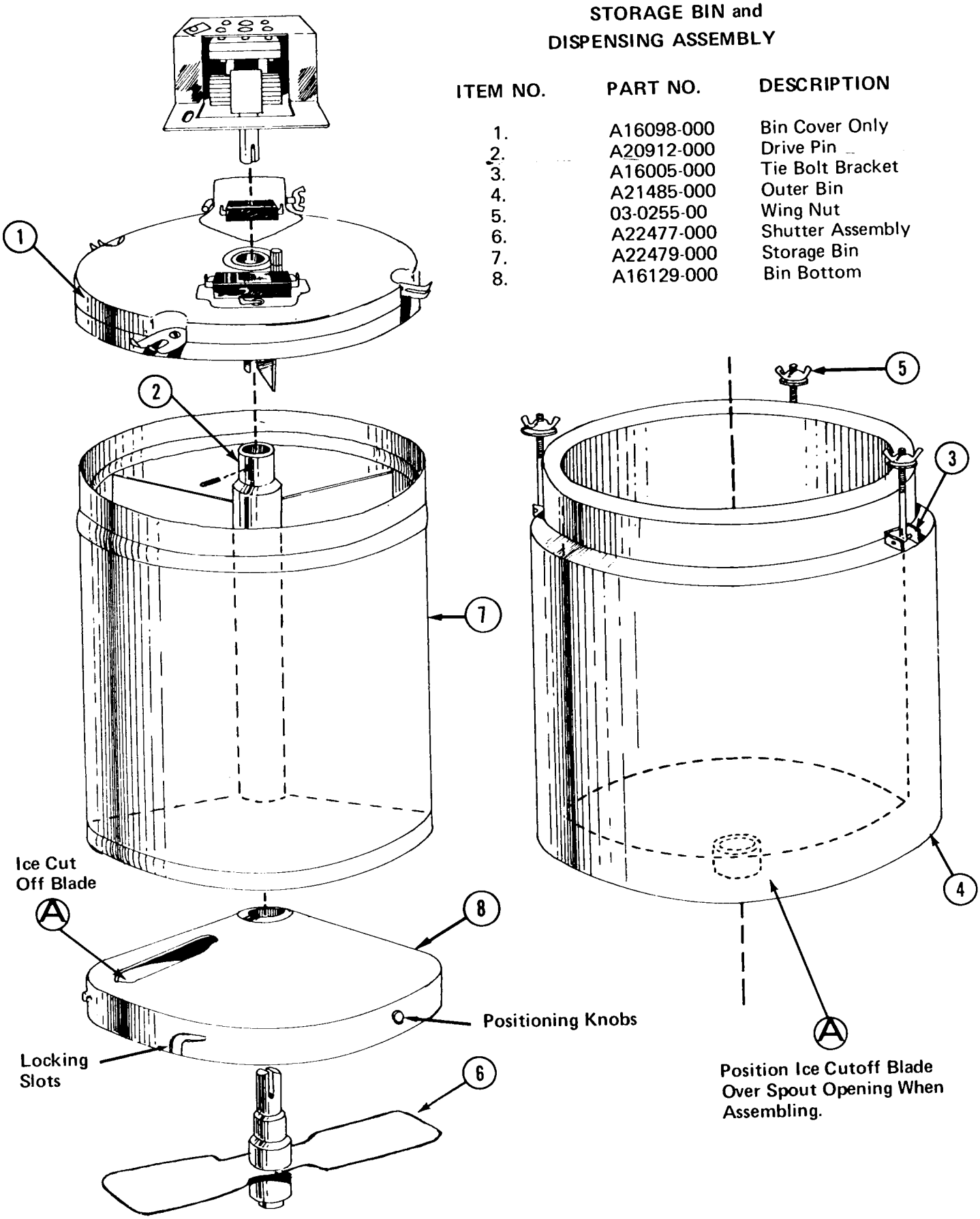

BIN CONTROLS

There are two controls located on the underside of the cover that govern the amount of ice that is in the bin. One control, that over the spout of the freezer, turns the freezer off when the bin is full of ice. This control must be in a position as illustrated in drawing page 19, Section B-B. The second control (see Section C-C page 19) hangs into the bin and holds the freezer off for a period of vends. This flipper slides upon the ice at the first ice vend and opens the switch contacts. It operates as a differential to keep the unit from starting and stopping at each vend and is a secondary means of stopping the unit should the spout switch fail.

Both of these controls can be easily removed for cleaning. The bin differential control has two fasteners securing it to the cover. They are tall round, knurled tubes which are unscrewed like a nut. Removing these two fasteners will drop the differential control from the cover.

The spout of the freezer has an extension that slides over the fixed spout. This removable extension has two small ears on the side. It is necessary when replacing the cover on the bin to slide this extension as far back on the freezer spout as possible. Be sure the small ears of the extension are on the outside of the cover. When the cover has been fitted over the bin and before it is bolted down, this extension should be slid toward the cover until the ears rest against it.

Serious damage could result if the cover is not installed properly. The small flipper over the switch button in the ice spout of this cover must definitely be forward. Check section B-B, page 19 carefully before attempting to install the cover.

To further control the compressor and to avoid the freezing and stoppage of the auger in the freezer a control is incorporated on the gear motor drive for the freezer.

The bin controls do not energize the compressor but only the gear motor. In turn the gear motor operates the compressor.

A speed sensing switch mounted on top of the motor of the gear unit will stop the compressor when the RPM of the motor is less than 900. At 1200 RPM it will start the compressor.

Should the auger begin to freeze the speed of the gear motor is reduced due to excessive load. At 900 RPM it opens the circuit to the compressor and thereby stopping the freezing. As the gear unit, only, continues to run it will clear the auger and when the motor speed reaches 1200 RPM, the compressor is turned on.

Any freeze ups are thereby automatically cleared by the unit.

If the water should be shut off when the unit is running, the inlet water line will freeze shut. The control mentioned above will have no control over such a situation.

STORAGE BIN TOP ASSEMBLY
A-21215-002

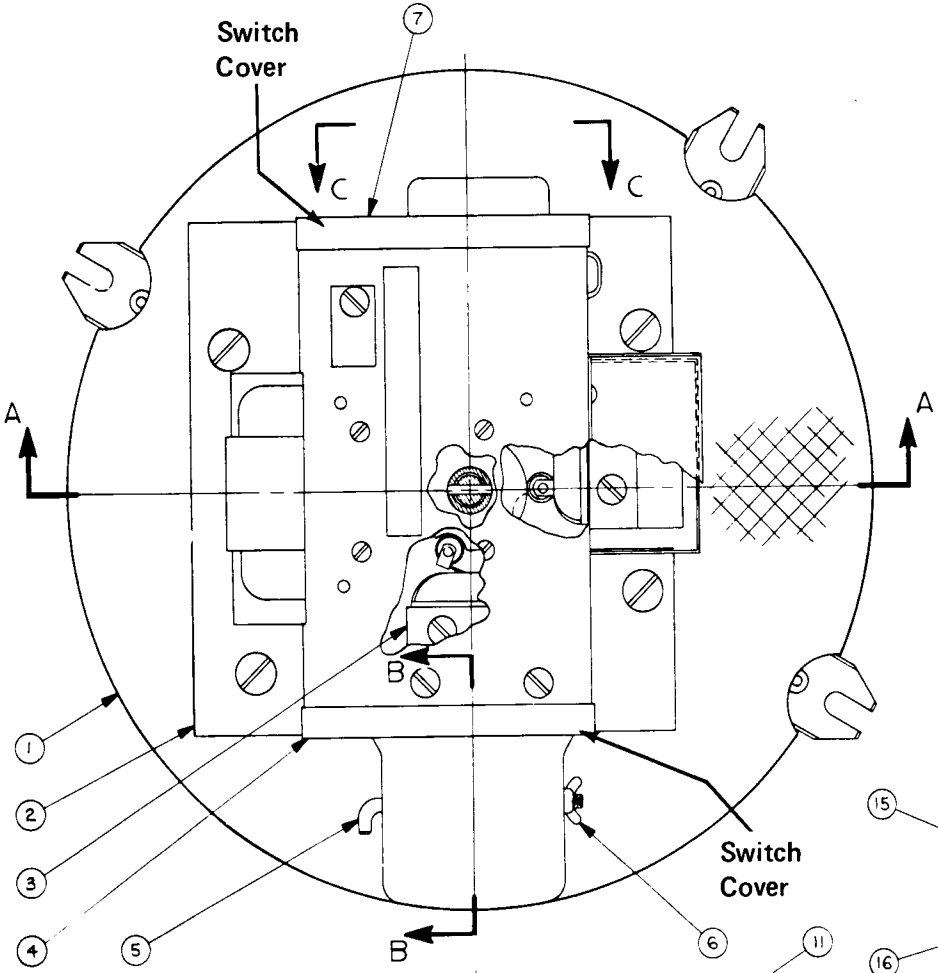

ITEM NO.	PART NO.	DESCRIPTION
1.	A21215-002	Storage Bin Top Assembly
2.	A18468-000	Motor Mount
3.	12-0876-00	Positioning Switch (Continuous ice)
4.	A16498-000	Switch Cover
5.	A16104-000	Hinge Pin
6.	03-1229-00	Wing Nut
7.	A16499-000	Switch Cover
8.	12-1610-01	Dispenser Drive Motor
9.	02-1576-00	Switch
10.	A21207-000	Drive Shaft
11.	03-0387-00	Set Screws
12.	12-0876-00	Cam Switch (two ounces ice)
13.	12-0876-00	Cam Switch (one ounce ice)
14.	A16101-000	Cover Bushing
15.	12-1018-01	Spout Switch
16.	12-1643-00	Boot & Bushing
17.	A16010-000	Ice Control Lever
18.	A16495-000	Differential Bracket Nut
19.	12-1018-01	Differential Switch
20.	A19269-000	Differential Paddle

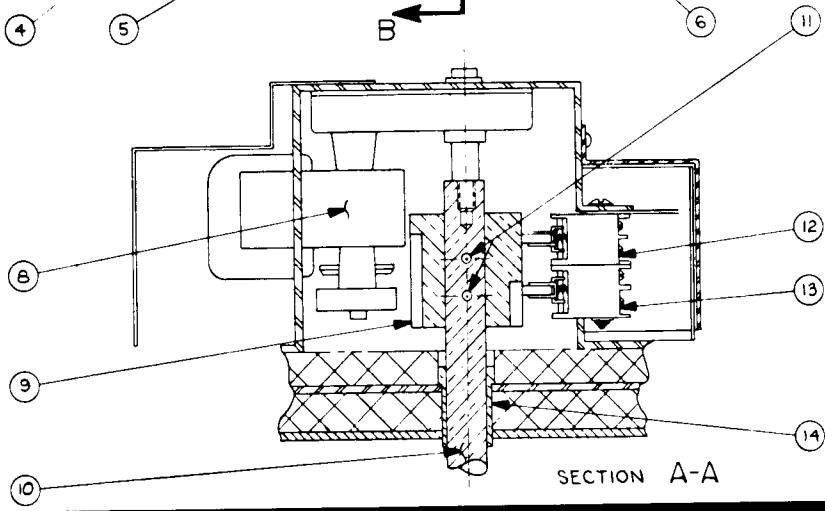

SECTION A-A

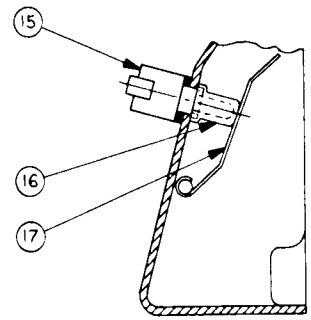

SECTION B-B

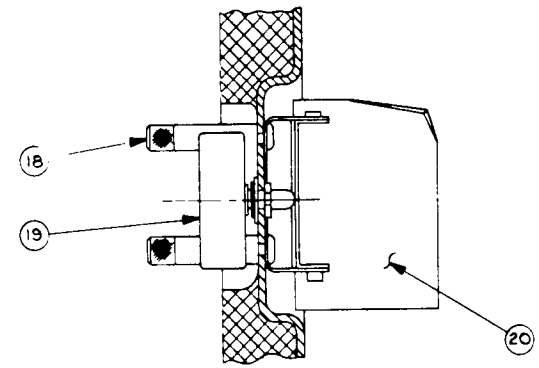

SECTION C-C

FD4 DISPENSER CONTROL SYSTEM

The control system, for the dispenser only, consists of six switches. The terminology and function of these switches are as follows:

DISPENSING SWITCH:

1. Located in the sink area on firewall back of the sink. It is accessible by removing the right side panel.

2. When depressed, usually by a water glass, it actuates the dispensing mechanism.

3. It is a double pole, double throw leaf type snap switch.

SELECTOR SWITCH:

1. Located on the frame back of the front panel. It is accessible by removing the front panel.

2. By its setting it determines if one or two ounces of ice will be dispensed. Or in the continuous setting the dispenser is operated as long as the dispensing switch is held "IN".

3. This is a three position, 30 degree throw rotary switch.

CONTINUOUS CAM SWITCH:

1. This is the single top switch riding on the upper edge of the cam.

2. This is actually a locating switch that will always stop the dispensing mechanism when the shutter is covering the dispensing opening. When the selector switch is set for "continuous" ice, the dispenser operates as long as the dispensing switch is held in. When this dispensing switch is released, the continuous cam switch will hold the circuit on until the shutter is over the discharge spout or opening.

3. This switch is a single pole double throw roller type switch. Only two terminals, the common and normally open, are used.

MAXIMUM 1 OR 2 OZ. CAM SWITCH:

1. This is the top switch of the two cam switches that are mounted together. It rides on the center of the cam.

2. When the selector switch is set at 2 oz. this will control the dispensing drum to one full turn.

3. It is a single pole double throw roller type micro switch.

MINIMUM OR 1 OZ. CAM SWITCH:

1. This is the lower switch of the two cam switches that are mounted together. It rides on the lower edge of the cam.

2. When the selector switch is set at one ounce it will control the dispensing drum to 1/2 turn.

3. This switch is a single pole double throw roller type micro switch.

WATER SWITCH:

1. Located on the front panel.

2. When in an "ON" position, it energizes a water solenoid to dispense water with ice.

3. This is a rocker type single pole single throw switch.

Besides the two flaker control switches covered in the information on this unit, there is a master switch.

This switch is located on the top frame and is a plunger type single pole single throw switch. It is held in an "ON" position by the cabinet top. When top is removed the switch is in an open position.

WIRING DIAGRAM

FD4
115-60-1

CONTROLS SHOWN IN THE ICE MAKING MODE
WITH ALL DISPENSING SYSTEMS IN OPERATION

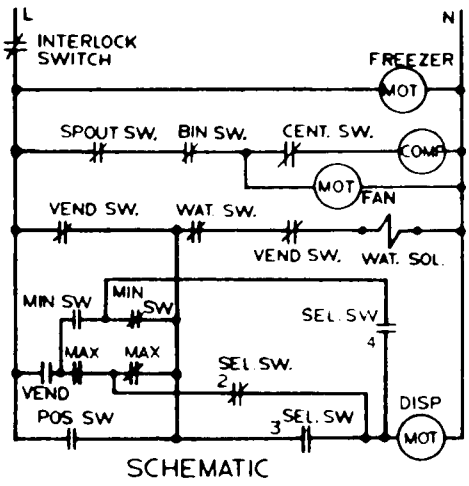

SCHEMATIC

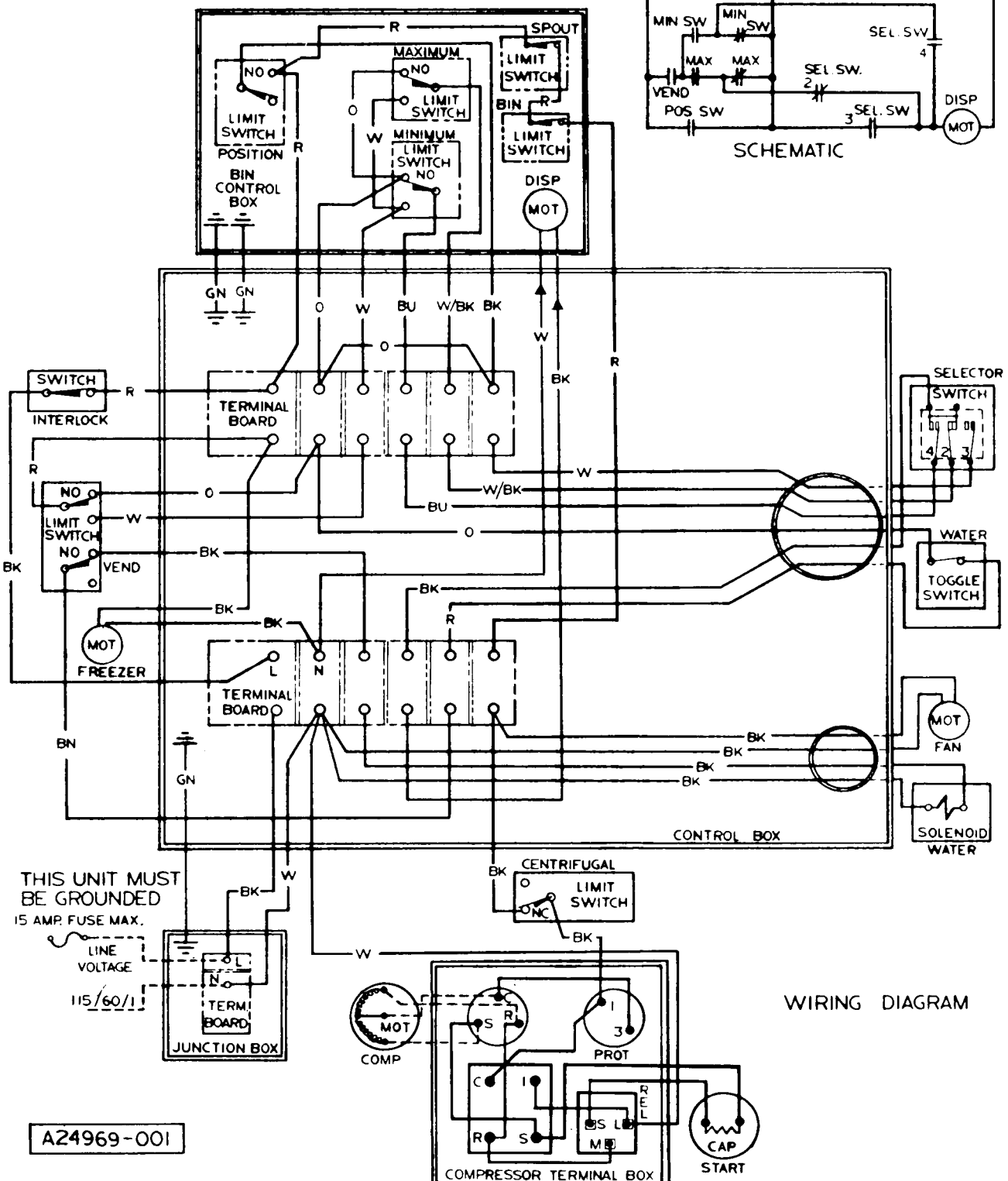

WIRING DIAGRAM

A24969-001

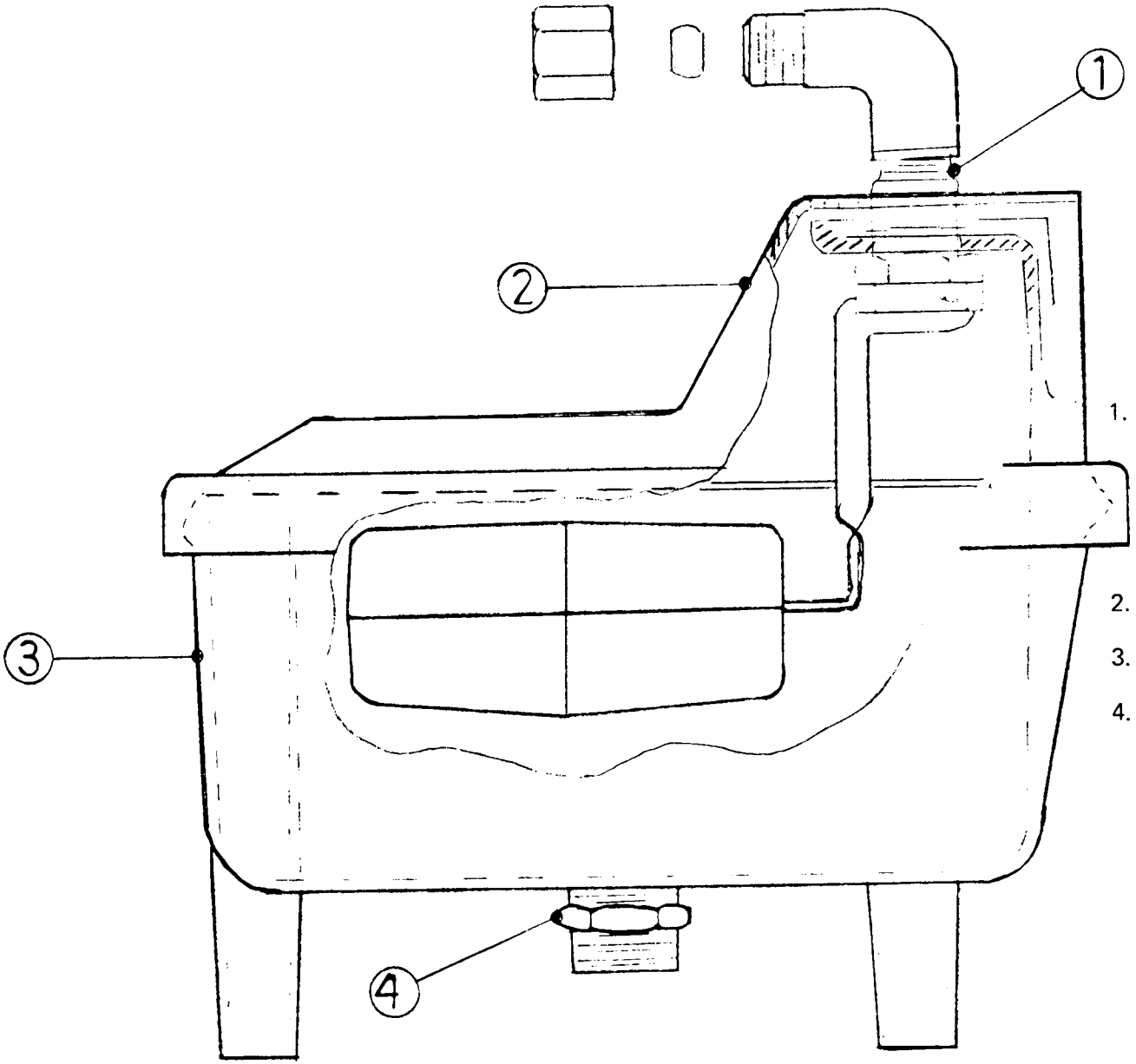

RESERVOIR ASSY. A22348-000

1.	02-1793-02	Valve Assembly consisting of: Inlet Ell Straight Compression nut Compression Sleeve Valve Assembly with Float
2.	02-1793-03	Reservoir Cover
3.	02-1793-04	Reservoir Body
4.	02-1793-05	Reservoir mounting nut 3/8-18

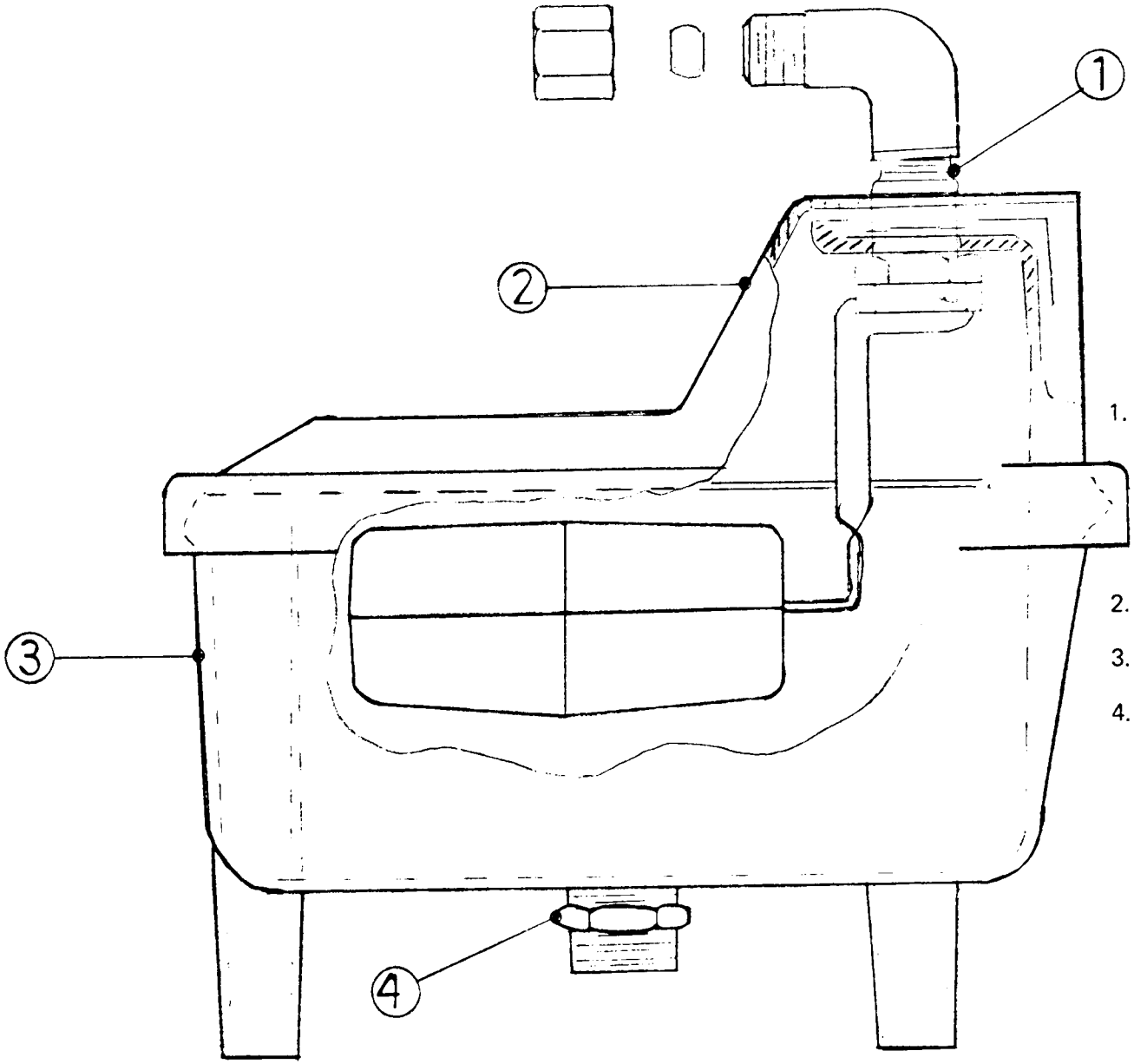

RESERVOIR ASSY. A22348-000

1.	02-1793-02	Valve Assembly consisting of: Inlet Ell Straight Compression nut Compression Sleeve Valve Assembly with Float
2.	02-1793-03	Reservoir Cover
3.	02-1793-04	Reservoir Body
4.	02-1793-05	Reservoir mounting nut 3/8-18

CHASSIS ASSEMBLY
Right Side

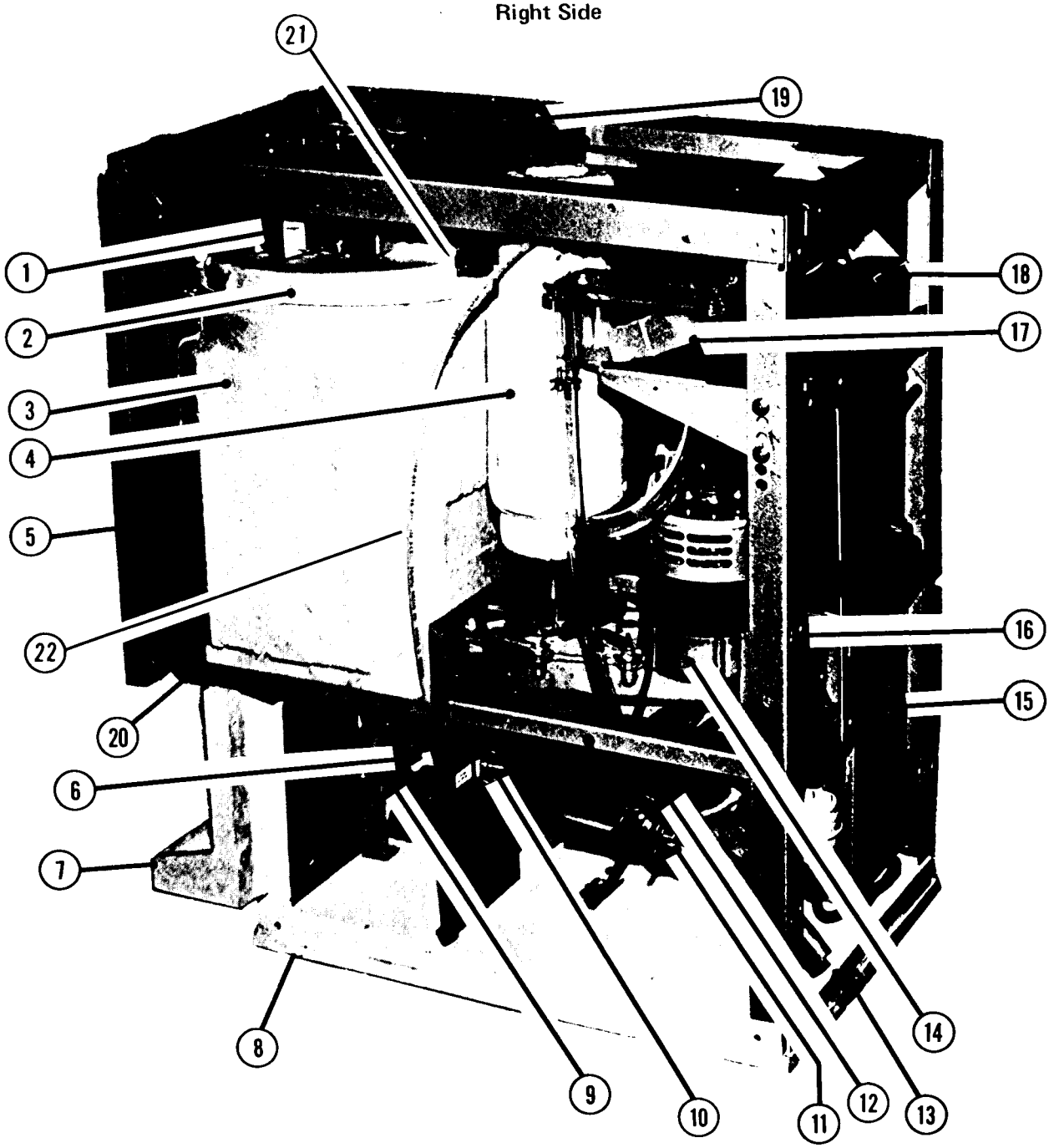

ITEM NO.	PART NO.	DESCRIPTION
1.	12-1610-01	Dispensing Drive Motor
2.	A21215-002	Storage Bin Top
3.	A21485-000	Storage Bin
4.	A21430-020	Freezer Ass'y Complete
5.	15-0507-00	Front Trim
6.	12-1434-04	Water Valve with Solenoid
7.	A21429-000	Sink
8.	13-0566-00	Base Gasket
9.	12-1641-00	Vend Switch
10.		Inlet Water Connection
11.	02-1338-00	Hose Clamp-Bin-Reservoir Drain
12.	18-0422-00	Fan Motor Bracket
	18-0137-01	Fan Blade
	12-1573-01	Fan Motor Cord
	12-1576-01	Fan Motor
13.	13-674-8	7/8" O.D. Drain Tube/feet
14.	A18380-021	Gear Motor Complete
15.	A18752-000	Air Cooled Condenser
16.		Junction Box-Electrical Supply
17.	A22348-000	Water Reservoir Complete
18.	18-2200-01	Compressor 115/60/1
	18-2200-25	Overload
	18-2200-26	Relay
	18-2200-29	Capacitor
19.	12-1570-00	Interlock (Master) Switch
20.	02-1804-00	Plastic Spout Extension
*21.	A16151-000	Freezer To Bin Spout Extension

* Not Shown

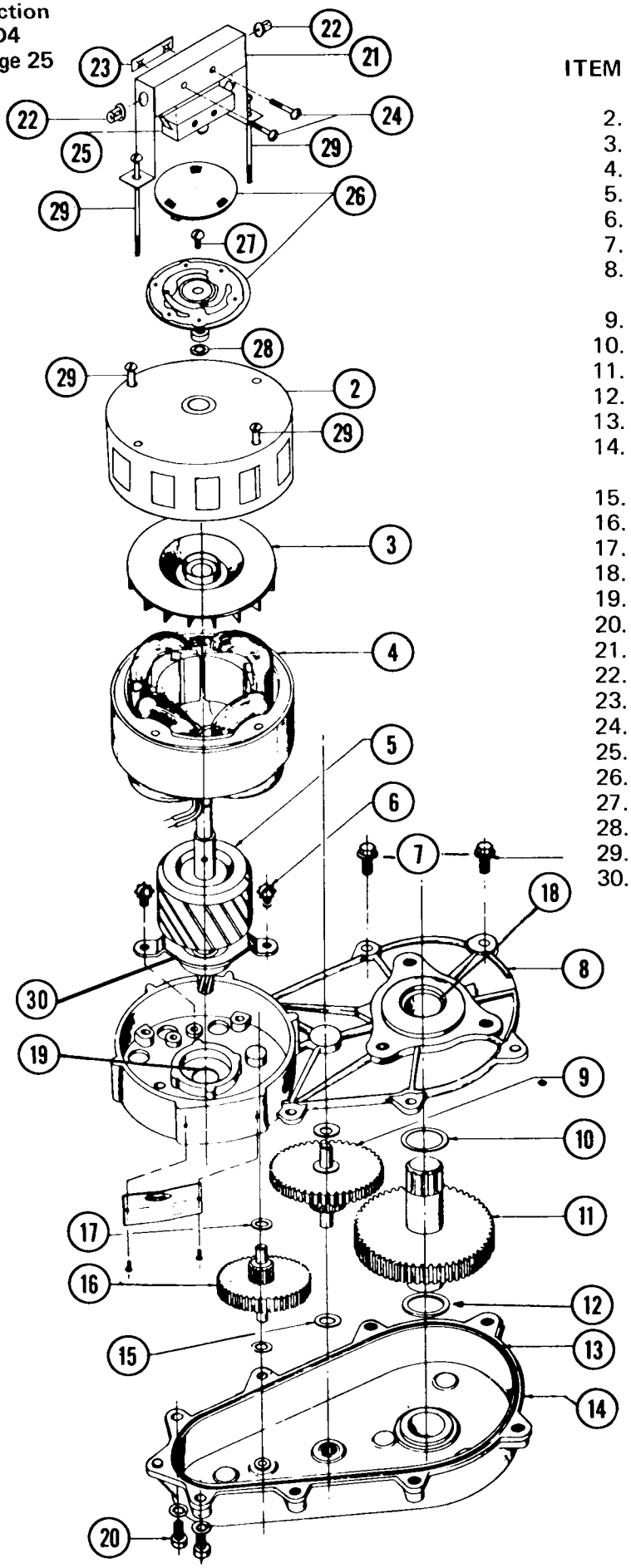

FD4 GEAR MOTOR ASSY

ITEM NO.	PART NO.	DESCRIPTION
2.	A17047-000	Motor Housing
3.	A16915-000	Cooling Fan
4.	12-1400-01	Stator Assy.
5.	A19884-002	Rotor Assy.
6.	03-1245-00	Screws
7.	03-1251-00	Flange Screws
8.	A16920-000	Gear Case Cover (includes Item 14)
9.	02-1521-00	Gear & Pinion
10.	03-1403-05	Washer
11.	02-1513-00	Gear & Output Shaft
12.	03-1408-04	Washer
13.	02-1505-00	"O" Ring
14.	A16919-000	Gear Case Assy. (includes Item 8)
15.	03-1408-06	Washer
16.	02-1520-00	1st Gear & Pinion
17.	03-1408-07	Washer
18.	02-1503-00	Grease Seal
19.	02-1504-00	Grease Seal
20.	03-1252-00	Screw
21.	03-0579-00	Switch Bracket
22.	12-1213-03	Snap Bushings
23.	03-0886-00	Twin Speed Nut
24.	03-1403-10	Screws
25.	12-1644-00	Switch
26.	A19898-000	Synchro Snap Assy.
27.	03-1248-01	Screw
28.	03-1417-06	Washer
29.	03-1403-43	Motor Bolts
30.	A16914-000	Bearing
	A18380-021	Gear Motor Assy Complete

Output Shaft turns at 10 RPM.

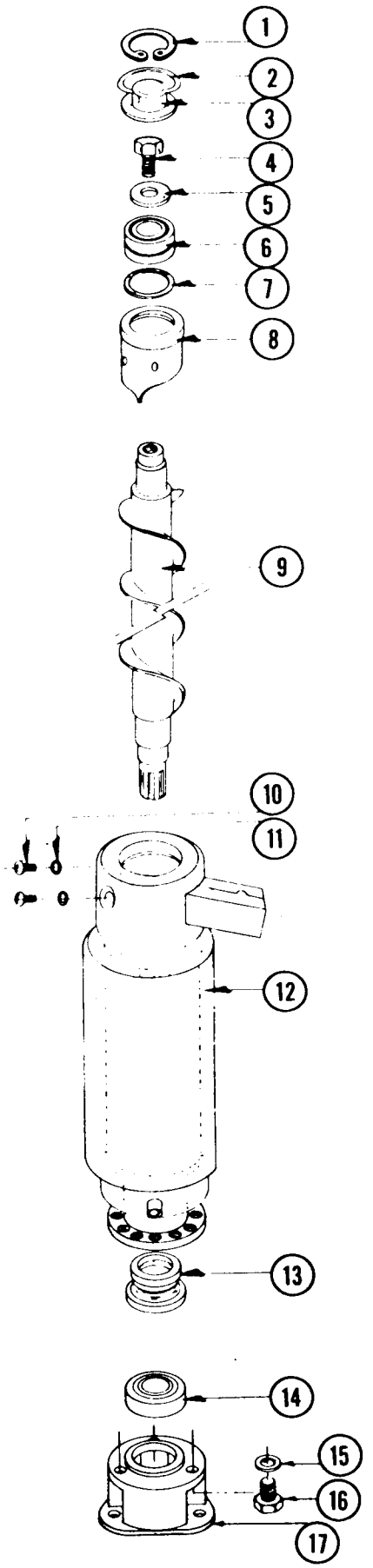

FD4 FREEZER ASSY.

ITEM NO.	PART NO.	DESCRIPTION
1.	03-0553-00	Retainer Ring
2.	A08162-000	Cap Hook
3.	A07701-000	Cap
4.	03-0758-00	Screw
5.	A07699-000	Washer
6.	02-1412-00	Top Bearing-Matched Set
7.	13-0617-16	"O" Ring
8.	A14591-000	Breaker
	A14678-000	Breaker with Bearing
9.	02-1538-00	Auger
10.	03-1403-46	Screw
11.	03-1417-07	Washer
12.	A21431-20	Evaporator Shell (includes suction line, etc)
13.	A18945-000	Water Seal
14.	02-0417-00	Bearing, Lower
15.	03-1408-03	Washer, (3 req'd)
16.	03-1405-14	Cap Screw, (3 req'd)
17.	A23073-000	Adapter-Amaloy
18.	150575-01	Spline Drive Coupling
19.	02-1347-00	Shaft Drip Shield-Rubber
	A21430-20	Freezer Complete with Suction Line

SERVICE ANALYSIS
ICE MAKER SECTION FD4

SYMPTOM	POSSIBLE CAUSE	CORRECTION
Water Leaks.	Defective water seal.	Replace
	Gravity feed line leaking.	Check hose clamps.
	Water level in reservoir too high.	Adjust to 1/4 inch below overflow pipe.
Excessive noise or chattering	Mineral or scale deposit on auger and inner freezing chamber walls.	Remove and manually polish auger, polish inner chamber walls of freezer barrel. For lighter concentration use Scotsman Ice Machine Cleaner periodically.
	Low suction.	Add gas to raise suction pressure.
	Intermittent water supply.	Check and clean water strainer. Check gravity feed line for air lock. Remove air lock.
	Water level in reservoir too low.	Adjust to 1/4 inch below overflow pipe.
	Gear reducer loose on frame.	Tighten bolts.
	Motor compressor not solid on rubber mounts.	Repair or replace rubber mounts.
Gearmotor noise.	Low on oil.	Remove case cover to check for proper oil level. Top of gears should be covered. Use PenZoil Lub. -302-TTM or similar.
Unit will not run.	Blown fuse.	Replace fuse and check for cause of blown fuse.
	Loose electrical connection.	Check wiring.
	Inoperative master switch.	Replace switch.

SERVICE ANALYSIS
ICE MAKER SECTION FD4

SYMPTOM	POSSIBLE CAUSE	CORRECTION
Compressor cycles intermittently.	Low voltage.	Check for overloading.
	Dirty condenser.	Clean.
	Air circulation blocked.	Move unit to correct.
	Inoperative condenser motor.	Replace.
	Non-condensable gases in system.	Purge off.
Making wet ice.	Surrounding air temperature.	Correct or move unit.
	Under or over-charge of refrigerant.	Recharge with the proper amount.
	High water level in water reservoir.	Lower to 1/2 inch below overflow pipe.
	Faulty compressor.	Replace or repair.
Low ice production.	Loss of refrigerant, under or over-charge of refrigerant.	Check and recharge with proper amount of refrigerant.
	Dirty or plugged condenser.	Clean condenser.
	Low water level in water reservoir.	Adjust to 1/2 inch below overflow pipe.
	Partial restriction in capillary tube or drier.	Moisture in system. Overcharge of oil in system. Remove charge and drier. Replace and recharge system.
	Inlet water strainer partially plugged.	Remove screen and clean.
	Corroded or stained worm shaft due to water condition.	Remove worm shaft and clean.
Machine runs but makes no ice	Loss or under-charge of refrigerant.	Check for leaks and recharge.
	Water not entering freezing chamber.	Plugged strainer or supply line. Check and clean. Air lock in gravity feed line. Check and remove air lock.
	Moisture in system.	Check and remove charge and drier. Replace and recharge.
	Water seal leaking.	Replace seal.
	Water turned off while unit was operating.	Inlet water line froze shut. Unit must be turned off and defrosted.

SERVICE ANALYSIS
ICE MAKER SECTION FD4

SYMPTOM	POSSIBLE CAUSE	CORRECTION
Will not dispense.	Power off.	Check line fuses and plug.
	Motor overload open.	See correction under motor overload.
	Cam switches improperly set.	Adjust per manual.
	Master switch open.	Cabinet cover must be on tight to keep switch on.
	Spout jammed with ice. Unit not level or holding glasses against spout.	Remove ice and clear ice under removable bottom. Check reservoir possibly too high.
	Wires off dispensing switch.	Check switch terminals.
Motor hot—Overload Open.	Ice under removeable bottom.	Remove ice.
	Wing nuts on cover turned down to tight.	Keep wing nuts only slightly snug—never tight.
	Shutter or rotating bin does not turn free.	Check and repair any drag.
	Ice too hard.	Raise freezer water level and check refrigerant charge.
Dispenser does not stop.	Brake on drive motor not working properly.	Brake must be free and stop the motor before 5 revolutions after the dispensing switch is released
	Cam switches out of adjustment.	Check switches and set per manual.
Water will not dispense.	Solenoid defective.	Replace.
	Lines closed up.	Clean.
Water runs too slow.	Water line too small.	Increase size.

MAINTENANCE INSTRUCTIONS – FLAKER SECTION

THE FOLLOWING MAINTENANCE SHOULD BE SCHEDULED THREE TIMES PER YEAR.

1. Check and clean water strainers and float valve. Depress float valve to insure full stream of water.

2. Check water level and machine level. Keep water level below overflow, but as high as possible and still not run out of spout opening with machine off. Water should come out of spout with ice at all times. Adjust as required.

3. Clean reservoir and interior of freezer assembly using SCOTSMAN Ice Machine Cleaner. See cleaning instructions on next page.

   A. If machine has been cleaned regularly and no problems such as dry ice or chatter are noticed, clean by making ice from solution of 4 oz. of cleaner to 2 quarts of water.

   B. If heavy mineral deposits on auger and walls, or sediment at inlet to freezer are encountered, clean by pouring strong solution 1/2 acid – 1/2 water into reservoir and operate drive motor only for agitation. Allow 1/2 hour or longer as required. Drain by disconnecting tygon at water inlet to freezer.

NOTE: Cleaning requirements vary according to local water conditions. Visual inspection of the auger before and after cleaning will indicate best procedure to be followed in local area.

4. Check top bearing of freezing tube. Remove retainer ring around edge of stamped brass cap, pull cap off. If moisture is around bearing, wipe up and remove grease. Add new grease. Use Beacon No. 325 or equal.

5. Clean air cooled condenser. Always shut off machine when cleaning.

6. Oil condenser fan motor when possible.
7. Check for refrigerant leaks and proper frost line. Should frost out of accumulator at least one-half way to compressor, and in some areas, back to service valve.

8. Check for water leaks. Tighten drain line connections. Run water down drain line to make sure it is open.

9. Check quality of ice. Ice should be wet when formed, but will cure rapidly to normal hardness in the bin.

CLEANING INSTRUCTIONS FOR SCOTSMAN ICE MACHINE MODEL FD4

1. Set selector switch to continuous ice and vend until bin is empty.
2. Remove top cabinet cover.
3. Remove storage bin cover and spout extension.
4. Remove both ice control flippers from storage bin cover. Note positions of these parts, if parts re-assembled incorrectly damage to the machine may result.
5. Remove inner bin and bin bottom.
6. Position shutter over rubber ice spout and replace bin cover.
7. Turn OFF water supply or block float. Drain reservoir by disconnecting tube between reservoir and freezer. Afterdraining, reconnect tubing.
8. Block main switch ON and pour cleaning solution into reservoir. (Use 4 oz. of Scotsman cleaner and 1 qt. of hot water). Do not fill above overflow tube. Do not allow unit to operate with less than 1" of solution in reservoir.
9. While waiting for Step No. 8 and/or No. 11 to complete, remove drain grate and ice vend lever from sink.Wash and sanitize these parts and parts removed from storage bin in accordance with local health department regulations. (Step No. 8 may complete before Step No. 9).
10. Remove block from main switch. Wash and rinse reservoir, turn water on or remove float block.
11. Block main switch ON. Let unit run for at least 15 minutes to flush out any cleaning fluid. Check ice for acid taste—run until ice tastes sweet.
12. Remove block from main switch and remove bin cover. Add hot water to ice in bin, using this melt water thoroughly wash and rinse the underside of the storage bin top, shutter, rubber ice spout and all surfaces within the storage bin.
13. Using solution from Step No. 9, thoroughly wash and rinse sink.
14. Re-assemble storage bin and sink parts.
15. Replace cabinet cover. Unit is ready for normal operation.

ACCESSORY ITEM

WALL MOUNT KIT
Part No. KWB1

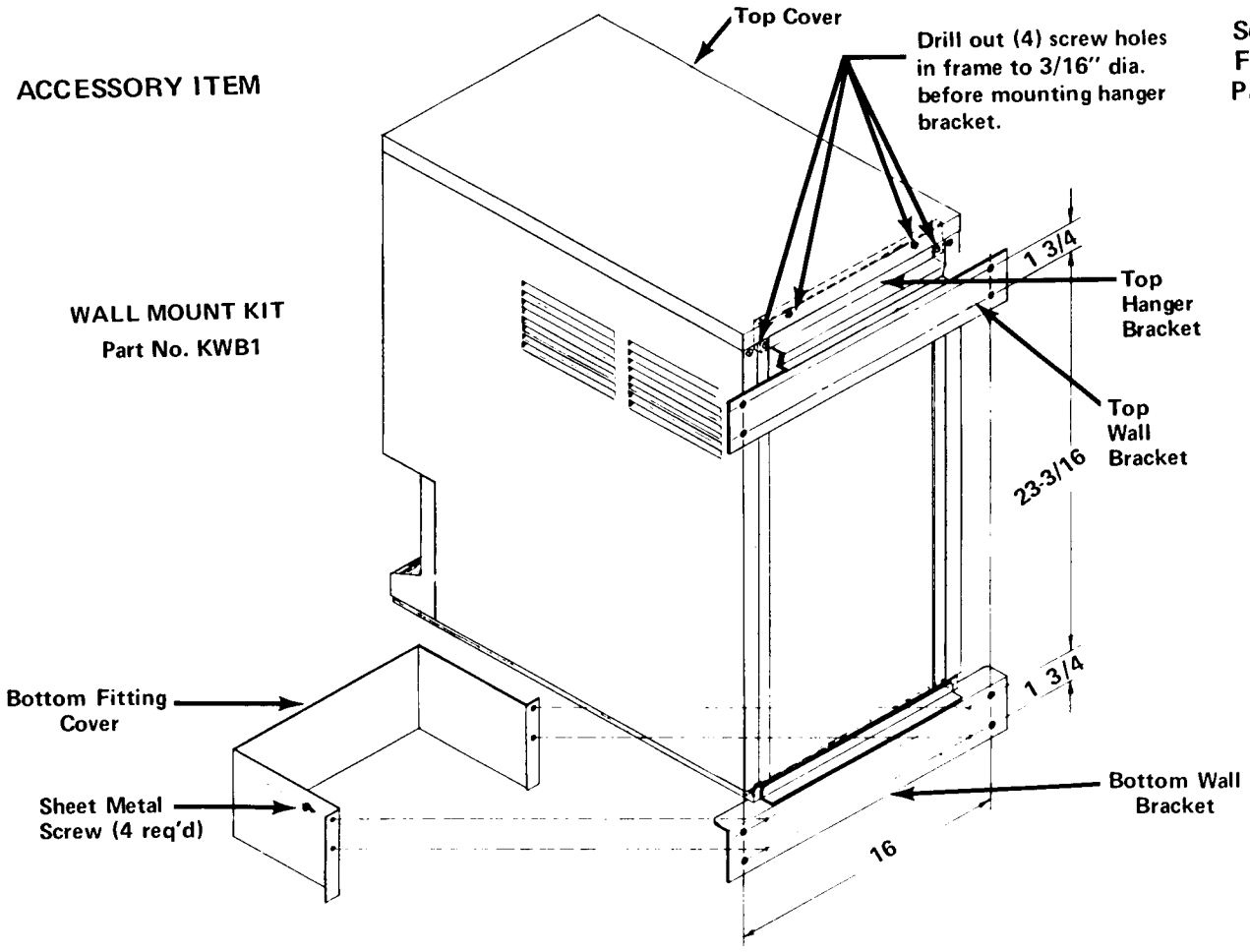

THE KIT

1. Top Case Hanger Bracket
   Attach to inside of frame of the dispenser.
2. Top Wall Bracket
   Mounts to wall and engages top case hanger bracket to support dispenser.
3. Bottom Wall Bracket
   Mounts to wall and supports bottom of dispenser.
4. Bottom Fittings Cover
   Fastened to bottom wall bracket to conceal electrical and plumbing fittings from view.

TOP HANGER BRACKET:

1. Remove back cover and save four screws for mounting bracket.
2. Remove top cover.
3. Drill out four holes of weld nuts in back of frame with 3/16 dia. drill as indicated in illustration.
4. Place bracket inside of frame and fasten solidly with four screws, saved from Step 1, through drilled out holes.

TOP WALL BRACKET:

1. Position bracket in desired location.
2. Secure to wall with fasteners of any suitable type for that particular wall through the four holes in bracket. These fasteners or lag screws are not furnished. Be sure to secure bracket rigidly.

BOTTOM WALL BRACKET:

1. Hang the dispenser on top wall bracket.
2. Position bottom bracket so that moulding on dispenser base bottoms in channel of the bracket.
3. Secure bracket to wall through the four large holes with suitable fasteners. Fasteners not furnished.

BOTTOM FITTINGS COVER:

1. Connect water inlet, bin drain and sink drain of dispenser through bottom of case. Also run electrical cable in from bottom.
2. Secure fitting cover to bottom wall bracket with the four sheet metal screws provided in this kit.

GENERAL INFORMATION:

1. The dispenser is provided with an interlock device.
2. The interlock must be closed before the dispenser will function.
3. The interlock is closed by the top cover of the dispenser. When the cover is tightly in place.
4. To place the cover in proper position, it may be necessary to bend out the back lip of the cover at the screw holes with pliers. Caution! There must be enough friction between the screw heads, (which secure the hanger bracket) and the top cover to hold the cover tightly down on the case and interlock.

SINK EXTENSION KITS
KDE1 Painted
KDE1-SS Stainless Steel

A conversion for the FD4 dispenser to increase the distance between the discharge spout and the sink to twelve inches and to provide a faster sink drainage.

KIT:

A19720-000	Sink and Drain Assembly (4) 3-1403-29 Screws
02-1828-00	Splash Plate (6) 3-1403-7 Screws
02-1701-00	Drain Grill (6) 3-1406-1 Nuts
A21538-000	Base (2) 3-1403-6 Screws
A21538-001	Base-Stainless Steel

KIT:

FEATURES:

By the use of the splash plate, only, and the wall bracket A19090 (another accessory), the FD4 model can be mounted on a wall over an existing sink.

As a counter-top model, the dispenser is mounted on the six-inch base, A21538. The splash plate, sink and grill replace the conventional sink on the models.

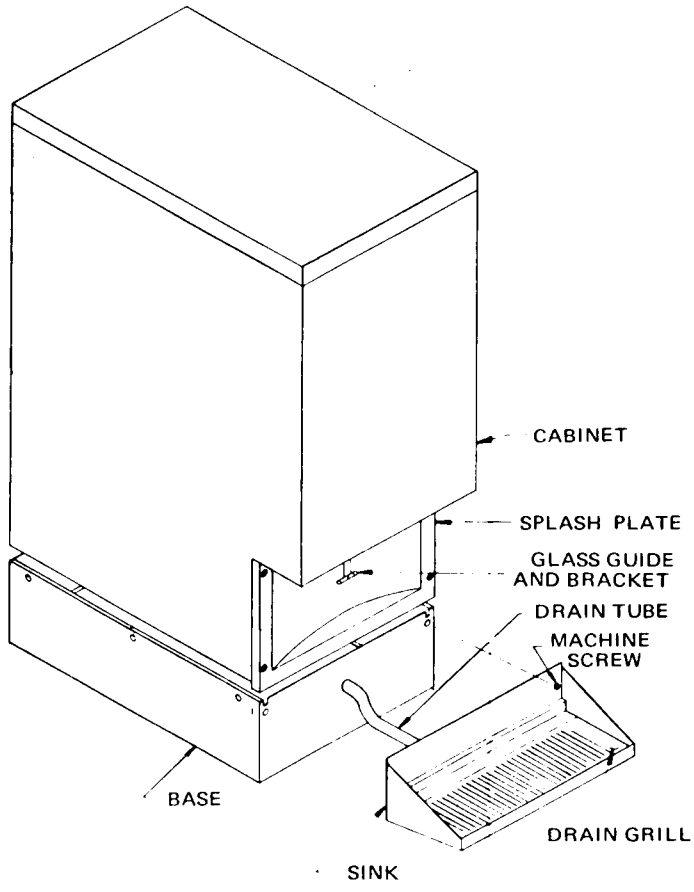

INSTALLATION:

1. Remove conventional sink from cabinet.
2. Remove glass actuator arm and holder from sink.
3. Remove drain tube from original sink.
4. Install drain tube to replacement sink.
5. Remove rubber seal from base of the dispenser.
6. Mount the dispenser on base, A21538. The flange of the dispenser base is to fit in slots provided in the base extension. Secure with the 3 screws on each side of base.
7. Mount sink in place and secure with two machine screws.
8. Install splash plate to cabinet with four machine screws, furnished. The splash plate fits over top of sink.
9. Install glass actuator arm and holder to splash plate. The plunger on the arm must operate freely through hole in splash plate.
10. Install grate.

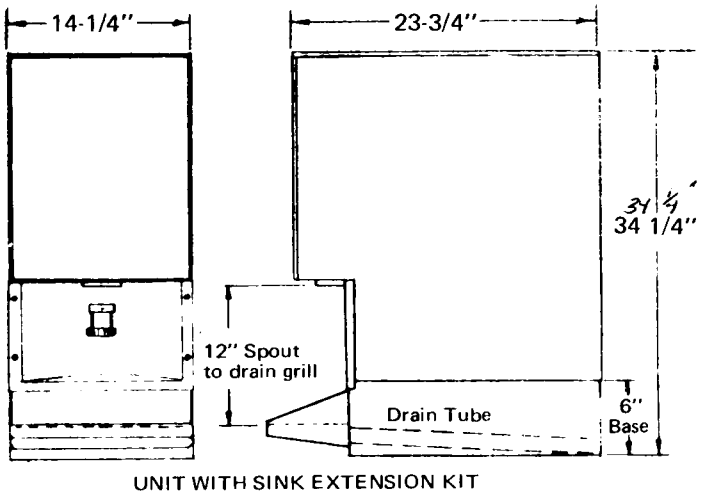

UNIT WITH SINK EXTENSION KIT

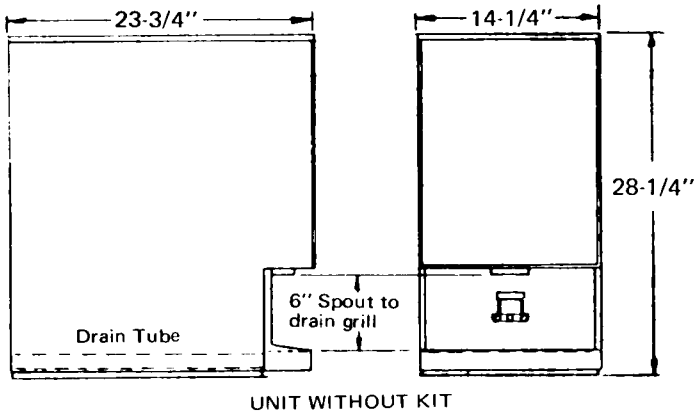

UNIT WITHOUT KIT

FD470

This service manual provides the specifications and the step-by-step procedures for the installation, start up and operation of the Scotsman FD470 Icemaker-Dispenser.

The FD470 is a flake icemaker and ice dispenser in one cabinet.

Flaked ice is manufactured in a refrigerated cylinder; it then fills up a plastic storage bin. From the bin the ice is vended into the users container. When the ice level drops, the icemaker portion of the machine restarts to refill the bin.

The purpose of the machine is to fill water or drink glasses with ice or ice and water, by pushing a lever with the glass.

Pressing the glass filler lever causes the ice dispensing mechanism to vend ice through the spout into the glass. Dispensing will continue until the glass is full, or, if filling multiple glasses, the bin is empty.

The base of the machine contains a sealing gasket which will seal the machine tight to the table top or counter top. This is a requirement for counter top installations.

TABLE OF CONTENTS

	Page
Specifications	2
Location & Leveling	3
For The Installer	
Sink Kit	4
Wall Mount Kit	5
For The Electrician	6
For The Plumber	7
Final Check List	8
Initial Start Up	9
How It Works	10
Electrical Operation	11
Component Description	12
Cleaning & Sanitizing	17
Maintenance	18
Service Diagnosis	20
Repair	23

A Wiring Diagram And The Parts List Are Located In The Center Of This Manual, Printed On Yellow Paper.

THIS PAGE
INTENTIONALLY
LEFT BLANK

FD470

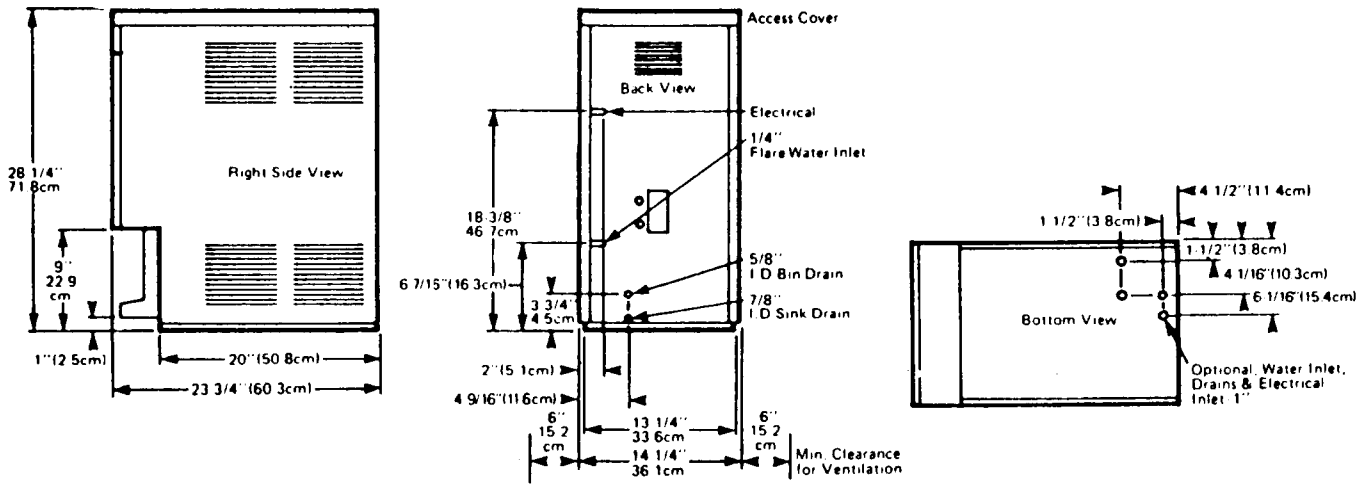

SPECIFICATIONS

Model Number	H" x W" x D"	Bin Cap.	Ice Prod. Cap. 24 Hrs.	Cond. Type	Basic Electrical	Comp. H. P.	Min. Circuit Ampacity+	Max. Fuse Size
FD470AE-1B	28 ¼ x 14 ¼ x 23 ¾	12	470 lbs.	Air	115/60/1	1/2	15.9	20

+ Use this value to determine minimum wire size as per National Electric Code standards.

Scotsman Ice Systems are designed and manufactured with the highest regard for safety and performance. They meet or exceed the standards of U.L., N.S.F., and C.S.A.

Scotsman assumes no liability or responsibility of any kind for products manufactured by Scotsman that have been altered in any way, including the use of any parts and/or other components not specifically approved by Scotsman.

Scotsman reserves the right to make design changes and/or improvements at any time. Specifications and designs are subject to change without notice.

IMPORTANT OPERATING REQUIREMENTS

	MINIMUM	MAXIMUM
Air Temperatures	50°F (10.0°C)	100°F (38°C)
Water Temperatures	40°F (4.4°C)	100°F (38°C)
Water Pressures	20 lbs. gauge	120 lbs. gauge
Electrical Voltage Variation Voltage rating specified on nameplate	-10%	+ 10%

Extended periods of operation exceeding these limitations constitutes misuse under the terms of Scotsman Manufacturer's Limited Warranty, resulting in a loss of warranty coverage.

SEE NAMEPLATE for electrical and refrigeration specifications. Locate the NAMEPLATE on the left side shelf forward of the freezer and drivemotor assembly.

Refrigerant.....R12

SPKFD3C/FD4C STAINLESS STEEL PANEL KIT: Contains stainless steel sides, back, top and front to replace enameled cabinet. Not factory installed.

DRAIN EXTENSION KIT

Permits convenient access to flake ice and water for larger than normal containers, such as pitchers and tall glasses. Adds 5-1/2" to unit height.
KDE1 Enamel finish
KDE1SS Stainless Steel finish

KWB1 WALL MOUNTING KIT

Wall mounting brackets are made of strong tempered steel. Wall mounted units are easy to install where adequate counter space is not available or above an existing sink. Holes are provided at the bottom of the icemaker for water and electrical connections.

FD470 LOCATION AND LEVELING

////////////////////////CAUTION////////////////////////////////
This icemaker is NOT designed for outdoor installations, nor for any area where the air temperature is below 50^0 F. or above 100^0F.

Inlet water temperatures must not drop below 40^0 F. or go above 100^0 F.

Extended periods of operation exceeding these limitations, or any outdoor installation is considered MISUSE under the terms of the warranty, resulting in the warranty being VOID.
//

Service Access

Adequate space is required for all utility connections, located at the rear or bottom of the cabinet.

When the wall mounting kit is used to hang the FD470 from the wall, utility connections may be made though the base.

A six inch minimum clearance at both side panels for air circulation. The icemaker discharges warm air from the left bottom louvers.

If wall mounted, allow access above the unit for cleaning and sanitation access.

When installing on the counter, avoid sliding on the sealing gasket. Check to be sure the unit is level.

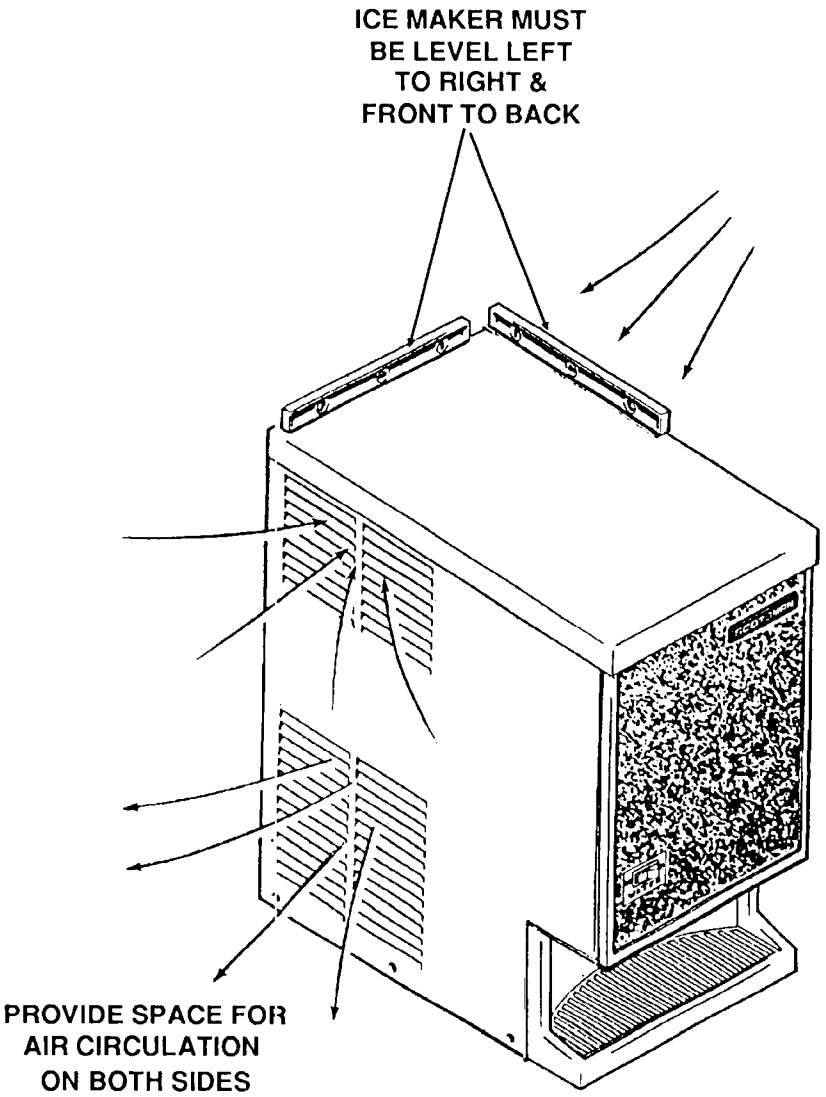

SINK EXTENSION KITS

KDE1 — Painted Finish
KDE1-SS — Stainless Steel

An option for the FD4 dispenser to increase the distance between the discharge spout and the sink to twelve inches and to provide a faster sink drainage.

FEATURES:

With the use of the KWB1 Wall Mount Kit and the splash plate, the FD4 model can be mounted on a wall over an existing sink.

As a counter-top model, the dispenser is mounted on the six-inch base. The splash plate, sink and grill replace the standard sink on the FD4 icemaker dispenser.

KIT CONTENTS:

02-1699-00	Sink Assembly
03-1403-06	Screws (2)
02-1828-00	Splash Plate
03-1403-29	Screws (4)
02-1701-00	Drain Grill
A21538-000	Base, Enamel (W/KDE1)
A21538-001	Base, Stainless Steel (W/KDE1-SS)
03-1403-07	Screws (6)
03-1406-01	Nuts (6)
17-0905-00	Decal
13-0617-11	O-ring
02-2809-01	Drain Top
A18331-000	Drain Fitting

INSTALLATION:

1. Remove conventional sink from cabinet.
2. Remove glass actuator arm and holder from sink.
3. Remove drain tube from original sink.
4. Install drain tube to replacement sink.
5. Remove rubber seal from base of the dispenser.
6. Mount the dispenser on the base. The flange of the dispenser base fits in slots provided in the base extension. Secure with the 3 screws on the front side panel.
7. Mount sink in place and secure with two machine screws.
8. Install splash plate to cabinet with four machine screws, furnished. The splash plate fits over top of sink.
9. Install glass actuator arm and holder to splash plate. The plunger on the arm must operate freely through hole in splash plate.
10. Install grill.

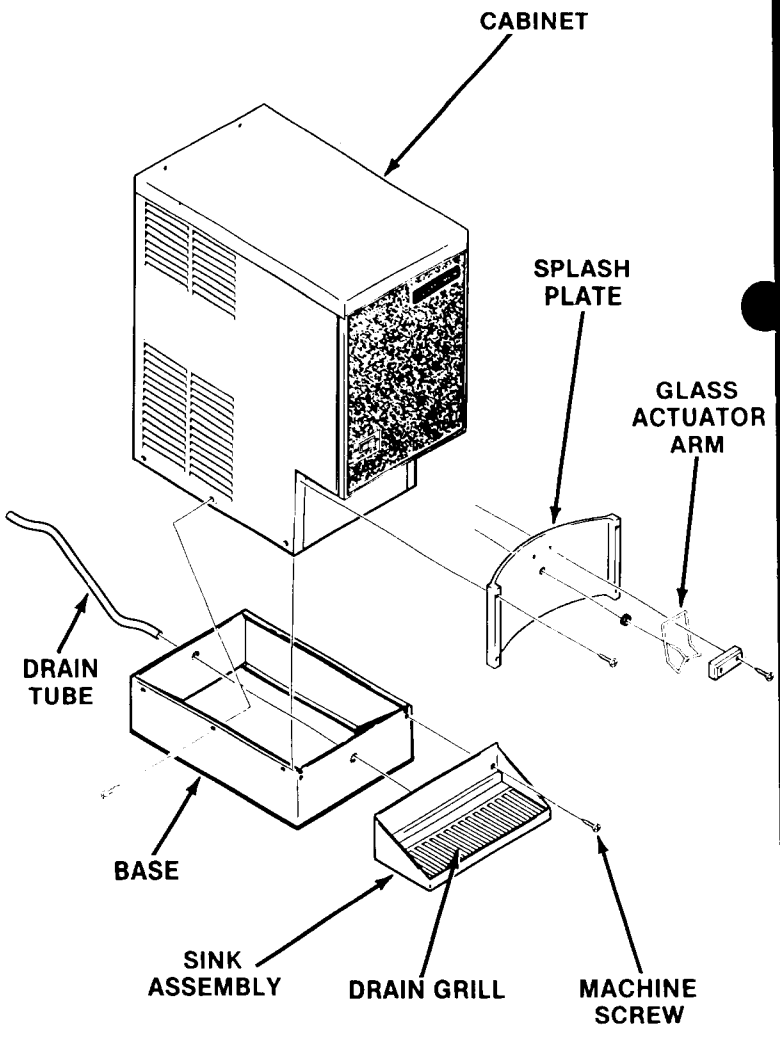

KWB1 WALL MOUNT KIT COMPONENT DESCRIPTION

KIT CONTENTS

1. **Top Case Hanger Bracket.** Attach to inside of frame of the dispenser.
2. **Top Wall Bracket.** Mounts to wall and engages top case hanger bracket to support dispenser.
3. **Bottom Wall Bracket.** Mounts to wall and supports bottom of dispenser.
4. **Bottom Fittings Cover.** Fastened to bottom wall bracket to conceal electrical and plumbing fittings from view.

INSTALLATION, KWB1 WALL MOUNT KIT

TOP HANGER BRACKET:

1. Remove back cover and save four screws for mounting bracket.
2. Remove top cover.
3. Drill out threads of weld nuts in back of frame with 3/16 dia. drill as indicated in illustration.
4. Place top hanger bracket on the inside of frame and fasten solidly with four screws, saved from Step 1, through drilled out holes.

TOP WALL BRACKET:

1. Position bracket in desired location.
2. Secure to wall with fasteners of any suitable type for that particular wall through the four holes in bracket. These fasteners or lag screws are not furnished. Be sure to secure bracket rigidly.

BOTTOM WALL BRACKET:

1. Hang the dispenser on top wall bracket.
2. Position bottom bracket so that moulding on dispenser base bottoms in channel of the bracket.
3. Secure bracket to wall through the four large holes with suitable fasteners. Fasteners not furnished.

BOTTOM FITTING COVER:

1. Connect water inlet, bin drain and sink drain of dispenser through bottom of case. Also run electrical cable in from bottom.
2. Secure bottom fitting cover to bottom wall bracket with the four sheet metal screws provided in this kit.

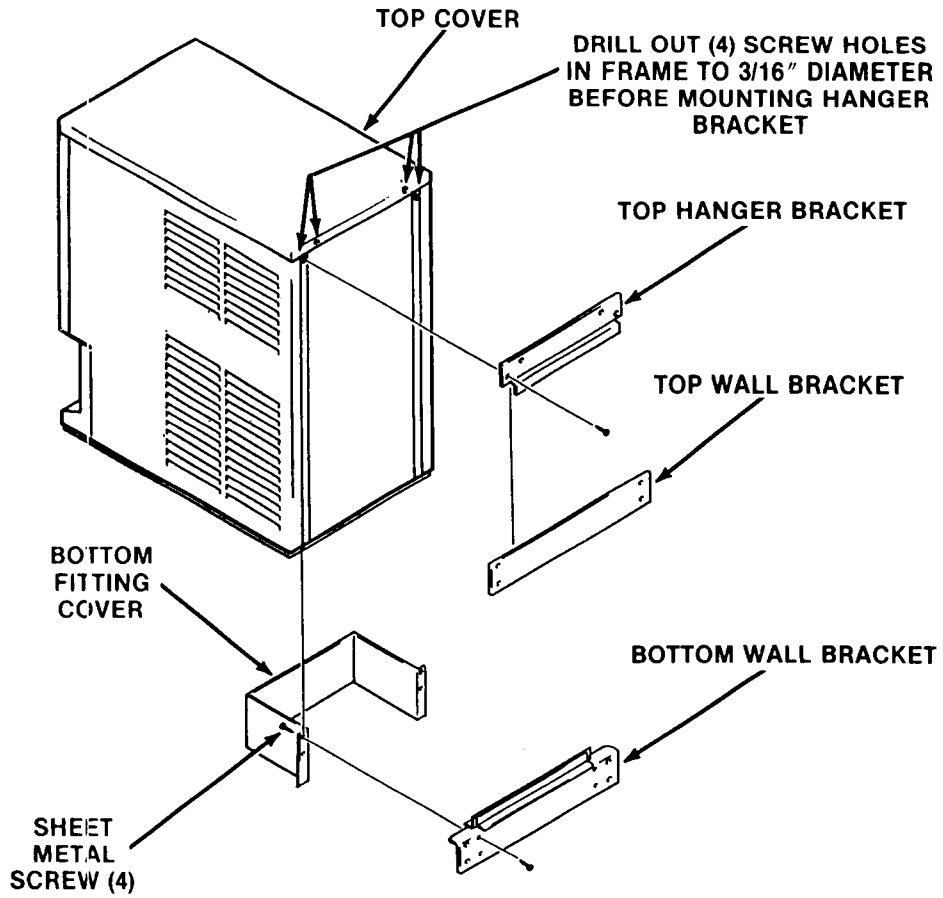

ELECTRICAL CONNECTIONS

SEE NAMEPLATE for current requirements to determine wire size to be used for electrical hookup. The FD4 Icemaker requires a solid earth ground wire. See wiring diagram.

Be certain the icemaker is connected to its own electrical circuit and individually fused. The maximum allowable voltage variation should not exceed ten percent of the nameplate rating, even under starting conditions. Low voltages can cause erratic operation and may be responsible for serious damage to the compressor and motor windings.

All external wiring should conform to the national, state and local electrical codes and the services of a licensed electrician may be required.

Knockouts in cabinets are made for cord connectors.

Remove screws and remove back and right side panels to gain access for service connections.

Make electrical connections in the junction box located inside the back of the icemaker.

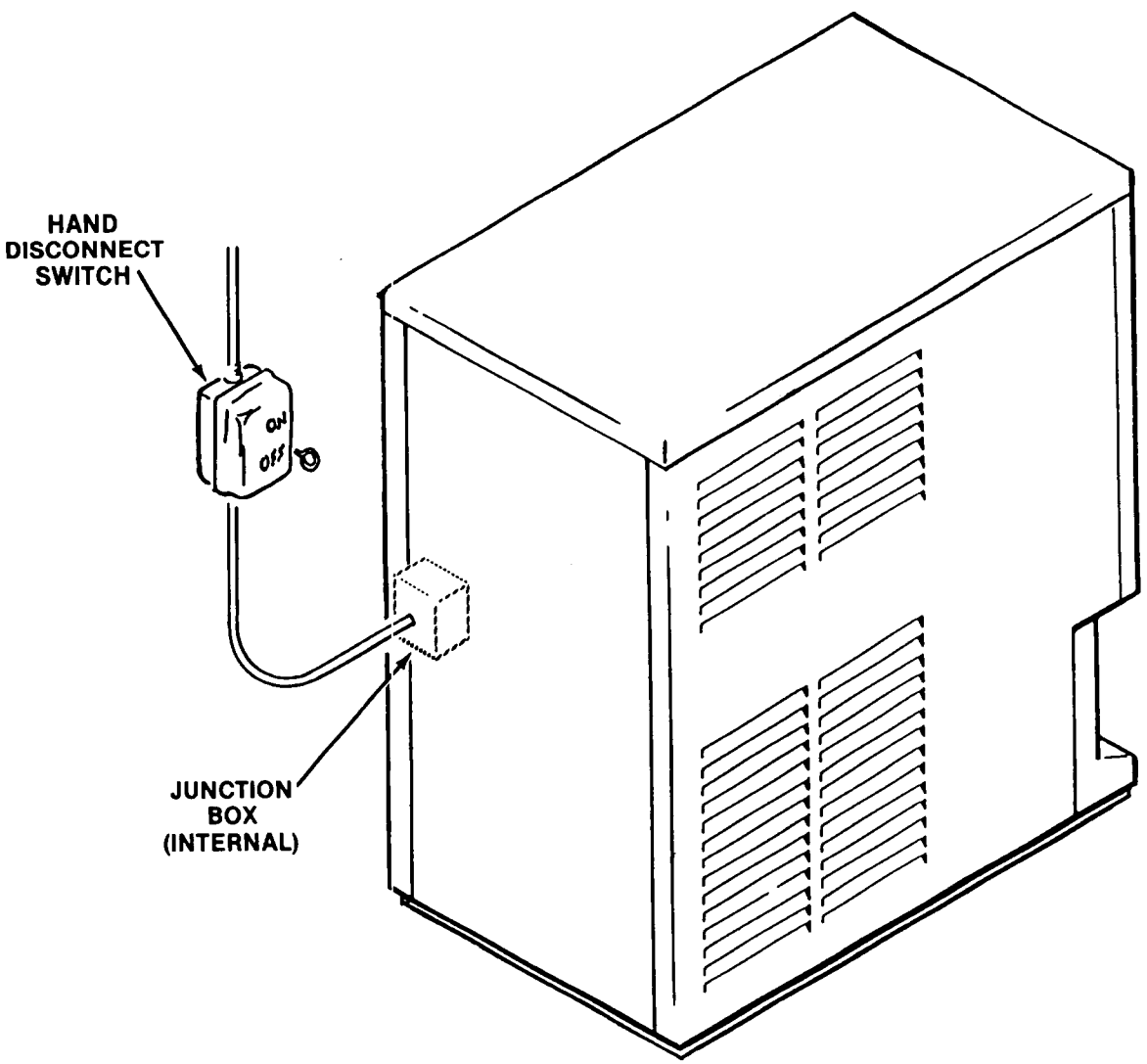

FD470 FOR THE PLUMBER

WATER SUPPLY

Remove screws and remove back and right side panels to gain access for service connections. The recommended potable water supply line is a 3/8 inch O.D. copper tubing with a minimum pressure of 20 psig.

The icemaker is equipped with a low water pressure safety device which in the event of low water pressure, will automatically stop the icemaker to prevent damage. The icemaker will automatically restart with increased water pressure.

A 1/4-inch S.A.E. flare fitting is provided internally. Route the inlet water line through the cabinet back panel to the flare fitting provided for potable inlet water connection. Connect the cold potable water supply line with standard plumbing fittings, with a shut-off valve installed in an accessible place between the water supply and the cabinet.

It is recommended a strainer or water purification system be installed between the shut-off valve and the icemaker connection.

DRAIN CONNECTIONS

All drains are gravity type and must be a minimum of 1/4-inch fall per foot on horizontal runs. Drainage must be installed to conform with the local plumbing codes. Install a vertical open vent on drain line to insure good venting. The drain receptacle should be an open, trapped or vented construction.

The FD4 icemaker has two drains. The reservoir overflow, a 5/8-inch I.D. tube and the sink drain, a 7/8-inch I.D. tube. The two drain tubes may be routed through the holes provided in the back panel or through the holes provided in the base.

Pull each drain tube through the back panel or the base and connect using standard plumbing fittings and practices.

In some cases, a plumbing permit and services of a licensed plumber will be required.

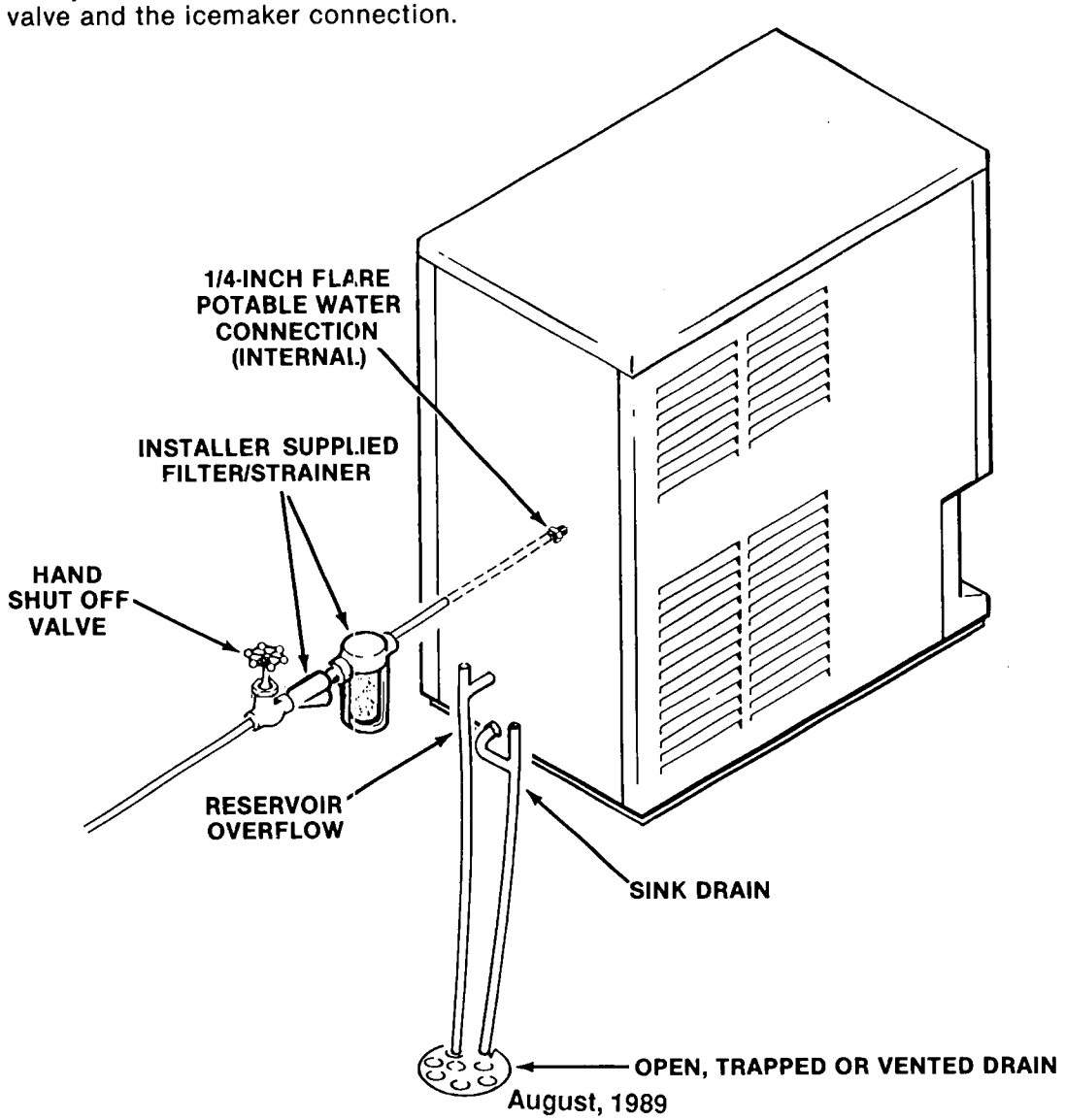

FINAL CHECK LIST

1. Is the cabinet in a room where ambient temperatures are within the minimum and maximum temperatures specified?
2. Is there at least six inches clearance at both sides of the cabinet for proper air circulation?
3. Has water supply pressure been checked to insure a minimum of 20 PSIG and a maximum of 120 PSIG operating pressure?
4. Is the cabinet level?
5. Have all electrical and piping connections been made?
6. Is the water supply line shut-off valve installed and electrical wiring properly connected?
7. Has the shipping block been removed from under the compressor. Have the compressor hold-down nuts been checked to be sure the compressor is snug on the mounting pads?
8. Check all refrigerant lines and conduit lines, to guard against vibration or rubbing and possible failure.
9. Have the bin and cabinet been wiped clean?
10. Has the Manufacturer's Registration Card been properly filled out? Check for correct model and serial numbers from Serial nameplate, then mail the completed card to the SCOTSMAN factory.
11. Has the owner/user been given the Service Manual and instructed how to operate and maintain the icemaker?
12. Has the owner been given the name and telephone number of the authorized SCOTSMAN Service Agency serving him?

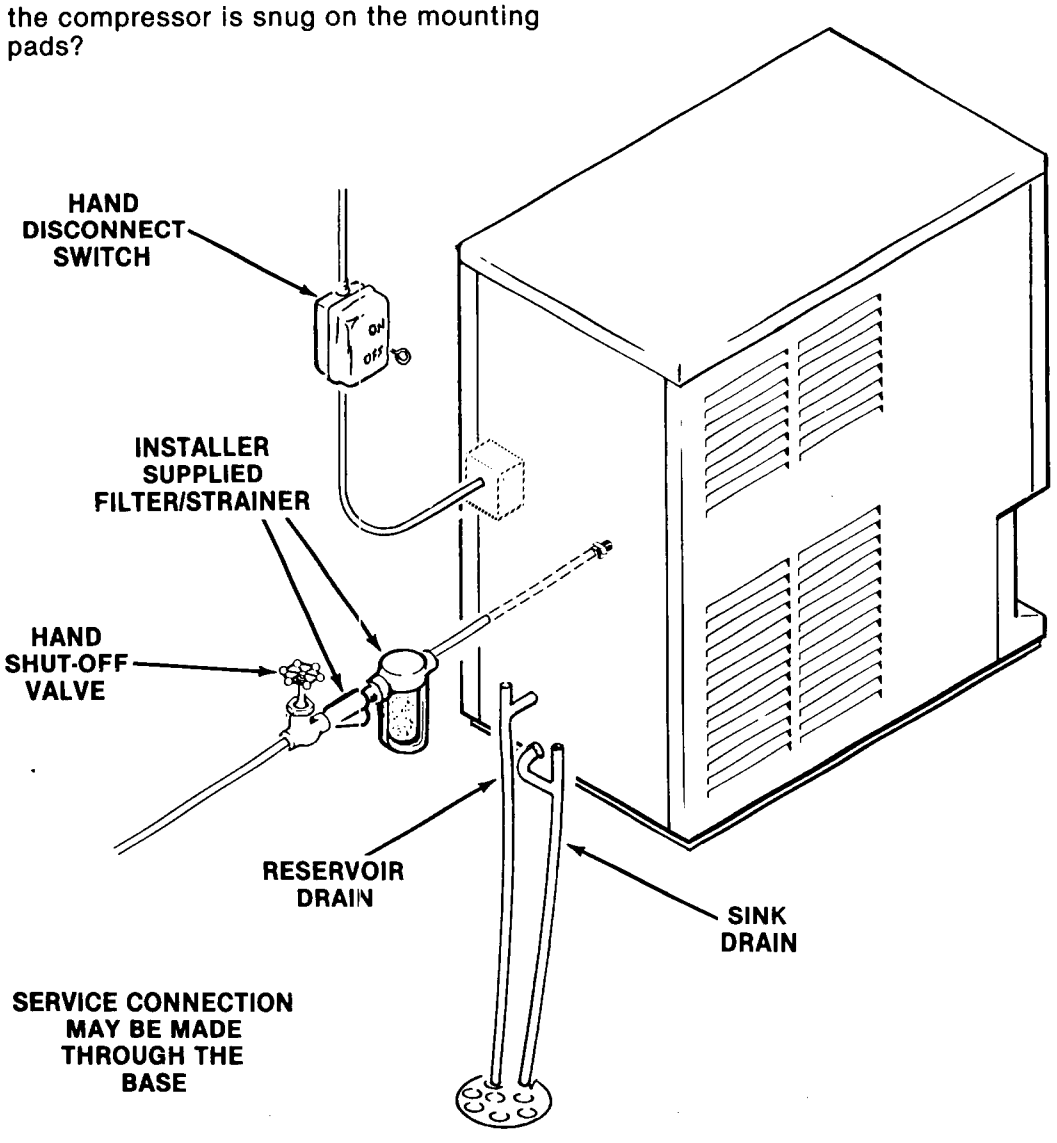

FD470 INITIAL START UP

1. Remove screws and the top and side panels.

2. Open the water supply line shut off valve.

3. Observe the water filling operaton, see the water schematic below.

A. Water flows into the water reservoir.

B. Water flows from the reservoir to the evaporator.

C. The float in the reservoir will rise to shut off the water supply when the evaporator water level matches that of the reservoir.

4. Check all internal water connections to be certain that there are no leaks.

5. Plug unit in or switch on the electrical power to start the unit making ice (there is no master switch).

6. Let the system operate, check for any unusual noises beyond normal compressor, fan and gearmotor noise.

After the unit has been started and has run for about 10 minutes, there should be enough ice in the bin to test the dispense system.

7. Using a container, push the glass filler lever in and see that ice is dispensed (the bin drive motor will continue to run as long as the glass filler lever is pushed in).

8. Move the water switch (rocker switch on the front panel) to ON. Then use a container to push in the glass filler lever again, both water and ice should be dispensed as long as the lever is held in.

9. The refrigeration pressure can be checked: the suction pressure should be about 13-15 P.S.I.G. and the discharge pressure should be about 125-135 P.S.I.G.

10. Explain the operation and maintenance requirements to the owner/user.

11. Leave the service manual with the owner/user and explain who should be called for any service or maintenance.

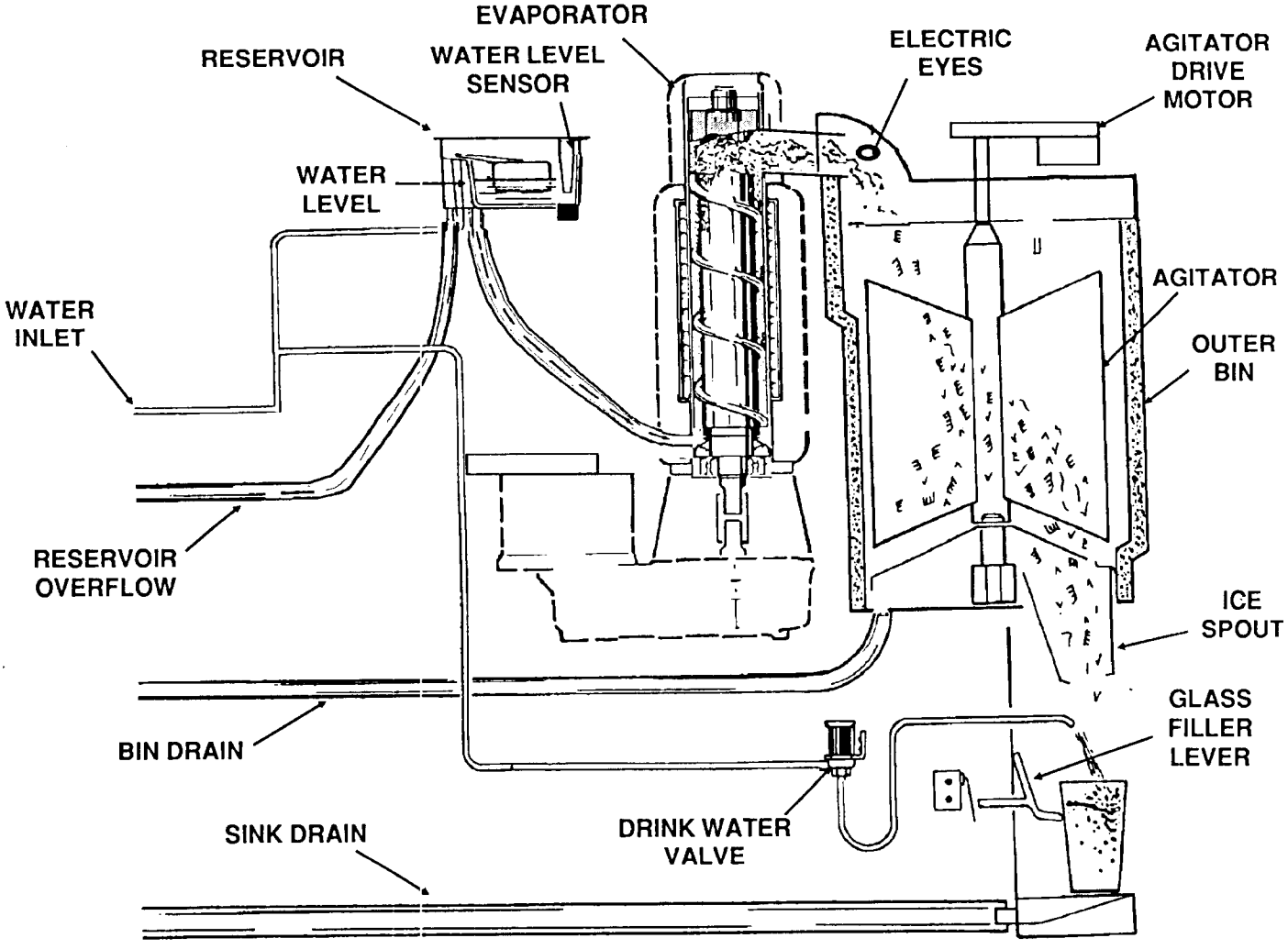

ICEMAKER OPERATION

The water supply flows from the building source through the optional inline water strainer, enters at the inlet fitting and on to the water reservoir. The water reservoir functions to maintain a constant water level inside the freezer assembly. Water from the water reservoir enters at the bottom of the freezer assembly and is changed into ice by low temperatures inside the freezer.

Move building source power switch to the ON position or plug into electrical outlet to start the automatic icemaking process.

A stainless steel auger within the freezer is powered by the drivemotor assembly, a direct-drive gearmotor, and the rotating auger carries the ice upward to the end of the auger, see Water Schematic Illustration, and pushed out through the ice chute and into the ice storage bin. When the ice storage bin has been filled with ice, up to the level of the bin control actuator, icemaking processes shut OFF.

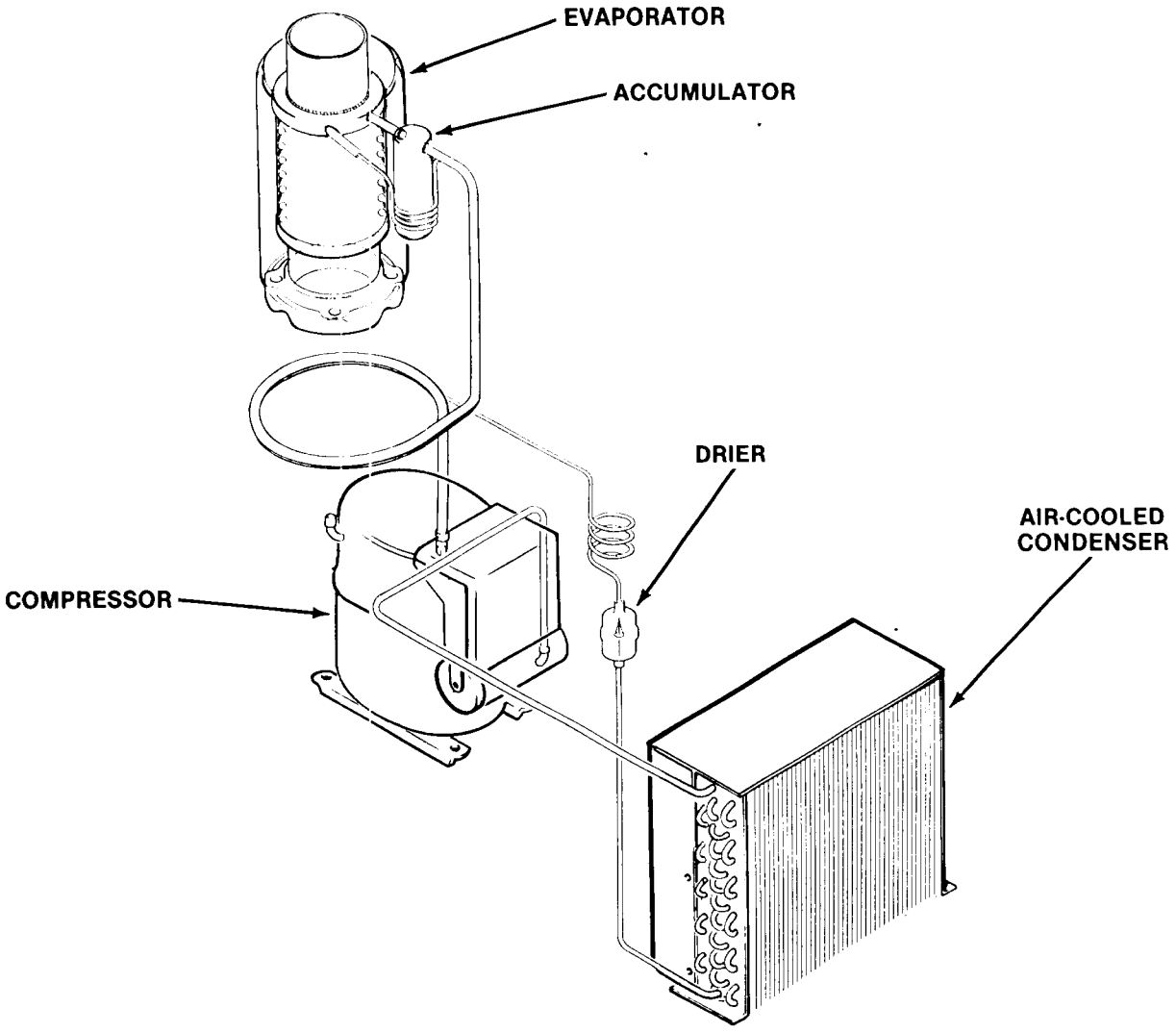

The FD470 needs the correct amount of voltage in order to operate properly. If voltage is not right, poor operation and possible equipment damage can be expected.

Cold water and air can cause excessively hard ice, and that can overload the auger drive motor.

How it Makes Ice:

When there isn't any ice at the top of the bin, the electric eyes "see" each other. This allows the circuit board to energize both the compressor and the auger drive motor relays. When the auger drive motor spins up to full speed, the microswitch on top of it closes, connecting power to the compressor.

As the compressor operates, it circulates refrigerant, moving heat from the evaporator to the condenser. This, and the revolving auger, causes ice to be made. The auger pushes ice up the evaporator and into the bin.

The ice making continues until the bin is full enough for ice to pile up in between the electric eyes in the plastic bin top.

After the electric eyes have been blocked for more than 15 seconds, the circuit board shuts off power to the compressor relay. This stops the refrigeration system. The auger relay is still on and the auger motor will continue to turn, pushing out any ice that may be in the evaporator. This will continue for about 2 and a half minutes, then the circuit board will shut off the power to the auger relay, and the ice making portion of the icemaker dispesner will be off.

There is also a low refrigerant pressure control. It is an automatic reset. If the refrigerant pressure becomes too low (low charge or the auger not turning) the low pressure control will open, stopping the ice maker.

Vending

When the glass filler lever is pushed, the bin drive motor is energized and stays energized as long as the glass filler lever keeps the bin drive motor going.

Water may be dispensed with ice if the Water Switch is in the ON position.

FD470B COMPONENT LOCATION

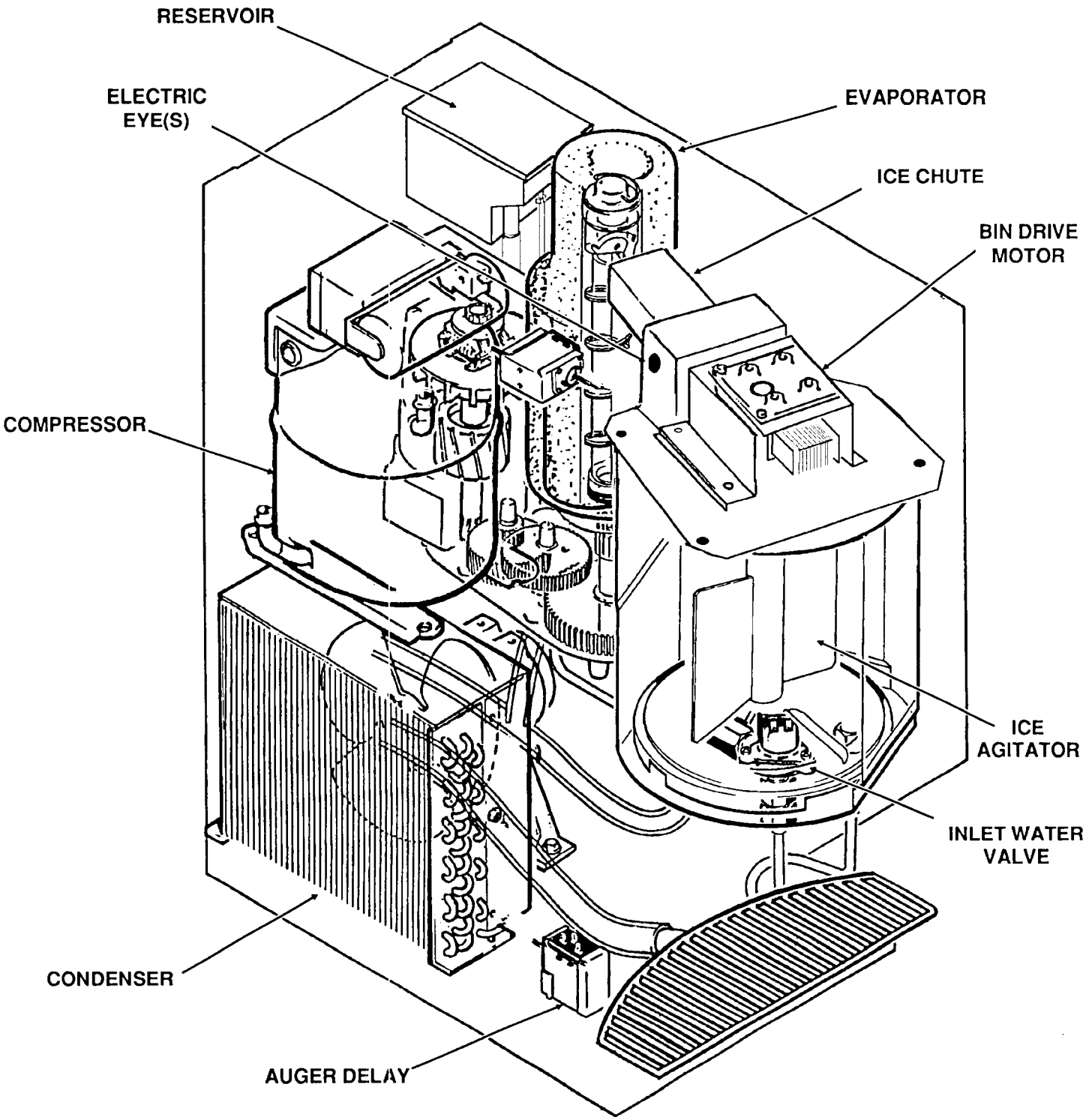

FD470B COMPONENT DESCRIPTION

Agitator

This part is a central shaft with large vanes attached. When the agitator drive motor turns, the vanes of the agitator sweep the ice in the bin across the bin bottom.

Bin Bottom

The bin bottom is a conical, stationary base for the ice. When the ice is moved over a slot in the bin bottom, it falls through a chute into the user's container.

Water Reservoir

The water reservoir uses a float valve to maintain a constant water level both in the reservoir and in the connected evaporator. The water level in the evaporator will be the same as it is in the reservoir.

Water Level Sensor

In the reservoir, the water sensor will not allow the ice machine to operate without water.

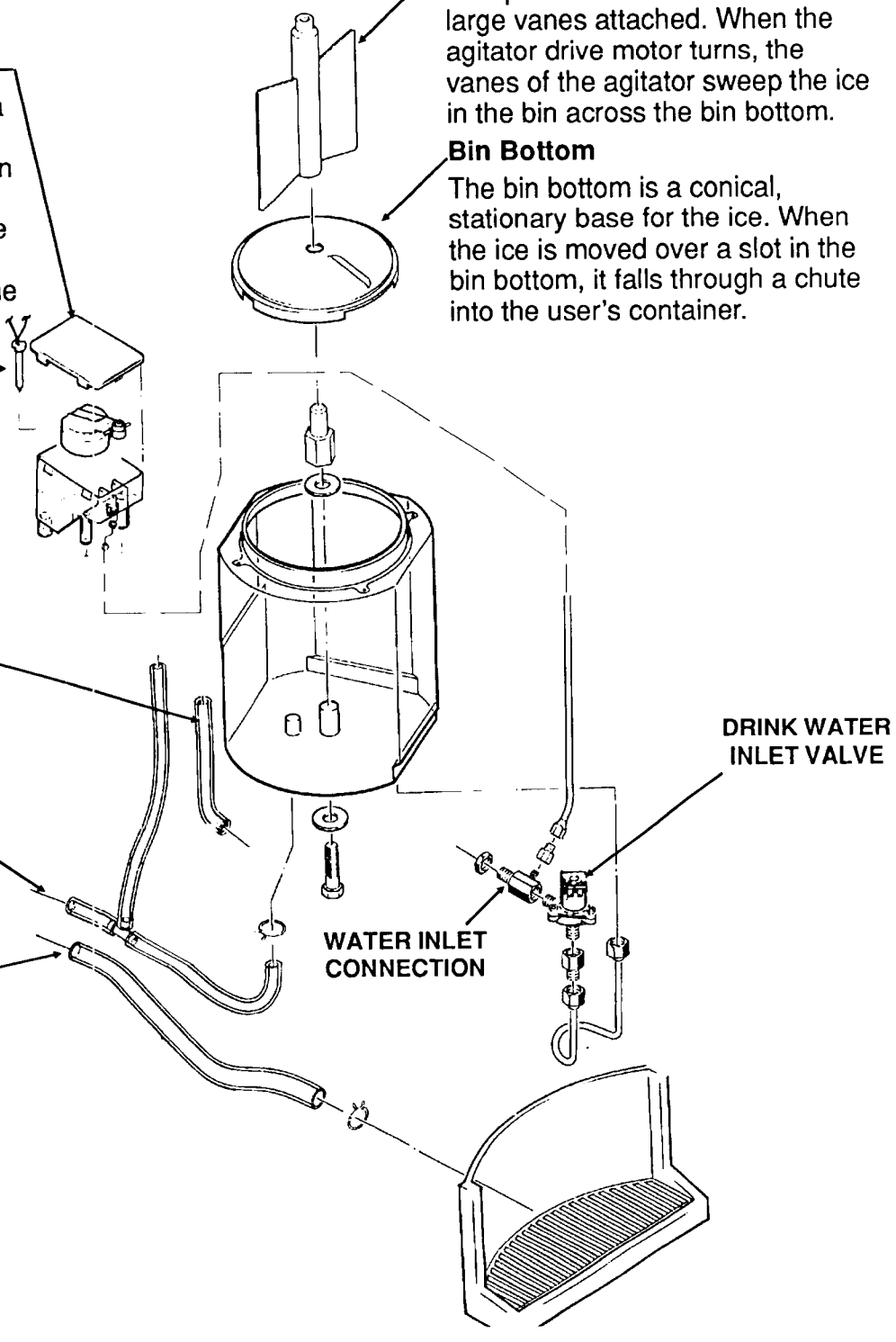

FD470 COMPONENT DESCRIPTION

FREEZER ASSEMBLY

Evaporator coils surround a cylindrical tube which is filled with water. As ice forms on the interior wall, it is lifted by a rotating auger which moves the ice to the ice breaker at the top of the cylinder where it is compacted and forced through the ice delivery chute.

ICE BREAKER ASSEMBLY

The ice breaker assembly, bolted to the top of the freezer, contains the bearing and seal for the top of the auger. Flaked ice created by the freezer is carried by the auger to the ice breaker assembly and the flaked ice is pushed by the auger through the hole in the side of the freezer and falls into the bin.

AUGER

The highly-polished stainless steel auger inside the freezer assembly, is rotated by the gearmotor and pushes ice to the top of the freezer.

LOWER WATER SEAL

The highly precision two-part water seal located at the bottom of the freezer, seals the bottom of the freezer assembly to contain water. The rotating part of the lower water seal is attached to the bottom of the auger and the stationary part of the seal is pressure fit into the bottom of the freezer assembly tube. Anytime condition of the lower water seal is in question, replace the seal.

FREEZER ASSEMBLY

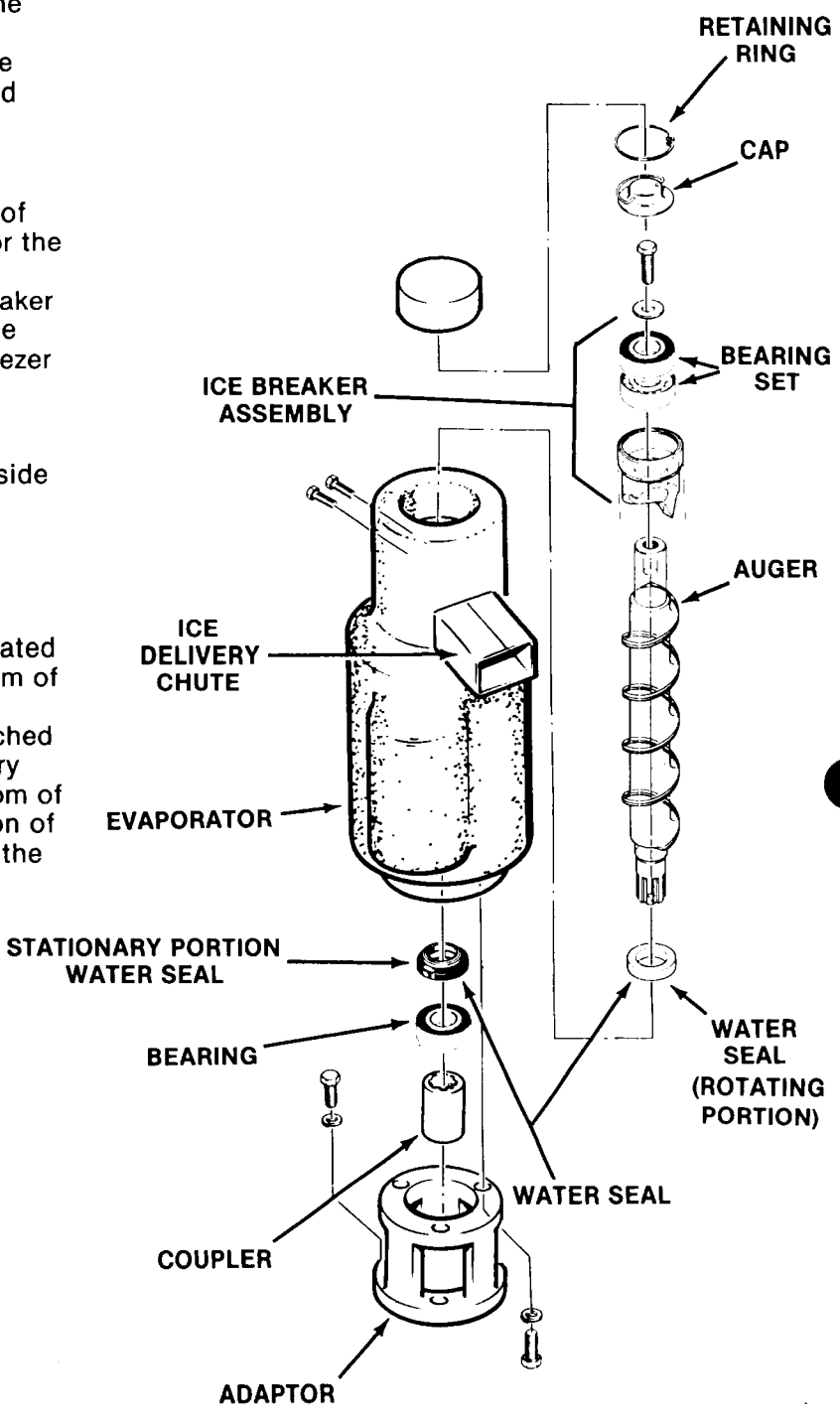

FD470 COMPONENT DESCRIPTION: "A" MODEL BIN TOP

BIN TOP

The bin top assembly protects the ice supply and provides a mount for the bin ice level switch and the bin ice level safety switch.

SPOUT SWITCH

The spout switch is an ON-OFF switch, that shuts OFF the compressor to stop icemaking, while the freezer assembly drivemotor continues to operate, and clear all ice from the auger. When the refrigerant pressure equalizes, the refrigerant lo-pressure control will shut OFF the drivemotor. When the ice flow pushes the actuator arm of the switch IN, the compressor is shut OFF and when the action of the melting or dispensed ice releases the actuator arm, the switch CLOSES the circuit and RESTARTS the compressor and the icemaking process.

BIN ICE LEVEL SWITCH

The bin ice level switch is mounted on the opposite side of the bin top to the spout switch and is actuated by the movement against the switch actuator. The switch acts as a differential switch, keeping the unit OFF until the ice level has dropped on both sides of the inner bin.

BIN DRIVE MOTOR

The bin drive motor and reduction gear assembly, located above the bin, is controlled with the ice vend switch. The bin drive motor rotates the inner bin and ice supply to vend ice into a container.

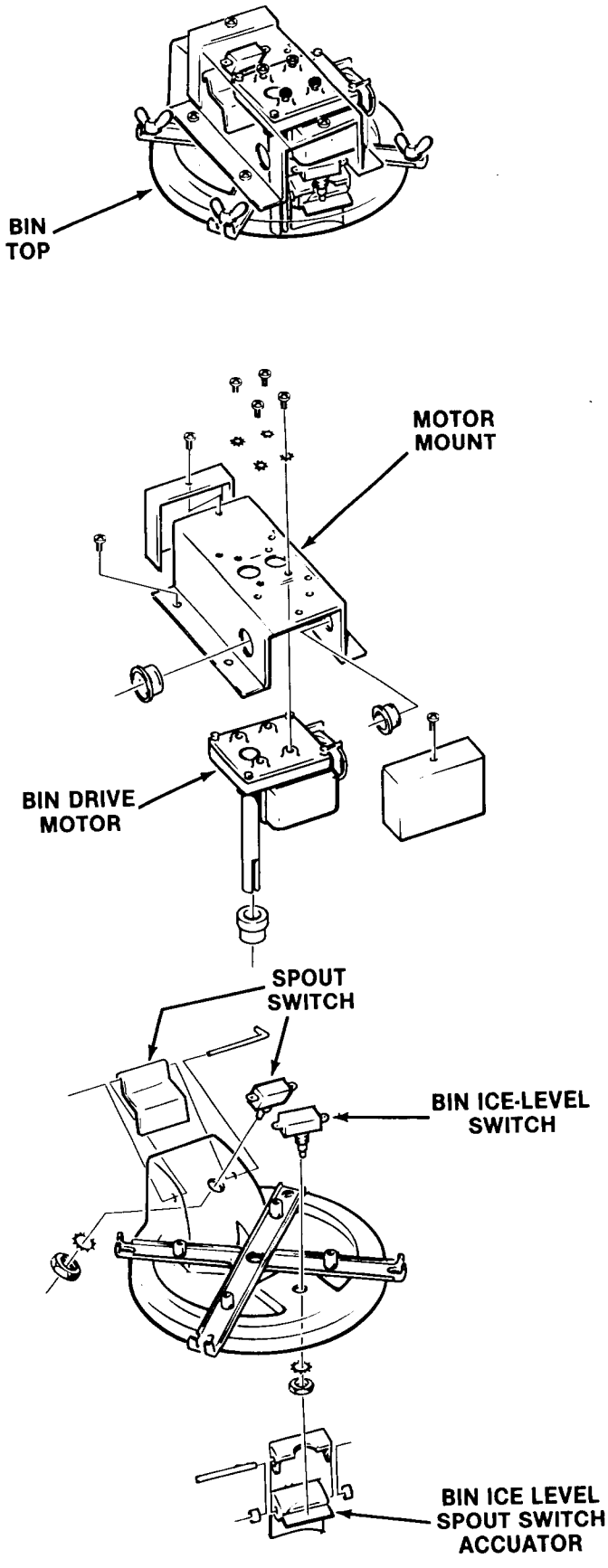

FD470 COMPONENT DESCRIPTION: "B" MODEL BIN TOP

BIN TOP

The bin top assembly protects the ice supply and provides a mounting place for the bin drive motor and electric eye bin control.

BIN DRIVE MOTOR

The bin drive motor and gear assembly is located at the top of the bin. The output shaft of the bin drive motor connects to the agitator in the bin.

ELECTRIC EYE

The electric eyes are the bin control for the ice machine. A light beam is present between the two parts of the electric eye. When ice flows through it, the beam is interupted. When the beam has been interupted for more than 15 continuous seconds the circuit board shuts the ice machine off.

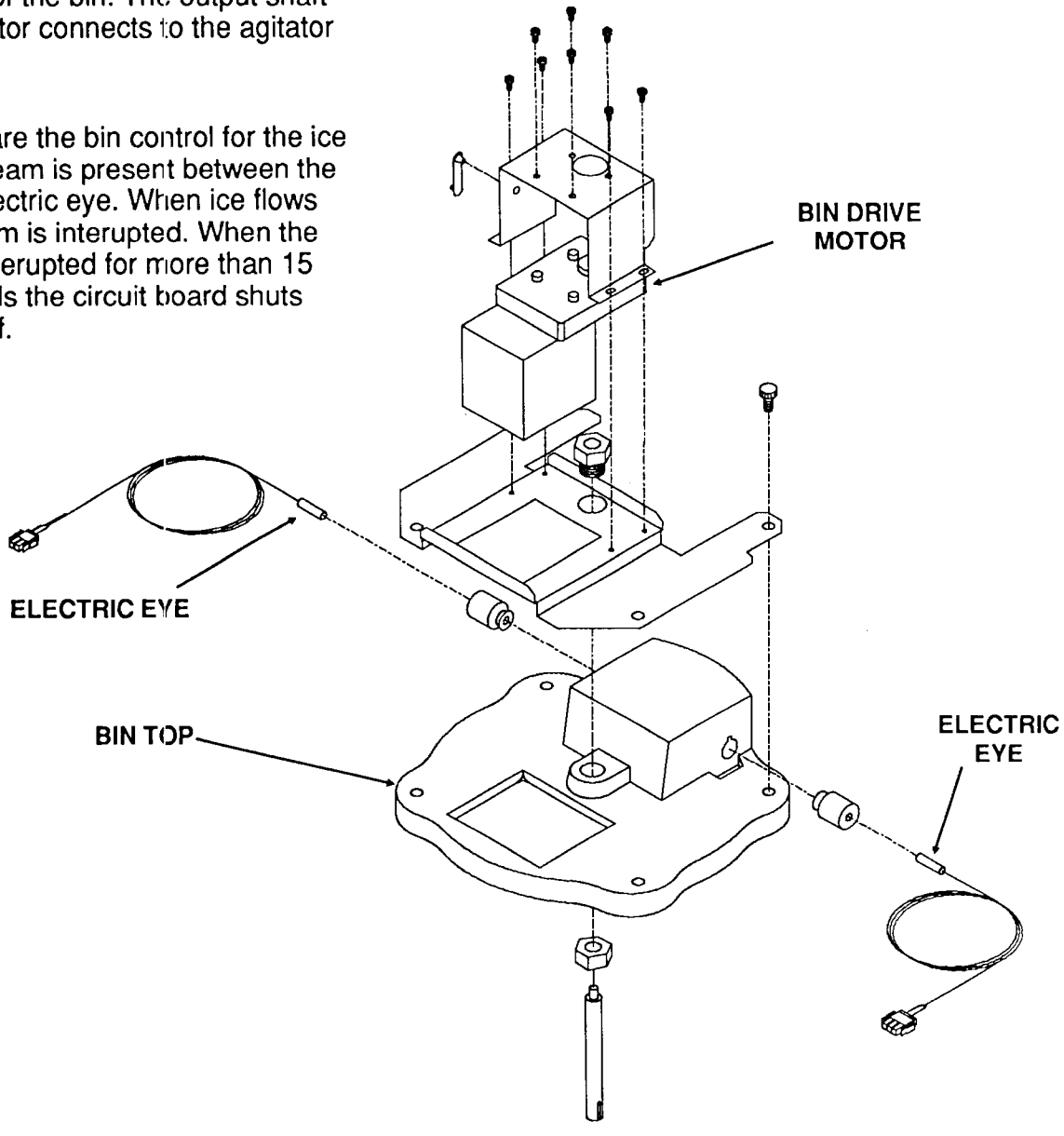

FD470 CLEANING AND SANITIZING

A Scotsman Ice System represents a sizable investment of time and money in any company's business. In order to receive the best return for that investment, the ice machine must receive periodic maintenance.

it is the USERS RESPONSIBILITY to see that the unit is properly maintained. It is always preferable, and less costly in the long run, to avoid possible down time by keeping it clean, adjusting it as needed and by replacing worn parts before they can cause failure. The following is a list of recommended maintenance that will help keep the machine running with a minimum of problems.

Maintenance and Cleaning should be scheduled at a MINIMUM of twice per year.

Cleaning

1. Push in glass filler lever and dispense all of the ice out of the bin.

WARNING

Disconnect electrical power.

2. Remove top panel.
3. Remove storage bin cover and spout extension.
4. Move both ice control flippers in the bin top; they must move freely, lubricate with food grade grease or lubricant if they do not.
5. Remove agitator assembly and bin bottom.
6. Replace bin cover.
7. Remove the reservoir cover, and block the float up to shut off water to the reservoir.
8. Drain the water from the evaporator by removing the water inlet tube from the evaporator inlet. Reconnect tubing.

WARNING

Scotsman Ice Machine Cleaner contains Phosphoric and Hydroxyacetic acids. These compounds are corrosive and may cause burns. If swallowed, DO NOT induce vomiting. Give large amounts of water or milk. Call Physician immediately. In case of external contact, flush with water. KEEP OUT OF THE REACH OF CHILDREN.

9. Mix a solution of 4 ounces of Scotsman Ice Machine Cleaner and 1.5 quarts of hot (95^0F.-115^0F.) potable water. Pour some of the solution into the reservoir until it is full. Allow the solution to stay in the unit for at least 15 minutes.
10. After 15 minutes, reconnect electrical power and pour additional ice machine cleaner solution into the reservoir as it is used up. After all of the solution has been poured in, remove the block from the float.
11. Allow the unit to make ice for 15 additional minutes, and then taste the ice, if not sour, all of the ice machine cleaner has been used up.
12. Unplug or disconnect electrical power, remove bin top and pour hot water into the bin to melt the ice produced during cleaning.
13. Remove drain grate and ice vend lever from sink. Wash and sanitize these parts, as well as the agitator, bin bottom, inside of the bin top and the inside of the bin, including ice chute. See Sanitizing.
14. Reassemble the bin bottom and agitator, replace the cover of the bin. Reattach the ice vend lever and replace the sink grate.
15. Replace cabinet cover. Plug in and unit is ready for normal operation.

Sanitizing

The ice machine and dispenser will occasionally require sanitizing. Use an approved sanitizer and follow the directions and warnings of that sanitizer or use the following instructions for the use of household bleach, it meets most local codes:

1. Mix a solution of 1 ounce of household bleach to 2 gallons of water.
2. Using rubber gloves, immerse the parts in the sanitizing solution and wash the parts, flushing the solution thoroughly in, over and through all parts and surfaces of the parts being cleaned.
3. Allow to air dry.
4. Reassemble all sanitized components.

FD470 ICE MAKER MECHANISM MAINTENANCE

1. Check and clean any water strainer or filter that has been installed in the incoming water line.

2. Check the water reservoir. Check that the float shuts off the water when the water is high enough. It is normal for some water to flow out of the spout with the ice.

3. Clean the reservoir and the interior of the evaporator using the cleaning procedures on the product or in this manual.

4. B model: Check the water level sensor for scale on the tip. Wipe the tip clean with a clean cloth. Note the tip is made of glass, so be careful when wiping it.

5. Remove the auger to check the bearings. See the next page. Check the top bearing for wear and the auger for mineral build up. The auger, if still stained after the evaporator has been cleaned with ice machine cleaner, will require more cleaning.

6. Check the interior of the evaporator. The tube should have a uniform surface from the bottom to the top. There should be no horizontal scoring marks, nor deep pits. There are machined vertical grooves evenly spaced around the insdie of the evaporator tube. They are there to guide the ice up the tube. If large portions of the vertical grooves are not there or are damaged, the evaporator will have to be replaced. Small pits or tough stains may be sanded out of the evaporator surface using 100 grit sand paper in a vertical motion.

7. Clean the air cooled condenser. Always shut off the machine when cleaning.

8. Check for water leaks.

9. B model: Check the electric eyes for mineral scale. Wipe them clean with a clean cloth.

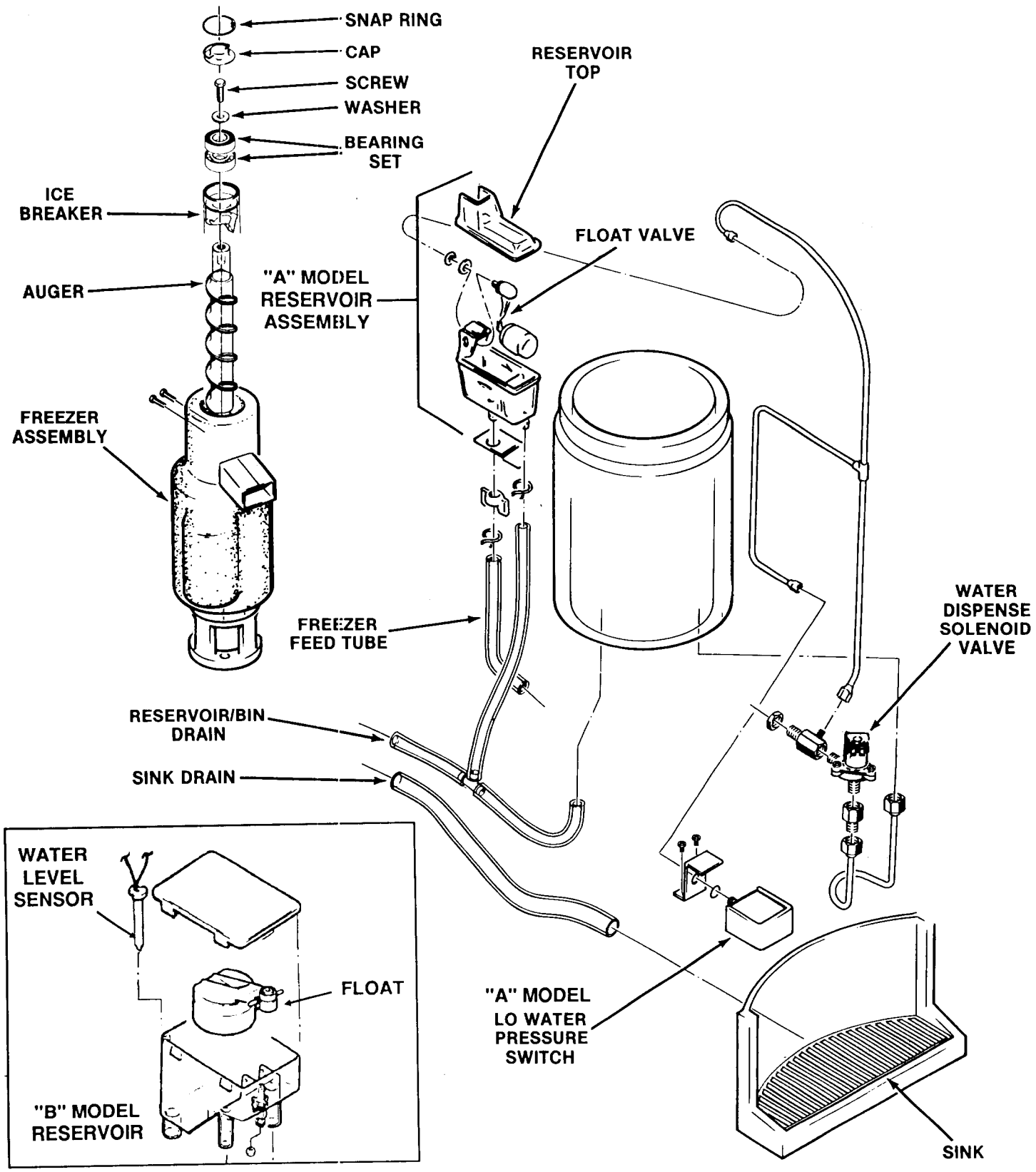
SNAP RING
CAP
SCREW
WASHER
BEARING SET
ICE BREAKER
AUGER
"A" MODEL RESERVOIR ASSEMBLY
FREEZER ASSEMBLY
RESERVOIR TOP
FLOAT VALVE
FREEZER FEED TUBE
WATER DISPENSE SOLENOID VALVE
RESERVOIR/BIN DRAIN
SINK DRAIN
WATER LEVEL SENSOR
FLOAT
"B" MODEL RESERVOIR
"A" MODEL LO WATER PRESSURE SWITCH
SINK

FD470 SERVICE DIAGNOSIS

SYMPTOM	POSSIBLE CAUSE	CORRECTION
Water Leaks	Evaporator water seal worn or cracked	Replace seal
	Tubing to evaporator leaks	Check hose clamps
	Tubing to drains leaks	Check hose clamps & tubing
Water will not dispense	Solenoid defective	Replace
	Water shut off	Re-connect water
	Water switch set at OFF	Switch to ON
Water flow too slow	Screen on inlet of solenoid dirty	Clean screen
Unit will not dispense	No ice in bin	Faulty bin controls. B model-check with tester
		Unit too small for application, check usage
		No water to unit, restore water
		No power to unit, check breaker or fuse.
	Vend switch will not close	Replace vend switch
	Bin drive motor does not turn	Replace bin drive motor
	Bin jammed with ice in spout	Unplug unit and clear out ice
Will not stop dispensing	Vend switch stuck closed	Replace switch
Unit will not make ice	Power off	Reconnect power
	Water off	Restore water supply
	Auger drive motor will not turn	Drive motor worn out, replace
		Drive motor overheats, check gears, evaporator & bearings
	Auger drive motor turns, compressor will not come on	Centrifugal switch on motor will not close
	Low on refrigerant	Locate leak, repair, weigh in nameplate charge
	Cycles on low pressure control	Auger not turning, check coupling, check gearbox
		See "Low on Refrigerant" above
	Compressor does not start	Check for power to compressor
		Check compressor start capacitor
		Check compressor start relay
		Compressor locked up, open, or shorted. Replace compressor.

FD470 SERVICE DIAGNOSIS

SYMPTOM	POSSIBLE CAUSE	CORRECTION
Makes too much noise when producing ice	Evaporator and auger have mineral scale on them	Clean machine with Scotsman Ice Machine Cleaner per instructions on unit or in manual
	Not enough water in evaporator	Check for water restriction between reservoir and evaporator
	Low suction pressure	Add refrigerant to raise suction pressure, check for a leak. If it declines again, there is a leak.
	Gearmotor loose on frame	Check mounting
	Coupling dry	Grease coupling
	Tubing vibrating	Check tubing for contact
	Tooth on a gear missing	Remove gearbox from ice machine, check gears.
	Compressor too loud internally	Replace compressor
	Gear noise	Low oil in gearmotor. Check for gear and bearing damage.
Oil leak from gearmotor	Gearmotor seals worn	Remove gearmotor from ice machine, check for internal damage, replace parts as needed or replace gearmotor assembly
	Water in gearmotor	Evaporator water seal leaking, replace it, evaporator bearings and gearmotor assembly.

CIRCUIT BOARD TESTING - B MODELS ONLY	
Use tester part number A33942-001. The instructions that follow assume that the ice machine will not run, and prior investigation of electric power, controls and mechanical parts indicate that the electronic circuit may be at fault. **WARNING: Testing reqiuires that power to the machine be ON, but connections should only be made with the power OFF.**	
Bin control sensors do not work	Unplug bin control sensors (electric eyes) from circuit board connections "Photo Trans" and "LED".
	Plug connectors from the tester into the circuit board.
	Move the bin full switch to FULL. The light on the tester should be ON. If the light on the tester is not on, the circuit board should be replaced
	IF the light is ON, move the Bln Full switch to EMPTY. The light on the tester should go off, the light on the circuit board should go on and after 10-20 seconds the ice machine should start. If the machine starts, the sensors (electric eyes) should be replaced.
	If the Bin Empty light does not come ON, the circuit board should be replaced.
Water Level	Unplug "water sen" connector from circuit board.
	Plug "water sen" connector from Scotsman tester into circuit board.
	Move "water" switch on tester to No Water position. The NO Water light on the circuit board should go ON. If not, replace the circuit board.
	Move the "water" switch on the tester to the Water postiion. The NO Water light on the board should go OFF, and the ice machine should start (if bin sensors are connected, working and there is no ice in the bin). If not, replace the circuit board, if the light does go off, replace the water level sensor.

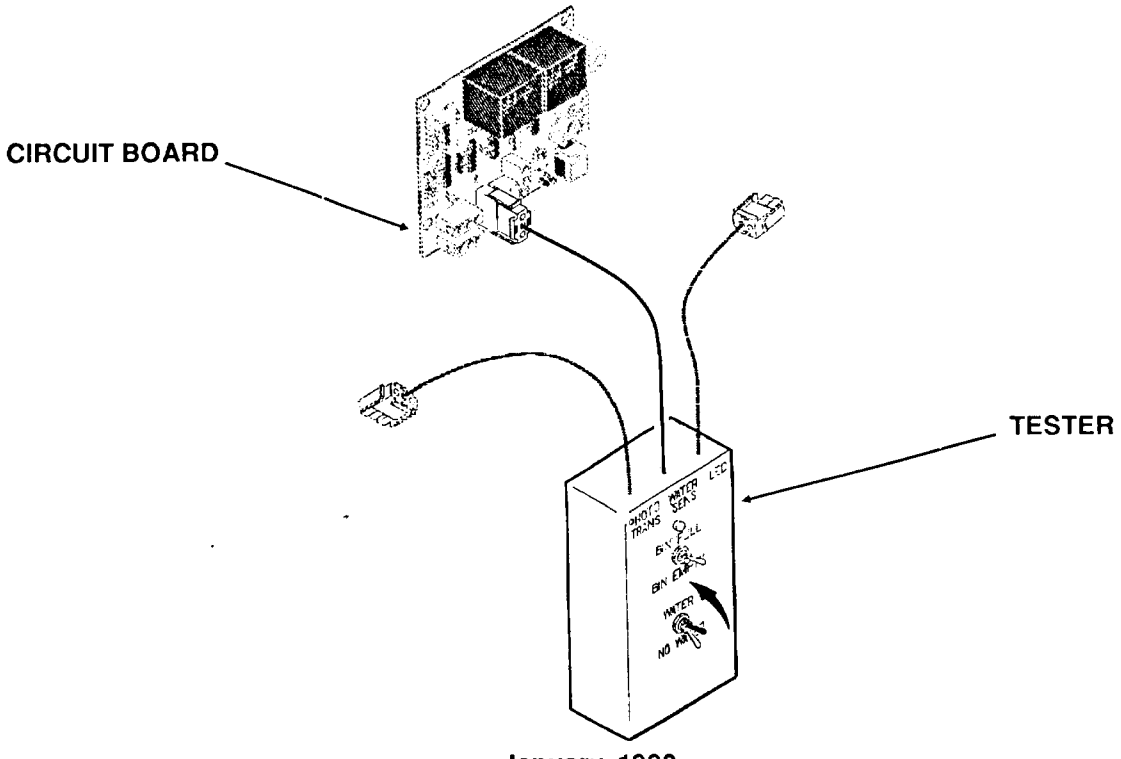

ICE BREAKER AND AUGER REMOVAL

1. Remove permagum and two screws from the side of the freezer.
2. Pull up on cap hook located in the top of the freezer assembly to remove ice breaker with bearing set, auger and the top portion of the lower water seal.
3. Remove snap ring and cap and remove the bolt from the ice breaker and auger assembly to separate the ice breaker assembly from the auger. The bearings may be replaced or the ice breaker and bearings may be replaced as an assembly.

WATER SEAL INSTALLATION

Inspect the water seal in its package. Do not use if mating surfaces are scratched or cracked.

1. Remove auger, unbolt freezer from adaptor stand. Drive out old bottom bearing and water seal from the top down.
2. Remove old rotating half of water seal from auger and clean the auger at the seal mounting area.
3. Apply Scotsman part number 19-0529-01 RTV silicone rubber to the auger shoulder before pushing on the water seal. Place just enough silicone on to the auger, so that when the water seal is placed on the auger, the gap between the auger shoulder and water seal is completely filled with silicone.

   The silicone must be allowed to "set-up" or dry on the surface before any water can be added to the freezer. (See illustration, page 26).

//////////////////// WARNING ////////////////////

If any silicone gets onto the mating surfaces of the water seal, the seal is ruined, and cannot be used.

//

4. Clean the inside of the evaporator at the bottom bearing and water seal mounting area. Lubricate the outside edge of the stationary seal with food grade lubricant to aid installation.
5. Carefully push the stationary part of the water seal up into the bottom of the evaporator. It must go in straight and must not be pushed in beyond 1/4" past the bottom of the freezer.
6. Install new bottom bearing, push it into the freezer under the new water seal. It must be pushed in straight, but do not push it in past 1/8" from the bottom of the evaporator tube.
7. Mount the adaptor stand to the bottom of the freezer. Hand tighten the three cap screws until the stand flange is tight against the bottom bearing. Then, tighten the cap screws in a rotating pattern to insure proper alignment.

(CONTINUED)

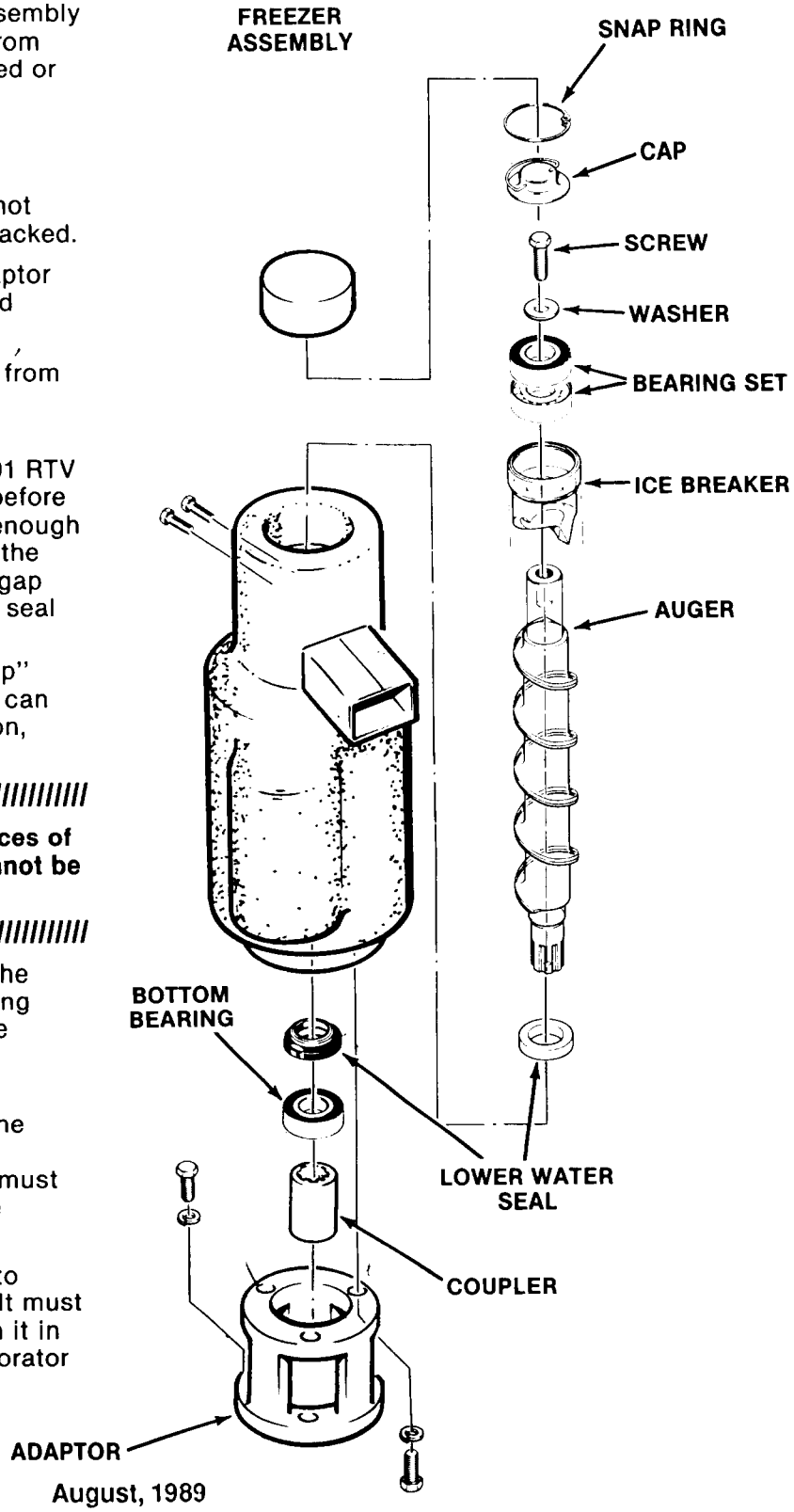

8. The top bearing should also be changed at this time. Be sure to mount the top bearing/bearing retainer assembly onto the auger **first** before installing the auger into the freezer tube.

9. Install the auger and test the unit.

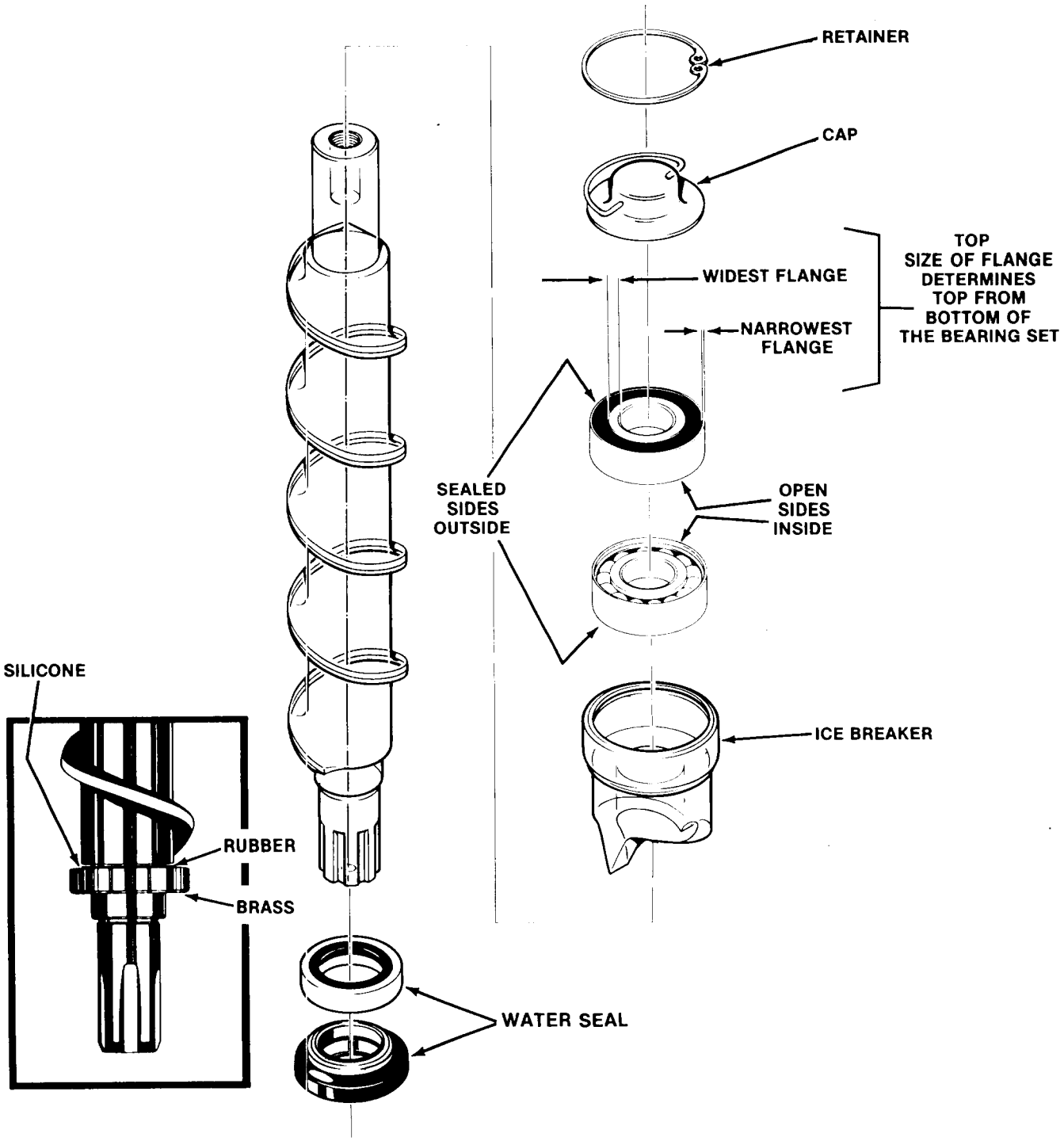

General:

- Scotsman recommends that any work on the refrigeration system only be done when it is certain that the system needs repair.
- Refrigerant should not be added except as a way to determine the proper operation of the product. If the system was low on refrigerant, there is a leak, and it must be found and repaired.
- Refrigerant should not be wasted to the atmosphere, but reclaimed.
- This system has a critical charge, it must be recharged with the correct amount of refrigerant as listed on the nameplate of the ice machine, or performance will suffer.
- Anytime the refrigeration system has been opened, the dryer should be replaced.

Specifically:

Recover, reclaim or recycle refrigerant. The method chosen is up to the service company. There are various mechanical devices that may be used to recycle refrigerant at the field level, however, Scotsman requires that any refrigerant placed into a Scotsman ice machine meet ARI spec 700. Reclaim programs are available thru most refrigerant wholesalers.

Use conservation minded service procedures:

- Refrain from checking refrigeration pressures without reason. There are many ways to determine the proper operation of a Scotsman ice machine without using refrigerant gauges. Visual inspection of the water system, observation of the ice formation, amp draw, voltage, and other techniques will lead to proper diagnosis. Scotsman also recommends that, at the time of initial start up, gauges not be used.
- If gauges must be used, do not always check the high side pressure. If the condenser is clean and seems to be operating correctly, it most likely is. The low side pressure is much more important on an ice machine than is the high side.
- If gauges must be used, use very short hoses. Minimal refrigerant discharged into the hoses equals minimal refrigerant discharged into the air.
- If hi side pressure must be checked, use a quick connect at the end of the discharge hose to minimize the release of refrigerant, J/B Industires part number A33000 works well.
- Scotsman's schrader valve caps must be tightened to 70 inch - pounds to insure that the valves will not leak.
- If using recycled refrigerant, it must meet ARI spec 700 or have been cleaned by a machine capable of attaining ARI spec 700. Removal and Replacement: Refrigeration System

If the refrigeration system must be serviced, the quality of service must insure that there will not be a repeat failure, as repeat failures will cause refrigerant to be discharged into the air by the failure or when the failure is corrected:

- If there has been a compressor burn out, check for acid in the oil. If acid is indicated, extra steps must be taken to clean up the system.
- Never use refrigerant, such as R-11, to clean up or flush out a refrigeration system. When system clean-up is required, the use of suction line filter-dryers and liquid line filter-dryers are recommended.
- Always replace the dryer when repairing a leak or replacing a refrigeration component.
- Evacuate the system with a good vacuum pump to 500 microns or less. If the triple evacuation method is used, the vacuum should be broken each time with dry nitrogen, not refrigerant. Evacuation must be from both sides of the system.
- Weigh in or measure in the nameplate charge. Recharge into the high side.
- Check for leaks with a high quality, electronic leak detector. Halide torches will not locate the very small leaks.
- Scotsman's schrader valve caps must be tightened to 70 inch - pounds to insure that the valves will not leak.

If an ice machine is to be discarded and still contains refrigerant, Scotsman recommends that the refrigerant be recovered, reclaimed, or recycled so that it is not discharged into the air.

WARNING

Be sure the electrical power supply and the water supply are OFF, BEFORE starting any of the following REMOVAL AND REPLACEMENT procedures as a precaution to prevent possible personal injury or damage to equipment.

REMOVAL AND REPLACEMENT OF THE DRIER

NOTE: Always install a replacement drier, anytime the sealed refrigeration system is opened. Do not replace the drier until all other repair or replacement has been completed.

To replace the drier:

1. Remove screws and remove back panel.
2. Bleed off or blow the refrigerant charge through the Schrader valve.
3. Remove attaching hardware and drier brace or strap from the drier.
4. Unsolder refrigeration lines at both ends of the drier.

To replace the drier:

CAUTION

1. **If the factory seal is broken on the replacement drier, exposing it to the atmosphere more than a few minutes, the drier will absorb moisture from the atmosphere and lose substantial ability for moisture removal.**
2. **Be sure the replacement drier is installed with the arrow positioned in the direction of the refrigerant flow.**

1. Remove the factory seals from the replacement drier and install the drier in the refrigerant lines with the arrow positioned in the direction of the refrigerant flow.
2. Solder the drier into the lines, two places.
3. Secure drier with the drier brace or strap.
4. Purge the system and check for leaks.
5. Thoroughly evacuate the system to remove moisture and non-condensables.
6. Charge the system with refrigerant, by weight. SEE NAMEPLATE.

REMOVAL AND REPLACEMENT OF THE BIN DRIVE MOTOR ASSEMBLY

To remove the drive motor:

1. Remove wing nuts and remove bin top.
2. Remove screws and remove switch cover.
3. Remove screws and separate bin drive motor from the switch cover.
4. Unplug electrical lead wires from connector.

REMOVAL AND REPLACEMENT OF THE FAN MOTOR ASSEMBLY

To remove fan motor assembly:

1. Remove screws and remove back panel.
2. Disconnect electrical lead from the fan motor.
3. Remove two screws and lockwashers securing the fan motor bracket to the chassis base and remove the fan motor assembly and bracket from the cabinet.
4. Remove the nut from the end of the fan motor to the motor bracket and separate the motor from the bracket.

To replace the fan motor assembly, reverse the removal procedure.

REMOVAL AND REPLACEMENT OF THE CYLINDRICAL ICE STORAGE BIN

1. Remove cabinet top.
2. Remove bin top wing nuts and remove bin top.
3. Pull UP and remove inner bin from insulated container.
4. Rotate counter-clockwise and remove inner bin bottom.
5. Remove hex nuts washers from bin base mounting bolts. Remove insulated ice storage bin.

REMOVAL AND REPLACEMENT OF THE WATER PRESSURE SWITCH ASSEMBLY

To remove the low water pressure switch assembly:

WARNING

Be sure the electrical power supply and the water supply are OFF, BEFORE starting any of the following REMOVAL AND REPLACEMENT procedures as a precaution to prevent possible personal injury or damage to equipment.

1. Remove screws and remove top, back and right side panel.
2. Disconnect electrical leads in the control box from the low pressure switch.
3. Unscrew the flare nut fitting and disconnect the low pressure control and washer from the bracket.

To replace the low water pressure control assembly, reverse the removal procedure.

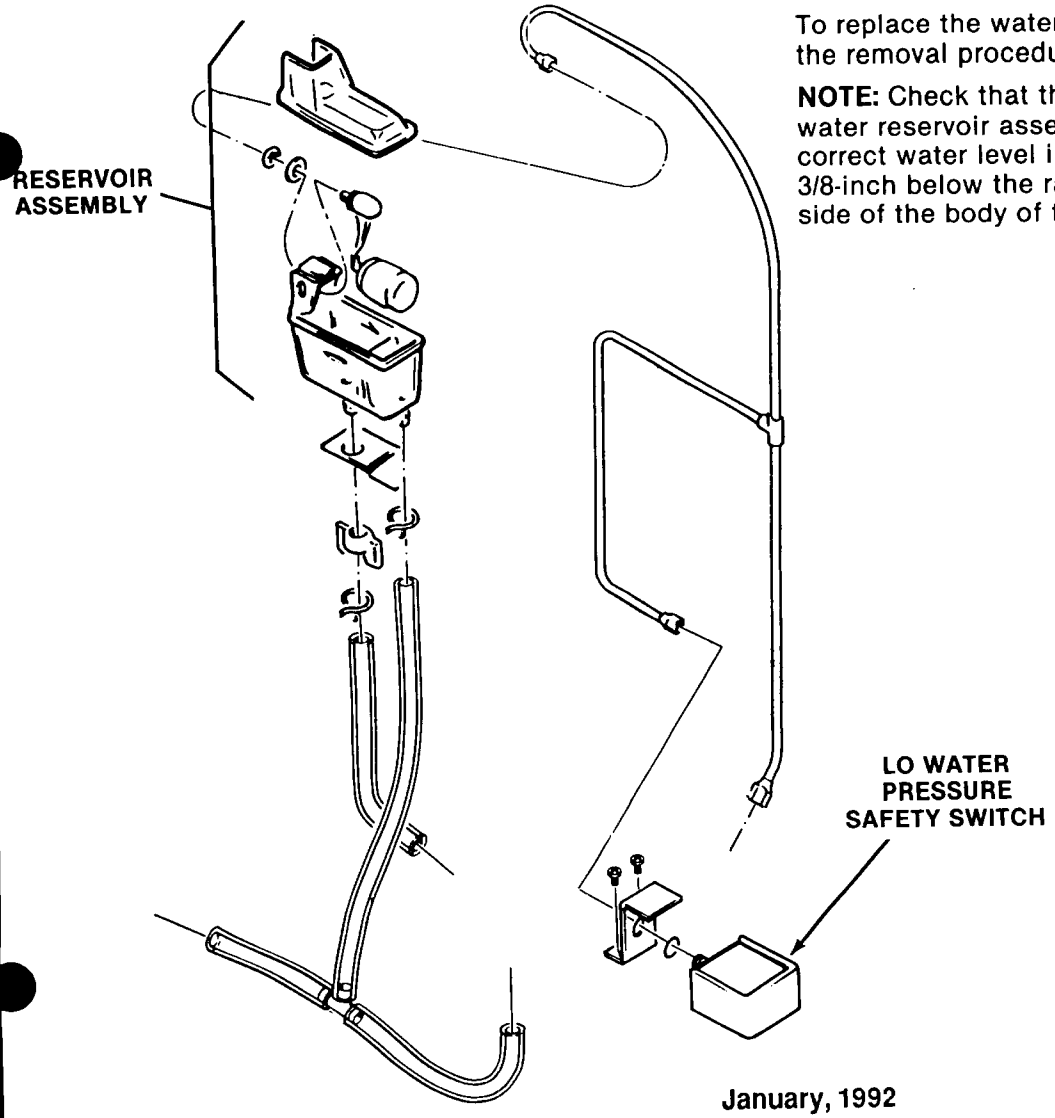

REMOVAL AND REPLACEMENT OF THE WATER RESERVOIR ASSEMBLY

To remove the water reservoir assembly:

1. Remove screws and remove top, back and right side panel.
2. Turn OFF water supply to the icemaker at the hand shut-off valve.

NOTE: Be prepared with container or rags, to catch water left in lines, when lines are disconnected in next steps, to prevent draining water on parts, components, electrical lines, etc.

3. Disconnect the water inlet tube from the water reservoir assembly.
4. Remove two corbin clamps and two tubes from the bottom of the water reservoir assembly.
5. Unscrew and remove the plastic wingnut from the bottom of the water reservoir assembly.
6. Lift and remove the water reservoir assembly from the mounting bracket.

To replace the water reservoir assembly, reverse the removal procedure.

NOTE: Check that the installed replacement water reservoir assembly float moves freely. The correct water level in the water reservoir is 3/8-inch below the raised molded line, on the side of the body of the water reservoir.

REBUILDING THE 1/10 HORSEPOWER DRIVEMOTOR GEAR REDUCER ASSEMBLY

DRIVEMOTOR PARTS

To replace the centrifugal switch and mechanism or the motor winding or the motor rotor, removal of the gearbox assembly is not necessary.

////////////////////// **WARNING** //////////////////////

Be sure the electrical power supply and the water supply are OFF, BEFORE starting any of the following REMOVAL AND REPLACEMENT procedures as a precaution to prevent possible personal injury or damage to equipment.

//

1. Disconnect electrical power
   Remove top and right side panels.
2. Remove cover from the top of the centrifugal switch assembly and remove the electric wires from the microswitch. To replace just the centrifugal switch, remove two machine screws retaining the switch and remove the switch. To replace, reverse the procedure to this point.
3. If the motor is to be removed, the next step is to remove the four screws holding down the plastic switch assembly housing and lift the housing off of the motor top.
4. Remove the centrifugal switch mechanism from the rotor by unscrewing the machine screw at the top of the rotor.
5. The motor and housing may now be removed. Lift off the motor fan housing, and pull off the plastic fan. The next part to be removed is the motor winding. Disconnect the electrical leads of the motor from its control box location and lift off the winding.
6. The rotor is all that remains of the motor in the gear motor assembly. Use a pry bar to carefully pry up the rotor. (The only thing holding it in is the tight fit of the bottom rotor bearing into the top of the gear case.) To replace any of the above parts, reverse the disassembly procedure.

REMOVAL OF THE DRIVEMOTOR ASSEMBLY

To remove the Drivemotor Assembly:

1. Remove top and right side panel.
2. Remove bin top assembly.
3. Unscrew three capscrews retaining freezer assembly to the gearmotor assembly.
4. Unscrew two capscrews under gearmotor chassis support retaining gearmotor to the frame.
5. Remove motor electrical leads from the connections.
6. Raise freezer assembly up enough that the output shaft clears the freezer adaptor.
7. Remove the gearmotor assembly by sliding it out from under the freezer.

DRIVEMOTOR ASSEMBLY

After removal of the drivemotor gear reducer from the unit, inspect the internal parts of this gearmotor:

1. Place gearbox on a flat surface, covered with rags to absorb any spilled lubricant.
2. Using a punch, drive the roll pins out of the casing.
3. Remove the four capscrews on the top of the gear case and the two under the motor.
4. Pry the two cases apart.

When inspecting the internal parts, look for:

* Condition and quantity of lubricant. (The proper oil level is near the top of the output (biggest) gear.) (5 oz. capacity) Use Scotsman Gear Case Oil, P/N A25835-001.
* Bearing condition
* Gear and gear shaft condition
* Woodruff key between output gear and shaft.
* Grease seals, back to back
* Vent hole

Be sure to count and retain the spacer washers as they come out of the gearbox.

Replace the parts as required, using the part numbers found in the parts list section of this manual. Replace the gears into a CLEAN bottom gearcase, replacing the spacer washers in the same quantity as they were upon disassembly. If no count was kept, refer to the parts illustration.

NOTE

Some bearing grease should be placed in all bearings before assembly to insure proper lubrication upon start-up.

DRIVEMOTOR ASSEMBLY

To reassemble:

1. Set top gearcase on gears and spacers and oil. Be sure O-ring is in place.
2. Drive rollpins back into locating holes.
3. Replace capscrews into gearcase covers and torque (8 capscrews) at 80-90 inch pounds.
4. Bench test the gearmotor assembly.

Test for noise, amp draw (must not be in excess of icemaker nameplate for gearmotor) and oil leaks.

Return gearbox to the unit. Be certain all mounting surfaces are clean and reassembly gearbox to chassis and freezer assembly.

If the freezer water seal begins to leak, removal of the auger is required in order to replace the top and bottom bearing and water seal. AT THE SAME TIME, it would be recommended to remove the gearmotor assembly, open it up and inspect it.

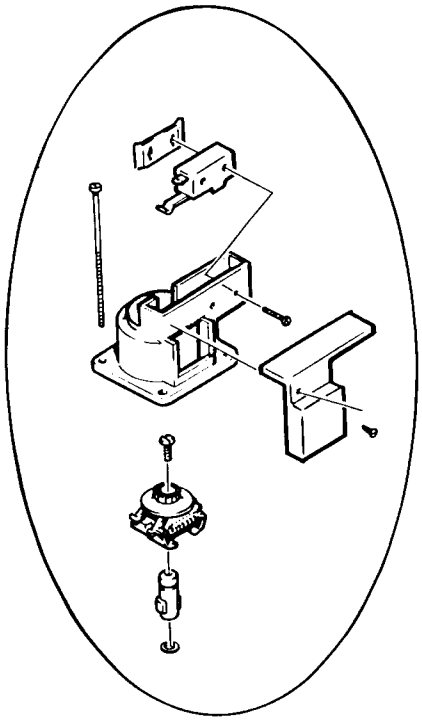

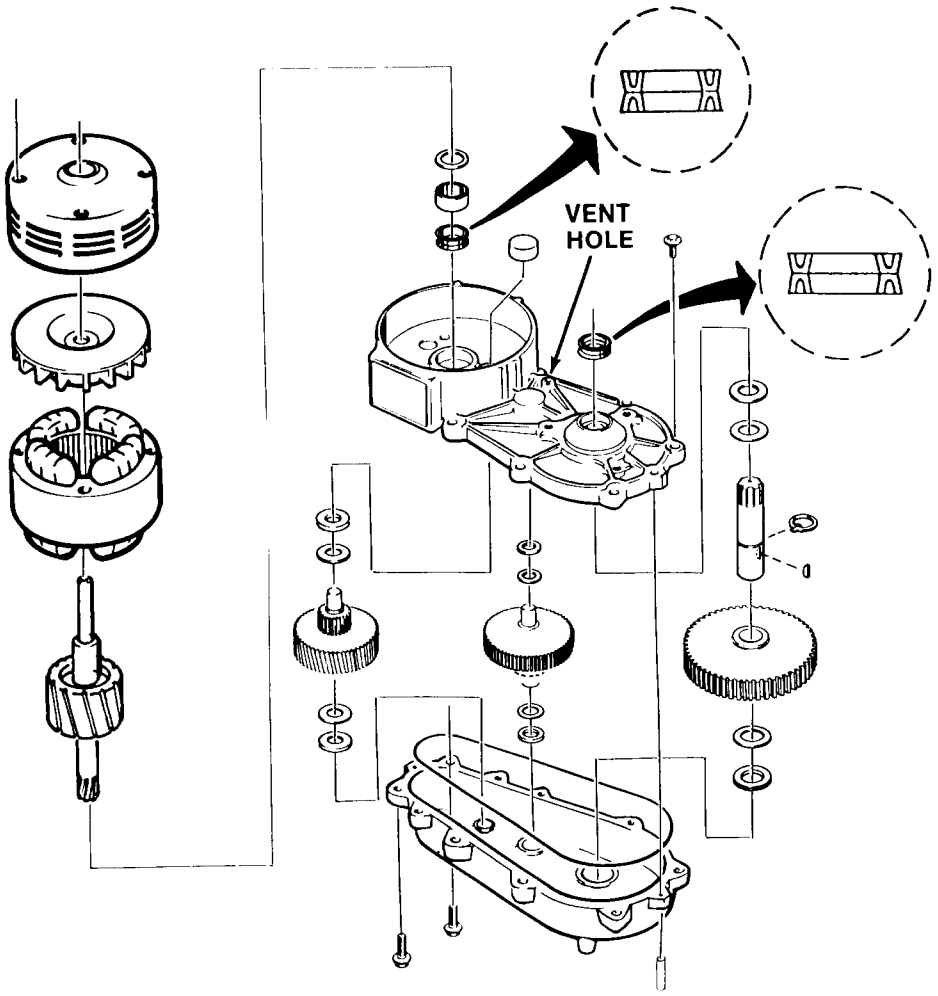

TABLE OF CONTENTS

Foreword 1

Table of Contents 2

Photo and Ice Making Capacity 3

Specifications 4

General Description 5

Installation Instructions - Limitations - Practice 6-7-8

Hook-Up Practice 9

Storage Bin and Dispensing Assy 10

Bin Controls 11

Storage Bin Top Assy 12

Wiring Diagram 14

Function - T.I. Lo Pressure Switch 13

Reservoir Assy 15

Cabinet Panels — Chassis 16

Chassis Assembly - Parts - 17-19

Gear Motor Assembly - Parts - Centrifugal Switch 20-22

Freezer Assembly - Top Bearing Replacement 23-24

Freezer Assembly 25

Service Analysis (Icemaker) 26-28

Maintenance Instructions 29

Cleaning Instructions 30

Accessory Kits 31-32

THIS PAGE
INTENTIONALLY
LEFT BLANK

THIS PAGE
INTENTIONALLY
LEFT BLANK

SCOTSMAN®

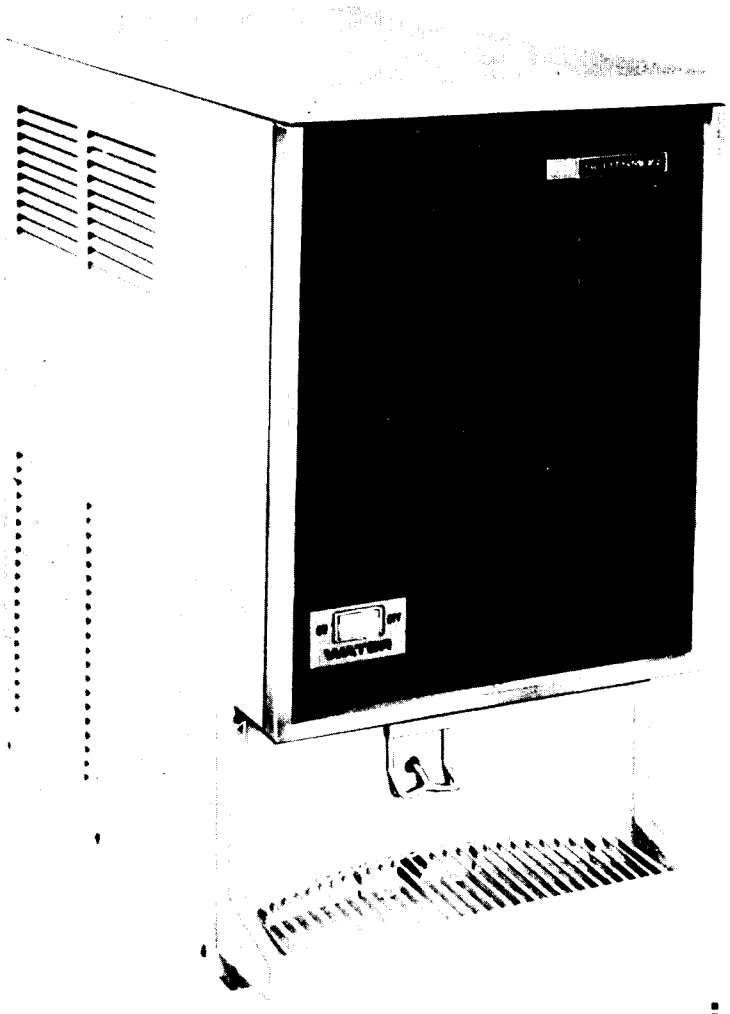

FD4 SERIES ICEMAKER-DISPENSERS

ice making capacity

Daily Ice Capacity is directly related to condenser air inlet temperature, water temperature, and age of machine.

To keep your SCOTSMAN FLAKER DISPENSER performing at its maximum capacity, it is necessary to perform periodic maintenance as outlined on page 29-30 of this manual.

FD4 flake ice dispenser

Storage Bin: 8 lbs. (3.3kg.) All stainless steel
Height: 38-1/4" (71.8cm). 33-1/4" (83.8cm) with Drain Extension Kit.
Width: 14-1/4" (36.1cm); **Depth:** 23-3/4" (60.3cm)
Ice Vend: Continuous Flow
Shipping Wt: FD4 model — 192 lbs. (87kg.)

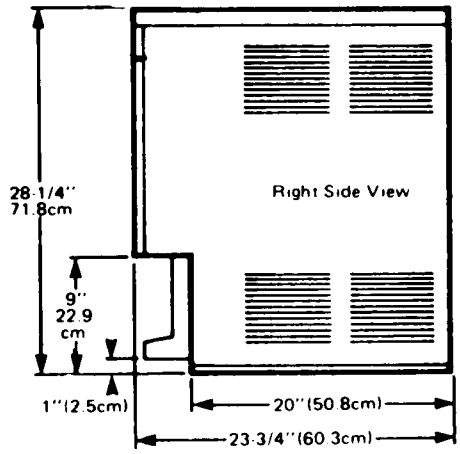

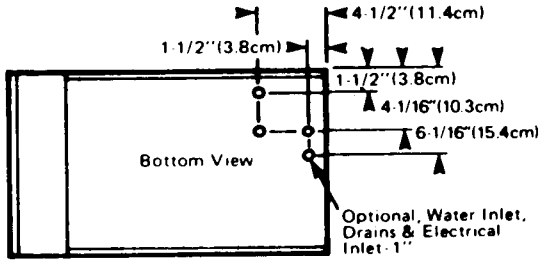

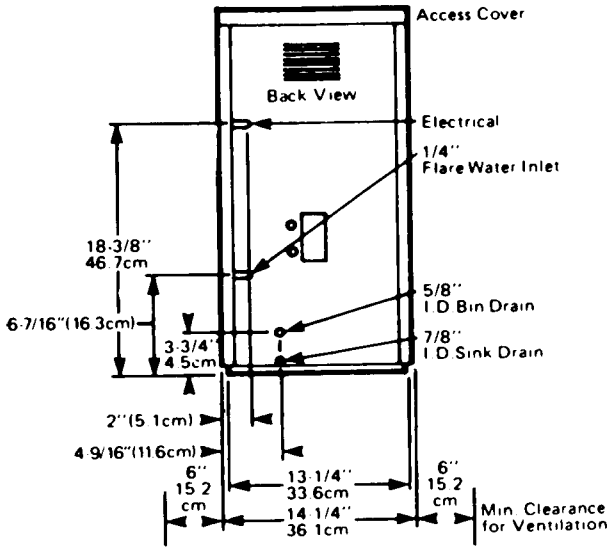

FLAKER/ DISPENSER MODEL		Bin Capacity pounds	24 Hr. Product. pounds	1 Hr. Product. pounds	Full Bin Vends/Recovery Rate Vends per Hour			
					2 OZ.	4 OZ.	6 OZ.	8 OZ.
FD4	Air Cooled	8	445	18.5	64/148	32/74	21/49	16/37

Note: All production and vend figures are approximate, based on temperatures of 70° air and 50° water.

FINISH: Walnut Vinyl front panel with Sandalwood enamel cabinet.
SPK FD3/FD4 STAINLESS STEEL PANEL KIT: Contains Stainless Steel sides, back, top and front to replace enameled cabinet.

SPECIFICATION — FD4

Model Number	Cond. Unit	Comp. HP	Finish	Ship.Wt. lbs./kgs.
FD4AE	Air	1/2	Enamel	192/87

Basic Electricals	Running Amps	Max. Oper. Amps	No. of Wires	Min. **Circuit Ampacity	Max. Fuse Size
FD4	11.6	13.8	2	15.9	15

****Note:** Use this value to determine minimum wire size required to meet national electrical code standards.

OUNCES DISPENSED AT PEAK PERFORMANCE
FD4 model dispenses 212 2-oz. vends first hour of operation, 360 2-oz. vends thru second hour.

IMPORTANT OPERATING REQUIREMENTS
Electrical Voltage: Machine requires voltage indicated on rating nameplate. Failures caused by improper voltage are not considered factory defects.

Scotsman products are not designed for outdoor installations or installations where air temperatures are below 50° F. or above 100° F. and the water temperature is below 40° F. or above 100° F. Extended periods of operation at temperatures exceeding these limitations will constitute misuse under the terms of Scotsman manufacture's limited warranty resulting in a loss of warranty coverage.

We reserve the right to make product improvements at any time. Specifications and design are subject to change without notice.

Scotsman Ice Systems include a full line of modular and self-storing cubers, flakers, drink dispensers, bins and accessories.

SCOTSMAN
COMMERCIAL ICE SYSTEMS/HOME ICE MAKERS
QUEEN PRODUCTS DIVISION
KING-SEELEY THERMOS CO.
505 FRONT ST., ALBERT LEA, MN 56007

GENERAL DESCRIPTION

This unit is a counter or table-top type of dispenser with a self-contained refrigeration unit, flaked ice freezer, storage bin and automatic dispensing mechanism.

The primary purpose of this machine is to fill water or drink glasses with water and ice or just ice by actuating a control arm with the glass.

Press the actuator arm and a continuous flow of ice can be obtained. By pushing a water switch to "on" water will be dispensed with the ice or as long as the glass actuator arm is energized.

The sink or area in which the ice is dispensed is constructed of plastic. The drain grill is 100% nylon coated steel wire. The cabinet is of stainless steel or steel with a baked-on enamel finish. Water lines within the cabinet are of copper and drain lines are Tygon (plastic) tubing.

The complete machine has been designed with sanitation and ease of cleaning emphasized. The complete dispensing unit can be dismantled for cleaning without the need of tools. By removing two winged screws the cabinet top can be removed. Three winged bolts on the storage bin cover may be loosened and the cover can be lifted off. This exposes the entire dispensing mechanism which can be lifted out of the storage bin.

The base of the machine contains a sealing gasket which will seal the machine tight against the table or counter top, thereby, eliminating the possibility of dirt or bugs lodging under the base.

The top, back, front, sink or either side of the cabinet can be removed in a matter of minutes.

To clean the condenser or for access to the control box, the left side panel is removed.

INSTALLATION LIMITATIONS

ELECTRICAL

1. Scotsman purchases electrical motors that are rated to operate within 10% variance above or below nameplate ratings.

2. Improper voltages applied to Scotsman equipment can cause premature failures burnouts. Failures of this type are not considered as factory fault or defect.

AMBIENT

WARNING — This machine is not designed for outdoor installations. This machine will not operate when air temperatures are below 50° F. or above 100° F.

This unit was not fabricated nor intended to be installed outdoors.

WATER

3. Scotsman Ice Systems require 20 pounds flowing water pressure to operate satisfactorily. Pressures lower than 20 pounds or interruptions in the water supply can cause serious mechanical damage to this product.

   This machine will not operate when water supply temperatures are below 40° F. or above 100° F.

WARNING

This machine is not designed for outdoor installations or installations where air temperatures are below 50° F or above 100° F and the water temperature is below 40° F or above 100° F. Extended periods of operation at temperatures exceeding these limitations will constitute misuse under the terms of the Scotsman manufactureres limited warranty resulting in a loss of warranty coverage.

INSTALLATION INSTRUCTIONS

The following installation instructions were written for use by an authorized tradesman only, not the user or customer. We suggest you call your local authorized Scotsman Service Agency for hook-up, start-up, and check out. He's listed under "Ice Making Machinery & Equipment" in your telephone book, yellow pages.

1. Remove the unit from the carton and install on a table or counter with a flat, level, rigid top. Mount at a convenient height for filling glasses.
2. Avoid sliding the unit on the rubber sealing base.
3. Remove the top of the cabinet and the rear side panels.
4. Remove shipping tapes and check tubings, wiring, capillary lines for rubbing or chafing, refashion as required.
5. Pull the drain from the cabinet. This may be routed through the rear panel or through the hole provided in the base. It is possible to route all lines through holes which have been provided in the in the base. All drains should be made to a open, trapped and vented drain. (See next page.)
6. The lower drain from the sink area must never be installed higher than the base of the cabinet. Consideration should be made in regard to this drain in order to get proper flow from the sink drain.
7. Water should be supplied from a 3/8" copper or equivalent pipe. A small water supply line will only result in an increase in time for filling glasses with water.
8. Connect power to terminal strip in junction box.
9. Replace the rear panel and the cabinet cover. Disconnect electrical supply when the machine is opened for cleaning. At such a time both the unit and dispenser are disconnected.
10. Thirty minutes after the unit has been started, ice can be dispensed.

NOTE: Should this unit be improperly installed with the drain favoring front of the machine, a condition would result in slushy, wet ice as the meltage water would remain in the bottom of the storage bin, and may run out the discharge spout.

WARNING: THIS MACHINE MUST NOT BE ALLOWED TO OPERATE WHEN THE WATER SUPPLY IS SHUT OFF, OR AT BELOW RECOMMENDED WATER PRESSURE. DISCONNECT ELECTRICAL SUPPLY WHEN WATER SUPPLY IS OFF, OR WHEN WATER PRESSURE IS BELOW RECOMMENDED OPERATING PRESSURE.

INSTALLATION PRACTICE

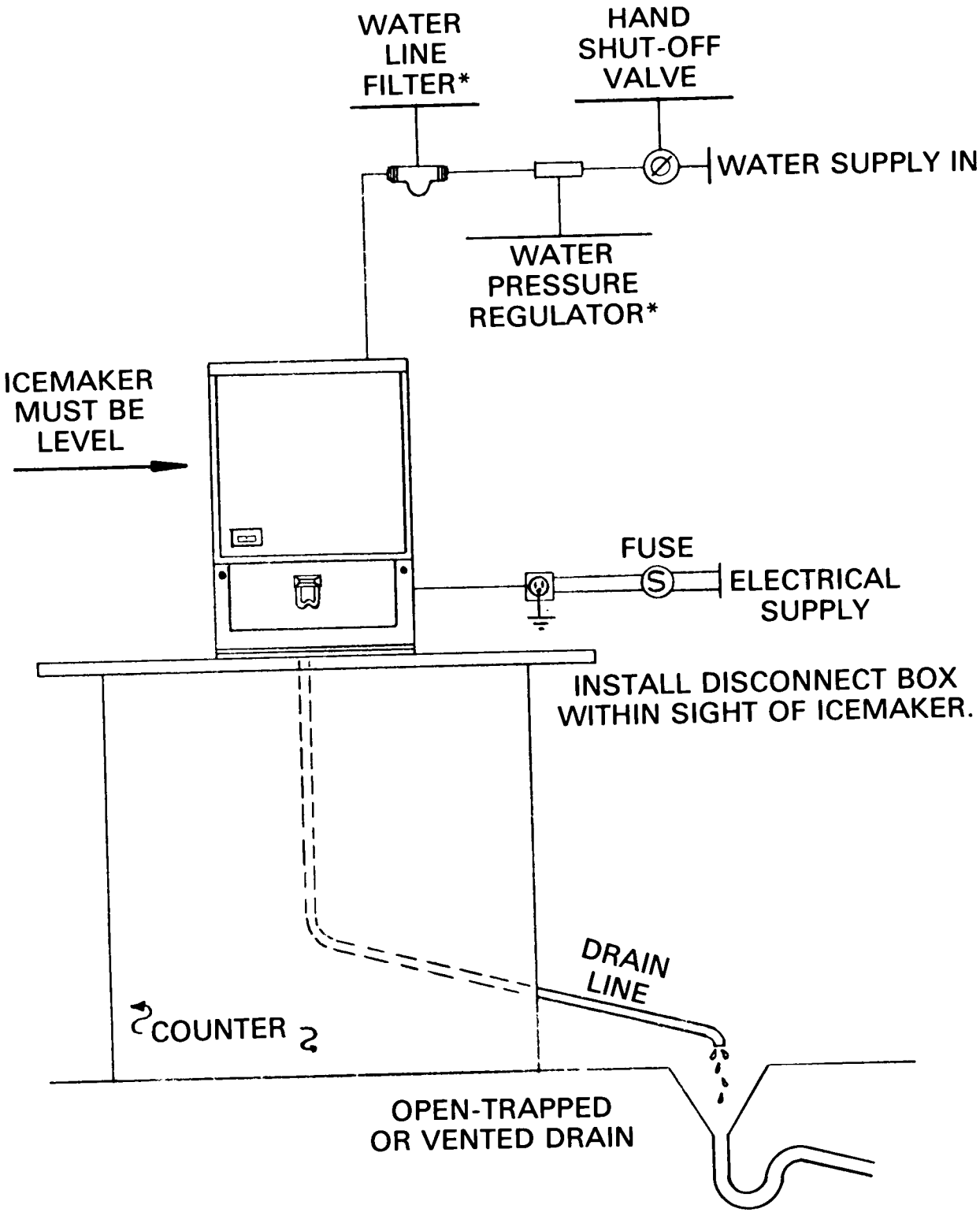

*REGULATOR AND HAND SHUT OFF VALVE ARE ACCESSORY ITEMS TO BE INSTALLED AS CONDITIONS WARRANT

HOOK-UP PRACTICE

ELECTRICAL:

Standard electricals are 115 volts, 60 Hertz single phase current. This unit must have a solid ground wire.

Consult name plate on Icemaker back panel for proper electrical requirements and wire size.

Fuse protection is required, preferably a delay type such as Fustat, Fusetron etc. All external wiring should conform to National Underwriters, as well as State and local codes. The maximum allowable voltage variation must not exceed 10 per cent of unit nameplate ratings, even under starting conditions.

Knockouts in cabinets are made for cord connectors. Supply line ties into terminal board of control box. Use separate circuit for icemaker only.

WATER SUPPLY:

A single cold water supply line is required. Recommended tubing size 3/8" O.D. or larger, cabinet connection is to a 1/4" S.A.E. flare tee on internal cabinet bulkhead. A water strainer with clean out feature should be installed in supply line along with a hand shut off valve.

Minimum water pressure is 20 pounds gauge, maximum pressure over 50 pound gauge may cause chattering of float ball in reservoir tank. For pressures in excess of 50 pounds, use a water pressure regulator in line. Cabinet back is slotted for supply line entrance.

WATER AND CONDENSATE DRAINS:

Two soft drains (plastic tubing) are provided, see page 4. The upper drain is 5/8" I.D. tubing, the lower drain is 7/8" I.D. tubing. Drain lines should be run to an open, trapped or vented drain in accordance with your State and local code regulations. These are gravity drains, therefore maintain at least a 1/4" pitch per foot away from unit drains. knockouts are provided for either out the back or thru the base drain.

REFRIGERANT SYSTEM:

The standard Scotsman Flaker system is used in slightly modified form. Refrigerant 12 is pumped by compressor into the air cooled condenser, into the liquid line, thru a filter-drier and then into the capillary refrigerant control line.

Liquid refrigerant is then carried down to the bottom end of the shell and tube type evaporator (freezing cylinder) where it expands and rises to the top of evaporator. Here the vapors and gases are returned thru an accumulator and suction line to the compressor.

Average operating head pressure is 135 lb. gauge, operating back pressure is 14 lb. gauge.

Factory charge is 21 ounces of Refrigerant 12.

Compressor is 1/2 horsepower, 2 pole, 3500 RPM by Copeland, Proper model number is Copelaweld: RSF2-0050-1AA.

STORAGE BIN/DISPENSER

ITEM NO.	PART NO.	DESCRIPTION
1.	A16098-000	Bin Top
2.	A26440-001	Revolving Storage Bin
3.	A16004-000	Tie Bolts 3/Unit
4.	A26447-001	Storage Bin - Insulated
5.	03-0255-00	Wing Nuts 3/Unit
6.	12-1610-01	Dispensing Motor
7.	A26445-001	Tapered Bottom Plate
8.	A26435-001	Hub Assembly
9.	03-1408-08	Fiber Washer

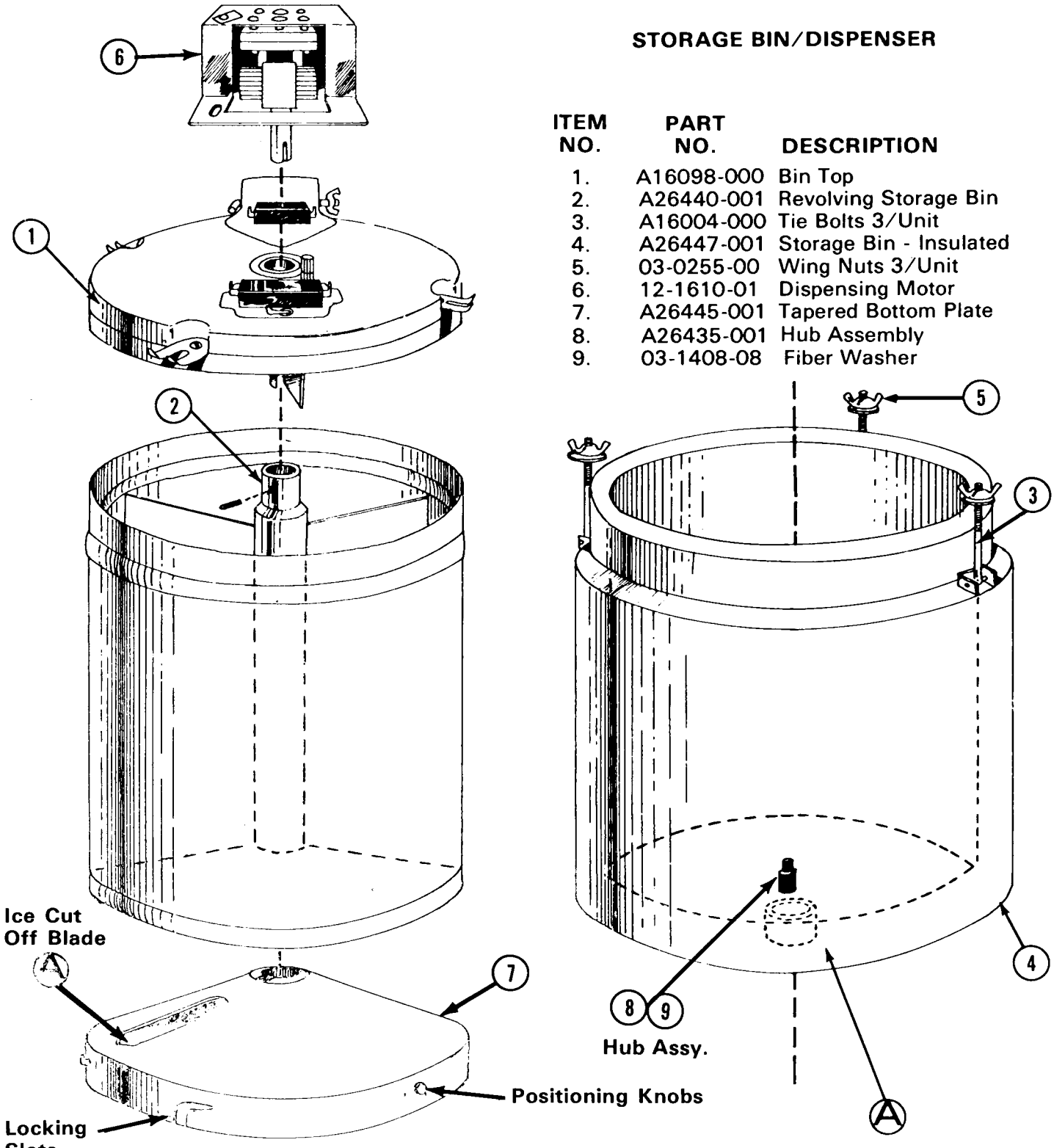

BIN CONTROLS

There are two controls located on the underside of the cover that govern the amount of ice that is in the bin. One control, that over the spout of the freezer, turns the freezer off when the bin is full of ice. This control must be in a position as illustrated in drawing page 12. Section B-B. The second control (see Section C-C page 12) hangs into the bin and holds the freezer off for a period of vends. This flipper slides upon the ice at the first ice vend and opens the switch contacts. It operates as a differential to keep the unit from starting and stopping at each each vend and is a secondary means of stopping the unit should the spout switch fail.

Both of these controls can be easily removed for cleaning. The bin differential control has two fasteners securing it to the cover. They are tall round, knurled tubes which are unscrewed like a nut. Removing these two fasteners will drop the differential control from the cover.

The spout of the freezer has an extension that slides over the fixed spout. This removable extension has two small ears on the side. it is necessary when replacing the cover on the bin to slide this extension as far back on the freezer spout as possible. Be sure the small ears of the extension are on the outside of the cover. When the cover has been fitted over the bin and before it is bolted down, this extension should be slide toward the cover until the ears rest against it.

Serious damage could result if the cover is not installed properly. The small flipper over the switch button in the ice spout of this cover must definitely be forward. Check section B-B, page 12 carefully before attempting to install the cover.

WATER SWITCH:

1. Located on the front panel.
2. When in an "ON" position, it energizes a water solenoid to dispense water with ice.
3. This is a rocker type single pole single throw switch.

DISPENSING SWITCH:

1. Locate in the sink area on firewall back of the sink. It is accessible by removing the right side panel.
2. When depressed, usually by a water glass, it actuates the dispensing mechanism.
3. It is a double pole, double throw leaf type snap switch.

A27491-021
BIN TOP
ASSEMBLY COMPLETE

ITEM NO.	PART NO.	DESCRIPTION
1.	A21207-000	Shaft
2.	12-1610-01	Motor
3.	03-1404-08	Screw
4.	A27485-001	Cover
5.	A27486-001	Cover
6.	12-0629-09	Bushing
7.	03-1403-16	Screw 4/Unit
8.	03-1417-05	Washer 4/Unit
9.	03-1403-47	Screw 4/Unit
10.	03-1417-09	Washer 4/Unit
11.	A16098-000	Bin Top
12.	A16104-000	Hinge Pin
13.	03-0255-02	Wing Nut
14.	A16495-000	Knurled Nut 2/Unit
15.	12-1018-01	Micro Switch
16.	A19269-000	Bin Paddle Assembly
17.	A16010-000	Spout Paddle Assembly

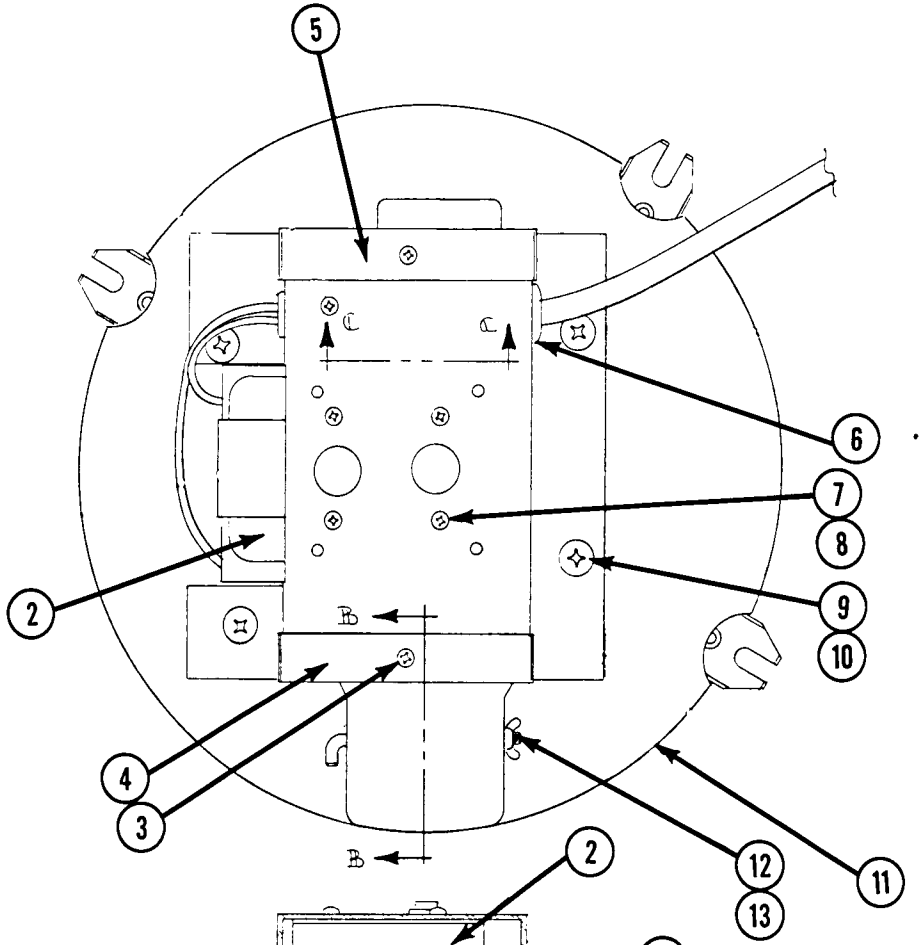

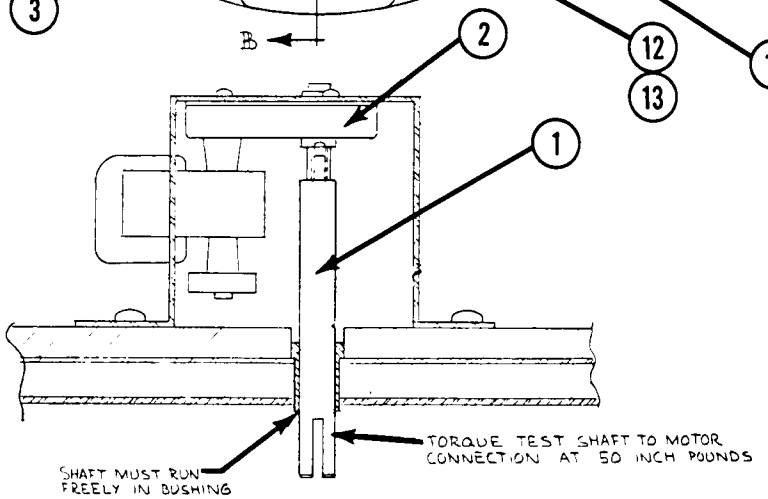

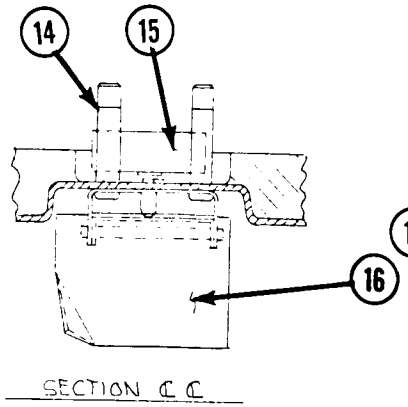

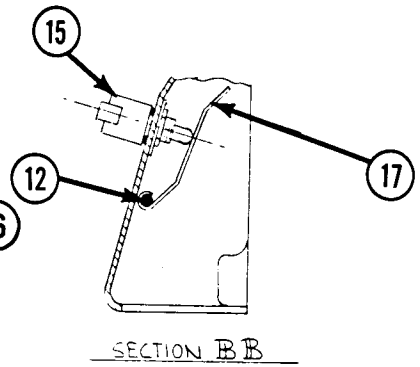

CONTROLS SHOWN IN THE ICE MAKING MODE
WITH ALL DISPENSING SYSTEMS IN OPERATION

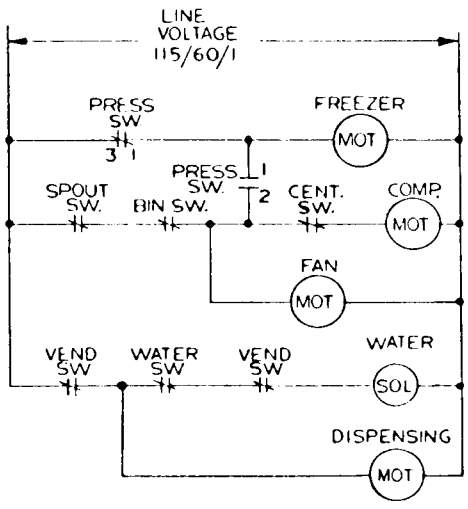

SCHEMATIC

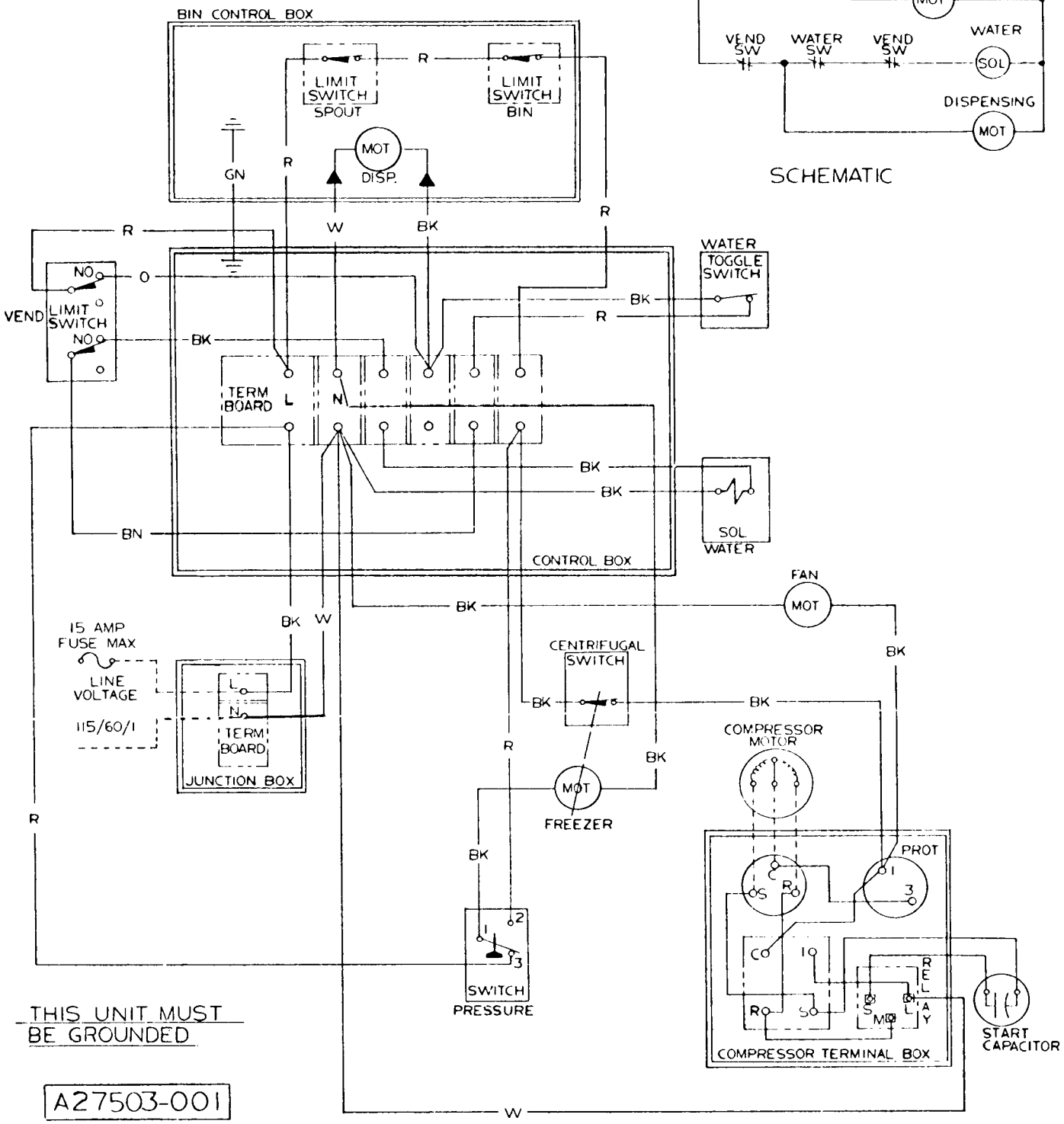

THIS UNIT MUST
BE GROUNDED

A27503-001

Description of the Function of the Texas Instruments Low Pressure Control Switch When Used on 1/10 H.P. Gear Motors

On all Scotsman units using a 1/10 H.P. gear motor, the centrifugal switch mechanism is mounted on top of the motor. Also incorporated is a low pressure control switch. This is a single pole double throw (SPDT) switch manufactured by Texas instruments. (Queen Products Part No. 11-0396-01*).

*Refer to a typical wiring diagram, showing contacts, for description of switch function.

On all Queen Products wiring diagrams, the controls are shown in the ice making mode. Thus, the 1-3 contacts are shown as closed. On machine start up the 1-3 contacts are open and the 1-2 contacts are closed. As the unit begins to run, the low side pressure starts to fall from the stabilized or "at rest" pressure. As soon as the pressure drops to 20 Psig, the 1-2 contacts open and the 1-3 contacts close. This removes the operating controls, such as the bin thermostat, from the "gear motor circuit". If one of the operating controls opens, it will shut off the "compressor circuit". The gear motor will run until the low side pressure rises to 32 Psig. At this point the 1-3 contacts open and turns the gear motor off. This usually takes 1-3 minutes depending on ambient conditions. This length of time allows the auger to transport all the ice out of the freezing chamber. Consequently, when called on to start up again, there is no load to start up aginst. On start up, again, the 1-3 contacts are open and the 1-2 contacts closed.

*Function 11-0396-01 Low Pressure Control Switch

1-3 Contacts - Open on Pressure Rise
Opens at 32 Psig
Closes at 20 Psig

1-2 Contacts - Open on Pressure Fall
Opens at 20 Psig
Closes at 32 Psig

NOTE: Refer also to Pages 21-22 for additional information concerning Gearmotor Centrifugal Switch.

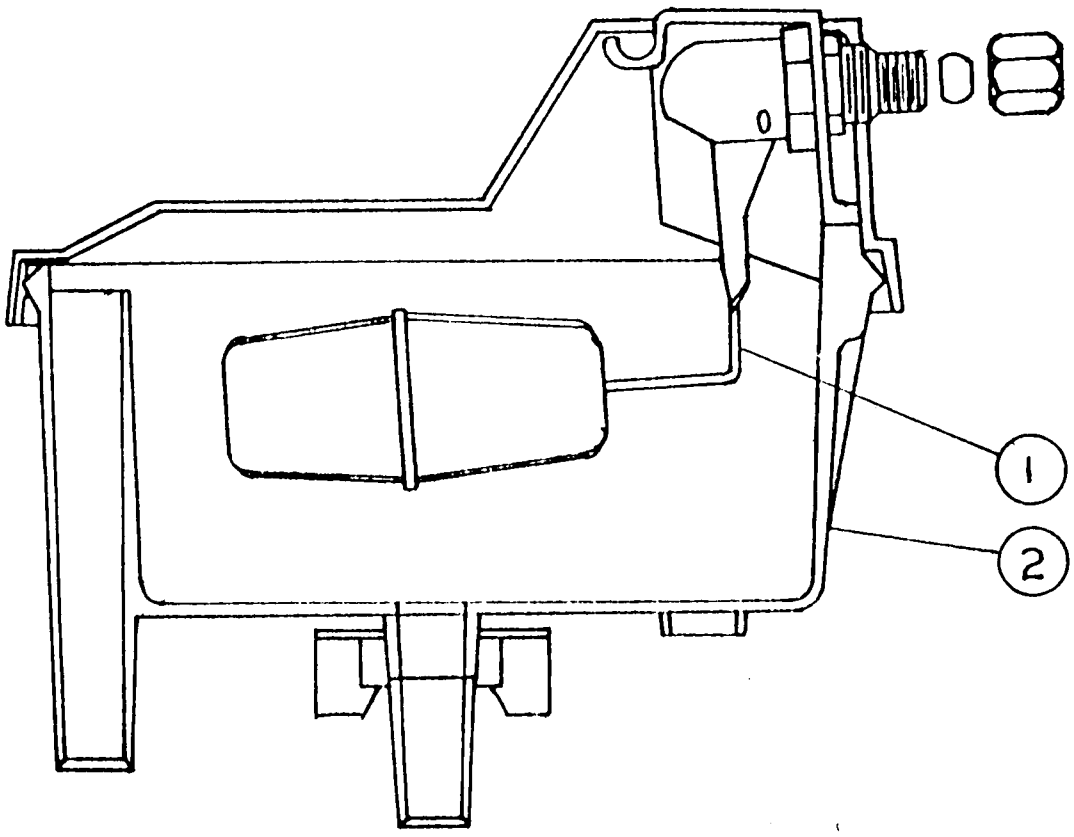

RESERVOIR ASSEMBLY

ITEM NO.	PART NO.	DESCRIPTION
1.	02-2217-02	Valve Assy.
2.	02-2217-01	Reservoir Complete

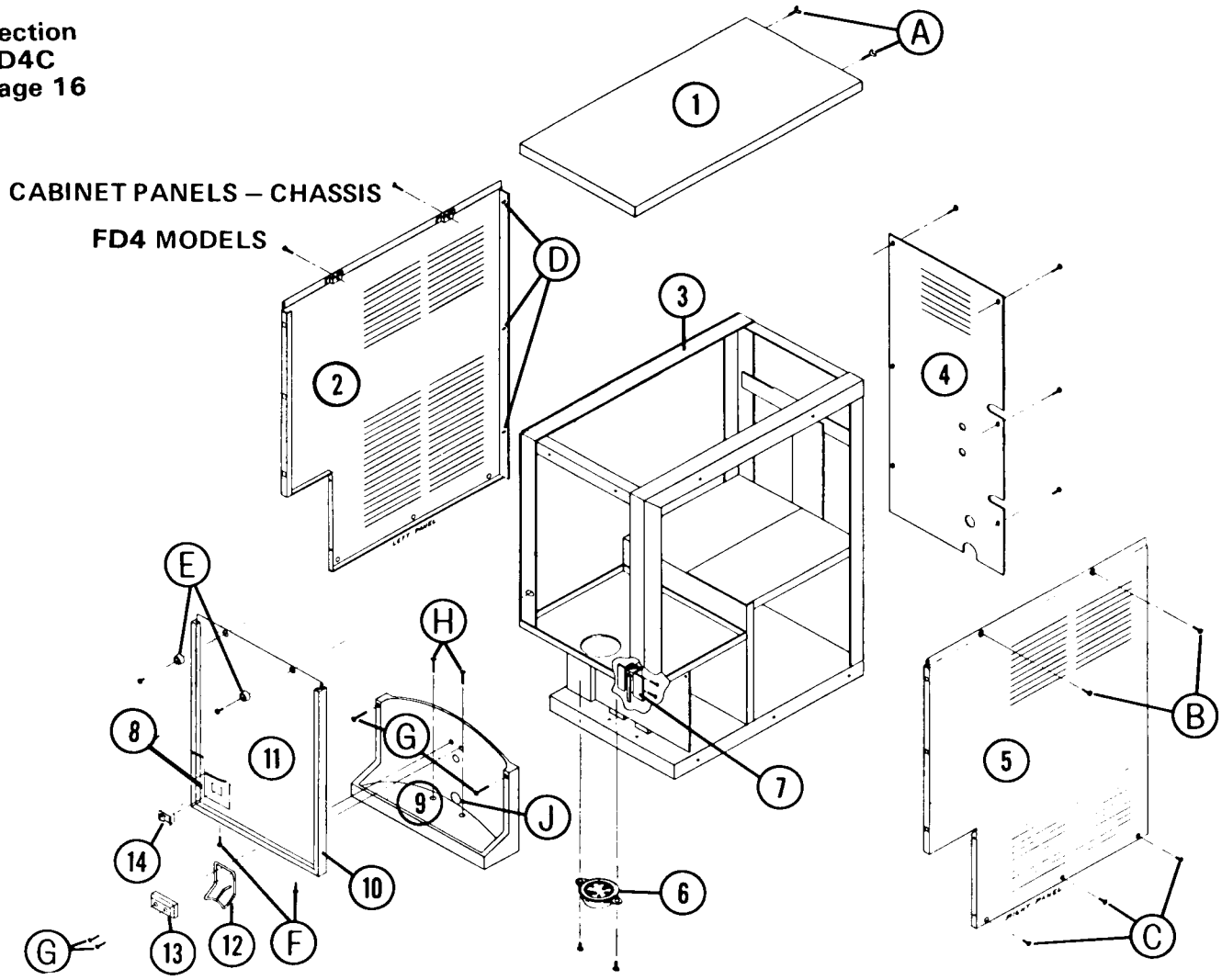

ITEM NO.	PART NO.	DESCRIPTION
1.	A16317-004	Top Panel - Painted
	A16317-001	Top Panel St. Steel
2.	A21415-002	Left Side Panel - Painted
	A21415-001	Left Side Panel - St. Steel
3.		Cabinet Frame
4.	A21405-002	Back Panel - Painted
	A21405-001	Back Panel - St. Steel
5.	A21416-002	Right Side Panel - Painted
	A21416-001	Right Side Panel St. Steel
6.	02-1804-00	Spout Extension
7.	12-1641-00	Vend Switch
8.	15-0621-01	Decal - Water
9.	A21429-000	Sink
	02-1473-00	Sink Grate
10.	15-0507-00	Moulding Trim
11.	A27500-002	Front Panel - Walnut Vinyl
	A27500-001	Front Panel St. Steel
12.	A21544-000	Actuator Arm
13.	02-1833-00	Adapter
14.	12-1377-00	Water Switch
A.	03-1578-01	Screw 2/Unit
B.	03-1403-21	Screw 4/Unit

REMOVING PANELS & SINK

1. To remove either side panel or front, first remove the two bolts in the back of cover No. 1, Item (A). Lift the back of the cover upward and push forward to release.

2. Either side panel can be taken off by removing two screws across the top (B) and three across the bottom of the panel. (C) These are the only screws that hold the panel. Pull the panel from in back of sink, then slide backward about 1/2 inch.
There are no screws in the back of the panel, only pins that slide into holes in the frame. (D)
The front edge of the panel merely fits under the aluminum trim.

3. The front panel is removed by unscrewing the two rubber bumpers at the top of the panel (E) and two screws under the sink top area. (F)
The water switch (14) will snap out and the quick connects can be removed from the switch.

4. The sink (9) can be removed by removing four screws (G) on the front side of the switch and two screws in the bottom of the sink. (H)
These screws are sealed to eliminate water leaks.
The drain tube connection (J) is fastened to the sink rear by a hose clamp. To remove the clamp, it is necessary to remove the right side panel.

5. Remove top and left side panel to clean air cooled condenser.

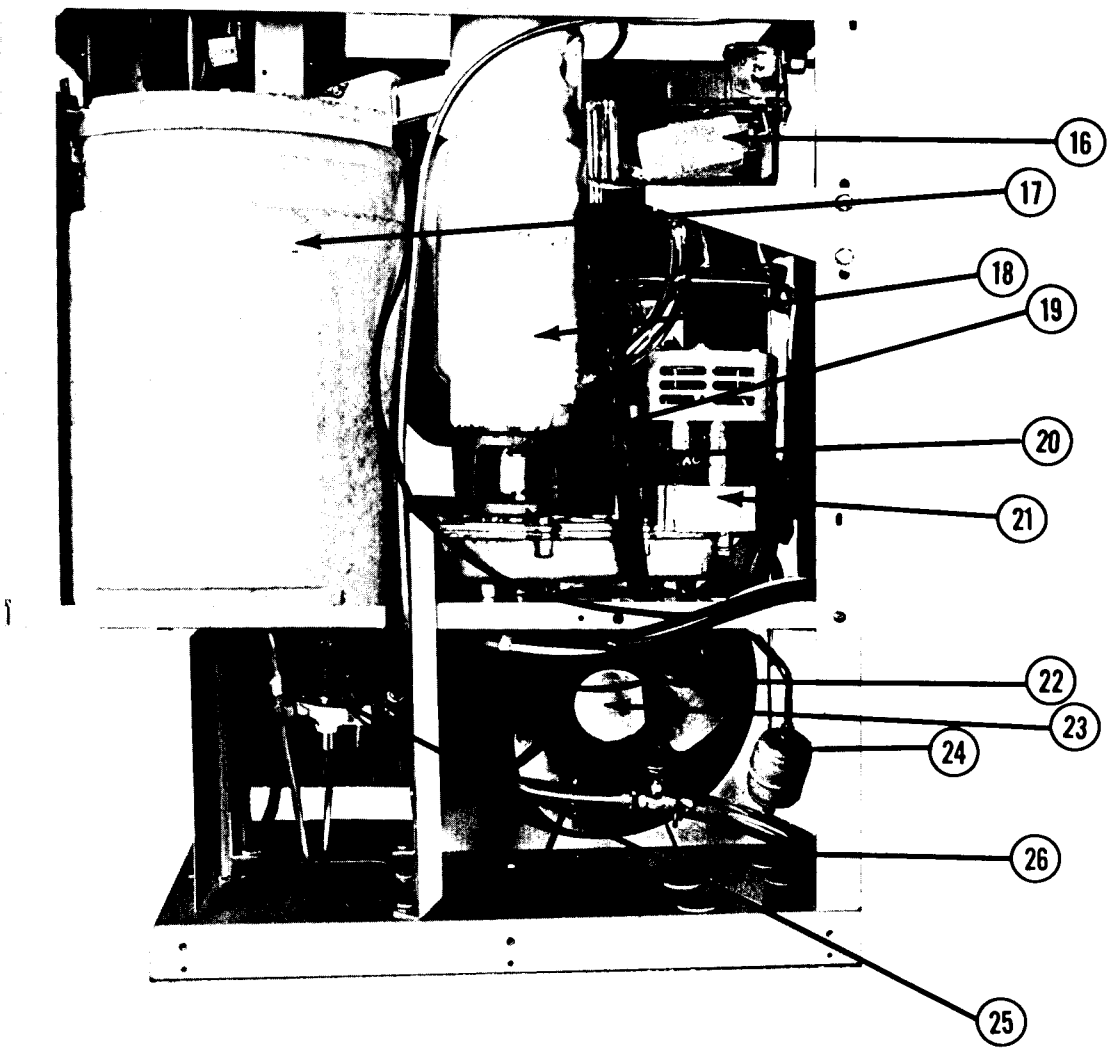

Right Side

ITEM NO.	PART NO.	DESCRIPTION
16.	02-2217-0	Reservoir
17.	A-26447-001	Storage Bin
18.	A-26743-020	Freezer Assembly
19.	15-0575-01	Coupling
20.	08-0595-01	Adapter
21.	A25995-021	Gearmotor
22.	18-0137-01	Fan Blade
23.	12-1576-01	Fan Motor
24.	02-0831-00	Drier
25.	12-1434-04	Inlet Water Solenoid
26.	18-0422-00	Bracket-Fan Motor

CHASSIS ASSEMBLY

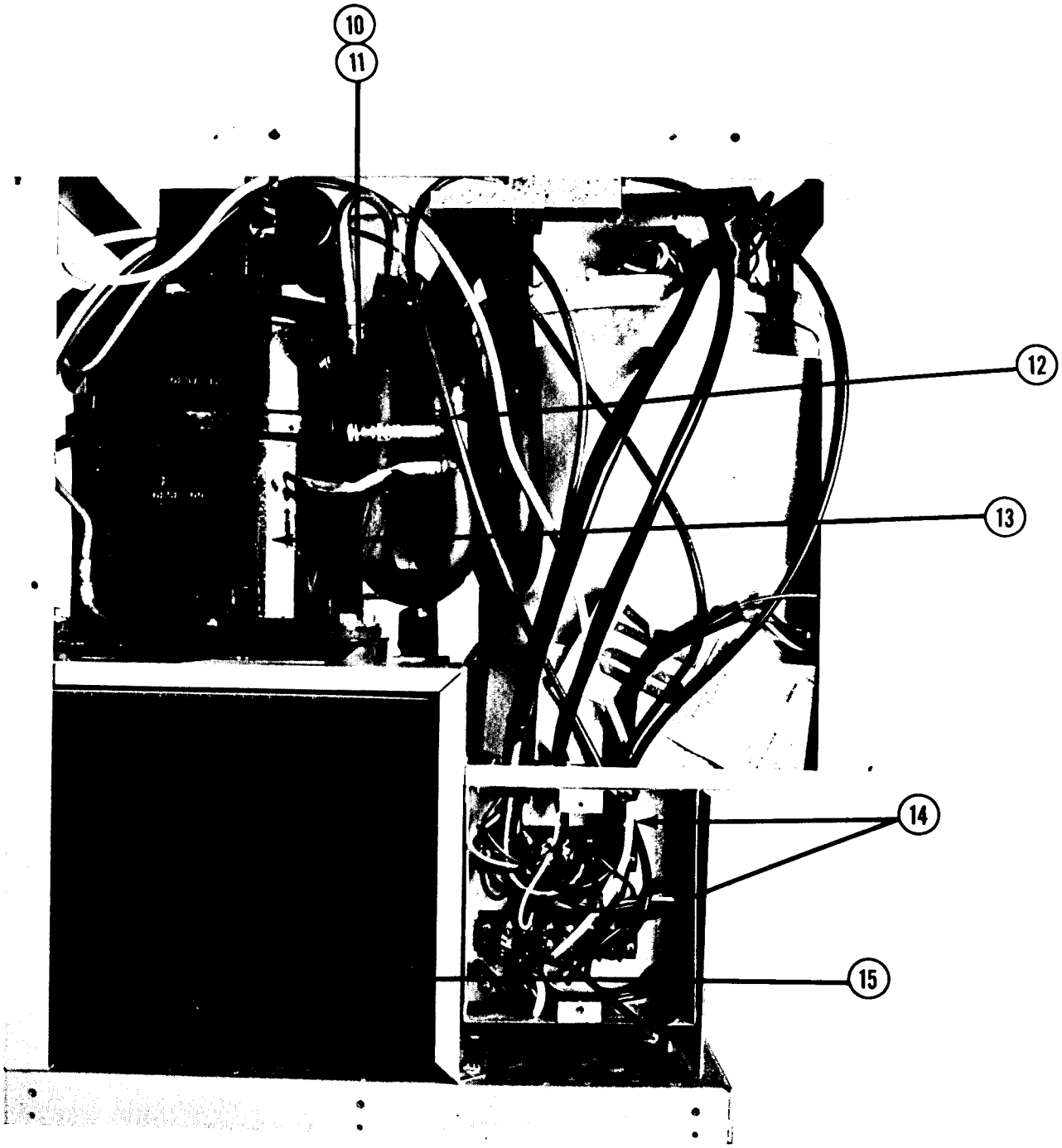

Left Side

10.	16-0563-00	Cap
11.	16-0560-00	Core
12.	16-0673-18	Process Header - Low Side
13.	18-2200-01	Compressor
14.	12-0813-03	Terminal Strip
15.	18-1927-00	Condensor - Air Cooled

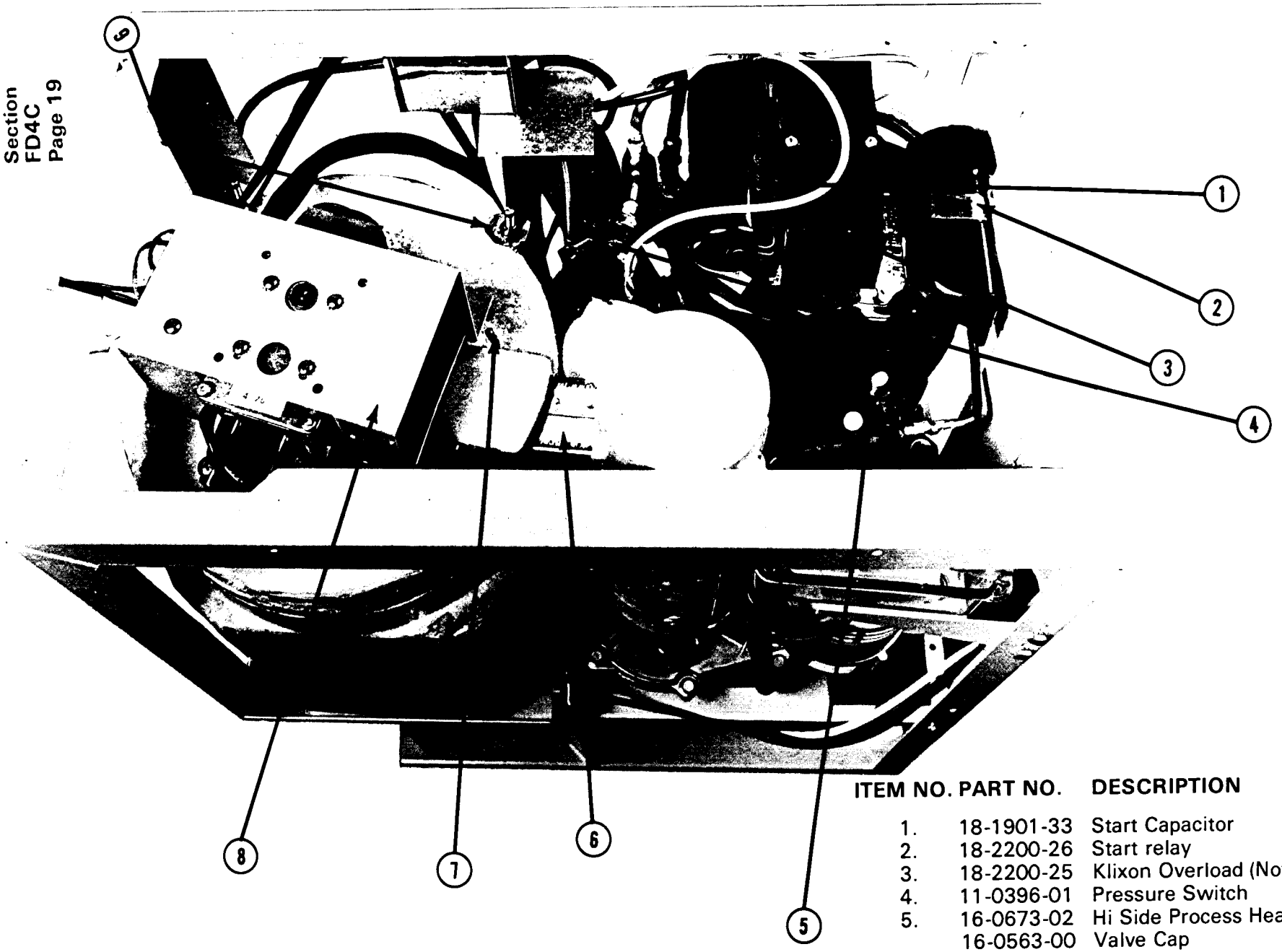

ITEM NO.	PART NO.	DESCRIPTION
1.	18-1901-33	Start Capacitor
2.	18-2200-26	Start relay
3.	18-2200-25	Klixon Overload (Not Shown)
4.	11-0396-01	Pressure Switch
5.	16-0673-02	Hi Side Process Header
	16-0563-00	Valve Cap
	16-0560-00	Valve Core
6.	A16151-000	Sliding Spout Extension
7.	A16104-000	Hinge Pin - Spout
8.	A27493-001	Motor Mount
9.	03-0255-00	Wing Nuts 3/Unit

A25995-021
GEAR MOTOR ASSEMBLY
1/10 H.P.
115/60/1

11.5 RPM at output shaft

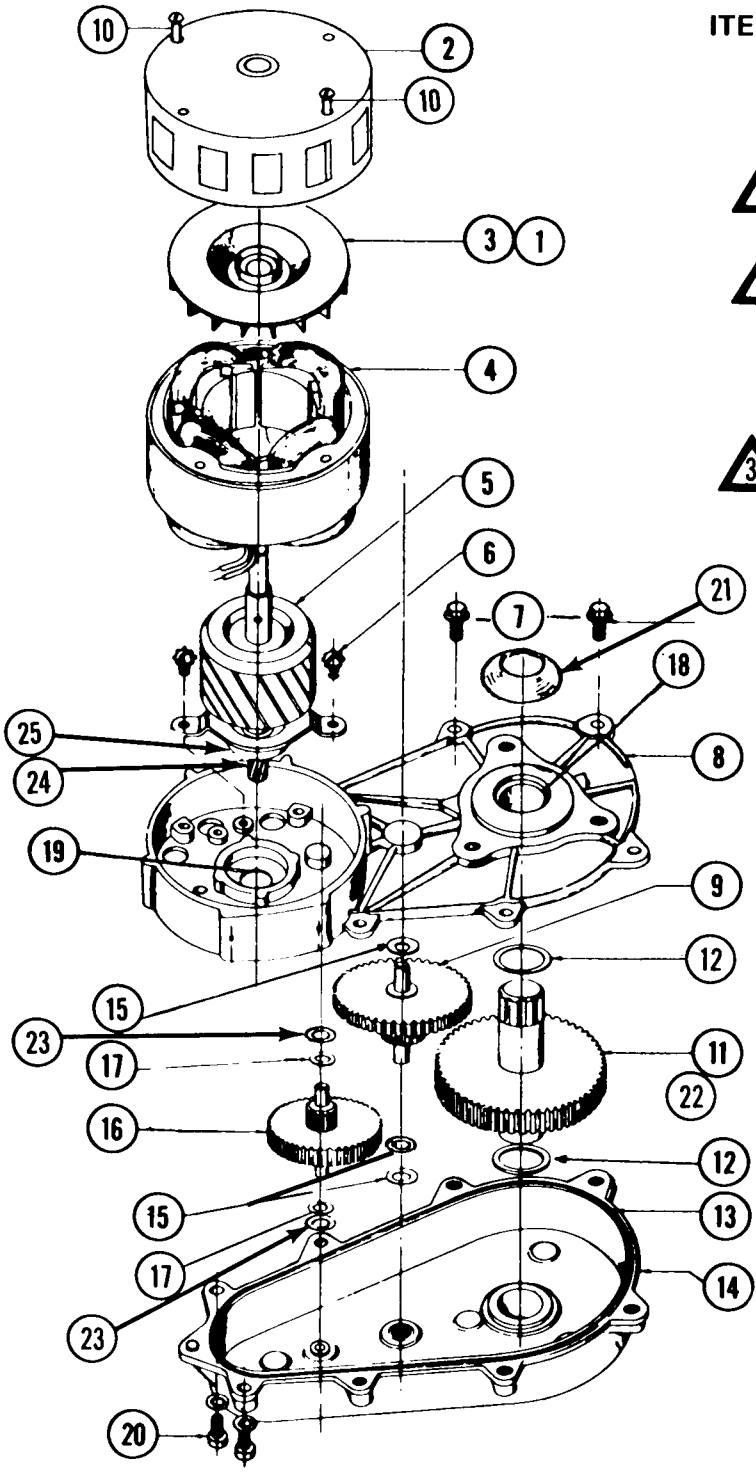

ITEM NO.	PART NO.	DESCRIPTION
1.	03-1246-00	Set Screw (2)
2.	A17047-000	Motor Housing
3.	A16915-000	Cooling Fan
4.	12-1400-01	Stator Assy.
5.	A26454-001	Rotor & 1st. Gear Kit
6.	03-1245-00	Screws (2)
7.	03-1251-00	Flange Screws (6)
8.	A16920-021	Gear Case Cover
9.	02-1521-00	Gear and Pinion
10.	03-1403-43	Motor Bolts (4)
11.	A26650-001	Gear and Output Shaft
12.	03-1408-21	Washer (2)
13.	02-1505-00	"O" Ring
14.	A24184-001	Gear Case Kit
15.	03-1408-06	Washer (3)
16.	02-2224-01	1st Gear and Pinion
17.	03-1408-19	Washer (2)
18.	02-1503-00	Grease Seal
19.	02-1504-00	Grease Seal
20.	03-1252-00	Screw (2)
21.	13-0709-01	Water Shed
22.	03-1475-01	Key
23.	03-1408-20	Washer (2)
24.	13-0617-04	Slinger Ring
25.	02-1501-00	Rotor Bearing

NOTE:

1. Cover comes with grease seals items 18 & 19.
2. Fiber gear (item 16 and rotor bearing (item 25) included in the rotor kit.
3. Includes items: 8, 13, 15, 17, 18, 19, 23 and gear lube.

GEAR MOTOR ASSEMBLY/CENTRIFUGAL SWITCH
Part #A25995-001

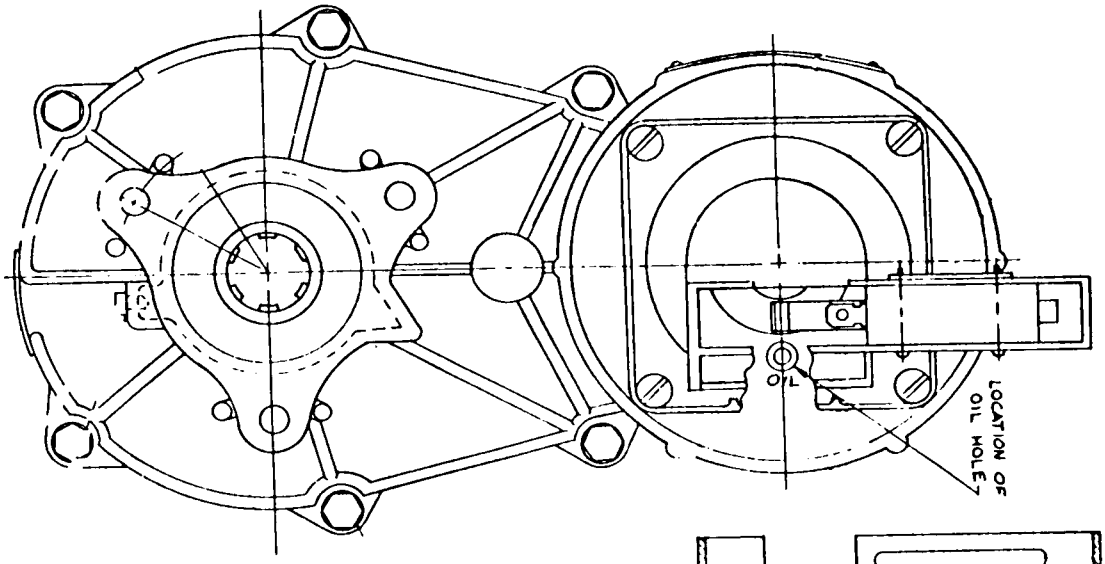

New style centrifugal switch started with "C" models. Approximate serial number starting usage is: 346800-1C.

FD-4 models prior to above may be converted to current standard using Kit Part #A27494-01 shown on next page.

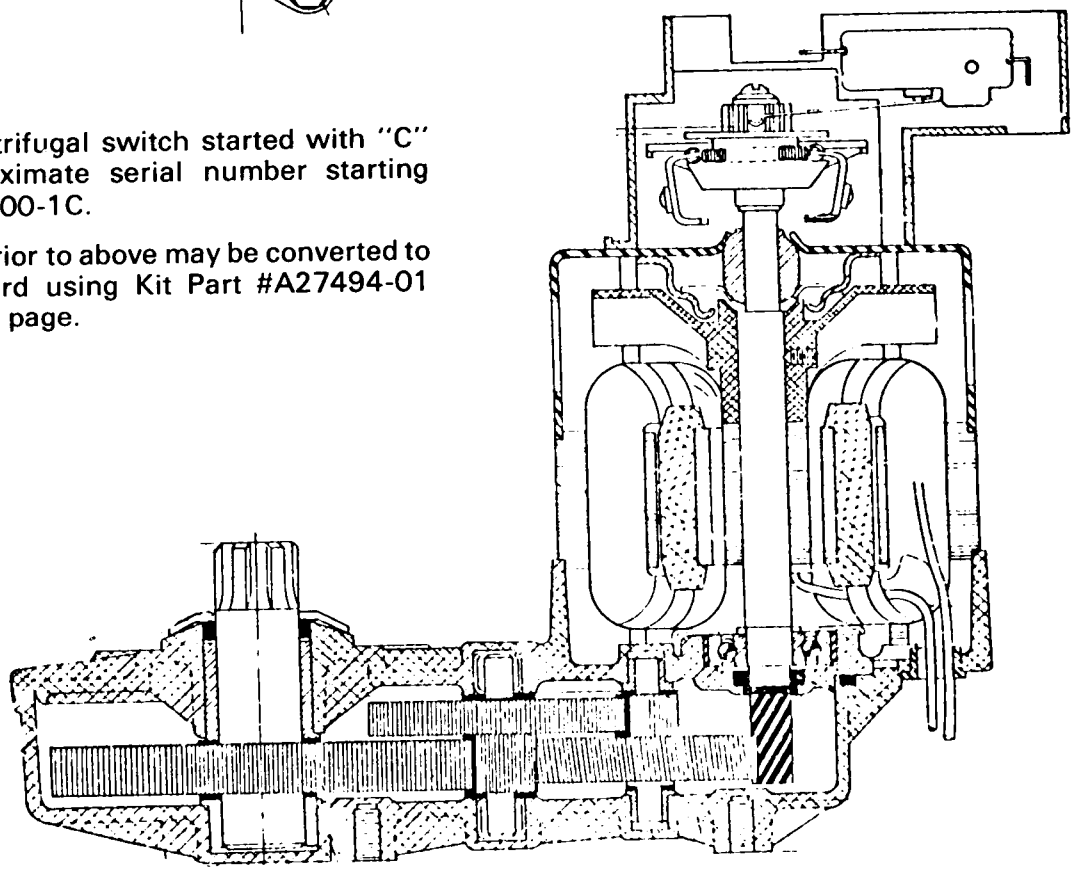

CENTRIFUGAL SWITCH KIT INSTALLATION INSTRUCTIONS

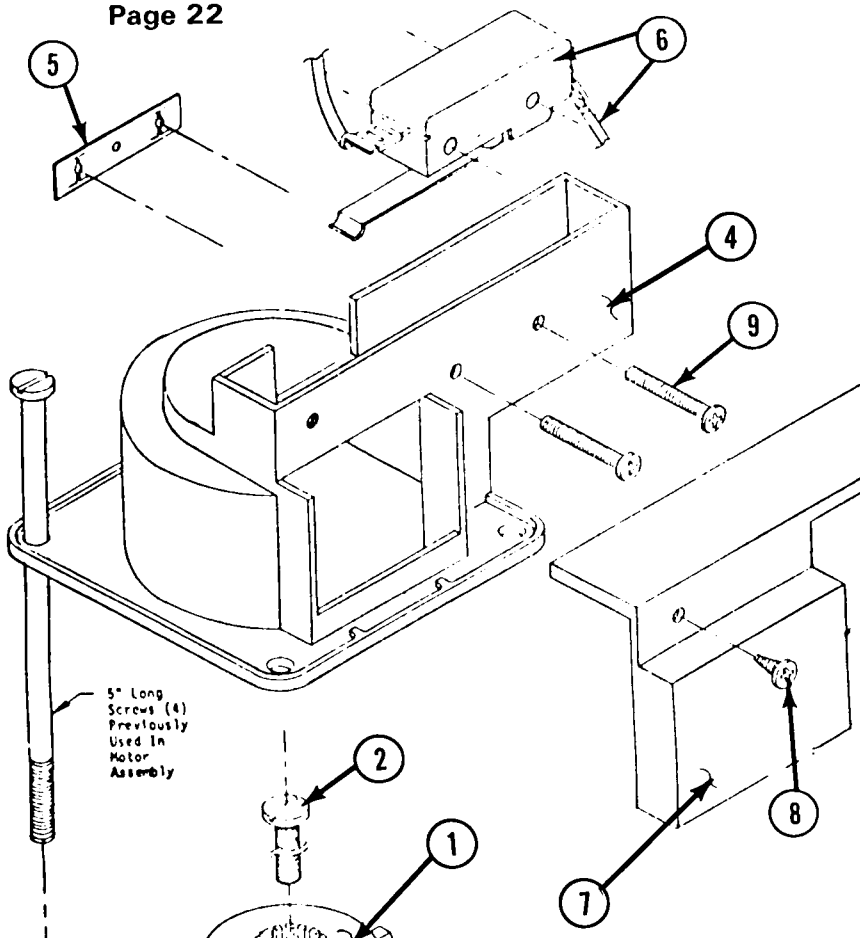

SWITCH ADJUSTMENT

.03 minimum gap between seitch lever and mechanism with centrifugal mechanism actuated (Motor running). Switch circuit should be closed. When motor is stopped and centrifugal mechanism deactivates, the switch circuit should be broken. There should be enough adjustment by loosening the switch mounting screws and tilting switch in direction required. If this fails a small amount of bending can be done on the switch lever.

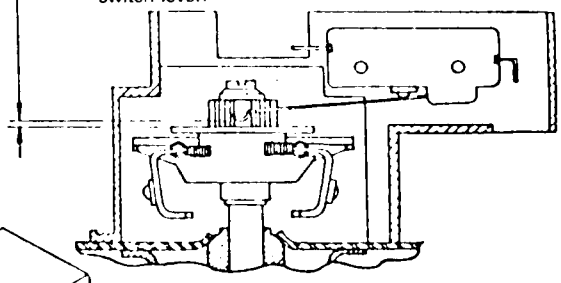

CENTRIFUGAL MECHANISM INSTALLATION INSTRUCTIONS

In order to replace an existing centrifugal mechanism or just adding this new centrifugal mechanism into your unit, the installation procedure is the same.

REMOVAL

1. Remove all existing hardware from the top of the drive motor so that all that is visible on the top of themotor is the shaft of the motor and the four holes left vacant by the motor support screws. Do not remove motor housing cover.

NOTE:1 These four screws (approximately 5" long) will be reused to assemble the new mechanism.

NOTE: These four screws (approximately 5" long) will be reused to assemble the new mechanism.

You are now ready to install the new mechanism.

INSTALLATION

1. Install Item 1 centrifugal actuator to motor shaft with Item 2 #10-32 screw and Item 3 small flat washer. A small amount of Locktite should be used on the screw threads to prevent screw from backing out.

   NOTE: The shaft extension shown has been faxtory installed into the centrifugal actuator for your convenience.

2. install Item 4 switch case using four 5" long screws previously removed when disassembling unit.

   NOTE: Switch has been factory installed for your convenience.

3. Make any necessary adjustments noted in sketch above.

4. As the purpose of this mechanism is to turn the compressor off when the gear motor slows down, the switch in this mechanism should be wired into the neutral line of the compressor.

   NOTE: Two white wires Items 5 and 6 have been furnished with this kit to ease your assembly. The insulated terminals should terminate at the centrifugal switch. The remaining ends of these wires will connect at the terminals vacated when the neutral wire from the compressor is removed.

5. After wiring has been completed, install Item 7 cover, with Item 8 thread forming screw.

   This unit is now optional.

   NOTE: The intent of this mechanism is not in any way related to the function of the Texas instrument low pressure switch installed in certain models.

ITEM NO.	PART NO.	DESCRIPTION
1.	12-2060-01	Centrifugal Actuator
2.	03-1403-77	Screw
3.	03-1408-36	Washer
4.	02-2373-01	Case
5.	03-0886-00	Twin Speed Nut
6.	12-2059-01	Switch
7.	02-2373-02	Case Cover
8.	03-1404-05	Screw
9.	03-1403-09	Screws 2/Unit

KIT PART #A27494-01

Item 4 & 3 Supplied in Case Assembly Kit Part# A27895-001.

The top bearing assembly (part number 02-1412-00) used in the freezer assemblies on the FD-4 models consists of **two** single row bearings which are pressed into the ice breaker, one on top of the other.

The bearings are supplied as a matched set, secured together by a holding strap.

These bearings are lifetime lubricated and have shields on the **exterior** side.

To prevent premature failures, the following instructions must be observed.

1. Bearing must be installed "Right Side Up." (Correct position is illustrated on the next page.)
2. Bearings must be pressed in by the outer race.
3. Apply 30 foot pounds, plus or minus 5 foot pounds, on a torque wrench when tightening the hex cap screw down on the stainless flat washer over the top of the bearing. Excessive pressure on the cap screw will shorten bearing life.
4. Use care in storing and handling bearings. Keep free of dirt, moisture, etc.

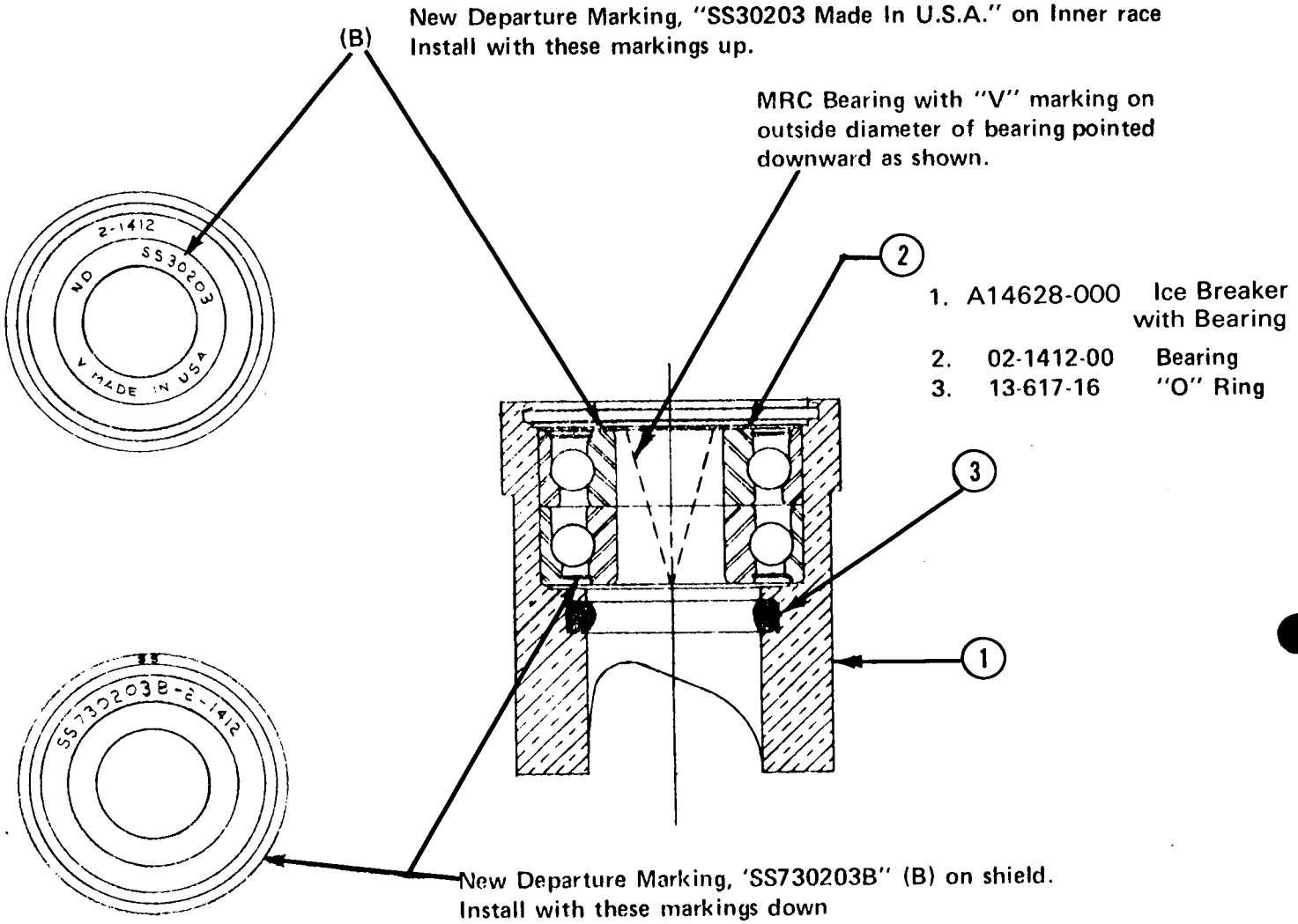

CAUTION:

A. Install MRC BEARINGS with "V" markings pointing downward as shown.

B. Install NEW DEPARTURE BEARINGS with shields on exterior sides and with markings as shown.

C. Peer Bearing. Same as A.

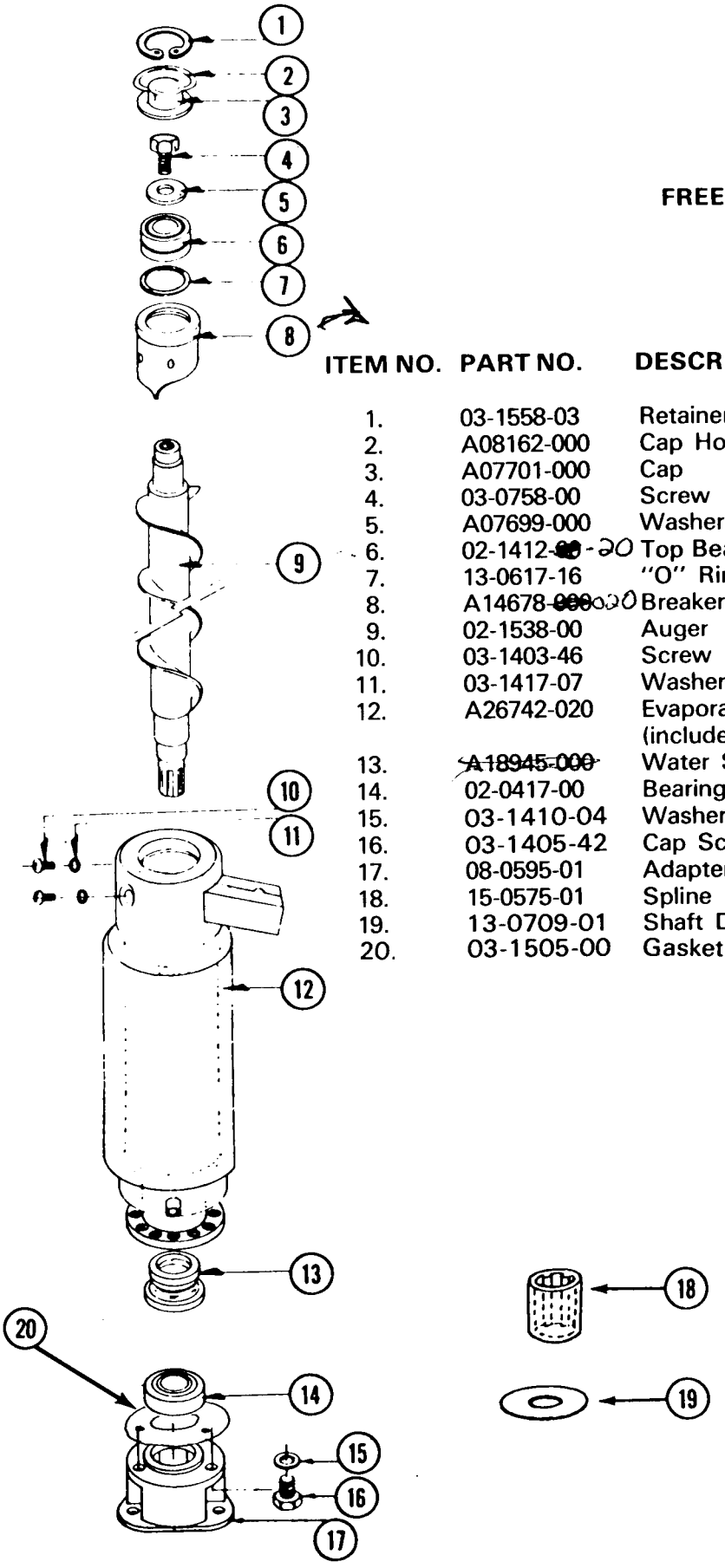

FREEZER ASSEMBLY

ITEM NO.	PART NO.	DESCRIPTION
1.	03-1558-03	Retainer Ring
2.	A08162-000	Cap Hook
3.	A07701-000	Cap
4.	03-0758-00	Screw
5.	A07699-000	Washer
6.	02-1412-~~00~~-20	Top Bearing-Matched Set See Page 10 & 11
7.	13-0617-16	"O" Ring
8.	A14678-~~000~~020	Breaker with Bearing –
9.	02-1538-00	Auger
10.	03-1403-46	Screw
11.	03-1417-07	Washer
12.	A26742-020	Evaporator shell (includes suction line)
13.	~~A18945-000~~	Water Seal —— 02-1300-01
14.	02-0417-00	Bearing, Lower
15.	03-1410-04	Washer, (3 req'd)
16.	03-1405-42	Cap Screw (3 req'd)
17.	08-0595-01	Adapter-Amaloy
18.	15-0575-01	Spline Drive Coupling
19.	13-0709-01	Shaft Drip Shield-Rubber
20.	03-1505-00	Gasket

SERVICE ANALYSIS
ICE MAKER SECTION FD4

SYMPTOM	POSSIBLE CAUSE	CORRECTION
Water Leaks.	Defective water seal.	Replace
	Gravity feed line leaking.	Check hose clamps.
	Water level in reservoir too high.	Adjust to 1/4 inch below overflow pipe.
Excessive noise or chattering	Mineral or scale deposit on auger and inner freezing chamber walls.	Remove and manually polish auger, polish inner chamber walls of freezer barrel. For lighter concentration use Scotsman Ice Machine Cleaner periodically.
	Low suction.	Add gas to raise suction pressure.
	Intermittent water supply.	Check and clean water strainer. Check gravity feed line for air lock. Remove air lock.
	Water level in reservoir too low.	Adjust to 1/4 inch below overflow pipe.
	Gear reducer loose on frame.	Tighten bolts.
	Motor compressor not solid on rubber mounts.	Repair or replace rubber mounts.
Gearmotor noise.	Low on oil.	Remove case cover to check for proper oil level. Top of gears should be covered. Use 600W or similar.
Unit will not run.	Blown fuse.	Replace fuse and check for cause of blown fuse.
	Loose electrical connection.	Check wiring.
	Inoperative master switch.	Replace switch.

SERVICE ANALYSIS
ICE MAKER SECTION FD4

SYMPTOM	POSSIBLE CAUSE	CORRECTION
Compressor cycles intermittently.	Low voltage.	Check for overloading.
	Dirty condenser.	Clean.
	Air circulation blocked.	Move unit to correct.
	Inoperative condenser motor.	Replace.
	Non-condensable gases in system.	Purge off.
Making wet ice.	Surrounding air temperature.	Correct or move unit.
	Under or over-charge of refrigerant.	Recharge with the proper amount.
	High water level in water reservoir.	Lower to 1/2 inch below overflow pipe.
	Faulty compressor.	Replace or repair.
Low ice production.	Loss of refrigerant, under or over-charge of refrigerant.	Check and recharge with proper amount of refrigerant.
	Dirty or plugged condenser.	Clean condenser.
	Low water level in water reservoir.	Adjust to 1/2 inch below overflow pipe.
	Partial restriction in capillary tube or drier.	Moisture in system. Overcharge of oil in system. Remove charge and drier. Replace and recharge system.
	Inlet water strainer partially plugged.	Remove screen and clean.
	Corroded or stained worm shaft due to water condition.	Remove worm shaft and clean.
Machine runs but makes no ice	Loss or under-charge of refrigerant.	Check for leaks and recharge.
	Water not entering freezing chamber.	Plugged strainer or supply line. Check and clean. Air lock in gravity feed line. Check and remove air lock.
	Moisture in system.	Check and remove charge and drier. Replace and recharge.
	Water seal leaking.	Replace seal.
	Water turned off while unit was operating.	Inlet water line froze shut. Unit must be turned off and defrosted.

SERVICE ANALYSIS
ICE MAKER SECTION FD4

SYMPTOM	POSSIBLE CAUSE	CORRECTION
Will not dispense.	Power off.	Check line fuses and plug.
	Motor overload open.	See correction under motor overload.
	Spout jammed with ice. Unit not level or holding glasses against spout.	Remove ice and clear ice under removable bottom. Check reservoir possibly too high.
	Wires off dispensing switch.	Check switch terminals.
Motor hot—Overload Open.	Ice under removeable bottom.	Remove ice.
	Wing nuts on cover turned down too tight.	Keep wing nuts only slightly snug—never tight.
	Rotating bin does not turn free.	Check and repair any drag.
	Ice too hard.	Raise freezer water level and check refrigerant charge.
Dispenser does not stop.	Brake on drive motor not working properly.	Brake must be free and stop the motor before 5 revolutions after the dispensing switch is released
Water will not dispense.	Solenoid defective.	Replace.
	Lines closed up.	Clean.
Water runs too slow.	Water line too small.	Increase size.

MAINTENANCE INSTRUCTIONS — FLAKER SECTION

THE FOLLOWING MAINTENANCE SHOULD BE SCHEDULED THREE TIMES PER YEAR.

1. Check and clean water strainers and float valve. Depress float valve to insure full stream of water.

2. Check water level and machine level. Keep water level below overflow, but as high as possible and still not run out of spout opening with machine off. Water should come out of spout with ice at all times. Adjust as required.

3. Clean reservoir and interior of freezer assembly using SCOTSMAN Ice Machine Cleaner. See cleaning instructions on next page.

   A. If machine has been cleaned regularly and no problems such as dry ice chatter are noticed, clean by making ice from solution of 4 oz. of cleaner to 2 quarts of water.

   B. If heavy mineral deposits on auger and walls, or sediment at inlet to freezer are encountered, clean by pouring strong solution 1/2 acid - 1/2 water into reservoir and operate drive motor only for agitation. Allow 1/2 hour or longer as required. Drain by disconnecting tygon at water inlet to freezer.

NOTE: Cleaning requirements vary according to local water conditions. Visual inspection of the auger before and after cleaning will indicate best procedure to be followed in local area.

4. Check top bearing of freezing tube. Remove retainer ring around edge of stamped brass cap, pull cap off. If moisture is around bearing, wipe up and remove grease. Add new grease. Use Beacon No. 325 or equal.

5. Clean air cooled condenser. Always shut off machine when cleaning.

6. Oil condenser fan motor when possible.

7. Check for refrigerant leaks and proper frost line. Should frost out of accumulator at least one-half way to compressor, and in some areas, back to service valve.

8. Check for water leaks. Tighten drain line connections. Run water down drain line to make sure it is open.

9. Check quality of ice. Ice should be wet when formed, but will cure rapidly to normal hardness in the bin.

CLEANING INSTRUCTIONS FOR SCOTSMAN ICE MACHINE MODEL FD4

1. Depress ice actuator arm and vend until bin is empty.
2. Remove top cabinet cover. Disconnect (unplug) electrical supply.
3. Remove storage bin cover and spout extension.
4. Remove both ice control flippers from storage bin cover. Note positions of these parts, if parts re-assembled incorrectly damage to the machine may result.
5. Remove inner bin and bin bottom.
6. Replace bin cover.
7. Turn *off* water supply or block float. Drain reservoir by disconnecting tube between reservoir and freezer.
   After draining, reconnect tubing.
8. Plug unit in and pour cleaning solution into reservoir. (Use 4 oz. of Scotsman cleaner and 1 qt. of hot water.) Do not fill above overflow tube. Do not allow unit to operate with less that 1" of solution in reservoir.
9. Remove drain grate and ice vend lever from sink. Wash and sanitize these parts and parts removed from storage bin in accordance with local health department regulations.

   Finish washing parts during step #11 if necessary.
10. Unplug unit. Wash and rinse reservoir, turn water on or remove float block.
11. Plug unit in. Let run for at least 15 minutes to flush out any cleaning fluid. Check ice for acid taste - - - run until ice tastes sweet.
12. Unplug unit and remove bin cover. Add hot water to ice in bin, using this melt water thoroughly wash and rinse the underside of the storage bin top, rubber ice spout and all surfaces within the storage bin.
13. Using solution from step #9, thoroughly wash and rinse sink and grille.
14. Re-assembly storage bin and sink parts.
15. Replace cabinet cover. Plug in and unit is ready for normal operation.

ACCESSORY ITEM

WALL MOUNT KIT
Part No. KWB1

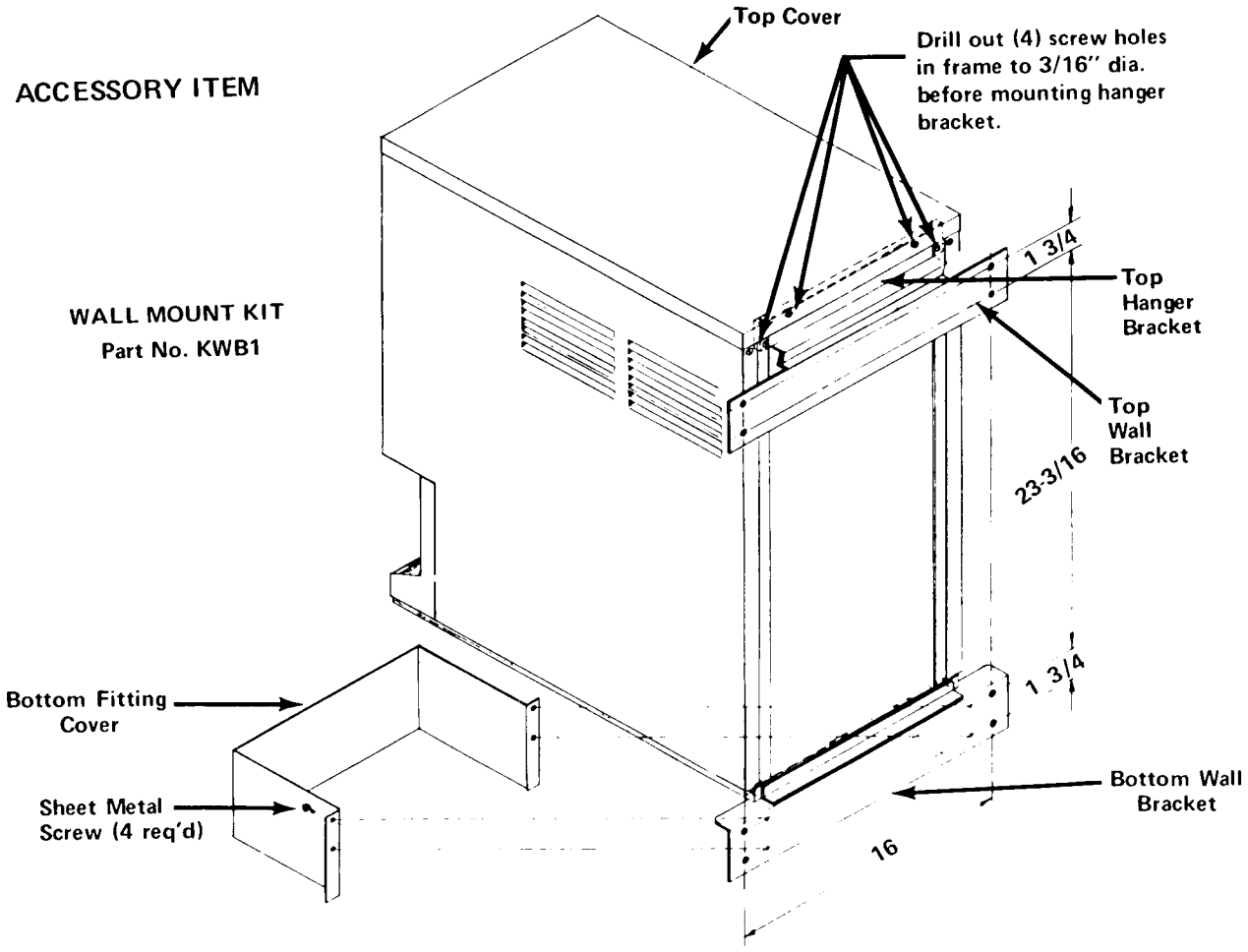

THE KIT

1. Top Case Hanger Bracket
   Attach to inside of frame of the dispenser.
2. Top Wall Bracket
   Mounts to wall and engages top case hanger bracket to support dispenser.
3. Bottom Wall Bracket
   Mounts to wall and supports bottom of dispenser.
4. Bottom Fittings Cover
   Fastened to bottom wall bracket to conceal electrical and plumbing fittings from view.

TOP HANGER BRACKET:

1. Remove back cover and save four screws for mounting bracket.
2. Remove top cover.
3. Drill out four holes of weld nuts in back of frame with 3/16 dia. drill as indicated in illustration.
4. Place bracket inside of frame and fasten solidly with four screws, saved from Step 1, through drilled out holes.

TOP WALL BRACKET:

1. Position bracket in desired location.
2. Secure to wall with fasteners of any suitable type for that particular wall through the four holes in bracket. These fasteners or lag screws are not furnished. Be sure to secure bracket rigidly.

BOTTOM WALL BRACKET:

1. Hang the dispenser on top wall bracket.
2. Position bottom bracket so that moulding on dispenser base bottoms in channel of the bracket.
3. Secure bracket to wall through the four large holes with suitable fasteners. Fasteners not furnished.

BOTTOM FITTINGS COVER:

1. Connect water inlet, bin drain and sink drain of dispenser through bottom of case. Also run electrical cable in from bottom.
2. Secure fitting cover to bottom wall bracket with the four sheet metal screws provided in this kit.

SINK EXTENSION KITS
KDE1 – Painted
KDE1-SS – Stainless Steel

A conversion for the FD4 dispenser to increase the distance between the discharge spout and the sink to twelve inches and to provide a faster sink drainage.

KIT:

02-1699-00	Sink Assembly (4) 3-1403-29 Screws
02-1828-00	Splash Plate (6) 3-1403-7 Screws
02-1701-00	Drain Grill (6) 3-1406-1 Nuts
A21538-000	Base (2) 3-1403-6 Screws
A21538-001	Base—Stainless Steel

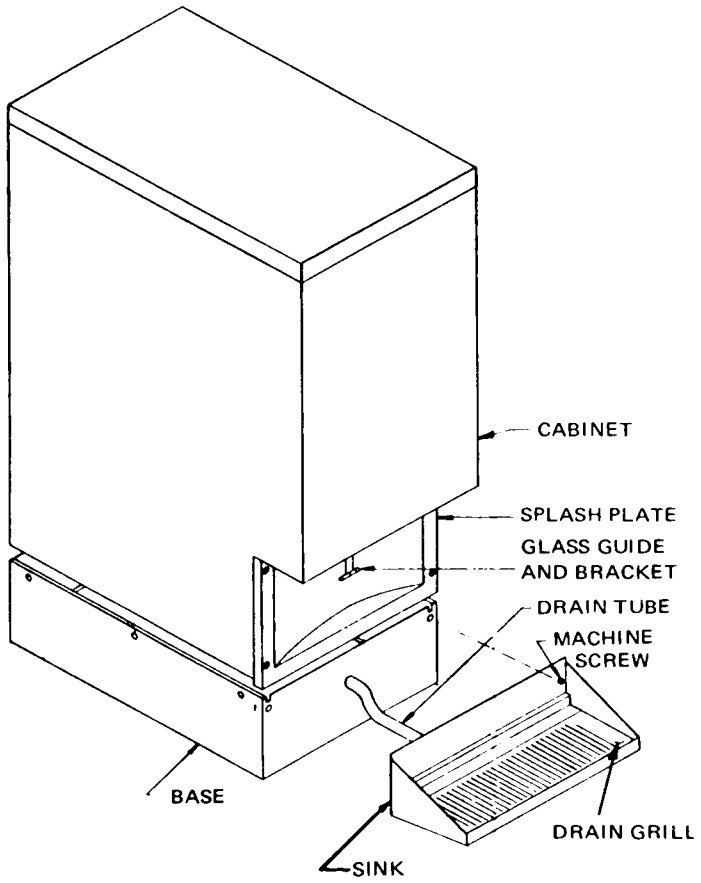

FEATURES:

By the use of the splash plate, only, and the wall bracket Kit No. (another accessory), the FD4 model can be mounted on a wall over an existing sink.

As a counter-top model, the dispenser is mounted on the six-inch base, A21538. The splash plate, sink and grill replace the conventional sink on the models.

INSTALLATION:

1. Remove conventional sink from cabinet.
2. Remove glass actuator arm and holder from sink.
3. Remove drain tube from original sink.
4. Install drain tube to replacement sink.
5. Remove rubber seal from base of the dispenser.
6. Mount the dispenser on base, A21538. The flange of the dispenser base is to fit in slots provided in the base extension. Secure with the 3 screws on each side of base.
7. Mount sink in place and secure with two machine screws.
8. Install splash plate to cabinet with four machine screws, furnished. The splash plate fits over top of sink.
9. Install glass actuator arm and holder to splash plate. The plunger on the arm must operate freely through hole in splash plate.
10. Install grate.

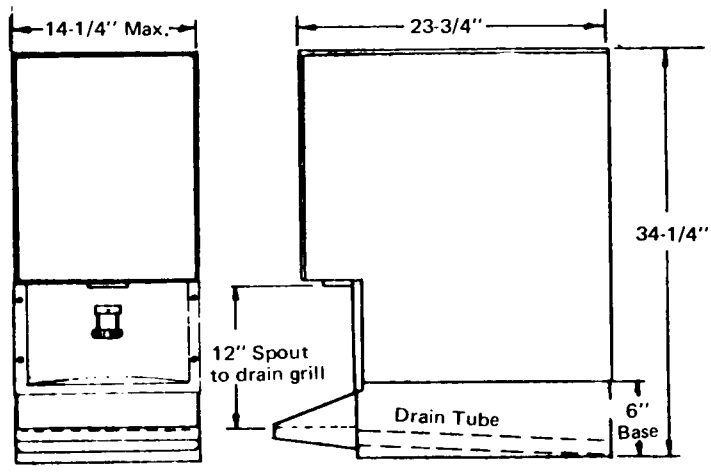

UNIT WITH SINK EXTENSION KIT

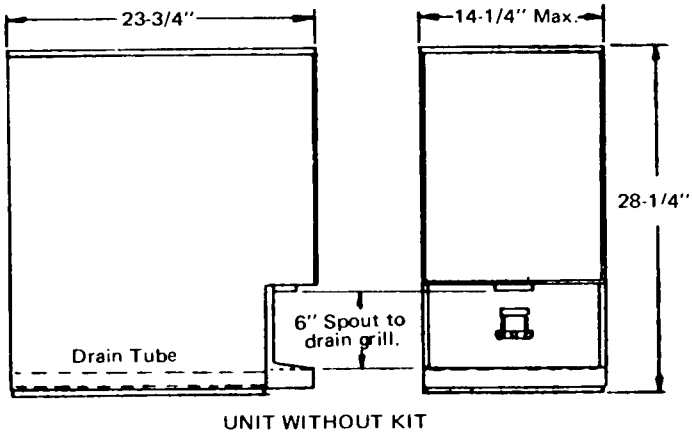

UNIT WITHOUT KIT

FD4

TABLE OF CONTENTS

GENERAL INFORMATION & INSTALLATION
- Introduction 2
- For the Installer 3
- Location and Leveling 5
- KDE1 Sink Extension Kit 6
- KWB1 Wall Mount Kit 7
- For the Electrician 8
- For the Plumber 9
- Final Checklist 10

OPERATING INSTRUCTIONS
- Start-Up 11
- Icemaker Operation 12
- Electrical Operation 13

COMPONENT DESCRIPTION 15

MAINTENANCE AND CLEANING INSTRUCTIONS
- Cleaning Instructions 19
- Maintenance Instructions 19
- Sanitizing 21

SERVICE DIAGNOSIS 22

REMOVAL AND REPLACEMENT PROCEDURES
- Ice Breaker and Auger 25
- Water Seal Installation 25
- Compressor Assembly 27
- Safety Controls, High Pressure, Low Pressure and Auger Delay 27
- Condenser Assembly - Air-Cooled 27
- Freezing Assembly 27
- Drier 28
- Bin Drivemotor Assembly 28
- Fan Motor Assembly 28
- Cylindrical Ice Storage Bin 28
- Water Pressure Switch Assembly 29
- Water Reservoir Assembly 29
- Re-building 1/10 Horsepower Drivemotor Gear Reducer Assembly 30
- Drivemotor Assembly 30

LIST OF ILLUSTRATIONS

- Specifications 3
- Component Location 4
- Location and Leveling 5
- Sink Extension Kit 6
- Wall Mount Kit 7
- Electrical Connections 8
- Water and Drain Connections 9
- Final Checklist 10
- Start-Up 11
- Operation 12
- Component Description 14
- Maintenance and Cleaning 20
- Removal and Replacement 25

PARTS LIST AND WIRING DIAGRAMS 1
(Printed in yellow)

PARTS LIST:
- Component Location 2
- Cabinet Assembly 3
- Major Components 4
- Freezer Assembly 5
- Drivemotor Assembly 6
- Bin Top Assembly 7
- Potable Water and Drainage System 8
- Control Box Assembly 9
- KDE1 Sink Extension Kit 10
- KWB1 Wall Mount Kit 10

WIRING DIAGRAMS:
- FD4A-1D (115/60/1) 11

THIS PAGE
INTENTIONALLY
LEFT BLANK

FD4 GENERAL INFORMATION AND INSTALLATION

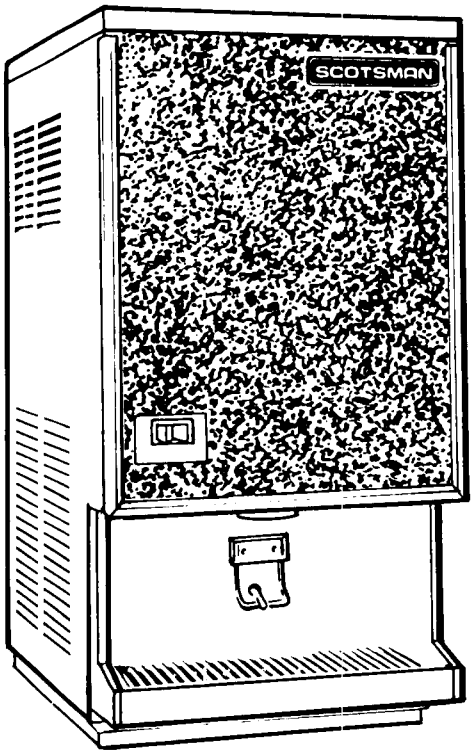

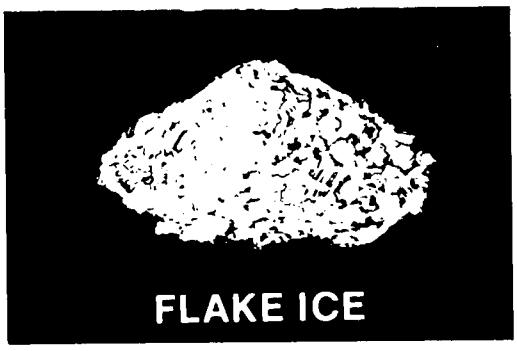

INTRODUCTION

These instructions provide the specifications and the step-by-step procedures for the installation, start up and operation for the Scotsman Model FD4 Flaker Dispenser.

The FD4 Flaker Dispensers are quality designed, engineered and constructed, and are thoroughly tested icemaking systems, providing the utmost in flexibility to fit the needs of a particular user.

The FD4 Flaker Dispenser is a counter or table-top type of dispenser with a flaked ice freezer, storage bin and automatic dispensing mechanism and a sealed refrigeration system to provide quiet, efficient operation of the icemaker. The compressor motor is internally spring-mounted. The compressor motor is covered by a five-year parts warranty.

The purpose of this machine is to fill water or drink glasses with water and ice or just ice by actuating a control arm with the glass.

Press the actuator arm and a continuous flow of ice can be obtained. By pushing a water switch to "ON" water will be dispensed with the ice or as long as the glass actuator arm is energized.

The sink or area in which the ice is dispensed is constructed of plastic. The drain grill is 100% nylon coated steel wire. The cabinet is of stainless steel or steel with a baked-on enamel finish.

The Scotsman FD4 Flaker Dispenser has been designed with sanitation and ease of cleaning emphasized. The complete dispensing unit can be dismantled for cleaning without the need of tools.

The base of the machine contains a sealing gasket which will seal the machine tight against the table or counter top, eliminating sanitation problems.

This icemaker has been engineered to our own rigid safety and performance standards. The National Sanitation Foundation (NSF) seal, signifies that it is listed with the NSF and that it complies with the materials and construction standards of the NSF. In addition, the Underwriters Laboratories, Inc., (UL) Listing Mark and the Canadian Standards Association (CSA) Monogram, both signify that its construction and design have been inspected and tested by them. NSF, UL and CSA inspectors also perdiodically examine production icemakers at the factory, to assure continued compliance.

To retain the safety and performance built into this icemaker, it is important that installation and maintenance be conducted in the manner outlined in this manual.

FD4 FOR THE INSTALLER

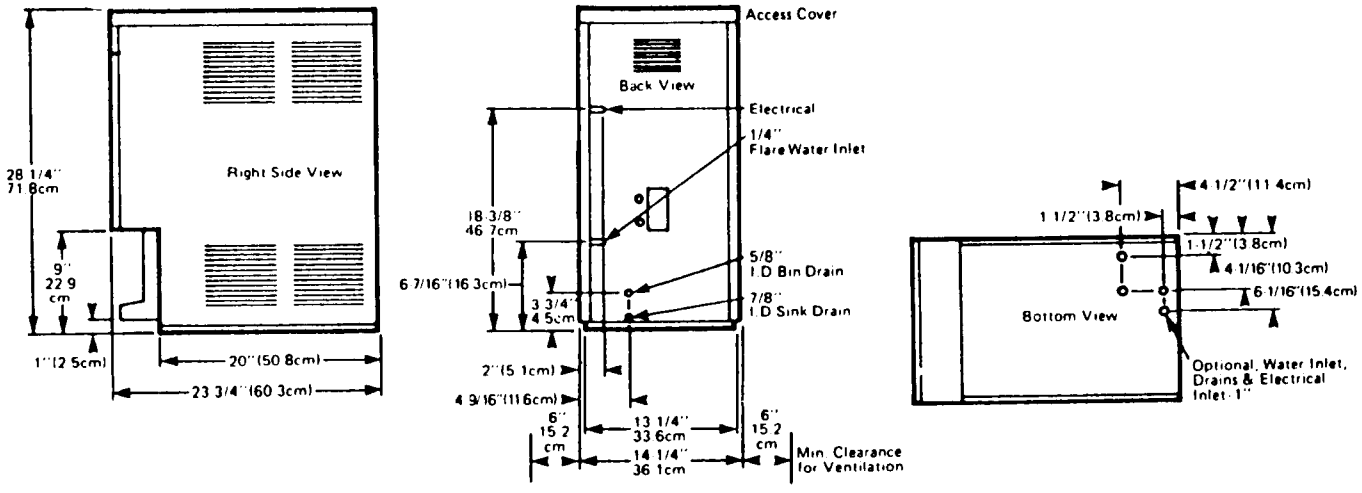

INSTALLATION NOTE: Allow 6" minimum space at sides and back for ventilation and utility connections.

This product qualifies for the following listings:

We reserve the right to make product improvements at any time. Specifications and design are subject to change without notice.

SPECIFICATIONS

Model Number	(Height - w/o Legs) Dimensions H" x W" x D"	Bin Cap.	Cond. Unit	Finish **	Basic Electrical	Comp. H.P.	No. of Wires	Min. Circuit Ampacity †	Max. Fuse Size	Ship. Wt. lbs./kg.
FD4AE-1D	28¼ x 14¼ x 23¼	8 lbs.	Air	ES	115/60/1	1/2	2	15.9	20	194/88

** (ES) Sandalwood, Leathergrain embossed steel with high gloss baked enamel finish.
Use this value to determine minimum wire size as per National Electric Code Standards.

IMPORTANT OPERATING REQUIREMENTS

	MINIMUM	MAXIMUM
Air Temperatures	50°F (10.0°C)	100°F (38°C)
Water Temperatures	40°F (4.4°C)	100°F (38°C)
Water Pressures	20 lbs. gauge	120 lbs. gauge
Electrical Voltage Variation Voltage rating specified on nameplate	-10%	+ 10%

Extended periods of operation exceeding these limitations constitutes misuse under the terms of Scotsman Manufacturer's Limited Warranty, resulting in a loss of warranty coverage.

SEE NAMEPLATE for electrical and refrigeration specifications. Locate the NAMEPLATE on the left side shelf forward of the freezer and drivemotor assembly.

Refrigerant.....R12

SPKFD3C/FD4C STAINLESS STEEL PANEL KIT:

Contains stainless steel sides, back, top and front to replace enameled cabinet. Not factory installed.

DRAIN EXTENSION KIT

Permits convenient access to flake ice and water for larger than normal containers, such as pitchers and tall glasses. Adds 5-1/2" to unit height. Installation Instructions on page 8.
KDE1 Enamel finish
KDE1SS Stainless Steel finish

KWB1 WALL MOUNTING KIT

Wall mounting brackets are made of strong tempered steel. Wall mounted units are easy to install where adequate counter space is not available or above an existing sink. Holes are provided at the bottom of the icemaker for water and electrical connections.
Installation Instructions on pages 8 and 9.

FD4 FOR THE INSTALLER

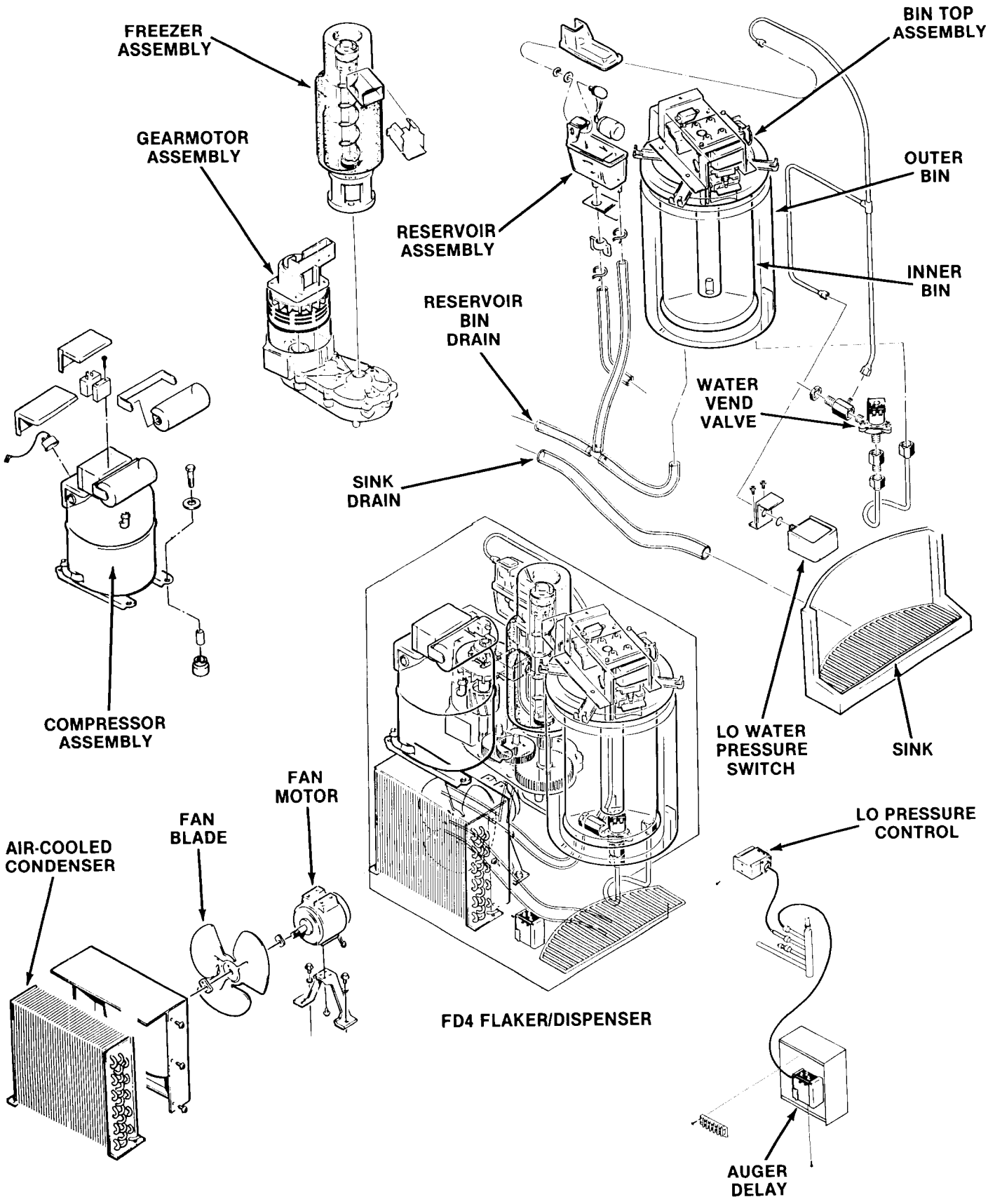

FD4 FLAKER/DISPENSER

FD4 FOR THE INSTALLER

LOCATION AND LEVELING

////////////////////// WARNING //////////////////////

This icemaker is NOT designed for outdoor installations where air temperature is below 50° F. or above 100° F.

Inlet water temperature must not drop below 40° F. or exceed 100° F.

Extended periods of operation at temperatures exceeding these limitations will constitute misuse under the terms of the SCOTSMAN Manufacturer's limited warranty, resulting in LOSS of warranty coverage.

//

SERVICE ACCESS

Adequate space for all service connections, located at the rear or bottom of the cabinet. When the KWB1 Kit is used to mount the FD4 to the wall, service access may be through the holes provided in the base.

A six-inch minimum clearance at both side panels for air circulation, to maintain air circulation through the air-cooled condenser for best icemaking performance.

Avoid sliding the unit on the rubber sealing base.

1. Position the FD4 flaker dispenser in the permanent location installed at a convenient height for filling glasses.
2. Level the FD4 flaker dispenser in both the left-to-right and front-to-back directions.

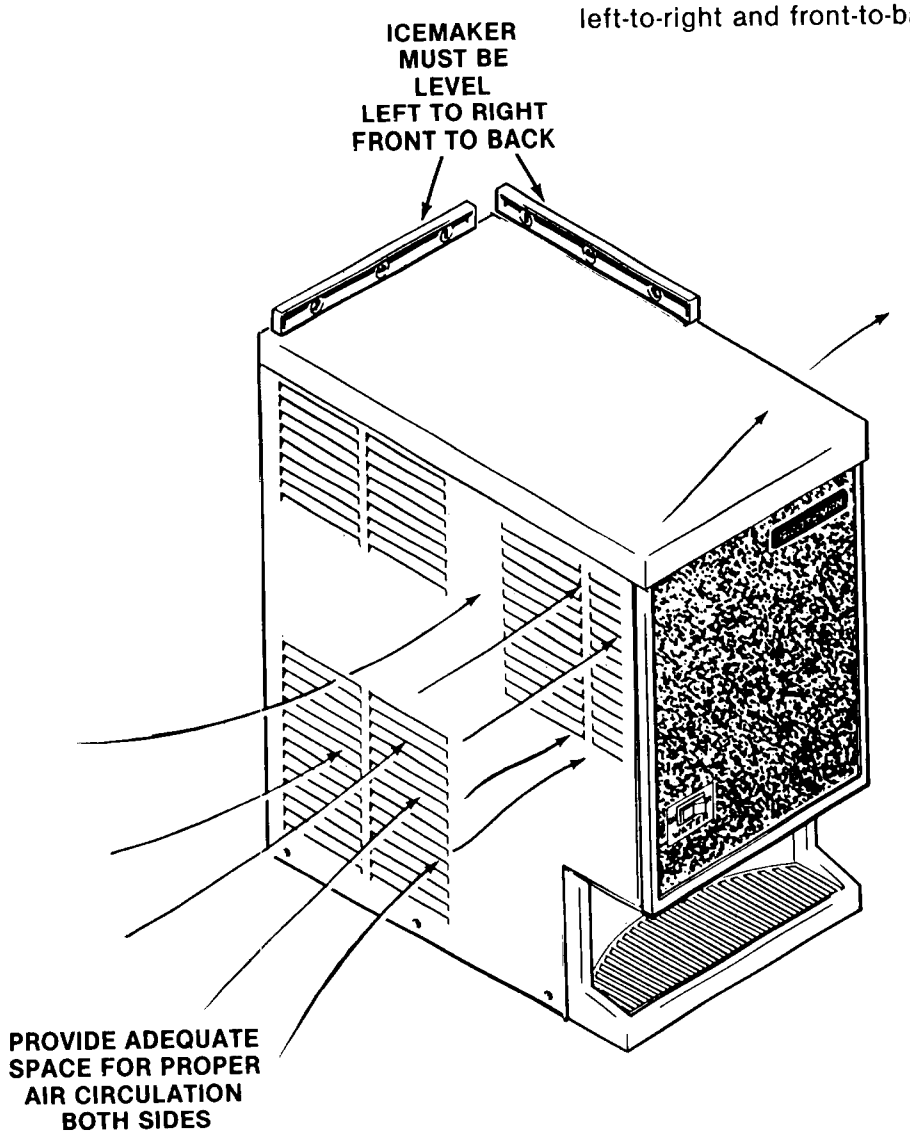

FD4 FOR THE INSTALLER

SINK EXTENSION KITS

KDE1 — Painted Finish
KDE1-SS — Stainless Steel

An option for the FD4 dispenser to increase the distance between the discharge spout and the sink to twelve inches and to provide a faster sink drainage.

FEATURES:

With the use of the KWB1 Wall Mount Kit and the splash plate, the FD4 model can be mounted on a wall over an existing sink.

As a counter-top model, the dispenser is mounted on the six-inch base. The splash plate, sink and grill replace the standard sink on the FD4 icemaker dispenser.

KIT CONTENTS:

02-1699-00	Sink Assembly
03-1403-06	Screws (2)
02-1828-00	Splash Plate
03-1403-29	Screws (4)
02-1701-00	Drain Grill
A21538-000	Base, Enamel (W/KDE1)
A21538-001	Base, Stainless Steel (W/KDE1-SS)
03-1403-07	Screws (6)
03-1406-01	Nuts (6)
17-0905-00	Decal
13-0617-11	O-ring
02-2809-01	Drain Top
A18331-000	Drain Fitting

INSTALLATION:

1. Remove conventional sink from cabinet.
2. Remove glass actuator arm and holder from sink.
3. Remove drain tube from original sink.
4. Install drain tube to replacement sink.
5. Remove rubber seal from base of the dispenser.
6. Mount the dispenser on the base. The flange of the dispenser base fits in slots provided in the base extension. Secure with the 3 screws on the front side panel.
7. Mount sink in place and secure with two machine screws.
8. Install splash plate to cabinet with four machine screws, furnished. The splash plate fits over top of sink.
9. Install glass actuator arm and holder to splash plate. The plunger on the arm must operate freely through hole in splash plate.
10. Install grill.

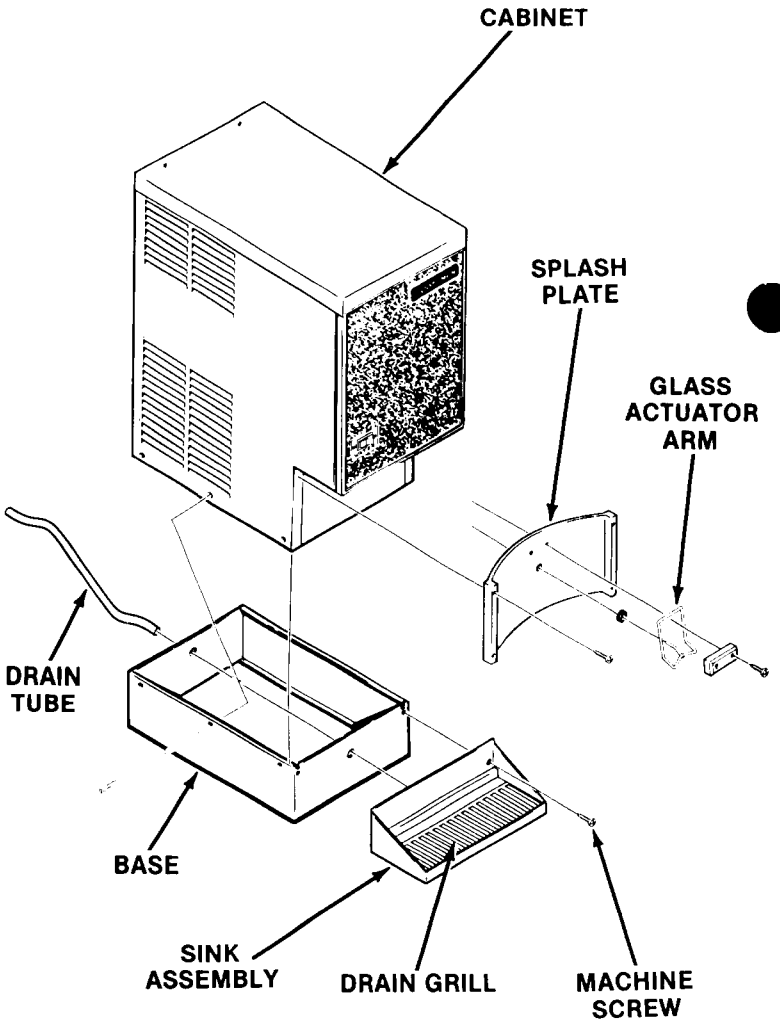

FD4 FOR THE INSTALLER

KWB1 WALL MOUNT KIT COMPONENT DESCRIPTION

KIT CONTENTS

1. **Top Case Hanger Bracket.** Attach to inside of frame of the dispenser.
2. **Top Wall Bracket.** Mounts to wall and engages top case hanger bracket to support dispenser.
3. **Bottom Wall Bracket.** Mounts to wall and supports bottom of dispenser.
4. **Bottom Fittings Cover.** Fastened to bottom wall bracket to conceal electrical and plumbing fittings from view.

INSTALLATION, KWB1 WALL MOUNT KIT TOP HANGER BRACKET:

1. Remove back cover and save four screws for mounting bracket.
2. Remove top cover.
3. Drill out threads of weld nuts in back of frame with 3/16 dia. drill as indicated in illustration.
4. Place top hanger bracket on the inside of frame and fasten solidly with four screws, saved from Step 1, through drilled out holes.

TOP WALL BRACKET:

1. Position bracket in desired location.
2. Secure to wall with fasteners of any suitable type for that particular wall through the four holes in bracket. These fasteners or lag screws are not furnished. Be sure to secure bracket rigidly.

BOTTOM WALL BRACKET:

1. Hang the dispenser on top wall bracket.
2. Position bottom bracket so that moulding on dispenser base bottoms in channel of the bracket.
3. Secure bracket to wall through the four large holes with suitable fasteners. Fasteners not furnished.

BOTTOM FITTING COVER:

1. Connect water inlet, bin drain and sink drain of dispenser through bottom of case. Also run electrical cable in from bottom.
2. Secure bottom fitting cover to bottom wall bracket with the four sheet metal screws provided in this kit.

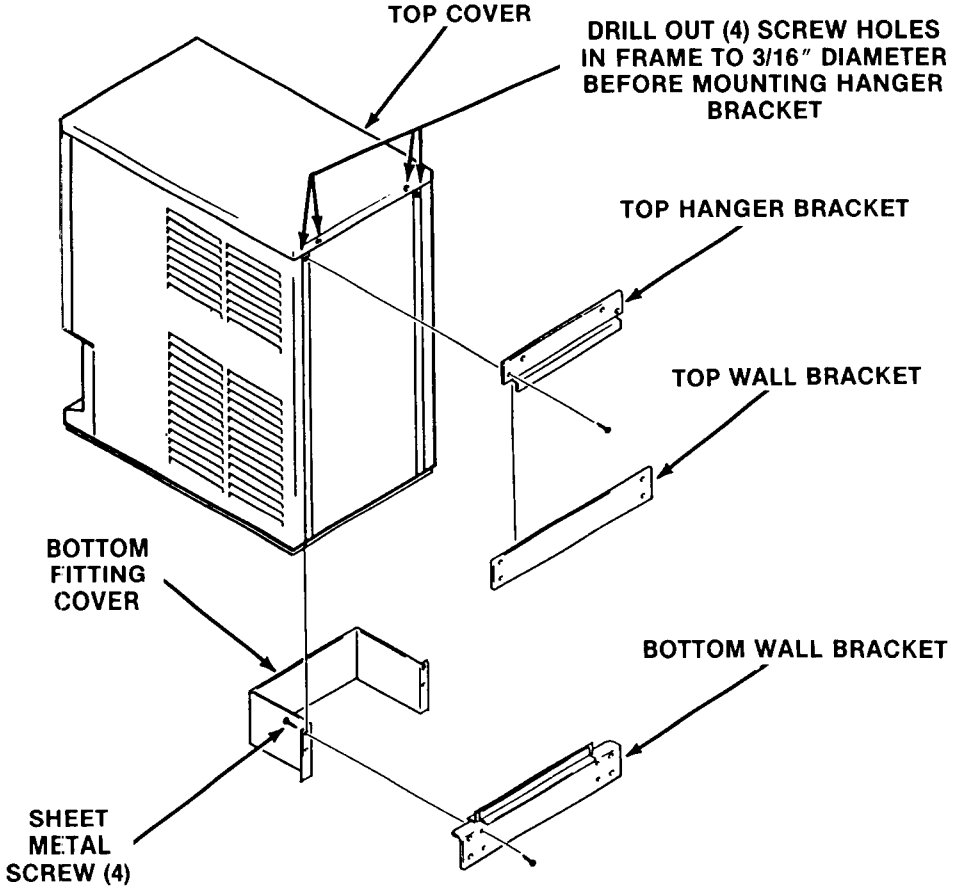

FD4 FOR THE ELECTRICIAN

ELECTRICAL CONNECTIONS

SEE NAMEPLATE for current requirements to determine wire size to be used for electrical hookup. The FD4 Icemaker requires a solid earth ground wire. See wiring diagram.

Be certain the icemaker is connected to its own electrical circuit and individually fused. The maximum allowable voltage variation should not exceed ten percent of the nameplate rating, even under starting conditions. Low voltages can cause erratic operation and may be responsible for serious damage to the compressor and motor windings.

All external wiring should conform to the national, state and local electrical codes and the services of a licensed electrician may be required.

Knockouts in cabinets are made for cord connectors.

Remove screws and remove back and right side panels to gain access for service connections.

Make electrical connections in the junction box located inside the back of the icemaker.

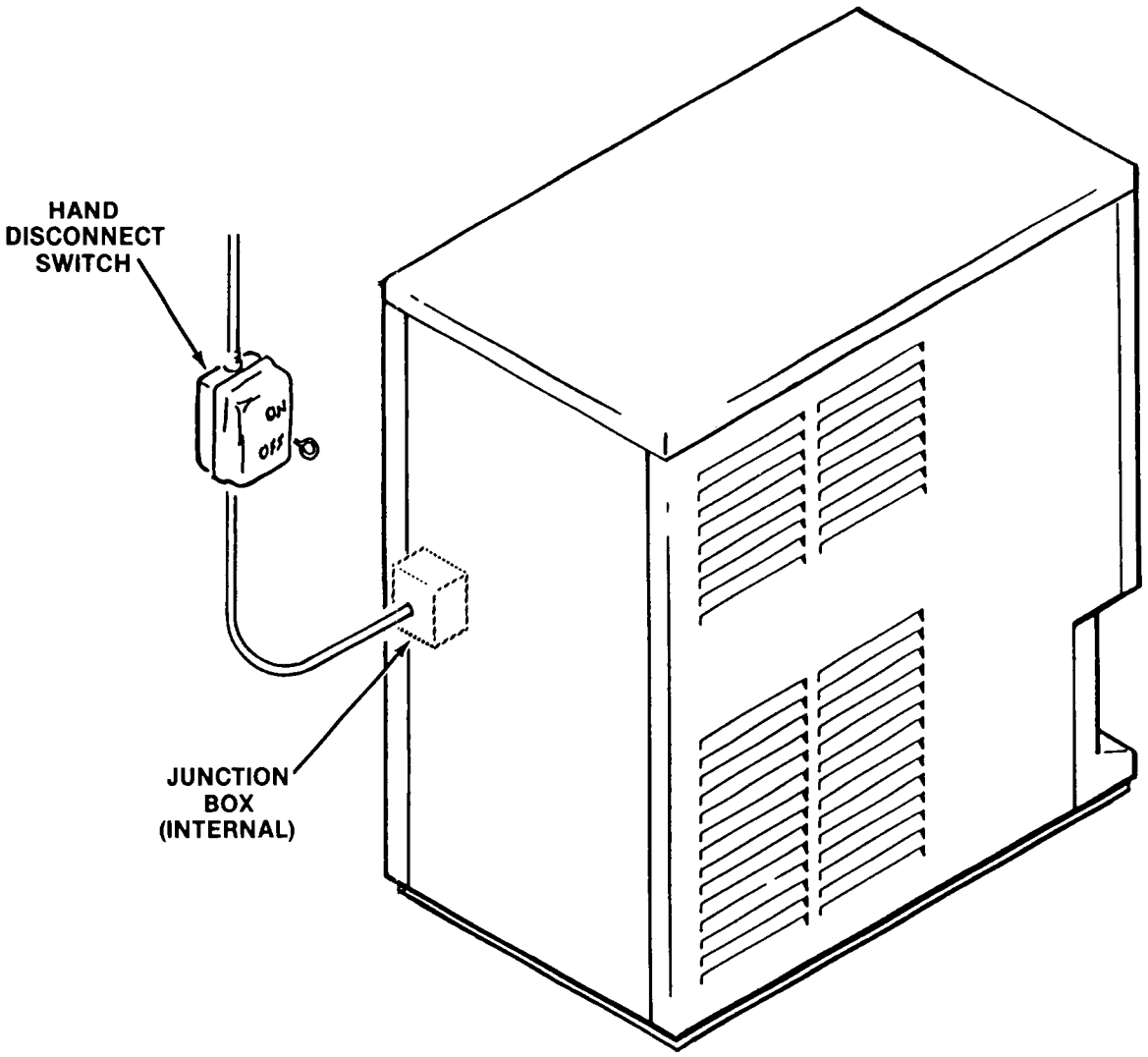

FD4 FOR THE PLUMBER

WATER SUPPLY

Remove screws and remove back and right side panels to gain access for service connections. The recommended potable water supply line is a 3/8 inch O.D. copper tubing with a minimum pressure of 20 psig.

The icemaker is equipped with a low water pressure safety device which in the event of low water pressure, will automatically stop the icemaker to prevent damage. The icemaker will automatically restart with increased water pressure.

A 1/4-inch S.A.E. flare fitting is provided internally. Route the inlet water line through the cabinet back panel to the flare fitting provided for potable inlet water connection. Connect the cold potable water supply line with standard plumbing fittings, with a shut-off valve installed in an accessible place between the water supply and the cabinet.

It is recommended a strainer or water purification system be installed between the shut-off valve and the icemaker connection.

DRAIN CONNECTIONS

All drains are gravity type and must be a minimum of 1/4-inch fall per foot on horizontal runs. Drainage must be installed to conform with the local plumbing codes. Install a vertical open vent on drain line to insure good venting. The drain receptacle should be an open, trapped or vented construction.

The FD4 icemaker has two drains. The reservoir overflow, a 5/8-inch I.D. tube and the sink drain, a 7/8-inch I.D. tube. The two drain tubes may be routed through the holes provided in the back panel or through the holes provided in the base.

Pull each drain tube through the back panel or the base and connect using standard plumbing fittings and practices.

In some cases, a plumbing permit and services of a licensed plumber will be required.

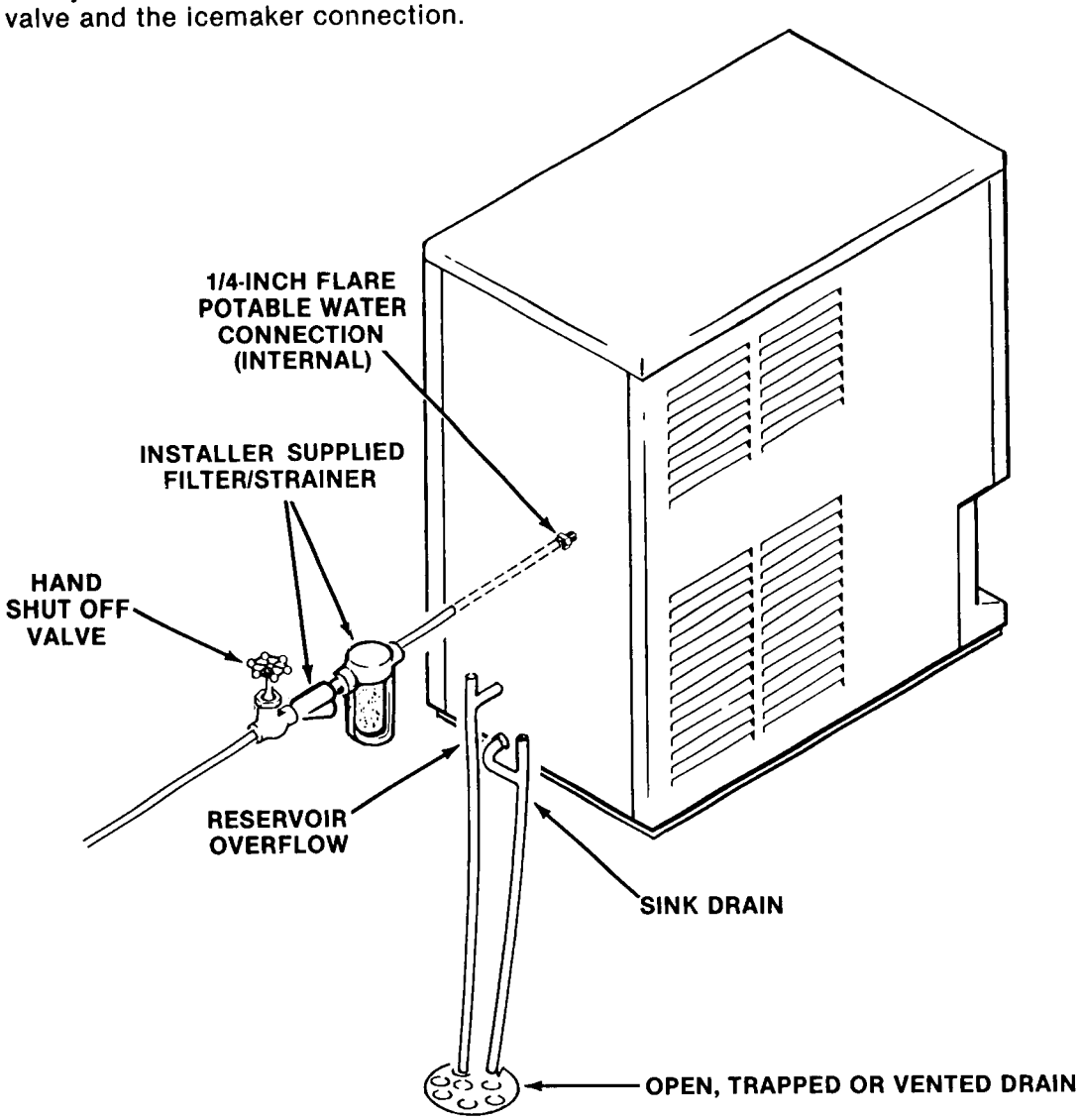

FD4 GENERAL INFORMATION AND INSTALLATION

FINAL CHECK LIST

1. Is the cabinet in a room where ambient temperatures are within the minimum and maximum temperatures specified?
2. Is there at least six inches clearance at both sides of the cabinet for proper air circulation?
3. Has water supply pressure been checked to insure a minimum of 20 PSIG and a maximum of 120 PSIG operating pressure?
4. Is the cabinet level?
5. Have all electrical and piping connections been made?
6. Is the water supply line shut-off valve installed and electrical wiring properly connected?
7. Has the shipping block been removed from under the compressor. Have the compressor hold-down nuts been checked to be sure the compressor is snug on the mounting pads?
8. Check all refrigerant lines and conduit lines, to guard against vibration or rubbing and possible failure.
9. Have the bin and cabinet been wiped clean?
10. Has the Manufacturer's Registration Card been properly filled out? Check for correct model and serial numbers from Serial nameplate, then mail the completed card to the SCOTSMAN factory.
11. Has the owner/user been given the Service Manual and instructed how to operate and maintain the icemaker?
12. Has the owner been given the name and telephone number of the authorized SCOTSMAN Service Agency serving him?

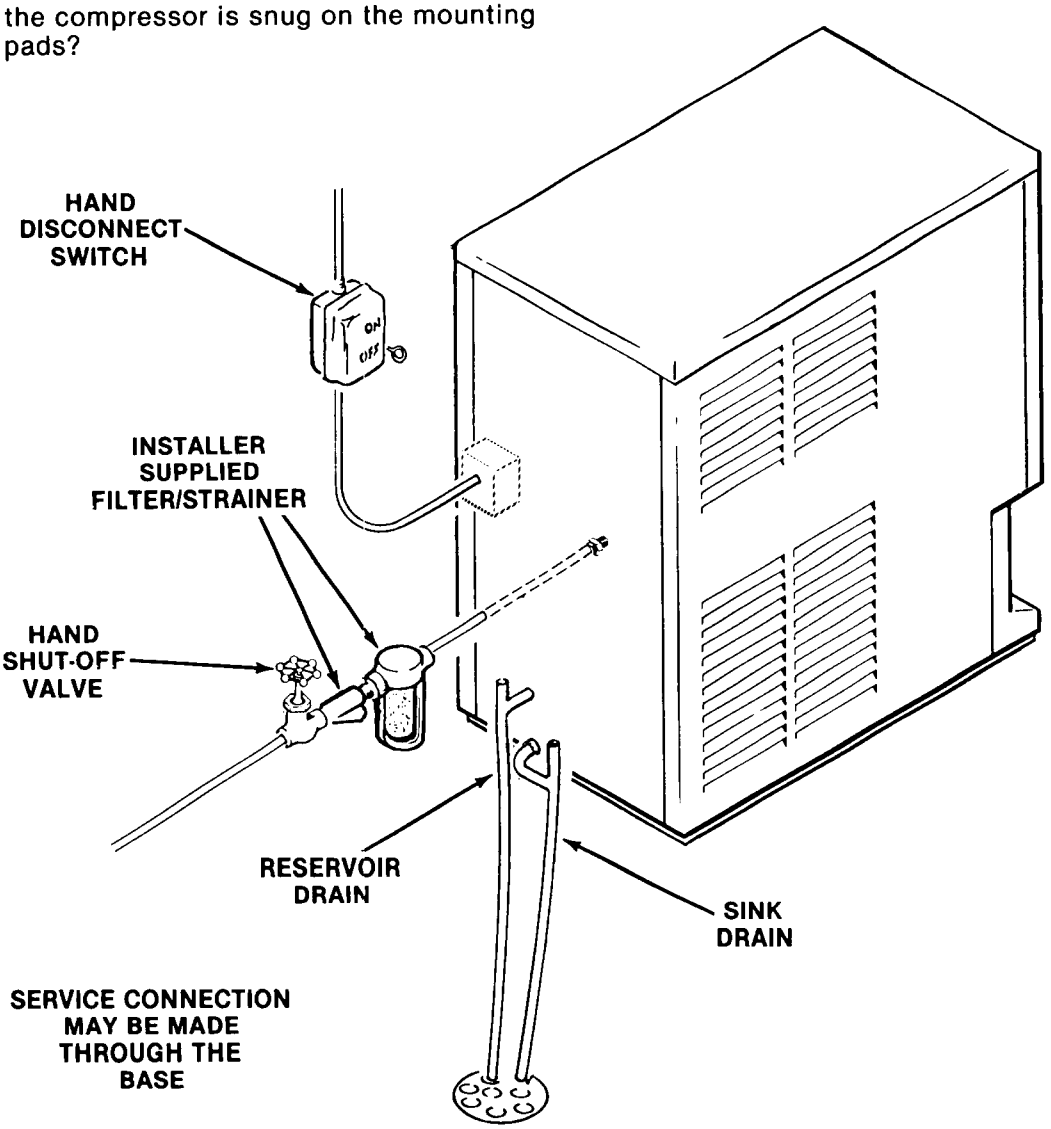

FD4 START-UP

OPERATING INSTRUCTIONS

START-UP

1. Remove screws and the top and side panels.
2. OPEN the water supply line shut-off valve.
3. Observe the water filling operation, see the Water Schematic illustration.
   a. Water flows into water reservoir.
   b. Water flows through water feed line to the bottom of the freezer assembly.
   c. Float rises until the water supply is sufficient to shut off. Float valve adjustment may be required to maintain the correct water level.
4. Check all internal water connections to be sure they do not leak.
5. Plug unit in or turn on electrical power to start the automatic icemaking process.
6. Let the system operate. Check for any excess noises beyond normal compressor noise:
   a. Fan noises, blades touch other surfaces, blades bent or out-of-balance.
   b. Vibrating type, from touching lines.
   c. Chattering, lack of water in freezer.
   d. Compressor loose.

   After the unit has been started and a supply of ice has accumulated in the bin:
7. Using a container, push the water filler lever in and dispense ice into the container. Release pressure from the water filler lever and ice dispensing stops.
8. Move water dispense switch to the ON position. Use a container to test that water and ice are dispensed simultaneously.
9. Thoroughly explain to the owner/user the significant specifications of the icemaker, the start-up and operation, going through the procedures of the operating instructions. Answer all questions about the icemaker.

   Inform the owner of the name and telephone number of the authorized SCOTSMAN Distributor or Service Agency serving him.

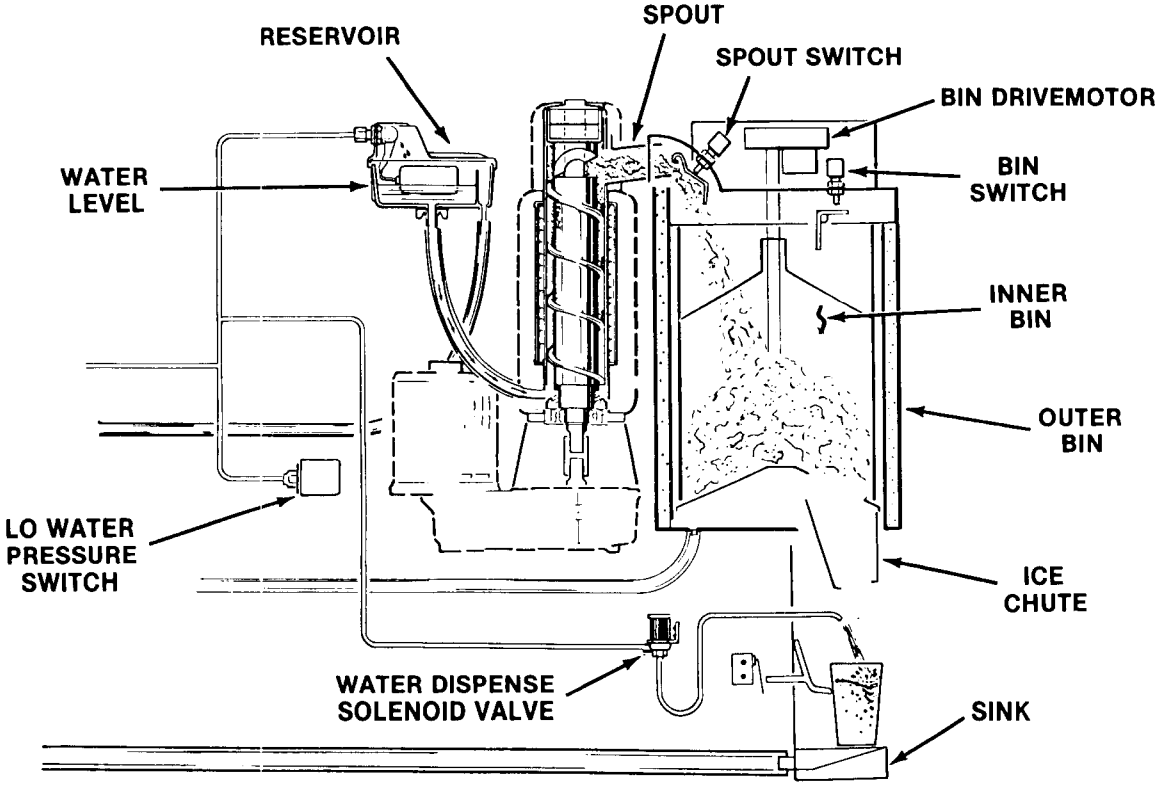

FD4 OPERATING INSTRUCTIONS

ICEMAKER OPERATION

The water supply flows from the building source through the optional inline water strainer, enters at the inlet fitting and on to the water reservoir. The water reservoir functions to maintain a constant water level inside the freezer assembly. Water from the water reservoir enters at the bottom of the freezer assembly and is changed into ice by low temperatures inside the freezer.

Move building source power switch to the ON position or plug into electrical outlet to start the automatic icemaking process.

A stainless steel auger within the freezer is powered by the drivemotor assembly, a direct-drive gearmotor, and the rotating auger carries the ice upward to the end of the auger, see Water Schematic Illustration, and pushed out through the ice chute and into the ice storage bin. When the ice storage bin has been filled with ice, up to the level of the bin control actuator, icemaking processes shut OFF.

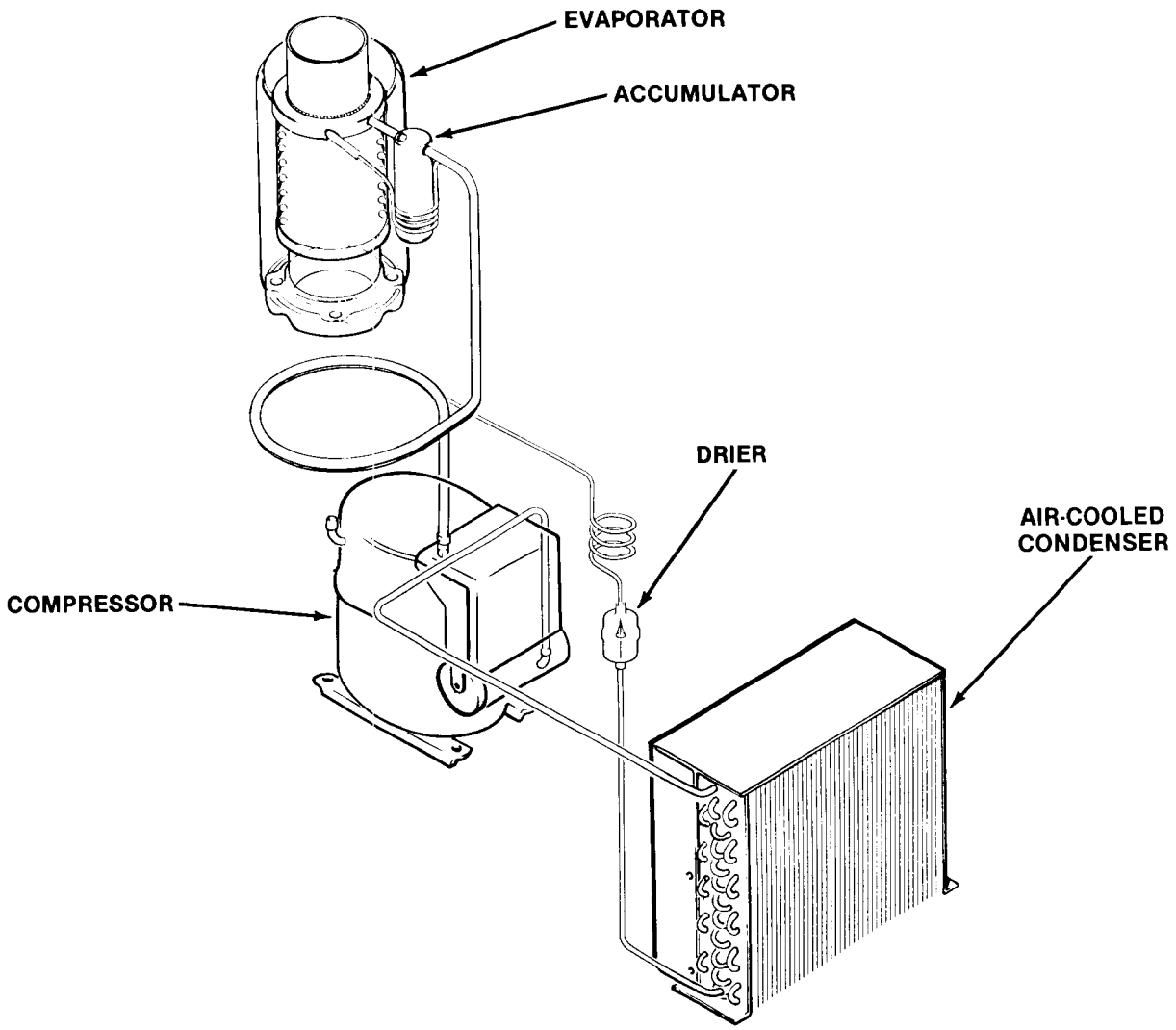

FD4 OPERATING INSTRUCTIONS

ELECTRICAL OPERATION

The Model FD4 icemakers are designed to operate on standard electrical supply 115 volts, 60 Hertz, single phase. Other voltage requirements are available on special order. Therefore, always CHECK NAMEPLATE for electrical information BEFORE proceeding with wiring connection to the icemaker.

Cold ambient temperatures and interruptions in water supply are conditions that can cause excessively hard ice and overloads within the freezer assembly, which is directly transmitted to the drivemotor; and in turn, will cause speed reduction or ultimate freezeup.

When the drivemotor is slowed to a pre-determined RPM, a sensing switch mounted on top of the motor is designed to open the electrical circuit to the compressor. The compressor stops operating, no more ice is produced, and the drivemotor continues to operate rotating the auger to clear the overload and gradually build up to full speed.

At a pre-determined higher RPM drivemotor speed, the speed sensing switch closes the electrical circuit to the compressor, causing the normal icemaking process to resume.

The bin top has two mechanically operated switches. The one next to the freezer discharge spout is known as the spout switch. The other switch, the bin switch, is in series with the spout switch. If either one is open, (because of high ice level inside the bin) the icemaker will not run.

There are two safety controls. The low pressure control, an automatic reset, non-adjustable control, is set to electrically open at zero to four PSIG to stop the compressor. The auger delay switch, a single-pole double-throw (SPDT) switch, functions as a control device to allow the drivemotor to rotate the auger to clear the freezing chamber while the compressor circuit is OFF.

Refer to the appropriate wiring diagram and trace circuitry and control functions, as described in the following paragraph.

As shown on all SCOTSMAN wiring diagrams, the controls are in the ICEMAKING MODE. Thus, the 1-2 contacts are CLOSED, At START-UP, the 1-2 contacts are OPEN and the 3-2 contacts are CLOSED. As the icemaker begins to operate, the low side pressure starts to decrease from the stabilized or at-rest pressure. As soon as the pressure is reduced to 20 PSIG, the 3-2 contacts OPEN and the 1-2 contacts CLOSE. This removes the operating controls, such as the bin control, from the drivemotor circuit. If one of the operating controls OPENS, it will SHUT OFF the compressor circuit. The drivemotor will operate until the low side pressure increases to 32 PSIG. Then, the 1-2 contacts OPEN and SHUTS OFF the drivemotor, usually within one to two minutes, depending upon ambient conditions. This brief period of time allows the auger to transport all the ice out of the freezing chamber. Consequently, when called on to START-UP again, there is no ice load to start up against. Again, on STARTUP, the 1-2 contacts are OPEN and the 3-2 contacts are CLOSED.

On all models, a low-water pressure switch functions to discontinue the icemaking process whenever inlet water pressure is reduced to below 20 PSIG. The switch will automatically restart the icemaking process when the water pressure is increased to 20 PSIG.

Suction pressure should be 14 PSIG with proper refrigerant charge. Suction pressure will vary about two PSIG plus or minus, depending upon ambient temperatures and inlet water supply temperatures to the freezer assembly.

When charging the system with refrigerant, always CHECK NAMEPLATE for specific refrigeration charge for individual icemaker.

FD4 COMPONENT DESCRIPTION

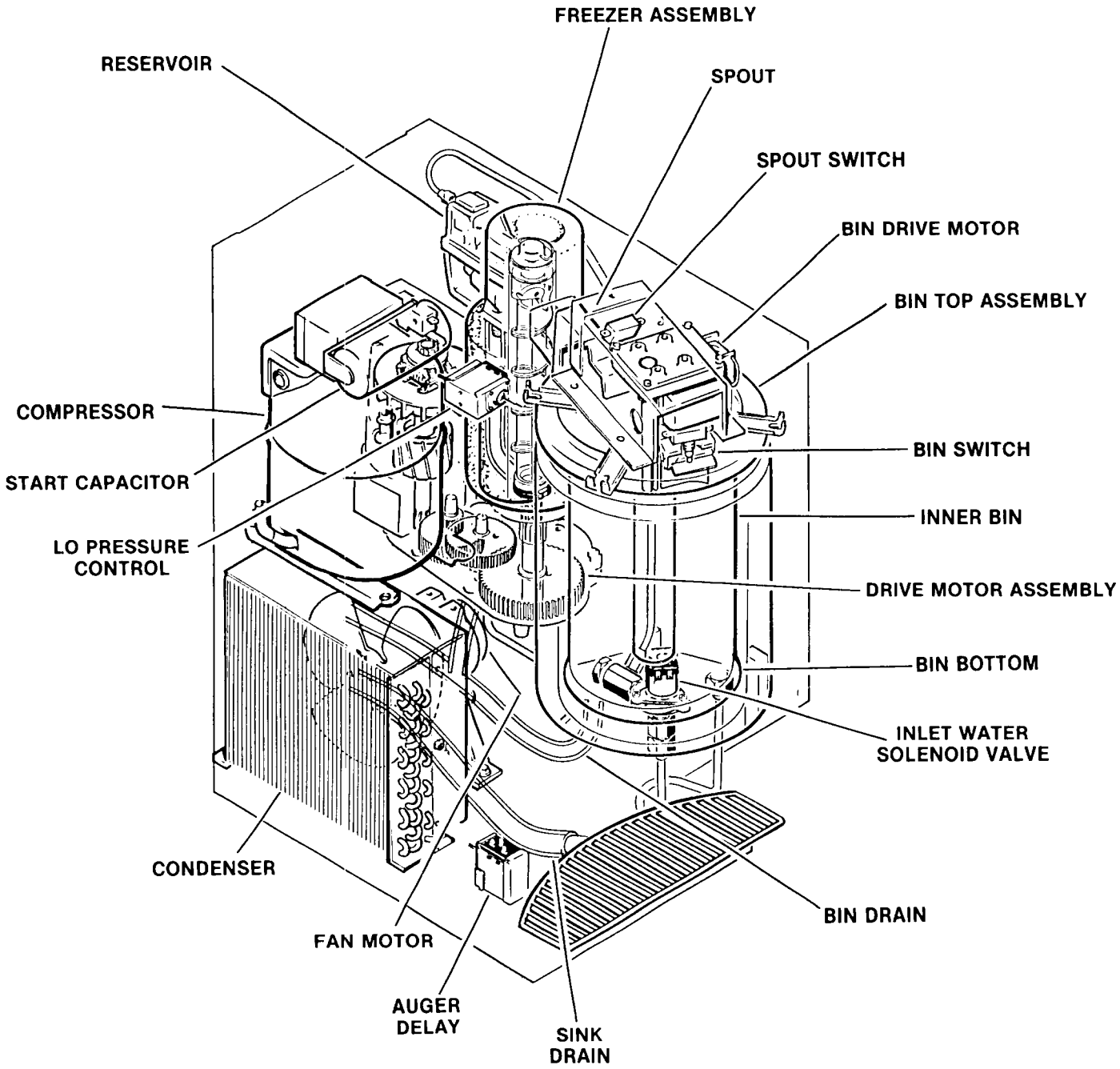

FD4 COMPONENT DESCRIPTION

FREEZER ASSEMBLY

Evaporator coils surround a cylindrical tube which is filled with water. As ice forms on the interior wall, it is lifted by a rotating auger which moves the ice to the ice breaker at the top of the cylinder where it is compacted and forced through the ice delivery chute.

ICE BREAKER ASSEMBLY

The ice breaker assembly, bolted to the top of the freezer, contains the bearing and seal for the top of the auger. Flaked ice created by the freezer is carried by the auger to the ice breaker assembly and the flaked ice is pushed by the auger through the hole in the side of the freezer and falls into the bin.

AUGER

The highly-polished stainless steel auger inside the freezer assembly, is rotated by the gearmotor and pushes ice to the top of the freezer.

LOWER WATER SEAL

The highly precision two-part water seal located at the bottom of the freezer, seals the bottom of the freezer assembly to contain water. The rotating part of the lower water seal is attached to the bottom of the auger and the stationary part of the seal is pressure fit into the bottom of the freezer assembly tube. Anytime condition of the lower water seal is in question, replace the seal.

FREEZER ASSEMBLY

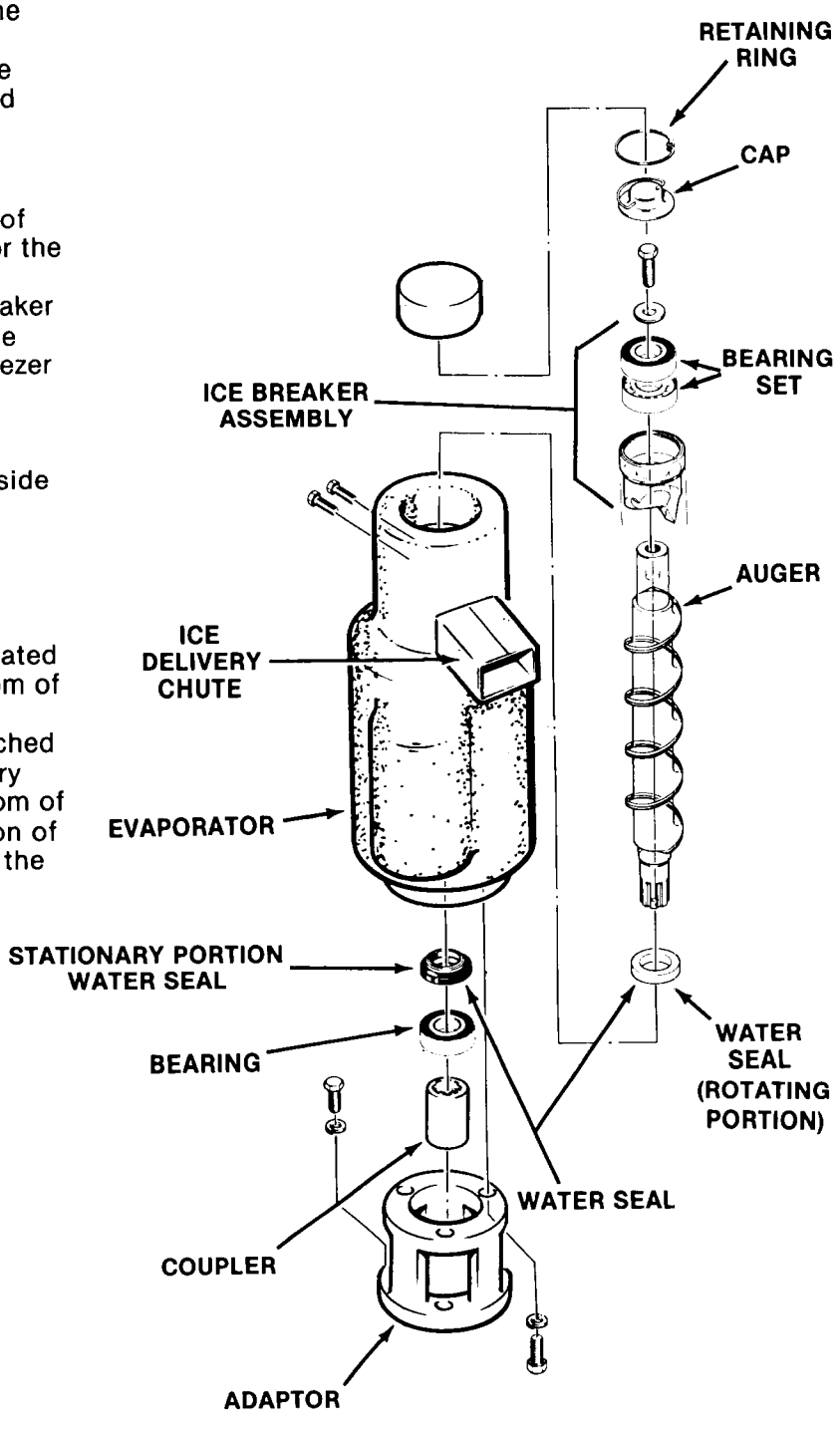

FD4 COMPONENT DESCRIPTION

WATER RESERVOIR

The water reservoir, with a float valve assembly, maintains a constant water supply within the freezer assembly. The water level in the reservoir is the same water level as in the freezer and the correct water level in the freezer is level in the top of the auger flights. The water level in the freezer can be adjusted by raising or lowering the water reservoir with the bracket.

WATER PRESSURE SAFETY SWITCH installed in the potable water inlet line is set to electrically open at zero to four PSIG and stop the entire icemaker. The AUTOMATIC RESET will restart the icemaking process when water pressure rises to 20 PSIG.

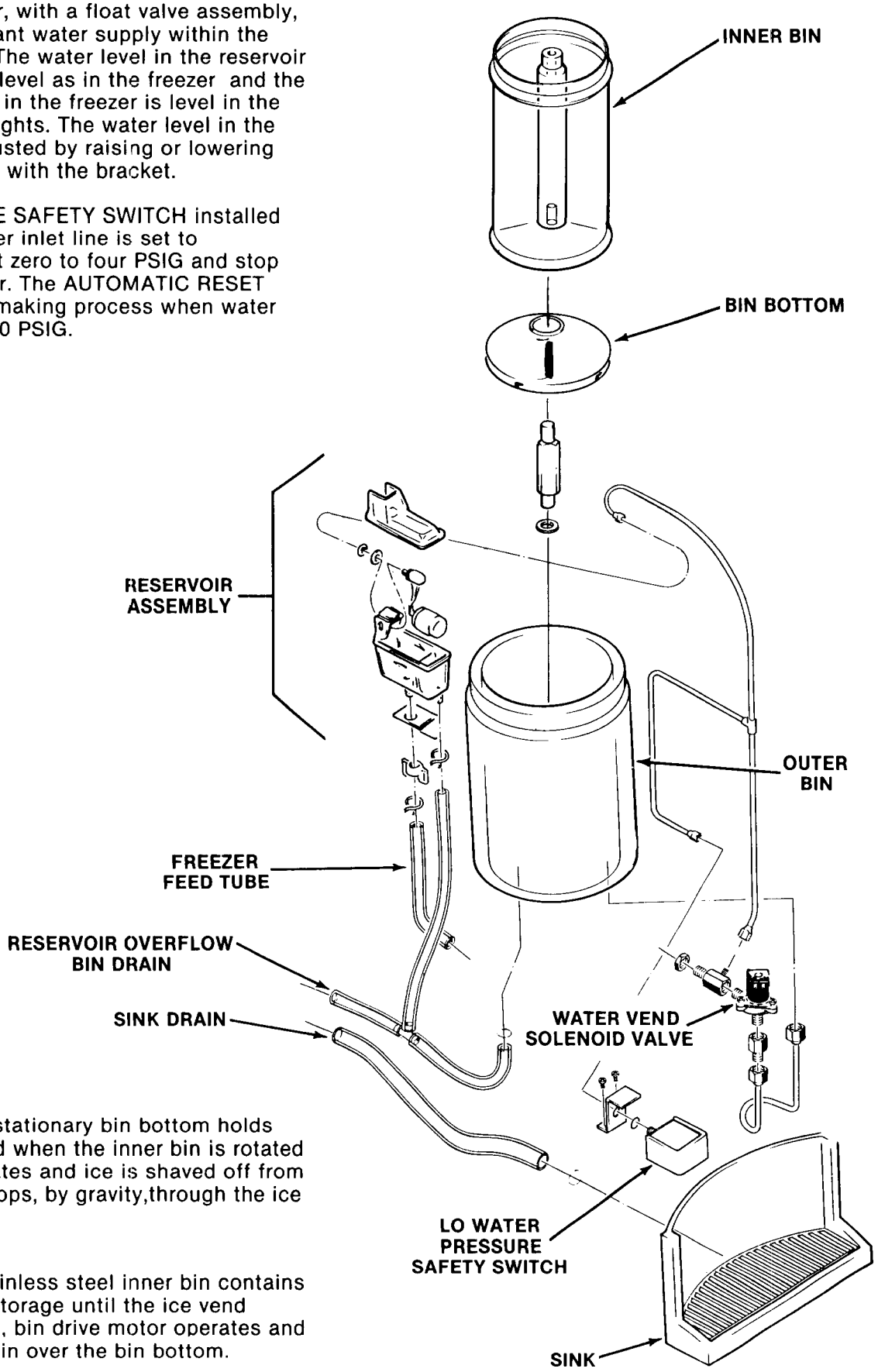

BIN BOTTOM

The cone shaped stationary bin bottom holds the ice supply, and when the inner bin is rotated the ice supply rotates and ice is shaved off from the bottom and drops, by gravity,through the ice dispense spout.

INNER BIN

The cylindrical stainless steel inner bin contains the ice supply in storage until the ice vend switch is activated, bin drive motor operates and rotates the inner bin over the bin bottom.

FD4 COMPONENT DESCRIPTION

BIN TOP

The bin top assembly protects the ice supply and provides a mount for the bin ice level switch and the bin ice level safety switch.

SPOUT SWITCH

The spout switch is an ON-OFF switch, that shuts OFF the compressor to stop icemaking, while the freezer assembly drivemotor continues to operate, and clear all ice from the auger. When the refrigerant pressure equalizes, the refrigerant lo-pressure control will shut OFF the drivemotor. When the ice flow pushes the actuator arm of the switch IN, the compressor is shut OFF and when the action of the melting or dispensed ice releases the actuator arm, the switch CLOSES the circuit and RESTARTS the compressor and the icemaking process.

BIN ICE LEVEL SWITCH

The bin ice level switch is mounted on the opposite side of the bin top to the spout switch and is actuated by the movement against the switch actuator. The switch acts as a differential switch, keeping the unit OFF until the ice level has dropped on both sides of the inner bin.

BIN DRIVE MOTOR

The bin drive motor and reduction gear assembly, located above the bin, is controlled with the ice vend switch. The bin drive motor rotates the inner bin and ice supply to vend ice into a container.

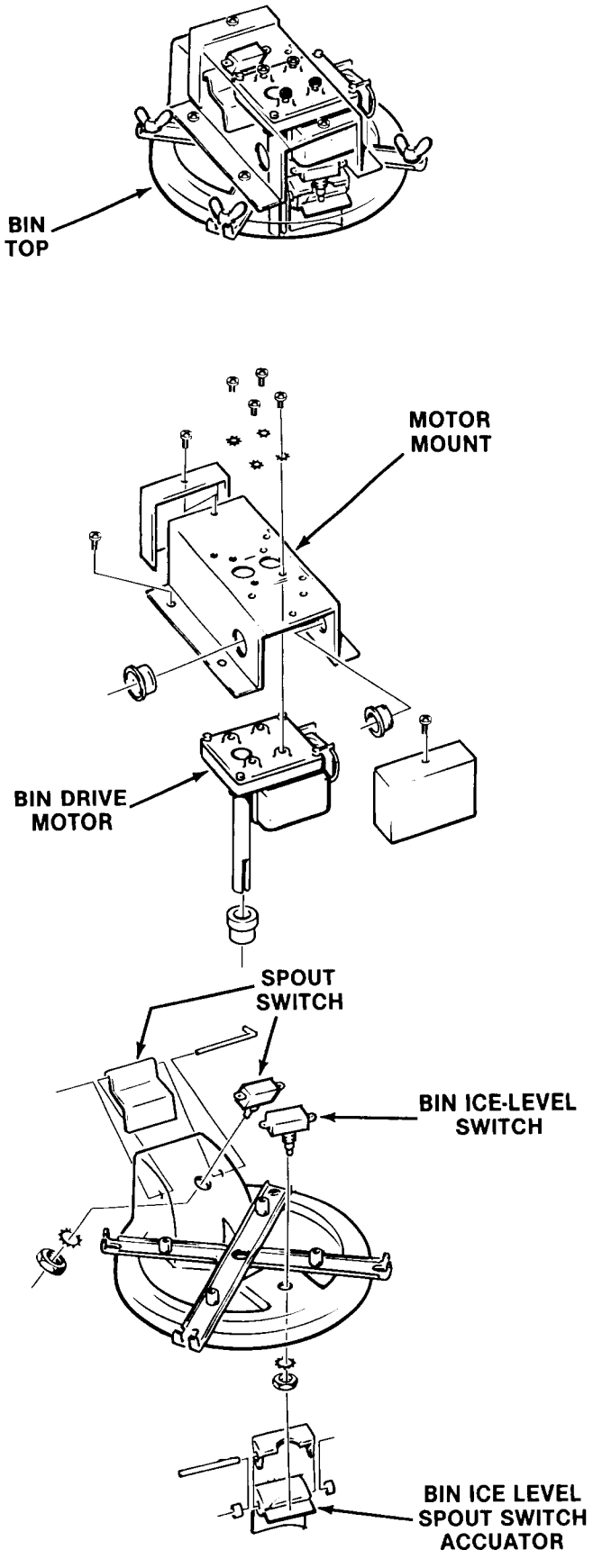

FD4 COMPONENT DESCRIPTION

AUGER DELAY SWITCH, a single-pole double throw (SPDT) switch, allows the gearmotor to rotate the Auger and clear the freezing chamber after the bin ice level switch circuit to compressor is OFF. When the icemaker restarts, the gearmotor starts in a no load condition, preventing excessive loading of gearmotor and bearings.

REFRIGERANT LO PRESSURE CONTROL is factory set to automatically SHUT DOWN the icemaker if the low-side pressure drops below 4 PSIG or low ambient or water temperatures exist.

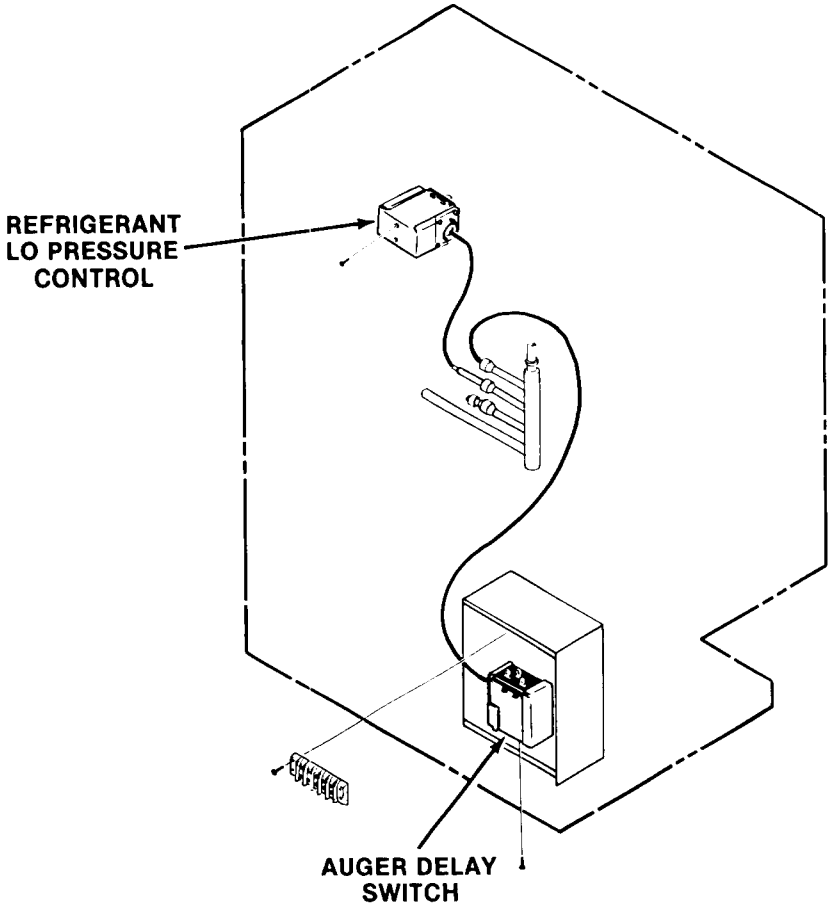

FD4 MAINTENANCE AND CLEANING INSTRUCTIONS

A Scotsman Ice System represents a sizable investment of time and money in any company's business. In order to receive the best return for that investment, it MUST receive periodic maintenance.

It is the USERS RESPONSIBILITY to see that the unit is properly maintained. It is always preferable; and less costly in the long run, to avoid possible down time by keeping it clean, adjusting it as needed and by replacing worn parts before they can cause failure. The following is a list of recommended maintenance that will help keep your machine running with a minimum of problems.

Maintenance and Cleaning should be scheduled at a MINIMUM of twice per year.

CLEANING INSTRUCTIONS FOR SCOTSMAN ICE MACHINE MODEL FD4

1. Depress ice actuator arm and vend until bin is empty. Disconnect or unplug electrical supply to the icemaker.
2. Remove top cabinet cover.
3. Remove storage bin cover and spout extension.
4. Move both ice control flippers in the bin top, movement should be free and operate switches.
5. Remove inner bin and bin bottom.
6. Replace bin cover.
7. Turn *off* water supply or block float. Drain reservoir by disconnecting tube between reservoir and freezer. After draining, reconnect tubing.
8. Plug unit in and pour cleaning solution into reservoir. (Use 4 oz. of Scotsman cleaner and 1 qt. of hot water.) Do not fill above overflow tube. Do not allow unit to operate with less than 1 inch of solution in reservoir.
9. Remove drain grate and ice vend lever from sink. Wash and sanitize these parts and parts removed from storage bin in accordance with local health department regulations.
10. Disconnect or unplug electrical power supply to icemaker. Wash and rinse reservoir, turn water on or remove float block.
11. Reconnect or plug icemaker electrical supply and operate for at least 15 minutes to flush out any cleaning fluid. Taste ice for acid taste and make ice until ice tastes sweet.
12. Disconnect or unplug unit and remove bin cover. Add hot water to ice in bin, using this melt water thoroughly wash and rinse the underside of the storage bin top, rubber ice spout and all surfaces within the storage bin.
13. Using solution from step #8, thoroughly wash and rinse sink and grill.
14. Re-assemble storage bin and sink parts.
15. Replace cabinet cover. Plug in and unit is ready for normal operation.

MAINTENANCE INSTRUCTIONS — FLAKER SECTION

1. Check and clean optional water strainers and float valve. Depress float valve to insure full stream of water.
2. Check water level and machine level. Keep water level below overflow, but as high as possible and still not run out of spout opening with machine off. Water should come out of spout with ice at all times. Adjust as required.
3. Remove auger. See page 25. Check top bearing for wear and auger for mineral build-up. Auger may need to be cleaned outside of the freezer chamber.

NOTE: Cleaning requirements vary according to local water conditions. Visual inspection of the auger before and after cleaning will indicate best procedure to be followed in local area.

4. Clean reservoir and interior of freezer assembly using SCOTSMAN Ice Machine Cleaner. See Cleaning Instructions.
5. Clean air cooled condenser. Always shut off machine when cleaning.
6. Oil condenser fan motor when possible.
7. Check for refrigerant leaks and proper frost line. Should frost out of accumulator at least one-half way to compressor, and in some areas, back to service valve.
8. Check for water leaks. Tighten drain line connections. Run water down drain line to make sure it is open.
9. Check quality of ice. Ice should be wet when formed, but will cure rapidly to normal hardness in the bin.

FD4 MAINTENANCE AND CLEANING INSTRUCTIONS

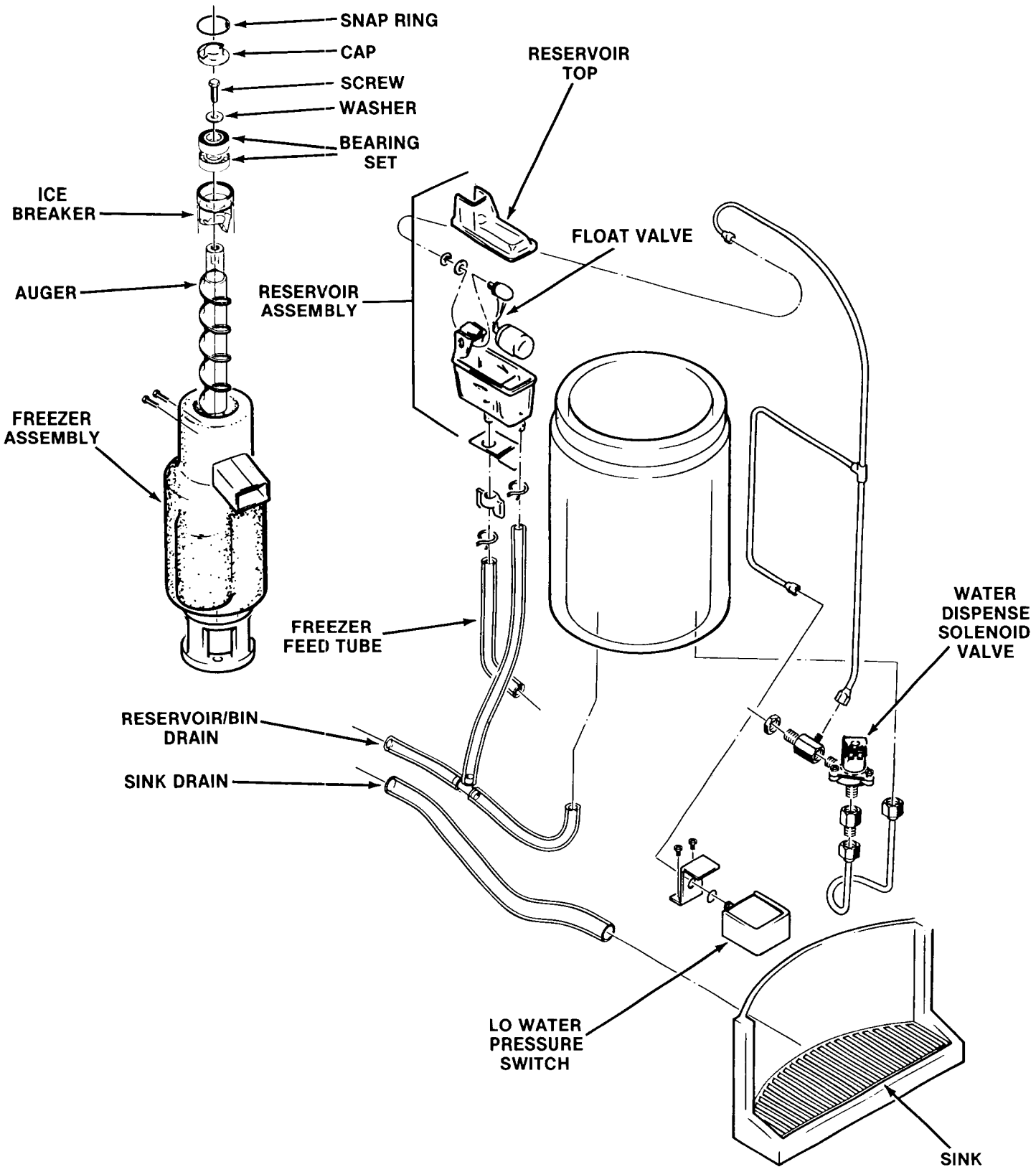

FD4 MAINTENANCE & CLEANING INSTRUCTIONS

SANITIZING

Sanitizing is an important phase of the icemaking and dispensing operation. The following sanitizing procedure should be performed after every repair or replacement of parts in the FD4 in/or through which water flows or drains and ice is made, spouted, stored or dispensed. Additional requirements for performing the sanitizing procedure should be following in accordance with the requirements.

////////////////////// **WARNING** //////////////////////

Read WARNING thoroughly BEFORE preparing sanitizing solution, in next stop.

1. **STERILAX 3-Q SANITIZING TABLETS.**

   DANGER: KEEP OUT OF REACH OF CHILDREN. Tablets may be harmful or fatal if swallowed. May cause skin irritation or eye damage. Avoid prolonged skin contact. Do not get in eyes. In case of contact, flush with plenty of water. If irritation persists get medical attention. Avoid contamination of food.

   FIRST AID: If tablets are swallowed, drink promptly a large quantity of milk, egg whites or gelatin solution. Avoid alcohol.

   NOTE TO PHYSICIAN: Probable mucusal damage may contraindicate the use of gastric lavage. Measures against circulator shock, respiratory depression and convulsion may be needed.

   Rinse empty carton container thoroughly with water and discard. Always follow your health department regulation.

2. **MIKRO-QUAT**

   DANGER: Causes eye damage and skin irritation. Do not get into eyes, or on skin, or on clothing. Protect eyes when handling concentrated product. Harmful if swallowed. Avoid contamination of food.

   FIRST AID: In case of contact, immediately flush eyes or skin with plenty of water for at least 15 minutes. For eyes, call a physician. Remove and wash contaminated clothing before reuse. If swallowed, drink promptly a large quantity of milk, egg whites or gelatin solution, or if these are not available, drink a large quantity of water. Call physician immediately.

//

NOTE: Contact your local Health Authorities and obtain their approval of the sanitizer you intend to use when sanitizing the FD4.

Prior to performing the sanitizing procedure, it is assumed the cleaning procedure has been performed.

1. Prepare one gallon of sanitizing solution composed of 450 PPM active quaternary ammonium germicide solution, using a quaternary ammonium sanitizing solution.

NOTE: Carefully follow directions and observe all precautions on the container of the compound.

Three *Sterilax 3-Q sanitizing tablets per gallon of water; or, 2/3 ounce of *Mikro-Quat per gallon of water will yield a solution of about 450 PPM active quaternary.

2. Immerse the parts in the sanitizing solution and wash the parts, flushing the solution thoroughly in, over and through all parts and surfaces of the FD4 parts being sanitized.
3. Allow the parts to drain and air dry.
4. Replace the sanitized parts in the reverse order of removal.

*Sterilax 3-Q sanitizing tablets are distributed by Pittsburgh Chemical Laboratory, Inc., Pittsburgh, PA 15222, and may be obtained through most restaurant supply houses.

*Mikro-Quat is manufactured by Economics Laboratory, Inc., Osborn Building, St. Paul, MN 55102, and may be obtained from them through their Magnus Division, The Klensade Division, or from restaurant supply houses.

FD4 SERVICE DIAGNOSIS

SYMPTOM	POSSIBLE CAUSE	CORRECTION
Water Leaks.	Defective water seal.	Replace
	Gravity feed line leaking.	Check hose clamps.
	Water level in reservoir too high.	Adjust to 1/4 inch below overflow pipe.
Excessive noise or chattering	Mineral or scale deposit on auger and inner freezing chamber walls.	Remove and manually polish auger, polish inner chamber walls of freezer barrel.
		For lighter concentration use Scotsman Ice Machine Cleaner periodically.
	Low suction.	Add gas to raise suction pressure.
	Intermittent water supply.	Check and clean water strainer. Check gravity feed line for air lock. Remove air lock.
	Water level in reservoir too low.	Adjust to 1/4 inch below overflow pipe.
	Gear reducer loose on frame.	Tighten bolts.
	Motor compressor not solid on rubber mounts.	Repair or replace rubber mounts.
Gear motor noise.	Low on oil.	Remove case cover to check for proper oil level. See Removal & Replacement page 30.
Unit will not run.	Blown fuse.	Replace fuse and check for cause of blown fuse.
	Loose electrical connection.	Check wiring.
	Inoperative master switch.	Replace switch.

FD4 SERVICE DIAGNOSIS

SYMPTOM	POSSIBLE CAUSE	CORRECTION
Compressor cycles intermittently.	Low voltage.	Check for overloading.
	Dirty condenser.	Clean.
	Air circulation blocked.	Move unit to correct.
	Inoperative condenser motor.	Replace.
	Non-condensable gases in system.	Purge off.
Making wet ice.	Surrounding air temperature.	Correct or move unit.
	Under or over-charge of refrigerant.	Recharge with the proper amount.
	High water level in water reservoir.	Lower to 1/2 inch below overflow pipe.
	Faulty compressor.	Replace or repair.
Low ice production.	Loss of refrigerant, under or over-charge of refrigerant.	Check and recharge with proper amount of refrigerant.
	Dirty or plugged condenser.	Clean condenser.
	Low water level in water reservoir.	Adjust to 1/2 inch below overflow pipe.
	Partial restriction in capillary tube or drier.	Moisture in system. Overcharge of oil in system. Remove charge and drier. Replace and recharge system.
	Inlet water strainer partially plugged.	Remove screen and clean.
	Corroded or stained worm shaft due to water condition.	Remove worm shaft and clean.
Machine runs but makes no ice	Loss or under-charge of refrigerant.	Check for leaks and recharge.
	Water not entering freezing chamber.	Plugged strainer or supply line. Check and clean. Air lock in gravity feed line. Check and remove air lock.
	Moisture in system.	Check and remove charge and drier. Replace and recharge.
	Water seal leaking.	Replace seal.
	Water turned off while unit was operating.	Inlet water line froze shut. Unit must be turned off and defrosted.

FD4 SERVICE DIAGNOSIS

SYMPTOM	POSSIBLE CAUSE	CORRECTION
Will not dispense.	Power off.	Check line fuses and plug.
	Motor overload open.	See correction under motor overload.
	Spout jammed with ice. Unit not level or holding glasses against spout.	Remove ice and clear ice under removable bottom. Check reservoir possibly too high.
	Wires off dispensing switch.	Check switch terminals.
Motor hot—Overload Open.	Ice under removeable bottom.	Remove ice.
	Wing nuts on cover turned down too tight.	Keep wing nuts only slightly snug—never tight.
	Rotating bin does not turn free.	Check and repair any drag.
	Ice too hard.	Raise freezer water level and check refrigerant charge.
Dispenser does not stop.	Brake on drive motor not working properly.	Brake must be free and stop the motor before 5 revolutions after the dispensing switch is released.
Water will not dispense.	Solenoid defective.	Replace.
	Lines closed up.	Clean.
Water runs too slow.	Water line too small.	Increase size.

FD4 REMOVAL AND REPLACEMENT PROCEDURES

ICE BREAKER AND AUGER REMOVAL

1. Remove permagum and two screws from the side of the freezer.
2. Pull up on cap hook located in the top of the freezer assembly to remove ice breaker with bearing set, auger and the top portion of the lower water seal.
3. Remove snap ring and cap and remove the bolt from the ice breaker and auger assembly to separate the ice breaker assembly from the auger. The bearings may be replaced or the ice breaker and bearings may be replaced as an assembly.

WATER SEAL INSTALLATION

Inspect the water seal in its package. Do not use if mating surfaces are scratched or cracked.

1. Remove auger, unbolt freezer from adaptor stand. Drive out old bottom bearing and water seal from the top down.
2. Remove old rotating half of water seal from auger and clean the auger at the seal mounting area.
3. Apply Scotsman part number 19-0529-01 RTV silicone rubber to the auger shoulder before pushing on the water seal. Place just enough silicone on to the auger, so that when the water seal is placed on the auger, the gap between the auger shoulder and water seal is completely filled with silicone.

   The silicone must be allowed to "set-up" or dry on the surface before any water can be added to the freezer. (See illustration, page 26).

////////////////// WARNING //////////////////

If any silicone gets onto the mating surfaces of the water seal, the seal is ruined, and cannot be used.

//

4. Clean the inside of the evaporator at the bottom bearing and water seal mounting area. Lubricate the outside edge of the stationary seal with food grade lubricant to aid installation.
5. Carefully push the stationary part of the water seal up into the bottom of the evaporator. It must go in straight and must not be pushed in beyond 1/4" past the bottom of the freezer.
6. Install new bottom bearing, push it into the freezer under the new water seal. It must be pushed in straight, but do not push it in past 1/8" from the bottom of the evaporator tube.
7. Mount the adaptor stand to the bottom of the freezer. Hand tighten the three cap screws until the stand flange is tight against the bottom bearing. Then, tighten the cap screws in a rotating pattern to insure proper alignment.

(CONTINUED)

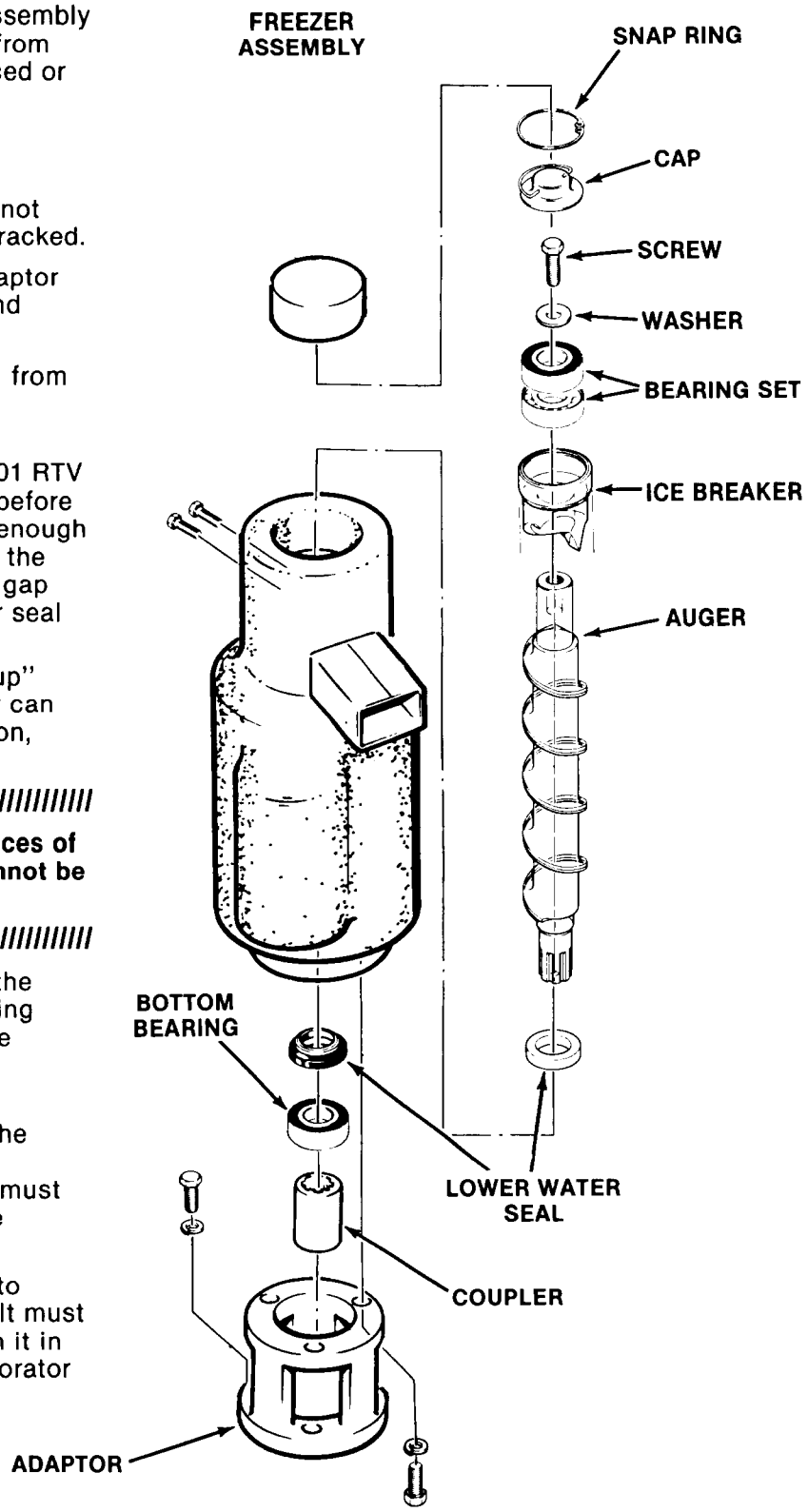

FD4 REMOVAL AND REPLACEMENT PROCEDURES

8. The top bearing should also be changed at this time. Be sure to mount the top bearing/bearing retainer assembly onto the auger **first** before installing the auger into the freezer tube.

9. Install the auger and test the unit.

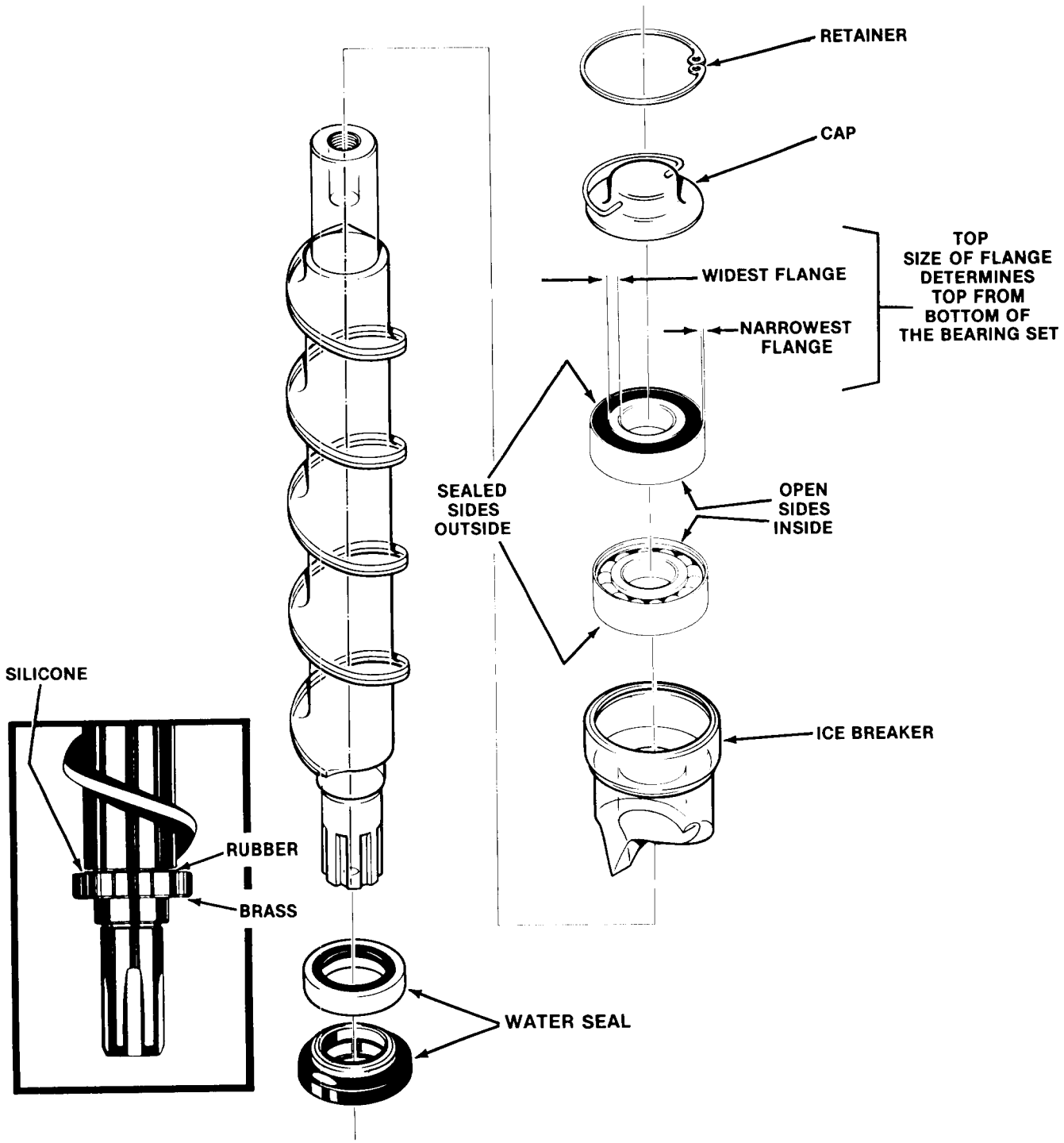

FD4 REMOVAL AND REPLACEMENT PROCEDURES

//////////////////// WARNING ////////////////////

Be sure the electrical power supply and the water supply are OFF, BEFORE starting any of the following REMOVAL AND REPLACEMENT procedures as a precaution to prevent possible personal injury or damage to equipment.

//

REMOVAL AND REPLACEMENT OF THE COMPRESSOR ASSEMBLY

To remove the compressor assembly:

1. Remove screws and remove top, back and left side panel.
2. Bleed off or blow the refrigerant charge through the schrader valve.
3. Remove the cover from the terminal box on the compressor; then, disconnect electrical leads from the compressor.
4. Unsolder and disconnect the refrigerant suction line and the discharge line from the compressor.
5. Unsolder the process header from the compressor and retain for installation on the replacement compressor.
6. Remove four bolts, washers, mounting sleeves and grommets and the compressor from the chassis base.

To replace the compressor assembly, reverse the removal procedure.

REMOVAL AND REPLACEMENT OF THE SAFETY CONTROLS, HIGH PRESSURE, LOW PRESSURE, AND AUGER DELAY

To remove the controls:

1. Remove screws and remove top and left side panels.
2. Bleed off or blow the refrigerant charge through the Schrader valve.
3. Unsolder the control capillary tube from its corresponding process header.
4. Replace the control and solder the capillary tube to its corresponding process header.
5. Follow the removal and replacement procedure of the liquid line drier.

REMOVAL AND REPLACEMENT OF THE CONDENSER ASSEMBLY — AIR-COOLED

To remove the condenser assembly:

1. Remove screws and remove top, back and
2. Bleed off or blow the refrigerant charge through the schrader valve.
3. Unsolder and disconnect refrigeration lines from the condenser.
4. Unsolder and remove the drier from the refrigerant line connected to the condenser.
5. Remove screws, lockwashers and air-cooled condenser from the chassis base.

To replace the air cooled condenser, reverse the removal procedure.

REMOVAL AND REPLACEMENT OF THE FREEZER ASSEMBLY

To remove the freezer assembly:

1. Remove cabinet top and right side panels, to prepare for removal of the freezer assembly.
2. Remove Corbin clamp and Tygon tube from the freezer assembly that connects to the water reservoir assembly.
3. Bleed off or blow the refrigerant charge through the Schrader valve.
4. Unsolder the suction line from the compressor.
5. Unsolder the capillary line at the drier.
6. Remove three screws, lockwashers and washers which attach the adaptor to the drivemotor assembly.
7. Lift the freezer assembly up and off of the drivemotor procedure.

To replace the freezer assembly, reverse the removal procedure.

NOTE

Thoroughly evacuate the system to remove moisture and non-condensables.

NOTE: Always install a replacement drier, anytime the sealed refrigeration system is opened. Do not replace the drier until all other repair or replacement has been completed.

FD4 REMOVAL AND REPLACEMENT PROCEDURES

WARNING

Be sure the electrical power supply and the water supply are OFF, BEFORE starting any of the following REMOVAL AND REPLACEMENT procedures as a precaution to prevent possible personal injury or damage to equipment.

REMOVAL AND REPLACEMENT OF THE DRIER

NOTE: Always install a replacement drier, anytime the sealed refrigeration system is opened. Do not replace the drier until all other repair or replacement has been completed.

To replace the drier:

1. Remove screws and remove back panel.
2. Bleed off or blow the refrigerant charge through the Schrader valve.
3. Remove attaching hardware and drier brace or strap from the drier.
4. Unsolder refrigeration lines at both ends of the drier.

To replace the drier:

CAUTION

1. **If the factory seal is broken on the replacement drier, exposing it to the atmosphere more than a few minutes, the drier will absorb moisture from the atmosphere and lose substantial ability for moisture removal.**
2. **Be sure the replacement drier is installed with the arrow positioned in the direction of the refrigerant flow.**

1. Remove the factory seals from the replacement drier and install the drier in the refrigerant lines with the arrow positioned in the direction of the refrigerant flow.
2. Solder the drier into the lines, two places.
3. Secure drier with the drier brace or strap.
4. Purge the system and check for leaks.
5. Thoroughly evacuate the system to remove moisture and non-condensables.
6. Charge the system with refrigerant, by weight. SEE NAMEPLATE.

REMOVAL AND REPLACEMENT OF THE BIN DRIVE MOTOR ASSEMBLY

To remove the drive motor:

1. Remove wing nuts and remove bin top.
2. Remove screws and remove switch cover.
3. Remove screws and separate bin drive motor from the switch cover.
4. Unplug electrical lead wires from connector.

REMOVAL AND REPLACEMENT OF THE FAN MOTOR ASSEMBLY

To remove fan motor assembly:

1. Remove screws and remove back panel.
2. Disconnect electrical lead from the fan motor.
3. Remove two screws and lockwashers securing the fan motor bracket to the chassis base and remove the fan motor assembly and bracket from the cabinet.
4. Remove the nut from the end of the fan motor to the motor bracket and separate the motor from the bracket.

To replace the fan motor assembly, reverse the removal procedure.

REMOVAL AND REPLACEMENT OF THE CYLINDRICAL ICE STORAGE BIN

1. Remove cabinet top.
2. Remove bin top wing nuts and remove bin top.
3. Pull UP and remove inner bin from insulated container.
4. Rotate counter-clockwise and remove inner bin bottom.
5. Remove hex nuts washers from bin base mounting bolts. Remove insulated ice storage bin.

REMOVAL AND REPLACEMENT OF THE WATER PRESSURE SWITCH ASSEMBLY

To remove the low water pressure switch assembly:

WARNING

Be sure the electrical power supply and the water supply are OFF, BEFORE starting any of the following REMOVAL AND REPLACEMENT procedures as a precaution to prevent possible personal injury or damage to equipment.

1. Remove screws and remove top, back and right side panel.
2. Disconnect electrical leads in the control box from the low pressure switch.
3. Unscrew the flare nut fitting and disconnect the low pressure control and washer from the bracket.

To replace the low water pressure control assembly, reverse the removal procedure.

REMOVAL AND REPLACEMENT OF THE WATER RESERVOIR ASSEMBLY

To remove the water reservoir assembly:

1. Remove screws and remove top, back and right side panel.
2. Turn OFF water supply to the icemaker at the hand shut-off valve.

NOTE: Be prepared with container or rags, to catch water left in lines, when lines are disconnected in next steps, to prevent draining water on parts, components, electrical lines, etc.

3. Disconnect the water inlet tube from the water reservoir assembly.
4. Remove two corbin clamps and two tubes from the bottom of the water reservoir assembly.
5. Unscrew and remove the plastic wingnut from the bottom of the water reservoir assembly.
6. Lift and remove the water reservoir assembly from the mounting bracket.

To replace the water reservoir assembly, reverse the removal procedure.

NOTE: Check that the installed replacement water reservoir assembly float moves freely. The correct water level in the water reservoir is 3/8-inch below the raised molded line, on the side of the body of the water reservoir.

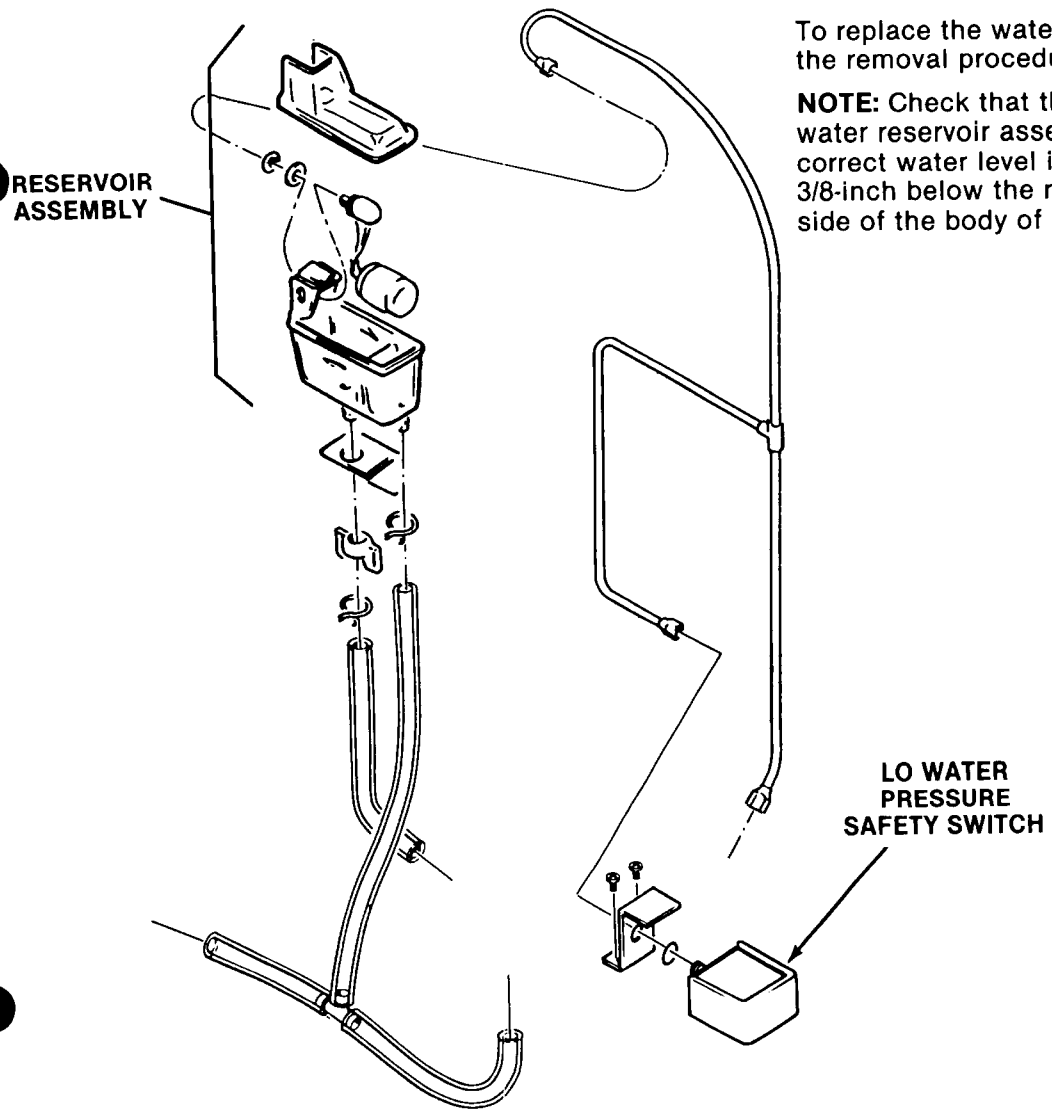

FD4 REMOVAL AND REPLACEMENT PROCEDURES

REBUILDING THE 1/10 HORSEPOWER DRIVEMOTOR GEAR REDUCER ASSEMBLY

DRIVEMOTOR PARTS

To replace the centrifugal switch and mechanism or the motor winding or the motor rotor, removal of the gearbox assembly is not necessary.

//////////////////// **WARNING** ////////////////////

Be sure the electrical power supply and the water supply are OFF, BEFORE starting any of the following REMOVAL AND REPLACEMENT procedures as a precaution to prevent possible personal injury or damage to equipment.

//

1. Disconnect electrical power to the FD4. Remove top and right side panels.
2. Remove cover from the top of the centrifugal switch assembly and remove the electric wires from the microswitch. To replace just the centrifugal switch, remove two machine screws retaining the switch and remove the switch. To replace, reverse the procedure to this point.
3. If the motor is to be removed, the next step is to remove the four screws holding down the plastic switch assembly housing and lift the housing off of the motor top.
4. Remove the centrifugal switch mechanism from the rotor by unscrewing the machine screw at the top of the rotor.
5. The motor and housing may now be removed. Lift off the motor fan housing, and pull off the plastic fan. The next part to be removed is the motor winding. Disconnect the electrical leads of the motor from its control box location and lift off the winding.
6. The rotor is all that remains of the motor in the gear motor assembly. Use a pry bar to carefully pry up the rotor. (The only thing holding it in is the tight fit of the bottom rotor bearing into the top of the gear case.) To replace any of the above parts, reverse the disassembly procedure.

REMOVAL OF THE DRIVEMOTOR ASSEMBLY

To remove the Drivemotor Assembly:

1. Remove top and right side panel.
2. Remove bin top assembly.
3. Unscrew three capscrews retaining freezer assembly to the gearmotor assembly.
4. Unscrew two capscrews under gearmotor chassis support retaining gearmotor to the frame.
5. Remove motor electrical leads from the connections.
6. Raise freezer assembly up enough that the output shaft clears the freezer adaptor.
7. Remove the gearmotor assembly by sliding it out from under the freezer.

DRIVEMOTOR ASSEMBLY

After removal of the drivemotor gear reducer from the unit, inspect the internal parts of this gearmotor:

1. Place gearbox on a flat surface, covered with rags to absorb any spilled lubricant.
2. Using a punch, drive the roll pins out of the casing.
3. Remove the four capscrews on the top of the gear case and the two under the motor.
4. Pry the two cases apart.

When inspecting the internal parts, look for:

* Condition and quantity of lubricant. (The proper oil level is near the top of the output (biggest) gear.) (5 oz. capacity) Use Scotsman Gear Case Oil, P/N A25835-001.
* Bearing condition
* Gear and gear shaft condition
* Woodruff key between output gear and shaft.
* Grease seals, back to back
* Vent hole

Be sure to count and retain the spacer washers as they come out of the gearbox.

Replace the parts as required, using the part numbers found in the parts list section of this manual. Replace the gears into a CLEAN bottom gearcase, replacing the spacer washers in the same quantity as they were upon disassembly. If no count was kept, refer to the parts illustration.

NOTE

Some bearing grease should be placed in all bearings before assembly to insure proper lubrication upon start-up.

DRIVEMOTOR ASSEMBLY

To reassemble:

1. Set top gearcase on gears and spacers and oil. Be sure O-ring is in place.
2. Drive rollpins back into locating holes.
3. Replace capscrews into gearcase covers and torque (8 capscrews) at 80-90 inch pounds.
4. Bench test the gearmotor assembly.

Test for noise, amp draw (must not be in excess of icemaker nameplate for gearmotor) and oil leaks.

Return gearbox to the unit. Be certain all mounting surfaces are clean and reassembly gearbox to chassis and freezer assembly.

If the freezer water seal begins to leak, removal of the auger is required in order to replace the top and bottom bearing and water seal. AT THE SAME TIME, it would be recommended to remove the gearmotor assembly, open it up and inspect it.

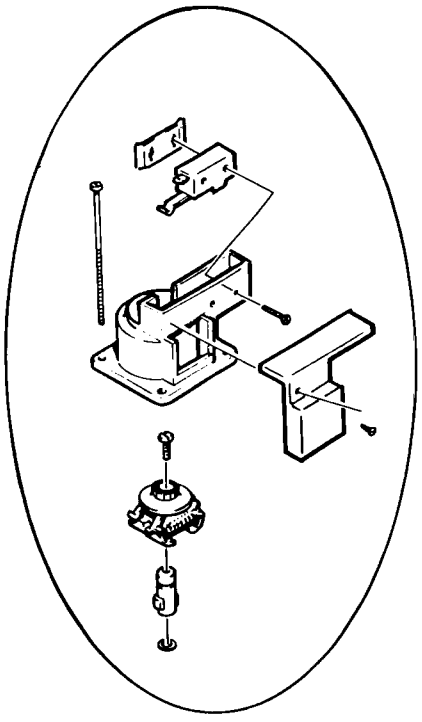

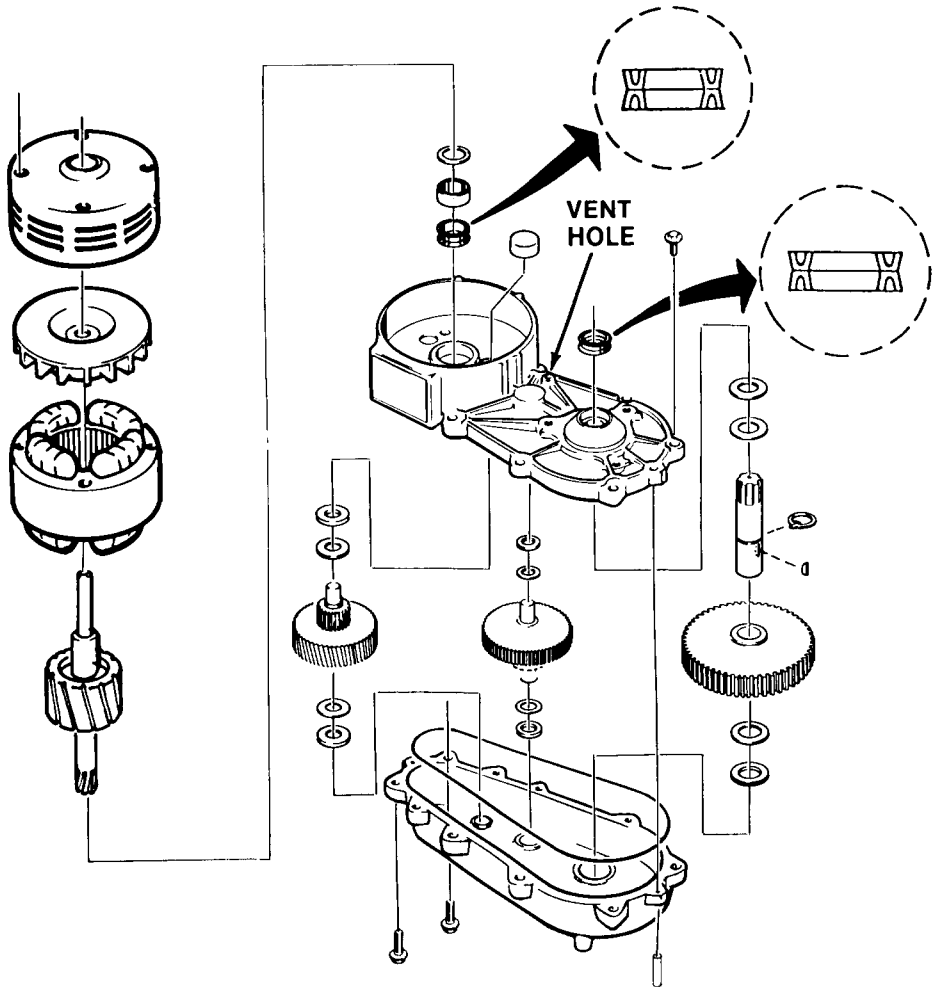

TABLE OF CONTENTS

Table of Contents 2

General Description 3

Specifications
Photo, Capacity, Outline Dimensions 4-5

Specifications - Mechanical 6

Installation Instructions 7-8-9

Cleaning and Maintenance Instructions 10

Wiring Diagram
Air Cooled 11

Wiring Diagram
Water Cooled 12

Function - Lo Pressure Switch 13

Ice Dispenser control System 14

Parts List
External Cabinet Parts 15
Internal Parts (General) 16-17
Bin Drive & Dispensing Parts 18
Bin Top & Control System 19
Water Reservoir 20
Gearmotor 21
Freezer 22
Storage Bin Ass'y 23
Control Box 24

Service Analysis 25-27

FD5 Mounted on Companion Stand 28

Bin Top Adjustments 29

THIS PAGE
INTENTIONALLY
LEFT BLANK

THIS PAGE
INTENTIONALLY
LEFT BLANK

GENERAL DESCRIPTION

This unit is a counter top or wall suspended type of dispenser which contains a complete flaked ice dispenser, storage bin, and automatic dispensing mechanism.

The primary purpose of this machine is to fill glasses with water and ice or just ice by actuating a control arm with the glass.

Variable portion or continuous flow of ice can be obtained by rotating the ice control switch. By pushing a water switch to "On"; water will be dispensed with the ice as long as the glass actuator arm is depressed. Ice dispensing will stop automatically when the preselected portion of ice has been dispensed.

The drain grate is vinyl-coated steel wire allowing spilled ice to pass through freely.

The cabinet is stainless steel or steel with baked-on enamel. Enamel models have a wood grain upper front panel, dark amber control panel, stainless steel splash panel and remaining cabinet enclosure in a textured color.

The complete machine has been designed with sanitation and ease of cleaning emphasized. The storage bin is sealed, and the ice spout is automatically closed when ice is not being dispensed. The dispensing mechanism, storage bin, and parts requiring cleaning are accessible without tools.

All components are accessible through the top or front panels. On air cooled machines, there is a special removable section of the condenser shroud to facilitate cleaning of condenser.

The on-off switch and portion control are located left of the ice spout under the upper front panel.

The bin control is mechanical arm controlling a switch. This is backed up by a manual reset switch to prevent damage by failure of bin controls.

SCOTSMAN®

FD-5 SERIES ICEMAKER-DISPENSERS

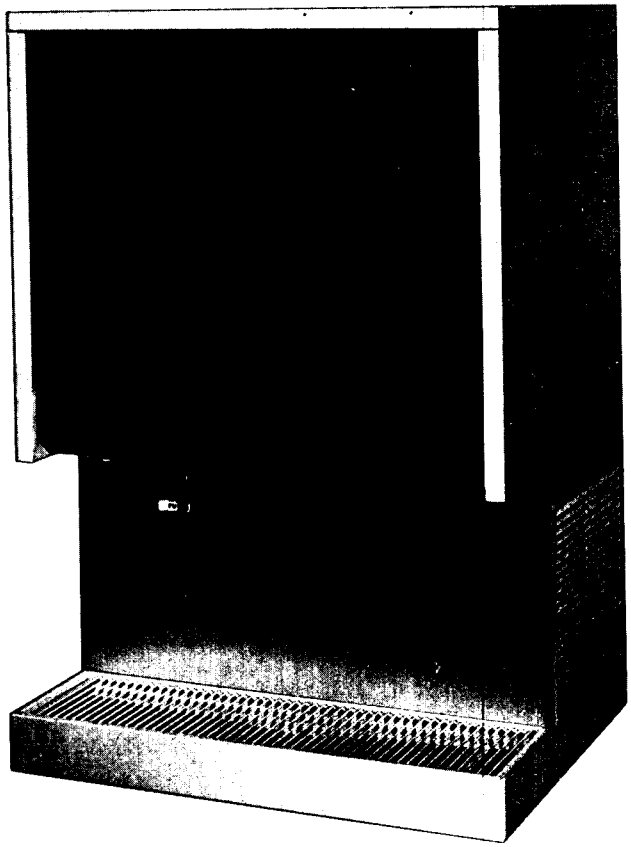

ice making capacity

Daily Ice Capacity is directly related to condenser air inlet temperature, water temperature, and age of machine.

To keep you SCOTSMAN FLAKER DISPENSER performing at it's maximum capacity, it is necessary to perform periodic maintenance as outlined on page 10 of this manual.

SPECIFICATIONS

PERFORMANCE DATA:

Ice Storage — Approximately 20 lbs.
Ice Portion — Portion is variable from approx. 1 to 5 oz. per vend or may be positioned to continuous vend.
Vend Rate — Approximately 2.0 oz./sec.
Water Control — Water may be dispensed with all ice portion control settings.

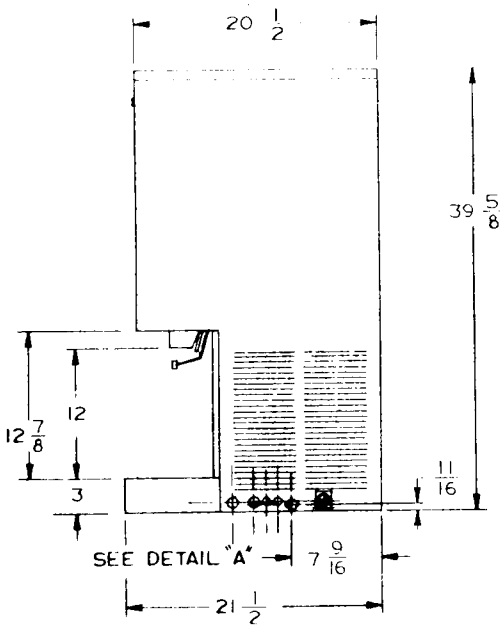

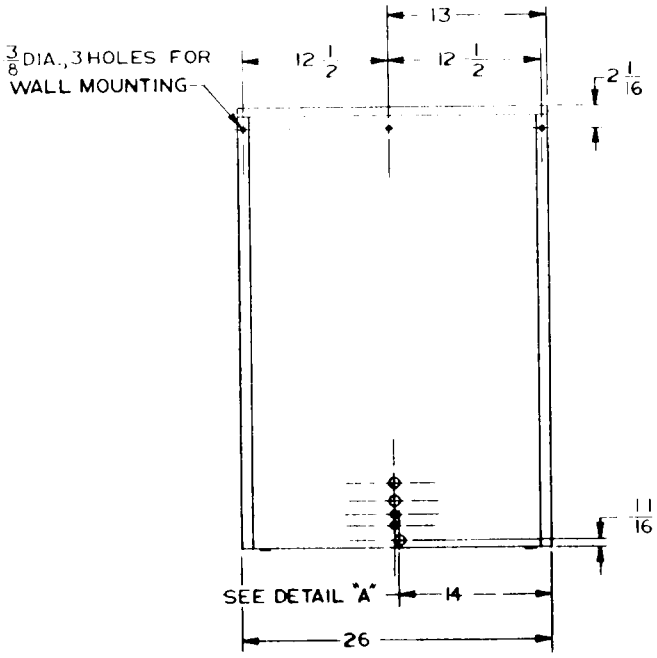

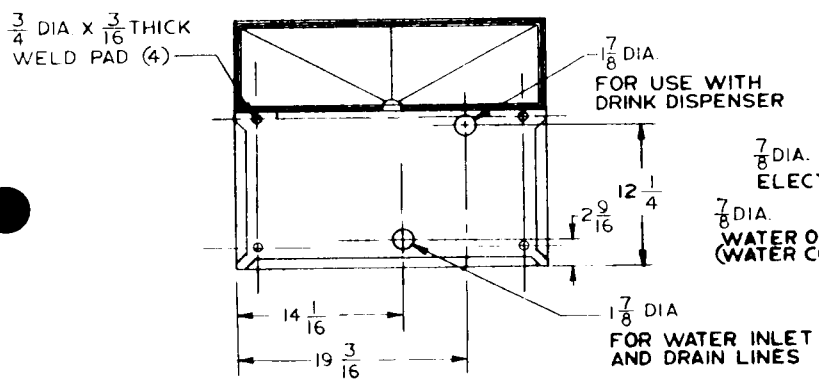

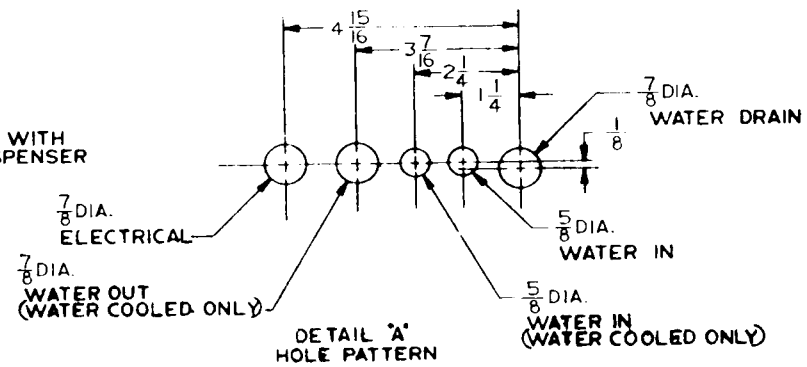

SPECIFICATIONS

ELECTRICAL

Power Supply ..... 115 + 10% Volts 60 Hertz 1 Phase
Minimum Wire size ..... No. 12 AWG
Maximum Fuse Size .....20 Amp Time Delay

PLUMBING

Potable Water Inlet ..... 1/4" SAE Male Flare Fitting
Potable Water Outlet ..... Plastic Tube Accepts 5/8" O.D. Tube
Condenser Water Inlet ..... 3/8 N.P.T. at water reg. valve
Condenser Water Outlet .....3/8 SAE Flare Fitting

TEMPERATURE LIMITS

100° F. Maximum .....50° F. Minimum

WATER LIMITS

100° F. Maximum .....125 PSIG Maximum
40° F. Minimum .....20 PSIG Minimum

COMPRESSOR

Copelaweld RSF2-0050-1AA-207
115V 60 Cy
11.2 FLA
51.0 LRA
1/2 H.P.

GEAR MOTOR (Freezer Drive)

Queen Products A25995-001
115 V 60 Cy
4.0 FLA
1/10 H.P.

GEAR MOTOR (Ice Dispensing)

Merkle-Korff S-418
115 V 60 Hertz
3.7 FLA
200 Watt

REFRIGERANT CHARGE

Frost Line .....6 - 8 Inches From Compressor
Approximate Charge ..... 24 Oz. R12 (Air Cooled)
20 Oz. R12 (Water Cooled)

NORMAL OPERATING PRESSURES

Air Cooled ..... 140 PSIG High Side
14.5 PSIG Low Side
Water Cooled ..... 135 PSIG High Side
14.5 PSIG Low Side

INSTALLATION INSTRUCTIONS

The following installation instructions were written for use by a authorized tradesman only, not the user or customer. We suggest you call your local authorized Scotsman Service Agency for hook-up, start-up, and check out. He's listed under "Ice Making Machinery & Equipment" in your telephone book, yellow pages.

1. Machine should have both sides open to free air for air movement in and out of the machine (air cooled models). Avoid locations with high temperatures and dirty air, such as found next to grills or in kitchens.

2. Machine may be placed on a solid countertop, on other equipment manufactured by Scotsman or fastened to a wall. When wall mounting is desired, use the three mounting holes provided across the reinforcement strip on upper back of cabinet.

3. Remove cabinet top (push up on front edge), remove upper front panel (pull out along top edge) and lower front splash panel (remove 4 screws).

4. Electrical connections and plumbing - connections may enter cabinet through the sides, back or base, whichever is convenient.

   Electrical - Terminate at control box - See wiring diagram for wire and fuse size - Voltage must be within - 10% of nameplate rating during start-up and normal running conditions. Wiring must conform to National and Local Codes.

   Plumbing (water In) - Inlet fitting is 1/4" SAE male and has fasteners provided on fitting to attach to cabinet sides. Use 1/4" O.D. copper tube with separate hand shut-off valve. If local conditions warrant, install water regulator and water strainer between machine and valve. Water cooled models have a 3/8" N.P.T. fitting at the water regulating valve for condenser water inlet.

   Plumbing (Water Out) - 5/8" O.D. drain tube must be used and connected to plastic tube inside cabinet. Drain must run to an open drain such as a floor drain or sink. Allow ample slope to assure proper drainage of machine. Water cooled models have a 3/8 SAE flare fitting at the condenser water outlet.

5. Remove sink and grill frompackaging and mount in plage—fasteners are provided with sink. Place drain tube on sink drain fitting and secure with clamp. Clamp is shipped in place on drain tube.

6. Replace panels, turn on water and electrical supply, and set On-Off switch to On position.

7. Thirty minutes after the unit has been started ice can be dispensed.

WARNING: THIS MACHINE MUST NOT BE ALLOWED TO OPERATE WHEN THE WATER SUPPLY IS SHUT OFF, OR AT BELOW RECOMMENDED WATER PRESSURE. TURN MASTER SWITCH TO "OFF" POSITION WHEN WATER SUPPLY IS OFF, OR WHEN WATER PRESSURE IS BELOW RECOMMENDED OPERATING PRESSURE.

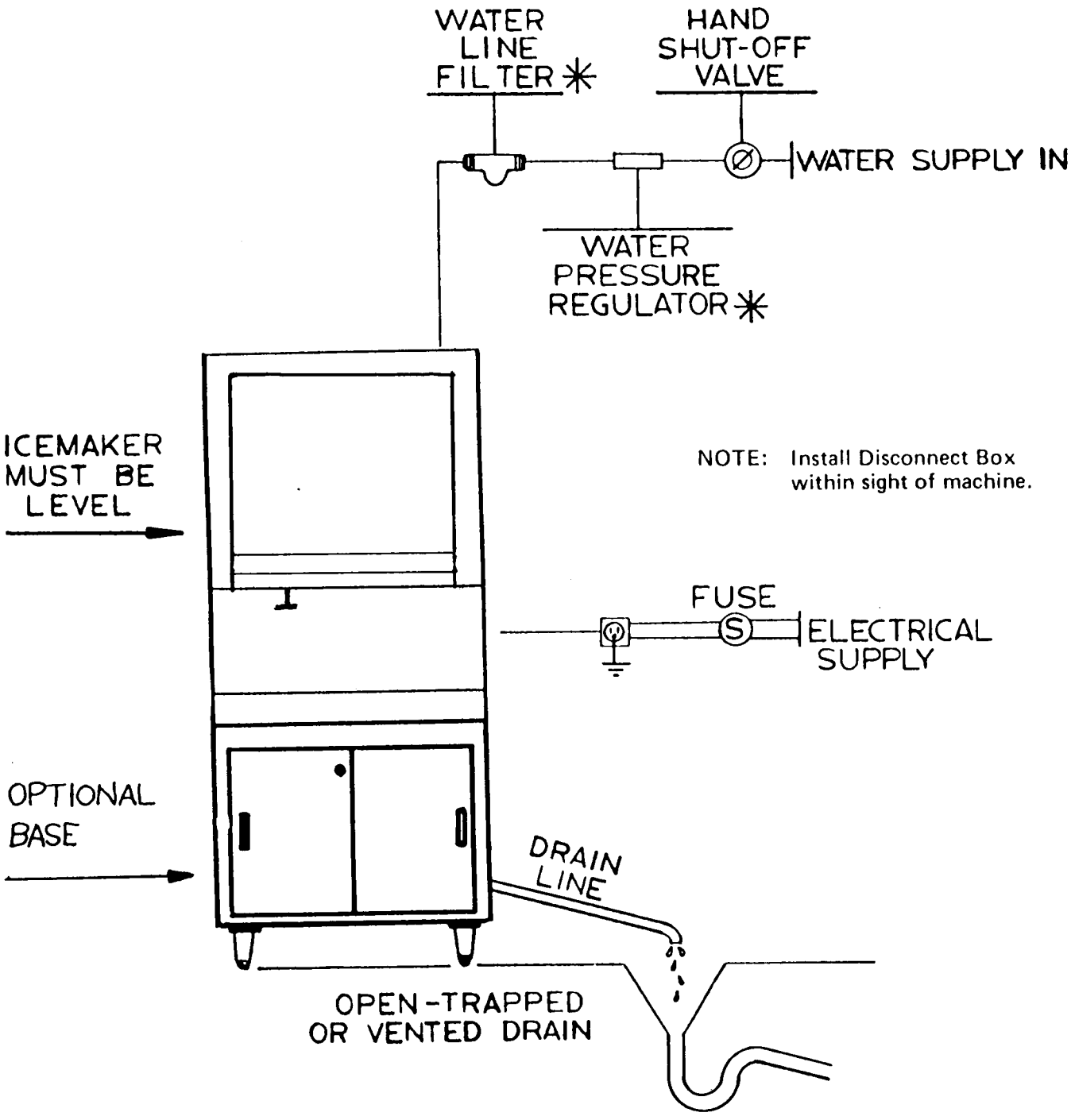

✳ REGULATOR AND FILTER ARE ACCESSORY ITEMS TO BE INSTALLED AS CONDITIONS WARRANT

INSTALLATION LIMITATIONS

ELECTRICAL

1. Scotsman, like most manufacturers, purchases electrical motors that are rated to operate within 10% variance above or below nameplate ratings.

2. Improper voltages applied to Scotsman equipment can cause premature failures and burnouts. Failures of this type are not considered as factory fault or defect.

AMBIENT

WARNING — This machine is not designed for outdoor installations. This machine will not operate when air temperatures are below 50° F. or above 100° *F.*

This unit was not fabricated nor intended to be installed outdoors.

WATER

3. Scotsman Ice Systems require 20 pounds flowing water pressure to operate satisfactorily. Pressures lower than 20 pounds or interruptions in the water supply can cause serious mechanical damage to this product.

   This machine will not operate when water supply temperatures are below 40° F. or above 100° F.

MAINTENANCE AND CLEANING INSTRUCTIONS — FD5

THE FOLLOWING MAINTENANCE SHOULD BE SCHEDULED THREE TIMES PER YEAR ON SCOTSMAN DISPENSERS. CALL YOUR AUTHORIZED SCOTSMAN SERVICE DEPARTMENT.

1. Check and clean water strainers and float valve. Depress float valve to insure full stream of water.
2. Check water level and machine level, keep water level below overflow, but as high as possible and still not run out of spout opening with machine off. Water droplets come out of spout with ice at all times. Adjust as required.
3. Clean reservoir and interior of freezer using SCOTSMAN Ice Machine Cleaner.
   A. If machine has been cleaned regularly and no problems such as dry ice or chatter are noticed, clean as per the following instructions:
   a. Set selector switch to continuous ice and vend until bin is empty.
   b. Disconnect Power.
   c. Remove inner bin and bin bottom, wash and sanitize these parts and inside of bin.
   d. Turn Off water supply or block float. Drain reservoir by removing the overflow tube in the reservoir. After draining, replace the overflow tube.
   e. Turn On power and pour cleaning fluid into reservoir. (Use 4 oz. of Scotsman cleaner and 1 gal. of hot water). Do not fill above overflow tube. Do not allow unit to operate with less than 1" of solution in reservoir.
   f. While waiting for step "e" to complete, wash and sanitize sink, drain grate, glass filler lever and surrounding area in accordance with local Health Department regulations.
   g. When cleaning fluid has been depleted, turn on water supply and let unit run for at least 15 minutes to flush out any cleaning fluid. Check ice for acid taste - run unit until ice tastes sweet.
   h. Disconnect power and melt ice in storage bin with hot water to remove ice and rinse bin parts.
   i. Re-assemble all parts - unit is ready for normal operation.

NOTE: Cleaning requirements vary according to local water conditions. Visual inspection of the auger before and after cleaning will indicate best procedure to be followed in local areas.

4. Check high and low side pressure. On air-cooled models head pressures range between 130 and 145 PSI. Suction pressure should be above 12 PSI and will range up to 15 PSI depending upon water and ambient temperatures.
5. Check gearmotor operation. Normal running temperatures are in the area of 160° Farenheit, which is hot to the touch.
6. Check top bearing of freezing tube. Remove retainer ring around edge of stamped brass cap. If moisture is around bearing, wipe up and remove grease. Add new grease. Use Beacon No. 325. Replace cap and retainer ring.
7. Clean air-cooled condenser. Inform customer to clean frequently. Always shut off machine when cleaning.
8. Check for refrigerant leaks and proper frost line. Should frost out of accumulator at least one-half way to compressor, and in some areas back to service valve.
9. Check for water leaks. Tighten drain line connections. Run water down bin drain line to make sure it is open.

WIRING DIAGRAM

115/60/1

(Air Cooled)

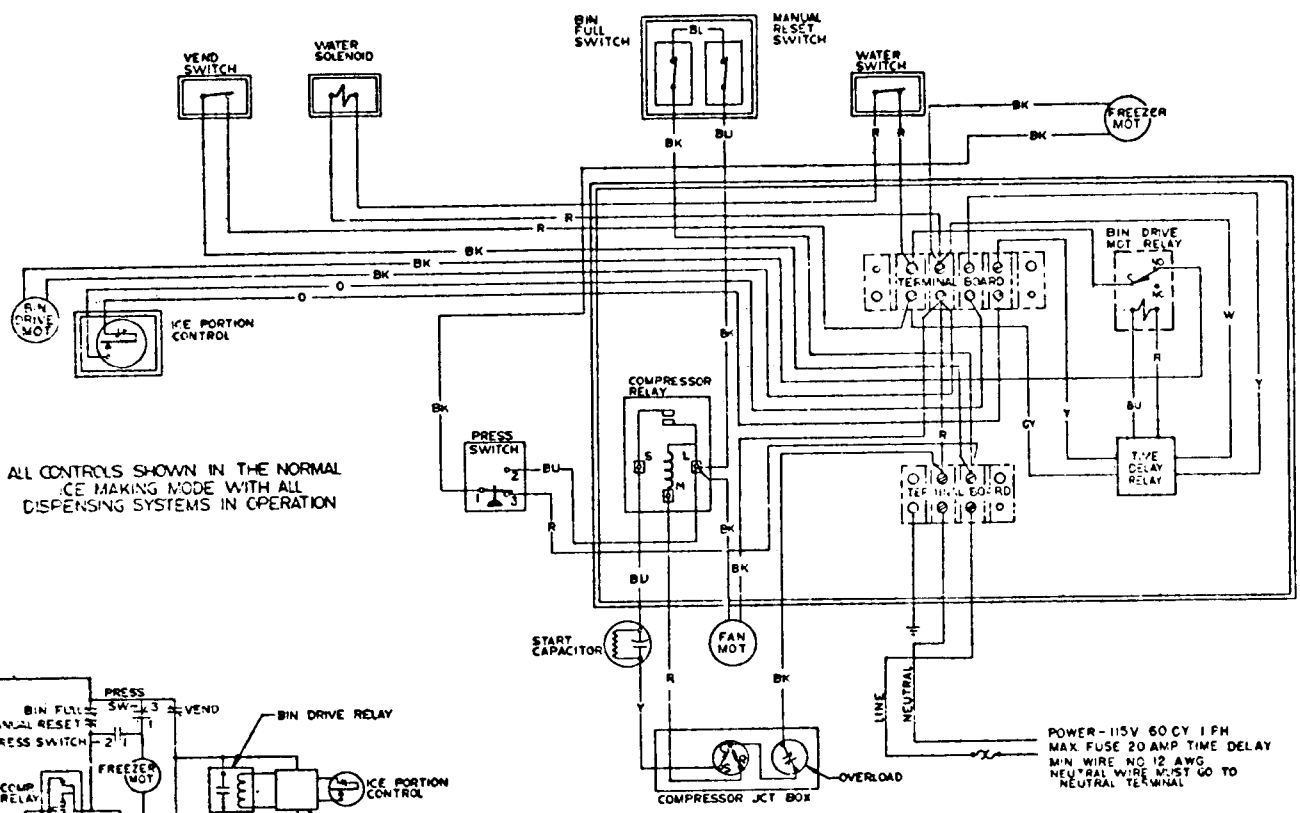

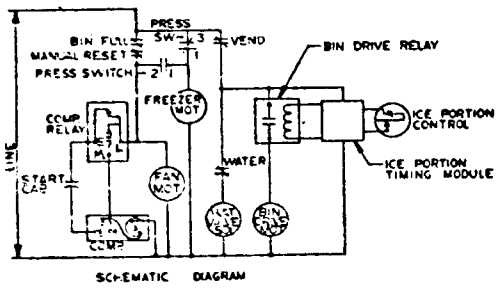

WIRING DIAGRAM

115/60/1

(Water Cooled)

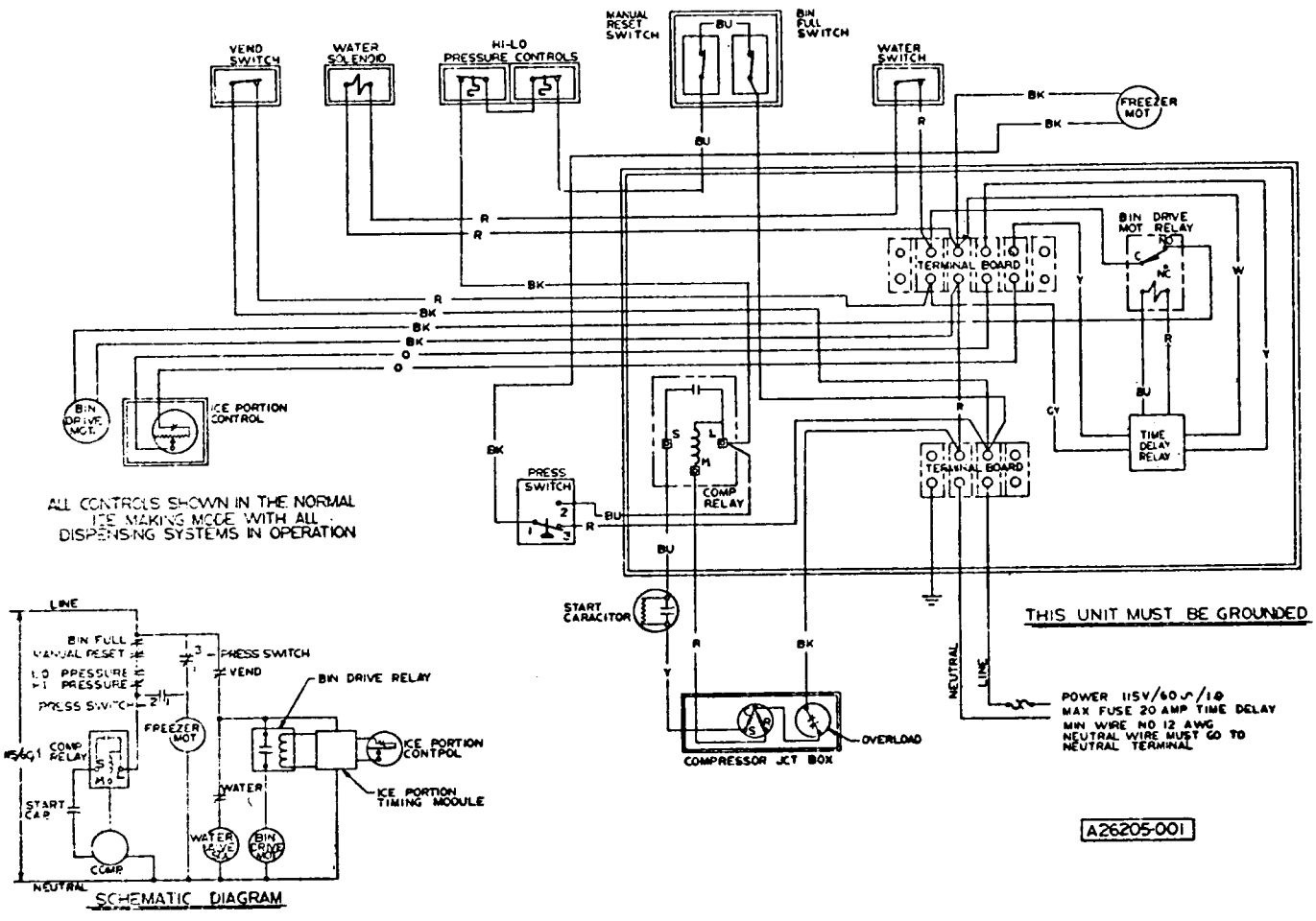

SCHEMATIC DIAGRAM

A26205-001

Description of the Function of the Texas Instruments Low Pressure Control Switch When Used on 1/15 and 1/10 H.P. Gear Motors

On all Scotsman units using a 1/15 or 1/10 H.P. gear motor, the centrifugal switch mechanism, mounted on top of the motor, was removed and replaced, in the system, with a low pressure control switch. This is a single pole double throw (SPDT) switch manufactured by Texas Instruments. (Queen Products Part No. 11-0396-01*).

* Refer to a typical wiring diagram, showing contacts, for description of switch function.

On all Queen Products wiring diagrams, the controls are shown in the ice making mode. Thus, the 1-3 contacts are shown as closed. On machine start up the 1-3 contacts are open and the 1-2 contacts are closed. As the unit begins to run, the low side pressures starts to fall from the stabilized or "at rest" pressure. As soon as the pressure drops to 21 Psig, the 1-2 contacts open and the 1-3 contacts close. This removes the operating controls, such as the bin thermostat, from the "gear motor circuit". If one of the operating controls opens, it will shut off the "compressor circuit". The gear motor will run until the low side pressure rises to 29 Psig. At this point the 1-3 contacts open and turns the gear motor off. This usually takes 1-3 minutes depending on ambient conditions. This length of time allows the auger to transport all the ice out of the freezing chamber. Consequently, when called on to start up again, there is no load to start up against. On start up, again, the 1-3 contacts are open and the 1-2 contacts closed.

*Function 11-0393-01 Low Pressure Control Switch

1-3 Contacts - Open on Pressure Rise
Opens at 29 Psig
Closes at 21 Psig

1-2 Contacts - Open on Pressure Fall
Opens at 21 Psig
Closes at 29 Psig

* *See wiring diagram.*

ICE DISPENSER CONTROL SYSTEM

Depressing the glass filler opens the spout and closes the vend switch. The vend switch closes the circuit to the water switch and to the water solenoid valve, if water switch is positioned to "with water". Also, the vend switch closes a circuit to the ice portion control and its timing module located in the control box. If ice control is positioned to continuous, then ice will be dispensed as long as the glass lever is depressed. If ice control is in a portion position, then only that quality of ice will be dispensed until the glass lever is actuated another time. The portion control and timing module regulate the time period the bin drive motor is engaged. When this time period has lapsed then the normal closed relay is energized, opening the circuit to the drive motor and stopping the dispensing action. The vend switch mounting position is adjustable and must be positioned so glass lever is fully depressed before closing vend switch. This is to insure the ice spout is fully opened.

VEND SWITCH ADJUSTMENT

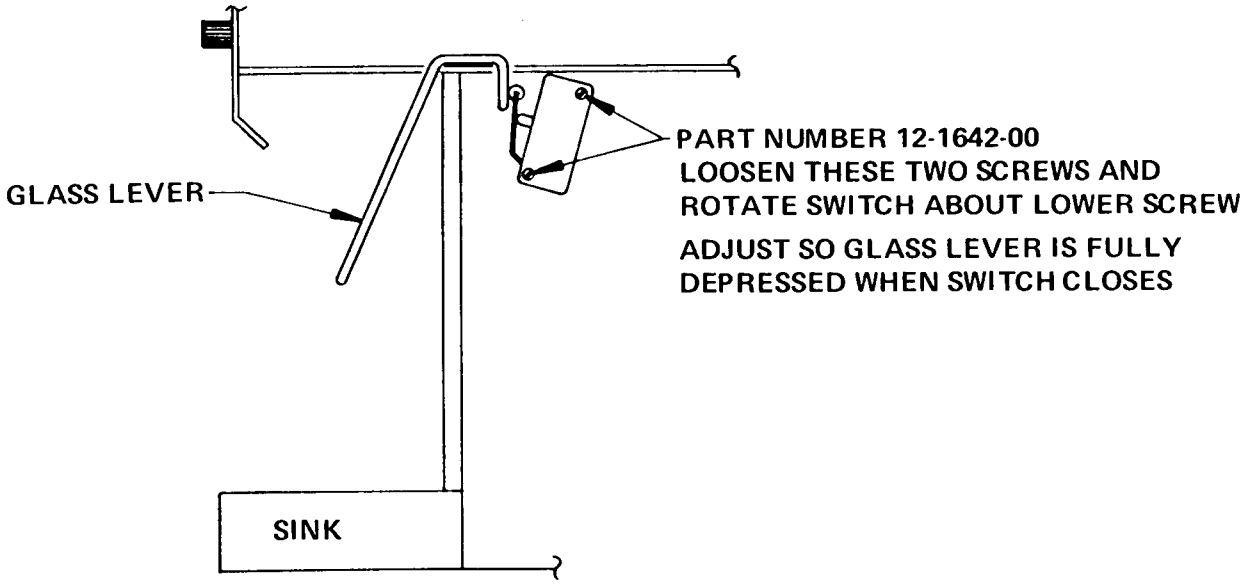

EXTERNAL CABINET PARTS

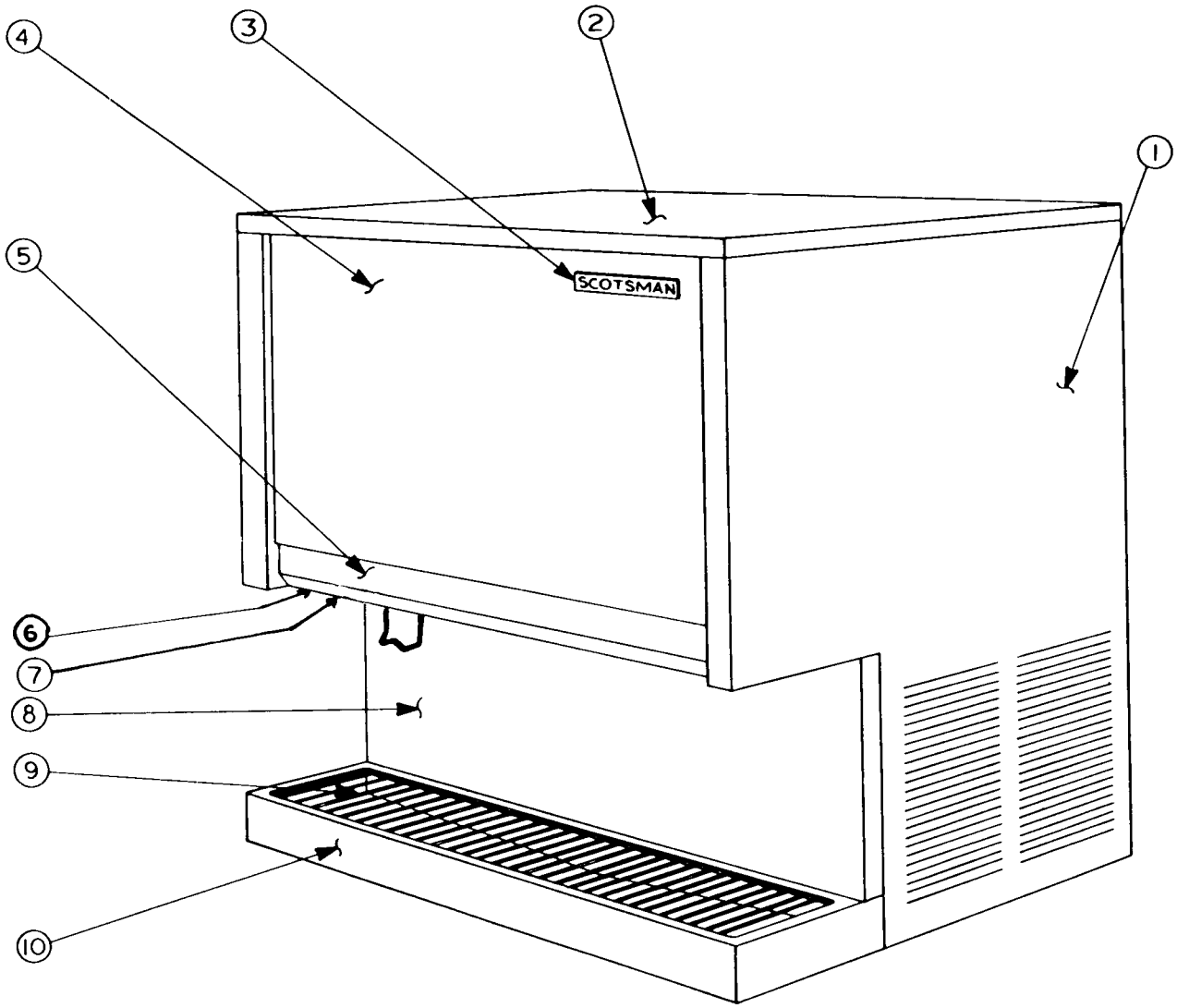

ITEM	PART NO.	DESCRIPTION
1.	A19945-000	Cabinet Painted
	A19945-001	Cabinet SS
2.	A20192-000	Top Panel Painted
	A20192-001	Top Panel SS
3.	15-0156-00	Emblem Scotsman
	03-0271-00	Speed Nut
4.	A21273-000	Front Panel Wood Grain
	A21273-001	Front Panel SS
5.	A24282-001	Control Panel Painted
	A24282-002	Control Panel SS
6.	12-1557-00	Portion Control
	02-1810-00	Knob Portion Control
7.	12-1337-01	Switch Water
8.	A19339-000	Splash Panel
	03-1418-25	Screws Panel
9.	02-1858-00	Grill
10.	A23212-000	Sink

PANEL FASTENERS

15-0411-00	Strike
03-1406-04	Nut
02-0836-00	Catch

INTERNAL PARTS VIEW

(Air Cooled)

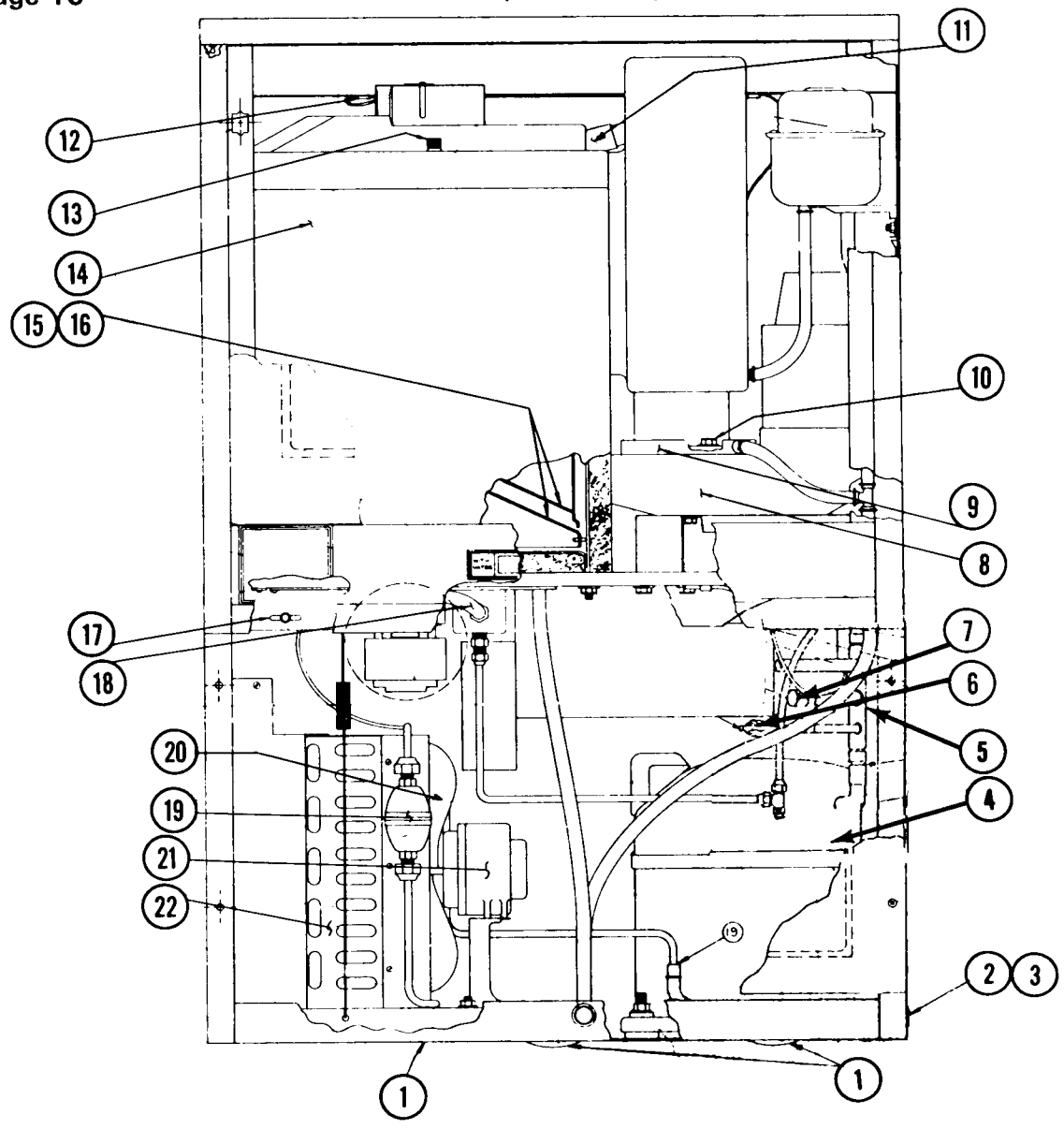

ITEM	PART NO.	DESCRIPTION
1.	A22349-000	Plug Button
2.	02-1875-07	Plug Button Sm.
3.	02-1875-11	Plug Button Lg.
4.	18-2200-01	Compressor
5.	16-0673-04	Processor Header
*6.	11-0396-01	Low Pressure Control
7.	16-0560-00	Valve Core
	16-0563-00	Brass Cap
8.	A25995-001	Gear Motor
9.	A18153-000	Drip Pan Ass'y
	13-0628-00	Gasket
10.	03-1420-04	Screw
	03-1417-12	Washer
11.	A16151-000	Spout Extension
12.	03-1230-00	Tin Clip
13.	A21983-000	Nut
14.	A21386-000	Bin Ass'y.
15.	A19349-000	Inner Bin Fab. Ass'y.
16.	A19343-000	Inner Bin Bottom
17.	A24326-01	Switch Plate Ass'y.
	03-1403-16	Screw
18.	A23315-001	Solenoid Ass'y.
19.	02-0831-00	Filter Drier
20.	18-0137-01	Fan Blade
21.	12-1576-01	Fan Motor
22.	18-1927-00	Condenser

* See Page 13

INTERNAL PARTS VIEW (Water Cooled)

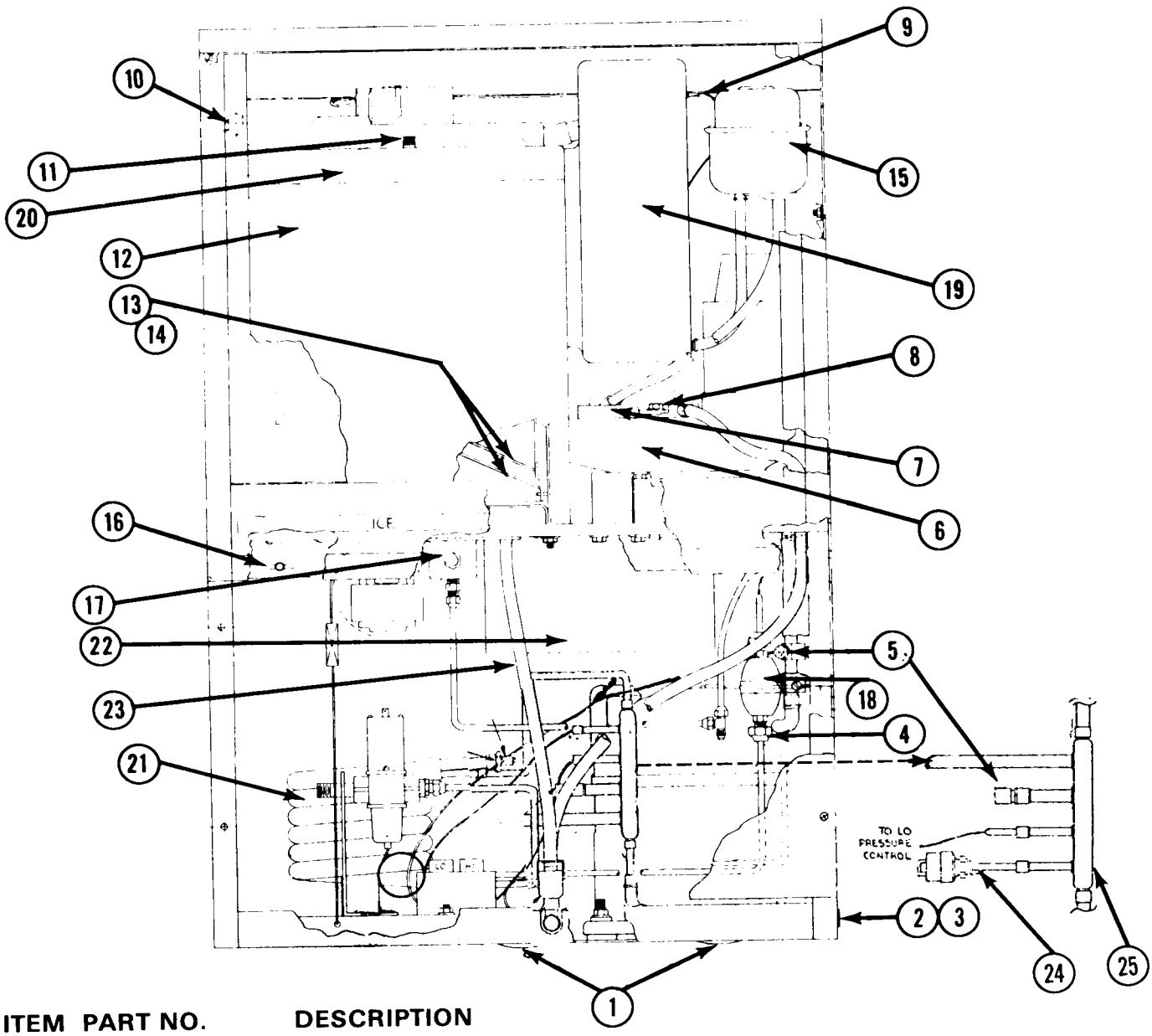

ITEM	PART NO.	DESCRIPTION
1.	A22349-000	Plug Button
2.	02-1875-11	Plug Button (Large)
3.	02-1875-07	Plug Button (Small)
4.	18-2200-01	Compressor
5.	16-0560-00	Valve Core
	16-0563-00	Brass Cap
6.	A25995-001	Gear Motor
7.	A18153-000	Drip Pan Assy.
	13-0628-00	Gasket
8.	03-1420-04	Screw
	03-1417-12	Washer
9.	A16151-000	Spout Extension
10.	03-1230-00	Tin Clip
11.	A21983-000	Nut
12.	A21386-000	Bin Assy.
13.	A19349-000	Inner Bin Fab. Assy.
14.	A19343-000	Inner Bin Bottom
15.	02-2217-01	Reservoir Assy.
16.	A24326-001	Switch Plate Assy.
	03-1403-16	Screw
17.	A23315-001	Solenoid Assy.
18.	02-0831-00	Filter Drier
19.		Freezer Assy.-See Page 22
20.	A22025-001	Bin Top Assy.
21.	18-3303-02	Condenser
22.	02-1827-00	Spring
23.	A16173-000	Drain Tube
*24.	11-0396-01	Low Pressure control
25.	16-0673-06	Processor Header

* See page 13

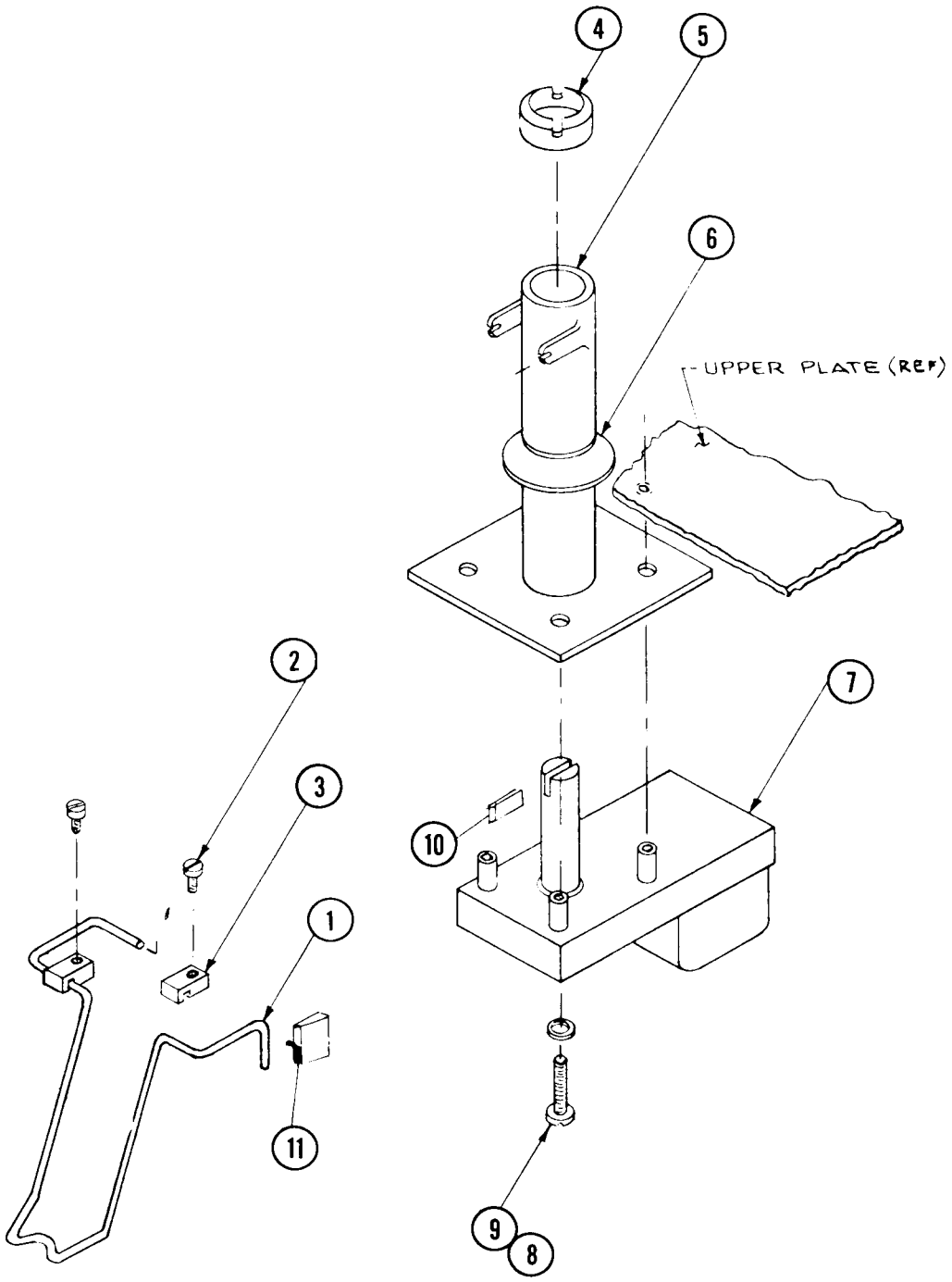

ITEM	PART NO.	DESCRIPTION
1.	02-2076-01	Glass Filler
2.	03-1403-06	Screw
3.	02-1969-00	Linkage Clamp
4.	02-1976-00	Retaining Collar
5.	02-1971-00	Bracket Gear Motor
6.	13-0747-00	Water Shed
7.	12-1561-00	Gear Motor
8.	03-1410-02	Lockwasher
9.	03-1403-36	Screw
10.	A20472-000	Slot Pin
11.	12-1642-00	Vend Switch

BIN CONTROL SYSTEM

There are two switches mounted in the enclosure on the bin top. One switch is actuated by the lever which is moved by the incoming ice—this switch has a large differential. (4)

In the event this switch fails to stop the ice maker, then the incoming ice forces the lever which in turn pushes the bin switch back into the manual re-set switch. The icemaker will not start until this switch is re-set. (7)

Continual tripping of the re-set switch will result if the bin full switch is defective. If nuisance tripping of this switch occurs, the bin full switch may be moved away from the re-set switch by use of its mounting nuts. Major adjustment can be made by bending the lever to increase or decrease its angle.

To further control the compressor and to avoid the freezing and stoppage of the auger in the freezer, a control is incorporated on the gear motor drive for the freezer.

The bin controls do not energize the compressor, only the gear motor. In turn, the gear motor operate the compressor.

A speed sensing switch designed externally on the motor of the gear unit will stop the compressor when the RPM of the motor is reduced or stalled.

Should the auger begin to freeze, the speed of the gear motor is reduced due to excessive load. At reduced RPM it opens the circuit to the compressor and thereby stopping the freezing. As the gear unit, only, continues to run, it will clear the auger; and when the motor speed increases, the compressor is turned on.

Any freeze-ups are thereby automatically cleared by the unit.

If the water should be shut off when the unit is running, the inlet water line will freeze shut. The control mentioned above will have no control over such a situation.

BIN TOP PARTS

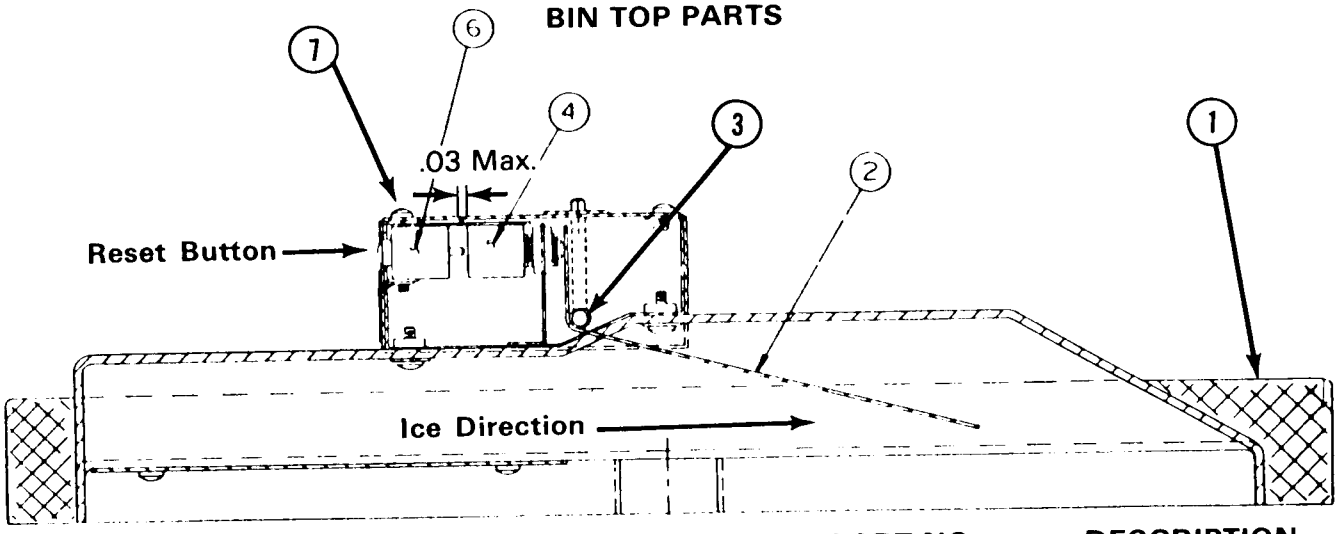

ITEM	PART NO.	DESCRIPTION
1.	A20486-000	Top Foam Assy.
2.	A21995-000	Actuator Arm
3.	A21982-000	Pin
4.	12-1018-02	Bin Full Switch
5.	A21997-000	Electrical Insulation
6.	12-1664-00	Reset Switch
7.	03-1404-07	Screw

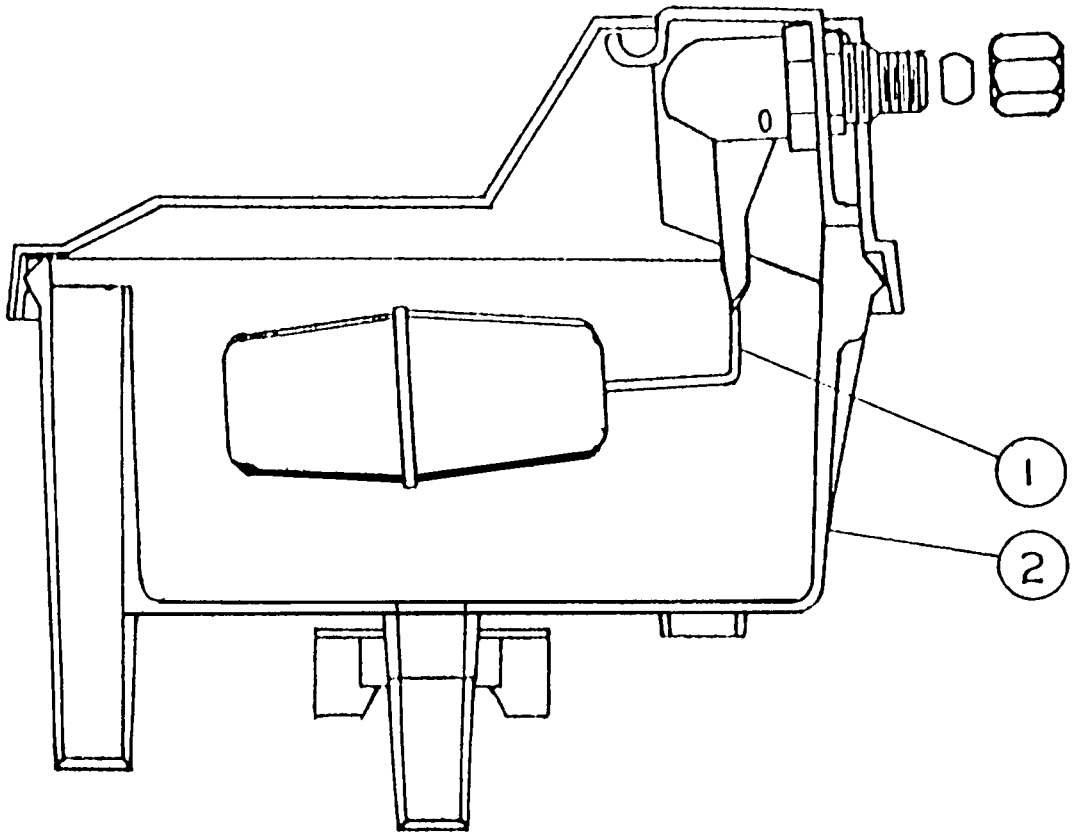

RESERVOIR ASSEMBLY

ITEM	PART NO.	DESCRIPTION
1.	02-2217-02	Valve Assy.
2.	02-2217-01	Reservoir Complete

GEAR MOTOR ASSY.

ITEM	PART NO.	DESCRIPTION
1.	03-1246-00	Set Screw (2)
2.	A17047-000	Motor Housing
3.	A16915-000	Cooling Fan
4.	12-1400-01	Stator Assy.
5.	A26454-001	Rotor Assy. & First Gear
6.	03-1245-00	Screws (2)
7.	03-1251-00	Flange Screws (6)
8.	A16920-021	Gear Case Cover
9.	02-1521-00	Gear & Pinion
11.	A26650-001	Gear & Output Shaft
12.	03-1408-21	Washer (2)
13.	02-1505-00	"O" Ring
*14.	A24184-001	Gear Case Assy. Kit
15.	03-1408-06	Washer (3)
16.	A26454-001	1st Gear & Pinion
17.	03-1408-19	Washer (2)
18.	02-1503-00	Grease Seal
19.	02-1504-00	Grease Seal
20.	03-1252-00	Screw (2)
21.	13-0617-04	Oil Slinger Ring
22.	03-1403-43	Motor Bolts

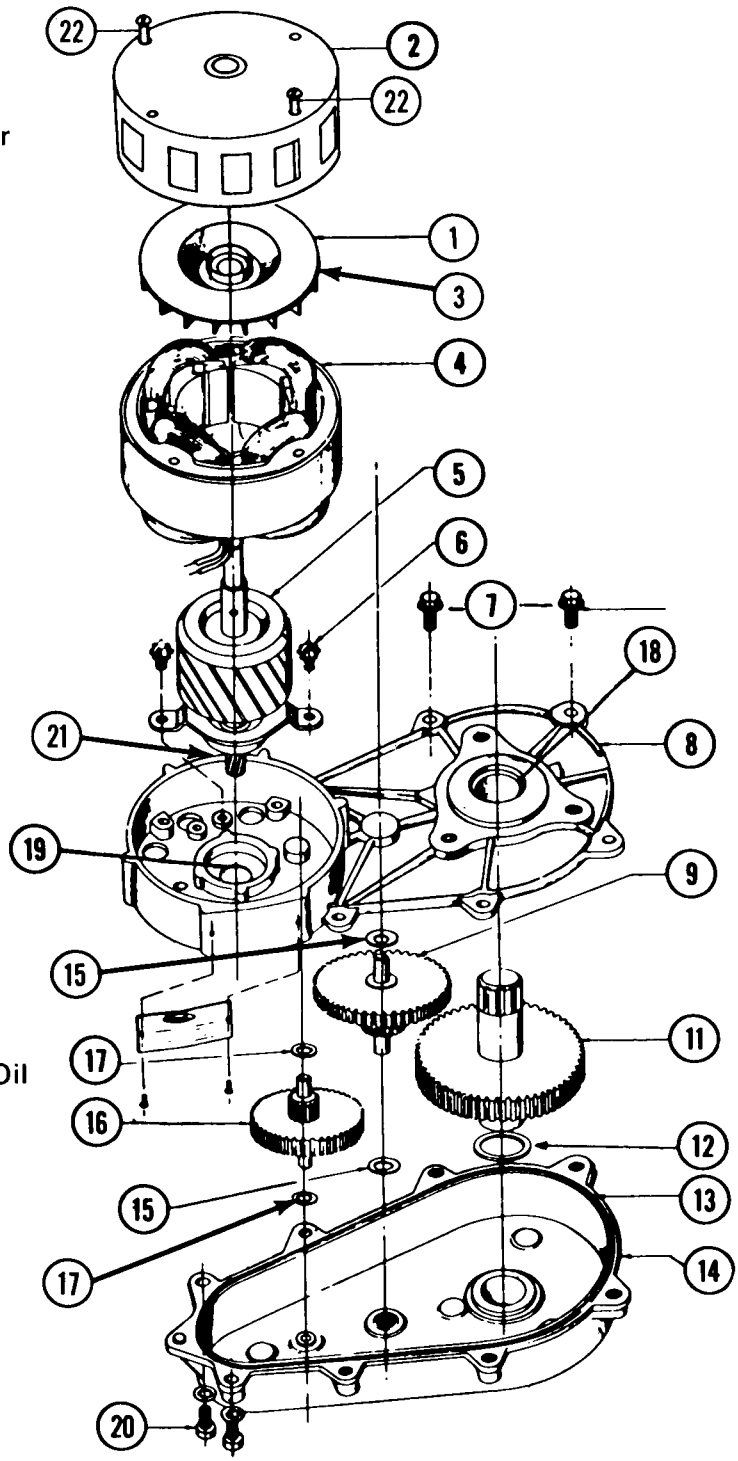

A25995-001 Gear Motor Assy. Complete

*Includes Items #8-13-15-17-18-19 (1) Can Oil

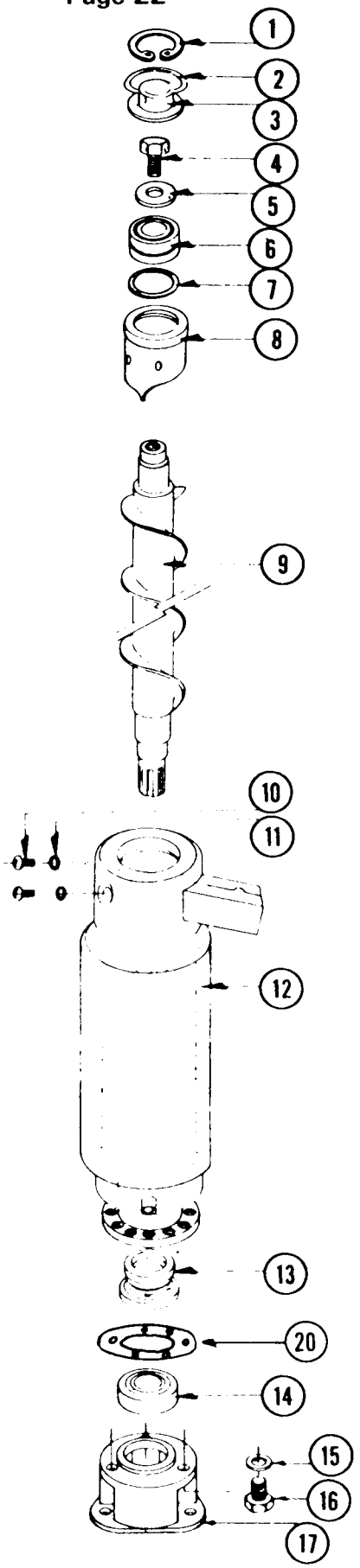

ITEM	PART NO.	DESCRIPTION
1.	03-1558-03	Retainer Ring
2.	A08162-000	Cap Hook
3.	A07701-000	Cap
4.	03-0758-00	Screw
5.	A07699-000	Washer
6.	02-1412-00	Top Bearing—Matched Set
7.	13-0617-16	"O" Ring
8.	A14678-000	Breaker with Bearing
9.	02-1538-00	Auger
10.	03-1403-46	Screw
11.	03-1417-07	Washer
12.	A26752-020	Evaporator Shell includes Suction Line, No internal parts.
13.	A18945-000	Water Seal
14.	02-0417-00	Bearing, Lower
15.	03-1410-04	Washer, (3 Req'd)
16.	03-1405-42	Cap Screw (3 Req'd)
17.	08-0595-01	Adapter-Amaloy
18.	15-0575-01	Spline Drive Coupling
19.	13-0709-01	Shaft Drip Shield — Rubber
20.	03-1505-00	Gasket

STORAGE BIN ASSEMBLY

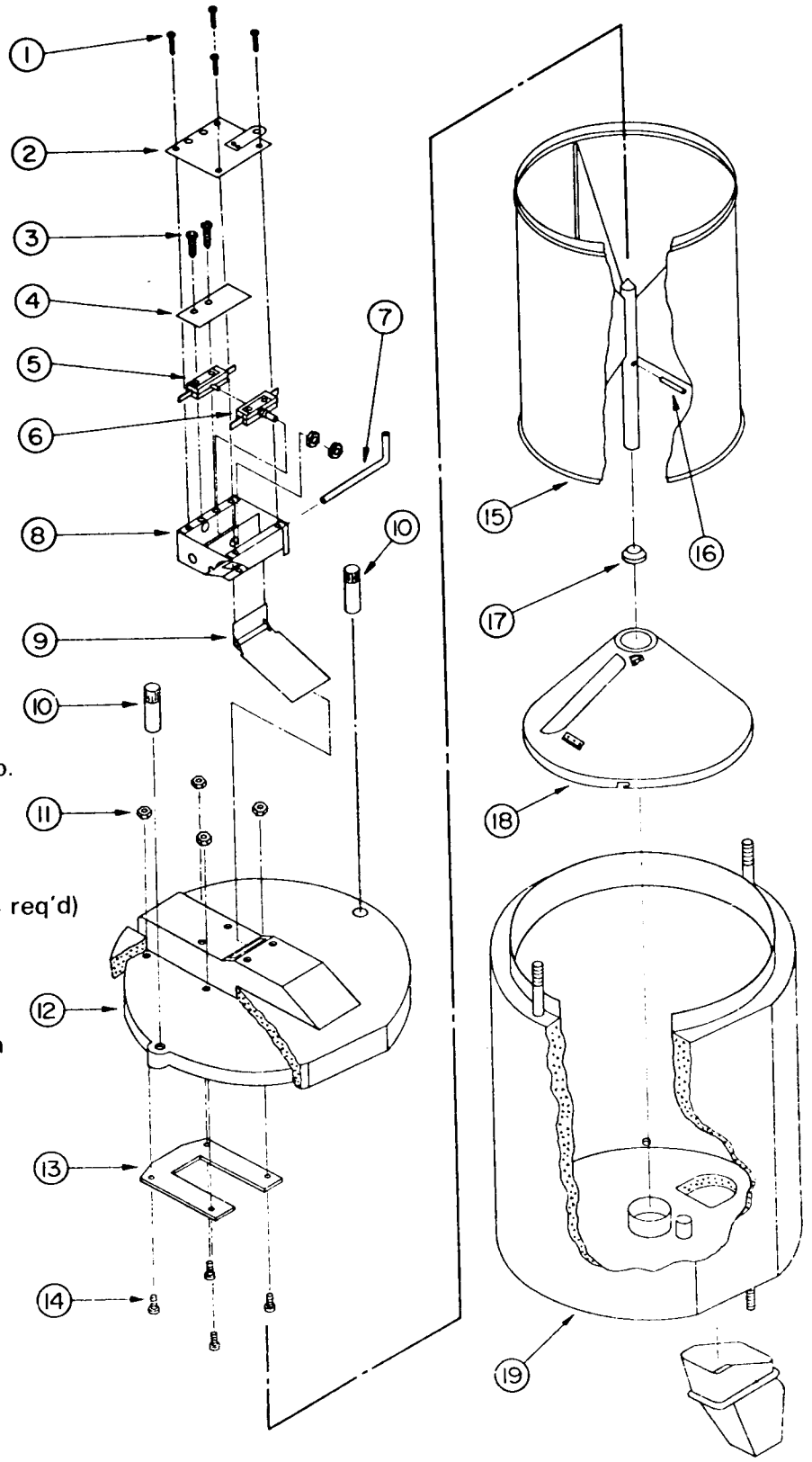

ITEM	PART NO.	DESCRIPTION
1.	03-1404-04	Screw (4 req'd)
2.	A21996-000	Cover Fab. Ass'y.
3.	03-1403-10	Screw (2 req'd)
4.	03-0886-00	Twin Nut
5.	12-1664-00	Reset Switch
6.	12-1018-02	Switch
7.	A21982-000	Pin
8.	A21992-000	Bin Switch Box
9.	A21995-000	Actuator Arm Fab.
10.	A21983-000	Nut (2 req'd)
11.	03-1406-04	Nut (4 req'd)
12.	A20486-000	Top-Foam Ass'y.
13.	A21987-000	Bridge Plate
14.	03-0255-02	Screw, Thumb (4 req'd)
15.	A19349-000	Inner Bin Fab. Ass'y.
16.	A23223-000	Pin-Inner Bin
17.	02-1976-00	Collar
18.	A19343-000	Inner Bin Bottom Fab. Ass'y.
19.	A21386-000	Bin Ass'y.

CONTROL BOX PARTS

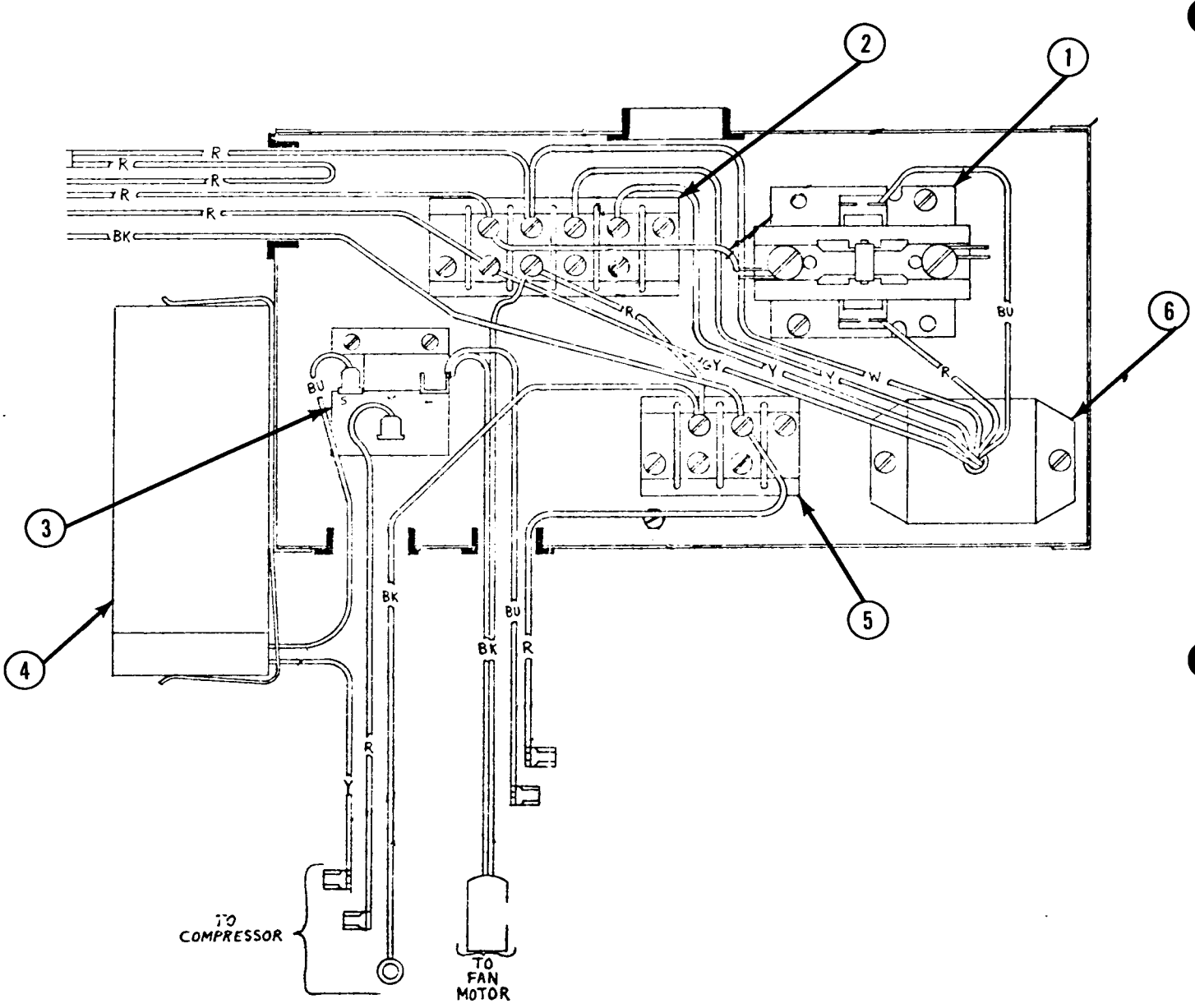

ITEM	PART NO.	DESCRIPTION	ITEM	PART NO.	DESCRIPTION
1.	12-2041-01	Contactor	4.	18-1901-33	Compressor Capacitor (start)
2.	12-0813-01	Terminal Board	5.	12-0813-04	Terminal Board
3.	18-2200-26	Compressor Relay	6.	A26213-001	Time Delay Relay

SERVICE ANALYSIS ICE MAKER SECTION FD5

SYMPTOM	POSSIBLE CAUSE	CORRECTION
Water Leaks.	Defective water seal.	Replace.
	Gravity feed line leaking.	Check hose clamps.
	Water level in reservoir too high.	Adjust water level to 1/4 inch below reservoir overflow, then raise reservoir until water comes out freezer spout, then lower 3/4 inch.
Excessive noise or chattering.	Mineral or scale deposit on auger and inner freezing chamber walls.	Clean per cleaning instructions with Scotsman Ice Machine Cleaner — for severe deposits remove auger and clean freezer parts manually.
	Low suction pressure.	Add gas to raise suction pressure.
		Adjust Water Regulator on Water Cooled Machines
	Intermittent Water Supply.	Check and clean water strainer. Check gravity feed line for air lock.
		Remove air lock.
	Water level in reservoir	See "Corrections" under "Symptom" water leaks.
	Motor compressor not solid on rubber mounts.	Repair or replace rubber mounts.
Gearmotor noise.	Low on oil.	Remove case cover to check for proper oil level. Top of gears should be covered. Use 600W oil.
Unit will not run.	Bin Reset Switch.	Push to reset - continue operation - replace bin full switch.
	Water Shortage.	Check water supply (Water Cooled Only)
	Blown fuse.	Replace fuse and check for cause of blown fuse.
	Loose electrical connection.	Check wiring.
	Inoperative master switch.	Replace switch.

SERVICE ANALYSIS ICE MAKER SECTION FD1

SYMPTOM	POSSIBLE CAUSE	CORRECTION
Compressor cycles intermittently.	High or low voltage.	Check for overloading.
	Dirty condenser.	Clean.
	Air circulation blocked.	Remove cause or move unit to correct.
	Inoperative condenser motor.	Replace.
	Non-condensable gases in system.	Check for leaks, evacuate and recharge.
Making wet ice.	Surrounding air temperature very high.	Correct or move unit.
	Water Shortage.	Check water supply (Water cooled only)
	Under or over-charge of refrigerant.	Recharge with the proper amount.
	Faulty compressor.	Replace or repair.
Low ice production.	Loss of refrigerant, under or over-charge of refrigerant.	Check and recharge with proper amount of refrigerant.
	Dirty or plugged condenser.	Clean condenser.
		Check water supply (water cooled only)
	Water level in water reservoir.	See "Corrections" under "Symptoms" water leaks.
	Partial restriction in capiallary tube or drier.	Moisture in system. Overcharge of oil in system. Remove charge and drier. Replace and recharge system.
	Corroded or stained worm. shaft due to water conditions.	Remove worm shaft and clean.
	Inlet water strainer partially plugged.	Remove screen and clean.
Machine runs but makes no ice.	Loss or under-charge of refrigerant.	Check for leaks and recharge. Plugged strainer or supply line.
	Water not entering freezing chamber.	Check and clean. Air lock in gravity feed line. Check and remove air lock.
	Moisture in system.	Check and remove charge and drier. Replace and recharge.
	Water seal leaking.	Replace seal.
	Water turned off while unit was operating.	Inlet water line froze shut. Unit must be turned off and defrosted.

SERVICE ANALYSIS DISPENSING MECHANISM FD5

SYMPTOM	POSSIBLE CAUSE	CORRECTION
Will not dispense.	Power off.	Check fuses and electrical supply to machine. Check symptoms - bin drive motor runs, bin drive motor stopped.
Bin drive motor runs (will not dispense).	Plugged spout.	Operator held full glass under spout forcing ice to jam, clear spout and instruct personnel using machine.
	Vend switch adjustment.	Vend switch must be positioned so it will close only when glass lever is completely depressed to prevent vending when ice chute is only partially open.
	Gear Motor.	Check if output shaft turns if not, replace gearmotor.
	Inner bin does not rotate.	Check keyed coupling to gear motor. Key is soft soldered in place and may be replaced.
Bin drive motor stopped.	Drive motor burned out.	Replace.
	Inner bin jammed.	Check assembly of inner bin bottom, may NOT be down and locked in place.
	Vend switch.	Faulty - replace.
		Out of adjustment - readjust.
Will not portion ice, runs, continous.	Ice portion control timing module.	If components fail to open machine will vend continuously when glass lever is depressed. The timing module and ice portion control stop the vend cycle by energizing the relay which opens the circuit to the bin drive motor.
		It is recommended to service these two components by substitution.

FD5

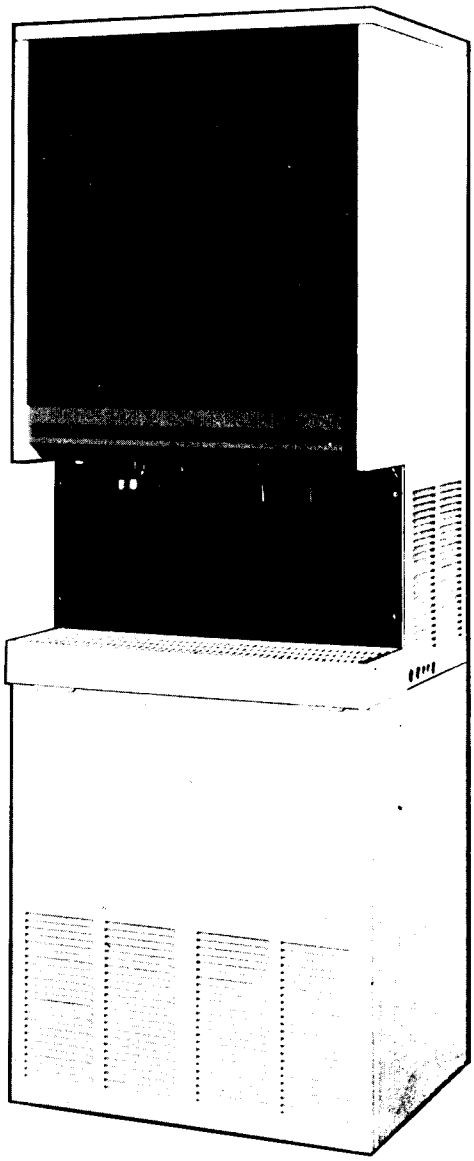

ACCESSORY ITEM

***DMS 20-D**

OR

DMS 20-S

MACHINE STANDS

DMS 20-E is Enamel Finish.
DMS 20-S is Stainless Steel Finish

***Legs not included with stands. Order separately from Sales Department.**

BIN TOP ADJUSTMENTS

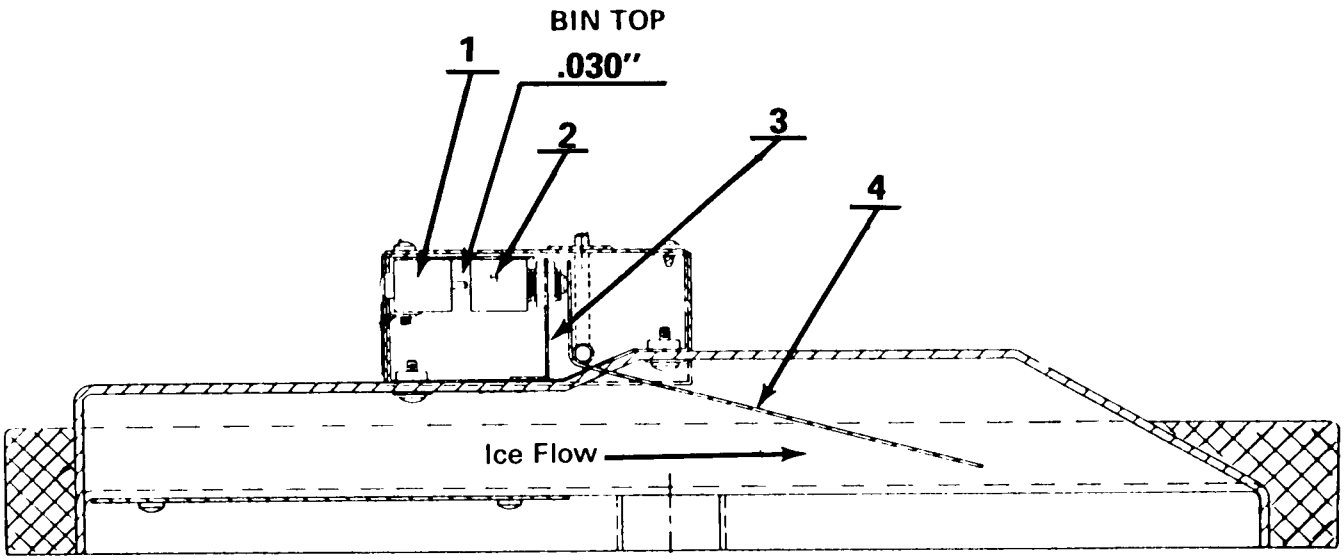

Drawing No. 2

The gap between the tip of the plunger of the safety switch and the back of the bin full switch (items 1 & 2 Drawing) should be no greater than .030 inch. If this gap exceeds .030" two types of problems can occur.

First, in the instance of a bin full switch failure it is concievable for ice to back up and jam the freezing section before the safety switch trips.

Second, the position of the plunger on the bin full switch is critical in relation to the actuator arm. If the plunger is too forward (a result of a gap larger than .030") the actuator arm would tend to push up on the plunger rather than in. This could damage the switch in such a way that it will not function or the drag alone may be enough to prevent operation.

The gap between the switches can be adjusted by two nuts holding the switch in place. The .030 inch specification is maximum - a smaller gap is acceptable.

In some cases you may find that the mounting plate (item 3 Drawing) for the bin full switch was spot welded so that it is not square with the sides. This can cause a malfunction of the switch the same as an incorrect gap. Where this occurs a new bin switch box part No. A21992-000 should be ordered and installed.

TABLE OF CONTENTS

Table of Contents 1

General Description 2

Specifications
Photo, Capacity, Outline Dimensions 3-4

Specifications - Mechanical 5

Installation Instructions 6-7

Installation Limitation 7-8

Cleaning and Maintenance Instructions 9

Bin Control System 10

Ice Dispenser Control System 11

Wiring Diagram Air Cooled 12

Wiring Diagram Water Cooled 13

Parts List
External Cabinet Parts 14
Internal Parts (General) 15-16
Bin Drive & Dispensing Parts 17
Bin Top 18

Control Box - Air Cooled 19

Control Box - Water Cooled 20

Reservoir Assy 21

Gear Motor Assy 22

Freezer Assy 23

Storage Bin Assy 24

Service Analysis 26

FD6B Mounted on Stand 27

SERVICE DEPARTMENT
SCOTSMAN®
ICE SYSTEMS
QUEEN PRODUCTS DIVISION
KING-SEELEY THERMOS CO
ALBERT LEA, MINNESOTA 56007

THIS PAGE
INTENTIONALLY
LEFT BLANK

GENERAL DESCRIPTION

This unit is a counter top or wall suspended type of dispenser which contains a complete flaked ice dispenser, storage bin, and automatic dispensing mechanism.

The primary purpose of this machine is to fill glasses with water and ice or just ice by actuating a control arm with the glass.

Variable portion or continuous flow of ice can be obtained by rotating the ice control switch. By pushing a water switch to "On", water will be dispensed with the ice as long as the glass actuator arm is depressed. Ice dispensing will stop automatically when the preselected portion of ice has been dispensed.

The drain grate is vinyl-coated steel wire allowing spilled ice to pass through freely.

The cabinet is stainless steel or steel with baked-on enamel. Enamel models have a wood grain upper front panel, orange control panel, stainless steel splash panel and remaining cabinet enclosure in a textured color.

The complete machine has been designed with sanitation and ease of cleaning emphasized. The storage bin is sealed, and the ice spout is automatically closed when ice is not being dispensed. The dispensing mechanism, storage bin, and parts requiring cleaning are accessible without tools.

All components are accessible through the top or front panels. On air cooled machines, there is a special removable section of the condenser shroud to facilitate cleaning of condenser.

The bin control is a mechanical arm controlling a switch. This is backed up by a manual re-set switch to prevent damage by failure of the bin control.

SCOTSMAN

FD-6 SERIES ICEMAKER-DISPENSERS

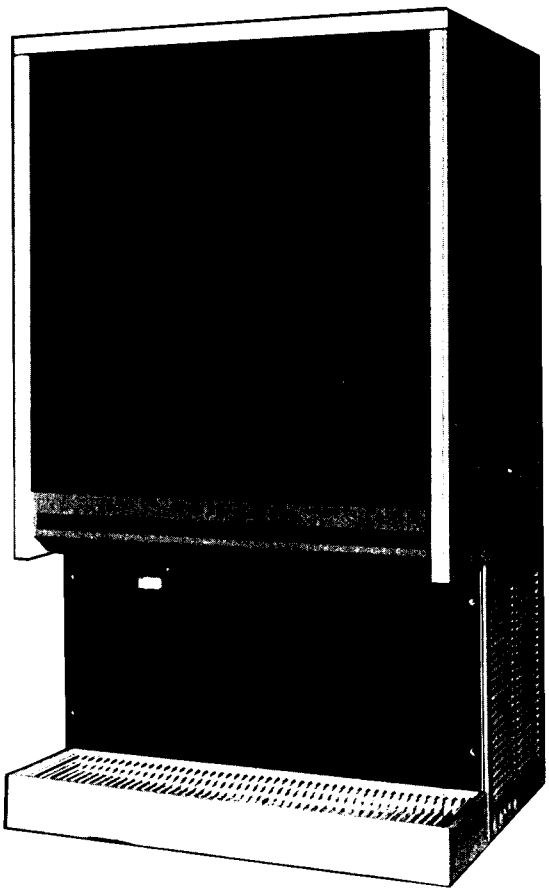

ice making capacity

Daily Ice Capacity is directly related to condenser air inlet temperature, water temperature and age of machine.

NOTE: To keep your SCOTSMAN DISPENSER preforming at it's maximum capacity it is necessary to perform periodic maintenance as outlined on page 9 of this manual.

SPECIFICATIONS

PERFORMANCE DATA:

Ice Storage – Approximately 35 lbs.
Ice Portion – Portion is variable from approx. 1 to 5 oz. per vend or may be positioned to continuous vend.
Vend Rate – Approximately 2.0 oz./sec.
Water Control – Water may be dispensed with all ice portion control settings.

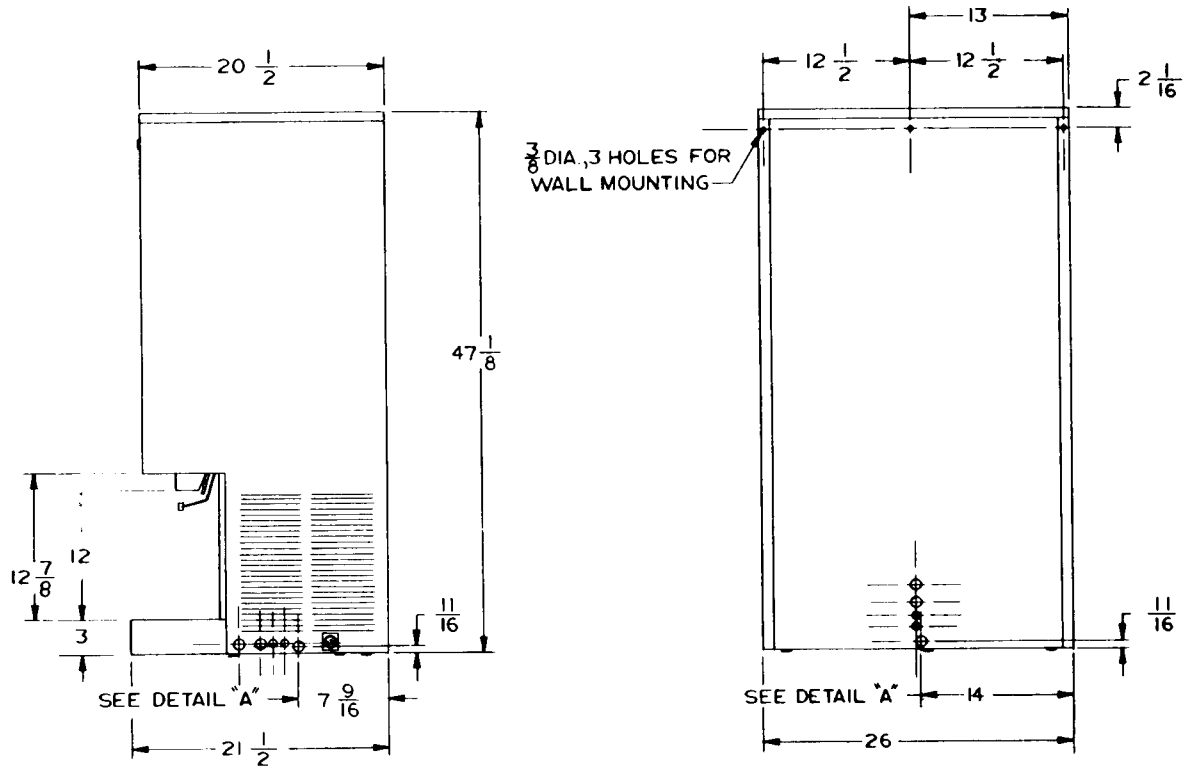

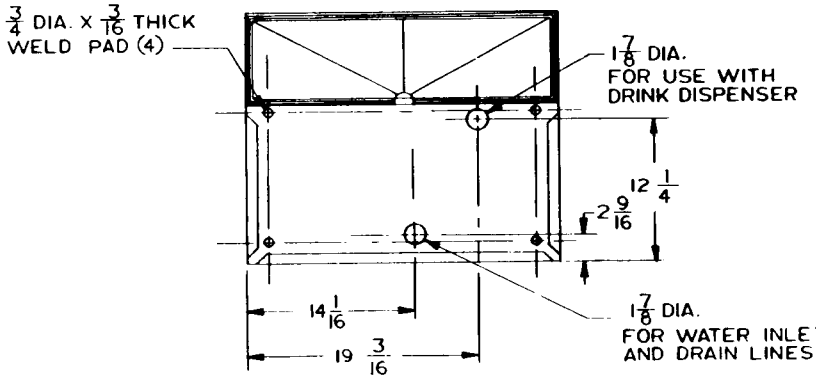

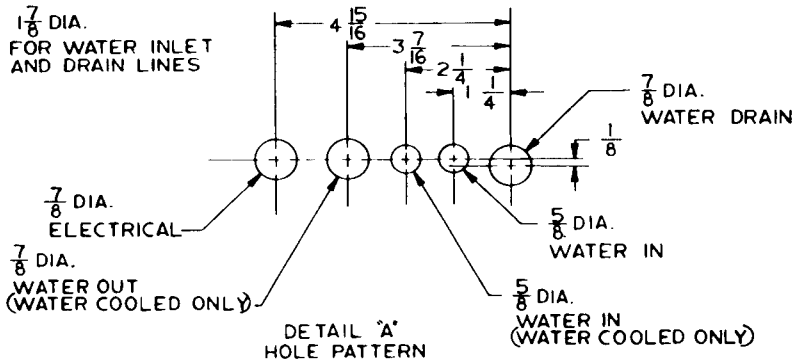

SPECIFICATIONS

Electrical

Power Supply ..... 115 + 10% Volts 60 Hertz 1 Phase
Minimum Wire Size ..... No. 12 AWG
Maximum Fuse Size ..... 20 Amp Time Delay

Plumbing

Potable Water Inlet ..... 1/4" SAE Male Flare Fitting
Potable Water Outlet ..... Plastic Tube Accepts 5/8" O.D. Tube

Water Limits

100° F. Maximum Temperature ..... Pressure 125 PSIG Maximum
40° F. Minimum Temperature ..... Pressure 20 PSIG Minimum

Temperature Limits

100° F. Maximum Ambient Air ..... 50° F. Minimum

Compressor

Copelaweld RSN4-0050-1AA
115V 60Cy
11.2 FLA
51.0 LRA
1/2 H.P.

Gear Motor (Freezer Drive)

Queen Products A-22750-021
115V 60Cy
4.8FLA
1/4 H.P.

Gear Motor (Ice Dispensing)

Merkle-Korff S-418
115V 60Cy
3.7 FLA
200 Watt

Refrigerant Charge

Frost Line ..... 6-8 Inches From Compressor
Approximate Charge ..... 23 Oz. R12 Air Cooled
23 Oz. R12 Water Cooled

Normal Operating Pressures

Air Cooled ..... 140 PSIG High Side
14.5 PSIG Low Side

Water Cooled ..... 135 PSIG High Side
14.5 PSIG Low Side

WARNING: THIS MACHINE MUST NOT BE ALLOWED TO OPERATE WHEN THE WATER SUPPLY IS SHUT OFF, OR AT BELOW RECOMMENDED WATER PRESSURE. DISCONNECT UNIT ELECTRICALLY WHEN WATER SUPPLY IS OFF, OR WHEN WATER PRESSURE IS BELOW RECOMMENDED OPERATING PRESSURE.

Condenser Water Inlet ..... 3/8" N.P.T. at water reg. valve
Condenser Water Outlet ..... 3/8" SAE Flare Fitting

INSTALLATION INSTRUCTIONS

The following installation instructions pages 4 through 10 were written for use by an autorized tradesman only, not the user or customer. We suggest you call your local authorized Scotsman Service Agency for hook-up, start-up, and check out. He's listed under "Ice Making Machinery & Equipment" in your telephone book, yellow pages.

1. Machine should have both sides open to free air for air movement in and out of the machine (air cooled models). Avoid locations with high temperatures and dirty air, such as found next to grills or in kitchens.

2. Machine may be placed on a solid countertop, on other equipment manufactured by Scotsman or fastened to a wall. When wall mounting is desired, use the three mounting holes provided across the reinforcement strip on upper back of cabinet. Follow the directions provided with the wall mount kits.

3. Remove cabinet top (push up on front edge), remove upper front panel (pull out along top edge) and lower front splash panel (remove 4 screws.)

4. Electrical connections and plumbing - connections may enter cabinet through the sides, back or base, whichever is convenient.

   Electrical - Terminate at control box - See wiring diagram for wire and fuse size - Voltage must be within - 10% of nameplate rating during start-up and normal Running conditions. Wiring must conform to National and Local Codes.

   Plumbing (water in) - Inlet fitting is 1/4" SAE male and has fasteners provided on fitting to attach to cabinet sides. Use 1/4" O.D. copper tube with separate hand shut-off valve. If local conditions warrant, install water regulator and water* strainer between machine and valve. Water cooled models have a 3/8" N.P.T. Fitting at the water regulating valve for condenser water inlet.

   Plumbing (water out) - 5/8" O.D. drain tube must be used and connected to plastic tube inside cabinet. Drain must run to an open drain such as a floor drain or sink. Allow ample slope to assure proper drainage of machine. Water Cooled models have a 3/8" SAE flare fitting at the condenser water outlet.

5. Remove sink and grill from packaging and mount in place — fasteners are provided with sink. Place drain tube on sink drain fitting and secure with clamp. Clamp is shipped in place on drain tube.

6. Replace panels, turn on water and electrical supply.

7. Thirty minutes after the unit has been started ice can be dispensed.

* Water regulator, strainer are available as accessory items.

INSTALLATION SCHEMATIC

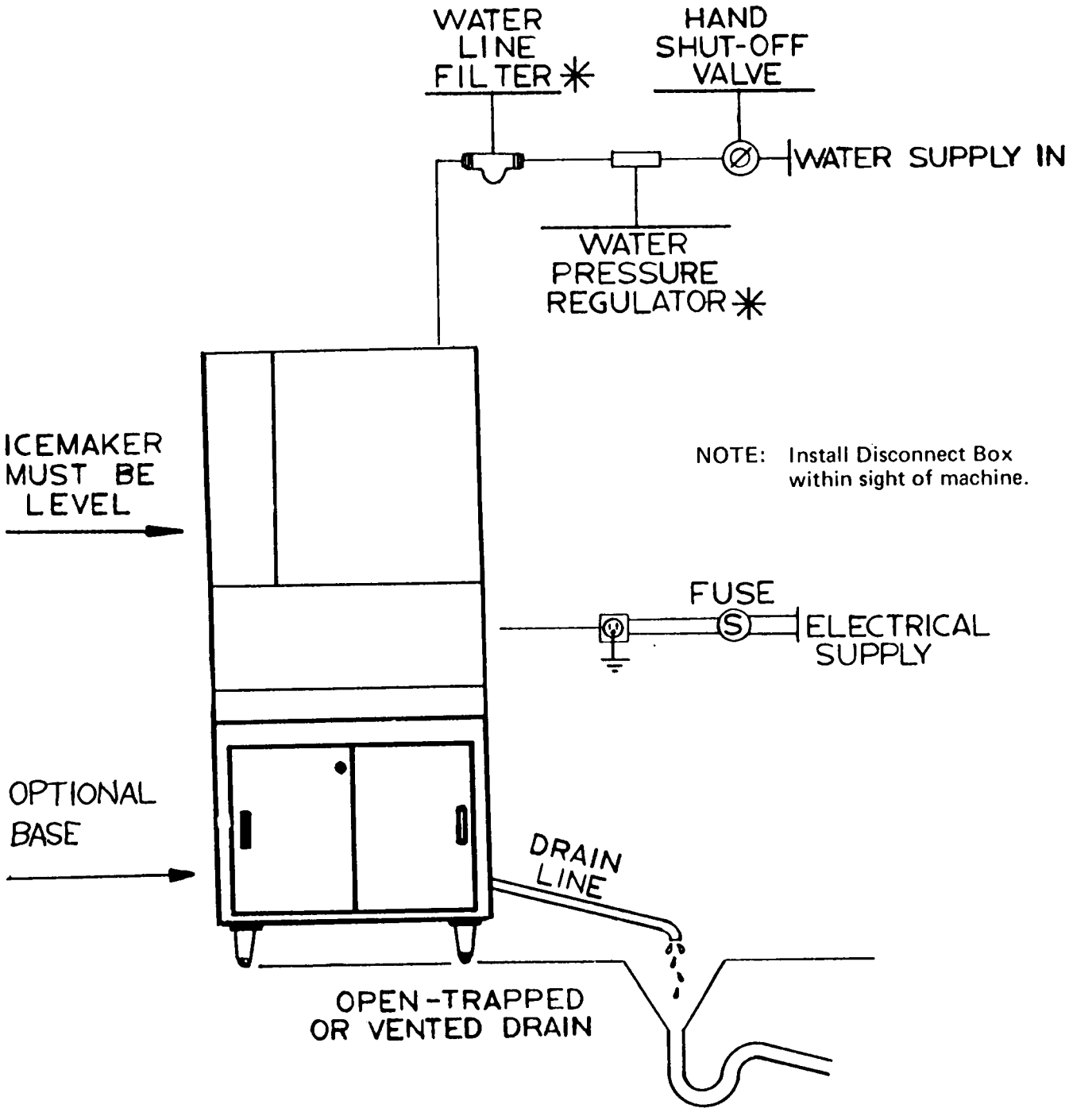

* REGULATOR AND FILTER ARE ACCESSORY ITEMS TO BE INSTALLED AS CONDITIONS WARRANT

INSTALLATION LIMITATIONS

ELECTRICAL

1. Scotsman, like most manufacturers, purchases electrical motors that are rated to operate within 10% variance above or below nameplate ratings.

2. Improper voltages applied to Scotsman equipment can cause premature failures and burnouts. Failures of this type are not considered as factory fault or defect.

AMBIENT

WARNING — This machine is not designed for outdoor installations. This machine will not operate when air temperatures are below 50° F. or above 100° F.

2. This unit was not fabricated nor intended to be installed outdoors.

WATER

3. Scotsman Ice Systems require 20 pounds flowing water pressure to operate satisfactorily. Pressures lower than 20 pounds or interruptions in the water supply can cause serious mechanical damage to this product.

   This machine will not operate when water supply temperatures are below 40° F. or above 100° F.

CLEANING INSTRUCTIONS — FD6

THE FOLLOWING MAINTENANCE SHOULD BE SCHEDULED THREE TIMES PER YEAR ON SCOTSMAN DISPENSERS. CALL YOUR AUTHORIZED SCOTSMAN SERVICE DEPARTMENT.

1. Check and clean water strainers and float valve. Depress float valve to insure full stream of water.
2. Check water level and machine level, keep water level below overflow, but as high as possible and still not run out of spout opening with machine off. Water droplets come out of spout with ice at all times. Adjust as required.
3. Clean reservoir and interior of freezer using SCOTSMAN Ice Machine Cleaner.
   A. If machine has been cleaned regularly and no problems such as dry ice or chatter are noticed, clean as per the following instructions:
   a. Set selector switch to continuous ice and vend until bin is empty.
   b. Disconnect Power
   c. Remove inner bin and bin bottom, wash and sanitize these parts and inside of bin.
   d. Turn Off water supply of block float. Drain reservoir by removing the overflow tube in the reservoir. After draining, replace the overflow tube.
   e. Turn On power and pour cleaning fluid into reservoir. (Use 4 oz, of Scotsman cleaner and 1 gal. of hot water). Do not fill above overflow tube. Do not allow unit to operate with less than 1" of solution in reservoir.
   f. While waiting for step "e" to complete, wash and sanitize sink, drain grate, glass filler lever and surrounding area in accordance with local Health Department regulations.
   g. When cleaning fluid has been depleted, turn on water supply and let unit run for at least 15 minutes to flush out any cleaning fluid. Check ice for acid taste - run unit until ice tastes sweet.
   h. Disconnect power and melt ice in storage bin with hot water to remove ice and rinse bin parts.
   i. Re-assemble all parts - unit is ready for normal operation.

NOTE: Cleaning requirements vary according to local water conditions. Visual inspection of the auger before and after cleaning will indicate best procedure to be followed in local areas.

4. Check high and low side pressure. On air-cooled models head pressures range between 130 and 145 PSI. Suction pressure should be above 12 PSI and will range up to 15 PSI depending upon water and ambient temperatures.
5. Check gearmotor operation. Normal running temperatures are in the area of 160° Farenheit, which is hot to the touch.
6. Check top bearing of freezing tube. Remove retainer ring around edge of stamped brass cap. If moisture is around bearing, wipe up and remove grease. Add new grease. Use Beacon No. 325. Replace cap and retainer ring.
7. Clean air cooled condenser. Inform customer to clean frequently. Always shut off machine when cleaning.
8. Check for refrigerant leaks and proper frost line. Should frost out of accumulator at least one-half way to compressor, and in some areas back to service valve.
9. Check for water leaks. Tighten drain line connections. Run water down bin drain line to make sure it is open.

BIN CONTROL SYSTEM

There are two switches mounted in the enclosure on the bin top. (4-6) One switch is actuated by the lever which is moved by the incoming ice—this switch has a large differential. (4)

In the event this switch fails to stop the ice maker, then the incoming ice forces the lever (2) which in turn pushes the bin switch back into the manual re-set switch.(6) The icemaker will not start until this switch is re-set.

Continual tripping of the re-set switch will result if the bin full switch is defective. If nuisance tripping of this switch occurs, the bin full switch may be moved away from the re-set switch by use of its mounting nuts. Major adjustment can be made by bending the lever to increase or decrease its angle.

To further control the compressor and to avoid the freezing and stoppage of the auger in the freezer, a control is incorporated on the gear motor drive for the freezer.

The bin controls do not energize the compressor, only the gear motor. In turn, the gear motor operates the compressor.

A speed sensing switch designed internally in the motor of the gear unit will stop the compressor when the RPM of the motor is reduced or stalled.

Should the auger begin to freeze, the speed of the gear motor is reduced due to excessive load. At reduced RPM it opens the circuit to the compressor and thereby stopping the freezing. As the gear unit, only, continues to run, it will clear the auger; and when the motor speed increases, the compressor is turned on.

Any freeze-ups are thereby automatically cleared by the unit.

If the water should be shut off when the unit is running, the inlet water line will freeze shut. The control mentioned above will have no control over such a situation.

BIN TOP PARTS

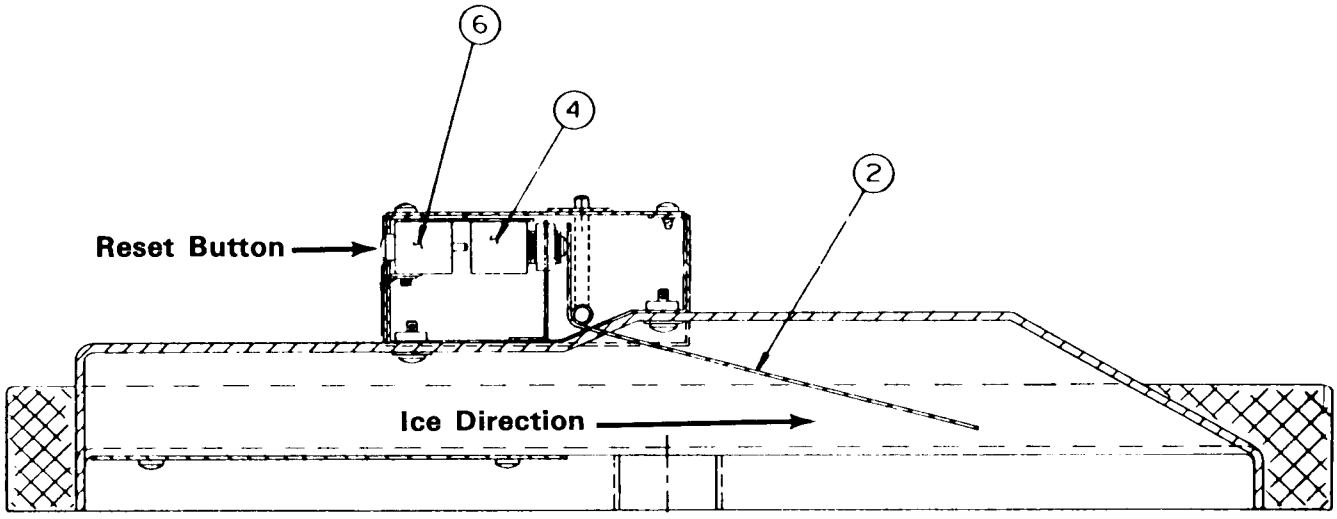

ICE DISPENSER CONTROL SYSTEM

Depressing the glass filler opens the spout and closes the vend switch. The vend switch closes the circuit to the water switch and to the water solenoid valve, if water switch is positioned to "with water". Also, the vend switch closes a circuit to the ice portion control and its timing module located in the control box. If ice control is positioned to continuous, then ice will be dispensed as long as the glass lever is depressed. If ice control is in a portion position, then only that quantity of ice will be dispensed until the glass lever is actuated another time. The portion control and timing module regulate the time period the bin drive motor is engaged. When this time period has lapsed then the normal closed relay is energized, opening the circuit to the drive motor and stopping the dispensing action. The vend switch mounting position is adjustable and must be positioned so glass lever is fully depressed before closing vend switch. This is to insure the ice spout is fully opened.

VENT SWITCH ADJUSTMENT

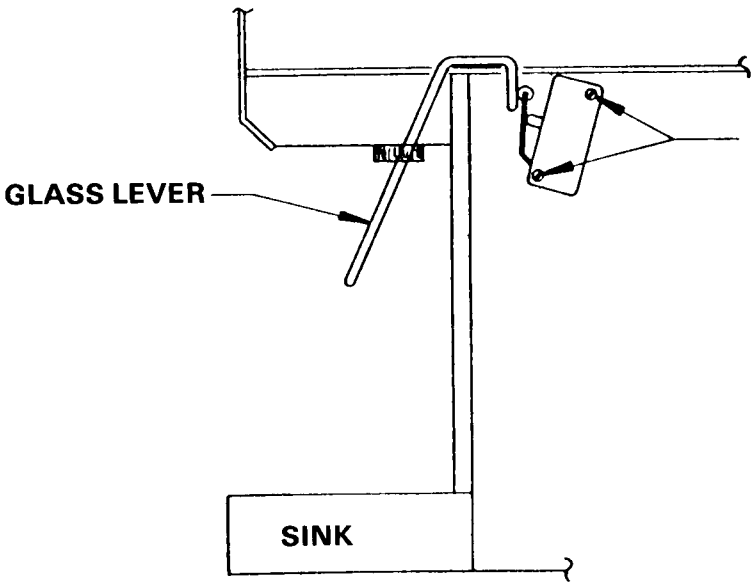

PART NUMBER 12-1642-00
LOOSEN THESE TWO SCREWS AND ROTATE SWITCH ABOUT LOWER SCREWS. ADJUST SO GLASS LEVER IS FULLY DEPRESSED WHEN SWITCH CLOSES.

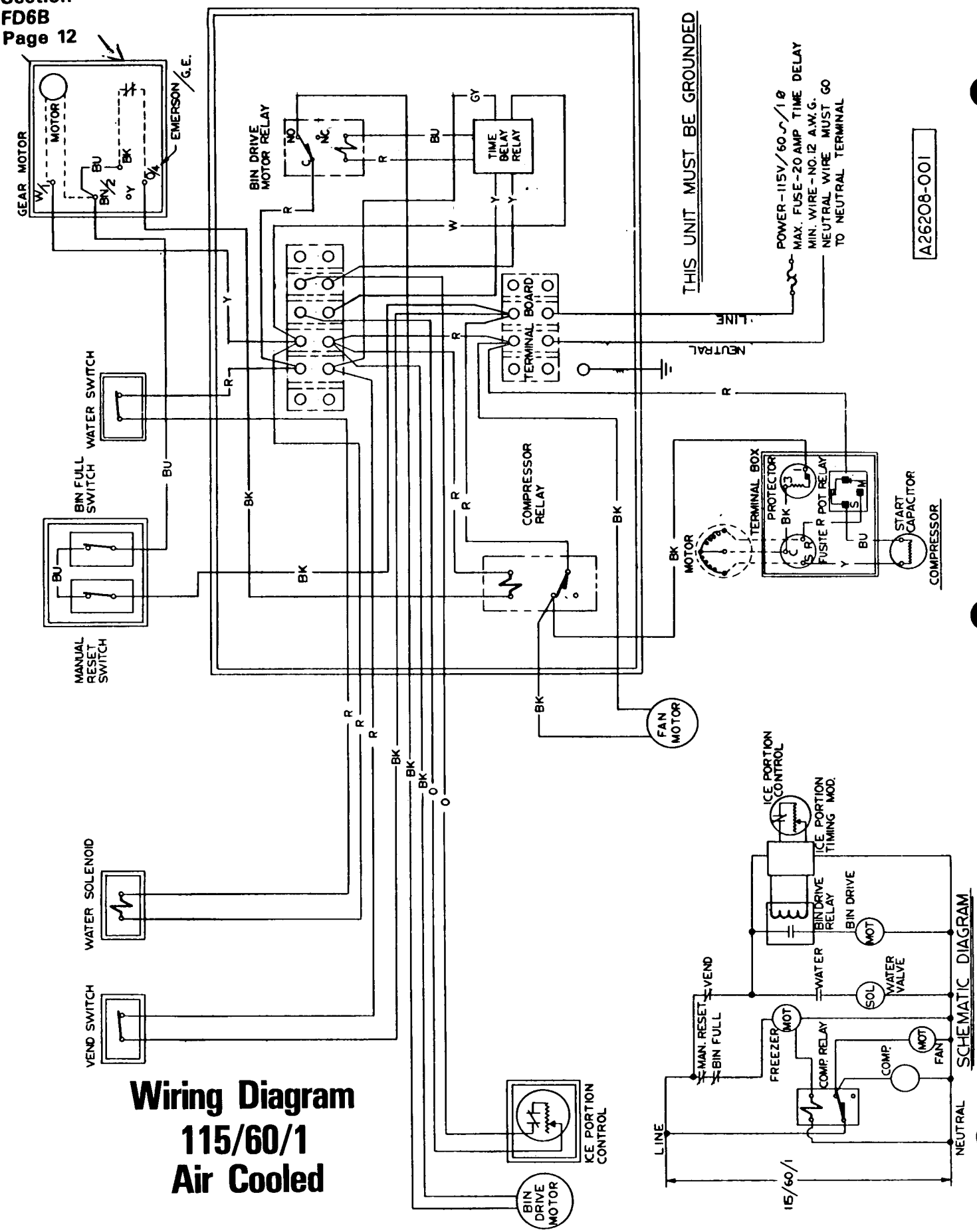

Wiring Diagram
115/60/1
Air Cooled

Wiring Diagram
115/60/1
Water Cooled

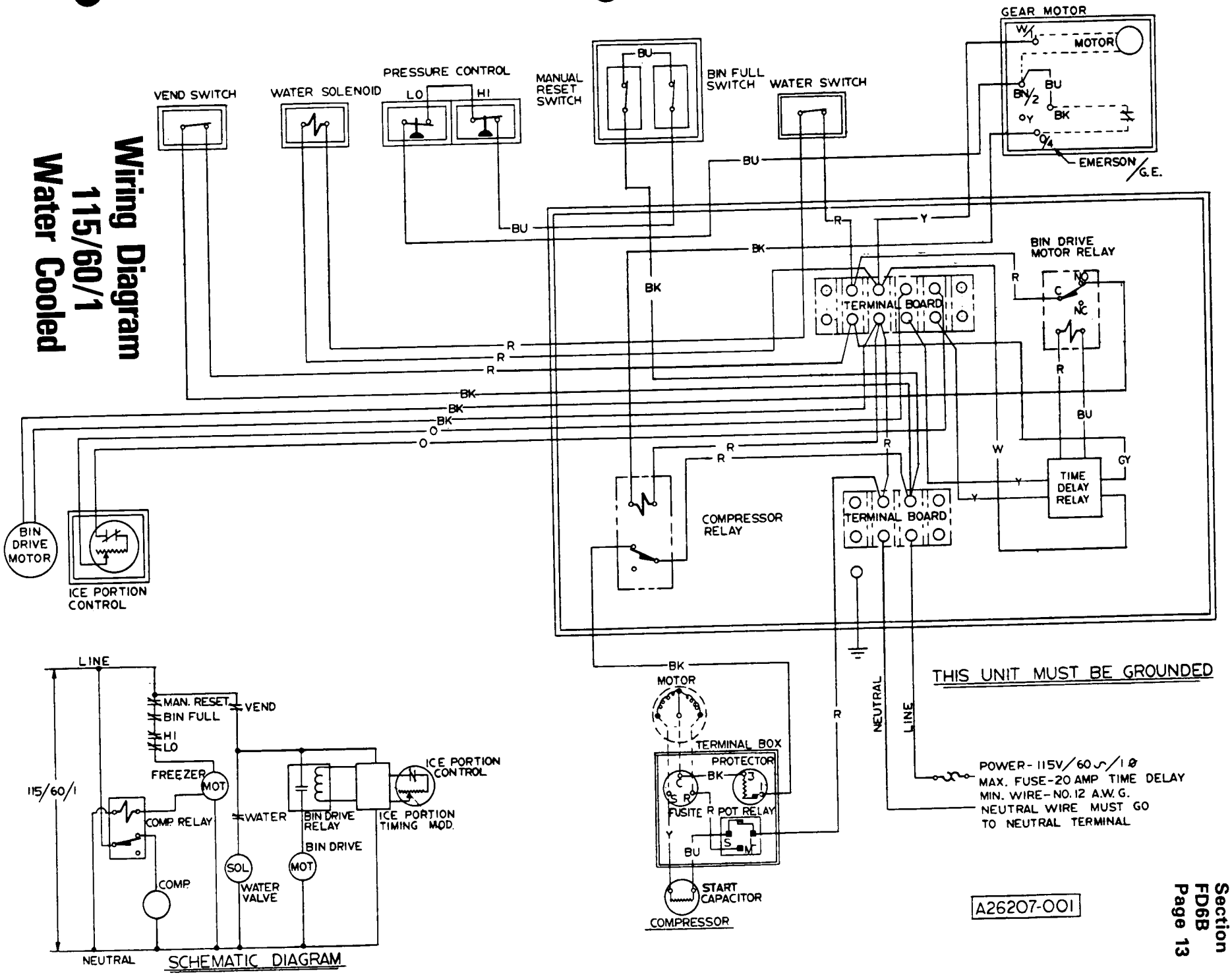

A26207-001

EXTERNAL CABINET PARTS

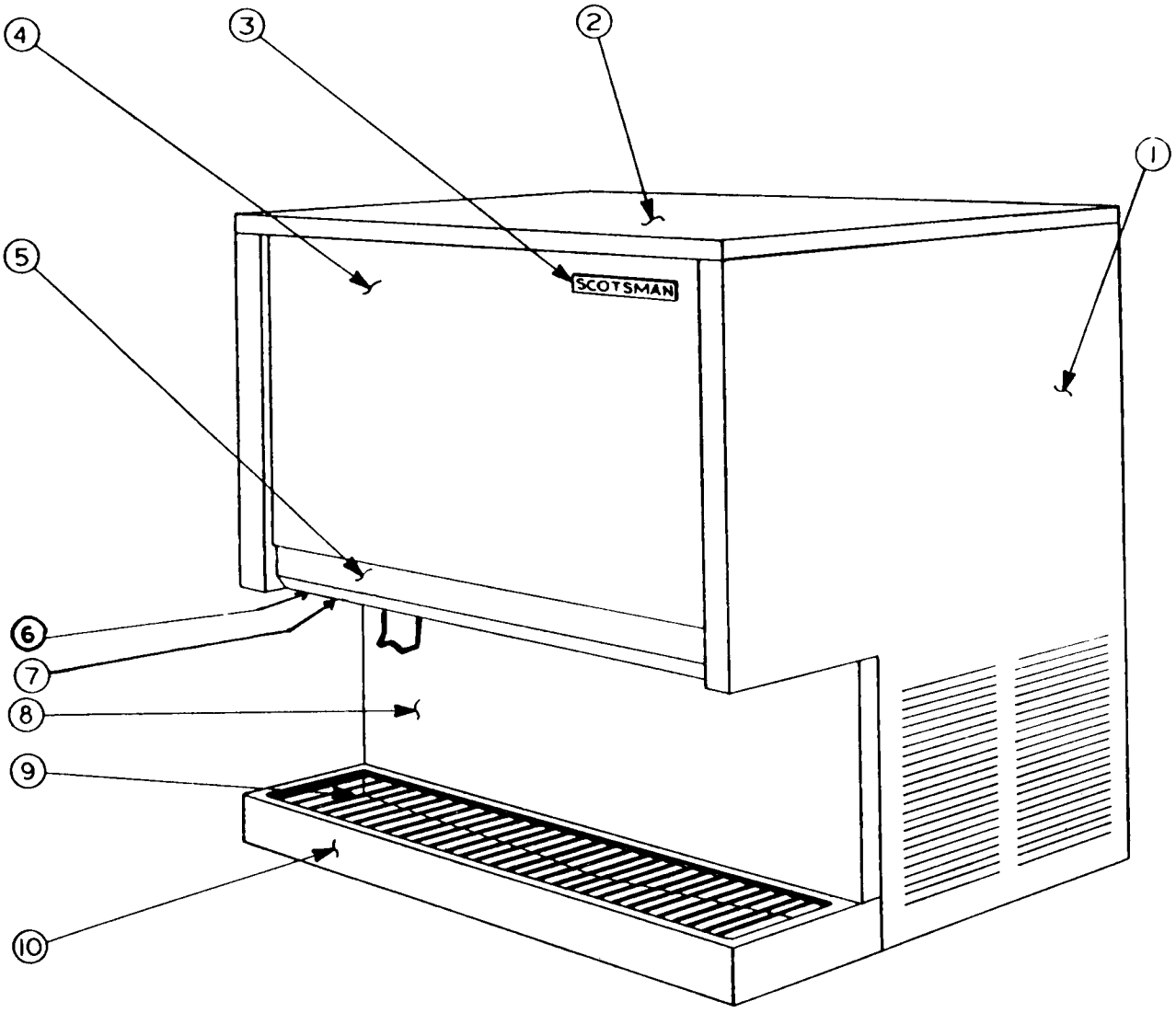

ITEM NO.	PART NO.	DESCRIPTION
1.	A23431-001	Cabinet Painted
	A23431-002	Cabinet SS
2.	A20192-000	Top Panel Painted
	A20192-001	Top Panel SS
3.	15-0156-00	Emblem Scotsman
	03-0271-00	Speed Nut
	A23443-001	Front Panel Wood Grain
	A23443-002	Front Panel SS
5.	A24282-001	Control Panel Painted
	A24282-002	Control Panel SS
6.	15-0561-00	Decal Portion Control
	12-1557-00	Portion Control
	02-1810-00	Knob Portion Control
7.	12-1377-01	Switch Water
8.	A19339-000	Splash Panel
	03-1404-09	Screws Panel
9.	02-1858-00	Grill
10.	A23212-000	Sink

PANEL FASTENERS

15-0411-00	Strike
03-1406-04	Nut
02-0836-00	Catch

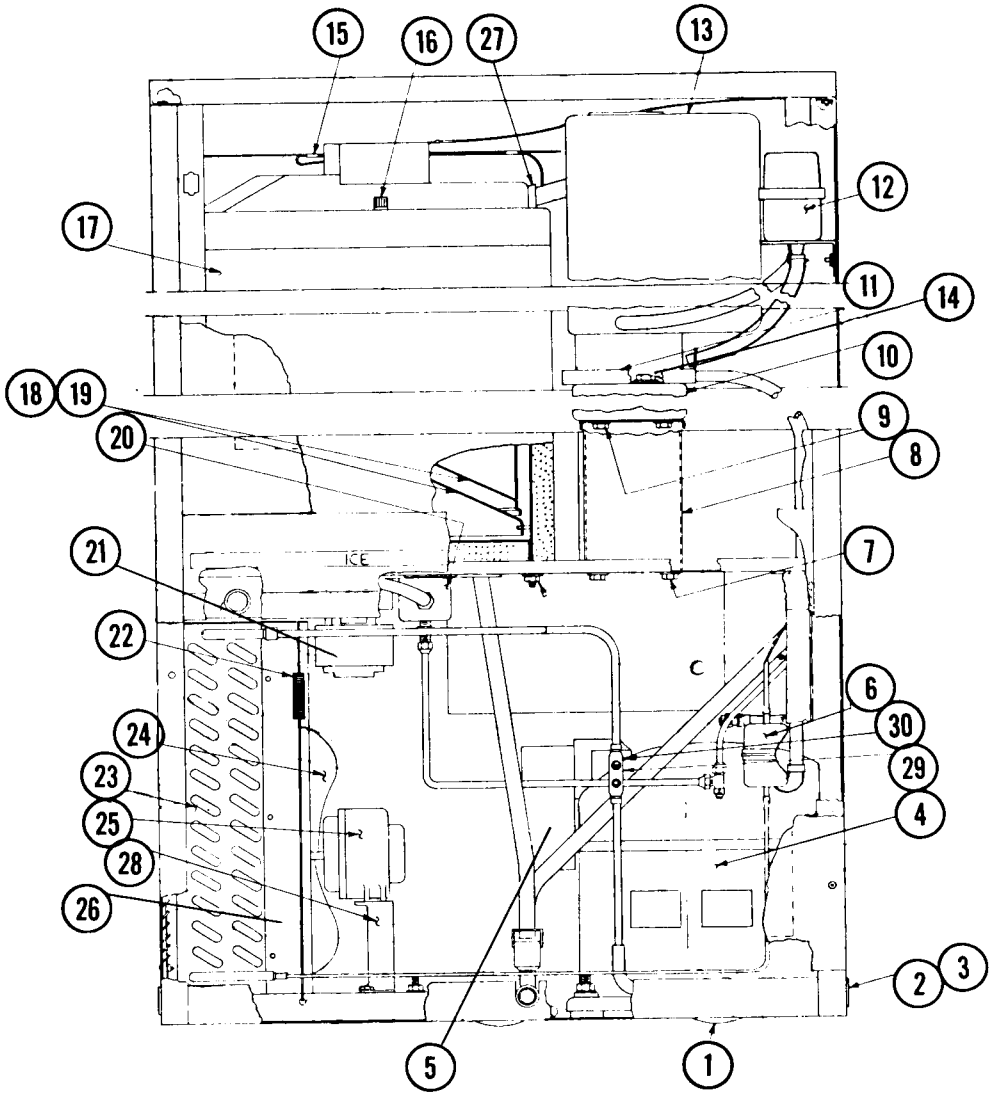

FD6B AIR COOLED

Item No.	Part No.	Description
1.	A22349-000	Plug Button
2.		Plug Button (Small)
3.		Plug Button (Large)
4.	18-4600-01	Compressor
5.	18-2200-25	Overload
	18-2200-26	Relay
	18-1901-33	Capacitor
6.	02-0544-01	Drier
7.	03-1405-03	Screw
	03-1417-09	Washer
8.	A23497-001	Motor Support
9.	03-1405-17	Screw
	03-1417-12	Lock Washer
10.	See Break Down	Gear Motor
11.	A24156-001	Drip Pan
12.	See Break Down	Reservoir Assy
13.	See Break Down	Freezer Assy
14.	03-1420-03	Screw
	03-1408-03	Washer
15.	03-1230-00	Tin Clip
16.	A21983-000	Nut
17.	A23250-001	Bin Assy
18.	A23247-001	Inner Bin
19.	A19343-000	Inner Bin Bottom
20.	12-1646-01	Solenoid Valve
21.	12-1561-01	Bin Drive Motor
22.	02-1827-00	Spring
23.	18-3304-01	Condenser
24.	18-0137-02	Fan Blade
25.	12-1576-01	Fan Motor
26.	A24082-001	Condenser Shoud
27.	A24876-001	Spout Extension
28.	18-0422-00	Motor Bracket
29.	16-0560-00	Valve Core
	16-0563-00	Brass Cap
30.	16-0673-18	Process Header.

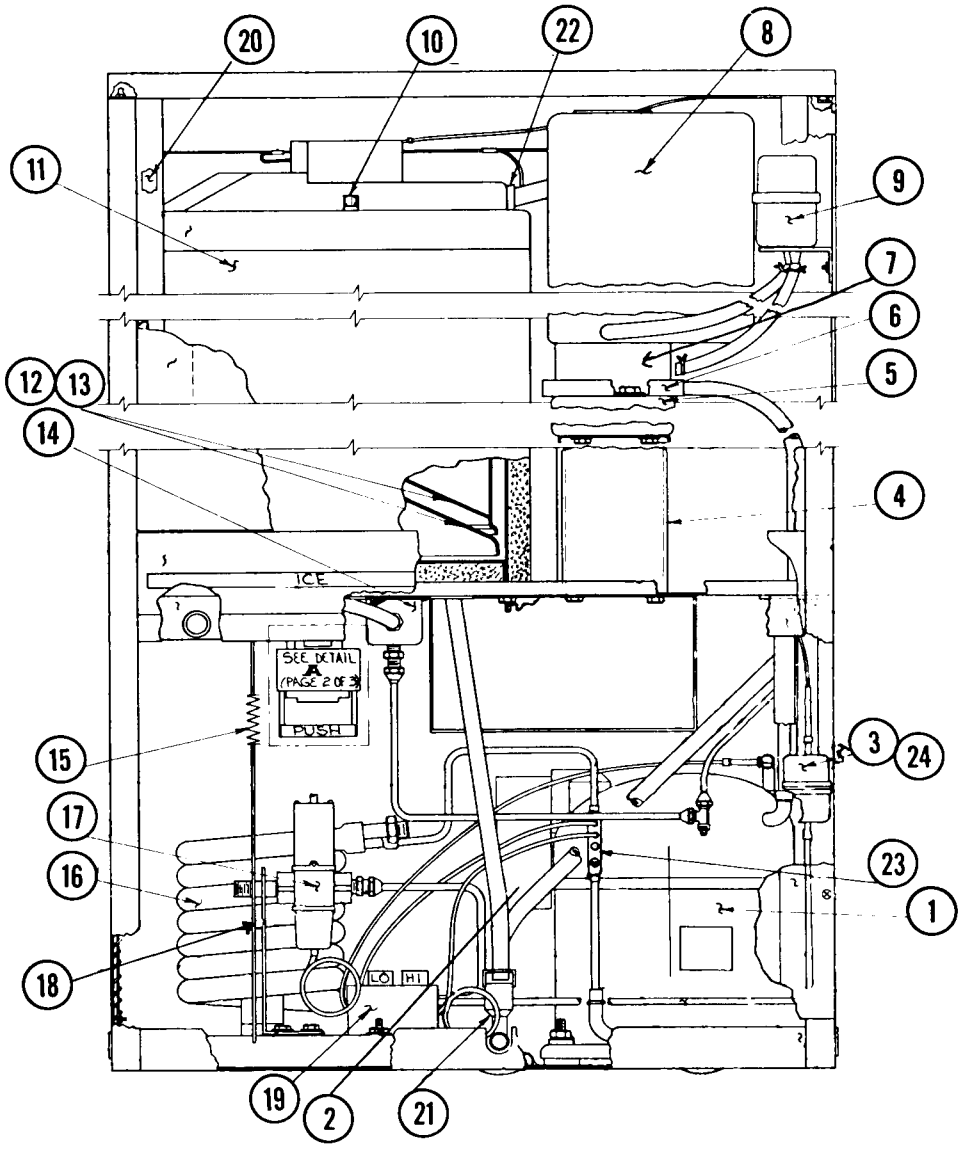

FD6B Water Cooled

ITEM NO.	PART NO.	DESCRIPTION	ITEM NO.	PART NO.	DESCRIPTION
1.	18-4600-01	Compressor	15.	02-1827-00	Spring
2.	18-2200-25	Overload	16.	18-3305-02	Condenser W. C.
	18-2200-26	Relay	17.	11-0198-02	Water Regulator
	18-1901-33	Cap Ocitor	18.	A15924-000	Bracket
3.	02-0544-01	Drier	19.	11-0385-01	Hi-Lo Pressure Control
4.	A23497-001	Motor Support	20.	02-0836-00	Catch
5.	A22750-021	Gearmotor 115/60/1	21.	A21532-000	Drain Tee
6.	A24156-001	Drip Pan	22.	A24876-001	Spout Extension
7.	02-1629-00	Base Adapter	23.	16-0673-08	Process Header
8.	See Break Down	Freezer Assy	24.	16-0560-00	Valve Core
9.	See Break Down	Reservoir Assy		16-0563-00	Brass Cap
10.	A21983-000	Nut			
11.	A23250-001	Bin Assembly			
12.	A23247-001	Inner Bin			
13.	A19343-000	Inner Bin Bottom			
14.	12-1646-01	Solenoid Valve			

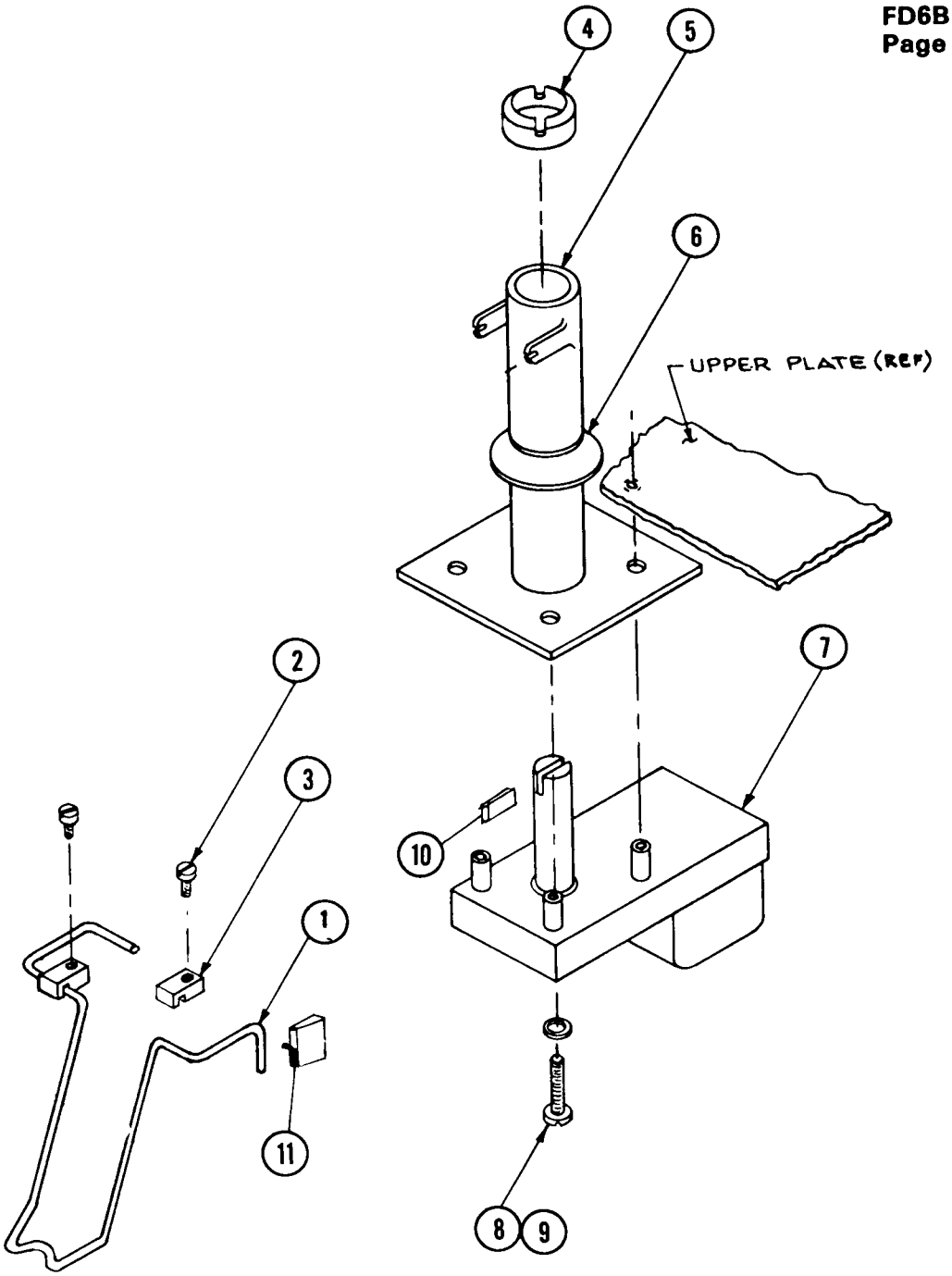

ITEM NO.	PART NO.	DESCRIPTION
1.	02-2076-01	Glass Filler
2.	03-1403-06	Screw
3.	02-1969-00	Linkage Clamp
4.	02-1976-00	Retaining Collar
5.	02-1971-00	Bracket Gear Motor
6.	13-0747-00	Water Shed
7.	12-1561-01	Gear Motor
8.	03-1410-02	Lockwasher
9.	03-1403-36	Screw
10.	A20472-000	Slot Pin
11.	12-1642-00	Vend Switch

BIN TOP PARTS

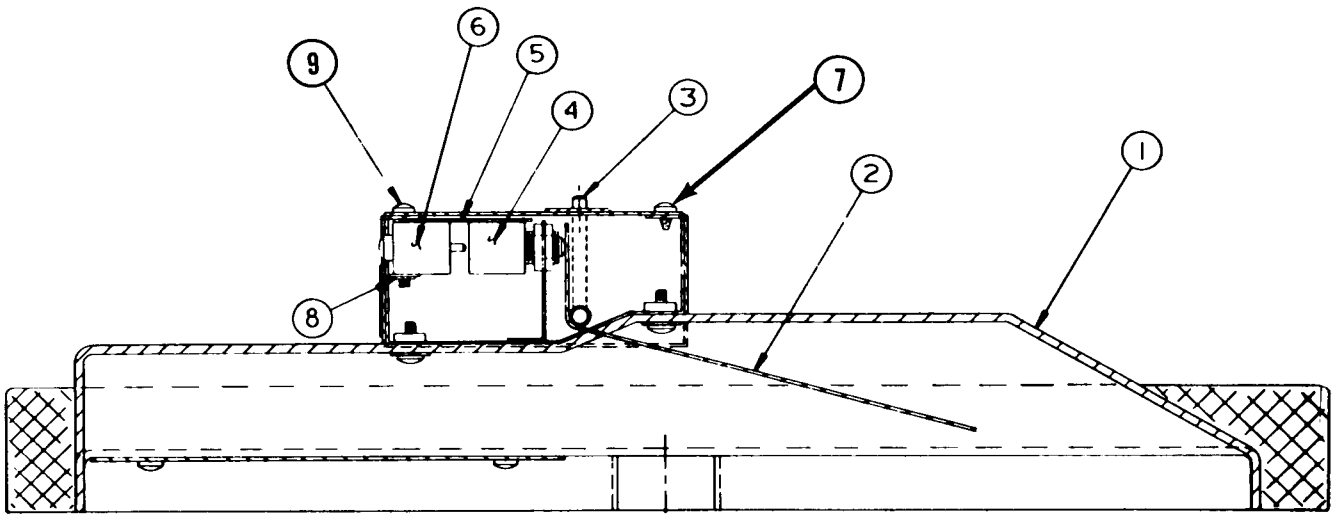

ITEM NO.	PART NO.	DESCRIPTION
1.	A23493-001	Top Foam Assy
2.	A21995-000	Actuator Arm
3.	A21982-000	Pin
4.	12-1018-02	Bin Full Switch
5.		Electrical Insulation
6.	12-1664-00	Reset Switch
7.	03-1404-04	Screw (4)
8.	03-0886-00	Twin Nut
9.	03-1403-10	Screw (2)

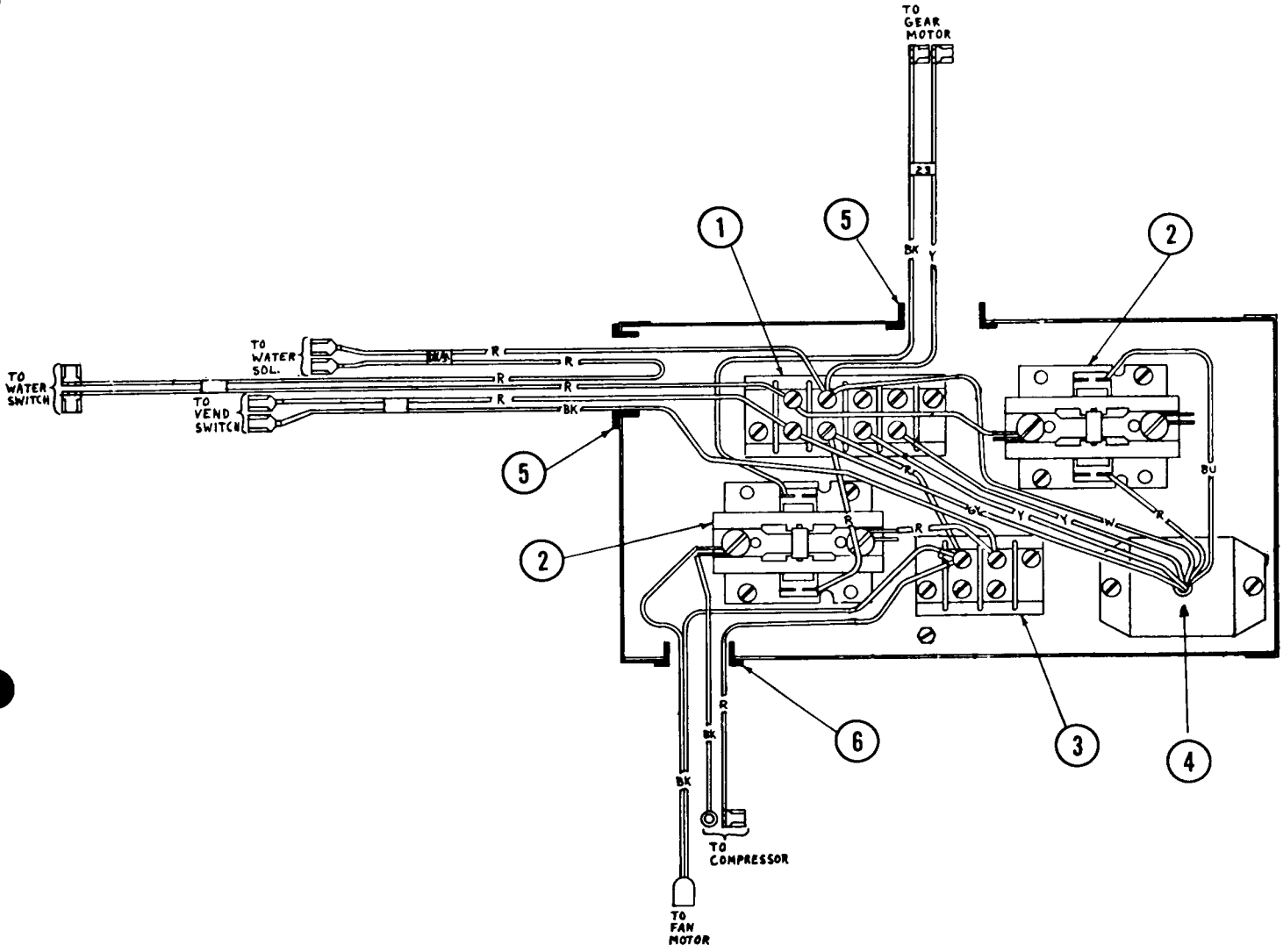

CONTROL BOX - AIR COOLED

ITEM NO.	PART NO.	DESCRIPTION
1.	12-0813-01	Terminal Board
2.	12-2041-01	Contactor
3.	12-0813-04	Teminal Board
4.	A26213-001	Relay - Time Delay
5.	12-1213-12	Snap Bushing
6.	12-1213-11	Snap Bushing

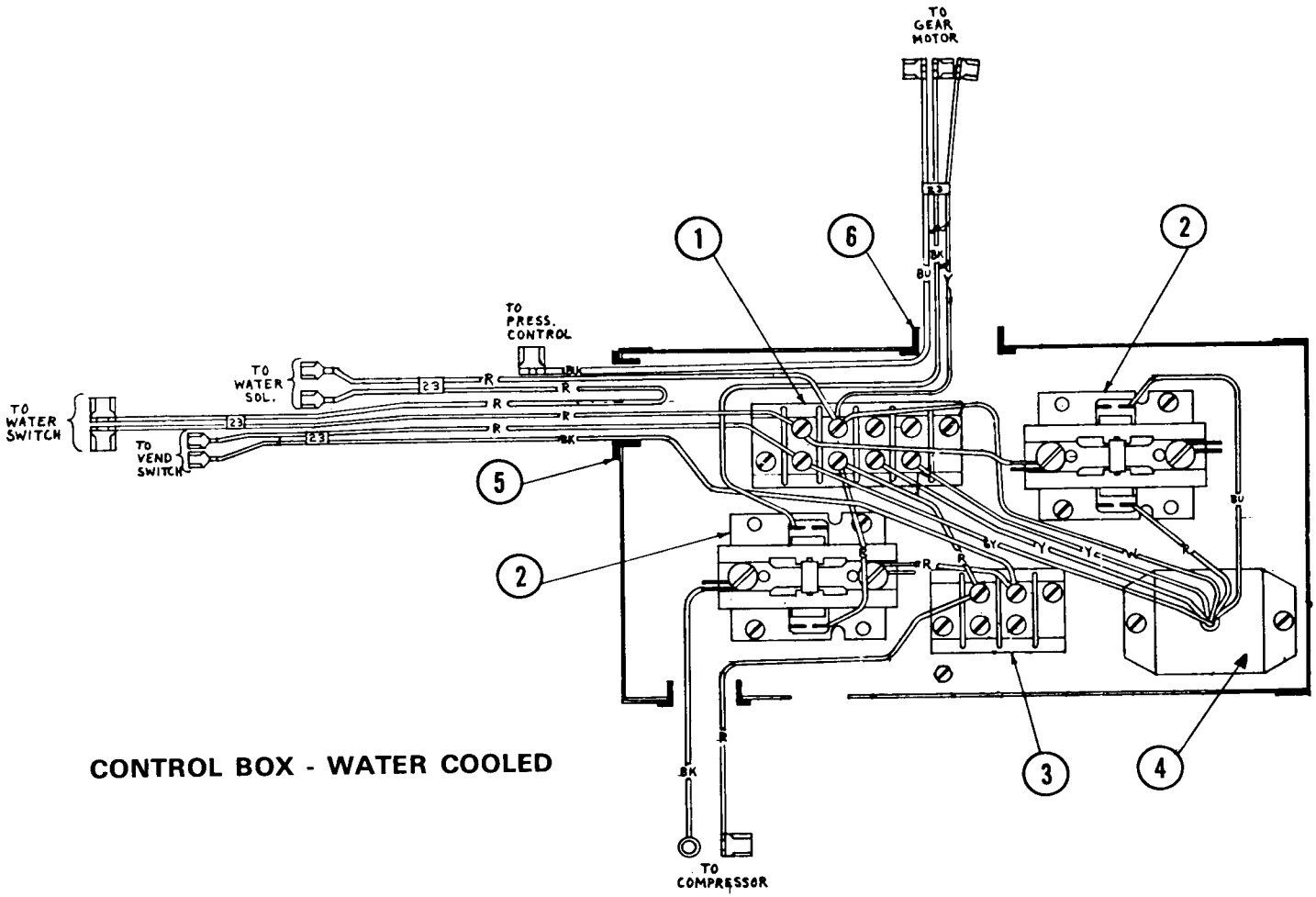

CONTROL BOX - WATER COOLED

ITEM NO.	PART NO.	DESCRIPTION
1.	12-0813-01	Terminal Board
2.	12-2041-01	Contactor
3.	12-0813-04	Terminal Board
4.	A26213-001	Relay - Time Delay
5.	12-1213-12	Snap Bushing
6.	12-1213-11	Snap Bushing

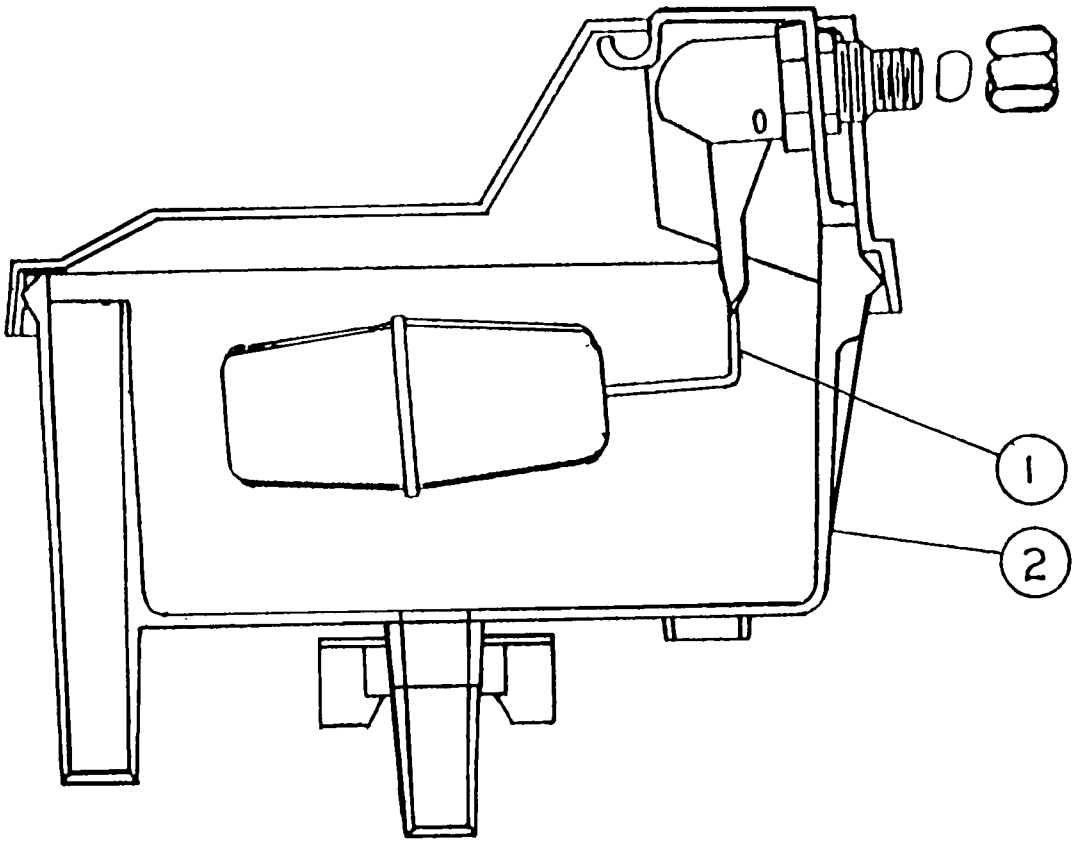

RESERVOIR ASSEMBLY

ITEM NO.	PART NO.	DESCRIPTION
1.	02-2217-02	Valve Assy.
2.	02-2217-01	Reservoir Complete

GEAR MOTOR ASSEMBLY

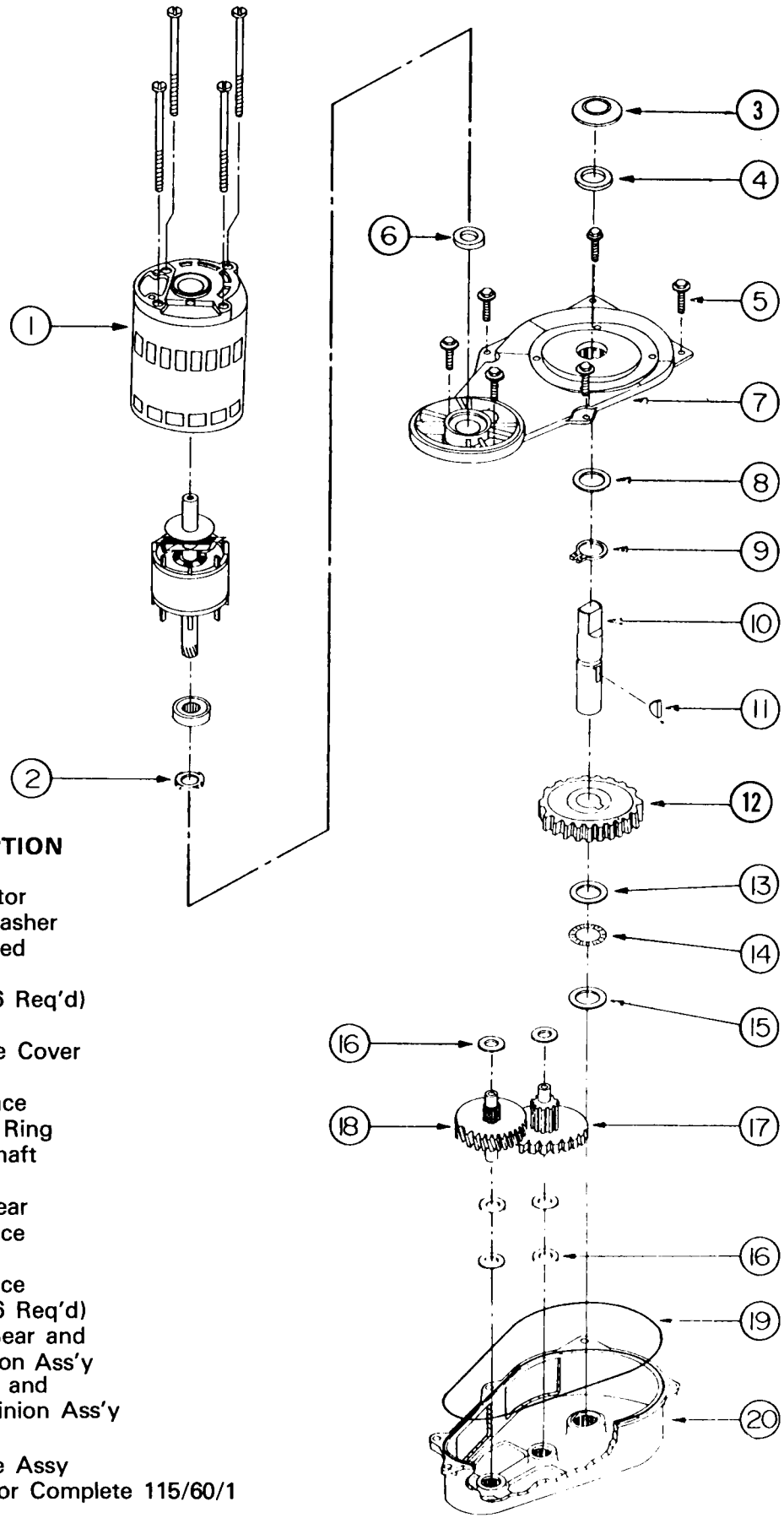

ITEM	PART NO.	DESCRIPTION
1.	A26455-001	Drive Motor
2.	03-1426-00	Spring Washer
3.	13-0709-02	Water Shed
4.	02-1607-00	Oil Seal
5.	03-1251-01	Screws (6 Req'd)
6.	02-1606-00	Oil Seal
7.	A22200-000	Gear Case Cover Assembly
8.	02-1681-00	Thrust Race
9.	03-1363-00	Retaining Ring
10.	02-1652-00	Output Shaft
11.	03-1364-00	Key
12.	02-1653-00	Output Gear
13.	02-1681-00	Thrust Race
14.	02-1680-00	Bearing
15.	02-1679-00	Thrust Race
16.	03-1408-24	Washer (6 Req'd)
17.	02-1604-00	Second Gear and Third Pinion Ass'y
18.	02-1603-00	First Gear and Second Pinion Ass'y
19.	A26103-001	"O" Ring
20.	A22199-000	Gear Case Assy
	A22750-021	Gear Motor Complete 115/60/1

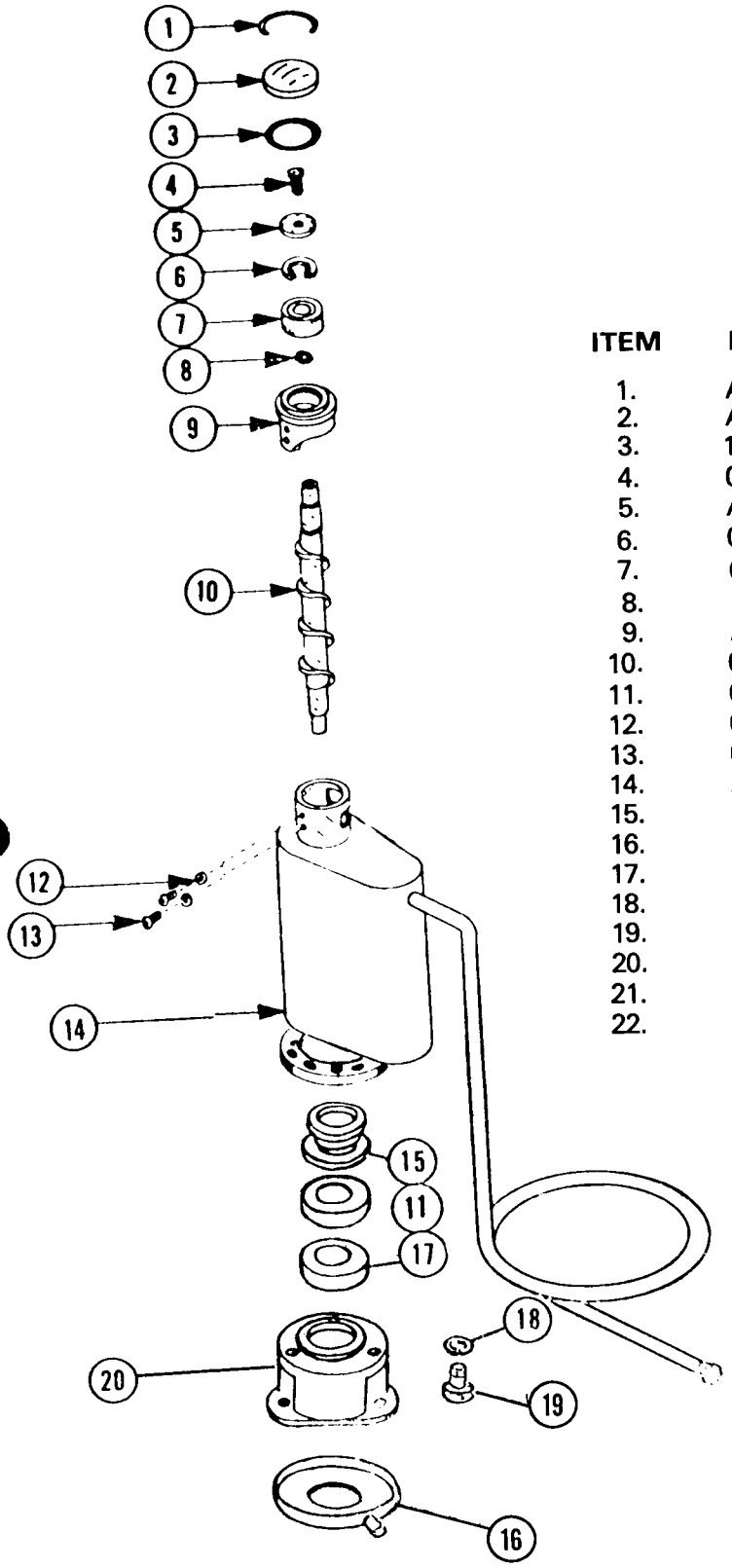

ITEM	PART NO.	DESCRIPTION
1.	A08582-000	Cap Hook
2.	A08581-000	Cap
3.	13-0617-20	"O" Ring
4.	03-1405-36	Cap Screw
5.	A06273-000	Washer
6.	03-1558-04	Snap Ring
7.	02-0646-00	Bearing
8.	13-0617-15	"O" Ring
9.	A26704-001	Breaker With Bearings
10.	02-0617-00	Auger
11.	02-0619-00	Bearing
12.	03-1410-03	Washer
13.	03-1403-46	Screw
14.	A27169-001	Worm Tube — Suction Line
15.	A22569-000	Water Seal
16.	A24156-001	Drip Pan
17.	A10591-000	Bearing Retainer
18.	03-1410-04	Washer
19.	03-1405-41	Screw
20.	02-1629-00	Adapter
21.	15-0573-01	Drive Coupling
22.	13-0704-00	Shaft Drip Shield Rubber

STORAGE BIN ASSEMBLY

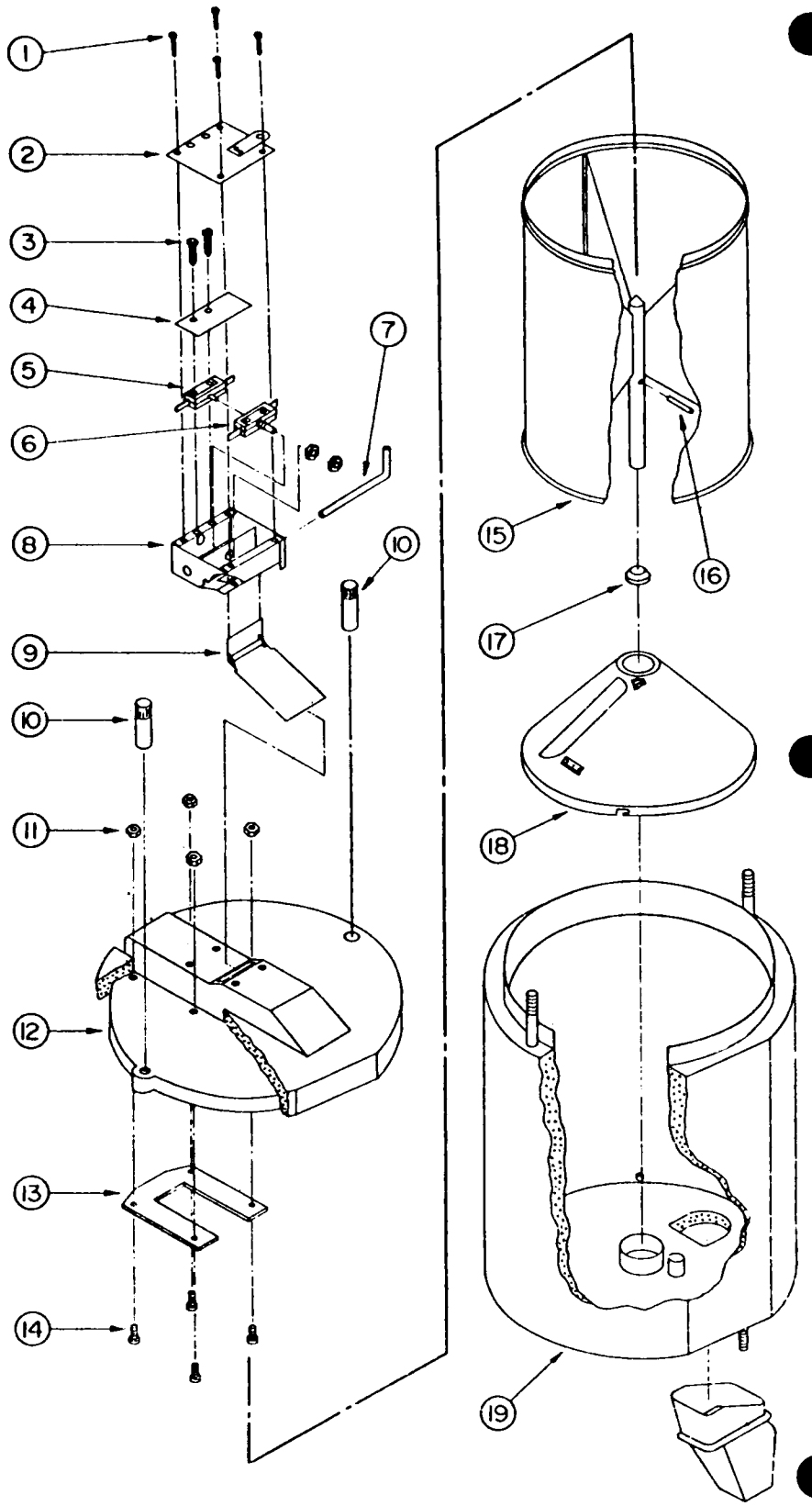

ITEM	PART NO.	DESCRIPTION
1.	03-1404-04	Screw (4 reqc)
2.	A21996-000	Cover Fab. Assy
3.	03-1403-10	Screw (2 reqd)
4.	03-0886-00	Twin Nut
5.	12-1664-00	Reset Switch
6.	12-1018-02	Switch
7.	A21982-000	Pin
8.	A21992-000	Bin Switch Box
9.	A21995-000	Actuator Arm Fab.
10.	A21983-000	Nut (2 reqc)
11.	03-1406-04	Nut (4 reqd)
12.	A23493-001	Top-Foam Assy
13.	A21987-000	Bridge Plate
14.	03-1279-000	Screw, Thumb (4 reqd)
15.	A23247-001	Inner Bin Fab. Assy
16.	A23223-000	Pin-Inner Bin
17.	02-1976-00	Collar
18.	A19343-000	Inner Bin Bottom Fab. Assy
19.	A23250-001	Bin Assy

SERVICE ANALYSIS – ICE MAKER SECTION FD6

SYMPTOM	POSSIBLE CAUSE	CORRECTION
Water Leaks	Defective water seal.	Replace.
	Gravity feed line leaking.	Check hose clamps.
	Water level in reservoir too high	Adjust water level to 1/4 inch below reservoir overflow, then raise reservoir until water comes out freezer spout, then lower 3/4 inch.
Excessive noise or chattering.	Mineral or scale deposit on auger and inner freezing chamber walls.	Clean per cleaning instructions with Scotsman Ice Machine Ceaner - for severe deposits remove auger and clean freezer parts manually.
	Low suction pressure.	Add gas to raise suction pressure.
	Intermittent water supply.	Check and clean water strainer. Check gravity feed line for air lock. Remove air lock.
	Water level in reservoir too low.	See "Correction" under "Symptom" water leaks.
	Motor compressor not solid on rubber mounts.	Repair or replace rubber mounts.
Gearmotor noise.	Low on oil.	Remove case cover to check for proper oil level. Top of gears should be covered. Use 600W or equivilant.
Unit will not run.	Bin Reset Switch	Push to reset - continue operation replace bin full switch.
	Blown Fuse.	Replace fuse and check for cause of blown fuse.
	Loose electrical connection.	Check wiring.
	Inoperative master switch.	Replace switch.
Compressor cycles intermittently	High or low voltage.	Check for overloading.
	Dirty condenser.	Clean.
	Air circulation blocked.	Remove cause or move unit to correct.
	Inoperative condenser motor.	Replace.
	Non-condensable gases in system.	Check for leaks, evacuate and recharge.
Making wet ice.	Surrounding air temperature very high.	Correct or move unit.
	Under or over-charge of refrigerant.	Recharge with the proper amount.
	Faulty compressor.	Replace or repair.
Low ice production.	Loss of refrigerant, under or over-charge of refrigerant.	Check and recharge with proper amount of refrigerant.
	Dirty or plugged condenser.	Clean condenser.
	Water level in water reservoir.	See "Corrections" under "Symptiom" water leaks.

	Partial restriction in capillary tube or drier.	Moisture in system. Oversharge of oil in system. Remove charge and drier. Replace and recharge system.
	Inlet water strainer partially plugged.	Remove screen and clean.
	Corroded or stained worm shaft due to water conditions.	Remove worm shaft and clean.
Machine runs but makes no ice.	Loss or under-charge of refrigerant.	Check for leaks and recharge.
	Water not entering freezing chamber.	Plugged strainer or supply line. Check and clean. Air lick in gravity feed line. Check and remove air locks.
	Moisture in system.	Check and remove charge and drier. Replace and recharge.
	Water seal leaking.	Replace seal.
	Water turned off while unit was operating.	Inlet water line froze shut. Unit must be turned off and defrosted.
Will not dispense.	Power off.	Check master switch, fuses and electrical supply to machine. Check symptoms - bin drive motor runs, bin drive motor stopped.
Bin drive motor runs (will not dispense)	Plugged spout.	Operator held full glass under spout forcing ice to jam, clear spout and instruct personnel using machine.
	Vend switch adjustment.	Vend switch must be positioned so it will close only when glass lever is completely depressed to prevent vending when ice chute is only partially open.
	Gear Motor.	Check if output shaft turns if not, replace gearmotor.
	Inner bin does not rotate	Check keyed coupling to gear motor. Key is soft soldered in place and may be replaced.
Bin drive motor stopped.	Drive motor burned out.	Replace.
	Inner bin Jammed.	Check assembly of inner bin bottom, may NOT be down and locked in place.
	Vend switch.	Faulty-replace. Out of adjustment - readjust
	Relay (relay has 115 V holding coil 24V coil will not work with timing module.	Relay is normally closed, may open too quidkly if ice portion control or timing module is faulty.
Will not portion ice, runs continuous.	Ice portion control timing module.	If components fail to open machine will vend continuously when glass lever is depressed. The timing module and ice portion control stop the vend cycle by energizing the relay which opens the circuit to the bin drive motor. It is recommended to service these two components by substitution.

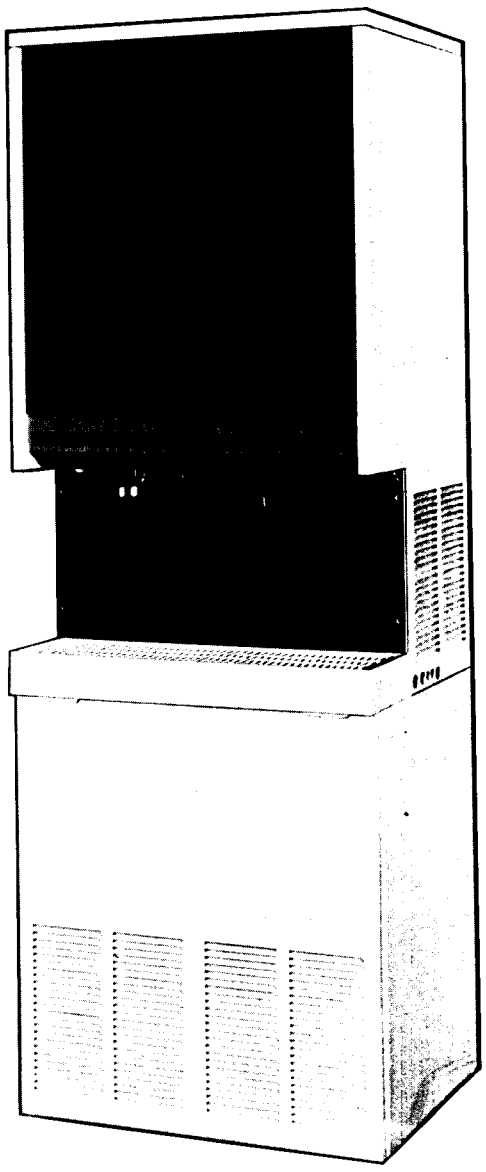

FD-6 Dispenser

Optional
Machine
Stand

Accessory Legs
Not included

ACCESSORY LIST

KWB-3	Wall Mount Kit
KGF-1	Glass Filler Kit
KSP-1	Splash Panel Kit
DMS-20 E	Machine Stand - Enamel Finish
DMS-20 S	Machine Stand - Stainless Steel.
KLP-2E	4 Leg Package - Enamel Finish
KLP-25	4 Leg Package - Stainless Steel Finish.

TABLE OF CONTENTS

Table of Contents 1
Photo 2
Specifications & Dimensions 3
Preparation for Installation 4
Installation 5
Installation (Bin Components) 6
Installation Schematic 7
Final Check List 8
Start Up 8
Refrigeration Schematic 9
Wiring Diagram (Air Cooled) 10
Wiring Diagram (Water Cooled) 11
Service Analysis 12-14
Cleaning Dispenser Mechanism 15
Maintenance Instructions (Ice Making Section) 15
Ice Shutter Control Schematic 16
SERVICE INSTRUCTIONS:
- Freezer Gearmotor 17
- Freezer Assembly 17
- Freezer Worm Shaft 17
- Freezer Ass'y, Top Bearing 17
- Freezer Ass'y, Bottom Bearing and Water Seal 18
- Bin Full Switch 18
- Water Reservoir 18
- Head Pressure Control (Water Cooled) 19
- Low Pressure Control 19
- Water Regulating Valve (Water Cooled) 19
- Bin and Auger Drive Unit Ass'y 19

PARTS BREAKDOWN:
- Front View (Air Cooled) 20
- Side View (Air and Water Cooled) 21
- Front View (Water Cooled) 22
- Freezer Ass'y 23
- Gear Motor Ass'y 24
- Drive Unit Ass'y 25
- Spout Ass'y 26
- Shutter Actuator Ass'y 27
- Shutter Actuator Rod Ass'y 28
- Bin Full Switch Ass'y 28
- Ice Discharge Spout Ass'y 29
- Reservoir Ass'y 30
- Control Box (Air Cooled) 31
- Control Box (Water Cooled) 32
- Cabinet Parts 33
- Optional Switch Mounting and Accessories 34

THIS PAGE
INTENTIONALLY
LEFT BLANK

SCOTSMAN®

ICE MAKER DISPENSER

MODEL

FD7 SERIES

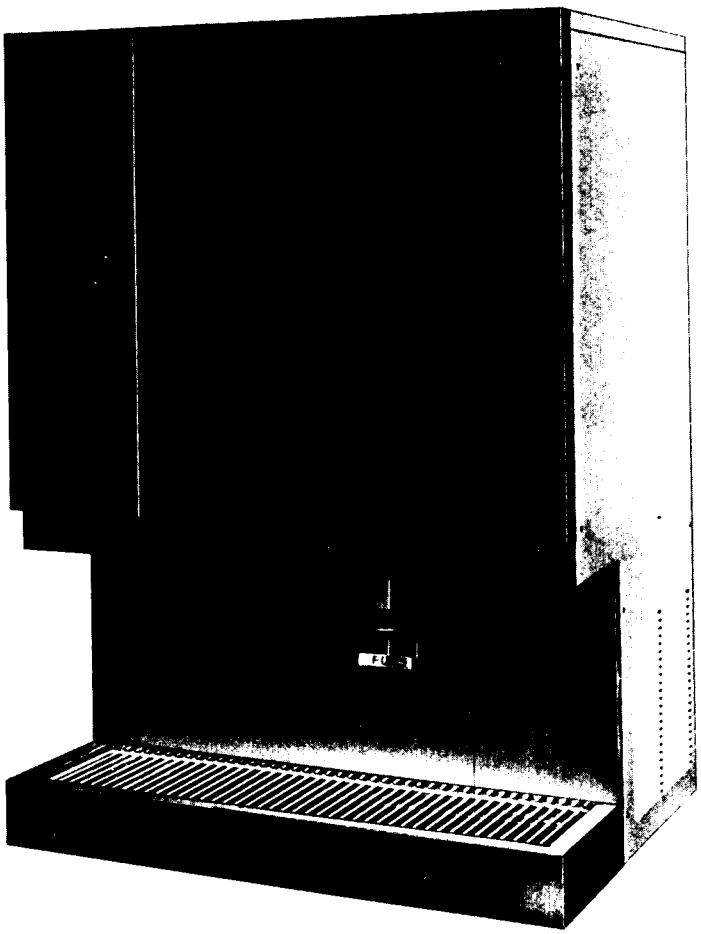

ice making capacity

Daily Ice Capacity is directly related to condenser air inlet temperature, water temperature, and age of machine.

NOTE: To keep your SCOTSMAN ICEMAKER DISPENSER performing at it's maximum capacity, it is necessary to perform periodic maintenance as outlined on page 15 of this manual.

SCOTSMAN®

FD7 Series

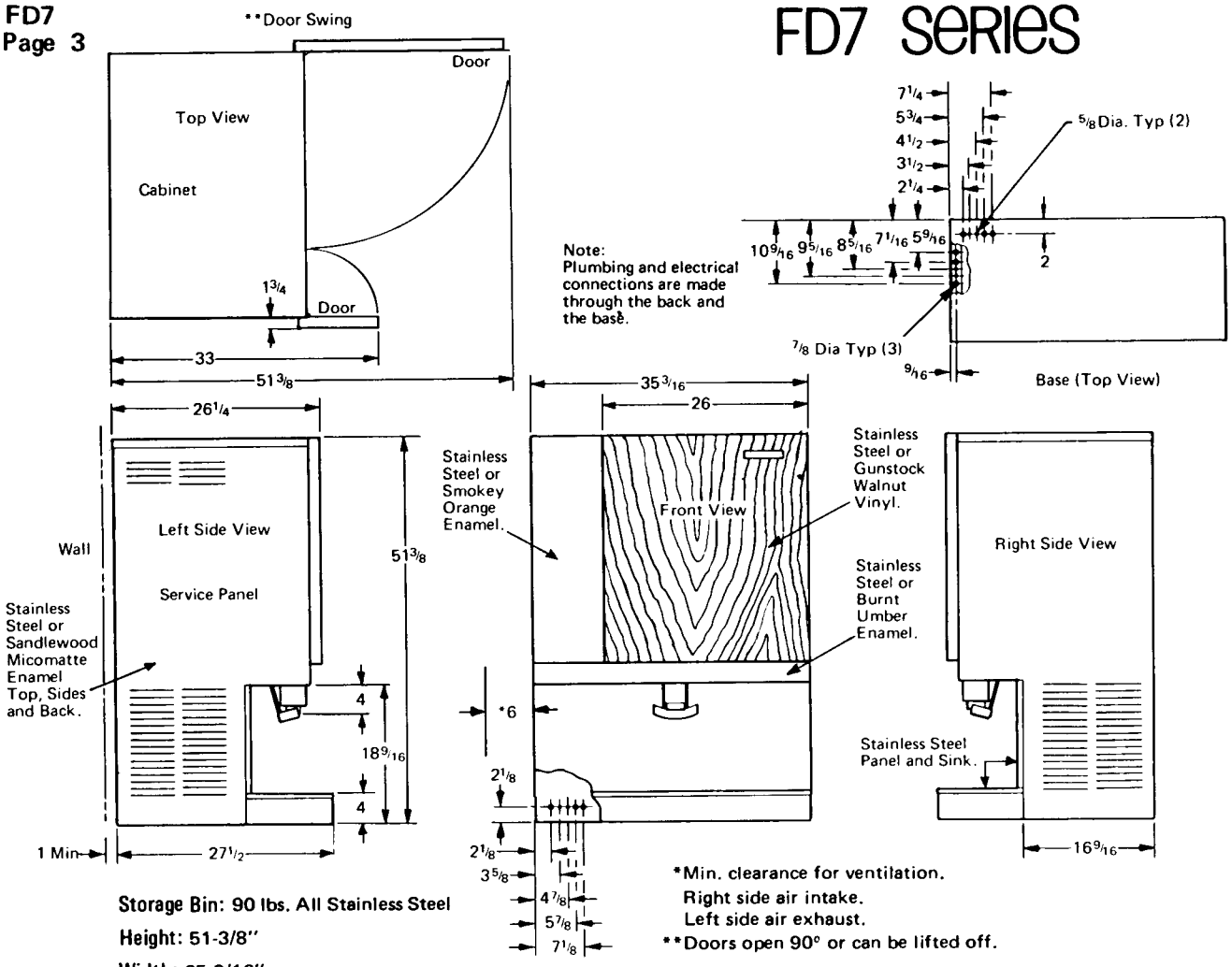

Storage Bin: 90 lbs. All Stainless Steel

Height: 51-3/8"

Width: 35-3/16"

Depth: 27-1/2" with sink
26-1/4" without sink

*Min. clearance for ventilation.
Right side air intake.
Left side air exhaust.

**Doors open 90° or can be lifted off.

Meter Ice Per Vend: Variable selection to continuous ice flow

NOTE: FD7 can be mounted on machine stand, wall mounted, or counter mounted, sink is removable.

SPECIFICATIONS:

Model	Condensing Unit	Compressor Horsepower	Finish (P-painted) (SS-Stainless Steel)	Shipping Weight (lbs.)
FD7AE	Air	1/2	P*	600
FD7AS	Air	1/2	SS	600
FD7WE	Water	1/2	P*	600
FD7WS	Water	1/2	SS	600

Basic Electricals	Minimum Wire Sizes (w-wire) (g-gauge)	Total Amperages
Air Cooled 115/60/1	2w 12g	16.7
Water Cooled 115/60/1	2w 12g	16.7

*(Painted model has woodgrain front storage door panel)

Specifications subject to change without notice.

PREPARATION FOR INSTALLATION

1. The entire unit comes in one crate. Upon delivery a visual inspection of the crate and ice machine should be made and any severe damage noted should be reported to the delivering carrier and a concealed damage claim filed subject to internal inspection with carrier representative present.

2. Remove lower front panel and left side panel. Open and remove front service access doors.

3. Install unit on machine stand or counter top with a flat, level rigid top. Mount at convenient height for filling glasses. To mount on the wall order special wall mounting kit.

4. Thru left side of machine, locate metal reservoir. Remove water reservoir cover and take out paper packing around float ball.

5. Route the drains from the cabinet. They may be routed through the rear panel or through the base. It is possible to route all lines through holes which have been provided in the base.

6. The lower drain from the sink area must never be installed higher than the base of the cabinet. Consideration should be made in regard to this drain in order to get proper flow from the sink drain.

7. Water should be supplied from a 3/8" copper or equivalent pipe. Too small a water supply line will only result in an increase in time for filling glasses with water.

8. Open electrical junction box cover on back panel of machine and check unit nameplate voltage against building source voltage and made sure they correspond. Caution - Improper voltage supplied to units will void your parts replacement program.

9. Select unit location prior to hookup of water drain and electrical in accordance with local and national codes. Minimum room temperatues is 50 degrees Fahrenheit, maximum room temperature 100 degrees Fahrenheit. On air cooled models, select well ventilated location.

10. Locate and tear out registration card from front of Users Manual and fill out card completely including model and serial numbers as taken from aluminum plate found behind front service panel. Forward to Scotsman Factory using self-mailing card, for your personal registration certificate.

11. Call your local authorized Scotsman Service Agency for hook-up, start-up and check out. He's listed under "Ice Making Machinery & Equipment" in your telephone book, yellow pages.

WARNING: THIS MACHINE MUST NOT BE ALLOWED TO OPERATE WHEN THE WATER SUPPLY IS SHUT OFF, OR AT BELOW RECOMMENDED WATER PRESSURE. TURN MASTER SWITCH TO "OFF" POSITION WHEN WATER SUPPLY IS OFF, OR WHEN WATER PRESSURE IS BELOW RECOMMENDED OPERATING PRESSURE.

INSTALLATION

ELECTRICAL CONNECTIONS:
FD7AE-1
115 Volts, 60 Cycle, 1 Phase
30 Amp. Circuit

12 Gauge wire should be used for electrical hook-up. Model FD7 requires a solid earth ground wire.

Be certain that the dispenser is on its own circuit and individually fused. The maximum allowable voltage variation should not exceed 10 per cent of the nameplate rating even under starting conditions. Low voltage can cause erratic operation and may be responsible for serious damage to the overload switch and motor windings.

All external wiring should conform to the National, State and local Electrical Code requirements. Usually and electrical permit and the services of a licensed electrician will be required.

ELECTRICAL INSTALLATION FD-7

Compressor	1/2 HP	Copelaweld: RSN2-0050-1AA 2 pole, 3500 RPM	
	Voltage	115	
	Amp. rating F.L.A.	11.2	
	Cycle	60	
	Phase	Single	
Gear Drive Motor (Freezer)	1/4 HP	Queen Products	
	Voltage	115	
	Amp. rating F.L.A.	4.7	
	Cycle	60	
	Phase	Single Thermally Protected	
Gear Drive Motors (Vend)		Bin Drive	Auger Drive
	Voltage	115	115
	AMP Rating	3.3	1.2
	Cycle	60	60
	Phase	Single	Single
Fan Motor (Air Cooled)	Voltage	115	
	AMP Rating	.9	
	Cycle	60	
	Phase	Single	

WATER SUPPLY:
A single cold water supply line is required. Recommend tubing size 3/8" O.D. or larger, cabinet connection is to a 3/8" S.A.E. flare tee. A water strainer with clean out feature should be installed in supply line along with a hand shut off valve.

Minimum water pressure is 20 pounds gauge, maximum pressure over 50 pound gauge may cause chattering of float ball in reservoir tank. For pressures in excess of 50 pounds, use a water pressure regulator in line. Holes are provided in back and bottom of unit for supply line entrance.

DRAIN:
Water and Condensate Drains: Run separate drain lines for each drain provided from machine. 5/8" I.D. tubing drain from ice storage compartment. 3/8" I.D. tubing drain from flaker freezer assembly. 7/8" I.D. tubing drain sink, if used, 3/8" O.D. copper drain from water cooled condenser or water cooled units only. Drain lines should be run to an open, trapped or vented drain in accordance with your State and local code.

INSTALLATION
BIN COMPONENTS

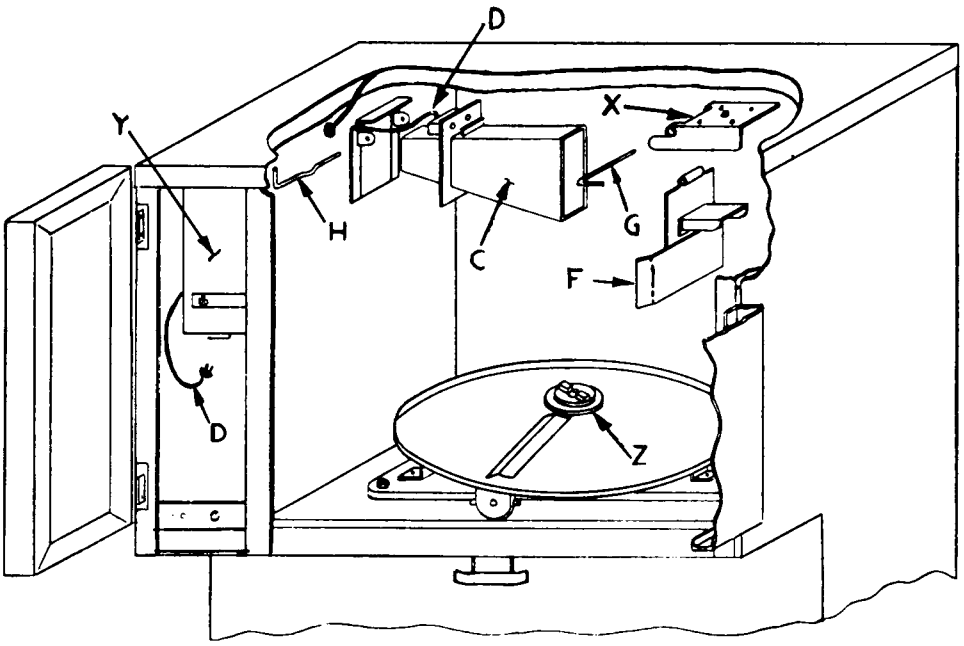

1. Remove parts container, divider, and styrofoam filler from upper compartment. Remove bin by unscrewing locking cap "B" from center of bin.
2. Completely clean spout, differential plate, upper compartment and bin using Scotsman cleaning solution. Rinse thoroughly.
3. Install parts in this order:
   A. Place Bin "A" on drive lug "Z" of the gear unit. Turn the bin until it seats on the lugs of "Z".
   B. Screw locking cap "B" down snug in the center of the bin.
   C. Place differential plate "F" in place on plate "X".
   D. Insert pin "G" through holes to hold the plate in place.
   E. Turn handle of pin down behind tab of plate "X".
   F. The differential plate "F" is installed with the tab to the right so it actuates the switch in the cover when it is pushed backward or to the right.
   G. Pull cord "D" of the flaker soput "C" through the flaker opening. Bring it down the side of the compartment and plug it into a receptacle in box "Y."
   H. Push flaker spout "C" through compartment opening and place over cast spout of freezer.
   I. Push spout tight against compartment opening and insert pin "H".
   J. When "H" is in place pull handle down to lock it in place.
   K. WARNING: Pins "H" and "G" must be locked in place. Any part that falls in the bin will cause serious damage to the unit.

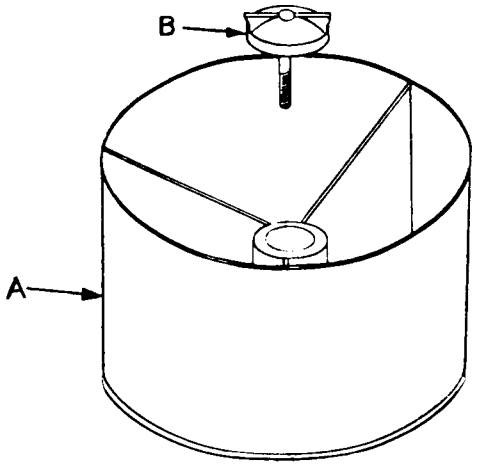

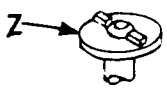

INSTALLATION SCHEMATIC

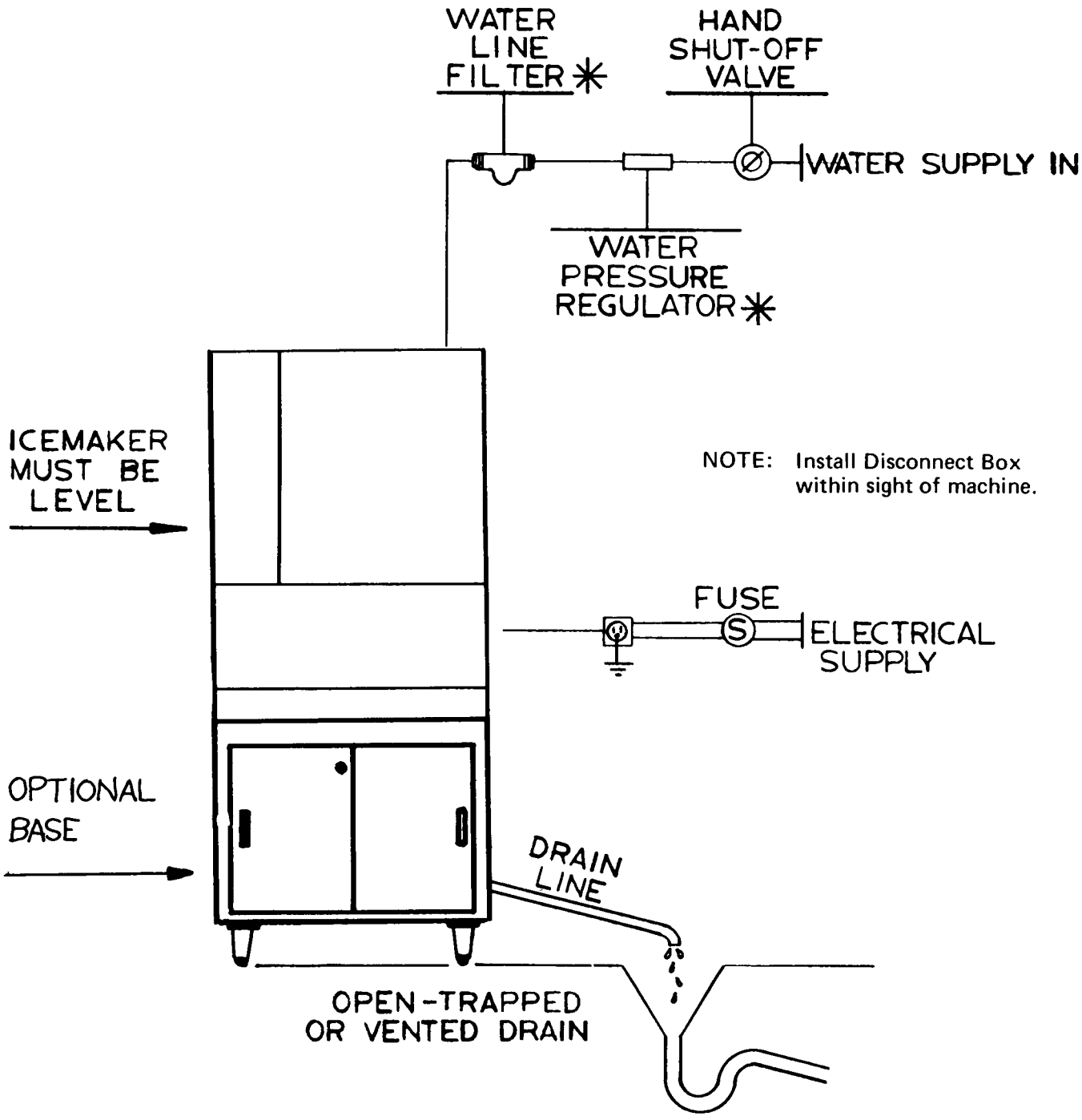

* REGULATOR AND FILTER ARE ACCESSORY ITEMS TO BE INSTALLED AS CONDITIONS WARRANT

FINAL CHECK LIST

1. Is the unit level? (IMPORTANT)
2. Have all electrical and piping connections been made?
3. Has the voltage been tested and checked against the nameplate rating?
4. Is the water supply valve open and the electric power on?
5. Is the water reservoir filled and shut off? All packing removed?
6. Have unit and bin been wiped clean?
7. Has owner been given this Operating Instruction Booklet, and has he been instructed on how to operate the machine?
8. Have the installation and registration cards been filled out and mailed to the factory?
9. Check all refrigerant and conduit lines to guard against vibration and possible failure.
10. Installed in a well ventilated room where ambient temperatures do not fall below 50 degrees Fahrenheit.
11. Is unit installed with a minimum 4" air space around sides and back?

SERVICE

STARTING THE MACHINE:

When the machine is placed and inspected as per instructions and all plumbing and electrical connections are completed and tested, turn on the water supply. Be sure the float cover is removed to check on the float operation and water level in the water reservoir. Be sure the water reservoir is filled before starting the machine. Water level should be 1/4 inch below the reservoir overflow.

When this is completed, turn on the manual switch on the front of the cabinet and the machine is in automatic operation. In two to three minutes ice will start dropping off the worm shaft and out the ice chute. Let the machine operate for at least 30 minutes and check for any excess noise other than the normal compressor noise.

Check pressure settings at the time of start-up. On the water-cooled models set the head pressure at 135 PSI. On the air-cooled models the head pressure will vary between 130 and 145 PSI head pressure. The frost line should extend out of the accumulator if properly charged with refrigerant and suction pressure will range between 14 and 16 PSI with 50 degrees Fahrenheit inlet water.

Check the hand reset low pressure control setting. This safety device should be set at approximately 2 PSI and should cut off in case of interruption in water supply, shortage of refrigerant, low ambient or any other cause of abnormally low suction pressure.

REFRIGERANT SYSTEM:

The standard Scotsman Flaker system is used in slightly modified form. Refrigerant 12 is pumped by compressor into the air cooled condenser, into the liquid line, thru a filter-drier and then into the capillary refrigerant control line.

Liquid refrigerant is then carried down to the bottom end of the shell and tube type evaporator (freezing cylinder) where it expands and rises to the top of evaporator. Here the vapors and gases are returned thru an accummulator and suction line to the compressor.

REFRIGERANT CHARGE:

The below refrigerant charge is approximate. When charging, set at 135 PSI(water cooled) or 145 PSI (Air Cooled) and charge so that the frost line extends out of the evaporator and into the accumulator after fifteen minutes of operation.

Model	Refrigerant Charge
Air Cooled	33 oz. R-12
Water-Cooled	33 oz. R-12

REFRIGERATION CYCLE FD7

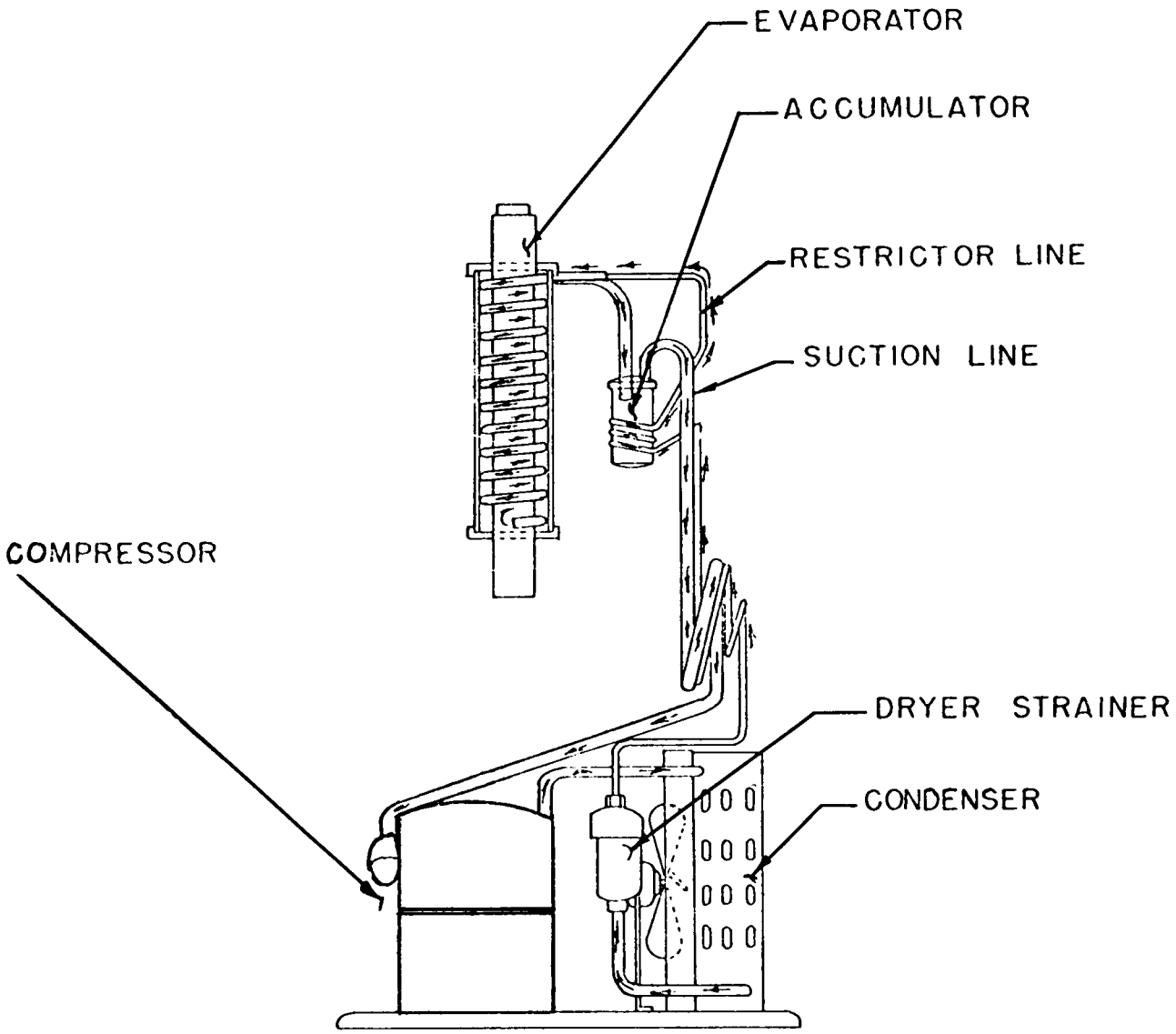

WIRING DIAGRAM (AIR COOLED) A24891-001

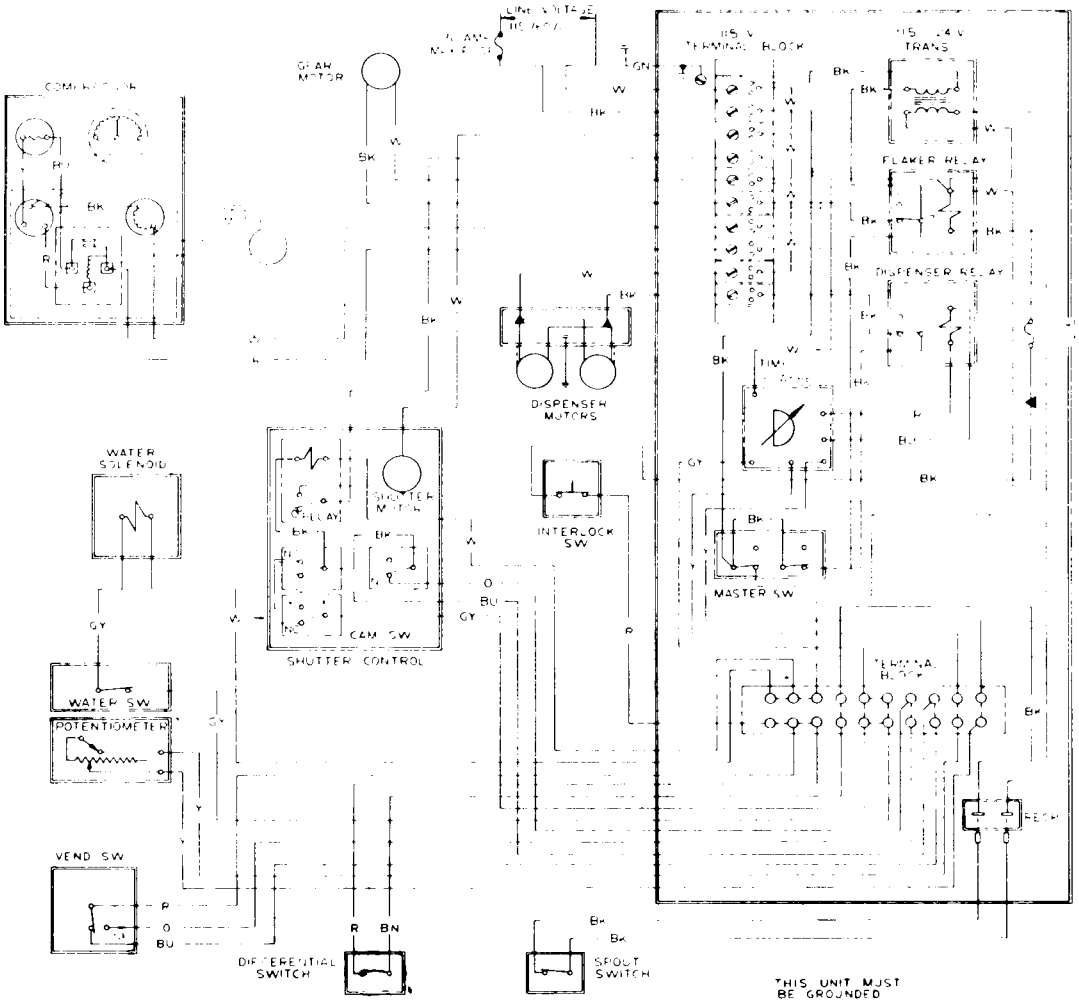

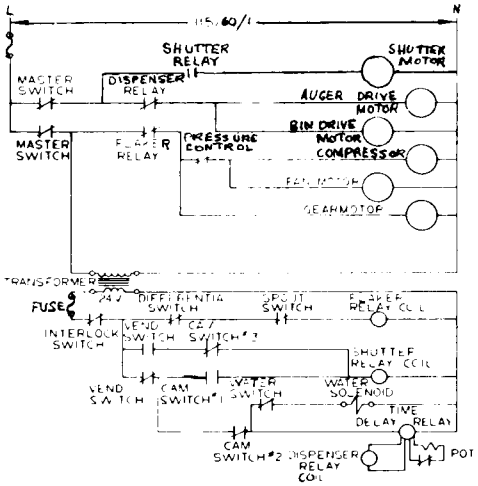

A2

WIRING DIAGRAM (WATER COOLED) A24890-001

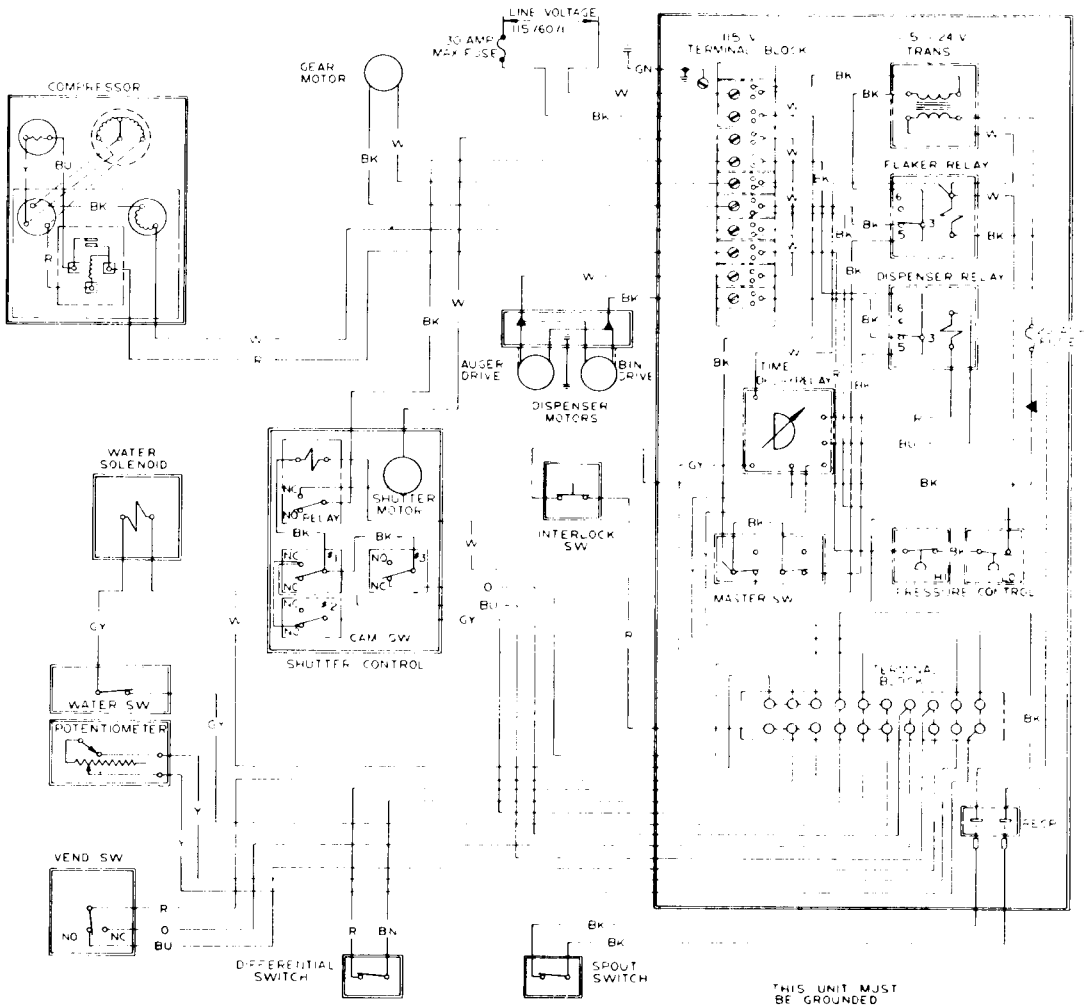

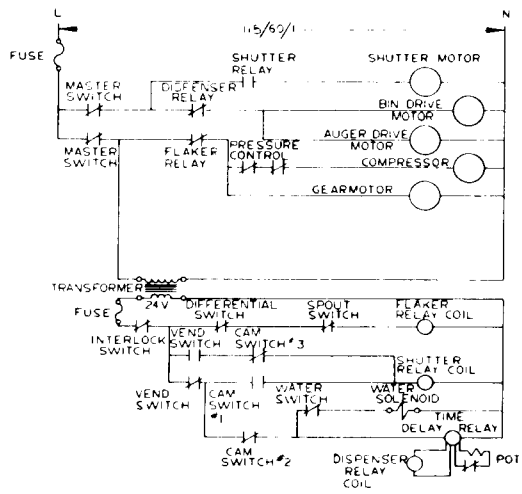

SERVICE ANALYSIS CHART

COMPLAINT	POSSIBLE CAUSE	CORRECTION
When actuating arm is pushed, shutter does not open.	Actuator not depressing switch plunger.	Check actuator switch. Must be adjusted dow to contact activator lever
	Loose thumb nuts.	Tighten thumb nuts holding actuator arm to mounting plate.
	Defective actuator switch.	Replace switch.
	Shutter rubbing on plastic bin liner.	Remove shutter and install washer on shaft to raise shutter.
	Actuator rod bent.	Replace rod or check set screw on motor cam. Do not attempt to bend rod for an adjustment.
	Actuator motor, cam or switch No. 1 defective or out of adjustment.	Replace or adjust. (See page 16 for adjustment.)
	Shutter motor relay defective.	Check and replace if necessary.
When actuating arm is pushed shutter opens but machine will not vend.	Cam switch of shutter control box out of adjustment or defective.	Adjust or replace.
	Vend relay in control box inoperative.	Check and replace.
	Vend switch out of adjustment or defective.	Adjust or replace (See page 30 for adjustments).
	Timing module in control box open.	Check and replace if necessary.
	Bin or discharge auger motors inoperative.	Remove bin and check.
	Ice jammed in discharge spout.	Remove discharge auger and clear ice from spout and auger.
	Pin attaching bin drive hub to motor sheared.	Check and replace if found sheared. (Refer to Item No. 15 page 19).
Dispenser auger will not turn.	Drive on end of auger sheared.	Remove auger, replace drive.
	Gearmotor defective	Replace gearmotor.
Vend relay energized but machine will not dispense ice.	Contacts on relay bent or wires to relay loose.	Replace relay or tighten connections.
	Dispenser motors defective.	Repair or replace. These motors have an internal thermo overload - automatic reset.
Portion control will not work. Runs continuous when actuator is held on.	Timing module defective.	Replace module.
	Potentiometer switch defective.	Replace Potentiometer
	Loose connection or open wires to potentiometer.	Check terminal wires.

SERVICE ANALYSIS CHART

COMPLAINT	POSSIBLE CAUSE	CORRECTION
Will not dispense water when water switch is activated.	Defective water switch.	Replace switch.
	Defective water solenoid.	Replace solenoid located behind control panel.
	Water line restricted.	Clean.
Shutter motor will not stop. Shutter opens and closes.	Cam switches out of adjustment	Adjust (See page 16).
Machine runs but doesn't make ice.	Water not entering freezing chamber.	Plugged strainer or supply line. Check and clean. Air lock in gravity feed line. Check and remove air lock.
	Loss or undercharge of refrigerant.	Check for leaks and recharge.
	Moisture in system.	Check and remove charge and drier. Replace and recharge.
	Water seal leaking.	Replace seal.
Water leaks.	Defective water seal.	Replace.
	Gravity feed line leaking.	Check hose clamps and tubing.
	"O" ring in spout casting leaking.	Remove spout casting and install new "O" ring.
	Water level in reservoir too high.	Adjust to 1/4" below overflow pipe.
Excessive noise or chattering.	Scale or mineral build-up on inside of freezer or on auger.	Ice sticking and jamming inside. Clean with Ice Machine Cleaner or remove and manually polish auger and inner chamber walls of freezer barrel.
	Low suction pressure.	Raise suction pressure. Adjust head pressure control to recommended setting or balance refrigerant charge.
	Intermittent water supply.	Check and clean water strainer. Check gravity feed line for air lock. Remove air lock.
	Water level in reservoir too low.	Adjust to 1/4" below overflow pipe.
	Gearmotor endplay or worn bearings.	Repair or replace.
	Gearmotor loose on frame.	Tighten.
Low ice production.	Loss of refrigerant. Under or over-charge of refrigerant.	Check and recharge with proper amount of refrigerant.
	Drive motor weak.	Replace.
	Dirty or plugged condenser.	Clean condenser.
	Low water level in water reservoir.	Adjust to 1/4" below overflow pipe.

SERVICE ANALYSIS CHART

COMPLAINT	POSSIBLE CAUSE	CORRECTION
Low ice production. Continued.	Partial restriction in capillary tube or drier.	Moisture in system. Overcharge of oil in system. Remove charge by blowing back through cap tube,.Replace and recharge.
	Inlet water strainer partially plugged.	Remove screen and clean.
	Corroded or stained worm shaft due to water condition.	Remove worm shaft and clean, or use Ice Machine Cleaner. See Maintenance Section.
Machine continues to run with full storage bin.	Storage bin controls are defective.	Replace.
Squeal in freezer.	Too hard ice.	Increase water level in reservoir. Check low side pressure and adjust if necessary.
Machine will not operate.	Low or high pressure controls open.	Reset button. Check why controls have activated.

CLEANING DISPENSER MECHANISM

Cleaning of the dispenser mechanism should be accomplished every three months. This unit can be disassembled for cleaning without the use of tools.

1. Dispense all the ice from the bin.
2. Open top front door. This disconnects the flaker as well as the dispensing unit from the electrical power as safety switch is no longer held closed by the door.
3. Remove the front end plate from the auger by lifting the two lock arms.
4. Remove ice auger by pulling straight out.
5. Remove spout pin and remove electrical plug connected from the spout switch to control box.
6. Lift spout from the unit.
7. Remove cap nut from shaft in storage bin.
8. Lift off revolving storage bin and remove from the storage compartment.
9. Remove wing nuts at base of stationary bottom and lift out of storage compartment.
10. To assemble proceed in the same reverse order. Be sure the electrical plugs from the ice spout are inserted in the receptacle on top of the dispenser control box.
11. The ice auger must be turned until it engages with the output coupling of the gear unit when it is reinstalled.

MAINTENANCE INSTRUCTIONS FOR ICE MAKER SECTION

Combine this service with cleaning of dispenser section if possible.

The following services must be accomplished a minimum of two (2) times per year on all Ice Makers.

1. Check and clean water strainers and float valve. Depress float valve to insure full stream of water.
2. Check water level and machine level, keep water level below overflow, but as high as possible and still not run out of spout opening with machine off. Water should come out of spout with ice at all times.
3. Clean reservoir and interior of freezer using SCOTSMAN Ice Machine Cleaner.
   A. If machine has been cleaned regularly and no problems such as dry ice or chatter are noticed, clean by making ice from solution of 8 oz. of cleaner to 1 gal. warm water.
   B. If heavy mineral deposits on auger and walls, or sediment at inlet to freezer are encountered, clean by pouring strong solution (1/2 acid - 1/2 water) into reservoir and operate drive motor only for agitation. Allow 1/2 hour or longer as required. Drain by disconnecting tygon at water inlet to freezer.

NOTE: Cleaning requirements vary according to local water conditions. Visual inspection of the auger before and after cleaning will indicate best procedure to be followed in local areas.

ICE SHUTTER CONTROL SCHEMATIC

TO OPEN & CLOSE THE ICE DISCHARGE SPOUT

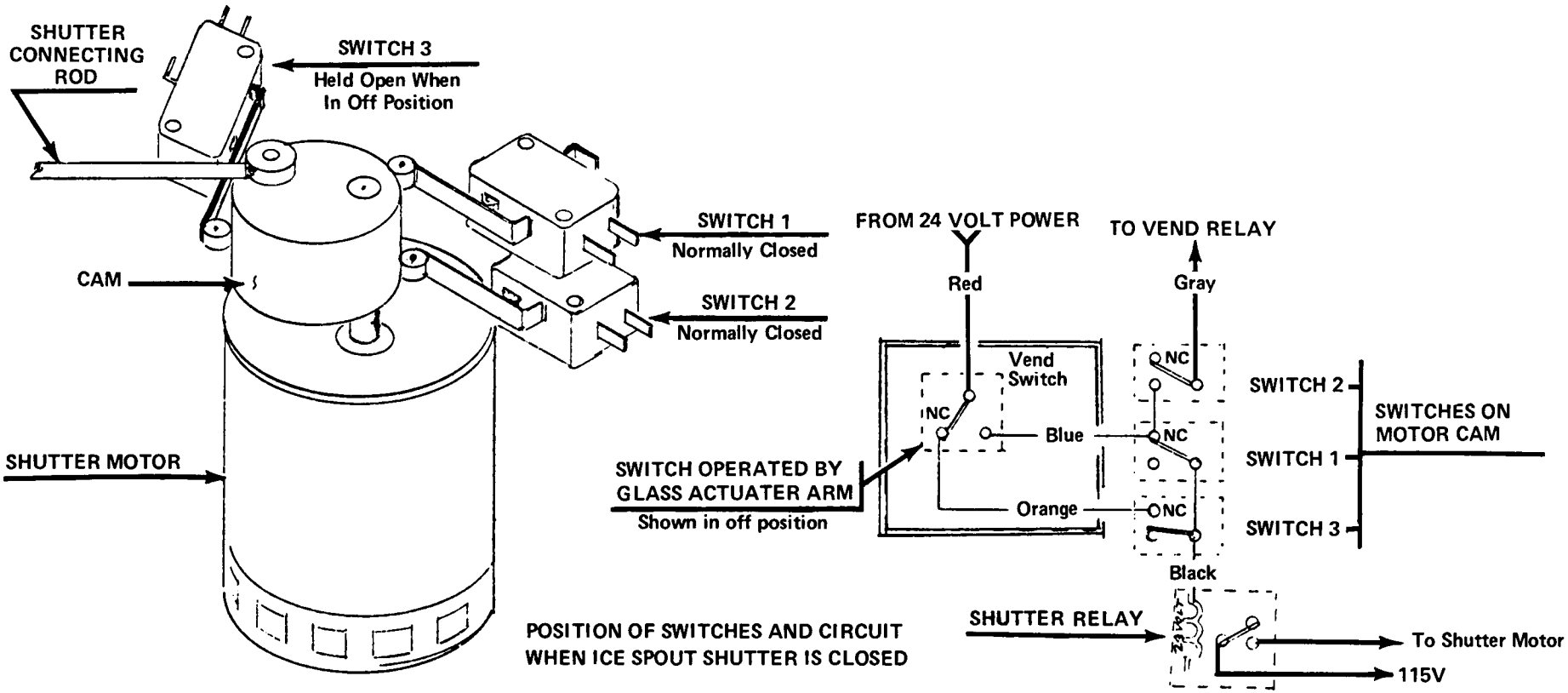

NOTE: If pressing the glass filler fails to initiate a vend cycle, it is possible one of the micro switches is out of adjustment. Switch No. 2 must be closed to start the cycle. If the shutter will not open, adjust switch No. 1. If the shutter will not close, adjust switch No. 3.

FREEZER GEARMOTOR

The FD7 is equipped with a 1/4 housepower direct drive gear reducer.

TO REPLACE:

1. Disconnect electrical power and shut off water supply to the unit.
2. Remove the top and left side panels.
3. Disconnect the electrical led to the gearmotor at the control box.
4. Remove the water line from reservoir and drain freezer.
5. Open right front door and disconnect the spout by removing the locking pin. Pull enough cord through the opening to set the spout in the bin.
6. Remove the two bolts holding the freezer bracket at the top of the tube to the inner wall.
7. Remove the three bolts holding the adaptor to the gear reducer.
8. Lift the freezer up and remove the coupling.
9. Remove the three bolts from the bottom of the frame holding the gear reducer to the chassis.
10. Remove gear reducer from machine.
11. Reverse procedure to replace unit.

FREEZER ASSEMBLY

TO REPLACE:

1. Disconnect electrical power and shut off water supply to unit.
2. Remove top and left side panel.
3. Remove tygon tubing from bottom of freezer and drain water from machine.
4. Open right front door and disconnect spout by removing the locking pin. Pull enough cord through the opening to set the spout in the bin.
5. Purge off refrigerant and disconnect flare nuts at drier and suction Rotolock valve.
6. Remove the three bolts securing the freezer base adaptor to the gear reducer. Lift freezer and remove coupling.
7. Remove four screws from corner brace. (Number 37, side view, Air and Water Cooled)
8. Pull freezer assy from machine being careful not to kink the suction line or cap tube.
9. Reverse procedure to replace unit.

FREEZER WORM SHAFT (AUGER)

TO REPLACE:

1. Disconnect electrical power and shut off water supply to unit.
2. Remove top and left side panels.
3. Remove tygon tubing from bottom of freezer and drain water from machine.
4. Remove two stainless steel screws from the top rear portion of freezer ass'y.
5. By lifting up on the freezer cap pull ring, the complete worm shaft and upper bearing retainer can be removed. NOTE: The top half of the water seal is attached to the lower end of the auger.

FREEZER ASSEMBLY TOP BEARING

TO REPLACE:

1. Follow steps 1 thru 5, freezer worm shaft removal.
2. Remove cap ring and freezer cap from bearing retainer.
3. Remove cap screw and washer holding shaft to inner race of bearing and pull worm shaft from bearing and retainer.
4. Remove snap ring and pull bearing from retainer.
5. Reverse steps to re-install.
6. When replacing with a new bearing, add new grease. (Beacon No. 325)

FREEZER ASS'Y BOTTOM BEARING AND WATER SEAL

TO REPLACE:

1. Follow steps 1 thru 5, freezer worm shaft removal.
2. Remove 3 bolts holding freezer to mounting adaptor.
3. Lift freezer off adaptor enough to allow bottom bearing and bottom half of water seal to be removed from freezer tube.
4. Lightly grease bottom half of new water seal and insert face up approximately 1/2" in freezer tube.
5. Insert bottom bearing in bottom of freezer tube. Force approximately 1/8" past tube end. This will allow the positioning ring on the adaptor to properly position the bearing in the tube when the three mounting bolts are replaced.
6. After securing the three mounting bolts, put new top half of water seal on worm shaft. When reassembling, put a small amount of vaseline on the shaft end. This will allow the shaft to slide through the rubber on the water seal without tearing it.
7. Carefully insert worm shaft in freezer tube and into coupling on bottom.
8. Replace 2 stainless steel screws on back of freezer ass'y.

BIN FULL SWITCH

The level of ice in the bin is controlled by the bin full switch located in the top center of the bin compartment. As the ice level increases, it pushes the stainless steel paddle back, depressing the cut off switch. As the ice is dispensed, the paddle falls forward, re-starting the freezing cycle. Should this switch fail to shut the machine off when the bin is full, the ice will back up into the discharge spout. The pressure created in the spout ass'y will depress the spout plate switch, shutting off the machine. This provides a back up or safety device to prevent the ice from backing all the way to the freezer ass'y and causing damage to freezer or gearmotor components.

TO REPLACE:

1. Disconnect electrical power to the unit.
2. Remove top panel.
3. Open right front door and remove hex nut holding switch in place. Also remove 4 screws holding cover down.
4. Remove and replace switch, remount cover and hinge ass'y, replace hex nut on switch.
5. Turn on machine and check switch operation.

WATER RESERVOIR

The water level is maintained in the reservoir by a float operated valve. Water is piped from the water reservoir to the freezing chamber by a gravity feed line maintaining an equal water level.

The reservoir is equipped with a 2 inch air gap to prevent back siphoning and meet all health codes.

The water level in the reservoir is adjusted by bending the float arm. The water level should be set approximately 1/4 inch below the overflow stand pipe.

A water strainer must be installed in the supply line. A strainer is provided with each machine.

TO REPLACE:

1. Remove cabinet top and left side panel.
2. Turn off water supply and drain reservoir.
3. Remove 1/4 inch inlet water line.
4. Remove tygon feed line to freezer.
5. Remove two screws holding reservoir bracket to wall.
6. Lift out reservoir.
7. To replace, reverse procedure.

HEAD PRESSURE CONTROL, WATER COOLED

This safety device is mounted in the control box behind the left side door. It is a manual reset control with an adjustment screw for raising or lowering the cut-out pressure. This control is preset at the factory for 190 PSIG. It will shut off the machine if the head pressure exceeds this point. Usually, this condition is caused by the water being cut off to the condenser.

LOW PRESSURE CONTROL – AIR & WATER COOLED

This is a manual reset, safety device designed to cut off the machine if the back pressure drops below 5 PSIG. This situation could be caused by loss of water in the freezer, low refrigerant or low ambient temperatures. Other conditions could also exist which would lower the back pressure and damage the machine if it continued to run.

WATER REGULATING VALVE (WATER COOLED MODELS ONLY)

The water Regulating Valve is deisgned to maintain a constant head pressure by regulating the amount of incoming water flow through the water cooled condenser. This valve is operated by high side pressure and may be adjusted by the adjusting screw on top of the valve to raise or lower the operating head pressure.

TO REPLACE:

1. Shut off water supply to machine and disconnect electrical power.
2. Disconnect old valve from water supply line and install new valve.
   NOTE: Be sure arrow on side of valve points in direction of water flow.
3. Purge off refrigerant and disconnect valve capillary line from high side fitting and immediately attach capillary from new valve.
4. Recharge system. Refer to page 8 for proper referigerant charge and head and back pressure settings.

BIN AND AUGER DRIVE UNIT ASS'Y

TO REPLACE:

1. Disconnect electrical power to unit.
2. Unplug spout at control box. Remove locking pin and pull spout out of compartment.
3. Pull hinge pin and remove stainless steel shut off arm from ice level control ass'y.
4. Remove bin locking cap and lift out bin.
5. Press out pin (item 15, page 25) and remove hub drive. (item 5, page 25)
6. Remove end plate ass'y (item 42, page 20) pull out auger.
7. Remove hold down nuts on stationary bottom and lift out.
8. Disconnect wires to drive unit.
9. Remove screws and lift off motor cover.
10. Remove 4 screws and pull out auger drive motor. (Horizontal shaft, 56 RPM)
11. Turn mounting plate over and remove screws holding bin support (item 12, page 25)
12. Remove screws and lift out bin drive motor. (perpendicular shaft, 2 RPM)

NOTE: WHEN REMOUNTING BIN DRIVE MOTOR, DO NOT TIGHTEN SCREW COMPLETELY. THE MOTOR IS DESIGNED TO HANG FREE UNDER THE BIN SUPPORT. LEAVE 1/4" GAP BETWEEN THE MOTOR MOUNT POSTS AND THE BIN SUPPORT.

FD7 FRONT VIEW
(Air Cooled)

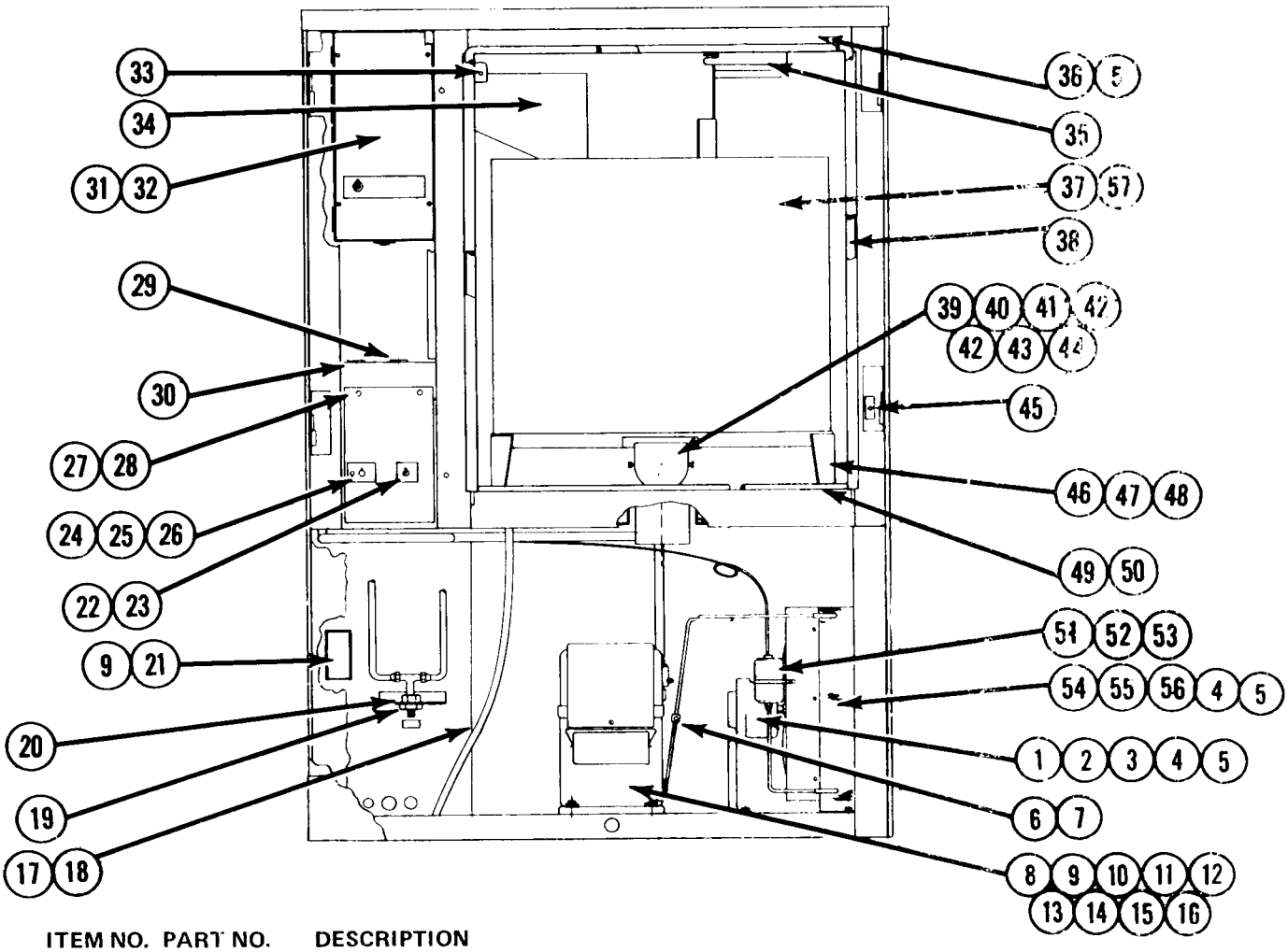

ITEM NO.	PART NO.	DESCRIPTION
1.	18-0363-00	Blade, Fan
2.	18-0388-00	Bracket, Fan
3.	12-1576-01	Fan Motor
4.	03-1405-03	Screw
5.	03-1417-09	Washer
6.	16-0563-00	Cap, Brass
7.	16-0560-00	Valve Core
8.	18-3500-01	Compressor
	18-2200-25	Overload
	18-3520-00	Relay
	18-1901-33	Capacitor
9.	12-1213-10	Snap Bushing
10.	18-2200-27	Sleeve
11.	18-2200-28	Grommet
12.	18-2201-30	Valve, Suction, Rotolock
13.	18-2300-29	Seal, Valve
14.	03-1417-12	Washer
15.	03-1405-20	Screw
16.	03-1408-02	Washer
17.	A16173-008	Drain Tube
18.	02-1338-00	Clamp
19.	03-1394-01	Nut
20.	A24625-001	Water Inlet Ass'y
21.	12-0901-00	Cover
22.	15-0556-01	Water Decal
23	12-0426-01	Toggle Switch
24.	15-0555-01	Ice Decal
25.	02-1810-00	Potentiometer Knob
26.	12-1557-00	Potentiometer
27.	03-1404-09	Screw
28.	A24259-001	Switch Mount
29.	12-1213-13	Snap Bushing
30.	12-1213-15	Snap Bushing
31.	03-1404-08	Screw
32.	A23769-001	Cover, Control Box
33.	A14926-000	Locking Pin, Spout
34.	See page 26	Spout Ass'y
35.	See page 28	Switch Ass'y
36.	03-1403-47	Screw
37.	A14945-000	Storage Bin
38.	A24624-001	Gasket
29.	03-1409-12	Washer
40.	A14932-000	Chute Lock
41.	A16766-000	Ice Auger Ass'y
42.	A14933-000	End Plate Ass'y
43.	03-1408-09	Washer
44.	03-1129-00	Cap Nut
45.	12-1276-00	Switch
46.	See Page 25	Drive Unit Ass'y
47.	A24294-001	Stationary Bottom
48.	03-1235-00	Wing Nut
49.	13-0765-01	Gasket
50.	A24350-001	Trim Channel
51.	02-0544-00	Drier
52.	A09388-001	Brace, Drier
53.	03-1404-15	Screw
54.	A23754-001	Condenser
55.	A23825-001	Shroud
56.	03-1404-03	Screw
*57.	02-1587-00	Bin Locking Cap

* Not Shown

SIDE VIEW – AIR & WATER

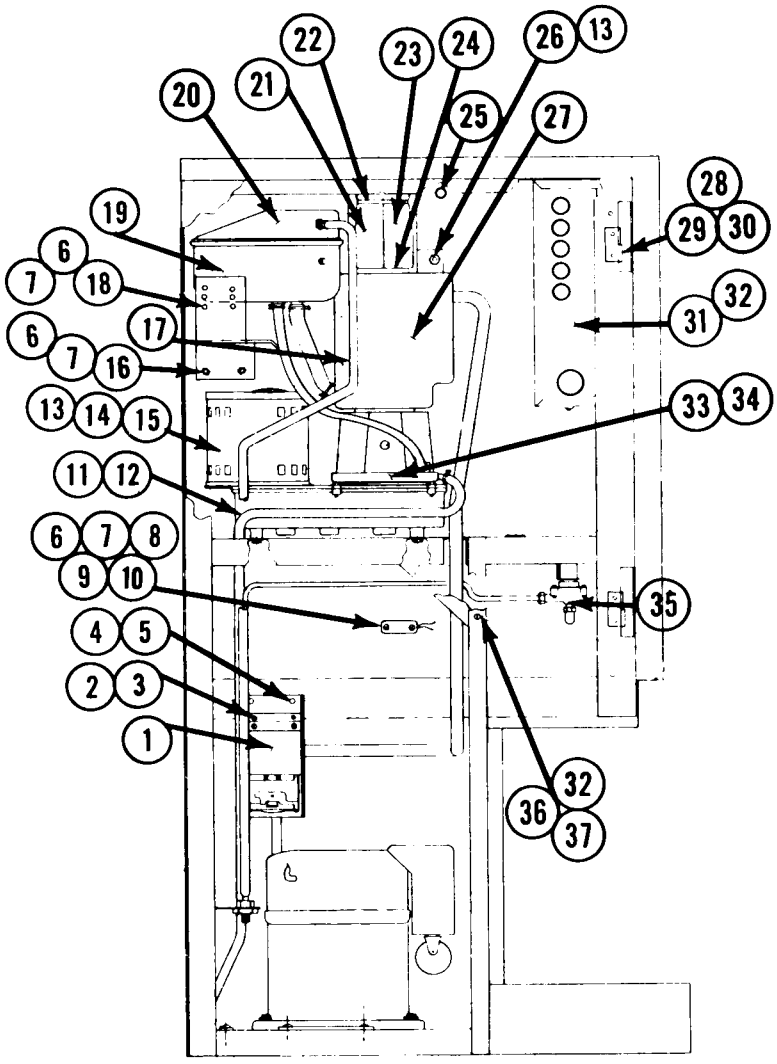

ITEM NO.	PART NO.	DESCRIPTION
1.	See Page 18	Shutter Actuator Assy.
2.	03-1404-05	Screw
3.	A21226-000	Cover
4.	03-1417-09	Washer
5.	03-1403-47	Screw
6.	03-1403-28	Screw
7.	03-1417-05	Washer
8.	12-0184-01	Splice cap
9.	A24286-001	Junction Box Ass'y
10.	12-0901-00	Cover
11.	A21002-003	Drain Tube
12.	02-0534-00	Clamp
13.	03-1410-04	Washer
14.	03-1405-18	Screw
15.	A22750-001	Gear Motor
16.	A24339-001	Reservoir Mount
17.	A23751-001	Water Line
18.	03-1406-06	Nut
19.	A23410-011	Reservoir Ass'y
20.	A16012-000	Cover
21.	A17890-000	Insulation, Spout, Lt.
22.	A08733-000	Strap, Insulation
23.	A17891-000	Insulation, Spout, Rt.

ITEM NO.	PART NO.	DESCRIPTION
24.	02-1438-00	Clip, Insulation
25.	12-1213-04	Snap Bushing
26.	03-1406-10	Nut
27.	A23518-001	Freezer Ass'y
28.	03-1407-04	Washer
29.	15-0543-03	Hinge, Rt
	15-0543-01	Hinge, Left
30.	03-1403-25	Screw
31.	A23697-001	Control Box, Air Cooled
	A24195-001	Control Box. Water Cooled
32.	03-1403-17	Screw
33.	03-1420-03	Screw
34.	03-1408-03	Washer
35.	A24527-007	Solenoid
36.	03-1417-03	Washer
37.	A23731-001	Corner Brace

FRONT VIEW (Water Cooled)

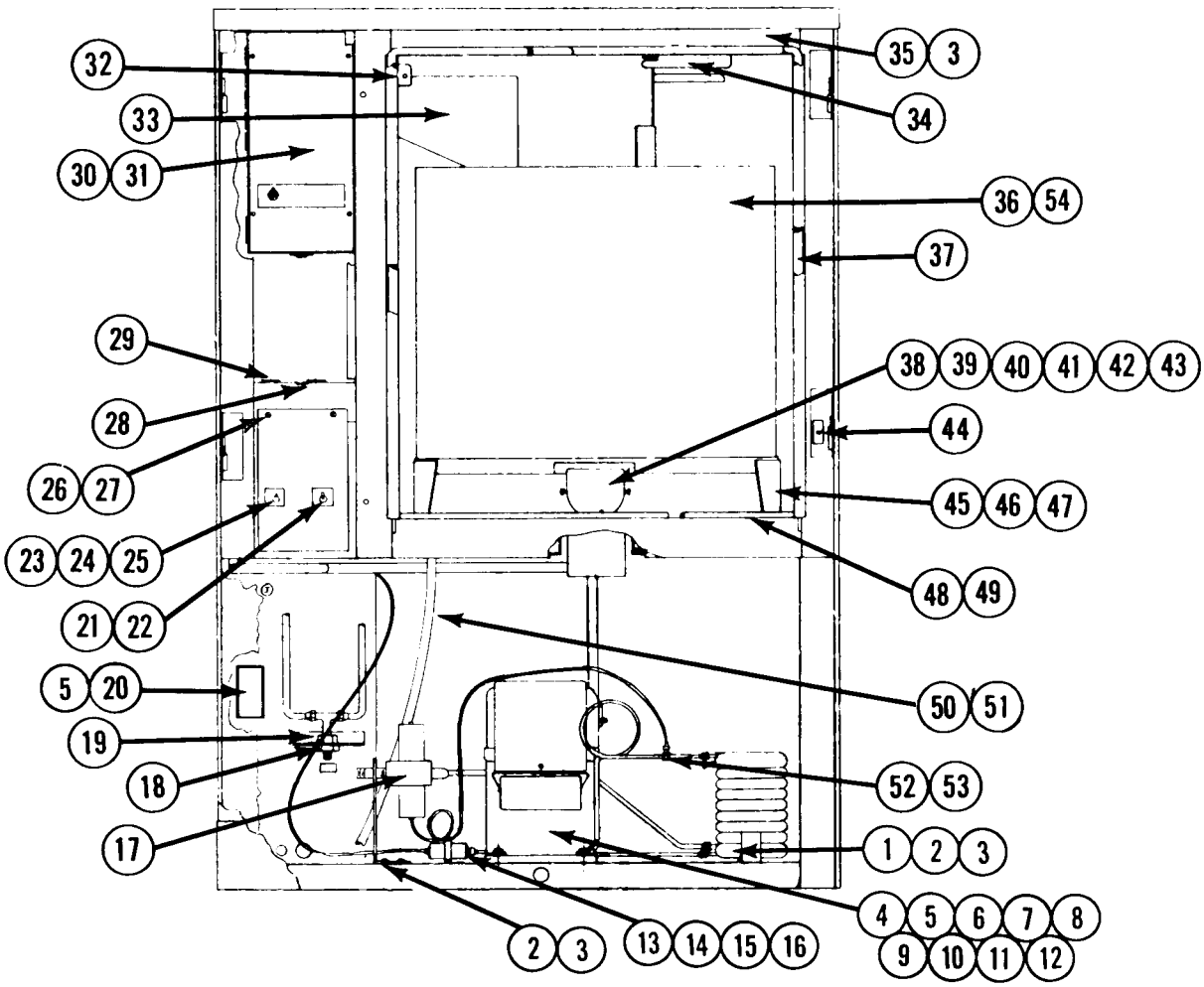

ITEM NO.	PART NO.	DESCRIPTION
1.	18-1305-01	Condenser
2.	03-1405-03	Screw
3.	03-1417-09	Washer
4.	18-3500-01	Compressor
	18-2200-25	Overload
	18-3520-00	Relay
	18-1901-33	Capacitor
5.	12-1213-10	Bushing
6.	18-2200-27	Sleeve
7.	18-2200-28	Grommet
8.	18-2201-30	Valve, Suction Rotolock
9.	18-2300-29	Seal, Valve
10.	03-1417-12	Washer
11.	03-1405-20	Screw
12.	03-1408-02	Washer
13.	A09388-01	Brace, Drier
14.	02-0544-00	Drier
15.	03-1405-03	Screw
16.	03-1417-09	Washer
17.	11-0198-00	Water Regulator
18.	03-1394-00	Nut
19.	A24625-001	Water Inlet Ass'y
20.	12-0901-00	Cover
21.	15-0556-01	Water Decal
22.	12-0426-01	Toggle Switch
23.	15-0555-01	Ice Decal
24.	02-1810-00	Potentiometer Knob
25.	12-1557-00	Potentiometer
26.	A24259-001	Switch Mount
27.	03-1404-09	Screw
28.	12-1213-13	Snap Bushing
29.	12-1213-15	Snap Bushing
30.	03-1404-08	Screw
31.	A23769-001	Cover, Control Box
32.	A14926-000	Locking Pin, Spout
33.	See Page 26	Spout Ass'y
34.	See Page 28	Switch Ass'y
35.	03-1403-47	Screw
36.	A14945-000	Storage Bin
37.	A24624-001	Gasket
38.	03-1409-12	Washer
39.	A14932-000	Chute Lock
40.	A16766-000	Ice Auger Ass'y
41.	A14933-000	End Plate Ass'y
42.	03-1408-09	Washer
43.	03-1129-00	Cap Nut
44.	12-1276-00	Switch
45.	See Page 25	Drive Unit Ass'y
46.	A24294-001	Stationary Bottom
47.	03-1235-00	Wing Nut
48.	A24350-001	Trim Channel
49.	13-0765-01	Gasket
50.	A16173-008	Drain Tube
51.	02-1338-00	Clamp
52.	16-0563-00	Brass Cap
53.	16-0560-00	Valve Core
*54.	02-1587-00	Bin Locking Cap

FREEZER ASSEMBLY
A23518-020

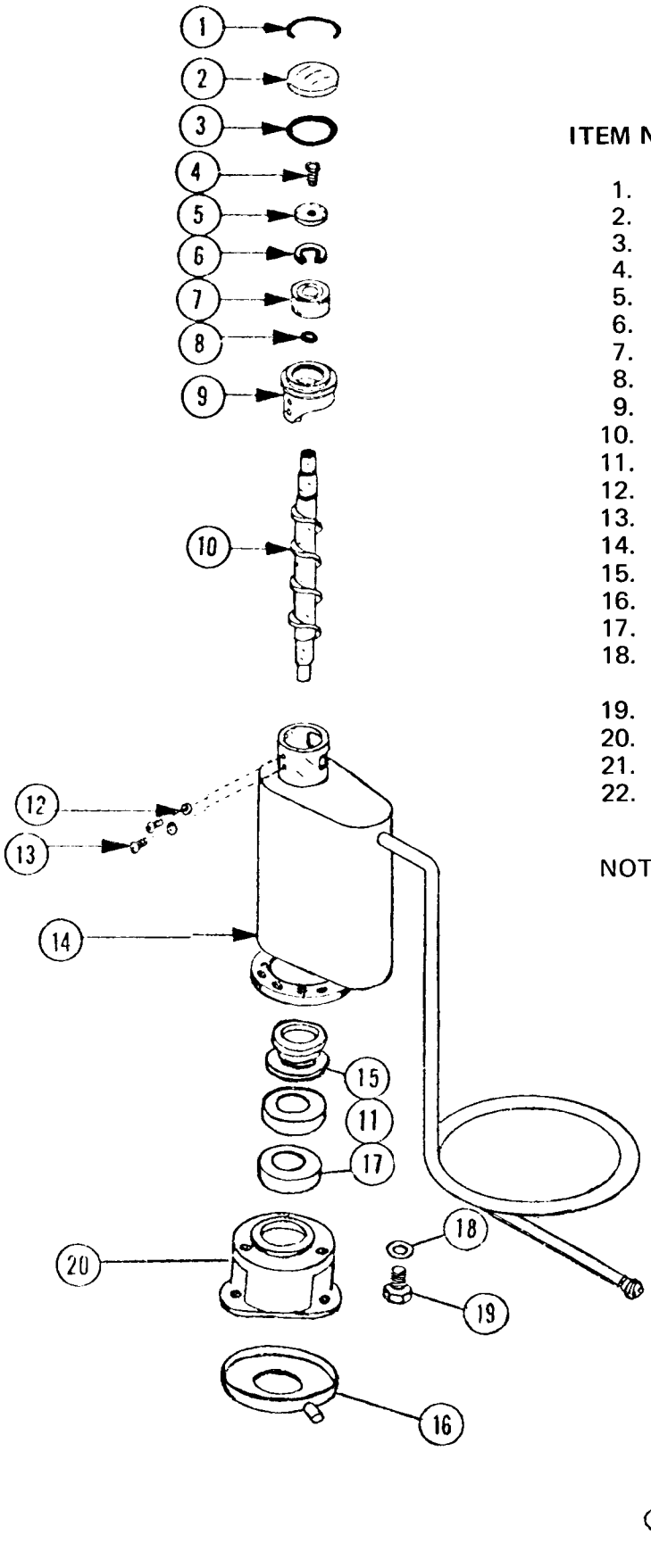

ITEM NO.	PART NO.	DESCRIPTION
1.	A08582-000	Cap Hook
2.	A08581-000	Cap
3.	13-0617-20	"O" Ring
4.	03-1405-36	Cap Screw
5.	A06273-000	Washer
6.	03-712-00	Snap Ring
7.	02-0646-00	Bearing
8.	13-0617-15	"O" Ring
9.	A08316-000	Breaker
10.	02-0617-00	Auger
11.	02-0619-00	Bearing
12.	03-1410-03	Washer (2)
13.	03-1403-48	Screw (2)
14.	A23519-020	Freezer Fab. Ass'y
15.	02-0929-00	Water Seal
16.	A24156-001	Drip Pan
17.	A10591-000	Bearing Retainer
18.	03-1410-04	Lockwasher
	03-1408-03	Washer
19.	03-1405-41	Screw
20.	02-1629-00	Adapter
21.	15-0573-01	Drive Coupling
22.	13-0704-00	Shaft Drip Shield Rubber

NOTE: Items 16, 21, and 22 do not come with Freezer Assembly.

GEAR MOTOR ASSEMBLY

A22750-021

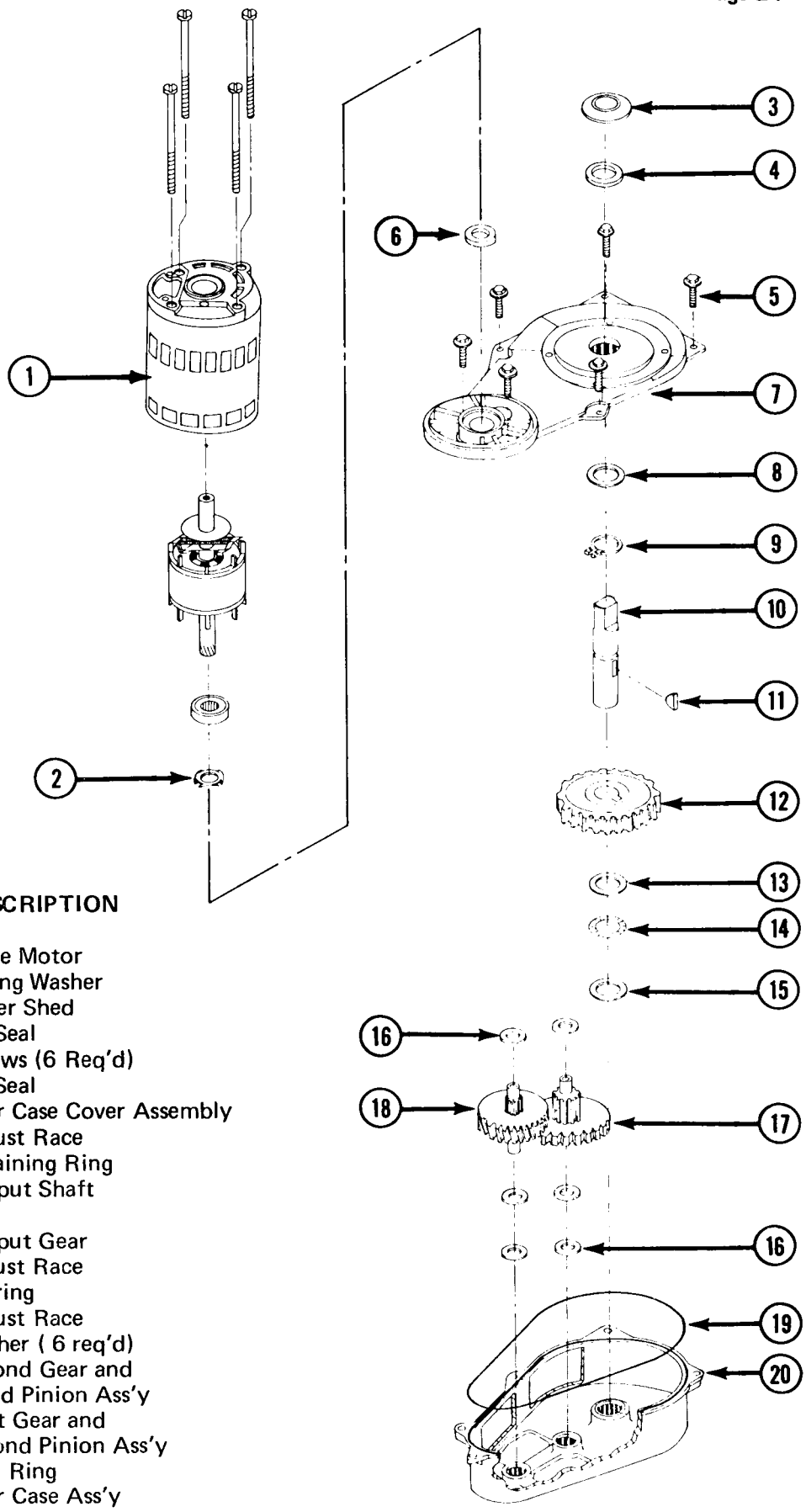

ITEM NO.	PART NO.	DESCRIPTION
1.	12-1741-01	Drive Motor
2.	03-1426-00	Spring Washer
3.	13-0709-02	Water Shed
4.	02-1607-00	Oil Seal
5.	03-1251-00	Screws (6 Req'd)
6.	02-1606-00	Oil Seal
7.	A22200-000	Gear Case Cover Assembly
8.	02-1681-00	Thrust Race
9.	03-1363-00	Retaining Ring
10.	02-1652-00	Output Shaft
11.	03-1364-00	Key
12.	02-1653-00	Output Gear
13.	02-1681-00	Thrust Race
14.	02-1680-00	Bearing
15.	02-1679-00	Thrust Race
16.	03-1408-24	Washer (6 req'd)
17.	02-1604-00	Second Gear and Third Pinion Ass'y
18.	02-1603-00	First Gear and Second Pinion Ass'y
19.	13-0617-38	"O" Ring
20.	A22199-000	Gear Case Ass'y

DRIVE UNIT ASSEMBLY

A24095-001

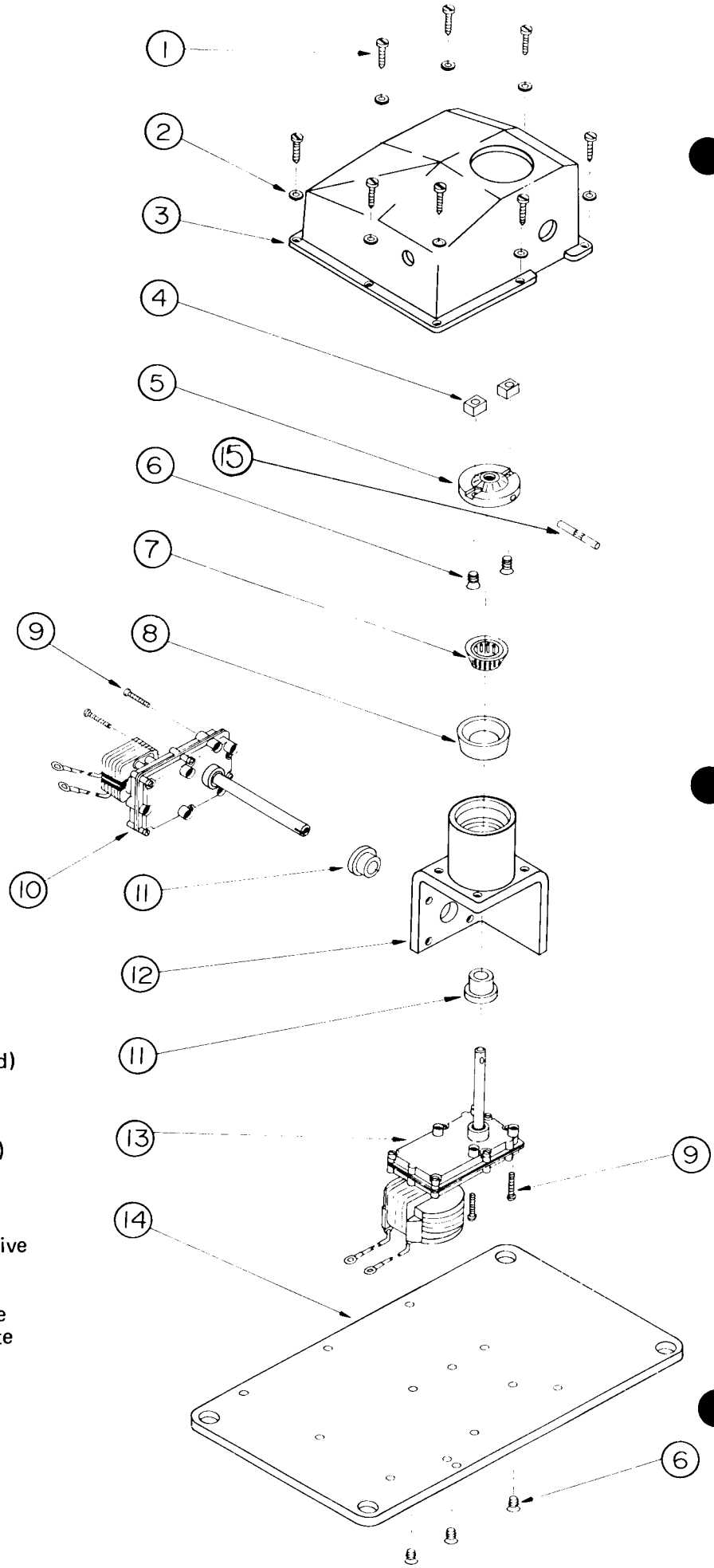

ITEM	PART NO.	DESCRIPTION
1	03-1403-15	Screw (8 req'd)
2	03-1407-02	Washer (8 req'd)
3	02-2049-01	Motor Cover
4	A17482-000	Key
5	A24089-001	Hub Drive
6	03-1418-13	Screw (5 req'd)
7	02-2014-01	Roller Bearing
8		Insert
9	03-1403-36	Screw (8 req'd)
10	12-1851-01	Motor-Auger Drive
11	02-1461-00	Bearing
12	A24087-001	Bin Support
13	12-1850-01	Motor-Bin Drive
14	A23841-001	Motor Mtg. Plate
15	A24094-001	Pin

SPOUT ASSEMBLY
A21655-000

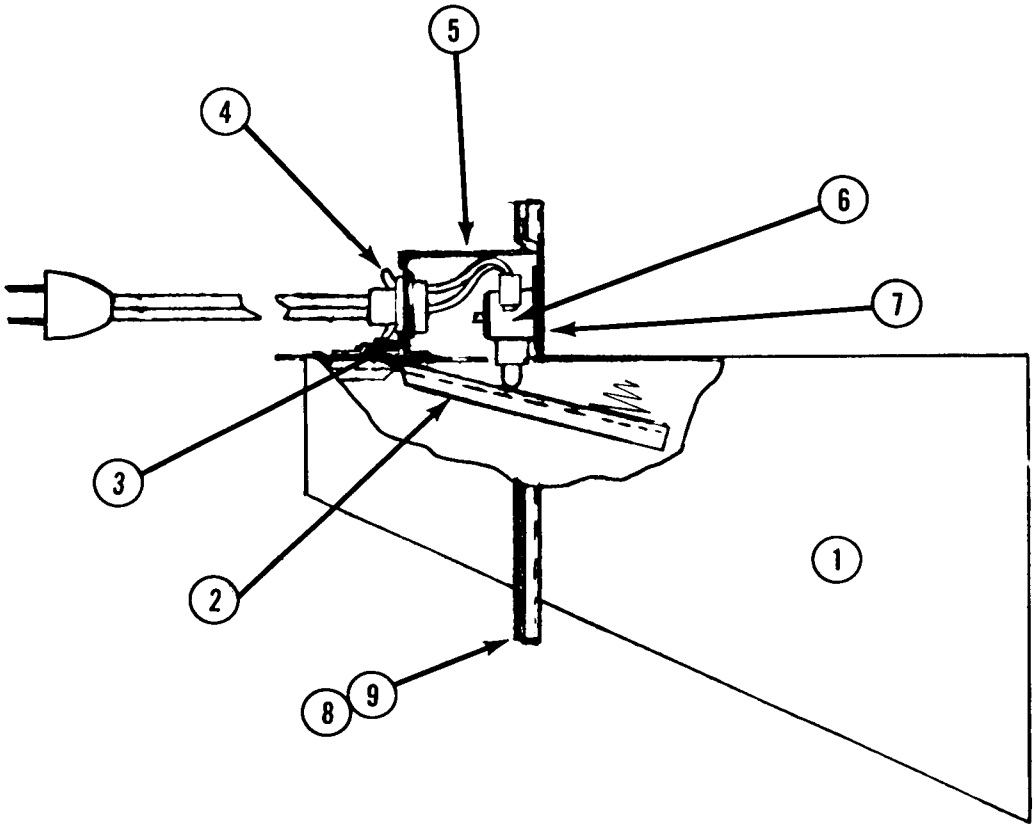

* Not Shown

ITEM NO.	PART NO.	DESCRIPTION
1.	A21656-000	Spout Fab. Ass'y
2.	A16353-000	Spout Pressure Plate
3.	A21654-000	Plate Stop
4.	03-1229-00	Wing Nut
5.	A24453-001	Limit Box Ass'y
6.	12-1018-00	Micro Switch
7.	03-1403-08	Screw
8.	13-0624-02	Gasket
9.	13-0624-01	Gasket
*10.	A14926-000	Locking Pin Spout

SHUTTER ACTUATOR ASSEMBLY

A23738-001

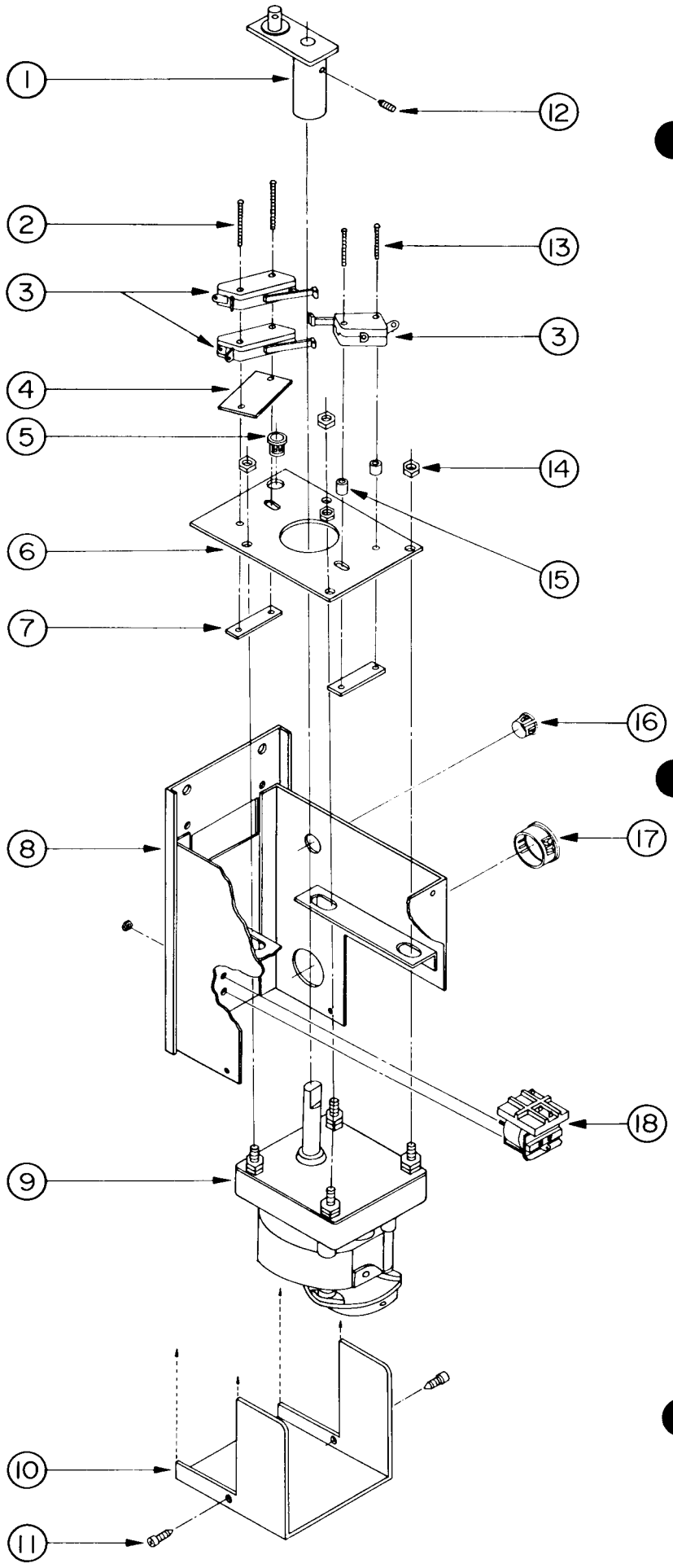

ITEM	PART NO.	DESCRIPTION
1.	A24356-001	Cam Fab. Ass'y
2.	03-1403-63	Screw (2 Req'd.)
3.	12-1614-00	Switch (3 Req'd.)
4.	A21814-000	Fish Paper
5.	12-1213-02	Snap Bushing
6.	A23737-001	Plate, Comp. M. T. G.
7.	A22053-000	Twin Nut (2 Req'd.)
8.	A21220-000	Motor Mounting Fab. Assembly
9.	12-1613-00	Motor, Gear
10.	A21783-000	Shutter Cover
11.	03-1404-05	Screw
12.	03-1451-00	Set Screw
13.	03-1403-62	Screw (2 Req'd.)
14.	03-1406-05	Nut (4 Req'd.)
15.	02-1820-00	Spacer (2 Req'd.)
16.	12-1213-04	Snap Bushing
17.	12-1213-09	Snap Bushing
18.	12-1467-00	Relay

SHUTTER ACTUATOR ROD ASSEMBLY

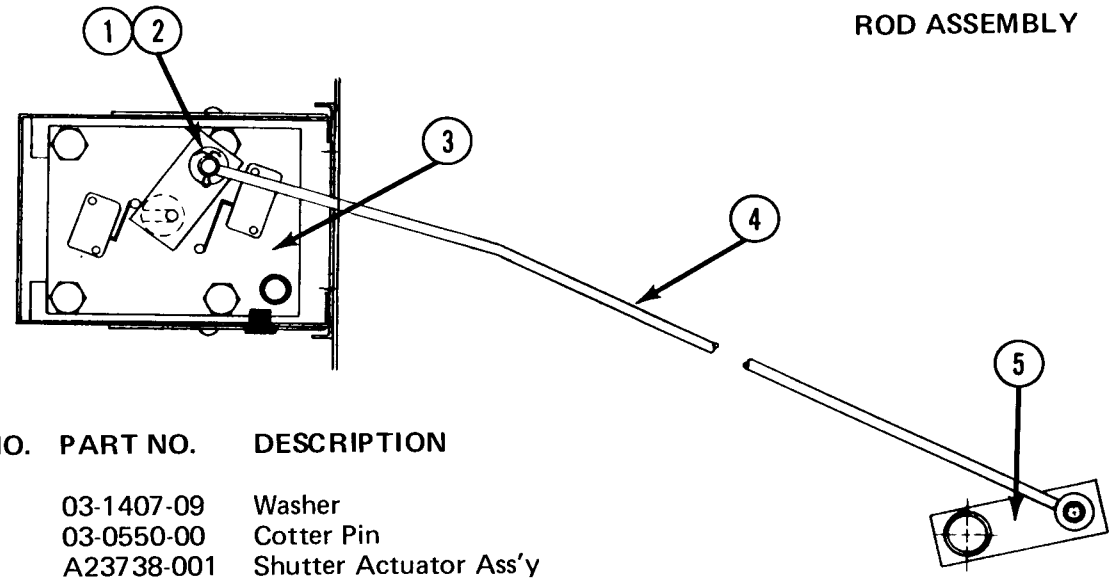

ITEM NO.	PART NO.	DESCRIPTION
1.	03-1407-09	Washer
2.	03-0550-00	Cotter Pin
3.	A23738-001	Shutter Actuator Ass'y (See exploded view, page 27)
4.	A23692-001	Rod, Actuator
5.	A23740-001	Arm, Actuator
*	A25180-001	Ice Shutter Plate
*	A16835-000	Bearing Nut, Ice Shut Off
*	A16857-000	Pin, Ice Shut Off
*	03-1539-01	E-Ring, Ice Shut Off

* Part Not Shown

BIN FULL SWITCH ASSEMBLY

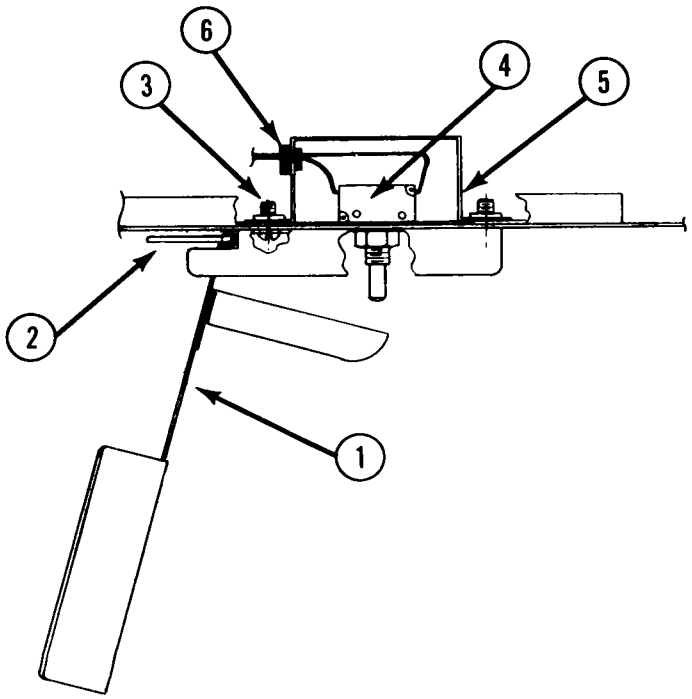

ITEM NO.	PART NO.	DESCRIPTION
1.	A16883-000	Bottom Hinge Ass'y
2.	A16885-000	Pin, Hinge
3.	03-1403-27	Screw
4.	12-1018-01	Switch
5.	A16880-000	Cover Ass'y
6.	12-0629-03	Snap Bushing

ICE DISCHARGE SPOUT ASSEMBLY

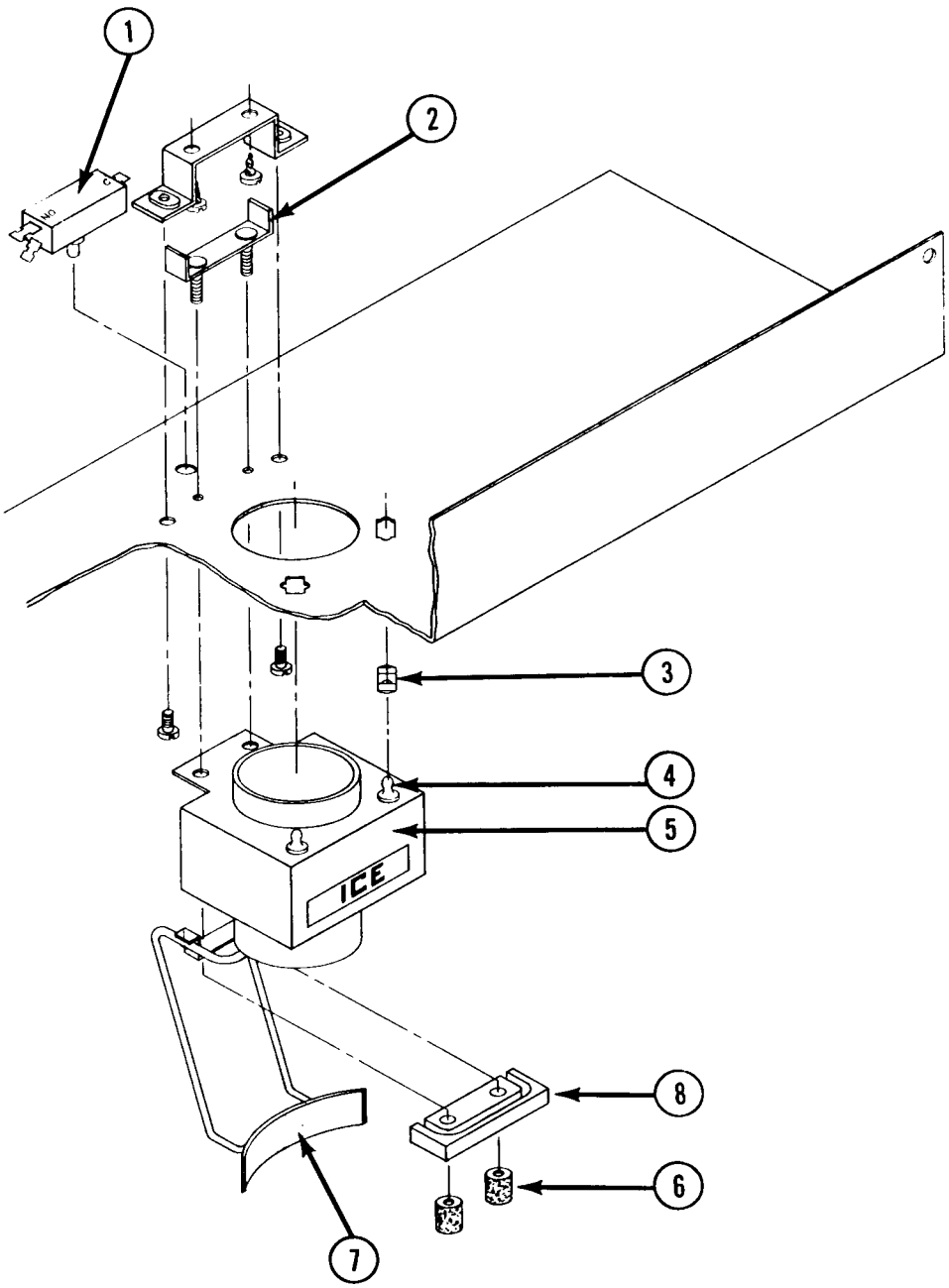

ITEM NO.	PART NO.	DESCRIPTION
1.	12-1570-00	Micro Switch
2.	A24084-001	Bracket Adapter
3.	02-0836-00	Catch, Cabinet
4.	15-0411-00	Strike
5.	A23844-001	Spout Cover
6.	A22031-000	Thumb Nut
7.	02-2090-01	Actuator Arm
8.	A22032-000	Adapter

FD7 RESERVOIR ASSEMBLY

A23532-001 Complete (less cover)

ITEM NO.	PART NO.	DESCRIPTION
1.	A16012-000	Reservoir Cover
2.	02-1259-00	Valve Pin
3.	02-1320-00	Deflector
4.	S08779-000	Inlet Valve
5.	03-1001-00	Rivet
6.	A05777-000	Valve Seat Holder
7.	S06947-000	Valve Seat
8.	03-1394-00	Nut
9.	A12869-000	Bracket
10.	S06715-000	Stand Pipe
11.	S08138-000	Inlet Valve Ass'y
12.	A23533-001	Reservoir Body
13.	A08055-000	Bracket Nut
14.	A12067-000	Float and Arm Ass'y
15.	A18418-001	Water Deflector

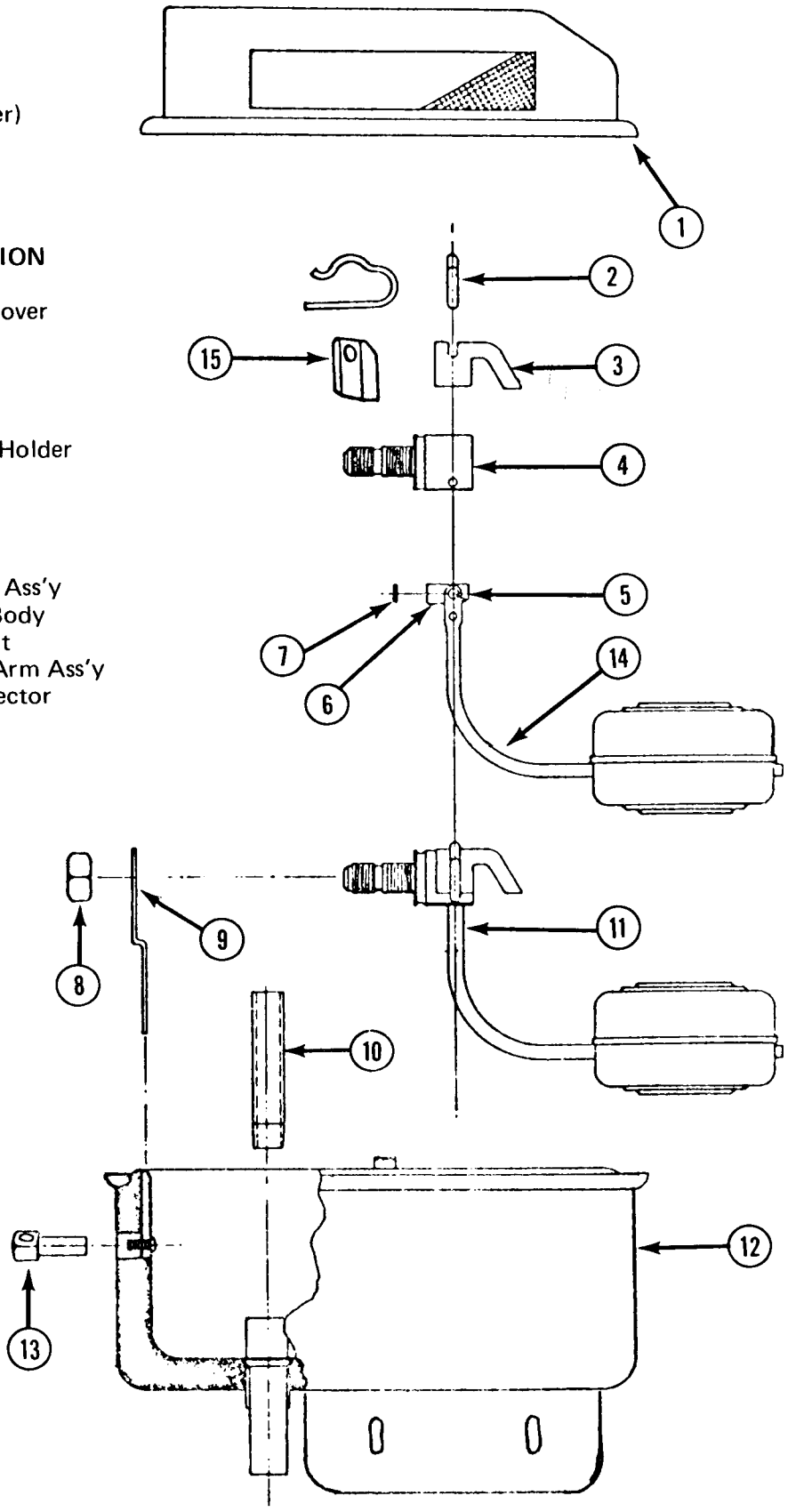

CONTROL BOX

Air Cooled

A23697-001

ITEM NO.	PART NO.	DESCRIPTION
1.	A23696-001	Control Box Fab Ass'y
2.	12-1809-00	Transformer
3.	03-1403-04	Screw
4.	12-0419-01	Relay
5.	03-1403-20	Screw
6.	11-0358-00	Pressure Control
7.	03-1403-02	Screw
8.	13-0557-00	Grommet
9.	12-0994-00	Socket
10.	03-1406-01	Nut
11.	12-1213-12	Snap Bushing
12.	03-1403-21	Screw
13.	12-1861-01	Terminal Block
14.	12-0537-00	Toggle Switch
15.	03-1403-17	Screw
16.	A24272-001	Relay Sub Ass'y
17.	12-1213-10	Snap Bushing
18.	03-1417-03	Washer
19.	12-1860-01	Terminal Block

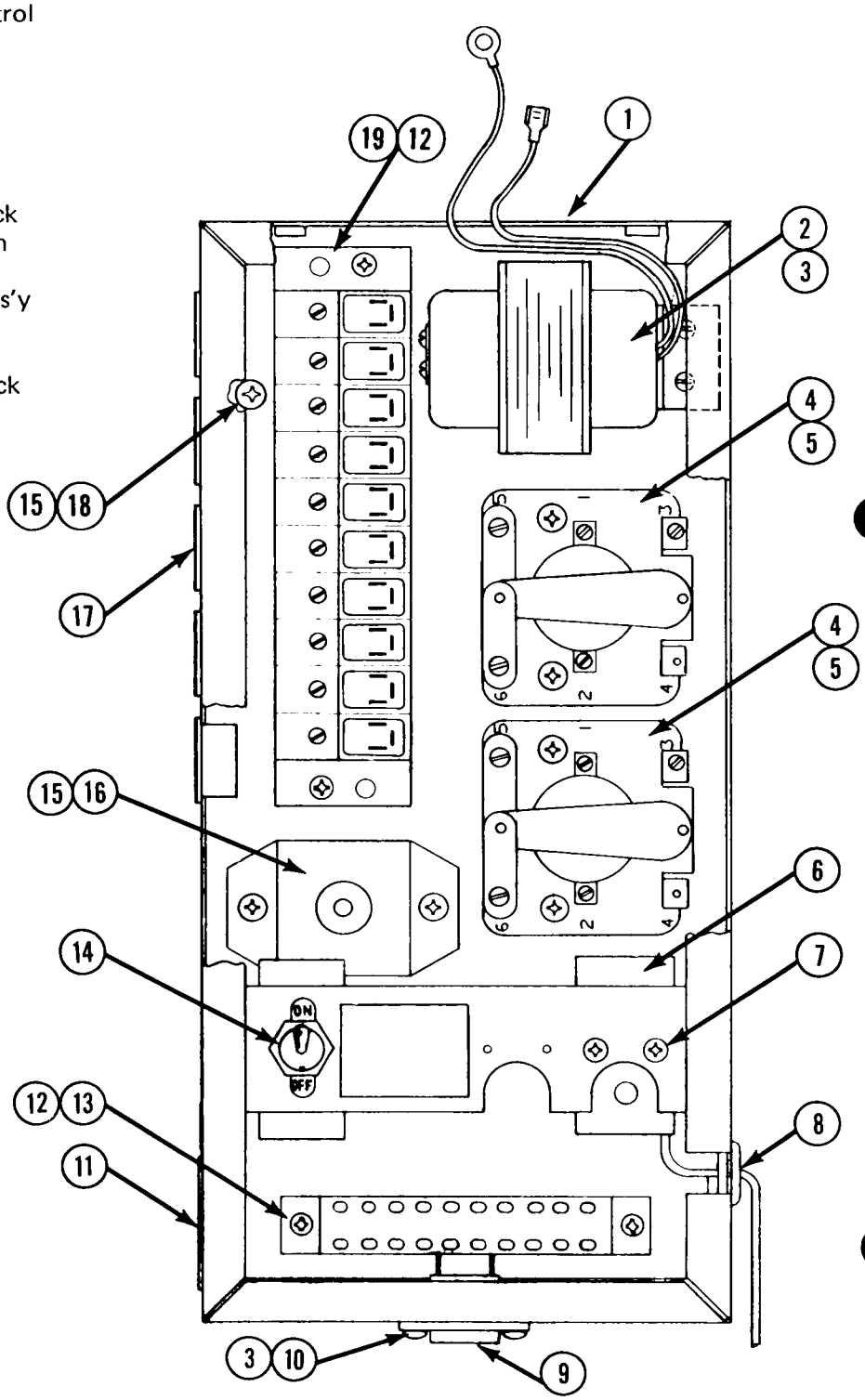

CONTROL BOX
Water Cooled
A24195-001

ITEM NO.	PART NO.	DESCRIPTION
1.	A23696-001	Control Box Fab Ass'y
2.	12-1809-00	Transformer
3.	03-1403-04	Screw
4.	12-0419-01	Relay
5.	03-1403-20	Screw
6.	11-0358-00	Pressure Control
7.	03-1403-02	Screw
8.	11-0357-02	Pressure Control
9.	13-0557-00	Grommet
10.	12-0994-00	Socket
11.	03-1406-01	Nut
12.	12-1213-12	Snap Bushing
13.	03-1403-21	Screw
14.	12-1861-01	Terminal Block
15.	12-0537-00	Toggle Switch
16.	03-1403-17	Screw
17.	A24272-001	Relay Sub Ass'y
18.	12-1213-10	Snap Bushing
19.	03-1417-03	Washer
20.	12-1860-01	Terminal Block

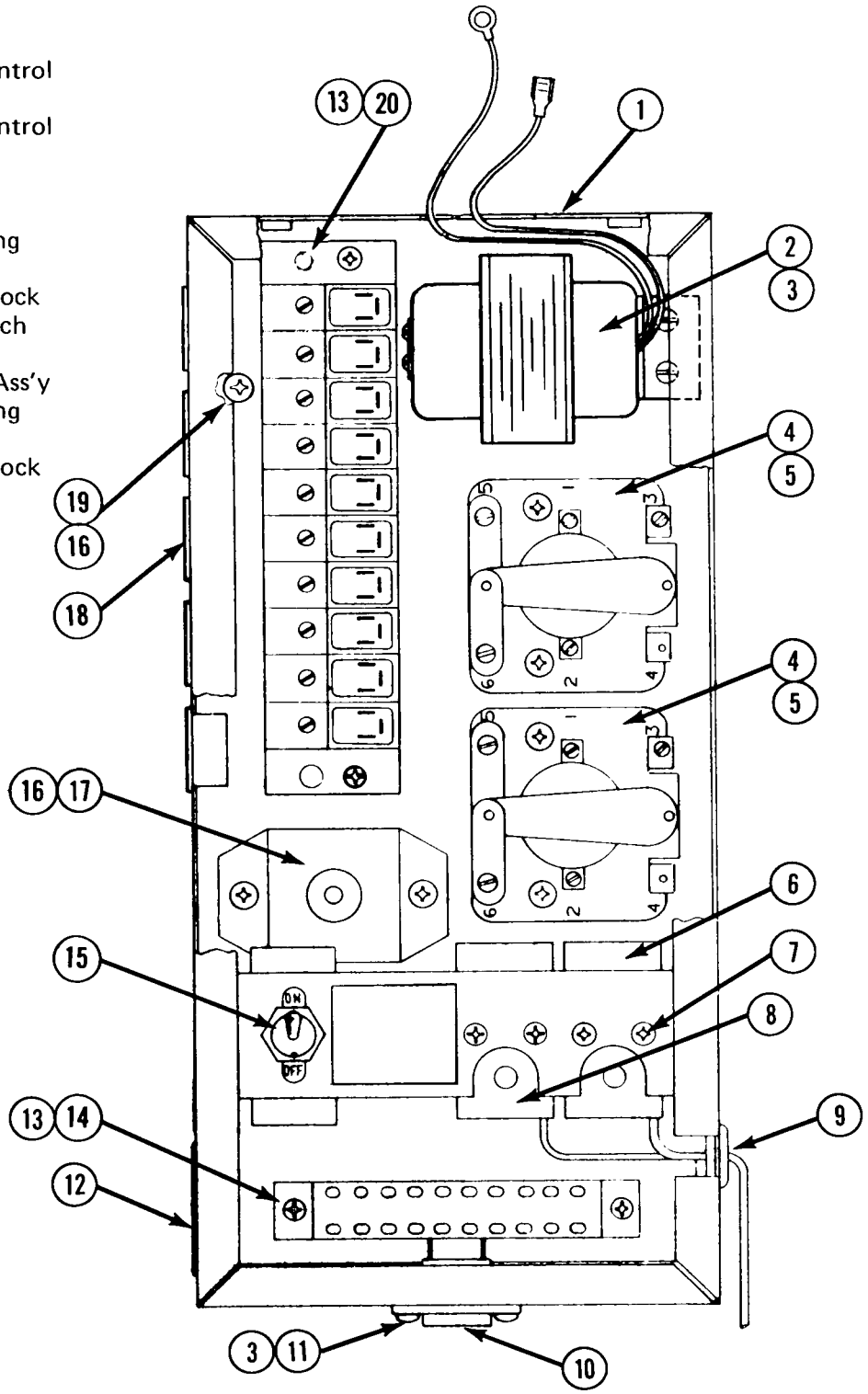

CABINET PARTS

ITEM NO.	PART NO.	DESCRIPTION
1.	03-1404-09	Screw
2.	A24243-001	Hole Plate
3.	03-1403-47	Screw
4.	03-1417-09	Washer
5.	03-1403-17	Screw
6.	02-1472-04	Plug Button
7.	03-1418-07	Screw
8.	03-1422-06	Speed Nut
9.	03-1418-11	Screw
10.	03-1403-19	Screw
11.	A23572-001	Back Panel, Painted
12.	A23574-001	Top Panel, Painted
13.	A24853-001	Side Panel, Left, Painted
14.	A24837-001	Side Panel, Lower Left, Painted
15.	A23702-001	Front Panel Ass'y, Painted
16.	A23523-001	Door Ass'y, Painted
17.	A23575-001	Control Panel, Painted
18.	A24852-001	Side Panel, Right, Painted
19.	A24837-002	Side Panel, Lower Right, Painted
20.	A23572-002	Back Panel, SS
21.	A23574-002	Top Panel, SS
22.	A24853-002	Side Panel, Left, SS
23.	A24837-003	Side Panel, Lower Left, SS
24.	A23702-002	Front Panel Ass'y, SS
25.	A23523-002	Door Ass'y, SS
26.	A23575-002	Control Panel, SS
27.	A24852-002	Side Panel, Right, SS
28.	A24837-004	Side Panel, Lower Right, SS
29.	A23857-001	Backsplash Assy
30.	02-2021-01	Grill
31.	A24207-001	Sink Fab Ass'y
32.	02-0932-00	Clamp
33.	13-0617-11	"O" Ring
34.	A20250-003	Tube
35.	02-1741-00	Drain Top
36.	02-1742-00	Drain Bottom
37.	A23704-001	Sink Support
38.	A23704-002	Sink Support

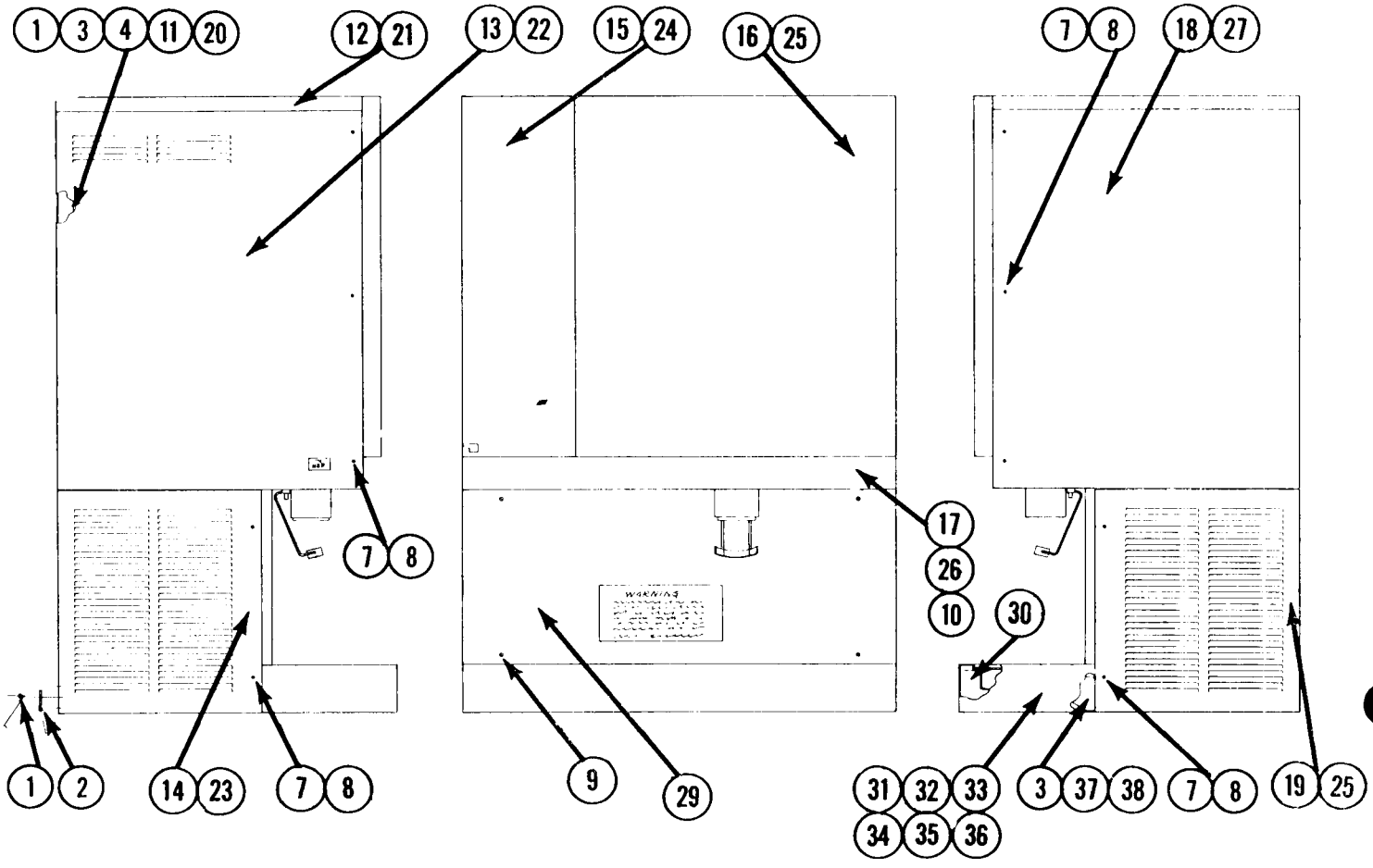

If the user requires frequent access to the water and portion controls, the switches can be moved to the panel below the door. A copy of the instructions listed below is packed with each machine along with new decals.

OPTIONAL MOUNTING FOR WATER AND ICE SWITCH

1. Remove left side panel. Remove switches from switch mount panel by loosening locknuts.
2. Remove (2) screws from switch mount panel and lift panel from unit.
3. It is necessary to drill (3) holes in control panel to remount switches. To do this, you will need a 5/32 dia. drill, 3/8 dia. drill, and 15/32 dia. drill.
4. Hold switch mount panel in original position except with bottom portion, with (3) holes, on outside of control panel. Either mark hole locations and remove panel, or drill holes using panel as template.
5. Replace switch mount to original position. Place ice and water decals in position and install switches. Replace left side panel and unit is ready for operation.

17-1173-01

SPECIAL KITS AND ACCESSORIES AVAILABLE FOR THE FD7

Back Splash Extention Kit, KSP2 – to be used when unit is mounted over a sink. The standard sink and back splash panel are removed and the kit installed.

Glass Filler Kit, KGF1 – to be installed when two discharge spouts are required. One used for water only and the other for ice only.

Machine stand, DMS30E or DMS30SS – to be used when the FD7 is mounted on the floor.

Wall Mounting Kit, KWB2 – This is the only approved method for mounting the FD7 on a wall. All other methods may be dangerous because of the weight of the machine.

TABLE OF CONTENTS

	Table of Contents	i
	List of Illustrations	ii
	Specifications	iv
SECTION I -	GENERAL INFORMATION & INSTALLATION	1-1
I.	Introduction	1-1
II.	Unpacking and Inspection	1-1
III.	Location and Leveling	1-2
IV.	Electrical Connections	1-4
V.	Water Supply and Drain Connections	1-4
VI.	Installation - Optional	1-4
VII.	Final Check List	1-4
SECTION II -	OPERATING INSTRUCTIONS	2-1
I.	Pre-Startup Polarity Test	2-1
II.	Start Up	2-2
SECTION III -	PRINCIPLES OF OPERATION - How It Works	3-1
I.	Freezing Cycle	3-1
II.	Harvest Cycle	3-2
III.	Component Description	3-2
SECTION IV -	ADJUSTMENT & REMOVAL & REPLACEMENT	4-1
I.	Adjustment of the Bin Thermostat Control	4-1
II.	Adjustment of the Cube Size Control	4-1
III.	Adjustment of the Timer & Switch Assembly	4-2
IV.	Adjustment of the Water Regulator - W/C	4-2
V.	Removal & Replacement of the Agitator Motor	4-3
VI.	Removal & Replacement of the Bin Thermostat Control	4-3
VII.	Removal & Replacement of the Compressor	4-4
VIII.	Removal & Replacement of the Condenser - Air-Cooled	4-4
IX.	Removal & Replacement of the Condenser - Water-Cooled	4-4
X.	Removal and Replacement of the Cube Size Control	4-5
XI.	Removal and Replacement of the Curtain Assembly	4-5
XII.	Removal and Replacement of the Drier	4-5
XIII.	Removal and Replacement of the Fan Motor Assembly - A/C	4-6
XIV.	Removal and Replacement of the Freezing Chamber, Platen Assembly and Spray Bar Assembly	4-6
XV.	Removal & Replacement of the Spray Bar Assembly	4-7
XVI.	Removal & Replacement of the Water Pump Assembly	4-7
XVII.	Removal and Replacement of the Water Regulator Assembly - W/C	4-7
SECTION V -	MAINTENANCE & CLEANING INSTRUCTIONS	5-1
I.	General	5-1
II.	Icemaker	5-1
III.	CLEANING - Icemaker	5-1
SECTION VI -	SERVICE DIAGNOSIS	6-1
I.	Icemaking - Refrigeration System	6-1

TABLE OF CONTENTS (CONT'D.)

SECTION VII - WIRING DIAGRAMS 7-1
Wiring Diagram HC1200 - Air-Cooled 208-220/60/3 7-2
Wiring Diagram HC1200 - Water-Cooled 208-220/60/3 7-3
Wiring Diagram HC1200 - Air-Cooled 208-230/60/1 7-4
Wiring diagram HC1200 - Water-Cooled 208-230/60/1 7-5
Schematic Wiring Diagram HC1200 - 208-220/60/3 7-6
Schematic Wiring Diagram HC1200 - 208-230/60/1 7-7
Wiring Diagram HC1200B - Air-Cooled - 208-220/60/3 7-8
Wiring Diagram HC1200B - Water Cooled - 208-220/60/3 7-9
Wiring Diagram HC1200B - Air Cooled - 208-230/60/1 7-10
Wiring Diagram HC1200B - Water-Cooled 208/230/60/1 7-11
Schematic Wiring Diagram HC1200B - 208-220/60/3 7-12
Schematic Wiring Diagram HC1200B - 208-230/60/1 7-13

SECTION VIII - THE PARTS ILLUSTRATION AND PARTS LISTS 8-1
I. General 8-1
II. How to Use the Illustrations and Parts Lists 8-1
III. How to Order Parts or Assemblies 8-1

LIST OF ILLUSTRATIONS

Specifications iv
Figure 1-1 Uncrating the HC1200 1-2
Figure 1-2 Installing Cube Deflector Bulb Holder and Bin Thermostat Capillary Tube 1-3
Figure 1-3 Installation Practice 1-5
Figure 2-1 Polarity Test 2-1
Figure 2-2 Control Panel 2-2
Figure 2-3 Timer Cam Positions 2-3
Figure 2-4 Ice Cube Shape 2-4
Figure 3-1 Freezing Cycle 3-1
Figure 3-2 Harvest Cycle 3-2
Figure 4-1 Adjustment of the Temperature Control 4-1
Figure 4-2 Adjustment of the Timer & Switch Assembly 4-2
Figure 4-3 Removal of the Agitator Motor Assembly 4-3
Figure 5-1 START Positions for the Freeze/Harvest Cycles 5-2
Figure 7-1 Wiring Diagram HC1200 - Air-Cooled 208-220/60/3 7-2
Figure 7-2 Wiring Diagram HC1200 - Water-Cooled 208-220/60/3 7-3
Figure 7-3 Wiring Diagram HC1200 - Air-Cooled 208-230/60/1 7-4
Figure 7-4 Wiring Diagram HC1200 - Water-Cooled 208-230/60/1 7-5
Figure 7-5 Schematic Wiring Diagram HC1200 - 208-220/60/3 7-6
Figure 7-6 Schematic Wiring Diagram HC1200 - 208-230/60/1 7-7
Figure 7-7 Wiring Diagram HC1200B Air-Cooled - 208-220/60/3 7-8

LIST OF ILLUSTRATIONS (CONT'D.)

Figure 7-8	Wiring Diagram HC1200B - Water-Cooled -208-220/60/3	7-9
Figure 7-9	Wiring Diagram HC1200B - Air-Cooled - 208-230/60/1	7-10
Figure 7-10	Wiring Diagram HC1200B - Water-Cooled - 208-230/60/1	7-11
Figure 7-11	Schematic Wiring Diagram HC1200B - 208-220/60/3	7-12
Figure 7-12	Schematic Wiring Diagram HC1200B - 208-230/60/1	7-13
Figure 8-A.	HC1200 Automatic Cuber - Flow Chart	8-2
Figure 8-1.	Model HC1200 Automatic Cuber	8-3
Figure 8-2.	Major Assemblies - Air-Cooled	8-5
Figure 8-3.	Major Assemblies - Water-Cooled	8-8
Figure 8-4.	Fan Motor & Air-Cooled Condenser Assembly	8-11
Figure 8-5.	Freezer Assembly - Dual	8-13
Figure 8-6.	Freezing Chamber Assembly	8-16
Figure 8-7.	Freezing Chamber - Sump w/Tubes	8-19
Figure 8-8.	Dual Drive Spray Assemblies	8-21
Figure 8-9.	Control Panel Assembly	8-25
Figure 8-10	Control Box Assembly	8-27
Figure 8-00	How To Use The Illustrated Parts List	8-30

SPECIFICATIONS

HC1200

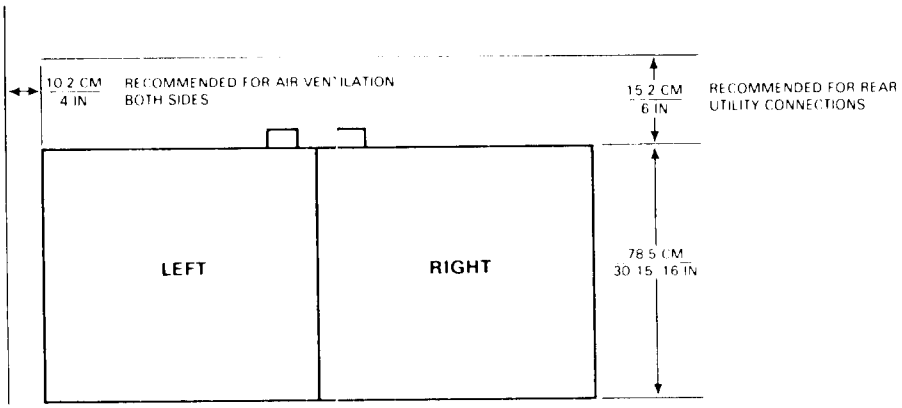

TOP VIEW

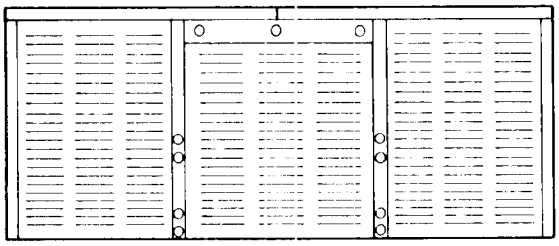

REAR VIEW

Height: 28-1/4 IN.
Width: 66-1/8 IN.
Depth: 30-15/16 IN.
Est. Ship. Wt.: 647 lbs.

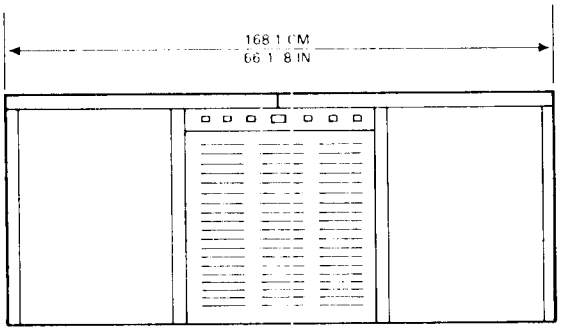

FRONT VIEW

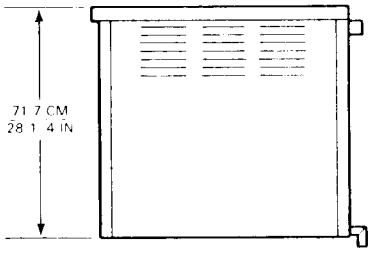

RIGHT SIDE VIEW

NOTE:

TOP NUMBERS IN CENTIMETERS — CM
BOTTOM NUMBERS IN INCHES - IN

SPECIFICATIONS (CONT'D)

MODEL HC1200B

Air-Cooled: Model HC1200A-1A

Water-Cooled: Model HC1200W-1A

Small, Medium, Large Cube Size

Electrical: 115/208-220/60/3
115/208-230/60/1

Est. Ship. Wt: 647 lbs.

Lighted Dual System Control Panel

FRONT SERVICE ACCESS PANEL

OPTIONALS

SPKHC1200 - Stainless Steel Cabinet Panels

B120 Bin - 860 lbs. storage capacity

BX128 Bin Extension - 720 lbs. storage capacity

BX113 Bin Extension - 350 lbs. storage capacity

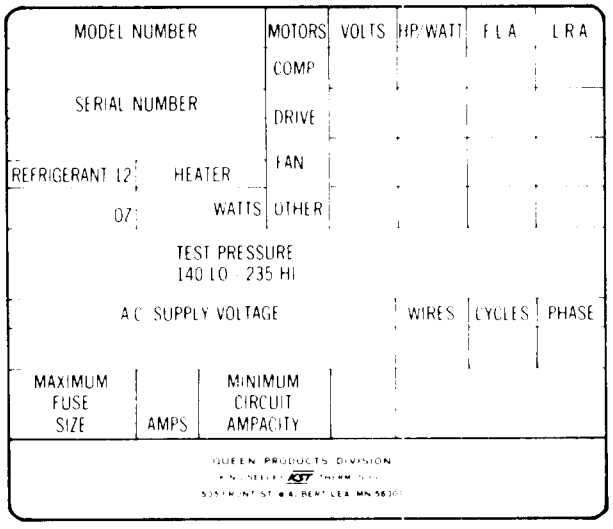

SEE NAMEPLATE, shown at left, for electrical and refrigeration specifications. NAMEPLATE located on top rear, center service panel.

Remove left Front Panel to locate the Model Serial Number plate, shown below, on lower Chassis frame, below left Control Box.

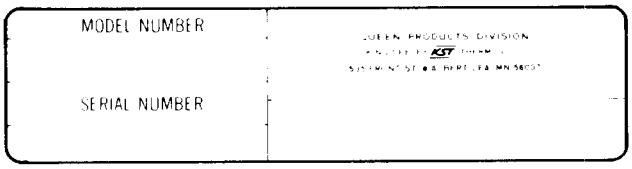

We reserve the right to make product improvements at any time. Specifications and design are subject to change without notice.

This icemaker has been engineered to our own rigid safety and performance standards. The National Sanitation Foundation (NSF) seal, signifies that it is listed with the NSF and that it complies with the materials and construction standards of the NSF. In addition, the Underwriters Laboratories, Inc., (UL) Listing Mark and the Canadian Standards Association (CSA) Monogram, both signify that its construction and design have been inspected and tested by them. NSF, UL and CSA inspectors also periodically examine production icemakers at the factory, to assure continued compliance.

To retain the safety and performance built into this icemaker, it is important that installation and maintenance be conducted in the manner outlined in this manual.

SECTION I

GENERAL INFORMATION & INSTALLATION

I. INTRODUCTION

This manual provides specifications and the step-by-step procedures for the installation, startup and operation, and the maintenance and cleaning for the SCOTSMAN Model HC1200A and HC1200B Modular Cuber.

The Model HC1200 Modular Cubers are quality designed, engineered and constructed, and thoroughly tested icemaking systems, providing the utmost in flexibility to fit the needs of a particular user. Separate sections detail more specifically: General Information & Installation; Start Up Operation; Principles of Operation; Adjustment and Removal and Replacement Procedures; Maintenance and Cleaning Instructions; Service Diagnosis; Wiring Diagrams; and, the Illustrated Assemblies and Parts Lists.

Essentially, the differences between the Model HC1200A and HC1200B is in the Compressor. Model HC1200A uses a Copeland Compressor and the Model HC1200B uses the Tecumseh Compressor. Be sure to check and use the correct Wiring Diagram and parts reference.

Each HC1200 is comprised of two independent icemaking systems housed in one horizontal cabinet. Each separate system has dual Evaporator assemblies with associated Compressor, Water Pumps and controls. The air-cooled model has a unique, hinged Condenser that can be rotated open and out of the way, with flexible refrigerant lines; thus, offering easy front access for service and cleaning.

The single Fan Motor and air-cooled Condenser Assembly is shared by both independent icemaking systems; whereby, through a Fan Relay, electrical current is supplied to the Fan Motor any time one, or both, icemaking systems operates.

Another feature is an external illuminated service and control panel console, with pilot light indicators and push buttons, that display and identify when each system is in operation and not in operation, such as: (1) due to a refrigerant high pressure situation; (2) a refrigerant low pressure situation; or, (3) a loss of electrical power.

An elapsed time, or Hour Meter indicator—on the panel, records the actual hours of operating time accumulated by the Modular Cuber.

DESCRIPTION

An attractive horizontal cabinet of leathergrain embossed steel with high gloss, charcoal brown baked enamel finish. Also, an optional stainless steel panel kit is available. These removable panels allow easy access to electrical and mechanical components for cleaning and maintenance.

SEALED REFRIGERATION SYSTEM

To provide quiet efficient operation of Icemaker, the Compressor motor is internally spring-mounted. The Compressor motor is covered by a five year parts warranty.

STORAGE BIN & EXTENSIONS

Since the Model HC1200, like other modular cubers in the SCOTSMAN line, does not have an attached ice storage bin, it is necessary to use an auxiliary bin. The B120 Storage Bin, with 860-pounds capacity, is specifically designed for the HC1200 Cuber, featuring two lift-up doors for convenient front access to stored ice. Two Bin extensions are available: BX128 with 720-pounds capacity and the BX113 with 350-pounds capacity. Two HC1200 Modular Cubers stacked to double ice production volume.

II. UNPACKING AND INSPECTION

1. Call your authorized SCOTSMAN Distributor or Dealer, for proper installation. He's listed under ICE MAKING EQUIPMENT and MACHINERY in the yellow pages of the telephone book.
2. Visually inspect the exterior of the shipping container and skid and any severe damage noted, should be reported to the delivering carrier; and, a concealed damage claim filed subject to internal inspection, with the carrier representative present.
3. Using nail puller, see Figure 1-1, remove all nails around the base of the shipping container, which attach the container to the skid; then, remove the top and all panels of the container.
4. Remove the hex nut and flat washer, under each of the four corners of the skid, from the special J-clamp skid bolts, which then frees the Cuber from the skid.
5. Remove screws and shipping tape, and all panels, including the top, from the cabinet, and inspect for any concealed damage. Notify carrier of any concealed damage claims, as stated in step 2 above.
6. Remove all internal support packing, tape and wires, if any, in machinery compartment.
7. Check that refrigerant lines do not rub or touch lines or other surfaces, and that fan blades, if any, move freely.

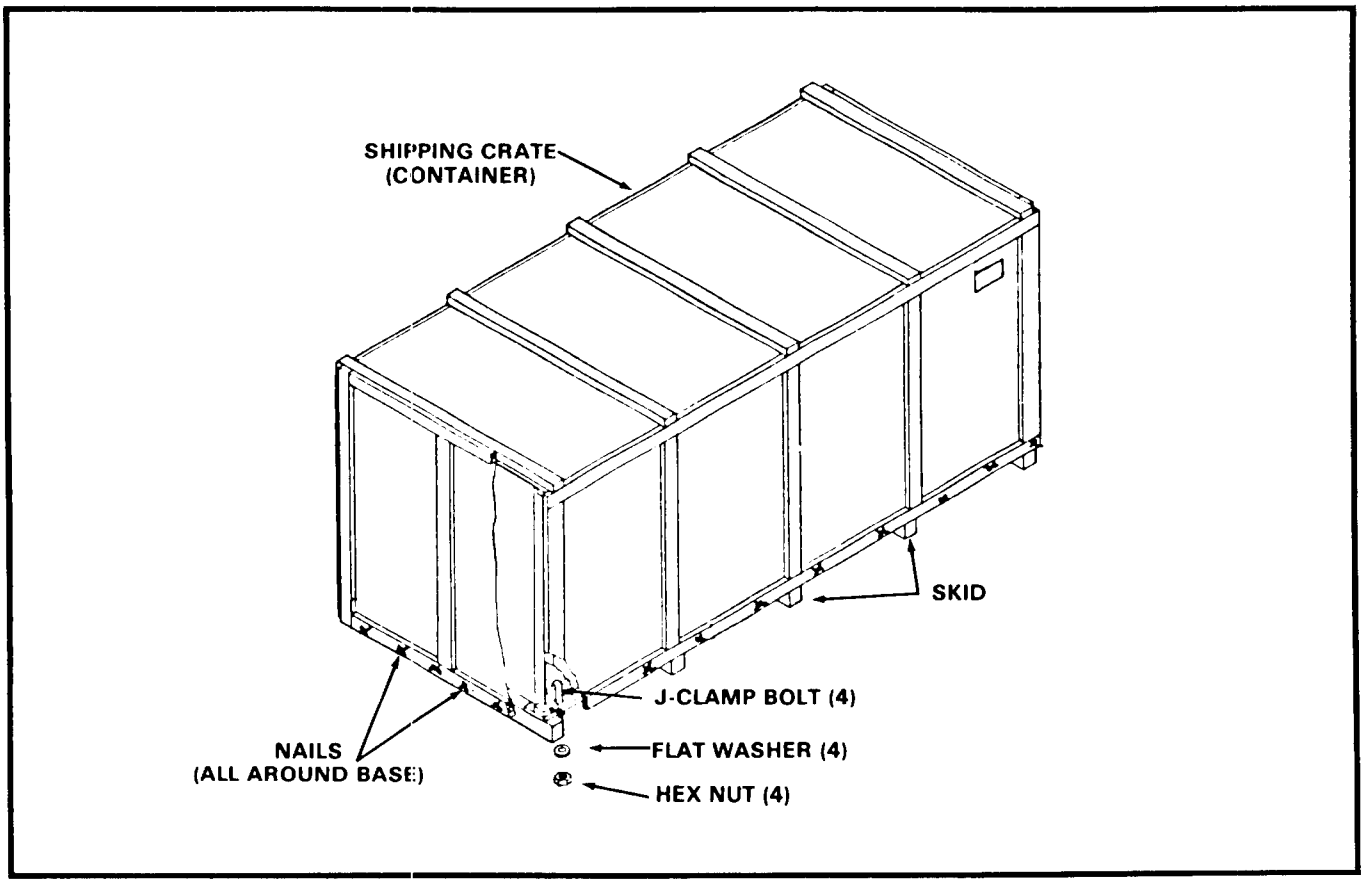

Figure 1-1. Uncrating the HC1200.

8. Check that Compressors are snug on all mounting pads.
9. Remove optional Water Strainers from shipping bag, for installation in water supply line.
10. Untape and remove for installation, two plastic Base Drains and two electrical Conduit Boxes shipped from the factory taped to the top diagonal crossmember support above the Freezing Chambers.
11. Remove for installation, two combination Cube Deflector and Bulb Holders, shipped between the upper and lower Freezing Chambers, at the rear. See Figure 1-2.
12. Use clean damp cloth or disposable paper wiper to wipe clean the exterior surfaces of the cabinet.
13. SEE NAMEPLATE on the top rear, center service panel, and check that the location source voltage corresponds with the voltage specified on the nameplate.

CAUTION

Improper voltage supplied to the Icemaker will void your parts replacement program.

14. Fill in all spaces in the Manufacturer's Registration Card including: Model Number and Serial Number taken from the Model-Serial Nameplate located on the left side, front part of the Chassis base, with Left Front Panel removed. Forward the completed, self addressed, registration card to the SCOTSMAN factory.

III. LOCATION AND LEVELING

WARNING

This Modular Cuber is NOT designed for outdoor installations where air temperatures are below 50-degrees F., or above 100-degrees F., and water temperature is below 40-degrees F. or above 100-degrees F. Extended periods of operation at temperatures exceeding these limitations will constitute misuse, under the terms of the SCOTSMAN Manufacturer's limited warranty coverage.

1. Position the Modular Cuber and Bin, with or without Bin Extensions, in the selected permanent location.

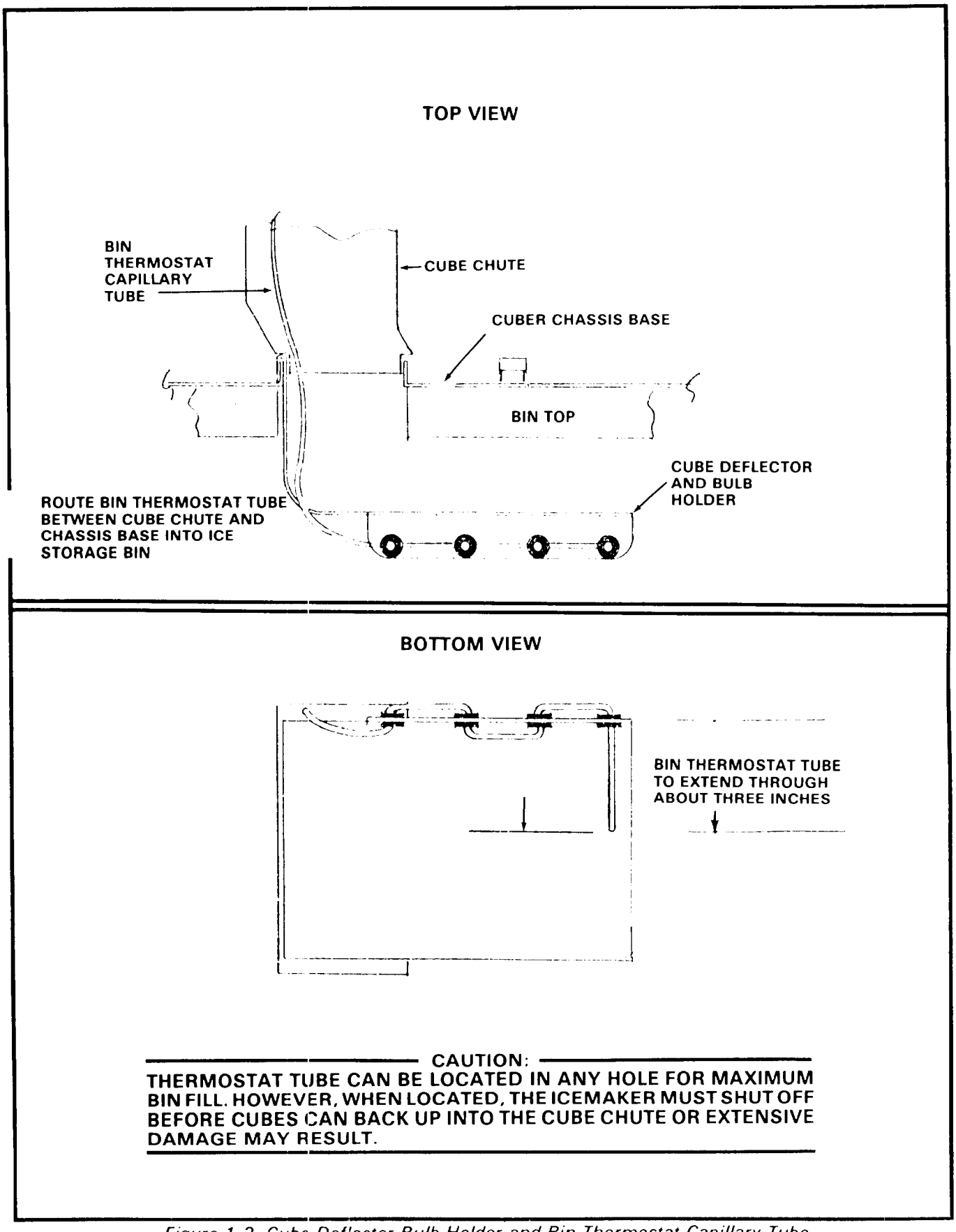

Figure 1-2. Cube Deflector Bulb Holder and Bin Thermostat Capillary Tube.

NOTE

Prior consideration for location site shall include:

1. *Minimum room temperature 50-degrees F. and maximum room temperature 100-degrees F.*
2. *Water inlet temperatures: Minimum 40-degrees F. and maximum 100-degrees F.*
3. *Well ventilated location for air-cooled model, advising user to frequently clean Condenser, located directly behind Center Front Panel.*
4. *SERVICE ACCESS: Adequate space for all service connections, through the rear of the cabinet. A six inch minimum clearance at rear, left and front louvered panels, for routing cooling air drawn into and exhausted out of the compartment, to maintain proper condensing operation on air-cooled models.*

2. Level the modular cabinet in both the left-to-right and front-to-rear directions. The optional leveling legs on the B120 Bin can be adjusted.

IV. ELECTRICAL CONNECTIONS

WARNING

This icemaker requires a SOLID EARTH GROUND that meets the national, state and local electrical code requirements. To prevent possible SEVERE ELECTRICAL SHOCK INJURY to individuals, or extensive damage to equipment, install an approved SOLID EARTH GROUND wire to this icemaker. See wiring diagram.

SEE NAMEPLATE for current requirements to determine wire size to be used for electrical hookup. The Cuber requires a solid earth ground wire. See Wiring Diagram.

Be certain the Dispenser is connected to its own electrical circuit and individually fused. The maximum allowable voltage variation should not exceed ten percent of the nameplate rating, even under starting conditions. Low voltages can cause erratic operation and may be responsible for serious damage to the motor windings.

All external wiring should conform to the national, state and local electrical code requirements. Usually an electrical permit and services of a licensed electrician will be required.

BE SURE to conduct the POLARITY TEST, procedure II-I, BEFORE startup of the HC1200 Modular Cuber, to PREVENT possible burnout damage to equipment.

V. WATER SUPPLY AND DRAIN CONNECTIONS

A. AIR-COOLED MODELS - DUAL CONNECTIONS: The recommended water supply line is a 3/8-inch O.D. copper tubing. Connect to cold water supply line with standard plumbing fittings, with a shutoff valve installed in an accessible place between the water supply and the Cuber.

Two wire mesh strainers are provided and must be installed with the cleanout plug down. Locate the strainers next to the two male flare water inlet fittings, at the rear of the Chassis, with the arrow on the strainers positioned in the direction of the water flow. The strainers protect against large particles of rust, scale, etc., which may be loosened in the water supply line at the time of installation.

In some cases a plumbing permit and services of a licensed plumber will be required.

WARNING

DO NOT operate this Modular Cuber when the water supply is shut OFF, or is BELOW the recommended 20 PSIG water pressure. Press the Master ON-OFF amber pushbutton on the Control Panel to OFF immediately.

B. WATER-COOLED MODELS: On Water-Cooled Models, a separate cold water supply inlet line is required, to be connected to a third 3/8-inch O.D. male flare fitting at the top center, rear of the Chassis. Additional drain lines are required to drain the two water-cooled Condensers.

C. DRAIN CONNECTIONS: All drains are gravity type and must have a minimum of 1/4-inch fall per foot on horizontal runs. The drains to be installed to conform with the local plumbing code. Install separate drain lines for discharge water from the water-cooled Condensers. Install a vertical open vent on drain lines to ensure good venting. The drain receptacle should be an open, trapped or vented construction. See Figure 1-3.

Recommended Bin drain is 5/8-inch O.D. copper tubing and should be vented and run separately.

VI. INSTALLATION - OPTIONAL

Install optionals ordered with the HC1200:

1. SPKHC1200 - Stainless Steel Cabinet Panels.
2. B120 Bin - 860 lbs. storage capacity.
3. BX128 Bin Extension - 720 lbs. storage capacity.
4. BX113 Bin Extension - 350 lbs. storage capacity.

VII. FINAL CHECK LIST

1. Is the Cabinet level? (IMPORTANT)
2. Have all kits, if any, been installed?

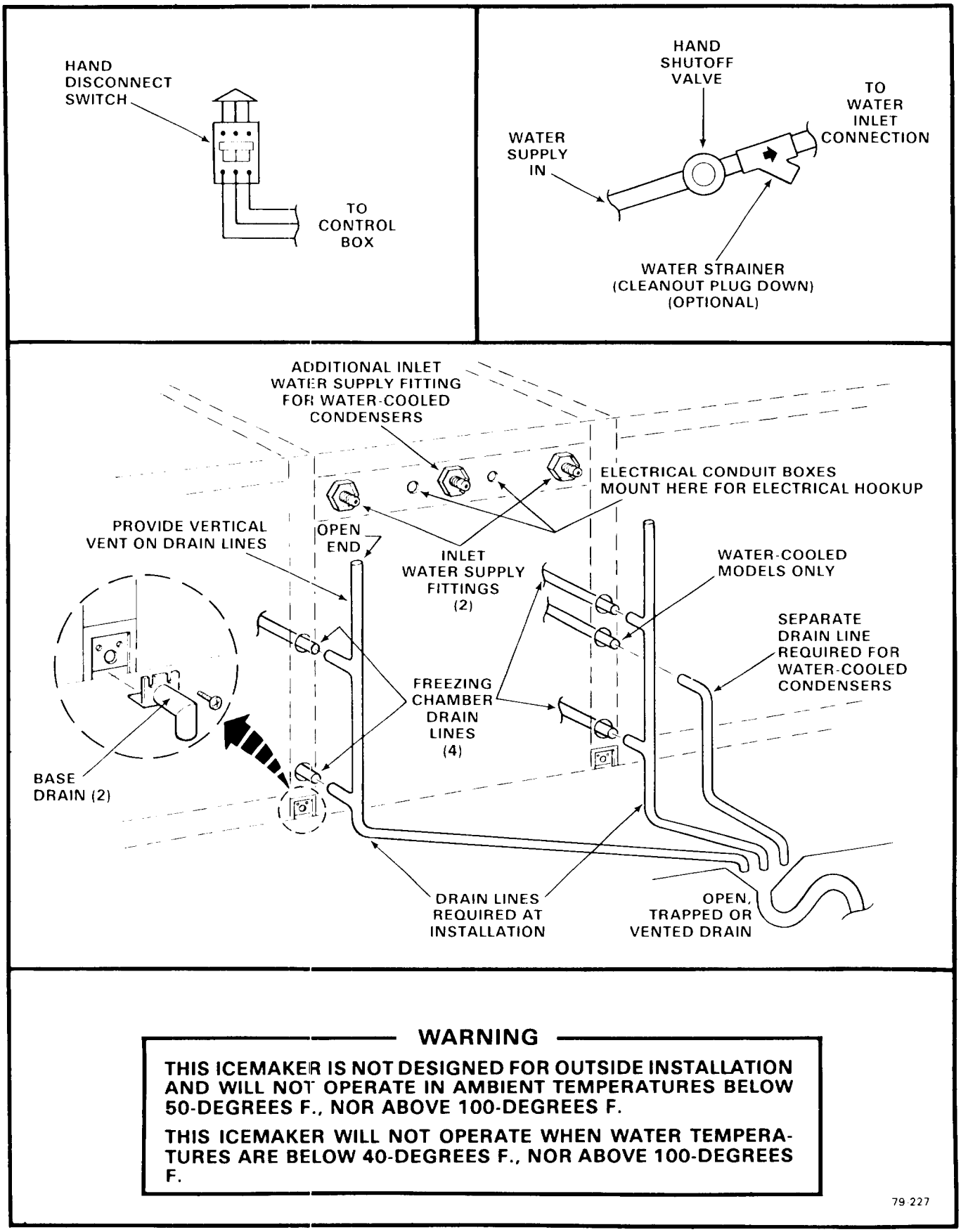

WARNING

THIS ICEMAKER IS NOT DESIGNED FOR OUTSIDE INSTALLATION AND WILL NOT OPERATE IN AMBIENT TEMPERATURES BELOW 50-DEGREES F., NOR ABOVE 100-DEGREES F.

THIS ICEMAKER WILL NOT OPERATE WHEN WATER TEMPERATURES ARE BELOW 40-DEGREES F., NOR ABOVE 100-DEGREES F.

79-227

Figure 1-3. Installation Practice

3. Have all electrical and piping connections been made?
4. Has the voltage been tested and checked against the nameplate rating?
5. Is the water supply line shutoff valve installed and open and electrical power supply wiring properly connected?
6. All masking tape removed from doors, panels, inner freezer curtains, etc?
7. Has the Cuber and the Bin been wiped clean with clean damp cloths?
8. Have the Compressor holddown bolts been checked, to be sure the Compressor is snug on the mounting pads?
9. Has the owner/user been given the User Manual and instructed on how to operate the icemaker and the importance of periodic maintenance?
10. Has the Manufacturer's Registration Card been properly filled out" Check for correct Model and Serial numbers from nameplate, then mail the completed card to the SCOTSMAN factory.
11. Check all refrigerant lines and conduit lines, to guard against vibration and possible failure.
12. Is there at least a six inch clearance behind and around the Cabinet, for all connections and for proper air circulation?
13. Is the Cuber in a room where ambient temperatures are a minimum of 50-degrees F. all year around?
14. Has the inlet water supply pressure been checked to ensure a minimum of 20 PSIG?
15. Has the owner been given the name and telephone number of the authorized SCOTSMAN Distributor or Service Agency serving him?

SECTION II

OPERATING INSTRUCTIONS

I. PRE-STARTUP POLARITY TEST

A. GENERAL

The Model HC1200 Modular Cuber has two separate icemaking systems: System One, located in the left side section and System Two, located in the right side section. The Polarity Test procedure below is required when the HC1200 is initially installed at a location; and, also when the HC1200 is relocated at anytime, to a subsequent different location, even if in the same building. This test could well prevent loss of considerable time and costs in parts and labor.

WARNING

BEFORE STARTUP, when installing the HC1200 Cuber, conduct the POLARITY TEST below, to prevent possible burnout damage to equipment.

B. POLARITY TEST

1. Check that building source electrical power to the HC1200 Chassis is ON.
2. Check that BOTH master ON-OFF Switch amber pushbuttons, on the front Control Panel are OFF.
3. Remove screws and the left and right Front Panels.
4. Check that both Compressor ON-OFF toggle switches, on the front of each Control Box, are in the OFF position.
5. Remove screws and both Control Box Covers.
6. Using volt-ohm-meter, check voltage between L1 and L2, upper lineside, terminals of the Contactor in the left, System One Control Box. See Figure 2-1.

   Should indicate the rated voltage. Example: (208-220) check NAME-PLATE.
7. Repeat step 6, for System Two Contactor.

   Should be same indication, as above.

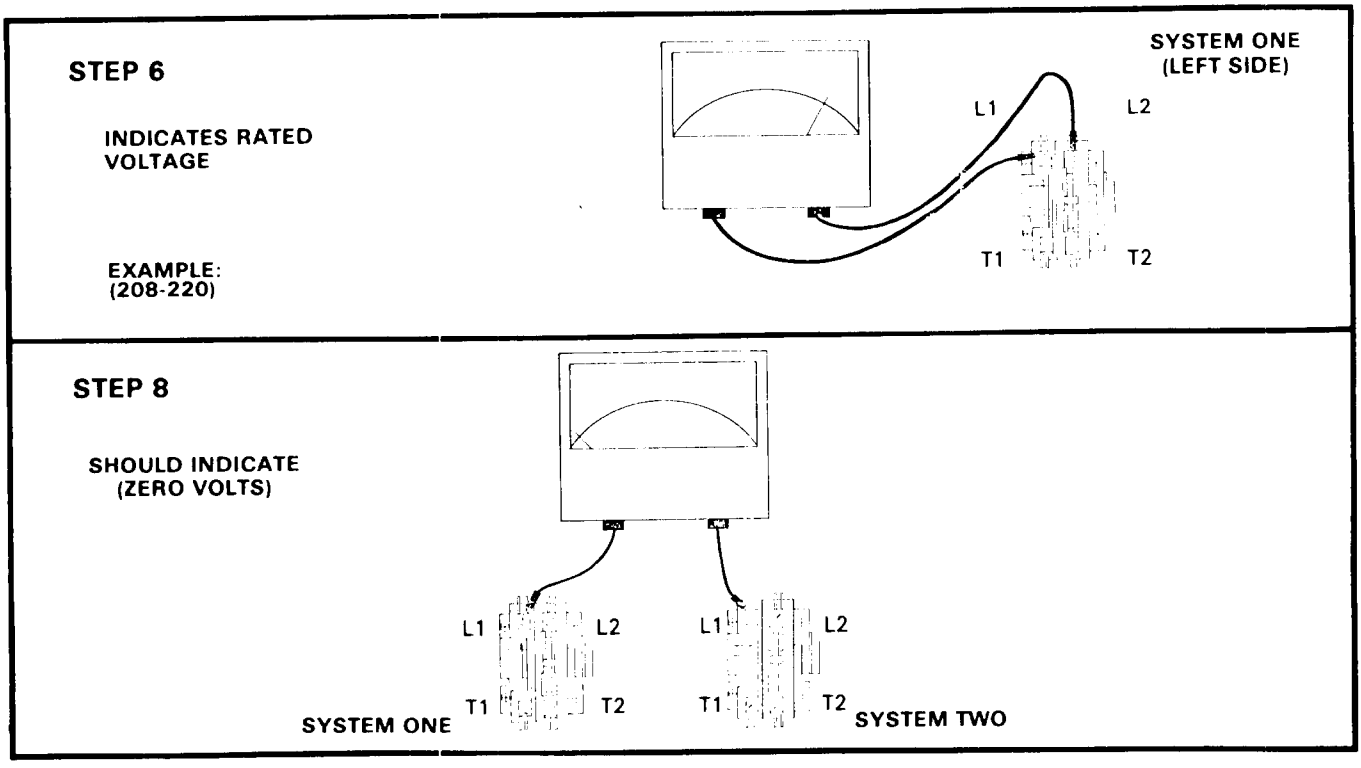

Figure 2-1. Polarity Test.

8. Check voltage potential, between corresponding L1 in left Contactor and L1 in right Contactor. See Figure 2-1.

   Should indicate: ZERO volts.

9. Repeat step 8, for L2 and L2; and when applicable, for L3 and L3; also, indication should be ZERO volts.

CAUTION

When other than ZERO volts is indicated, have electrician change field connection wiring, to obtain ZERO volts.

II. START UP

WARNING

BEFORE STARTUP, when installing the HC1200 Cuber, BE SURE the POLARITY TEST procedure above, has been conducted and the electrical system wiring proved acceptable.

NOTE

The START UP procedure assumes both Front Panels have been removed, to conduct the above POLARITY TEST procedure. At other times, following a complete shutdown, it will not be necessary to remove the Front Panels for START UP. At some of those START UPs, it is very likely the first ice cube harvest will not produce full-sized ice cubes and could very well produce only a small amount of ice. However, the second harvest should be normal.

1. Check that both Master ON-OFF amber pushbuttons are OFF, on the front Control Panel. See Figure 2-2.
2. Check that the Compressor ON-OFF toggle switches, on the front of each Control Box, are in the OFF position.
3. Rotate the shaft of each Timer & Switch Assembly, protruding through the hole in the front Cover of the Control Boxes, CLOCK-WISE, to start the Timer for filling the reservoir sump, in the Freezing Chamber, with water.

NOTE

Slowly rotate the shaft CLOCKWISE, until the actuator arm on the microswitch drops off of the outer cam into the cam slot. An audible click can be heard, but in a noisy area, look at the cam and switch to observe the event. See A, Figure 2-3.

4. Press the Master ON-OFF amber pushbuttons, on the front Control Panel to ON: they should change to amber glow.

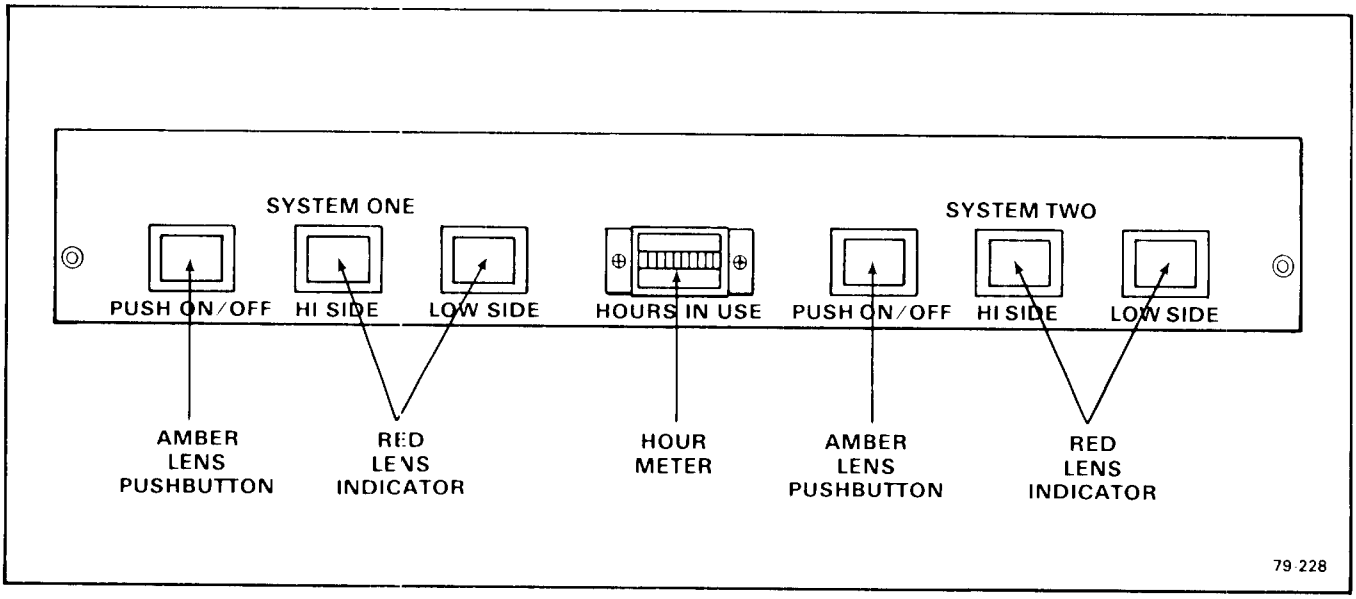

Figure 2-2. Control Panel.

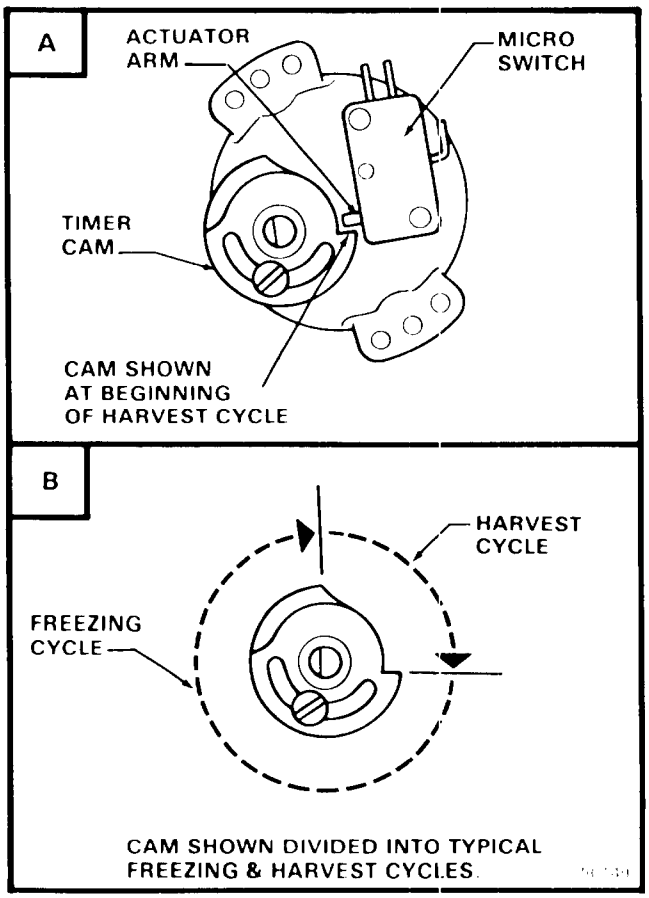

Figure 2-3. Timer Cam Positions.

NOTE

Observe that the Water Inlet Solenoid valves OPEN and inlet water flows from the valves through tubing and can be seen flowing to the Defrost Water Tube, at the top rear of each Freezing Chamber, where the water then flows around the inverted ice cube cups and drains into the Freezing Chamber sump. Excess water is overflowed through the standpipe and drain tube. This cycle will take about three minutes, when the Timer will CLOSE the Water Inlet Solenoid Valve.

5. Repeat step 3, for both Timers.
6. After completion of the second Harvest Cycle, move both Compressor ON-OFF toggle switches to the ON position.

NOTE

1. *During START UP, advancing two Harvest Cycles, allows a check that: the Water Inlet Solenoid Valves operate properly; inlet water can be observed flowing; the sumps are filled with water in preparation for the Freezing Cycle; and, checks the function of the overflow and drains.*
2. *The Water Pumps operate during the defrost Harvest Cycle. Factory testing proved faster defrost and increased ice capacity with continuous operation of the Water Pumps.*

7. Temporarily remove Cube Chutes for these operational checks.
8. Check that the plastic Curtains hang evenly and vertically, to prevent loss of water during the Freezing Cycle.

NOTE

The Timer dial does not rotate at the end of the Harvest Cycle, it is started later by the Cube Size Control, in the Control Box.

9. Check operation of Freezing Cycle:
   a. Compressors are operating.
   b. Agitator Motors are operating, as seen by Fans rotating on top of upper Freezing Chamber.
   c. Water Pumps are operating, as seen at Tygon Tubes on Pump and looking at water being sprayed into inverted ice cube cups, from rotating Spray Bars, seen inside Freezing Chambers.
   d. Icemaking process begins: feeling inside ice cube cups reveals cold temperatures and very shortly ice begins to form.

NOTE

Freezing time will range between 17 to 25 minutes in a 70-degree F. ambient temperature. Longer time, for temperatures above 70-degrees F. and shorter time required when temperatures are below 70-degrees F. Average complete cycle range is about 20 to 30 minutes.

WARNING

DO NOT operate this Icemaker when the water supply is shut OFF, or is BELOW the recommended 20 PSI water pressure. Press both Master ON-OFF amber pushbuttons to OFF, immediately.

10. Replace both plastic Cube Chutes, before Harvest Cycle begins.
11. Observe first ice cube harvest:
    a. Check size of ice cubes: when too small after a second harvest, refer to procedure IV-II, for adjustment to Cube Size Control to increase size of ice cube.

NOTE

Normal cube size is with a one-quarter inch depression in the crown. See Figure 2-4.

    b. Check texture of ice cubes: when partially cloudy throughout, suggests icemaker operating short of water, near end of freezing cycle, or possibly an extreme

problem water condition, wherein filtering or purifying equipment is recommended. Contact SCOTSMAN—Queen Products Division, Service Department, Albert Lea, Minnesota, for further details.

12. With the icemaker in the Harvest Cycle, hold ice against the Bin Thermostat Control bulb to test shutoff, which should cause the icemaker to shut OFF at the end of the Harvest Cycle.

NOTE

Within minutes after the ice is removed from the sensing bulb, the bulb will warm up and cause the icemaker to restart. This control is factory set and should not be reset until testing is performed. Normal setting is about 35-degrees F. CUT-OUT and 39-degrees F. CUT-IN.

13. Install refrigerant service gauges on the high side and low side Schrader valve fittings and check the Compressor head pressure and back pressure. RETAIN Schrader valve caps.

NOTE

1. *Air-Cooled Models: Head pressure after 20 minutes of Freezing Cycle, at 70-degree F. ambient temperature, will be about 135 PSIG. The back pressure equalizes during hot gas defrost and gradually pulls down to about four PSIG, just before Harvest Cycle. Higher ambient temperatures and dirty Condenser will cause higher pressure.*
2. *Water-Cooled Models: Water Regulator Valves are factory set at 135 PSIG. Check the gauge indication and adjust, if necessary. Back pressure will operate the same as Air-Cooled Models.*

14. Remove refrigerant service gauges and BE SURE to REPLACE the Schrader valve caps on Schrader valves, to prevent leaks.

15. Replace Control Box Covers and all service panels.

16. Thoroughly explain to the owner/user the significant specifications of the Icemaker, the start up and operation, going through the procedures in the operating instructions. Answer all questions about the Icemaker, by the owner; and, inform the owner of the name and telephone number of the authorized SCOTSMAN Distributor, or Service Agency serving him.

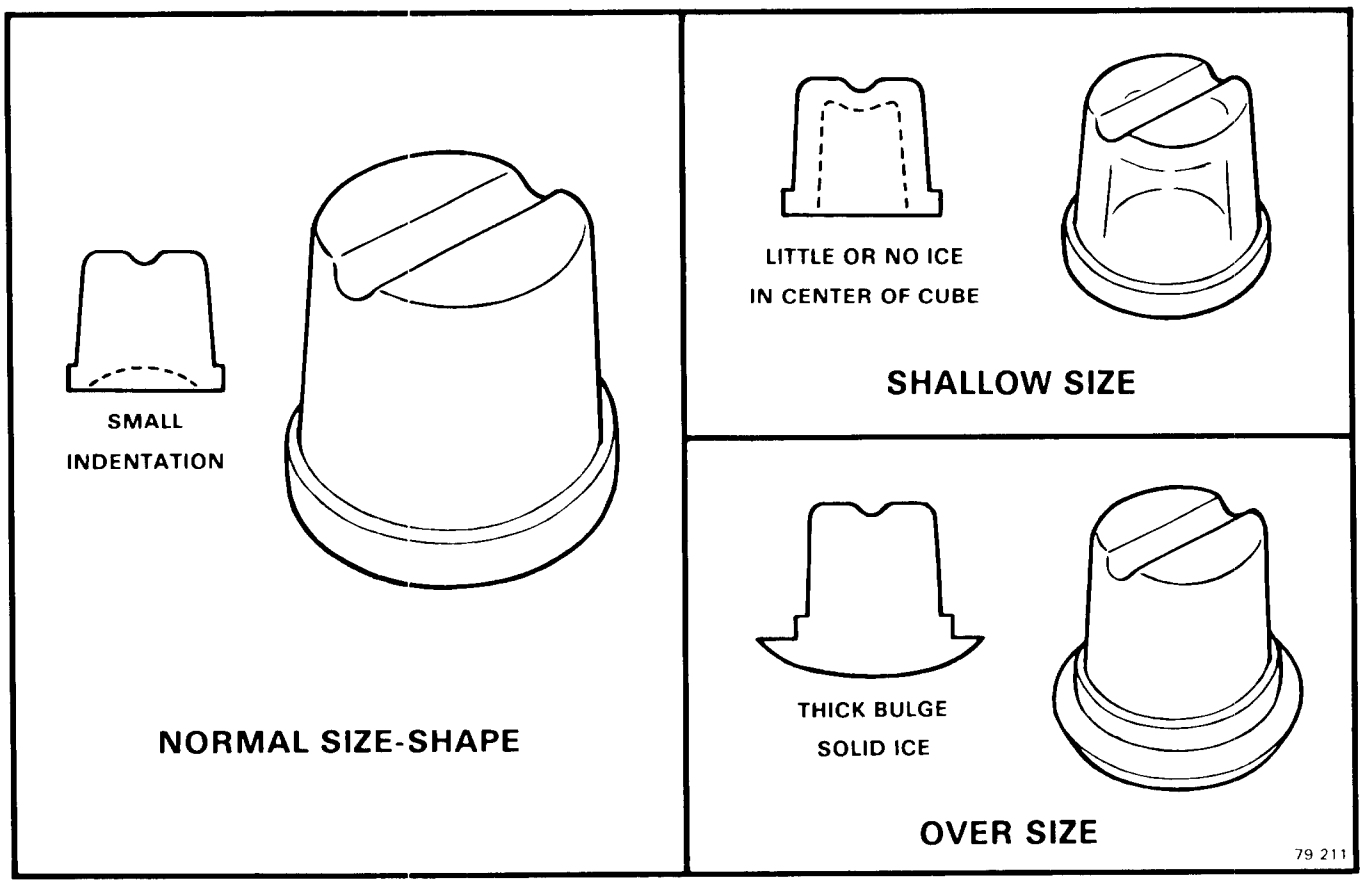

Figure 2-4. Ice Cube Shape.

SECTION III
PRINCIPLES OF OPERATION
How It Works

I. FREEZING CYCLE

Water from the sump in the reservoir of the Freezing Chamber is pumped to a rotating Spray Bar Assembly, which is powered by the Agitator Motor drivemotor on top of the upper Freezing Chamber. Each Spray Bar Assembly has ten jets through which water is uniformly sprayed into the inverted ice cube cup molds of the Freezing Chamber Evaporator. See Figure 3-1. At the beginning of the Freeze Cycle, the electrical circuit is completed to the Compressor, Water Pump, and the coil of the Finish Relay. The Water Pump operates continuously during the Freeze Cycle, through contacts of the Finish Relay. In Water-Cooled models water also flows through the Condenser and out the drain. While in the Condenser, water removes heat from the refrigerant and allows the refrigerant to condense from a gas to a liquid.

Refrigerant is compressed in the Compressor and discharged into the Condenser as a high pressure, high temperature gas. The refrigerant is cooled and condensed by either air or water and condenses to a high pressure, high temperature liquid. This liquid refrigerant, then passes through a small capillary tube where the temperature and pressure of the liquid refrigerant are lowered. The low pressure, low temperature liquid refrigerant, then enters the Evaporator. The refrigerant is warmed by water being sprayed against the Evaporator and begins to boil off, to become a gas. The refrigerant next travels through the Accumulator, where any remaining liquid refrigerant then returns to the Compressor as a low pressure, low temperature gas, and the cycle starts again.

During the Freezing Cycle, both the Water Inlet Solenoid Valve and the Hot Gas Solenoid Valve are CLOSED.

When the ice cubes are about three-quarters formed, the Cube Size Control bulb located on the suction line coming out of the Evaporator platen assembly, will sense the temperature at which it is preset to CLOSE. This will complete

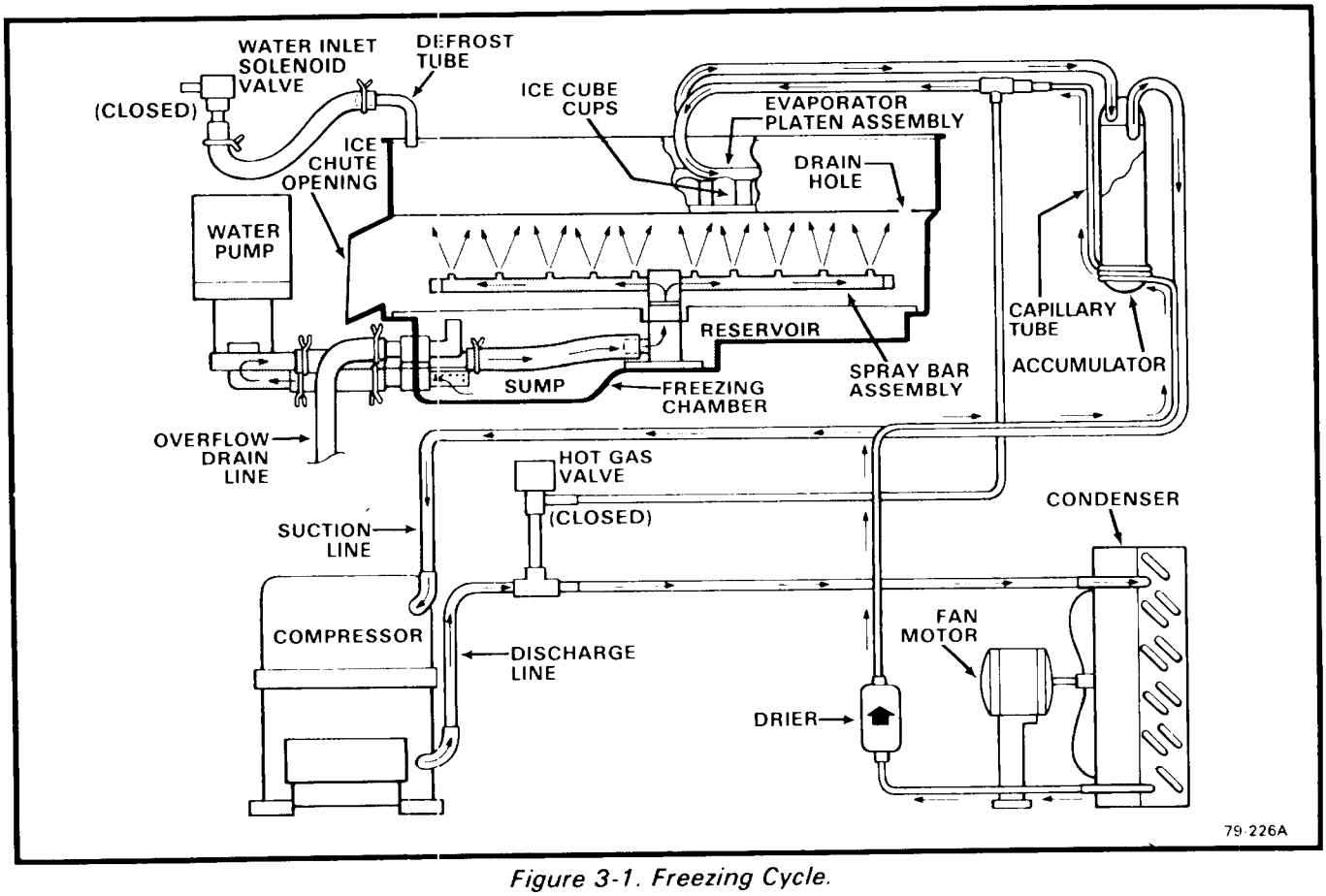

Figure 3-1. Freezing Cycle.

the electrical circuit to the Timer. The Timer then controls the remainder of the cycle.

The Timer will keep the Icemaker operating in the Freezing Cycle for the next six minutes. This will give the cubes time to fully form. After six minutes, the Timer will switch the Icemaker into the Harvest Cycle, through the contacts of the Timer Assembly microswitch.

II. HARVEST CYCLE

When the Timer switches the Icemaker into the Harvest Cycle, hot gas being discharged from the Compressor is diverted from the Condenser through the Hot Gas Solenoid Valve into the Evaporator. During this cycle, the hot gas circulates from the Compressor to the Evaporator and back again, bypassing the Condenser and capillary tube. In the electrical circuit, the compressor is operating and both the Water Inlet Solenoid Valve and the Hot Gas Solenoid Valve are energized. See Figure 3-2.

Opening the Water Inlet Solenoid Valve, allows a fresh water supply to be discharged into the top of the Evaporator platen assembly. The finished ice cubes are released from the Evaporator, by the warming effect of the hot gas flowing through the Evaporator tubes and the water flow around the ice cube molds. The released ice cubes drop into the inner bottom of the Freezing Chamber and pushed by the rotating Spray Bar Assembly out the slightly slanted ice chute opening, down the plastic Cube Chute and into the ice storage bin. At the end of the Harvest Cycle, the Timer cam will push the actuator arm of the microswitch IN. If the Bin Thermostat is still CLOSED, a whole new cycle will begin. If the Bin Thermostat is OPEN, the Icemaker will shut OFF at this time.

III. COMPONENT DESCRIPTIONS

A. BIN THERMOSTAT CONTROL - (TWO)

The Bin Thermostat Control is located in the lower half of each Control Box. The sensing capillary tube of the control is routed out of the Control Box downward between the Cube Chute and the Chassis base and into the ice storage Bin. Thread the capillary tube through the grommeted holes of the combination cube deflector and thermostat bulb bracket. The Bin Thermostat Control functions to automatically shut OFF the Icemaker, when the ice storage Bin is filled and ice contacts the capillary tube. It also signals the RESTART of the Icemaker when the capillary tube starts to warm up, after ice has been removed from the Bin.

NOTE

Altitude adjustment should ONLY be performed on Icemakers installed at 2000-foot level locations and ABOVE, and adjust only in increments of one-fourth turn of a screw at a time.

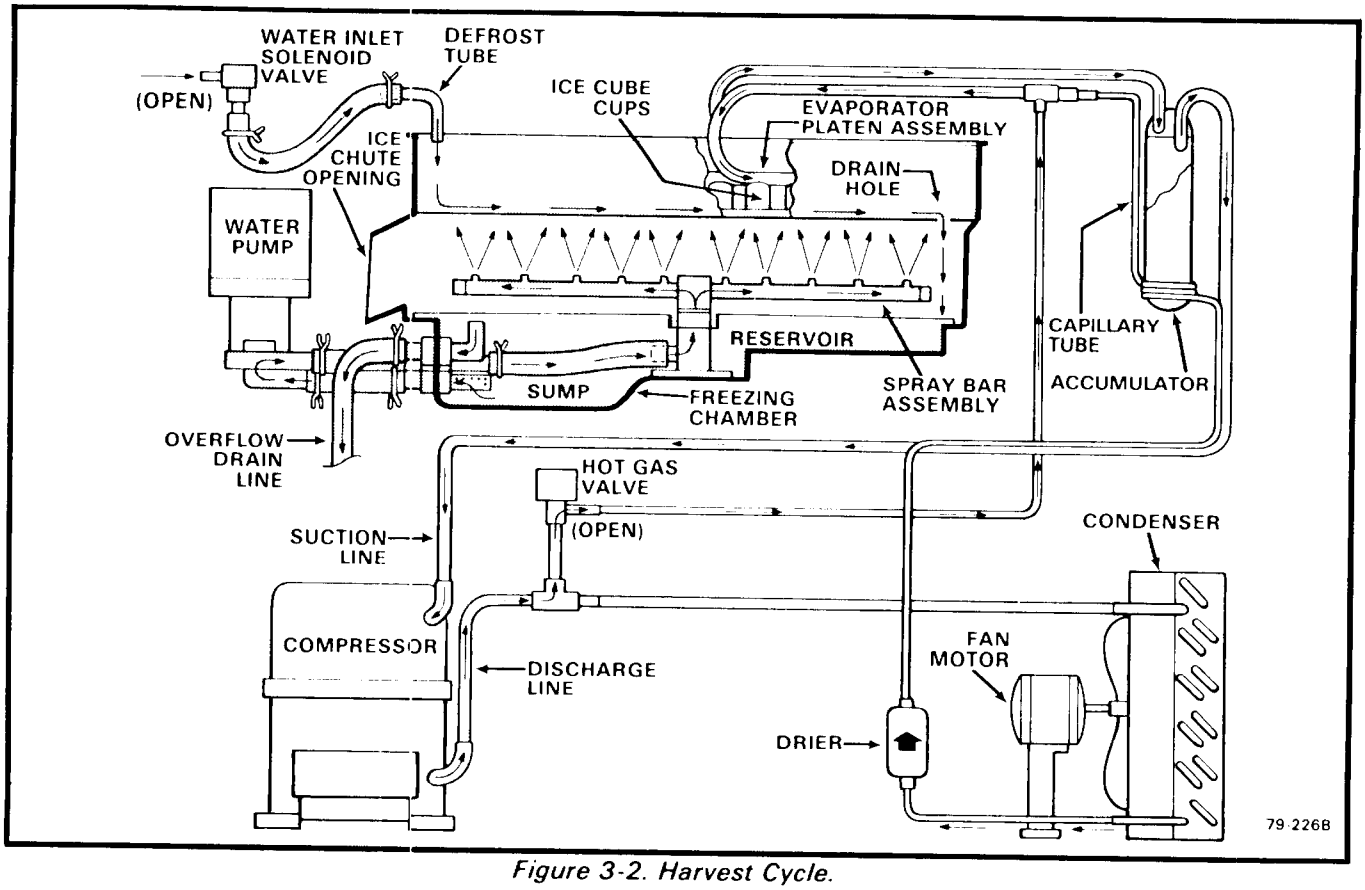

Figure 3-2. Harvest Cycle.

B. COMPRESSOR START RELAY - (TWO)

The Compressor Start Relay functions to carry the Compressor line current. The relay is wired so any control in the pilot circuit, such as the Bin Thermostat, Low Pressure— and High Pressure Controls, etc., will cause the relay holding coil to be de-energized, when the control contact OPENS, thereby breaking the circuit to the Compressor through the relay points.

C. CUBE SIZE CONTROL - (TWO)

The temperature sensing Cube Size Control affects the length of the Freezing Cycle prior to initiating the Finishing Timer. The Cube Size Control closes its contacts when the Evaporator reaches a preset temperature, starting the Finishing Timer. A variation in either ambient air or incoming water temperature will affect the efficiency of the refrigeration system. This will vary the length of time it takes the Evaporator to reach the temperature at which the Cube Size Control is preset to CLOSE; which, in turn, will affect the overall cycle time.

NOTE

Be sure to refer to procedure IV-II, Adjustment of the Cube Size Control, BEFORE attempting to adjust the control.

D. FAN RELAY - Air-Cooled Models.

The Fan Relay functions to switch electrical current to the Fan Motor Assembly, for the air-cooled Condenser, from electrical power supplied by the icemaking system, either left or right side, that happens to be operating. When both icemaking systems are operating, both share the Fan Motor and air-cooled Condenser Assembly, which is switched through the Fan Relay, at that time, from the left side, or System One electrical circuits.

E. FINISH RELAY - (TWO)

The multi-function, three-pole, double-throw, plug-in relay is installed directly into a receptacle on the printed circuit board in the Control Box. The relay functions, in part, to by-pass the Bin Thermostat Control, to prevent the Icemaker from shutting OFF, when a filled-bin condition occurs, during the Freezing Cycle. The by-pass action serves to ensure full-sized ice cubes with each Harvest Cycle; and, to prevent short cycling on the Bin Thermostat Control.

F. FINISHING TIMER - Timer & Switch Assembly - (TWO)

The function of the Finishing Timer begins when activated by the Cube Size Control. The Timer controls an eight minute dual function: six minutes are programmed to finish freezing the ice cubes and the final two minute portion is for the defrost operation and harvest of the ice cubes. All electrical circuitry is connected through the printed circuit board and the Finishing Timer and shunted by the single-pole, double-throw microswitch to either the Freezing Cycle or the Harvest Cycle. The microswitch is actuated by a Cam Assembly directly connected to the Timer Motor. The Timer Cam can be adjusted to vary the defrost timer as required.

G. HIGH PRESSURE CONTROL - Water-Cooled Model - (TWO)

The High Pressure Control, a safety control, is factory set at 250 PSIG. The control functions as a precautionary device, to shut OFF electrical power to the Icemaker, should a loss of water occur to the water-cooled Condenser. In addition to being a manual reset Control, there is an adjusting screw for raising or lowering the CUT-IN pressure.

H. HOT GAS SOLENOID VALVE-(TWO)

The Hot Gas Solenoid Valve functions only during the Harvest Cycle, to divert the hot discharge gas from the Compressor, by-passing the Condenser and capillary tube, for direct flow to the Evaporator Platen Assembly to release ice cubes from the inverted ice cube molds. The Hot Gas Solenoid Valve is comprised of two parts, the Body & Plunger and the Coil & Frame assemblies. Installed in the discharge line of the Compressor, the energized solenoid coil lifts the valve stem within the valve body to cause the hot discharge gas to be diverted when the Finishing Timer has advanced to the start of the Harvest Cycle.

I. HOUR METER

The Hour Meter records the accumulated operating time of the Model HC1200 Cuber. Operating time is automatically recorded when either, or both, Compressors are in operation. Monitoring operating time recorded on the Hour Meter, the Serviceman can schedule specific preventive maintenance and cleaning operations.

J. SPRAY BAR ASSEMBLY-(FOUR)

The Spray Bar Assemblies are rotated by the Agitator Motors, two small drivemotors mounted on top of the two upper Freezing Chambers; and, are designed to channel re-circulating water to small jets for uniformly spraying water into the inverted ice cube cups. The Celcon material, used in fabricating the Spray Bar parts, is not subject to chemical attack by either acidic or alkaline materials at low temperatures or at high temperatures. Because of the smooth,

non-porous surface of the Celeon material Spray Bar, foreign materials have difficulty trying to adhere to these surfaces, thereby, reducing the usual frequency of cleaning procedures.

NOTE

Refer to procedure V-III, CLEANING - Icemaker; and, for problems requiring removal of parts refer to procedure IV-XV, for details for removing the Spray Bar Assembly.

K. WATER INLET SOLENOID VALVE-(TWO)

The Water Inlet Solenoid Valve functions only during the Harvest Cycle, when it is energized to permit a metered, one-fourth gallon-per-minute rate of incoming water, to flow through the Defrost Tube onto the top of the plastic Platen Assembly, assisting in the harvest of ice cubes. The water drains through holes in the Platen Assembly into the Reservoir in the lower section of the Freezing Chamber; and there, the water is recirculated through the Water Pump for return to the Spray Bars.

L. WATER REGULATOR VALVE-Water-Cooled Model - (TWO)

The Water Regulator Valve functions to maintain a constant Compressor head pressure, by regulating the amount of incoming water flow through the Condenser, on water-cooled models. The valve operates through the refrigerant system high side pressure. Rotating the adjusting screw, located on top of the valve, can INCREASE or DECREASE the water flow through the water-cooled Condenser, which in turn, will DECREASE or INCREASE the Compressor operating head pressure.

NOTE

When installing a replacement Water Regulator Valve, be sure the replacement valve is installed with the arrow positioned in the direction of the water flow.

REFRIGERANT CHARGE

MODEL		HC1200 Refrig. Chg.
Air-Cooled	*C	43 oz. R-12 (Approx.)
Water-Cooled	*C	35 oz. R-12 (Approx.)
Air-Cooled	*T	39 oz. R-12 (Approx.)
Water-Cooled	*T	31 oz. R-12 (Approx.)

NOTE

Always CHECK NAMEPLATE on individual Icemaker for specific refrigerant charge, BEFORE charging the refrigeration system. The above listed refrigerant charges are approximate charges for the HC1200 Cubers, however it is important to CHECK NAMEPLATE for each Icemaker, especially when there are different Compressors. The above listed refrigerant charges are for EACH icemaking system; it would double for two systems.

*C: Copeland Compressors installed.

*T: Tecumseh Compressors installed.

SECTION IV

ADJUSTMENT & REMOVAL & REPLACEMENT

The procedures provided in this Section are arranged in alphabetical order, to make specific Adjustment and Removal and Replacement information easy to locate.

Read the instructions thoroughly before preforming any Adjustment or Removal and Replacement Procedures.

I. ADJUSTMENT OF THE BIN THERMOSTAT CONTROL

The control for the Bin Thermostat is the Temperature Control, located in the lower half of the Control Box Assembly.

See Figure 4-1 for location and direction of rotation, clockwise (CW) or counterclockwise (CCW), of the adjusting screws on the Temperature Control, in the particular Control Box the adjustment is to be performed.

WARNING

The adjusting screws on the Temperature Control device have very sensitive response to adjustment. DO NOT attempt to adjust the screw until after thoroughly reading and understanding the following instructions and illustration. Over-adjusting or erratic guessing, can foul the instrument and cause ultimate delay and part replacement, WHICH COULD HAVE BEEN PREVENTED.

II. ADJUSTMENT OF THE CUBE SIZE CONTROL

CAUTION

BEFORE performing actual adjustment to the Cube Size Control, check other possible causes for

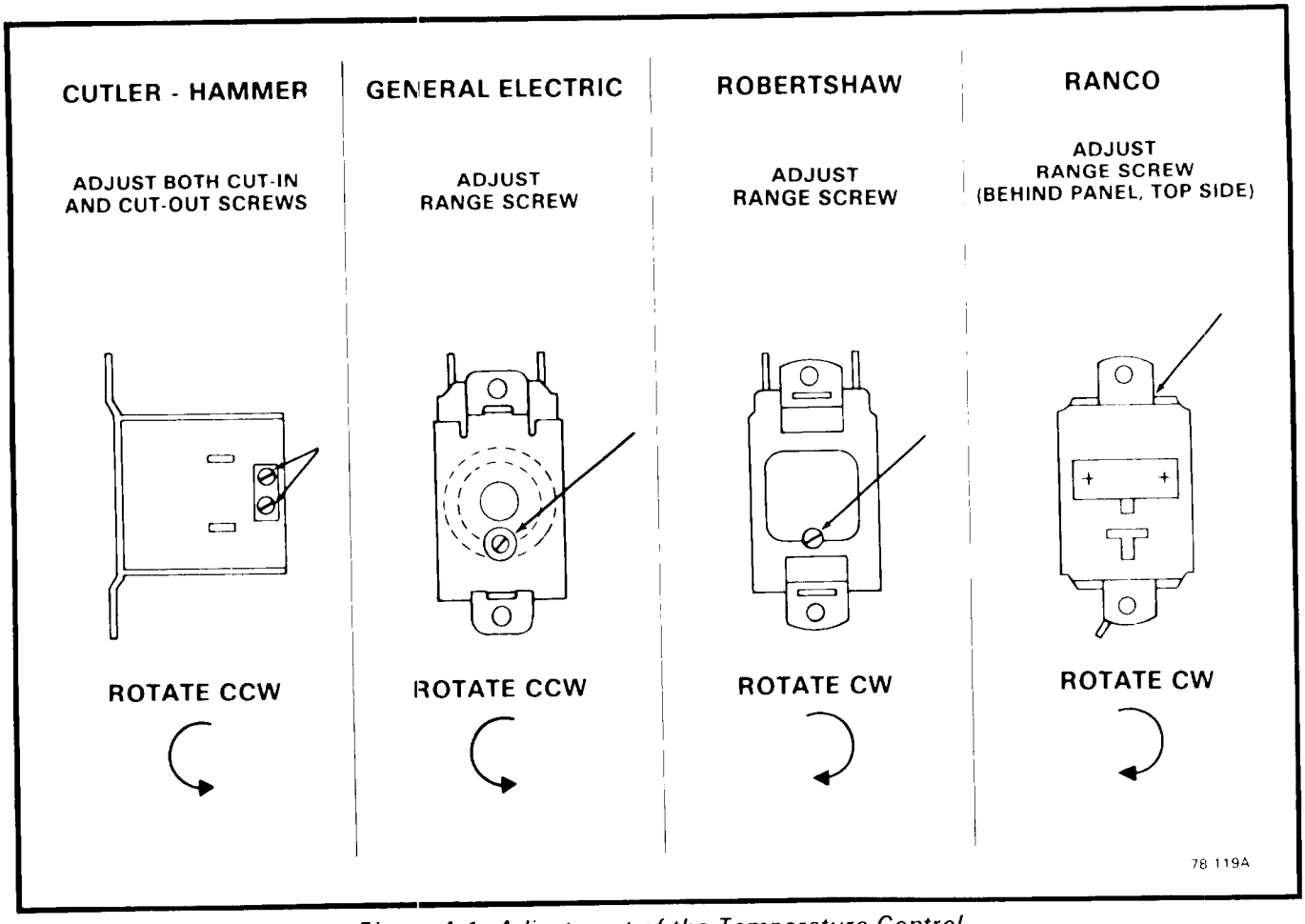

Figure 4-1. Adjustment of the Temperature Control.

cube size problems, refer to Section VI, SERVICE DIAGNOSIS for problem review and analysis.

DO NOT perform adjustment when a new Cube Size Control is installed, until the control bulb has been properly installed in the tube well, on the refrigerant tube of the Platen Assembly and the Icemaker has progressed through several complete freezing and harvest cycles, to observe size and quality of ice cubes and whether or not a cube size problem exists.

As a reverse acting temperature control, adjustment on the Cube Size Control is performed to either cause larger sized ice cubes or smaller sized ice cubes to be produced.

A. To Produce LARGER Sized Ice Cubes:

1. Locate the Cube Size Control, the first control below the toggle switch in the Control Box Assembly.
2. Rotate the adjusting screw one-eighth of a turn CLOCKWISE toward COLDER.
3. Observe size of ice cubes in next two ice cube harvests and repeat step 2 above, in one-eighth turn increments, until desired ice cube size is achieved.

B. To Produce SMALLER Sized Ice Cubes:

1. Locate the Cube Size Control, first control below the toggle switch in the Control Box Assembly.
2. Rotate the adjusting screw one-eighth of a turn COUNTERCLOCKWISE toward WARMER.
3. Observe size of ice cubes in next two ice cube harvests and repeat step 2 above, in one-eighth turn increments, until desired ice cube size is achieved.

III. ADJUSTMENT OF THE TIMER & SWITCH ASSEMBLY

The Timer & Switch Assembly is factory set, so that one complete revolution of the cam on the Timer represents eight minutes. Six minutes comprise the freezing cycle event during cam rotation, and the final two minutes program the defrost and harvest cycle. Rotating the shaft of the Timer Cam, CLOCKWISE will allow positioning the actuator arm of the microswitch on the cam at the selected start position for either the freezing cycle or harvest cycle, as required, during the START UP procedures and in the CLEANING instructions. Rotating the shaft COUNTERCLOCKWISE will unscrew the shaft from the threaded stud on the Timer Cam.

To Adjust the Timer Switch Assembly:

A. HARVEST CYCLE: Slowly rotate the shaft of the Timer & Switch Assembly, located in the hole in the front of the Control Box Cover, CLOCKWISE, until the actuator arm on the microswitch drops off of the outer cam into the cam slot. An audible click can be heard, but in a noisy area, look at the cam and switch to observe the event. See Figure 4-2.

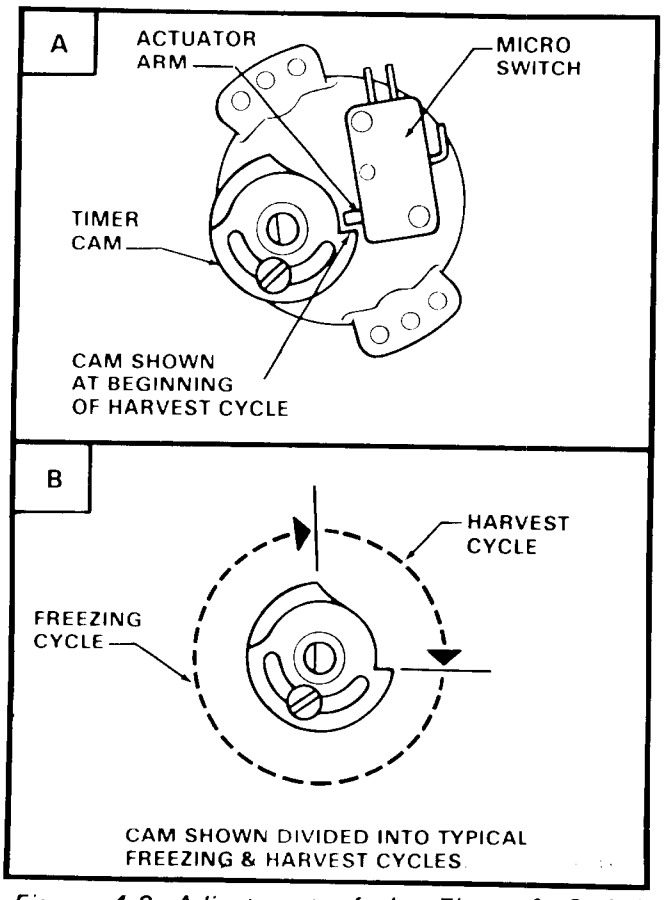

Figure 4-2. Adjustment of the Timer & Switch Assembly.

B. FREEZING CYCLE: Slowly rotate the shaft of the Timer & Switch Assembly, located in the hole in the front of the Control Box Cover, CLOCKWISE, until the actuator arm on the microswitch rides up out of the cam slot to the start of the surface of the outer cam.

IV. ADJUSTMENT OF THE WATER REGULATOR ASSEMBLY - WATER-COOLED MODELS

The correct Compressor head pressure on Water-Cooled Models is 135 PSIG. Adjusting the Water Regulator Valve increases or decreases the rate of flow of water, through the Water-Cooled Condenser; which increases or decreases the affected temperature/pressure of the Compressor head pressure. INCREASED water flow, results in DECREASED or LOWER head pressure; while, DECREASED water flow, results in INCREASED or HIGHER head pressure.

To adjust the Water Regulator Assembly:

A. To INCREASE the head pressure: Rotate the adjusting screw COUNTERCLOCKWISE.

B. To DECREASE the head pressure: Rotate the adjusting screw CLOCKWISE.

C. Check change in Compressor head pressure, and repeat step A or B as necessary, to achieve desired operating head pressure.

WARNING

Be sure the electrical power supply and the water supply are OFF, BEFORE starting any of the following REMOVAL AND REPLACEMENT procedures as a precaution to prevent possible personal injury or damage to equipment.

V. REMOVAL AND REPLACEMENT OF THE AGITATOR MOTOR ASSEMBLY - (TWO)

NOTE

There are two Agitator Motors in the HC1200 Cuber, one is installed on top of each of the two upper Freezing Chambers.

A. To remove the Agitator Motor Assembly:

1. Remove screws and the Top Panel and Front Panel to gain access to the particular Agitator Motor to be removed.
2. Tilt the top of the plastic Cube Chute forward slightly, then, lift the Cube Chute up for removal.
3. Remove three U-Type Clips and the plastic Curtain Assembly.
4. Reach through the ice chute opening in the upper Freezing Chamber and feel for the Spray Bar.
5. Move hand to the center hub and rotate the Spray Bar, so one end is aligned with the ice chute opening.
6. Lift the Spray Bar up, off of the jet bearing hub, then, remove the Spray Bar through the ice chute opening.
8. Disconnect electrical leads and ground wire from terminals on the Agitator Motor.
9. Reach through the same ice chute opening, as before, and grasp the top Drive Fork with one hand, and the Agitator Motor Fan, on top of the upper Freezing Chamber, with the other hand. See Figure 4-3.
10. Hold the Fan blades still and rotate the left-hand thread Drive Fork to the right, COUNTERCLOCKWISE, and unscrew the Drive Fork from the Agitator Motor.
11. Remove four screws and lift the Agitator Motor out the top of the upper Freezing Chamber.

B. To replace the Agitator Motor Assembly, reverse the removal procedure.

VI. REMOVAL AND REPLACEMENT OF THE BIN THERMOSTAT CONTROL - (TWO)

A. To remove the Bin Thermostat Control:
1. Remove screws and the Front Panel to

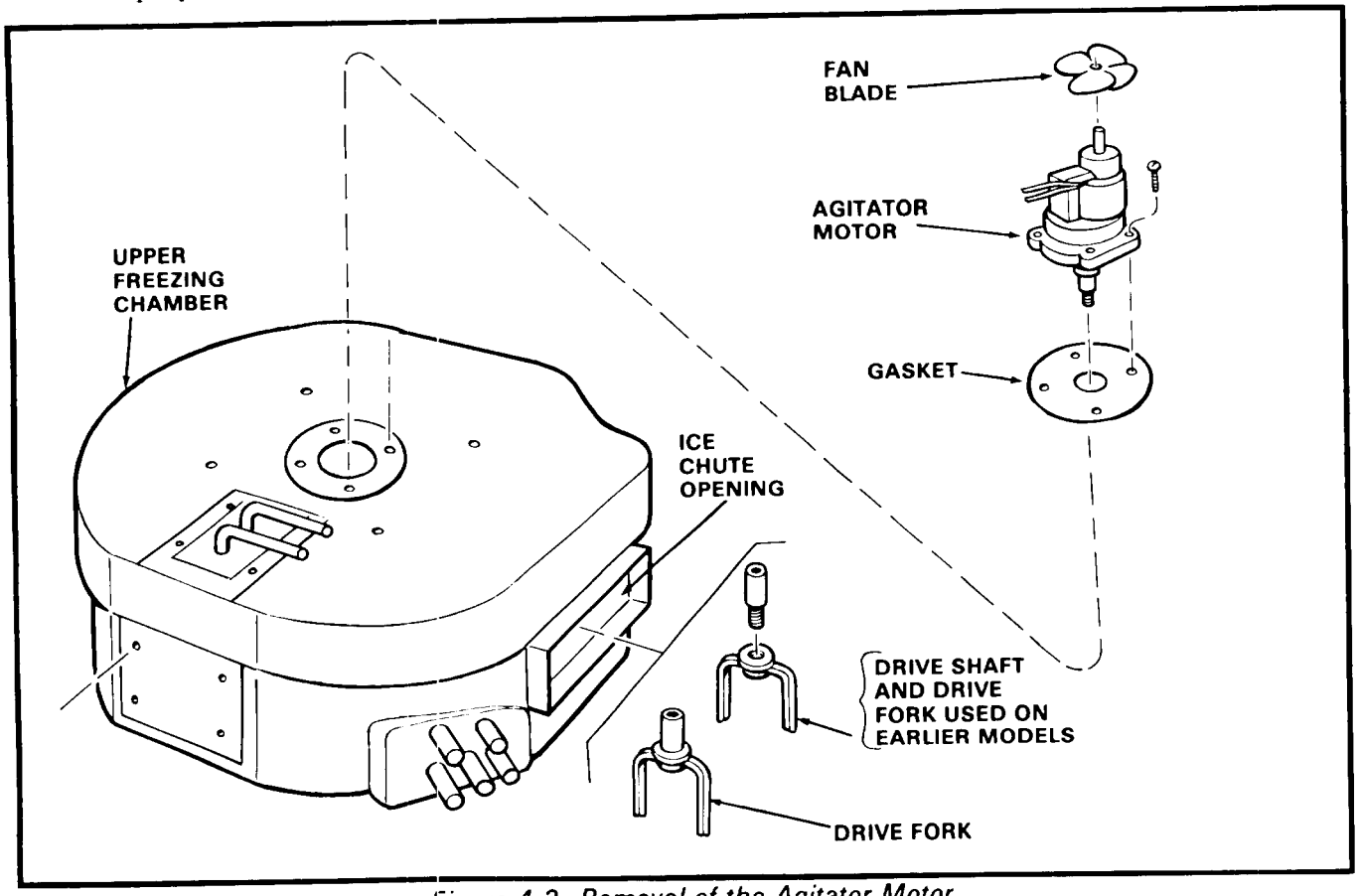

Figure 4-3. Removal of the Agitator Motor Assembly.

gain access to the particular Bin Thermostat Control to be removed.

2. Remove screws and the Control Box Cover.
3. Trace capillary tube, from the Bin Thermostat Control, the second control below the toggle switch in the Control Box, to the Chassis frame post down to the Cube Deflector.
4. Carefully remove the capillary tube from the bulb holder holes on the side of the Cube Deflector.
5. Carefully withdraw the capillary tube from the Bin, up through the Chassis Base to the Control Box.
6. Remove electrical leads from the Bin Thermostat Control.
7. Remove screws and the Bin Thermostat Control, carefully working the capillary tube out of the rubber grommet and slot in the left wall of the Control Box.

B. To replace the Bin Thermostat Control, reverse the removal procedures.

VII. REMOVAL AND REPLACEMENT OF THE COMPRESSOR ASSEMBLY - (TWO)

NOTE

Always install a replacement Drier, anytime the sealed refrigeration system is opened. Do not replace the Drier until all other repair or replacement has been completed.

A. To remove the Compressor Assembly:

1. Remove screws and the Center Front Panel.
2. Remove three screws from the left side of the Condenser frame, on the air-cooled models, then, rotate the Fan and Air-Cooled Condenser Assembly to the fully open position.
3. Bleed off or blow the refrigerant charge through the Schrader valve.
4. Remove the cover from the terminal box on the Compressor; then, remove three screws and electrical leads from the Compressor.
5. Unsolder the refrigerant suction line and the discharge line from the Compressor.
6. Unsolder the process header from the Compressor and retain for installation on the replacement Compressor.
7. Remove four bolts and washers which secure the Compressor to the Chassis mounting base.
8. Slide and remove the Compressor from the Cabinet.

B. To replace the Compressor Assembly, reverse the removal procedure.

VIII. REMOVAL AND REPLACEMENT OF THE CONDENSER - AIR-COOLED MODELS

NOTE

Always install a replacement Drier, anytime the sealed refrigeration system is opened. Do not replace the Drier until all other repair or replacement has been completed.

A. To remove the Condenser:

1. Remove screws and the Center Front Panel.
2. Remove three screws from the left side of the Condenser frame, then, rotate the Fan and Air-Cooled Condenser Assembly to the fully open position.
3. Bleed off or blow the refrigerant charge through the Schrader valve.
4. Unsolder and disconnect two flexsteel hoses on top of the Condenser.
5. Unsolder and remove two Driers from the refrigerant lines connecting to the Condenser.
6. Remove screws attaching the Fan and Air-Cooled Condenser Assembly, hinged on the right, to the Chassis frame, and remove the Assembly from the Cabinet.
7. Remove screws and disassemble the Fan Motor Bracket, Fan Blade, Fan Motor, Shroud Assembly and the Condenser Hinge from the Air-Cooled Condenser.

B. To replace the Air-Cooled Condenser, reverse the removal procedure.

IX. REMOVAL AND REPLACEMENT OF THE CONDENSER - WATER-COOLED MODELS - (TWO)

NOTE

Always install a replacement Drier, anytime the sealed refrigeration system is opened. Do not replace the Drier until all other repair or replacement has been completed.

A. To remove the Condenser:

1. Remove screws and the Center Front Panel.
2. Bleed off or blow the refrigerant charge through the Schrader valve.
3. Check to be sure building source water inlet supply shutoff valve to rear of Chassis is OFF.
4. Disconnect water inlet supply line at top rear of Chassis.
5. Disconnect Water-Cooled Condenser inlet water line at the Water Regulator Assembly outlet fitting.
6. Unsolder the refrigerant capillary tube at the Drier.

7. Unsolder the Compressor discharge line, at the top of the Water-Cooled Condenser.
8. Unsolder the Condenser water outlet line, at the top of the Water-Cooled Condenser.
9. Remove two screws and washers and the Water-Cooled Condenser from the Cabinet.

B. To replace the Water-Cooled Condenser, reverse the removal procedures.

X. REMOVAL AND REPLACEMENT OF THE CUBE SIZE CONTROL - (TWO)

A. To remove the Cube Size Control:

1. Remove screws and the Front Panel to gain access to the particular Cube Size Control to be removed.
2. Remove screws and the Control Box Cover.
3. Trace capillary Tube, from the Cube Size Control, the first control below the toggle switch in the Control Box, to the capillary tube well on the refrigerant suction line on the Evaporator Platen Assembly; then peel back the insulation.
4. Carefully work the coiled capillary tube bulb out of the capillary tube well and withdraw the entire capillary tube from the Freezer section of the Cabinet.
5. Remove electrical leads from the Cube Size Control.
6. Remove screws and the Cube Size Control, carefully working the capillary tube out of the rubber grommet and slot in the left wall of the Control Box.

B. To replace the Cube Size Control, reverse the removal procedure.

XI. REMOVAL AND REPLACEMENT OF THE CURTAIN ASSEMBLY - (FOUR)

A. To remove the Curtain Assembly:

1. Remove screws and the Front Panel to gain access to the particular Curtain Assembly to be removed.
2. Tilt the top of the plastic Cube Chute forward slightly, then, lift the Cube Chute up for removal.

NOTE

Before removing the Curtain Assembly in the next step, look inside the ice chute opening to note the irregular end of the plastic stiffener of the Curtain Assembly is installed at the left side of the opening.

3. Remove three U-Type Clips and the plastic Curtain Assembly from the top lip of the ice chute opening.

B. To replace the Curtain Assembly, reverse the removal procedure.

NOTE

Be sure to install the replacement Curtain Assembly with the irregular end of the plastic stiffener positioned at the left side of the ice chute opening; and, the edge of the Curtain is dressed evenly with the top lip of the ice chute opening and secured with three U-Type Clips. The thin, clear plastic sheet of the curtain should hang down evenly.

XII. REMOVAL AND REPLACEMENT OF THE DRIER - (TWO)

NOTE

1. *Always install a replacement Drier, anytime the sealed rerigeration system is opened. Do not replace the Drier until all other repair or replacement has been completed.*
2. *As the HC1200 has two independent and complete icemaking systems, there are two Driers, one for each refrigeration system. On the air-cooled model, both Driers are installed at the right rear of the air-cooled Condenser; and the Drier for the refrigeration system in the right side section is the UPPER Drier, while the LOWER Drier is for the refrigeration system in the left side section of the Chassis.*

A. To remove the Drier:

1. Remove screws and the Center Front Panel.
2. Remove three screws from the left side of the Condenser frame, on the air-cooled models, then, rotate the Fan and Air-Cooled Condenser Assembly to the fully open position.
3. Bleed off or blow the refrigerant charge through the Schrader valve.
4. Remove screw and Drier Brace attaching the Drier to the Condenser shroud on Air-Cooled Models; and, to the Chassis base on Water-Cooled Models.
5. Unsolder refrigeration lines at both ends of the Drier, remove the Drier and separate the Drier from the Drier Brace.

B. To replace the Drier:

CAUTION

1. **If the factory seal is broken on the replacement Drier, exposing it to the atmoshere more than a few minutes, the Drier will absorb moisture from the atmosphere and lose substantial ablility for moisture removal.**
2. **Be sure the replacement Drier is installed with the arrow positioned in the direction of the refrigerant flow.**

1. Remove the factory seals from the replacement Drier and install the Drier in the refrigerant lines with the arrow positioned in the direction of the refrigerant flow.
2. Install the Drier Brace on the Drier.
3. Solder the Drier into the lines, two places.
4. Purge the system and check for leaks.
5. Thoroughly evacuate the system to remove moisture and non-condensables.
6. Charge the system with refrigerant, by weight. SEE NAMEPLATE.
7. Secure the hinged Air-Cooled Condenser on Air-Cooled Models; and, replace and attach the Center Front Panel, on both models.

XIII. REMOVAL AND REPLACEMENT OF THE FAN MOTOR ASSEMBLY - AIR-COOLED MODELS

A. To remove the Fan Motor Assembly:

1. Remove screws and the Center Front Panel.
2. Remove three screws from the left side of the Condenser frame, on the air-cooled models, then rotate the Fan and Air-Cooled Condenser to the fully open position.
3. Disconnect the two electrical leads from the Fan Motor at the rear of the Hour Meter on the Control Panel Assembly.
4. Remove three screws at the top and three screws at the bottom of the Fan Motor Bracket and remove the Fan Motor and Bracket from the Condenser shroud.
5. Loosen set screws on the Fan Blade and remove the Fan Blade from the Fan Motor.
6. Remove four nuts and lockwashers and separate the Fan Motor from the Fan Motor Bracket.

B. To replace the Fan Motor Assembly, reverse the removal procedure.

NOTE

Be sure to replace the Fan Blade with the hub of the Fan Blade facing the Fan Motor, to ensure airflow is toward the Fan Motor.

XIV. REMOVAL AND REPLACEMENT OF THE FREEZING CHAMBER - (FOUR)

A. To remove the Freezing Chamber:

1. Remove screws and the Top Panel, Front Panel and the End Panel to gain access to the particular Freezing Chamber to be removed.
2. Tilt the top of the plastic Cube Chute forward slightly, then, lift the Cube Chute up for removal.
3. Remove three U-type Clips and the plastic Curtain Assembly.
4. Reach through the ice chute opening in the upper Freezing Chamber and feel for the Spray Bar.
5. Move hand to the center hub and rotate the Spray Bar, so one end is aligned with the ice chute opening.
6. Lift the Spray Bar up, off of the jet bearing hub, then, remove the Spray Bar through the ice chute opening.
7. Disconnect electrical leads and ground wire from terminals on the Agitator Motor.
8. Reach through the same ice chute opening, as before, and grasp the top Drive Fork with one hand, and the Agitator Motor Fan on top of the Freezing Chamber, with the other hand.
9. Hold the Fan Blades still and rotate the left-hand thread Drive Fork to the right, COUNTERCLOCKWISE, and unscrew the Drive Fork from the Agitator Motor.
10. Remove four screws and lift out the Agitator Motor.
11. Insert and hold firm, a screwdriver through a hole in the top jet bearing, then, reach through the ice chute opening of the lower Freezing Chamber and rotate the left-hand thread Drive Fork to the right, COUNTERCLOCKWISE, to unscrew the bottom Drive Fork from the Water Tube.
12. Raise the screwdriver and top jet bearing up, an inch or so, to expose the hole in the Water Tube; next, insert and hold firm, a second screwdriver in the hole in the upper end of the Water Tube; then, rotate the screwdriver in the top jet bearing to the left, CLOCKWISE, to unscrew the bearing from the Water Tube.
13. Remove bearing, both screwdrivers, and push the Water Tube UP, and remove the tube through the hole in the Platen and Cover Assembly.
14. Remove hose clamps and work loose four tygon Tubes from the Freezing Chamber, three from the Water Pump and one drain tube.
15. Carefully lift the Platen and Cover Assembly, and tie off or use a board to support and give ample space to allow removal of the Freezing Chamber.
16. Remove eight screws and lockwashers and two bolts and the Freezer Mount Plate; repeat for second Freezer Mount Plate.
17. Carefully work the upper Freezing Chamber out of the Chassis; or, remove hose clamps and Tygon Tubes from the lower Freezing Chamber, and remove the

lower Freezing Chamber.

B. To replace the Freezing Chamber, reverse the removal procedure.

XV. REMOVAL AND REPLACEMENT OF THE SPRAY BAR AND WATER TUBE ASSEMBLY

A. To remove the Spray and Water Tube Assembly.

1. Remove screws and the Front Panel to gain access to the particular Spray Bar Assembly to be removed.
2. Tilt the top of the plastic Cube Chute forward slightly, then, lift the Cube Chute up for removal.
3. Remove three U-type Clips and the plastic Curtain Assembly.
4. Reach through the ice chute opening in the Freezing Chamber and feel for the Spray Bar.
5. Move hand to the center hub and rotate the Spray Bar, so one end is aligned with the ice chute opening.
6. Lift the Spray Bar up, off of the jet bearing hub, then, remove the Spray Bar through the ice chute opening.
7. Disconnect electrical leads and ground wire from terminals on the Agitator Motor.
8. Reach through the upper ice chute opening, and grasp the Top Fork with one hand, and the Agitator Motor Fan on top of the Freezing Chamber, with the other hand.
9. Hold the Fan Blades still and rotate the left-hand thread Drive Fork to the right, COUNTERCLOCKWISE, and unscrew the Drive Fork from the Agitator Motor.
10. Remove four screws and lift out the Agitator Motor.
11. Insert and hold firm, a screwdriver through a hole in the top bearing; then, reach through the ice chute opening of the lower Freezing Chamber and rotate the left-hand thread Drive Fork to the right, COUNTERCLOCKWISE, to unscrew and remove the bottom Drive Fork from the Water Tube. Remove the lower Spray Bar.
12. Raise the screwdriver and top jet bearing up, an inch or so, to expose the hole in the Water Tube; next insert and hold firm, a second screwdriver in the hole in the upper end of the Water Tube; then, rotate the Screwdriver in the top jet bearing to the left, CLOCKWISE, to unscrew the bearing from the Water Tube.
13. Remove bearing, both screwdrivers, and push the Water Tube UP, and remove the tube through the hole in the Platen and Cover Assembly.

B. To replace the Spray Bar and Water Tube Assembly, reverse the removal procedure.

XVI. REMOVAL AND REPLACEMENT OF THE WATER PUMP ASSEMBLY - (FOUR)

A. To remove the Water Pump Assembly:

1a. LEFT SIDE SYSTEM: Remove screws and the left Front Panel and the left End Panel.

1b. RIGHT SIDE SYSTEM: Remove screws and the right Front Panel and the Center Front Panel; next, remove three screws from the left side of the Condenser frame, on the air-cooled models, then, rotate the Fan and Air-Cooled Condenser Assembly to the fully open position.

2. Remove one screw and one end of the green ground wire from the Water Pump Bracket.
3. Remove two screws and washers attaching the Water Pump Assembly to the Water Pump Bracket.
4. Remove three hose clamps connecting the three Tygon Tubes to the Freezing Chamber; then, lift the Water Pump Assembly off of the Water Pump Bracket and work loose the three attached Tygon Tubes from the Freezing Chamber.

B. To replace the Water Pump Assembly, reverse the removal procedure.

XVII. REMOVAL AND REPLACEMENT OF THE WATER REGULATOR ASSEMBLY - WATER-COOLED MODELS - (TWO)

NOTE

A. To remove the Water Regulator Assembly:

1. Remove screws and the Center Front Panel.
2. Check to be sure building source water inlet supply shutoff valve to rear of Chassis is OFF.
3. Bleed off or blow the refrigerant charge through the Schrader valve.
4. Disconnect water inlet supply line at the top rear of the Chassis.
5. Disconnect water line at the inlet and outlet fittings on the Water Regulator Assembly.
6. Unsolder the Water Regulator Valve capillary tube from the Compressor refrigerant discharge line.
7. Remove two screws and the Water Regulator Assembly from the Chassis Base.

B. To replace the Water Regulator Assembly, reverse the removal procedure.

SECTION V

MAINTENANCE & CLEANING INSTRUCTIONS

I. GENERAL

The periods and procedures for maintenance and cleaning are given as guides and are not to be construed as absolute or invariable. Cleaning especially will vary, depending upon local water conditions and the ice volume produced; and, each Icemaker must be maintained individually, in accordance with its own particular location requirements.

II. ICEMAKER

THE FOLLOWING MAINTENANCE SHOULD BE SCHEDULED AT LEAST TWO TIMES PER YEAR ON THIS ICEMAKER. CALL YOUR AUTHORIZED SCOTSMAN SERVICE AGENCY.

1. Check and clean water line Strainers.
2. Check that the Icemaker cabinet is level, in side-to-side and front-to-rear directions.
3. Clean the water system Evaporator, Freezing Chamber Reservoir and Spray Bars, using a solution of SCOTSMAN Ice Machine Cleaner. Refer to procedure V-III, CLEANING-Icemaker.

NOTE

Cleaning requirements vary according to local water conditions and individual user operation. Continuous check of the clarity of ice cubes and visual inspection of the Spray Bar parts before and after cleaning will indicate frequency and procedure to be followed in local areas.

4. Check that plastic curtains hang down evenly within the opening at the front of the Freezing Chambers.
5. Check and tighten all bolts.
6. Check and tighten all electrical connections.
7. Check Hot Gas Solenoid Valve for correct operation and high pressure controls for cut-in and cut-out pressures.
8. With Icemaker and Fan Motor OFF on Air-Cooled Models, clean Condenser, using vacuum cleaner, whisk broom or brush. Instruct customer to clean frequently.
9. Check that Fan Blades move freely, are not touching any surfaces and are not bent or out of balance.
10. Check for refrigerant leaks and tighten line connections.
11. Check for water leaks and tighten drain line connections. Pour water down Bin drain line to be sure that drain line is open and clear.
12. Check size, condition and texture of ice cubes. Perform adjustments as required. Refer to procedure IV-II.
13. Check Bin Thermostat Control bulb to test shutoff. With the Icemaker in the Harvest Cycle, place ice on the bulb, which should cause the Icemaker to shut OFF at the end of the Harvest Cycle.

NOTE

Within minutes after the ice is removed from the sensing bulb, the bulb will warm up and cause the Icemaker to restart. This control is factory set and should not be reset until testing is performed. Normal setting is about 35-degrees F. CUT-OUT and 40-degrees F. CUT-IN.

III. CLEANING - Icemaker

1. Press both Master ON-OFF Switch, amber buttons, on the Control Panel, to the OFF position.
2. Remove screws and both Front Panels and Top Panels.
3. Tilt the top of each plastic Cube Chute forward slightly, then, lift the Cube Chute up for removal.
4. Move the Compressor ON-OFF toggle switch, on each Control Box, to the OFF position.
5. Slowly rotate the shaft of the Timer & Switch Assembly, protruding through the hole in the front of the Control Box Cover, until you hear an audible click as the microswitch actuator arm drops into the cam slot, the START position of the Harvest Cycle, then stop. See Figure 5-1. Set BOTH Timers.
6. Remove all four Defrost Water Tubes, located at the top, rear of each of the four Freezing Chamber, from the tube hole.

WARNING

SCOTSMAN Ice Machine Cleaner contains Phosphoric and Hydroxyacetic acids. These compounds are corrosive and may cause burns if swallowed. DO NOT induce vomiting. Give large amounts of water or milk. Call physician immediately. In case of external contact, flush with water. KEEP OUT OF THE REACH OF CHILDREN.

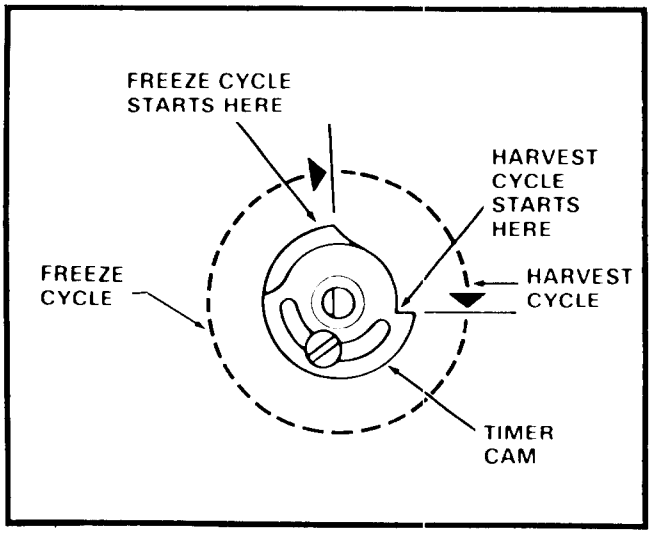

Figure 5-1. START Positions for the Freeze/Harvest Cycles.

7. For EACH Freezing Chamber, prepare the following cleaning solution: Mix 16-ounces of SCOTSMAN Ice Machine Cleaner with eleven pints of fresh, potable water in a clean container.
8. Pour each batch of prepared cleaning solution into the respective Freezing Chambers, through the Defrost Water Tube holes at the top, center rear of the Freezing Chambers.
9. Immediately replace the Defrost Water Tubes; then, press BOTH Master ON-OFF Switch, amber buttons, on the Control Panel, to ON.
10. Allow both icemaking systems to operate normally for twenty minutes into the Freezing Cycle.

NOTE

NO ICE CUBES will be made, because the Compressors have been switched OFF.

11. At the end of twenty minutes, rotate the shaft of both Timer & Switch Assemblies, CLOCKWISE, to start a second Harvest Cycle. See Figure 5-1.
12. Allow both icemaking systems to operate normally through the Harvest Cycle; then, when the Harvest Cycle is completed, rotate the Timer again THROUGH the Freezing Cycle to START another Harvest Cycle. Perform this Harvest Cycle operation three times.

NOTE

During each Harvest Cycle, fresh inlet water is introduced into the water system and acts to rinse all water-related parts and to wash away most mineral concentration through the drain.

13. Wash all Curtain Assemblies and both Cube Chutes in a solution of one ounce of household bleach in one gallon of water.
14. Using a clean, damp cloth or disposable paper wiper, wipe off the Curtain Assemblies and the Cube Chutes.
15. Move the Compressor ON-OFF toggle switch, on both Control Boxes, to the ON position.
16. Replace all Curtain Assemblies and both Cube Chutes.
17. Check each ice cube harvest, until the ice cubes are clear and the acid taste is eliminated.

CAUTION

DO NOT USE ice cubes produced from the cleaning solution. Be sure none remains in the Bin.

18. Pour hot water over ice cubes in the Bin, to melt the ice cubes and allow the same cleaning solution to be used to thoroughly wash the inner surfaces of the Bin and the solution to help clean the drain lines as it drains. Rinse inner surfaces of Bin.
19. Replace all panels removed.
20. Clean and sanitize the interior Bin surfaces each week.

SECTION VI
SERVICE DIAGNOSIS

The Service Diagnosis Section is for use in aiding the serviceman in diagnosing a particular problem for pin-pointing the area in which the problem lies, thus an ever available reference for proper corrective action.

The following charts list corrective actions for the causes of known symptoms of certain problems that can occur in the Icemaking-Refrigeration System.

I. ICEMAKING - REFRIGERATION SYSTEM

SYMPTOM	POSSIBLE CAUSE	CORRECTION
Irregular size cubes and some cloudy.	Some jets plugged.	Clean jets.
	Shortage of water.	See Shortage of water CORRECTION.
	Unit not level. Water overflowing vent holes on low side, burning cubes.	Level cabinet, as required.
Cubes too large.	Cube Size Control set too cold.	Rotate Cube Size Control dial toward WARMER.
Cubes too small.	Cube Size Control set too warm.	Rotate Cube Size Control dial toward COLDER.
	Partially restricted capillary tube.	Blow refrigerant charge; replace drier; evacuate system; add refrigerant charge.
	Moisture in system.	Same as above CORRECTION.
	Shortage of water.	See Shortage of water CORRECTION.
	Loss of refrigerant.	Check for refrigerant leaks, correct leaks; recharge system.
Cloudy Cubes.	Shortage of water.	See Shortage of water SYMPTOM.
	Dirty water supply.	Install water filter or softener.
	Accumulated impurities.	Use SCOTSMAN Ice Machine Cleaner.
Shortage of water.	Water spraying out through curtain.	Hang curtain in proper position.
	Water solenoid not opening.	Repair or replace solenoid.
	Water leak in sump area.	Locate leak and repair or correct condition.
	Partial restrictions in water strainer.	Clean or replace strainer.
Shortage of water in upper freezing chamber.	Defective lower seal in upper freezing chamber.	Replace lower seal.

SYMPTOM	POSSIBLE CAUSE	CORRECTION
Decreased ice capacity.	Defective compressor.	Replace compressor.
	Leaky water valve.	Repair or replace valve.
	High head pressure, result of dirty condenser or faulty Fan Motor.	Clean condenser. Repair or replace Fan Motor.
	Non-condensable gas in the system.	Purge the system.
	Poor circulation or extreme hot location.	Relocate the cabinet; or provide ventilation by cutting openings.
	Overcharge of refrigerant.	Slowly purge off to correct charge.
	Hot gas solenoid valve leaking.	Replace valve.
	Partially restricted capillary tube.	See Cubes too small CORRECTION.
Poor harvests.	Too short defrost time.	Check and adjust harvest cycle. Check Timer two-minute setting.
	Restriction in water inlet line.	Check strainer and flow check valve. DO NOT remove flow control washers.
	Hot gas solenoid does not open.	Binds or burned out. Replace.
	Plugged air vent holes in upper part of cube cups.	Clean out air vent holes.
Icemaker does not harvest.	Water pressure too low.	Check for 20 PSI flowing water.
Compressor cycles intermittently.	Low voltage.	Check for circuit overload. Check building supply voltage, if low, contact power company.
	Dirty condenser.	Clean condenser with vacuum cleaner or brush. NO WIRE BRUSH.
	Air circulation blocked.	Locate cabinet with adequate air space for proper air flow.
	Defective Fan Motor.	Replace Fan Motor.
	Non-condensable gases in system.	Purge the system.
Icemaker will not operate.	Blown fuse in line.	Replace fuse and check for cause.
	Master switch in OFF position.	Set switch to ON position.
	Faulty Master switch.	Replace switch.
	Timer contacts open.	Replace Timer microswitch.
Hole washed inside ice cube.	Water over the top of cube cups during harvest cycle.	Check and re-level the HC1200 cabinet.

SECTION VII
WIRING DIAGRAMS

This Section is provided as an aid in understanding the electrical circuitry of the Automatic Cuber:

WARNING

When conducting a continuity check of the Automatic Cuber:

1. **Disconnect the main power source.**
2. **DO NOT use an incandescent lamp or jumper wire, conduct all tests with a volt-ohm-meter.**

The Wiring Diagrams in this section are:

Figure 7-1. Wiring Diagram HC1200
208-220/60/3 - Air-Cooled

Figure 7-2. Wiring Diagram HC1200
208-230/60/3 - Water-Cooled

Figure 7-3. Wiring Diagram HC1200
208-230/60/1 - Air-Cooled

Figure 7-4. Wiring Diagram HC1200
208-230/60/1 - Water-Cooled

Figure 7-5. Schematic Wiring Diagram
HC1200 - 208-220/60/3

Figure 7-6. Schematic Wiring Diagram
HC1200 - 208-230/60/1

Figure 7-7. Wiring Diagram HC1200B
208-220/60/3 - Air-Cooled

Figure 7-8. Wiring Diagram HC1200B
208-220/60/3 - Water-Cooled

Figure 7-9. Wiring Diagram HC1200B
208-230/60/1 - Air-Cooled

Figure 7-10. Wiring diagram HC1200B
208-230/60/1 - Water-Cooled

Figure 7-11 Schematic Wiring Diagram
HC1200B - 208-220/60/3

Figure 7-12. Schematic Wiring Diagram
HC1200B - 208-230/60/1

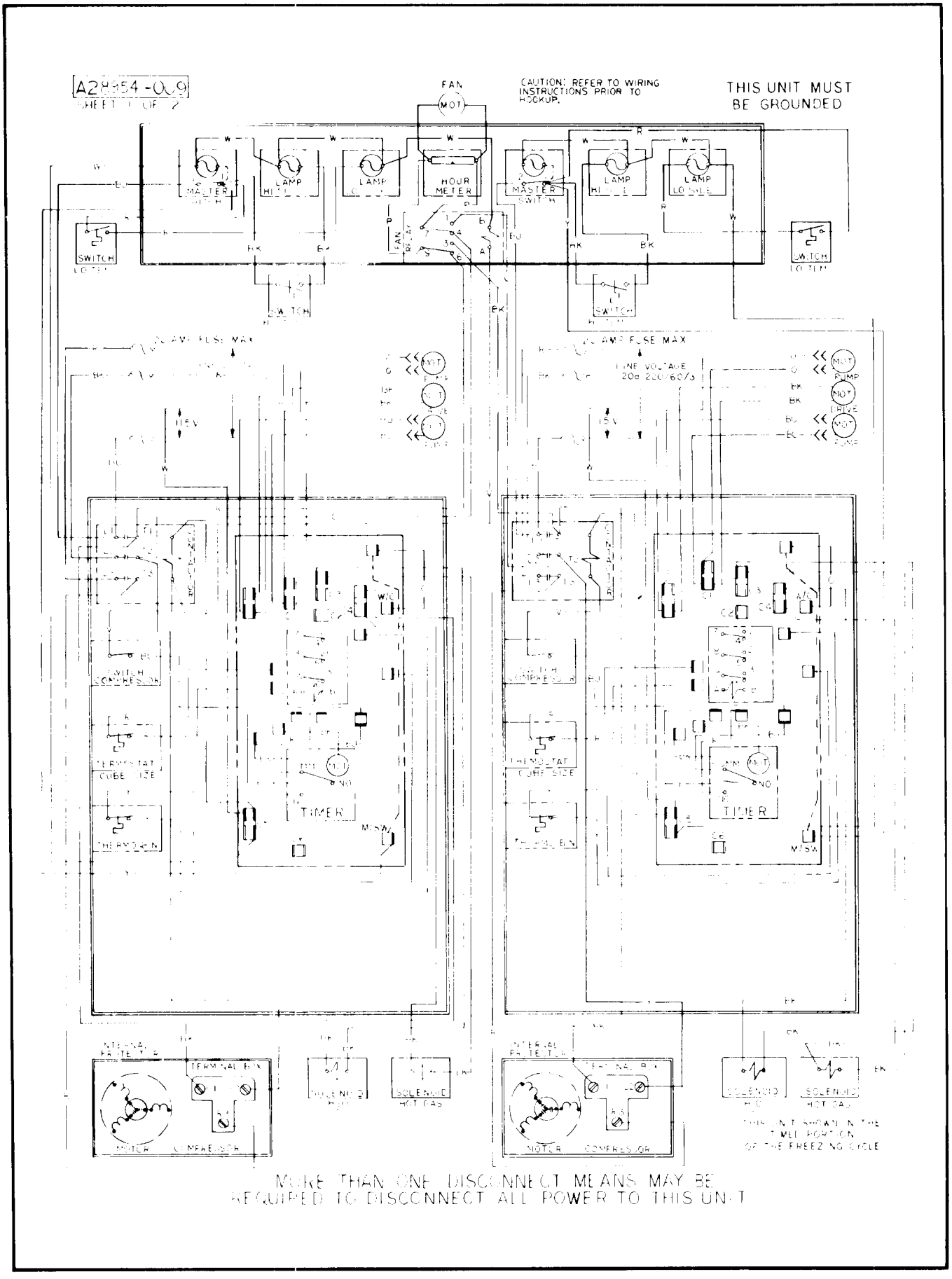

Figure 7-1. Wiring Diagram HC1200 - Air-Cooled (208-220/60/3).

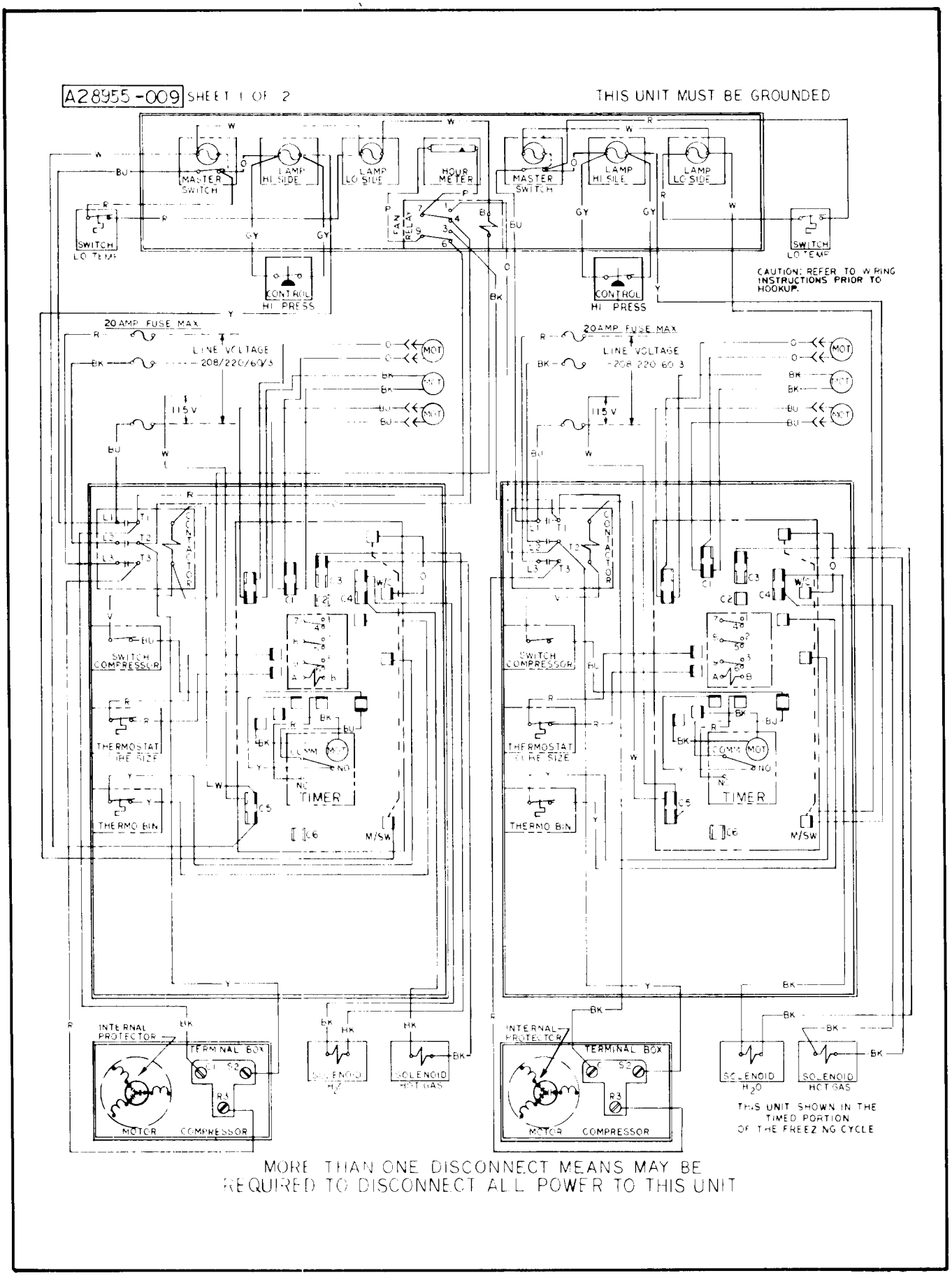

Figure 7-2. Wiring Diagram HC1200 - Water-Cooled (208-220/60/3).

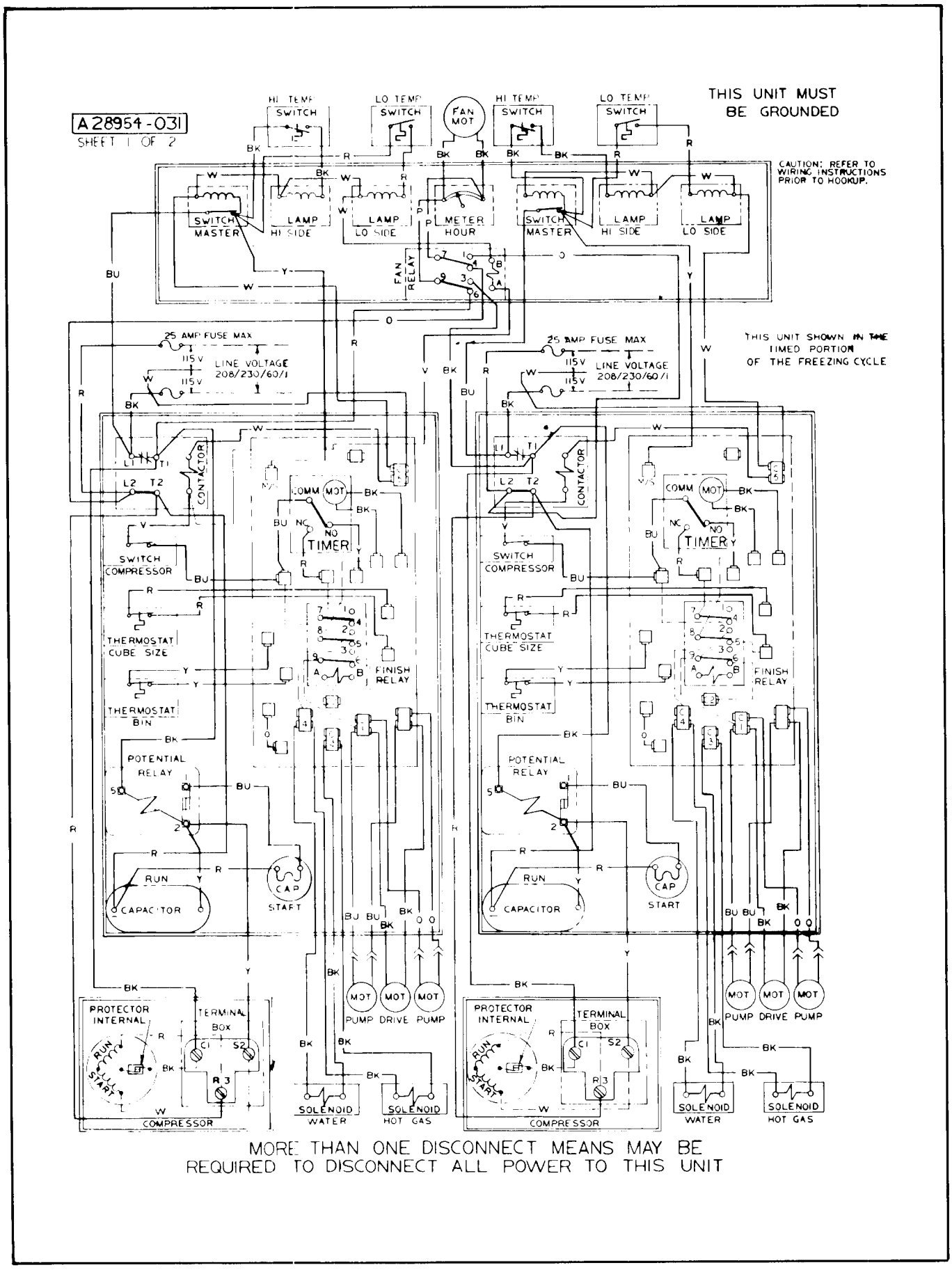

Figure 7-3. Wiring Diagram HC1200 - Air-Cooled (208-230/60/1).

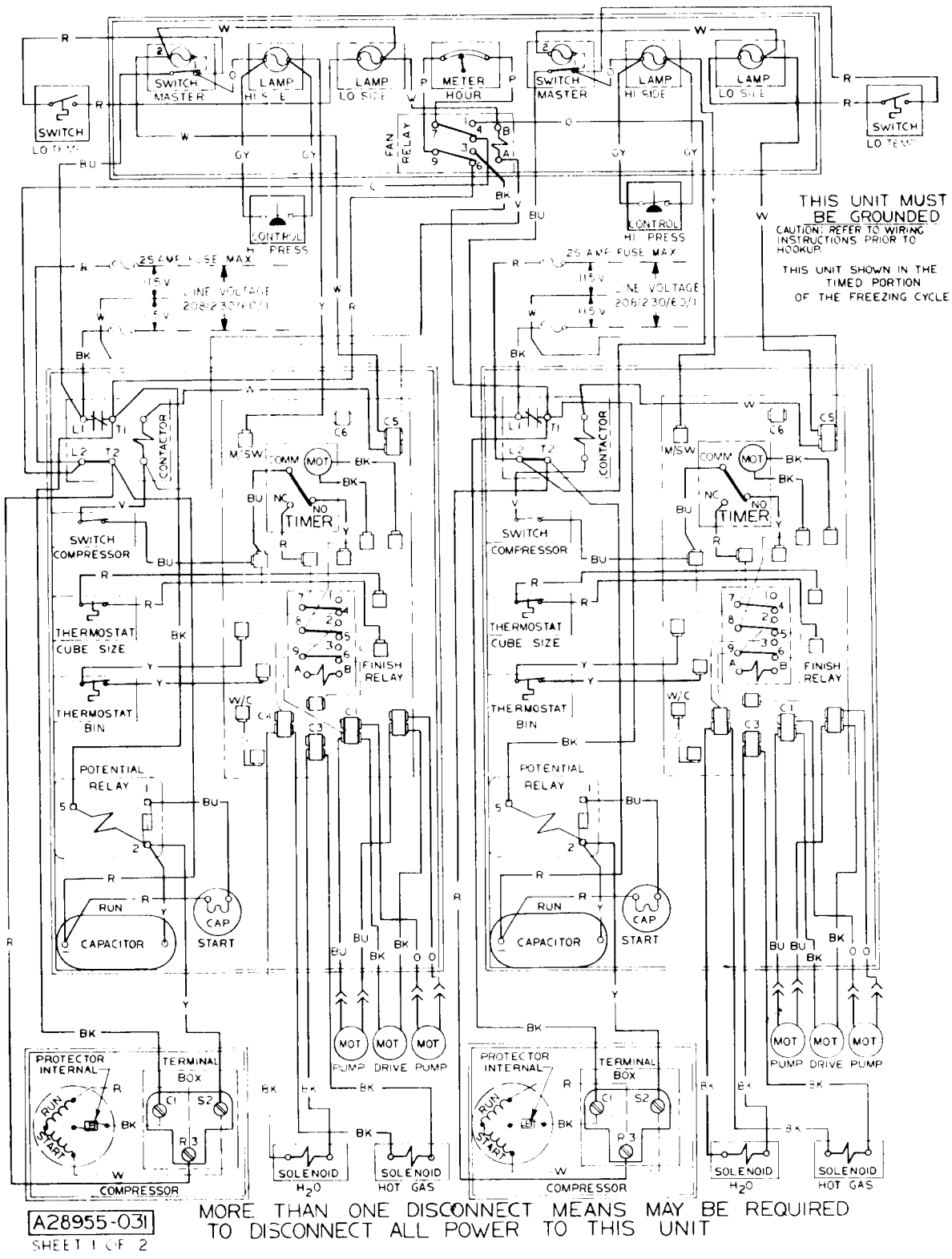

Figure 7-4. Wiring Diagram HC1200 - Water-Cooled (208-230/60/1).

A

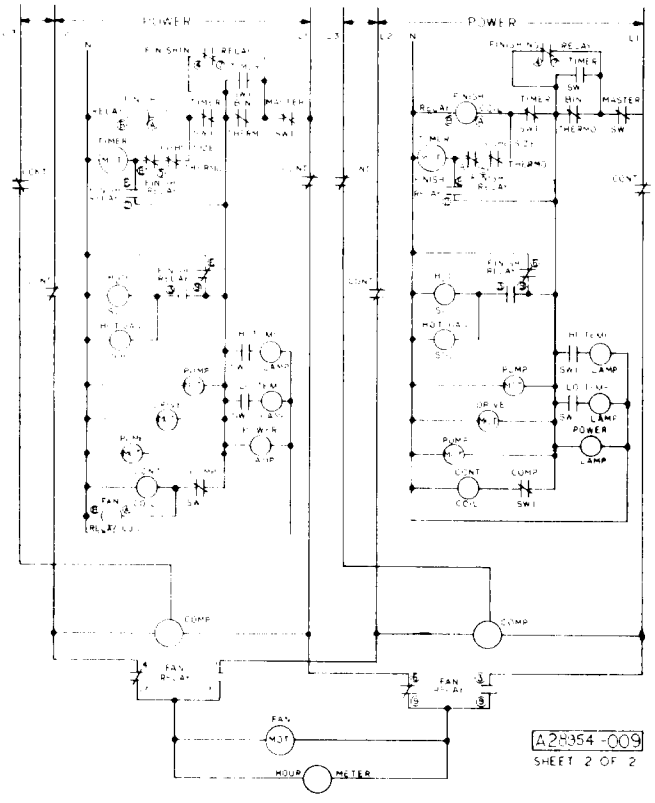

See Figure 7-1 for Wiring Diagram

(AIR-COOLED)

B

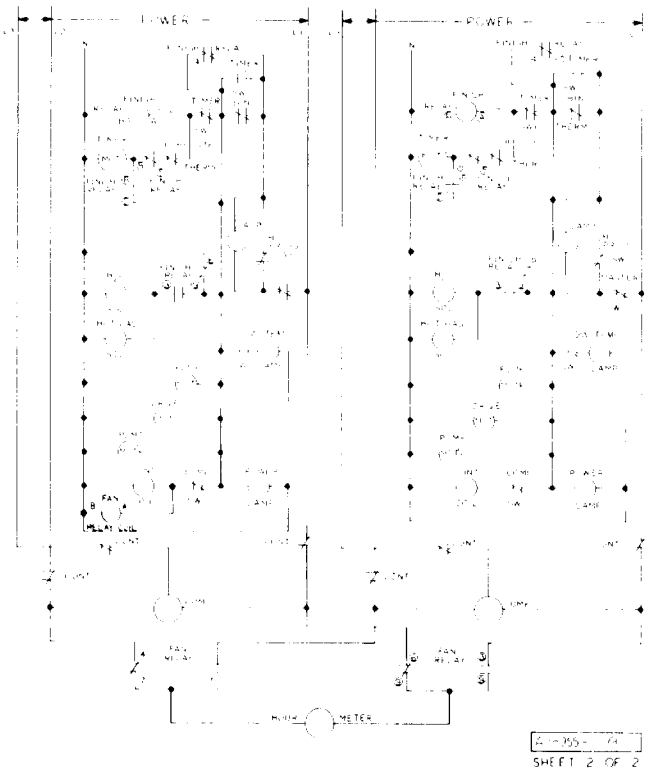

See Figure 7-2 for Wiring Diagram

(WATER-COOLED)

Figure 7-5. Schematic Wiring Diagram HC1200 (208-220/60/3).

A

See Figure 7-3. for Wiring Diagram

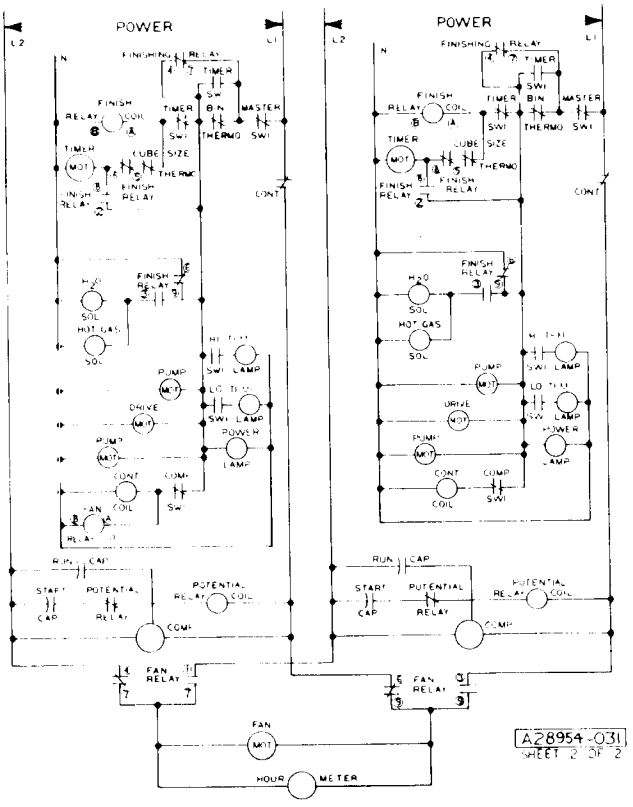

(AIR-COOLED)

B

See Figure 7-4 for Wiring Diagram

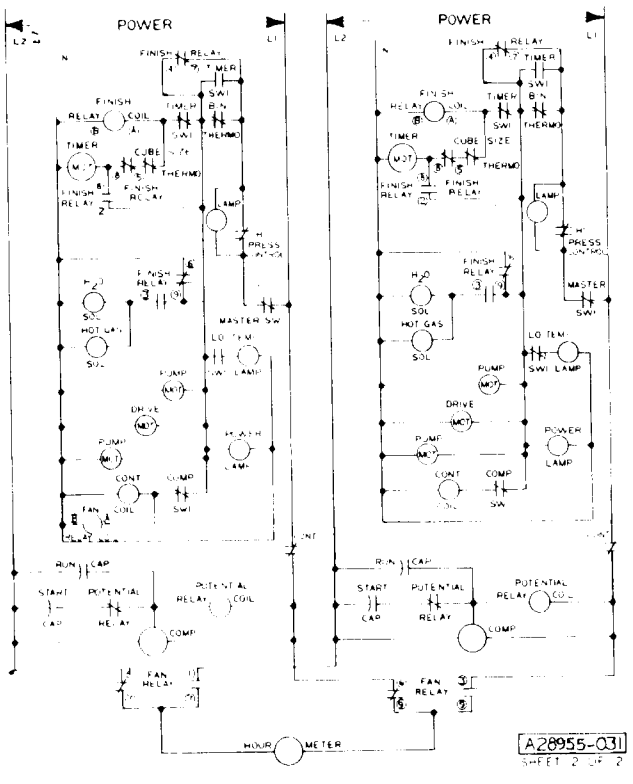

(WATER-COOLED)

Figure 7-6. Schematic Wiring Diagram HC1200 - (208-230/60/1).

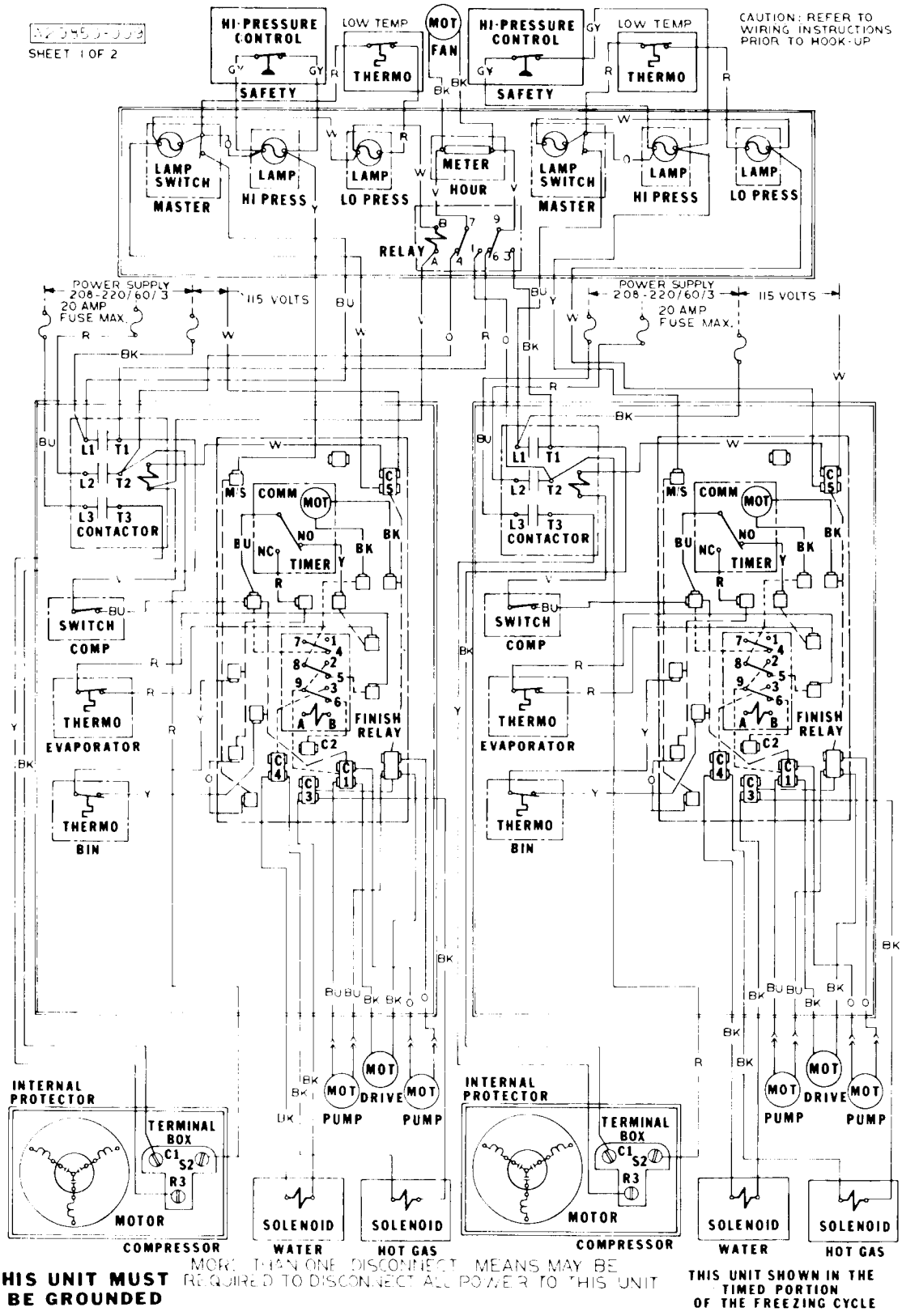

Figure 7-7. Wiring Diagram HC1200B - Air-Cooled (208-220/60/3).

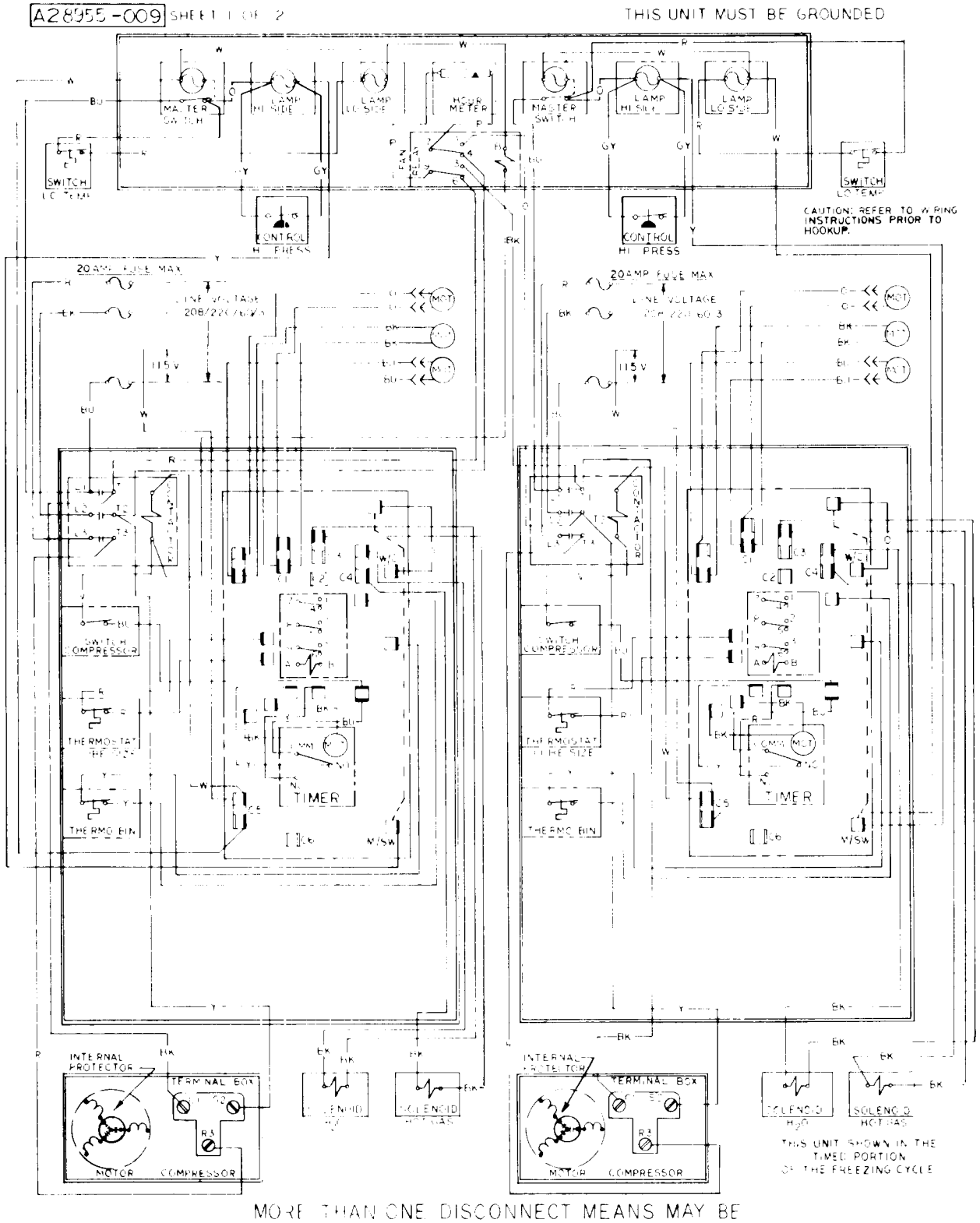

Figure 7-8. Wiring Diagram HC1200B - Water-Cooled (208-220/60/3).

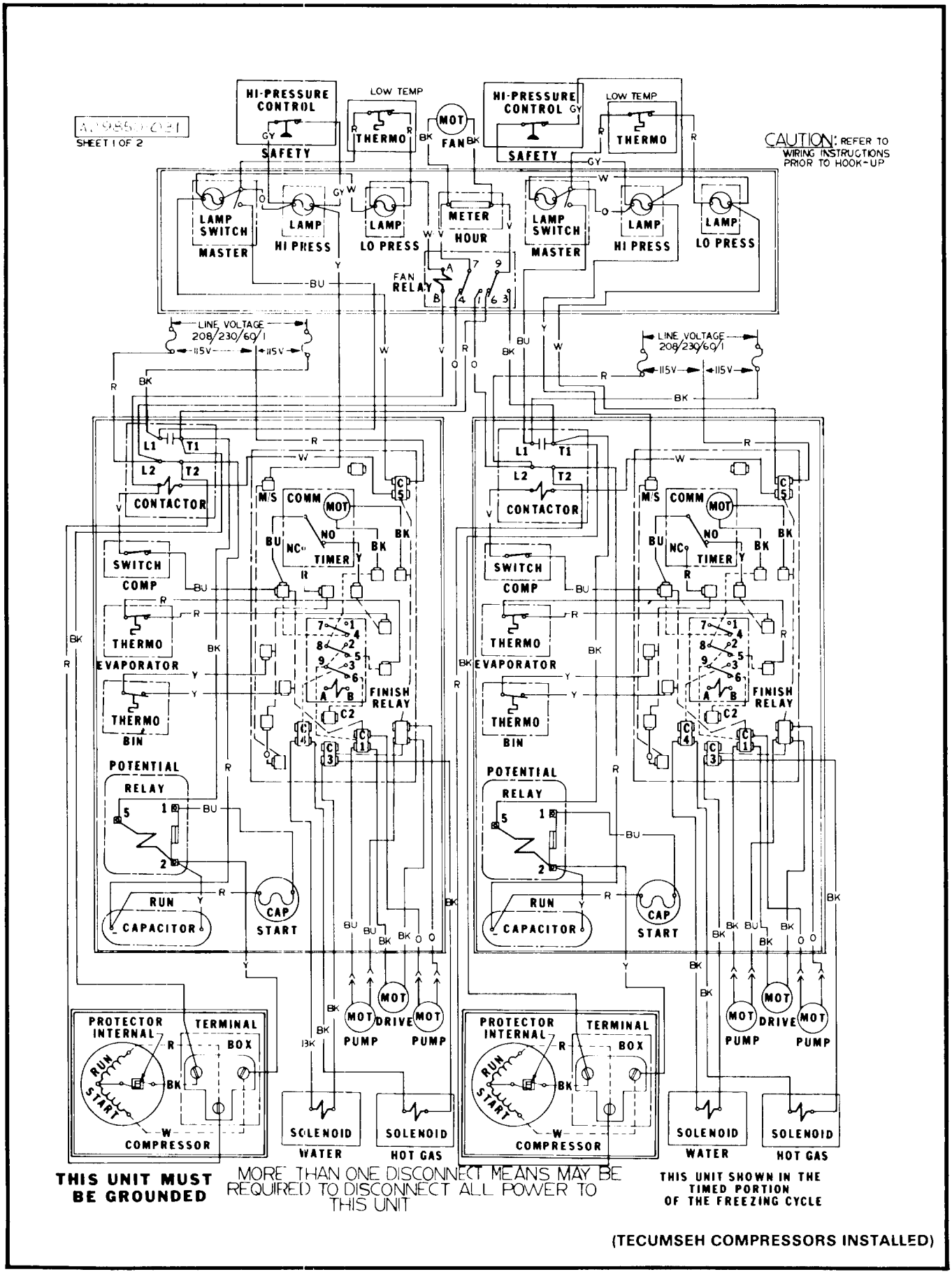

Figure 7-9. Wiring Diagram HC1200B — Air-Cooled (208-230/60/1).

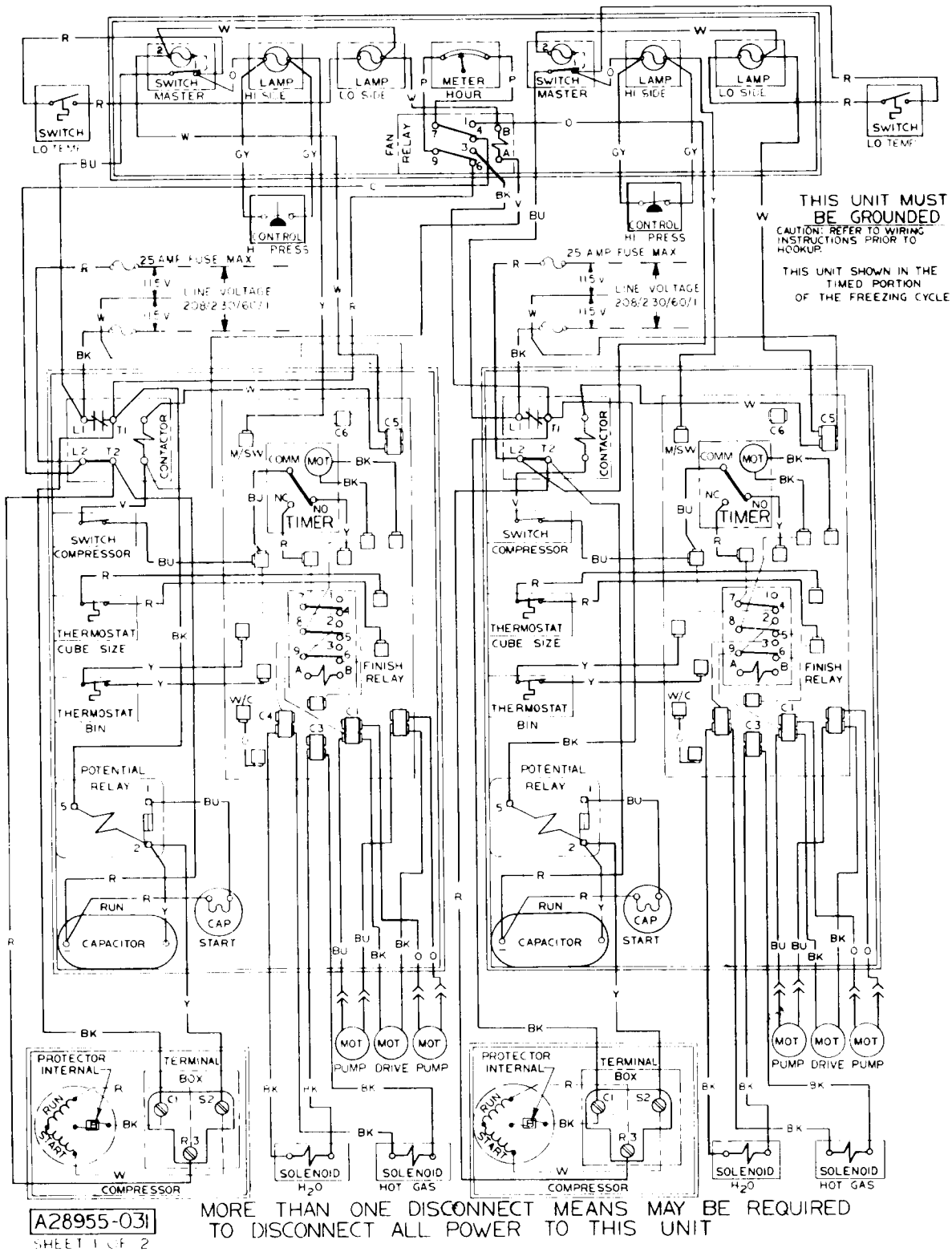

Figure 7-10. Wiring Diagram HC1200B — Water-Cooled (208-230/60/1).

A

See Figure 7-7 for Wiring Diagram

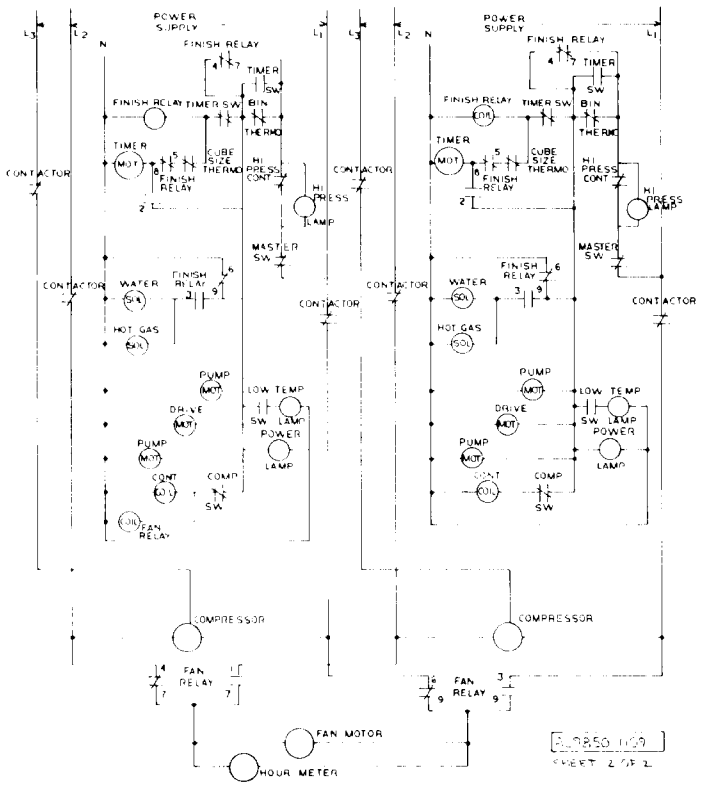

(AIR-COOLED)

B

See Figure 7-8 for Wiring Diagram

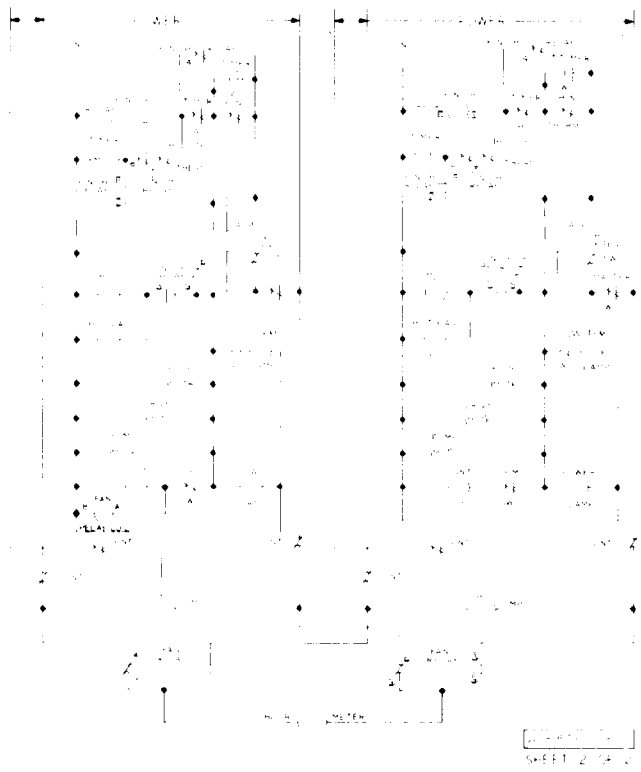

(WATER-COOLED)

Figure 7-11. Schematic Wiring Diagram HC1200B (208/220/60/3).

A

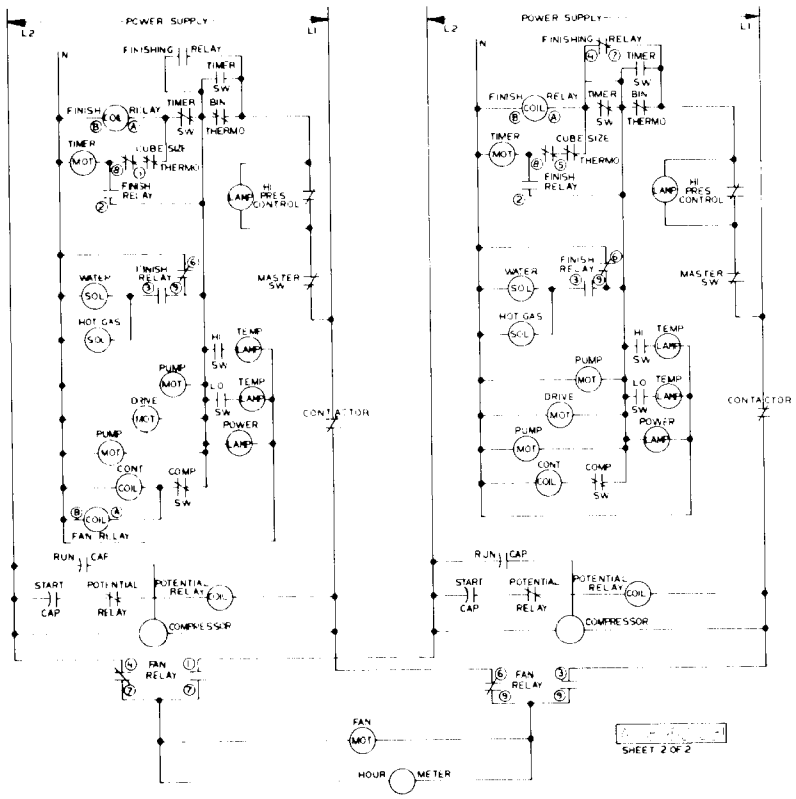

See Figure 7-9 for Wiring Diagram

(AIR-COOLED)

B

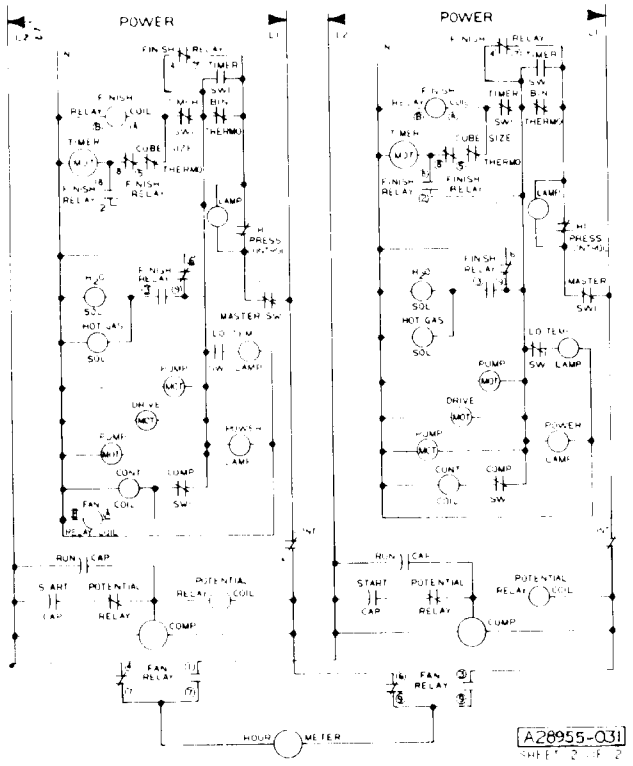

See Figure 7-10 for Wiring Diagram

(WATER-COOLED)

Figure 7-12. Schematic Wiring Diagram HC1200B (208-230/60/1).

SECTION VIII
THE PARTS AND ILLUSTRATIONS AND PARTS LIST

I. GENERAL

This section contains the Parts Illustrations and the Parts List for each of the major assemblies in the HC1200 Automatic Cuber.

Each Parts Illustration shows an assembly as an exploded view, with and Index Number for each part or sub-assembly, given in disassembly order. These Index Numbers key with the Parts List for the assembly and are found in the Parts List Column headed Index Number. The Description Column gives the identifying nomenclature for the item indexed. The Part Number Column gives the number of item. The Number Required Column gives the number of items required per assembly, but not necessarily the total number of parts required per Cuber.

All assemblies are cross-referenced both from the major assembly listing where they first appear in the Parts Listing to their break-down listing, and from the break-down listing, back to the major assembly (next higher assembly) listing.

A *No Number* designation, when used in the Part Number Column indicates the unit is not available from SCOTSMAN as an assembly. This designation is used only for the convenience and clarity of division in cataloging.

When an Index Number is followed by a letter (e.g. la, lb), the letter indicates the part listed is part of the assembly indexed by the basic Index Number. The number required of the part indexed by the number and letter combination is for only one of the assemblies indexed by the basic Index Number and not necessarily the total number or parts used in the Cuber. Where the notation *Ref* occurs in the Number Required Column the number of the assemblies or parts required for use in the Cuber will be found under a previous Index Number or in the next higher assembly Parts Listing. The next higher listing Figure/Index number is shown in the Description Column immediately following the items description.

II. HOW TO USE THE ILLUSTRATIONS AND PARTS LIST

To find the part number of a required part or assembly, turn to the List of Illustrations and find the page number of the Parts Illustration of the major or sub-assembly containing the part. Turn to the indicated page and locate the part and its Index Number on the specific illustration. Find the Index Number on the required part in the Parts List to determine the complete description of the part.

III. HOW TO ORDER PARTS OR ASSEMBLIES

When ordering parts or assemblies, to avoid costly delays and errors in shipment, give the part number, the complete description shown in the list, and the quantities of each part or assembly required. Also include the Model name, the serial number of the Cuber for which the part is required, and for parts which require color matching, the color of the Cabinet. See Figure 8-00, at the end of this Section for detailed ordering instructions.

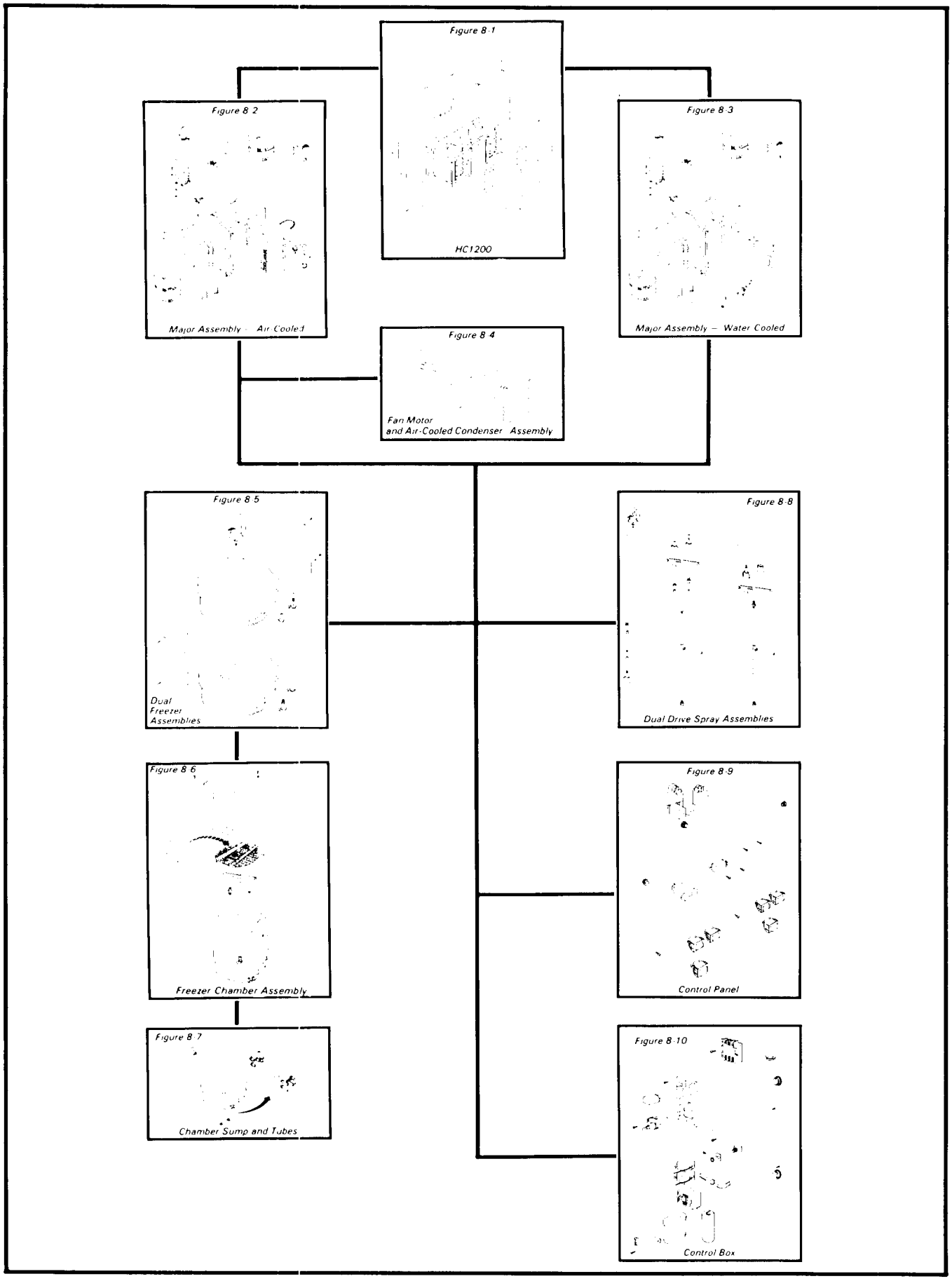

Figure 8-A. HC1200 Automatic Cuber Flow Chart

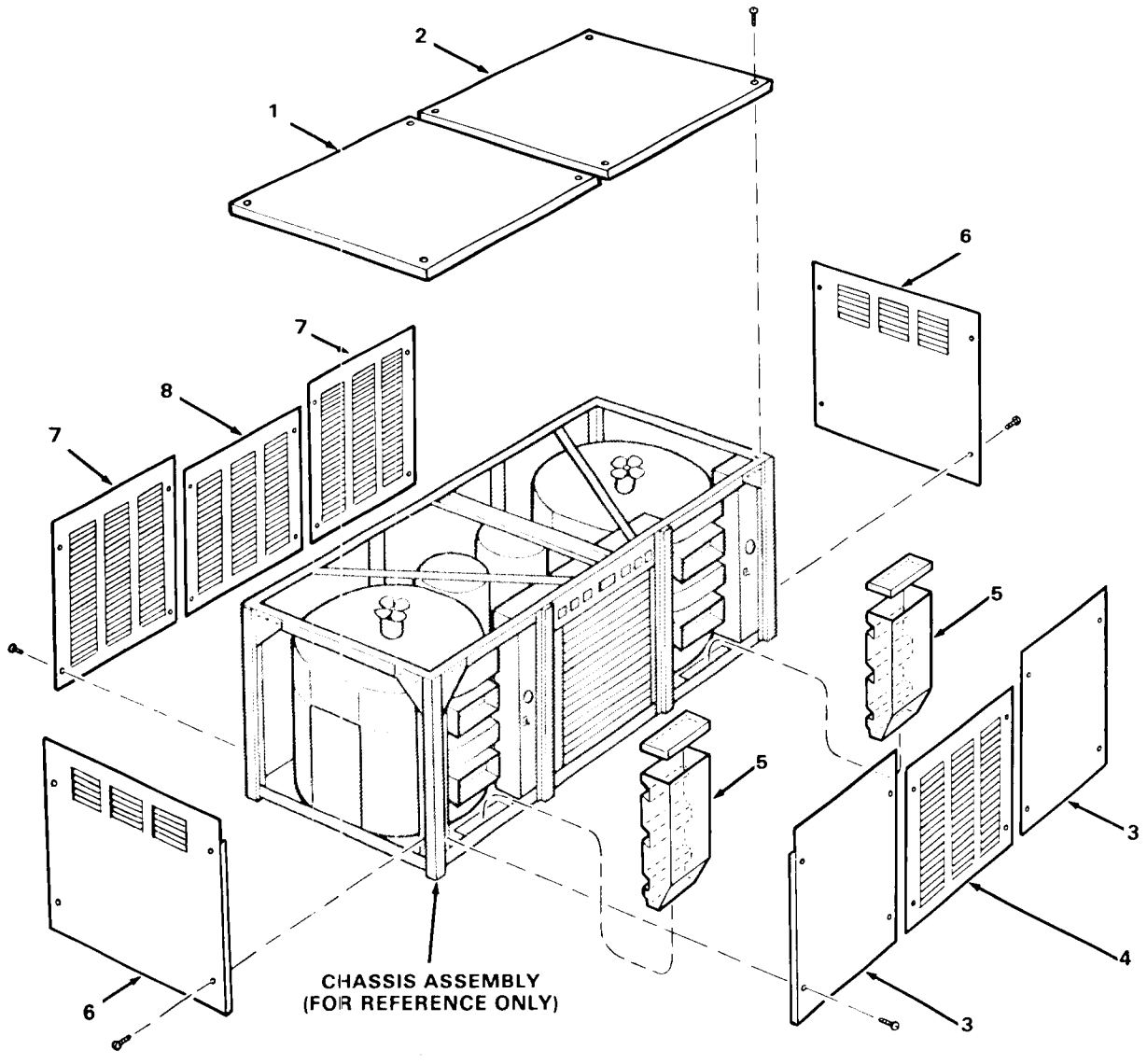

Figure 8-1. Model HC1200 Automatic Cuber

Figure 8-1. Model HC1200 Automatic Cuber

INDEX NO.	DESCRIPTION	PART NUMBER	REQ'D NUMBER
	Model HC1200 Automatic Cuber	No Number	1
	***		
1	Panel, Top - Left Side (Enamel) (Embossed)	A27831-003	1
	Panel, Top - Left Side (Stainless Steel)	A27831-002	1
2	Panel, Top - Right Side (Enamel) (Embossed)	A27832-003	1
	Panel, Top - Right Side (Stainless Steel)	A27832-002	1
	Attaching parts, Index 1 & 2		
	Screw, No. 8 x 3/8 T/F Tap	03-1404-08	8
	***		
3	Panel, Front (Enamel) (Embossed)	A27299-003	2
	Panel, Front (Stainless Steel)	A27299-002	2
	attaching parts, Index 3		
	Screw, No. 10 x 1 Hex Washer Hd S/T	03-1586-02	8
	***		
4	Panel, Center Front (Enamel) (Embossed)	A27297-003	2
	Panel, Center Front (Stainless Steel)	A27297-002	2
	attaching parts, Index 4		
	Screw, No. 10 x 1 Hex Washer Hd S/T	03-1586-02	8
	***		
5	Chute, Cube - w/cover	A27822-001	2
	***		
6	Panel, End (Enamel) (Embossed)	A27296-003	2
	Panel, End (Stainless Steel)	A27296-002	2
	attaching parts, Index 6		
	Screw, No. 10 x 1 Hex Washer Hd S/T	03-1586-02	8
	***		
7	Panel, Rear (Galvanized)	A27295-001	2
	***		
8	Panel, Center Rear (Galvanized)	A27297-003	1
	attaching parts, Index 7 & 8		
	Screw, No. 10 x 1 Hex Washer HD S/T	03-1586-02	12
	* * *		

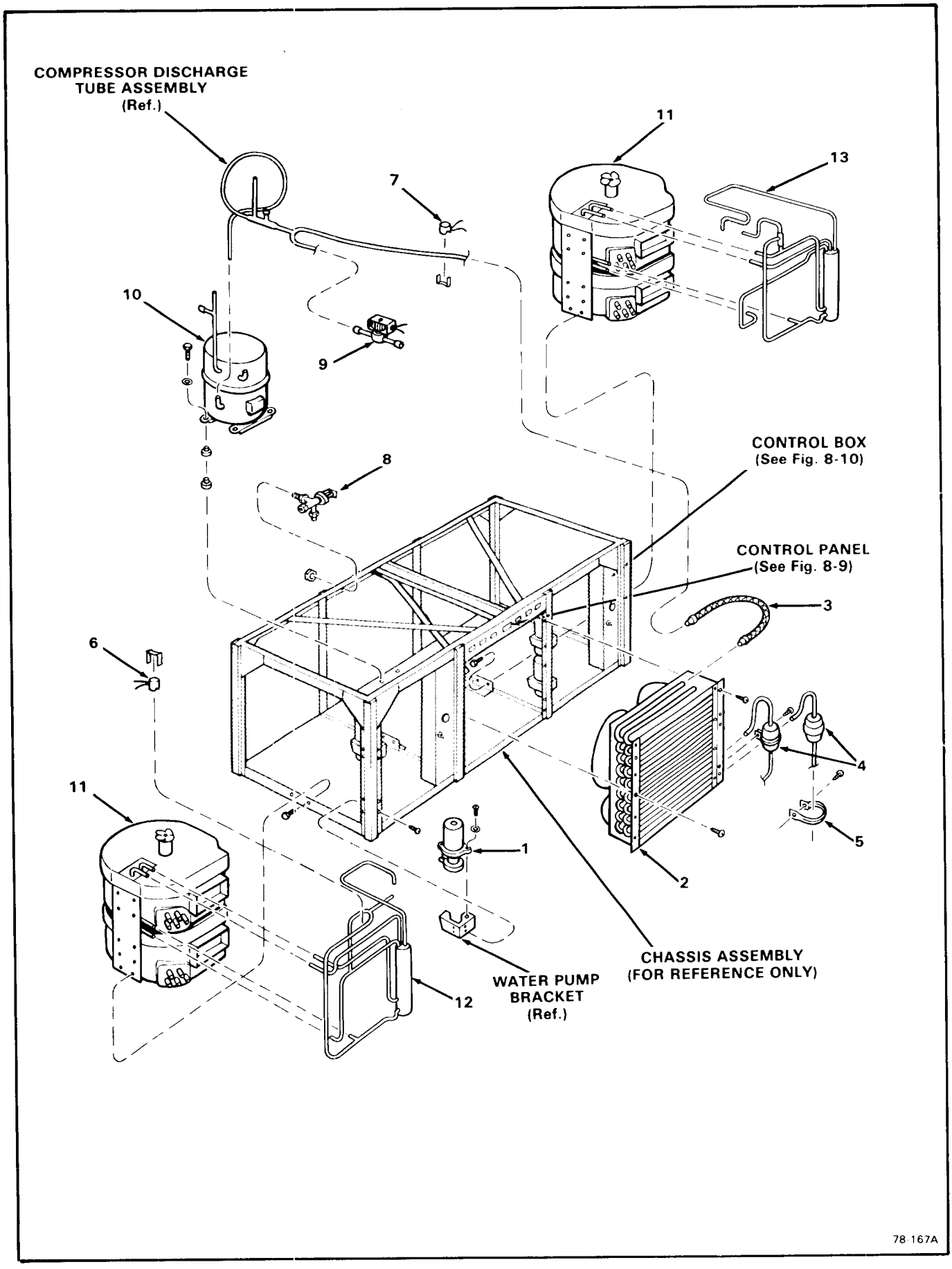

Figure 8-2. Major Assemblies - Air-Cooled

Figure 8-2. Major Assemblies - Air-Cooled

INDEX NO.	DESCRIPTION	PART NUMBER	REQ'D NUMBER
	Major Assemblies - Air-Cooled	No Number	Ref.
	***		
1	Pump Assembly, Water	12-1930-01	1(4)
	attaching parts, Index 1		
	Washer, No. 1/4 Plain	03-1407-05	2(8)
	Screw, No. 1/4-20 x 1/2 T/C Hex Hd	03-0571-00	2(8)
	***		
2	Condenser Assembly, Fan Motor & Air-Cooled	No Number	1
	(See Figure 8-4)		
	attaching parts, Index 2		
	Screw, No. 10 x 3/8 T/F Tap	03-1404-15	5
	***		
3	Hose, Flexsteel (18-inches long)	02-2372-01	2
	***		
4	Drier	02-0677-01	2
5	Brace, Drier	A09388-000	2
	attaching parts, Index 4 & 5		
	Screw, No. 10 x 3/4 T/F Tap	03-1404-32	2
	***		
6	Sensor, Lo Temp - w/Clip	11-0400-01	2
	***		
7	Sensor, High Temp - w/Clip	11-0401-01	2
	***		
8	Inlet Assembly, Water	12-1434-01	2
	***		
9	Valve, Hot Gas Solenoid	12-2135-01	2
	Wire Assembly — (not shown)	12-1490-05	1
	* * *		
10	Compressor (208-230/60/1) (Single-Phase) — (Copeland) — (A)	18-4300-02	
	Compressor (208-220/60/3) (Three Phase) — (Copeland) — (A)	18-4300-03	2
	Compressor (208-230/60/1) (Single-Phase) — (Tecumseh) — (B)	18-5100-02	2
	Compressor (208-220/60/3) (Three-Phase) — (Tecumseh) — (B)	18-5100-03	2
	attaching parts, Index 10		

Figure 8-2. Major Assemblies - Air-Cooled (Cont'd)

INDEX NO.	DESCRIPTION	PART NUMBER	REQ'D NUMBER
	Grommet	18-2300-27	4(8)
	Sleeve, Mounting	18-2300-26	4(8)
	Washer, No. 5/16 Plain	03-1407-07	4(8)
	Screw, No. 5/16 - 18 x 1-1/2 Hex Cap	03-1405-20	4(8)
	***		
11	Freezer Assembly - Dual	No Number	2
	(See Figure 8-5)		
	attaching parts, Index 11		
	Screw, No. 14-20 x 1/2 T/C Hex Hd	03-0571-00	4(8)
	***		
12	Exchanger Assembly, Heat - Left	A28784-020	1
	***		
13	Exchanger Assembly, Heat - Right	A28779-020	1
	***		
	NOTE: See Figure 8-9 for replacement parts within the Control Panel Assembly.		
	See Figure 8-10 for replacement parts within the Control Box Assembly.		

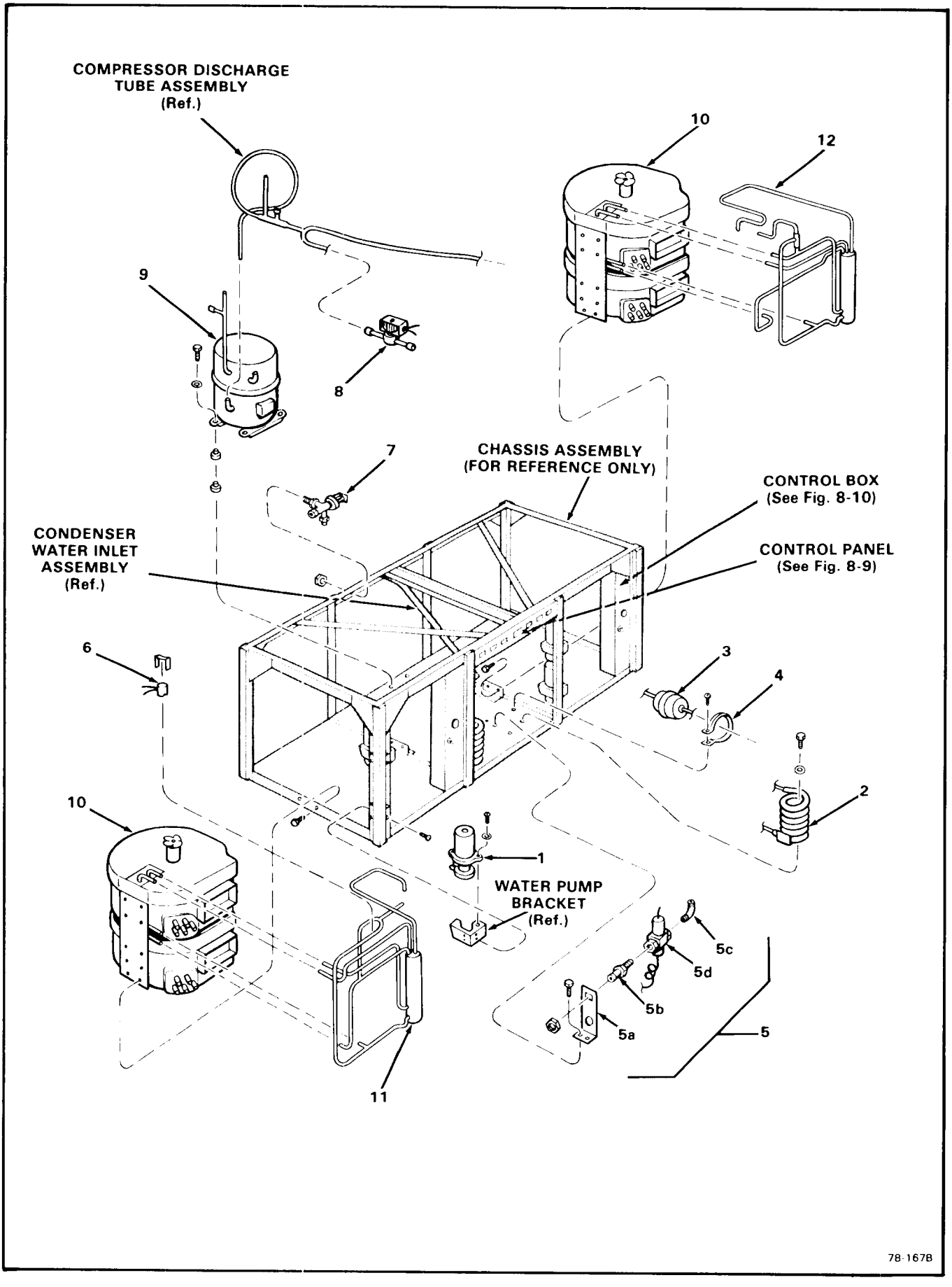

Figure 8-3. Major Assemblies - Water-Cooled

Figure 8-3. Major Assemblies - Water Cooled

INDEX NO.	DESCRIPTION	PART NUMBER	REQ'D NUMBER
	Major Assemblies - Water-Cooled	No Number	Ref.
	***		
1	Pump Assembly, Water	12-2930-01	1(4)
	attaching parts, Index 1		
	Washer, No. 1/4 Plain	03-1407-05	2(8)
	Screw, No. 1/4-20 x 1/2 T/C Hex Hd	03-0571-00	2(8)
	***		
2	Condenser Assembly - Water-Cooled	18-3306-02	2
	attaching parts, Index 2		
	Washer, No. 1/4 Plain	03-1407-05	4
	Screw, No. 1/4-20 x 1/2 T/C Hex Hd	03-0571-00	4
	***		
3	Drier	02-0677-01	2
4	Brace, Drier	A09388-000	2
	attaching parts, Index 3 & 4		
	Screw, No. 10 x 3/4 T/F Tap	03-1404-32	2
	***		
5	Regulator Assembly, Water - Condenser	No Number	2
	attaching parts, Index 5		
	Screw, No. 1/4-20 x 1/2 T/C Hex Hd	03-0571-00	2(4)
5a	Bracket, Mounting	A25805-001	1(2)
5b	Fitting, Inlet Water - 3/8 NPT x 3/8 Flare Brass	A24804-001	1(2)
5c	Elbow, 3/8 NPT x 3/8 Flare Brass	16-0401-00	1(2)
5d	Valve, Water Regulator	11-0198-02	1(2)
	attaching part, Index 5a & 5b		
	Nut, Pal	03-1394-01	1(2)
	***		
6	Sensor, Lo Temp - w/Clip	11-0400-01	2
	***		
7	Inlet Assembly, Water	12-1434-01	2

Figure 8-3. Major Assemblies - Water-Cooled (Cont'd.)

INDEX NO.	DESCRIPTION	PART NUMBER	REQ'D NUMBER
	***		
8	Valve, Hot Gas Solenoid	12-2135-01	2
	Wire Assembly — (not shown)	12-1490-05	1
	***		
9	Compressor (208-230/60/1) (Single-Phase) — (Copeland) — (A)	18-4300-02	2
	Compressor (208-220/60/3) (Three Phase) — (Copeland) — (A)	18-4300-03	2
	Compressor (208-230/60/1) (Single-Phase) — (Tecumseh) — (B)	18-5100-02	2
	Compressor (208-220/60/3) (Three-Phase) — (Tecumseh) — (B)	18-5100-03	2
	attaching parts, Index 9		
	Grommet	18-2300-27	4(8)
	Sleeve, Mounting	18-2300-26	4(8)
	Washer, No. 5/16 Plain	03-1407-07	4(8)
	Screw, No. 5/16 x 1-1/2 Hex Cap	03-1405-20	4(8)
	***		
10	Freezer Assembly - Dual	No Number	2
	(See Figure 8-5)		
	attaching parts, Index 10		
	Screw, No. 1/4-20 x 1/2 T/C Hex Hd	02-0571-00	4(8)
	***		
11	Exchanger Assembly, Heat - Left	A28784-020	1
	***		
12	Exchanger Assembly, Heat - Right	A28779-020	1
	***		
	NOTE: See Figure 8-9 for replacement parts within the Control Panel Assembly.		
	See Figure 8-10 for replacement parts within the Control Box Assembly.		

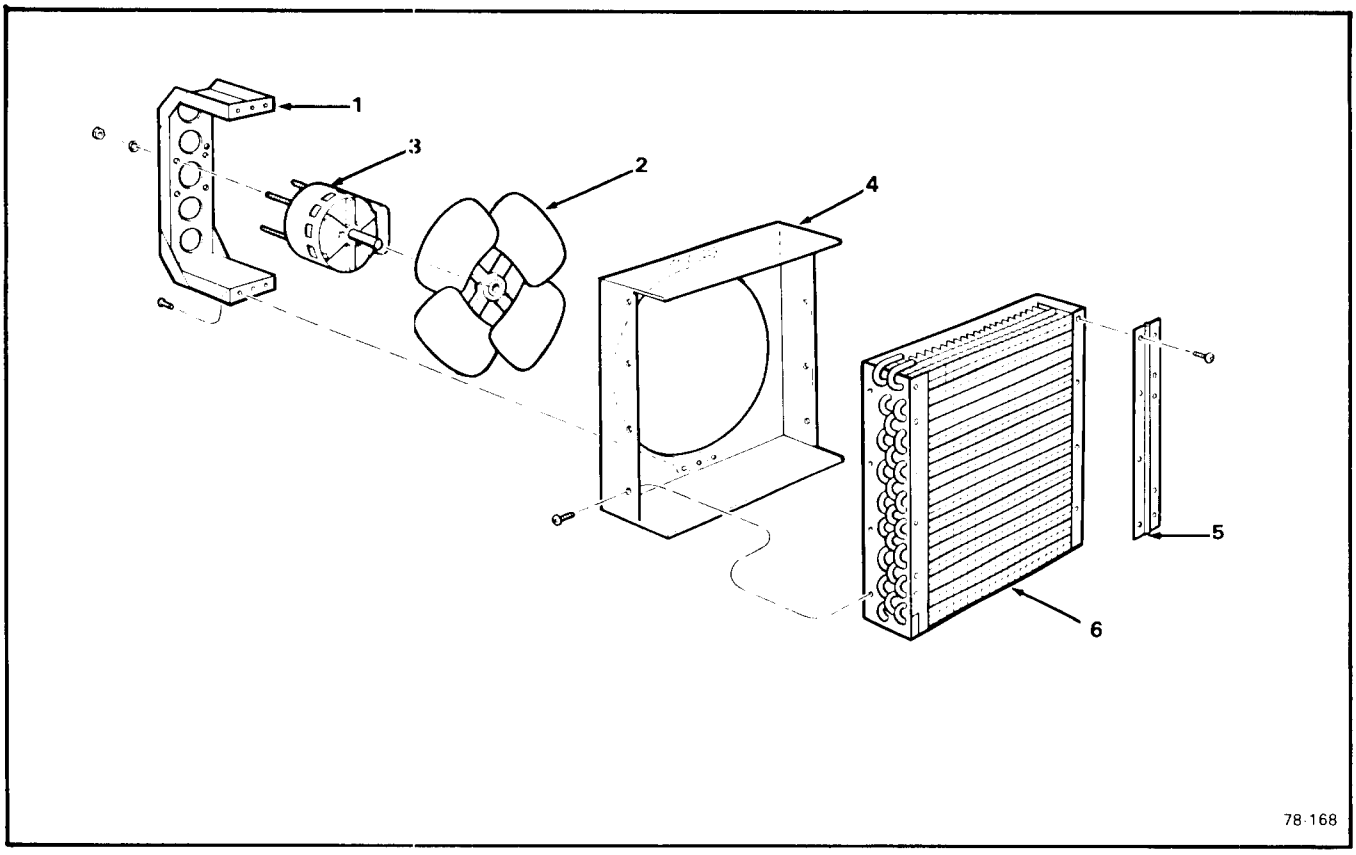

Figure 8-4. Fan Motor & Air-Cooled Condenser Assembly.

INDEX NO.	DESCRIPTION	PART NUMBER	REQ'D NUMBER
	Fan Motor & Air-Cooled Condenser Assembly	No Number	Ref.
	(See Figure 8-2/2 fcr		
	next higher assembly)		
	***		
1	Bracket, Fan Motor	A27425-001	1
	attaching parts, Index 1 to 4		
	Screw, No. 10-24 x 3/8 Phil Recess Pan Hd	03-1403-26	6
	***		
2	Blade, Fan	18-3723-01	1
	(Attaches with two setscrews in Hub)		
	***		
3	Motor, Fan	18-3722-31	1
	attaching parts, Index 3 to 1		
	Lockwasher, No. 8	03-1410-07	4
	Nut, No. 8-32 Hex	03-1406-03	4
	***		

Figure 8-4. Fan Motor & Air-Cooled Condenser Assembly (Cont'd.)

INDEX NO.	DESCRIPTION	PART NUMBER	REQ'D. NUMBER
4	Shroud Assembly	A27428-001	1
	attaching parts, Index 4 to 6		
	Screw, No. 10 x 3/8 T/F Tap	03-1404-15	8
	***		
5	Hinge, Condenser	02-2375-01	1
	attaching parts, Index 5 to 6		
	Screw, No. 10 x 3/8 T/F Tap	03-1404-15	4
	***		
6	Condenser - Air-Cooled	A27933-001	1
	***		

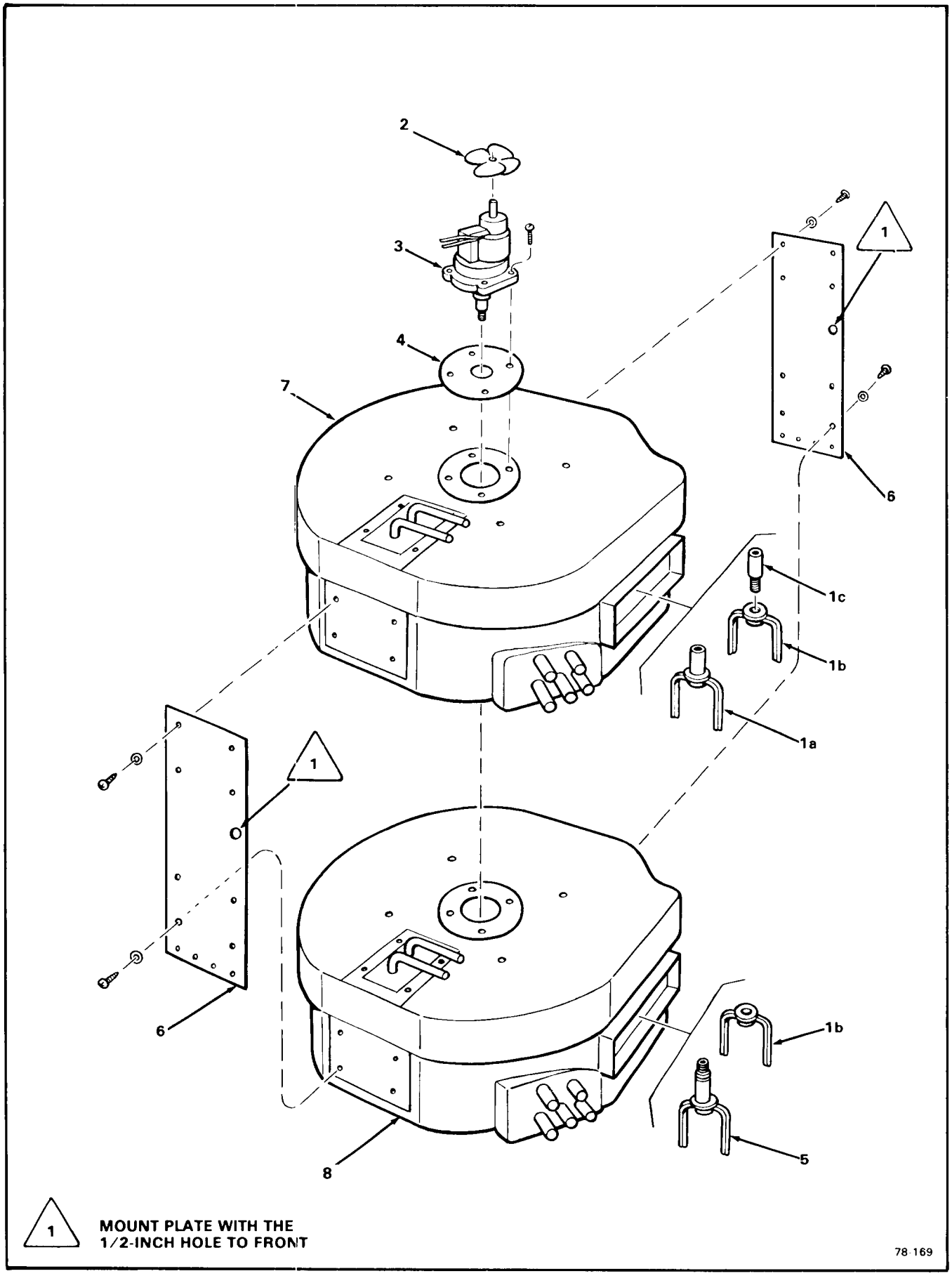

Figure 8-5. Freezer Assembly - Dual

Figure 8-5. Freezer Assembly - Dual

INDEX NO.	DESCRIPTION	PART NUMBER	REQ'D NUMBER
	Freezer Assembly - Dual	No Number	Ref.
	(See Figure 8-2/11 and 8-3/10		
	for next higher Assembly)		
	***		
*1a	Fork, Drive - Upper (Left-hand thread)	02-2369-02	1(2)
	(Used on S/N 435660-02R and up)		
*1b	Fork, Drive (earlier style) (Left-hand thread)	02-2194-01	2(4)
	(Used on units prior to S/N 435660-02R)		
*1c	Shaft, Drive - Upper (Obsolete, order 1a)	No Number	1(2)
	(Used on units prior to S/N 435660-02R)		
	***		
2	Blade, Fan - Drivemotor	12-0675-25	1(2)
	***		
3	Drivemotor Assembly, Agitator	A24656-001	1(2)
4	Gasket - Agitator Drivemotor Assembly	13-0176-00	1(2)
	attaching parts, Index 3 & 4		
	Screw, No. 6 x 1 T/F Tap	03-1404-28	4(8)
	***		
*5	Fork, Drive - Lower (Left-hand thread)	02-2369-01	1(2)
	(Used on S/N 435660-02R and up)		
	***		
6	Plate, Freezer Mount	A27294-001	2(4)
7	Chamber, Freezing - Upper	No Number	1(2)
8	Chamber, Freezing - Lower	No Number	1 (2)
	(See Figure 8-6)		
	attaching parts, Index 6, 7, 8		
	Lockwasher, No. 10 External Tooth	03-1417-05	16(32)
	Screw, No. 10-16 x 1/2 S/T	03-1360-00	4(8)

Figure 8-5. Freezer Assembly - Dual (Cont'd)

INDEX NO.	DESCRIPTION	PART NUMBER	REQ'D NUMBER
	Screw, No. 10-16 x 5/8 T/F Tap	03-1404-18	4(8)
	***		
	*The above parts change, noted with asterisk (*), began during the September 1978 production run, at approximately P/N 435660-02R.		

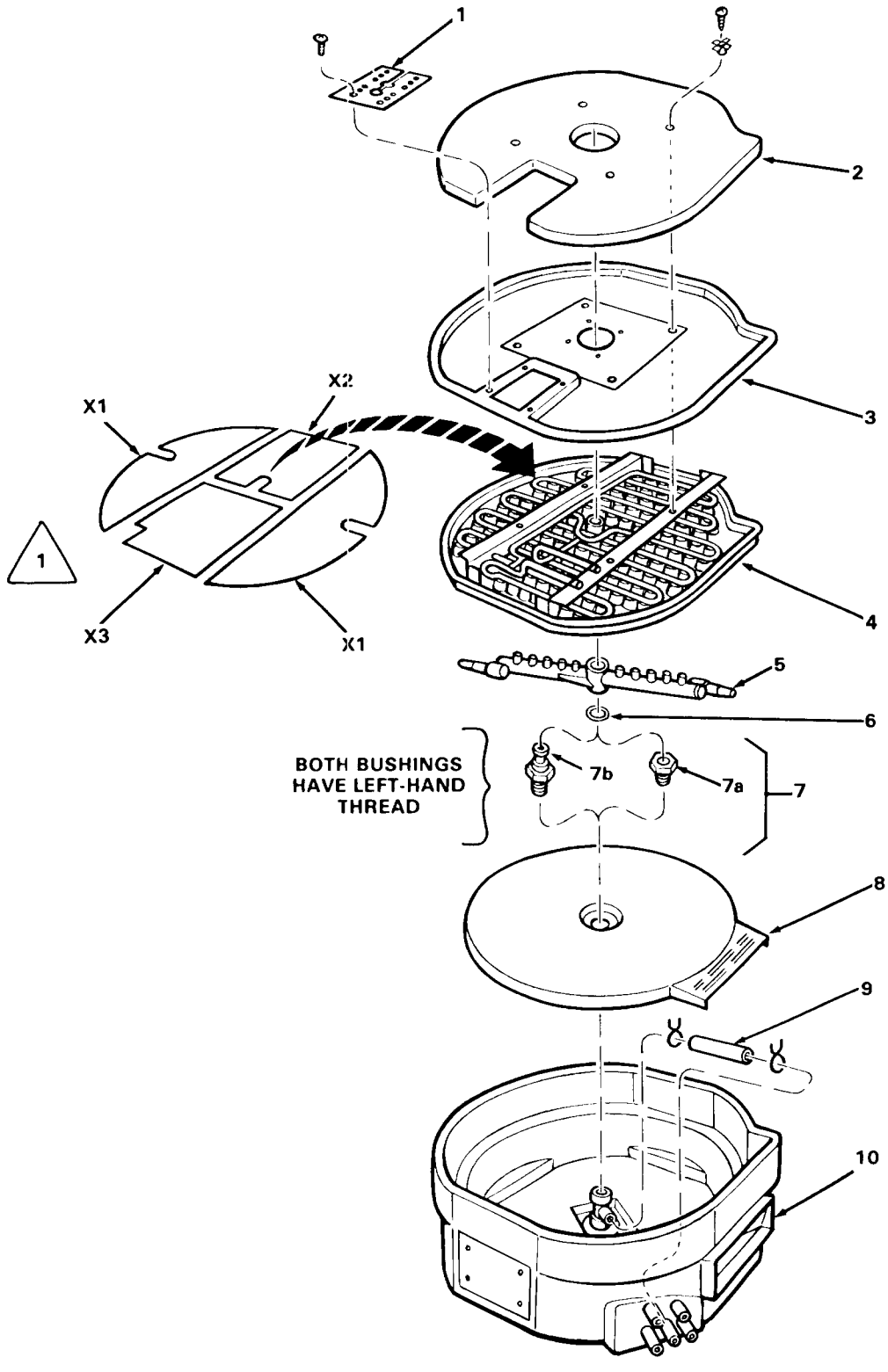

Figure 8-6. Freezing Chamber Assembly

Figure 8-6. Freezing Chamber Assembly

INDEX NO.	DESCRIPTION	PART NUMBER	REQ'D NUMBER
	Freezing Chamber Assembly	A24819-001	Ref.
	(See Figure 8-5/7 & 8		
	for next higher Assembly)		
	***		
1	Spacer, Tube	02-2129-01	1(2)
	attaching part, Index 1		
	Plug, Hole	02-2065-02	4(8)
	***		
2	Cover, Insulation	02-2124-01	1(2)
3	Cover, Freezing Chamber	02-2123-01	1(2)
4	Platen Assembly, Cup (SMALL ice cube cups)	A27218-002	2(4)
	Platen Assembly, Cup (MEDIUM ice cube cups)	A27217-002	2(4)
	Platen Assembly, Cup (LARGE ice cube cups)	A27129-002	2(4)
	attaching parts, Index 2, 3, 4		
	Washer, Centering	A24830-001	4(8)
	Screw, No. 8 x 1/2 T/F Tap	03-1404-10	4(8)
	***		
5	Bar Assembly, Spray	A25480-001	2(4)
	***		
6	O-Ring	13-0617-25	2(4)
	***		
7	Bushing/Bearing (Left-hand threads)	No Number	1(2)
7a	Bushing, Nut (Used in UPPER Chamber)	A27197-001	1(2)
7b	Bearing, Spray Bar (Used in LOWER Chamber)	02-2120-01	1(2)
	(Also order P/N 13-0168-00 Water Seal with Index 7a or 7b)		
	***		
8	Bottom, Inner	02-2028-01	1(2)
	***		

Figure 8-6. Freezing Chamber Assembly (Cont'd)

INDEX NO.	DESCRIPTION	PART NUMBER	REQ'D NUMBER
9	Tube, Tygon (8-inch lg.) (Order by the foot)	13-0674-07	1(2)
	attaching part, Index 9		
	Clamp, Hose	02-1358-01	2(4)
	***		
10	Sump, Freezing Chamber	No Number	1(2)
	(See Figure 8-7)		
	***		
	NOTE: Spray Deflectors below, are ONLY used on SMALL ice cube Cup Platen Assembly P/N A27218-002.		
X1	Deflector, Spray	A24198-001	2(4)
	(Installed at rounded ends, over top of cup molds)		
X2	Deflector, Spray	A24198-003	1(2)
	(Installed around hole in Platen, with notch as shown)		
X3	Deflector, Spray	A24198-004	1(2)
	(Installed LAST, under two tubes and over ends of X2)		
	***		

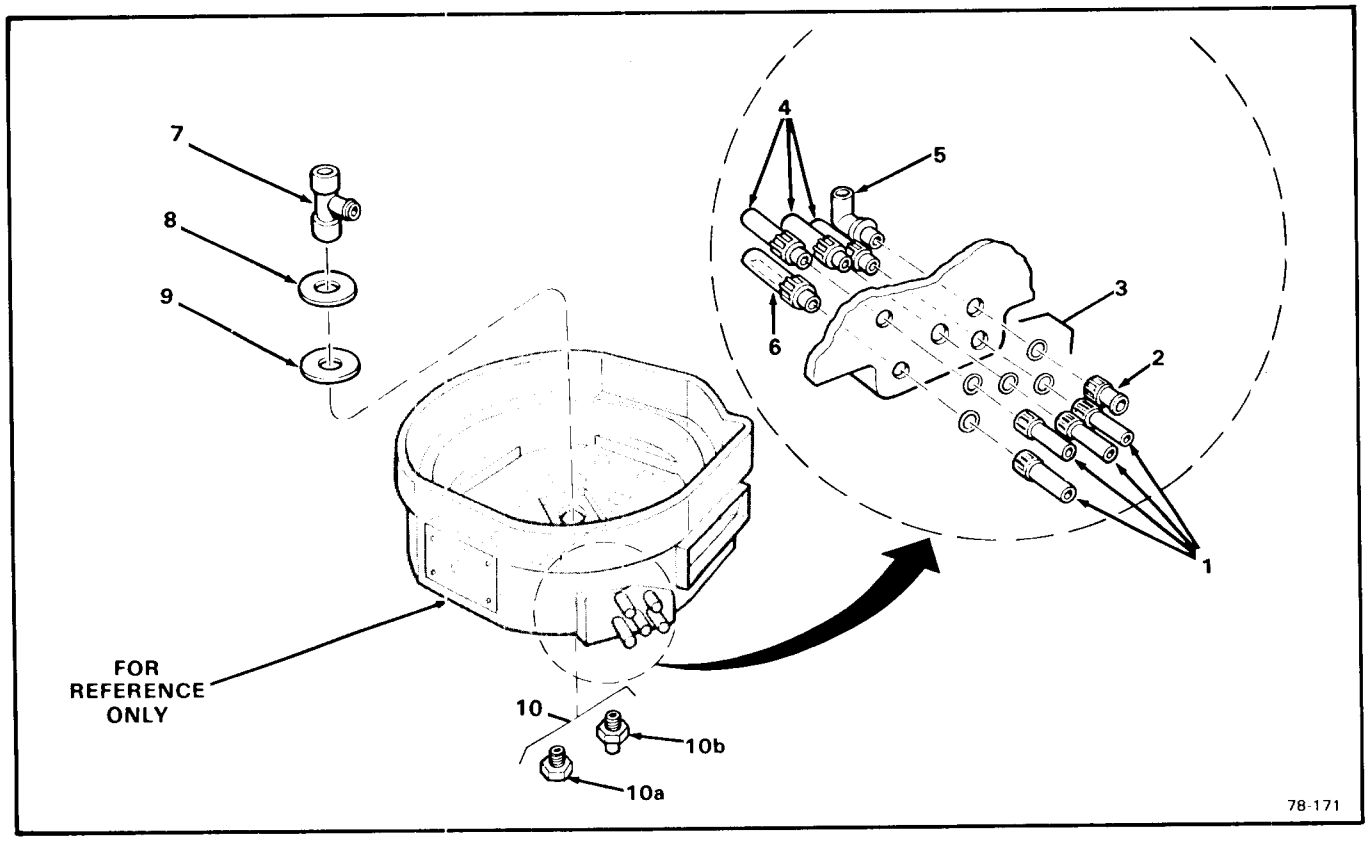

Figure 8-7. Freezing Chamber - Sump w/Tubes

INDEX NO.	DESCRIPTION	PART NUMBER	REQ'D NUMBER
	Freezing Chamber - Sump w/Tubes	A24819-001	Ref.
	(See Figure 8-5/7 and 8		
	for next higher Assembly)		
	***		
	NOTE: P/N A24819-001 shipped as replacement for both		
	upper and lower Freezing Chamber, with Index 10a installed.		
	For upper Freezing Chamber, also order Index 10b		
	P/N A27197-002 and P/N 13-0168-00 Water Seal. Remove		
	Index 10a and replace with Index 10b.		
	***		
1	Tube, Female	02-2081-01	4
	***		
2	Tube, Female - (Cut off)	A24379-001	1
	***		
3	O-Ring	13-0617-02	5
	***		

Figure 8-7. Freezing Chamber - Sump w/Tubes (Cont'd)

INDEX NO.	DESCRIPTION	PART NUMBER	REQ'D NUMBER
4	Tube, Male	02-2080-01	3
	***		
5	Pipe, Stand	02-2125-01	1
	***		
6	Tube, Pick-Up - Pump	02-2082-01	1
	***		
7	Housing, Inlet	02-2121-01	1
	***		
8	Plate, Support - Spray Bar	A23827-001	1
	***		
9	Washer, Non-Metallic - 7/8-inch I.D.	03-1409-11	1
	***		
10	Plug, Bottom	No Number	1
10a	Plug, Bottom	02-2122-01	Ref.
	(Used in Lower Freezing Chamber)		
10b	Plug, Bottom	A27197-002	Ref.
	(Used in Upper Freezing Chamber)		
	***		

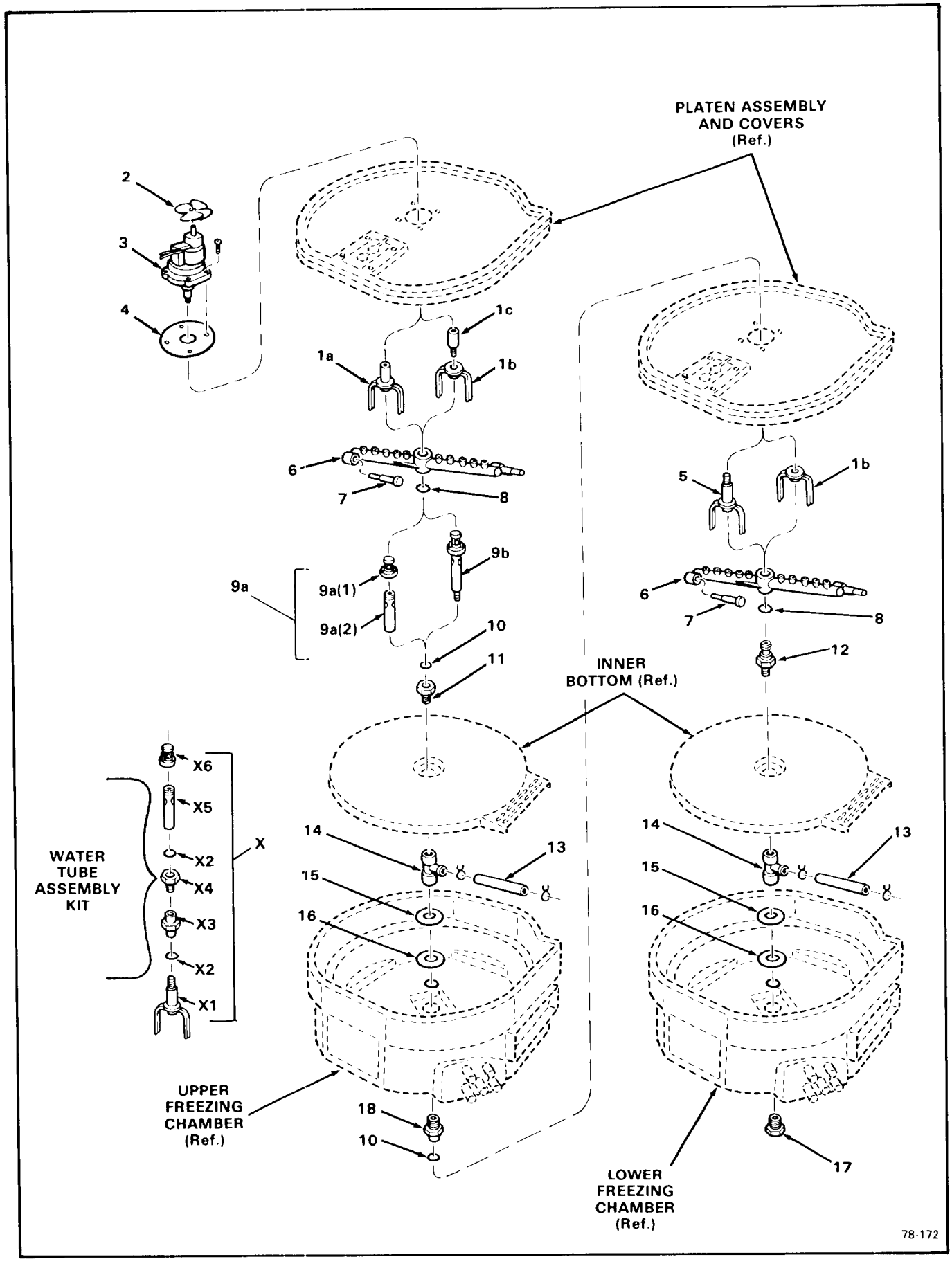

Figure 8-8. Dual Drive Spray Assemblies

Figure 8-8. Dual Drive Spray Assemblies

INDEX NO.	DESCRIPTION	PART NUMBER	REQ'D NUMBER
	Dual Drive Spray Assemblies	No Number	2
	(See Figures 8-5, 8-6, 8-7		
	for next higher Assembly)		
	***		
1a	Fork, Drive - Upper (Left-hand thread)	02-2369-02	Ref.
	*(Used on S/N A45660-02R and up)		
1b	Fork, Drive - (Earlier style) (Left-hand thread)	02-2194-01	Ref.
	*(Used on units prior to S/N 435660-02R)		
1c	Shaft, Drive - Upper (Obsolete, order 1a)	No Number	Ref.
	*(Used on units prior to S/N 435660-02R)		
	***		
2	Blade, Fan - Drivemotor	12-0675-25	Ref.
	***		
3	Drivemotor Assembly, Agitator	A24656-001	Ref.
4	Gasket - Agitator Drivemotor Assembly	13-0176-00	Ref.
	attaching parts, Index 3 & 4		
	Screw, No. 6 x 1 T/F Tap	03-1404-28	Ref.
	***		
5	Fork, Drive - Lower (Left-hand thread)	02-2369-01	Ref.
	***		
6	Bar Assembly, Spray (w/rubber tips)	A25480-001	1(2)
	***		
7	Rubber - Spray Bar	13-0653-00	2(4)
	***		
8	O-Ring	13-0617-25	2
	***		
9a	Tube Assembly, Water	No Number	1
9a(1)	Support, Spray Bar	02-2271-01	1
9a(2)	Tube, Water (Available only in Index X, Water Tube Assembly, Kit P/N A24518-001. Obsolete, order Index X.	No Number	1

Figure 8-8. Dual Drive Spray Assemblies (Cont'd)

INDEX NO.	DESCRIPTION	PART NUMBER	REQ'D NUMBER
9b	Tube Assembly, Water (Obsolete, order Index X)	No Number	1
	*(Used on units prior to S/N 435660-02R)		
	***		
10	Seal, Water	13-0168-00	2
	***		
11	Bushing, Nut (Also order Index 10, Water Seal)	A27197-001	1
	***		
12	Bearing, Spray Bar	02-2120-01	1
	***		
13	Tube, Tygon (8-inch lg.) (Order by the foot)	13-0675-07	1(2)
	attaching parts, Index 13		
	Clamp, Hose	02-1358-01	2(4)
	***		
14	Housing, Inlet	02-2121-02	2
	***		
15	Plate, Support - Spray Bar	A23827-001	2
	***		
16	Washer, Non-Metallic - (7/8-inch I.D.)	03-1409-11	2
	***		
17	Plug, Bottom	02-2122-01	1
	(Used in Lower Freezing Chamber)		
	***		
18	Bushing, Nut (Also order Index 10, Water Seal)	A27197-002	1
	(Used in Upper Freezing Chamber)		
	***		
	NOTE: When Water Tube Assembly, Index 9b is needed as a replacement, on earlier units, order the Water Tube Assembly Kit, Index X below. Also, on current production units, when Water Tube, Index 9a is needed as a replacement, order Kit, Index X.		

Figure 8-8. Dual Drive Spray Assemblies (Cont'd)

INDEX NO.	DESCRIPTION	PART NUMBER	REQ'D NUMBER
X	Kit - Water Tube Assembly	A24518-001	1
X1	Fork, Drive (Left-hand thread)	02-2369-01	1
X2	Seal, Water	13-0168-00	2
X3	Bushing, Nut (Left-hand thread)	A27197-002	1
X4	Bushing, Nut (Left-hand thread)	A27197-001	1
X5	Tube, Water (Order Kit P/N 24518-001)	No Number	1
X6	Support, Spray Bar	02-2271-01	1
	***		
	*The above parts change, noted with asterik (*), began during the September 1978 production run, at approximately P/N 435660-02R.		

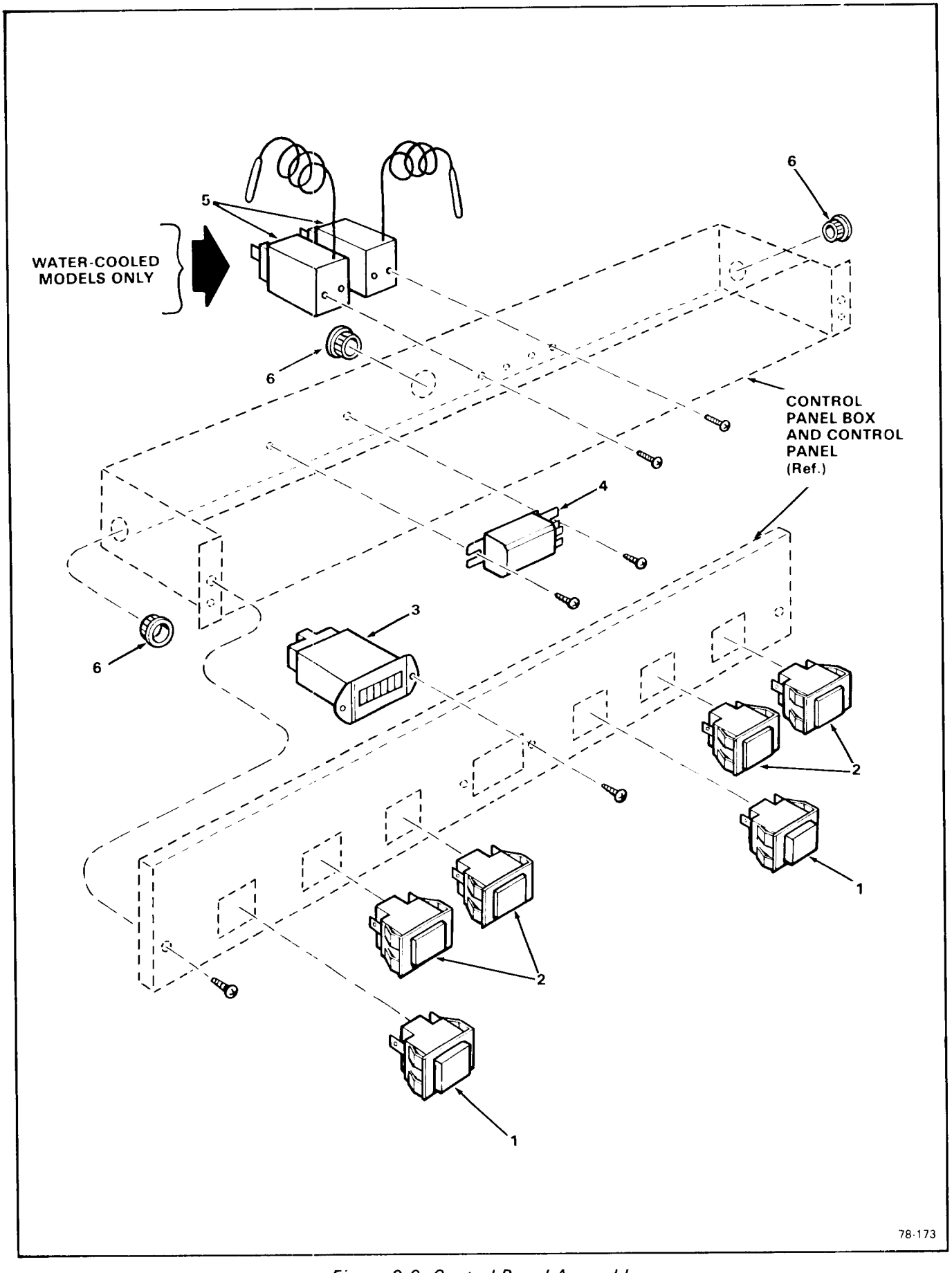

Figure 8-9. Control Panel Assembly

Figure 8-9. Control Panel Assembly

INDEX NO.	DESCRIPTION	PART NUMBER	REQ'D NUMBER
	Control Panel Assembly	No Number	1
	(See Figure 8-2, 8-3		
	for next higher Assembly)		
	***		
1	Switch - (SPST) (Amber lens pushbutton)	12-2067-01	2
	***		
2	Lamp - Lighted indicator (Red lens)	12-2068-01	4
	***		
3	Meter, Hour	12-2058-02	1
	attaching parts, Index 3		
	Screw, No. 4-40 x 3/8 Pan Hd. Mach.	03-1403-78	2
	Nut, No. 4-40 Hex	03-1406-14	2
	***		
4	Relay	12-2070-01	1
	attaching parts, Index 4		
	Screw, No. 8 x .250 T/F Tap	03-1531-03	2
	***		
5	Control, Pressure (Water-Cooled Models)	11-0410-01	2
	attaching parts, Index 5		
	Screw, No. 6-32 x 1/4 Pan Hd Mach	03-1403-02	4
	***		
6	Bushing, Snap	12-1213-10	3
	***		

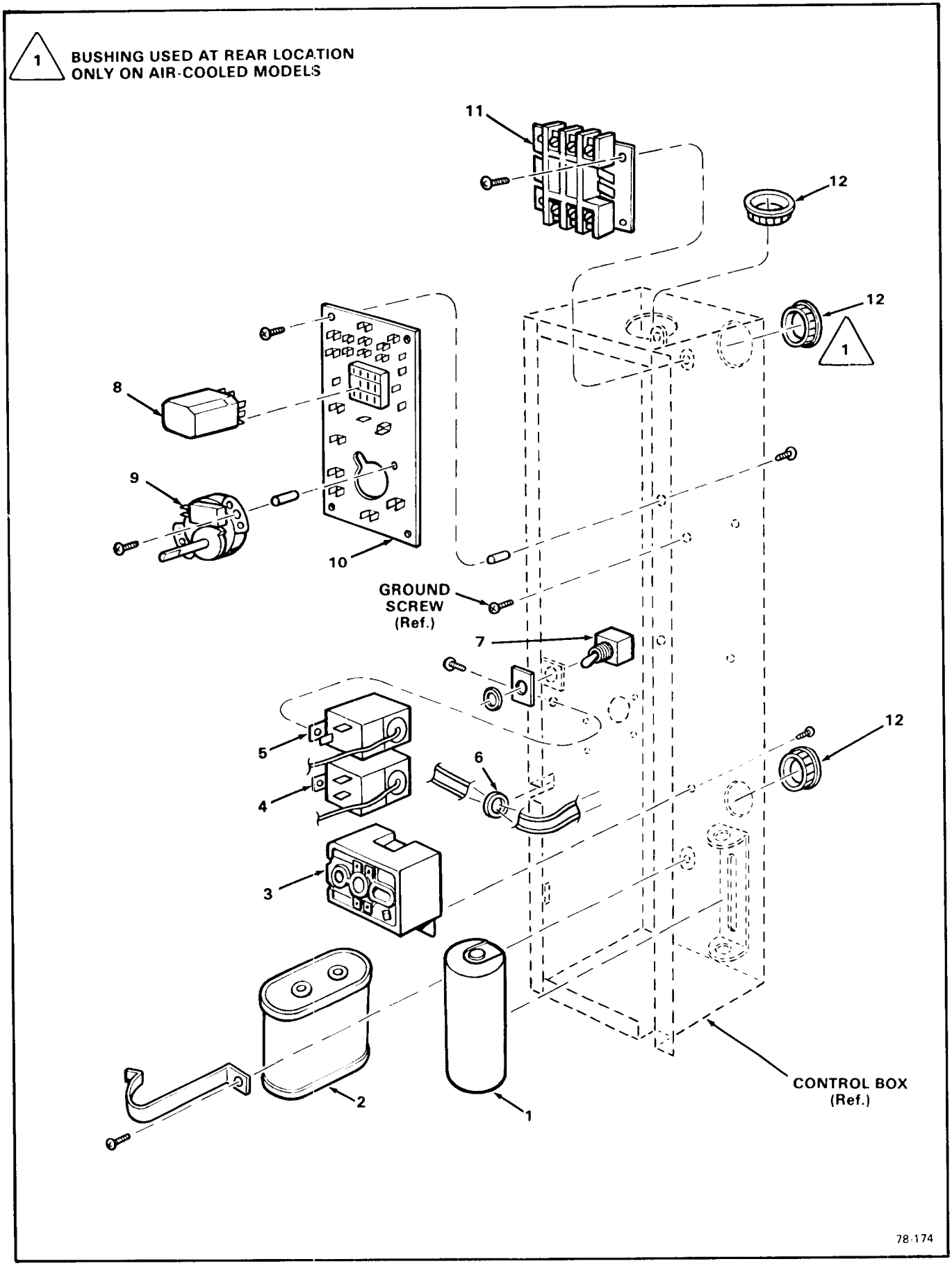

Figure 8-10. Control Box Assembly

Figure 8-10. Control Box Assembly

ITEM NO.	DESCRIPTION	Air-Cooled Water-Cooled (A/C) (W/C)	PART NUMBER	PHASE 1 208 230 60	PHASE 3 208 220 60
	Control Box Assembly	(A/C) (W/C)	No Number	1	1
	(See Figure 8-2, 8-3				
	for next higher Assembly)				
	***				
1	Capacitor, Start	(A/C) (W/C)	18-1901-23 (A)	1	0
	Capacitor, Start		18-1901-40 (B)	1	0
	***				
2	Capacitor, Run	(A/C) (W/C)	18-1902-45 (A)	1	0
	Capacitor, Run		18-1902-50 (B)	1	0
	attaching parts, Index 2				
	Bracket, Capacitor		No Number	1	0
	Screw, No. 8-32 x 1 Phil Recess Pan Hd		03-1403-22	1	0
	***				
3	Relay	(A/C) (W/C)	18-1903-34 (A)	1	0
	Relay		18-1903-42 (B)	1	0
	attaching parts, Index 3				
	Screw, No. 6 x 3/8 T/F Tap		03-1404-05	1	0
	***				
4	Control, Temperature - Bin	(A/C) (W/C)	11-0353-03	1	1
5	Control, Temperature - Cube Size	(A/C) (W/C)	11-0345-00	1	1
	attaching parts, Index 4 & 5				
	Screw, No. 8-32 x 1/4 Phil Recess Pan Hd		03-1403-15	4	4
	***				
6	Grommet	(A/C) (W/C)	13-0115-00	1	1
	***				
7	Switch, Toggle	(A/C) (W/C)	12-0426-01	1	1
	***				
8	Relay, 3PDT Covered	(A/C) (W/C)	12-1879-02	1	1
	***				
9	Timer & Switch Assembly	(A/C) (W/C)	12-2107-01	1	1

Figure 8-10. Control Box Assembly (Cont'd)

INDEX NO.	DESCRIPTION	Air-Cooled Water Cooled (A/C) (W/C)	PART NUMBER	PHASE 1 208 230 60	PHASE 3 208 220 60
	attaching parts, Index 9				
	Stand-Off - (7/8 lg.)		02-2242-01	2	2
	Screw, No. 6-32 x 1/4 Phil Recess Pan Hd		03-1403-02	2	2
	***				
10	Board Assembly, Circuit	(A/C) (W/C)	12-1912-01	1	1
	attaching parts, Index 10				
	Stand-Off - (5/8 lg.)		02-2242-02	5	5
	Screw, No. 6-32 x 1/4 Phil Recess Pan Hd		03-1403-02	5	5
	***				
11	Contactor (Single-phase)	(A/C) (W/C)	12-2037-01	1	0
	Contactor (Three-phase)	(A/C) (W/C)	12-0739-01	0	1
	attaching parts, Index 11				
	Screw, No. 8-32 x 3/8 Phil Recess Pan Hd		03-1403-17	2	2
	***				
12	Bushing, Snap (Left side)	(A/C) (W/C)	12-1213-13	3	3
	Bushing, Snap (Left Side)	(A/C) (W/C)	12-1213-10	1	1
	Bushing, Snap (Right side)	(A/C) (W/C)	12-1213-13	2	2
	***				

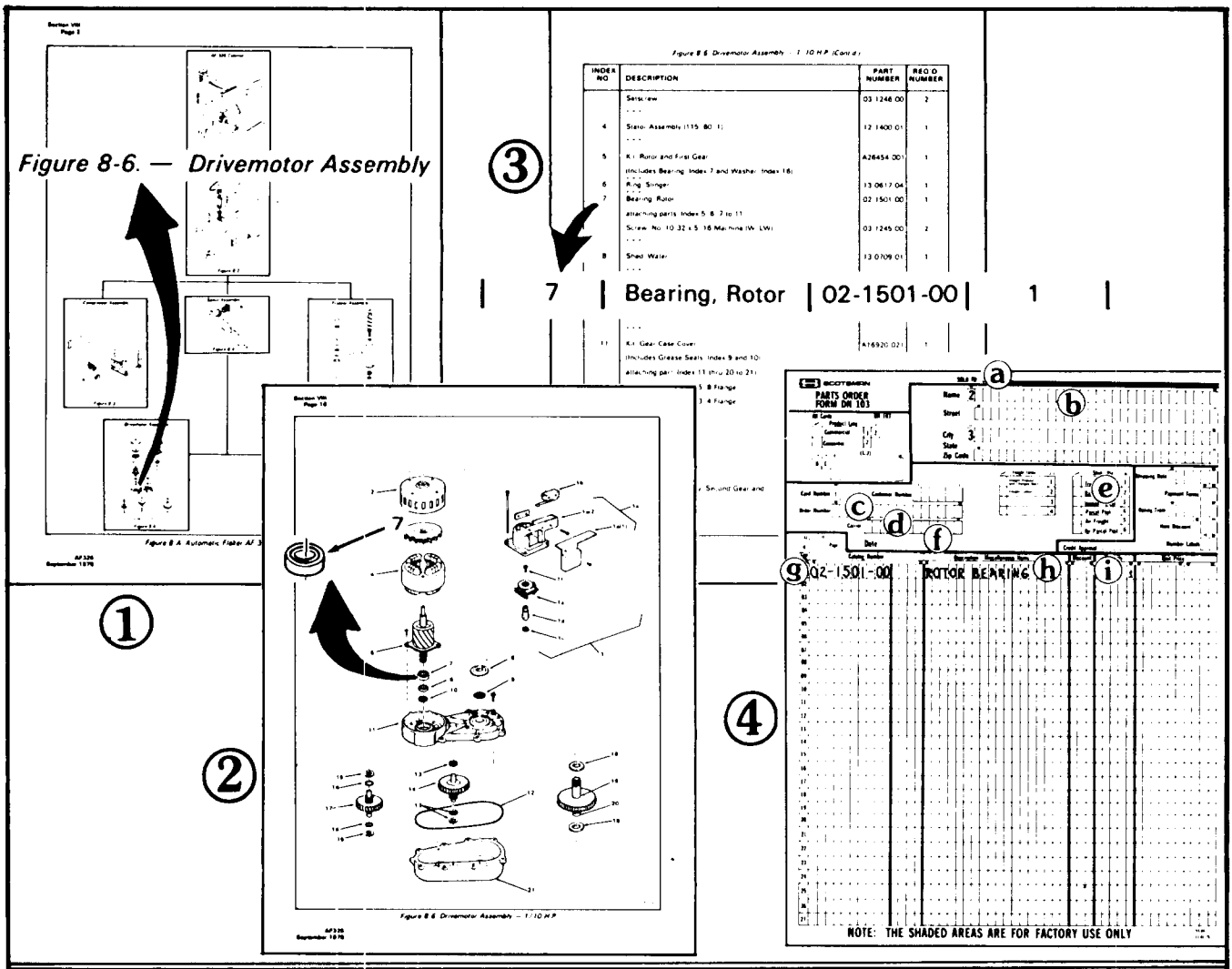

HOW TO USE A SCOTSMAN PARTS MANUAL WHEN ORDERING PARTS FOR ICE SYSTEMS PRODUCTS

IMPORTANT A. All Part Numbers have TEN DIGITS (spaces), required for use in the Computer System. BE SURE to fill in ALL SPACES in the CATALOG NUMBER column, on the Parts Order form as shown above.

B. Enter the QUANTITY of the Parts ordered, in the last digit column under the QUANTITY column heading, the one under the small 55 number, for parts from 1 thru 9. For 10 or more parts use two columns.

To be sure you receive the proper parts in the proper quantities, ALWAYS use the PART NUMBERS and DESCRIPTIONS given in the Parts Manuals.

The figures above illustrate the way a Parts Manual would be used, if the Part being ordered were the ROTOR BEARING that is used in the DRIVEMOTOR ASSEMBLY of an AF325 Automatic Flaker, for example.

PROCEDURE:

1. At the beginning of Section VIII, THE PARTS ILLUSTRATIONS AND PARTS LISTS, in each Parts and Service Manual, is Figure 8-A; which, is a flow chart prepared from exploded views in Section VIII. Use the flow chart to quickly determine which Figure contains the Assembly, Component or Part.

FIGURE 1: Since the Part required in the above example is in the DRIVEMOTOR ASSEMBLY, shown as FIGURE 8-6.

2. Open the Manual to page showing FIGURE 8-6.

3. Locate the PART and its INDEX NUMBER on the exploded view illustration.

FIGURE 2: The INDEX NUMBER for the PART is 7.

4. Check the numerical sequence in the associated Parts List following the illustration.

5. LOCATE the INDEX NUMBER 7, in the INDEX NO. column, the first column on the left side of the Parts List page.

FIGURE 3: INDEX NO. 7 is listed as a BEARING, ROTOR in the DESCRIPTION column. The Part Number for the Rotor Bearing is 02-1501-00 as listed in the PART NUMBER column on the right side of the Parts List page. And, one Rotor Bearing is listed in the REQ'D NUMBER column, or that ONLY one of those parts is required for one Drivemotor Assembly.

6. Write an order for the Part. (Use SCOTSMAN Parts Order Form DN103)

FIGURE 4: a. Distributor Name.
b. (Use for DROP-SHIP order ONLY).
c. Distributor Purchase Order Number.
d. Carrier
e. How shipped (Truck, Rail, UPS, etc.)
f. Date ordered
g. Part Catalog Number
(use full TEN digits (spaces) listed in Parts Manual, including dashes between numbers.
h. Description - as listed in Parts Manual.
i. Quantity - number of parts ordered.
(use far right column)

Figure 8-00. How To Use The Illustrated Parts List.

HC400

TABLE OF CONTENTS

GENERAL INFORMATION & INSTALLATION

Introduction 3
Location and Leveling 4
Stacking HC400 Icemaker 4
Install Bin Thermostat Capillary Tube 5
Electrical Connections 6
Water Supply and Drain Connections 6
Final Check List 8

OPERATING INSTRUCTIONS

Start-Up 8
Adjustment of Cube Size 11
Freezing Cycle 12
Harvest Cycle 13

ADJUSTMENT, REMOVAL & REPLACEMENT

Bin Thermostat Control 15
Cube Size Control 15
Timer & Switch Assembly 16
Water Regulator Assembly—
Water-Cooled Models 33
Bin Thermostat Control 34
Compressor Assembly 34
Condenser — Air-Cooled Models 34
Condenser — Water-Cooled Models 34
Cube Size Control 35
Curtain Assembly 35
Drier 35
Fan Motor Assembly —
Air-Cooled Models 35
Freezing Chamber 36
Water Pump Assembly 36
Water Regulator Assembly—
Water-Cooled Models 36

SERVICE DIAGNOSIS 37

MAINTENANCE AND CLEANING INSTRUCTIONS

General 40
Icemaker 40
Cleaning — Icemaker 41

LIST OF ILLUSTRATIONS

Specifications 2
HC400 — Component Location 3
Stacking Modular HC400 Cubers 4
Installing the Bin Thermostat
Capillary Tube 5
Installation, Electrical, Water
Supply and Drain Connections 6
Timer Cam Positions 8
Operation 9
Cube Size Control Adjustment 11
Freezing Cycle 12
Harvest Cycle 13
Adjustment of the Temperature
Control 15
Adjustment of the Timer and
Switch Assembly 16

PARTS LIST & WIRING DIAGRAMS
(Printed in Yellow) 17

PARTS LIST:
Cabinet Assembly 19
Major Assembies —
Air-Cooled 24
Major Assemblies —
Water-Cooled 23
Freezer Assembly 25
Control Box 26

WIRING DIAGRAMS:
HC400 AE -1A Air-Cooled —
(115/60/1) 27
HC400WE-1A Water-Cooled
(115/60/1) 28
HC400AE-31A Air-Cooled
(115/208-230/1) 29
HC400WE-31A Water-Cooled
(115/208-230/60/1) 30
Agitator Motor Assembly 30
Maintenance and Cleaning 40
Cleaning Water System 41

THIS PAGE
INTENTIONALLY
LEFT BLANK

HC400 MODULAR CUBER

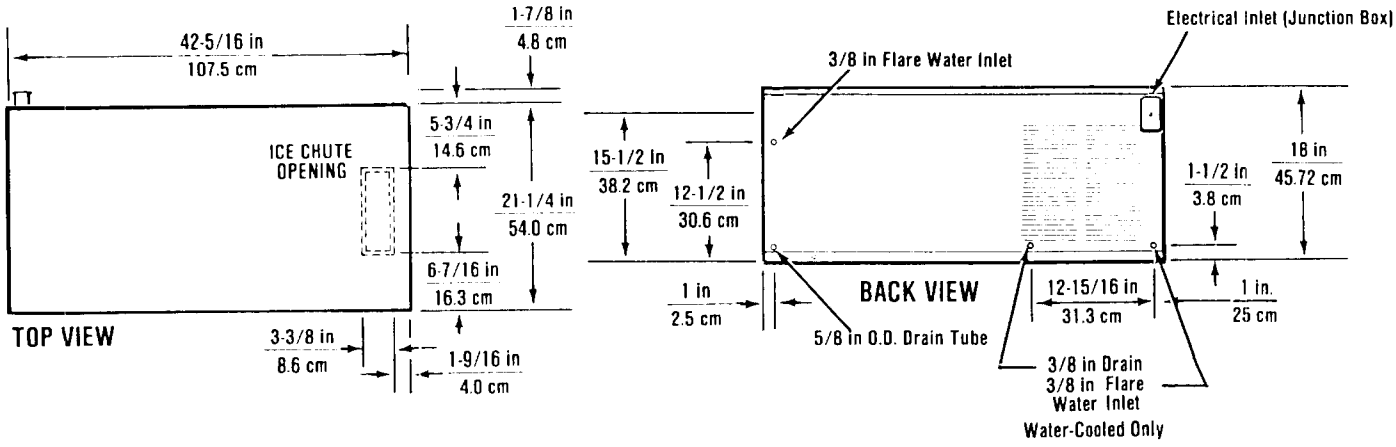

This product qualifies for the following listings:

We reserve the right to make product improvements at any time. Specifications and design are subject to change without notice.

SPECIFICATIONS

Model Number	Dimensions H" x W" x D"	Cube Size	Cond. Unit	Basic Electrical	Comp. H.P.	Run. Amps.	Max. Oper. Amps.	No. of Wires	Min. Circuit Ampacity †	Max. Fuse Size
HC400 MODULAR STACKING CUBER										
HC400SAE-1A	18 x 42 5/16 x 21 1/4	Small	Air	115/60/1	1	15.0	28.3	2	31.3	30
HC400SAE-31A	18 x 42 5/16 x 21 1/4	Small	Air	115/208-230/60/1	1	8.7	16.4	3	19.8	20
HC400SWE-1A	18 x 42 5/16 x 21 1/4	Small	Water	115/60/1	1	14.0	27.5	2	30.5	30
HC400SWE-31A	18 x 42 5/16 x 21 1/4	Small	Water	115/208-230/60/1	1	8.0	15.6	3	19.0	20
HC400MAE-1A	18 x 42 5/16 x 21 1/4	Medium	Air	115/60/1	1	15.0	28.3	2	31.3	30
HC400MAE-31A	18 x 42 5/16 x 21 1/4	Medium	Air	115/208-230/60/1	1	8.7	16.4	3	19.8	20
HC400MWE-1A	18 x 42 5/16 x 21 1/4	Medium	Water	115/60/1	1	14.0	27.5	2	30.5	30
HC400MWE-31A	18 x 42 5/16 x 21 1/4	Medium	Water	115/208-230/60/1	1	8.0	15.6	3	19.0	20

Leathergrain embossed steel with high gloss baked enamel finish.

† Use this value to determine minimum wire size as per National Electric Code Standards.

OPTIONAL STAINLESS STEEL PANEL KIT

SPKMC25 contains top, front and 2 end panels. Not factory installed.

IMPORTANT OPERATING REQUIREMENTS

	MINIMUM	MAXIMUM
Air Temperatures	50°F (10.0°C)	100°F (37.7°C)
Water Temperatures	40°F (4.4°C)	100°F (37.7°C)
Water Pressures	20 lbs. gauge	120 lbs. gauge
Electrical Voltage Variation		
Voltage rating specified on nameplate	-10%	+10%

Extended periods of operation exceeding these limitations constitutes misuse under the terms of Scotsman Manufacturer's Limited Warranty, resulting in a loss of warranty coverage.

STORAGE BIN & EXTENSIONS

Since the Model HC400, like other modular cubers in the SCOTSMAN line, does not have an attached ice storage bin, it is necessary to use an auxiliary bin. Modular systems combinations include: B40 Ice Storage Bin with 350 pounds (lbs.) capacity; B60 with 550 lbs.; B90 with 590 lbs.; and, bin extensions: BX25 with 150 lbs., and the KBT2 Bin Top used with BX83 with 260 lbs.; and BX87 with 560 lbs. Two HC400 Modular Cubers can be stacked to double ice production volume.

INTRODUCTION

These instructions provide the specifications and the step-by-step procedures for the installation, start up and operation for the Scotsman Model HC400 Modular Cuber.

The Model HC400 Modular Cubers are quality designed, engineered and constructed, and are thoroughly tested icemaking systems, providing the utmost in flexibility to fit the needs of a particular user.

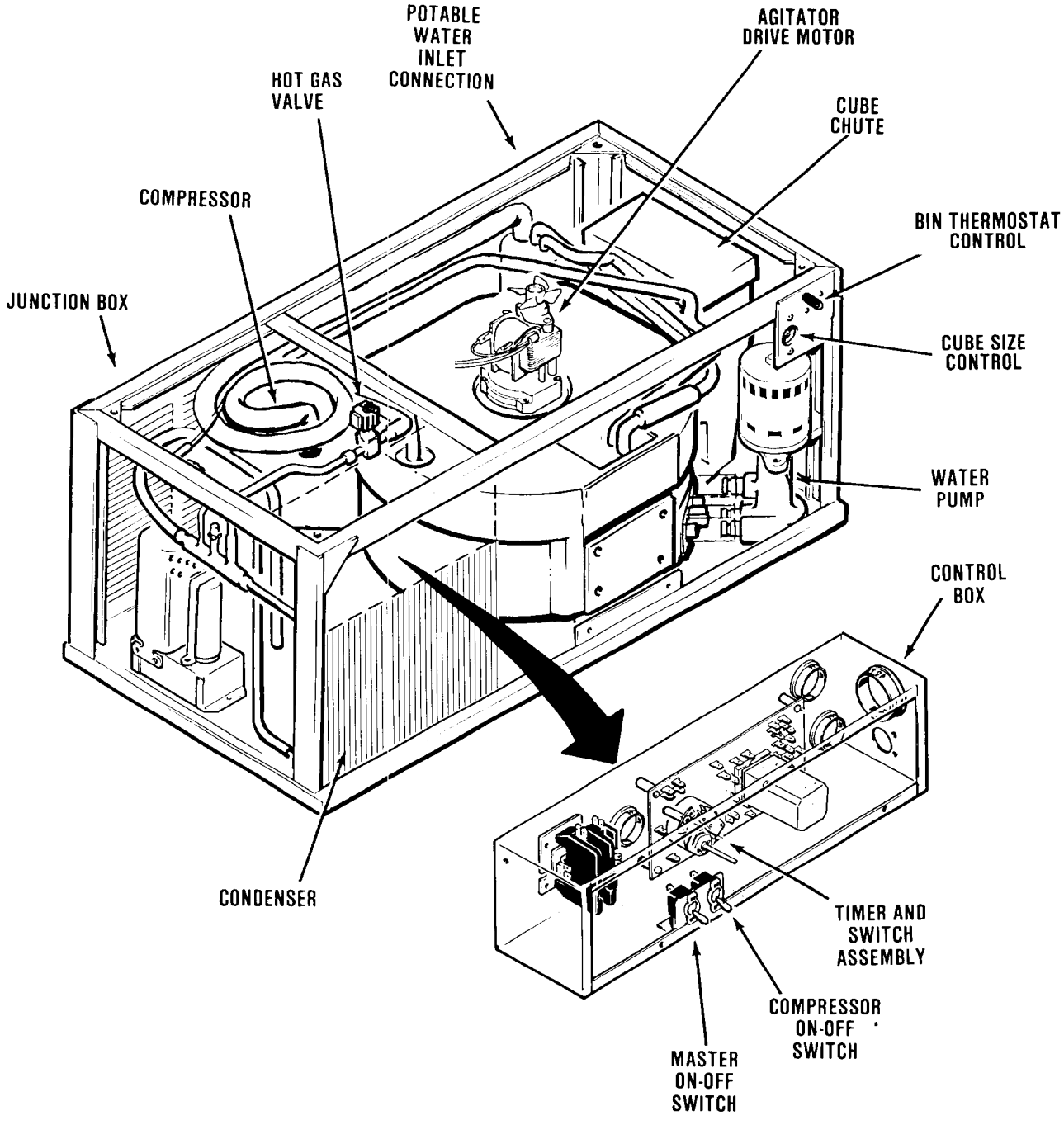

HC400 — Component Location

LOCATION & LEVELING

1. Position the selected bin in the permanent location, which should have a minimum room temperature of 50-degrees F., and maximum room temperature of 100-degrees F. Level the bin, adjusting the leg levelers in both the front-to-rear and side-to-side directions. Select a well-ventilated location for the air-cooled models.
2. Inspect the bin top mounting gasket, which should be flat, with no wrinkles, to provide a good seal when the HC400 Cuber is installed on top of the bin.
3. Install the HC400 Modular Cuber on top of the selected bin, using care to be sure a good seal is made between the two cabinets.
4. Remove screws, top panel, front panel, and both side panels.
5. Remove cube chute from the machine.
6. Bolt the cuber to the bin using the two hex head bolts, retained from the shipping skid. Thread the bolts down through the cuber base into the top edge of both storage bin side panels.
7. Install cube deflector. Hook the cube deflector over the flange in base of the icemaker. See Detail.

STACKING HC400 ICEMAKER

1. Top panel of bottom machine may be set aside, as it is not used when machines are stacked. Remove the cube chute from top machine. Place upper machine directly on frame of lower machine. Bolt together with 2 bolts used to hold machine to the crate skid.
2. Slide cube chute into cube chute opening of bottom icemaker.
3. Position stacking kit cover over cube chute of bottom icemaker.
4. Slide the stainless steel sleeve through cube chute opening of upper icemaker and into the stacking kit cover.
5. Slide cube chute into cube chute opening of upper icemaker.
6. See Installing Bin Thermostat Capillary Tube with steps to thread the capillary tube from each icemaker into the cube deflector.
7. Install cube chute and cover on top machine, and replace all cabinet panels on both machines.

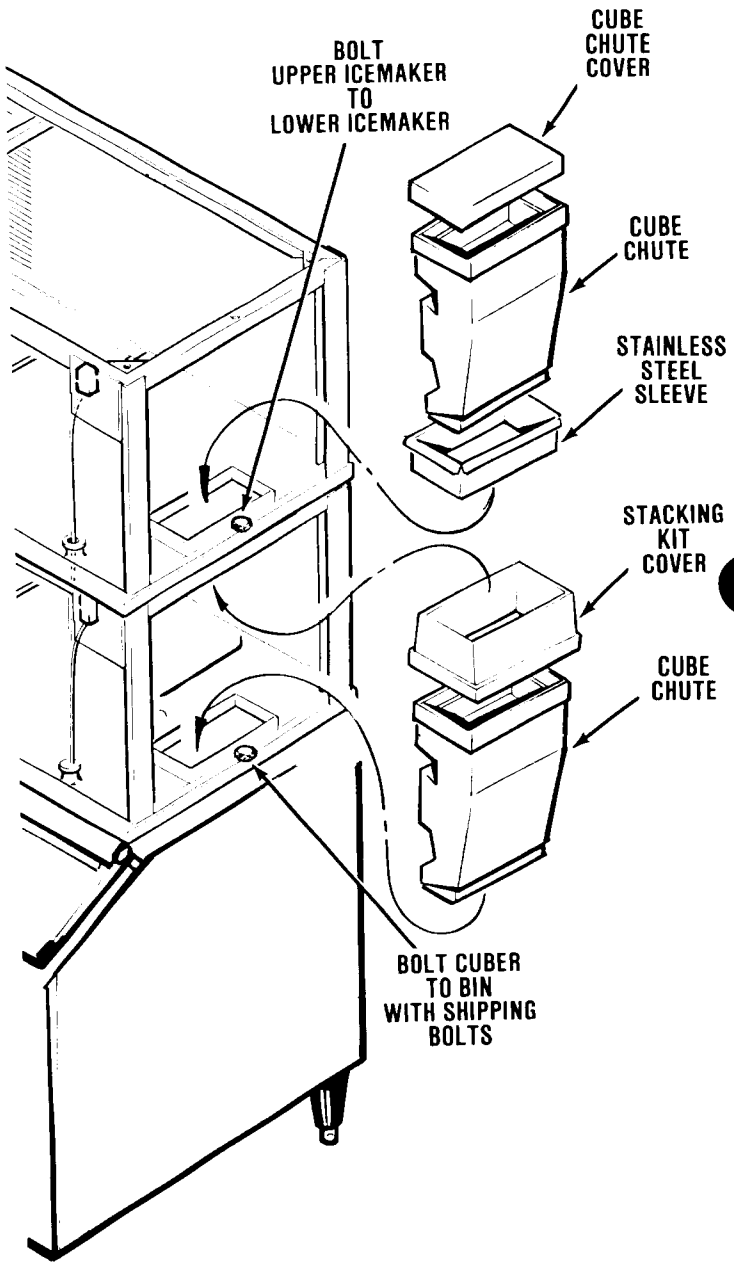

Stacking Modular HC400 Cubers

INSTALL BIN THERMOSTAT CAPILLARY TUBE

CAUTION

Careful handling of the bin thermostat capillary tube is required.

1. Uncoil the bin thermostat capillary tube and route from the bin thermostat control down through the plastic grommet in the icemaker base and under the cube deflector.
2. Thread the capillary tube through the grommets in the cube deflector as indicated. See *Installing the Capillary Tube* illustration.

   Stacking modular HC400 cubers: Route the bin thermostat capillary tube from the upper icemaker through the plastic grommet and into the chassis of the lower icemaker, through the plastic grommet of the lower icemaker, under and into the cube deflector.

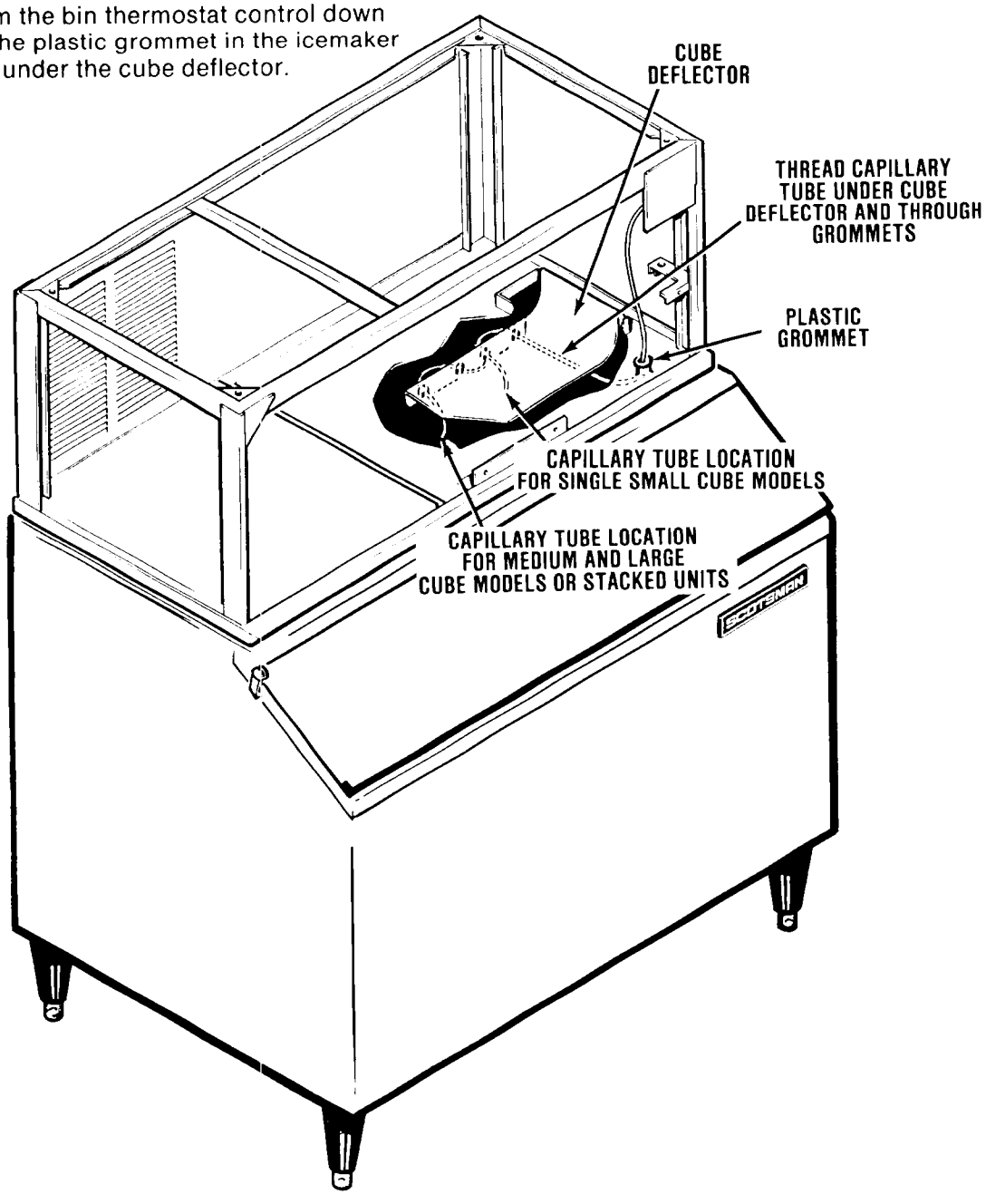

Installing the Bin Thermostat Capillary Tube

ELECTRICAL CONNECTIONS

SEE NAMEPLATE for current requirements to determine wire size to be used for electrical hookup. The cuber requires a solid chassis-to-earth ground wire. See Wiring Diagram.

Be certain the cuber is connected to its own electrical circuit and individually fused. Voltage variation should not exceed ± ten percent of the nameplate rating, even under starting conditions. Low voltages can cause erratic operation and may be responsible for serious damage to the icemaker.

All external wiring should conform to the national, state and local electrical code requirements. Usually an electrical permit and services of a licensed electrician will be required.

WATER SUPPLY AND DRAIN CONNECTIONS

AIR-COOLED MODELS: The recommended water supply line is a 3/8-inch O.D. copper tubing with a minimum operating pressure of 20 PSIG and a maximum of 120 PSIG. Connect to cold water supply line with standard plumbing fittings, with a shutoff valve installed in an accessible place between the water supply and the cuber. In some cases a plumbing permit and services of a licensed plumber will be required.

WATER-COOLED MODELS: On water-cooled models, a separate cold water supply inlet is required, to be connected to a second 1/2-inch O.D. male flare fitting at the rear of the cabinet. Additional drain lines are required to drain the water-cooled condenser.

DRAIN CONNECTIONS: All drains are gravity type and must have a minimum of 1/4-inch fall per foot on horizontal runs. The drains to be installed to conform with the local plumbing code. Install separate drain line for discharge water from the water-cooled condenser. The drain receptacle should be an open, trapped or vented construction.

Recommended bin drain is 5/8-inch O.D. copper tubing and should be vented and run separately.

Install Drain Cup. A drain hole is located at the cabinet rear base lower left corner and a Drain Cup is provided and must be installed. Coat both inside corners of Drain Cup with a small amount of sealant to insure a proper water seal, and attach Drain Cup to icemaker base using screws. Attach suitable length of 1/2-inch O.D. drain tube and route tubing to drain.

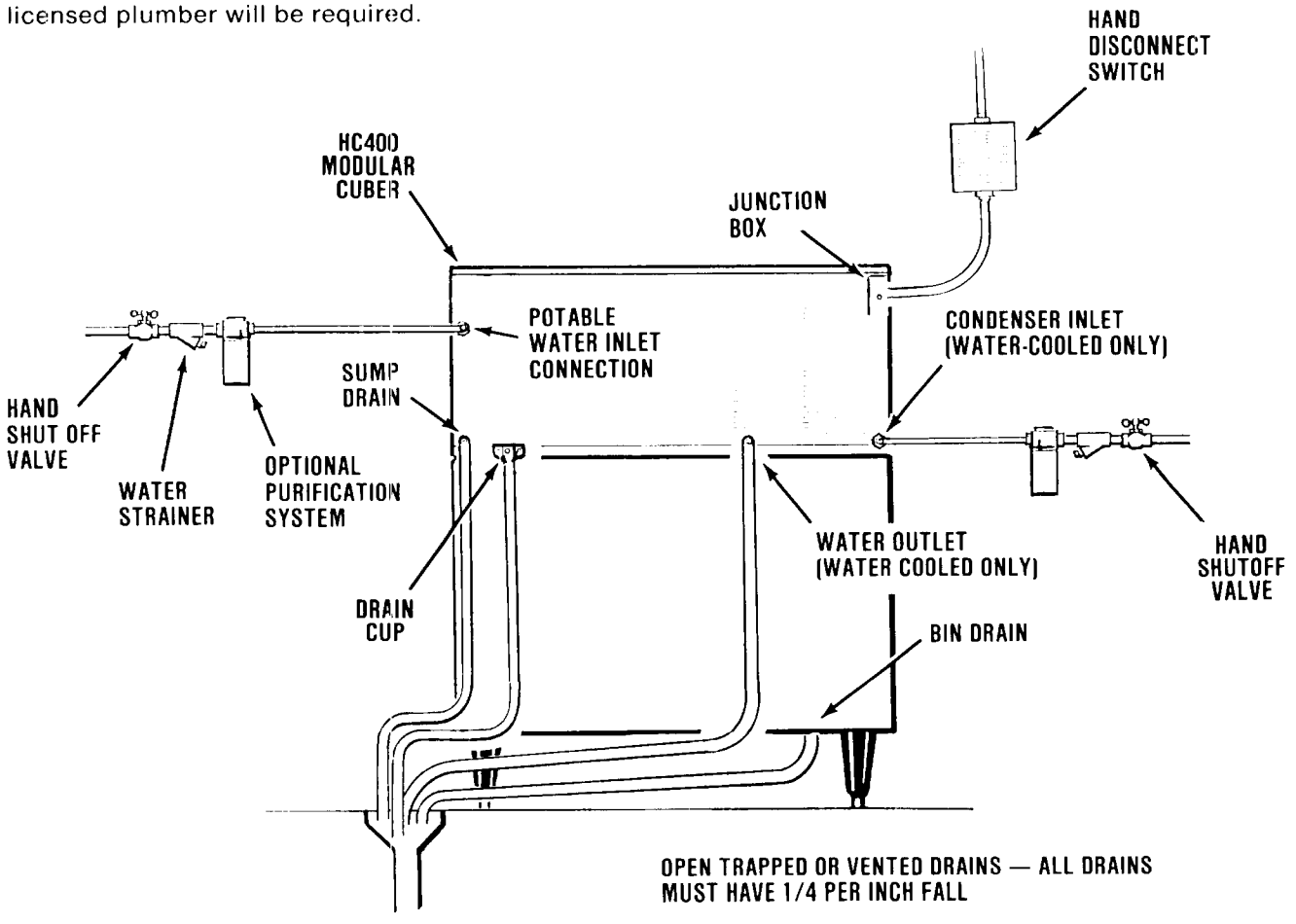

Installation, Electrical, Water Supply and Drain Connection

FINAL CHECK LIST

1. Is the cabinet/bin level and the cuber bolted to the bin? (IMPORTANT)
2. Is the cuber in a location where ambient temperatures are a minimum of 50-degrees F. all year around and do not exceed a maximum of 100° F?
3. Is there at least a six-inch clearance behind and around the cabinet for all connections and for proper air circulation?
4. Have all electrical and piping connections been made?
5. Has the electrical power supply wiring been properly connected, and the voltage tested and checked against the nameplate rating? Has proper chassis-to-earth ground been installed?
6. Is the water supply line shutoff valve installed and opened and has the inlet water supply pressure been checked to ensure a minimum of 20 PSIG and a maximum pressure of 120 PSIG?
7. All masking tape removed from doors and panels? Have styrofoam blocks been removed from the top of the freezing chamber?
8. Have the compressor holddown bolts been checked to be sure the compressor is snug on the mounting pads?
9. Check all refrigerant lines and conduit lines to guard against vibration and possible failure.
10. Has the bin thermostat capillary tube been properly installed in the cube deflector?
11. Has the cuber and the bin been wiped clean with clean damp cloths?
12. Has the owner/user been given the User Manual and instructed on how to operate the icemaker and the importance of periodic maintenance?
13. Has the owner/user been given the name and telephone number of the Authorized Scotsman Distributor or Service Agency serving him?
14. Has the Manufacturer's Registration Card been properly filled out? Check for correct Model and Serial Numbers from nameplate, then mail the completed card to the SCOTSMAN factory.

OPERATING INSTRUCTIONS

START—UP

1. Remove screws and remove the top and front panels.
2. Check that the two toggle switches, the MASTER ON-OFF toggle switch and the COMPRESSOR ON-OFF toggle switch are in the OFF position, on the control box.
3. OPEN the water supply line shutoff valve.
4. Protruding through the control box cover is the shaft of the timer and the switch assembly. Rotate the shaft of the timer and switch assembly clockwise until the actuator arm on the microswitch drops off outer cam into cam slot, the start of the harvest cycle. See Timer Cam Positions. An audible click can be heard, but in a noisy area, look at the cam and switch to observe the event.

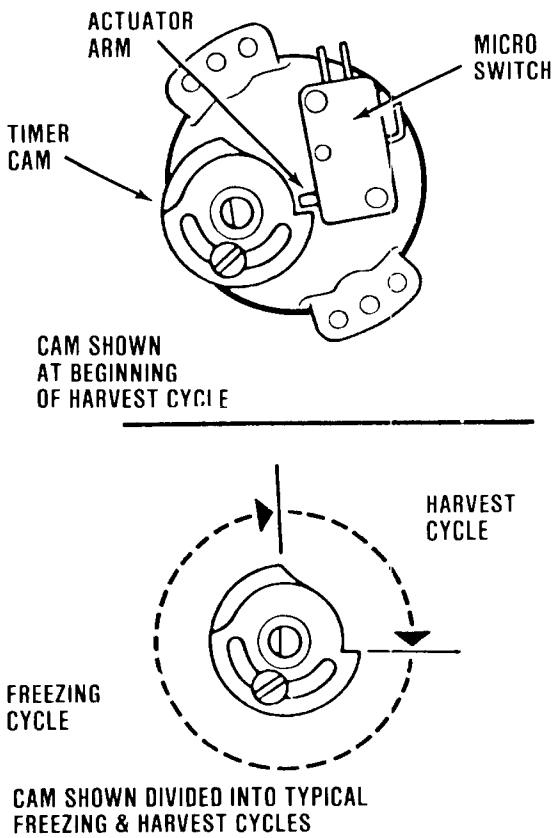

Timer Cam Positions

5. Move the master ON-OFF toggle switch, the bottom toggle switch, to the ON position.
6. Observe that the water inlet solenoid valve OPENS and inlet water flows from the valve through tubing and can be seen flowing to the defrost water tube, at the top rear of the freezing chamber, where the water then flows around the inverted ice cube cups and drains into the freezing chamber sump. Excess water is overflowed through the stand pipe and drain tube. This cycle will take about three minutes, when the Timer will CLOSE the water inlet solenoid valve.

   Advancing the shaft of the timer and switch assembly through the remaining cycles into a new harvest cycle, restarts the timer and allows a check that: Water inlet solenoid valve OPENS and the reservoir overflows through the stand pipe. Water inlet valve CLOSES, stopping water overflow.
7. When the second harvest cycle is completed, move the compressor ON-OFF toggle switch, to the ON position.
8. Check operation of freezing cycle:

   Agitator motor is operating, as seen by fan rotating on top of the freezing chamber.

   Water pump is operating, as seen at Tygon tubes on pump and looking at water being sprayed into inverted ice cube cups, from rotating spray bar, seen inside freezing chamber.

   The icemaking process begins; feeling the metal parts of the evaporator reveals cold temperature, very shortly ice begins to form. Tubing will become frosted at the top of the evaporator inlet located on the top front portion at the freezing chamber.

   Freezing time will range between 20 and 30 minutes in a 70-degree F. ambient temperature. Longer time for temperatures above 70-degrees F., and shorter time required when temperatures are below 70-degrees F. Average complete cycle range is about 17 to 22 minutes.
9. Replace the plastic cube chute before the harvest cycle begins.

(Continued on page 10)

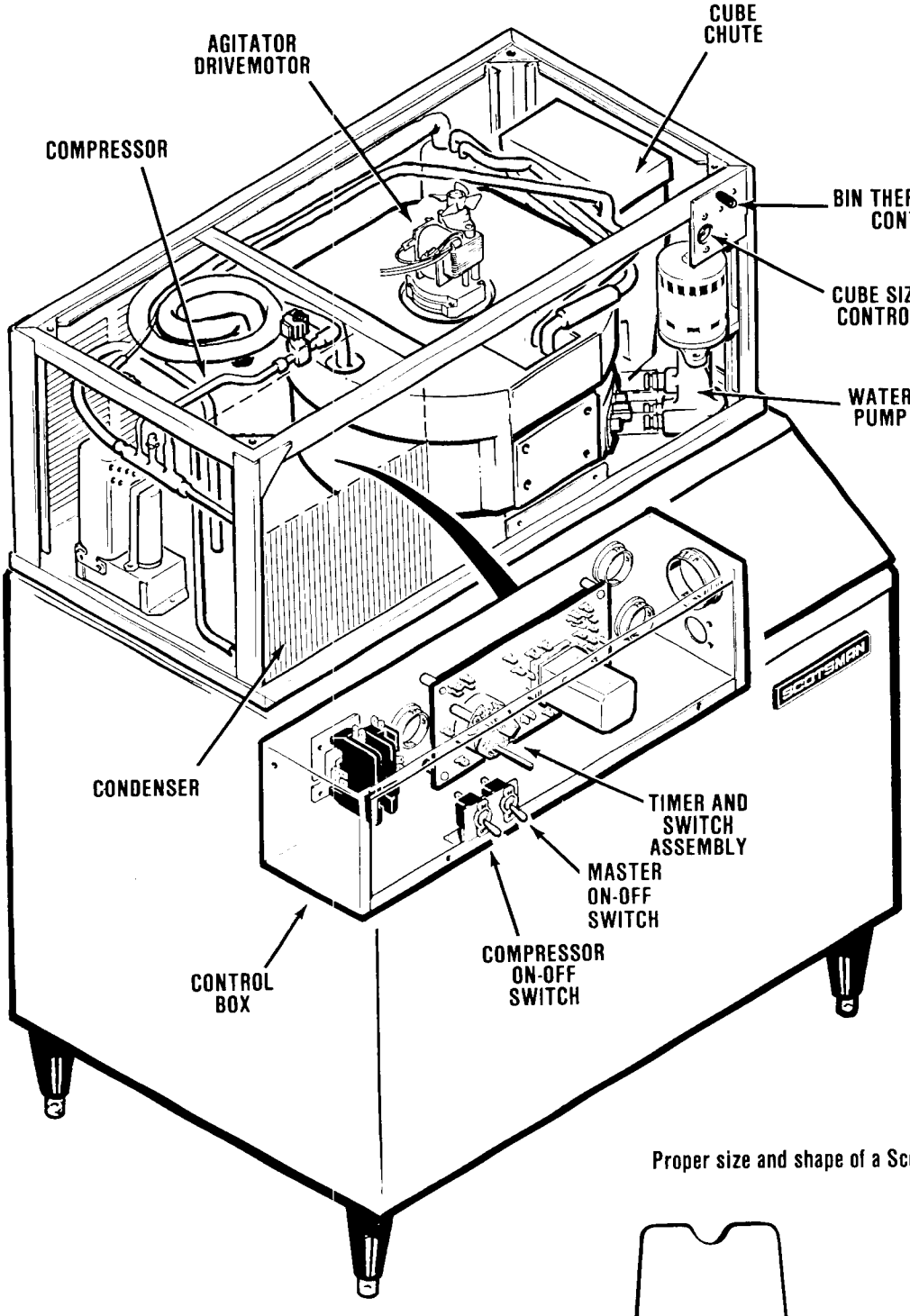

Observe cubes produced and check size and shape — compare cubes to example on page 10.

Proper size and shape of a Scotsman Round Cube:

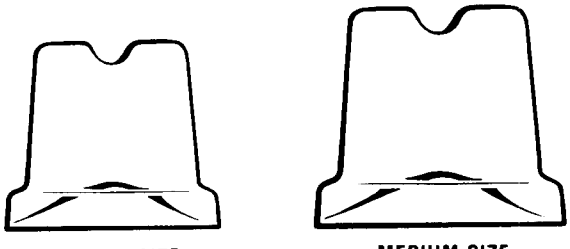

SMALL SIZE MEDIUM SIZE

NOTE

Normal cube size is with a one-quarter depression in the crown.

10. Observe first ice cube harvests:

    All cubes should drop from the freezing chamber by the end of the timed portion of the harvest cycle. If required, the harvest time should be adjusted.

    Check size of ice cubes:

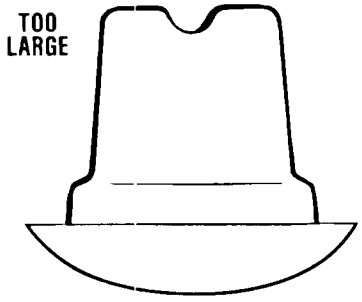

Too LARGE requires longer freezing cycle — may cause evaporator freeze ups. Adjust cube size control.

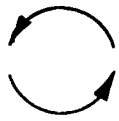

Proper size and shape of a Scotsman Round Cube:

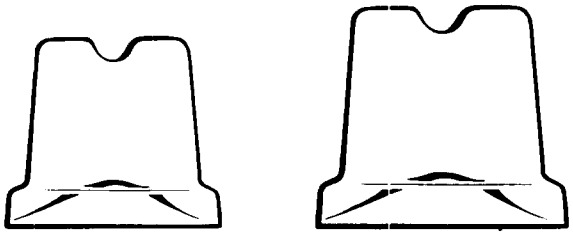

PROPER SIZE AND SHAPE of the round cube. Icemaker operates at peak efficiency when a cube this size and shape is produced.

NOTE

Normal cube size is with a one-quarter depression in the crown.

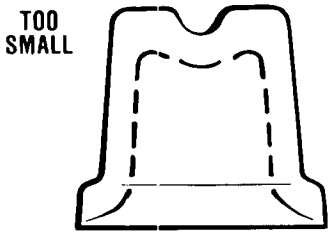

TOO SMALL. Adjust cube suze control. Any cubes this size or shape are too small and cause excessive cycling to produce an equal quality of production. Can also lead to freeze up problems due to poor harvest.

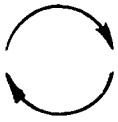

ADJUSTMENT OF CUBE SIZE

To produce LARGER sized ice cubes:

Locate cube size control, in the top right end of the icemaker chassis.

Rotate the adjusting screw one-eighth of a turn CLOCKWISE to COLDER.

Observe size of ice cubes in the next two cube harvests and adjust in one-eighth turn or less increments, until correct ice cube size is achieved.

To produce SMALLER sized ice cubes:

Locate cube size control, in the top right section of the control box.

Rotate the adjusting screw one-eighth of a turn COUNTERCLOCKWISE to WARMER.

Observe size of the ice cubes in the next two ice cube harvests and adjust in one-eighth turn or less increments, until correct ice cube size is achieved.

Check texture of ice cubes; when partially cloudy throughout, suggests icemaker is operating short of water; or, possibly an extreme problem water condition exists, wherein filtering or purifying equipment is recommended. Contact SCOTSMAN ICE SYSTEMS, Service Department, Albert Lea, Minnesota 56007 for further details.

11. With the icemaker in the harvest cycle, hold ice against the bin thermostat control bulb to test shutoff, which should cause the icemaker to shut OFF at the END OF THE HARVEST CYCLE.

    Within minutes after the ice is removed from the sensing bulb, the bulb will warm up and cause the icemaker to restart. This control is factory set and should not be reset until testing is performed.

12. Replace control box cover and all cabinet panels and screws.

13. Thoroughly explain to the owner/user the significant specifications of the icemaker, the start up and operation, going through the procedures in the operating instructions. Answer all questions about the icemaker by the owner; and inform the owner of the name and telephone number of the authorized SCOTSMAN Distributor, or service agency serving him.

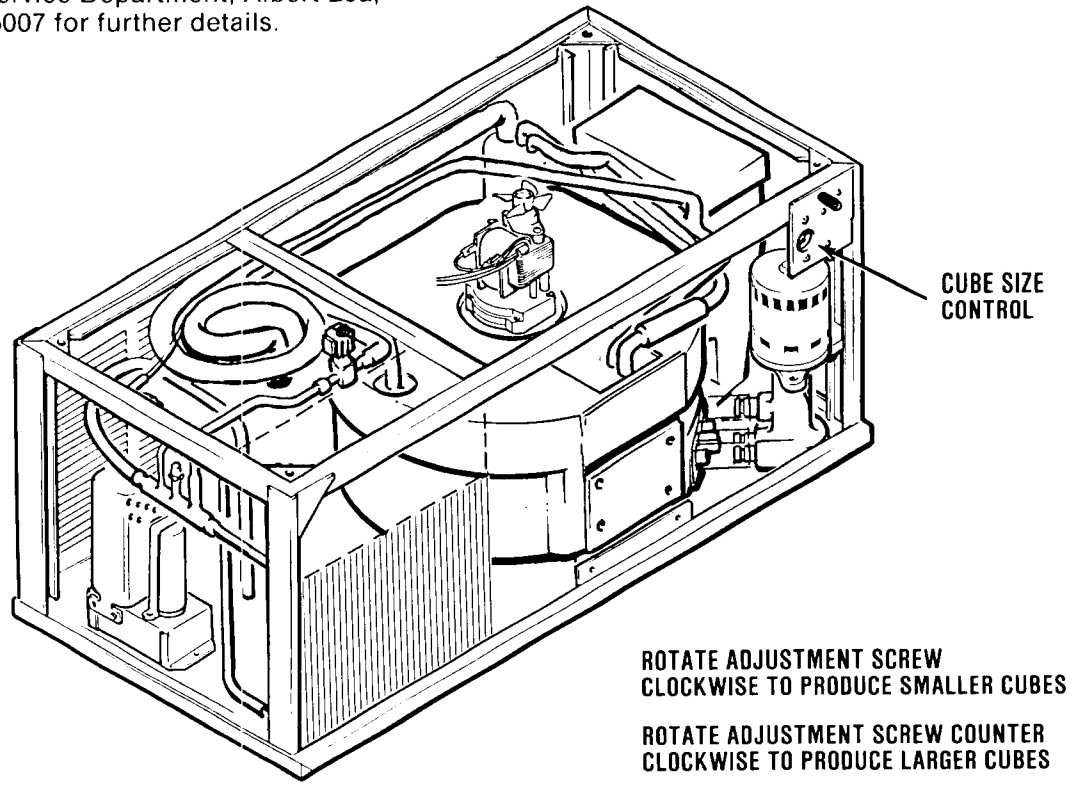

Cube Size Control Adjustment

FREEZING CYCLE

Water from the sump in the reservoir of the freezing chamber is pumped to a rotating spray bar assembly, which is powered by the agitator drivemotor on top of the freezing chamber. The spray bar assembly has ten jets through which water is uniformly sprayed up into the inverted ice cube cup molds of the freezing chamber evaporator. See *Freezing cycle* illustration. At the beginning of the freezing cycle, the electrical circuit is completed to the compressor, the agitator drivemotor and the water pump. The water pump and the agitator drivemotor operate continuously, through both the freezing cycle and the harvest cycle.

In the compressor, gaseous refrigerant is compressed and discharged into the condenser, as a high pressure, high temperature gas. The refrigerant is cooled and condensed, by either air or water, into a high pressure, medium temperature liquid. This liquid refrigerant is then distributed through the capillary tube where the temperature and pressure of the liquid refrigerant are lowered and enters the evaporator. The refrigerant is warmed by the water sprayed up into the ice cube molds of the evaporator and begins to boil off and become a gas. The refrigerant next travels through the heat exchange area of the suction line and into the accumulator, where any remaining liquid refrigerant boils off and returns to the compressor as a low pressure, low temperature gas, and the cycle starts again.

During the freezing cycle, the hot gas solenoid valve is CLOSED and the water inlet solenoid valve is CLOSED.

When the ice cubes are about three-quarters formed, the cube size control bulb located on the suction line coming out of the evaporator platen assembly, will sense the temperature at which it is preset to CLose. This will complete the electrical circuit to the timer. The timer then controls the remainder of the cycle.

The timer will keep the icemaker operating in the freezing cycle for a selected length of time. This will give the ice cubes time to fully form. After that selected length of time, the timer will switch the icemaker into the harvest cycle, through the contacts of the timer assembly microswitch.

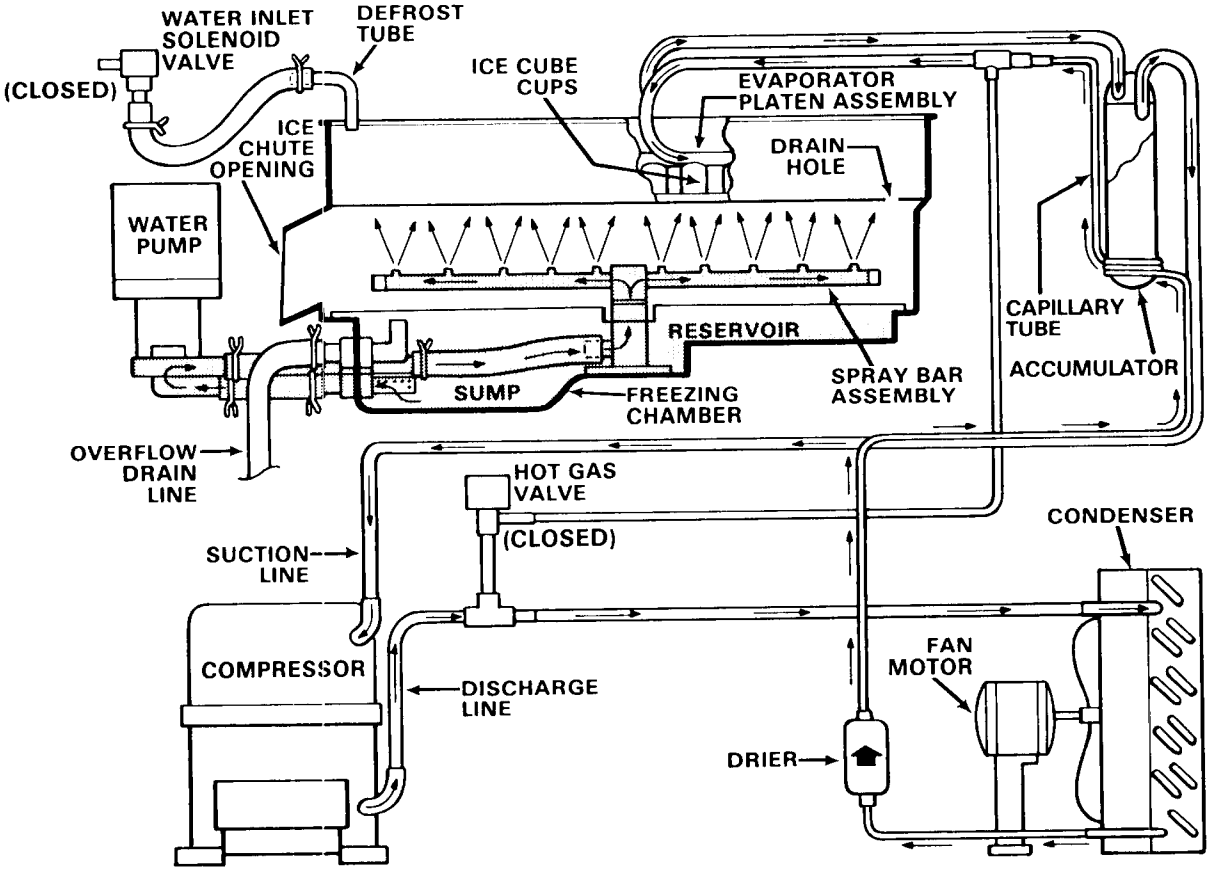

Freezing Cycle

HARVEST CYCLE

When the timer switches the icemaker into the harvest cycle, high pressure, high temperature gaseous refrigerant being discharged from the compressor is diverted from the condenser through the hot gas solenoid valve into the evaporator. During this cycle, the gaseous refrigerant bypasses the condenser and the capillary tube.

In the electrical circuit, the compressor agitator drivemotor and the water pump operate and the hot gas solenoid valve is energized and OPEN and the water inlet solenoid valve is OPEN.

The water inlet solenoid valve OPENS and allows a fresh water supply to be discharged into the top of the evaporator platen assembly. The finished ice cubes are released from the evaporator by the warming effect of the hot gas flowing through the evaporator tubes and the water flow around the ice cube molds. The released ice cubes drop into the inner bottom of the freezing chamber and are pushed by the rotating spray bar assembly out the slanted ice chute opening, down the plastic cube chute and into the ice storage bin.

At the end of the harvest cycle, the timer cam will push the actuator arm of the microswitch IN. If the bin thermostat is still CLOSED, a whole new cycle will begin. If the bin thermostat is OPEN, the icemaker will shut OFF, at this time.

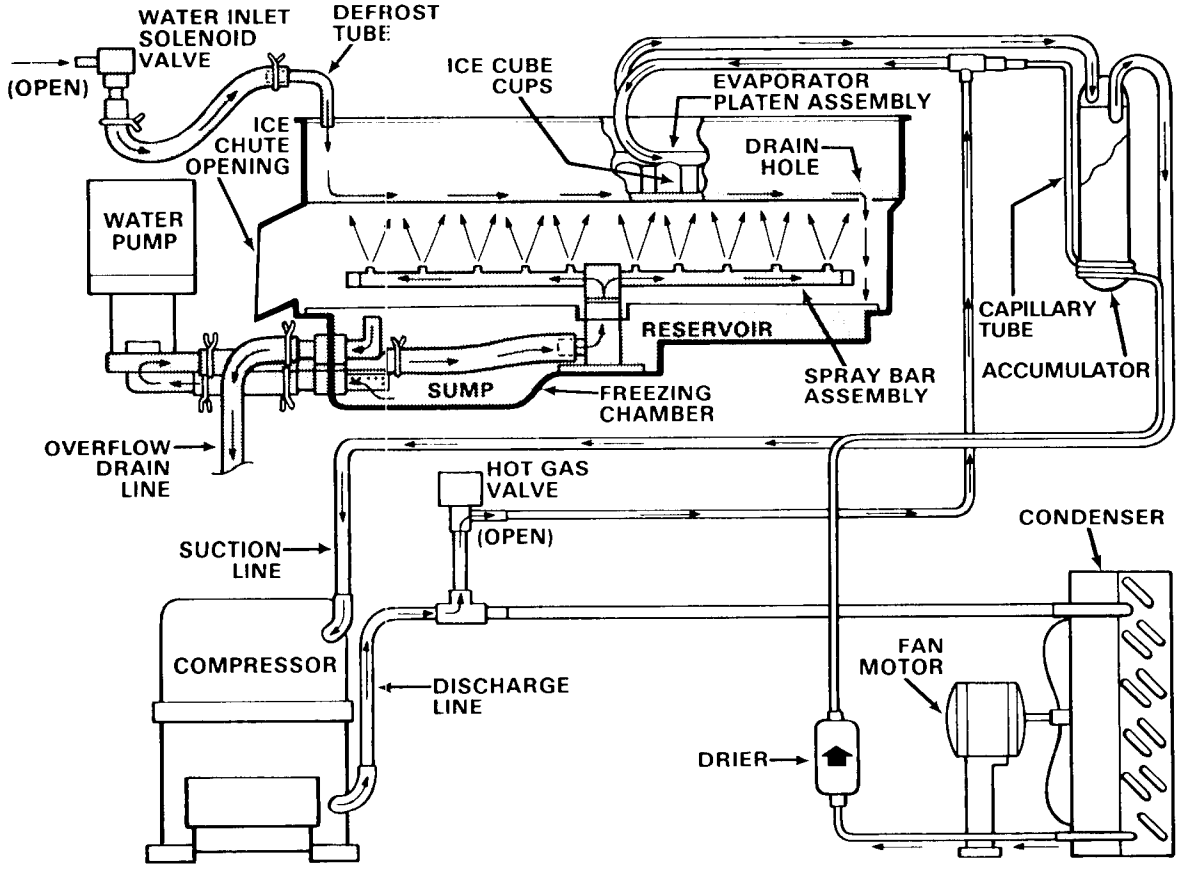

Harvest Cycle

ADJUSTMENT, REMOVAL & REPLACEMENT

The procedures provided in this Section are arranged in alphabetical order, to make specific Adjustment and Removal and Replacement information easy to locate.

Read the instructions thoroughly before performing any Adjustment or Removal and Replacement Procedures.

ADJUSTMENT OF THE BIN THERMOSTAT CONTROL

The control for the Bin Thermostat is the Temperature Control, located in the right side of the gusset in the front upper corner of the Chassis frame.

See Adjustment of the Temperature Control Illustration for location and direction of rotation, clockwise (CW) or counterclockwise (CCW), of the adjusting screws on the Temperature Control, the Adjustment is to be towards warmer as altitude increases.

WARNING

The adjusting screws on the Temperature Control device have very sensitive response to adjustment. DO NOT attempt to adjust the screw until after thoroughly reading and understanding the following instructions and illustration. Over-adjusting or erratic guessing, can foul the instrument and cause ultimate delay and part replacement, WHICH COULD HAVE BEEN PREVENTED.

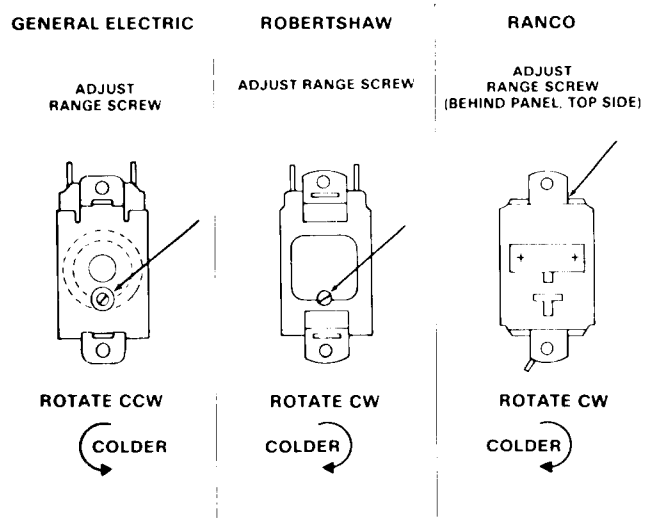

Adjustment of the Temperature Control.

ADJUSTMENT OF THE CUBE SIZE CONTROL

CAUTION

BEFORE performing actual adjustment to the Cube Size Control, check other possible causes for cube size problems, refer to SERVICE DIAGNOSIS section for problem review and analysis.

DO NOT perform adjustment when a new Cube Size Control is installed, until the control bulb has been properly installed in the tube well, on the refrigerant tube of the Platen Assembly and the Icemaker has progressed through several complete freezing and harvest cycles, to observe size and quality of ice cubes and whether or not a cube size problem exists.

As a reverse acting temperature control, adjustment on the Cube Size Control is performed to either cause larger sized ice cubes or smaller sized ice cubes to be produced.

To Produce LARGER Sized Ice Cubes:

Locate the Cube Size Control, in the left side of the gusset in the front upper corner of the Chassis frame.

Rotate the adjusting screw one-eighth of a turn CLOCKWISE toward COLDER.

Observe size of ice cubes in next two ice cube harvests and repeat step 2 above, in one-eighth turn increments, until desired ice cube size is achieved.

To Produce SMALLER Sized Ice Cubes:

Locate the Cube Size Control, in the left side of the gusset in the front upper corner of the Chassis frame.

Rotate the adjusting screw one-eighth of a turn COUNTERCLOCKWISE.

Observe size of ice cubes in next two ice cube harvests and repeat step 2 above, in one-eighth turn increments, until desired ice cube size is achieved.

ADJUSTMENT OF THE TIMER & SWITCH ASSEMBLY

The timer and switch assembly is factory set, so one complete revolution of the cam on the timer represents eight minutes. Four and one-half minutes comprise the freezing cycle event during cam rotation, and the final three and one-half minutes program the defrost and harvest cycle. Rotating the shaft of the timer cam CLOCKWISE will allow positioning the actuator arm of the microswitch on the cam at the selected start position for either the freezing cycle or harvest cycle, as required in the CLEANING instructions.

WARNING

Disconnect electrical power supply to icemaker whenever adjustment procedures are performed.

TO ADJUST THE TIMER & SWITCH ASSEMBLY:

A. HARVEST CYCLE: Slowly rotate the shaft of the timer and switch assembly, located in the control box, CLOCKWISE, until the actuator arm on the microswitch initiates the harvest cycle. An audible click can be heard, but in a noisy area, look at the cam and switch to observe the event.

B. FREEZING CYCLE: Slowly rotate the shaft of the timer and switch assembly, located in the control box, CLOCKWISE, until the actuator arm on the microswitch initiates the freezing cycle.

C. The length of the harvest cycle can be changed by loosening the adjustment screw on the cam. The minimum harvest setting is two minutes; the maximum s three and one-half minutes, as set at the factory. It is important that the length of the harvest cycle allow enough time for all the ice cubes to fall from the evaporator. Too short of a time will cause the evaporator to freeze up and stop ejecting ice into the bin. Too much time wastes icemaking capacity, energy and water. Adjustment of the harvest cycle may require a corresponding adjustment of the cube size control.

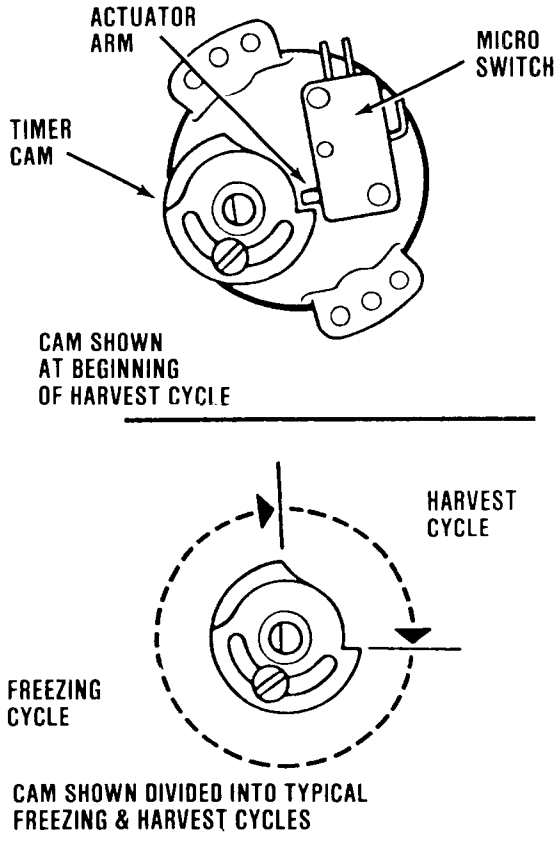

Adjustment of the Timer & Switch Assembly.

WARNING

Be sure the electrical power open circuit breaker supply and the inlet water supply are OFF, BEFORE starting any of the following REMOVAL AND REPLACEMENT procedures as a precaution to prevent possible personal injury or damage to equipment.

PARTS ILLUSTRATIONS AND PARTS LISTS

GENERAL

This section contains the Parts Illustrations and the Parts List for each of the major assemblies in the Model HC400 Modular Cuber.

A *No Number* designation, when used in the Part Number Column indicates the unit is not available from SCOTSMAN as an assembly. This designation is used only for the convenience and clarity of division in cataloging.

HOW TO ORDER PARTS OR ASSEMBLIES

When ordering parts or assemblies, to avoid costly delays and errors in shipment, give the part number, the complete description shown in the lists, and the quantities of each part or assembly required. Also include the Model name, the serial number of the Modular Cuber for which the part is required, and for parts which require color matching, the color of the Cabinet.

IMPORTANT

All Part Numbers have TEN DIGITS (spaces), required for use in the Computer System. BE SURE to fill in ALL SPACES in the CATALOG NUMBER Column, on the Parts Order form.

Enter the QUANTITY of the Parts ordered, in the last digit column under the QUANTITY column heading, the one under the small 55 number, for parts from 1 thru 9. For 10 or more parts use two columns.

To be sure you receive the proper parts in the proper quantities, ALWAYS use the PART NUMBERS and DESCRIPTIONS given in the Parts Manuals.

Write an order for the Part. (Use SCOTSMAN Parts Order Form DN103) Be sure to include:

- ☐ Distributor Name.
- ☐ (Use for DROP-SHIP order ONLY.)
- ☐ Distributor Purchase Order Number.
- ☐ Carrier.
- ☐ How shipped (Truck, Rail, UPS, etc.)
- ☐ Date ordered.
- ☐ Part Catalog Number. (Use full TEN digits (spaces) listed in Parts Manual, including dashes between numbers.)
- ☐ Description — as listed in Parts Manual.
- ☐ Quantity — number of parts ordered. (Use far right column.)

WIRING DIAGRAMS

This Section is provided as an aid in understanding the electrical circuitry of the Modular Cuber:

WARNING

When conducting a continuity check of the Modular Cuber:

1. **Disconnect the main power source.**
2. **DO NOT use an incandescent lamp or jumper wire, conduct all tests with a volt-ohm-meter.**

The Wiring Diagrams in this Section are:

HC400AE-1A 115/60/1 — Air-Cooled

HC400WE-1A 115/60/1 — Water-Cooled

HC400AE-31A 115/208-230/60/1 — Air-Cooled

HC400WE-31A 115/208-230/60/1 — Water-Cooled

HC400 CABINET ASSEMBLY PARTS LISTING

1	Screw, No. 8 x 1-1/4 Flat Hd. Stainless Steel	03-1419-09	6
2	Lockwasher 1/4 Counter Sunk External Tooth	03-1417-08	10
3	Panel, Top (Enamel)	A23784-006	1
	Panel, Top (Stainless Steel)	A23784-002	1
4	Panel, Front (Enamel)	A23785-005	1
	Panel, Front (Stainless Steel)	A23785-002	1
5	Panel, Left S de (Enamel)	A23782-006	1
	Panel, Left S de (Stainless Steel)	A23782-002	1
6	Panel, Right Side (Enamel)	A23783-006	1
	Panel, Right Side (Stainless Steel)	A23783-002	1
7	Logo Plate, Scotsman	15-0711-01	1
8	Clip	03-0271-00	2
9	Base Drain	02-2296-01	1
10	Screw, No. 8 x 1/2 Stainless Steel	02-1404-10	8
11	Cabinet Frame Assembly	A26178-001	1

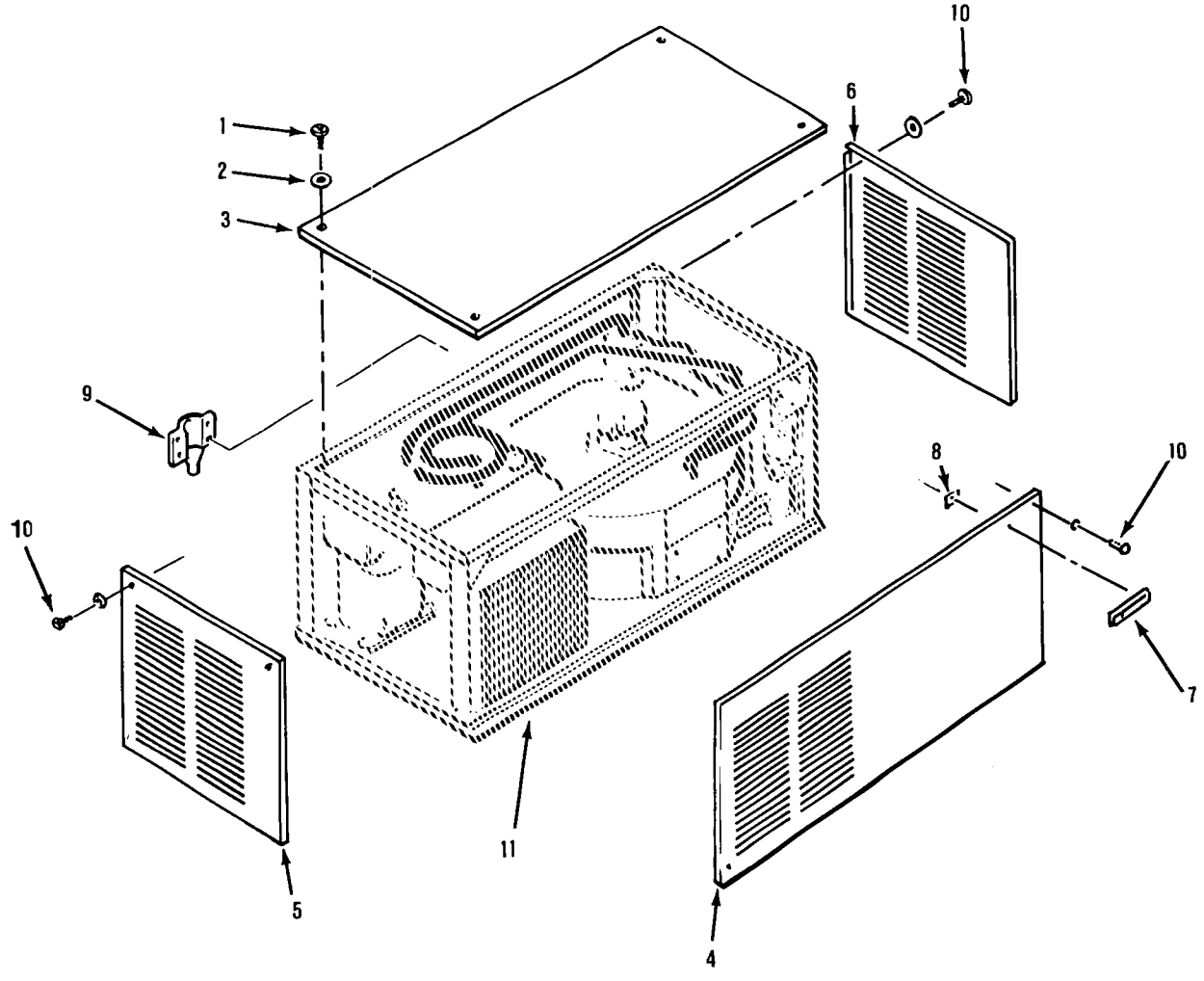

HC400 Cabinet Assembly.

HC400 MAJOR ASSEMBLIES AIR-COOLED PARTS LISTING

1	Cube Size Control	11-0345-02	1
2	Thermostat, Bin	11-0353-03	1
3	Pump Assembly, Water	12-1930-01	1
4	Tube, Tygon (Order by the foot)	13-0674-07	4
5	Clamp, Hose	02-1358-00	4
6	Solenoid Assembly, Water	12-1900-07	1
	Fitting	16-0723-01	1
7	Chute, Cube, includes cover	A27821-001	1
8	Drier	02-2426-01	1
9	Solenoid Valve, Hot Gas	12-2135-01	1
10	Compressor Assembly - 115/60/1	18-4200-01	1
	Compressor Assembly - 208-230/60/1	18-4200-02	1
	Compressor Overload - 115/60/1	18-4200-40	1
	Compressor Overload - 208/230/60/1	18-4200-41	1
11	Screw, No. 5/16 x 18 Hex Machine	03-1405-20	1
12	Washer	03-1407-07	4
13	Sleeve	18-2300-26	4
14	Grommet, Mounting	18-2300-27	4
15	Capacitor, Run - 115/60/1	18-1902-45	1
	Capacitor, Run - 208-230/60/1	18-1902-29	1
16	Capacitor, Start - 115/60/1	18-1901-09	1
	Capacitor, Start - 208-230/60/1	18-1901-15	1
17	Relay - 115/60/1	18-1903-33	1
	Relay - 208-230/60/1	18-1903-29	1
18	Drain Tube Assembly	*No Number*	1
19	Condenser, Air-Cooled	18-3703-01	1
20	Shroud, Fan	02-2352-01	1
21	Fan Blade - Includes Mtg. Hwd.	18-0625-00	1
22	Motor, Fan - Includes Mtg. Hwd. - 115/60/1	12-1681-01	1
	Motor, Fan - 208-230/60/1	12-1681-01	1
23	Mount, Fan Motor	A25548-001	1
24	Accumulator Suction Line Assembly	A28803-020	1
25	Inlet Valve Fitting	16-0723-01	1

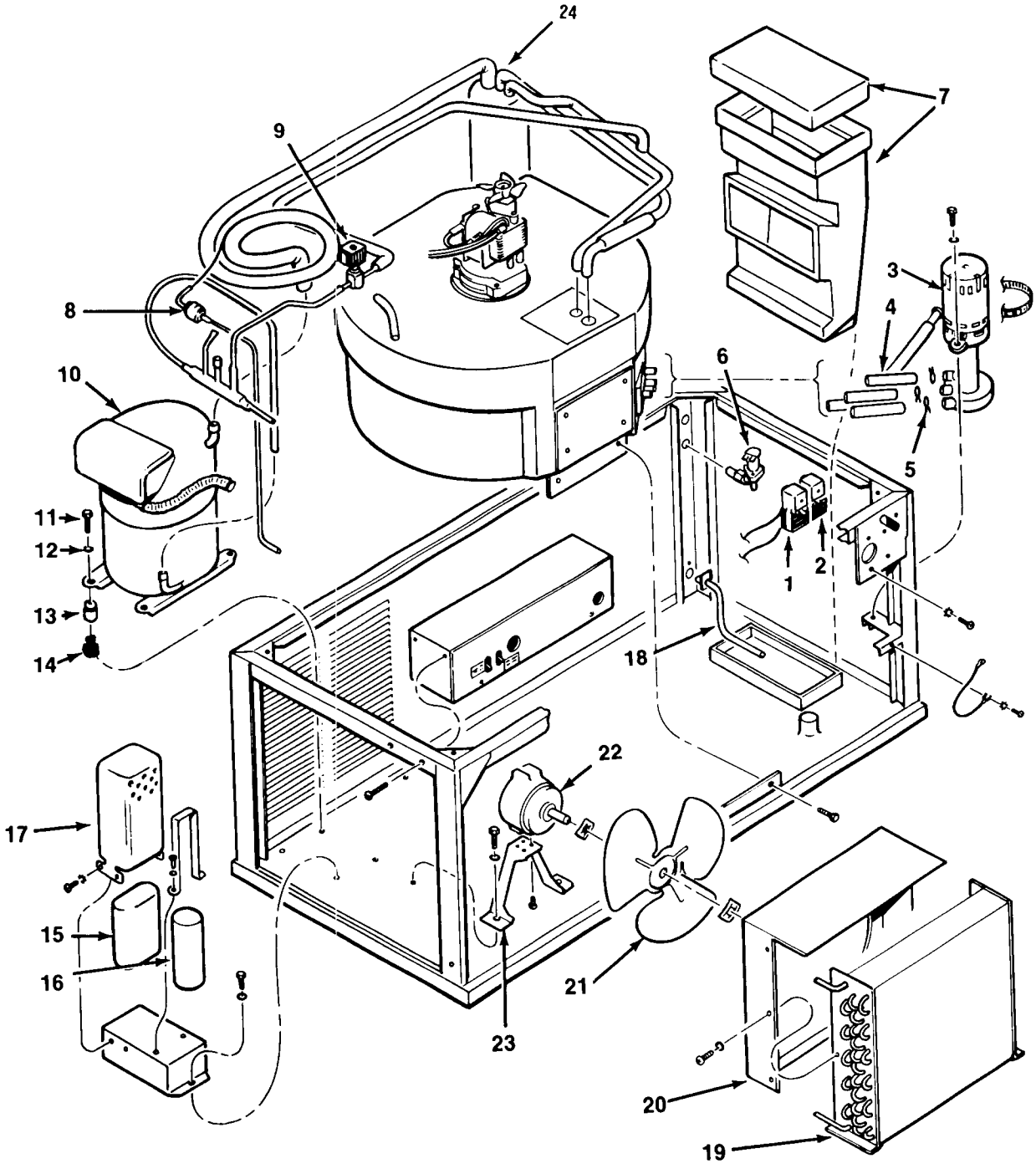

HC400 Major Assemblies Air-Cooled.

HC400 MAJOR ASSEMBLIES WATER-COOLED PARTS LISTING

1	Cube Size Control	11-0345-02	1
2	Thermostat, Bin	11-0353-03	1
3	Pump Assembly, Water	12-1930-01	1
4	Tube, Tygon (Order by the foot)	13-0674-07	4
5	Clamp, Hose	02-1358-00	4
6	Solenoid Assembly, Water	12-1900-07	1
7	Chute, Cube, includes cover	A27821-001	1
8	Drier	02-2426-01	1
9	Solenoid Valve, Hot Gas	12-2135-01	1
10	Compressor Assembly - 115/60/1	18-4200-01	1
	Compressor Assembly - 208-230/60/1	18-4200-02	1
	Compressor Overload - 115/60/1	18-4200-40	1
	Compressor Overload - 208-230/60/1	18-4200-41	1
11	Screw, No. 5/16 x 18 Hex Machine	03-1405-20	1
12	Washer	03-1407-07	4
13	Sleeve	18-2300-26	4
14	Grommet, Mounting	18-2300-27	4
15	Capacitor, Run - 115/60/1	18-1902-45	1
	Capacitor, Run - 208-230/60/1	18-1902-29	1
16	Capacitor, Start - 115/60/1	18-1901-09	1
	Capacitor, Start - 208-230/60/1	18-1901-15	1
17	Relay - 115/60/1	18-1903-33	1
	Relay - 208-230/60/1	18-1903-29	1
18	Drain Tube Assembly	*No Number*	1
19	Condenser, Water-Cooled	18-3306-02	1
20	Water Regulator Bracket	A15924-000	1
21	Water Regulator Valve	11-0198-02	1
22	Accumulator Suction Line Assembly	A28803-020	1

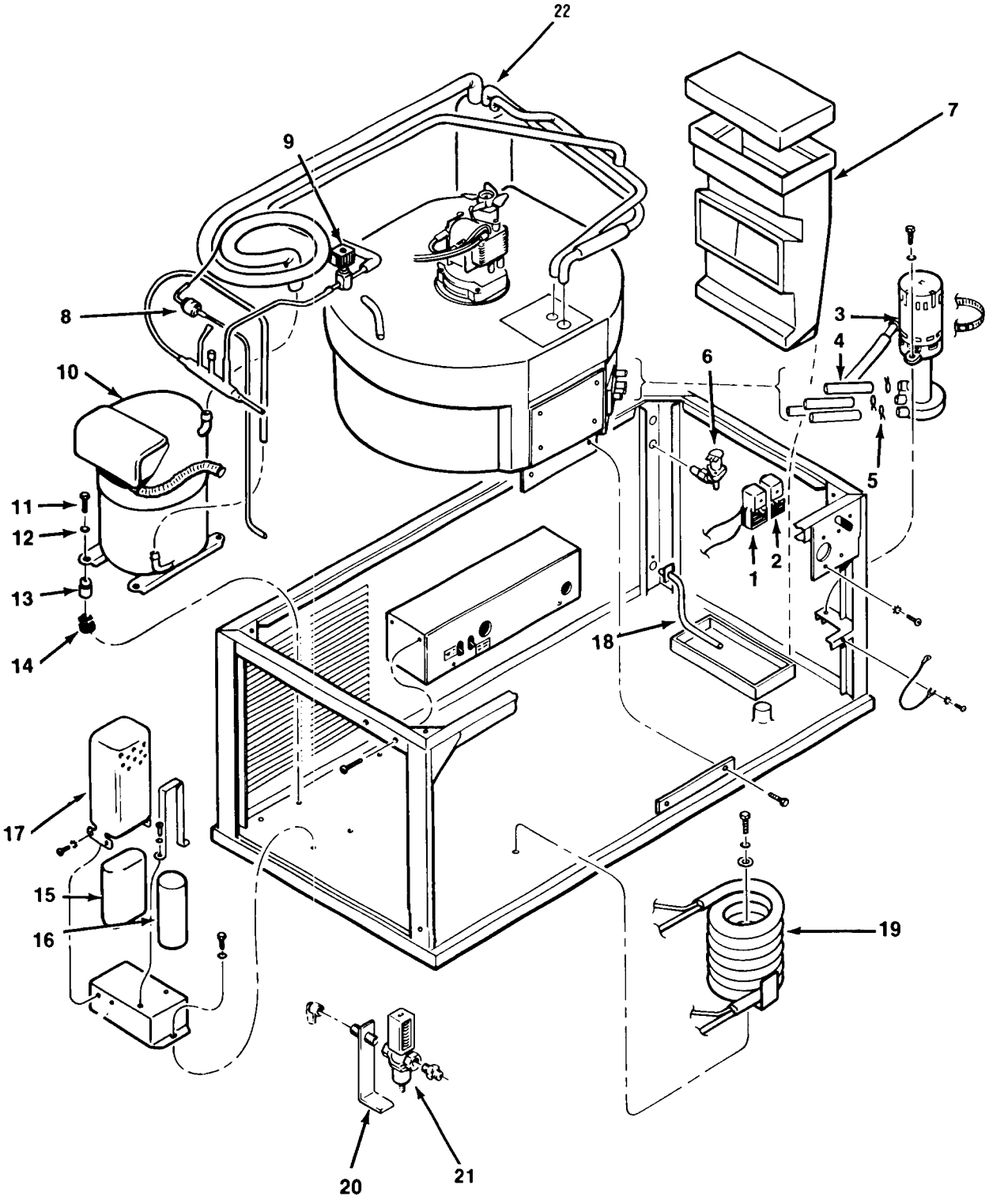
22
9
7
8
3
4
10
6
5
11
12
2
1
13
14
18
17
15
16
19
20
21

HC400 FREEZER ASSEMBLY PARTS LISTING

1	Blade, Fan - Drivemotor	12-0675-25	1
2	Drivemotor Assembly, Agitator	A24656-001	1
3	Screw, No. 6 x 1 T/F Top	03-1404-28	4
4	Screw, No. 8 x 1/2 Stainless Steel	03-1404-10	4
5	Washer, Centering	A24830-001	4
6	Plug, Hole	02-2065-02	4
7	Spacer, Tube	02-2129-01	1
8	Gasket - Agitator Drivemotor Assembly	13-0176-00	1
9	Cover, Insulation	02-2124-01	1
10	Cover, Freezing Chamber	A24803-001	1
11	Platen Assembly, Cup (Small cubes)	A27218-002	1
	Platen Assembly, Cup (Medium cubes)	A27217-002	1
	Platen Assembly, Cup (Large cubes)	A24129-002	1
12	Fork, Drive (Left-hand thread)	02-2369-02	1
13	Bar Assembly, Spray (w/rubber tips)	A25480-001	1
14	Rubber - Spray Bar Ends	13-0653-00	2
15	O-Ring	13-0617-25	1
16	Bearing, Spray Bar	02-2120-01	1
17	Bottom, Inner	02-2028-01	1
18	Tube, Tygon (8-inch lg.)(Order by the foot)	13-0674-07	1
19	Clamp, Hose	02-1358-01	2
20	Housing, Inlet	02-2121-01	1
21	Plate, Support - Spray Bar	A23827-001	1
22	Washer, Rubber	A23827-001	1
23	Sump, Freezing Chamber	03-1409-01	1
24	Mount, Front	A24498-001	1
25	Screw, No. 10 x 5/8 cap	03-1404-18	4
26	Plug, Bottom	02-2122-01	1
27	Tube, Female	02-2081-01	4
28	Tube, Female (cut-off)	02-2606-01	1
29	O-Ring	13-0617-02	5
30	Tube, Male	02-2080-01	3
31	Pipe, Stand	02-2125-01	1
32	Tube, Pick-Up-Pump	02-2082-01	1

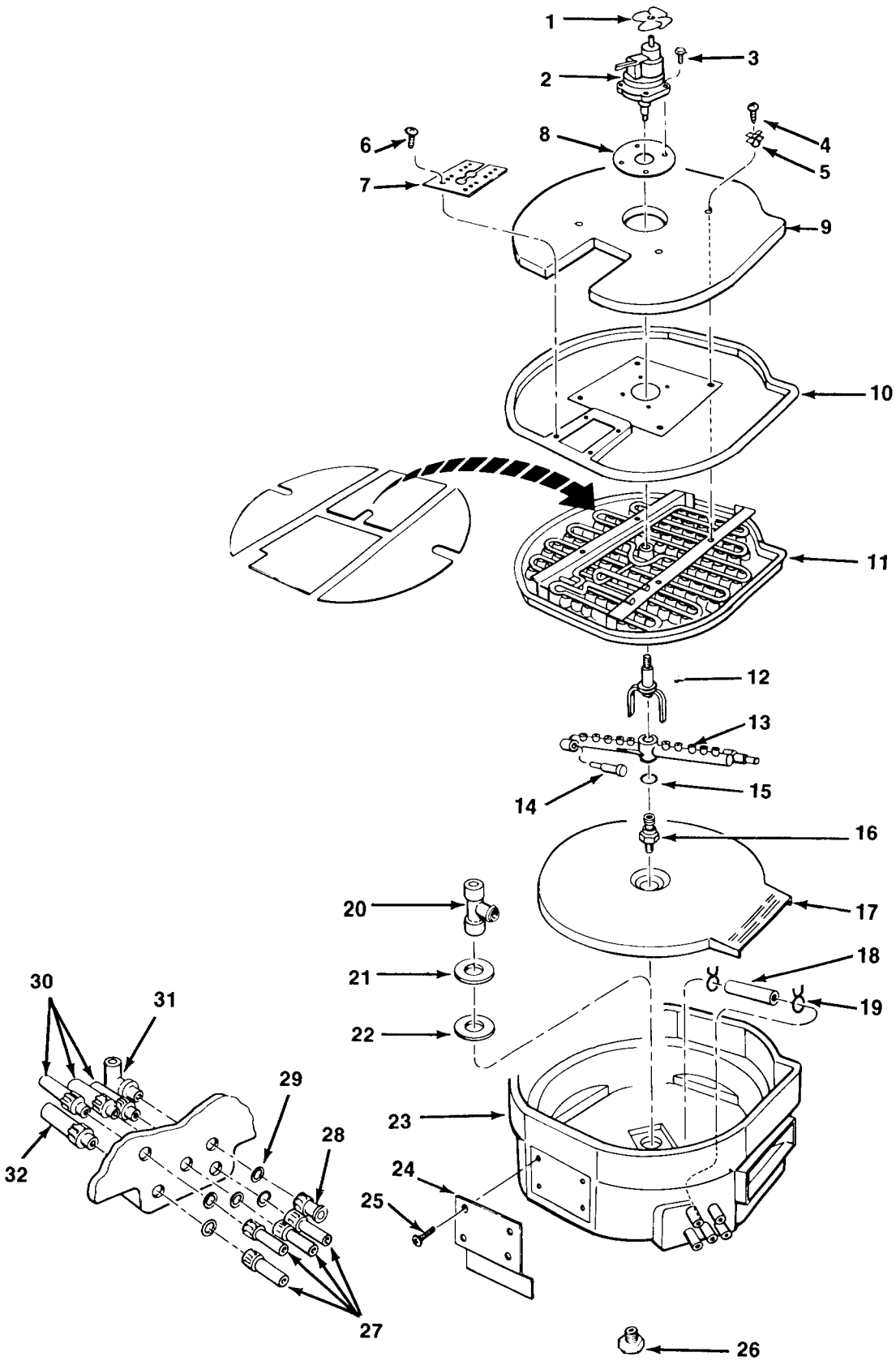
1
2
3
4
5
6
7
8
9
10
11
12
13
14
15
16
17
18
19
20
21
22
23
24
25
26
27
28
29
30
31
32

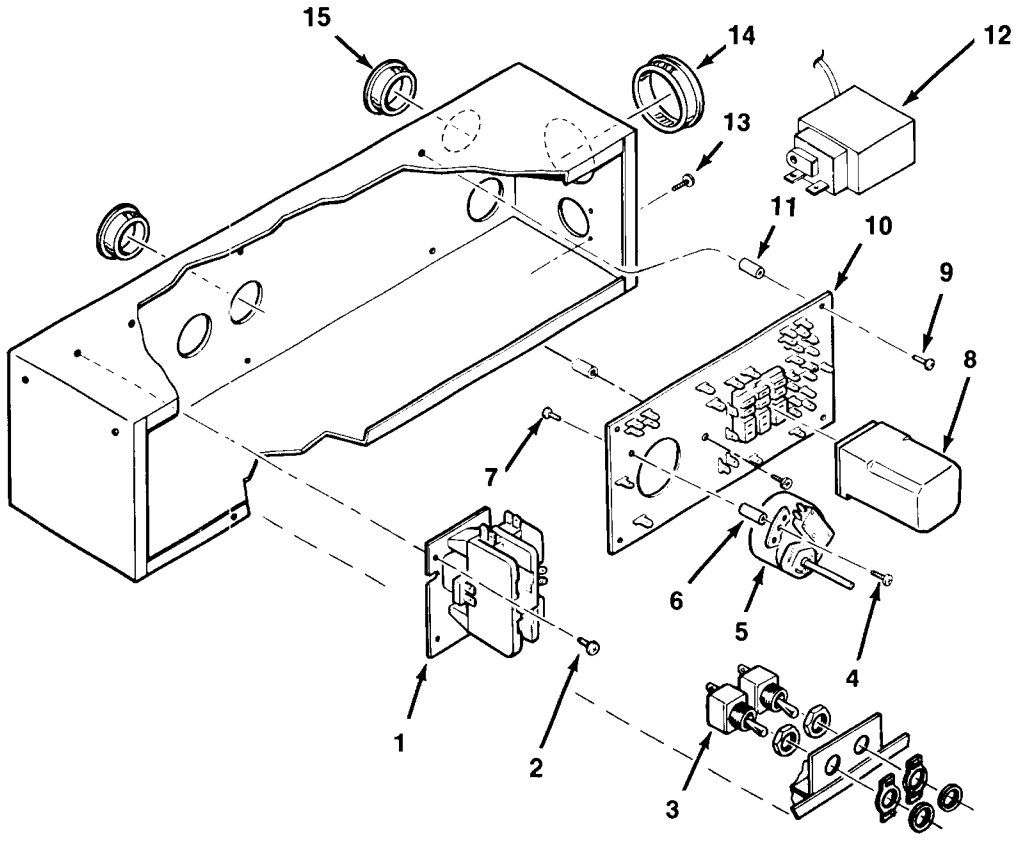

HC400 CONTROL BOX ASSEMBLY PARTS LISTING

1	Contactor - 115/60/1	12-2041-01	1
	Contactor - 208-230/60/1	12-2037-01	1
2	Screw, No. 8-32 x 3/8	03-1403-17	3
3	Switch	12-0426-01	2
4	Screw, No. 6-32 x 1/4 Phil Recess Pan Hd.	03-1403-02	2
5	Timer and Switch Assembly	12-1980-01	1
6	Stand-Off, 7/8-long	02-2242-01	2
7	Screw, No. 6-32 x 1/4 Phil Recess Pan Hd.	03-1403-02	2
8	Relay - 115/60/1	12-1879-02	1
	Relay - 208-230/60/1	12-1879-02	1
9	Screw, No. 6-32 x 1/4 Phil Recess Pan Hd.	03-1403-02	5
10	Circuit Board	12-1912-01	1
11	Stand-Off, 5/8 inch	02-2242-02	5
12	Control, Hi Pressure (Water-Cooled)	11-0388-02	1
13	Screw, No. 6-32 x 1/4 Phil Recess Pan Hd.	03-1403-04	2
14	Bushing, Snap	12-1213-13	1
15	Bushing, Snap	12-1213-10	3

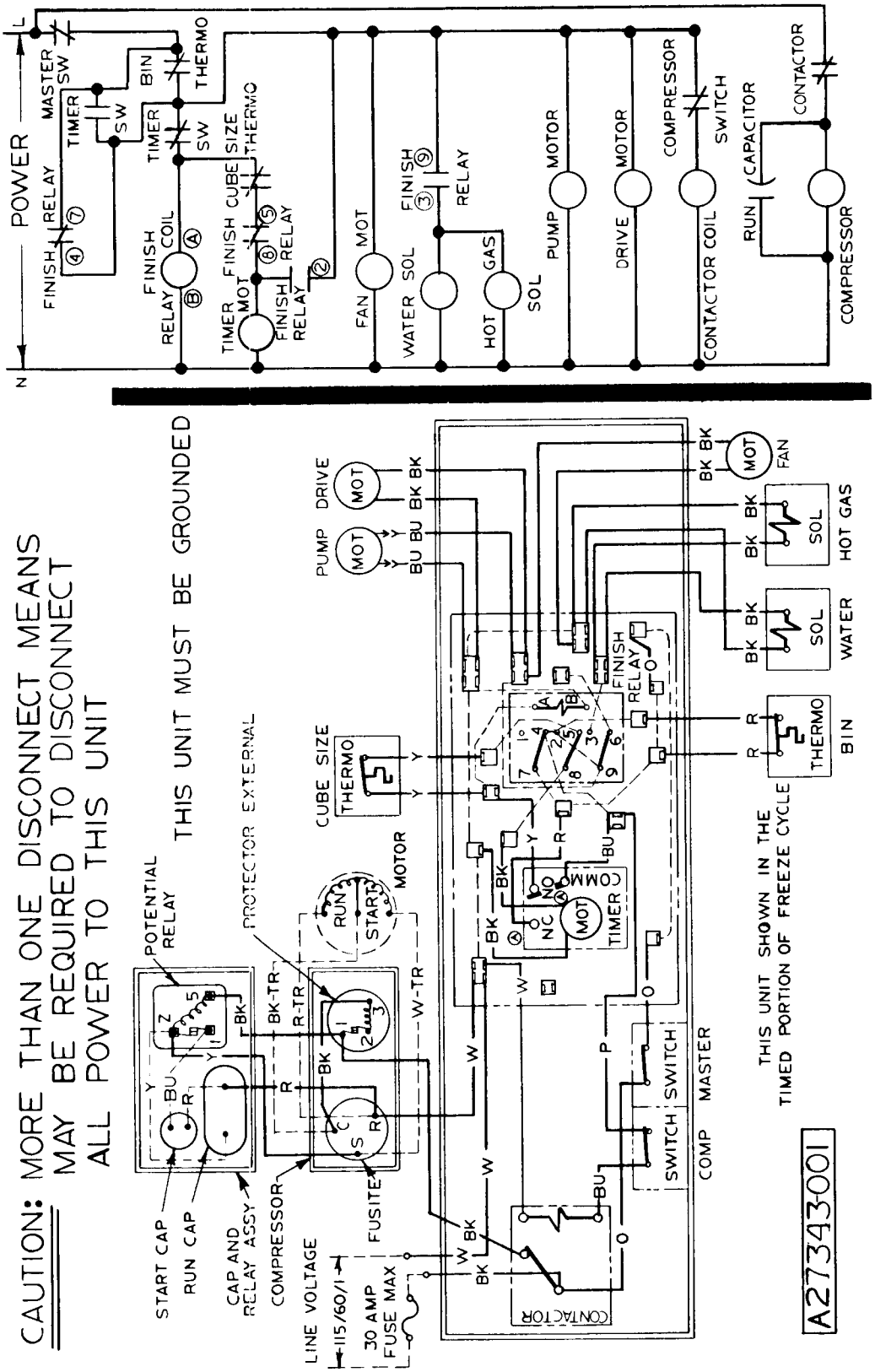

Air-Cooled 115/60/1

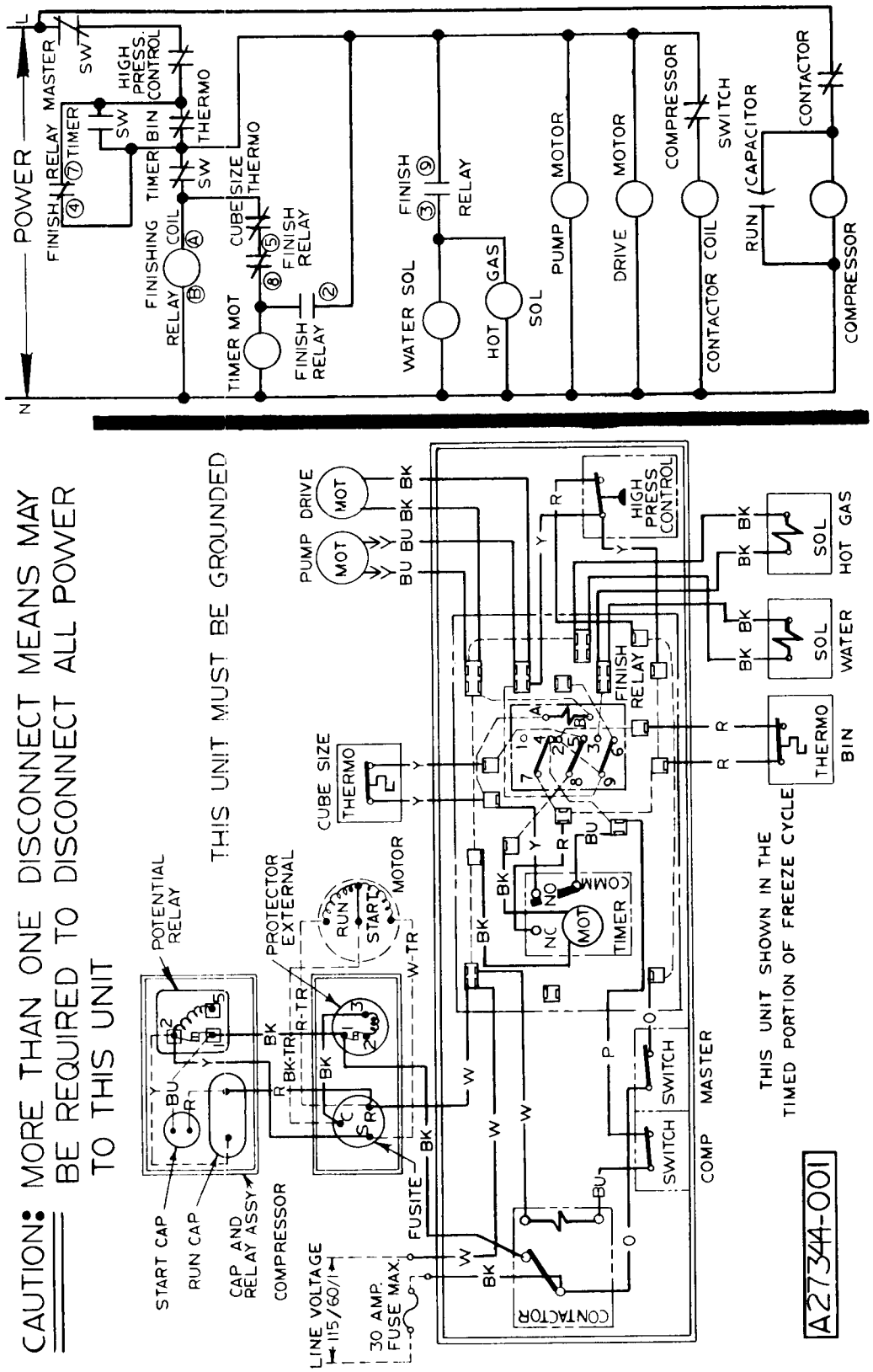

Water-Cooled 115/60/1

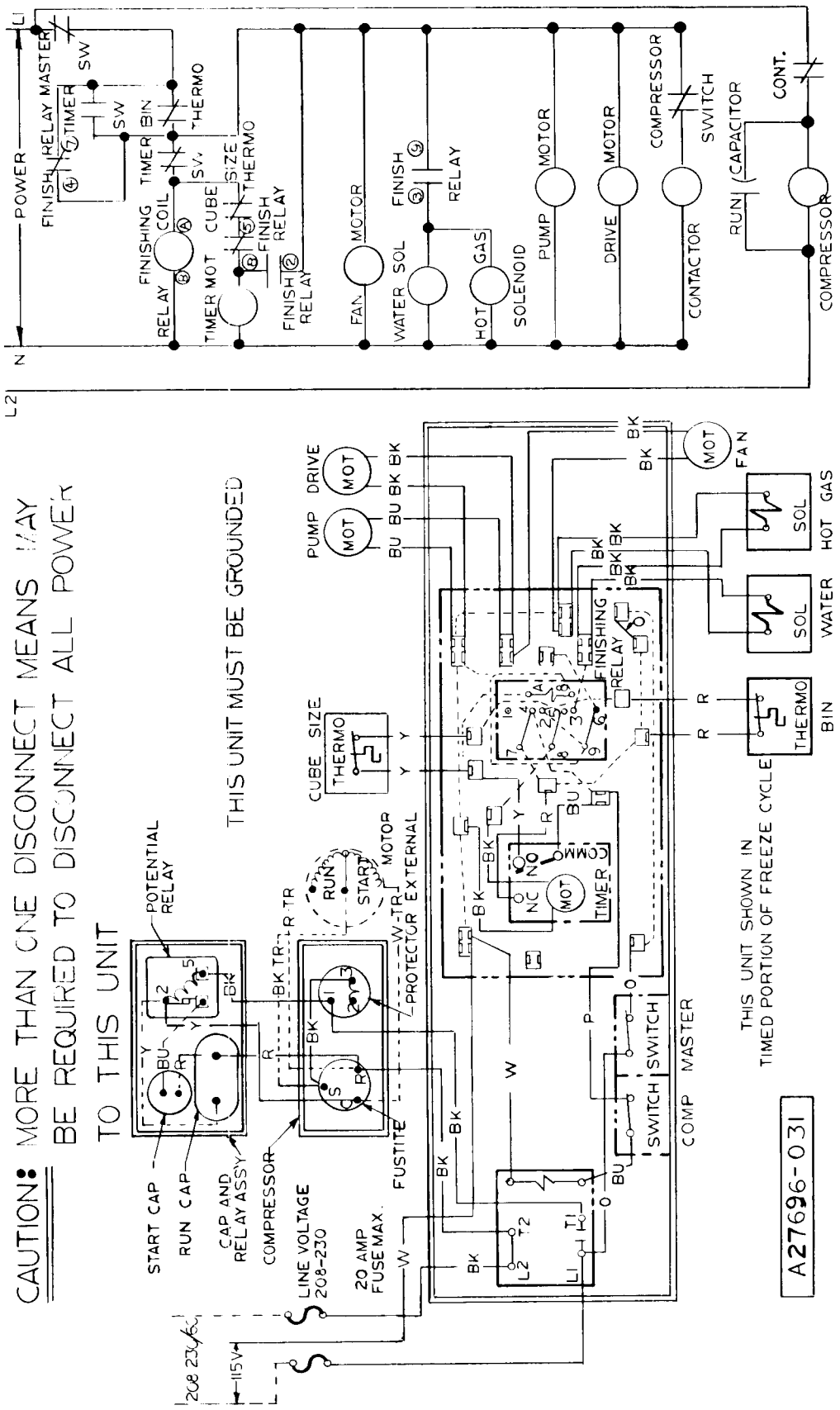
CAUTION: MORE THAN ONE DISCONNECT MEANS MAY BE REQUIRED TO DISCONNECT ALL POWER TO THIS UNIT
THIS UNIT MUST BE GROUNDED
POWER
L1
N
L2
FINISH TIMER RELAY
MASTER SW
TIMER
SW
BIN THERMO
FINISHING COIL
RELAY
TIMER MOT
CUBE SIZE THERMO
FINISH RELAY
FINISH RELAY
FAN MOTOR
WATER SOL
FINISH RELAY
HOT GAS SOLENOID
PUMP MOTOR
DRIVE MOTOR
COMPRESSOR
CONTACTOR
SWITCH
RUN CAPACITOR
CONT.
COMPRESSOR
PUMP DRIVE MOT
FAN MOT
CUBE SIZE THERMO
POTENTIAL RELAY
START CAP
RUN CAP
CAP AND RELAY ASSY
COMPRESSOR
LINE VOLTAGE 208-230
20 AMP FUSE MAX.
FUSITE
PROTECTOR EXTERNAL
W-TR
R-TR
START
RUN
MOTOR
TIMER
COMM
NC
NO
MOT
FINISHING RELAY
SOL HOT GAS
SOL WATER
THERMO BIN
COMP MASTER SWITCH
SWITCH
THIS UNIT SHOWN IN TIMED PORTION OF FREEZE CYCLE
208 230
115V
A27696-031

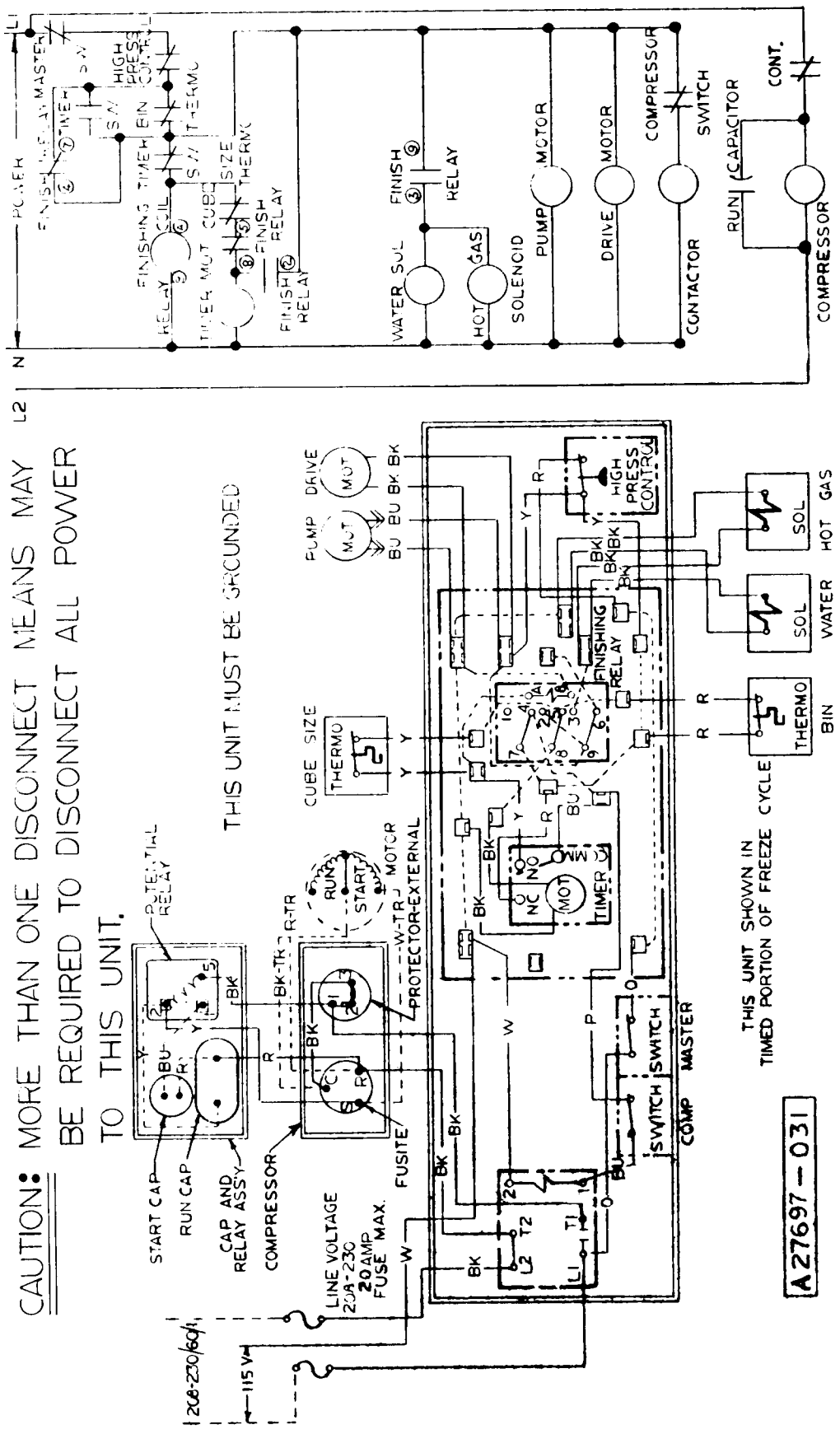

Water-Cooled 115/208-230/60/1

ADJUSTMENT OF THE WATER REGULATOR ASSEMBLY — WATER-COOLED MODELS

The correct Compressor head pressure on Water-Cooled Models is 135 PSIG. Adjusting the Water Regulator Valve increases or decreases the rate of flow of water, through the Water-Cooled Condenser; which increases or decreases the affected temperature/pressure of the Compressor head pressure. INCREASED water flow, results in DECREASED or LOWER head pressure; while, DECREASED water flow, results in INCREASED or HIGHER head pressure.

To adjust the Water Regulator Assembly:

To INCREASE the head pressure: Rotate the adjusting screw COUNTERCLOCKWISE.

To DECREASE the head pressure: Rotate the adjusting screw CLOCKWISE.

Check change in Compressor head pressure, and adjust as necessary to achieve desired operating head pressure.

WARNING

Be sure the electrical power supply and the water supply are OFF BEFORE starting any of the following REMOVAL AND REPLACEMENT procedures as a precaution to prevent possible personal injury or damage to equipment.

REMOVAL AND REPLACEMENT OF THE AGITATOR MOTOR ASSEMBLY

The Agitator Motor in the HC400 Cuber is installed on top of the Freezing Chamber.

To Remove the Agitator Motor Assembly:

1. Remove screws and the Top Panel and Front Panel to gain access to the Agitator Motor.
2. Tilt the top of the plastic Cube Chute forward slightly, then, lift the Cube Chute up for removal.
3. Remove three U-Type Clips and the plastic Curtain Assembly.
4. Reach through the ice chute opening in the Freezing Chamber and feel the Spray Bar.
5. Move hand to the center hub and rotate the Spray Bar, so one end is aligned with the ice chute opening.
6. Lift the Spray Bar up, off the jet bearing hub, then, remove the Spray Bar through the ice chute opening.
7. Disconnect electrical leads and ground wire from terminals on the Agitator Motor.
8. Reach through the same ice chute opening, and grasp the Drive Fork with one hand, and the Agitator Motor Fan, on top of the Freezing Chamber, with the other hand.

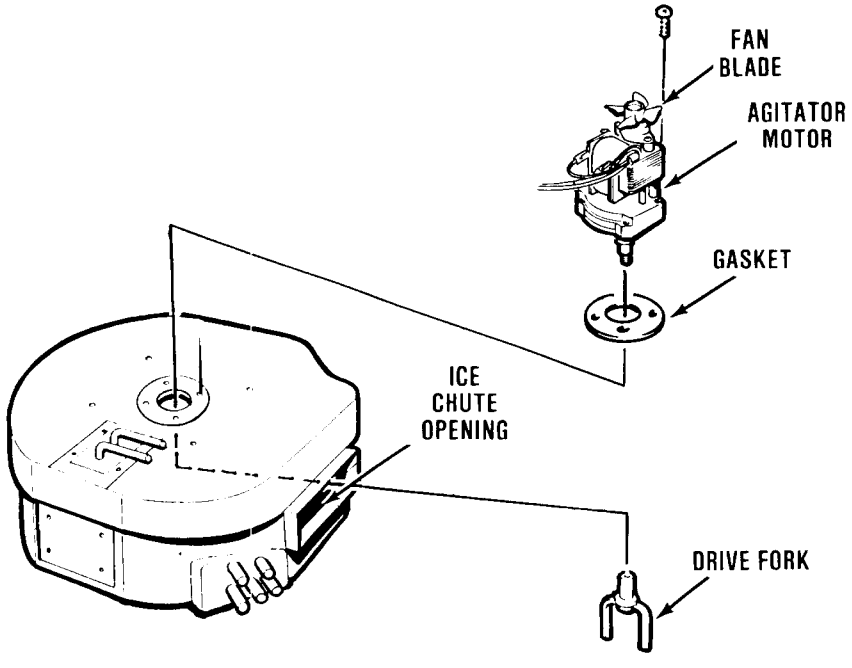

Removal of the Agitator Motor Assembly.

9. Hold the Fan blades still and rotate the left-hand thread Drive Fork to the right, COUNTER-CLOCKWISE, and unscrew the Drive Fork from the Agitator Motor.
10. Remove four screws and lift the Agitator Motor off the Freezing Chamber.

To replace the Agitator Motor Assembly, reverse the removal procedure.

REMOVAL AND REPLACEMENT OF THE BIN THERMOSTAT CONTROL

To remove the Bin Thermostat Control:

1. Remove screws and the Front Panel to gain access to the Bin Thermostat Control.
2. Trace capillary tube, from the Bin Thermostat Control, down to the Cube Deflector.
3. Carefully remove the capillary tube from the bulb holder holes on the side of the Cube Deflector.
4. Carefully withdraw the capillary tube from the Bin, up through the Chassis Base.
5. Remove electrical leads from the Bin Thermostat Control.
6. Remove screws and the Bin Thermostat Control.

To replace the Bin Thermostat Control, reverse the removal procedures.

REMOVAL AND REPLACEMENT OF THE COMPRESSOR ASSEMBLY

To remove the Compressor Assembly:

1. Remove screws and the Top, Front and Left Side Panels.
2. Bleed off or blow the refrigerant charge through the Schrader valve.
3. Remove the cover from the terminal box on the Compressor; then, remove electrical leads from the Compressor.
4. Unsolder the refrigerant suction line and the discharge line from the Compressor.
5. Unsolder the process header from the Compressor and retain for installation on the replacement Compressor.
6. Remove four bolts and washers which secure the Compressor to the Chassis mounting base.
7. Slide and remove the Compressor from the Cabinet.

To replace the Compressor Assembly, reverse the removal procedure.

Always install a replacement Drier, any time the sealed refrigerant system is opened. Do not replace the Drier until all other repair or replacement has been completed.

REMOVAL AND REPLACEMENT OF THE CONDENSER — AIR-COOLED MODELS

To remove the Condenser:

1. Remove screws and the Left Side Panel and Front Panel.
2. Bleed off or blow the refrigerant charge through the Schrader valve.
3. Unsolder and disconnect refrigerant lines from the Condenser.
4. Unsolder and remove the Drier from the refrigerant lines connecting to the Condenser.
5. Remove screws, lockwashers and the Condenser from the Chassis base.

To replace the Air-Cooled Condenser, reverse the removal procedure.

Always install a replacement Drier, any time the sealed refrigerant system is opened. Do not replace the Drier until all other repair or replacement has been completed.

REMOVAL AND REPLACEMENT OF THE CONDENSER — WATER-COOLED MODELS

To remove the Condenser:

1. Remove screws and the Front Panel.
2. Bleed off or blow the refrigerant charge through the Schrader valve.
3. Check to be sure building source water inlet supply shutoff valve to rear of Chassis is OFF.
4. Disconnect water inlet supply line at the left bottom rear of Chassis.
5. Disconnect Water-Cooled Condenser inlet water line at the Water Regulator Assembly outlet fitting.
6. Unsolder the refrigerant capillary tube at the Drier.
7. Unsolder the Compressor discharge line, at the top of the Water-Cooled Condenser.
8. Unsolder the Condenser refrigerant outlet line, at the bottom of the Water-Cooled Condenser.
9. Remove two screws and washers and the Water-Cooled Condenser from the Cabinet.

To replace the Water-Cooled Condenser, reverse the removal procedures.

Always install at replacement Drier, any time the sealed refrigerant system is opened. Do not replace the Drier until all other repair or replacement has been completed.

REMOVAL AND REPLACEMENT OF THE CUBE SIZE CONTROL

To remove the Cube Size Control:

1. Remove screws and the Front Panel to gain access to the Cube Size Control.
2. Trace capillary Tube, from the Cube Size Control, to the refrigerant suction line on the Evaporator Platen Assembly; then peel back the insulation.
3. Remove clips and the coiled capillary tube bulb out of the Freezer section of the Cabinet.
4. Remove electrical leads from the Cube Size Control.
5. Remove screws and the Cube Size Control.

To replace the Cube Size Control, reverse the removal procedure.

REMOVAL AND REPLACEMENT OF THE CURTAIN ASSEMBLY

To remove the Curtain Assembly:

1. Remove screws and the Right Side Panel to gain access to the Curtain Assembly to be removed.
2. Tilt the top of the plastic Cube Chute forward slightly, then, lift the Cube Chute up for removal.

Before removing the Curtain Assembly in the next step, look inside the ice chute opening to note the irregular end of the plastic stiffener of the Curtain Assembly is installed at the left side of the opening.

3. Remove three U-Type Clips and the plastic Curtain Assembly from the top lip of the chute opening.

To replace the Curtain Assembly, reverse the removal procedure.

Be sure to install the replacement Curtain Assembly with the irregular end of the plastic stiffener positioned at the left side of the ice chute opening; and, the edge of the Curtain is dressed evenly with the top lip of the ice chute opening and secured with three U-Type Clips. The thin, clear plastic sheet of the curtain should hang down evenly.

REMOVAL AND REPLACEMENT OF THE DRIER

To remove the Drier:

1. Remove screws and the Left Side Panel and the Front Panel.
2. Bleed off or blow the refrigerant charge through the Schrader valve.
3. Remove the brace attaching the Drier to the chassis.
4. Unsolder refrigeration lines at both ends of the Drier.

To replace the Drier:

CAUTION

1. If the factory seal is broken on the replacement Drier, exposing it to the atmosphere more than a few minutes, the Drier will absorb moisture from the atmosphere and lose substantial ability for moisture removal.

2. Be sure the replacement Drier is installed with the arrow positioned in the direction of the refrigerant flow.

1. Remove the factory seals from the replacement Drier and install the Drier in the refrigerant lines with the arrow positioned in the direction of the refrigerant flow.
2. Solder the Drier into the lines, two places.
3. Secure Drier to Chassis with the drier brace.
4. Purge the system and check for leaks.
5. Thoroughly evacuate the system to remove moisture and non-condensables.
6. Charge the system with refrigerant, by weight. SEE NAMEPLATE.
7. Replace and attach the Left Side Panel and the Front Panel.

REMOVAL AND REPLACEMENT OF THE FAN MOTOR ASSEMBLY — AIR-COOLED MODELS

To remove the Fan Motor Assembly:

1. Remove screws and the Left Side Panel and the Front Panel.
2. Disconnect the two electrical leads from the Fan Motor at the Control Box Assembly.
3. Remove screws and the Fan Motor Assembly; and remove the Fan Motor and Bracket from the Chassis base.
4. Loosen set screws on the Fan Blade and remove the Fan Blade from the Fan Motor.
5. Remove screws and lockwashers and separate the Fan Motor from the Fan Motor Bracket.

To replace the Fan Motor Assembly, reverse the removal procedure.

Be sure to replace the Fan Blade with the hub of the Fan Blade facing the Fan Motor, to ensure air flow is toward the Fan Motor.

WARNING

Be sure the electrical power supply to the icemaker is OFF before proceeding with removal procedures.

REMOVAL AND REPLACEMENT OF THE FREEZING CHAMBER

To remove the Freezing Chamber:

1. Remove screws and the Top Panel, Front Panel and the Right Side Panel to gain access to the Freezing Chamber.
2. Tilt the top of the plastic Cube Chute forward slightly, then lift the Cube Chute up for removal.
3. Remove three U-type Clips and the plastic Curtain Assembly.
4. Reach through the ice chute opening in the Freezing Chamber and feel for the Spray Bar.
5. Move hand to the center hub and rotate the Spray Bar so one end is aligned with the ice chute opening.
6. Lift the Spray Bar up, off of the jet bearing hub, then remove the Spray Bar through the ice chute opening.
7. Disconnect electrical leads and ground wire from terminals on the Agitator Motor.
8. Reach through the same ice chute opening, as before, and grasp the Drive Fork with one hand, and the Agitator Motor Fan on top of the Freezing Chamber, with the other hand.
9. Hold the Fan Blades still and rotate the left-hand thread Drive Fork to the right, and unscrew the Drive Fork from the Agitator Motor.
10. Remove four screws and lift out the Agitator Motor.
11. Remove hose clamps and work loose four Tygon Tubes from the Freezing Chamber, three from the Water Pump and one drain tube.
12. Carefully lift the Platen and Cover Assembly, and tie off or use a board to support and give ample space to allow removal of the Freezing Chamber.
13. Remove screws, lockwashers, bolts, and the front Freezer Mount Plate; also 2 screws and lockwashers from rear Freezer Mount Plate.
14. Carefully work the Freezing Chamber out of the Chassis.

To replace the Freezing Chamber, reverse the removal procedure.

WARNING

Be sure the electrical power supply to the icemaker is OFF before proceeding with removal procedures.

REMOVAL AND REPLACEMENT OF THE WATER PUMP ASSEMBLY

To remove the Water Pump Assembly:

1. Remove screws and the Right Side Panel and the Front Panel.
2. Unclip and disconnect electrical leads from water pump motor.
3. Remove one screw and one end of the ground wire from the Water Pump Bracket.
4. Remove two screws and washers attaching the Water Pump Assembly to the Water Pump Bracket.
5. Remove three spring type clamps and one screw type hose clamp connecting the four Tygon Tubes to the Freezing Chamber; then lift the Water Pump Assembly off of the Water Pump Bracket and work loose the attached Tygon Tubes from the Freezing Chamber.

To replace the Water Pump Assembly, reverse the removal procedure.

REMOVAL AND REPLACEMENT OF THE WATER REGULATOR ASSEMBLY — WATER-COOLED MODELS

To remove the Water Regulator Assembly:

1. Remove screws and the Left Side Panel and the Front Panel.
2. Check to be sure building source water inlet supply shutoff valve to rear of Chassis is OFF.
3. Bleed off or blow the refrigerant charge through the Schrader valve.
4. Disconnect water inlet supply line at the left bottom rear of the Chassis.
5. Disconnect water line at the inlet and outlet fittings on the Water Regulator Assembly.
6. Unsolder the Water Regulator Valve capillary tube from the Compressor refrigerant discharge line.

Always install a replacement Drier, any time the sealed refrigeration system is opened. Do not replace the Drier until all other repair or replacement has been completed.

7. Remove the Water Regulator Assembly from the Chassis Base.

To replace the Water Regulator Assembly, reverse the removal procedure.

SERVICE DIAGNOSIS

The Service Diagnosis Section is for use in aiding the serviceman in diagnosing a particular problem and for pin-pointing the area in which the problem lies. It is an ever available reference for proper corrective action.

The following charts list corrective actions for the causes of known symptoms of certain problems that can occur in the Icemaking-Refrigeration system.

ICEMAKING - REFRIGERATION SYSTEM

SYMPTOM	POSSIBLE CAUSE	CORRECTION
Irregular shape cubes and some cloudy.	Some jets plugged.	Clean jets.
	Shortage of water.	See Shortage of water CORRECTION.
	Unit not level. Water overflowing vent holes on low side, burning cubes.	Level cabinet, as required.
Cube improper size.	Cube Size Control set too cold.	Rotate Cube Size Control dial toward WARMER.
	Cube Size Control set too warm.	Rotate Cube Size Control dial toward COLDER.
	Partially restricted capillary tube.	Blow refrigerant charge; replace drier; evaculate system; add refrigrant charge.
	Moisture in system.	Same as above CORRECTION.
	Shortage of water.	See Shortage of water CORRECTION.
	Loss of refrigerant.	Check for refrigerant leaks, correct leaks; recharge system.
Cloudy Cubes.	Shortage of water.	See Shortage of water SYMPTOM.
	Dirty water supply.	Install water filter or softener.
	Accumulated impurities.	Use SCOTSMAN Ice Machine Cleaner.
Shortage of water.	Water spraying out through curtain.	Hang curtain in proper position.
	Water solenoid not opening.	Repair or replace solenoid.
	Water leak in sump area.	Locate leak and repair or correct condition.
	Partial restriction in water strainer, located within water inlet of water solenoid.	Clean or replace strainer.

SYMPTOM	POSSIBLE CAUSE	CORRECTION
Decreased ice capacity	Poor circulation or extreme hot location.	Relocate the cabinet; or provide ventilation by cutting openings.
	Dirty Air-cooled condenser or faulty fan motor.	Clean Air-cooled condenser, or replace or repair fan motor.
	Lo water pressure to Water-cooled condenser.	Restore water pressure.
	Improper charge of refrigerant.	Refer to refrigerant charge indicated on name plate and correct.
	Non-condensable gas in the system.	Purge the system.
	Hot gas solenoid valve leaking.	Replace valve.
	Partially restricted capillary tube.	See Cubes too small CORRECTION.
	Defective compressor.	Replace compressor.
	Leaky water valve.	Repair or replace valve.
Poor harvests.	Too short defrost time.	Check and adjust harvest cycle.
		Check Timer 3.5-minute setting.
	Restriction in water inlet line.	Check strainer and flow check valve. DO NOT remove flow control washers.
	Hot gas solenoid does not open.	Binds or burned out. Replace.
	Plugged air vent holes in upper part of cube cups.	Clean out air vent holes.
	Improper refrigerant charge.	Check or recharge system.
	Water pressure too low.	Check for 20 PSI flowing water.
Compressor cycles intermittently.	Dirty condenser.	Clean condenser with vacuum cleaner or brush. NO WIRE BRUSH.
	Air circulation blocked.	Locate cabinet with adequate air space for proper air flow.
	Low voltage.	Check for circuit overload.
		Check building supply voltage; if low, contact power company.
	Defective Fan Motor.	Replace Fan Motor.
	Non-condensable gases in system.	Purge the system.
	Check compressor, start components.	Replace defective components.

SYMPTOM	POSSIBLE CAUSE	CORRECTION
Icemaker will not operate.	Blown fuse in line.	Replace fuse and check for cause.
	Master switch in OFF position.	Set switch to ON position.
	Lo water pressure reset open.	Reset manual to water pressure control.
	Faulty Master switch.	Replace switch.
	Timer contacts open.	Replace Timer microswitch.
	Faulty Bin thermostat.	Replace faulty Bin thermostat.
Freeze-up.	Dirty condenser coil (Air-cooled)	Clean coil
	Loss of water or water pressure.	Restore water pressure.
	High Ambient.	Adjust cube size control warmer.
	Faulty water solenoid.	Replace water solenoid.
	Faulty hot gas solenoid.	Replace hot gas solenoid.
	Faulty agitator motor.	Replace agitator motor.
	Faulty timer.	Replace timer.
	Faulty cube size control.	Replace cube size control.
	Loss of refrigerant. (Leak)	Repair leak and recharge.
	Harvest cycle too short.	Adjust harvest cycle time.

MAINTENANCE & CLEANING INSTRUCTIONS

GENERAL

The periods and procedures for maintenance and cleaning are given as guides and are not to be construed as absolute or invariable. Cleaning especially will vary, depending upon local water conditions and the ice volume produced; and, each icemaker must be maintained individually, in accordance with its own particular location requirements.

ICEMAKER

THE FOLLOWING MAINTENANCE SHOULD BE SCHEDULED AT LEAST TWO TIMES PER YEAR ON THIS ICEMAKER. CALL YOUR AUTHORIZED SCOTSMAN SERVICE AGENCY.

1. Check and clean or service any optional water treatment devices, if any installed.
2. Check the HC400 cabinet is level, in the side-to-side and front-to-back directions.
3. Clean the water system, evaporator freezing chamber reservoir and spray bar using a solution of SCOTSMAN Ice Machine Cleaner. Refer to CLEANING.

Cleaning requirements vary according to local water conditions and individual user operation. Continuous check of the clarity of ice cubes and visual inspection of the water system parts, evaporator and the sump assembly before and after cleaning will indicate frequency and procedure to be followed in local areas.

4. Check that the plastic curtain hangs down evenly within the opening.
5. Check and tighten all bolts and screws.
6. Check and tighten all electrical connections.
7. Check hot gas solenoid valve for correct operation.
8. With MASTER ON-OFF switch and COMPRESSOR ON-OFF switch in the OFF position, clean the condenser using vacuum cleaner, whisk broom or brush. Instruct customer to clean condenser frequently. DO NOT USE A WIRE BRUSH.
9. Check for water leaks and make corrections.
10. Check the bin thermostat control bulb to test shut off. Holding ice against bin thermostat control bulb should cause the icemaker to shut off at the end of the harvest cycle.

    Within minutes after ice is removed from the bin thermostat control bulb, the icemaker will restart.

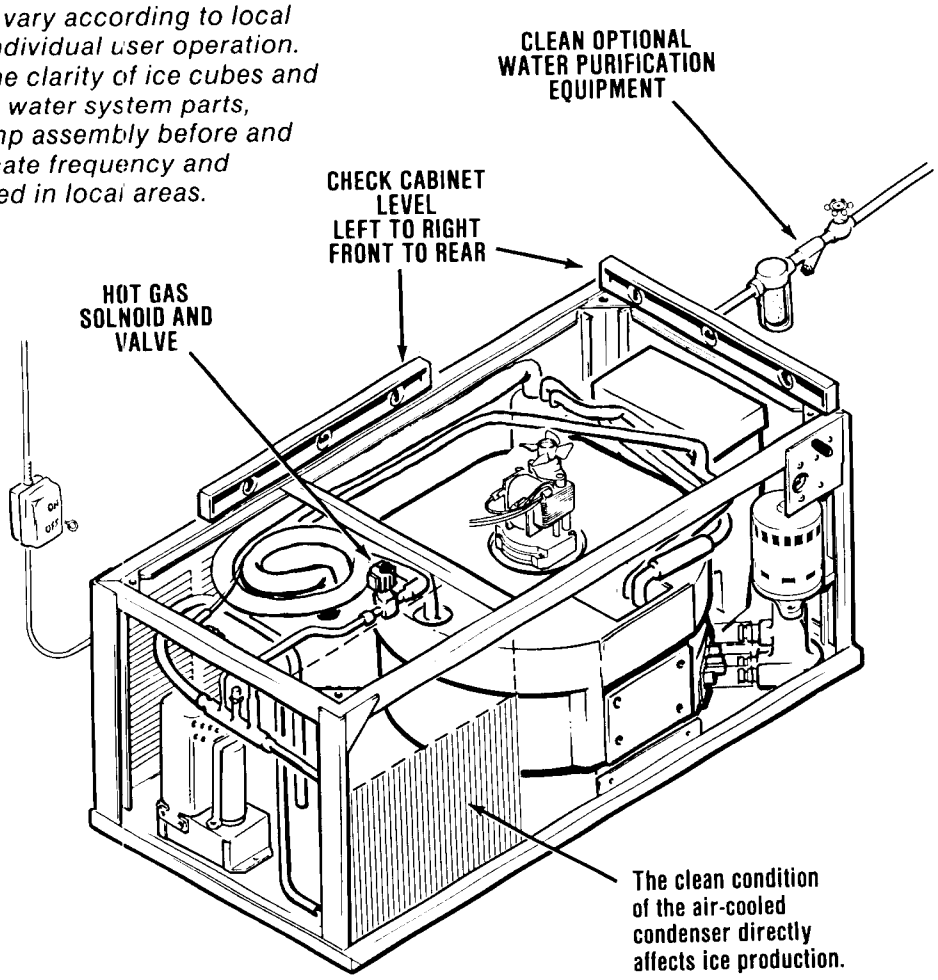

CLEANING - Icemaker

1. Remove screws and front panel and top panel.
2. Move the master ON-OFF switch and the compressor ON-OFF switch, on the control box, to the OFF positions.
3. Tilt the top of the plastic cube chute forward slightly, then lift the cube chute up for removal.
4. Rotate the shaft of the timer and switch assembly, protruding through the hole in the front of the control box cover, until the microswitch actuator arm drops into the cam slot, the START POSITION of the harvest cycle, then stop. See *Start Positions* illustration.
5. Remove the defrost water tube, located at the top left side of the freezing chamber, from the tube hole.
6. Prepare the following cleaning solution: Mix 16-ounces of SCOTSMAN Ice Machine Cleaner with eleven pints of fresh, potable water in a clean container.

WARNING

SCOTSMAN Ice Machine Cleaner contains Phosphoric and Hydroxyacetic acids. These compounds are corrosive and may cause burns if swallowed. DO NOT induce vomiting. Give large amounts of water or milk. Call physician immediately. In case of external contact, flush with water. KEEP OUT OF THE REACH OF CHILDREN.

7. Pour the batch of prepared cleaning solution into the freezing chamber, through the defrost water tube hole at the top, left center of the freezing chamber.
8. Immediately replace the defrost water tube; then, move the master ON-OFF switch, on the control panel, to ON.
9. Allow the icemaking system to operate normally for twenty minutes in the freezing cycle. NO ICE CUBES will be made, because the compressor has been switched OFF.

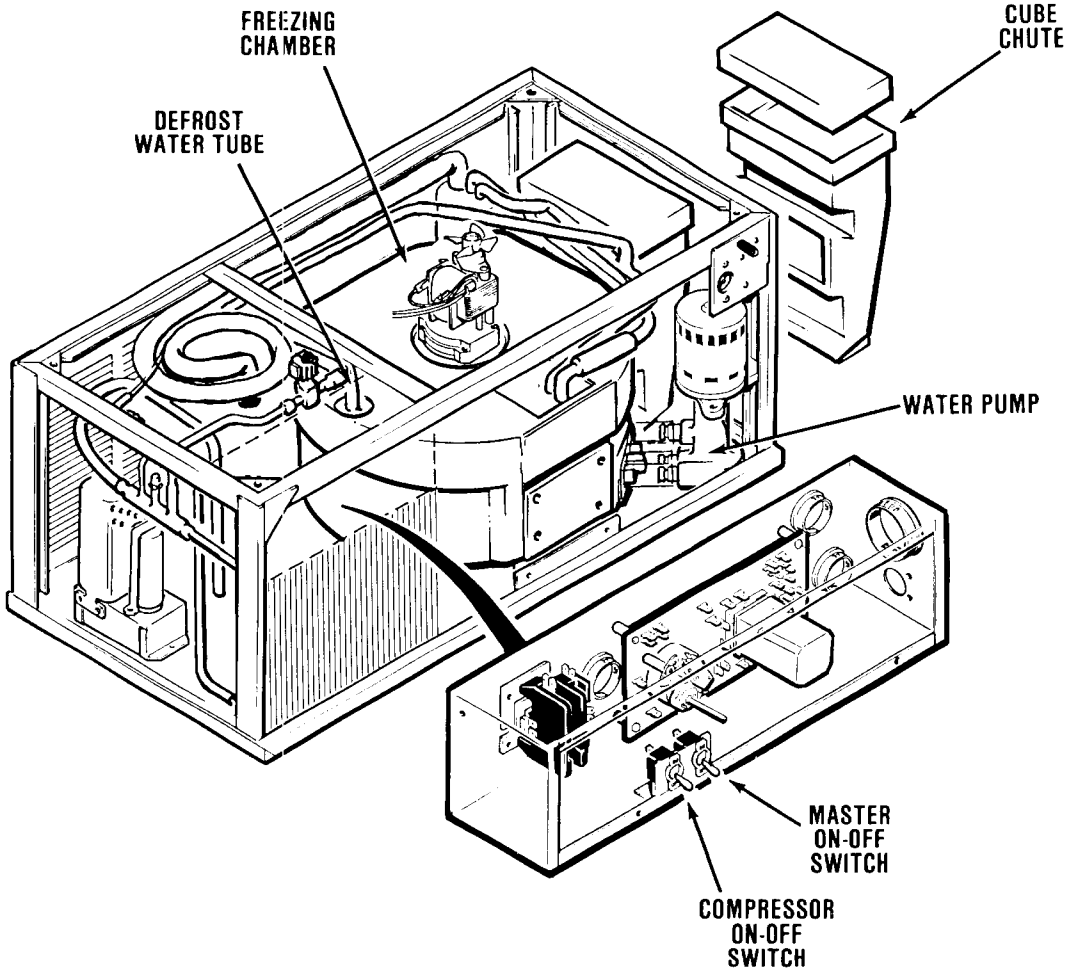

Cleaning Water System

10. At the end of twenty minutes, rotate the shaft of the timer and switch assembly, CLOCKWISE, to start a second harvest cycle. See *Start Positions* illustration.
11. Allow the icemaking system to operate normally through the harvest cycle; then, when the harvest cycle is completed, rotate the timer again THROUGH the freezing cycle to START another harvest cycle. Perform this harvest cycle operation three times. During each harvest cycle, fresh inlet water is introduced into the water system and acts to rinse all water-related parts and to wash away most mineral concentration through the drain.
12. Wash the curtain assembly and the cube chute in a solution of one ounce of household bleach in one gallon of water.
13. Using a clean, damp cloth or disposable paper wiper, wipe off the curtain assembly and the cube chute.
14. Replace the curtain assembly and the cube chute.
15. Move the compressor ON-OFF switch, on the control box, to the ON position.
16. Check each ice cube harvest, until the ice cubes are clear and the acid taste is eliminated.

WARNING

DO NOT USE ice cubes produced from the cleaning solution. Be sure no ice remains in the bin. Rinse and wipe clean inside bin walls.

17. Pour hot water over ice cubes in the bin, to melt the ice cubes and allow the same cleaning solution to be used to thoroughly wash the inner surfaces of the bin and the solution to help clean the drain lines as it drains. Rinse inner surfaces of bin.
18. Replace all panels and screws.
19. Clean and sanitize the interior bin surfaces each week.

TABLE OF CONTENTS

SECTION I -	GENERAL INFORMATION & INSTALLATION	1-1
I.	Introduction	1-1
II.	Unpacking and Inspection	1-1
III.	Location and Leveling - Icemaker	1-3
IV.	Remote Condenser and Pre-Charged Lines - Installation	1-3
V.	Electrical Connections	1-5
VI.	Water Supply and Drain Connections	1-5
VII.	Installation - Optional	1-5
VIII.	Final Check List	1-9
SECTION II -	OPERATING INSTRUCTIONS	2-1
I.	Start Up	2-1
SECTION III -	PRINCIPLES OF OPERATION - How It Works	3-1
I.	Freezing Cycle	3-1
II.	Harvest Cycle	3-2
III.	Pump Down Cycle Circuit	3-2
IV.	Component Descriptions	3-2
SECTION IV -	ADJUSTMENT & REMOVAL & REPLACEMENT	4-1
I.	Adjustment of the Bin Thermostat Control	4-1
II.	Adjustment of the Cube Size Control	4-1
III.	Adjustment of the Timer & Switch Assembly	4-2
IV.	Removal and Replacement of the Agitator Motor Assembly	4-3
V.	Removal and Replacement of the Bin Thermostat Control	4-3
VI.	Removal and Replacement of the Compressor Assembly	4-4
VII.	Removal and Replacement of the Cube Size Control	4-4
VIII.	Removal and Replacement of the Curtain Assembly	4-4
IX.	Removal and Replacement of the Drier	4-4
X.	Removal and Replacement of the Freezing Chamber	4-5
XI.	Removal and Replacement of the Spray Bar Assembly	4-5
XII.	Removal and Replacement of the Thermostatic Expansion Valve	4-5
XIII.	Removal and Replacement of the Water Pump Assembly	4-6
XIV.	**Removal and Replacement of Remote Condenser Fan Motor Assembly, Thermostat Control, Head Pressure Control Valve**	**4-6**
SECTION V -	MAINTENANCE & CLEANING INSTRUCTIONS	5-1
I.	General	5-1
II.	Icemaker	5-1
III.	Remote Condenser	5-1
IV.	Cleaning - Icemaker	5-1
SECTION VI -	SERVICE DIAGNOSIS	6-1
I.	Icemaking - Refrigeration System	6-1
SECTION VII -	WIRING DIAGRAMS	7-1
	Wiring Diagram HC400R-1A - (115/60/1)	7-2
	Wiring Diagram HC400R-31A - (115/208-230/60/1)	7-3

TABLE OF CONTENTS (Cont'd)

SECTION VIII - THE PARTS ILLUSTRATIONS AND PARTS LISTS 8-1

I. General 8-1

II. How to Use the Illustrations and Parts Lists 8-1

III. How to Order Parts or Assemblies 8-1

LIST OF ILLUSTRATIONS

Specifications iii

Figure 1-1 Cube Deflector Bulb Holder and Bin Thermostat Capillary Tube 1-2

Figure 1-2 Pre-Charged Refrigerant Line Hookup 1-6

Figure 1-3 Pre-Charged Refrigerant Line Routing 1-7

Figure 1-4 Installation Practice 1-8

Figure 2-1 Timer Cam Positions 2-1

Figure 3-1 Freezing Cycle 3-1

Figure 3-2 Harvest Cycle 3-2

Figure 4-1 Adjustment of the Temperature Control 4-1

Figure 4-2 Adjustment of the Timer & Switch Assembly 4-2

Figure 4-3 Removal of the Agitator Motor Assembly 4-3

Figure 5-1 START Positions for the Freeze/Harvest Cycles 5-2

Figure 7-1 Wiring Diagram HC400R-1A - (115/60/1) 7-2

Figure 7-2 Wiring Diagram HC400R-31A - (115/208-230/60/1) 7-3

Figure 8-A Model HC400R Flow Chart 8-2

Figure 8-1 Model HC400R Cabinet and Remote Condenser 8-3

Figure 8-2 Major Assemblies 8-5

Figure 8-3 Freezer Assembly 8-7

Figure 8-4 Freezing Chamber Assembly 8-8

Figure 8-5 Drive Spray Assembly 8-10

Figure 8-6 Freezing Chamber - Sump w/Tubes 8-12

Figure 8-7 Control Box Assembly 8-14

Figure 8-8 Remote Condenser 8-16

Figure 8-00 How To Use The Illustrated Parts List 8-18

This icemaker has been engineered to our own rigid safety and performance standards. The National Sanitation Foundation (NSF) seal, signifies that it is listed with the NSF and that it complies with the materials and construction standards of the NSF. In addition, the Underwriters Laboratories, Inc., (UL) Listing Mark signifies that its construction and design have been inspected and tested by them. NSF and UL inspectors also periodically examine production icemakers at the factory, to assure continued compliance.

To retain the safety and performance built into this icemaker, it is important that installation and maintenance be conducted in the manner outlined in this manual.

SPECIFICATIONS
HC400R

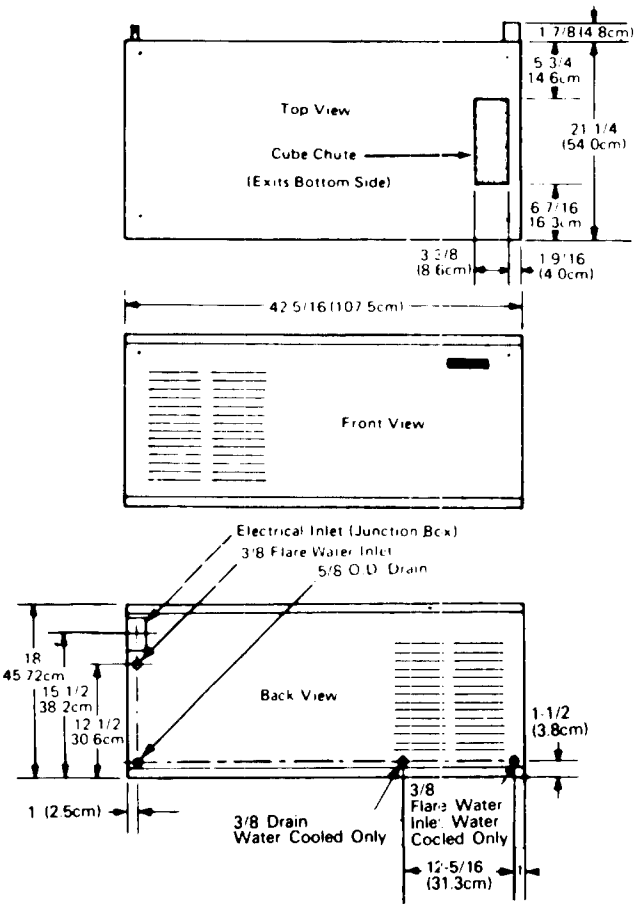

MODEL HC400R with REMOTE CONDENSER

HC400 MRE-1A	115/60/1
HC400 MRE-31A	115/208-230/60/1

Est. Ship Wt.: 210 lbs.

EASY ACCESS SERVICE PANELS

OPTIONALS

SPKMC1 Stainless Steel Panels
Refer to paragraph I-I for listing of ice storage Bins, Extensions and Bin Top.

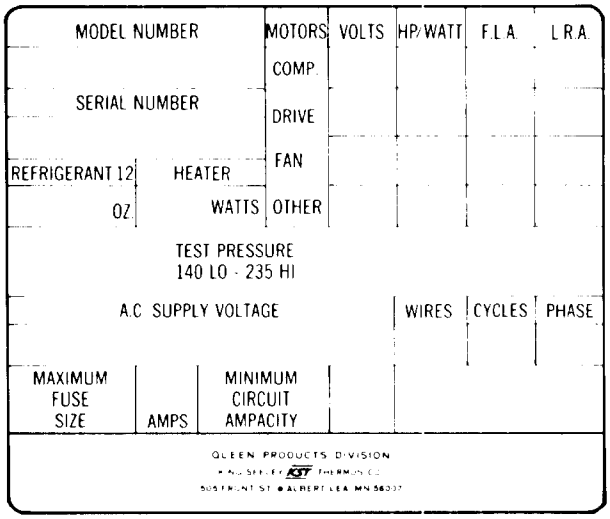

SEE NAMEPLATE, shown at left, for electrical and refrigeration specifications. NAMEPLATE located near top right corner of rear service panel.

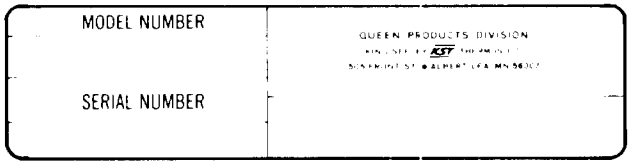

Remove Front Panel to locate the Model Serial Number plate, shown at left, on the Chassis base, just to the right of the Control Box.

SPECIFICATIONS (Con't)

MODEL RC 151-32A, RC 202-32A and RC 303-32A

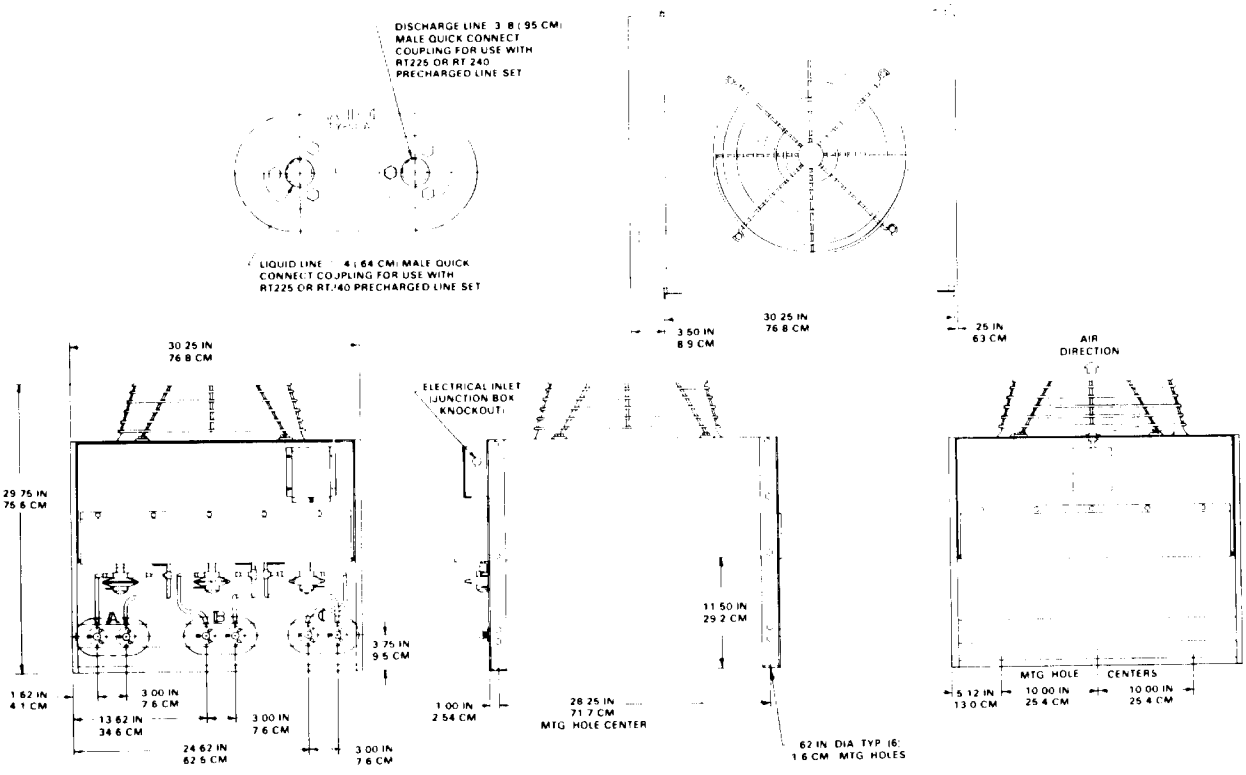

FRONT VIEW SIDE VIEW REAR VIEW

MODEL	ELECTRICAL	EST. SHIP. WT.
RC 151-32A	208/230/60/1	140 lbs.
RC 202-32A	208/230/60/1	145 lbs.
RC 303-32A	208/230/60/1	150 lbs.

SEE DATA PLATE for MODEL NUMBER, SERIAL NUMBER, ELECTRICAL and REFRIGERATION Specifications. Locate DATA PLATE on the upper front panel at the center of the shroud.

SCOTSMAN
AIR COOLED CONDENSER
QUEENS PRODUCTS DIV.
KING SEELEY THERMOS CO.
ALBERT LEA, MINNESOTA 56007

MODEL NUMBER	RCXXX-32A
SERIAL NUMBER	XXXXXX-XX
VOLTS	XXX-XXX
CYCLE	XX
PHASE	X
NUMBER OF MOTORS	X
MOTOR HORSEPOWER	XX
NUMBER REFRIGERANT CIRCUITS	X
R-12 CIRCUIT	XX oz
TOTAL AMPS	XX amps
MINIMUM CIRCUIT AMPACITY	XX amps
MAXIMUM FUSE SIZE	XX amps
WORKING PRESSURE	XXX psig

SUITABLE FOR OUTDOOR USE

PRE-CHARGED REFRIGERANT LINE KITS

KIT NUMBER	SIZE	EST. SHIP. WT.
RT-225	25-Foot	7 lbs.
RT-240	40-Foot	10 lbs.

We reserve the right to make product improvements at anytime. Specifications subject to change without notice.

SECTION I

GENERAL INFORMATION & INSTALLATION

I. INTRODUCTION

This manual provides specifications and the step-by-step procedures for the installation, startup and operation, and the maintenance and cleaning for the SCOTSMAN Model HC400R Modular Cuber, with Remote Condenser.

The Model HC400R Modular Cubers are quality designed, engineered and constructed, and thoroughly tested icemaking systems, providing the utmost in flexibility to fit the needs of a particular user. Separate sections detail more specifically: General Information & Installation; Start Up Operation; Principles of Operation; Adjustment and Removal and Replacement Procedures; Maintenance and Cleaning Instructions; Service Diagnosis; Wiring Diagrams; and, the Illustrated Assemblies and Parts Lists.

DESCRIPTION

An attractive horizontal cabinet of leathergrain embossed steel with high gloss, charcoal brown baked enamel finish. Also, an optional stainless steel panel kit is available. These removable panels allow easy access to electrical and mechanical components for cleaning and maintenance.

SEALED REFRIGERATION SYSTEM

To provide quiet efficient operation of Icemaker, the Compressor motor is internally spring-mounted. The Compressor motor is covered by a five year parts warranty.

REMOTE CONDENSER AND PRE-CHARGED REFRIGERANT LINES

The Model HC400R Modular Cuber can be installed with any one of three Remote Condensers and with either of two lengths of precharged refrigerant lines and sealed couplings.

Available are the single-pass Condenser, two-pass Condenser, and the three-pass Condenser. The single-pass Condenser can accommodate a single HC400R Cuber and one set of two precharged refrigerant lines. The two-pass Condenser can accommodate two separate HC400R Cubers at two different locations; or, a double-stacked installation of two HC400R Cubers and two sets of the two pre-charged refrigerant lines. The three-pass Condenser can accommodate three separate HC400R Cubers at three different locations; or, a triple-stacked installation; or, a combination of one double-stacked and one single installation, plus three sets of the two pre-charged refrigerant lines.

In any of the above installations or combination installations, the sets of two pre-charged refrigerant lines to be used, are the 25-foot line kits or the 40-foot line kits. These pre-charged refrigerant line kits are a one-time, initial charge type of hardware; that is, once the sealed couplings are connected, the internal seal is severed and the lines cannot be disconnected without losing the refrigerant charge. However, they ARE REUSABLE in the refrigerant system, when they are removed and reconnected, and the complete refrigeration system is re-charged with refrigerant.

STORAGE BIN & EXTENSIONS

Since the Model HC400R, like other modular cubers in the SCOTSMAN line, does not have an attached ice storage bin, it is necessary to use an auxiliary bin. Modular systems combinations include: B40 Ice Storage Bin with 350 pounds (lbs.) capacity; B60 with 550 lbs.; B80 with 590 lbs.; B90 with 590 lbs.; and, bin extensions: BX15 with 75 lbs.; BX25 with 150 lbs.; and the KBT2 Bin Top used with BX83 with 260 lbs.; BX85 with 560 lbs., and BX87 with 560 lbs. Two HC400R Modular Cubers can be stacked to double ice production volume.

II. UNPACKING AND INSPECTION

1. Call your authorized SCOTSMAN Distributor or Dealer, for proper installation. He's listed under ICE MAKING EQUIPMENT and MACHINERY in the yellow pages of the telephone book.

2. Visually inspect the exterior of the shipping container and skid and any severe damage noted, should be reported to the delivering carrier; and a concealed damage claim filed subject to internal inspection, with the carrier representative present.

3. Remove screws and shipping tape, and all panels, including the top, from the cabinet, and inspect for any concealed damage. Notify carrier of any concealed damage claims, as stated in step 2 above.

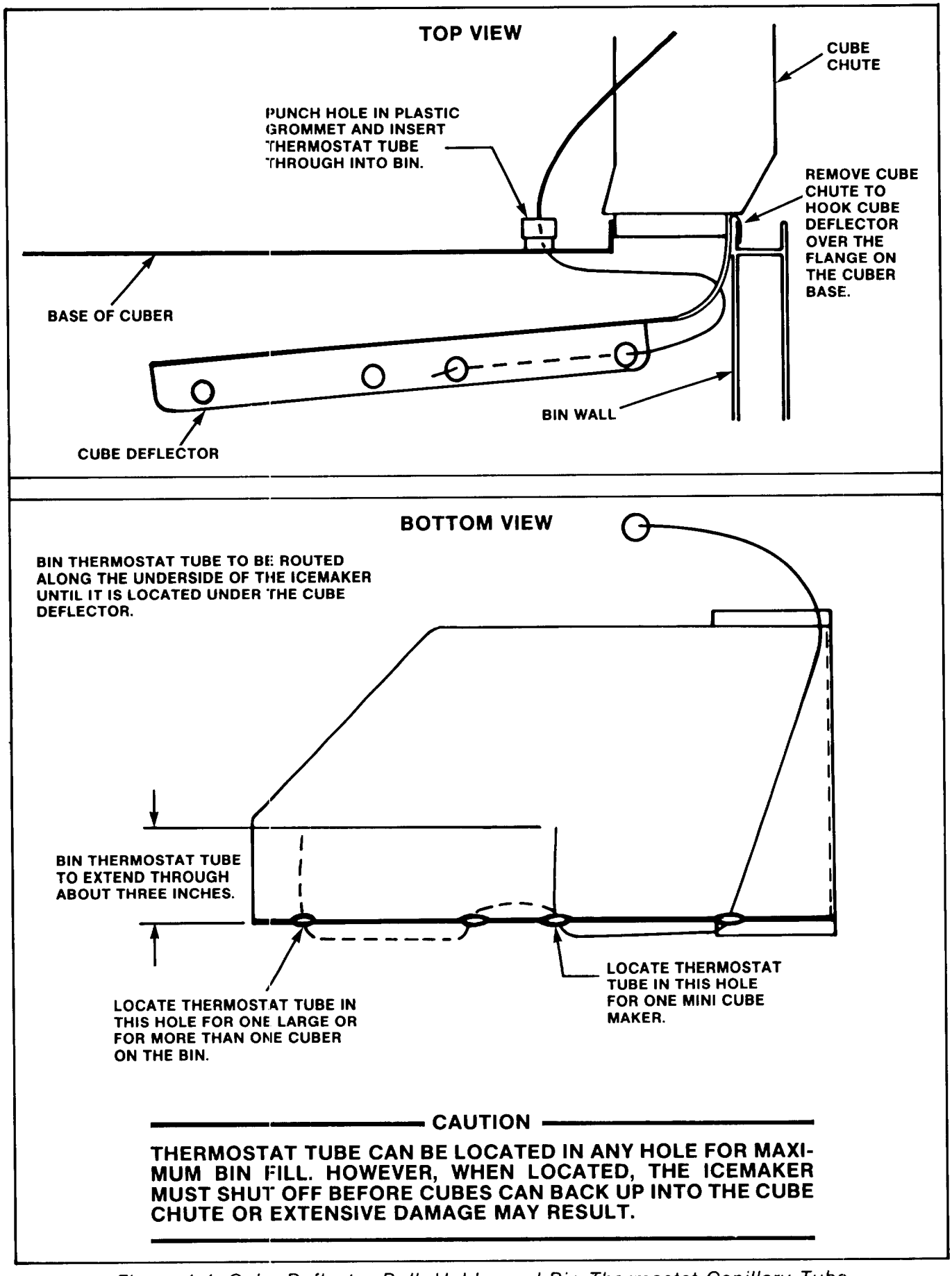

CAUTION

THERMOSTAT TUBE CAN BE LOCATED IN ANY HOLE FOR MAXIMUM BIN FILL. HOWEVER, WHEN LOCATED, THE ICEMAKER MUST SHUT OFF BEFORE CUBES CAN BACK UP INTO THE CUBE CHUTE OR EXTENSIVE DAMAGE MAY RESULT.

Figure 1-1. Cube Deflector Bulb Holder and Bin Thermostat Capillary Tube.

4. Remove all internal support packing, tape and wires, if any, in machinery compartment.
5. Check that refrigerant lines do not rub or touch lines or other surfaces, and that fan blades, if any, move freely.
6. Check that Compressors are snug on all mounting pads.
7. Remove optional Water Strainers from shipping bag, for installation in water supply line.
8. Untape and remove for installation, one plastic Base Drain and one electrical Conduit Box taped to the top channel support above the Freezing Chambers, and install Conduit Box in locatio shown on Specification Page III, per instructions on label inside the Box.
9. Uncoil Bin Thermostat Tube and install Cube Deflector in Bin, see Figure 1-1.
10. Use clean damp cloth or disposable paper wiper to wipe clean the exterior surfaces of the cabinet.
11. SEE NAMEPLATE on the top rear, center service panel, and check that the location source voltage corresponds with the voltage specified on the nameplate.

CAUTION

Improper voltage supplied to the Icemaker will void your parts replacement program.

12. Remove the Manufacturer's Registration Card from the front of the User's Manual and fill in all spaces including: Model Number and Serial Number taken from the Model-Serial Nameplate located on the left side, front part of the Chassis base, with Left Front Panel removed. Forward the completed, self addressed, registration card to the SCOTSMAN factory.

III. LOCATION AND LEVELING -ICEMAKER

WARNING

This Icemaker is NOT designed for outdoor installations, or where air temperatures are below 50-degrees F., or above 100-degrees F., and water temperature is below 40-degrees F., or above 100-degrees F. Extended periods of operation at temperatures exceeding these limitations will constitute misuse, under the terms of the SCOTSMAN Manufacturer's limited warranty coverage. This WARNING does NOT include the Remote Condenser.

1. Position the Modular Cuber and Bin, with or without Bin Extensions, in the selected permanent location.

NOTE

Prior consideration for location site shall include:

1. *Minimum room temperature 50-degrees F. and maximum room temperature 100-degres F.*
2. *Water inlet temperatures: Minimum 40-degrees F. and maximum 100-degrees F.*
3. *Well ventilated location for air-cooled model, advising user to frequently clean Condenser.*
4. *SERVICE ACCESS: Adequate space for all service connections, through the rear of the cabinet. A six inch minimum clearance at rear, left and front panels.*
5. *Location determined length of pre-charged refrigerant lines, 25-foot or 40-foot, and the restriction of a maximum of 12-foot vertical rise in the connecting tubing of the installation.*

2. Level the modular cabinet in both the left-to-right and front-to-rear directions. The optional leveling legs on the Bins can be adjusted.

IV. REMOTE CONDENSER AND PRE-CHARGED LINES - INSTALLATION

A. Location Considerations:

1. Limited to a 40-foot length or a 25-foot length of pre-charged refrigerant line from the rear of the icemaker Chassis to the Remote Condenser.
2. Maximum vertical rise of 12 feet between the icemaker and the Remote Condenser coupling connection levels.
3. Available separate electrical power source to the Remote Condenser, for the Fan Motor.
4. Best available location, protected from the extremes of dirt, dust, rain, sun and winds.
5. Must meet local building code installation requirements.

B. Unpacking and Inspection:

1. Visually inspect the exterior of the shipping container and any severe damage noted, should be reported to delivering carrier; and a concealed damage claim filed subject to internal inspection, with carrier representative present.
2. Uncrate the Remote Condenser and the Pre-Charged Refrigerant Line Kits and inspect for any concealed damage. Notify carrier of any concealed damage claims, as stated in Step 1, above.

3. Check that the pre-charged refrigerant lines are intact, not kinked, and that there is no seal puncture or loss of refrigerant.

C. Remote Condenser - Roof Attachment:

1. Install and attach the Remote Condenser to the roof of the building, using the methods and practices of building standards that conforms to and meets the local building code requirements, in your area.
2. Install an electrical power line to the Fan Motor of the Remote Condenser. This electrical power line shall be separate from the icemaker electrical power line and have a separate junction box and switch. Install properly grounded conduit, wherever the electrical power line to the Fan Motor is exposed to outside weather.
3. Remove Junction Box Cover, from the Remote Condenser, and set Ambient Sensing Thermostat at 50-degrees F.

D. Pre-Charged Refrigerant Lines:

1. Each set of pre-charged refrigerant lines in the 25-foot length, or 40-foot length kits, consists of a ¼-inch diameter, self-sealing LIQUID line and a ⅜-inch diameter, self-sealing DISCHARGE line. One coupling on each line is fitted with a charging port, which provides the service man with access for service gauges at the REMOTE CONDENSER location, when necessary

NOTE

The openings in the building ceiling or wall, listed in the next step, are minimum sizes recommended, through which the pre-charged refrigerant lines may pass; and, are to be considered only if they conform to and meet the local building code requirements, in your area.

2. Minimum recommended sizes for openings required in a ceiling or wall, for the pre-charged refrigerant lines to pass, are as follows:
   a. Single-pass Condenser: 1-¾-inch diameter.
   b. Two-pass Condenser: 2-inch diameter.
   c. Three-pass Condenser: 2-¼-inch diameter.
3. When possible, route the maximum length of the pre-charged refrigerant lines INSIDE the building, with the MINIMUM length on the roof, to prevent vandalism and to minimize the CONDENSER EFFECT that exposed lines can produce in cold weather. INSULATE refrigerant lines that will be exposed to outside temperatures that will be below freezing, for extended periods of time.

CAUTION

1. The couplings on the sets of pre-charged refrigerant lines, the refrigerant fittings on the Remote Condenser, and the rear of the icemaker Chassis are SELF-SEALING and should be tightened 1/4-turn more than snug tight.

ALWAYS USE TWO WRENCHES WHEN TIGHTENING THESE FITTINGS, ONE AS BACKUP WRENCH TO PREVENT TWISTING OF TUBING AND POSSIBLE KINKING OR LINE RUPTURE.

2. BE SURE to connect the ends of the pre-charged refrigerant lines, that have the charging port fittings, TO THE REMOTE CONDENSER FITTINGS. This gives the serviceman access for service gauges at the REMOTE CONDENSER location, when necessary.

4. Connect the ¼-inch diameter refrigerant line coupling, with the CHARGING PORT fitting, to the Remote Condenser refrigerant fitting labeled: LIQUID LINE. Use two proper size wrenches, on the coupling body hex and on the union nut, and tighten until the coupling bodies BOTTOM, or a definite RESISTANCE is felt; THEN, TIGHTEN AN ADDITIONAL 1/4-TURN. See Figure 1-2.
5. Connect the ⅜-inch diameter refrigerant line coupling, with the CHARGING PORT fitting, to the Remote Condenser refrigerant fitting labeled: DISCHARGE LINE. Tighten as detailed in step 4.
6. Connect the ¼-inch diameter refrigerant line coupling, to the refrigerant fitting on the upper right rear of the icemaker Chassis labeled: LIQUID LINE. Tighten as detailed in step 4.
7. Connect the ⅜-inch diameter refrigerant line coupling, to the refrigerant fitting on the upper, right rear of the icemaker Chassis labeled: DISCHARGE LINE. Tighten as detailed in step 4.

E. Excess Length of Pre-Charged Refrigerant Lines:

At installations where the icemaker Chassis-to-Remote Condenser refrigerant line path is substantially LESS than the 25-foot length or 40-foot length of pre-charged refrigerant line kit to be installed, route and dress the excess refrigerant line as follows:

1. Follow straight line routing, when possible.

2. Retain excess pre-charged refrigerant line INSIDE the building.
3. SPIRAL the excess footage of the pre-charged refrigerant line(s), in the best selected INSIDE location, and in a manner that PREVENTS refrigerant TRAPPING. See Figure 1-3 for recommended methods of spiralling the excess refrigerant lines.

CAUTION

DO NOT kink or crimp the refrigerant lines. DO NOT bend the excess refrigerant lines in a vertical LOOP(s), which allow trapping of refrigerant in LOW sections, during OFF time. Bend and shape the excess refrigerant lines in VERTICAL spirals, not HORIZONTAL spirals. See Figure 1-3.

V. ELECTRICAL CONNECTIONS

SEE NAMEPLATE for current requirements to determine wire size to be used for electrical hookup. The Cuber requires a solid earth ground wire. See Wiring Diagram.

Be certain the Cuber is connected to its own electrical circuit and individually fused. The maximum allowable voltage variation should not exceed ten percent of the nameplate rating, even under starting conditions. Low voltages can cause erratic operation and may be responsible for serious damage to the motor windings.

All external wiring should conform to the national, state and local electrical code requirements. Usually electrical permit and services of a licensed electrician will be required. Install separate power line, junction box and grounded conduit for areas the power line is exposed to outside weather, for the Remote Condenser Fan.

WARNING

BE SURE the icemaker is properly grounded and connected to the proper voltage at the location power source, to begin the 12-hour PRE-START heating of the Compressor Crankcase. This precautionary step heats the oil in the Compressor Crankcase, separates refrigerant from oil, which prevents probable damage to the Compressor, at START-UP.

VI. WATER SUPPLY AND DRAIN CONNECTIONS

The recommended water supply line is a ⅜-inch O.D. copper tubing. Connect to cold water supply line with standard plumbing fittings, with a shutoff valve installed in an accessible place between the water supply and the Cuber.

A wire mesh strainer is available and must be installed with the cleanout plug down. Locate the strainer next to the male flare water inlet fitting, at the rear of the Chassis, with the arrow on the strainer positioned in the direction of the water flow. The strainer protects against large particles of rust, scale, etc., which may be loosened in the water supply line at the time of installation.

In some cases a plumbing permit and services of a licensed plumber will be required.

WARNING

DO NOT operate this Modular Cuber when the water supply is shut OFF, or is BELOW the recommended 20 PSIG water pressure. Press the Master ON-OFF toggle switch on the Control Box to OFF immediately.

B. DRAIN CONNECTIONS. All drains are gravity type and must have a minimum of ¼-inch fall per foot on horizontal runs. The drains to be installed to conform with the local plumbing code. Install a vertical open vent on drain line to ensure good venting. The drain receptacle should be an open, trapped or vented construction. See Figure 1-4.

Recommended bin drain is ⅝-inch O.D. copper tubing and should be vented and run separately.

VII. INSTALLATION - OPTIONAL

Install optionals ordered with the HC400R:

1. SPKMC1 - Stainless Steel Cabinet Panels.
2. B40 Bin - 350 lbs. storage capacity.
3. B60 - 550 lbs. storage capacity.
4. B80 Bin - 590 lbs. storage capacity.
5. B90 Bin - 590 lbs. storage capacity.
6. BX15 Bin Extention - 75 lbs.
7. BX25 Bin Extension - 150 lbs.
8. BX83 Bin Extension - 260 lbs.
9. BX85 Bin Extension - 560 lbs.
10. BX87 - Bin Extension - 560 lbs.
11. KBT2 Bin Top.

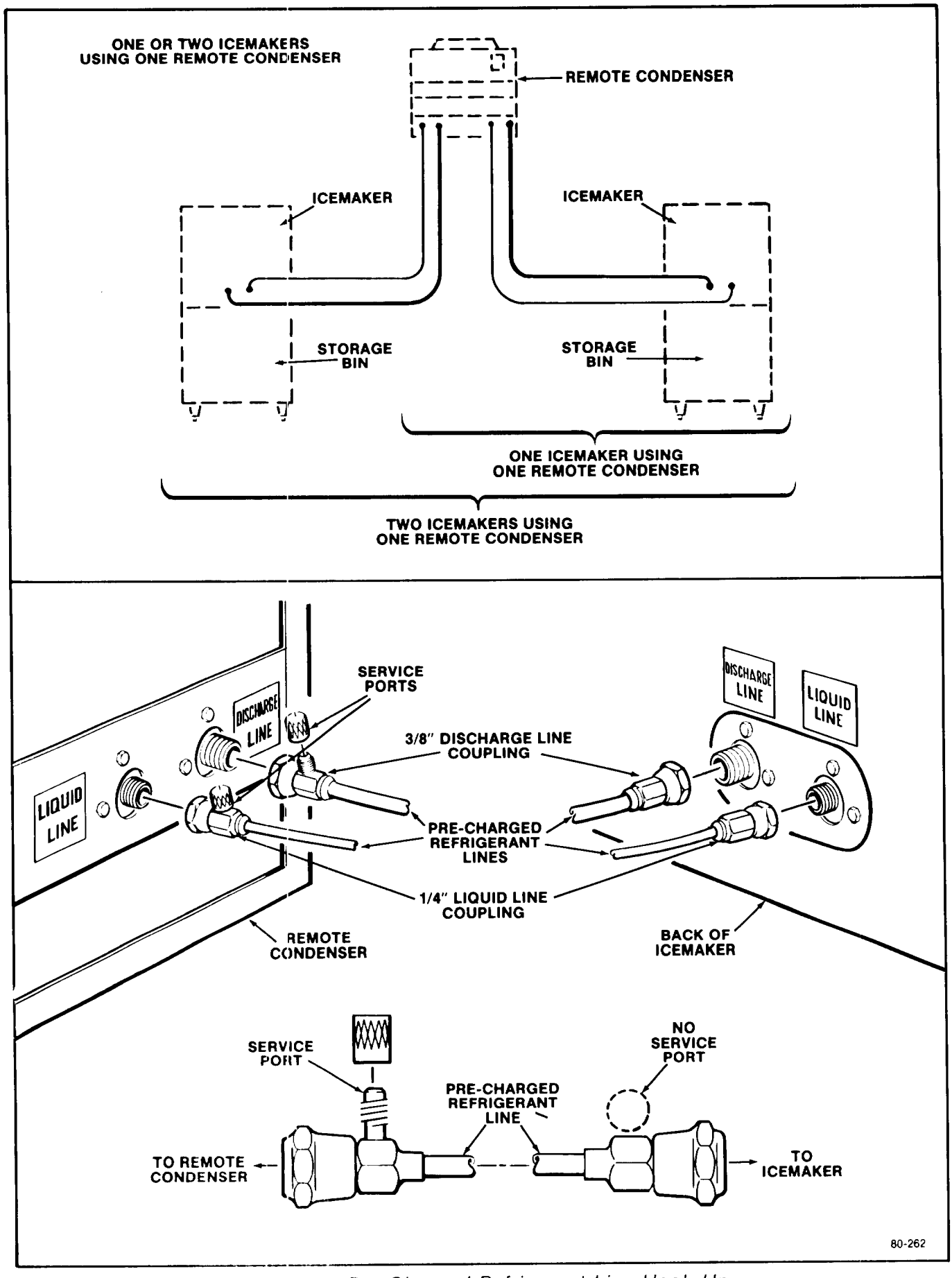

Figure 1-2. Pre-Charged Refrigerant Line Hook-Up

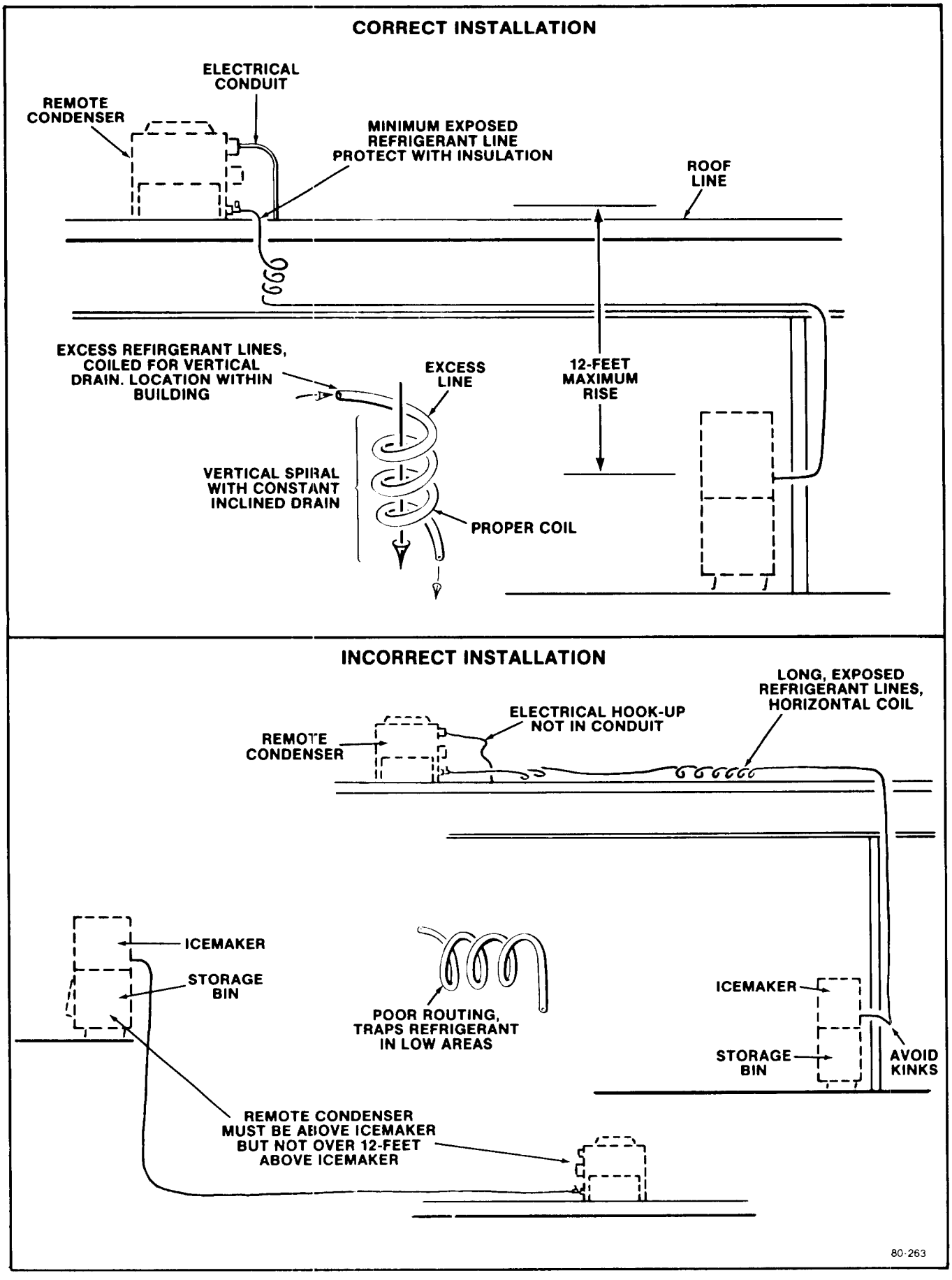

Figure 1-3. Pre-Charged Refrigerant Line Routing

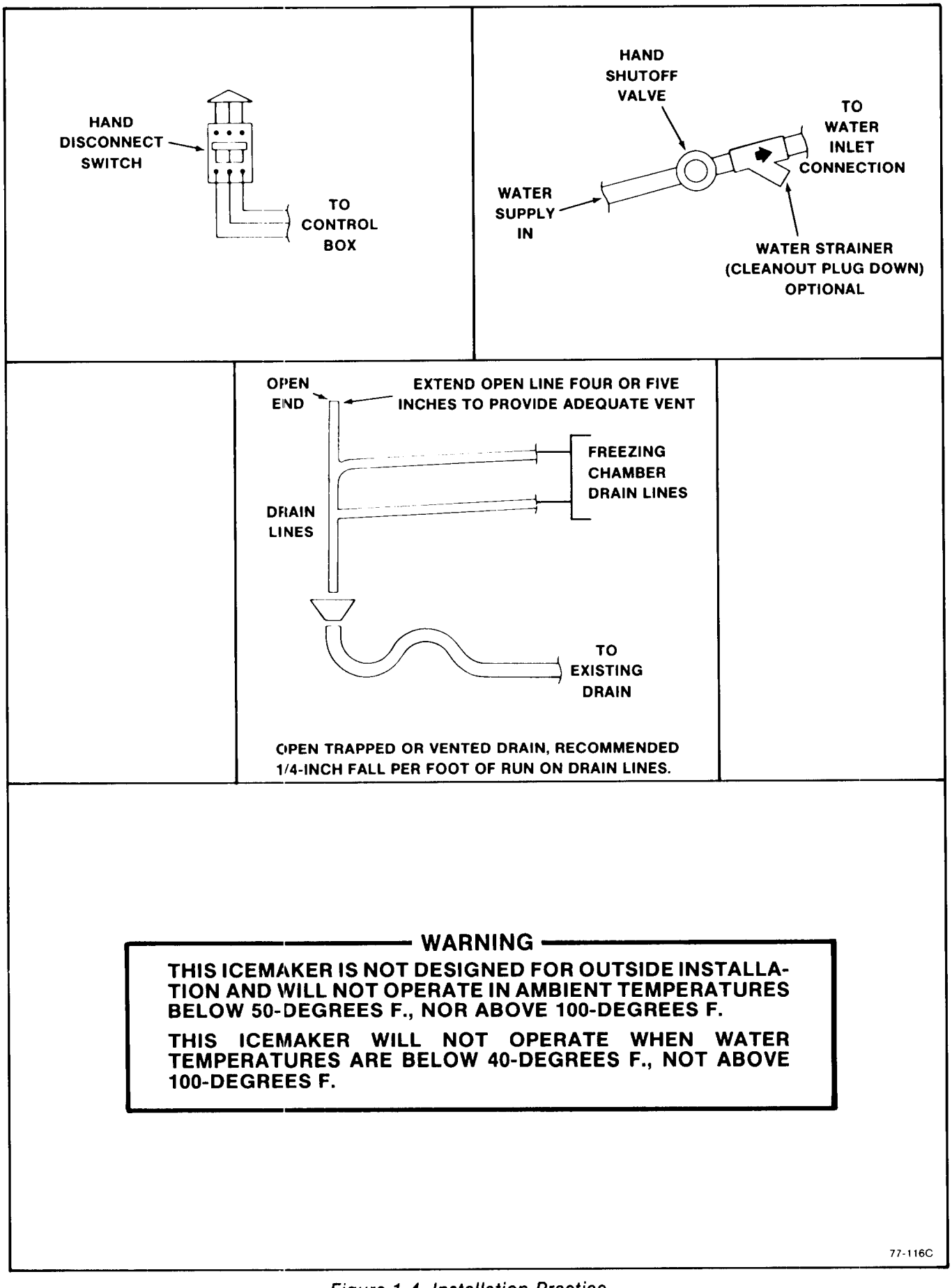

WARNING

THIS ICEMAKER IS NOT DESIGNED FOR OUTSIDE INSTALLATION AND WILL NOT OPERATE IN AMBIENT TEMPERATURES BELOW 50-DEGREES F., NOR ABOVE 100-DEGREES F.

THIS ICEMAKER WILL NOT OPERATE WHEN WATER TEMPERATURES ARE BELOW 40-DEGREES F., NOT ABOVE 100-DEGREES F.

77-116C

Figure 1-4. Installation Practice

VIII. FINAL CHECK LIST

1. Is the Cabinet/Bin level?
2. Is the Cuber in a room where ambient temperatures are a minimum of 50-degrees F. all year around?
3. Is there at least six inches clearance behind the Cabinet, for all connections?
4. All shipping tape removed from doors, panels, styrofoam blocks, etc.?
5. Have all electrical and piping connections been made?
6. Has the electrical power supply wiring been properly connected, and the voltage tested and checked against the nameplate rating? Has proper Chassis-to-earth ground been installed?
7. Is the water supply shutoff valve installed and opened; and, has the inlet water supply pressure been checked to ensure a minimum of 20 PSIG?
8. Have the Compressor hold down bolts been checked, to be sure the Compressor is snug on the mounting pads?
9. Check all refrigerant lines and conduit lines to guard against vibration and possible failure.
10. Check that the Bin Thermostat Control bulb and Bracket have been properly installed.
11. Has the Cuber and Bin been wiped clean with clean damp cloths?
12. Has the Remote Condenser and associated set of pre-charged refrigerant lines been properly installed and connections made and checked?
13. Check to be sure the Ambient Sensing Thermostat, on the Remote Condenser, is set at 50-degrees F.
14. Has a separate electrical power line been routed to the Condenser Fan Motor and Chassis-to-earth ground installed and checked?
15. Has the electrical power to the icemaker been connected to start the 12-hour period of PRE-START crankcase heating?
16. Has the owner been given the User Manual and instructed on how to operate the icemaker and the importance of periodic maintenance?
17. Has the owner been given the name and telephone number of the Authorized SCOTSMAN Distributor or Service Agency serving him?
18. Has the Manufacturer's Registration Card been properly filled out? Check for correct Model and Serial numbers from nameplate then mail the completed card to the SCOTSMAN factory.

SECTION II

OPERATING INSTRUCTIONS

I. START UP

WARNING

Check to BE SURE the 12-hour pre-heating of the Compressor Crankcase has been completed. Be sure the icemaker is properly grounded and connected to proper voltage at the location power source.

1. Move the junction box switch for the Remote Condenser Fan Motor to the ON position.
2. Remove screws, the Top Panel and the Front Panel.
3. Check that the Master ON-OFF and Compressor ON-OFF toggle switches are OFF, on the front of the Control Box.
4. Rotate the shaft of the Timer & Switch Assembly protruding through the hole in the front cover of the Control Box, CLOCKWISE, to start the Timer for filling the reservoir sump, in the Freezing Chamber, with water.

NOTE

Slowly rotate the shaft CLOCKWISE, until the actuator arm on the microswitch drops off of the outer cam into the cam slot. An audible click can be heard, but in a noisy area, look at the cam and switch to observe the event. See A, Figure 2-1.

5. *Move the Master ON-OFF toggle switch to the ON position.*

NOTE

Observe that the Water Inlet Solenoid valve OPENS and inlet water flows from the valve through tubing and can be seen flowing to the Defrost Water Tube, at the top rear of Freezing Chamber, where the water then flows around the inverted ice cube cups and drains into the Freezing Chamber sump. Excess water is overflowed through the standpipe and drain tube. This cycle will take about three minutes, when the Timer will CLOSE the Water Inlet Solenoid Valve.

6. Repeat step 4.
7. After completion of the second Harvest Cycle, move the Compressor ON-OFF toggle switch to the ON position.

NOTE

1. *During START UP, advancing two Harvest Cycles, allows a check that: the Water Inlet Solenoid Valve operates properly; inlet water can be observed flowing; the sump is filled with water in preparation for the Freezing Cycle; and, checks the function of the overflow and drain.*
2. *The Water Pump operates during the defrost Harvest Cycle, Factory testing proved faster defrost and increased ice capacity with continuous operation of the Water Pump.*

8. Temporarily remove Cube Chute for these operational checks.
9. Check that the plastic Curtain hangs evenly and vertically, to prevent loss of water during the Freezing Cycle.

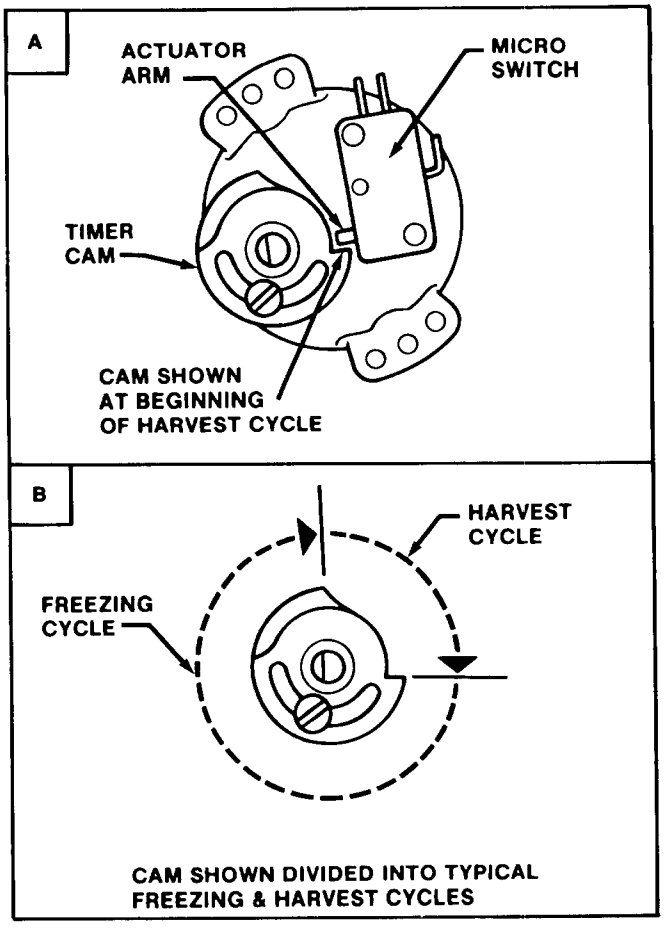

Figure 2-1. Timer Cam Positions

NOTE

The Timer dial does not rotate at the end of the Harvest Cycle, it is started later by the Cube Size Control, in the Control Box.

10. Check operation of Freezing Cycle:
    a. Compressor is operating.
    b. Agitator Motor is operating, as seen by Fan rotating on top of Freezing Chamber. Chamber.
    c. Water Pump is operating, as seen at Tygon Tubes on Pump and looking at water being sprayed into inverted ice cube cups, from rotating Spray Bar, seen inside Freezing Chamber.
    d. Icemaking process begins: feeling inside ice cube cups reveals cold temperatures and very shortly ice begins to form.

NOTE

Freezing time will range between 17 to 25 minutes in a 70-degree F. ambient temperature. Longer time, for temperatures above 70-degrees F. and shorter time required when temperatures are below 70-degrees F. Average complete cycle range is about 20 to 30 minutes.

WARNING

DO NOT operate this Icemaker when the water supply is shut OFF, or is BELOW the recommended 20 PSI water pressure. Move the Master ON-OFF toggle switch to OFF, immediately.

11. Replace the plastic Cube Chute, before Harvest Cycle begins.
12. Observe first ice cube harvest:
    a. Check size of ice cubes: when too small after a second harvest, refer to procedure IV-II, for adjustment to Cube Size Control to increase size of ice cube.

NOTE

Normal cube size is with a one-quarter inch depression in the crown.

    b. Check texture of ice cubes: when partially cloudy throughout, suggests icemaker operating short of water, near end of freezing cycle, or possibly an extreme problem water condition, where in filtering or purifying equipment is recommended. Contact SCOTSMAN - Queen Products Division, Service Department, Albert Lea, Minnesota, for further details.
13. With the icemaker in the Harvest Cycle, hold ice against the Bin Thermostat Control bulb to test shutoff, which should cause the icemaker to shut OFF at the end of the Harvest Cycle.

NOTE

Within minutes after the ice is removed from the sensing bulb, the bulb will warm up and cause the icemaker to restart. This control is factory set and should not be reset until testing is performed. Normal setting is about 35-degrees F. CUT-OUT and 39-degrees F. CUT-IN.

14. Install refrigerant service gauges on the high side and low side Schrader valve fittings and check the Compressor head pressure and back pressure.

NOTE

Air-Cooled Models: Head pressure after 20 minutes of Freezing Cycle, at 70-degree F. ambient temperature, will be about 135 PSIG. The back pressure tends to equalize during hot gas defrost and gradually pulls down to about four PSIG, just before Harvest Cycle. Higher ambient temperatures and dirty Condenser will cause higher pressure.

15. Replace Control Box Cover and all service panels.
16. Remove refrigerant service gauges.
17. Thoroughly explain to the owner/user the significant specifications of the Icemaker, the start up and operation, going through the procedures in the operating instructions. Answer all questions about the Icemaker, by the owner; and, inform the owner of the name and telephone number of the authorized SCOTSMAN Distributor, or Service Agency serving him.

SECTION III
PRINCIPLES OF OPERATION - How It Works

I. FREEZING CYCLE

Water from the sump in the reservoir of the Freezing Chamber is pumped to a rotating Spray Bar Assembly, which is powered by the Agitator Motor drivemotor on top of the Freezing Chamber. Each Spray Bar Assembly has ten jets through which water is uniformly sprayed into the inverted ice cube cup molds of the Freezing Chamber Evaporator. See Figure 3-1. At the beginning of the Freeze Cycle, the electrical circuit is completed to the Compressor, Water Pump, and the coil of the Finish Relay. The Water Pump operates continuously during the Freeze Cycle, through contacts of the Finish Relay.

Refrigerant is compressed in the Compressor and discharged into the Condenser as a high pressure, high temperature gas. The refrigerant is cooled and condensed by air and condenses to a high pressure, high temperature liquid. This liquid refrigerant, then passes through a Receiver, which stores excess refrigerant not required at high condensing temperatures: then, on to the Thermostatic Expansion Valve where the temperature and pressure of the liquid refrigerant are lowered. The low pressure, low temperature liquid refrigerant, next enters the Evaporator. The refrigerant is warmed by water being sprayed against the Evaporator and begins to boil off, to become a gas. The refrigerant next travels through the Accumulator, where any remaining liquid refrigerant then returns to the Compressor as a low pressure, low temperature gas, and the cycle starts again.

During the Freezing Cycle, both the Water Inlet Solenoid Valve and the Hot Gas Solenoid Valve are CLOSED.

When the ice cubes are about three-quarters formed, the Cube Size Control bulb located on the Evaporator inlet lines will sense the temperature at which it is preset to CLOSE.

This will complete the electrical circuit to the Timer. The Timer then controls the remainder of the cycle.

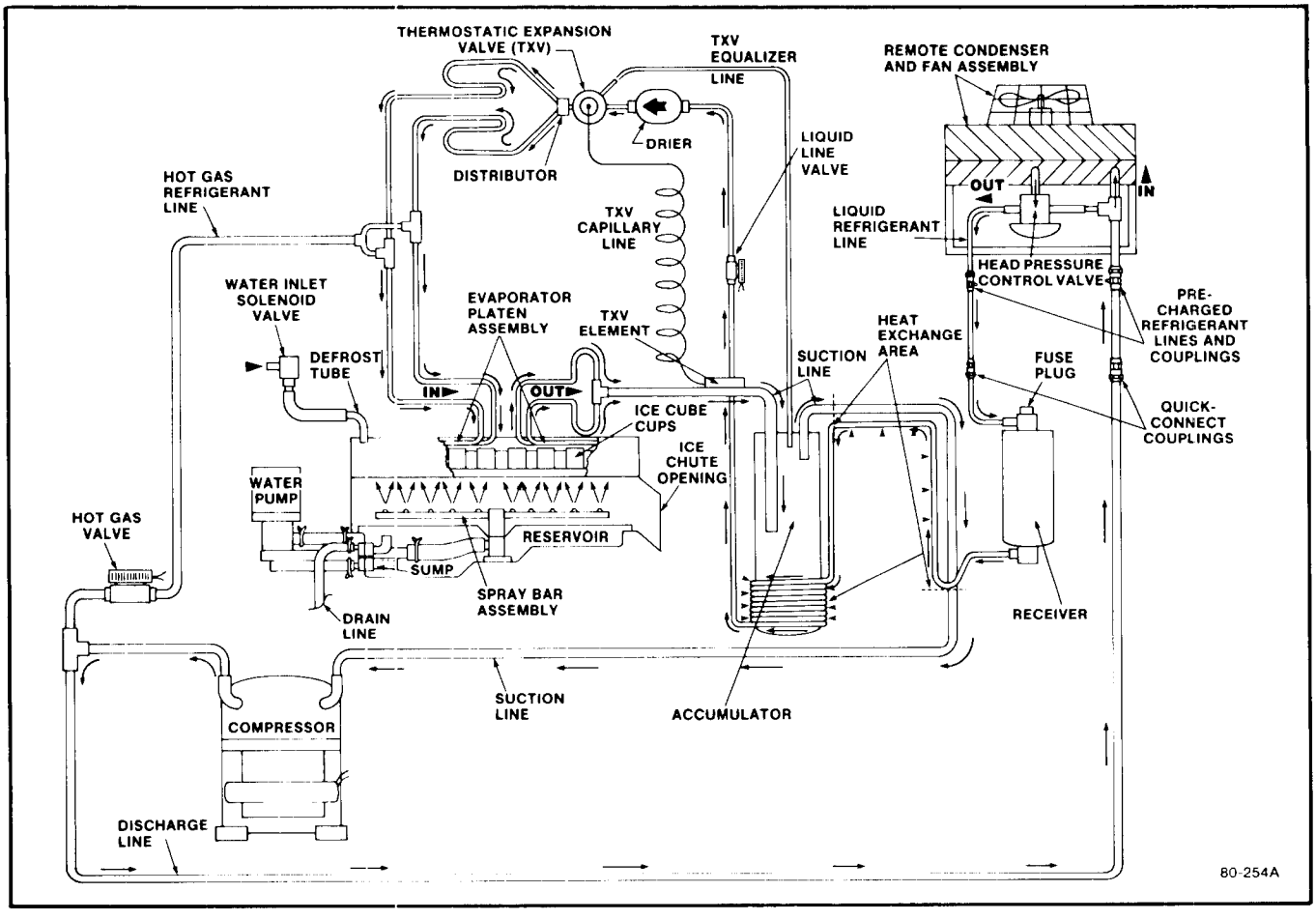

Figure 3-1. Freezing Cycle

The Timer will keep the Icemaker operating in the Freezing Cycle for the next six minutes. This will give the cubes time to fully form. After six minutes, the Timer will switch the Icemaker into the Harvest Cycle, through the contacts of the Timer Assembly microswitch.

II. HARVEST CYCLE

When the Timer switches the Icemaker into the Harvest Cycle, hot gas being discharged from the Compressor is diverted from the Condenser through the Hot Gas Solenoid Valve into the Evaporator. During this cycle, the hot gas circulates from the Compressor to the Evaporator and back again, bypassing the Condenser and Thermostatic Expansion Valve. In the electrical circuit, the Compressor is operating and both the Water Inlet Solenoid Valve and the Hot Gas Solenoid Valve are energized. See Figure 3-2.

Opening the Water Inlet Solenoid Valve, allows a fresh water supply to be discharged into the top of the Evaporator platen assembly. The finished ice cubes are released from the Evaporator, by the warming effect of the hot gas flowing through the Evaporator tubes and the water flow around the ice cube molds. The released ice cubes drop into the inner bottom of the Freezing Chamber and pushed by the rotating Spray Bar Assembly out the slightly slanted ice chute opening, down the plastic Cube Chute and into the ice storage bin. At the end of the Harvest Cycle, the Timer cam will push the actuator arm of the microswitch IN. If the Bin Thermostat is still CLOSED, a whole new cycle will begin. If the Bin Thermostat is OPEN, the icemaker will shut OFF at this time.

III. PUMP DOWN CYCLE CIRCUIT

Three added components, in this series icemaker, control the pump down cycle function: a Contactor, a liquid line Solenoid Valve and a Lo-Pressure Control.

At the end of the Finishing Cycle the liquid line Solenoid Valve will CLOSE. The low side pressure is ABOVE the Lo-Pressure Control setting, which allows the Compressor to continue to PUMP DOWN to 10 PSIG, at which time the Lo-Pressure Control will OPEN, de-energizing the Contactor, which SHUTS OFF the Compressor. As the low side pressure builds back up to 43 PSIG, the Lo-Pressure Control CLOSES, and the cycle starts again.

IV. COMPONENT DESCRIPTIONS

A. BIN THERMOSTAT CONTROL

The Bin Thermostat Control is located in the

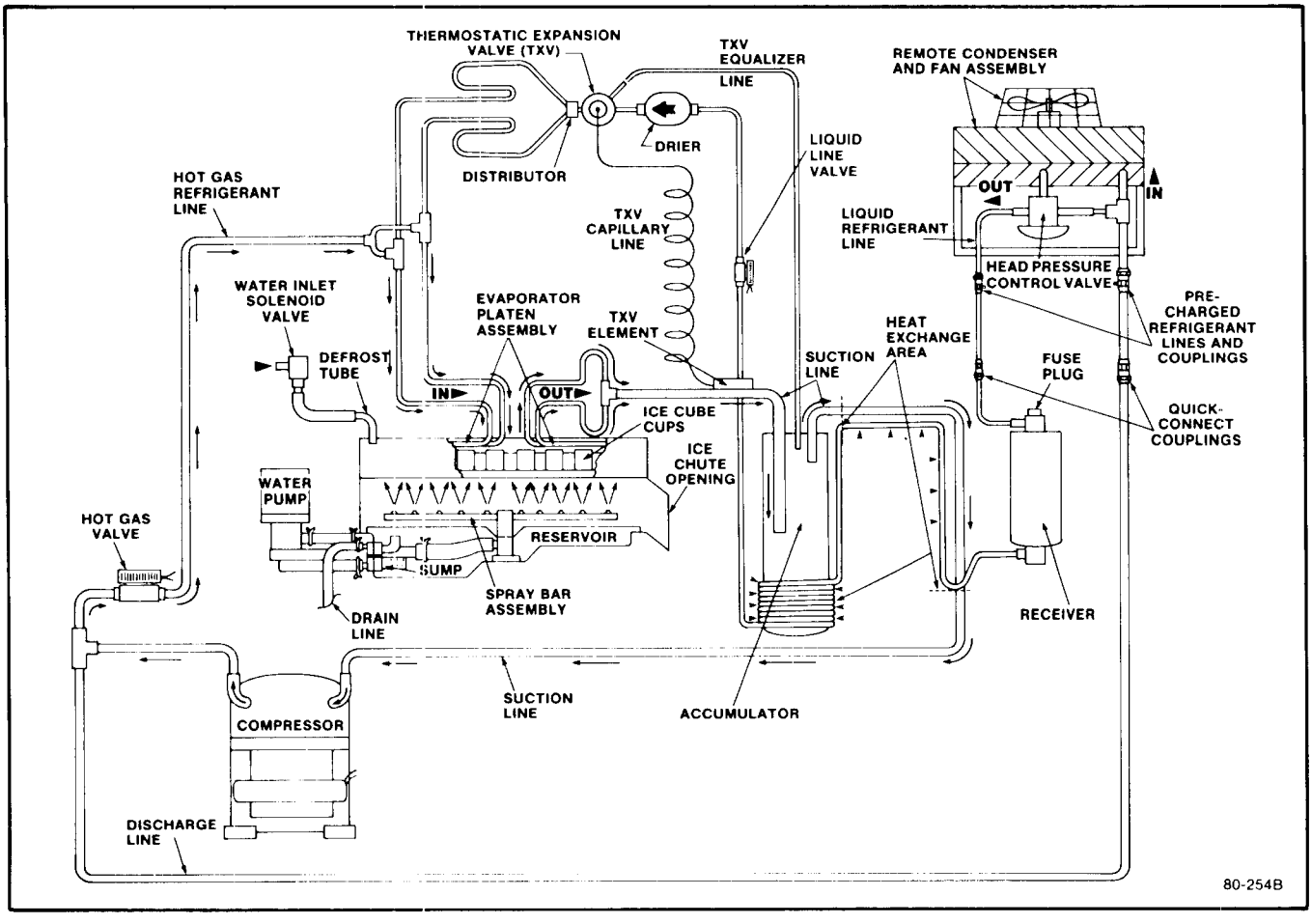

Figure 3-2. Harvest Cycle

right side of the gusset in the front upper corner of the Chassis frame. The sensing capillary tube of the control is routed downward and into the ice storage Bin. The capillary tube is threaded through the grommeted holes of the combination cube deflector and thermostat bulb bracket. The Bin Thermostat Control functions to automatically shut OFF the Icemaker, when the ice storage Bin is filled and ice contacts the capillary tube. It also signals the RESTART of the Icemaker when the capillary tube starts to warm up, after ice has been removed from the Bin.

NOTE

Altitude adjustment should ONLY be performed on Icemakers installed at 2000-foot level locations and ABOVE, and adjust only in increments of one-fourth turn of a screw at a time.

B. COMPRESSOR CRANKCASE HEATER

The Compressor Crankcase Heater is an electrical wire band heater located around the lower outside shell of the Compressor, below the level of the crankcase oil in the Compressor. The heat generated by the Crankcase Heater heats oil in the crankcase, which keeps the oil separated from the refrigerant; and, during the OFF cycle, prevents the refrigerant from migrating back into the Compressor from other areas of the refrigeration system; which can cause severe damage to the Compressor, at STARTUP.

WARNING

BE SURE the Compressor Crankcase Heater is ON, 12-HOURS BEFORE STARTUP, to properly heat crankcase oil, and separate the refrigerant from the oil and PREVENT POSSIBLE DAMAGE to the Compressor, at START-UP.

C. COMPRESSOR START RELAY

The Compressor Start Relay functions to carry the Compressor line current. The relay is wired so any control in the pilot circuit, such as the Bin Thermostat, Low Pressure - and High Pressure Controls, etc., will cause the relay holding coil to be de-energized, when the control contact OPENS, thereby breaking the circuit to the Compressor through the relay points.

D. CUBE SIZE CONTROL

The temperature sensing Cube Size Control affects the length of the Freezing Cycle prior to initiating the Finishing Timer. The Cube Size Control closes its contacts when the Evaporator reaches a preset temperature, starting the Finishing Timer. A variation in either ambient air or incoming water temperature will affect the efficiency of the refrigeration system. This will vary the length of time it takes the Evaporator to reach the temperature at which the Cube Size Control is preset to CLOSE; which, in turn, will affect the overall cycle time.

NOTE

Be sure to refer to procedure IV-II, Adjustment of the Cube Size Control, BEFORE attempting to adjust the control.

E. FINISH RELAY

The multi-function, three pole, double-throw, plug-in relay is installed directly into a receptacle on the printed circuit board in the Control Box. The relay functions, in part, to by-pass the Bin Thermostat Control, to prevent the Icemaker from shutting OFF, when a filled-bin condition occurs, during the Freezing Cycle. The by-pass action serves to ensure full-sized ice cubes with each Harvest cycle; and, to prevent short cycling on the Bin Thermostat Control.

F. FINISHING TIMER - Timer & Switch Assembly

The function of the Finishing Timer begins when activated by the Cube Size Control. The Timer controls a fifteen minute dual function: eleven and one-half minutes are programmed to finish freezing the ice cubes and the final three and one-half minute portion is for the defrost operation and harvest of the ice cubes. All electrical circuitry is connected through the printed circuit board and the Finishing Timer and shunted by the single-pole, double-throw microswitch to either the Freezing Cycle or the Harvest Cycle. The microswitch is actuated by a Cam Assembly directly connected to the Timer Motor. The Timer Cam can be adjusted to vary the defrost timer as required.

G. HOT GAS SOLENOID VALVE

The Hot Gas Solenoid Valve functions only during the Harvest Cycle, to divert the hot discharge gas from the Compressor, by-passing the Condenser and capillary tube, for direct flow to the Evaporator Platen Assembly to release ice cubes from the inverted ice cube molds. The Hot Gas Solenoid Valve is comprised of two parts, the Body & Plunger and the Coil & Frame assemblies. Installed in the discharge line of the Compressor, the energized solenoid coil lifts the valve stem within the valve body to cause the hot discharge gas to be diverted when the Finishing Timer has advanced to the start of the Harvest Cycle.

H. SPRAY BAR ASSEMBLY

The Spray Bar Assemblies are rotated by the Agitator Motor, a small drivemotor mounted on top of the Freezing Chamber; and, designed to channel recirculating water to small jets for uniformly spraying water into the inverted ice cube cups. The Celcon material, used in fabricating the Spray Bar parts, is not subject to chemical attack by either acidic or alkaline materials at low temperatures or at high temperatures. Because of the smooth non-porous surface of the Celcon material Spray Bar, foreign materials have difficulty trying to adhere to these surfaces, thereby, reducing the usual frequency of cleaning procedures.

NOTE

Refer to procedure V-IV, CLEANING - Icemaker; and, for problems requiring removal of parts refer to procedure IV-XI, for details for removing the Spray Bar Assembly.

I. WATER INLET SOLENOID VALVE

The Water Inlet Solenoid Valve functions only during the Harvest Cycle, when it is energized to permit a metered, gallon-per-minute rate of incoming water, to flow through the Defrost tube onto the top of the plastic Platen Assembly, assisting in the harvest of ice cubes. The water drains through holes in the Platen Assembly into the Reservoir in the lower section of the Freezing Chamber; and there, the water is recirculated through the Water Pump for return to the Spray Bars.

J. THERMOSTATIC EXPANSION VALVE

The Thermostatic Expansion Valve regulates the amount of refrigerant admitted into the evaporator during the Freezing Cycle. The operation of the Valve is determined by three fundamental pressures: (1) Capillary bulb pressure acts on one side of the diaphragm, tends to OPEN the Valve; (2) Evaporator pressure acts on the opposite side of the diaphragm, and tends to CLOSE the Valve; and, (3) Spring pressure, within the Valve, which also assists in the CLOSE action, is applied to the pin carrier and is transmitted through push rods to a buffer plate on the Evaporator side of the diaphragm.

When liquid refrigerant in the Evaporator evaporates and becomes superheated, the temperature increases, and the capillary bulb senses increased temperature and changes its refrigerant correspondingly, increasing temperature and pressure. This pressure, acting on the bulb side of the diaphragm, is greater than the opposing Evaporator pressure plus spring pressure, causing the valve pin to be moved away from the valve seat, thus admitting liquid refrigerant into the Evaporator until the pressures equalize and the valve CLOSES.

REFRIGERANT CHARGE

MODEL	Refrig. Chg.
HC400R	72 oz. R-12 (Approx.) (Icemaker ONLY)

NOTE

Always CHECK NAMEPLATE on individual Icemaker for specific refrigerant charge, BEFORE charging the refrigeration system. The above listed refrigerant charges are approximate charges for the HC400R Cubers, however it is important to CHECK NAMEPLATE for each Icemaker, especially when there are different Compressors. See table below, for charging weights of the refrigerant, when charging the complete refrigerant system. SEE usage label on the Rear Panel for each icemaker.

REMOTE CONDENSER	PRE-CHARGED REFRIGERANT LINE KIT	COMPLETE SYSTEM REFRIGERANT CHARGE
RC151	RT225	136 oz.
RC151	RT240	136 oz.
RC202	RT225	112 oz.
RC202	RT240	112 oz.
RC303	RT225	112 oz.
RC303	RT240	112 oz.

SECTION IV
ADJUSTMENT & REMOVAL & REPLACEMENT

The procedures provided in this Section are arranged in alphabetical order, to make specific Adjustment and Removal and Replacement information easy to locate.

Read the instructions thoroughly before performing any Adjustment or Removal and Replacement Procedures.

I. ADJUSTMENT OF THE BIN THERMOSTAT CONTROL

The control for the Bin Thermostat is the Temperature Control, located in the right side of the gusset in the front upper corner of the Chassis frame.

See Figure 4-1 for location and direction of rotation, clockwise (CW) or counterclockwise (CCW), of the adjusting screws on the Temperature Control, the adjustment is to be performed.

WARNING

The adjusting screws on the Temperature Control device have very sensitive response to adjustment. DO NOT attempt to adjust the screw until after thoroughly reading and understanding the following instructions and illustration. Over-adjusting or erratic guessing, can foul the instrument and cause ultimate delay and part replacement, WHICH COULD HAVE BEEN PREVENTED.

II. ADJUSTMENT OF THE CUBE SIZE CONTROL

CAUTION

BEFORE performing actual adjustment to the Cube Size Control, check other possible

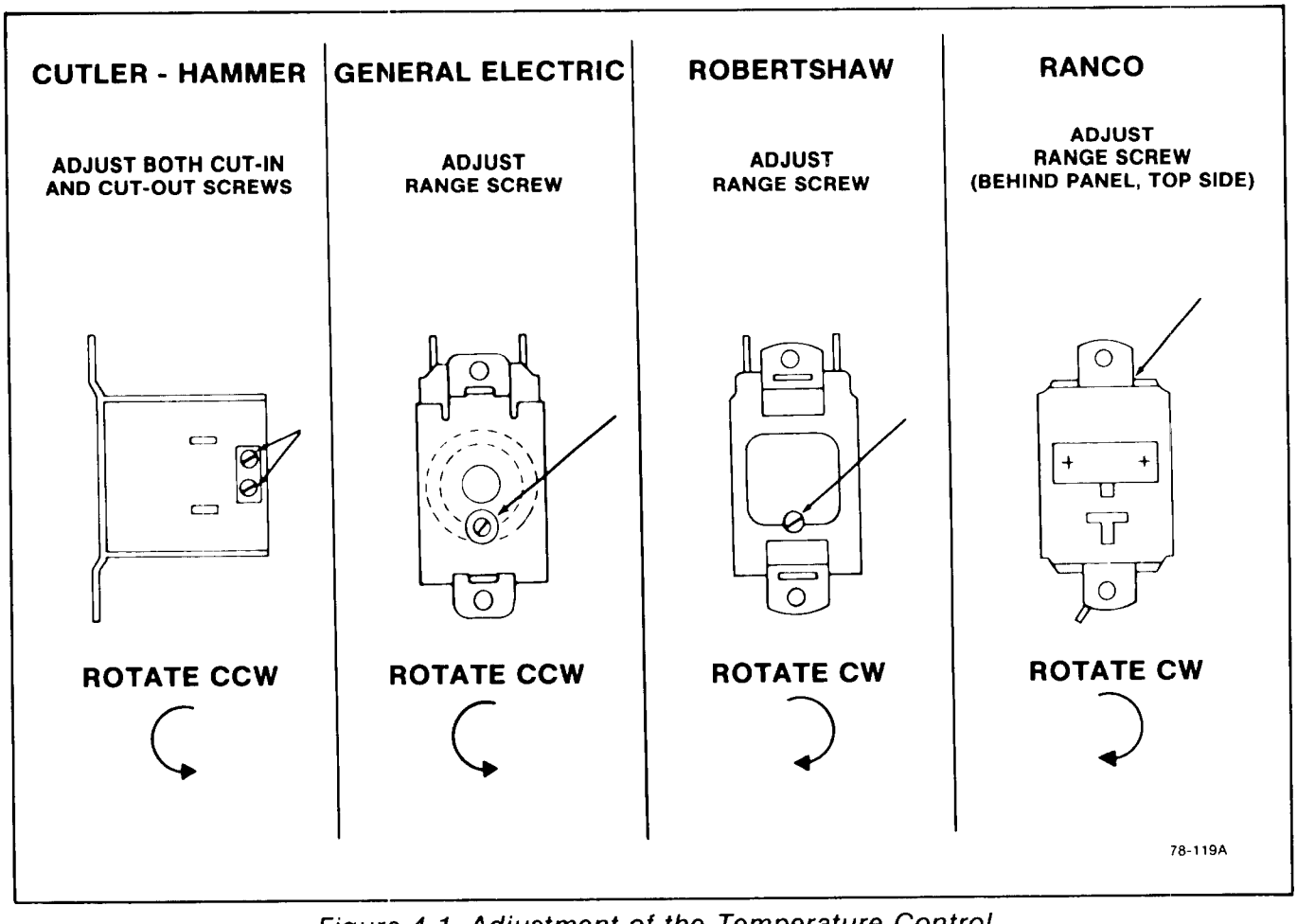

Figure 4-1. Adjustment of the Temperature Control

causes for cube size problems, refer to Section VI, SERVICE DIAGNOSIS for problem review and analysis.

DO NOT perform adjustment when a new Cube Size Control is installed, until the control bulb has been properly installed in the tube well, on the refrigerant tube of the Platen Assembly and the Icemaker has progressed through several complete freezing and harvest cycles, to observe size and quality of ice cubes and whether or not a cube size problem exists.

As a reverse acting temperature control, adjustment on the Cube Size Control is performed to either cause larger sized ice cubes or smaller sized ice cubes to be produced.

A. To Produce LARGER Sized Ice Cubes:

1. Locate the Cube Size Control, in the left side of the gusset in the front upper corner of the Chassis frame.
2. Rotate the adjusting screw one-eighth of a turn CLOCKWISE toward COLDER.
3. Observe size of ice cubes in next two ice cube harvests and repeat step 2 above, in one-eighth turn increments, until desired ice cube size is achieved.

B. To Produce SMALLER Sized Ice Cubes:

1. Locate the Cube Size Control, in the left side of the gusset in the front upper corner of the Chassis frame.
2. Rotate the adjusting screw one-eighth of a turn COUNTERCLOCKWISE toward WARMER.
3. Observe size of ice cubes in next two ice cube harvests and repeat step 2 above, in one-eighth turn increments, until desired ice cube size is achieved.

III. ADJUSTMENT OF THE TIMER & SWITCH ASSEMBLY

The Timer & Switch Assembly is factory set, so that one complete revolution of the cam on the Timer represents fifteen minutes. Eleven and one-half minutes comprise the freezing cycle event during cam rotation, and the final three and one-half minutes program the defrost and harvest cycle. Rotating the shaft of the Timer Cam, CLOCKWISE will allow positioning the actuator arm of the microswitch on the cam at the selected start position for either the freezing cycle or harvest cycle, as required, during the START UP procedures and in the CLEANING instructions. Rotating the shaft COUNTER-CLOCKWISE will unscrew the shaft from the threaded stud on the Timer Cam.

To Adjust the Timer Switch Assembly:

A. HARVEST CYCLE: Slowly rotate the shaft of the Timer & Switch Assembly, located in the hole in the front of the Control Box Cover, CLOCKWISE, until the actuator arm on the microswitch drops off of the outer cam into the cam slot. An audible click can be heard, but in a noisy area, look at the cam and switch to observe the event. See Figure 4-2.

B. FREEZING CYCLE: Slowly rotate the shaft of the Timer & Switch Assembly, located in the hole in the front of the Control Box Cover, CLOCKWISE, until the actuator arm on the microswitch rides up out of the cam slot to the start of the surface of the outer cam.

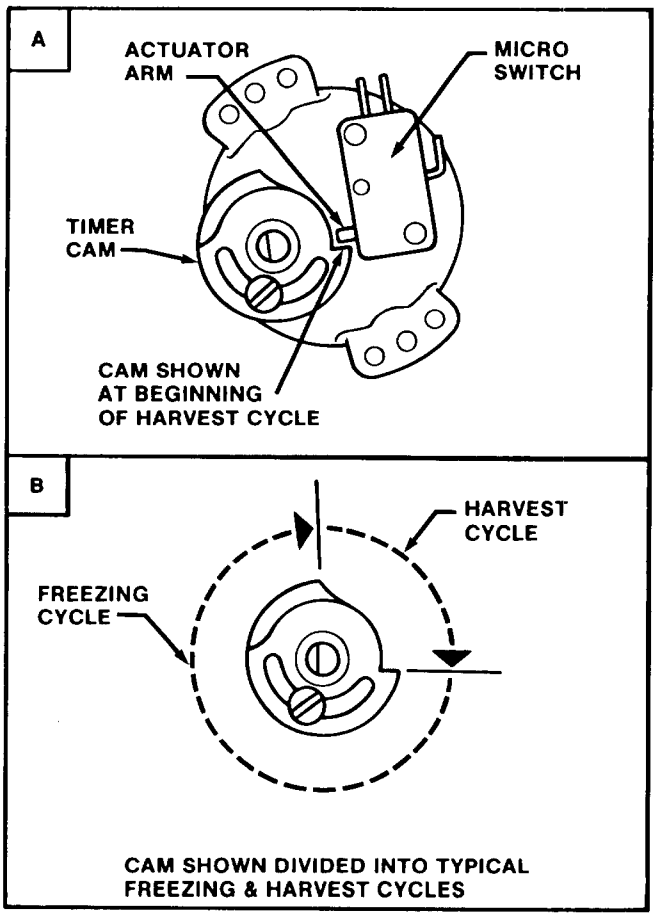

Figure 4-2. Adjustment of the Timer & Switch Assembly.

WARNING

Be sure the electrical power supply and the water supply are OFF BEFORE starting any of the following REMOVAL AND REPLACEMENT procedures as a precaution to prevent possible personal injury or damage to equipment. BEFORE RE-START, be sure Compressor Crankcase Heater is ON for 12-hour period.

IV. REMOVAL AND REPLACEMENT OF THE AGITATOR MOTOR ASSEMBLY

A. To remove the Agitator Motor Assembly:

1. Remove screws and the Top Panel and Front Panel to gain access to the Agitator Motor.
2. Tilt the top of the plastic Cube Chute forward slightly, then, lift the Cube Chute up for removal.
3. Remove three U-Type Clips and the plastic Curtain Assembly.
4. Reach through the ice chute opening in the Freezing Chamber and feel for the Spray Bar.
5. Move hand to the center hub and rotate the Spray Bar, so one end is aligned with the ice chute opening.
6. Lift the Spray Bar up, off of the jet bearing hub, then, remove the Spray Bar through the ice chute opening.
7. Disconnect electrical leads and ground wire from terminals on the Agitator Motor.
8. Reach through the ice chute opening, as before, and grasp the top Drive Fork with one hand, and the Agitator Motor Fan, on top of the Freezing Chamber, with the other hand. See Figure 4-3.
9. Hold the Fan blades still and rotate the left-hand thread Drive Fork to the right, COUNTERCLOCKWISE, and unscrew the Drive Fork from the Agitator Motor.
10. Remove four screws and lift the Agitator Motor out the top of the Freezing Chamber.

B. To replace the Agitator Motor Assembly, reverse the removal procedure.

V. REMOVAL AND REPLACEMENT OF THE BIN THERMOSTAT CONTROL

A. To remove the Bin Thermostat Control:

1. Remove screws and the Front Panel to gain access to the Bin Thermostat Control.
2. Trace capillary tube, from the Bin Thermostat Control, down to the Cube Deflector.
3. Carefully remove the capillary tube from the bulb holder holes on the side of the Cube Deflector.
4. Carefully withdraw the capillary tube from the Bin, up through the Chassis Base.
5. Remove electrical leads from the Bin Thermostat Control.
6. Remove screws and the Bin Thermostat Control.

B. To replace the Bin Thermostat Control,

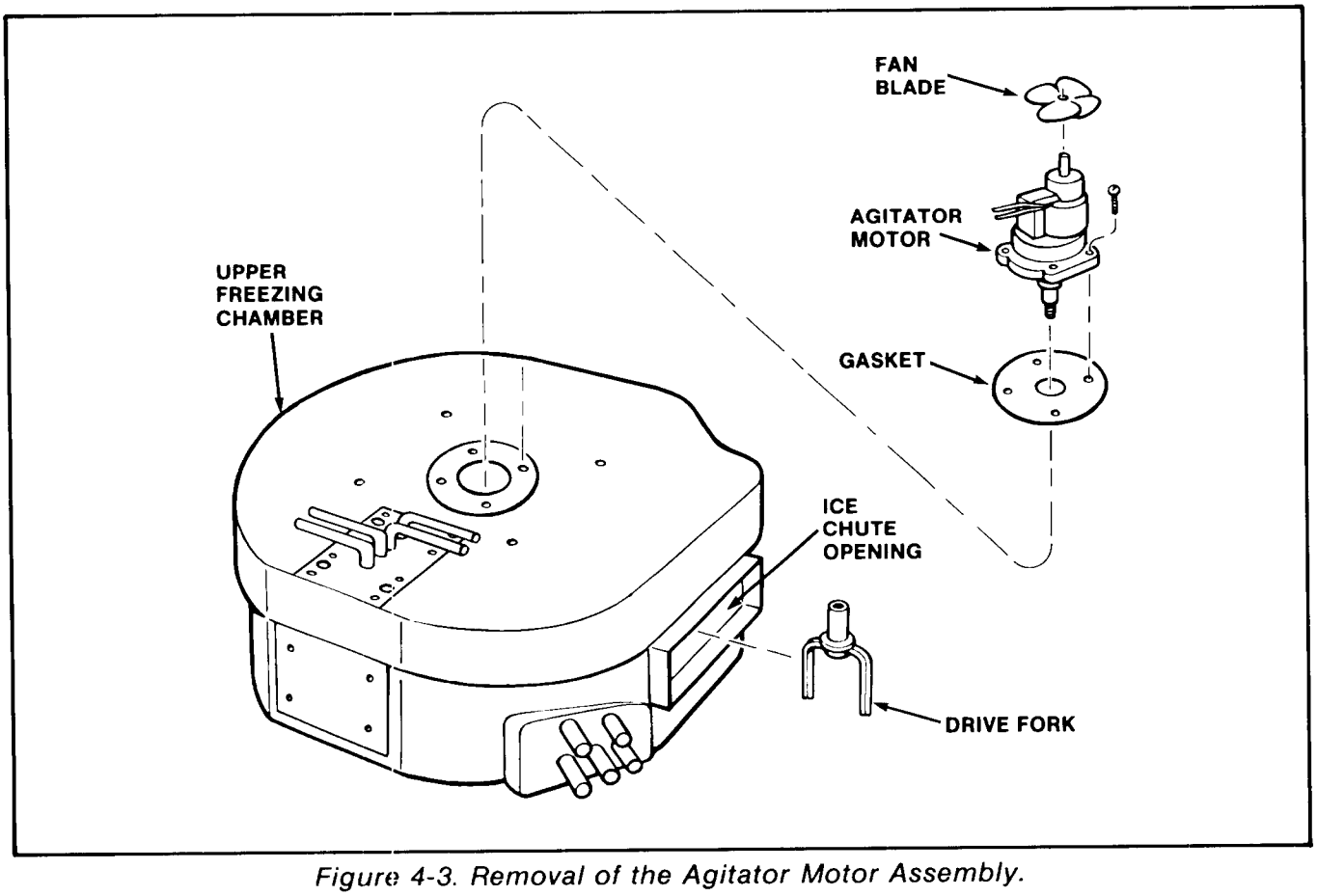

Figure 4-3. Removal of the Agitator Motor Assembly.

reverse the removal procedures.

VI. REMOVAL AND REPLACEMENT OF THE COMPRESSOR ASSEMBLY

CAUTION

Always install a replacement Drier, anytime the sealed refrigeration system is opened. Do not replace the Drier until all other repair or replacement has been completed. BE SURE the Compressor Crankcase Heater is ON, 12-HOURS BEFORE STARTUP.

A. To remove the Compressor Assembly:

1. Remove screws and the Top, Front and Left Side Panels.
2. Bleed off or blow the refrigerant charge through the Schrader valve.
3. Remove the cover from the terminal box on the Compressor; then, remove screws and electrical leads from the Compressor.
4. Disconnect the Compressor Crankcase electrical leads from the Control Box.
5. Unsolder the refrigerant suction line and the discharge line from the Compressor.
6. Remove four bolts and washers which secure the Compressor to the Chassis mounting base.
7. Slide and remove the Compressor from the left side of the Cabinet.
8. Unsolder the process header from the Compressor and retain for installation on the replacement Compressor.

NOTE

Prior to next step, note the exact location of the Compressor Crankcase Heater on the Compressor, so installation will be the same on the replacement Compressor.

9. Loosen and remove the Compressor Crankcase Heater from Compressor. Retain for replacement Compressor.

B. To replace the Compressor Assembly, reverse the removal procedure.

VII. REMOVAL AND REPLACEMENT OF THE CUBE SIZE CONTROL

A. To remove the Cube Size Control:

1. Remove screws and the Front Panel to gain access to the Cube Size Control.
2. Trace capillary Tube, from the Cube Size Control, to the refrigerant suction line on the Evaporator Platen Assembly; then peel back the insulation.
3. Remove clips and the coiled capillary tube bulb out of the Freezer section of the Cabinet.
4. Remove electrical leads from the Cube Size Control.
5. Remove screws and the Cube Size Control.

B. To replace the Cube size Control, reverse the removal procedure.

VIII. REMOVAL AND REPLACEMENT OF THE CURTAIN ASSEMBLY

A. To remove the Curtain Assembly:

1. Remove screws and the Right Side Panel to gain access to the Curtain Assembly to be removed.
2. Tilt the top of the plastic Cube Chute forward slightly, then, lift the Cube Chute up for removal.

NOTE

Before removing the Curtain Assembly in the next step, look inside the ice chute opening to note the irregular end of the plastic stiffener of the Curtain Assembly is installed at the left side of the opening.

3. Remove three U-Type Clips and the plastic Curtain Assembly from the top lip of the ice chute opening.

B. To replace the Curtain Assembly, reverse the removal procedure.

NOTE

Be sure to install the replacement Curtain Assembly with the irregular end of the plastic stiffener positioned at the left side of the ice chute opening; and, the edge of the Curtain is dressed evenly with the top lip of the ice chute opening and secured with three U-Type Clips. The thin, clear plastic sheet of the curtain should hang down evenly.

IX. REMOVAL AND REPLACEMENT OF THE DRIER

CAUTION

Always install a replacement Drier, anytime the sealed refrigeration system is opened. Do not replace the Drier until all other repair or replacement has been completed. BE SURE the Compressor Crankcase Heater is ON, 12-HOURS BEFORE STARTUP.

A. To remove the Drier:

1. Remove the screws and the Left Side Panel and the Front Panel.

2. Bleed off or blow the refrigerant charge through the Schrader valve.
3. Remove the clamp attaching the Drier to the Chassis base.
4. Unsolder refrigeration lines at both ends of the Drier.

B. To replace the Drier:

CAUTION

1. If the factory seal is broken on the replacement Drier, exposing it to the atmosphere more than a few minutes, the Drier will absorb moisture from the atmosphere and lose substantial ability for moisture removal.

2. Be sure the replacement Drier is installed with the arrow positioned in the direction of the refrigerant flow.

1. Remove the factory seals from the replacement Drier and install the Drier in the refrigerant lines with the arrow positioned in the direction of the refrigerant flow.
2. Solder the Drier into the lines, two places.
3. Secure Drier to Chassis base with the clamp.
4. Purge the system and check for leaks.
5. Thoroughly evacuate the system to remove moisture and non-condensables.
6. Charge the system with refrigerant, by weight. SEE NAMEPLATE.
7. Replace and attach the Left Side Panel and the Front Panel.

X. REMOVAL AND REPLACEMENT OF THE FREEZING CHAMBER

A. To remove the Freezing Chamber:

1. Remove screws and the Top Panel, Front Panel and the Right Side Panel to gain access to the Freezing Chamber.
2. Tilt the top of the plastic Cube Chute forward slightly, then, lift the Cube Chute up for removal.
3. Remove three U-Type Clips and the plastic Curtain Assembly.
4. Reach through the ice chute opening in the Freezing Chamber and feel for the Spray Bar.
5. Move hand to the center hub and rotate the Spray Bar, so one end is aligned with the ice chute opening.
6. Lift the Spray Bar up, off of the jet bearing hub, then, remove the Spray Bar through the ice chute opening.
7. Disconnect electrical leads and ground wire from terminals on the Agitator Motor.
8. Reach through the ice chute opening, as before, and grasp the Drive Fork with one hand, and the Agitator Motor Fan on top of the Freezing Chamber, with the other hand.
9. Hold the Fan Blades still and rotate the left-hand thread Drive Fork to the right. COUNTERCLOCKWISE, and unscrew the Drive Fork from the Agitator Motor.
10. Remove four screws and lift out the Agitator Motor.
11. Remove hose clamps and work loose four Tygon Tubes from the Freezing Chamber, three from the Water Pump and one drain tube.
12. Carefully lift the Platen and Cover Assembly, and tie off or use a board to support, and give ample space to allow removal of the Freezing Chamber.
13. Remove screws, lockwashers and bolts and and the Freezer Mount Plates.
14. Carefully work the Freezing Chamber out of the Chassis.

B. To replace the Freezing Chamber, reverse the removal procedure.

XI. REMOVAL AND REPLACEMENT OF THE SPRAY BAR ASSEMBLY

A. To remove the Spray Bar Assembly:

1. Remove screws and the Right Side Panel to gain access to the Spray Bar Assembly.
2. Tilt the top of the plastic Cube Chute forward slightly, then, lift the Cube Chute up for removal.
3. Remove three U-Type Clips and the plastic Curtain Assembly.
4. Reach through the ice chute opening in the Freezing Chamber and feel for the Spray Bar.
5. Move hand to the center hub and rotate the Spray Bar, so one end is aligned with the ice chute opening.
6. Lift the Spray Bar up, off of the jet bearing hub, then, remove the Spray Bar through the ice chute opening.

B. To replace the Spray Bar Assembly, reverse the removal procedure.

XII. REMOVAL AND REPLACEMENT OF THE THERMOSTATIC EXPANSION VALVE

CAUTION

Always install a replacement Drier, anytime the

sealed refrigeration system is opened. Do not replace the Drier until all other repair or replacement has been completed. BE SURE the Compressor Crankcase Heater is ON, 12-HOURS BEFORE STARTUP.

A. To remove the Thermostatic Expansion Valve:

1. Remove screws and the Front Panel.
2. Bleed off or blow the refrigerant charge through the Schrader valve.

NOTE

Before actual removal of the capillary bulb from the suction line, in the next step, MAKE NOTE or MARK, the exact location position, for precise replacement positioning of bulb.

3. Unwrap insulation, loosen clamp, mark position, and remove the capillary bulb of the Thermostatic Expansion Valve from the suction line of the Evaporator.

CAUTION

Wrap the Thermostatic Expansion Valve with WET CLOTHS, to protect the sensitive parts during soldering and installation. DO NOT direct flame toward the Valve, or the capillary line and bulb. Use extra care to KEEP DIRECT FLAME from these parts.

4. With Thermostatic Expansion Valve protected with WET CLOTHS, unsolder two ¼-inch O.D. lines from the body of the Valve.
5. Unsolder two 3/16-inch O.D. lines from the Evaporator inlet tubing and remove the Valve.

B. To replace the Thermostatic Expansion Valve, reverse the removal procedures and follow special precautions given for steps in installing and soldering Valve tubing.

XIII. REMOVAL AND REPLACEMENT OF THE WATER PUMP ASSEMBLY

A. To remove the Water Pump Assembly:

1. Remove screws and the Right Side Panel and the Front Panel.
2. Remove one screw and one end of the green ground wire from the Water Pump Bracket.
3. Remove two screws and washers attaching the Water Pump Assembly to the Water Pump Bracket.
4. Remove three hose clamps connecting the three Tygon Tubes to the Freezing Chamber; then, lift the Water Pump Assembly off of the Water Pump Bracket and work loose the three attached Tygon Tubes from the Freezing Chamber.

B. To replace the Water Pump Assembly, reverse the removal procedure.

XIV. REMOVAL AND REPLACEMENT OF REMOTE CONDENSER FAN MOTOR ASSEMBLY, THERMOSTAT CONTROL, HEAD PRESSURE CONTROL VALVE

CAUTION

Always install a replacement Drier, anytime the sealed refrigeration system is opened. Do not replace the Drier until all other repair or replacement has been completed. BE SURE the Compressor Crankcase Heater is ON, 12-HOURS BEFORE STARTUP.

WARNING

Be sure the electrical power supply to the Remote Condenser Fan Motor is OFF and the electrical power supply to the icemaker is OFF.

1. Loosen screws securing the wire guard around the Fan Blade on top of the Remote Condenser; then, rotate the wire guard hooks away from the screws and remove the wire guard.

CAUTION

BEFORE removing the Fan Blade in the next step, observe and mark the exact location of the height of the Fan Blade, on the shaft of the Fan Motor. This is a critical point, to be sure the replacement Fan Blade is installed in the same position, for proper balance and maximum efficiency of air flow. USE CARE in handling Fan Blade to prevent bending blades or otherwise disturbing the sensitive balance.

2. Loosen two setscrews, note and mark location of Fan Blade on shaft of Fan Motor and remove the Fan Blade.
3. Remove Cover to Junction Box and disconnect the electrical wire leads from the Fan Motor in the Junction Box. Pull wire leads out rear of Box.

4. Remove four nuts, lockwashers, flatwashers and mounting bolts and the Fan Motor from the mounting bracket inside the Condenser shroud.

NOTE

BEFORE removing the Thermostat Control, capillary line and bulb, in the next step, observe routing and exact positioning of the bulb for identical positioning during replacement procedures.

5. Remove screw, clamp and the Thermostat Control capillary bulb from the underside of the Remote Condenser. Remove plastic tie from tubing.
6. Carefully work the rubber grommet out of the hole in the Junction Box.
7. Disconnect the electrical wire leads from the Thermostat Control in the Junction Box.
8. Remove screws and the Thermostat Control from the Junction Box, carefully pulling the capillary line and bulb up through the hole in the Junction Box. Remove and retain rubber grommet from capillary line.
9. Bleed off or blow the refrigerant charge in the particular set of pre-charged refrigerant lines connected to the specific Head Pressure Control Valve to be replaced on the Remote Condenser.

CAUTION

Wrap the Head Pressure Control Valve with WET CLOTHS, to protect the sensitive parts during unsoldering; and also during later soldering for installation. DO NOT direct flame toward the Valve body. Use extra care to DIRECT FLAME AWAY from the Valve body.

10. With the Head Pressure Control Valve protected with WET CLOTHS, unsolder tubing connected to the Valve, three places, and remove the Valve.

B. To replace the Head Pressure Control Valve, reverse the removal procedures and follow special precautions given for installing and soldering tubing connections to Valve.

SECTION V
MAINTENANCE & CLEANING INSTRUCTIONS

I. GENERAL

The periods and procedures for maintenance and cleaning are given as guides and are not to be construed as absolute or invariable. Cleaning especially will vary, depending upon local water conditions and the ice volume produced; and, each icemaker must be maintained individually, in accordance with its own particular location requirements.

II. ICEMAKER

THE FOLLOWING MAINTENANCE SHOULD BE SCHEDULED AT LEAST TWO TIMES PER YEAR ON THIS ICEMAKER. CALL YOUR AUTHORIZED SCOTSMAN SERVICE AGENCY.

1. Check and clean water line Strainers.
2. Check that the Icemaker cabinet is level, in side-to-side and front-to-rear directions.
3. Clean the water system Evaporator, Freezing Chamber Reservoir and Spray Bars, using a solution of SCOTSMAN Ice Machine Cleaner. Refer to procedure V-IV CLEANING - Icemaker.

NOTE

Cleaning requirements vary according to local water conditions and individual user operation. Continuous check of the clarity of ice cubes and visual inspection of the Spray Bar parts before and after cleaning will indicate frequency and procedure to be followed in local areas.

4. Check that plastic curtain hangs down evenly within the opening at the front of the Freezing Chamber.
5. Check and tighten all bolts.
6. Check and tighten all electrical connections.
7. Check Hot Gas Solenoid Valve for correct operation and high pressure controls for cut-in and cut-out pressures.
8. Check for refrigerant leaks and tighten line connections.
9. Check for water leaks and tighten drain line connections. Pour water down Bin drain line to be sure that drain line is open and clear.
10. Check size, condition and texture of ice cubes. Perform adjustments as required. Refer to procedure IV-II.
11. Check Bin Thermostat Control bulb to test shutoff. With the Icemaker in the Harvest Cycle, place ice on the bulb, which should cause the Icemaker to shut OFF at the end of the Harvest Cycle.

NOTE

Within minutes after the ice is removed from the sensing bulb, the bulb will warm up and cause the Icemaker to restart. This control is factory set and should not be reset until testing is performed. Normal setting is about 35-degrees F. CUT-OUT and 40-degrees F. CUT-IN.

III. REMOTE CONDENSER

Frequent cleaning and inspection of the Condenser should be performed to maintain maximum efficiency of Icemaker. A dirty Condenser or blocked air flow will greatly decrease icemaking efficiency.

1. With electrical power OFF, on both the icemaker and the Fan Motor of the Remote Condenser, clean the Condenser, using a vacuum cleaner, whisk broom or brush. DO NOT USE A WIRE BRUSH. Instruct customer to clean frequently.
2. Check that Fan Blades move freely, are not touching any surfaces, are not bent or out of balance; and, the wire guard is properly installed and securely attached.
3. Check that the roof area immediately surrounding the Remote Condenser is free and clear of any debris that may collect, such as leaves, paper, trash, etc.

IV. CLEANING - Icemaker

1. Remove screws and Front Panel and Top Panel.
2. Tilt the top of the plastic Cube Chute forward slightly, then, lift the Cube Chute up for removal.
3. Move the Master ON-OFF toggle switch and the Compressor ON-OFF toggle switch, on the Control Box, to the OFF positions.
4. Slowly rotate the shaft of the Timer & Switch Assembly, protruding through the hole in the front of the Control Box Cover, until you hear an audible click as the microswitch actuator arm drops into the cam slot, the START position of the Harvest Cycle, then stop. See Figure 5-1.

5. Remove Defrost Water Rube at rear of Freezing Chamber, from the tube hole.

WARNING

SCOTSMAN Ice Machine Cleaner contains Phosphoric and Hydroxyacetic acids. These compounds are corrosive and may cause burns if swallowed. DO NOT induce vomiting. Give large amounts of water or milk. Call physician immediately. In case of external contact, flush with water. KEEP OUT OF THE REACH OF CHILDREN.

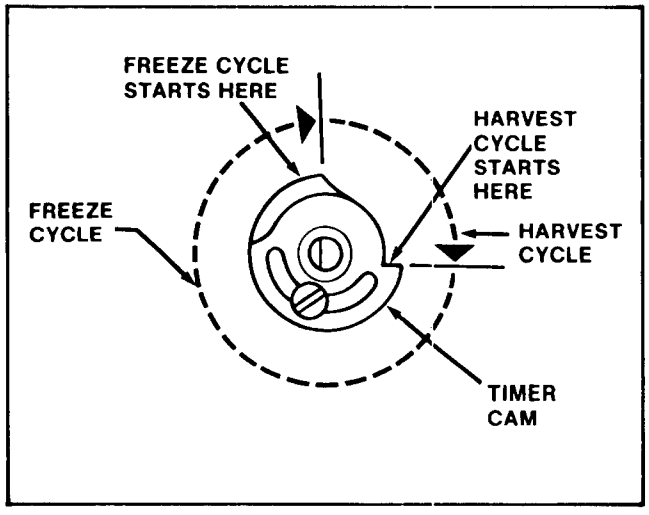

Figure 5-1. START Positions for the Freeze/ Harvest Cycles.

7. Prepare the following cleaning solution: Mix 16-ounces of SCOTSMAN Ice Machine Cleaner with eleven pints of fresh, potable water in a clean container.
8. Pour batch of prepared cleaning solution into the Freezing Chamber, through the Defrost Water Tube hole at the top, center rear of the Freezing Chamber.
9. Immediately replace the Defrost Water Tube; then, move the Master ON-OFF Switch, on the Control Panel, to ON.
10. Allow the icemaking system to operate normally for twenty minutes into the Freezing Cycle.

NOTE

NO ICE CUBES will be made, because the Compressor has been switched OFF.

11. At the end of twenty minutes, rotate the shaft of the Timer & Switch Assembly. CLOCKWISE, to start a second Harvest Cycle. See Figure 5-1.
12. Allow the icemaking system to operate normally through the Harvest Cycle; then, when the Harvest Cycle is completed, rotate the Timer again THROUGH the Freezing Cycle to START another Harvest Cycle. Perform this Harvest Cycle operation three times.

NOTE

During each Harvest Cycle, fresh inlet water is introduced into the water system and acts to rinse all water-related parts and to wash away most mineral concentration through the drain.

13. Wash Curtain Assembly and the Cube Chute in a solution of one ounce of household bleach in one gallon of water.
14. Using a clean, damp cloth or disposable paper wiper, wipe off the Curtain Assembly and the Cube Chute.
15. Move the Compressor ON-OFF toggle switch, on the Control Box, to the ON position.
16. Replace Curtain Assembly and the Cube Chute.
17. Check each ice cube harvest, until the ice cubes are clear and the acid taste is eliminated.

CAUTION

DO NOT USE ice cubes produced from the cleaning solution. Be sure none remains in the Bin.

18. Pour hot water over ice cubes in the Bin, to melt the ice cubes and allow the same cleaning solution to be used to thoroughly wash the inner surfaces of the Bin and the solution to help clean the drain lines as it drains. Rinse inner surfaces of Bin.
19. Replace all panels removed.
20. Clean and sanitize the interior Bin surfaces each week.

SECTION VI
SERVICE DIAGNOSIS

The Service Diagnosis Section is for use in aiding the serviceman in diagnosing a particular problem for pin-pointing the area in which the problem lies, thus an ever available reference for proper corrective action.

The following charts list corrective actions for the causes of known symptoms of certain problems that can occur in the Icemaking-Refrigeration System.

I. ICEMAKING - REFRIGERATION SYSTEM

SYMPTOM	POSSIBLE CAUSE	CORRECTION
Irregular size cubes and some cloudy.	Some jets plugged.	Clean jets.
	Shortage of water.	See Shortage of water CORRECTION.
	Unit not level. Water overflowing vent holes on low side, burning cubes.	Level cabinet, as required.
Cubes too large.	Cube Size Control set too cold.	Rotate Cube Size Control dial toward WARMER.
Cubes too small.	Cube Size Control set too warm.	Rotate Cube Size Control dial toward COLDER.
	Partially restricted capillary tube.	Blow refrigerant charge; replace drier; evacuate system, add refrigerant charge.
	Moisture in system.	Same as above CORRECTION.
	Shortage of water.	See Shortage of water CORRECTION.
	Loss of refrigerant.	Check for refrigerant leaks, correct leaks; recharge system.
Cloudy Cubes.	Shortage of water.	See Shortage of water SYMPTOM.
	Dirty water supply.	Install water filter or softener.
	Accumulated impurities.	Use SCOTSMAN Ice Machine Cleaner.
Shortage of water.	Water spraying out through curtain.	Hang curtain in proper position.
	Water solenoid not opening.	Repair or replace solenoid.
	Water leak in sump area.	Locate leak and repair or correct condition.
	Partial restrictions in water strainer.	Clean or replace strainer.

SYMPTOM	POSSIBLE CAUSE	CORRECTION
Decreased ice capacity.	Defective compressor.	Replace compressor.
	Leaky water valve.	Repair or replace valve.
	High head pressure, result of dirty condenser or faulty Fan Motor.	Clean condenser. Repair or replace Fan Motor.
	Non-condensable gas in the system.	Purge the system.
	Poor circulation or extreme hot location.	Relocate the cabinet; or provide ventilation by cutting openings.
	Overcharge of refrigerant.	Slowly purge off to correct charge.
	Hot gas solenoid valve leaking.	Replace valve.
	Defective Thermostat Expansion Valve.	Replace valve.
Poor harvest.	Too short defrost time.	Check and adjust harvest cycle. Check Timer two-minute setting.
	Restriction in water inlet line.	Check strainer and flow check valve. DO NOT remove flow control washers.
	Hot gas solenoid does not open.	Binds or burned out. Replace.
	Plugged air vent holes in upper part of cube cups.	Clean out air vent holes.
Icemaker does not harvest.	Water pressure too low.	Check for 20 PSI flowing water.
Compressor cycles intermittently.	Low voltage.	Check for circuit overload: Check building supply voltage, if low, contact power company.
	Dirty condenser.	Clean condenser with vacuum cleaner or brush. NO WIRE BRUSH.
	Air circulation blocked.	Locate cabinet with adequate air space for proper air flow.
	Defective Fan Motor.	Replace Fan Motor.
	Non-condensable gases in system.	Purge the system.
Icemaker will not operate.	Blown fuse in line.	Replace fuse and check for cause.
	Master switch in OFF position.	Set switch to ON position.
	Faulty Master switch.	Replace switch.
	Timer contacts open.	Replace Timer microswitch.
Hole washed inside ice cube.	Water over the top of cube cups during harvest cycle.	Check and re-level the HC400R cabinet.

SECTION VII
WIRING DIAGRAMS

This Section is provided as an aid in understanding the electrical circuitry of the Modular Cuber:

WARNING

When conducting a continuity check of the Modular Cuber:

1. **Disconnect the main power source.**
2. **DO NOT use an incandescent lamp or jumper wire, conduct all tests with a volt-ohm-meter.**

The Wiring Diagrams in this Section are:

Figure 7-1. Wiring Diagram HC400R-1A 115/60/1

Figure 7-2. Wiring Diagram HC400R-31A 115/208-230/60/1

Figure 7-3. Remote Condenser Wiring Diagram - RC151-32, RC202-32, RC303-32 - 208-230/60/1

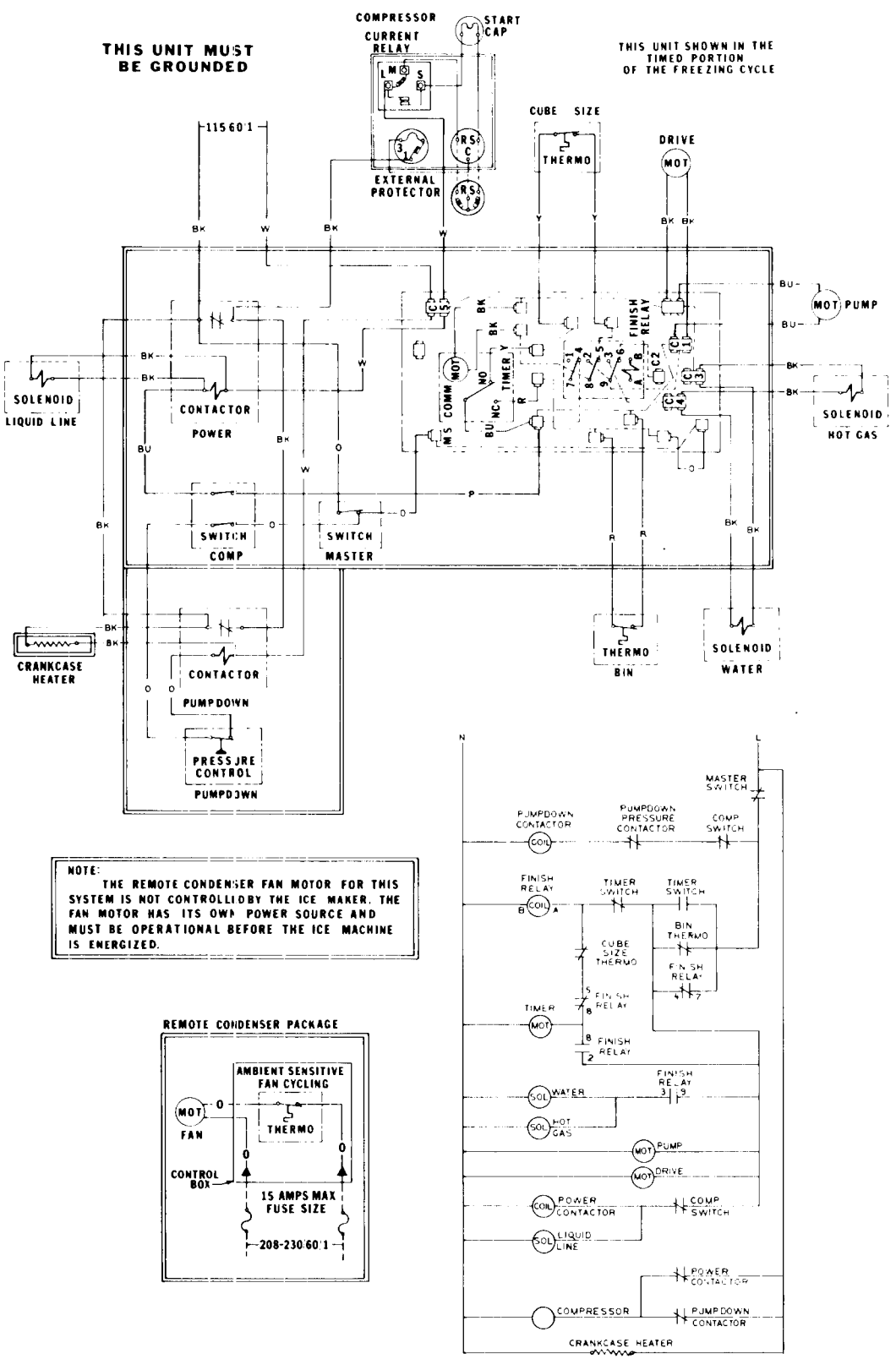

Figure 7-1. Wiring Diagram HC400R-1A - (115/60/1)

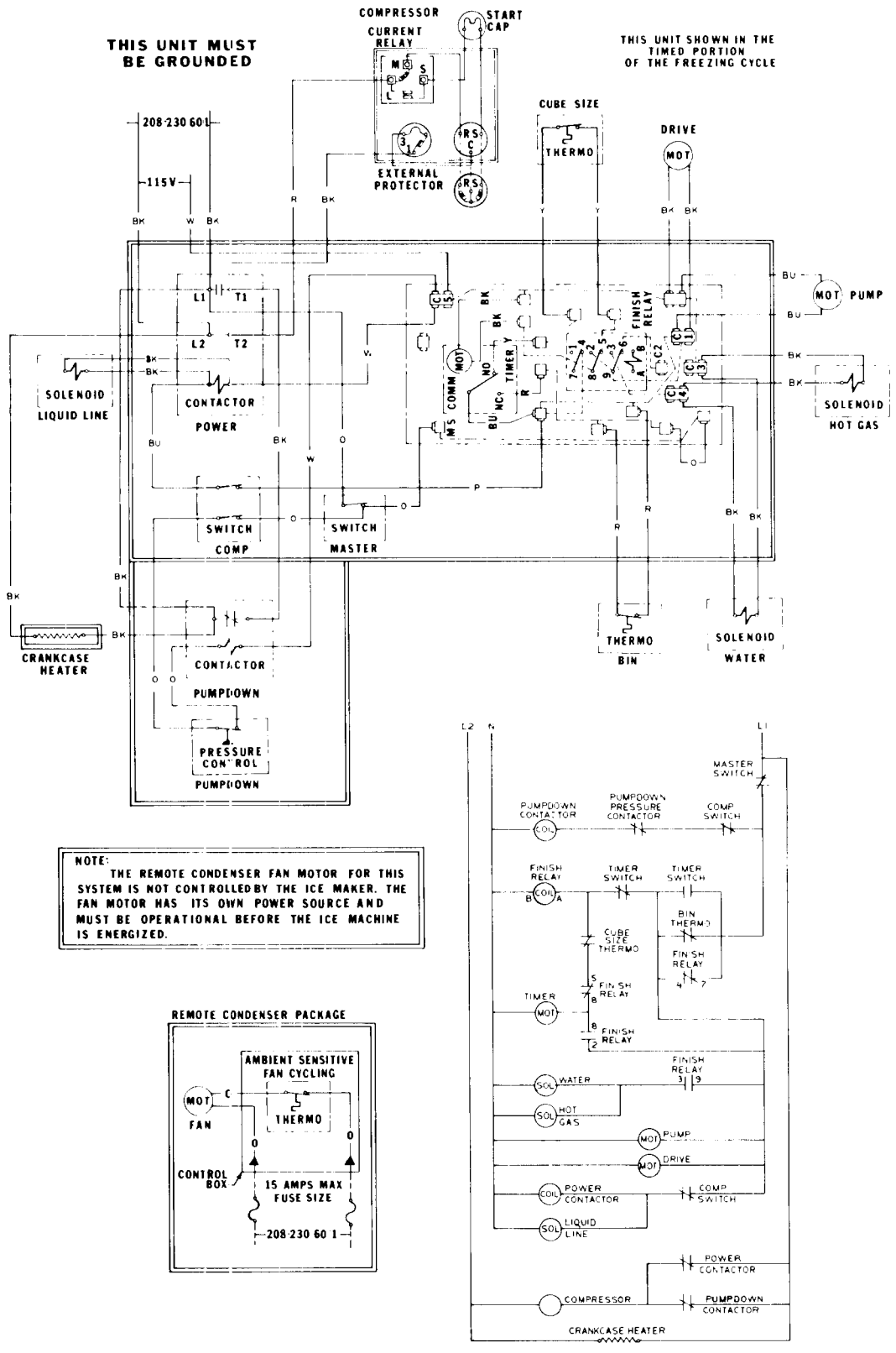

Figure 7-2. Wiring Diagram HC400R-31A - (115/208-230/60/1)

SECTION VIII
THE PARTS ILLUSTRATIONS AND PARTS LIST

I. GENERAL

This section contains the Parts Illustrations and the Parts List for each of the major assemblies in the HC400R Modular Cuber.

Each Parts Illustration shows an assembly as an exploded view, with an Index Number for each part or sub-assembly, given in disassembly order. These Index Numbers key with the Parts List for the assembly and are found in the Parts List Column headed Index Number. The Description Column gives the identifying nomenclature for the item indexed. The Part Number Column gives the number of item. The Number Required Column gives the number of items required per assembly, but not necessarily the total number of parts required per Cuber.

All assemblies are cross-referenced both from the major assembly listing where they first appear in the Parts Listing to their break-down listing, and from the break-down listing, back to the major assembly (next higher assembly) listing.

A *No Number* designation, when used in the Part Number Column indicates the unit is not available from SCOTSMAN as an assembly. This designation is used only for the convenience and clarity of division in cataloging.

When an Index Number is followed by a letter (e.g., la., lb.), the letter indicates the part listed is part of the assembly indexed by the basic Index Number. The number required of the part indexed by the number and letter combination is for only one of the assemblies indexed by the basic Index Number and not necessarily the total number or parts used in the Cuber. Where the notation *Ref* occurs in the Number Required Column the number of the assemblies or parts required for use in the Cuber will be found under a previous Index Number or in the next higher assembly Parts Listing. The next higher listing Figure/Index number is shown in the Description Column immediately following the items description.

II. HOW TO USE THE ILLUSTRATIONS AND PARTS LISTS

To find the part number of a required part of assembly, turn to the List of Illustrations and find the page number of the Parts Illustration of the major or sub-assembly containing the part. Turn to the indicated page and locate the part and its Index Number on the specific illustration. Find the Index Number on the required part in the Parts List to determine the complete description of the part.

III. HOW TO ORDER PARTS OR ASSEMBLIES

When ordering parts or assemblies, to avoid costly delays and errors in shipment, give the part number, the complete description shown in the list, and the quantities of each part or assembly required. Also include the Model name, the serial number of the Cuber for which the part is required, and for parts which require color matching, the color of the Cabinet. See Figure 8-00, at the end of this Section for detailed ordering instructions.

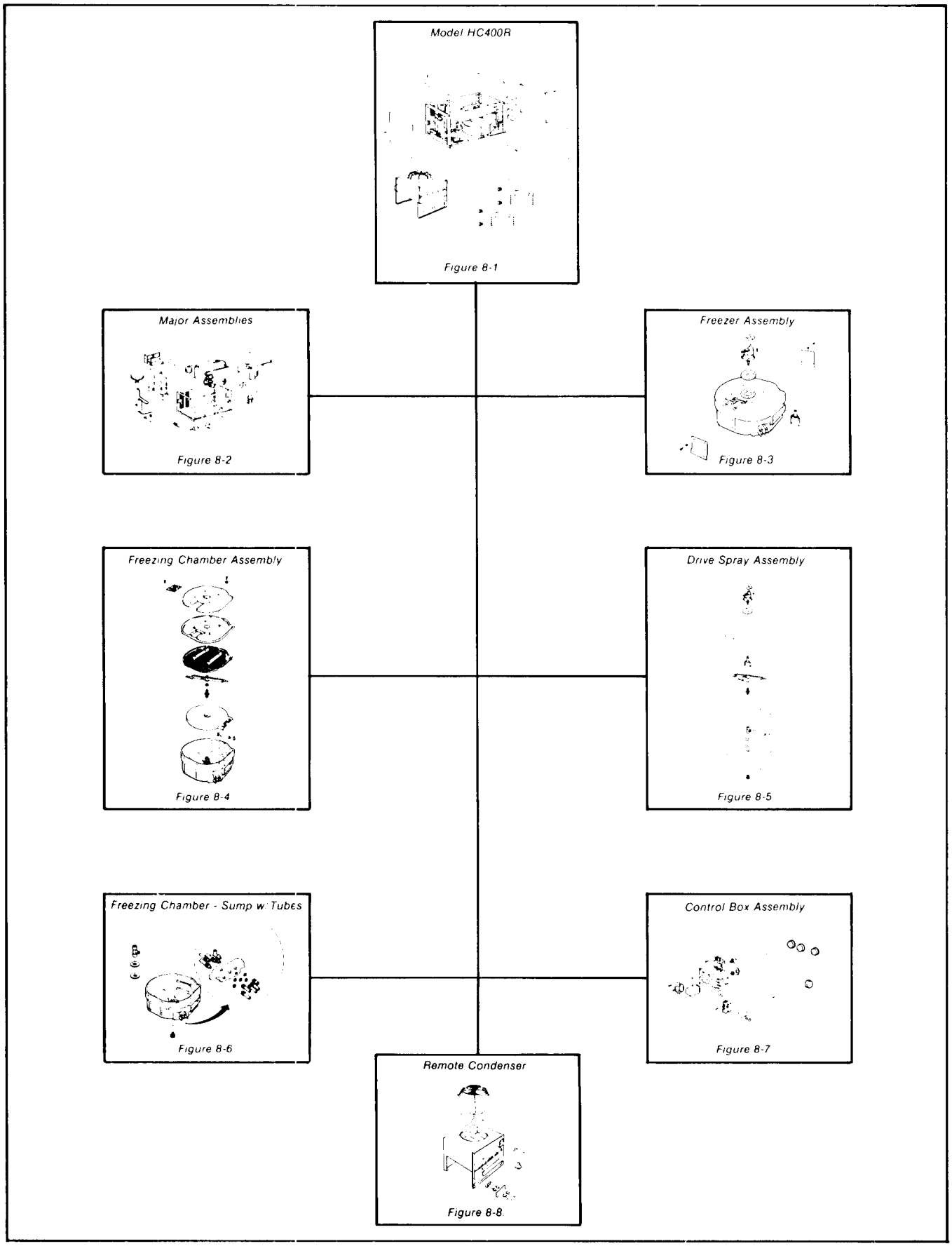

Figure 8-A. Model HC400R Flow Chart

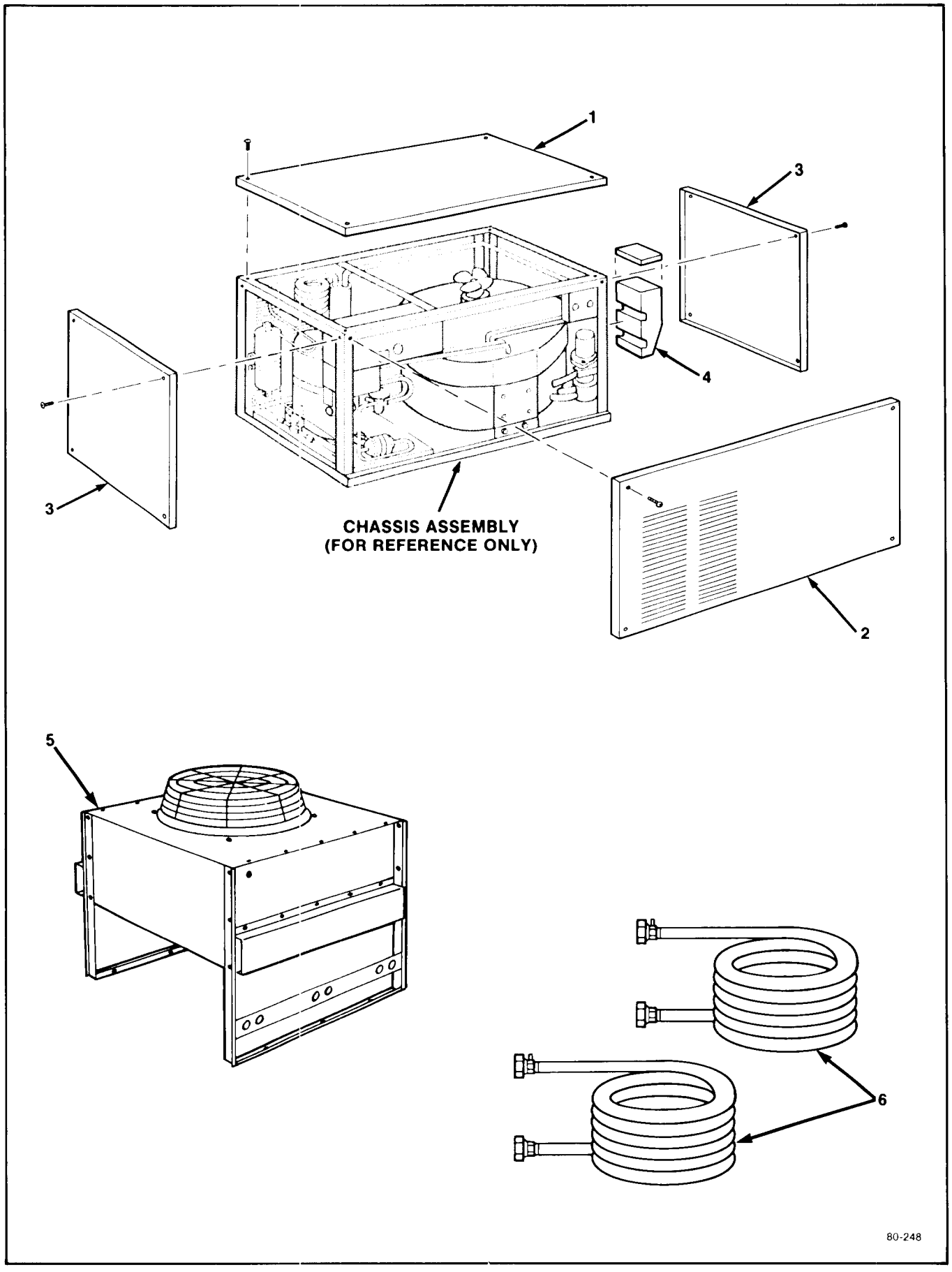

Figure 8-1. Model HC400R Cabinet and Remote Condenser

Figure 8-1. Model HC400R Cabinet and Remote Condenser

INDEX NO.	DESCRIPTION	PART NUMBER	REQ'D NUMBER
	Model HC400R Cabinet and Remote Condenser	No Number	1
	* * *		
1	Panel, Top	A23784-005	1
	attaching part, Index 1		
	Lockwasher, No. 8 Countersunk External Tooth	03-1417-15	6
	Screw, No. 8 x 1 1/4 S/T Flat Hd (SS) (Brown)	03-1419-09	6
	* * *		
2	Panel, Front	A23785-004	1
	attaching part, Index 2		
	Lockwasher, No. 8 Countersunk External Tooth	03-1417-15	2
	Screw, No. 8 x 1 1/4 S/T Flat Hd (SS) (Brown)	03-1419-09	2
	* * *		
3	Panel, Side - (Left and Right)	A23783-005	2
	attaching parts, Index 3		
	Screw, No. 8 x 1/2 T/F Tap	03-1404-10	2 (4)
	* * *		
4	Chute, Cube - W/Cover	A27821-001	1
	* * *		
5	Condenser, Remote - (Single-Pass)	RC-151-32A	1
	Condenser, Remote - (Two-Pass)	RC-202-32A	1
	Condenser, Remote - (Three-Pass)	RC-202-32A	1
	* * *		
6	Kit, Pre-Charged Remote Tubing - (25-foot)	RT-225	1
	Kit, Pre-Charged Remote Tubing - (40-foot)	RT-240	1
	* * *		

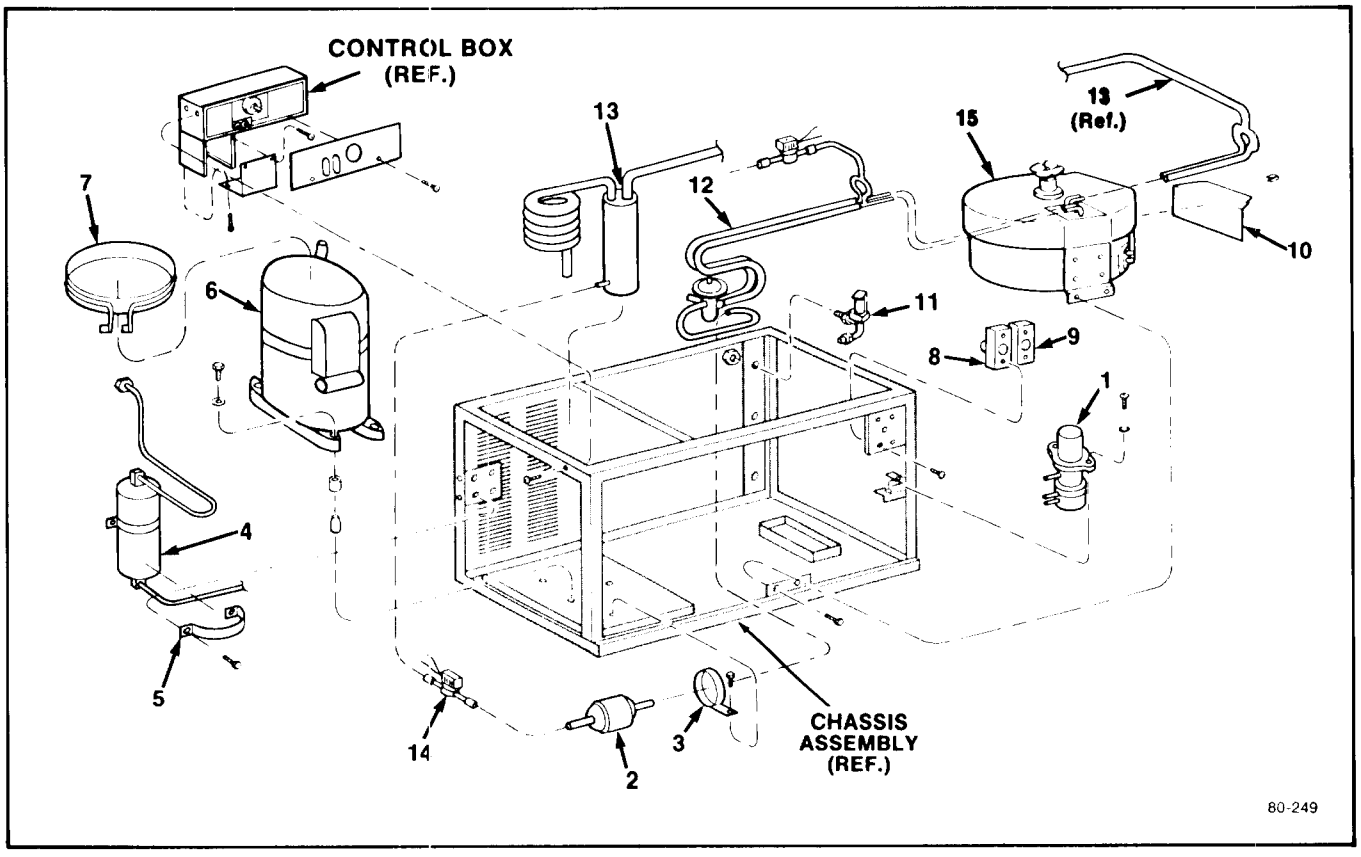

Figure 8-2. Major Assemblies

INDEX NO.	DESCRIPTION	PART NUMBER	REQ'D NUMBER
	Major Assemblies	No Number	Ref.
	* * *		
1	Pump Assembly, Water	12-1930-01	1
	attaching parts, Index 1		
	Washer, No. 1/4 Plain	03-1407-05	1
	Screw, No. 1/4 - 20 x 3/4 T/C Hex Hd		
	* * *		
2	Drier	02-0544-01	1
	* * *		
3	Clamp, Drier	A09388-001	1
	attaching parts, Index 2 & 3		
	Screw, No. 6 x 1/4 T/F Tap	03-1404-32	1
	* * *		
4	Receiver	A29661-020	1
	* * *		
5	Strap, Receiver Mounting	A29590-001	2
	attaching parts		
	Screw, No. 10-24 x 1 3/4 Phil Recess Pan Hd	03-1403-36	2
	* * *		

Figure 8-2. Major Assemblies (Cont'd)

INDEX NO.	DESCRIPTION	PART NUMBER	REQ'D NUMBER
6	Compressor (115/60/1)	18-3900-01	1
	Compressor (115/208-230/60/1)	18-3900-02	1
	attaching parts, Index 6		
	Sleeve, Mounting	18-2200-27	4
	Grommet, Mounting	18-2200-28	4
	Washer, No. 5/16 Plain	03-1407-07	4
	Screw, No. 5/16 x 1 1/2 Hex Cap	03-1405-20	4
	* * *		
7	Heater, Crankcase (115/60/1)	12-1868-01	1
	Heater, Crankcase (115/208-230/60/1)	12-1868-02	1
	* * *		
8	Control, Cube Size	11-0345-02	1
	* * *		
9	Control, Bin	11-0353-03	1
	attaching parts, Index 8 & 9		
	Screw, No. 8-32 x 3/16 Phil Recess Pan Hd	03-1403-14	2 (4)
	* * *		
10	Curtain Assembly	02-2038-01	1
	attaching part, Index 10		
	Clip, U-Type	03-1526-01	3
	* * *		
11	Valve, Solenoid - Water Inlet	12-1900-07	1
	attaching part, Index 11		
	Nut, Pal	A29668-020	1
	* * *		
12	Valve Assembly, Thermostatic Expansion	A29660-020	1
	(includes Distributor and two tubes soldered into valve)		
	* * *		
13	Accumulator Assembly	A29660-001	1
	* * *		
14	Valve, Solenoid - Liquid Line	12-2189-01	1
	* * *		
15	Freezer Assembly	No Number	1
	(See Figure 8-3)		
	attaching parts, Index 15		
	Screw, No. 1/4-20 x 1/2 T/C Hex Hd	02-0571-00	4
	* * *		

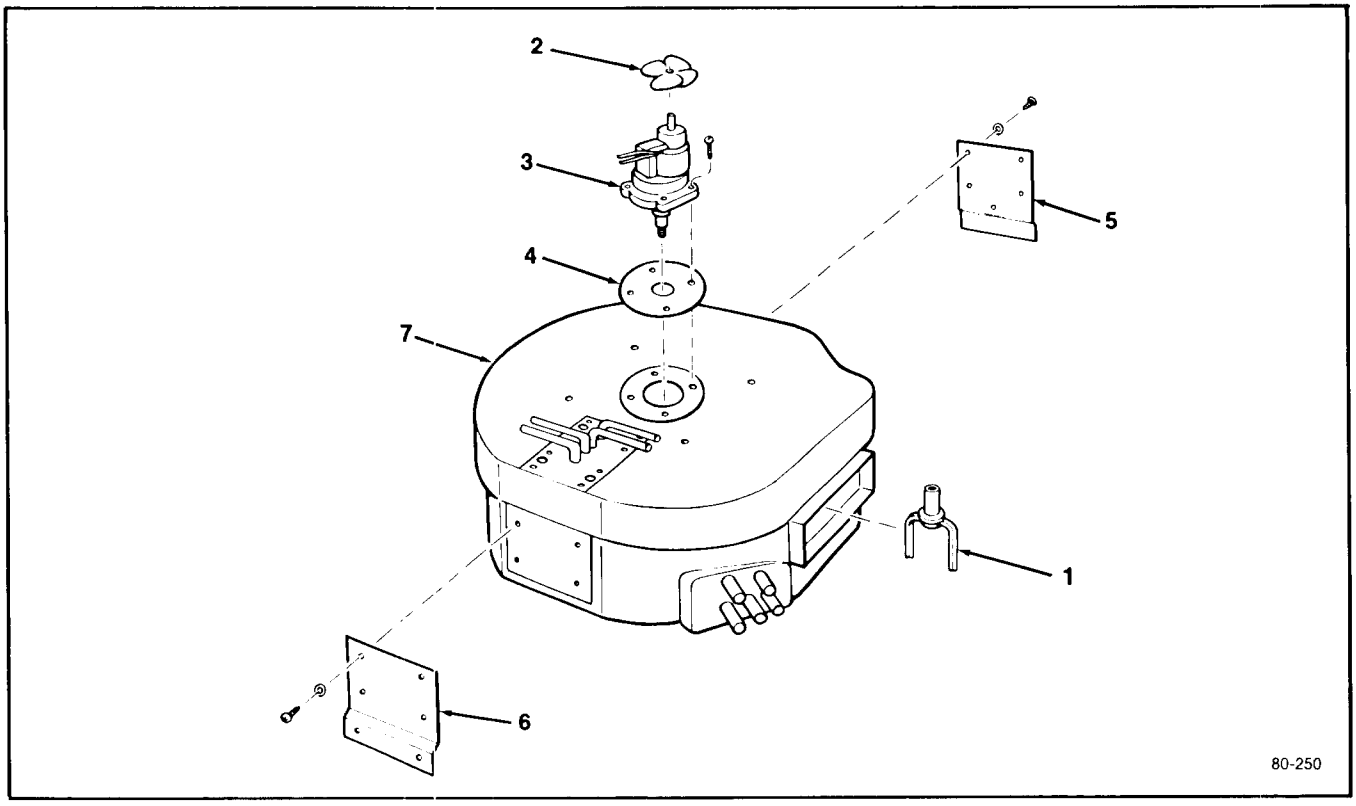

Figure 8-3. Freezer Assembly

INDEX NO.	DESCRIPTION	PART NUMBER	REQ'D NUMBER
	Freezer Assembly **(See Figure/Index 8-2/15** for next higher Assembly)	No Number	Ref.
	* * *		
1	Fork, Drive	02-2369-02	1
	* * *		
2	Blade, Fan - Drivemotor	12-0675-25	1
	* * *		
3	Drivemotor Assembly, Agitator	A24656-001	1
4	Gasket, Drivemotor	13-0176-00	1
	attaching parts, Index 3 & 4		
	Screw, No. 6 x 1 T/F Tap	03-1404-28	4
	* * *		
5	Mount, Rear	No Number	1
6	Mount, Front	No Number	1
	attaching parts, Index 5 & 6		
	Lockwasher, No. 10 External Tooth	03-1417-05	6
	Screw, No. 10 - 16 x 5/8 T/F Tap (Front & Rear)	03-1404-18	4
	Screw, No. 10 - 16 x 1/2 S/T Tap (Front, Middle)	03-1360-00	2
	* * *		
7	Chamber, Freezing **(see Figure 8-4)**	No Number	1
	* * *		

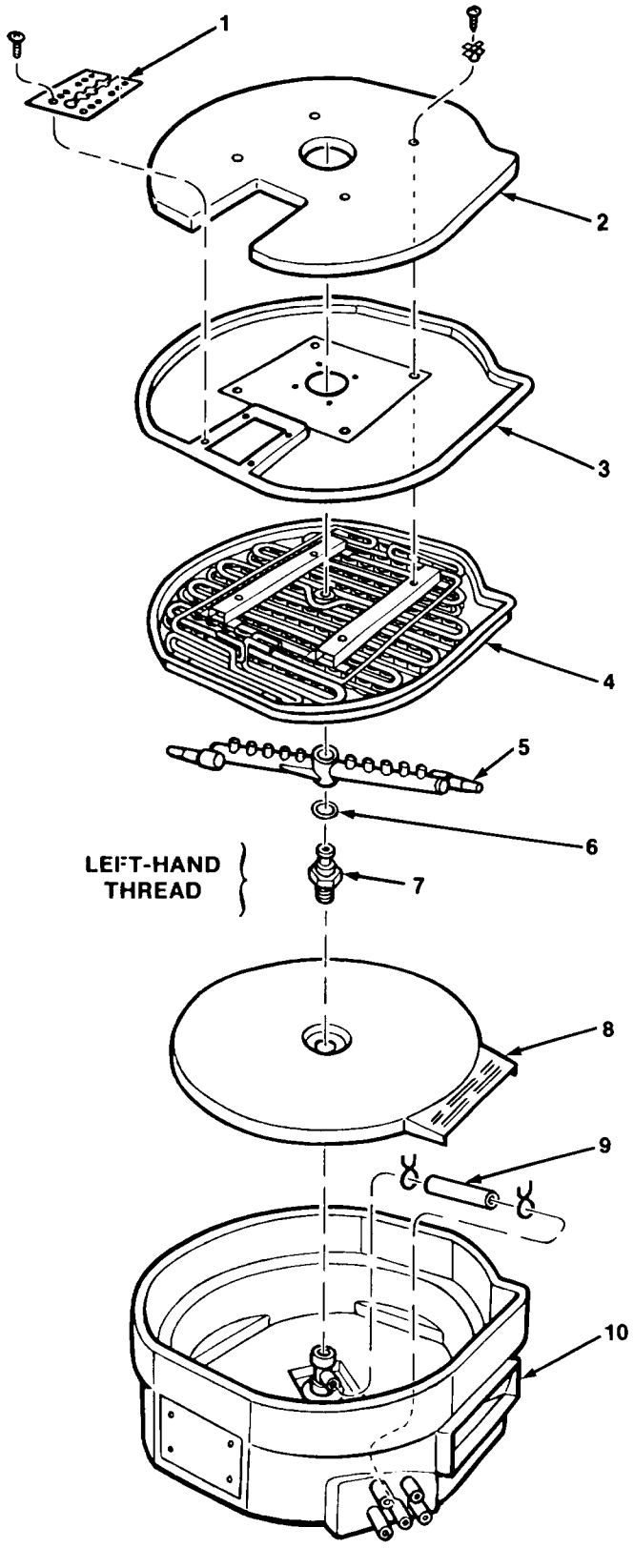

Figure 8-4. Freezing Chamber Assembly

Figure 8-4. Freezing Chamber Assembly

INDEX NO.	DESCRIPTION	PART NUMBER	REQ'D NUMBER
	Freezing Chamber Assembly **(See Figure 8-3** for next higher Assembly) * * *	No Number	Ref.
1	Spacer, Tube attaching part, Index 1 Plug, Hole * * *	02-2594-01 02-2065-02	1 4
2	Cover, Insulation	02-2124-01	1
3	Cover, Freezing Chamber	A24803-001	1
4	Platen Assembly, Cup (ice cube cups) attaching parts, Index 2, 3, 4 Washer, Centering Screw, No. 8 x 1/2 T/F Tap (Stainless Steel) * * *	A29605-020 A24830-001 03-1404-10	1 4 4
5	Bar Assembly, Spray (includes Rubber Tips) * * *	A25480-001	1
6	O-Ring * * *	13-0617-25	1
7	Bearing, Spray Bar (Used in LOWER Chamber) (Also order P/N 13-0168-00 Water Seal with Index 7) * * *	02-2120-01	1
8	Bottom, Inner * * *	02-2028-01	1
9	Tube, Tygon (8-inch lg.) (Order by the foot) attaching part, Index 9 Clamp, Hose * * *	13-0674-07 02-1358-01	1 2
10	Sump, Freezing Chamber (See Figure 8-6) * * *	No Number	1

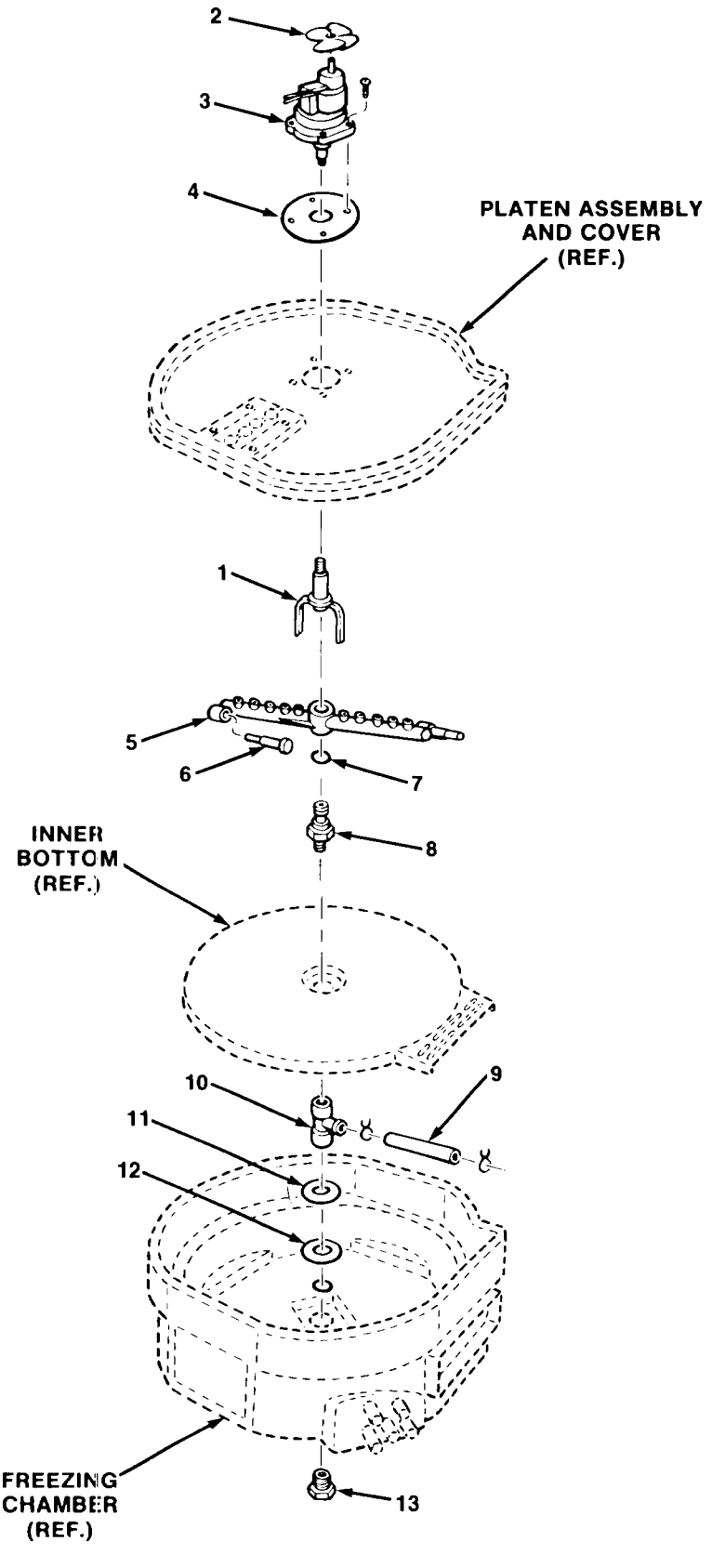

Figure 8-5. Drive Spray Assembly

Figure 8-5. Drive Spray Assembly

INDEX NO.	DESCRIPTION	PART NUMBER	REQ'D NUMBER
	Drive Spray Assembly (See Figures 8-3, 8-4 for next higher Assembly)	No Number	1
	* * *		
1	Fork, Drive	02-2369-02	Ref.
	* * *		
2	Blade, Fan - Drivemotor	12-0675-25	Ref.
	* * *		
3	Drivemotor Assembly, Agitator	A24656-001	Ref.
4	Gasket, Drivemotor	13-0176-00	Ref.
	attaching parts, Index 3 & 4		
	Screw, No. 6 x 1 T/F Tap	03-1404-28	4
	* * *		
5	Bar Assembly, Spray (W/Rubber Tips)	A25480-001	1
	* * *		
6	Rubber - Spray Bar	13-0653-00	2
	* * *		
7	O-Ring	13-0617-25	1
	* * *		
8	Bearing, Spray Bar	02-2120-01	1
	* * *		
9	Tube, Tygon (8-inch lg.) (Order by the foot)	13-0674-07	1
	attaching part, Index 9		
	Clamp, Hose	02-1358-01	2
	* * *		
10	Housing, Inlet	02-2121-01	1
	* * *		
11	Plate, Support - Spray Bar	A23827-001	1
	* * *		
12	Washer, Non-Metallic - (7/8-inch I.D.)	03-1409-11	1
	* * *		
13	Plug, Bottom	02-2122-01	1
	* * *		

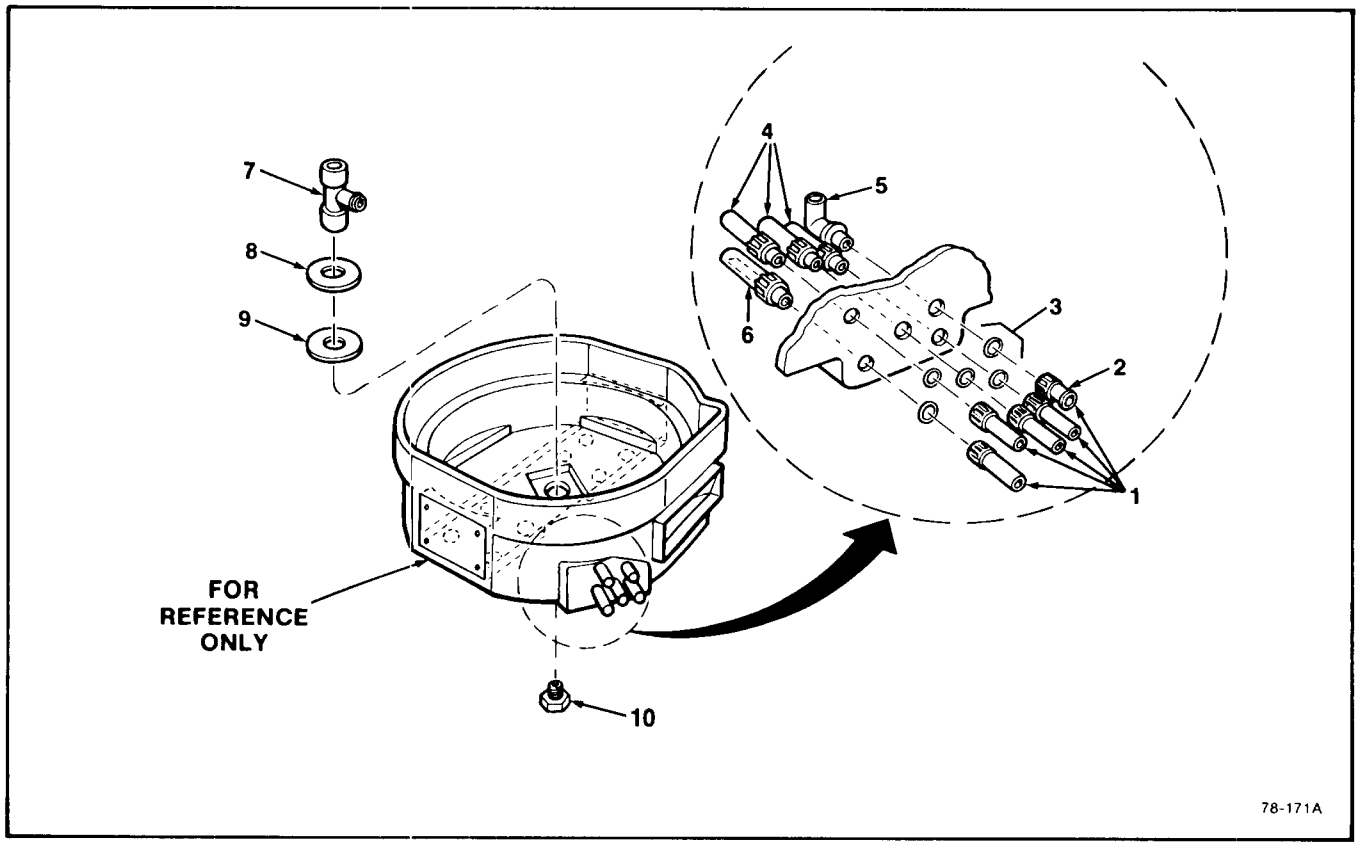

Figure 8-6. Freezing Chamber - Sump w/Tubes

INDEX NO.	DESCRIPTION	PART NUMBER	REQ'D NUMBER
	Freezing Chamber - Sump w/Tubes (See Figure 8-4/10 for next higher Assembly) * * *	A24819-001	Ref.
1	Tube, Female * * *	02-2081-01	4
2	Tube, Female - (Cut off) * * *	A24379-001	1
3	O-Ring * * *	13-0617-02	5
4	Tube, Male * * *	02-2080-01	3
5	Pipe, Stand * * *	02-2125-01	1
6	Tube, Pick-Up - Pump * * *	02-2082-01	1
7	Housing, Inlet * * *	02-2121-01	1

Figure 8-6. Freezing Chamber - Sump w/Tubes (Cont'd)

INDEX NO.	DESCRIPTION	PART NUMBER	REQ'D NUMBER
8	Plate, Support - Spray Bar * * *	A23827-001	1
9	Washer, Non-Metallic - 7/8-inch I.D. * * *	03-1409-11	1
10	Plug, Bottom * * *	02-2122-01	1

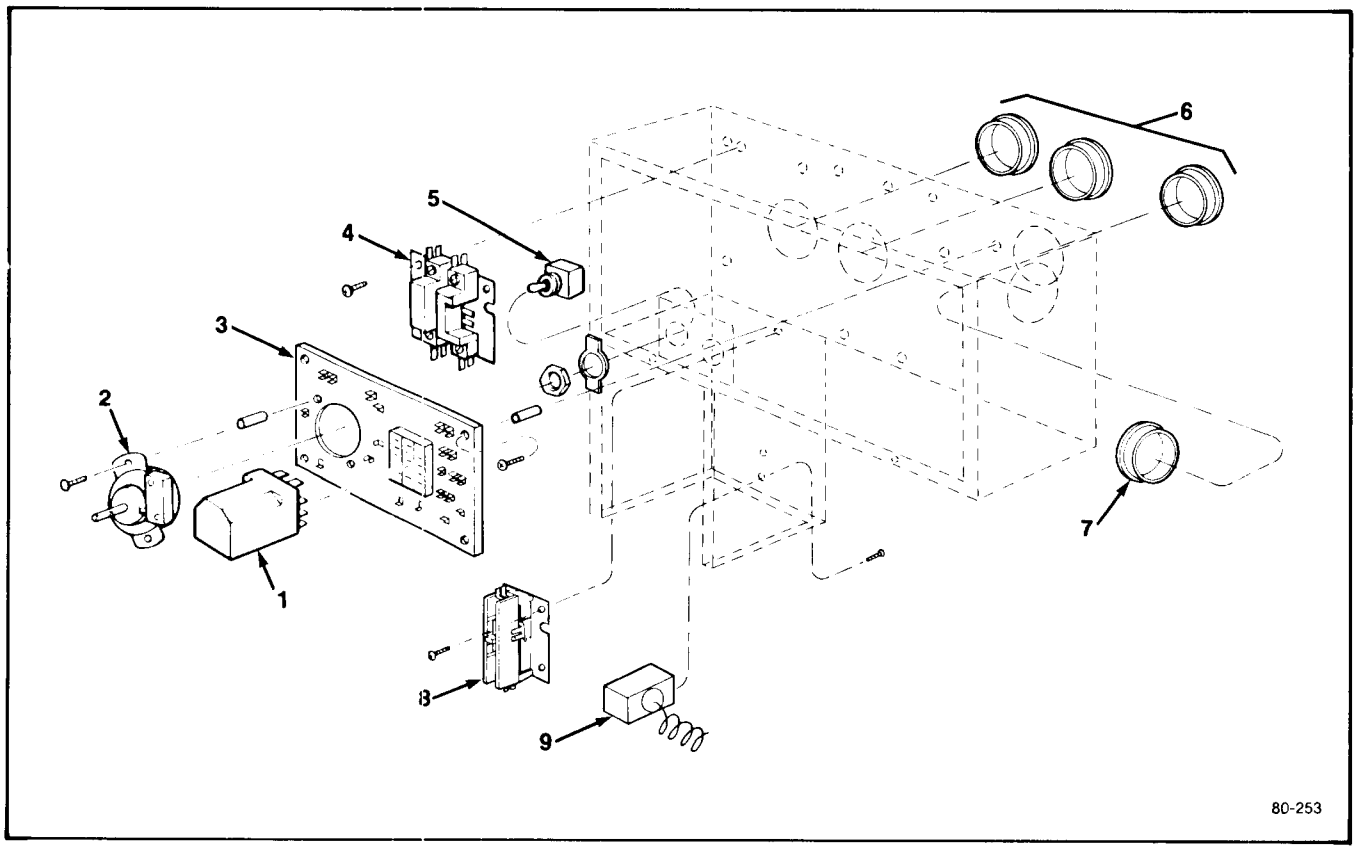

Figure 8-7. Control Box Assembly

INDEX NO.	DESCRIPTION	PART NUMBER	REQ'D NUMBER
	Control Box Assembly	No Number	Ref.
	(See Figure 8-2		
	for next higher Assembly)		
	* * *		
1	Relay	12-1879-02	1
	* * *		
2	Timer & Switch Assembly	12-1980-01	1
	attaching parts, Index 2		
	Stand-Off - (7/8-inch lg.)	02-2242-01	2
	Screw, No. 6-32 x 1/4 Phil Recess Pan Hd	03-1403-02	4
	* * *		
3	Board Assembly, Circuit	12-1912-01	1
	attaching parts, Index 3		
	Stand-Off - (5/8-inch lg.)	02-2242-02	5
	Screw, No. 6 - 32 x 3/8 Phil Recess Pan Hd	03-1403-04	5
	* * *		

Figure 8-7. Control Box Assembly (cont'd)

INDEX NO.	DESCRIPTION	PART NUMBER	REQ'D NUMBER
4	Contactor (115/60/1) (Main)	12-2041-01	1
	Contactor (115/208-230/60/1) (Main)	12-2037-01	1
	attaching parts, Index 4		
	Screw, No. 8 - 32 x 3/8 Phil Recess Pan Hd	03-1403-17	2
	* * *		
5	Switch, Toggle	12-0426-01	2
	* * *		
6	Bushing, Snap - (3/4-inch dia.)	12-1213-10	3
	* * *		
7	Bushing, Snap - (1 1/2-inch dia.)	12-1213-13	1
	* * *		
8	Contactor (115/60/1) (Pump Down)	12-2041-01	1
	* * *		
9	Control, Pressure (Pump Down)	11-0415-01	1
	* * *		

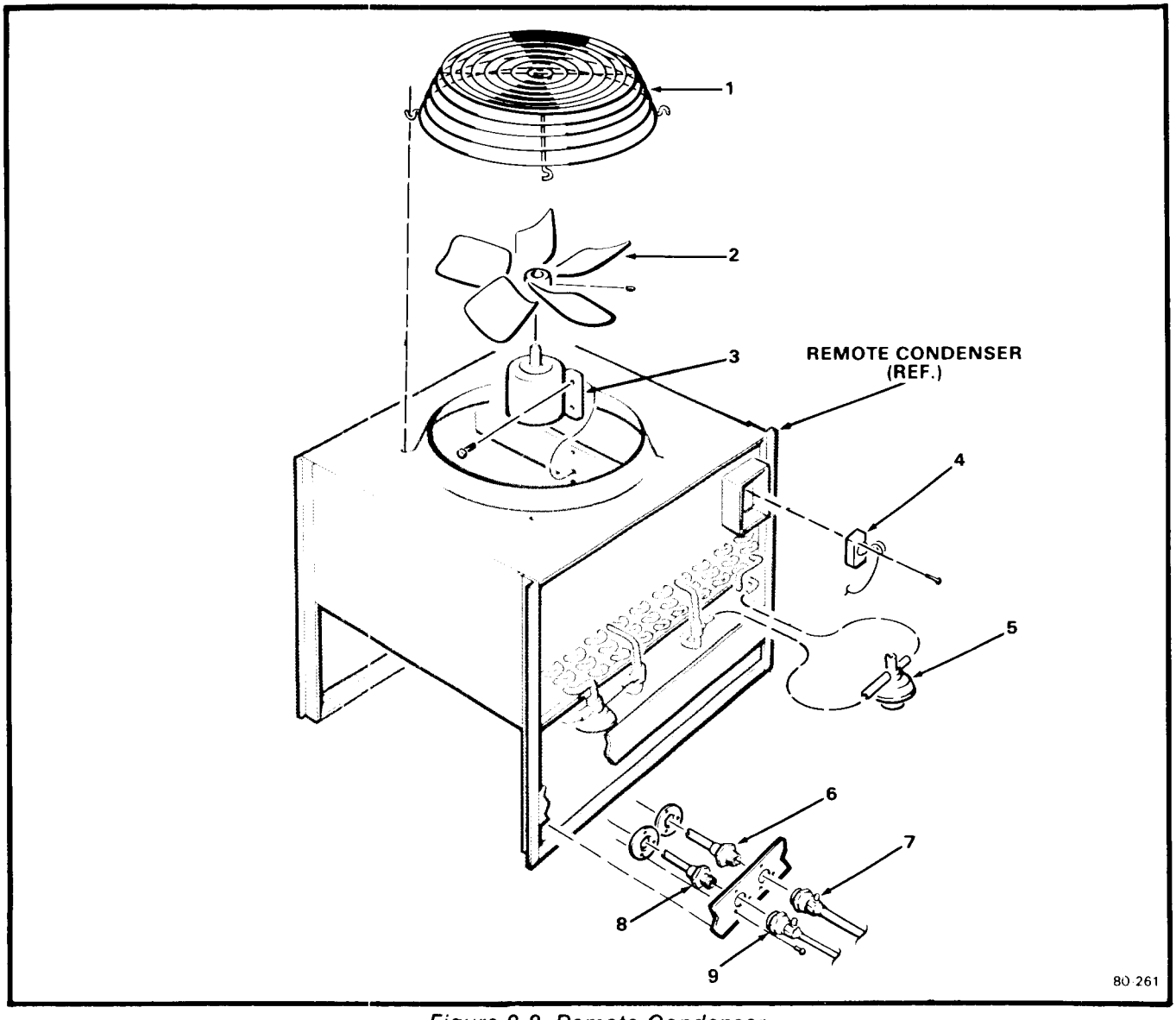

Figure 8-8. Remote Condenser

INDEX NO.	DESCRIPTION	PART NUMBER	REQ'D NUMBER
	Remote Condenser (See Figure/Index 8-1/5 for next higher Assembly) * * *	No Number	Ref.
1	Guard, Fan * * *	02-2618-01	1
2	Blade, Fan * * *	18-3733-01	1
3	Motor, Fan * * *	18-3734-01	1
4	Thermostat, Control * * *	12-2184-01	1

Figure 8-8. Remote Condenser (Cont'd).

INDEX NO.	DESCRIPTION	PART NUMBER	REQ'D NUMBER
5	Valve, Head Pressure Control - Single-Pass (RC151)	11-0414-01	1
	Valve, Head Pressure Control - Two-Pass (RC202)	11-0414-01	2
	Valve, Head Pressure Control - Three-Pass (RC303)	11-0414-01	3
	* * *		
6	Connector, 1/4-inch tubing, male	No Number	1
	* * *		
7	Connector, 1/4-inch tubing, female	No Number	1
	* * *		
8	Connector, 3/8-inch tubing, male	No Number	1
	* * *		
9	Connector, 3/8-inch tubing, female	No Number	1
	* * *		

Figure 8-6. — Drivemotor Assembly

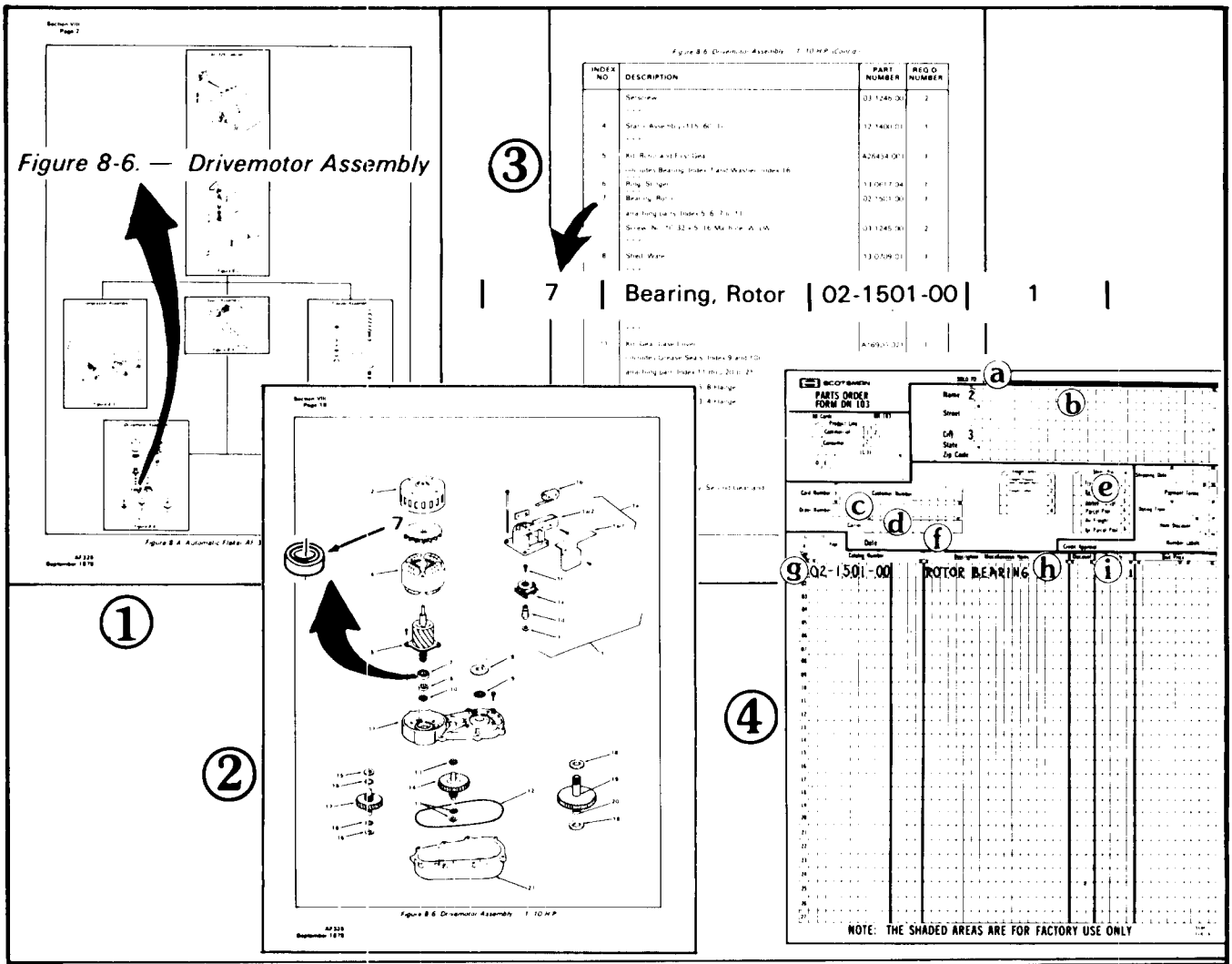

HOW TO USE A SCOTSMAN PARTS MANUAL WHEN ORDERING PARTS FOR ICE SYSTEMS PRODUCTS

IMPORTANT A. All Part Numbers have TEN DIGITS (spaces), required for use in the Computer System. BE SURE to fill in **ALL SPACES** in the CATALOG NUMBER column, on the Parts Order form as shown above.

B. Enter the QUANTITY of the Parts ordered, in the last digit column under the QUANTITY column heading, the one under the small 55 number, for parts from 1 thru 9. For 10 or more parts use two columns.

To be sure you receive the proper parts in the proper quantities, ALWAYS use the PART NUMBERS and DESCRIPTIONS given in the Parts Manuals.

The figures above illustrate the way a Parts Manual would be used, if the Part being ordered were the ROTOR BEARING that is used in the DRIVEMOTOR ASSEMBLY of ar AF325 Automatic Flaker, for example.

PROCEDURE:

1. At the beginning of Section VIII, THE PARTS ILLUSTRATIONS AND PARTS LISTS, in each Parts and Service Manual, is Figure 8-A; which, is a flow chart prepared from exploded views in Section VIII. Use the flow chart to quickly determine which Figure contains the Assembly, Component or Part.

FIGURE 1: Since the Part required in the above example is in the DRIVEMOTOR ASSEMBLY, shown as FIGURE 8-6.

2. Open the Manual to page showing FIGURE 8-6.

3. Locate the PART and its INDEX NUMBER on the exploded view illustration.

FIGURE 2: The INDEX NUMBER for the PART is 7.

4. Check the numerical sequence in the associated Parts List following the illustration.

5. LOCATE the INDEX NUMBER 7, in the INDEX NO. column, the first column on the left side of the Parts List page.

FIGURE 3: INDEX NO. 7 is listed as a BEARING, ROTOR in the DESCRIPTION column. The Part Number for the Rotor Bearing is 02-1501-00 as listed in the PART NUMBER column on the right side of the Parts List page. And, one Rotor Bearing is listed in the REQ'D NUMBER column, or that ONLY one of those parts is required for one Drivemotor Assembly.

6. Write an order for the Part. (Use SCOTSMAN Parts Order Form DN103)

FIGURE 4: a. Distributor Name.
b. (Use for DROP-SHIP order ONLY).
c. Distributor Purchase Order Number.
d. Carrier
e. How shipped (Truck, Rail, UPS, etc.)
f. Date ordered
g. Part Catalog Number
(use full TEN digits (spaces) listed in Parts Manual, including dashes between numbers.
h. Description - as listed in Parts Manual.
i. Quantity - number of parts ordered.
(use far right column)

Figure 8-00. How To Use The Illustrated Parts List.

TABLE OF CONTENTS

	Table of Contents	i
	List of Illustrations	ii
	Specifications	iv
SECTION I -	GENERAL INFORMATION & INSTALLATION	1-1
I.	Introduction	1-1
II.	Unpacking and Inspection	1-1
III.	Location and Leveling	1-2
IV.	Electrical Connections	1-4
V.	Water Supply and Drain Connections	1-4
VI.	Installation - Optional	1-4
VII.	Final Check List	1-4
SECTION II -	OPERATING INSTRUCTIONS	2-1
I.	Start Up	2-1
SECTION III -	PRINCIPLES OF OPERATION - How It Works	3-1
I.	Freezing Cycle	3-1
II.	Harvest Cycle	3-2
III.	Component Description	3-2
SECTION IV -	ADJUSTMENT & REMOVAL & REPLACEMENT	4-1
I.	Adjustment of the Bin Thermostat Control	4-1
II.	Adjustment of the Cube Size Control	4-1
III.	Adjustment of the Timer & Switch Assembly	4-2
IV.	Adjustment of the Water Regulator - W/C	4-2
V.	Removal & Replacement of the Agitator Motor Assembly	4-3
VI	Removal & Replacement of the Bin Thermostat Control	4-3
VII.	Removal & Replacement of the Compressor	4-4
VIII.	Removal & Replacement of the Condenser - Air-Cooled	4-4
IX.	Removal & Replacement of the Condenser - Water-Cooled	4-4
X.	Removal & Replacement of the Cube Size Control	4-5
XI.	Removal & Replacement of the Curtain Assembly	4-5
XII.	Removal and Replacement of the Drier	4-5
XIII.	Removal and Replacement of the Fan Motor Assembly - A/C	4-6
XIV.	Removal and Replacement of the Freezing Chamber	4-6
XV.	Removal & Replacement of the Spray Bar and Water Tube Assembly	4-7
XVI.	Removal & Replacement of the Water Pump Assembly	4-7
XVII.	Removal & Replacement of the Water Regulator Assembly - W/C	4-7
SECTION V -	MAINTENANCE & CLEANING INSTRUCTIONS	5-1
I.	General	5-1
II.	Icemaker	5-1
III.	CLEANING - Icemaker	5-1

TABLE OF CONTENTS (CONT'D.)

SECTION VI -	SERVICE DIAGNOSIS	6-1
I.	Icemaking - Refrigeration System	6-1
SECTION VII -	WIRING DIAGRAMS	7-1
	Wiring Diagram HC700 - Air-Cooled 115/208-220/60/3	7-2
	Wiring Diagram HC700 - Water-Cooled 115/208-220/60/3	7-3
	Wiring Diagram HC700 - Air-Cooled 115/208-230-60/1	7-4
	Wiring Diagram HC700 - Water-Cooled 115/208-230/60/1	7-5
SECTION VIII -	THE PARTS ILLUSTRATION AND PARTS LISTS	8-1
I.	General	8-1
II.	How to Use the Illustrations and Parts Lists	8-1
III.	How to Order Parts or Assemblies	8-1

LIST OF ILLUSTRATIONS

	Specifications	iv
Figure 1-1	Cube Deflector Bulb Holder and Bin Thermostat Capillary Tube	1-2
Figure 1-2	Installation Practice	1-5
Figure 2-1	Timer Cam Positions	2-1
Figure 3-1	Freezing Cycle	3-1
Figure 3-2	Harvest Cycle	3-2
Figure 4-1	Adjustment of the Temperature Control	4-1
Figure 4-2	Adjustment of the Timer & Switch Assembly	4-2
Figure 4-3	Removal of the Agitator Motor Assembly	4-3
Figure 5-1	START Positions for the Freeze/Harvest Cycles	5-2
Figure 7-1	Wiring Diagram HC700 Air-Cooled 115/208-220/60/3	7-2
Figure 7-2	Wiring Diagram HC700 - Water-Cooled 115/208-220/60/3	7-3
Figure 7-3	Wiring Diagram HC700 - Air-Cooled 115/208-230/60/1	7-4
Figure 7-4	Wiring Diagram HC700 - Water-Cooled 115/208-230/60/1	7-5
Figure 8-A	HC700 Modular Cuber Flow Chart	8-2
Figure 8-1	Model HC700 Modular Cuber	8-3
Figure 8-2	Major Assemblies - Air-Cooled	8-5
Figure 8-3	Major Assemblies - Water-Cooled	8-8
Figure 8-4	Freezer Assembly - Dual	8-11
Figure 8-5	Freezing Chamber Assembly	8-13
Figure 8-6	Freezing Chamber - Sump w/ Tubes	8-16
Figure 8-7	Dual Drive Spray Assemblies	8-18
Figure 8-8	Control Box Assembly	8-21
Figure 8-00	How To Use The Illustrated Parts List	8-23

SPECIFICATIONS
HC700

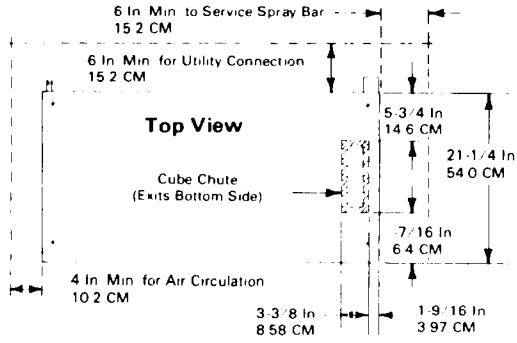

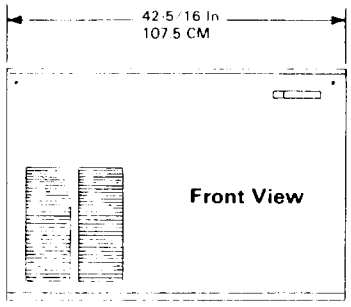

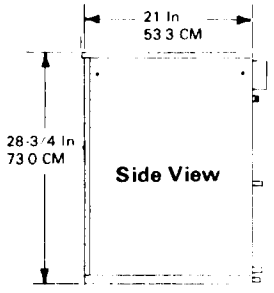

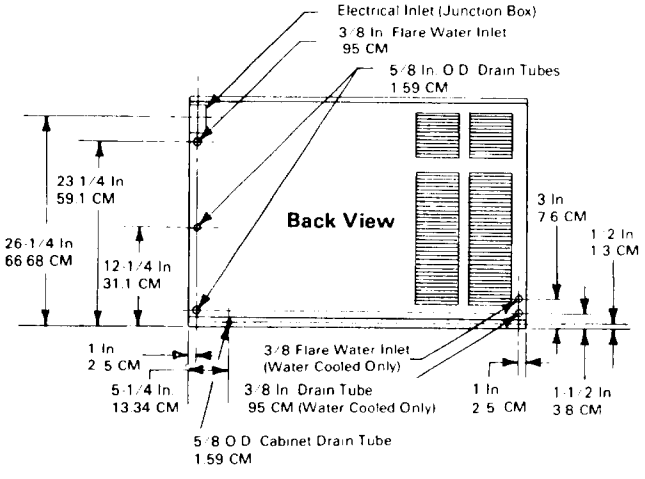

SPECIFICATIONS (CONT'D.)

MODEL HC700

Air-Cooled: Model HC700A

Water-Cooled: Model HC700W

Small, Medium, Large Cube Size

Electrical: 115/208-220/60/3
115/208-230/60/1

Est. Ship. Wt: 320 lbs.

MODEL NUMBER		MOTORS	VOLTS	HP/WATT	F.L.A.	L.R.A.
		COMP.				
SERIAL NUMBER		DRIVE				
		FAN				
REFRIGERANT 12	HEATER					
OZ	WATTS	OTHER				
TEST PRESSURE 140 LO - 235 HI						
A.C. SUPPLY VOLTAGE				WIRES	CYCLES	PHASE
MAXIMUM FUSE SIZE	AMPS	MINIMUM CIRCUIT AMPACITY				
QUEEN PRODUCTS DIVISION KING SEELEY THERMOS CO 505 FRONT ST. ALBERT LEA MN 56007						

FRONT SERVICE ACCESS PANEL

OPTIONALS

SPKMC35 - Stainless Steel Panels.
B40 Bin - 350 lbs. storage capacity.
B60 Bin - 550 lbs. storage capacity.
B80 Bin - 590 lbs. storage capacity.
B90 Bin - 590 lbs. storage capacity.
BX15 Bin Extension - 75 lbs.
BX25 Bin Extension - 150 lbs.
BX83 Bin Extension - 260 lbs.
BX85 Bin Extension - 560 lbs.
BX87 Bin Extension - 560 lbs.
KBT2 Bin Top.

SEE NAMEPLATE, shown at left, for electrical and refrigeration specifications. NAMEPLATE located on rear service panel.

Remove Left Side Panel to locate the Model Serial Number plate, shown below, on the Compressor base.

MODEL NUMBER	QUEEN PRODUCTS DIVISION KING SEELEY THERMOS CO 505 FRONT ST. ALBERT LEA MN 56007
SERIAL NUMBER	

We reserve the right to make product improvements at any time. Specifications and design are subject to change without notice.

This icemaker has been engineered to our own rigid safety and performance standards. The National Sanitation Foundation (NSF) seal, signifies that it is listed with the NSF and that it complies with the materials and construction standards of the NSF. In addition, the Underwriters Laboratories, Inc., (UL) Listing Mark and the Canadian Standards Association (CSA) Monogram, both signify that its construction and design have been inspected and tested by them. NSF, UL and CSA inspectors also periodically examine production icemakers at the factory, to assure continued compliance.

To retain the safety and performance built into this icemaker, it is important that installation and maintenance be conducted in the manner outlined in this manual.

SECTION I

GENERAL INFORMATION & INSTALLATION

I. INTRODUCTION

This manual provides specifications and the step-by-step procedures for the installation, startup and operation, and the maintenance and cleaning for the SCOTSMAN Model HC700 Modular Cuber.

The Model HC700 Modular Cubers are quality designed, engineered and constructed, and thoroughly tested icemaking systems, providing the utmost in flexibility to fit the needs of a particular user. Separate sections detail more specifically: General Information & Installation; Start Up Operation; Principles of Operation; Adjustment and Removal and Replacement Procedures; Maintenance and Cleaning Instructions; Service Diagnosis; Wiring Diagrams; and, the Illustrated Assemblies and Parts Lists.

DESCRIPTION

An attractive horizontal cabinet of leathergrain embossed steel with high gloss, charcoal brown baked enamel finish. Also, an optional stainless steel panel kit is available. These removable panels allow easy access to electrical and mechanical components for cleaning and maintenance.

SEALED REFRIGERATION SYSTEM

To provide quiet efficient operation of Icemaker, the Compressor motor is internally spring-mounted. The Compressor motor is covered by a five year parts warranty.

STORAGE BIN & EXTENSIONS

Since the Model HC700, like other modular cubers in the SCOTSMAN line, does not have an attached ice storage bin, it is necessary to use an auxiliary bin. Modular systems combinations include: B40 Ice Storage Bin with 350 pounds (lbs.) capacity; B60 with 550 lbs.; B80 with 590 lbs.; B90 with 590 lbs.; and, bin extensions: BX15 with 75 lbs.; BX25 with 150 lbs.; and the KBT2 Bin Top used with BX83 with 260 lbs.; BX85 with 560 lbs., and BX87 with 560 lbs. Two HC700 Modular Cubers can be stacked to double ice production volume.

II. UNPACKING AND INSPECTION

1. Call your authorized SCOTSMAN Distributor or Dealer, for proper installation. He's listed under ICE MAKING EQUIPMENT and MACHINERY in the yellow pages of the telephone book.
2. Visually inspect the exterior of the shipping container and skid and any severe damage noted, should be reported to the delivering carrier; and a concealed damage claim filed subject to internal inspection, with the carrier representative present.
3. Remove screws and shipping tape, and all panels, including the top, from the cabinet, and inspect for any concealed damage. Notify carrier of any concealed damage claims, as stated in step 2 above.
4. Remove all internal support packing, tape and wires, if any, in machinery compartment.
5. Check that refrigerant lines do not rub or touch lines or other surfaces, and that fan blades, if any, move freely.
6. Check that Compressors are snug on all mounting pads.
7. Remove optional Water Strainers from shipping bag, for installation in water supply line.
8. Untape and remove for installation, one plastic Base Drain and one electrical Conduit Box shipped from the factory taped to the top channel support above the Freezing Chambers.
9. Uncoil Bin Thermostat Tube and install Cube Deflector in Bin, see Figure 1-1.
10. Use clean damp cloth or disposable paper wiper to wipe clean the exterior surfaces of the cabinet.
11. SEE NAMEPLATE on the top rear, center service panel, and check that the location source voltage corresponds with the voltage specified on the nameplate.

CAUTION

Improper voltage supplied to the Icemaker will void your parts replacement program.

12. Remove the Manufacturer's Registration Card from the front of the User's Manual and fill in all spaces including: Model Number and Serial Number taken from the Model-Serial Nameplate located on the left side, front part of the Chassis base, with Left Front

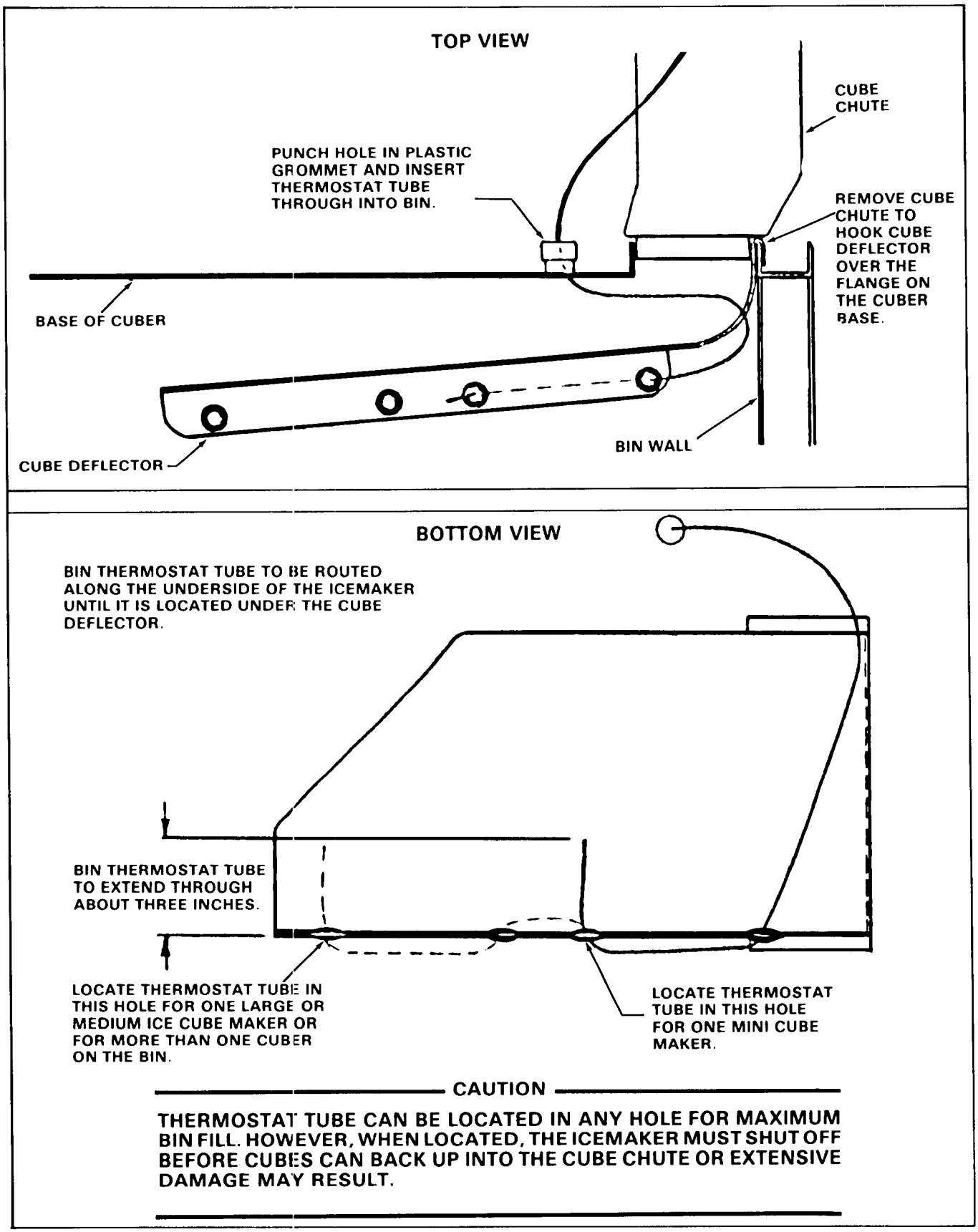

Figure 1-1. Cube Deflector Bulb Holder and Bin Thermostat Capillary Tube.

Panel removed. Forward the completed, self addressed, registration card to the SCOTSMAN factory.

III. LOCATION AND LEVELING

WARNING

This Modular Cuber is NOT designed for outdoor installations where air temperatures are below 50-degrees F., or above 100-degrees F., and water temperature is below 40-degrees F. or above 100-degrees F. Extended periods of operation at temperatures exceeding these limitations will constitute misuse, under the terms of the SCOTSMAN Manufacturer's limited warranty coverage.

1. Position the Modular Cuber and Bin, with or without Bin Extensions, in the selected permanent location.

NOTE

Prior consideration for location site shall include:

1. *Minimum room temperature 50-degrees F. and maximum room temperature 100-degrees F.*
2. *Water inlet temperatures: Minimum 40-degrees F. and maximum 100-degrees F.*
3. *Well ventilated location for air-cooled model, advising user to frequently clean Condenser, located directly behind Front Panel.*
4. *SERVICE ACCESS: Adequate space for all service connections, through the rear of the cabinet. A six inch minimum clearance at rear, left and front louvered panels, for routing cooling air drawn into and exhausted out of the compartment, to maintain proper condensing operation on air-cooled models.*

2. Level the modular cabinet in both the left-to-right and front-to-rear directions. The optional leveling legs on the Bins can be adjusted.

IV. ELECTRICAL CONNECTIONS

SEE NAMEPLATE for current requirements to determine wire size to be used for electrical hookup. The Cuber requires a solid earth ground wire. See Wiring Diagram.

Be certain the Cuber is connected to its own electrical circuit and individually fused. The maximum allowable voltage variation should not exceed ten percent of the nameplate rating, even under starting conditions. Low voltages can cause erratic operation and may be responsible for serious damage to the motor windings.

All external wiring should conform to the national, state and local electrical code requirements. Usually electrical permit and services of a licensed electrician will be required.

V. WATER SUPPLY AND DRAIN CONNECTIONS

A. AIR-COOLED MODELS - The recommended water supply line is a 3/8-inch O.D. copper tubing. Connect to cold water supply line with standard plumbing fittings, with a shutoff valve installed in an accessible place between the water supply and the Cuber.

A wire mesh strainer is provided and must be installed with the cleanout plug down. Locate the strainer next to the male flare water inlet fitting, at the rear of the Chassis, with the arrow on the strainer positioned in the direction of the water flow. The strainer protects against large particles of rust, scale, etc., which may be loosened in the water supply line at the time of installation.

In some cases a plumbing permit and services of a licensed plumber will be required.

WARNING

DO NOT operate this Modular Cuber when the water supply is shut OFF, or is BELOW the recommended 20 PSIG water pressure. Press the Master ON-OFF toggle switch on the Control Box to OFF immediately.

B. WATER-COOLED MODELS: On Water-Cooled Models, a separate cold water supply inlet line is required, to be connected to a second 3/8-inch O.D. male flare fitting at the lower left rear of the Chassis. Additional drain lines are required to drain the water-cooled Condenser.

C. DRAIN CONNECTIONS: All drains are gravity type and must have a minimum of 1/4-inch fall per foot on horizontal runs. The drains to be installed to conform with the local plumbing code. Install separate drain line for discharge water from the water-cooled Condenser. Install a vertical open vent on drain line to ensure good venting. The drain receptacle should be an open, trapped or vented construction. See Figure 1-2.

Recommended Bin drain is 5/8-inch O.D. copper tubing and should be vented and run separately.

VI. INSTALLATION - OPTIONAL

Install optionals ordered with the HC700:

1. SPKMC1 - Stainless Steel Cabinet Panels.
2. B40 Bin - 350 lbs. storage capacity.
3. B60 - 550 lbs. storage capacity.

4. B80 Bin - 590 lbs. storage capacity.
5. B90 Bin - 590 lbs. storage capacity.
6. BX15 Bin Extension - 75 lbs.
7 BX25 Bin Extension - 150 lbs.
8. BX83 Bin Extension - 260 lbs.
9. BX85 Bin Extension - 560 lbs.
10. BX87 Bin Extension - 560 lbs.
11. KBT2 Bin Top.

VII. FINAL CHECK LIST

1. Is the Cabinet level?(IMPORTANT)
2. Have all kits, if any, been installed?
3. Have all electrical and piping connections been made?
4. Has the voltage been tested and checked against the nameplate rating?
5. Is the water supply line shutoff valve installed and open and electrical power supply wiring properly connected?
6. All masking tape removed from doors, panels, styrofoam blocks from top of Freezing Chamber.
7. Has the Cuber and the Bin been wiped clean with clean damp cloths?
8. Have the Compressor holddown bolts been checked, to be sure the Compressor is snug on the mounting pads?
9. Has the owner/user been given the User Manual and instructed on how to operate the icemaker and the importance of periodic maintenance?
10. Has the Manufacturer's Registration Card been properly filled out? Check for correct Model and Serial numbers from nameplate, then mail the completed card to the SCOTSMAN factory.
11. Check all refrigerant lines and conduit lines, to guard aginast vibration and possible failure.
12. Is there at least a six inch clearance behind and around the Cabinet, for all connections and for proper air circulation?
13. Is the Cuber in a room where ambient temperatures are a minimum of 50-degrees F. all year around?
14. Has the inlet water supply pressure been checked to ensure a minimum of 20 PSIG?
15. Has the owner been given the name and telephone number of the Authorized SCOTSMAN Distributor or Service Agency serving him?

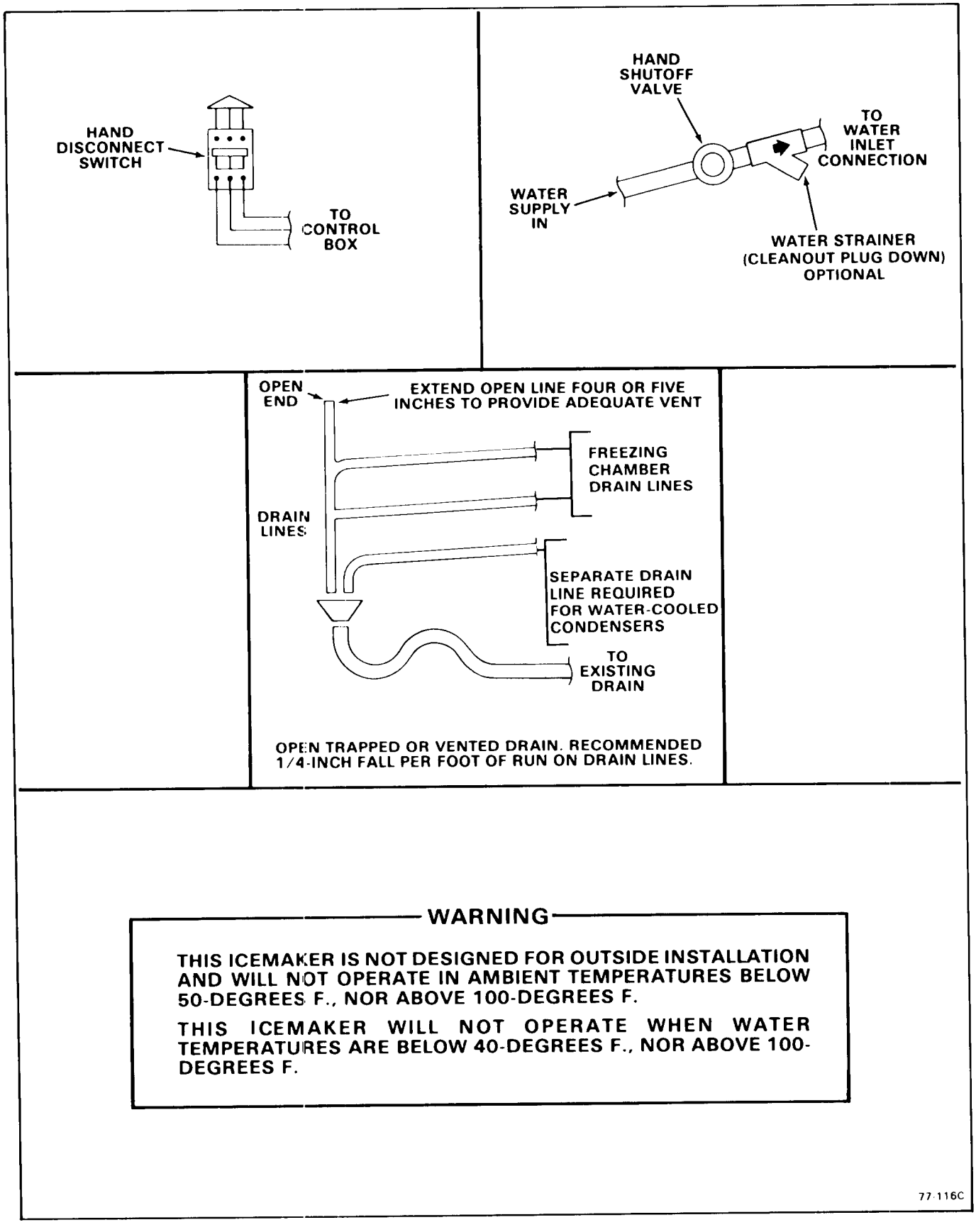

Figure 1-2. Installation Practice

SECTION II

OPERATING INSTRUCTIONS

I. START UP

1. Remove screws, the Top Panel and the Front Panel.
2. Check that the Master ON-OFF and Compressor ON-OFF toggle switches are OFF, on the front of the Control Box.
3. Rotate the shaft of the Timer & Switch Assembly protruding through the hole in the front Cover of the Control Box, CLOCK-WISE, to start the Timer for filling the reservoir sump, in the Freezing Chamber, with water.

NOTE

Slowly rotate the shaft CLOCKWISE, until the actuator arm on the microswitch drops off of the outer cam into the cam slot. An audible click can be heard, but in a noisy area, look at the cam and switch to observe the event. See A, Figure 2-1.

4. Move the Master ON-OFF toggle switch to the ON position.

NOTE

Observe that the Water Inlet Solenoid valve OPENS and inlet water flows from the valves through tubing and can be seen flowing to the Defrost Water Tube, at the top rear of each Freezing Chamber, where the water then flows around the inverted ice cube cups and drains into the Freezing Chamber sump. Excess water is overflowed through the standpipe and drain tube. This cycle will take about three minutes, when the Timer will CLOSE the Water Inlet Solenoid Valve.

5. Repeat step 3.
6. After completion of the second Harvest Cycle, move the Compressor ON-OFF toggle switch to the ON position.

NOTE

1. *During START UP, advancing two Harvest Cycles, allows a check that: the Water Inlet Solenoid Valve operate properly; inlet water can be observed flowing; the sumps are filled with water in preparation for the Freezing Cycle; and, checks the function of the overflow and drains.*
2. *The Water Pumps operate during the defrost Harvest Cycle. Factory testing proved faster defrost and increased ice capacity with continuous operation of the Water Pumps.*

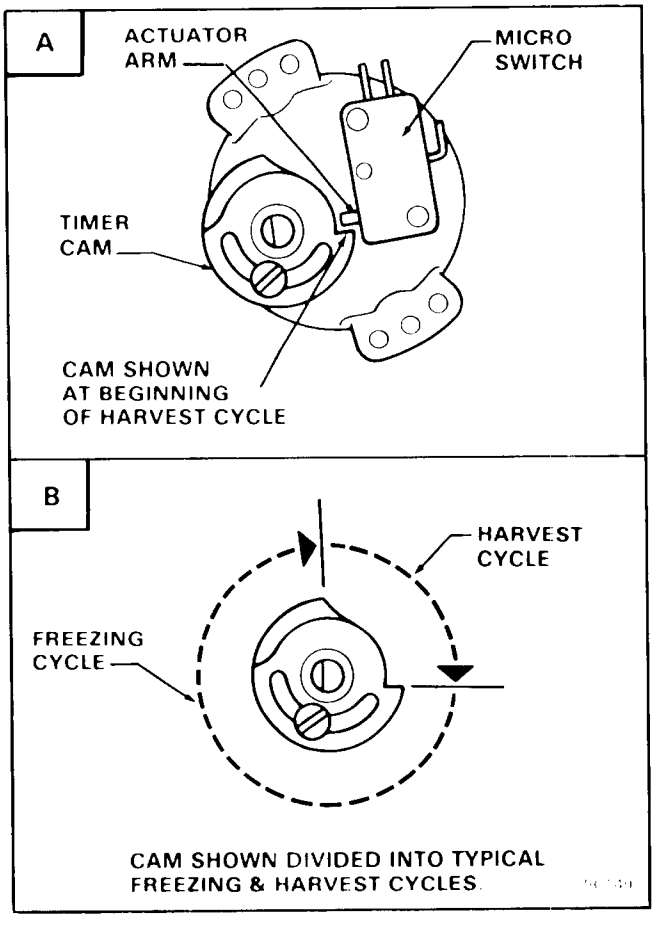

Figure 2-1. Timer Cam Positions.

7. Temporarily remove Cube Chute for these operational checks.
8. Check that the plastic Curtains hang evenly and vertically, to prevent loss of water during the Freezing Cycle.

NOTE

The Timer dial does not rotate at the end of the Harvest Cycle, it is started later by the Cube Size Control, in the Control Box.

9. Check operation of Freezing Cycle:
   a. Compressors are operating.
   b. Agitator Motor is operating, as seen by

Fan rotating on top of upper Freezing Chamber.

c. Water Pumps are operating, as seen at Tygon Tubes on Pump and looking at water being sprayed into inverted ice cube cups, from rotating Spray Bars, seen inside Freezing Chamber.

d. Icemaking process begins: feeling inside ice cube cups reveals cold temperatures and very shortly ice begins to form.

NOTE

Freezing time will range between 20 to 30 minutes in a 70-degree F. ambient temperature. Longer time, for temperatures above 70-degrees F. and shorter time required when temperatures are below 70-degrees F. Average complete cycle range is about 17 to 25 minutes.

WARNING

DO NOT operate this Icemaker when the water supply is shut OFF, or is BELOW the recommended 20 PSI water pressure. Move the Master ON-OFF toggle switch to OFF, immediately.

10. Replace the plastic Cube Chute, before Harvest Cycle begins.

11. Observe first ice cube harvest:

a. Check size of ice cubes: when too small after a second harvest, refer to procedure IV-II, for adjustment to Cube Size Control to increase size of ice cube.

NOTE

Normal cube size is with a one-quarter inch depression in the crown.

b. Check texture of ice cubes: when partially cloudy throughout, suggests icemaker operating short of water, near end of freezing cycle, or possibly an extreme problem water condition, where in filtering or purifying equipment is recommended. Contact SCOTSMAN - Queen Products Division, Service Department, Albert Lea, Minnesota, for further details.

12. With the icemaker in the Harvest Cycle, hold ice against the Bin Thermostat Control bulb to test shutoff, which should cause the icemaker to shut OFF at the end of the Harvest Cycle.

NOTE

Within minutes after the ice is removed from the sensing bulb, the bulb will warm up and cause the icemaker to restart. This control is factory set and should not be reset until testing is performed. Normal setting is about 35-degrees F. CUT-OUT and 39-degrees F. CUT-IN.

13. Install refrigerant service gauges on the high side and low side Schrader valve fittings and check the Compressor head pressure and back pressure.

NOTE

1. *Air-Cooled Models: Head pressure after 20 minutes of Freezing Cycle, at 70-degree F. ambient temperature, will be about 135 PSIG. The back pressure equalizes during hot gas defrost and gradually pulls down to about four PSIG, just before Harvest Cycle. Higher ambient temperatures and dirty Condenser will cause higher pressure.*

2. *Water-Cooled Models: Water Regulator Valves are factory set at 135 PSIG. Check the gauge indication and adjust, if necessary. Back pressure will operate the same as our Air-Cooled Models.*

14. Replace Control Box Cover and all service panels.

15. Remove refrigerant service gauges.

16. Thoroughly explain to the owner/user the significant specifications of the Icemaker, the start up and operation, going through the procedures in the operating instructions. Answer all questions about the Icemaker, by the owner; and, inform the owner of the name and telephone number of the authorized SCOTSMAN Distributor, or Service Agency serving him.

SECTION III

PRINCIPLES OF OPERATION - How It Works

I. FREEZING CYCLE

Water from the sump in the reservoir of the Freezing Chamber is pumped to a rotating Spray Bar Assembly, which is powered by the Agitator Motor drivemotor on top of the upper Freezing Chamber. Each Spray Bar Assembly has ten jets through which water is uniformly sprayed into the inverted ice cube cup molds of the Freezing Chamber Evaporator. See Figure 3-1. At the beginning of the Freeze Cycle, the electrical circuit is completed to the Compressor, Water Pump, and the coil of the Finish Relay. The Water Pump operates continuously during the Freeze Cycle, through contacts of the Finish Relay. In Water-Cooled models water also flows through the Condenser and out the drain. While in the Condenser, water removes heat from the refrigerant and allows the refrigerant to condense from a gas to a liquid.

Refrigerant is compressed in the Compressor and discharged into the Condenser as a high pressure, high temperature gas. The refrigerant is cooled and condensed by either air or water and condenses to a high pressure, high temperature liquid. This liquid refrigerant, then passes through a small capillary tube where the temperature and pressure of the liquid refrigerant are lowered. The low pressure, low temperature liquid refrigerant, then enters the Evaporator. The refrigerant is warmed by water being sprayed against the Evaporator and begins to boil off, to become a gas. The refrigerant next travels through the Accumulator, where any remaining liquid refrigerant then returns to the Compressor as a low pressure, low temperature gas, and the cycle starts again.

During the Freezing Cycle, both the Water Inlet Solenoid Valve and the Hot Gas Solenoid Valve are CLOSED.

When the ice cubes are about three-quarters formed, the Cube Size Control bulb located on the suction line coming out of the Evaporator

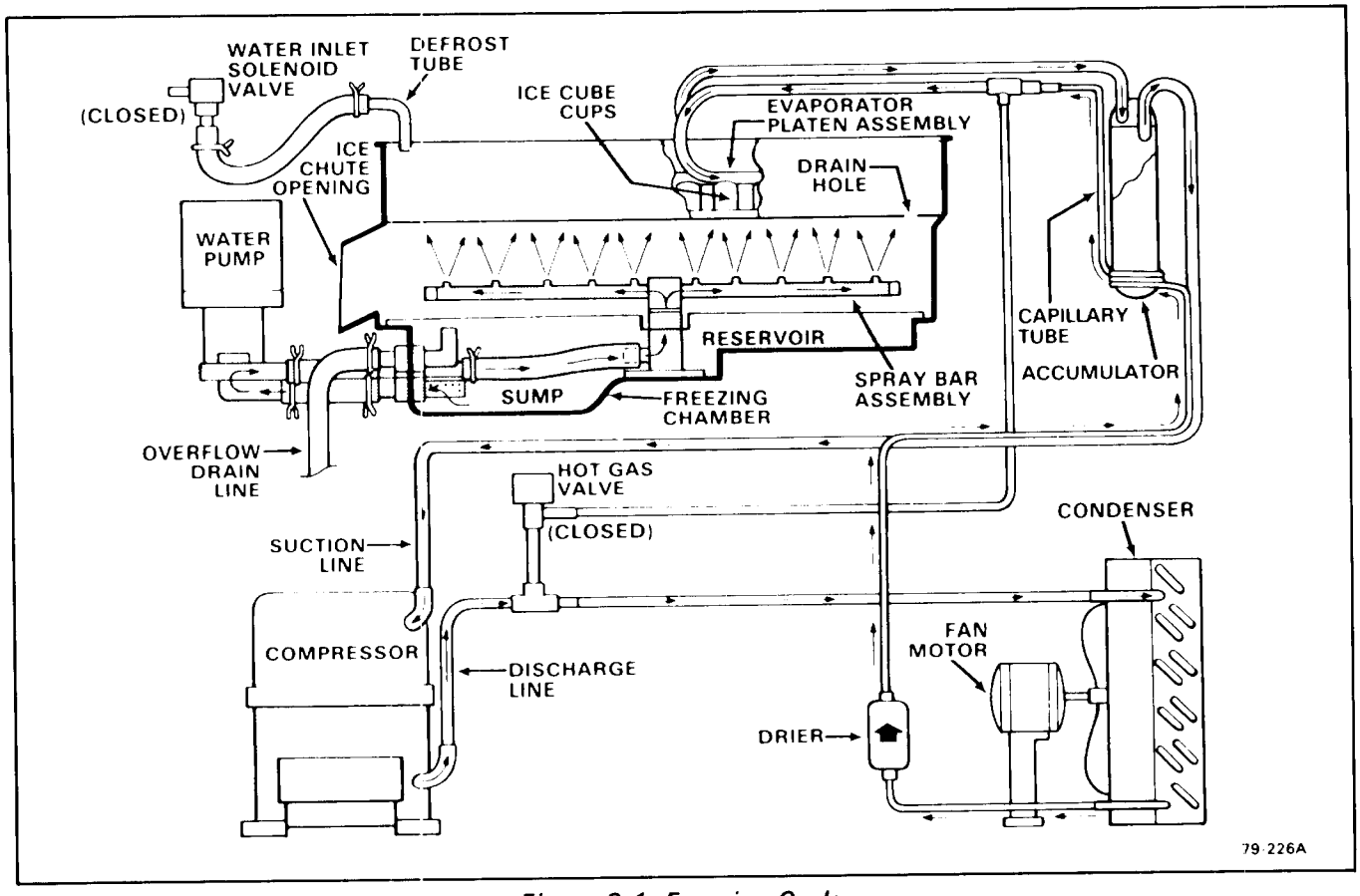

Figure 3-1. Freezing Cycle.

platen assembly, will sense the temperature at which it is preset to CLOSE. This will complete the electrical circuit to the Timer. The Timer then controls the remainder of the cycle.

The Timer will keep the Icemaker operating in the Freezing Cycle for the next six minutes. This will give the cubes time to fully form. After six minutes, the Timer will switch the Icemaker into the Harvest Cycle, through the contacts of the Timer Assembly microswitch.

II. HARVEST CYCLE

When the Timer switches the Icemaker into the Harvest Cycle, hot gas being discharged from the Compressor is diverted from the Condenser through the Hot Gas Solenoid Valve into the Evaporator. During this cycle, the hot gas circulates from the Compressor to the Evaporator and back again, bypassing the Condenser and capillary tube. In the electrical circuit, the Compressor is operating and both the Water Inlet Solenoid Valve and the Hot Gas Solenoid Valve are energized. See Figure 3-2.

Opening the Water Inlet Solenoid Valve, allows a fresh water supply to be discharged into the top of the Evaporator platen assembly. The finished ice cubes are released from the Evaporator, by the warming effect of the hot gas flowing through the Evaporator tubes and the water flow around the ice cube molds. The released ice cubes drop into the inner bottom of the Freezing Chamber and pushed by the rotating Spray Bar Assembly out the slightly slanted ice chute opening, down the plastic Cube Chute and into the ice storage bin. At the end of the Harvest Cycle, the Timer cam will push the actuator arm of the microswitch IN. If the Bin Thermostat is still CLOSED, a whole new cycle will begin. If the Bin Thermostat is OPEN, the icemaker will shut OFF at this time.

III. COMPONENT DESCRIPTIONS

A. BIN THERMOSTAT CONTROL

The Bin Thermostat Control is located in the right side of the gusset in the front upper corner of the Chassis frame. The sensing capillary tube of the control is routed downward and into the ice storage Bin. The capillary tube is threaded through the grommeted holes of the combination cube deflector and thermostat bulb bracket. The Bin Thermostat Control functions to automatically shut OFF the Icemaker, when the ice storage Bin is filled and ice contacts the capillary tube. It also signals the RESTART of the Icemaker when the capillary tube starts to warm up, after ice has been removed from the Bin.

NOTE

Altitude adjustment should ONLY be performed on Icemakers installed at 2000-foot level locations and

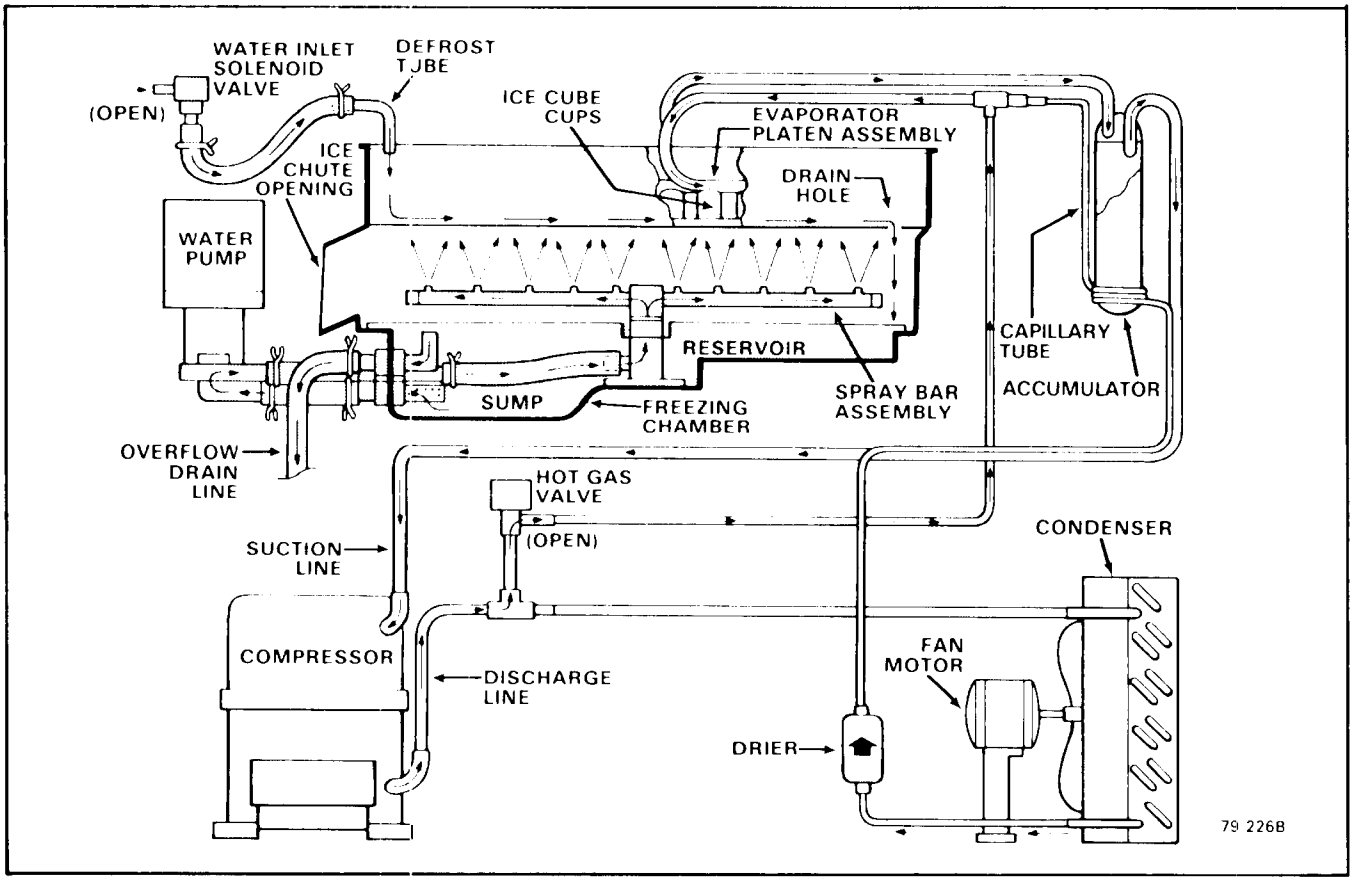

Figure 3-2. Harvest Cycle.

ABOVE, and adjust only in increments of one-fourth turn of a screw at a time.

B. COMPRESSOR START RELAY

The Compressor Start Relay functions to carry the Compressor line current. The relay is wired so any control in the pilot circuit, such as the Bin Thermostat, Low Pressure - and High Pressure Controls, etc., will cause the relay holding coil to be de-energized, when the control contact OPENS, thereby breaking the circuit to the Compressor through the relay points.

C. CUBE SIZE CONTROL

The temperature sensing Cube Size Control affects the length of the Freezing Cycle prior to initiating the Finishing Timer. The Cube Size Control closes its contacts when the Evaporator reaches a preset temperature, starting the Finishing Timer. A variation in either ambient air or incoming water temperature will affect the efficiency of the refrigeration system. This will vary the length of time it takes the Evaporator to reach the temperature at which the Cube Size Control is preset to CLOSE; which, in turn, will affect the overall cycle time.

NOTE

Be sure to refer to procedure IV-II, Adjustment of the Cube Size Control, BEFORE attempting to adjust the control.

D. FINISH RELAY

The multi-function, three pole, double-throw, plug-in relay is installed directly into a receptacle on the printed circuit board in the Control Box. The relay functions, in part, to by-pass the Bin Thermostat Control, to prevent the Icemaker from shutting OFF, when a filled-bin condition occurs, during the Freezing Cycle. The by-pass action serves to ensure full-sized ice cubes with each Harvest Cycle; and, to prevent short cycling on the Bin Thermostat Control.

E. FINISHING TIMER - Timer & Switch Assembly

The function of the Finishing Timer begins when activated by the Cube Size Control. The Timer controls a fifteen minute dual function: eleven and one-half minutes are programmed to finish freezing the ice cubes and the final three and one-half minute portion is for the defrost operation and harvest of the ice cubes. All electrical circuitry is connected through the printed circuit board and the Finishing Timer and shunted by the single-pole, double-throw microswitch to either the Freezing Cycle or the Harvest Cycle. The microswitch is actuated by a Cam Assembly directly connected to the Timer Motor. The Timer Cam can be adjusted to vary the defrost timer as required.

F. HIGH PRESSURE CONTROL - Air-Cooled Model

The High Pressure Control, a safety Control, is factory set at 300 PSIG. The control functions as a precautionary device, to shut OFF electrical power to the Icemaker, when extreme pressures occur in the refrigeration system. In addition to being a manual reset control, there is an adjusting screw for raising or lowering the CUT-IN pressure.

G. HIGH PRESSURE CONTROL - Water-Cooled Model

The High Pressure Control, a safety control, is factory set at 250 PSIG. The control functions as a precautionary device, to shut OFF electrical power to the Icemaker, should a loss of water occur to the water-cooled Condenser. In addition to being a manual reset Control, there is an adjusting screw for raising or lowering the CUT-IN pressure.

H. HOT GAS SOLENOID VALVE

The Hot Gas Solenoid Valve functions only during the Harvest Cycle, to divert the hot discharge gas from the Compressor, by-passing the Condenser and capillary tube, for direct flow to the Evaporator Platen Assembly to release ice cubes from the inverted ice cube molds. The Hot Gas Solenoid Valve is comprised of two parts, the Body & Plunger and the Coil & Frame assemblies. Installed in the discharge line of the Compressor, the energized solenoid coil lifts the valve stem within the valve body to cause the hot dischage gas to be diverted when the Finishing Timer has advanced to the start of the Harvest Cycle.

I. SPRAY BAR ASSEMBLY

The Spray Bar Assemblies are rotated by the Agitator Motor, a small drivemotor mounted on top of the upper Freezing Chamber; and, designed to channel recirculating water to small jets for uniformly spraying water into the inverted ice cube cups. The Celcon material, used in fabricating the Spray Bar parts, is not subject to chemical attack by either acidic or alkaline materials at low temperatures or at high temperatures. Because of the smooth non-porous surface of the Celcon material Spray Bar, foreign materials have difficulty trying to adhere to these surfaces, thereby, reducing the usual frequency of cleaning procedures.

NOTE

Refer to procedure V-III, CLEANING - Icemaker; and, for problems requiring removal of parts refer to procedure IV-XV, for details for removing the Spray Bar Assembly.

J. WATER INLET SOLENOID VALVE

The Water Inlet Solenoid Valve functions only during the Harvest Cycle, when it is energized to permit a metered, gallon-per-minute rate of incoming water, to flow through the Defrost Tube onto the top of the plastic Platen Assembly, assisting in the harvest of ice cubes. The water drains through holes in the Platen Assembly into the Reservoir in the lower section of the Freezing Chamber; and there, the water is recirculated through the Water Pump for return to the Spray Bars.

K. WATER REGULATOR VALVE - Water-Cooled Model

The Water Regulator Valve functions to maintain a constant Compressor head pressure, by regulating the amount of incoming water flow through the Condenser, on water-cooled models. The valve operates through the refrigerant system high side pressure. Rotating the adjusting screw, located on top of the valve, can INCREASE or DECREASE the water flow through the water-cooled Condenser, which in turn, will DECREASE or INCREASE the Compressor operating head pressure.

NOTE

When installing a replacement Water Regulator Valve, be sure the replacement valve is installed with the arrow positioned in the direction of the water flow.

REFRIGERANT CHARGE

MODEL	HC700 Refrig. Chg.
Air-Cooled	33 oz. R-12 (Approx.)
Water-Cooled	33 oz. R-12 (Approx.)

NOTE

Always CHECK NAMEPLATE on individual Icemaker for specific refrigerant charge, BEFORE charging the refrigeration system. The above listed refrigerant charges are approximate charges for the HC700 Cubers, however it is important to CHECK NAMEPLATE for each Icemaker, especially when there are different Compressors.

SECTION IV

ADJUSTMENT & REMOVAL & REPLACEMENT

The procedures provided in this Section are arranged in alphabetical order, to make specific Adjustment and Removal and Replacement information easy to locate.

Read the instructions thoroughly before preforming any Adjustment or Removal and Replacement Procedures.

I. ADJUSTMENT OF THE BIN THERMOSTAT CONTROL

The control for the Bin Thermostat is the Temperature Control, located in the right side of the gusset in the front upper corner of the Chassis frame.

See Figure 4-1 for location and direction of rotation, clockwise (CW) or counterclockwise (CCW), of the adjusting screws on the Temperature Control, the adjustment is to be performed.

WARNING

The adjusting screws on the Temperature Control device have very sensitive response to adjustment. DO NOT attempt to adjust the screw until after thoroughly reading and understanding the following instructions and illustration. Over-adjusting or erratic guessing, can foul the instrument and cause ultimate delay and part replacement, WHICH COULD HAVE BEEN PREVENTED.

II. ADJUSTMENT OF THE CUBE SIZE CONTROL

CAUTION

BEFORE performing actual adjustment to the Cube Size Control, check other possible causes for

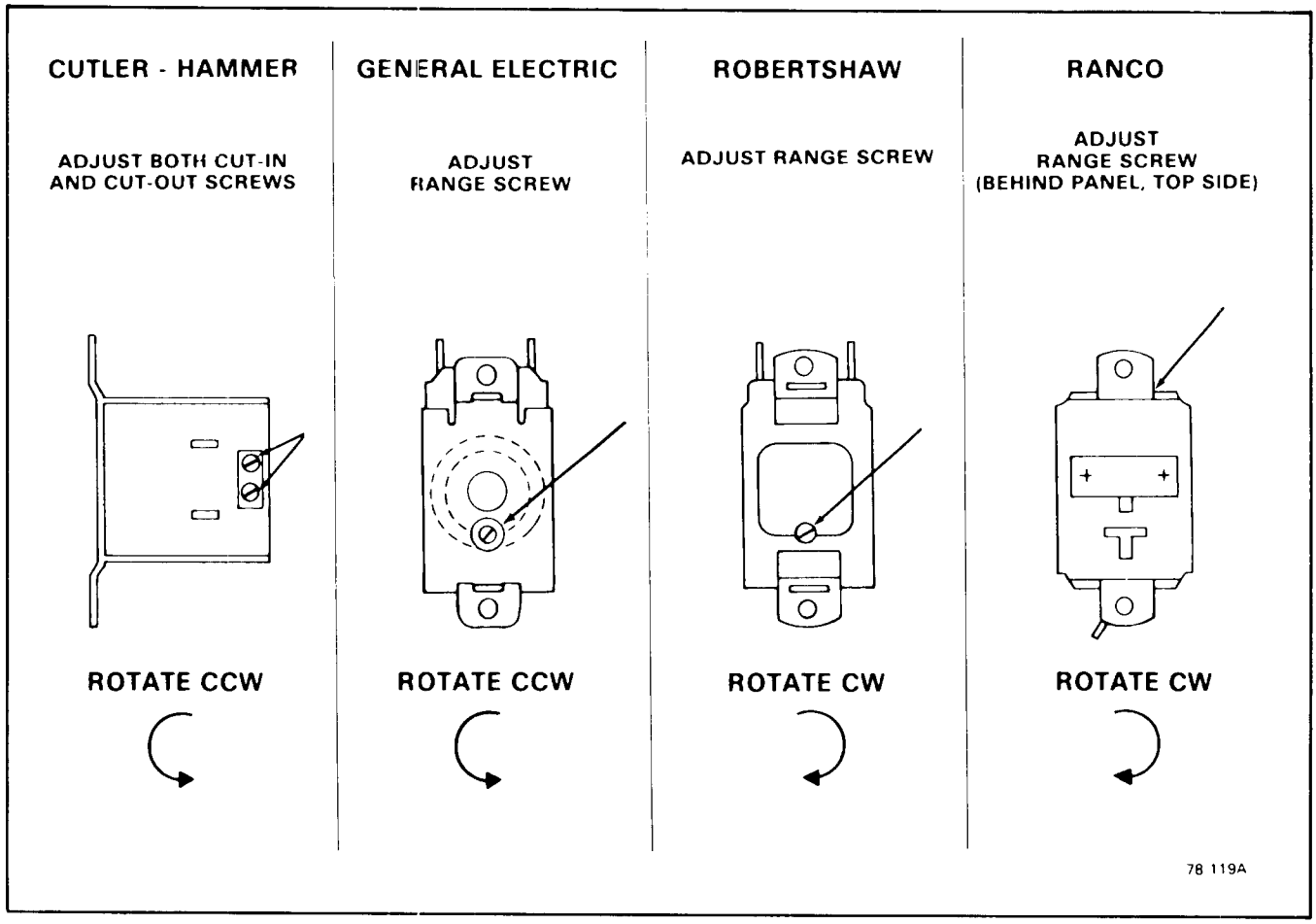

Figure 4-1. Adjustment of the Temperature Control.

cube size problems, refer to Section VI, SERVICE DIAGNOSIS for problem review and analysis.

DO NOT perform adjustment when a new Cube Size Control is installed, until the control bulb has been properly installed in the tube well, on the refrigerant tube of the Platen Assembly and the Icemaker has progressed through several complete freezing and harvest cycles, to observe size and quality of ice cubes and whether or not a cube size problem exists.

As a reverse acting temperature control, adjustment on the Cube Size Control is performed to either cause larger sized ice cubes or smaller sized ice cubes to be produced.

A. To Produce LARGER Sized Ice Cubes:

1. Locate the Cube Size Control, in the left side of the gusset in the front upper corner of the Chassis frame.
2. Rotate the adjusting screw one-eighth of a turn CLOCKWISE toward COLDER.
3. Observe size of ice cubes in next two ice cube harvests and repeat step 2 above, in one-eighth turn increments, until desired ice cube size is achieved.

B. To Produce SMALLER Sized Ice Cubes:

1. Locate the Cube Size Control, in the left side of the gusset in the front upper corner of the Chassis frame.
2. Rotate the adjusting screw one-eighth of a turn COUNTERCLOCKWISE toward WARMER.
3. Observe size of ice cubes in next two ice cube harvests and repeat step 2 above, in one-eighth turn increments, until desired ice cube size is achieved.

III. ADJUSTMENT OF THE TIMER & SWITCH ASSEMBLY

The Timer & Switch Assembly is factory set, so that one complete revolution of the cam on the Timer represents fifteen minutes. Eleven and one-half minutes comprise the freezing cycle event during cam rotation, and the final three and one-half minutes program the defrost and harvest cycle. Rotating the shaft of the Timer Cam, CLOCKWISE will allow positioning the actuator arm of the microswitch on the cam at the selected start position for either the freezing cycle or harvest cycle, as required, during the START UP procedures and in the CLEANING instructions. Rotating the shaft COUNTER-CLOCKWISE will unscrew the shaft from the threaded stud on the Timer Cam.

To Adjust the Timer Switch Assembly:

A. HARVEST CYCLE: Slowly rotate the shaft of the Timer & Switch Assembly, located in the hole in the front of the Control Box Cover, CLOCKWISE, until the actuator arm on the microswitch drops off of the outer cam into the cam slot. An audible click can be heard, but in a noisy area, look at the cam and switch to observe the event. See Figure 4-2.

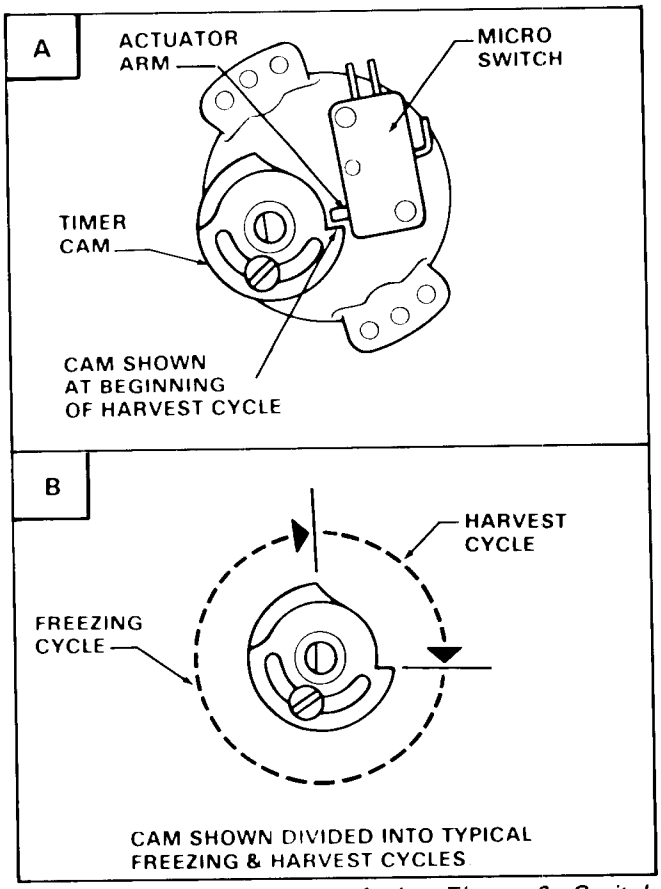

Figure 4-2. Adjustment of the Timer & Switch Assembly.

B. FREEZING CYCLE: Slowly rotate the shaft of the Timer & Switch Assembly, located in the hole in the front of the Control Box Cover, CLOCKWISE, until the actuator arm on the microswitch rides up out of the cam slot to the start of the surface of the outer cam.

IV. ADJUSTMENT OF THE WATER REGULATOR ASSEMBLY - WATER-COOLED MODELS

The correct Compressor head pressure on Water-Cooled Models is 135 PSIG. Adjusting the Water Regulator Valve increases or decreases the rate of flow of water, through the Water-Cooled Condenser; which increases or decreases the affected temperature/pressure of the Compressor head pressure. INCREASED water flow, results in DECREASED or LOWER head pressure; while, DECREASED water flow, results in INCREASED or HIGHER head pressure.

To adjust the Water Regulator Assembly:

A. To INCREASE the head pressure: Rotate the adjusting screw IN, or CLOCKWISE.

B. To DECREASE the head pressure: Rotate the adjusting screw OUT, or COUNTER-CLOCKWISE.

C. Check change in Compressor head pressure, and repeat step A or B as necessary, to achieve desired operating head pressure.

WARNING

Be sure the electrical power supply and the water supply are OFF BEFORE starting any of the following REMOVAL AND REPLACEMENT procedures as a precaution to prevent possible personal injury or damage to equipment.

V. REMOVAL AND REPLACEMENT OF THE AGITATOR MOTOR ASSEMBLY

NOTE

The Agitator Motor in the HC-700 Cuber, is installed on top of the upper Freezing Chamber.

A. To remove the Agitator Motor Assembly:

1. Remove screws and the Top Panel and Front Panel to gain access to the Agitator Motor.
2. Tilt the top of the plastic Cube Chute forward slightly, then, lift the Cube Chute up for removal.
3. Remove three U-Type Clips and the plastic Curtain Assembly.
4. Reach through the ice chute opening in the upper Freezing Chamber and feel for the Spray Bar.
5. Move hand to the center hub and rotate the Spray Bar, so one end is aligned with the ice chute opening.
6. Lift the Spray Bar up, off of the jet bearing hub, then, remove the Spray Bar through the ice chute opening.
8. Disconnect electrical leads and ground wire from terminals on the Agitator Motor.
9. Reach through the same ice chute opening, as before, and grasp the top Drive Fork with one hand, and the Agitator Motor Fan, on top of the upper Freezing Chamber, with the other hand. See Figure 4-3.
10. Hold the Fan blades still and rotate the left-hand thread Drive Fork to the right, COUNTERCLOCKWISE, and unscrew the Drive Fork from the Agitator Motor.
11. Remove four screws and lift the Agitator Motor out the top of the upper Freezing Chamber.

B. To replace the Agitator Motor Assembly, reverse the removal procedure.

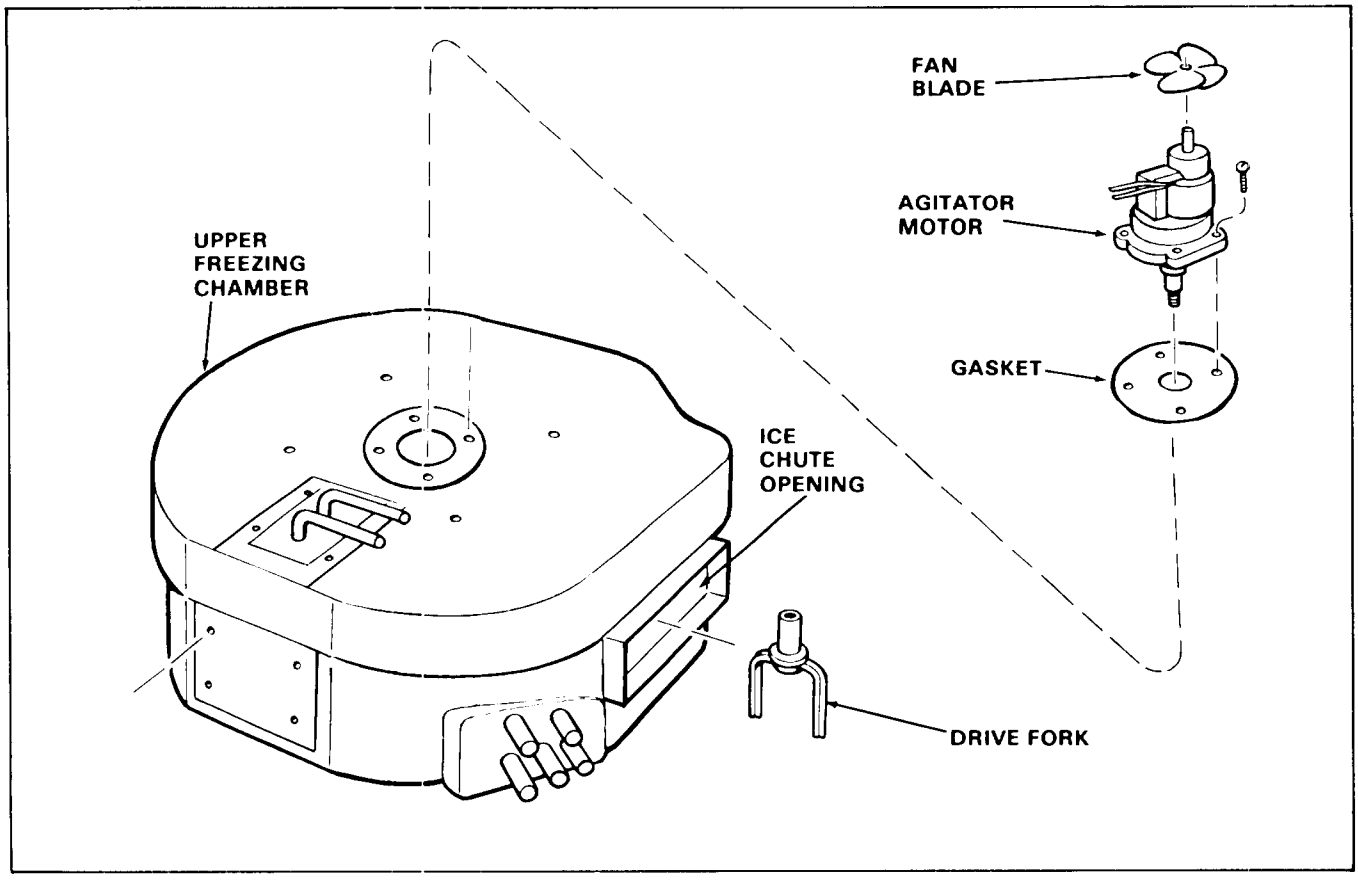

Figure 4-3. Removal of the Agitator Motor Assembly.

VI. REMOVAL AND REPLACEMENT OF THE BIN THERMOSTAT CONTROL

A. To remove the Bin Thermostat Control:

1. Remove screws and the Front Panel to gain access to the Bin Thermostat Control.
2. Trace capillary tube, from the Bin Thermostat Control, down to the Cube Deflector.
3. Carefully remove the capillary tube from the bulb holder holes on the side of the Cube Deflector.
4. Carefully withdraw the capillary tube from the Bin, up through the Chassis Base.
5. Remove electrical leads from the Bin Thermstat Control.
6. Remove screws and the Bin Thermostat Control.

B. To replace the Bin Thermostat Control, reverse the removal procedures.

VII. REMOVAL AND REPLACEMENT OF THE COMPRESSOR ASSEMBLY

NOTE

Always install a replacement Drier, anytime the sealed refrigeration system is opened. Do not replace the Drier until all other repair or replacement has been completed.

A. To remove the Compressor Assembly:

1. Remove screws and the Top, Front and Left Side Panels.
2. Bleed off or blow the refrigerant charge through the Schrader valve.
3. Remove the cover from the terminal box on the Compressor; then, remove three screws and electrical leads from the Compressor.
4. Unsolder the refrigerant suction line and the discharge line from the Compressor.
5. Unsolder the process header from the Compressor and retain for installation on the replacement Compressor.
6. Remove four bolts and washers which secure the Compressor to the Chassis mounting base.
7. Slide and remove the Compressor from the Cabinet.

B. To replace the Compressor Assembly, reverse the removal procedure.

VIII. REMOVAL AND REPLACEMENT OF THE CONDENSER - AIR-COOLED MODELS

NOTE

Always install a replacement Drier, anytime the sealed refrigeration system is opened. Do not replace the Drier until all other repair or replacement has been completed.

A. To remove the Condenser:

1. Remove screws and the Left Side Panel and Front Panel.
2. Bleed off or blow the refrigerant charge through the Schrader valve.
3. Unsolder and disconnect refrigerant lines from the Condenser.
4. Unsolder and remove the Drier from the refrigerant lines connecting to the Condenser.
5. Remove screws, lockwashers and the Condenser from the Chassis base.

B. To replace the Air-Cooled Condenser, reverse the removal procedure.

IX. REMOVAL AND REPLACEMENT OF THE CONDENSER - WATER-COOLED MODELS

NOTE

Always install a replacement Drier, anytime the sealed refrigeration system is opened. Do not replace the Drier until all other repair or replacement has been completed.

A. To remove the Condenser:

1. Remove screws and the Front Panel.
2. Bleed off or blow the refrigerant charge through the Schrader valve.
3. Check to be sure building source water inlet supply shutoff valve to rear of Chassis is OFF.
4. Disconnect water inlet supply line at the left bottom rear of Chassis.
5. Disconnect Water-Cooled Condenser inlet water line at the Water Regulator Assembly outlet fitting.
6. Unsolder the refrigerant capillary tube at the Drier.
7. Unsolder the Compressor discharge line, at the top of the Water-Cooled Condenser.
8. Unsolder the Condenser water outlet line, at the top of the Water-Cooled Condenser.
9. Remove two screws and washers and the Water-Cooled Condenser from the Cabinet.

B. To replace the Water-Cooled Condenser, reverse the removal procedures.

X. REMOVAL AND REPLACEMENT OF THE CUBE SIZE CONTROL

A. To remove the Cube Size Control:

1. Remove screws and the Front Panel to gain access to the Cube Size Control.
2. Trace capillary Tube, from the Cube Size Control, to the refrigerant suction line on

the Evaporator Platen Assembly; then peel back the insulation.

3. Remove clips and the coiled capillary tube bulb out of the Freezer section of the Cabinet.
4. Remove electrical leads from the Cube Size Control.
5. Remove screws and the Cube Size Control.

B. To replace the Cube Size Control, reverse the removal procedure.

XI. REMOVAL AND REPLACEMENT OF THE CURTAIN ASSEMBLY - TWO

A. To remove the Curtain Assembly:

1. Remove screws and the Right Side Panel to gain access to the Curtain Assembly to be removed.
2. Tilt the top of the plastic Cube Chute forward slightly, then, lift the Cube Chute up for removal.

NOTE

Before removing the Curtain Assembly in the next step, look inside the ice chute opening to note the irregular end of the plastic stiffener of the Curtain Assembly is installed at the left side of the opening.

3. Remove three U-Type Clips and the plastic Curtain Assembly from the top lip of the ice chute opening.

B. To replace the Curtain Assembly, reverse the removal procedure.

NOTE

Be sure to install the replacement Curtain Assembly with the irregular end of the plastic stiffener positioned at the left side of the ice chute opening; and, the edge of the Curtain is dressed evenly with the top lip of the ice chute opening and secured with three U-Type Clips. The thin, clear plastic sheet of the curtain should hang down evenly.

XII. REMOVAL AND REPLACEMENT OF THE DRIER

NOTE

Always install a replacement Drier, anytime the sealed refrigeration system is opened. Do not replace the Drier until all other repair or replacement has been completed.

A. To remove the Drier:

1. Remove screws and the Left Side Panel and the Front Panel.
2. Bleed off or blow the refrigerant charge through the Schrader valve.
3. Remove the Cable Tie attaching the Drier to the rear of the Control Box.
4. Unsolder refrigeration lines at both ends of the Drier.

B. To replace the Drier:

CAUTION

1. If the factory seal is broken on the replacement Drier, exposing it to the atmosphere more than a few minutes, the Drier will absorb moisture from the atmosphere and lose substantial ability for moisture removal.

2. Be sure the replacement Drier is installed with the arrow positioned in the direction of the refrigerant flow.

1. Remove the factory seals from the replacement Drier and install the Drier in the refrigerant lines with the arrow positioned in the direction of the refrigerant flow.
2. Solder the Drier into the lines, two places.
3. Secure Drier to Drain Bracket with a Cable Tie.
4. Purge the system and check for leaks.
5. Thoroughly evacuate the system to remove moisture and non-condensables.
6. Charge the system with refrigerant, by weight. SEE NAMEPLATE.
7. Replace and attach the Left Side Panel and the Front Panel.

XIII. REMOVAL AND REPLACEMENT OF THE FAN MOTOR ASSEMBLY - AIR-COOLED MODELS

A. To remove the Fan Motor Assembly:

1. Remove screws and the Left Side Panel and the Front Panel.
2. Disconnect the two electrical leads from the Fan Motor at the Control Box Assembly.
3. Remove screws and the Fan Motor Assembly; and remove the Fan Motor and Bracket from the Chassis base.
4. Loosen set screws on the Fan Blade and remove the Fan Blade from the Fan Motor.
5. Remove screws and lockwashers and separate the Fan Motor from the Fan Motor Bracket.

B. To replace the Fan Motor Assembly, reverse the removal procedure.

NOTE

Be sure to replace the Fan Blade with the hub of the Fan Blade facing the Fan Motor, to ensure air flow is toward the Fan Motor.

XIV. REMOVAL AND REPLACEMENT OF THE FREEZING CHAMBER - (TWO)

A. To remove the Freezing Chamber:

1. Remove screws and the Top Panel, Front Panel and the Right Side Panel to gain access to the Freezing Chamber.
2. Tilt the top of the plastic Cube Chute forward slightly, then, lift the Cube Chute up for removal.
3. Remove three U-type Clips and the plastic Curtain Assembly.
4. Reach through the ice chute opening in the upper Freezing Chamber and feel for the Spray Bar.
5. Move hand to the center hub and rotate the Spray Bar, so one end is aligned with the ice chute opening.
6. Lift the Spray Bar up, off of the jet bearing hub, then, remove the Spray Bar through the ice chute opening.
7. Disconnect electrical leads and ground wire from terminals on the Agitator Motor.
8. Reach through the same ice chute opening, as before, and grasp the top Drive Fork with one hand, and the Agitator Motor Fan on top of the Freezing Chamber, with the other hand.
9. Hold the Fan Blades still and rotate the left-hand thread Drive Fork to the right, COUNTERCLOCKWISE, and unscrew the Drive Fork from the Agitator Motor.
10. Remove four screws and lift out the Agitator Motor.
11. Insert and hold firm, a screwdriver through a hole in the top jet bearing, then, reach through the ice chute opening of the lower Freezing Chamber and rotate the left-hand thread Drive Fork to the right, COUNTERCLOCKWISE, to unscrew the bottom Drive Fork from the Water Tube.
12. Raise the screwdriver and top jet bearing up, an inch or so, to expose the hole in the Water Tube; next, insert and hold firm, a second screwdriver in the hole in the upper end of the Water Tube; then, rotate the screwdriver in the top jet bearing to the left, CLOCKWISE, to unscrew the bearing from the Water Tube.
13. Remove bearing, both screwdrivers and push the Water Tube UP, and remove the tube through the hole in the Platen and Cover Assembly.
14. Remove hose clamps and work loose four Tygon Tubes from the Freezing Chamber, three from the Water Pump and one drain tube.
15. Carefully lift the Platen and Cover Assembly, and tie off or use a board to support and give ample space to allow removal of the Freezing Chamber.
16. Remove screws and lockwashers and bolts and the upper Freezer Mount Plate; or the lower Freezer Mount Plate.
17. Carefully work the upper Freezing Chamber out of the Chassis; or, remove hose clamps and Tygon Tubes from the lower Freezing Chamber, and remove the lower Freezing Chamber.

B. To replace the Freezing Chamber, reverse the removal procedure.

XV. REMOVAL AND REPLACEMENT OF THE SPRAY BAR AND WATER TUBE ASSEMBLY

A. To remove the Spray and Water Tube Assembly.

1. Remove screws and the Right Side Panel to gain access to the Spray Bar Assemblies.
2. Tilt the top of the plastic Cube Chute forward slightly, then, lift the Cube Chute up for removal.
3. Remove three U-type Clips and the plastic Curtain Assembly.
4. Reach through the ice chute opening in the Freezing Chamber and feel for the Spray Bar.
5. Move hand to the center hub and rotate the Spray Bar, so one end is aligned with the ice chute opening.
6. Lift the Spray Bar up, off of the jet bearing hub, then, remove the Spray Bar through the ice chute opening.
7. Disconnect electrical leads and ground wire from terminals on the Agitator Motor.
8. Reach through the upper ice chute opening, and grasp the Top Fork with one hand, and the Agitator Motor Fan on top of the Freezing Chamber, with the other hand.
9. Hold the Fan Blades still and rotate the left-hand thread Drive Fork to the right, COUNTERCLOCKWISE, and unscrew the Drive Fork from the Agitator Motor.
10. Remove four screws and lift out the Agitator Motor.
11. Insert and hold firm, a screwdriver through a hole in the top bearing; then, reach through the ice chute opening of the lower Freezing Chamber and rotate the left-hand thread Drive Fork to the right, COUNTERCLOCKWISE, to unscrew and remove the bottom Drive Fork from the Water Tube. Remove the lower Spray Bar.

12. Raise the screwdriver and top jet bearing up, an inch or so, to expose the hole in the Water Tube; next insert and hold firm, a second screwdriver in the hole in the upper end of the Water Tube; then, rotate the Screwdriver in the top jet bearing to the left, CLOCKWISE, to unscrew the bearing from the Water Tube.
13. Remove bearing, both screwdrivers, and push the Water Tube UP, and remove the tube through the hole in the Platen and Cover Assembly.

B. To replace the Spray Bar and Water Tube Assembly, reverse the removal procedure.

XVI. REMOVAL AND REPLACEMENT OF THE WATER PUMP ASSEMBLY - (TWO)

A. To remove the Water Pump Assembly:

1. Remove screws and the Right Side Panel and the Front Panel.
2. Remove one screw and one end of the green ground wire from the Water Pump Bracket.
3. Remove two screws and washers attaching the Water Pump Assembly to the Water Pump Bracket.
4. Remove three hose clamps connecting the three Tygon Tubes to the Freezing Chamber; then, lift the Water Pump Assembly off of the Water Pump Bracket and work loose the three attached Tygon Tubes from the Freezing Chamber.

B. To replace the Water Pump Assembly, reverse the removal procedure.

XVII. REMOVAL AND REPLACEMENT OF THE WATER REGULATOR ASSEMBLY - WATER-COOLED MODELS

NOTE

A. To remove the Water Regulator Assembly:

1. Remove screws and the Left Side Panel and the Front Panel.
2. Check to be sure building source water inlet supply shutoff valve to rear of Chassis is OFF.
3. Bleed off or blow the refrigerant charge through the Schrader valve.
4. Disconnect water inlet supply line at the left bottom rear of the Chassis.
5. Disconnect water line at the inlet and outlet fittings on the Water Regulator Assembly.
6. Unsolder the Water Regulator Valve capillary tube from the Compressor refrigerant discharge line.
7. Remove two screws and the Water Regulator Assembly from the Chassis Base.

B. To replace the Water Regulator Assembly, reverse the removal procedure.

SECTION V

MAINTENANCE & CLEANING INSTRUCTIONS

I. GENERAL

The periods and procedures for maintenance and cleaning are given as guides and are not to be construed as absolute or invariable. Cleaning especially will vary, depending upon local water conditions and the ice volume produced; and, each icemaker must be maintained individually, in accordance with its own particular location requirements.

II. ICEMAKER

THE FOLLOWING MAINTENANCE SHOULD BE SCHEDULED AT LEAST TWO TIMES PER YEAR ON THIS ICEMAKER. CALL YOUR AUTHORIZED SCOTSMAN SERVICE AGENCY.

1. Check and clean water line Strainers.
2. Check that the Icemaker cabinet is level, in side-to-side and front-to-rear directions.
3. Clean the water system Evaporator, Freezing Chamber Reservoir and Spray Bars, using a solution of SCOTSMAN Ice Machine Cleaner. Refer to procedure V-III, CLEANING-Icemaker.

NOTE

Cleaning requirements vary according to local water conditions and individual user operation. Continuous check of the clarity of ice cubes and visual inspection of the Spray Bar parts before and after cleaning will indicate frequency and procedure to be followed in local areas.

4. Check that plastic curtains hang down evenly within the opening at the front of the Freezing Chambers.
5. Check and tighten all bolts.
6. Check and tighten all electrical connections.
7. Check Hot Gas Solenoid Valve for correct operation and high pressure controls for cut-in and cut-out pressures.
8. With Icemaker and Fan Motor OFF on Air-Cooled Models, clean Condenser, using vacuum cleaner, whisk broom or brush. Instruct customer to clean frequently.
9. Check that Fan Blades move freely, are not touching any surfaces and are not bent or out of balance.
10. Check for refrigerant leaks and tighten line connections.
11. Check for water leaks and tighten drain line connections. Pour water down Bin drain line to be sure that drain line is open and clear.
12. Check size, condition and texture of ice cubes. Perform adjustments as required. Refer to procedure IV-II.
13. Check Bin Thermostat Control bulb to test shutoff. With the Icemaker in the Harvest Cycle, place ice on the bulb, which should cause the Icemaker to shut OFF at the end of the Harvest Cycle.

NOTE

Within minutes after the ice is removed from the sensing bulb, the bulb will warm up and cause the Icemaker to restart. This control is factory set and should not be reset until testing is performed. Normal setting is about 35-degrees F. CUT-OUT and 40-degrees F. CUT-IN.

III. CLEANING - Icemaker

1. Remove screws and Front Panel and Top Panel.
2. Tilt the top of the plastic Cube Chute forward slightly, then, lift the Cube Chute up for removal.
3. Move the Master ON-OFF toggle switch and the Compressor ON-OFF toggle switch, on the Control Box, to the OFF positions.
4. Slowly rotate the shaft of the Timer & Switch Assembly, protruding through the hole in the front of the Control Box Cover, until you hear an audible click as the microswitch actuator arm drops into the cam slot, the START position of the Harvest Cycle, then stop. See Figure 5-1.
5. Remove both Defrost Water Tubes, located at the top, rear of each Freezing Chamber, from the tube hole.

WARNING

SCOTSMAN Ice Machine Cleaner contains Phosphoric and Hydroxyacetic acids. These compounds are corrosive and may cause burns if swallowed. DO NOT induce vomiting. Give large amounts of water or milk. Call physician immediately. In case of external contact, flush with water. KEEP OUT OF THE REACH OF CHILDREN.

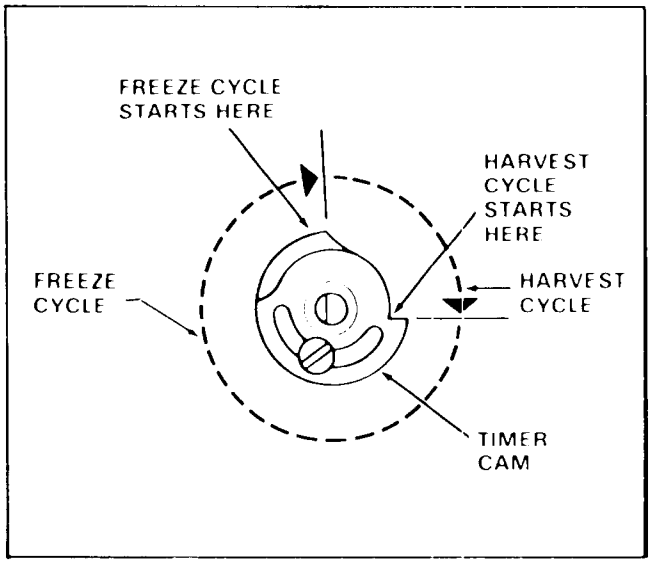

Figure 5-1. START Positions for the Freeze/Harvest Cycles.

7. For EACH Freezing Chamber, prepare the following cleaning solution: Mix 16-ounces of SCOTSMAN Ice Machine Cleaner with eleven pints of fresh, potable water in a clean container.
8. Pour each batch of prepared cleaning solution into the respective Freezing Chambers, through the Defrost Water Tube holes at the top, center rear of the Freezing Chambers.
9. Immediately replace the Defrost Water Tubes; then, move the Master ON-OFF Switch, on the Control Panel, to ON.
10. Allow the icemaking system to operate normally for twenty minutes into the Freezing Cycle.

NOTE

NO ICE CUBES will be made, because the Compressor has been switched OFF.

11. At the end of twenty minutes, rotate the shaft of the Timer & Switch Assembly, CLOCKWISE, to start a second Harvest Cycle. See Figure 5-1.
12. Allow the icemaking system to operate normally through the Harvest Cycle; then, when the Harvest Cycle is completed, rotate the Timer again THROUGH the Freezing Cycle to START another Harvest Cycle. Perform this Harvest Cycle operation three times.

NOTE

During each Harvest Cycle, fresh inlet water is introduced into the water system and acts to rinse all water-related parts and to wash away most mineral concentration through the drain.

13. Wash both Curtain Assemblies and the Cube Chute in a solution of one ounce of household bleach in one gallon of water.
14. Using a clean, damp cloth or disposable paper wiper, wipe off the Curtain Assemblies and the Cube Chute.
15. Move the Compressor ON-OFF toggle switch, on the Control Box, to the ON position.
16. Replace Curtain Assemblies and the Cube Chute.
17. Check each ice cube harvest, until the ice cubes are clear and the acid taste is eliminated.

CAUTION

DO NOT USE ice cubes produced from the cleaning solution. Be sure none remains in the Bin.

18. Pour hot water over ice cubes in the Bin, to melt the ice cubes and allow the same cleaning solution to be used to thoroughly wash the inner surfaces of the Bin and the solution to help clean the drain lines as it drains. Rinse inner surfaces of Bin.
19. Replace all panels removed.
20. Clean and sanitize the interior Bin surfaces each week.

SECTION VI

SERVICE DIAGNOSIS

The Service Diagnosis Section is for use in aiding the serviceman in diagnosing a particular problem for pin-pointing the area in which the problem lies, thus an ever available reference for proper corrective action.

The following charts list corrective actions for the causes of known symptoms of certain problems that can occur in the Icemaking-Refrigeration System.

I. ICEMAKING - REFRIGERATION SYSTEM

SYMPTOM	POSSIBLE CAUSE	CORRECTION
Irregular size cubes and some cloudy.	Some jets plugged.	Clean jets.
	Shortage of water.	See Shortage of water CORRECTION.
	Unit not level. Water overflowing vent holes on low side, burning cubes.	Level cabinet, as required.
Cubes too large.	Cube Size Control set too cold.	Rotate Cube Size Control dial toward WARMER.
Cubes too small.	Cube Size Control set too warm.	Rotate Cube Size Control dial toward COLDER.
	Partially restricted capillary tube.	Blow refrigerant charge; replace drier; evacuate system; add refrigerant charge.
	Moisture in system.	Same as above CORRECTION.
	Shortage of water.	See Shortage of water CORRECTION.
	Loss of refrigerant.	Check for refrigerant leaks, correct leaks; recharge system.
Cloudy Cubes.	Shortage of water.	See Shortage of water SYMPTOM.
	Dirty water supply.	Install water filter or softener.
	Accumulated impurities.	Use SCOTSMAN Ice Machine Cleaner.
Shortage of water.	Water spraying out through curtain.	Hang curtain in proper position.
	Water solenoid not opening.	Repair or replace solenoid.
	Water leak in sump area.	Locate leak and repair or correct condition.
	Partial restrictions in water strainer.	Clean or replace strainer.
Shortage of water in upper freezing chamber.	Defective lower seal in upper freezing chamber.	Replace lower seal.

SYMPTOM	POSSIBLE CAUSE	CORRECTION
Decreased ice capacity.	Defective compressor.	Replace compressor.
	Leaky water valve.	Repair or replace valve.
	High head pressure, result of dirty condenser or faulty Fan Motor.	Clean condenser. Repair or replace Fan Motor.
	Non-condensable gas in the system.	Purge the system.
	Poor circulation or extreme hot location.	Relocate the cabinet; or provide ventilation by cutting openings.
	Overcharge of refrigerant.	Slowly purge off to correct charge.
	Hot gas solenoid valve leaking.	Replace valve.
	Partially restricted capillary tube.	See Cubes too small CORRECTION.
Poor harvests.	Too short defrost time.	Check and adjust harvest cycle. Check Timer two-minute setting.
	Restriction in water inlet line.	Check strainer and flow check valve. DO NOT remove flow control washers.
	Hot gas solenoid does not open.	Binds or burned out. Replace.
	Plugged air vent holes in upper part of cube cups.	Clean out air vent holes.
Icemaker does not harvest.	Water pressure too low.	Check for 20 PSI flowing water.
Compressor cycles intermittently.	Low voltage.	Check for circuit overload. Check building supply voltage, if low, contact power company.
	Dirty condenser.	Clean condenser with vacuum cleaner or brush. NO WIRE BRUSH.
	Air circulation blocked.	Locate cabinet with adequate air space for proper air flow.
	Defective Fan Motor.	Replace Fan Motor.
	Non-condensable gases in system.	Purge the system.
Icemaker will not operate.	Blown fuse in line.	Replace fuse and check for cause.
	Master switch in OFF position.	Set switch to ON position.
	Faulty Master switch.	Replace switch.
	Timer contacts open.	Replace Timer microswitch.
Hole washed inside ice cube.	Water over the top of cube cups during harvest cycle.	Check and re-level the HC700 cabinet.

SECTION VII

WIRING DIAGRMS

This Section is provided as an aid in understanding the electrical circuitry of the Modular Cuber:

WARNING

When conducting a continuity check of the Modular Cuber:

1. **Disconnect the main power source.**
2. **DO NOT use an incandescent lamp or jumper wire, conduct all tests with a volt-ohm-meter.**

The Wiring Diagrams in this Section are:

Figure 7-1. Wiring Diagram HC700
115/208/220/60/3 - Air Cooled.

Figure 7-2. Wiring Diagram HC700
115/208/220/60/3 - Water-Cooled.

Figure 7-3. Wiring Diagram HC700
115/208-230/60/1 - Air-Cooled

Figure 7-4. Wiring Diagram HC700
115/208-230/60/1 - Water-Cooled.

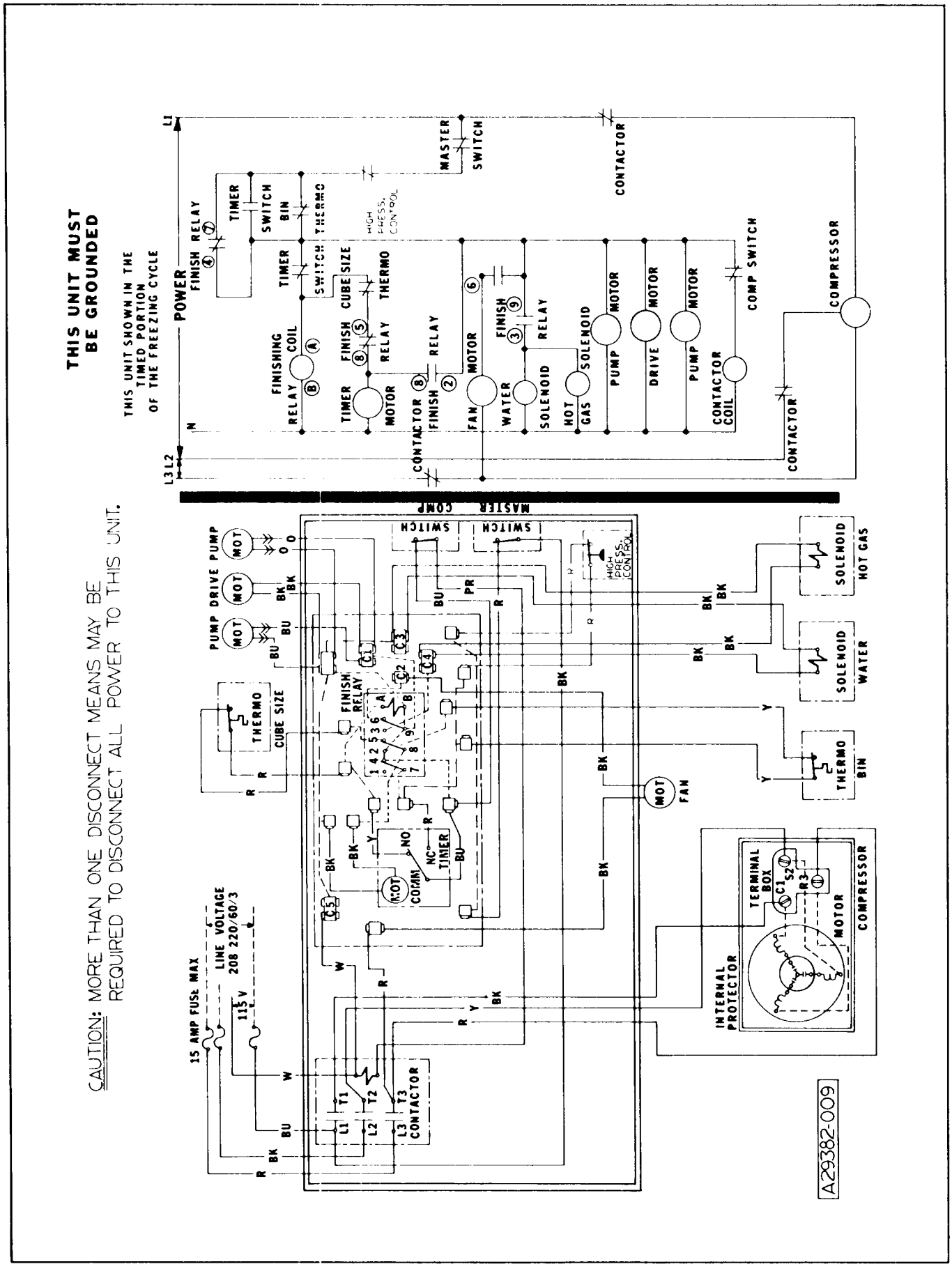

Figure 7-1. Wiring Diagram HC700 - Air-Cooled (115/208-220/60/3).

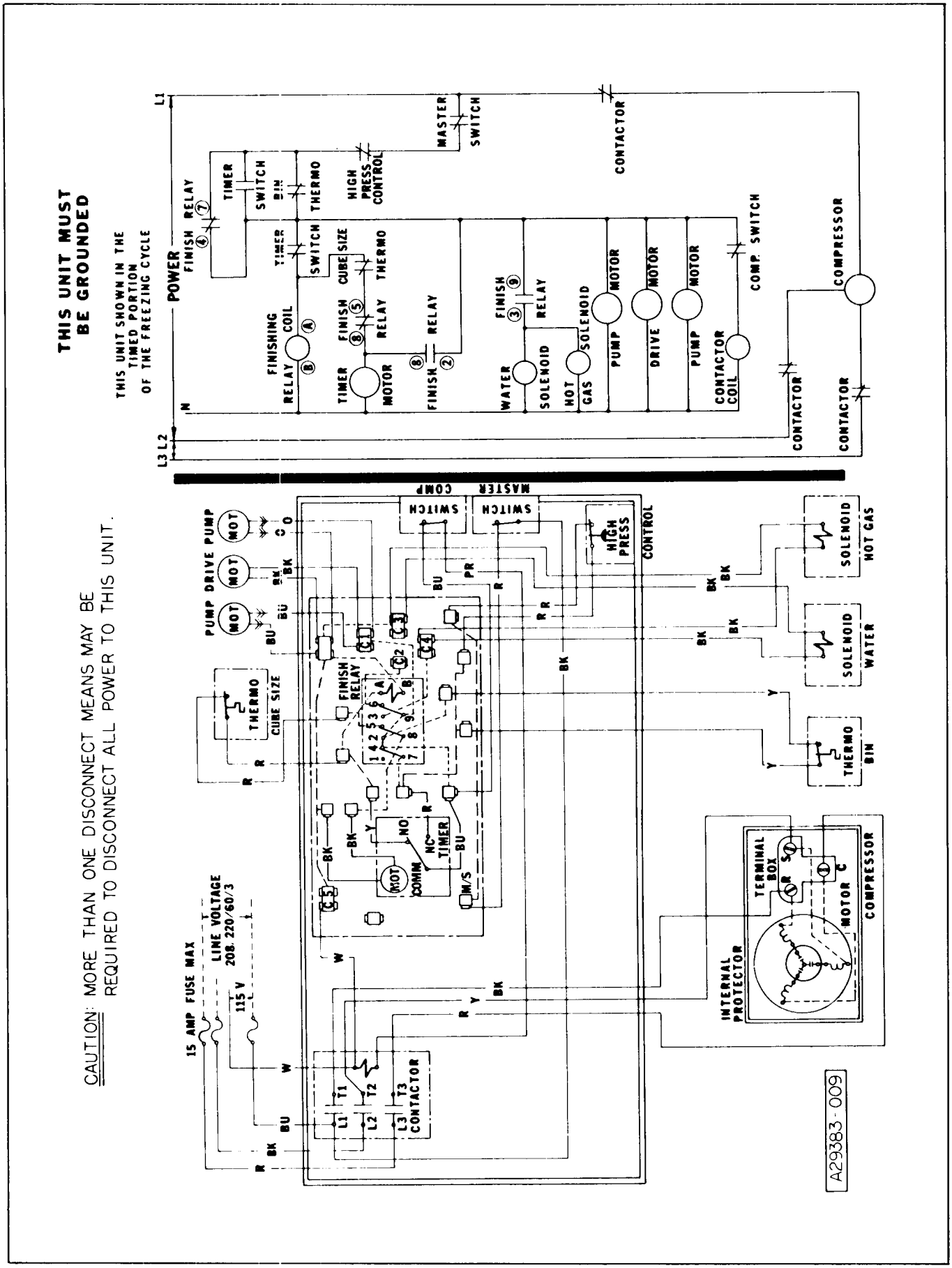

Figure 7-2. Wiring Diagram HC700 - Water-Cooled (115/208-220/60/3).

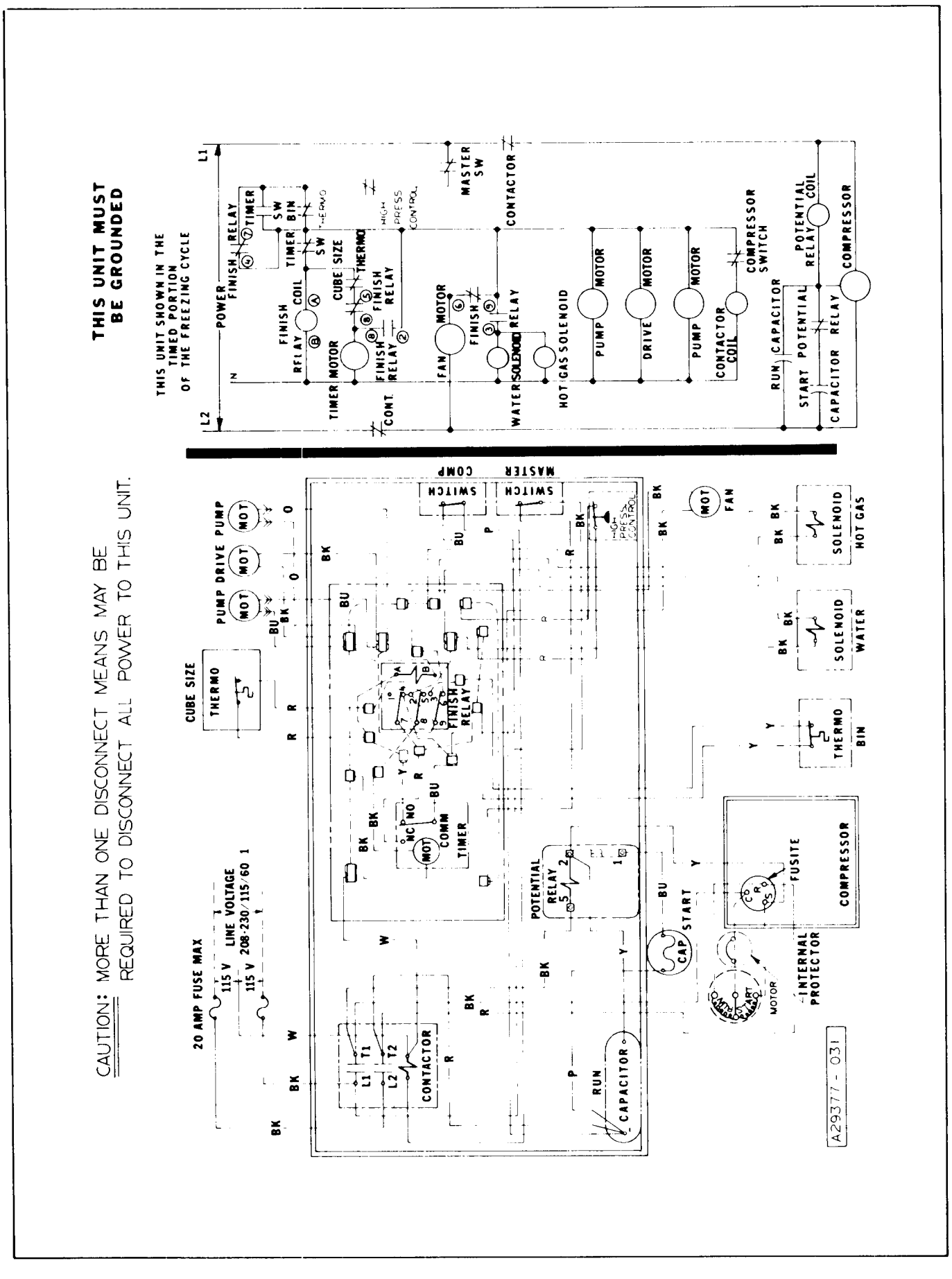

Figure 7-3. Wiring Diagram HC700 - Air-Cooled (115/208-230/60/1).

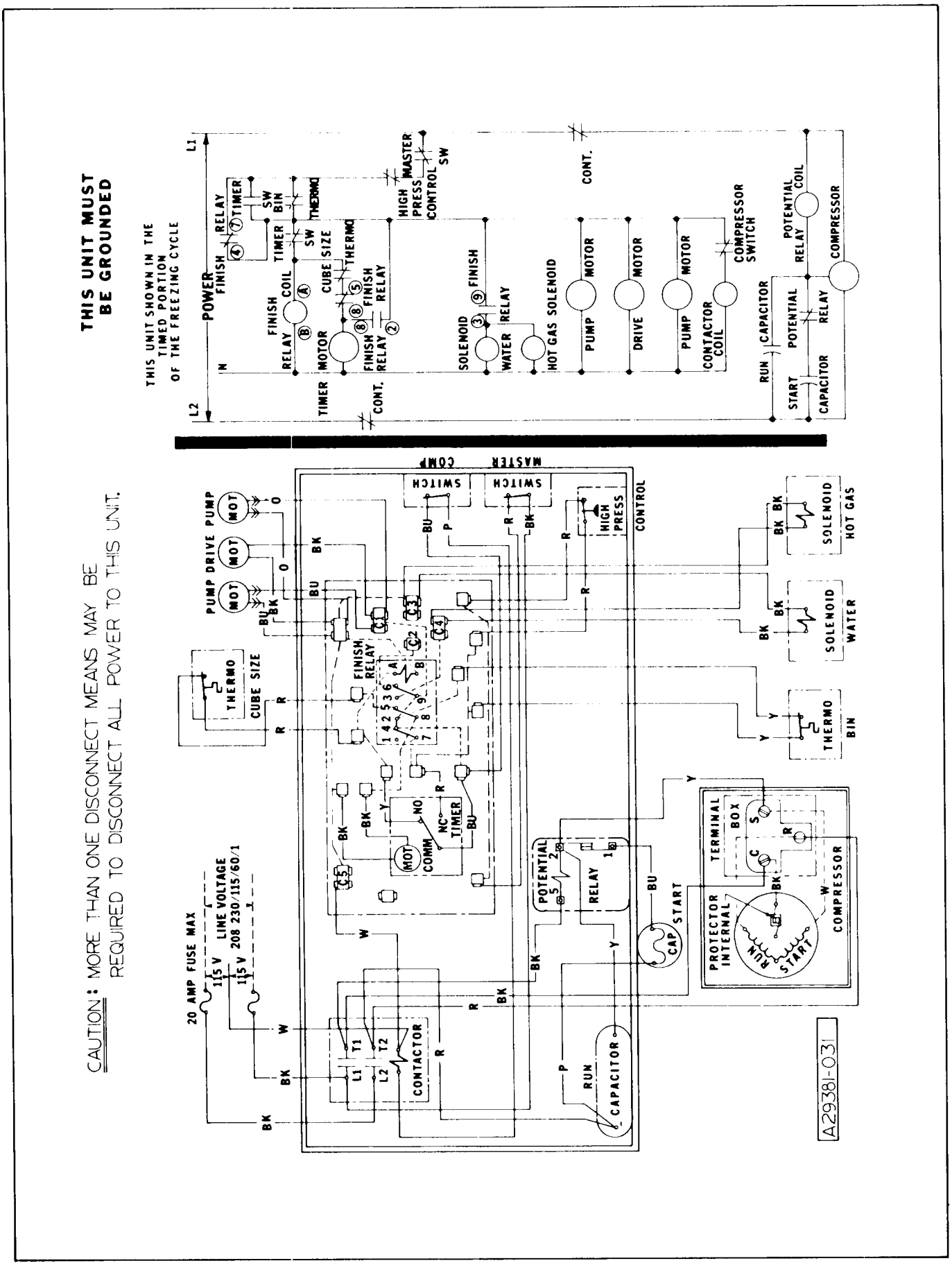

Figure 7-4. Wiring Diagram HC700 - Water-Cooled (115/208-230/60/1).

SECTION VIII

THE PARTS ILLUSTRATIONS AND PARTS LISTS

I. GENERAL

This section contains the Parts Illustrations and the Parts List for each of the major assemblies in the HC700 Modular Cuber.

Each Parts Illustration shows an assembly as an exploded view, with and Index Number for each part or sub-assembly, given in disassembly order. These Index Numbers key with the Parts List for the assembly and are found in the Parts List Column headed Index Number. The Description Column gives the identifying nomenclature for the item indexed. The Part Number Column gives the number of item. The Number Required Column gives the number of items required per assembly, but not necessarily the total number of parts required per Cuber.

All assemblies are cross-referenced both from the major assembly listing where they first appear in the Parts Listing to their break-down listing, and from the break-down listing, back to the major assembly (next higher assembly) listing.

A *No Number* designation, when used in the Part Number Column indicates the unit is not available from SCOTSMAN as an assembly. This designation is used only for the convenience and clarity of division in cataloging.

When an Index Number is followed by a letter (e.g. 1a, 1b), the letter indicates the part listed is part of the assembly indexed by the basic Index Number. The number required of the part indexed by the number and letter combination is for only one of the assemblies indexed by the basic Index Number and not necessarily the total number or parts used in the Cuber. Where the notation *Ref* occurs in the Number Required Column the number of the assemblies or parts required for use in the Cuber will be found under a previous Index Number or in the next higher assembly Parts Listing. The next higher listing Figure/Index number is shown in the Description Column immediately following the items description.

II. HOW TO USE THE ILLUSTRATIONS AND PARTS LIST

To find the part number of a required part or assembly, turn to the List of Illustrations and find the page number of the Parts Illustration of the major or sub-assembly containing the part. Turn to the indicated page and locate the part and its Index Number on the specific illustration. Find the Index Number on the required part in the Parts List to determine the complete description of the part.

III. HOW TO ORDER PARTS OR ASSEMBLIES

When ordering parts or assemblies, to avoid costly delays and errors in shipment, give the part number, the complete description shown in the list, and the quantities of each part or assembly required. Also include the Model name, the serial number of the Cuber for which the part is required, and for parts which require color matching, the color of the Cabinet. See Figure 8-00, at the end of this Section for detailed ordering instructions.

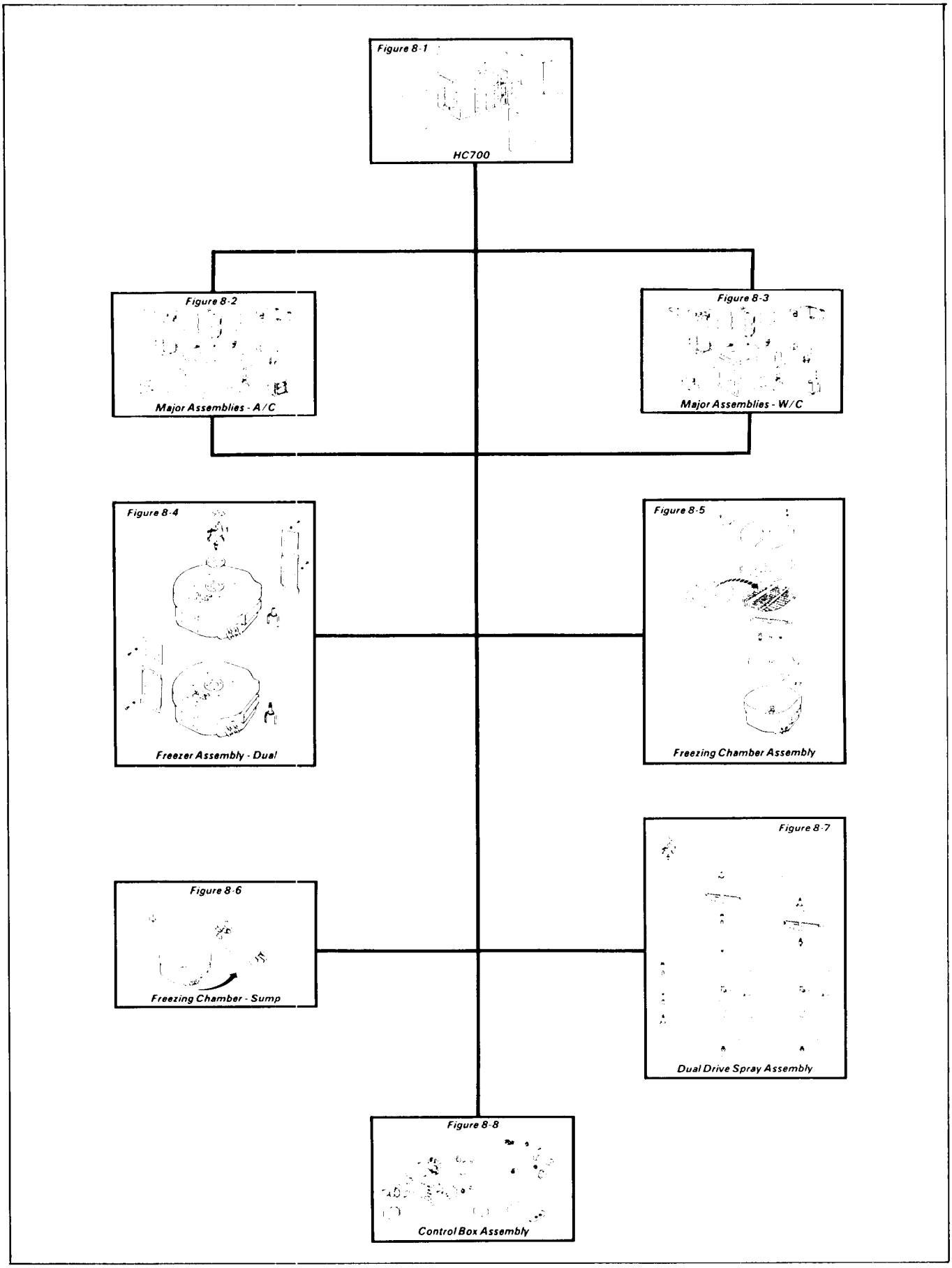

Figure 8-A. Model HC700 Modular Cuber Flow Chart

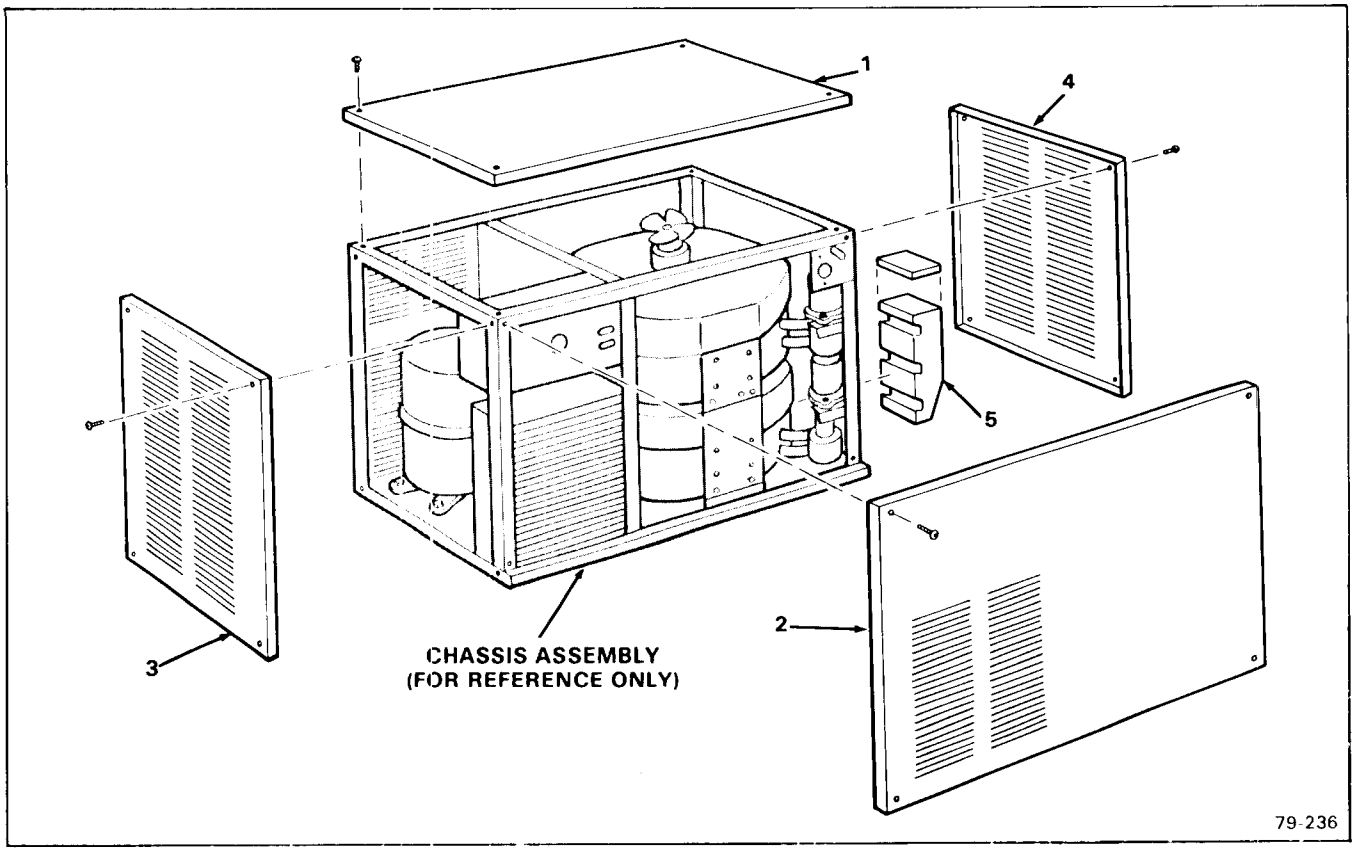

Figure 8-1. HC700 Modular Cuber.

INDEX NO.	DESCRIPTION	PART NUMBER	REQ'D NUMBER
	HC700 Modular Cuber	No Number	Ref.
	* * *		
1	Panel, Top - (Enamel)	A23784-005	1
	Panel, Top - (Stainless Steel)	A23784-002	1
	attaching part, Index 1		
	Lockwasher, No. 8 Countersunk External Tooth	03-1417-15	2
	Screw, No. 8 x 1-1/2 S/T Flat Hd	03-1419-09	4
	* * *		
2	Panel, Front - (Enamel)	A26183-003	1
	Panel, Front - (Stainless Steel)	A26183-002	1
	attaching part, Index 2		
	Lockwasher, No. 8 Countersunk External Tooth	03-1417-15	2
	Screw, No. 8 x 1-1/4 S/T Flat Hd (SS)	03-1419-09	2
	* * *		
3	Panel, Left Side - (Enamel)	A23899-004	1
	Panel, Left Side - (Stainless Steel)	A23899-002	1
	attaching part, Index 3		

Figure 8-1. HC700 Modular Cuber (Con't)

INDEX NO.	DESCRIPTION	PART NUMBER	REQ'D. NUMBER
	Screw, No. 8 x 1/2 T/F Tap (Stainless Steel)	03-1404-10	2
	* * *		
4	Panel, Right Side - (Enamel)	A23900-004	1
	Panel, Right Side - (Stainless Steel)	A23900-002	1
	attaching part, Index 4		
	Screw, No. 8 x 1/2 T/F Tap (Stainless Steel)	03-1404-10	2
	* * *		
5	Chute, Cube - w/Cover	A27822-001	1
	* * *		

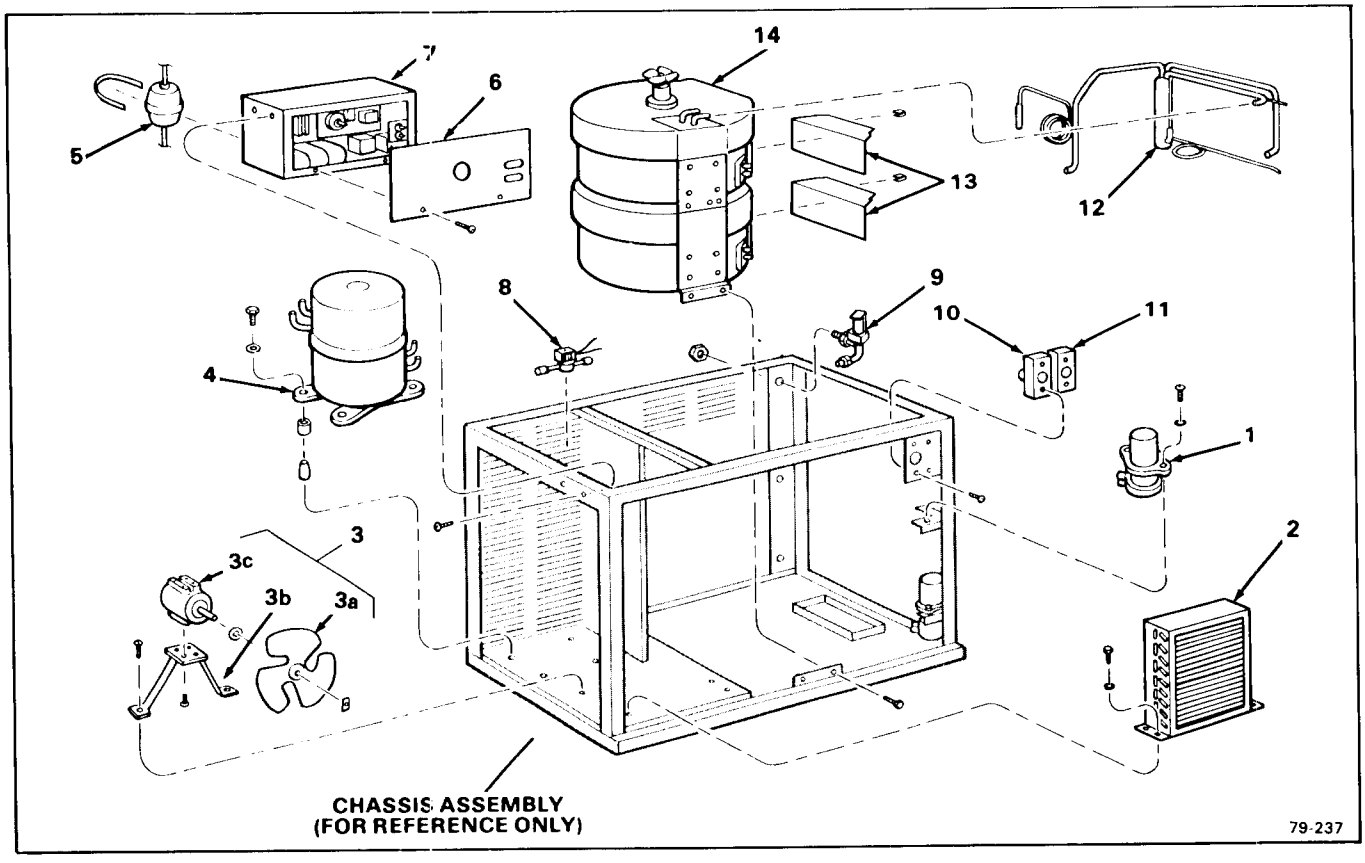

Figure 8-2. Major Assemblies - Air-Cooled

INDEX NO.	DESCRIPTION	PART NUMBER	REQ'D NUMBER
	Major Assemblies - Air-Cooled	No Number	Ref.
	* * *		
1	Pump Assembly, Water	12-1930-01	1(2)
	attaching parts, Index 1		
	Holder, Drain Tube	No Number	1(2)
	Clamp, Worm Drive	02-0706-00	1(2)
	Washer, No. 1/4 Plain	03-1407-05	1(2)
	Screw, No. 1/4-20 x 1/2 T/C Hex Hd	03-0571-01	1(2)
	* * *		
2	Condenser - Air-Cooled	18-0398-01	1
	attaching parts, Index 2		
	Washer, No. 1/4 Plain	03-1407-05	2
	Screw, No. 1/4-20 x 1/4 T/C Hex Hd	03-0571-00	2
	* * *		
3	Fan Motor & Mounting Bracket Assembly	No Number	1
3a	Blade, Fan w/Mtg. Hdwre	18-0787-01	1
3b	Mount, Fan Mount	18-0597-00	1

Figure 8-2. Major Assemblies - Air-Cooled (Cont'd.)

INDEX NO.	DESCRIPTION	PART NUMBER	REQ'D NUMBER
3c	Motor, Fan - 115/208-220/60/3	18-3704-07	1
	Motor, Fan - 115/208-230/60/1	18-3704-02	1
	attaching parts, Index 3		
	Lockwasher, No. 8 External Tooth	03-1417-03	4
	Screw, No. 8-32 x 1-1/4 Phil Recess Pan Hd	No Number	4
	* * *		
4	Compressor - 115/208-220/60/3	18-3850-03	1
	Compressor - 115/208-230/60/1	18-3850-02	1
	attaching parts, Index 4		
	Grommet	18-2300-27	4
	Sleeve, Mounting	18-2300-26	4
	Washer, No. 5/16 Plain	03-1407-07	4
	Screw, No. 5/16-18 x 1-1/2 Hex Cap	03-1405-20	4
	* * *		
5	Drier	02-2426-02	1
	attaching part, Index 5		
	Tie, Cable	No Number	1
	* * *		
6	Cover, Control Box	No Number	1
	attaching part, Index 6 to 7		
	Screw, No. 6 x 1/4 T/F Tap (Stainless Steel)	03-1404-04	2
	* * *		
7	Control Box Assembly	No Number	1
	(See Figure 8-8)		
	attaching part, Index 7		
	Lockwasher, No. 8 Countersunk External Tooth	03-1417-15	2
	Screw,No. 8 x 1-1/4 S/T Flat Hd (Stainless Steel)	03-1419-09	2
	(used to attach LEFT end)		
	Screw, No. 8 x 3/8 T/F Tap	03-1404-08	2
	(used to attach RIGHT end)		
	* * *		
8	Valve, Solenoid - Hot Gas	12-2135-01	1
	* * *		
9	Inlet Assembly, Water	12-1434-01	1
	* * *		
10	Control, Cube Size	11-0345-02	1

Figure 8-2. Major Assemblies - Air-Cooled (Cont'd.)

INDEX NO.	DESCRIPTION	PART NUMBER	REQ'D NUMBER
11	Control, Bin Level	11-0353-03	1
	attaching parts, Index 10 & 11		
	Screw, No. 8-32 x 3/16 Phil Recess Pan Hd	03-1403-14	2(4)
	* * *		
12	Exchanger Assembly, Heat	A29378-020	1
	* * *		
13	Curtain Assembly	02-2038-01	2
	attaching part, Index 13		
	Clip, U-Type	03-1526-01	3(6)
	* * *		
14	Freezer Assembly - Dual	No Number	1
	(See Figure 8-4)		
	attaching parts, Index 14		
	Screw, No. 1/4-20 x 1/2 T/C Hex Hd	02-0571-00	4
	* * *		

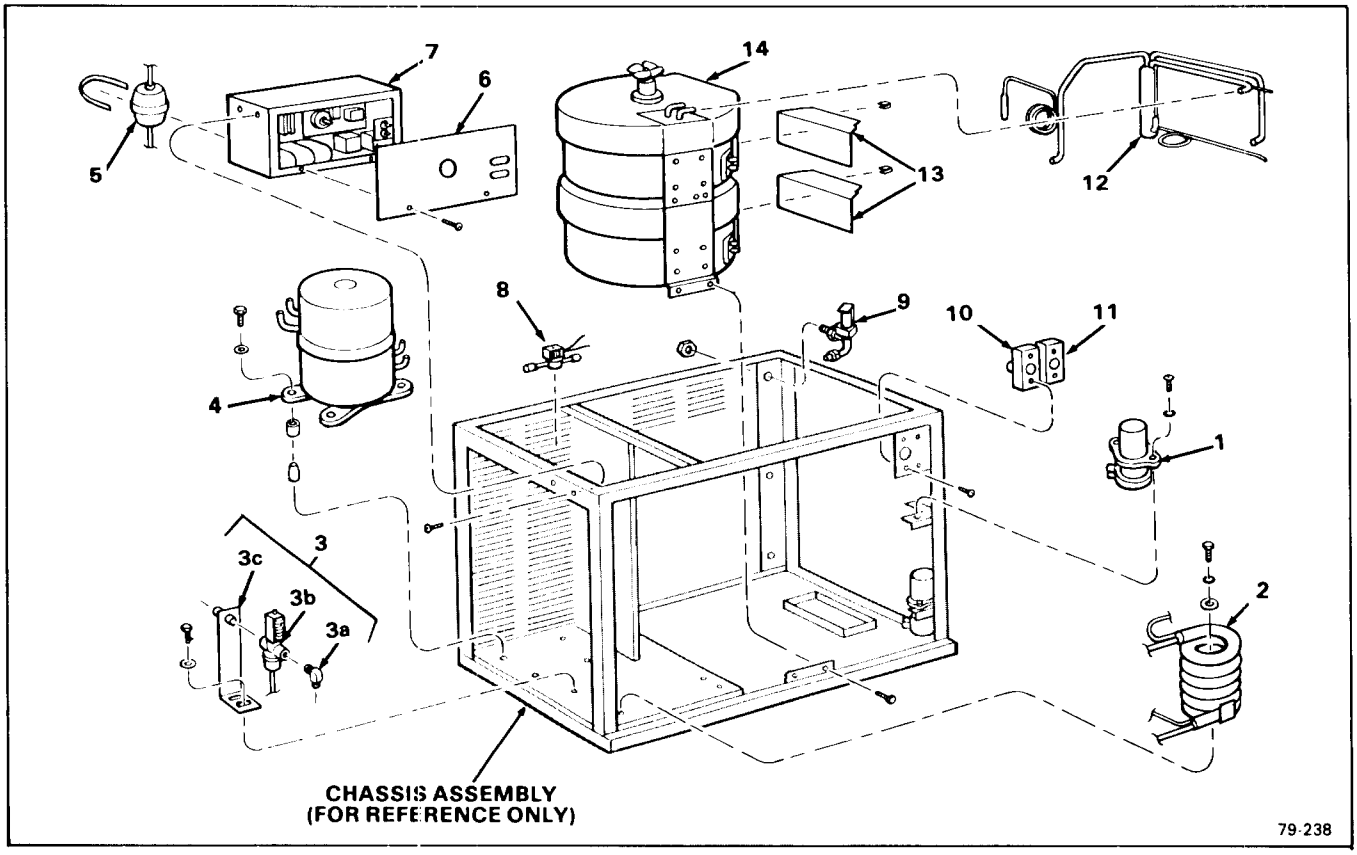

Figure 8-3. Major Assemblies - Water-Cooled

INDEX NO.	DESCRIPTION	PART NUMBER	REQ'D NUMBER
	Major Assemblies - Water-Cooled	No Number	Ref.
	* * *		
1	Pump Assembly, Water	12-1930-01	1(2)
	attaching parts, Index 1		
	Holder, Drain Tube	No Number	1(2)
	Clamp, Worm Drive	02-0706-00	1(2)
	Washer, No. 1/4 Plain	03-1407-05	1(2)
	Screw, No. 1/4-20 x 1/2 T/C Hex Hd	03-1571-01	1(2)
	* * *		
2	Condenser - Water-Cooled	18-3306-02	1
	attaching parts, Index 2		
	Washer, No. 1/4 Plain	03-1407-05	2
	Screw, No. 1/4-20 x 1/4 T/C Hex Hd	03-0571-00	2
	* * *		
3	Regulator Assembly, Water - Condenser	No Number	1
	attaching parts, Index 3		
	Washer, No. 1/4 Plain	03-1407-05	2
	Screw, No. 1/4-20 x 1/4 T/C Hex Hd	03-0571-00	2

Figure 8-3. Major Assemblies - Water-Cooled (Cont'd.)

INDEX NO.	DESCRIPTION	PART NUMBER	REQ'D NUMBER
3a	Elbow, 3/8 NPT x 3/8 Flare Brass	16-0401-00	1
3b	Valve, Water Regulator	11-0198-02	1
3c	Bracket, Mounting - w/nipple	A15924-000	1
	* * *		
4	Compressor - 115/208-220/60/3	18-3850-03	1
	Compressor - 115/208-230/60/1	18-3850-02	1
	attaching parts, Index 4		
	Grommet	18-2300-27	4
	Sleeve, Mounting	18-2300-26	4
	Washer, No. 5/16 Plain	03-1407-07	4
	Screw, No. 5/16-18 x 1-1/2 Hex Cap	03-1405-20	4
	* * *		
5	Drier	02-2426-02	1
	attaching part, Index 5		
	Tie, Cable	No Number	1
	* * *		
6	Cover, Control Box	No Number	1
	attaching part, Index 6 to 7		
	Screw, No. 6 x 1/4 T/F Tap (Stainless Steel)	03-1404-04	2
	* * *		
7	Control Box Assembly	No Number	1
	(See Figure 8-8)		
	attaching part, Index 7		
	Lockwasher, No 8 Countersunk External Tooth	03-1417-15	2
	Screw, No. 8 x 1-1/4 S/T Flat Hd (Stainless Steel)	03-1419-09	2
	(used to attach LEFT end)		
	Screw, No. 8 x 3/8 T/F Tap	03-1404-08	2
	(used to attach RIGHT end)		
	* * *		
8	Valve, Solenoid - Hot Gas	12-2135-01	1
	* * *		
9	Inlet Assembly, Water	12-1434-01	1
	* * *		
10	Control, Cube Size	11-0345-02	1
11	Control, Bin Level	11-0353-03	1
	attaching parts, Index 10 & 11		
	Screw, No. 8-32 x 3/16 Phil Recess Pan Hd	03-1403-14	2(4)
	* * *		

Figure 8-3. Major Assemblies - Water-Cooled (Cont'd.)

INDEX NO.	DESCRIPTION	PART NUMBER	REQ'D NUMBER
12	Exchanger Assembly, Heat	A29378-020	1
	* * *		
13	Curtain Assembly	02-2038-01	2
	attaching part, Index 13		
	Clip, U-Type	03-1526-01	3(6)
	* * *		
14	Freezer Assembly - Dual	No Number	1
	(See Figure 8-4)		
	attaching parts, Index 14		
	Screw, No. 1/4-20 x 1/2 T/C Hex Hd	02-0571-00	4
	* * *		

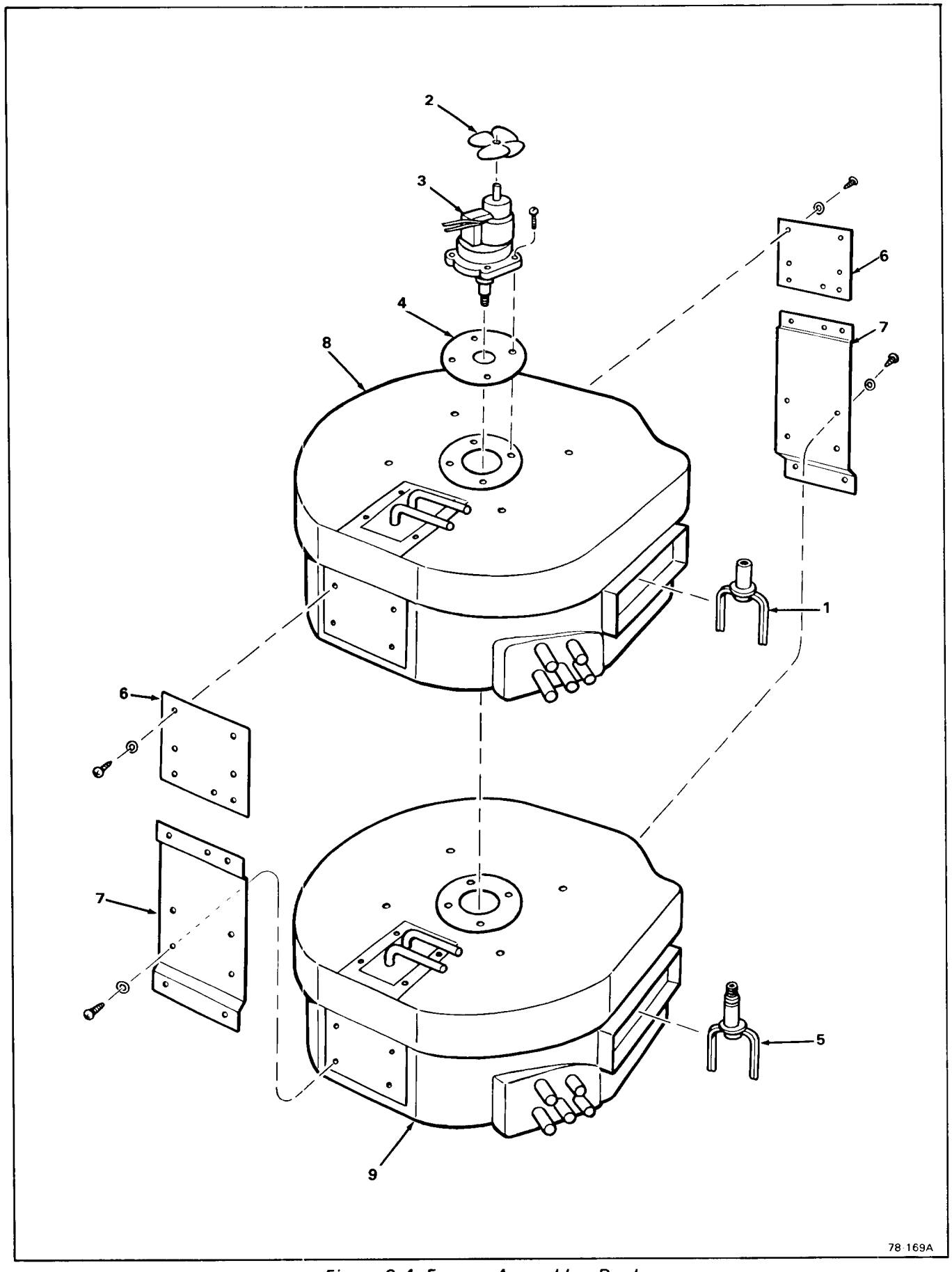

Figure 8-4. Freezer Assembly - Dual

Figure 8-4. Freezer Assembly - Dual

INDEX NO.	DESCRIPTION	PART NUMBER	REQ'D NUMBER
	Freezer Assembly - Dual	No Number	Ref.
	(See Figure/Index 8-2/14 and 8-3/14		
	for next higher Assembly)		
	* * *		
1	Fork, Drive - Upper (left-hand thread)	02-2369-02	1
	* * *		
2	Blade, Fan - Drivemotor	12-0675-25	1
	* * *		
3	Drivemotor Assembly, Agitator	A24656-001	1
4	Gasket - Agitator Drivemotor Assembly	13-0176-00	1
	attaching parts, Index 3 & 4		
	Screw, No. 6 x 1 T/F Tap	03-1404-28	4
	* * *		
5	Fork, Drive - Lower (left-hand thread)	02-2369-01	1
	* * *		
6	Plate, Mount Upper	A24502-001	1
7	Plate, Mount - Lower	A24500-001	1
	attaching parts, Index 6 & 7		
	Lockwasher, No. 10 External Tooth	03-1417-05	2
	Screw, No. 10 x 5/8 T/F Tap	03-1404-18	2
	(used in two upper holes in Index 6)		
	Lockwasher, No. 10 External Tooth	03-1417-05	2
	Screw, No. 10-16 x 1/2 S/T	03-1360-00	2
	(used in middle holes in Index 6)		
	Screw, No. 1/4-20 x 1/2 T/C Hex Hd	03-0571-00	3
	(used to attach Index 6 to 7)		
	Lockwasher, No. 10 External Tooth	03-1417-05	2
	Screw, No. 10 x 5/8 T/F Tap	03-1404-18	2
	(used in middle two holes in Index 7)		
	Lockwasher, No. 10 External Tooth	03-1417-05	2
	Screw, No. 10-16 x 1/2 S/T	03-1360-00	2
	(used in lower two holes in Index 7)		
	* * *		
8	Chamber, Freezing - Upper	No Number	1
9	Chamber, Freezing - Lower	No Number	1
	(See Figure 8-5)		
	* * *		

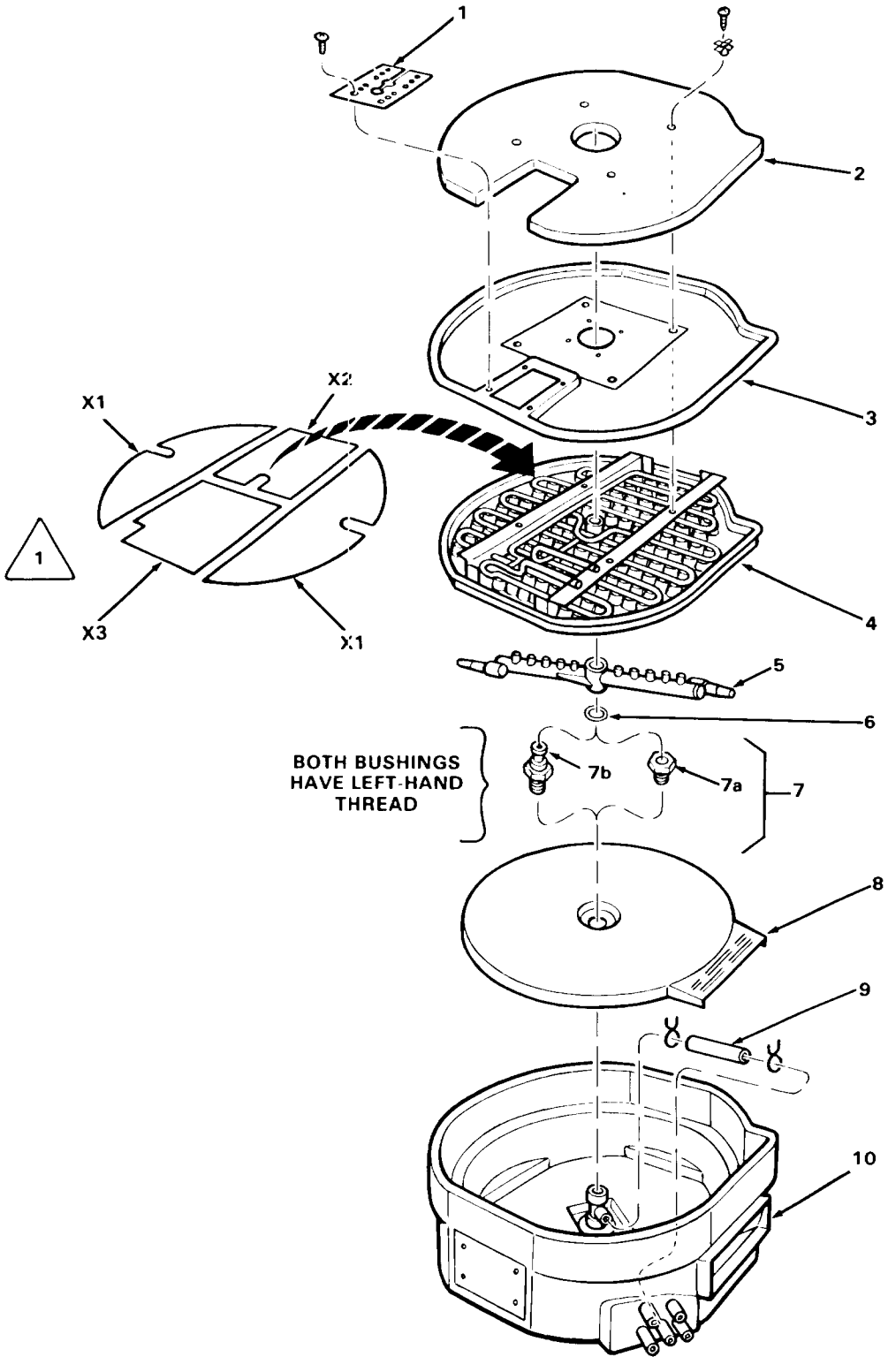

Figure 8-5. Freezing Chamber Assembly.

Figure 8-5. Freezing Chamber Assembly

INDEX NO.	DESCRIPTION	PART NUMBER	REQ'D NUMBER
	Freezing Chamber Assembly	A24819-001	Ref.
	(See Figure 8-4/8 & 9		
	for next higher Assembly)		
	***		
1	Spacer, Tube	02-2129-01	1(2)
	attaching part, Index 1		
	Plug, Hole	02-2065-02	4(8)
	***		
2	Cover, Insulation	02-2124-01	1(2)
3	Cover, Freezing Chamber	02-2123-01	1(2)
4	Platen Assembly, Cup (SMALL ice cube cups)	A27218-002	2(4)
	Platen Assembly, Cup (MEDIUM ice cube cups)	A27217-002	2(4)
	Platen Assembly, Cup (LARGE ice cube cups)	A27129-002	2(4)
	attaching parts, Index 2, 3, 4		
	Washer, Centering	A24830-001	4(8)
	Screw, No. 8 x 1/2 T/F Tap	03-1404-10	4(8)
	***		
5	Bar Assembly, Spray	A25480-001	2(4)
	***		
6	O-Ring	13-0617-25	2(4)
	***		
7	Bushing/Bearing (Left-hand threads)	No Number	1(2)
7a	Bushing, Nut (Used in UPPER Chamber)	A27197-001	1(2)
7b	Bearing, Spray Bar (Used in LOWER Chamber)	02-2120-01	1(2)
	(Also order P/N 13-0168-00 Water Seal with Index 7a or 7b)		
	***		
8	Bottom, Inner	02-2028-01	1(2)
	***		

Figure 8-5. Freezing Chamber Assembly (Cont'd.)

INDEX NO.	DESCRIPTION	PART NUMBER	REQ'D NUMBER
9	Tube, Tygon (8-inch lg.) (Order by the foot)	13-0674-07	1(2)
	attaching part, Index 9		
	Clamp, Hose	02-1358-01	2(4)
	***		
10	Sump, Freezing Chamber	No Number	1(2)
	(See Figure 8-6)		
	***		
	NOTE: Spray Deflectors below, are ONLY used on SMALL ice cube Cup Platen Assembly P/N A27218-002.		
X1	Deflector, Spray	A24198-001	2(4)
	(Installed at rounded ends, over top of cup molds)		
X2	Deflector, Spray	A24198-003	1(2)
	(Installed around hole in Platen, with notch as shown)		
X3	Deflector, Spray	A24198-004	1(2)
	(Installed LAST, under two tubes and over ends of X2)		
	***		

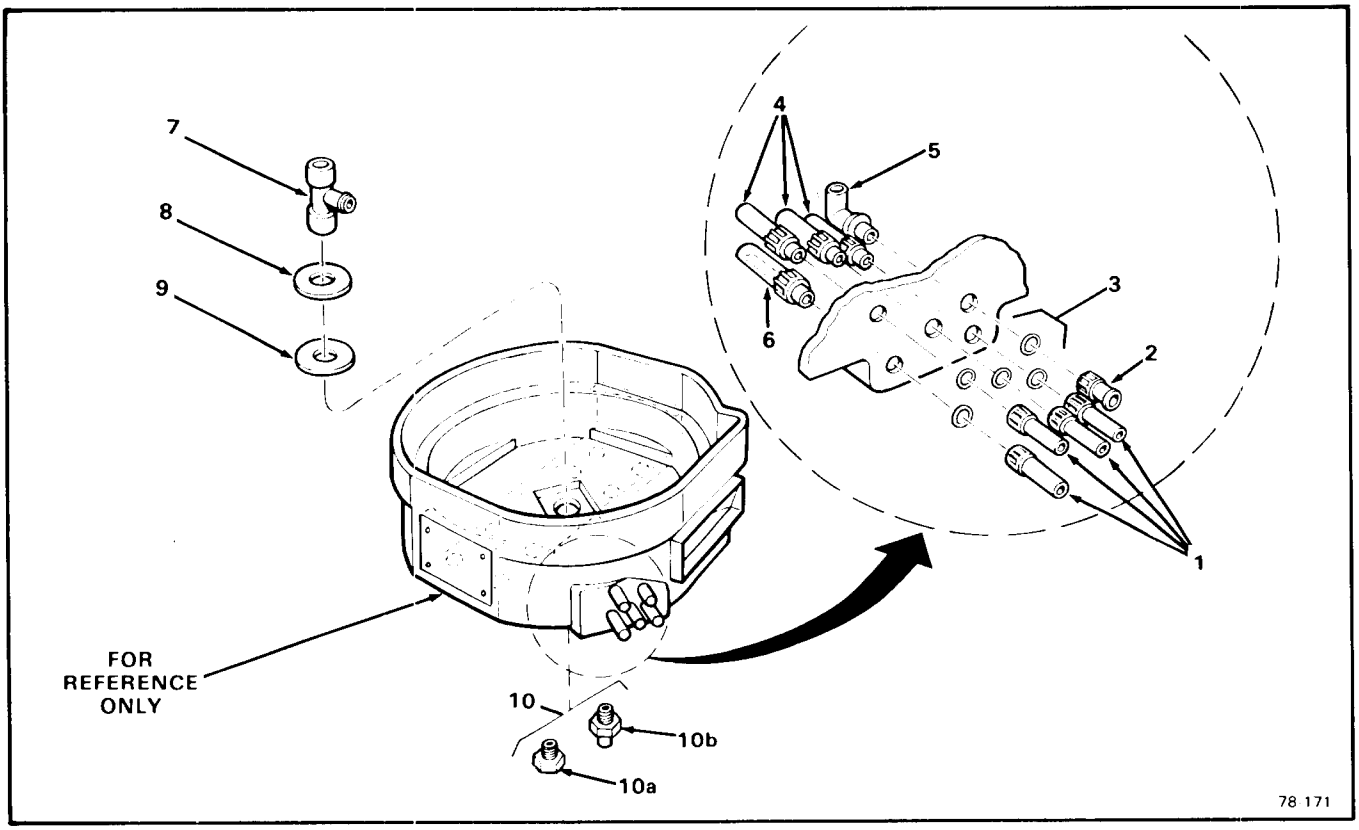

Figure 8-6. Freezing Chamber - Sump w/Tubes

INDEX NO.	DESCRIPTION	PART NUMBER	REQ'D NUMBER
	Freezing Chamber - Sump w/Tubes	A24819-001	Ref.
	(See Figure 8-4/7 and 8)		
	for next higher Assembly)		
	***		
	NOTE: P/N A24819-001 shipped as replacement for both upper and lower Freezing Chamber, with Index 10a installed. For upper Freezing Chamber, also order Index 10b P/N A27197-002 and P/N 13-0168-00 Water Seal. Remove Index 10a and replace with Index 10b.		
	***		
1	Tube, Female	02-2081-01	4
	***		
2	Tube, Female - (Cut off)	A24379-001	1
	***		
3	O-Ring	13-0617-02	5
	***		

Figure 8-6. Freezing Chamber - Sump w/Tubes (Cont'd.)

INDEX NO.	DESCRIPTION	PART NUMBER	REQ'D NUMBER
4	Tube, Male	02-2080-01	3
	***		
5	Pipe, Stand	02-2125-01	1
	***		
6	Tube, Pick-Up - Pump	02-2082-01	1
	***		
7	Housing, Inlet	02-2121-01	1
	***		
8	Plate, Support - Spray Bar	A23827-001	1
	***		
9	Washer, Non-Metallic - 7/8-inch I.D.	03-1409-11	1
	***		
10	Plug, Bottom	No Number	1
10a	Plug, Bottom	02-2122-01	Ref.
	(Used in Lower Freezing Chamber)		
10b	Plug, Bottom	A27197-002	Ref.
	(Used in Upper Freezing Chamber)		
	***		

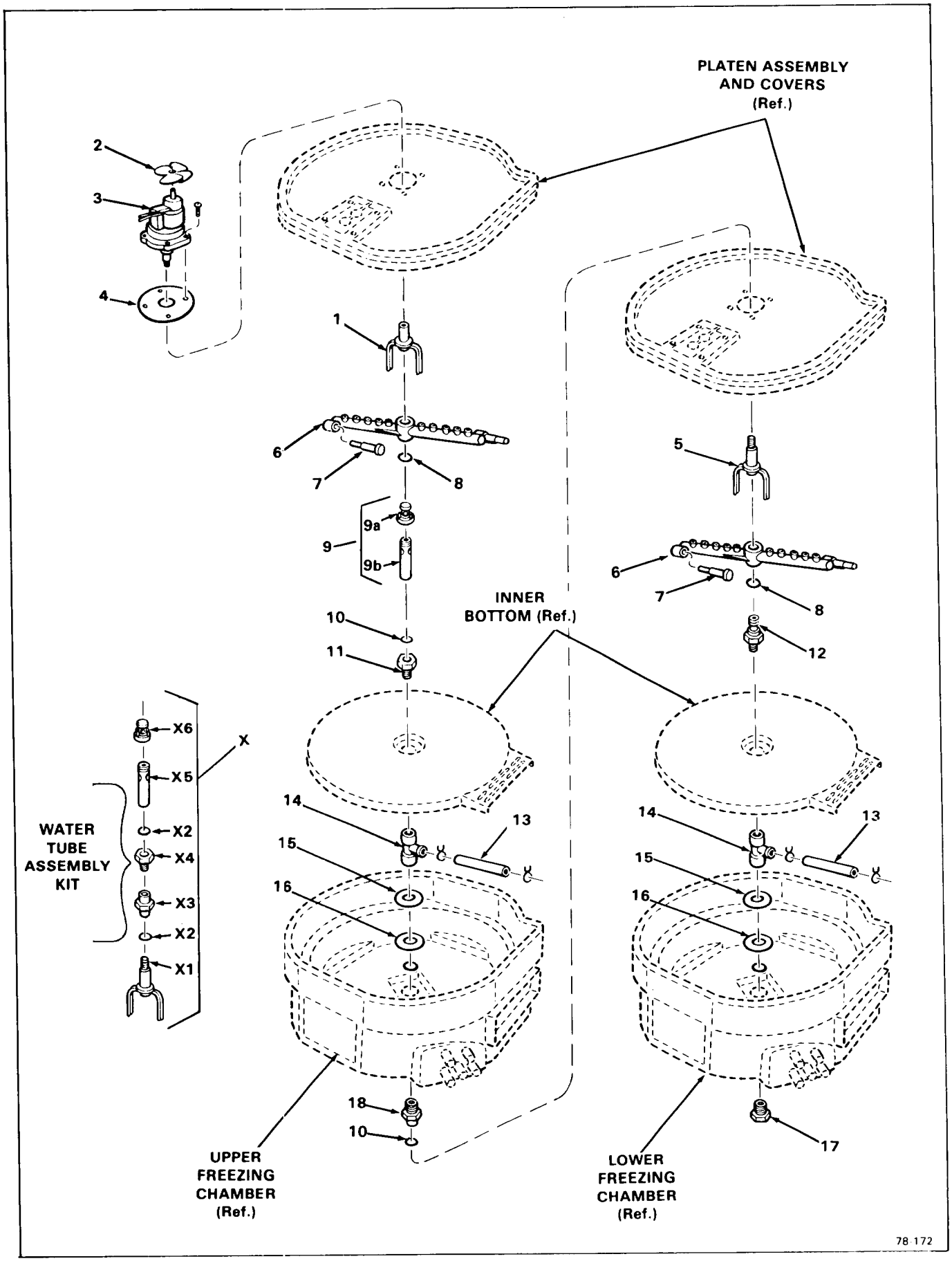

Figure 8-7. Dual Drive Spray Assemblies.

Figure 8-7. Dual Drive Spray Assemblies.

INDEX NO.	DESCRIPTION	PART NUMBER	REQ'D NUMBER
	Dual Drive Spray Assemblies (See Figures 8-4, 8-5, 8-6 for next higher Assembly) * * *	No Number	2
1	Fork, Drive - Upper (Left-hand thread) * * *	02-2369-02	Ref.
2	Blade, Fan - Drivemotor * * *	12-0675-25	Ref.
3	Drivemotor Assembly, Agitator	A24656-001	Ref.
4	Gasket - Agitator Drivemotor Assembly	13-0176-00	Ref.
	attaching parts, Index 3 & 4		
	Screw, No. 6 x 1 T/F Tap * * *	03-1404-28	Ref.
5	Fork, Drive - Lower (Left-hand thread) * * *	02-2369-01	Ref.
6	Bar Assembly, Spray (w/rubber tips) * * *	A25480-001	1(2)
7	Rubber - Spray Bar * * *	13-0653-00	2(4)
8	O-Ring * * *	13-0617-25	2
9	Tube Assembly, Water	No Number	1
9a	Support, Spray Bar	02-2271-01	1
9b	Tube, Water (Available only in Index X, Water Tube Assembly, Kit P/N A24518-001. Obsolete, order Index X.	No Number	1
10	Seal, Water * * *	13-0168-00	2
11	Bushing, Nut (Also order Index 10, Water Seal) * * *	A27197-001	1
12	Bearing, Spray Bar * * *	02-2120-01	1
13	Tube, Tygon (8-inch lg.) (Order by the foot)	13-0675-07	1(2)
	attaching parts, Index 13		
	Clamp, Hose * * *	02-1358-01	2(4)
14	Housing, Inlet * * *	02-2121-02	2

Figure 8-7. Dual Drive Spray Assemblies (Cont'd.)

INDEX NO.	DESCRIPTION	PART NUMBER	REQ'D NUMBER
15	Plate, Support - Spray Bar	A23827-001	2
	* * *		
16	Washer, Non-Metallic - (7/8-inch I.D.)	03-1409-11	2
	* * *		
17	Plug, Bottom (Used on Lower Freezing Chamber)	02-2122-01	1
	* * *		
18	Bushing, Nut (Also order Index 10, Water Seal) (Used in Upper Freezing Chamber)	A27197-002	1
	* * *		
X	Kit-Water Tube Assembly	A24518-001	1
X1	Fork, Drive (Left-hand thread)	02-2369-01	1
X2	Seal, Water	13-0168-00	2
X3	Bushing, Nut (Left-hand thread)	A27197-002	1
X4	Bushing, Nut (Left-hand thread)	A27197-001	1
X5	Tube, Water (Order Kit P/N 24518-001	No Number	1
X6	Support, Spray Bar	02-2271-01	1
	* * *		

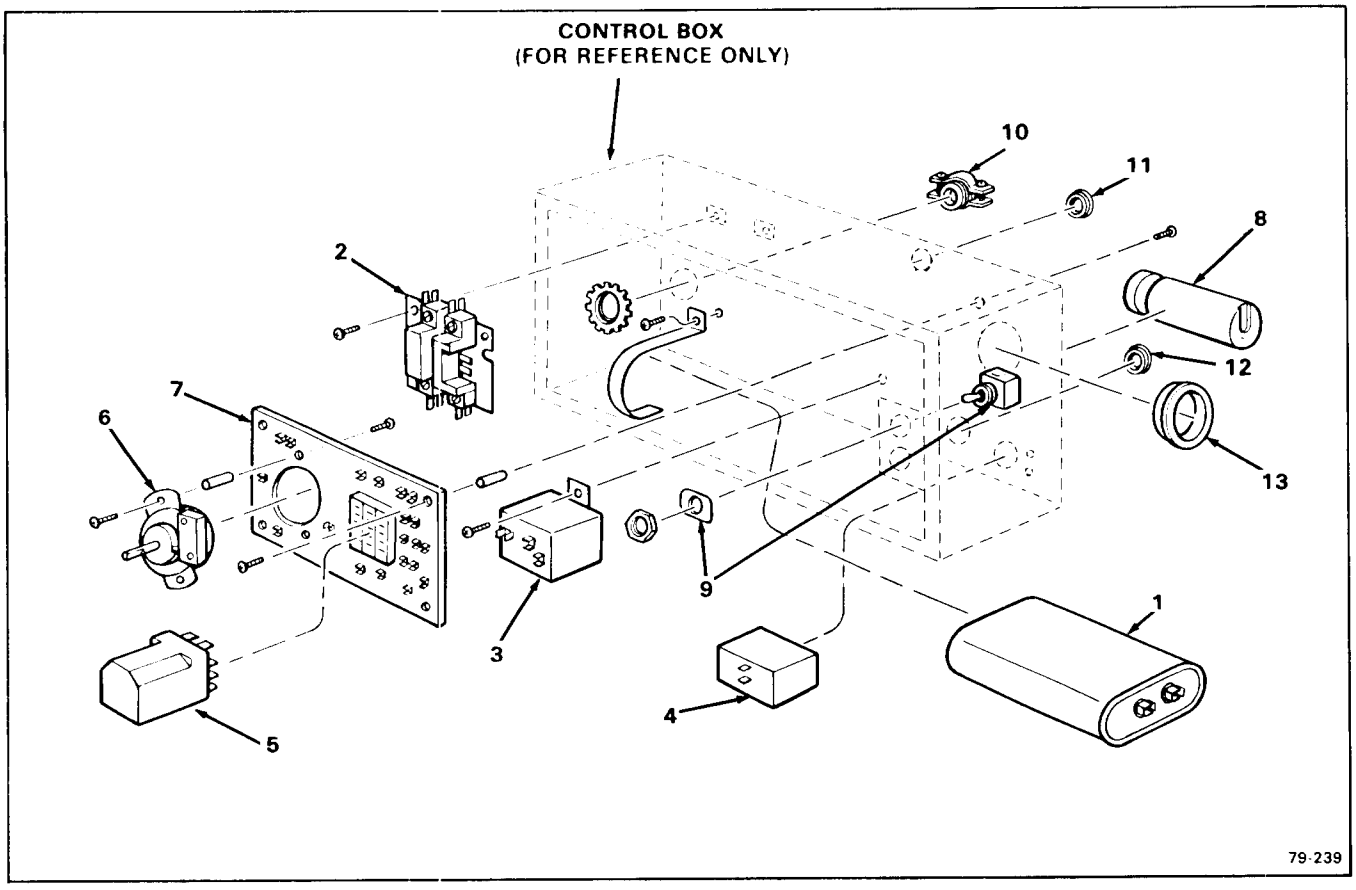

Figure 8-8. Control Box Assembly

INDEX NO.	DESCRIPTION	Air-Cooled Water Cooled (A/C) (W/C)	PART NUMBER	PHASE 1 208 230 60	PHASE 3 208 220 60
	Control Box Assembly (See Figure/Index 8-2/7 and 8-3/7 for next higher Assembly)		No Number	Ref	Ref
	* * *				
1	Capacitor, Run	A/C & W/C	18-1902-50	1	0
	attaching part, Index 1				
	Screw, No. 8-32 x 3/8 Phil Recess Pan Hd		03-1403-17	1	0
	* * *				
2	Contactor	A/C & W/C	12-0739-01	0	1
	Contactor	A/C & W/C	12-2037-01	1	0
	attaching part, Index 2				
	Screw, No. 8-32 x 3/8 Phil Recess Pan Hd		03-1403-17	2	2
	* * *				
3	Relay, Potential	A/C & W/C	18-1903-40	1	0

Figure 8-8. Control Box Assembly (Cont'd.)

INDEX NO.	DESCRIPTION	Air-Cooled Water Cooled (A/C) (W/C)	PART NUMBER	PHASE 1 208 230 60	PHASE 3 208 220 60
	attaching part, Index 3				
	Screw, No. 6-32 x 3/8 Phil Recess Pan Hd		03-1403-04	1	0
	Nut, Speed - J-Type		03-1423-01	1	0
	* * *				
4	Control, Pressure	W/C	11-0388-02	1	1
	Control, Pressure	A/C	11-0410-01	1	1
	attaching part, Index 4				
	Screw, No. 6-32 x 3/8 Phil Recess Pan Hd		03-1403-04	2	2
	* * *				
5	Relay	A/C & W/C	12-1879-02	1	1
	* * *				
6	Timer & Switch Assembly	A/C & W/C	12-1979-01	1	1
	attaching parts, Index 6				
	Stand-Off - 7/8-inch lg.		02-2242-01	2	2
	Screw, No. 6-32 x 1/4 Phil Recess Pan Hd		03-1403-02	4	4
	* * *				
7	Board Assembly, Circuit	A/C & W/C	12-1912-01	1	1
	attaching parts, Index 7				
	Stand-Off - 7/8-inch lg.		02-2242-01	5	5
	Screw, No. 6-32 x 1/4 Phil Recess Pan Hd		03-1403-02	5	5
	* * *				
8	Capacitor, Start	A/C & W/C	18-1901-40	1	0
	* * *				
9	Switch, Toggle	A/C & W/C	12-0426-01	2	2
	* * *				
10	Connector, Straight	A/C & W/C	No Number	1	1
	* * *				
11	Bushing, Snap - 1/2-in.	A/C & W/C	12-1213-04	1	1
	* * *				
12	Bushing, Snap - 7/8-in.	A/C & W/C	12-1213-10	1	1
	* * *				
13	Bushing, Snap - 1-1/2-in.	A/C & W/C	12-1213-13	1	1
	* * *				

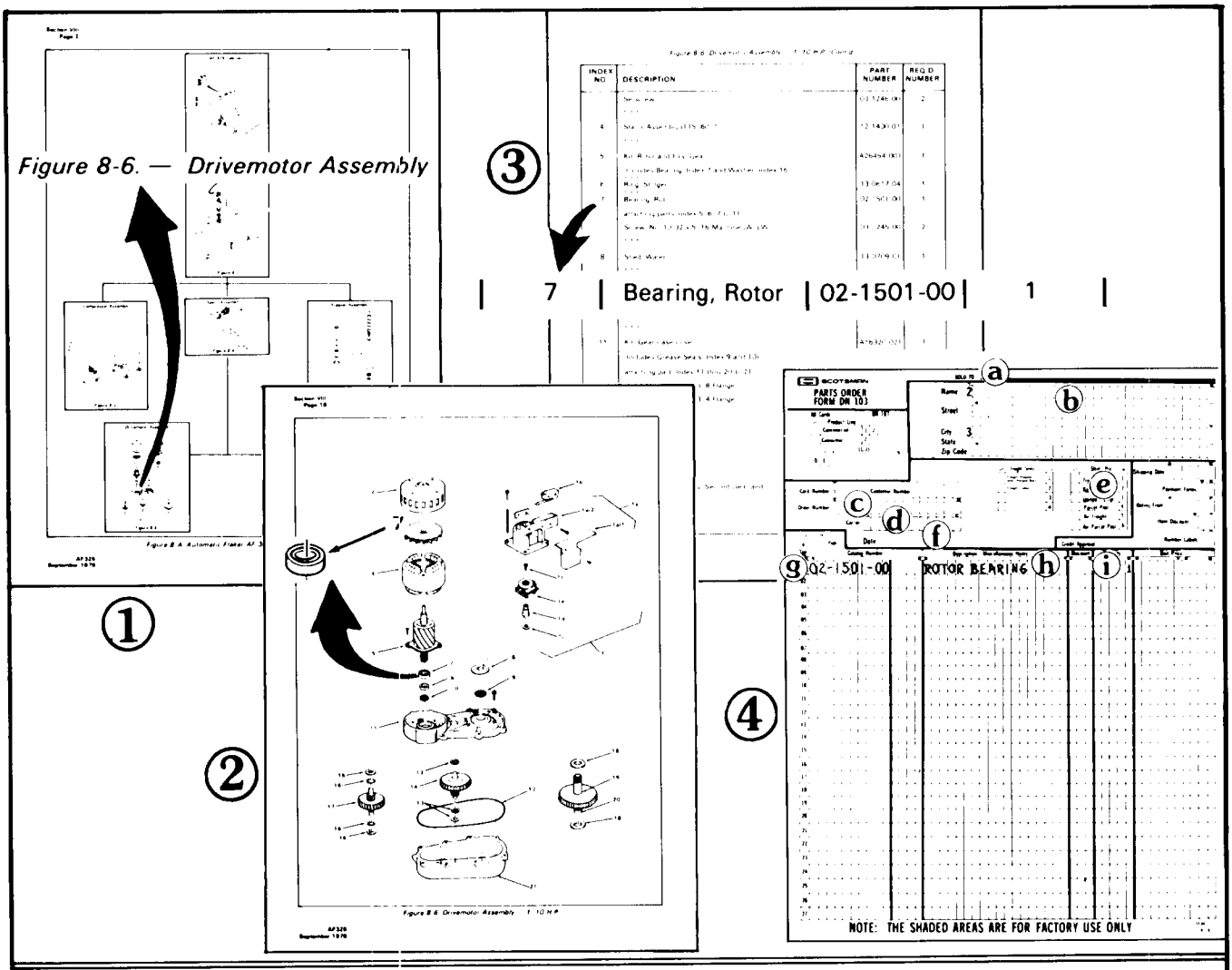

HOW TO USE A SCOTSMAN PARTS MANUAL WHEN ORDERING PARTS FOR ICE SYSTEMS PRODUCTS

IMPORTANT A. All Part Numbers have TEN DIGITS (spaces), required for use in the Computer System. BE SURE to fill in ALL SPACES in the CATALOG NUMBER column, on the Parts Order form as shown above.

B. Enter the QUANTITY of the Parts ordered, in the last digit column under the QUANTITY column heading, the one under the small 55 number, for parts from 1 thru 9. For 10 or more parts use two columns.

To be sure you receive the proper parts in the proper quantities, ALWAYS use the PART NUMBERS and DESCRIPTIONS given in the Parts Manuals.

The figures above illustrate the way a Parts Manual would be used, if the Part being ordered were the ROTOR BEARING that is used in the DRIVEMOTOR ASSEMBLY of an AF325 Automatic Flaker, for example.

PROCEDURE:

1. At the beginning of Section VIII, THE PARTS ILLUSTRATIONS AND PARTS LISTS, in each Parts and Service Manual, is Figure 8-A; which, is a flow chart prepared from exploded views in Section VIII. Use the flow chart to quickly determine which Figure contains the Assembly, Component or Part.

FIGURE 1: Since the Part required in the above example is in the DRIVEMOTOR ASSEMBLY, shown as FIGURE 8-6.

2. Open the Manual to page showing FIGURE 8-6.

3. Locate the PART and its INDEX NUMBER on the exploded view illustration.

FIGURE 2: The INDEX NUMBER for the PART is 7.

4. Check the numerical sequence in the associated Parts List following the illustration.

5. LOCATE the INDEX NUMBER 7, in the INDEX NO. column, the first column on the left side of the Parts List page.

FIGURE 3: INDEX NO. 7 is listed as a BEARING, ROTOR in the DESCRIPTION column. The Part Number for the Rotor Bearing is 02-1501-00 as listed in the PART NUMBER column on the right side of the Parts List page. And, one Rotor Bearing is listed in the REQ'D NUMBER column, or that ONLY one of those parts is required for one Drivemotor Assembly.

6. Write an order for the Part. (Use SCOTSMAN Parts Order Form DN103)

FIGURE 4: a. Distributor Name.
b. (Use for DROP-SHIP order ONLY).
c. Distributor Purchase Order Number.
d. Carrier
e. How shipped (Truck, Rail, UPS, etc.)
f. Date ordered
g. Part Catalog Number
(use full TEN digits (spaces) listed in Parts Manual, including dashes between numbers.
h. Description - as listed in Parts Manual.
i. Quantity - number of parts ordered.
(use far right column)

Figure 8-00. How To Use The Illustrated Parts List.

HC800

TABLE OF CONTENTS

GENERAL INFORMATION & INSTALLATION

Introduction 3
Location and Leveling 4
Stacking HC800 Icemaker 4
Install Bin Thermostat Capillary Tube 5
Electrical Connections 6
Water Supply and Drain Connections 6
Final Check List 8

OPERATING INSTRUCTIONS

Start-Up 8
Adjustment of Cube Size 11
Freezing Cycle 12
Harvest Cycle 13

ADJUSTMENT, REMOVAL & REPLACEMENT

Bin Thermostat Control 15
Cube Size Control 15
Timer & Switch Assembly 16
Water Regulator Assembly — Water-Cooled Models 39
Bin Thermostat Control 40
Compressor Assembly 40
Condenser — Air-Cooled Models 40
Condenser — Water-Cooled Models 40
Cube Size Control 41
Curtain Assembly 41
Drier 41
Fan Motor Assembly — Air-Cooled Models 41
Freezing Chamber 42
Water Pump Assembly 47
Water Regulator Assembly — Water-Cooled Models 42

SERVICE DIAGNOSIS 43

MAINTENANCE & CLEANING INSTRUCTIONS

General 45
Icemaker 46
Cleaning — Icemaker 47

LIST OF ILLUSTRATIONS

Specifications 2
HC800 — Component Location 3
Stacking Modular HC800 Cubers 4
Installing the Bin Thermostat Capillary Tube 5
Installation, Electrical, Water Supply and Drain Connections 6
Timer Cam Positions 8
Operation 9
Cube Size Control Adjustment 11
Freezing Cycle 12
Harvest Cycle 13
Adjustment of the Temperature Control 15
Adjustment of the Timer and Switch Assembly 16

PARTS LIST & WIRING DIAGRAMS (Printed in Yellow) 17

PARTS LIST:

Cabinet Assembly 19
Major Assemblies — Air-Cooled 24
Major Assemblies — Water-Cooled 23
Freezer Assembly (Dual) 25
Freezing Chamber Assembly 27
Freezing Chamber Sump w/Tubes 29
Dual Spray Bar Assemblies 31
Control Box 33

WIRING DIAGRAMS:

HC800AE-9A Air-Cooled (115/208-220/60/3) 35
HC800WE-9A Water-Cooled (115/208-220/60/3) 36
HC800AE-31A Air-Cooled (115/208-230/60/1) 37
HC800WE-31A Water-Cooled (115/208-230/60/1) 38

Agitator Motor Assembly 39
Maintenance and Cleaning 46
Cleaning Water System 47

THIS PAGE
INTENTIONALLY
LEFT BLANK

HC800 MODULAR CUBER

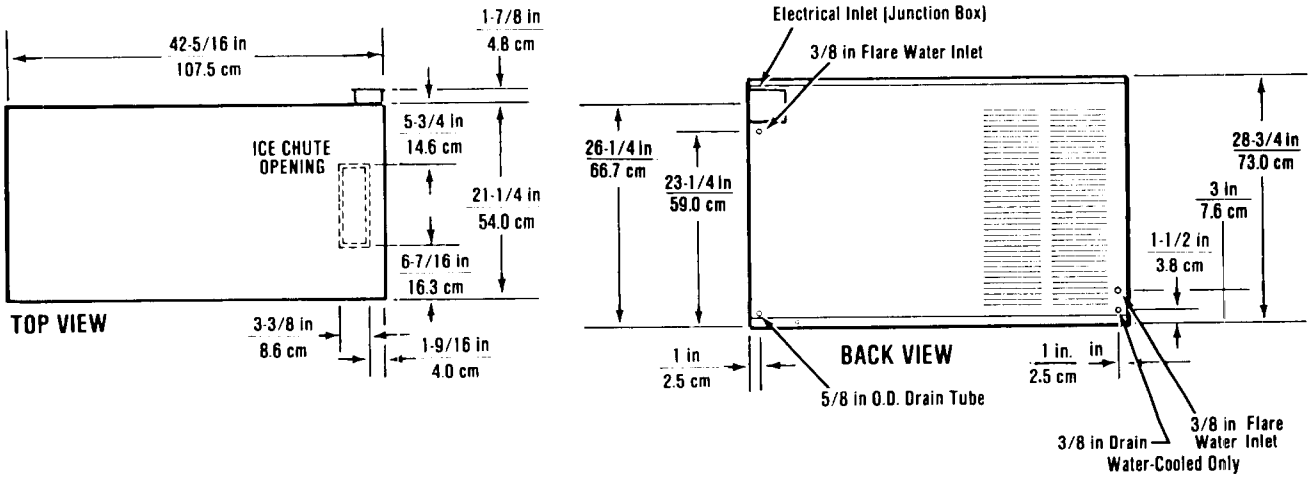

This product qualifies for the following listings:

INSTALLATION NOTE: Allow 6" minimum additional space at front, back and right side for ventilation and utility connections.

We reserve the right to make product improvements at any time. Specifications and design are subject to change without notice.

SPECIFICATIONS

Model Number	(Height - w/o Legs) Dimensions H" x W" x D"	Cube Size	Cond. Unit	Basic Electrical	Comp. H.P.	Run. Amps.	Max. Oper. Amps.	No. of Wires	Min. Circuit Ampacity †	Max. Fuse Size	Ship. Wt. lbs./kg.
HC800 MODULAR STACKING CUBER											
HC800SAE-9A	28¾ x 42⁵/₁₆ x 21¼	Small	Air	115/208-220/60/3	1½	10.1	13.4	4	16.8	20	306/138
HC800SAE-31A	28¾ x 42⁵/₁₆ x 21¼	Small	Air	115/208-230/60/1	1½	12.6	19.6	3	26.9	30	306/138
HC800SWE-9A	28¾ x 42⁵/₁₆ x 21¼	Small	Water	115/208-220/60/3	1½	9.1	12.4	4	15.8	20	296/134
HC800SWE-31A	28¾ x 42⁵/₁₆ x 21¼	Small	Water	115/208-230/60/1	1½	11.6	18.6	3	25.9	30	296/134
HC800MAE-9A	28¾ x 42⁵/₁₆ x 21¼	Medium	Air	115/208-220/60/3	1½	10.1	13.4	4	16.8	20	306/138
HC800MAE-31A	28¾ x 42⁵/₁₆ x 21¼	Medium	Air	115/208-230/60/1	1½	12.6	19.6	3	26.9	30	306/138
HC800MWE-9A	28¾ x 42⁵/₁₆ x 21¼	Medium	Water	115/208-220/60/3	1½	9.1	12.4	4	15.8	20	296/134
HC800SWE-31A	28¾ x 42⁵/₁₆ x 21¼	Medium	Water	115/208-230/60/1	1½	11.6	18.6	3	25.9	30	296/134

Order **SPKMC35** panel kit for stainless steel sides, front and top panels. Modular cubers stack onto B40, B60, B90 or B120 bins and extensions.
Electrical and water inlets are located in upper left of back panel and drain in lower left corner.
Water inlet and drain for water-cooled units only are located in lower right corner of back panel.

OPTIONAL STAINLESS STEEL PANEL KIT

SPKMC35 contains top, front and 2 end panels. Not factory installed.

IMPORTANT OPERATING REQUIREMENTS

	MINIMUM	MAXIMUM
Air Temperatures	50°F (10.0°C)	100°F (37.7°C)
Water Temperatures	40°F (4.4°C)	100°F (37.7°C)
Water Pressures	20 lbs. gauge	120 lbs. gauge
Electrical Voltage Variation		
Voltage rating specified on nameplate	-10%	+10%

Extended periods of operation exceeding these limitations constitutes misuse under the terms of Scotsman Manufacturer's Limited Warranty, resulting in a loss of warranty coverage.

STORAGE BIN & EXTENSIONS

Since the Model HC800, like other modular cubers in the SCOTSMAN line, does not have an attached ice storage bin, it is necessary to use an auxiliary bin. Modular systems combinations include: B40 ice Storage Bin with 350 pounds (lbs.) capacity; B60 with 550 lbs.; B90 with 590 lbs.; and, bin extensions: BX25 with 150 lbs., and the KBT2 Bin Top used with BX83 with 260 lbs.; and BX87 with 560 lbs. Two HC800 Modular Cubers can be stacked to double ice production volume, require Stacking Kit KSC1.

GENERAL INFORMATION AND INSTALLATION

INTRODUCTION

These instructions provide the specifications and the step-by-step procedures for the installation, start up and operation for the Scotsman Model HC400 Modular Cuber.

The Model HC800 Modular Cubers are quality designed, engineered and constructed, and are thoroughly tested icemaking systems, providing the utmost in flexibility to fit the needs of a particular user.

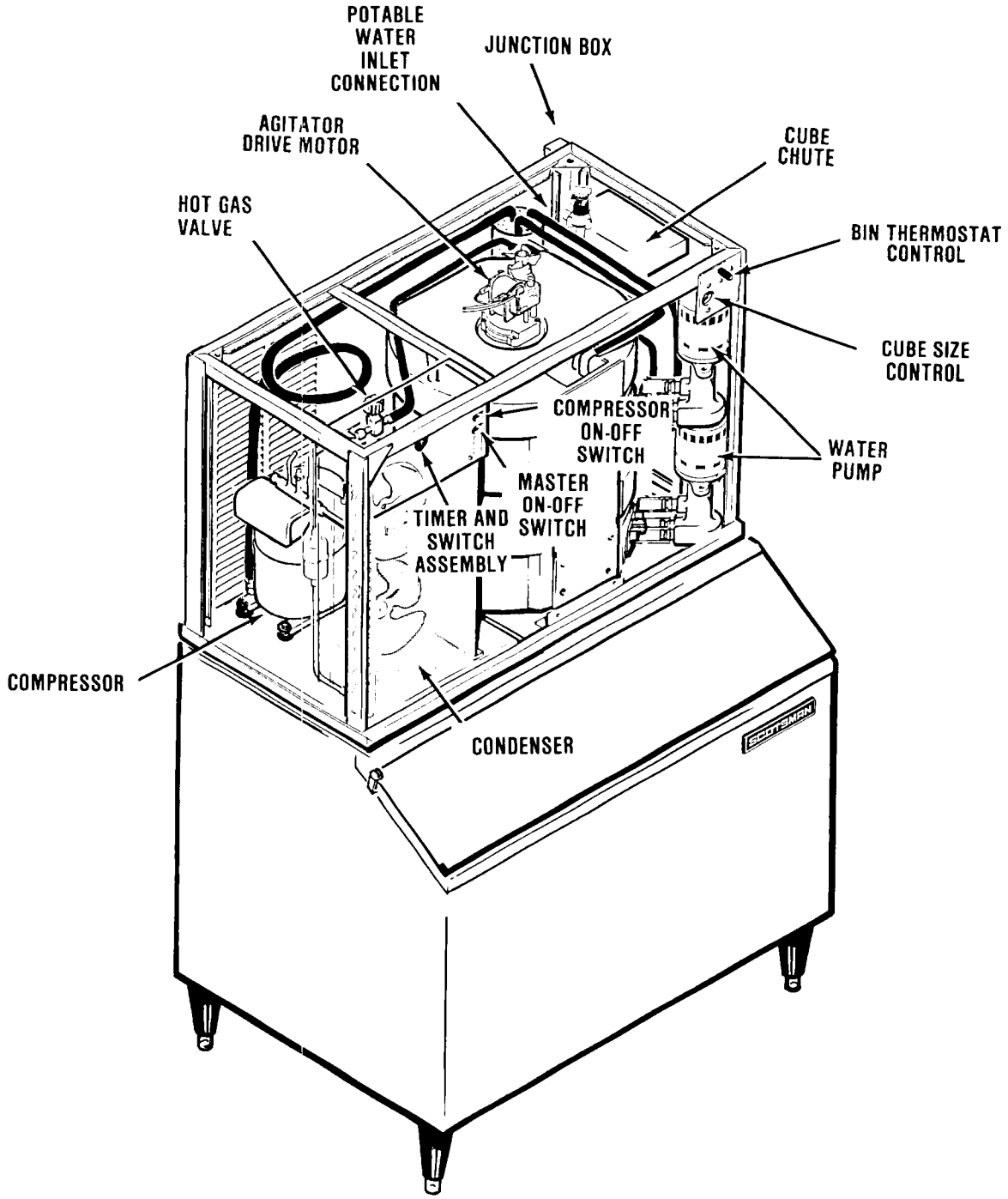

HC800 — Component Location

LOCATION & LEVELING

1. Position the selected bin in the permanent location, which should have a minimum room temperature of 50-degrees F., and maximum room temperature of 100-degrees F. Level the bin, adjusting the leg levelers in both the front-to-rear and side-to-side directions. Select a well-ventilated location for the air-cooled models.
2. Inspect the bin top mounting gasket, which should be flat, with no wrinkles, to provide a good seal when the HC800 Cuber is installed on top of the bin.
3. Install the HC800 Modular Cuber on top of the selected bin, using care to be sure a good seal is made between the two cabinets.
4. Remove screws, top panel, front panel, and both side panels.
5. Remove cube chute from the machine.
6. Bolt the cuber to the bin using the two hex head bolts, retained from the shipping skid. Thread the bolts down through the cuber base into the top edge of both storage bin side panels.
7. Install cube deflector. Hook the cube deflector over the flange in base of the icemaker. See Detail.

STACKING HC800 ICEMAKER

1. Top panel of bottom machine may be set aside, as it is not used when machines are stacked. Remove the cube chute from top machine. Place upper machine directly on frame of lower machine. Bolt together with 2 bolts used to hold machine to the crate skid.
2. Slide cube chute into cube chute opening of bottom icemaker.
3. Position stacking kit cover over cube chute of bottom icemaker.
4. Slide the stainless steel sleeve through cube chute opening of upper icemaker and into the stacking kit cover.
5. Slide cube chute into cube chute opening of upper icemaker.
6. See Installing Bin Thermostat Capillary Tube with steps to thread the capillary tube from each icemaker into the cube deflector.
7. Install cube chute and cover on top machine, and replace all cabinet panels on both machines.

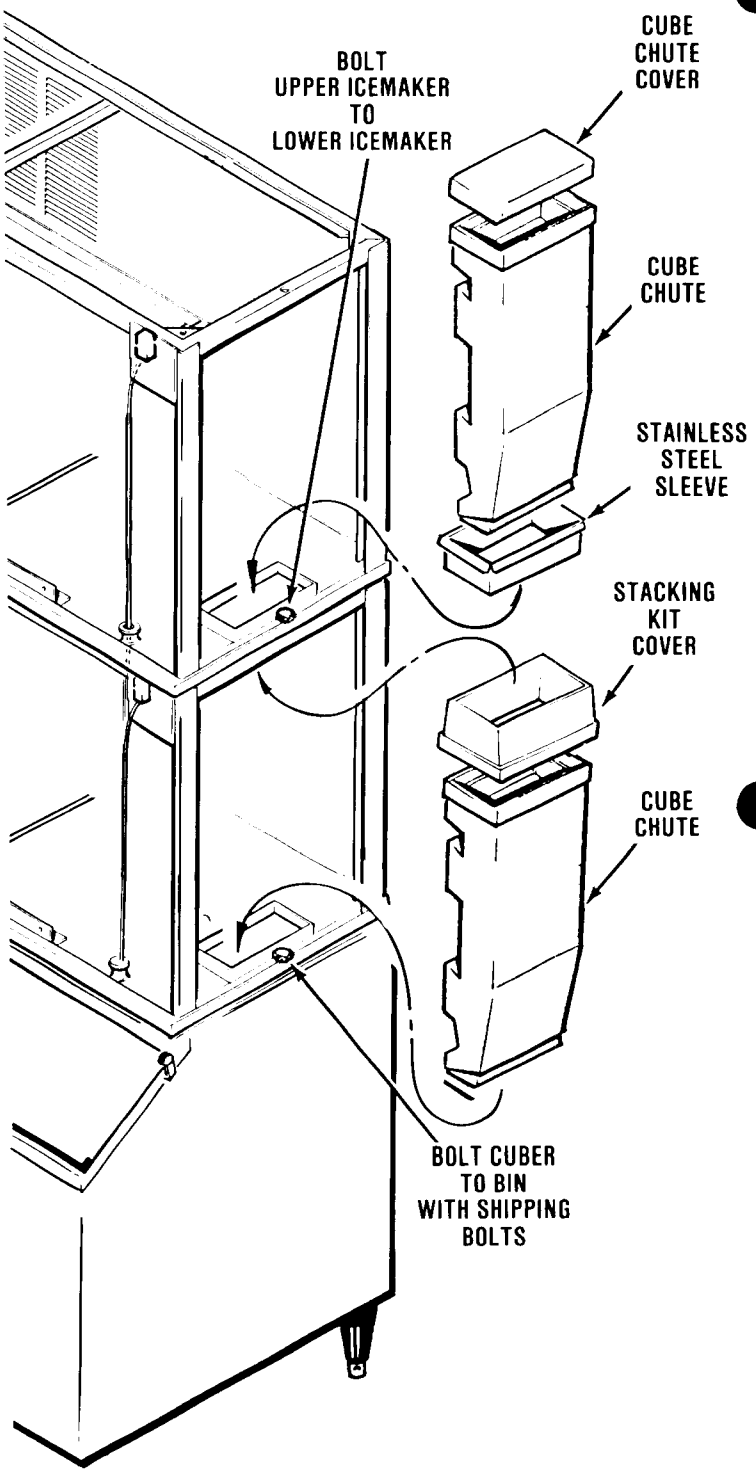

Stacking Modular HC800 Cubers

INSTALL BIN THERMOSTAT CAPILLARY TUBE

CAUTION

Careful handling of the bin thermostat capillary tube is required.

1. Uncoil the bin thermostat capillary tube and route from the bin thermostat control down through the plastic grommet in the icemaker base and under the cube deflector.
2. Thread the capillary tube through the grommets in the cube deflector as indicated. See *Installing the Capillary Tube* illustration.

   Stacking modular HC800 cubers: Route the bin thermostat capillary tube from the upper icemaker through the plastic grommet and into the chassis of the lower icemaker, through the plastic grommet of the lower icemaker, under and into the cube deflector.

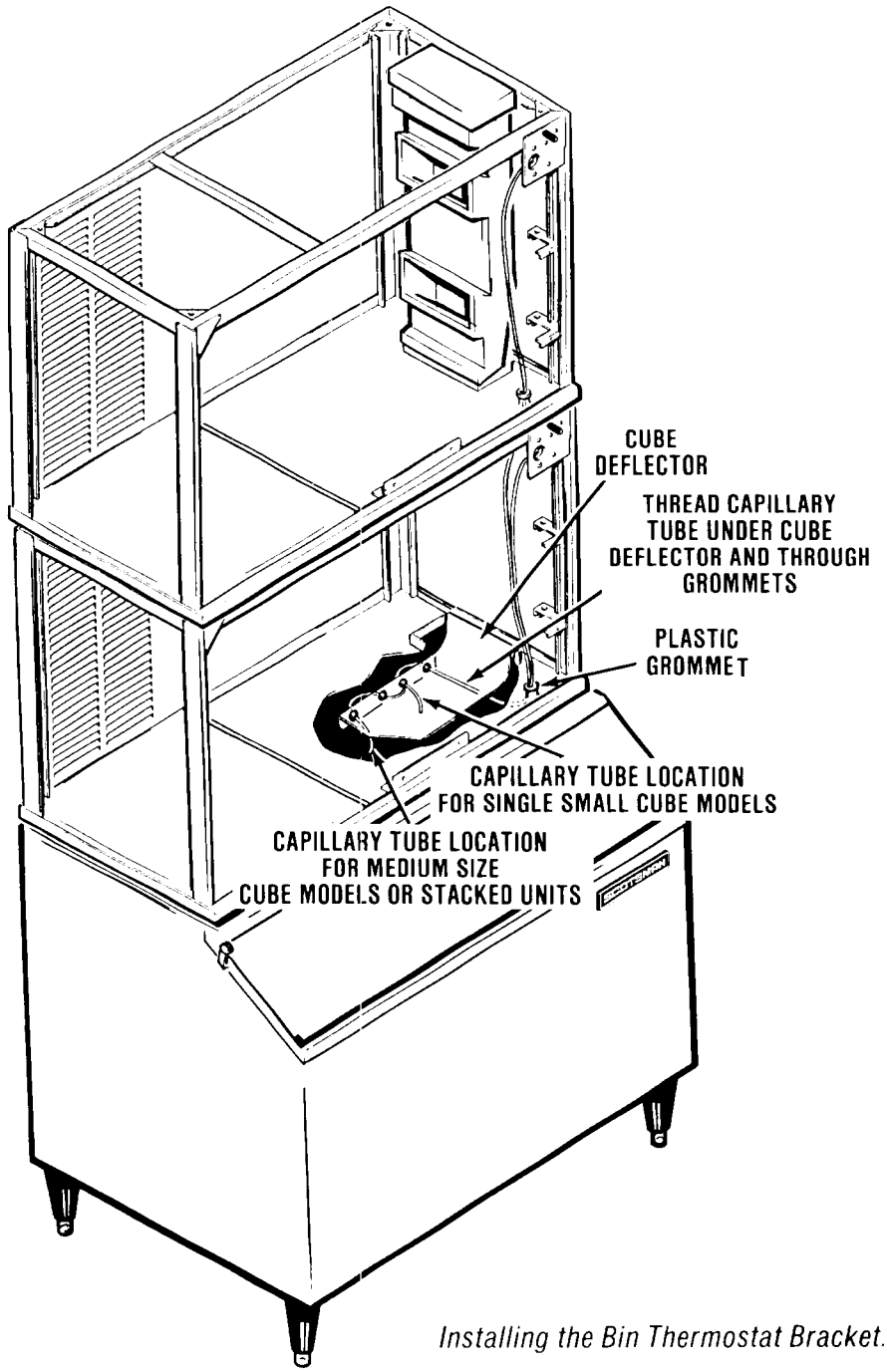

Installing the Bin Thermostat Bracket.

ELECTRICAL CONNECTIONS

SEE NAMEPLATE for current requirements to determine wire size to be used for electrical hookup. The cuber requires a solid chassis-to-earth ground wire. See Wiring Diagram.

Be certain the cuber is connected to its own electrical circuit and individually fused. Voltage variation should not exceed ± ten percent of the nameplate rating, even under starting conditions. Low voltages can cause erratic operation and may be responsible for serious damage to the icemaker.

All external wiring should conform to the national, state and local electrical code requirements. Usually an electrical permit and services of a licensed electrician will be required.

WATER SUPPLY AND DRAIN CONNECTIONS

AIR-COOLED MODELS: The recommended water supply line is a 3/8-inch O.D. copper tubing with a minimum operating pressure of 20 PSIG and a maximum of 120 PSIG. Connect to cold water supply line with standard plumbing fittings, with a shutoff valve installed in an accessible place between the water supply and the cuber. In some cases a plumbing permit and services of a licensed plumber will be required.

WATER-COOLED MODELS: On water-cooled models, a separate cold water supply inlet is required, to be connected to a second 1/2-inch O.D. male flare fitting at the rear of the cabinet. Additional drain lines are required to drain the water-cooled condenser.

DRAIN CONNECTIONS: All drains are gravity type and must have a minimum of 1/4-inch fall per foot on horizontal runs. The drains to be installed to conform with the local plumbing code. Install separate drain line for discharge water from the water-cooled condenser. The drain receptacle should be an open, trapped or vented construction.

Recommended bin drain is 5/8-inch O.D. copper tubing and should be vented and run separately.

Install Drain Cup. A drain hole is located at the cabinet rear base lower left corner and a Drain Cup is provided and must be installed. Coat both inside corners of Drain Cup with a small amount of sealant to insure a proper water seal, and attach Drain Cup to icemaker base using screws. Attach suitable length of 1/2-inch O.D. drain tube and route tubing to drain.

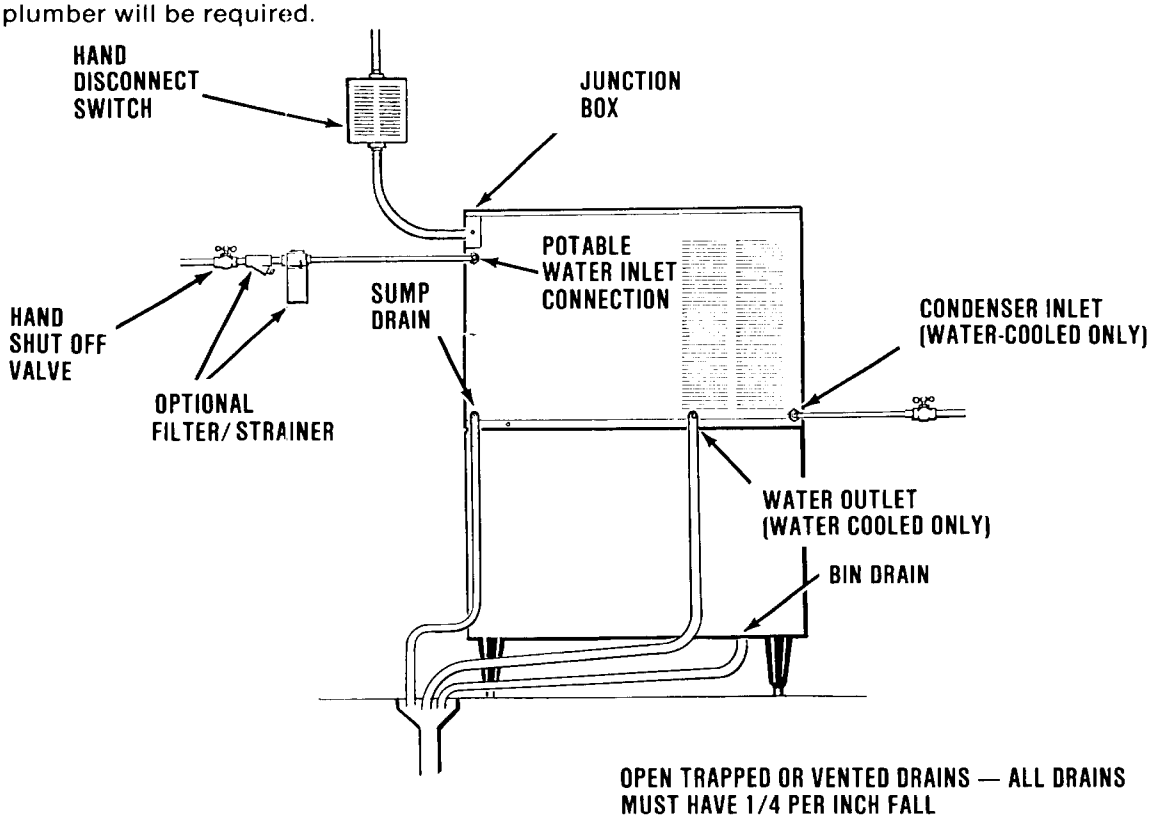

Installation, Electrical, Water Supply and Drain Connection

FINAL CHECK LIST

1. Is the cabinet/bin level and the cuber bolted to the bin? (IMPORTANT)
2. Is the cuber in a location where ambient temperatures are a minimum of 50-degrees F. all year around and do not exceed a maximum of 100° F?
3. Is there at least a six-inch clearance behind and around the cabinet for all connections and for proper air circulation?
4. Have all electrical and piping connections been made?
5. Has the electrical power supply wiring been properly connected, and the voltage tested and checked against the nameplate rating? Has proper chassis-to-earth ground been installed?
6. Is the water supply line shutoff valve installed and opened and has the inlet water supply pressure been checked to ensure a minimum of 20 PSIG and a maximum pressure of 120 PSIG?
7. All masking tape removed from doors and panels? Have styrofoam blocks been removed from the top of the freezing chamber?
8. Have the compressor holddown bolts been checked to be sure the compressor is snug on the mounting pads?
9. Check all refrigerant lines and conduit lines to guard against vibration and possible failure.
10. Has the bin thermostat capillary tube been properly installed in the cube deflector?
11. Has the cuber and the bin been wiped clean with clean damp cloths?
12. Has the owner/user been given the User Manual and instructed on how to operate the icemaker and the importance of periodic maintenance?
13. Has the owner/user been given the name and telephone number of the Authorized Scotsman Distributor or Service Agency serving him?
14. Has the Manufacturer's Registration Card been properly filled out? Check for correct Model and Serial Numbers from nameplate, then mail the completed card to the SCOTSMAN factory.

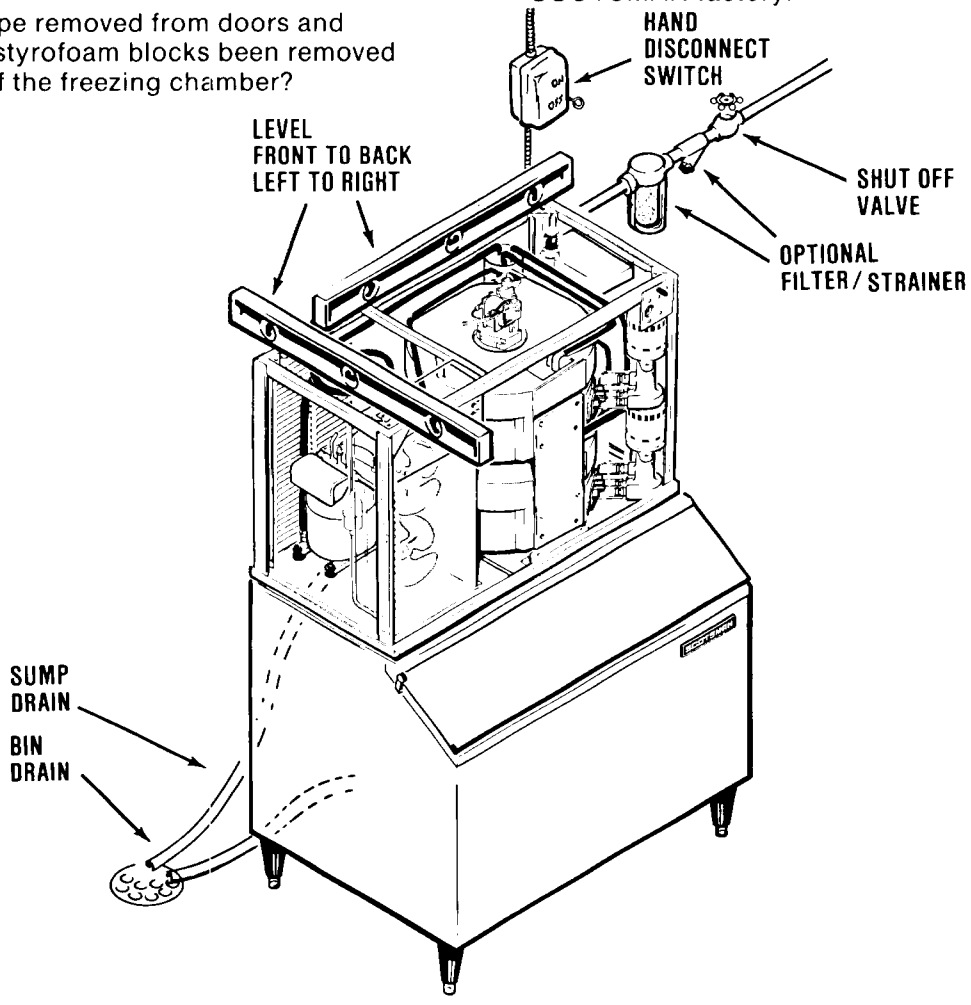

Final Checklist

OPERATING INSTRUCTIONS

START—UP

1. Remove screws and remove the top and front panels.
2. Check that the two toggle switches, the MASTER ON-OFF toggle switch and the COMPRESSOR ON-OFF toggle switch are in the OFF position, on the control box.
3. OPEN the water supply line shutoff valve.
4. Protruding through the control box cover is the shaft of the timer and the switch assembly. Rotate the shaft of the timer and switch assembly clockwise until the actuator arm on the microswitch drops off outer cam into cam slot, the start of the harvest cycle. See Timer Cam Positions. An audible click can be heard, but in a noisy area, look at the cam and switch to observe the event.

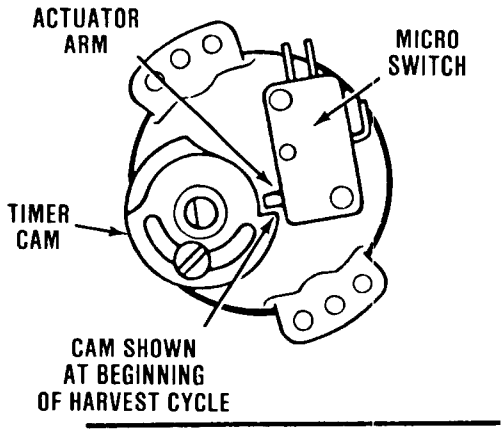

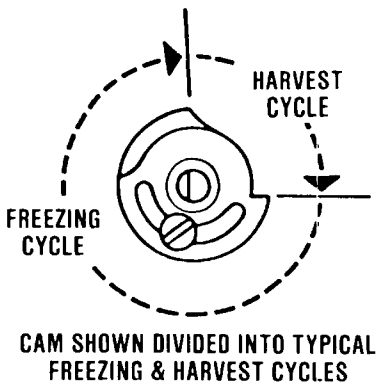

Timer Cam Positions

5. Move the master ON-OFF toggle switch, the bottom toggle switch, to the ON position.
6. Observe that the water inlet solenoid valve OPENS and inlet water flows from the valve through tubing and can be seen flowing to the defrost water tube, at the top rear of the freezing chamber, where the water then flows around the inverted ice cube cups and drains into the freezing chamber sump. Excess water is overflowed through the stand pipe and drain tube. This cycle will take about three minutes, when the Timer will CLOSE the water inlet solenoid valve.

   Advancing the shaft of the timer and switch assembly through the remaining cycles into a new harvest cycle, restarts the timer and allows a check that: Water inlet solenoid valve OPENS and the reservoir overflows through the stand pipe. Water inlet valve CLOSES, stopping water overflow.
7. When the second harvest cycle is completed, move the compressor ON-OFF toggle switch, to the ON position.
8. Check operation of freezing cycle:

   Agitator motor is operating, as seen by fan rotating on top of the freezing chamber.

   Water pump is operating, as seen at Tygon tubes on pump and looking at water being sprayed into inverted ice cube cups, from rotating spray bar, seen inside freezing chamber.

   The icemaking process begins; feeling the metal parts of the evaporator reveals cold temperature, very shortly ice begins to form. Tubing will become frosted at the top of the evaporator inlet located on the top front portion at the freezing chamber.

   Freezing time will range between 20 and 30 minutes in a 70-degree F. ambient temperature. Longer time for temperatures above 70-degrees F., and shorter time required when temperatures are below 70-degrees F. Average complete cycle range is about 17 to 22 minutes.
9. Replace the plastic cube chute before the harvest cycle begins.

(Continued on page 10)

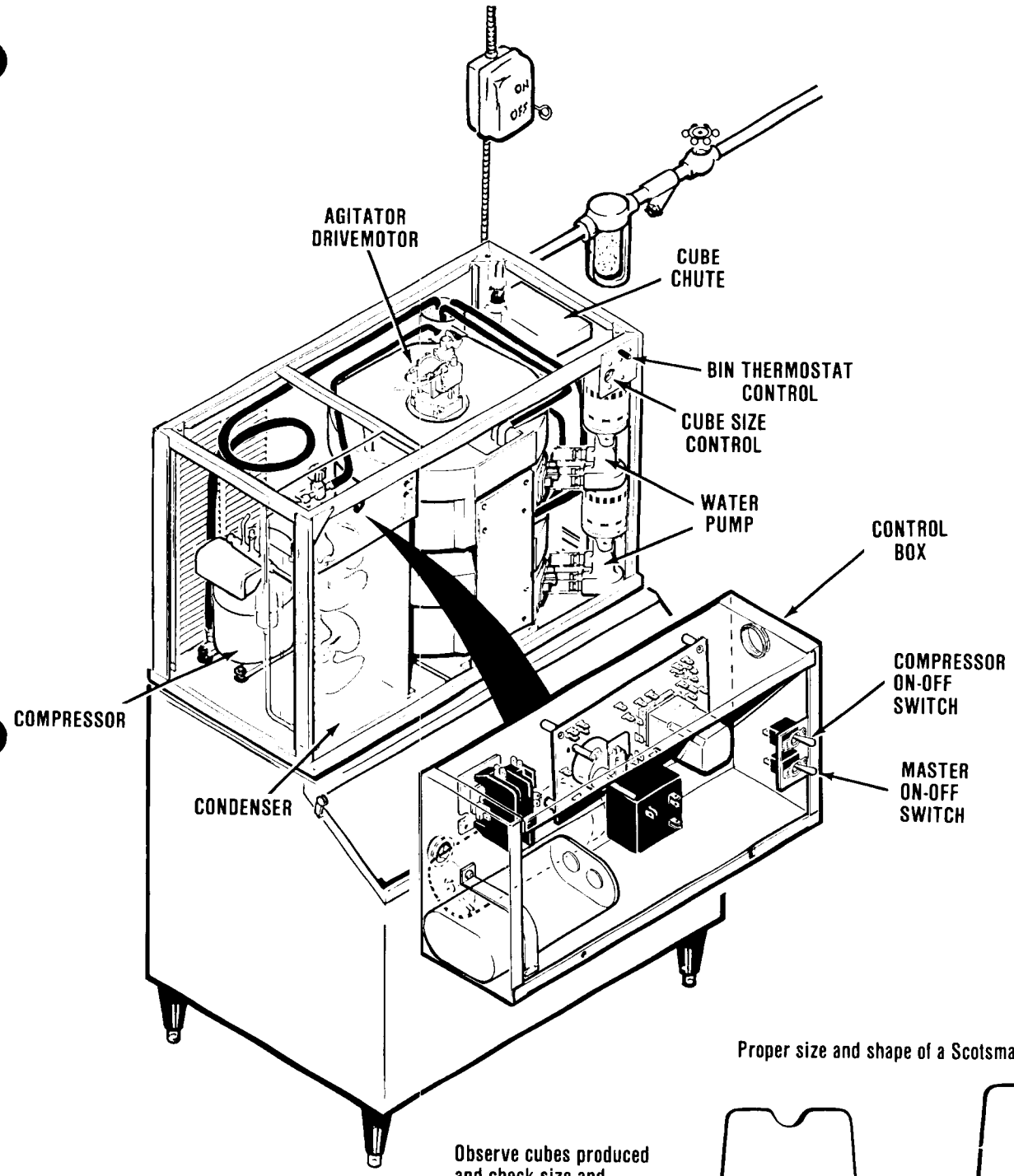

Observe cubes produced and check size and shape — compare cubes to example on page 10.

Proper size and shape of a Scotsman Round Cube:

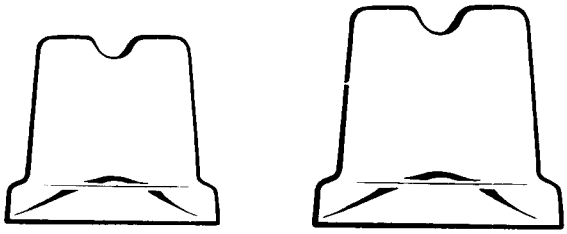

SMALL SIZE MEDIUM SIZE

Normal cube size is with a one-quarter inch depression in the crown.

Operation

10. Observe first ice cube harvests:

    All cubes should drop from the freezing chamber by the end of the timed portion of the harvest cycle. If required, the harvest time should be adjusted.

    Check size of ice cubes:

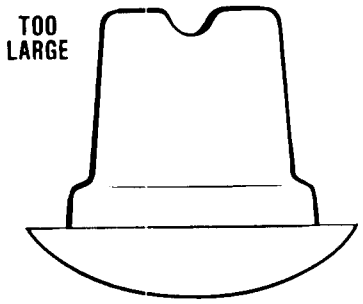

A cube this size and shape is TOO LARGE and requires longer freezing cycle which may cause evaporator freeze ups.

Adjust cube size control counter clockwise to produce a smaller cube.

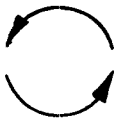

Proper size and shape of a Scotsman Round Cube:

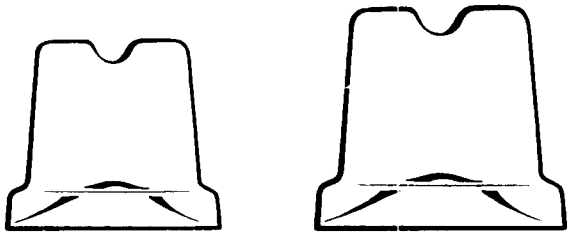

PROPER SIZE AND SHAPE of the round cube. Icemaker operates at peak efficiency when a cube this size and shape is produced.

NOTE

Normal cube size is with a one-quarter inch depression in the crown.

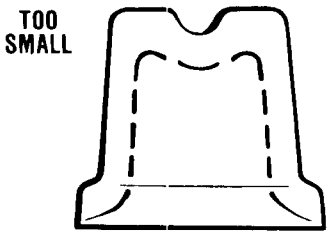

A cube this size and shape is TOO SMALL. Adjust cube size control clockwise to produce a larger cube. Cubes this size or shape are too small and cause excessive cycling.

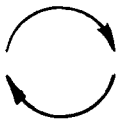

ADJUSTMENT OF CUBE SIZE

To produce LARGER sized ice cubes:

Locate cube size control, in the top right end the of icemaker chassis.

Rotate the adjusting screw one-eighth of a turn CLOCKWISE to COLDER.

Observe size of ice cubes in the next two cube harvests and adjust in one-eighth turn or less increments, until correct ice cube size is achieved.

To produce SMALLER sized ice cubes:

Locate cube size control, in the top right section of the chassis.

Rotate the adjusting screw one-eighth of a turn COUNTERCLOCKWISE to WARMER.

Observe size of the ice cubes in the next two ice cube harvests and adjust in one-eighth turn or less increments, until correct ice cube size is achieved.

Check texture of ice cubes; when partially cloudy throughout, suggests icemaker is operating short of water; or, possibly an extreme problem water condition exists, wherein filtering or purifying equipment is recommended. Contact SCOTSMAN ICE SYSTEMS, Service Department, Albert Lea, Minnesota 56007 for further details.

11. With the icemaker in the harvest cycle, hold ice against the bin thermostat control bulb to test shutoff, which should cause the icemaker to shut OFF at the END OF THE HARVEST CYCLE.

    Within minutes after the ice is removed from the sensing bulb, the bulb will warm up and cause the icemaker to restart. This control is factory set and should not be reset until testing is performed.

12. Replace control box cover and all cabinet panels and screws.

13. Thoroughly explain to the owner/user the significant specifications of the icemaker, the start up and operation, going through the procedures in the operating instructions. Answer all questions about the icemaker by the owner; and inform the owner of the name and telephone number of the authorized SCOTSMAN Distributor, or service agency serving him.

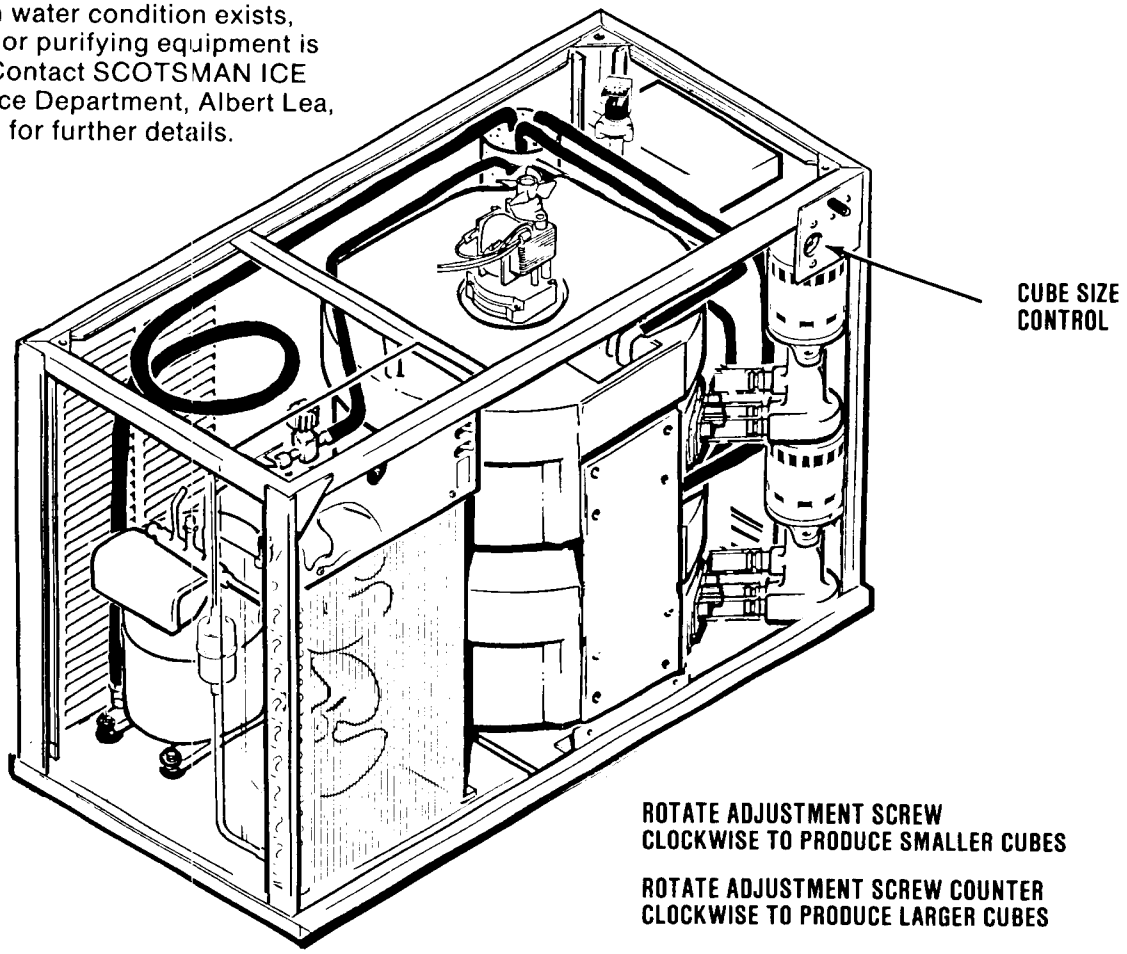

Cube Size Control Adjustment

FREEZING CYCLE

Water from the sump in the reservoir of the freezing chamber is pumped to a rotating spray bar assembly, which is powered by the agitator drivemotor on top of the freezing chamber. The spray bar assembly has ten jets through which water is uniformly sprayed up into the inverted ice cube cup molds of the freezing chamber evaporator. See *Freezing cycle* illustration. At the beginning of the freezing cycle, the electrical circuit is completed to the compressor, the gas. agitator drivemotor and the water pump. The water pump and the agitator drivemotor operate continuously, through both the freezing cycle and the harvest cycle.

In the compressor, gaseous refrigerant is compressed and discharged into the condenser, as a high pressure, high temperature The refrigerant is cooled and condensed, by either air or water, into a high pressure, medium temperature liquid. This liquid refrigerant is then distributed through the capillary tube where the temperature and pressure of the liquid refrigerant are lowered and enters the evaporator. The refrigerant is warmed by the water sprayed up into the ice cube molds of the evaporator and begins to boil off and become a gas. The refrigerant next travels through the heat exchange area of the suction line and into the accumulator, where any remaining liquid refrigerant boils off and returns to the compressor as a low pressure, low temperature gas, and the cycle starts again.

During the freezing cycle, the hot gas solenoid valve is CLOSED and the water inlet solenoid valve is CLOSED.

When the ice cubes are about three-quarters formed, the cube size control bulb located on the suction line coming out of the evaporator platen assembly, will sense the temperature at which it is preset to Close. This will complete the electrical circuit to the timer. The timer then controls the remainder of the cycle.

The timer will keep the icemaker operating in the freezing cycle for a selected length of time. This will give the ice cubes time to fully form. After that selected length of time, the timer will switch the icemaker into the harvest cycle, through the contacts of the timer assembly microswitch.

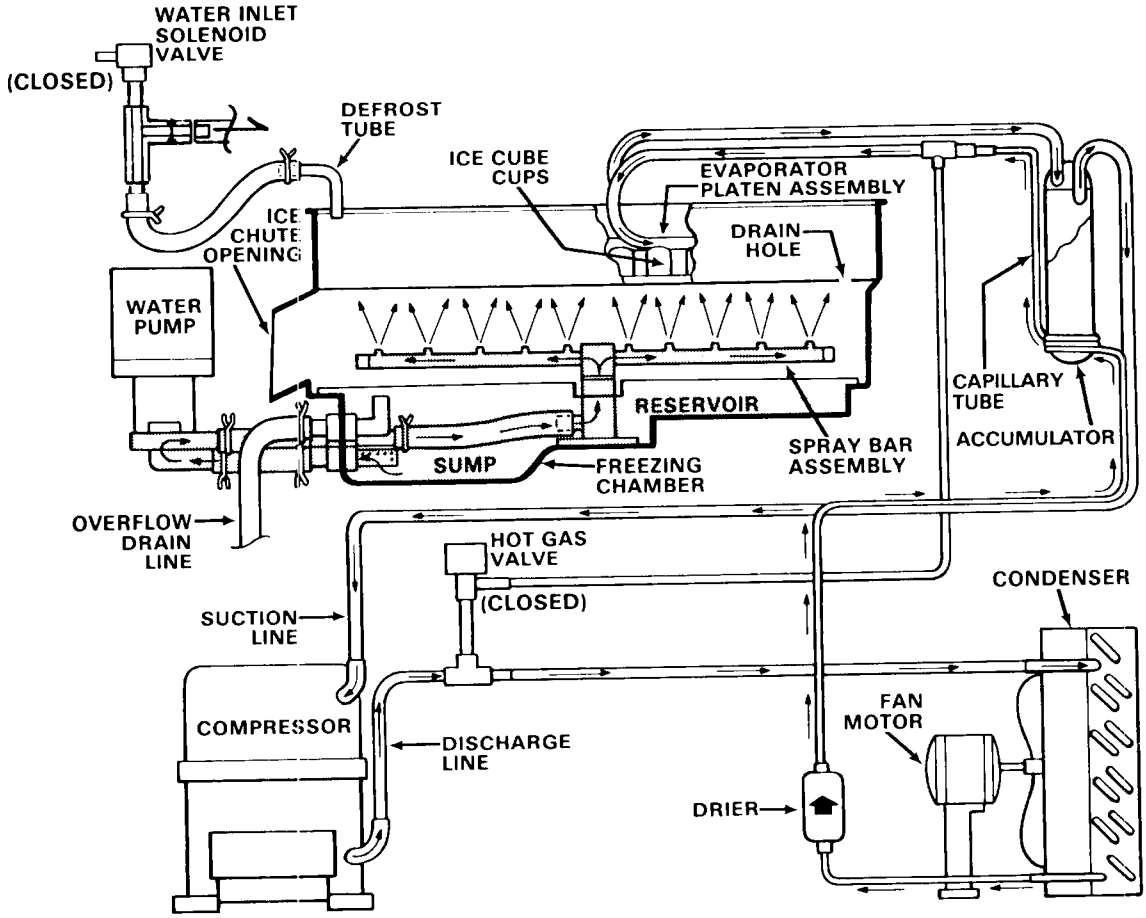

Freezing Cycle

HARVEST CYCLE

When the timer switches the icemaker into the harvest cycle, high pressure, high temperature gaseous refrigerant being discharged from the compressor is diverted from the condenser through the hot gas solenoid valve into the evaporator. During this cycle, the gaseous refrigerant bypasses the condenser and the capillary tube.

In the electrical circuit, the compressor agitator drivemotor and the water pump operate and the hot gas solenoid valve is energized and OPEN and the water inlet solenoid valve is OPEN.

On air-cooled models, the bottom fan is de-energized.

The water inlet solenoid valve OPENS and allows a fresh water supply to be discharged into the top of each evaporator platen assembly. The finished ice cubes are released from the evaporator by the warming effect of the hot gas flowing through the evaporator tubes and the water flow around the ice cube molds. The released ice cubes drop into the inner bottom of the freezing chamber and are pushed by the rotating spray bar assembly out the slanted ice chute opening, down the plastic cube chute and into the ice storage bin.

At the end of the harvest cycle, the timer cam will push the actuator arm of the microswitch IN. If the bin thermostat is still CLOSED, a whole new cycle will begin. If the bin thermostat is OPEN, the icemaker will shut OFF, at this time.

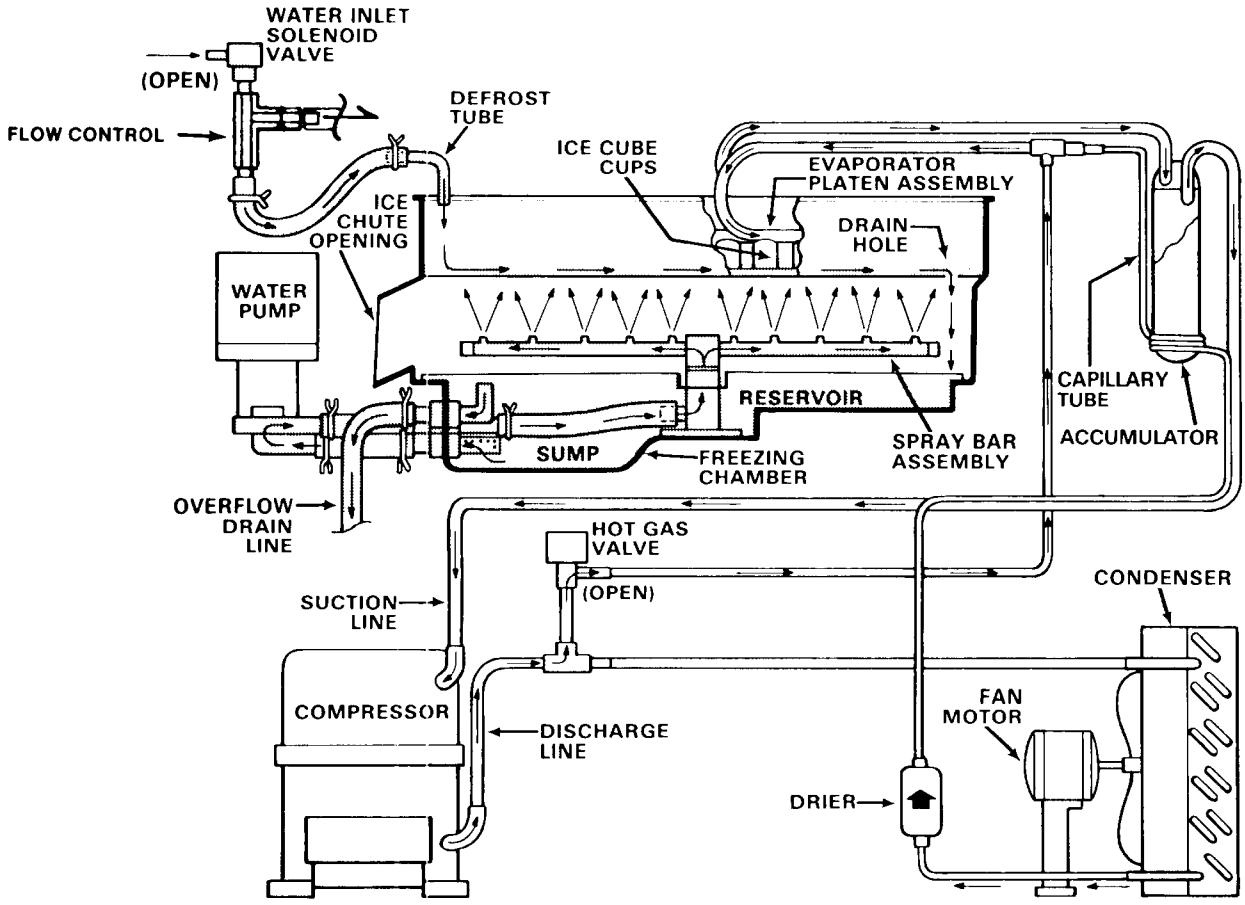

Harvest Cycle

HC800
ADJUSTMENT AND REMOVAL AND REPLACEMENT

The procedures provided in this Section are arranged in alphabetical order, to make specific Adjustment and Removal and Replacement information easy to locate.

Read the instructions thoroughly before performing any Adjustment or Removal and Replacement Procedures.

ADJUSTMENT OF THE BIN THERMOSTAT CONTROL

The control for the Bin Thermostat is the Temperature Control, located in the right side of the gusset in the front upper corner of the Chassis frame.

See Adjustment of the Temperature Control Illustration for location and direction of rotation, clockwise (CW) or counterclockwise (CCW), of the adjusting screws on the Temperature Control, the Adjustment is to be towards warmer as altitude increases.

WARNING

The adjusting screws on the Temperature Control device have very sensitive response to adjustment. DO NOT attempt to adjust the screw until after thoroughly reading and understanding the following instructions and illustration. Over-adjusting or erratic guessing, can foul the instrument and cause ultimate delay and part replacement, WHICH COULD HAVE BEEN PREVENTED.

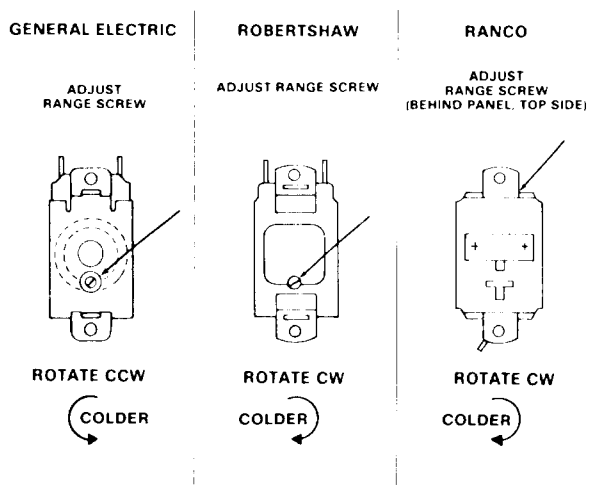

Adjustment of the Temperature Control.

ADJUSTMENT OF THE CUBE SIZE CONTROL

CAUTION

BEFORE performing actual adjustment to the Cube Size Control, check other possible causes for cube size problems, refer to SERVICE DIAGNOSIS section for problem review and analysis.

DO NOT perform adjustment when a new Cube Size Control is installed, until the control bulb has been properly installed in the tube well, on the refrigerant tube of the Platen Assembly and the Icemaker has progressed through several complete freezing and harvest cycles, to observe size and quality of ice cubes and whether or not a cube size problem exists.

As a reverse acting temperature control, adjustment on the Cube Size Control is performed to either cause larger sized ice cubes or smaller sized ice cubes to be produced.

To Produce LARGER Sized Ice Cubes:

Locate the Cube Size Control, in the left side of the gusset in the front upper corner of the Chassis frame.

Rotate the adjusting screw one-eighth of a turn CLOCKWISE toward COLDER.

Observe size of ice cubes in next two ice cube harvests and repeat step 2 above, in one-eighth turn increments, until desired ice cube size is achieved.

To Produce SMALLER Sized Ice Cubes:

Locate the Cube Size Control, in the left side of the gusset in the front upper corner of the Chassis frame.

Rotate the adjusting screw one-eighth of a turn COUNTERCLOCKWISE.

Observe size of ice cubes in next two ice cube harvests and repeat step 2 above, in one-eighth turn increments, until desired ice cube size is achieved.

ADJUSTMENT OF THE TIMER & SWITCH ASSEMBLY

The timer and switch assembly is factory set, so one complete revolution of the cam on the timer represents eight minutes. Five and one-half minutes comprise the freezing cycle event during cam rotation, and the final two and one-half minutes program the defrost and harvest cycle. Rotating the shaft of the timer cam CLOCKWISE will allow positioning the actuator arm of the microswitch on the cam at the selected start position for either the freezing cycle or harvest cycle, as required in the CLEANING instructions.

WARNING

Disconnect electrical power supply to icemaker whenever adjustment procedures are performed.

TO ADJUST THE TIMER & SWITCH ASSEMBLY:

A. HARVEST CYCLE: Slowly rotate the shaft of the timer and switch assembly, located in the control box, CLOCKWISE, until the actuator arm on the microswitch initiates the harvest cycle. An audible click can be heard, but in a noisy area, look at the cam and switch to observe the event.

B. FREEZING CYCLE: Slowly rotate the shaft of the timer and switch assembly, located in the control box, CLOCKWISE, until the actuator arm on the microswitch initiates the freezing cycle.

C. The length of the harvest cycle can be changed by loosening the adjustment screw on the cam. The minimum harvest setting is two minutes; the maximum is three and one-half minutes. It is important that the length of the harvest cycle allow enough time for all the ice cubes to fall from the evaporator. Too short of a time will cause the evaporator to freeze up and stop ejecting ice into the bin. Too much time wastes icemaking capacity, energy and water. Adjustment of the harvest cycle may require a corresponding adjustment of the cube size control.

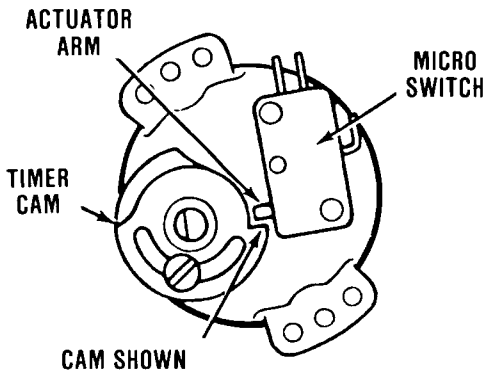

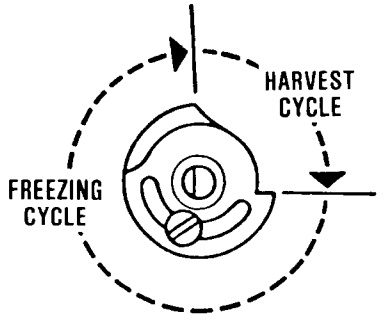

CAM SHOWN DIVIDED INTO TYPICAL FREEZING & HARVEST CYCLES

Adjustment of the Timer & Switch Assembly

WARNING

Be sure the electrical power open circuit breaker supply and the inlet water supply are OFF, BEFORE starting any of the following REMOVAL AND REPLACEMENT procedures as a precaution to prevent possible personal injury or damage to equipment.

PARTS ILLUSTRATIONS AND PARTS LISTS

GENERAL

This section contains the Parts Illustrations and the Parts List for each of the major assemblies in the Model HC800 Modular Cuber.

A *No Number* designation, when used in the Part Number Column indicates the unit is not available from SCOTSMAN as an assembly. This designation is used only for the convenience and clarity of division in cataloging.

HOW TO ORDER PARTS OR ASSEMBLIES

When ordering parts or assemblies, to avoid costly delays and errors in shipment, give the part number, the complete description shown in the lists, and the quantities of each part or assembly required. Also include the Model name, the serial number of the Modular Cuber for which the part is required, and for parts which require color matching, the color of the Cabinet.

IMPORTANT

All Part Numbers have TEN DIGITS (spaces), required for use in the Computer System. BE SURE to fill in ALL SPACES in the CATALOG NUMBER Column, on the Parts Order form.

Enter the QUANTITY of the Parts ordered, in the last digit column under the QUANTITY column heading, the one under the small 55 number, for parts from 1 thru 9. For 10 or more parts use two columns.

To be sure you receive the proper parts in the proper quantities, ALWAYS use the PART NUMBERS and DESCRIPTIONS given in the Parts Manuals.

Write an order for the Part. (Use SCOTSMAN Parts Order Form DN103) Be sure to include:

- ☐ Distributor Name
- ☐ (Use for DROP-SHIP order ONLY.)
- ☐ Distributor Purchase Order Number.
- ☐ Carrier.
- ☐ How shipped (Truck, Rail, UPS, etc.)
- ☐ Date ordered.
- ☐ Part Catalog Number. (Use full TEN digits (spaces) listed in Parts Manual, including dashes between numbers.)
- ☐ Description — as listed in Parts Manual.
- ☐ Quantity — number of parts ordered. (Use far right column.)

WIRING DIAGRAMS

This Section is provided as an aid in understanding the electrical circuitry of the Modular Cuber:

WARNING

When conducting a continuity check of the Modular Cuber:

1. **Disconnect the main power source.**
2. **DO NOT use an incandescent lamp or jumper wire, conduct all tests with a volt-ohm-meter.**

The Wiring Diagrams in the Section are:

HC800AE- 9A 115/208-220/60/3 - Air-Cooled

HC800WE-9A 115/208-220/60/3 — Water-Cooled

HC800AE-31A 115/208-230/60/1 — Air-Cooled

HC800WE-31A 115/208-230/60/1 — Water-Cooled

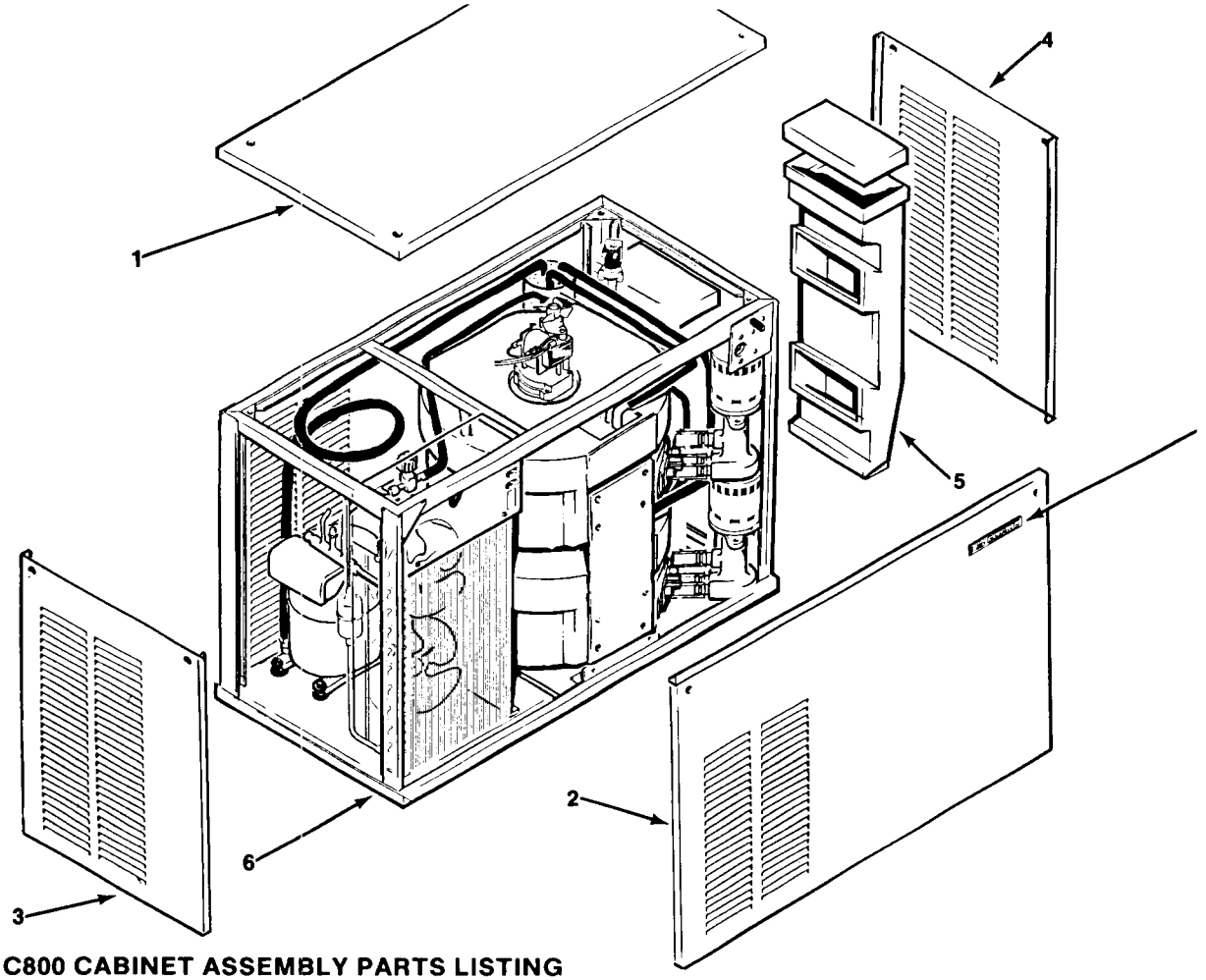

HC800 CABINET ASSEMBLY PARTS LISTING

ITEM NUMBER	PART NUMBER	DESCRIPTION	REQ'D NUMBER
1	A23784-007	Panel, Top - (Enamel) Sandalwood	1
	A23784-002	Panel, Top - (Stainless Steel)	1
		Attaching Part, Index 1	
	03-1417-15	Lockwasher, No. 8 Countersunk External Tooth	2
	03-1419-09	Screw, No. 8 x 1-1/2 S/T Flat Hd	4
2	A26183-005	Panel, Front - (Enamel) Sandalwood	1
	A26183-002	Panel, Front - (Stainless Steel)	1
		Attaching Part, Index 2	
	03-1417-15	Lockwasher, No. 8 Countersunk External Tooth	2
	03-1419-09	Screw, No. 8 x 1-1/4 S/T Flat Hd (SS)	2
3	A23899-006	Panel, Left Side - (Enamel) Sandalwood	1
	A23899-002	Panel, Left Side - (Stainless Steel)	1
		Attaching Part, Index 3	
	03-1404-10	Screw, No. 8 x 1/2 T/F Tap (Stainless Steel)	2
4	A23900-006	Panel, Right Side - (Enamel) Sandalwood	1
	A23900-002	Panel, Right Side - (Stainless Steel)	2
		Attaching Part, Index 4	
	03-1404-10	Screw, No. 8 x 1/2 T/F Tap (Stainless Steel)	2
5	A27822-001	Chute, Cube - w/Cover	1
6	A26179-001	Frame Assembly	1
7	15-0156-00	Emblem Plate	1

HC800 MAJOR ASSEMBLIES AIR-COOLED PARTS LISTING

ITEM NUMBER	PART NUMBER	DESCRIPTION	REQ'D NUMBER
1	12-2263-21	Pump Assembly, Water	1
		Attaching Parts, Index 1	
	No Number	Holder, Drain Tube	1
	02-0706-00	Clamp, Worm Drive	1
	03-1407-05	Washer, No. 1/4 Plain	1
	03-0571-01	Screw, No. 1/4-20 x 1/2 T/C Hex Hd	1
2	18-3709-01	Condenser - Air-Cooled	1
		Attaching Parts, Index 2	
	03-1407-05	Washer, No. 1/4 Plain	2
	03-0571-00	Screw, No. 1/4-20 x 1/4 T/C Hex Hd	2
3	18-0231-00	Blade, Fan w/Mtg. Hdwre	1
4	02-2378-01	Mount, Fan Motor	2
5	12-1575-01	Motor, Fan - 115/208-220-60/3	1
	12-1575-01	Motor, Fan - 115/208-230/60/1	1
		Attaching Parts, Index 3	
	03-1417-03	Lockwasher, No. 8 External Tooth	4
	No Number	Screw, No. 8-32 x 1-1/4 Phil Recess Pan Hd	4
6	18-5100-03	Compressor - 115/208-220/60/3	1
	18-5100-02	Compressor - 115/208-230/60/1	1
		Attaching Parts, Index 4	
	18-5100-51	Grommet	4
	18-5100-50	Sleeve, Mounting	4
	03-1407-07	Washer, No. 5/16 Plain	4
	03-1405-20	Screw, No. 5/16-18 x 1-1/2 Hex Cap Screw	1
		Attaching Part, Index 6 to 7	
	03-1404-04	Screw, No. 6 x 1/4 T/F Tap (Stainless Steel)	2
7	02-2426-02	Drier	1
8	*No Number*	Control Box Cover	1
9	*No Number*	Control Box Assembly	1
		(See Page 31)	
		Attaching Part, Index 7	
	03-1417-15	Lockwasher, No. 8 Countersunk External Tooth	2
	03-1419-09	Screw, No. 8 x 1-1/4 S/T Flat Hd	
		(Stainless Steel) (used to attach LEFT end)	2
	03-1404-08	Screw, No. 8 x 3/8 T/F Tap (used to attach	
		RIGHT end)	2
10	12-2135-01	Valve, Solenoid - Hot Gas	1
11	12-1434-01	Inlet Assembly, Water	1
12	11-0345-02	Control, Cube Size	1
13	11-0353-03	Control, Bin Level	1
		Attaching Parts, Index 10 & 11	
	03-1403-14	Screw, No. 8-32 x 3/16 Phil Recess Pan Hd	4
14	A29835-020	Exchanger Assembly, Heat	1
15	02-2038-01	Curtain Assembly	2
		Attaching Part, Index 13	
	03-1526-01	Clip, U-Type	6
16	*No Number*	Freezer Assembly, Dual (See Page 25)	1
		Attaching Parts, Index 14	
	02-0571-00	Screw, No. 1/4-20 x 1/2 T/C Hex Hd	4
17	A26230-001	Flow Control, .30 gpm Air-Cooled	2
18	16-0723-01	Water Inlet Fitting	1
19	A26161-001	Condenser Shroud	1
20	13-1394-01	Pal Nut	1

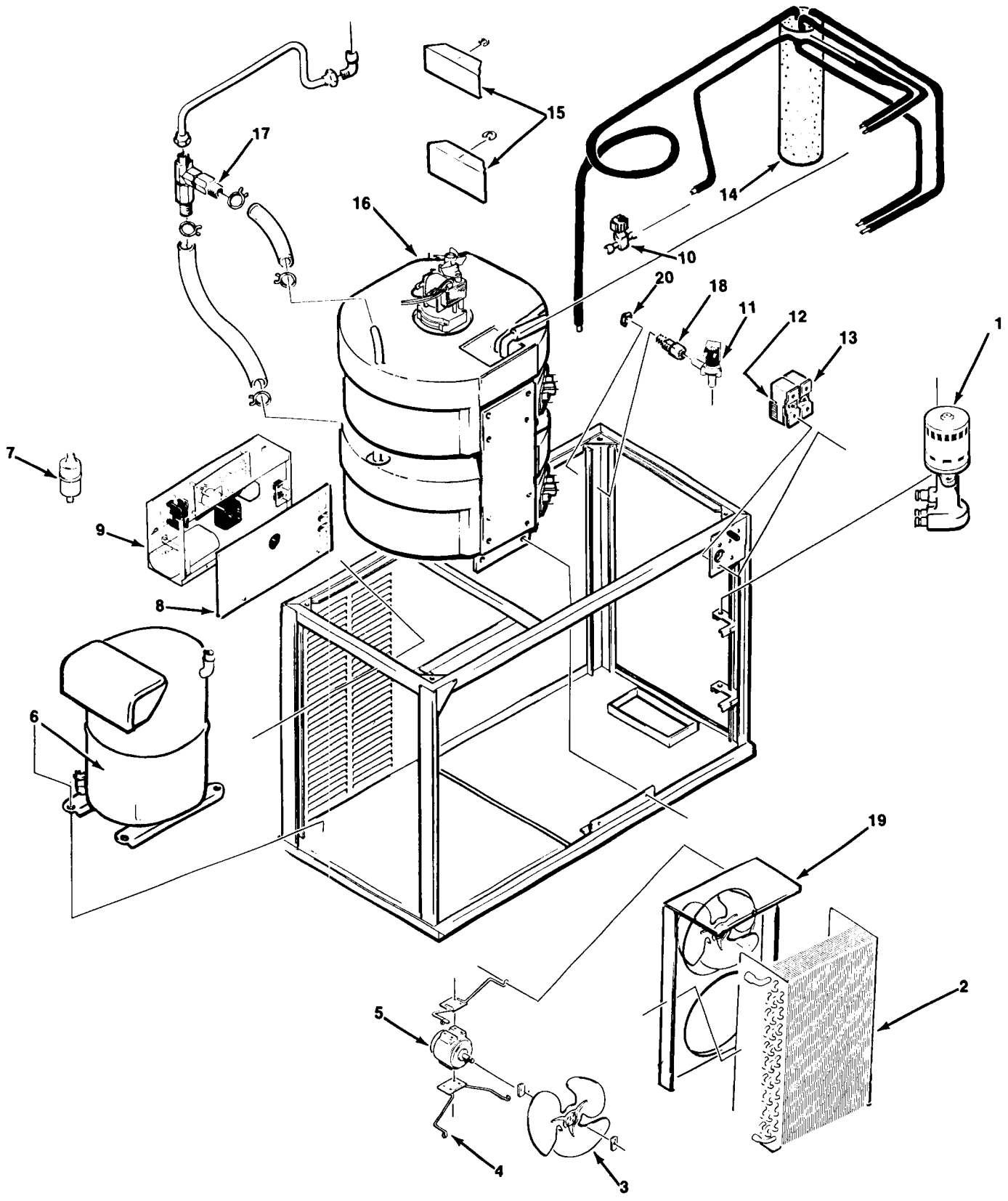
1
2
3
4
5
6
7
8
9
10
11
12
13
14
15
16
17
18
19
20

HC800 MAJOR ASSEMBLIES WATER-COOLED PARTS LISTING

ITEM NUMBER	PART NUMBER	DESCRIPTION	REQ'D NUMBER
1	12-2263-21	Pump Assembly, Water	1
		Attaching Parts, Index 1	
	No Number	Holder, Drain Tube	2
	02-0706-00	Clamp, Worm Drive	2
	03-1407-05	Washer, No. 1/4 Plain	2
	03-1571-01	Screw, No. 1/4-20 x 1/2 T/C Hex Hd	2
2	18-3306-02	Condenser, Water-Cooled	1
		Attaching Parts, Index 2	
	03-1407-05	Washer, No. 1/4 Plain	2
	03-0571-00	Screw, No. 1/4-20 x 1/4 T/C Hex Hd	2
3	16-0401-00	Elbow, 3/8 NPT x 3/8 Flare Brass	1
4	11-0198-02	Valve, Water Regulator	1
5	A15924-000	Bracket, Mounting - w/nipple	1
6	18-5100-03	Compressor - 115/208-220/60/3	1
	18-5100-02	Compressor - 115/208-230/60/1	1
		Attaching Parts, Index 4	
	18-5100-51	Grommet	4
	18-5200-50	Sleeve, Mounting	4
	03-1407-07	Washer, No. 5/16 Plain	4
	03-1405-20	Screw, No. 5/16-18 x 1-1/2 Hex Cap	4
7	02-2426-02	Drier	1
		Attaching Part, Index 5	
	No Number	Tie, Cable	1
8	*No Number*	Cover, Control Box	1
		Attaching Part, Index 6 to 7	
	03-1404-04	Screw, No. 6 x 1/4 T/F Tap (Stainless Steel)	2
9	*No Number*	Control Box Assembly (See Page 31)	1
		Attaching Part, Index 7	
	03-1417-15	Lockwasher, No. 8 Countersunk External Tooth	2
	03-1419-09	Screw, No. 8 x 1-1/4 S/T Flat Hd	
		(Stainless Steel) (Used to attach LEFT end)	2
	03-1404-08	Screw, No. 8 x 3/8 T/F Tap	
		(Used to attach RIGHT end)	2
10	12-2135-01	Valve, Solenoid - Hot Gas	1
11	12-1434-01	Inlet Assembly, Water	1
12	11-0345-02	Control, Cube Size	1
13	11-0353-03	Control, Bin Level	1
		Attaching Parts, Index 10 & 11	
	03-1403-14	Screw, No. 8-32 x 3/16 Phil Recess Pan Hd	4
14	A29835-020	Exchanger Assembly, Heat	1
15	02-2038-01	Curtain Assembly	2
		Attaching Part, Index 13	
	03-1526-01	Clip, U-Type	6
16	*No Number*	Freezer Assembly - Dual	1
		(See Page 25)	
		Attaching Parts, Index 14	
	02-0571-00	Screw, No. 1/4-20 x 1/2 T/C Hex Hd	4
17	A26230-002	Flow Control, .50 gpm	2
18	16-0723-01	Water Inlet Fitting	1
19	13-1394-01	Pal Nut	1

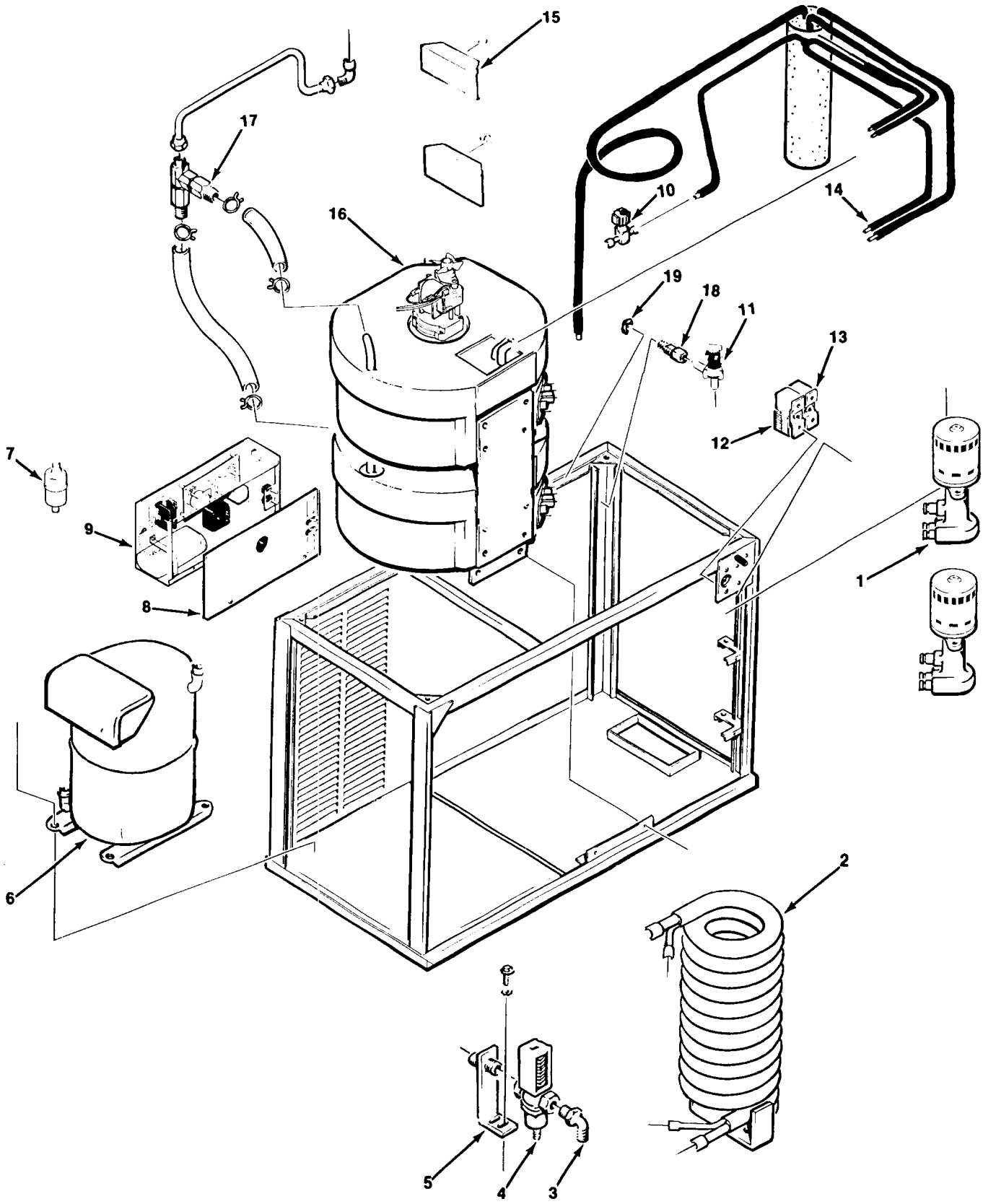
15
17
10
14
16
19
18
11
13
12
7
9
8
1
6
2
5
4
3

HC800 FREEZER ASSEMBLY - DUAL

ITEM NUMBER	PART NUMBER	DESCRIPTION	REQ'D NUMBER
1	02-2369-02	Fork, Drive - Upper (left-hand thread)	1
2	12-0675-25	Blade, Fan - Drivemotor	1
3	A24656-001	Drivemotor Assembly, Agitator	1
4	13-0176-00	Gasket - Agitator Drivemotor Assembly	1
		Attaching Parts, Index 3 & 4	
	03-1404-28	Screw, No. 6 x 1 T/F Tap	4
5	02-2369-01	Fork, Drive - Lower (left-hand thread)	1
6	A24502-001	Plate, Mount Upper	1
7	A24500-001	Plate, Mount Lower	1
		Attaching Parts, Index 6 & 7	
	03-1417-05	Lockwasher, No. 10 External Tooth	2
	03-1404-18	Screw, No. 10 x 5/8 T/F Tap	2
		(used in two upper holes in Index 6)	
	03-1417-05	Lockwasher, No. 10 External Tooth	2
	03-1360-00	Screw, No. 10-16 x 1/2 S/T	2
		(used in middle holes in Index 6)	
	03-0571-00	Screw, No. 1/4-20 x 1/2 T/C Hex Hd	3
		(used to attach Index 6 to 7)	
	03-1417-05	Lockwasher, No. 10 External Tooth	2
	03-1404-18	Screw, No. 10 x 5/8 T/F Tap	2
		(used in middle two holes in Index 7)	
	03-1417-05	Lockwasher, No. 10 External Tooth	2
	03-1360-00	Screw, No. 10-16 x 1/2 S/T	2
		(used in lower two holes in Index 7)	
8	*No Number*	Chamber, Freezing - Upper	1
9	*No Number*	Chamber, Freezing - Lower	1
		(See Page 30)	

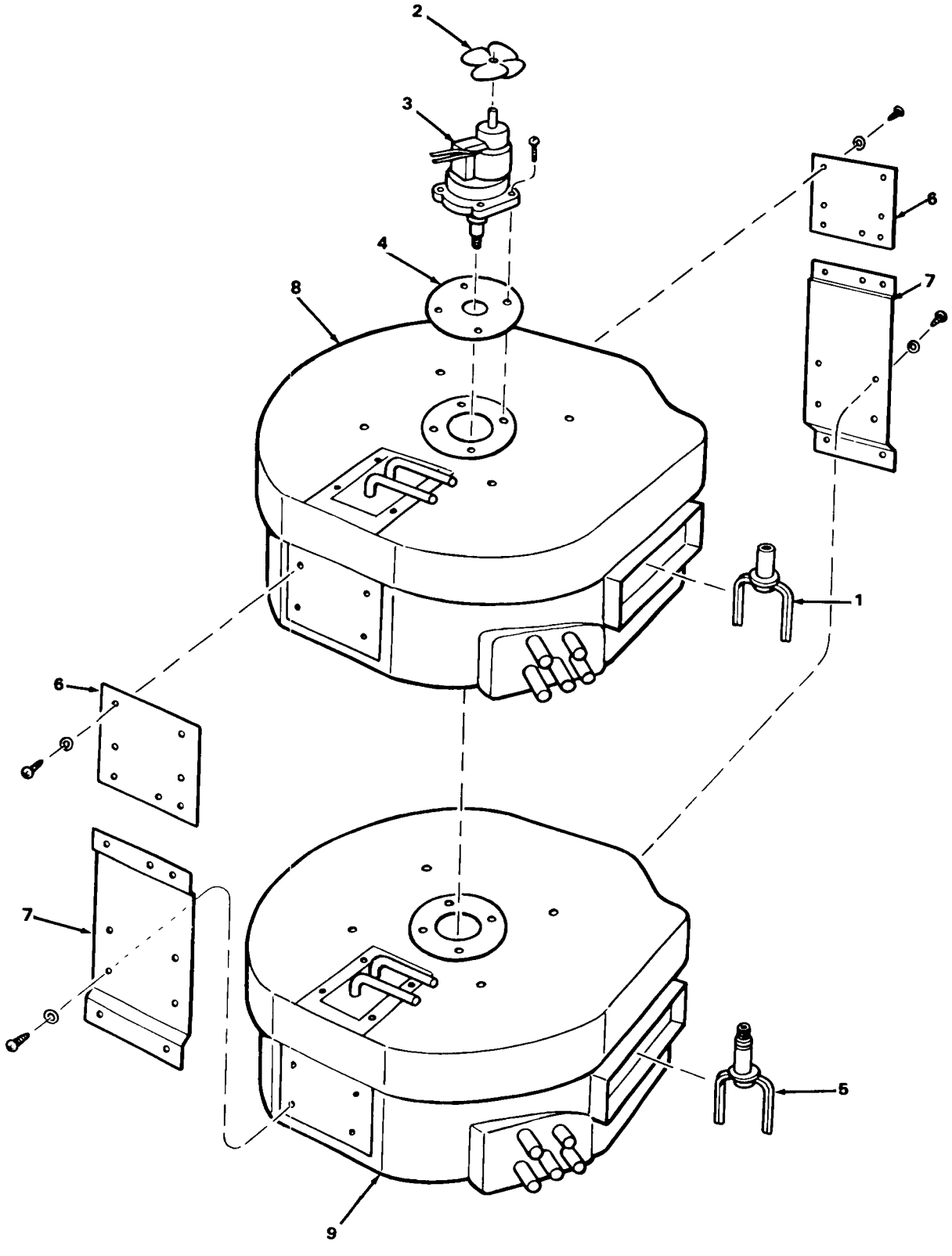
2
3
4
8
6
7
1
6
7
5
9

HC800 FREEZING CHAMBER ASSEMBLY

ITEM NUMBER	PART NUMBER	DESCRIPTION	REQ'D NUMBER
1	02-2129-01	Spacer, Tube	2
		Attaching Part, Index 1	
	02-2065-02	Plug, Hole	8
2	02-2124-01	Cover, Insulation	2
3	02-2123-01	Cover, Freezing Chamber	2
4	A27218-002	Platen Assembly, Cup (SMALL ice cube cups)	4
	A27217-002	Platen Assembly, Cup (MEDIUM ice cube cups)	4
		Attaching Parts, Index 2, 3, 4	
	A24830-001	Washer, Centering	8
	03-1404-10	Screw, No. 8 x 1/2 T/F Tap	8
5	A25480-001	Bar Assembly, Spray	4
6	13-0617-25	O-Ring	4
7	*No Number*	Bushing/Bearing (Left-hand threads)	2
7a	A27687-001	Bushing, Nut (Used in UPPER Chamber)	2
7b	02-2120-01	Bearing, Spray Bar (Used in LOWER Chamber) (Also order P/N 13-0168-00 Water Seal with Index 7a or 7b)	2
8	02-2028-01	Bottom, Inner	2
9	13-0674-07	Tube, Tygon (8-inch lg.) (Order by the foot)	2
		Attaching Part, Index 9	
	02-1358-01	Clamp, Hose	4
10	*No Number*	Sump, Freezing Chamber (See Pg. 30)	2
		NOTE: Spray Deflectors below, are ONLY used on SMALL ice cube Cup Platen Assembly P/N A27218-002.	
X1	A24198-001	Deflector, Spray (Installed at rounded ends, over top of cup molds)	4
X2	A24198-003	Deflector, Spray (Installed around hole in Platen, with notch as shown)	2
X3	A24198-004	Deflector, Spray (Installed LAST, under two tubes and over ends of X2)	2

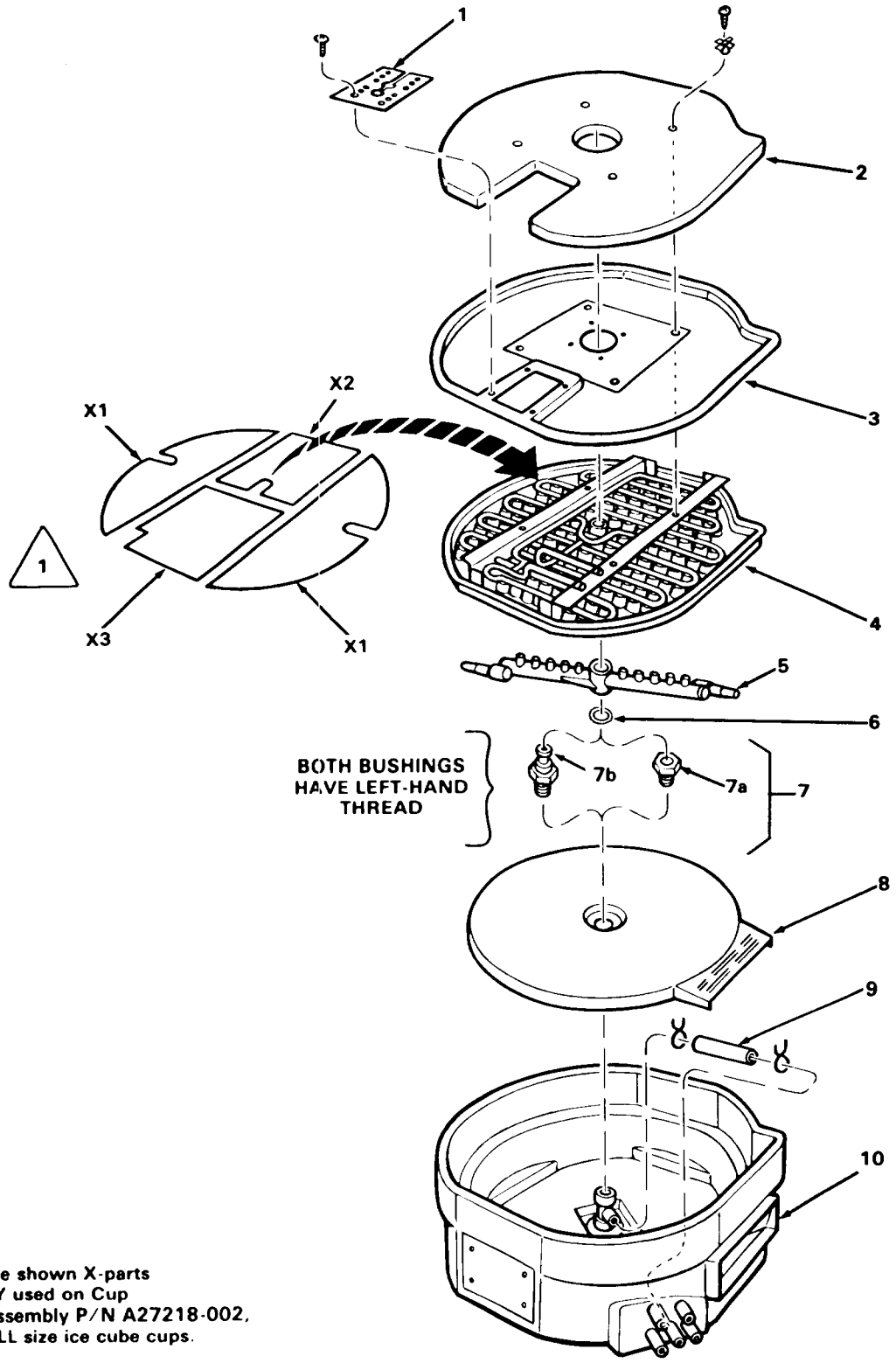

The above shown X-parts
are ONLY used on Cup
Platen Assembly P/N A27218-002,
for SMALL size ice cube cups.

HC800 DUAL DRIVE SPRAY ASSEMBLIES

ITEM NUMBER	PART NUMBER	DESCRIPTION	REQ'D NUMBER
1	02-2369-02	Fork, Drive - Upper (Left-hand thread)	Ref.
2	12-0675-25	Blade, Fan - Drivemotor	Ref.
3	A24656-001	Drivemotor Assembly, Agitator	Ref.
4	13-0176-00	Gasket - Agitator Drivemotor Assembly	Ref.
		Attaching Parts, Index 3 & 4	
	03-1404-28	Screw, No. 6 x 1 T/F Tap	Ref.
5	02-2369-01	Fork, Drive - Lower (Left-hand thread)	Ref.
6	A25480-001	Bar Assembly, Spray (w/rubber tips)	2
7	13-0653-00	Rubber - Spray Bar	4
8	13-0617-25	O-Ring	2
9	*No Number*	Tube Assembly, Water	1
9a	02-2271-01	Support, Spray Bar	1
9b	*No Number*	Tube, Water (Available only in Index X, Water Tube Assembly, Kit P/N A29868-001. Obsolete, order Index X.	1
10	13-0168-00	Seal, Water	2
11	A29687-001	Bushing, Nut (Also order Index 10, Water Seal)	1
12	02-2120-01	Bearing, Spray Bar	1
13	13-0675-07	Tube, Tygon (8-inch lg.) (Order by the foot)	2
		Attaching Parts, Index 13	
	02-1358-01	Clamp, Hose	4
14	02-2121-02	Housing, Inlet	2
15	A23827-001	Plate, Support - Spray Bar	2
16	03-1409-11	Washer, Non-Metallic - (7/8-inch I.D.)	2
17	02-2122-01	Plug, Bottom (Used on Lower Freezing Chamber)	1
18	A29687-002	Bushing, Nut (Also order Index 10, Water Seal) (Used in Upper Freezing Chamber)	1
X	A29868-001	Kit - Water Tube Assembly	1
X1	02-2369-01	Fork, Drive (Left-hand thread)	1
X2	13-0168-00	Seal, Water	2
X3	A29687-001	Bushing, Nut (Left-hand thread)	1
X4	A29687-002	Bushing, Nut (Left-hand thread)	1
X5	*No Number*	Tube, Water (Order Kit P/N A29868-001)	1
X6	02-2271-01	Support, Spray Bar	1

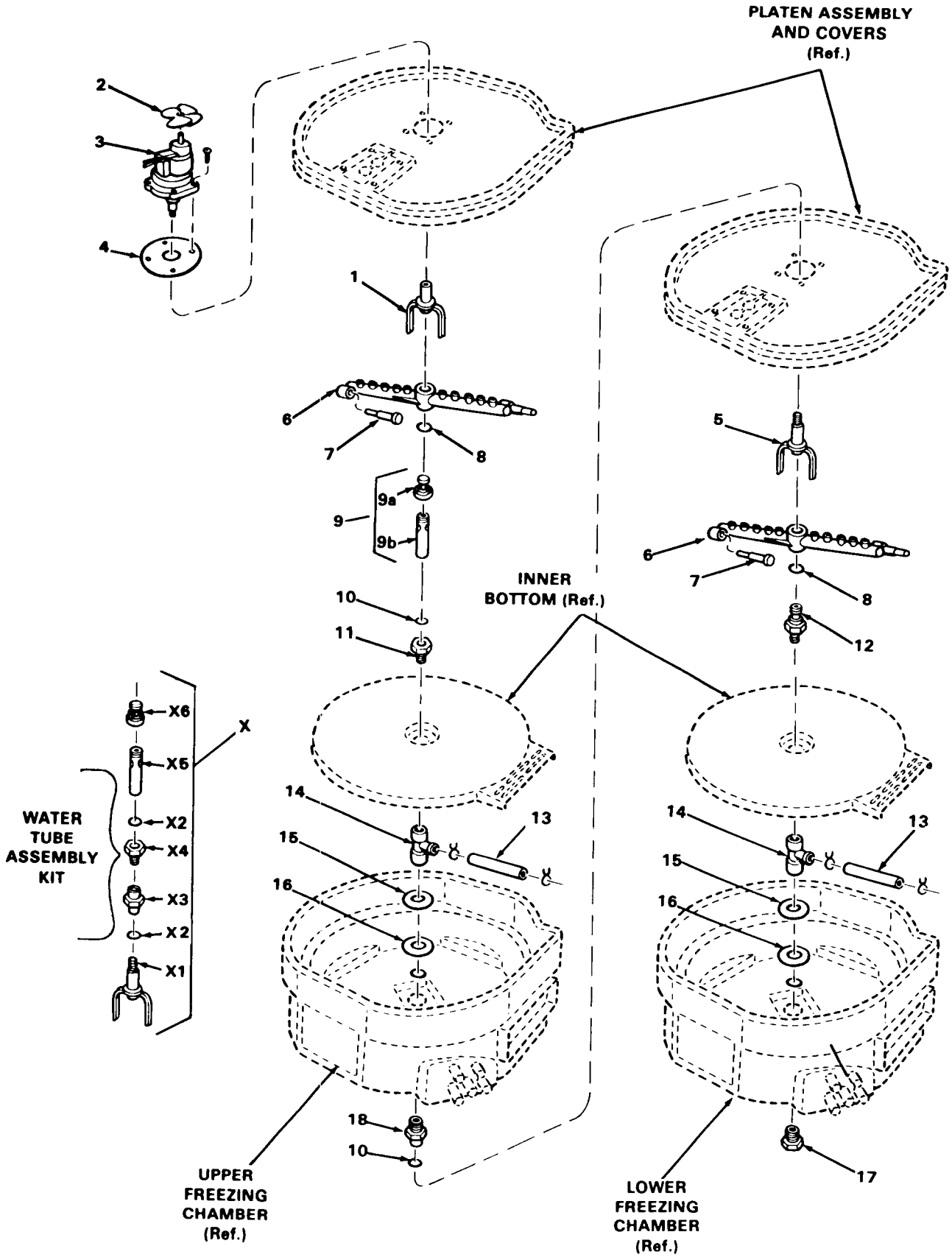
PLATEN ASSEMBLY
AND COVERS
(Ref.)
INNER
BOTTOM (Ref.)
WATER
TUBE
ASSEMBLY
KIT
X
X6
X5
X2
X4
X3
X2
X1
UPPER
FREEZING
CHAMBER
(Ref.)
LOWER
FREEZING
CHAMBER
(Ref.)

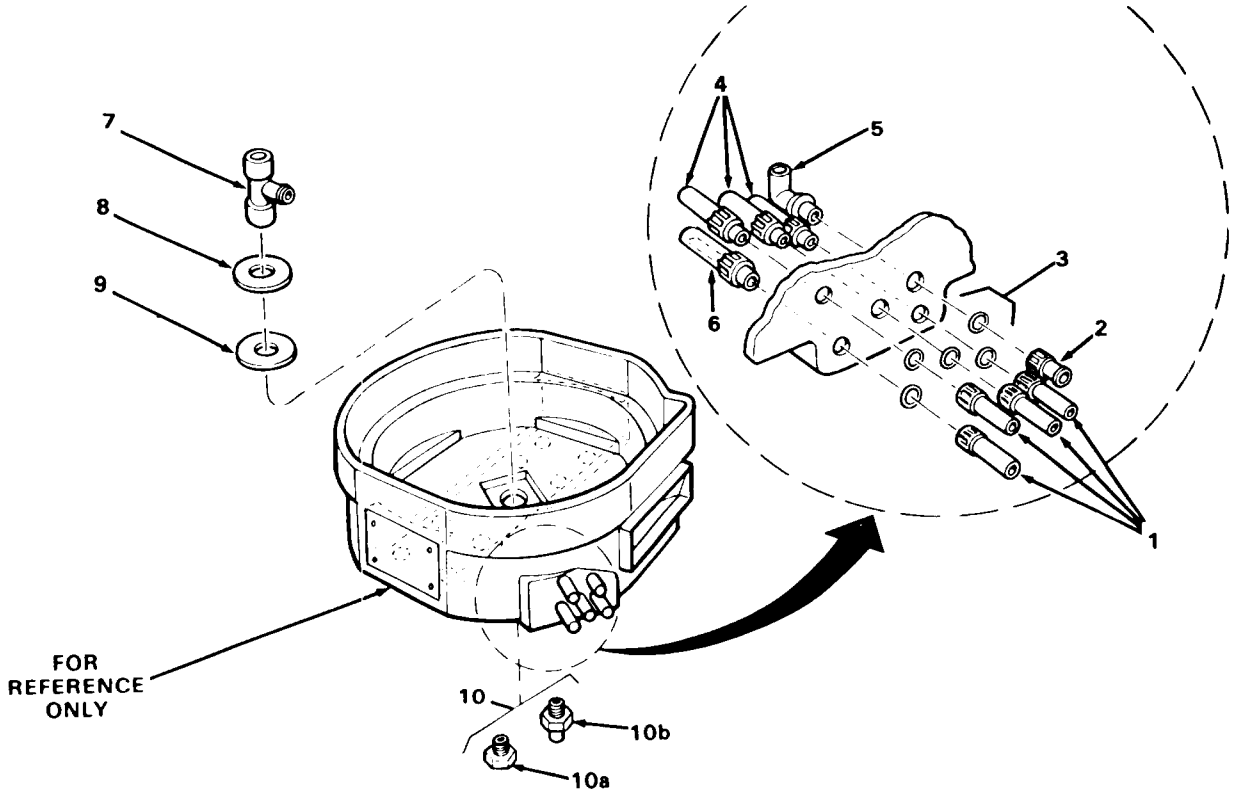

HC800 FREEZING CHAMBER — SUMP W/TUBES

ITEM NUMBER	PART NUMBER	DESCRIPTION	REQ'D NUMBER
		NOTE: P/N A24819-001 shipped as replacement for both upper and lower Freezing Chamber, with Index 10a installed. For upper Freezing Chamber, also order Index 10b.	
1	02-2081-01	Tube, Female	4
2	A24379-001	Tube, Female - (Cut off)	1
3	13-0617-02	O-Ring	5
4	02-2080-01	Tube, Male	3
5	02-2125-01	Pipe, Stand	1
6	02-2082-01	Tube, Pick-Up - Pump	1
7	02-2121-01	Housing, Inlet	1
8	A23827-001	Plate, Support - Spray Bar	1
9	03-1409-11	Washer, Non-Metallic - 7/8-inch I.D.	1
10	*No Number*	Plug, Bottom	1
10a	02-2122-01	Plug, Bottom (Used in Lower Freezing Chamber)	Ref.
10b	A27197-002	Plug, Bottom (Used in Upper Freezing Chamber)	Ref.

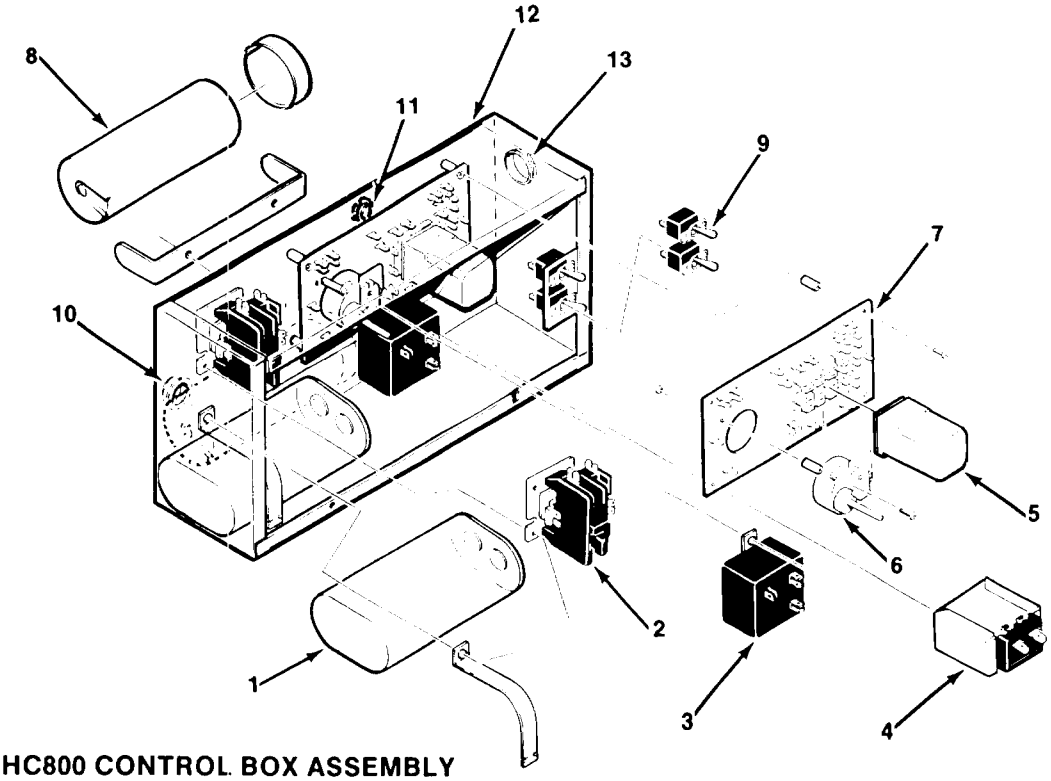

HC800 CONTROL BOX ASSEMBLY

ITEM NUMBER	PART NUMBER	DESCRIPTION
1	18-1902-51	Capacitor, Run 208-230/60/1
		Attaching Part, Index 1
	03-1403-17	Screw, No. 8-32 x 3/8 Phil Recess Pan Hd
2	12-0739-01	Contactor 208-220/60/3
	12-2037-01	Contactor 208-220/60/1
		Attaching Part, Index 2
	03-1403-17	Screw, No. 8-32 x 3/8 Phil Recess Pan Hd
3	18-1903-40	Relay, Potential 208-230/60/1
		Attaching Part, Index 3
	03-1403-04	Screw, No. 6-32 x 3/8 Phil Recess Pan Hd
	03-1423-01	Nut, Speed - J-Type
4	11-0388-02	Control, Pressure (Water-Cooled Only)
	11-0410-01	Control, Pressure (Air-Cooled Only)
		Attaching Part, Index 4
	03-1403-04	Screw, No. 6-32 x 3/8 Phil Recess Pan Hd
5	12-1879-02	Relay
6	12-1980-01	Timer & Switch Assembly
		Attaching Parts, Index 6
	02-2242-01	Stand-Off - 7/8-inch lg.
	03-1403-02	Screw, No. 6-32 x 1/4 Phil Recess Pan Hd
7	12-1912-01	Board Assembly, Circuit
		Attaching Parts, Index 7
	02-2242-01	Stand-Off - 7/8-inch lg.
	03-1403-02	Screw, No. 6-32 x 1/4 Phil Recess Pan Hd
8	18-1901-40	Capacitor, Start 208-230/60/1
9	12-0426-01	Switch, Toggle
10	*No Number*	Connector, Straight
11	12-1213-04	Bushing, Snap - 1/2-in.
12	12-1213-10	Bushing, Snap - 7/8-in.
13	12-1213-13	Bushing, Snap - 1-1/2-in.

CAUTION: MORE THAN ONE DISCONNECT MEANS MAY BE REQUIRED TO DISCONNECT ALL POWER TO THIS UNIT

THIS UNIT MUST BE GROUNDED

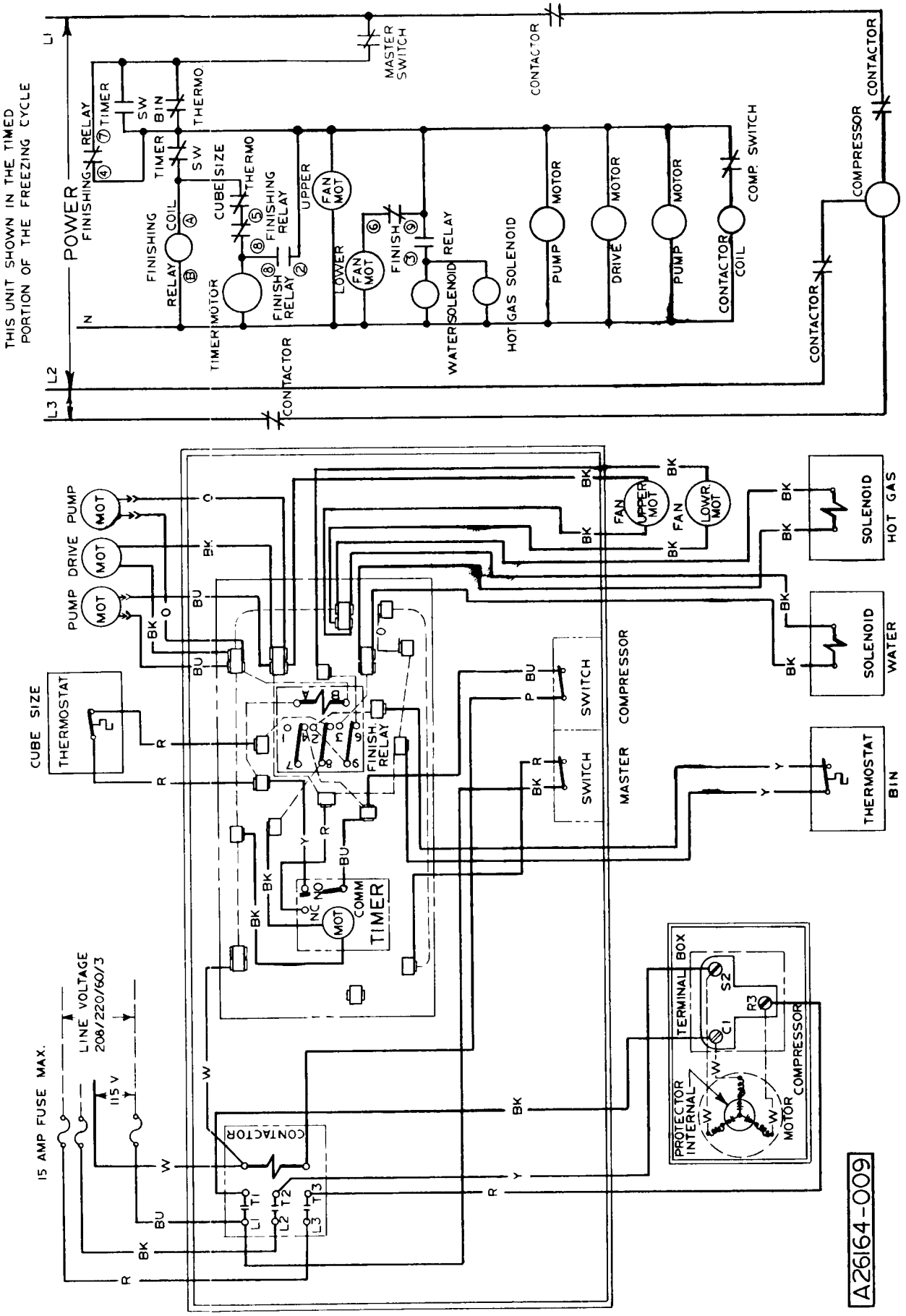

HC800AE-9A 115/208-220/60/3 — Air-Cooled

HC800
WIRING DIAGRAMS

CAUTION: MORE THAN ONE DISCONNECT MEANS MAY BE REQUIRED TO DISCONNECT ALL POWER TO THIS UNIT

THIS UNIT MUST BE GROUNDED

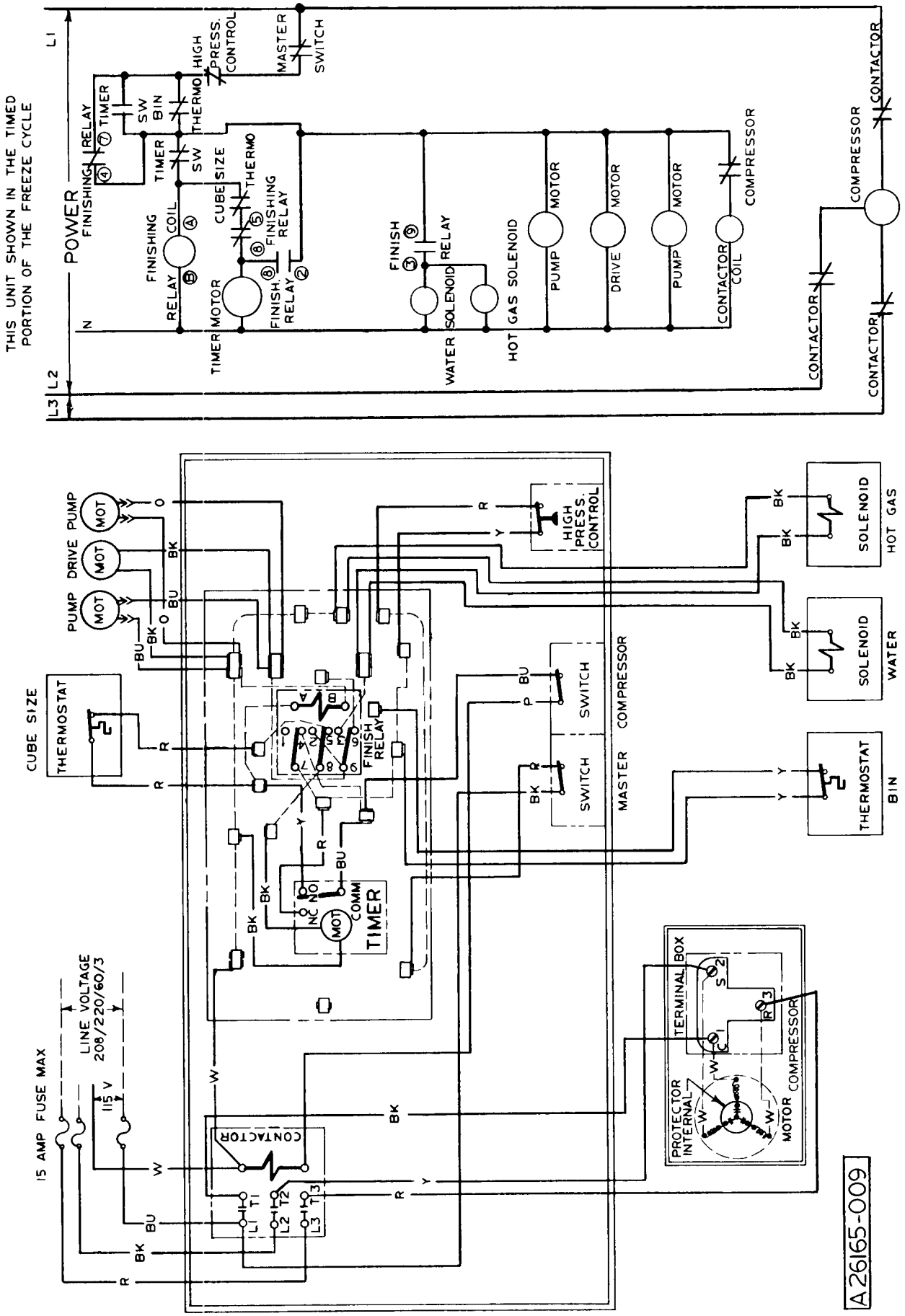

HC800AE-9A 115/208-220/60/3 — Water-Cooled

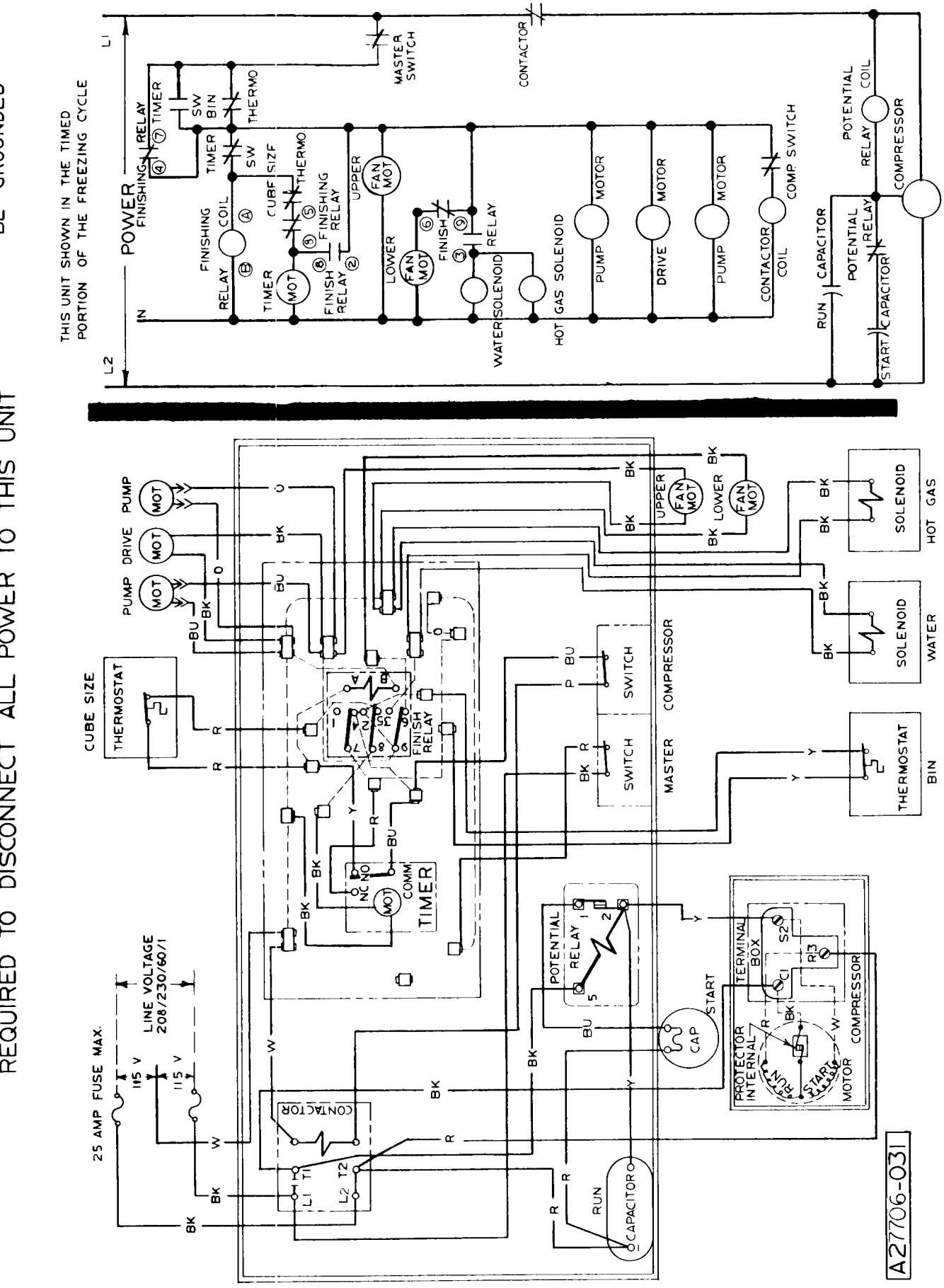

HC800AE-31A 115/208-230/60/1 — Air-Cooled

THIS UNIT MUST
BE GROUNDED

CAUTION: MORE THAN ONE DISCONNECT MEANS MAY BE
REQUIRED TO DISCONNECT ALL POWER TO THIS UNIT

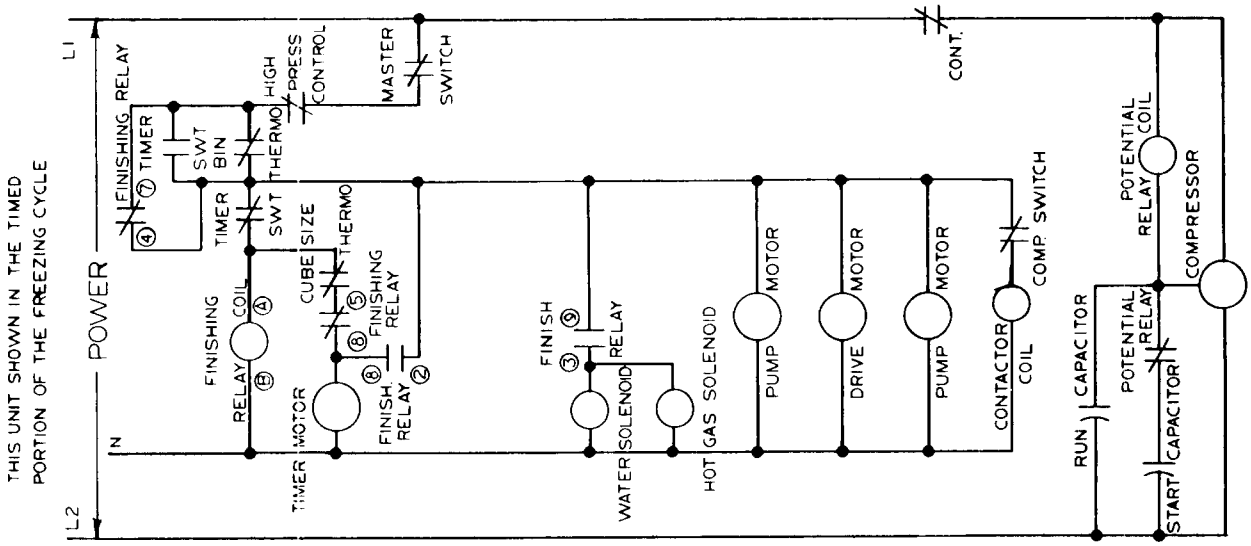

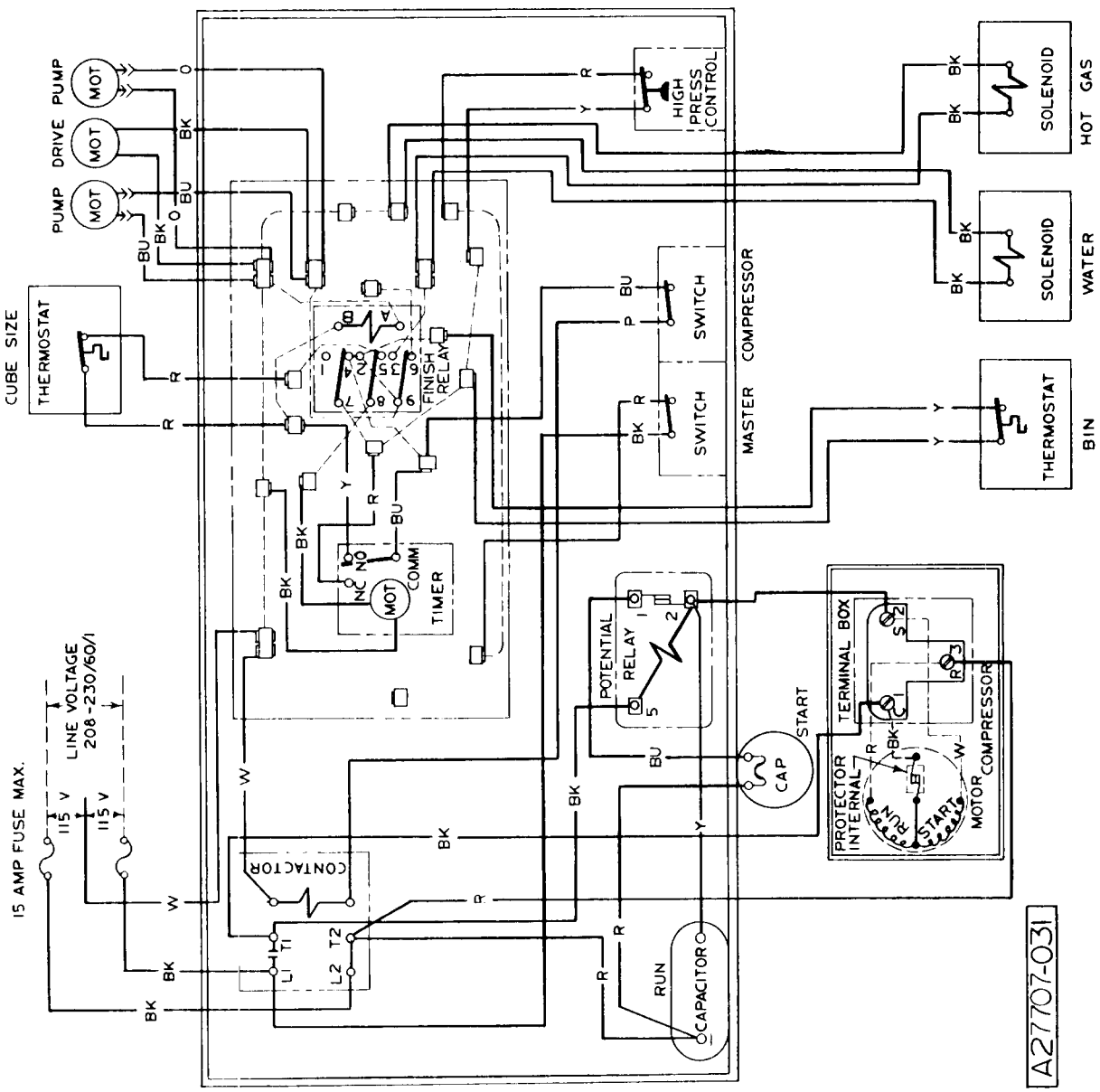

HC800AE-31A 115/208-230/60/1 — Water-Cooled

ADJUSTMENT OF THE WATER REGULATOR ASSEMBLY — WATER-COOLED MODELS

The correct Compressor head pressure on Water-Cooled Models is 135 PSIG. Adjusting the Water Regulator Valve increases or decreases the rate of flow of water, through the Water-Cooled Condenser; which increases or decreases the affected temperature/pressure of the Compressor head pressure. INCREASED water flow, results in DECREASED or LOWER head pressure; while, DECREASED water flow, results in INCREASED or HIGHER head pressure.

To adjust the Water Regulator Assembly:

To INCREASE the head pressure: Rotate the adjusting screw COUNTERCLOCKWISE.

To DECREASE the head pressure: Rotate the adjusting screw CLOCKWISE.

Check change in Compressor head pressure, and adjust as necessary to achieve desired operating head pressure.

WARNING

Be sure the electrical power supply and the water supply are OFF BEFORE starting any of the following REMOVAL AND REPLACEMENT procedures as a precaution to prevent possible personal injury or damage to equipment.

REMOVAL AND REPLACEMENT OF THE AGITATOR MOTOR ASSEMBLY

The Agitator Motor in the HC800 Cuber is installed on top of the upper Freezing Chamber.

To Remove the Agitator Motor Assembly:

1. Remove screws and the Top Panel and Front Panel to gain access to the Agitator Motor.
2. Tilt the top of the plastic Cube Chute forward slightly, then, lift the Cube Chute up for removal.
3. Remove three U-Type Clips and the plastic Curtain Assembly.
4. Reach through the ice chute opening in the Freezing Chamber and feel or the Spray Bar.
5. Move hand to the center hub and rotate the Spray Bar, so one end is aligned with the ice chute opening.
6. Lift the Spray Bar up, off the jet bearing hub, then, remove the Spray Bar through the ice chute opening.
7. Disconnect electrical leads and ground wire from terminals on the Agitator Motor.
8. Reach through the same ice chute opening, and grasp the Drive Fork with one hand, and the Agitator Motor Fan, on top of the Freezing Chamber, with the other hand.

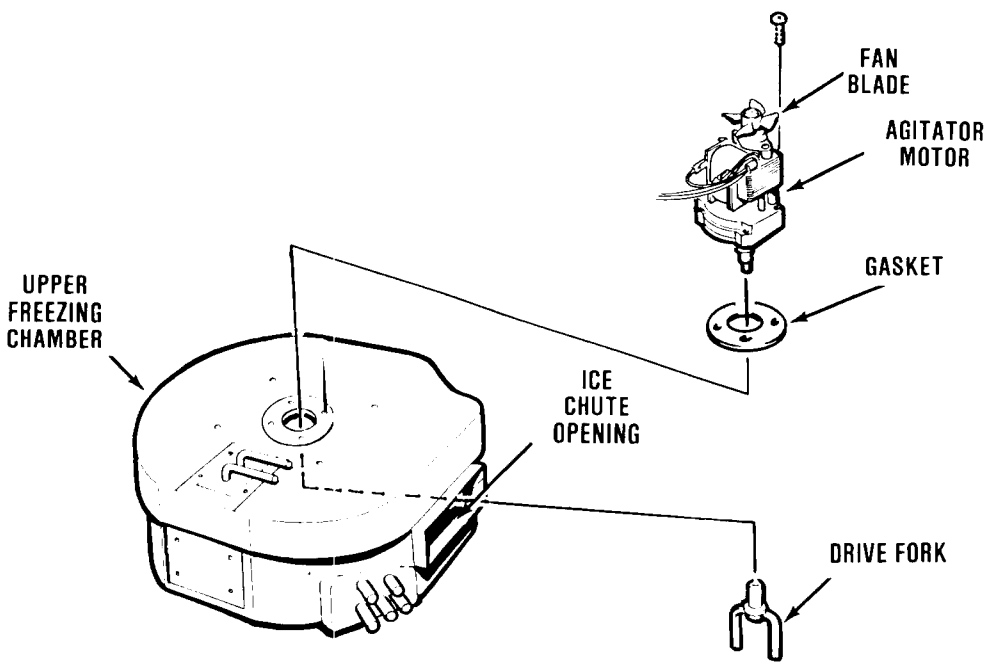

Removal of the Agitator Motor Assembly

9. Hold the Fan blades still and rotate the left-hand Drive Fork to the right, COUNTERCLOCKWISE, and unscrew the Drive Fork from the Agitator Motor.
10. Remove four screws and lift the Agitator Motor off the Freezing Chamber.

To replace the Agitator Motor Assembly, reverse the removal procedure.

REMOVAL AND REPLACEMENT OF THE BIN THERMOSTAT CONTROL

WARNING

Be sure the electrical power supply to the icemaker is OFF before proceeding with removal procedures.

To remove the Bin Thermostat Control:

1. Remove screws and the Front Panel to gain access to the Bin Thermostat Control.
2. Trace capillary tube, from the Bin Thermostat Control, down to the Cube Deflector.
3. Carefully remove the capillary tube from the bulb holder holes on the side of the Cube Deflector.
4. Carefully withdraw the capillary tube from the Bin, up through the Chassis Base.
5. Remove electrical leads from the Bin Thermostat Control.
6. Remove screws and the Bin Thermostat Control.

To replace the Bin Thermostat Control, reverse the removal procedures.

REMOVAL AND REPLACEMENT OF THE COMPRESSOR ASSEMBLY

WARNING

Be sure the electrical power supply to the icemaker is OFF before proceeding with removal procedures.

To remove the Compressor Assembly:

1. Remove screws and the Top, Front and Left Side Panels.
2. Bleed off or blow the refrigerant charge through the Schrader valve.
3. Remove the cover from the terminal box on the Compressor; then, remove electrical leads from the Compressor.
4. Unsolder the refrigerant suction line and the discharge line from the Compressor.
5. Unsolder the process header from the Compressor and retain for installation on the replacement Compressor.
6. Remove four bolts and washers which secure the Compressor to the Chassis mounting base.
7. Slide and remove the Compressor from the Cabinet.

To replace the Compressor Assembly, reverse the removal procedure.

Always install a replacement Drier, any time the sealed refrigerant system is opened. Do not replace the Drier until all other repair or replacement has been completed.

REMOVAL AND REPLACEMENT OF THE CONDENSER — AIR-COOLED MODELS

WARNING

Be sure the electrical power supply to the icemaker is OFF before proceeding with removal procedures.

To remove the Condenser:

1. Remove screws and the Left Side Panel and Front Panel.
2. Bleed off or blow the refrigerant charge through the Schrader valve.
3. Unsolder and disconnect refrigerant lines from the Condenser.
4. Unsolder and remove the Drier from the refrigerant lines connecting to the Condenser.
5. Remove screws, lockwashers and the Condenser from the Chassis base.

To replace the Air-Cooled Condenser, reverse the removal procedure.

Always install a replacement Drier, any time the sealed refrigerant system is opened. Do not replace the Drier until all other repair or replacement has been completed.

REMOVAL AND REPLACEMENT OF THE CONDENSER — WATER-COOLED MODELS

To remove the Condenser:

1. Remove screws and the Front Panel.
2. Bleed off or blow the refrigerant charge through the Schrader valve.
3. Check to be sure building source water inlet supply shutoff valve to rear of Chassis is OFF.
4. Disconnect water inlet supply line at the left bottom rear of Chassis.

5. Disconnect Water-Cooled Condenser inlet water line at the Water Regulator Assembly outlet fitting.
6. Unsolder the refrigerant capillary tube at the Drier.
7. Unsolder the Compressor discharge line, at the top of the Water-Cooled Condenser.
8. Unsolder the Condenser refrigerant outlet line, at the bottom of the Water-Cooled Condenser.
9. Remove two screws and washers and the Water-Cooled Condenser from the Cabinet.

To replace the Water-Cooled Condenser, reverse the removal procedures.

Always install at replacement Drier, any time the sealed refrigerant system is opened. Do not replace the Drier until all other repair or replacement has been completed.

REMOVAL AND REPLACEMENT OF THE CUBE SIZE CONTROL

WARNING

Be sure the electrical power supply to the icemaker is OFF before proceeding with removal procedures.

To remove the Cube Size Control:

1. Remove screws and the Front Panel to gain access to the Cube Size Control.
2. Trace capillary Tube, from the Cube Size Control, to the refrigerant suction line on the Evaporator Platen Assembly; then peel back the insulation.
3. Remove clips and the coiled capillary tube bulb out of the Freezer section of the Cabinet.
4. Remove electrical leads from the Cube Size Control.
5. Remove screws and the Cube Size Control.

To replace the Cube Size Control, reverse the removal procedure.

REMOVAL AND REPLACEMENT OF THE CURTAIN ASSEMBLY (TWO)

To remove the Curtain Assembly:

1. Remove screws and the Right Side Panel to gain access to the Curtain Assembly to be removed.
2. Tilt the top of the plastic Cube Chute forward slightly, then, lift the Cube Chute up for removal.

Before removing the Curtain Assembly in the next step, look inside the ice chute opening to note the irregular end of the plastic stiffener of the Curtain Assembly is installed at the left side of the opening.

3. Remove three U-Type Clips and the plastic Curtain Assembly from the top lip of the chute opening.

To replace the Curtain Assembly, reverse the removal procedure.

Be sure to install the replacement Curtain Assembly with the irregular end of the plastic stiffener positioned at the left side of the ice chute opening; and, the edge of the Curtain is dressed evenly with the top lip of the ice chute opening and secured with three U-Type Clips. The thin, clear plastic sheet of the curtain should hang down evenly.

CAUTION

1. **If the factory seal is broken on the replacement Drier, exposing it to the atmosphere more than a few minutes, the Drier will absorb moisture from the atmosphere and lose substantial ability for moisture removal.**
2. **Be sure the replacement Drier is installed with the arrow positioned in the direction of the refrigerant flow.**

1. Remove the factory seals from the replacement Drier and install the Drier in the refrigerant lines with the arrow positioned in the direction of the refrigerant flow.
2. Solder the Drier into the lines, two places.
3. Secure Drier to Chassis with the drier brace.
4. Purge the system and check for leaks.
5. Thoroughly evacuate the system to remove moisture and non-condensables.
6. Charge the system with refrigerant, by weight. SEE NAMEPLATE.
7. Replace and attach the Left Side Panel and the Front Panel.

REMOVAL AND REPLACEMENT OF THE FAN MOTOR ASSEMBLY — AIR-COOLED MODELS

WARNING

Be sure the electrical power supply to the icemaker is OFF before proceeding with removal procedures.

To remove the Fan Motor Assembly:

1. Remove screws and the Left Side Panel and the Front Panel.
2. Disconnect the two electrical leads from the Fan Motor at the Control Box Assembly.
3. Remove screws and the Fan Motor Assembly; and remove the Fan Motor and Bracket from the Condenser shroud.
4. Loosen set screws on the Fan Blade and remove the Fan Blade from the Fan Motor.
5. Remove screws and lockwashers and separate the Fan Motor from the Fan Motor Bracket.

To replace the Fan Motor Assembly, reverse the removal procedure.

Be sure to replace the Fan Blade with the hub of the Fan Blade facing the Fan Motor, to ensure air flow is toward the Fan Motor.

REMOVAL AND REPLACEMENT OF THE FREEZING CHAMBER (TWO)

WARNING

Be sure the electrical power supply to the icemaker is OFF before proceeding with removal procedures.

To remove the Freezing Chamber:

1. Remove screws and the Top Panel, Front Panel and the Right Side Panel to gain access to the Freezing Chamber.
2. Tilt the top of the plastic Cube Chute forward slightly, then lift the Cube Chute up for removal.
3. Remove three U-type Clips and the plastic Curtain Assembly.
4. Reach through the ice chute opening in the upper Freezing Chamber and feel for the Spray Bar.
5. Move hand to the center hub and rotate the Spray Bar so one end is aligned with the ice chute opening.
6. Lift the Spray Bar up, off of the jet bearing hub, then remove the Spray Bar through the ice chute opening.
7. Disconnect electrical leads and ground wire from terminals on the Agitator Motor.
8. Reach through the same ice chute opening, as before, and grasp the Drive Fork with one hand, and the Agitator Motor Fan on top of the Freezing Chamber, with the other hand.
9. Hold the Fan Blades still and rotate the left-hand thread Drive Fork to the right, and unscrew the Drive Fork from the Agitator Motor.
10. Remove four screws and lift out the Agitator Motor.
11. Insert and hold firm, a screwdriver through a hole in the top jet bearing, then reach through the ice chute opening of the lower Freezing Chamber and rotate the left-hand thread Drive Fork to the right, COUNTERCLOCKWISE, to unscrew the bottom Drive Fork from the Water Tube.
12. Raise the screwdriver and top jet bearing up, an inch or so, to expose the hole in the Water Tube; next, insert and hold firm, a second screwdriver in the hole in the upper end of the Water Tube; then, rotate the screwdriver in the top jet bearing to the left, CLOCKWISE, to unscrew the bearing from the Water Tube.
13. Remove bearing, both screwdrivers and push the Water Tube UP, and remove the tube through the hole in the Platen and Cover Assembly.
14. Remove hose clamps and work loose four Tygon Tubes from the Freezing Chamber, three from the Water Pump and one drain tube.
15. Remove hose clamps and work loose four Tygon Tubes from the Freezing Chamber, three from the Water Pump and one drain tube.
16. Carefully lift the Platen and Cover Assembly, and tie off or use a board to support and give ample space to allow removal of the Freezing Chamber.
17. Remove screws, lockwashers, bolts, and the front Freezer Mount Plate; also 2 screws and lockwashers from rear Freezer Mount Plate.
18. Carefully work the upper Freezing Chamber out of the Chassis.

To replace the Freezing Chamber, reverse the removal procedure.

REMOVAL AND REPLACEMENT OF THE WATER PUMP ASSEMBLY (TWO)

WARNING

Be sure the electrical power supply to the icemaker is OFF before proceeding with removal procedures.

To remove the Water Pump Assembly:

1. Remove screws and the Right Side Panel and the Front Panel.
2. Unclip and disconnect electrical leads from water pump motor.
3. Remove one screw and one end of the ground wire from the Water Pump Bracket.

4. Remove two screws and washers attaching the Water Pump Assembly to the Water Pump Bracket.
5. Remove three spring type clamps and one screw type hose clamp connecting the four Tygon Tubes to the Freezing Chamber; then lift the Water Pump Assembly off of the Water Pump Bracket and work loose the attached Tygon Tubes from the Freezing Chamber.

To replace the Water Pump Assembly, reverse the removal procedure.

REMOVAL AND REPLACEMENT OF THE WATER REGULATOR ASSEMBLY — WATER-COOLED MODELS

WARNING

Be sure the electrical power supply to the icemaker is OFF before proceeding with removal procedures.

To remove the Water Regulator Assembly:

1. Remove screws and the Left Side Panel and the Front Panel.
2. Check to be sure building source water inlet supply shutoff valve to rear of Chassis is OFF.
3. Bleed off or blow the refrigerant charge through the Schrader valve.
4. Disconnect water inlet supply line at the left bottom rear of the Chassis.
5. Disconnect water line at the inlet and outlet fittings on the Water Regulator Assembly.
6. Unsolder the Water Regulator Valve capillary tube from the Compressor refrigerant discharge line.

Always install a replacement Drier, any time the sealed refrigeration system is opened. Do not replace the Drier until all other repair or replacement has been completed.

7. Remove the Water Regulator Assembly from the Chassis Base.

To replace the Water Regulator Assembly, reverse the removal procedure.

REMOVAL AND REPLACEMENT OF THE SPRAY BAR AND WATER TUBE ASSEMBLY

To remove the Spray and Water Tube Assembly:

1. Remove screws and the Right Side Panel to gain access to the Spray Bar Assemblies.
2. Tilt the top of the plastic Cube Chute forward slightly, then, lift the Cube Chute up for removal.
3. Remove three U-type Clips and the plastic Curtain Assembly.
4. Reach through the ice chute opening in the Freezing Chamber and feel for the Spray Bar.
5. Move hand to the center hub and rotate the Spray Bar, so one end is aligned with the ice chute opening.
6. Lift the Spray Bar up, off of the jet bearing hub, then, remove the Spray Bar through the ice chute opening.
7. Disconnect electrical leads and ground wire from terminals on the Agitator Motor.
8. Reach through the upper ice chute opening, and grasp the Top Fork with one hand, and the Agitator Motor Fan on top of the Freezing Chamber, with the other hand.
9. Hold the Fan Blades still and rotate the left-hand thread Drive Fork to the right, COUNTERCLOCKWISE, and unscrew the Drive Fork from the Agitator Motor.
10. Remove four screws and lift out the Agitator Motor.
11. Insert and hold firm, a screwdriver through a hole in the top bearing; then, reach through the ice chute opening of the lower Freezing Chamber and rotate the left-hand thread Drive Fork to the right, COUNTERCLOCKWISE, to unscrew and remove the bottom Drive Fork from the Water Tube. Remove the lower Spray Bar.

SERVICE DIAGNOSIS

The Service Diagnosis Section is for use in aiding the serviceman in diagnosing a particular problem and for pin-pointing the area in which the problem lies. It is an ever available reference for proper corrective action.

The following charts list corrective actions for the causes of known symptoms of certain problems that can occur in the Icemaking-Refrigeration system.

ICEMAKING - REFRIGERATION SYSTEM

SYMPTOM	POSSIBLE CAUSE	CORRECTION
Irregular shape cubes and some cloudy.	Some jets plugged.	Clean jets.
	Shortage of water.	See Shortage of water CORRECTION.
	Unit not level. Water overflowing vent holes on low side, burning cubes.	Level cabinet, as required.
Cube improper size.	Cube Size Control set too cold.	Rotate Cube Size Control dial toward WARMER.
	Cube Size Control set too warm.	Rotate Cube Size Control dial toward COLDER.
	Partially restricted capillary tube.	Blow refrigerant charge; replace drier; evaculate system; add refrigrant charge.
	Moisture in system.	Same as above CORRECTION.
	Shortage of water.	See Shortage of water CORRECTION.
	Loss of refrigerant.	Check for refrigerant leaks, correct leaks; recharge system.
Cloudy Cubes.	Shortage of water.	See Shortage of water SYMPTOM.
	Dirty water supply.	Install water filter or softener.
	Accumulated impurities.	Use SCOTSMAN Ice Machine Cleaner.
Shortage of water.	Water spraying out through curtain.	Hang curtain in proper position.
	Water solenoid not opening.	Repair or replace solenoid.
	Water leak in sump area.	Locate leak and repair or correct condition.
	Partial restriction in water strainer, located within water inlet of water solenoid.	Clean or replace strainer.
	Flow control plugged.	

SYMPTOM	POSSIBLE CAUSE	CORRECTION
Decreased ice capacity	Poor circulation or extreme hot location.	Relocate the cabinet; or provide ventilation by cutting openings.
	Dirty Air-cooled condenser or faulty fan motor.	Clean Air-cooled condenser, or replace or repair fan motor.
	Lo water pressure to Water-cooled condenser.	Restore water pressure.
	Improper charge of refrigerant.	Refer to refrigerant charge indicated on name plate and correct.
	Non-condensable gas in the system.	Purge the system.
	Hot gas solenoid valve leaking.	Replace valve.
	Partially restricted capillary tube.	See Cubes too small CORRECTION.
	Defective compressor.	Replace compressor.
	Leaky inlet water valve.	Repair or replace valve.
Poor harvests.	Too short defrost time.	Check and adjust harvest cycle.
		Check Timer 3.5-minute setting.
	Restriction in water inlet line.	Check strainer and flow check valve. DO NOT remove flow control washers.
	Hot gas solenoid does not open.	Binds or burned out. Replace.
	Plugged air vent holes in upper part of cube cups.	Clean out air vent holes.
	Improper refrigerant charge.	Check or recharge system.
	Water pressure too low.	Check for 20 PSI flowing water.
Compressor cycles intermittently.	Dirty condenser.	Clean condenser with vacuum cleaner or brush. NO WIRE BRUSH.
	Air circulation blocked.	Locate cabinet with adequate air space for proper air flow.
	Low voltage.	Check for circuit overload.
		Check building supply voltage; if low, contact power company.
	Defective Fan Motor.	Replace Fan Motor.
	Non-condensable gases in system.	Purge the system.
	Check compressor, start components.	Replace defective components.

SYMPTOM	POSSIBLE CAUSE	CORRECTION
Icemaker will not operate.	Blown fuse in line.	Replace fuse and check for cause.
	Master switch in OFF position.	Set switch to ON position.
	Hi head pressure reset open.	Reset control.
	Faulty Master switch.	Replace switch.
	Timer contacts open.	Replace Timer microswitch.
	Faulty Bin thermostat.	Replace faulty Bin thermostat.
Freeze-up.	Dirty condenser coil (Air-cooled)	Clean coil.
	Loss of water or water pressure.	Restore water pressure.
	High Ambient.	Adjust cube size control warmer.
	Faulty water solenoid.	Replace water solenoid.
	Faulty hot gas solenoid.	Replace hot gas solenoid.
	Faulty agitator motor.	Replace agitator motor.
	Faulty timer.	Replace timer.
	Faulty cube size control.	Replace cube size control.
	Loss of refrigerant. (Leak)	Repair leak and recharge.
	Harvest cycle too short.	Adjust harvest cycle time.
	Cold air temp. and cold water.	

MAINTENANCE & CLEANING INSTRUCTIONS

GENERAL

The periods and procedures for maintenance and cleaning are given as guides and are not to be construed as absolute or invariable. Cleaning especially will vary, depending upon local water conditions and the ice volume produced; and, each icemaker must be maintained individually, in accordance with its own particular location requirements.

ICEMAKER

THE FOLLOWING MAINTENANCE SHOULD BE SCHEDULED AT LEAST TWO TIMES PER YEAR ON THIS ICEMAKER. CALL YOUR AUTHORIZED SCOTSMAN SERVICE AGENCY.

1. Check and clean or service any optional water treatment devices, if any installed.
2. Check the HC800 cabinet is level, in the side-to-side and front-to-back directions.
3. Clean the water system, evaporator freezing chamber reservoir and spray bar using a solution of SCOTSMAN Ice Machine Cleaner. Refer to CLEANING.
4. Check that the plastic curtain hangs down evenly within the opening.
5. Check and tighten all bolts and screws.
6. Check and tighten all electrical connections.
7. Check hot gas solenoid valve for correct operation.
8. With MASTER ON-OFF switch and COMPRESSOR ON-OFF switch in the OFF position, clean the condenser using vacuum cleaner, whisk broom or brush. Instruct customer to clean condenser frequently. DO NOT USE A WIRE BRUSH.
9. Check for water leaks and make corrections.
10. Check the bin thermostat control bulb to test shut off. Holding ice against bin thermostat control bulb should cause the icemaker to shut off at the end of the harvest cycle.

    Within minutes after ice is removed from the bin thermostat control bulb, the icemaker will restart.

Cleaning requirements vary according to local water conditions and individual user operation. Continuous check of the clarity of ice cubes and visual inspection of the water system parts, evaporator and the sump assembly before and after cleaning will indicate frequency and procedure to be followed in local areas.

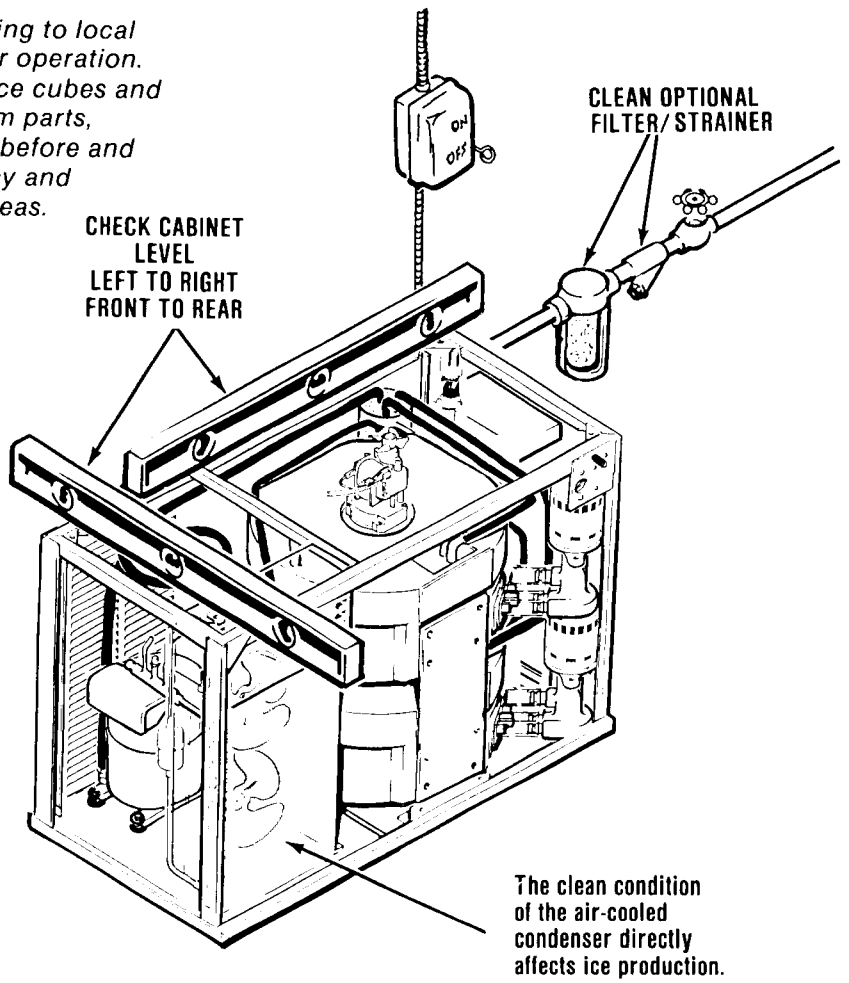

Maintenance and Cleaning

CLEANING - Icemaker

1. Remove screws and front, top, and right side panel.
2. Move the Master ON-OFF switch and the compressor ON-OFF switch, on the control box, to the OFF positions.
3. Tilt the top of the plastic cube chute forward slightly, then lift the cube chute up for removal.
4. Drain sumps using drain hose clipped to pumps, then re-attach drain hose.
5. Prepare the following cleaning solution: Mix 16-ounces of SCOTSMAN Ice Machine Cleaner with eleven pints of fresh, potable water in a clean container.

WARNING

SCOTSMAN Ice Machine Cleaner contains Phosphoric and Hydroxyacetic acids. These compounds are corrosive and may cause burns. If swallowed, DO NOT induce vomiting. Give large amounts of water or milk. Call physician immediately. In case of external contact, flush with water. KEEP OUT OF THE REACH OF CHILDREN.

6. Pour the batch of prepared cleaning solution into the upper and lower freezing chamber through each curtain opening.
7. Immediately replace the defrost water tube; then, move the master ON-OFF switch, on the control panel, to ON.
8. Allow the icemaking system to operate normally for twenty minutes in the freezing cycle. NO ICE CUBES will be made, because the compressor has been switched OFF.
9. At the end of twenty minutes, rotate the shaft of the timer and switch assembly, CLOCKWISE, to start a second harvest cycle. See *Start Positions* illustration.

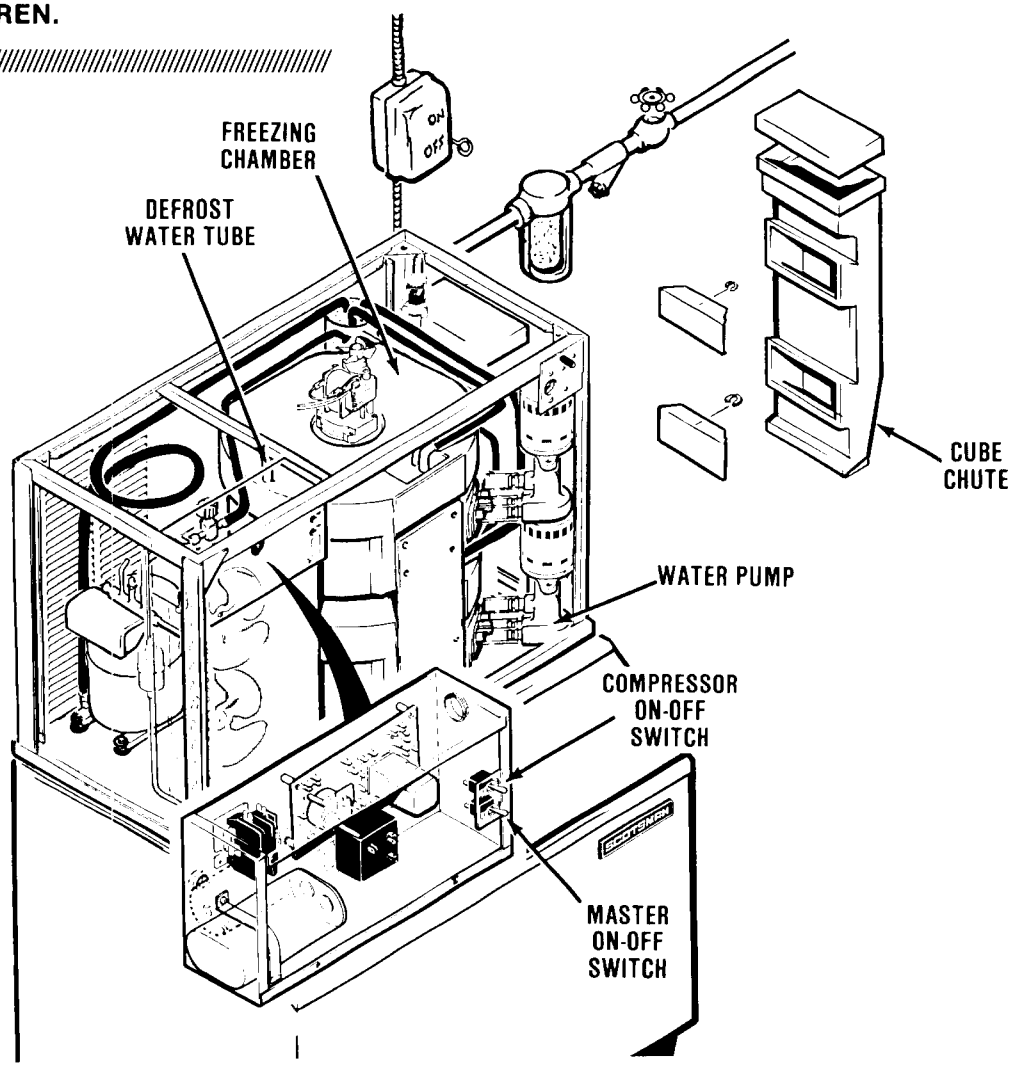

Cleaning Water System

10. Rotate the shaft of the timer and switch assembly, protruding through the hole in the front of the control box cover, until the microswitch actuator arm drops into the cam slot, the START POSITION of the harvest cycle, then stop. See *Start Positions* illustration.
11. Allow the icemaking system to operate normally through the harvest cycle; then, when the harvest cycle is completed, rotate the timer again THROUGH the freezing cycle to START another harvest cycle. Perform this harvest cycle operation three times. During each harvest cycle, fresh inlet water is introduced into the water system and acts to rinse all water-related parts and to wash away most mineral concentration through the drain.
12. Wash the curtain assembly and the cube chute in a solution of one ounce of household bleach in one gallon of water.
13. Using a clean, damp cloth or disposable paper wiper, wipe off the curtain assembly and the cube chute.
14. Replace the curtain assembly and the cube chute.
15. Move the compressor ON-OFF switch, on the control box, to the ON position.
16. Check each ice cube harvest, until the ice cubes are clear and the acid taste is eliminated.

WARNING

DO NOT USE ice cubes produced from the cleaning solution. Be sure no ice remains in the bin. Rinse and wipe clean inside bin walls.

17. Pour hot water over ice cubes in the bin, to melt the ice cubes and allow the same cleaning solution to be used to thoroughly wash the inner surfaces of the bin and the solution to help clean the drain lines as it drains. Rinse inner surfaces of bin.
18. Replace all panels and screws.
19. Clean and sanitize the interior bin surfaces each week.

HQD550

TABLE OF CONTENTS

GENERAL INFORMATION & INSTALLATION
Introduction 2
Location and Leveling 5
Wall Mount Instructions 6
Water Dispensing System 8
Valve Kit 9
Electrical Connections 10
Water Supply and Drain Connections 11
Final Check List 12

OPERATING INSTRUCTIONS
Start-Up 14
Dispensing System 16
Icemaker 17
Electrical/Refrigeration 17

COMPONENT DESCRIPTION 19

MAINTENANCE & CLEANING INSTRUCTIONS
General 25
Icemaker 25
Sanitizing 28

SERVICE DIAGNOSIS 30

ADJUSTMENT PROCEDURES
Leg Levelers 33
Water Regulator Assembly 33
Water Reservoir Float 33

REMOVAL AND REPLACEMENT PROCEDURES
Auger, Water Seal, O-Ring, Ice Breaker Assembly and Freezer 34
Compressor Assembly 37
Condenser Assembly - Air-Cooled 37
Condenser Assembly - Water-Cooled 37
Drier 39
Fan Motor Assembly 39
Inner Bin Drive Motor Assembly 39
Elbow and Switch Assembly 40
Water Pressure Switch Assembly 41
Water Regulator Assembly - Water-Cooled Models 41
Water Reservoir Assembly 41
Gear Motor 42

LIST OF ILLUSTRATIONS

Specifications 3
HQD550 - Component Location 4
Location and Leveling 5
Wall Mount Instructions 6
Water Dispensing System 8
Valve Kit 9
Electrical Connections 10
Water Supply and Drain 11
Final Checklist 12
Operation 13
Component Description 18
Maintenance and Cleaning 25-27

PARTS LIST AND WIRING DIAGRAMS 1
(Printed in Yellow)

PARTS LIST:
Cabinet Assembly 3
Potable Water and Drainage System 4
Ice Dispensing System 5
Air-Cooled Condenser Assembly 6
Water-Cooled Condenser Assembly 7
Elbow and Switch Assembly 8
Freezer Assembly 9
Drivemotor Assembly 10
Compressor Assembly 11
Bin Top Assembly 12
Control Box Assembly 13

WIRING DIAGRAMS:
HQD550AE-1C (115/60/1) 14
HQD550WE-1C (115/60/1) 15

THIS PAGE
INTENTIONALLY
LEFT BLANK

HQD550 GENERAL INFORMATION AND INSTALLATION

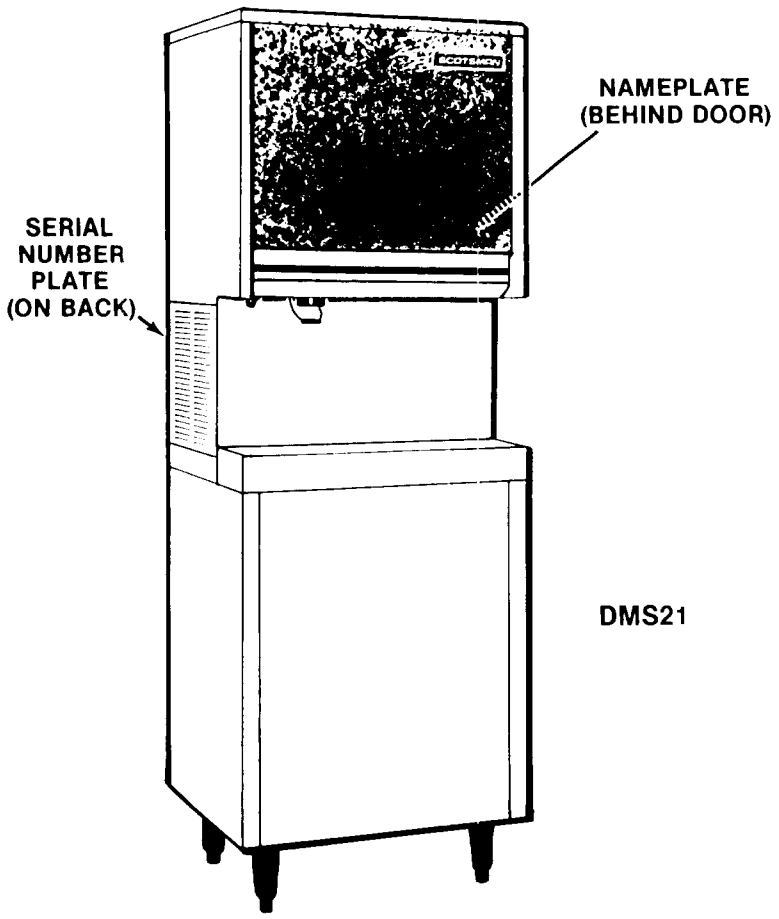

DESCRIPTION

This attractive compact cabinet has textured metal with a sandalwood enamel finish, cork pattern vinyl upper front panel and sienna accent trim. Also, an optional stainless steel cabinet finish is available. Both cabinets have up-to-date styling, and easily removable panels for easy access to electrical and mechanical components.

SELF-CONTAINED STORAGE BIN

These high quality ice dispensers store their own ice supply in a cylindrical insulated ice storage bin.

NAME PLATE

MODEL NUMBER
SERIAL NUMBER
A.C. SUPPLY VOLTAGE
MINIMUM CIRCUIT AMPACITY WIRES
MAXIMUM FUSE SIZE * HERTZ
HEATER WATTS PHASE
REFRIGERANT CHARGE OZ

MOTORS	VOLTS	R.L.A./F.L.A.	W/HP.	L.R.A.
COMPRESSOR				
FAN				
DRIVE				
OTHER				

DESIGN PRESSURE LOW HIGH
* OR HACR TYPE CIRCUIT BREAKER

SCOTSMAN

SERIAL NUMBER PLATE

MODEL NUMBER
SERIAL NUMBER
VOLTS/HERTZ/PHASE
MAXIMUM FUSE SIZE
REFRIGERANT CHARGE OZ

INTRODUCTION

This manual provides the specifications and the step-by-step procedures for the installation, start-up and operation, anc the maintenance and cleaning for the SCOTSMAN HQD550 high quality ice dispenser.

This product qualifies for the following listings

This icemaker has been engineered to our rigid safety and performance standards. The National Sanitation Foundation (NSF) seal, signifies that it is listed with the NSF and that it complies with the materials and construction standards of the NSF. In addition, the Underwriters Laboratories, Inc., (UL) Listing Mark and the Canadian Standards Association (CSA) Monogram, both signify that its construction and design have been inspected and tested by them. NSF, UL and CSA inspectors also periodically examine production icemakers at the factory, to assure continued compliance.

To retain the safety and performance built into this icemaker, it is important that installation and maintenance be conducted in the manner outlined in this manual.

HQD550 FOR THE INSTALLER

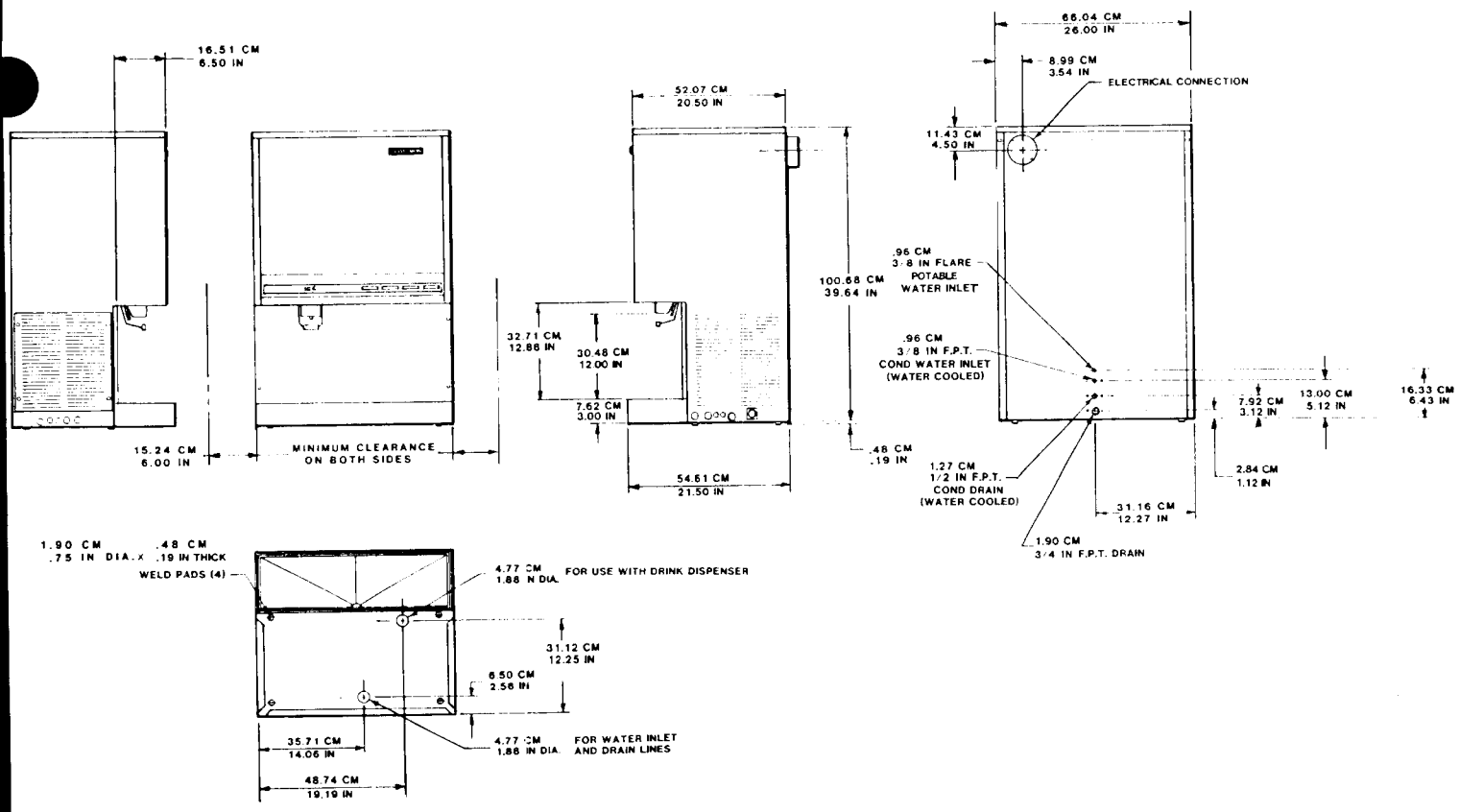

We reserve the right to make product improvements at any time. Specifications and design are subject to change without notice.

SPECIFICATIONS

Model Number	(Height - w/o Legs) Dimensions H" x W" x D"	Bin Cap.	Cube Size	Cond. Unit	Finish **	Basic Electrical	Comp. H.P.	No. of Wires	Min. Circuit Ampacity †	★ Max. Fuse Size	Ship. Wt. lbs./kg.
HQD550AE-1C	39⅝ x 26 x 21½	20 lbs	Nugget	Air	ES	115/60/1	1/2	2	17.9	20	270/122
HQD550AS-1C	39⅝ x 26 x 21½	20 lbs	Nugget	Air	SS	115/60/1	1/2	2	17.9	20	270/122
HQD550WE-1C	39⅝ x 26 x 21½	20 lbs	Nugget	Water	ES	115/60/1	1/2	2	17.3	20	270/122
HQD550WS-1C	39⅝ x 26 x 21½	20 lbs	Nugget	Water	SS	115/60/1	1/2	2	17.3	20	270/122

** (SS) Stainless Steel

** (ES) Sandalwood Leathergrain embossed steel with high gloss baked enamel finish

† Use this value to determine minimum wire size as per National Electric Code Standards

★ Or HACR type circuit breakers.

IMPORTANT OPERATING REQUIREMENTS

	MINIMUM	MAXIMUM
Air Temperatures	50°F (10.0°C)	100°F (38°C)
Water Temperatures	40°F (4.4°C)	100°F (38°C)
Water Pressures	20 lbs. gauge	120 lbs. gauge
Single Voltage Units	-10%	-10%

(Voltage rating specified on nameplate)

Extended periods of operation exceeding these limitations constitutes misuse under the terms of Scotsman Manufacturer's Limited Warranty, resulting in a loss of warranty coverage.

DMS21A Machine Stand: Available in baked enamel or stainless steel finish. 26-inches wide, 21-1/2-inches deep, 30-inches high — add 6-inches to height when optional legs are installed.

KSP1 Splash Panel Kit: For use when sink assembly is not used, covers sink mounting.

KV5H-30A: Four valve drink head for use with a remote carbonation system. Offers a choice of four soft drinks, carbonated water and non-carbonated water.

KWGF: Hardware and instructions to install water dispensing system. Can not be used with KV5H-30A.

OPTIONAL WALL MOUNTING KIT KWB3: For use when mounting on wall.

HQD550 FOR THE INSTALLER

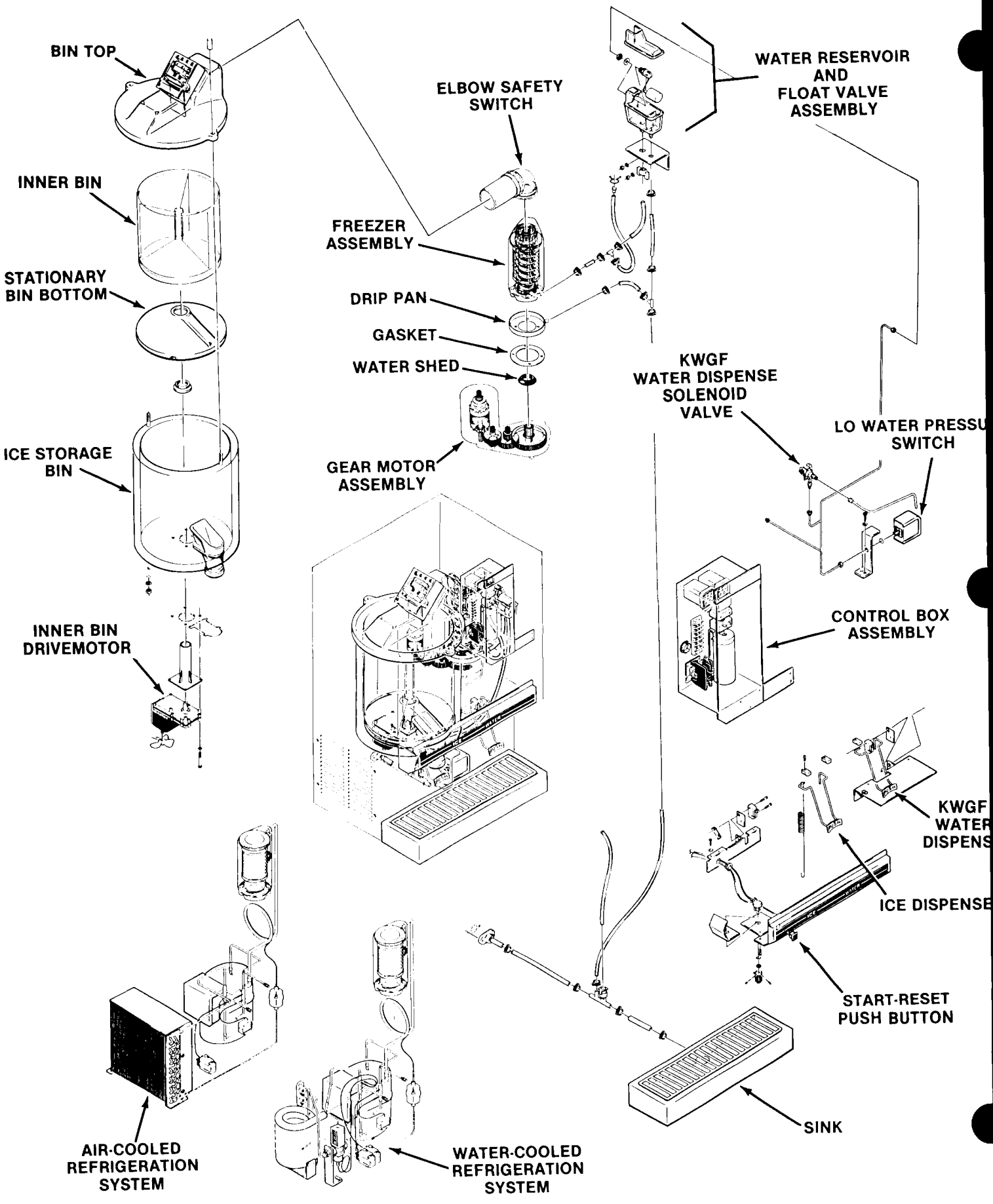

HQD550 FOR THE INSTALLER

LOCATION AND LEVELING

CAUTION

This Icemaker is NOT designed for outoor installations where air temperatures are below 50-degrees F., or above 100-degrees F., and water temperature is below 40-degrees F. or above 100-degrees F. Extended periods of operation at temperatures exceeding these limitations will constitute misuse, under the terms of the SCOTSMAN Manufacturer's limited warranty, resulting in LOSS of warranty coverage.

Prior consideration for location site shall include:

Minimum room temperature 50-degrees F.
Maximum room temperature 100-degrees F.

Water inlet temperatures:

Minimum 40-degrees F.
Maximum 100-degrees F.

Well ventilated location for air-cooled model, advising user to frequently clean air-cooled condenser, located directly behind the front service panel.

SERVICE ACCESS: Adequate space for all service connections, located at the rear of the cabinet. A six-inch minimum clearance at the rear and both side panels, for routing cooling air drawn into the air-cooled condenser and exhausted out the right side panel to maintain proper condensing operation of the air-cooled condenser.

1. Position the HQD550 dispenser in the permanent location.
2. Level the HQD550 dispenser in both the left-to-right and front-to-back directions.

The HQD550 "feet" fit into the DMS21A matching holes in the machine stand.

1. Remove shipping tape and packing.
2. Lay machine stand on back or side and install leg kit, if ordered.
3. Position machine stand in selected permanent location and level from front-to-back and side-to-side directions with the open section to the back.

Apply a 1/4" wide (minimum) bead of silicone sealant outlining the base of the dispenser (do not include the sink) to the top of the machine stand or counter as shown.

4. Set dispenser onto machine stand, tabs on the bottom of the dispenser match indentations and holes in the machine stand.
5. Wipe cabinet clean using damp cloth.

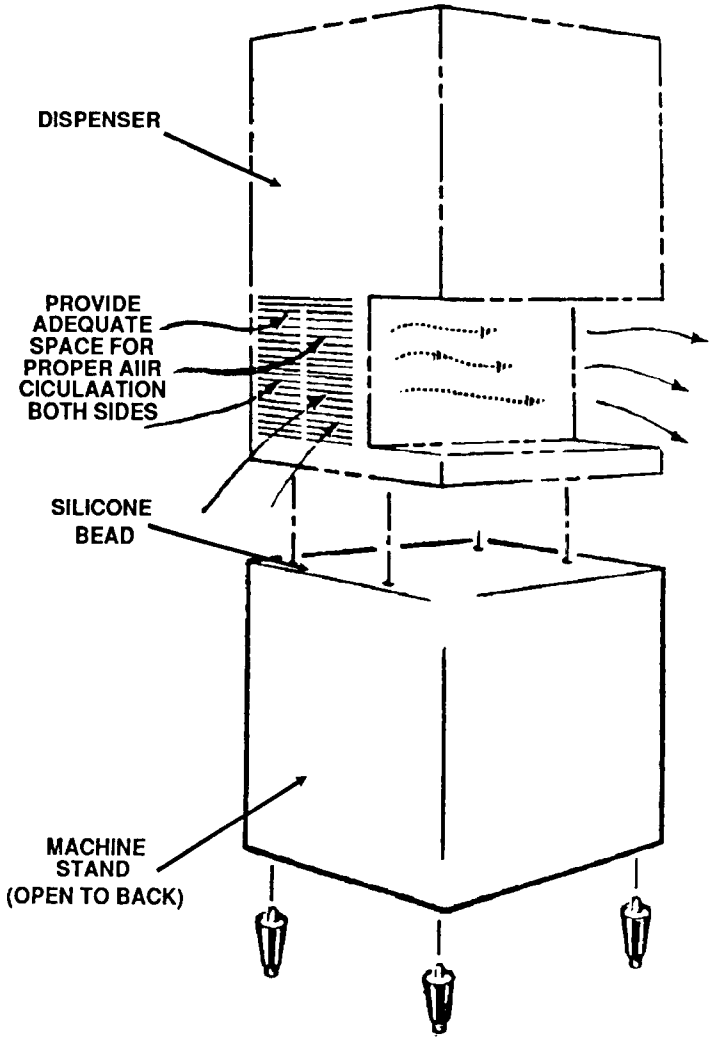

HQD550 FOR THE INSTALLER

KWB3 WALL MOUNT INSTRUCTIONS

WARNING

We recommend the wall mounting installation be done by an experienced contractor. The weights of the machines when in use are over 350 lbs. They should be mounted on a solid, rigid wall with proper fasteners for that type of wall and of adequate strength to support the weight of the machine during operation.

Clearance between wall and icemaker is a maximum of 1 inch.

A 6″ minimum clearance is required at both sides of icemaker for airflow. (Air-cooled models)

Utility connection considerations include:
- Removal of junction box.
- Routing of plumbing connections and electrical source.

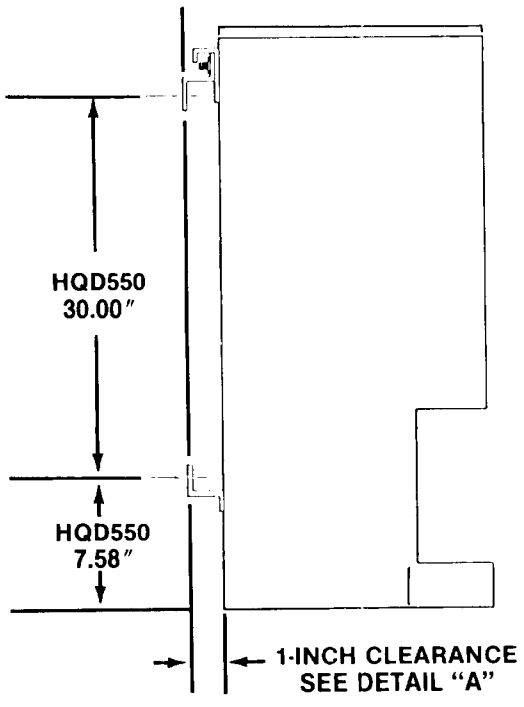

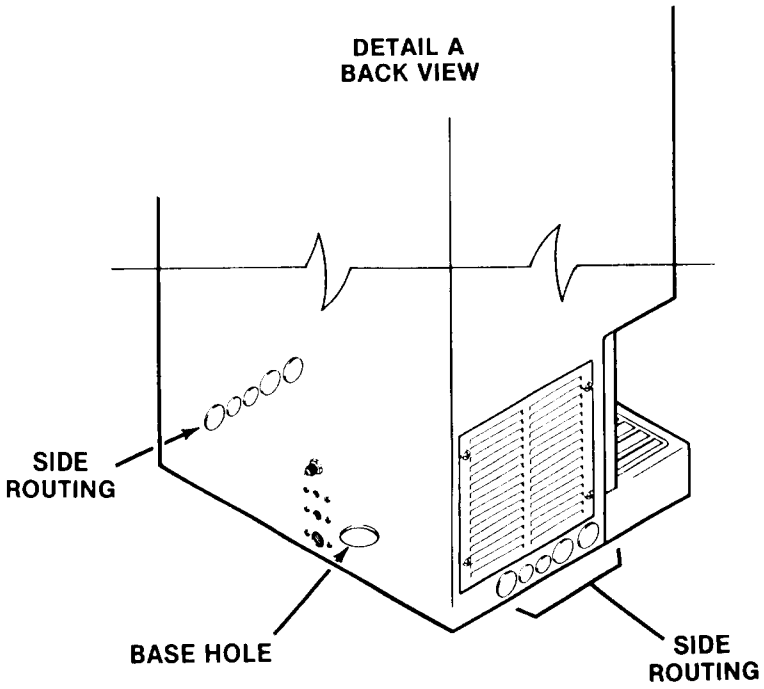

Utility connections may be made through the base or at either side through the pre-punched and plugged holes, using standard plumbing and electrical practices. See Detail A.

Interior plumbing lines must be disconnected from the original connections when routing utility connections through the side or base of icemacker.

HQD550 FOR THE INSTALLER

KWB3 WALL MOUNTING INSTRUCTIONS (Continued)

(See WARNING)

1. Remove machine top. Attach bracket "A" to machine using (3) nuts, (3) flat washers, (3) lockwashers and (3) 5/16-18 bolts received with kit.
2. Mount brackets "B" and "C" to wall at dimensions shown for specific unit. (Hardware for this not included.)

*USE FASTENERS AND WALL OF SUFFICIENT STRENGTH TO CARRY THE USE AND WEIGHT OF THE ICEMAKER.

3. Lift unit up and hook bracket "A" over bracket "B". Slide unit until the two remaining holes are aligned and secure with remaining (2) 1/4-20 bolts, (2) flat washers and (2) lockwashers.

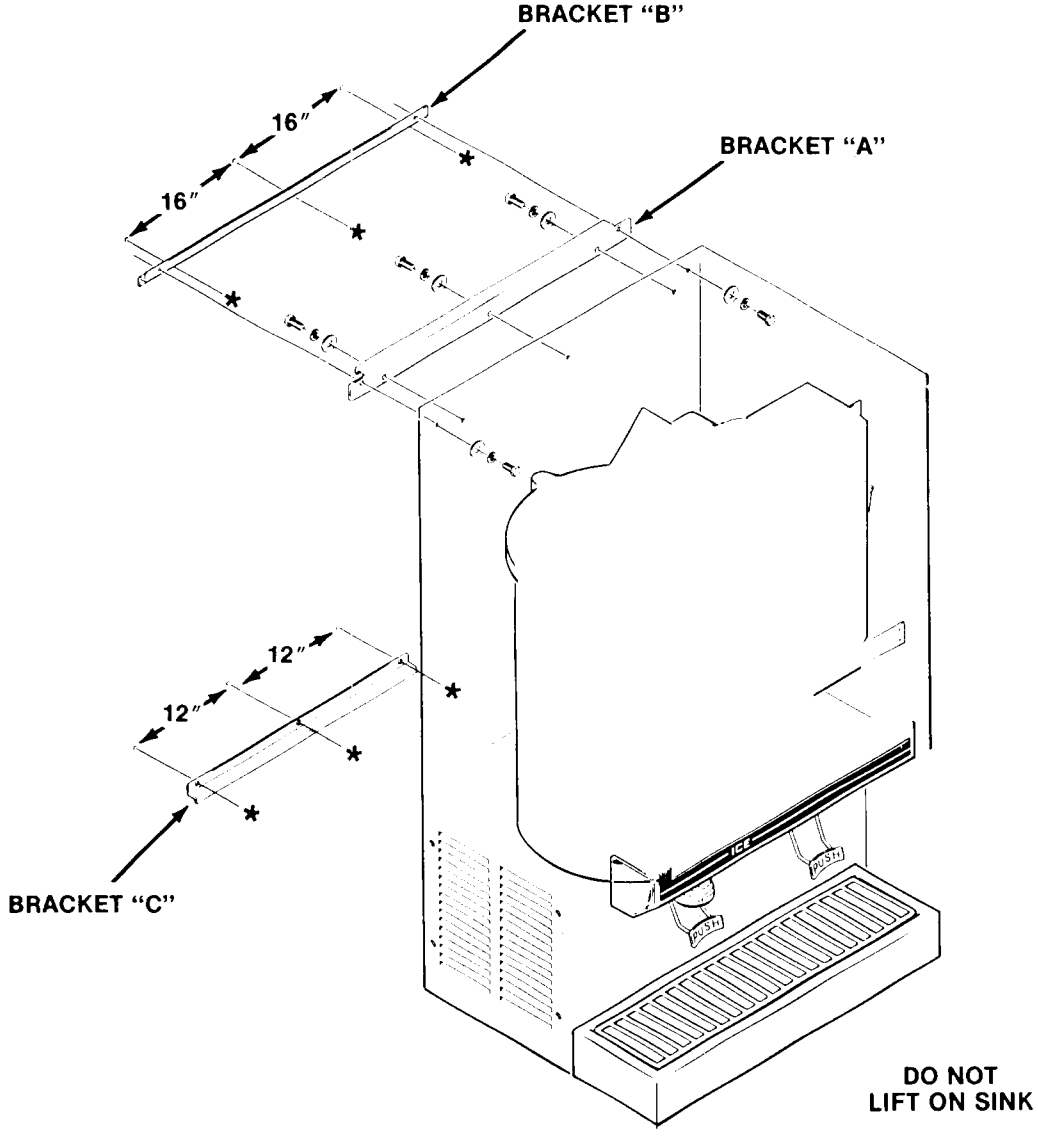

HQD550 FOR THE INSTALLER

INSTALLATION INSTRUCTIONS
KWGF WATER DISPENSING SYSTEM

CAUTION
Shut off potable water supply to HQD550 icemaker at shut-off valve.

WARNING
Before proceeding with installation, disconnect all electrical power to HQD550.

1. Remove two screws, push up to unsnap catches and remove cabinet top panel.
2. Remove two screws, pull out to unsnap catches and remove cabinet front panel.
3. Remove screws and remove cabinet splash panel.
4. Remove screws and remove filler plate from icemaker dispenser and scrap.
5. Locate water solenoid valve assembly in kit contents and attach the (2) red wires shipped with kits contents, to the solenoid terminals.
6. Locate in kit contents, the water line assembly and water line adapter and connect to water solenoid valve. Fitting sizes will determine location.
7. Remove plug from potable water line to prepare to connect to water inlet solenoid valve connecting tubing.
8. Install valve plate and switch assembly to dispenser, replacing filler plate removed and scrapped in step 4.
9. Attach water solenoid assembly to underside of upper compartment using (2) screws, #10 Helical Spring Lockwashers into threaded holes provided.
10. Attach water line adapter and solenoid valve assembly to water line where plug was removed in step 7.
11. Attach clamp and #8-32x3/4 Phillips recess pan head machine screw to install water line assembly to the dispenser.
12. Insert Glass Filler Lever through square slot in valve plate and switch assembly and attach to dispenser with (2) arm clamps and (2) #6-32x1/2 panhead machine screws.
13. See that glass filler lever pushs micro-switch actuator.
14. Attach glass filler lever spring to glass filler lever. Observe spring ends, large hook to filler lever, small hook to hole directly below in dispenser base.
15. Attach red wire connected to the solenoid to the switch on the valve plate assembly. Attach the blue wire to the switch on the valve plate. Route red wire connected to the solenoid and blue wire connected to the valve plate switch to the control box. Attach red wire to the bottom terminal of the terminal strip and attach the blue wire to the second from the bottom terminal of the terminal strip.

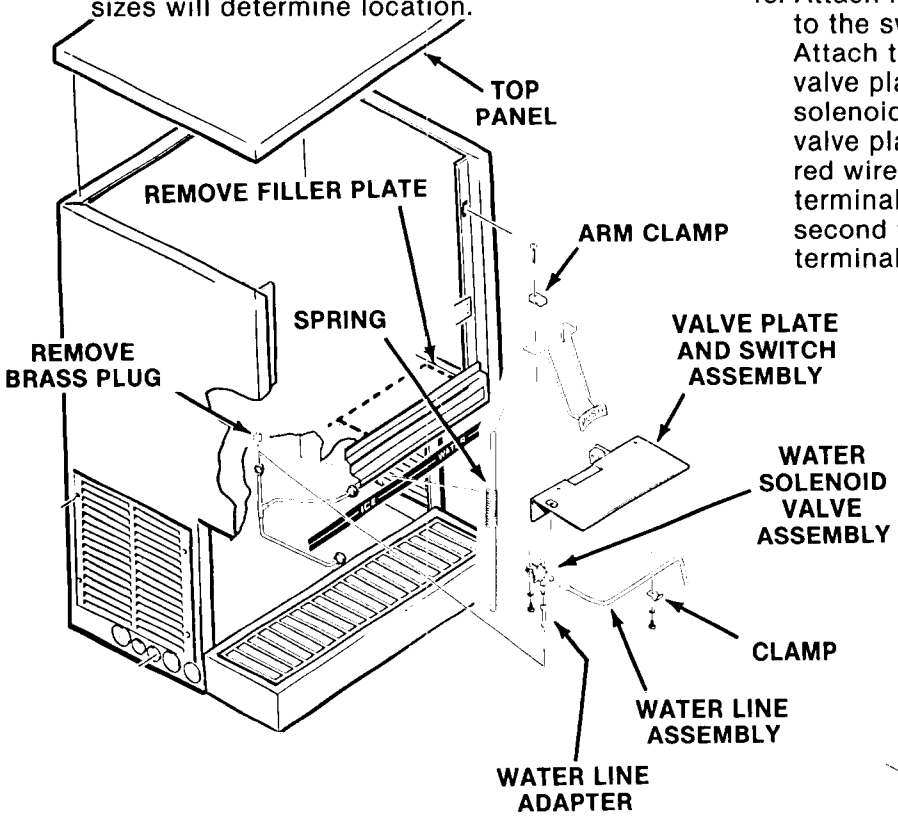

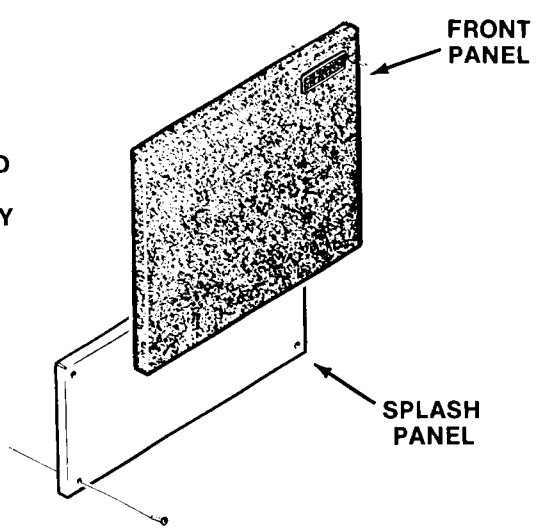

HQD550 FOR THE INSTALLER

INSTALLATION INSTRUCTIONS
KV5H-30A VALVE KIT TO HQD550
FOR USE WITH A CARBONATION SYSTEM.

////////////////// WARNING //////////////////

Before proceeding with installation, disconnect all electrical power to HQD550.

//

1. Remove cabinet top panel, front panel and splash panel to prepare to install drink valve kit.
2. Remove screws and remove filler plate from icemaker dispenser.
3. Remove plug button from base of ice machine.

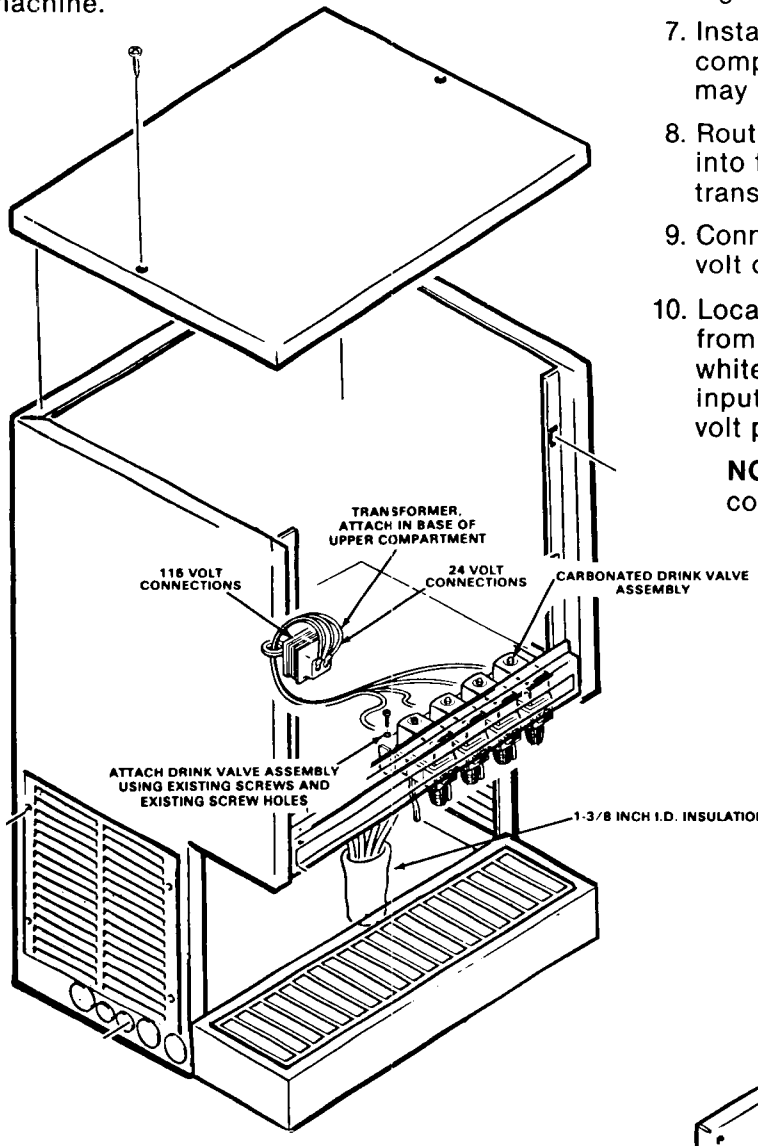

4. Install valve assembly in the ice machine with two screws through the same holes that held on valve cover plate. Install 1-3/8″ I.D. insulation tube covering over syrup and carbonated lines.
5. Route product lines through hole in base of unit.
6. Bundle all carbonated water lines and product lines together and cover with a good insulating tubing, (lines and insulating tube to be supplied by customer). Connect these lines to the valve kit lines making sure all product lines and connections are insulated. A carbonated water recirculating line is provided and recommended, this insures that high quality drinks are dispensed.
7. Install transformer in HQD550 upper compartment base using screws provided, it may be necessary to pre-drill holes.
8. Route drink valve head electrical leads up into the upper compartment to 24v Class II transformer location.
9. Connect wire leads from drink valves to 24 volt output side of transformer.
10. Locate a 115 volt continuous power source from within the icemaker control box. Route white and black wire leads from 115 volt input side at transformer and connect to 115 volt power source.

NOTE: Carbonator and carbonated product cooling system must be field supplied.

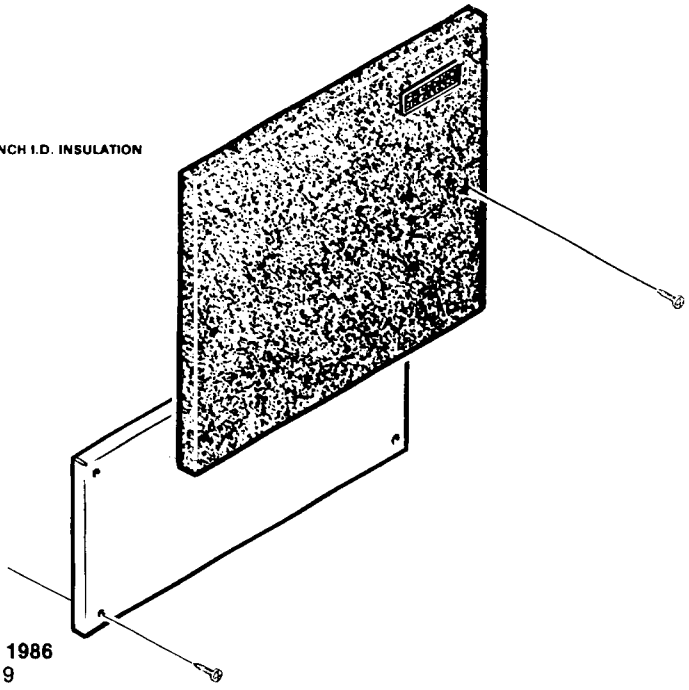

HQD550 FOR THE ELECTRICIAN

ELECTRICAL CONNECTIONS

//////////////////// WARNING ////////////////////

This icemaker requires a SOLID EARTH GROUND that meets the national, state and local electrical code requirements. To prevent possible SEVERE ELECTRICAL SHOCK INJURY to individuals, or extensive damage to equipment, install an approved SOLID EARTH GROUND wire to this icemaker. SEE wiring diagram.

//

SEE NAMEPLATE for current requirements to determine wire size to be used for electrical hookup.

Be certain the dispenser is connected to its own electrical circuit and individually fused. The maximum allowable voltage variation should not exceed ten percent of the nameplate rating, even under starting conditions. Low voltages can cause erratic operation and may be responsible for serious damage to the overload switch and motor windings.

All external wiring should conform to the national, state and local electrical code requirements. Usually an electrical permit and services of a licensed electrician will be required.

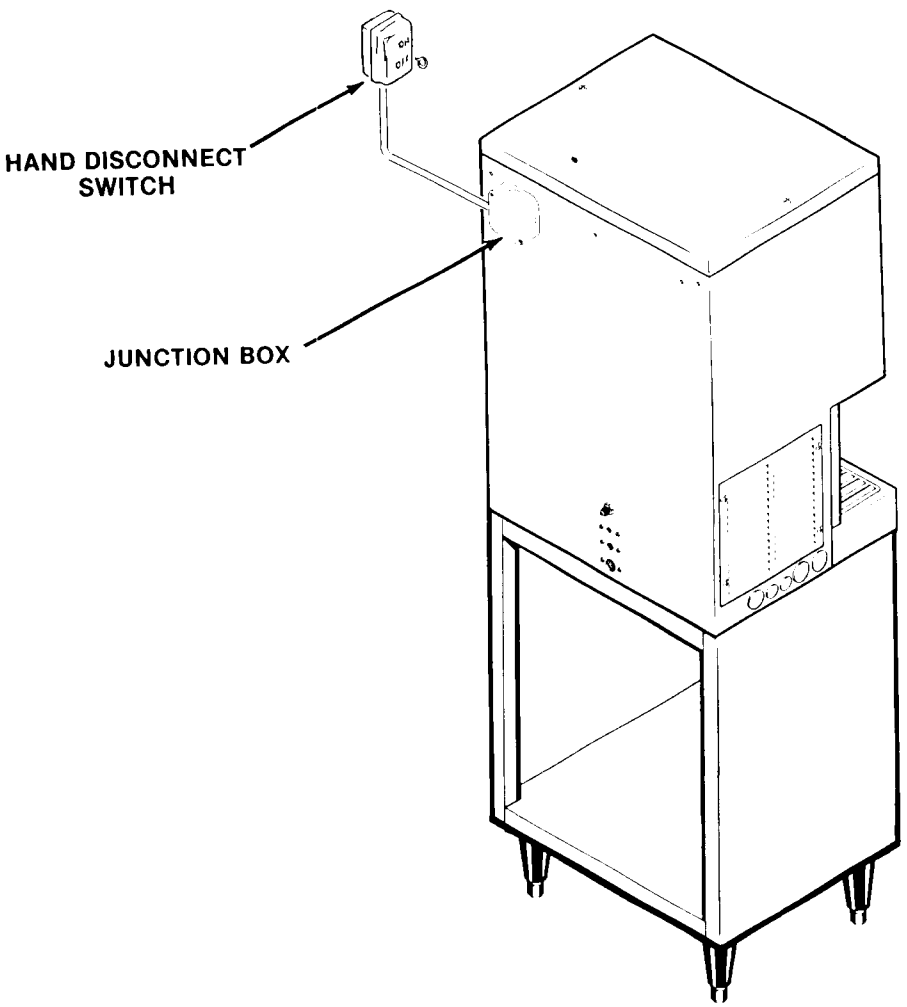

HQD550 FOR THE PLUMBER

WATER SUPPLY AND DRAIN CONNECTIONS

1. AIR-COOLED MODELS: The recommended water supply line is a 3/8 inch O.D. copper tubing. Connect to cold water supply line with standard plumbing fittings with a shutoff valve installed in an accessible place between the water supply and the dispenser.

   A wire mesh optional strainer is available, and when used, must be installed with the cleanout plug down. Locate the strainer in the water supply line, next to the dispenser with the arrow on the strainer, in the direction of the water flow. The strainer protects against large particles of rust, scale, etc., which may be loosened in the water supply pipe at the time of installation.

CAUTION

This icemaker is equipped with a low water pressure safety device which in the event of low water pressure will automatically stop the icemaker to prevent damage. The icemaker will automatically restart with increased water pressure.

2. WATER-COOLED MODELS: On water-cooled models a separate connection to the condenser is required. A 3/8 inch O.D. copper tubing is recommended for a separate water inlet line and a 1/2" O.D. separate drain line.

NOTE: The CAUTION in the text for the Air-Cooled models equally applies for the Water-Cooled models. In both type installations, water supply must be installed to conform with local plumbing codes. In some cases, a plumbing permit and services of a licensed plumber will be required.

3. DRAIN CONNECTIONS: All drains are gravity type and must be 1/4-inch fall per foot on horizontal runs. Drains are to be installed to conform with local code. The drain receptacle should be an open, trapped, or vented construction.

   Recommended bin drain is 3/4-inch O.D. copper tubing. It should be vented and run separately. Run a separate drain line to 1/2-inch O.D. drain tube from the Water-Cooled Condenser on Water-Cooled models.

4. Insert sink drain tube into dispenser drain tube located in the center bottom of the dispenser. Secure drain tube with hose clamp and snap sink into tabs located on the dispenser base. Drop grill into sink.

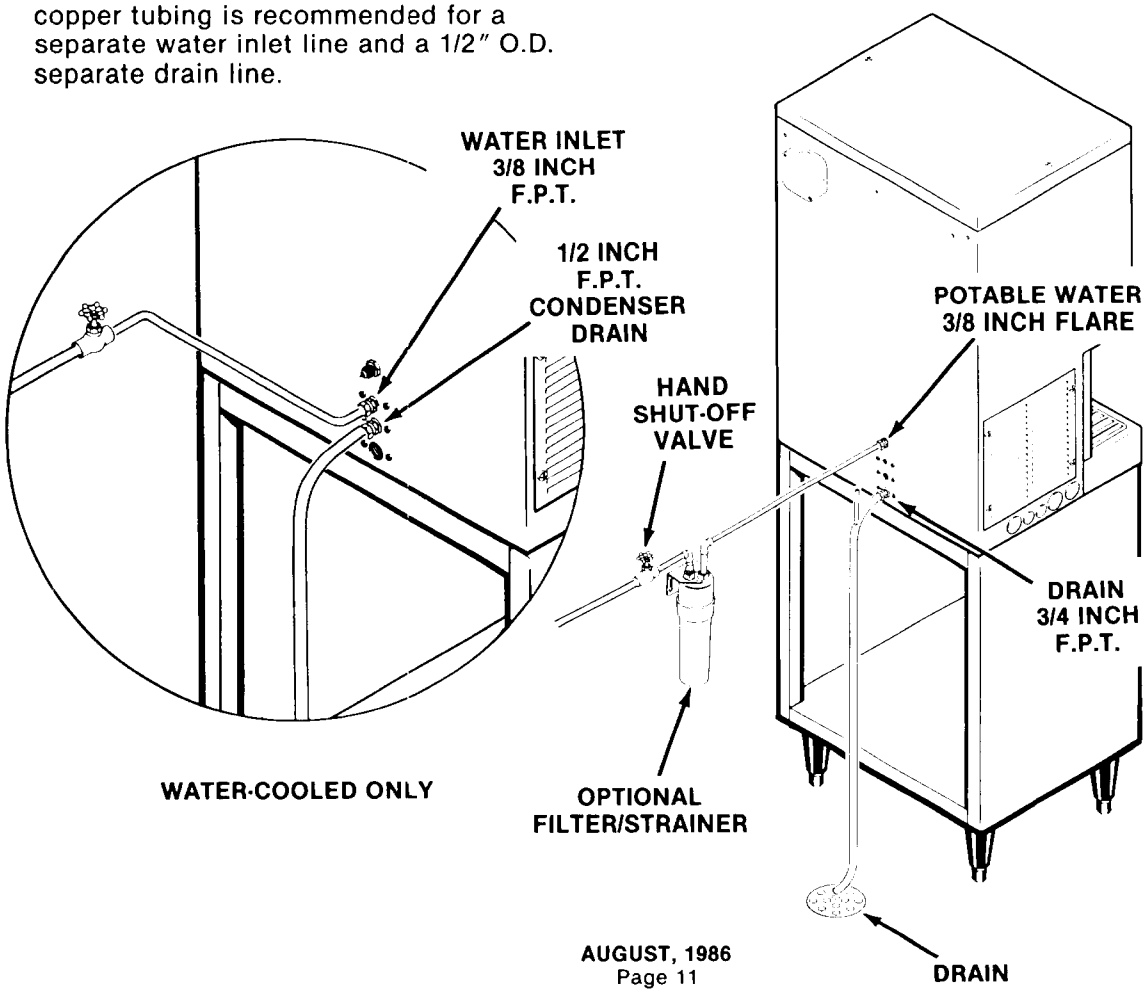

HQD550 FOR THE INSTALLER

FINAL CHECK LIST

1. Is the Dispenser level? (IMPORTANT)
2. Is the Dispenser in a room where ambient temperatures are a minimum of 50-degrees F. all year around?
3. Is there at least a six-inch clearance behind and around the cabinet for all connections and for proper air circulation?
4. All shipping tape removed from panels, doors, styrofoam blocks, etc?
5. Have all electrical and piping connections been made?
6. Has the electrical power supply wiring been properly connected, and the voltage tested and checked against the nameplate rating?
7. Has proper Chassis-to-earth ground been installed?
8. Is the water supply line shut-off valve installed and opened and has the inlet water supply pressure been checked to ensure a minimum of 20 PSIG?
9. Have the Compressor hold down bolts been checked to be sure the compressor is snug on the mounting pads?
10. Check that the Bin Ice Level and Bin Ice Level safety switches work.
11. Check that air flow from the air-cooled condenser does not return and recirculate into the condenser. A baffle may have to be fabricated behind the machine to prevent this recirculation problem.
12. Have the Dispenser and the Bin been wiped clean with clean damp cloths?
13. Has the owner/user been given the User Manual and instructed on how to operate the icemaker and the importance of periodic maintenance?
14. Has the owner/user been given the name and telephone number of the Authorized SCOTSMAN Distributor or Service Agency serving him?
15. Has the Manufacturer's Registration Card been properly filled out? Check for correct Model and Serial Numbers from nameplate, then mail the completed card to the SCOTSMAN factory.

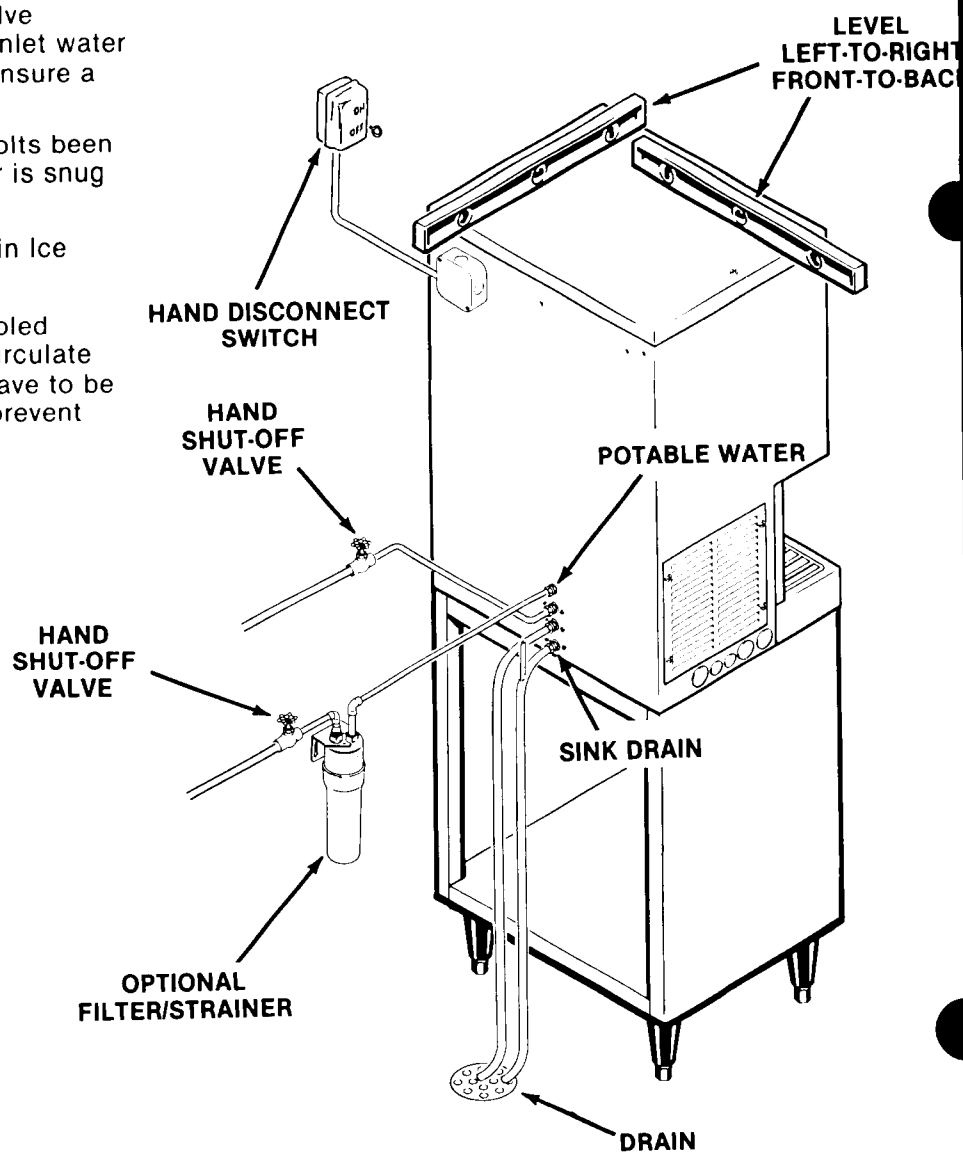

HQD550 START-UP

START UP

1. Remove two screws and push UP to unsnap catches and remove the top panel.
2. Remove two screws and pull OUT to unsnap catches and remove front panel.
3. Remove screws and back splash panel.
4. OPEN the inlet water supply line shut-off valve.
5. Observe the water filling operation.
   a. Water flows into water reservoir.
   b. Float moves up as water rises.
   c. Water flows through the water feed line to the bottom of the freezer assembly.
   d. Float STOPS water flow when level reaches 3/8-inches below the molded horizontal line on the body of the water reservoir.
6. Connect electrical power to ON position.
7. Press the illuminated START-RESET pushbutton to START the automatic ice making process. Listen for the sound the compressor start-up.
8. After four or five minutes of operation, observe that random lengths of cylindrical broken chunks of high quality ice begins dropping out of the open end of the ice spout, above the cylindrical ice storage bin.
9. Let the system operate for about 30 minutes or, until ice fills about one-fourth of the bin. Check for any excess noises beyond normal compressor noise:
   a. Fan noises, Air-Cooled: Blades touch other surfaces; blades bent, or out-of-balance.
   b. Vibrating type: From touching lines.
   c. Chattering: Lack of water in freezer.
   d. Compressor loose at one or more holddown bolts.
10. Rotate the ice portion control knob, on the front of the switch mount, fully CLOCKWISE, to the section labeled MAXIMUM.
11. With an ice drink glass, push IN on the glass filler level assembly, under the ice spout, and check that DESIRED amount of ice is dispensed.
12. After a few seconds, RELEASE pressure on the glass filler lever assembly and check that ice dispensing STOPS.
13. Rotate the ice portion control knob, on the control panel, to about MID-RANGE on the dial; then, with a standard ice drink glass, push IN on the glass filler lever assembly, under the ice spout, and observe that a measured amount of ice is dispensed and dispensing STOPS.
14. Check the ice portion dispensed in the glass to determine whether the amount of ice is:
    CORRECT ICE PORTION
    TOO SMALL ICE PORTION
    TOO LARGE ICE PORTION
15. Rotate the ice portion control knob, CLOCKWISE, about one-eighth of a turn, to INCREASE the ice portion; or, COUNTER-CLOCKWISE, about one-eighth of a turn, to DECREASE the ice portion.
16. Dispense several ice portions, in the glass to be used for standard example, and repeat steps to achieve the desired correct portion.
17. Check the bin ice level switch.

    NOTE: The bin ice level switch is an ON-OFF switch, that shuts OFF the compressor to stop icemaking, while the freezer assembly drivemotor continues to operate, in order to clear all ice from the auger. Then, when the refrigerant pressure equalizes, a refrigerant lo-pressure control will shut OFF the drivemotor. When the ice flow pushes the actuator arm of the switch IN, the compressor is shut OFF and when the action of the melting or dispensed ice releases the actuator arm, the switch CLOSES the circuit and RESTARTS the compressor and the icemaking process.

    The bin ice level safety switch is mounted next to bin ice level switch and is actuated by the movement against the switch actuator. The safety switch acts as a backup safety switch, should the bin ice level switch fail and cause ice to jam up in the ice spout. The safety switch will shut off the icemaker only when actuated. It is an immediate and complete shut down of the entire icemaker. The bin ice level safety switch must be manually reset.
18. Thoroughly explain to the owner/user the significant specifications of the icemaker, the start up and operation, going through the procedures for the operating instructions. Answer all questions about the icemaker, by the owner; and, inform the owner of the name and telephone number of the authorized SCOTSMAN Service Agency serving him.

HQD550 START-UP

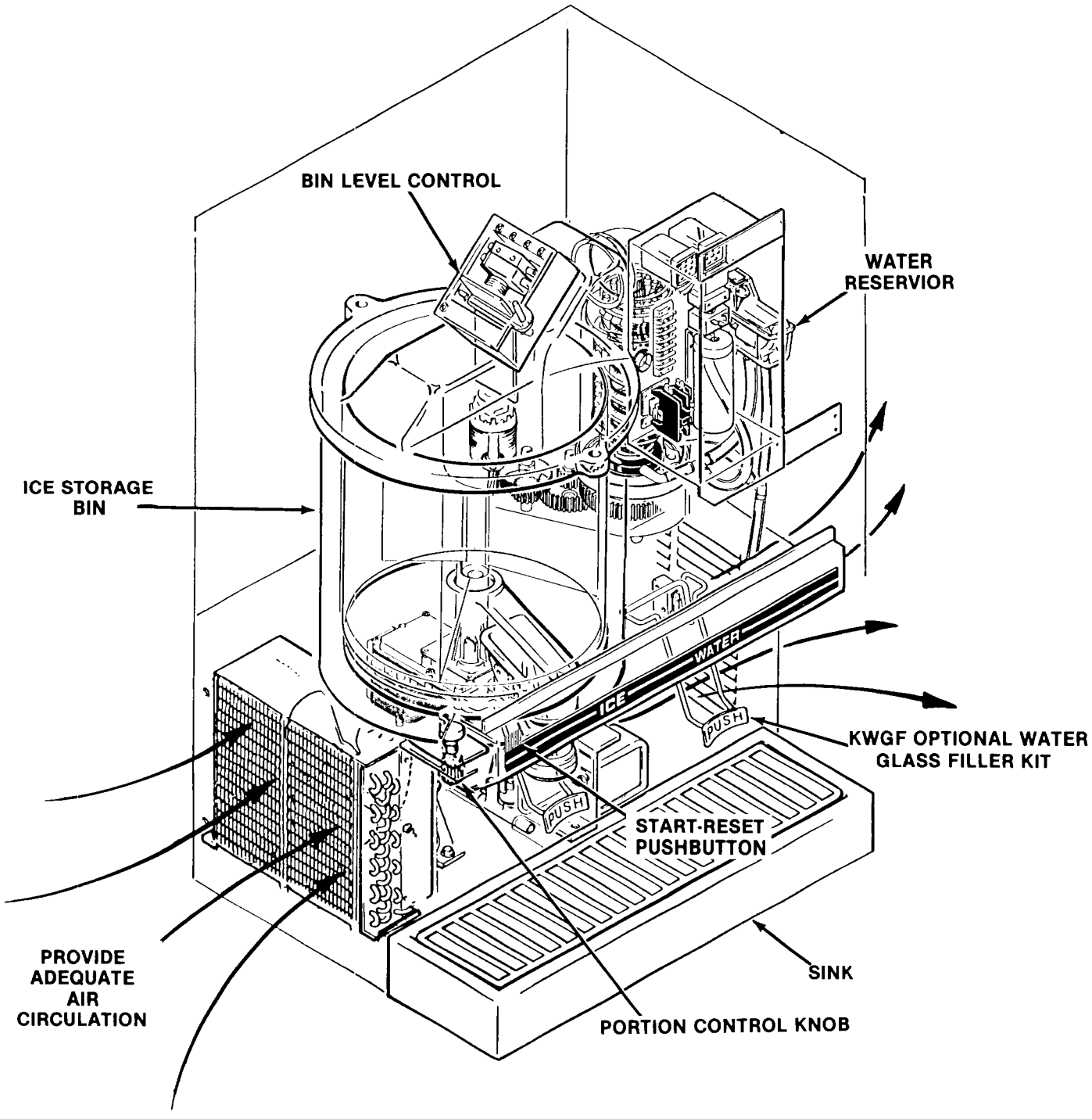

HQD550 OPERATION

DISPENSING SYSTEM

STANDBY—In the STANDBY mode, the refrigeration system is in automatic operation, ice is being made and dispensed into the cylindrical ice storage bin, or the bin is full and the refrigeration system is shutdown. The electrical circuit in the dispensing control circuit has an ice vend switch and an ice portion timing module, both in the N/O position.

ICE DISPENSE—With a container, push in a glass filler lever and dispense ice, the circuit is completed through the ice vend switch and the ice portion timing module and the bin drive motor, which causes ice to be dispensed. Then one of the two sequences next occur:

1. After a complete vend has been made the ice portion timing module removes power, which OPENS the circuit to the bin drive motor and STOPS the ice dispensing, and returns the circuit to the STANDBY condition.
2. When the container is removed, before a complete vend has been made, releasing the glass filler lever assembly, power is interrupted through the ice vend switch, which STOPS the ice dispensing, and returns the circuit to the STANDBY condition.

KWGF OPTIONAL WATER GLASS FILLER KIT

WATER DISPENSE—With a container, push in glass filler lever and dispense water, the circuit is completed through the water vend switch to the coil of the water solenoid, which energizes the coil and OPENS the water solenoid valve allowing a flow of water to be dispensed.

When the container is removed, releasing the glass filler lever assembly, the circuit through the water vend switch OPENS, interrupting power to the coil of the water solenoid; which de-energizes the coil and CLOSES the water solenoid valve, shutting OFF the flow of water being dispensed.

With an ice drink glass, pitcher or container, push IN on the glass filler lever assembly, under the water spout, and check that water is CONTINUOUSLY dispensed.

After a few seconds, RELEASE pressure on the glass filler lever assembly and check that water dispensing STOPS.

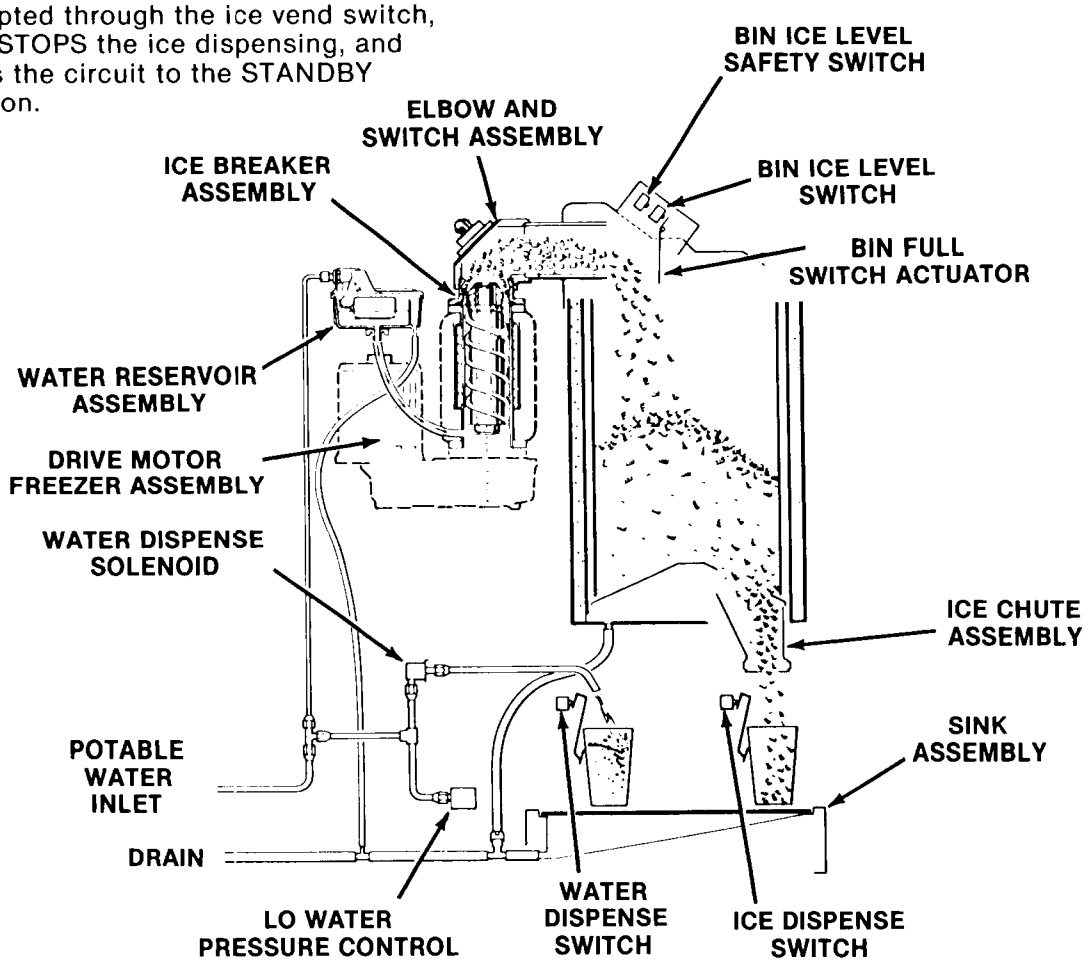

HQD550 OPERATION

ICEMAKER

The water supply flows from the building source through the inline water strainer, enters the cabinet and on to the water reservoir. The water reservoir functions to maintain a constant water level inside the freezer assembly. Water from the water reservoir enters at the bottom of the freezer assembly and is changed into ice by low temperatures inside the freezer.

A stainless steel auger within the freezer is powered by the drivemotor assembly, a direct-drive gearmotor, and the rotating auger carries the ice upward to the end of the auger, where excess water is pressed out of the ice, as it is extruded and broken into random length chunks of ice and pushed out through the ice spout and into the ice storage bin.

Connecting electrical power starts the automatic and continuous icemaking process. When the cylindrical ice storage bin has been filled with ice, up to the level of the bin ice level switch actuator, the actuator depresses the bin ice level switch and shuts off the icemaking process.

As the ice is removed from the cylindrical ice storage bin, the actuator releases the bin ice level switch restarting the automatic icemaking process.

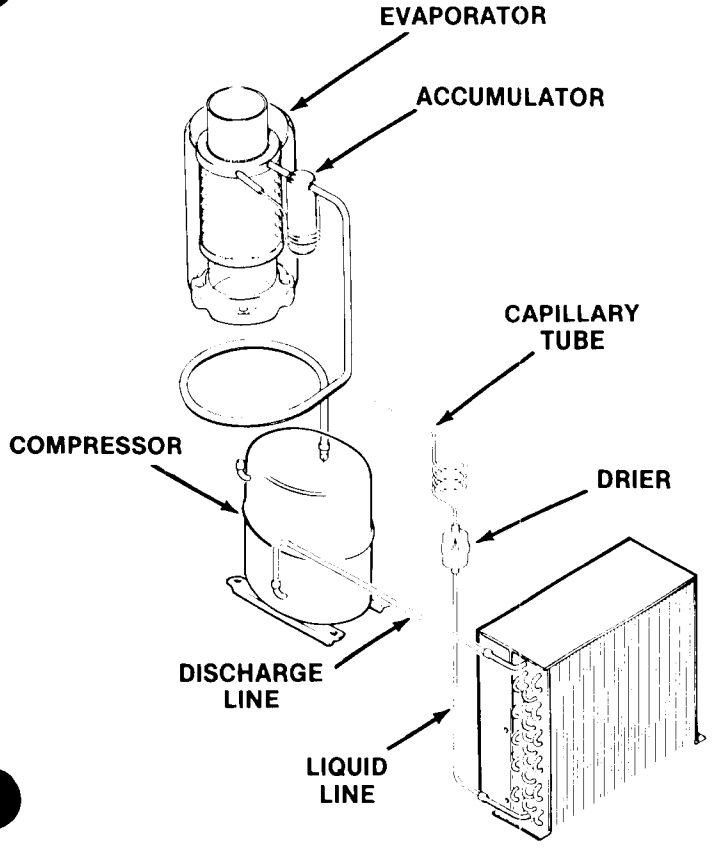

ELECTRICAL/REFRIGERATION

The Model HQD550 Dispensers are designed to operate on standard electrical supply 115 volts, 60 Hertz, single phase.
Therefore, always CHECK NAMEPLATE for electrical information BEFORE proceeding with electrical wiring connections to the icemaker.

Cold ambient temperatures and interruptions in water supply are conditions that can cause excessively hard ice and overloads within the freezer assembly, which is directly transmitted to the drivemotor; and in turn, will cause speed reduction or ultimate freezeup.

When the drivemotor is slowed to a predetermined RPM, a sensing switch mounted on top of the motor is designed to open the electrical circuit to the compressor. The compressor stops operating, no more ice is produced, and the drivemotor continues to operate, rotating the auger to clear the overload and gradually building up of full speed.

At a pre-determined higher RPM drivemotor speed, the speed sensing switch closes the electrical circuit to the compressor, causing the normal icemaking process to resume.

Refer to the appropriate Wiring Diagram and trace circuitry and control functions, as described in the following paragraph:

As shown on all SCOTSMAN wiring diagrams, the controls are in the ICEMAKING MODE. Thus, the 1-2 contacts are CLOSED. At START-UP, the 1-2 contacts are OPEN and the 3-2 contacts are CLOSED. As the icemaker begins to operate, the low side pressure starts to decrease from the stabilized or at-rest pressure. As soon as the pressure is reduced to 20 PSIG, the 3-2 contacts OPEN and the 1-2 contacts CLOSE.

This removes the operating controls, such as the bin ice level switch, from the gearmotor circuit. If one of the operating controls OPENS, it will SHUT OFF the compressor circuit. The gearmotor will operate until the low side pressure increases to 32 PSIG. Then, the 1-2 contacts OPEN and SHUT OFF the gearmotor, usually within one or two minutes, depending upon ambient conditions. This brief period of time allows the auger to transport all the ice out of the freezing chamber. Consequently, when called on to STARTUP again, there is no ice load to start up against. Again, on STARTUP, the 1-2 contacts are OPEN and the 3-2 contacts are CLOSED.

HQD550 COMPONENT DESCRIPTION

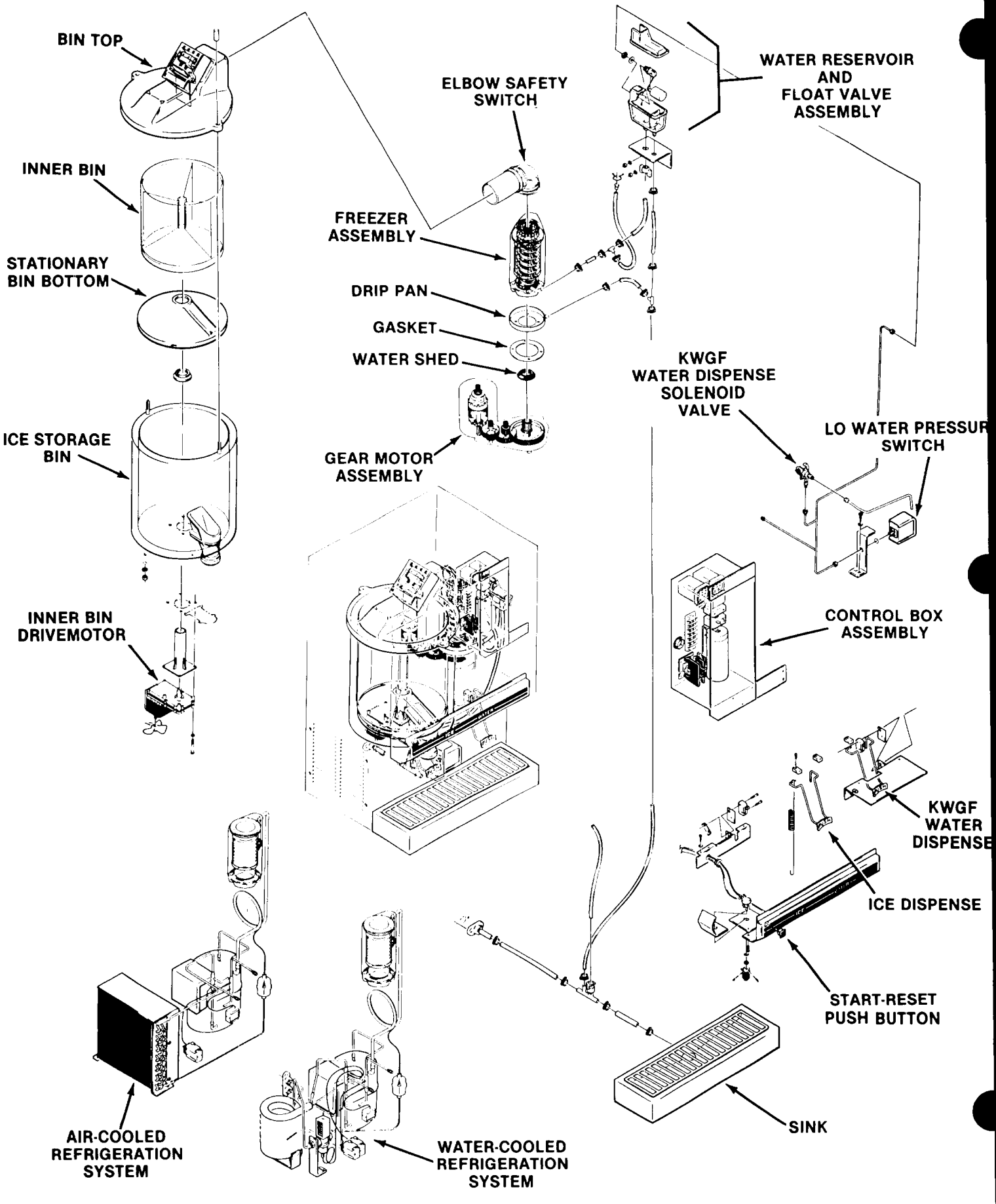

HQD550 COMPONENT DESCRIPTION

BIN ICE LEVEL SAFETY SWITCH

The bin ice level safety switch is mounted next to bin ice level switch and is actuated by the movement against the switch actuator. The safety switch acts as a backup safety switch, should the bin ice level switch fail and cause ice to jam up in the ice spout. The safety switch will shut off the icemaker only when actuated. It is an immediate and complete shut down of the entire icemaker. The bin ice level safety switch must be manually reset.

BIN TOP

The bin top assembly protects the ice supply and provides a mount for the bin ice level switch and the bin ice level safety switch.

BIN ICE LEVEL SWITCH

The bin ice level switch is an ON-OFF switch, that shuts OFF the compressor to stop icemaking, while the freezer assembly drivemotor continues to operate, in order to clear all ice from the auger. Then, when the refrigerant pressure equalizes, the refrigerant lo-pressure control will shut OFF the drivemotor. When the ice flow pushes the actuator arm of the switch IN, the compressor is shut OFF and when the action of the melting or dispensed ice releases the actuator arm, the switch CLOSES the circuit and RESTARTS the compressor and the icemaking process.

The proper cut in position of the bin ice level switch is when the bin fill switch actuator arm is hanging straight down.

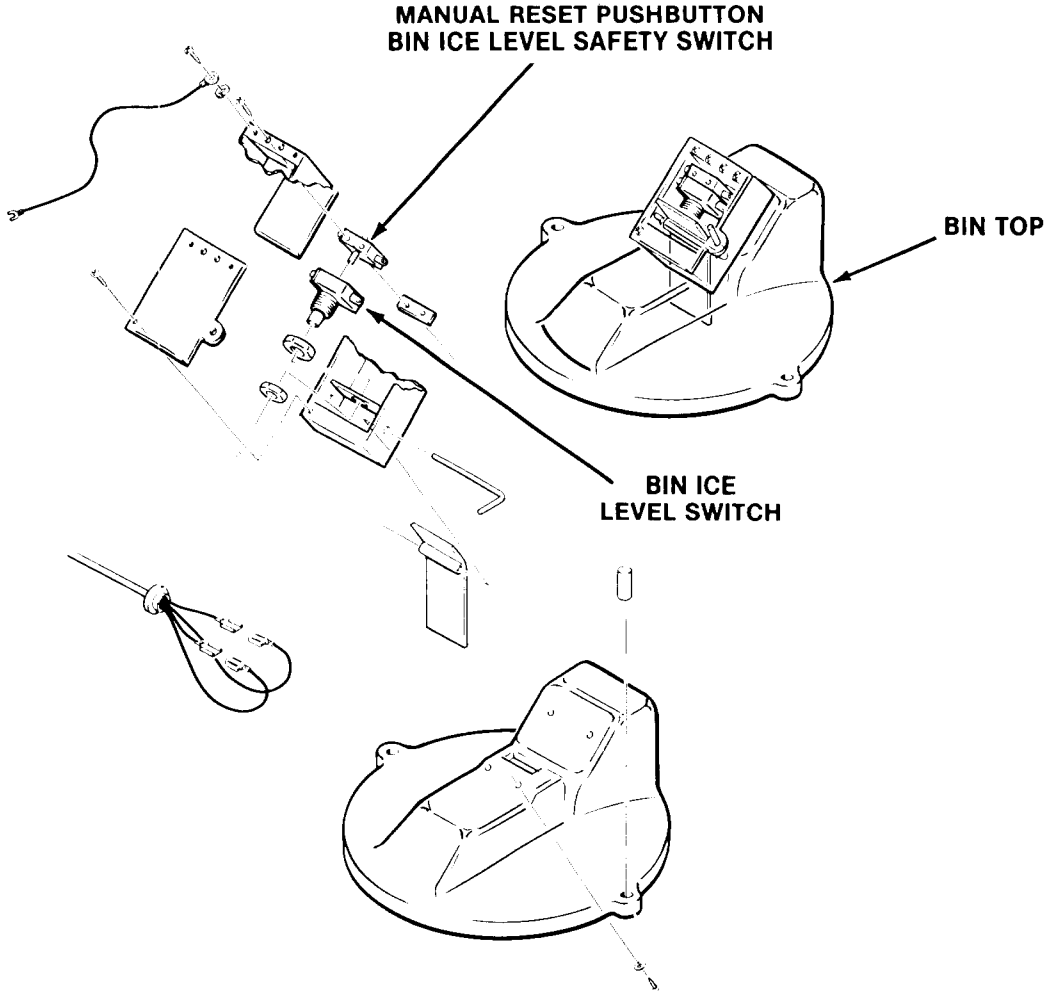

HQD550 COMPONENT DESCRIPTION

There are additional SAFETY CONTROL DEVICES within the HQD550 that protect the machine from expensive damage and down time.

WATER PRESSURE SAFETY SWITCH installed in the potable water inlet line is set to electrically open at zero to four PSIG and stop the entire icemaker. The AUTOMATIC RESET will restart the icemaking process when water pressure rises to 20 PSIG.

AUGER DELAY SWITCH, a single-pole double throw (SPDT) switch, allows the gearmotor to rotate the Auger and clear the freezing chamber after the bin ice level switch circuit to compressor is OFF. When the icemaker restarts, the gearmotor starts in a no load condition, preventing excessive loading of gearmotor and bearings.

REFRIGERANT LO PRESSURE CONTROL is factory set to automatically SHUT DOWN the icemaker if the low-side pressure drops below 4 PSIG or low ambient or water temperatures exist. This is a AUTOMATIC RESET control.

Water-cooled icemakers have two refrigerant pressure switches, hi refrigerant pressure and low refrigerant pressure.

ELBOW SAFETY SWITCH

The elbow safety switch is an ON-OFF switch that shuts off the compressor when an ice jam presses against the rubber diaphragm depressing the switch and opening the circuit. Melting action relieves pressure closing the circuit, lighting the start-reset pushbutton. The start-reset switch must then be pressed to start the automatic icemaking process.

ICE BREAKER ASSEMBLY

The ice breaker assembly, bolted to the top of the freezer, contains the bearing and seal for the top of the auger. Flaked ice created by the freezer is carried by the auger to the ice breaker assembly and the flaked ice is pushed by the auger through the tapered holes in the ice breaker. Flaked ice is compressed by auger pressure as it is pushed through the ice breaker assembly and the shafts of compressed ice are broken into random lengths of Ice Nuggets by the taper on the top of the ice breaker.

WATER REGULATOR VALVE
WATER-COOLED MODELS

The water regulator valve functions to maintain a constant head pressure, by regulating the amount of incoming water flow through the condenser, on water-cooled models. The valve operates through the refrigerant system high side pressure. Rotating the adjusting screw, located on top of the valve, can INCREASE or DECREASE the operating head pressure.

HQD550 COMPONENT DESCRIPTION

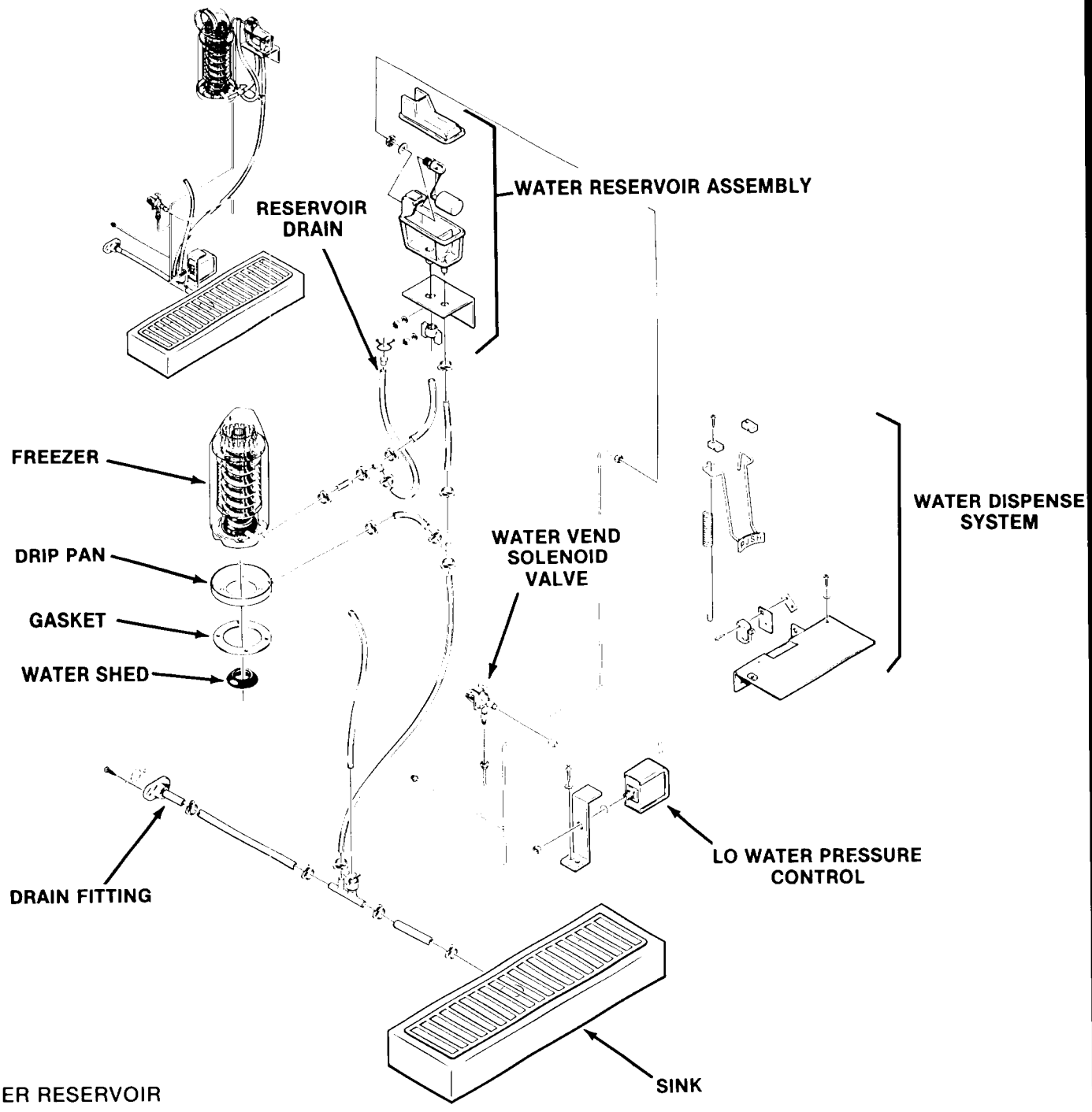

WATER RESERVOIR

The water reservoir, with a float valve assembly, maintains a constant water supply within the freezer assembly. The water level in the reservoir is the same water level as in the freezer and the correct water level in the freezer is level with the top of the auger flights. The water level in the freezer can be adjusted by raising or lowering the water reservoir with the bracket.

RESERVOIR DRAIN

The reservoir drain is for use to drain the water reservoir when cleaning or maintenance of the icemaking system.

HQD550 COMPONENT DESCRIPTION

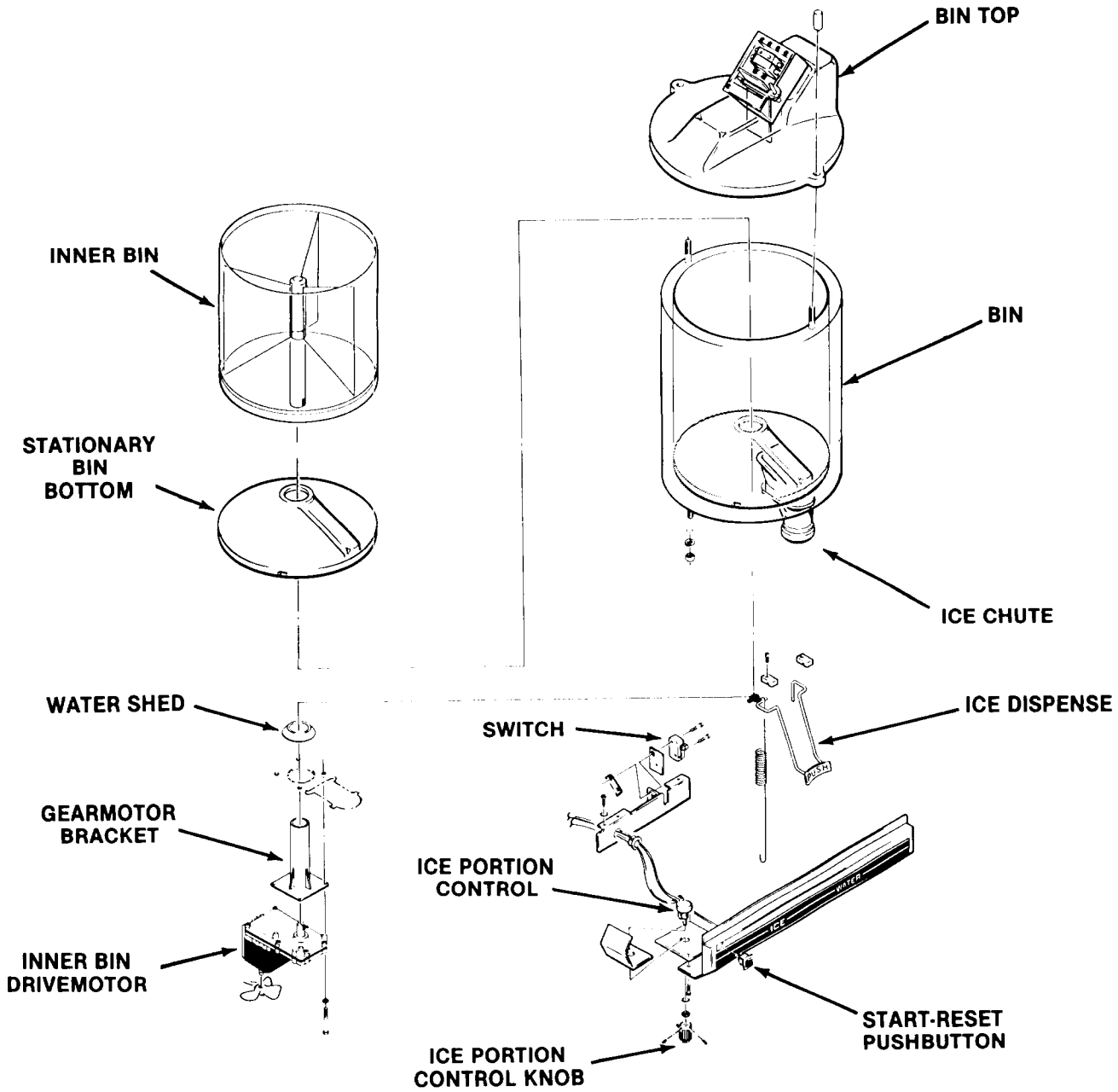

BIN BOTTOM

The cone shaped stationary bin bottom holds the ice supply, and when the inner bin is rotated the ice supply rotates and ice is shaved off from the bottom and drops, by gravity, through the ice dispense spout.

INNER BIN

Rotates when drivemotor is energized, causing ice pile to rotate over bin bottom, dispensing ice.

INNER BIN DRIVE MOTOR

The inner bin drive motor and reduction gear assembly, located below the bin, is controlled with the ice vend switch and portion control timing module. The inner bin drive motor rotates the inner bin and ice supply to vend a metered amount of ice into a container.

START-RESET PUSHBUTTON

When pushed completes the electrical circuit through the icemaker electrical components. The START-RESET PUSHBUTTON must be pressed to restart the icemaking process whenever any of the safety controls have functioned to stop the icemaker or an interruption in the electrical supply has occurred.

HQD550 COMPONENT DESCRIPTION

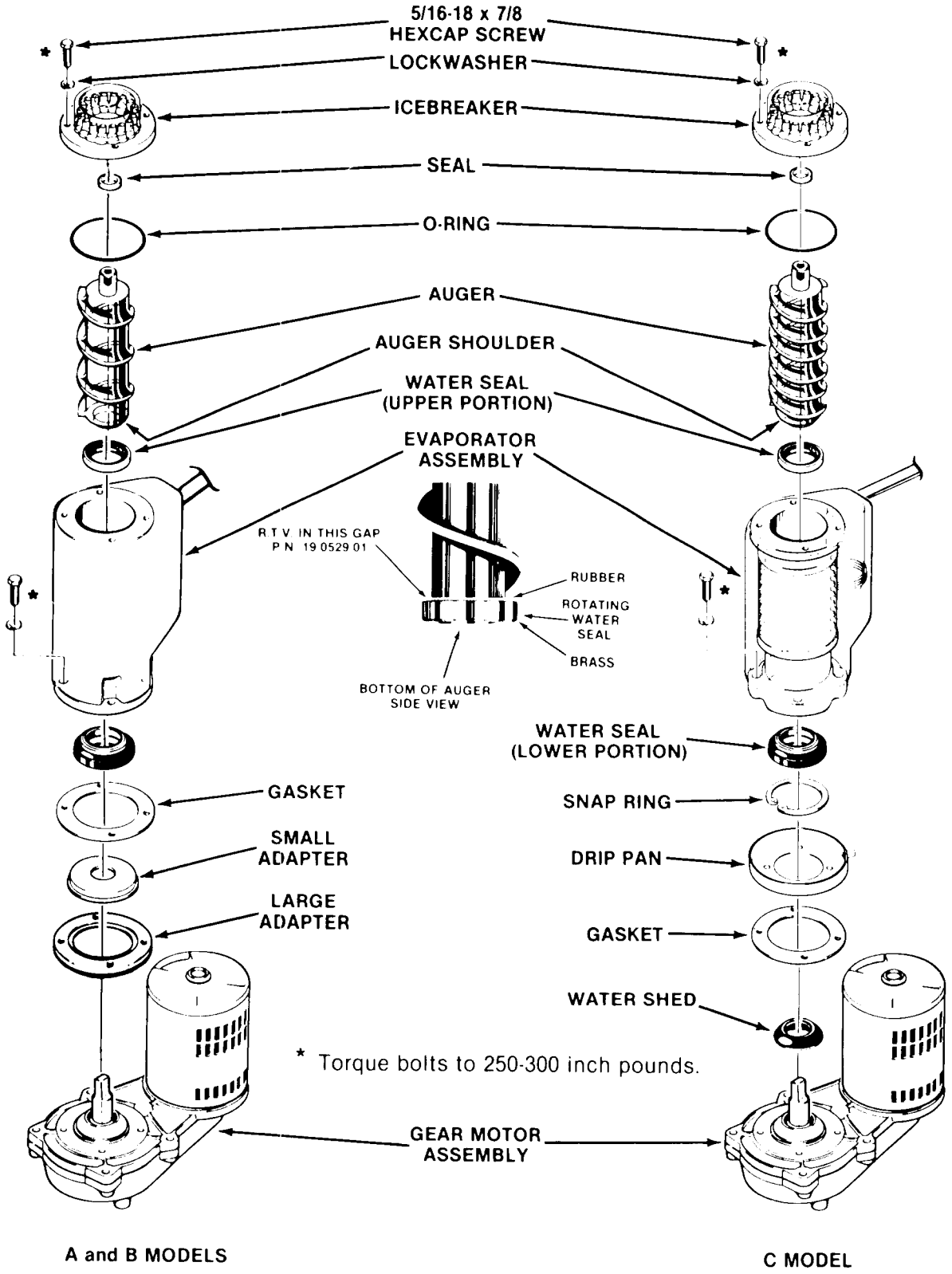

A and B MODELS

C MODEL

HQD550 COMPONENT DESCRIPTION

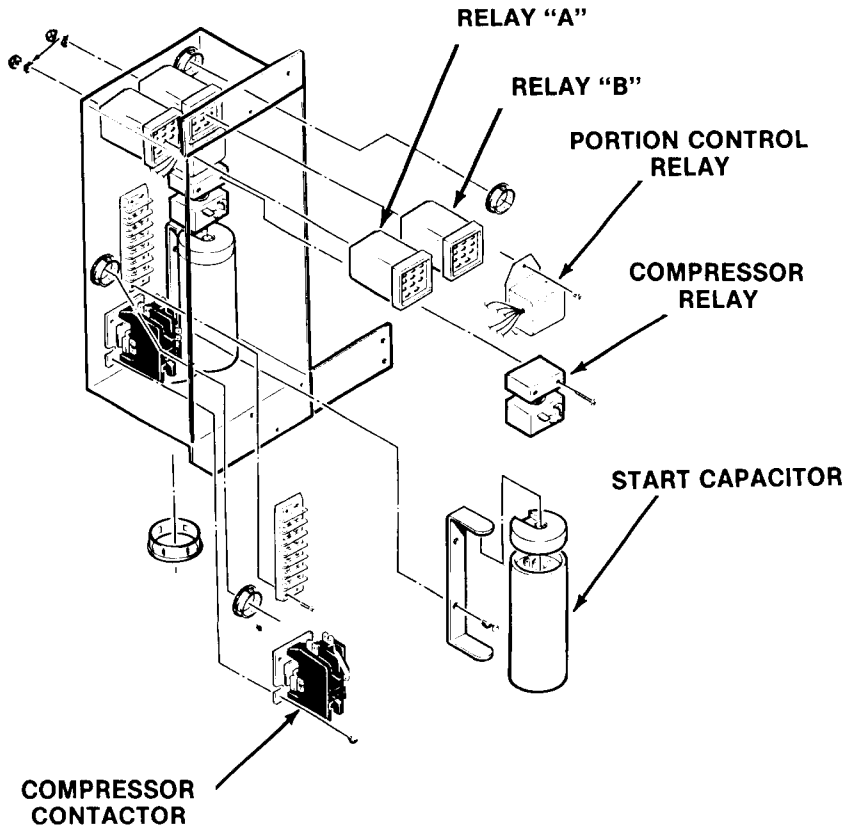

COMPRESSOR CONTACTOR

A single-pole contactor is used to supply current to the compressor; and, is wired so any control in the pilot circuit, such as the bin thermostat and high pressure control, etc., will cause the contactor coil to be de-energized, when the control contact OPENS, thereby breaking the circuit to the compressor through the contactor points.

ELBOW SAFETY SWITCH RELAY "A"

The elbow safety switch relay "A" maintains a circuit through the elbow safety switch until the elbow safety switch opens and switches the current through the lamp of the start reset pushbutton, which must be pushed and reset to restart the automatic icemaking process.

RELAY "B"

Relay "B" protects the compressor contactor from chattering during operation of the icemaking system.

COMPRESSOR START RELAY

The compressor start relay completes the circuit to the compressor from the start capacitor to provide enough energy to start the compressor. When the compressor motor has reached the proper RPM's, the compressor relay opens and removes the start capacitor from the circuit.

ICE PORTION CONTROL TIMING MODULE

The ice portion control timing module operates in conjunction with the ice portion control Potentiometer and times the run of the bin drive motor to meter the amount of ice dispensed. This system is adjustable from approximately 1/2 ounce to 6 ounces.

HQD550 MAINTENANCE AND CLEANING INSTRUCTIONS

A Scotsman Ice System represents a sizable investment of time and money in any company's business. In order to receive the best return for that investment, it MUST receive periodic maintenance.

It is the USERS RESPONSIBILITY to see that the unit is properly maintained. It is always preferable; and less costly in the long run, to avoid possible down time by keeping it clean, adjusting it as needed and by replacing worn parts before they can cause failure. The following is a list of recommended maintenance that will help keep your machine running with a minimum of problems.

Maintenance and Cleaning should be scheduled at a MINIMUM of twice per year.

ICEMAKER

THE FOLLOWING MAINTENANCE SHOULD BE SCHEDULED AT LEAST TWO TIMES PER YEAR ON THIS ICEMAKER. CALL YOUR AUTHORIZED SCOTSMAN SERVICE AGENCY.

1. Check and clean water line strainers.
2. Check that the water level in the water reservoir is at the molded line on the side of the float.
3. Remove cover from water reservoir and depress the float to insure that a full stream of water enters the reservoir.
4. Check that the icemaker cabinet is level, in side-to-side and front-to-back directions.
5. Clean the water reservoir and interior of the freezer assembly, using a solution of SCOTSMAN Ice Machine Cleaner. Refer to CLEANING-Icemaker.
6. When doubtful about refrigerant charge, install refrigerant gauges on Schrader valves and perform steps 6 and 7. Check gauge for compressor head pressure:

   AIR-COOLED MODELS: Varies between 130 and 145 PSIG.

   WATER-COOLED MODELS: Set at 135 PSIG. Adjust screw on top of water regulator valve to raise or lower head pressure.
7. Check gauge for suction line pressure:

   Varies around 18 PSIG, depending upon inlet water temperature and ambient air temperature.

AFTER SERVICING REFRIGERATION SYSTEM:
TORQUE REFRIGERATION ACCESS VALVE CAPS TO 60-75 INCH POUNDS.

8. Check drivemotor operation:

   Oil motor once per year.

   Normal operating temperatures are about 160-degrees F., which is hot to touch.

WARNING

Disconnect electrical power supply before removal procedures.

9. Check the elbow safety switch by removing the insulation halves, twisting the locking ring 90° and pulling out the switch assembly. The switch action can then be tested.

NOTE

The elbow safety switch is an ON-OFF switch that shuts off the compressor when an ice jam presses against the rubber diaphragm depressing the switch and opening the circuit. Melting action relieves pressure closing the circuit, lighting the start-reset pushbutton. The start-reset switch must then be pressed to start the automatic icemaking process.

10. Clean the air-cooled condenser, using vacuum cleaner, whisk broom or brush. Instruct customer to clean frequently and to be sure icemaker and fan motor are OFF.
11. Check that fan blades move freely, are not touching any surfaces and are not bent or out of balance.
12. Check for water leaks. Pour water down bin drain to be sure that drain line is open and clear.
13. Check the bin ice level switch.

NOTE

The bin ice level switch is an ON-OFF switch, that shuts OFF the compressor, when the ice pushes the actuator arm of thw switch IN. When the pressure releases the actuator arm, the switch CLOSES the circuit and RESTARTS the icemaker process.

14. Check the spout safety switch.

NOTE

The spout safety switch is manual reset and functions to immediately STOP the icemaking process if the bin ice level switch were to fail and begin to cause ice to jam up in the spout.

HQD550 MAINTENANCE AND CLEANING INSTRUCTIONS

NOTE

If the unit being serviced is equipped with a STEEL NEEDLE bearing, the breaker assembly should be REPLACED. Contact your local Scotsman Distributor for further information. Breakers with a NON-METALLIC bearing should be cleaned and the seal replaced TWICE PER YEAR. If the type of breaker bearing is not known, the breaker should be inspected. All A and B models were equipped with steel needle bearings. Most C Models have the non-metallic bearings.

15. Remove elbow insulation and remove three Allen head screws and spout retaining brackets from the freezer assembly end of the elbow and switch assembly.
16. Remove three Allen head screws and spout retaining brackets from the freezer assembly end of the elbow and switch assembly.

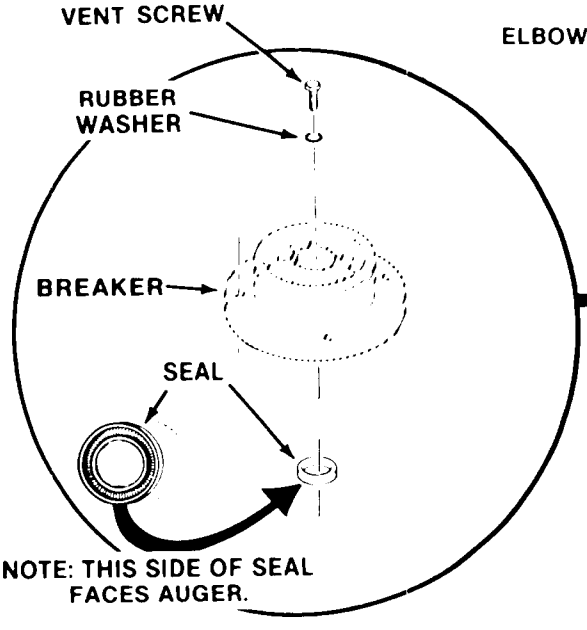

NOTE

In order to accomplish removal of the elbow and switch assembly in the next step, it may be necessary to further remove panels and disassemble the ice transport tube.

17. Lift the elbow and switch assembly and set aside to gain access to the top of the freezer assembly.
18. Remove four capscrews, lockwashers and the ice breaker assembly from the top of the freezer assembly for inspection.
19. Retain the O-ring for replacement during reassembly. Inspect the O-ring for cuts, tears or excessive wear, causes for replacement.
20. Replace the lip seal and inspect the top bearing seated in the ice breaker, wipe clean of mineral build up. Remove auger. Check seal and check auger for stains.

CAUTION

DO NOT force the auger and breaker together without having the vent hole open because pushing the breaker on with no air relief will cause the internal air pressure to force the grease seal away from the breaker.

(Continued on pg. 27)

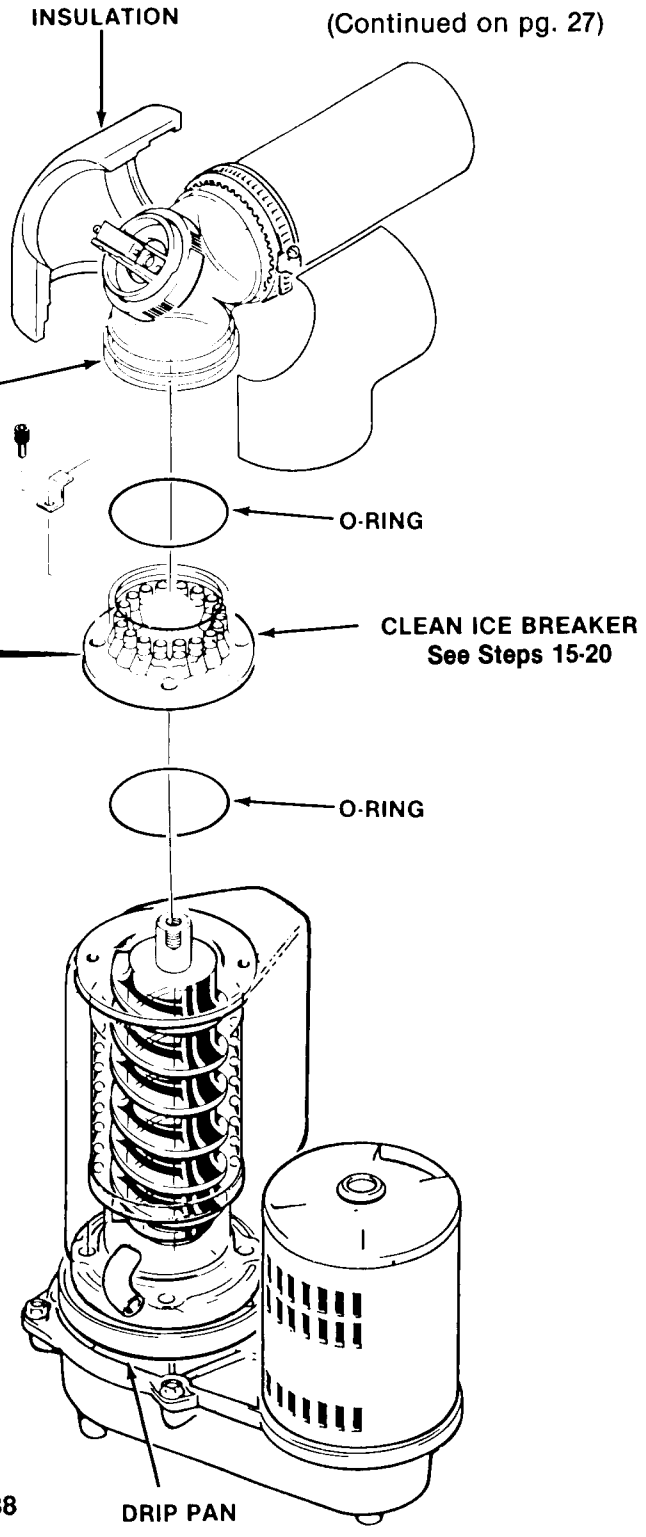

HQD550 MAINTENANCE AND CLEANING INSTRUCTIONS

CLEANING

1. Remove screws and push UP to unsnap catches and remove the top panel.
2. Remove screws and push OUT to unsnap catches and remove front panel.
3. Remove screws and back splash panel.
4. Remove screws and the left side panel.
5. Remove all ice from the cylindrical storage bin.

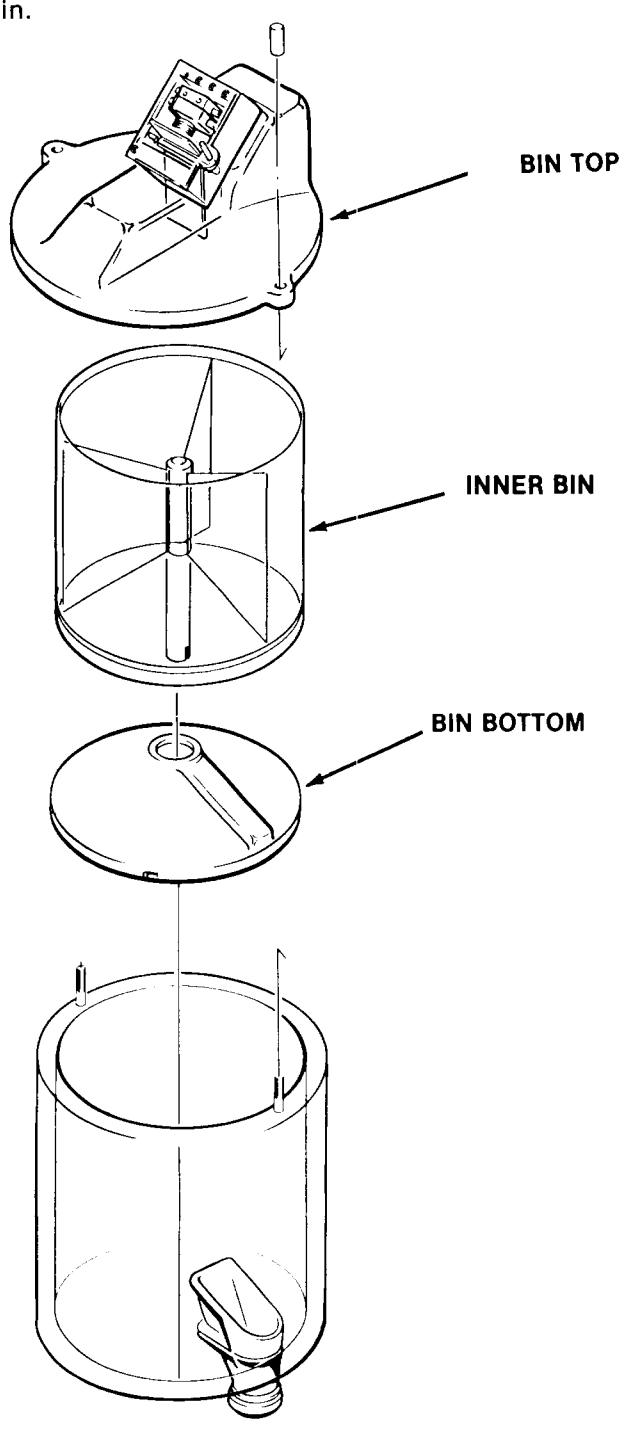

6. CLOSE the water supply shutoff valve or block the float in the water reservoir.
7. Use drain hose provided in the water feed tube and drain the reservoir.

WARNING

SCOTSMAN Ice Machine Cleaner contains Phosphoric and Hydroxyacetic acids. These compounds are corrosive and may cause burns. If swallowed, DO NOT induce vomiting. Give large amounts of water or milk. Call Physician immediately. In case of external contact flush with water. KEEP OUT OF THE REACH OF CHILDREN.

8. Prepare cleaning solution: Mix eight ounces of SCOTSMAN Ice Machine Cleaner with two quarts of hot water. (95^0F.-115^0F.)
9. Remove the cover to the water reservoir.
10. Slowly pour the cleaning solution into the water reservoir.
11. Reconnect electrical power.
12. Continue to slowly pour the solution into the water reservoir; maintain level just below the reservoir overflow.

REMOVE INNER BIN, AND BIN BOTTOM. CLEAN INNER BIN, BIN BOTTOM AND INSIDE OF BIN. POUR WATER INTO BIN TO RINSE DRAIN AND BE ASSURED DRAIN DRAINS IMMEDIATELY AND COMPLETELY.

13. Continue icemaking, using the cleaning solution, until all the solution is used up and the water reservoir is almost empty. DO NOT allow the icemaker to operate with empty reservoir.
14. Disconnect electical power, OFF.
15. Wash and rinse the water reservoir.
16. OPEN the water supply shutoff valve or remove the block from the float in the water reservoir.
17. Connect electrical power, ON.
18. Continue icemaking for at least 15 minutes, to flush out any cleaning solution. Check ice for acid taste — continue icemaking until ice tastes sweet.

HQD550 MAINTENANCE AND CLEANING INSTRUCTIONS

////////////////////////////////////WARNING////////////////////////////////

DO NOT USE Ice produced from the cleaning solution. Be sure none remains in the cylindrical storage bin.

//

19. Remove all ice from the cylindrical storage bin.

20. Add hot (95^0F. -115^0F.) water to the cylindrical storage bin and removable bin bottom. Throughly wash and rinse all surfaces within the bin.

21. Clean and sanitze the cylindrical storage bin and removable bin bottom each week.

SANITIZING

Sanitizing is an important phase of the icemaking and dispensing operation. The following sanitizing procedure should be performed after every repair or replacement of parts in the icemaker/dispenser in or through which water flows or drains and ice is made, spouted, stored or dispensed. Additional requirements for performing the sanitizing procedure should be followed in accordance with the requirements of the local Health Authorities.

////////////////////////////////////WARNING////////////////////////////////

This WARNING applies to the use of diluted household bleach as a sanitizing solution. Read this WARNING thoroughly before preparing sanitizing solution. DANGER: KEEP OUT OF THE REACH OF CHILDREN. If sanitizing solution should come in contact with eyes, flood with water. If taken internally, feed milk, contact a physician. If in contact with skin, flood with water. Do not use with other household cleaners, especially ammonia.

//

The following are directions for sanitizing with diluted household bleach, most local codes allow this type of sanitizer. Follow the directions of your local health department and use the sanitizer that is approved. Follow the directions and warnings of that sanitizer.

1. Mix one tablespoon of household bleach to two gallons of water in a container large enough to use with the parts that need to be sanitized.

2. Using rubber gloves, immerse the parts in the sanitizing solution and wash the parts, flushing the solution thoroughly in, over and through all parts and surfaces of the dispenser/icemaker parts being sanitized.

Note: If using a sanitizer that requires a contact time, be sure to allow the parts to soak for that time period.

3. Allow the parts to air dry.

4. Replace the sanitized parts in the reverse order of their removal.

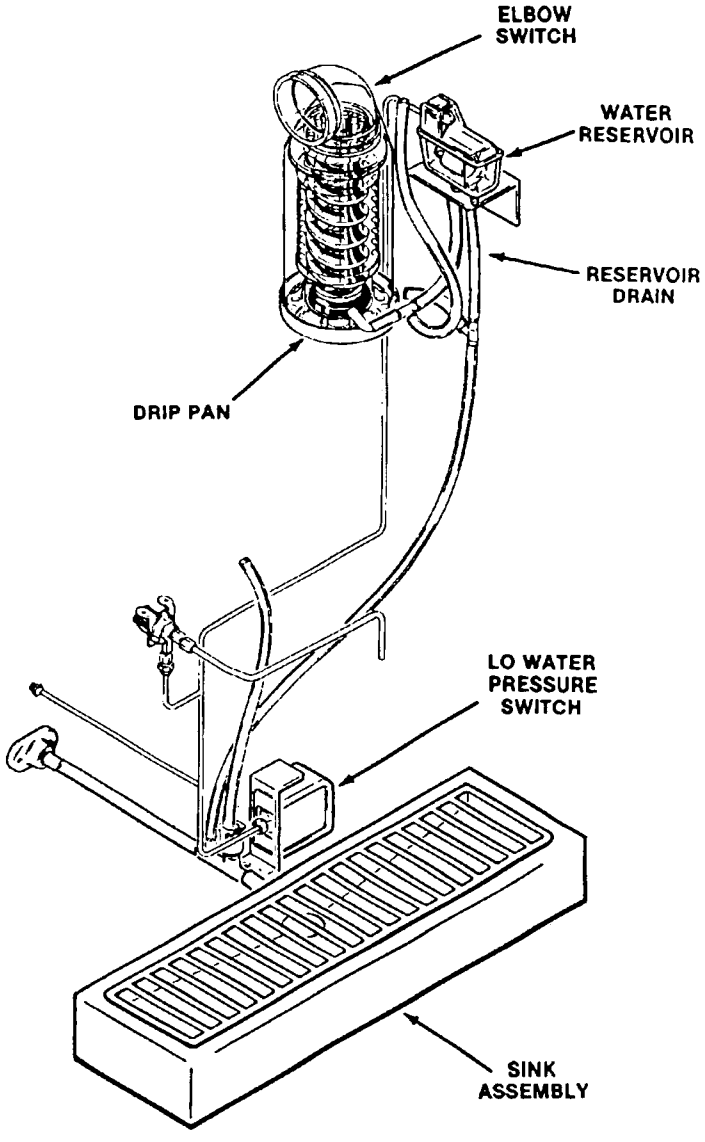

HQD550 SERVICE DIAGNOSIS

The Service Diagnosis Section is for use in aiding the serviceman in diagnosing a particular problem for pin-pointing the area in which the problem lies, thus an ever available reference for proper corrective action.

The following charts lists corrective actions for the causes of known symptoms of certain problems that can occur in the Dispensing System and the Icemaking - Refrigeration System.

DISPENSING SYSTEM

SYMPTOM	POSSIBLE CAUSE	CORRECTION
No water is dispensed. (Optional Kit)	Electrical power OFF.	Connect electrical power.
	Building water valve off.	Open valve.
	Defective water vend switch.	Replace switch.
	Defective water solenoid valve.	Replace defective valve.
No ice is dispensed.	Ice bin empty.	Check refrigeration system.
	Defective ice vend switch.	Replace switch.
	Broken or disconnected linkage.	Replace linkage.
	Bin drive motor defective.	Check, replace if defective.
	Jam in ice chute.	Remove obstruction.
Portion Control does not operate properly. Continues to operate when glass filler lever Assembly is held IN.	Timing module defective.	Replace defective timing module.
	Potentiometer switch defective. Loose connections or open wire leads to potentiometer.	Replace defective potentiometer. Check terminal wiring, tighten connection, repair wiring.
Icemaker will not run, red light on.	Bin has over filled due to:	
	Failed bin switch.	Replace switch.
	Compressor contactor stuck on.	Replace contactor.
	Bin Switch differential too short - unit cuts in too soon.	Replace Switch.
	Holding relay has been de-energized due to:	
	Power interruption.	Check power supply.
	Voltage drop at a holding circuit switch.	Check all switch contacts in holding circuit.

HQD550 SERVICE DIAGNOSIS

ICEMAKING — REFRIGERATION SYSTEM

SYMPTOM	POSSIBLE CAUSE	CORRECTION
Water Leaks.	Water level in reservoir too high.	Adjust water level to 1/4-inch below reservoir overflow pipe.
	Defective water seal.	Replace water seal.
	Gravity feed line leaking.	Check hose clamps, tubing.
	O-ring in spout casting leaks.	Remove spout casting, install replacement o-ring.
Excessive noise or chattering.	Mineral or scale deposit on auger and inner freezing walls.	For severe deposits, remove and manually polish auger, sand inner chamber walls of freezer barrel. For lighter concentration, use SCOTSMAN Ice Machine Cleaner periodically.
	Dirty air-cooled condenser.	Clean condenser and fan blades.
	Improper refrigerant pressures.	Adjust head pressure control W/C only to recommend setting or balance refrigerant charge.
	Intermittent water supply.	Check and clean optional water strainer. Check gravity feed line for air lock and remove air lock.
	Water level in reservoir too low.	See CORRECTION for water leaks above.
	Gearmotor loose on frame.	Tighten gearmotor mounting bolts.
	Gearmotor end-play or worn bearing.	Repair or replace worn bearing
	Top bearing worn.	Check/replace breaker.
	Compressor not snug on rubber mounts.	Repair or replace rubber mounts.
Squeal noises in freezer.	Ice is too hard in freezer.	Raise water level in reservoir. Check suction pressure and adjust as necessary.

HQD550 SERVICE DIAGNOSIS

ICEMAKING — REFRIGERATION SYSTEM

SYMPTOM	POSSIBLE CAUSE	CORRECTION
Low ice production.	Loss of refrigerant. Under or over-charge of refrigerant.	Check system and recharge. See NAMEPLATE for correct charge.
	Drive motor weak.	Replace drivemotor.
	Dirty or plugged condenser.	Clean condenser.
	Low water level in reservoir.	Check float.
	Partial restriction in capillary tube or drier.	Moisture in system. Overcharge of oil in system. Remove charge. by blowing back thru cap tube. Replace drier and recharge. See NAMEPLATE.
	Optional water strainer partially plugged.	Remove and clean strainer screen.
	Corroded to stained auger, due to water condition. Lime build up in freezer.	Remove and clean auger, or use SCOTSMAN Ice Machine Cleaner. See Maintenance & Cleaning.
Icemaker operates, but makes no ice.	Loss or undercharge of refrigerant.	Check for gas leaks, evacuate & recharge.
	Water not entering freezing Chamber. Plugged strainer or water inlet line.	Check and clean. Check, remove possible air lock in gravity feed line.
	Moisture in system.	Check, evacuate, replace drier, SEE NAMEPLATE & recharge system.
	Water seal leaks.	Replace water seal.
	Water turned OFF while icemaker was operating.	Freezer inlet water line froze shut. Shutdown and defrost icemaker.
Icemaker will not operate.	Manual safety switch tripped.	Reset switch.
	Blown fuse.	Replace fuse and check for cause of blown fuse.
	Low pressure control activiated.	Check for cause.
	Head pressure control activated.	Check cause of decreased or loss of water to water-cooled condenser.
	Bin ice level switch stuck, pushed IN.	Repair or replace switch.
	Electrical power disconnected.	Connect electrical power ON.

HQD550 ADJUSTMENT PROCEDURES

ADJUSTMENT OF THE LEG LEVELERS

When the Icemaker is installed with legs, the legs must be adjusted to level the cabinet. The cabinet must be leveled in the front-to-back and side-to-side directions. This adjustment should be performed during initial installation of the cabinet and anytime the cabinet is moved from the original location to another site.

1. Using a 1-1/8″ open-end wrench, and a carpenter's bubble level, rotate the threaded leveler in each leg to RAISE or LOWER the cabinet until the cabinet is level in the front-to-back direction.
2. Repeat step A, for leveling in the side-to-side direction.
3. Recheck both the front-to-back and the side-to-side leveling and repeat adjustments, as necessary.

ADJUSTMENT OF THE WATER REGULATOR ASSEMBLY

The correct head pressure on water-cooled models is 135 PSIG. Adjustments can be performed on the water regulator assembly to increase or decrease the head pressure.

To adjust the water regulator assembly:

1. To INCREASE the head pressures: Rotate the adjusting screw, on the water regulator assembly COUNTER-CLOCKWISE.
2. To DECREASE the head pressure: Rotate the adjusting screw, on the water regulator assembly CLOCKWISE.

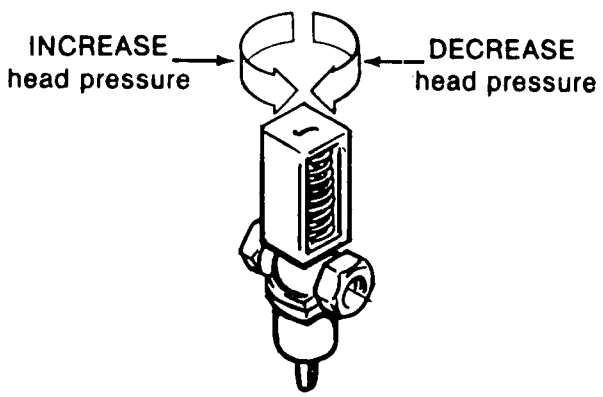

ADJUSTMENT OF THE WATER RESERVOIR FLOAT

The correct water level in the water reservoir should be at the level of the raised molded line, on the side of the body of the water reservoir. When the water line level is above or below the raised molded line, adjustment can be performed to raise or lower the water level by bending the metal arm of the float inside the water reservoir.

To adjust the water reservoir float:

1. To RAISE the water level:
   Hold one end of the metal arm of the float and slightly bend the float up.
2. To LOWER the water level:
   Hold one end of the metal arm of the float and slightly bend the float DOWN.
3. To perform MAJOR adjustment:
   When repair or replacement has been performed and the water level line betweeen the water reservoir and the freezer assembly has been substantially altered:
   a. Loosen the three screws and lockwashers which attach the reservoir bracket and water reservoir to the freezer mount.
   b. Move the reservoir bracket UP or DOWN to properly position the water line level within the freezer. The proper water level within the freezer is 1/2″ - 3/4″ below the top of the auger.
   c. When proper water level within the freezer is adjusted, re-tighten screws attaching the water reservoir bracket to the freezer mount.

HQD550 REMOVAL AND REPLACEMENT PROCEDURES

HQD550's have been manufactured in "A", "B" and "C" Models (as in model HQD550AE-1A vs. HQD550AE-1C.) The following instructions are designated for either "A" ,"B" or "C" models. Be certain to check your model number and refer to the appropriate steps.

Read the instructions thoroughly before performing any Adjustment or Removal and Replacement Procedures.

WARNING

Be sure the electrical power supply and the water supply are OFF, BEFORE starting any of the following REMOVAL AND REPLACEMENT procedures as a precaution to prevent possible personal injury or damage to equipment.

REMOVAL AND REPLACEMENT OF THE AUGER, WATER SEAL, O-RING, ICE BREAKER ASSEMBLY AND FREEZER ASSEMBLY (A ,B and C MODELS)

To remove the auger, water seal, o-ring and ice breaker assembly:

1. Shut off water supply to the icemaker/dispenser at the building source.
2. Disconnect or shut-off electrical power to the icemaker at the building source.
3. Remove screws and push UP to unsnap catches and remove top panel.
4. Remove screws and remove the front panel.
5. Remove retaining nuts and remove bin top.
6. Separate insulation halves and remove from the elbow safety switch.
7. Remove three socket head screws and spout retaining brackets from the end of the spout assembly at the top of the freezer assembly.

NOTE 1: *To service icebreaker/top bearing only, do steps 1-9 and 11 only. Refer to page 36 for ice breaker service. Reverse disassembly procedures to re-assemble.*

NOTE 2: *The control box may be removed from its mounting position for better access to the gearmotor and freezer assembly.*

8. Lift the elbow safety switch and spout UP, off of the freezer assembly.
9. Retain the o-ring for replacement during reassembly. Inspect for cuts, tears or excessive wear, causes for replacement.
10. Remove hose clamp and disconnect the water feeder tube from the reservoir, at the freezer to drain the reservoir and freezer of water.
11. Remove four capscrews, lockwashers and the ice breaker assembly from the top of the freezer assembly.
12. Retain the o-ring for replacement during reassembly. Inspect for cuts, tears or excessive wear, causes for replacement.
13. Remove the auger. If necessary a bolt can be threaded into the top end of the auger from the freezer and a hand tool used to pull on the bolt to remove the auger.

To remove Water Seal only, omit steps 15, 16, and 17.

TO REMOVE FREEZER ASSEMBLY:

14. Pull back permagum around freezer base mounting bolts and remove four screws and flatwashers. Separate the freezer assembly, gasket and adapters, from the drivemotor assembly.
15. Bleed off or blow the refrigerant charge through the Schrader valve.
16. Unsolder and disconnect the refrigerant suction line at the compressor, and the associated capillary line at the drier.
17. Remove the freezer assembly from the chassis.

A and B MODELS

18. Using a suitable length and size wooden dowel or stick inserted through the top of the open freezer assembly, tap the stationary piece water seal out the bottom of the freezer assembly.

C MODEL

18. Remove snap ring from inside bottom of evaporator assembly. Using a suitable length and size of wooden dowel or punch inserted through the top of the open freezer assembly, tap the stationary portion of the water seal out the bottom of the freezer assembly.

HQD550 REMOVAL AND REPLACEMENT PROCEDURES

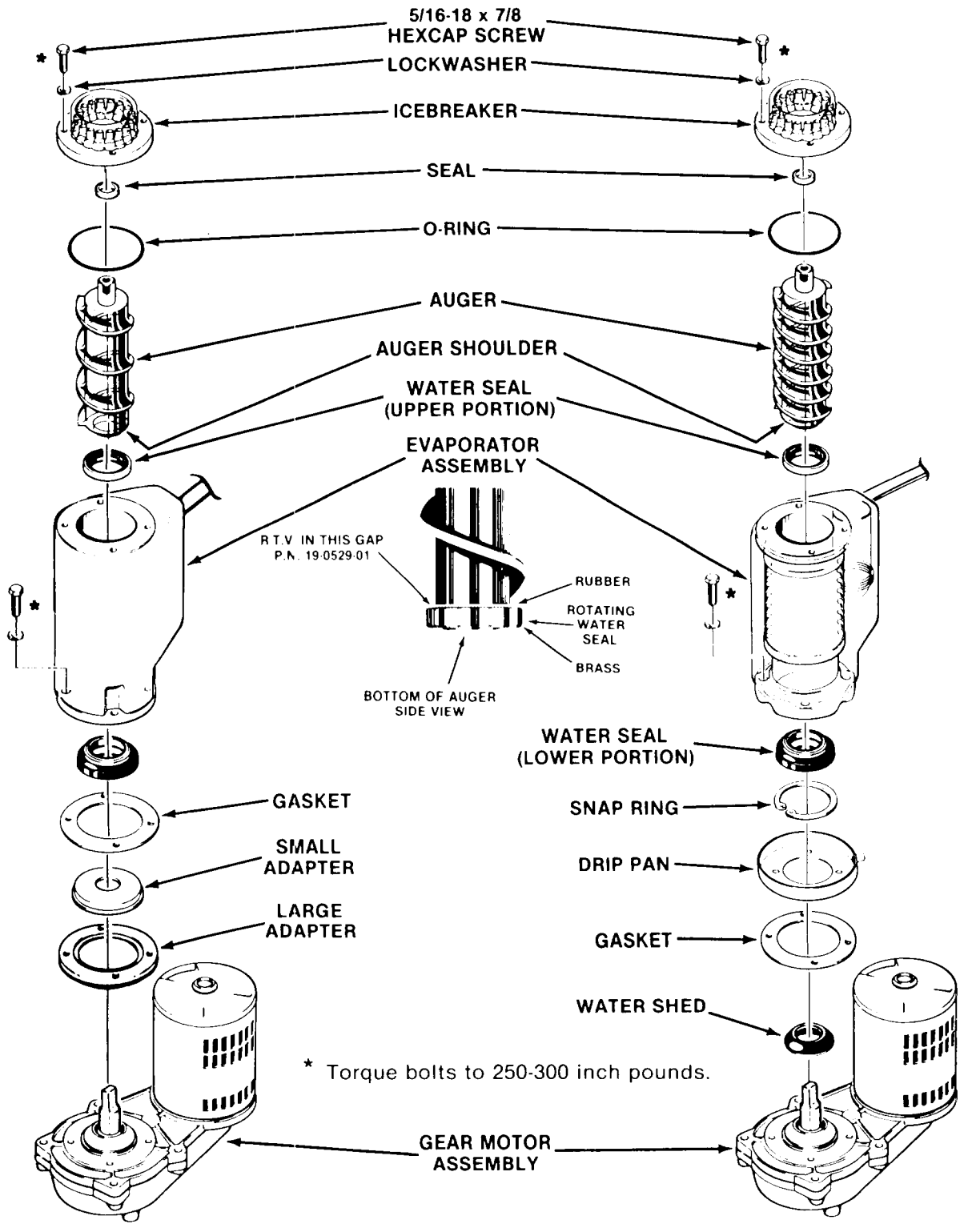

A and B MODELS

C MODEL

19. Replace the water seal any time it has been removed.

CAUTION

The lower two-part water seal is a precise seal and fitting. Any damage or wear will cause a failure. It is recommended that the lower two-part water seal be replaced any time there is a question of condition.

A and B MODELS

20. Replace the parts starting with the stationary part of the water seal. Carefully inspect it prior to assembly. Insert this half of the water seal into the bottom of the freezer. Then insert the brass freezer adapter into the bottom of the freezer tube and push it in as far as it will go.

C MODEL - OR REPLACEMENT FREEZER

20. Replace the new stationary portion of the two-part water seal in the bottom of the freezer assembly and press in far enough to install the snap ring. **IMPORTANT:** pull water seal back down against snap ring all the way around the freezer.

A and B MODELS

21. Mount the freezer and gasket to the gear motor case. Be certain that the gearmotor is in good working condition and that the large plastic adapter is in place on the gearbox.

C MODEL - OR REPLACEMENT FREEZER

21. Mount the freezer, drip pan and gasket to the gearmotor case. Check to be sure the gearmotor is in good condition and the water shed is in place around the output shaft.

22. Apply Scotsman part number 19-0529-01 RTV silicone rubber to the auger shoulder before pushing on the water seal. Place just enough silicone on to the auger, so that when the water seal is placed on the auger, the gap between the auger shoulder and water seal is completely filled with silicone.

    The silicone must be allowed to "set-up" or dry on the surface before any water can be added to the freezer.

CAUTION

If any silicone gets onto the mating surfaces of the water seal, the seal is ruined, and cannot be used.

23. Install auger.

24. Replace breaker.

25. Reassemble ice transport tube, insulation, and bin top assembly in reverse order of disassembly.

CAUTION

DO NOT force the auger and breaker together without having the vent hole open because pushing the breaker on with no air relief will cause the internal air pressure to force the grease seal away from the breaker.

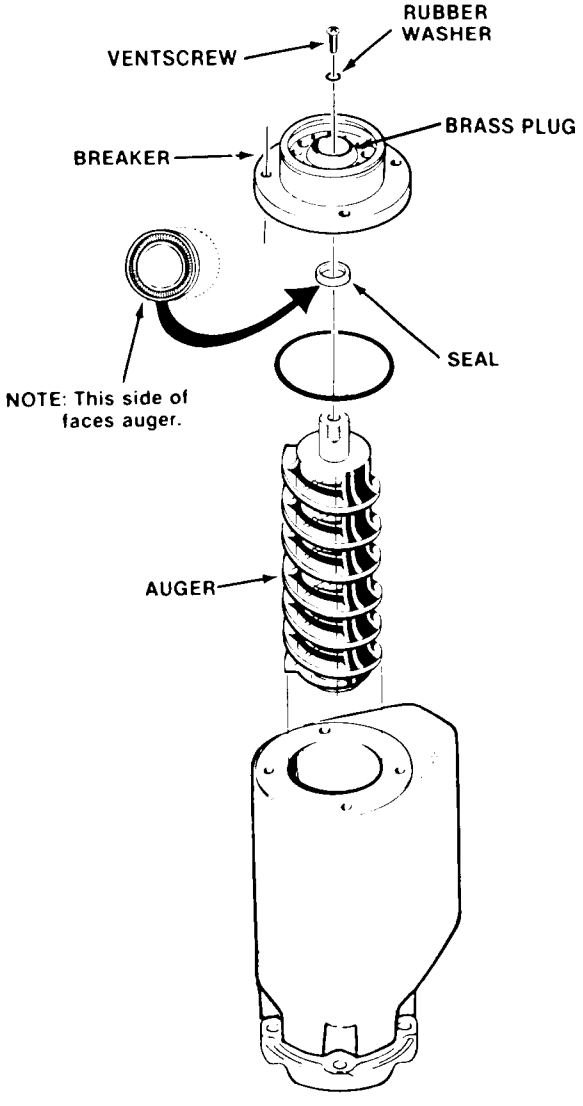

HQD550 REMOVAL AND REPLACEMENT PROCEDURES

WARNING

Disconnect electrical power supply before removal procedures.

REMOVAL AND REPLACEMENT OF THE COMPRESSOR ASSEMBLY

To remove the compressor assembly:

1. Remove two screws, push UP to unsnap catches and remove the top panel.
2. Remove two screws, pull OUT to unsnap catches and remove front panel.
3. Remove screws and back splash panel.
4. Remove screws and sink assembly; then, remove hose clamp and disconnect drain hose. Remove the sink assembly and grill from the cabinet.
5. Bleed off or blow the refrigerant charge through the schrader valve.
6. Remove the cover from the terminal box on the compressor; then, disconnect electrical leads from the compressor.
7. Unsolder and disconnect the refrigerant suction line and the discharge line from the compressor.
8. Unsolder the process header from the compressor and retain for installation on the replacement compressor.
9. Remove three nuts, washers, mounting sleeves and grommets and the compressor from the chassis base.

To replace the compressor assembly, reverse the removal procedure.

REMOVAL AND REPLACEMENT OF THE CONDENSER ASSEMBLY — AIR-COOLED

To remove the condenser assembly:

1. Remove screws and left side panel; then, remove screws and splash panel to gain access to the condenser assembly. Bleed off refrigerant charge.
2. Unsolder and disconnect refrigeration lines from the condenser.
3. Unsolder and remove the drier from the refrigerant line connected to the condenser.
4. Remove screws, lockwashers and air-cooled condenser from the chassis base.

To replace the air cooled condenser, reverse the removal procedure.

REMOVAL AND REPLACEMENT OF THE CONDENSER ASSEMBLY — WATER-COOLED

To remove the condenser assembly:

1. Remove screws and left side panel; then, remove screws and splash panel to gain access to the condenser assembly. Bleed off refrigerant charge.
2. Check to be sure building source water inlet supply shutoff valve is OFF.
3. Disconnect the water-cooled condenser inlet water line at the water regulator assembly outlet fitting.
4. Unsolder the refrigerant capillary tube at the drier.
5. Disconnect the water drain line at the top of the water-cooled condenser.
6. Unsolder the refrigerant line connecting the top of the water-cooled condenser to the process header.
7. Remove two screws and washers and the water-cooled condenser from the chassis base.

To replace the water-cooled condenser, reverse the removal procedure.

NOTE

Always install a replacement drier, anytime the sealed refrigeration system is opened. Do not replace the drier until all other repair or replacement has been completed.

HQD550 REMOVAL AND REPLACEMENT BREAKER/BEARING/WATER SEAL ASSEMBLY

INSPECTION:

If, when the breaker is removed from the evaporator, the yellow water seal stays on the auger, replace the breaker. If the auger shaft is rough or scored, it and the ice breaker must be replaced. If the auger shaft can be cleaned up, do NOT use an abrasive material; a nylon scouring pad used for cleaning dishes will do a very good job.

The bearing in the breaker is not replaceable. The breaker must be replaced when the bearing is worn past 1.009"ID.

The method of retaining the water seal in the nugget ice breaker was changed in early 1988.

The newest breakers have, at the water seal mounting location, a "lip" protruding into the inner diameter of the breaker.

This "lip" is at the bottom of the seal, retaining the seal in the breaker. The seal is retained so positively, that it cannot be removed without ruining it.

TO REPLACE THE SEAL IN THE BREAKER:

1. Pull old seal out with a pliers.
2. Place new seal on auger shaft, open side down.
3. Push breaker onto auger and seal as far as it will go.
4. Remove breaker and seal from auger, use your thumbs to push the seal all the way into the breaker.

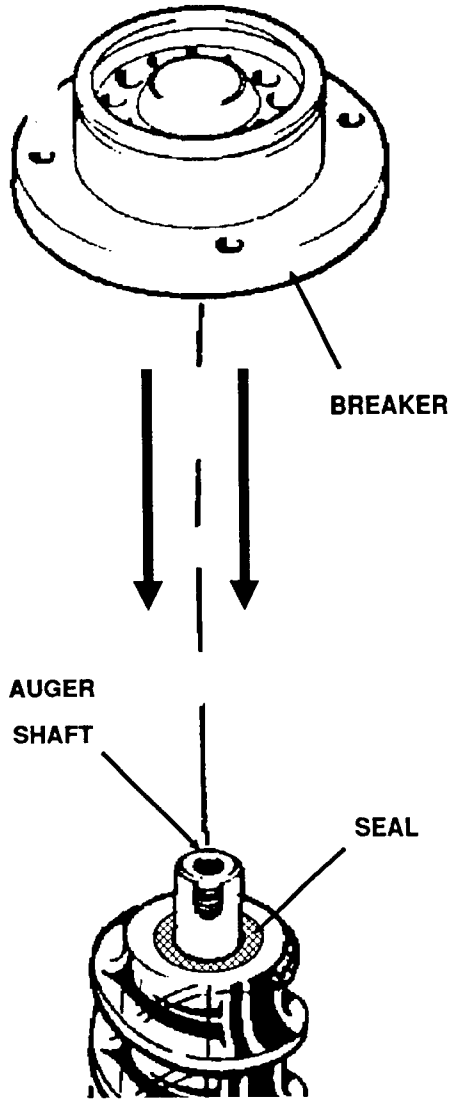

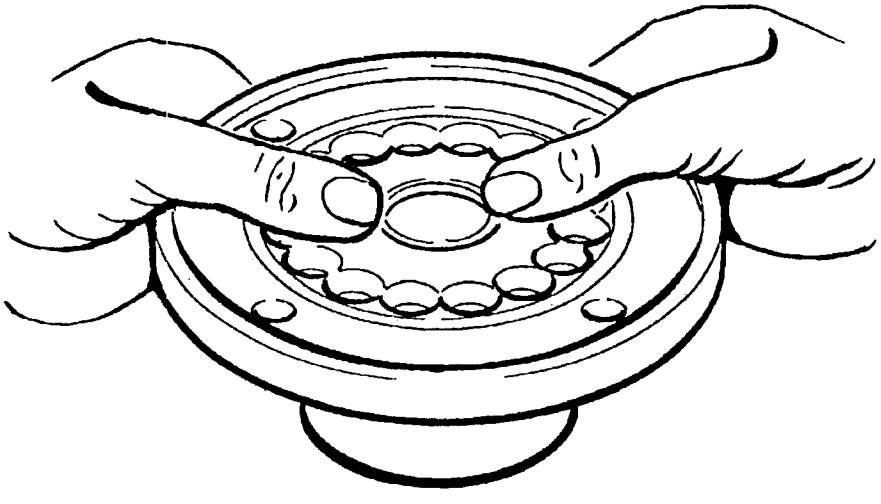

HQD550 REMOVAL AND REPLACEMENT PROCEDURES

WARNING

Disconnect electrical power supply before removal procedures.

REMOVAL AND REPLACEMENT OF THE DRIER

NOTE: Always install a replacement drier, anytime the sealed refrigeration system is opened. Do not replace the drier until all other repair or replacement has been completed.

To replace the drier:

1. Remove four screws and slide the backsplash assembly out from behind the dispensing assembly.
2. Remove screws attaching sink assembly to cabinet, then, remove hose clamps and disconnect drain hose, behind the sink assembly. Remove the sink assembly and grill from the cabinet.
3. Bleed off or blow the refrigerant charge through the Schrader valve.
4. Remove attaching hardware and drier brace or strap from the drier.
5. Unsolder refrigeration lines at both ends of the drier.

To replace the drier:

CAUTION

1. If the factory seal is broken on the replacement drier, exposing it to the atmosphere more than a few minutes, the drier will absorb moisture from the atmosphere and lose substantial ability for moisture removal.

2. Be sure the replacement drier is installed with the arrow positioned in the direction of the refrigerant flow.

1. Remove the factory seals from the replacement drier and install the drier in the refrigerant lines with the arrow positioned in the direction of the refrigerant flow.
2. Solder the drier into the lines, two places.
3. Secure drier with the drier brace or strap.
4. Purge the system and check for leaks.
5. Thoroughly evacuate the system to remove moisture and non-condensables.
6. Charge the system with refrigerant, by weight. SEE NAMEPLATE.
7. Replace and attach the sink assembly and backsplash assembly.

REMOVAL AND REPLACEMENT OF THE INNER BIN DRIVE MOTOR ASSEMBLY

To remove the drive motor:

1. Remove screws and splash panel to prepare for removal of the drive motor.
2. Remove four mounting plate screws and remove the drive motor from the cabinet.

To replace the drive motor assembly, reverse the removal procedure.

REMOVAL AND REPLACEMENT OF THE FAN MOTOR ASSEMBLY

To remove the fan motor assembly:

1. Remove four screws and slide the backsplash assembly from behind the dispensing assembly.
2. Disconnect electrical lead from the fan motor.
3. Remove two screws and lockwashers securing the fan motor bracket to the chassis base and remove the fan motor assembly and bracket from the cabinet.
4. Remove the nut from the end of the fan motor shaft and remove the fan blade.
5. Remove four screws securing the fan motor to the motor bracket and separate the motor from the bracket.

To replace the fan motor assembly, reverse the removal procedure.

HQD550 REMOVAL AND REPLACEMENT PROCEDURES

REMOVAL AND REPLACEMENT OF THE ELBOW AND SWITCH ASSEMBLY

To remove the elbow and switch assembly:

1. Disconnect the electrical supply to the icemaker at the circuit breaker or fuse box.

////////////////////// WARNING //////////////////////

Be sure the electrical power supply to the icemaker is OFF before proceeding with removal procedures.

//

2. Remove screws and remove top panel.
3. Remove insulation halves from the elbow switch assembly.
4. Loosen the screw on the screw clamp and U-channel securing the ice transport tube to the elbow and safety switch.
5. Separate the ice transport tube from the elbow.
6. Remove bolt and washer and remove switch support from the ice breaker.
7. Remove three Allen head screws and spout retaining brackets from the freezer assembly and elbow and switch assembly.
8. Lift the elbow and switch assembly UP to clear the top of the freezer assembly.
9. Remove screws and the switch from the switch actuator housing.
10. Rotate the retainer ring 90-degrees to unlock the retainer ring and the switch actuator housing from the elbow assembly and separate the parts from the elbow.
11. Inspect the rubber diaphragm for cuts, tearing or excessive wear.

To replace the elbow and switch assembly, reverse the removal procedure.

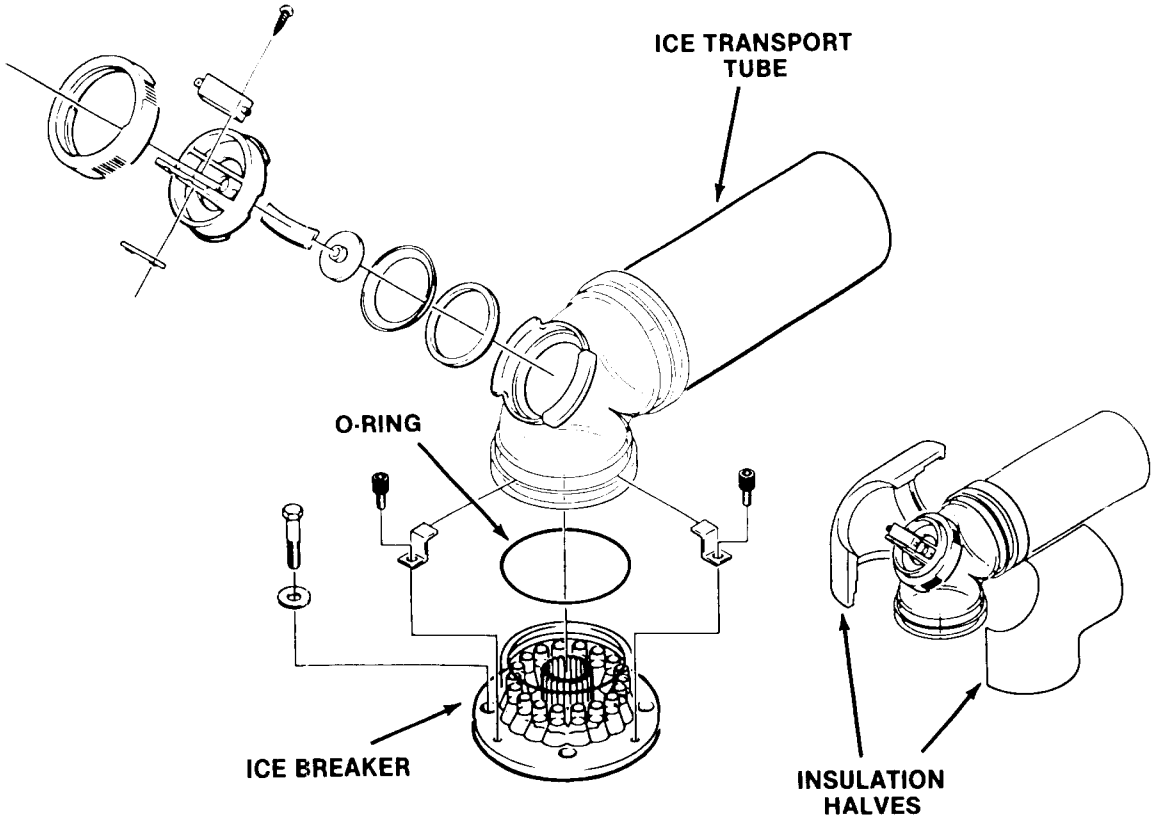

HQD650 REMOVAL AND REPLACEMENT PROCEDURES

WARNING

Disconnect electrical power supply before removal procedures.

REMOVAL AND REPLACEMENT OF THE WATER PRESSURE SWITCH ASSEMBLY

To remove the low water pressure switch assembly:

1. Remove screws and the splash panel.
2. Disconnect electrical leads in the control box from the low pressure switch.
3. Unscrew the flare nut fitting and disconnect the low pressure control and washer from the bracket.

To replace the low water pressure control assembly, reverse the removal procedure.

REMOVAL AND REPLACEMENT OF THE WATER REGULATOR ASSEMBLY — WATER-COOLED MODELS

To remove the water regulator assembly:

NOTE: Always install a replacement drier, anytime the sealed refrigeration system is opened. Do not replace the drier until all other repair or replacement has been completed.

1. Remove screws and splash panel.
2. Bleed off or blow the refrigerant charge through the schrader valve.
3. Unsolder the capillary line from the water regulator, at the process header.
4. Disconnect the water inlet line at the pipe fitting on the pipe nipple assembly bracket.
5. Unscrew the flare nut fitting, on the water regulator, and disconnect the water line from the water regulator to the water-cooled condenser.
6. Remove screws, lockwashers and the water regulator assembly from the chassis base.

To replace the water regulator assembly, reverse the removal procedure.

REMOVAL AND REPLACEMENT OF THE WATER RESERVOIR ASSEMBLY

To remove the water reservoir assembly:

1. Push UP to unsnap catches and remove the top panel.
2. Pull OUT to unsnap catches and remove the front panel.

NOTE: Be prepared with container or rags, to catch water left in lines, when lines are disconnected in next steps, to prevent draining water on parts, components, electrical lines, etc.

3. Disconnect the water inlet tube from the water reservoir assembly.
4. Remove two corbin clamps and two tubes from the bottom of the water reservoir assembly.
5. Unscrew and remove the plastic wingnut from the bottom of the water reservoir assembly.
6. Lift and remove the water reservoir assembly from the mounting bracket.

To replace the water reservoir assembly, reverse the removal procedure.

NOTE: Check that the installed replacement water reservoir assembly float moves freely. The correct water level in the water reservoir is 3/8-inch below the raised molded line, on the side of the body of the water reservoir.

HQD550 REMOVAL AND REPLACEMENT PROCEDURES

REMOVAL AND REPLACEMENT OF THE GEAR MOTOR

WARNING

Be sure the electrical power supply to the icemaker is OFF before proceeding with removal procedures.

To remove the auger drivemotor:

1. Disconnect electrical power leads from the motor.
2. Unscrew four capscrews securing motor to gearcase.
3. Lift off motor winding from the gear reducer.
4. Use a pry bar to remove rotor and rotor bearing from the gearcase.
5. Examine grease seal in gearcase. Replace if worn. Add grease to seal and bearing housing before re-assembly.

To replace, reverse the removal procedures.

NOTE

Motors must be exchanged complete. DO NOT mix rotors, housings or windings.

REMOVAL AND REPLACEMENT OF THE GEAR MOTOR ASSEMBLY

WARNING

Be sure the electrical power supply to the icemaker is OFF before proceeding with removal procedures.

CAUTION

SHUT OFF water supply to icemaker.

To remove the gear motor assembly:

1. Refer to Removal and Replacement of the Elbow & Switch Assembly and perform steps to gain access to the freezer assembly.
2. Thread suitable length bolts, having No. 5/16-18 UNC-2B threads, into thread hold in the top of the auger. Grasp bolt head with hand tool and pull auger out.
3. Unbolt freezer from gear motor assembly, lift up and off gear motor.
4. Remove the drivemotor cover and disconnect the three electrical wire leads.
5. Remove bolts holding gear motor plate to the machine base.
6. Lift the gear motor from the machine base.

To replace the gear motor assembly, reverse the removal procedure.

*Torque bolts to 250-300 inch pounds.

REPAIR OF THE GEAR MOTOR ASSEMBLY

1. Remove (6) cap screws to prepare to open gearcase.
2. Pry the two cases apart. Inspect the internal parts, look for:
   -Condition and quality of lubricant. (The proper oil level is flush with the top of the output (biggest) gear.)
   -Gear and gear shaft condition Woodruff key between output gear and shaft
   -Grease seals, back to back
   -Vent hole open
   -Thrust bearing intact.

   Be sure to count and retain the spacer washers as they come out of the gearbox.

   Replace the parts as required, using the part numbers found in the parts list section of this manual. Replace the gears into a CLEAN bottom gearcase, replacing the spacer washers in the same quantity as they were upon disassembly. If no count was kept, refer to the parts illustration.

NOTE: Some bearing grease should be placed in all bearings before assembly to insure proper lubrication upon start-up.

To reassemble:

1. Set top gearcase on gears and spacers and oil. Output gear when installed must be assembled with the flush, machined side DOWN and the protruding bossed center UP. Be sure O-ring is in place.
2. Replace gearcase cover. Drive in alignment pins before tightening cap screws and torque at 250-300 inch pounds.
3. Bench test the gearmotor assembly.

   Test for noise, amp draw (must not be in excess of icemaker nameplate for gearmotor) and oil leaks.

   Return gearbox to the unit. Be certain all mounting surfaces are clean and reassemble gearbox to chassis and freezer assembly.

   If the freezer water seal begins to leak, removal of the auger is required in order to replace the top bearing and water seal. AT THE SAME TIME, it would be recommended to remove the gearmotor assembly, open it up and inspect it.

HQD550 REMOVAL AND REPLACEMENT PROCEDURES

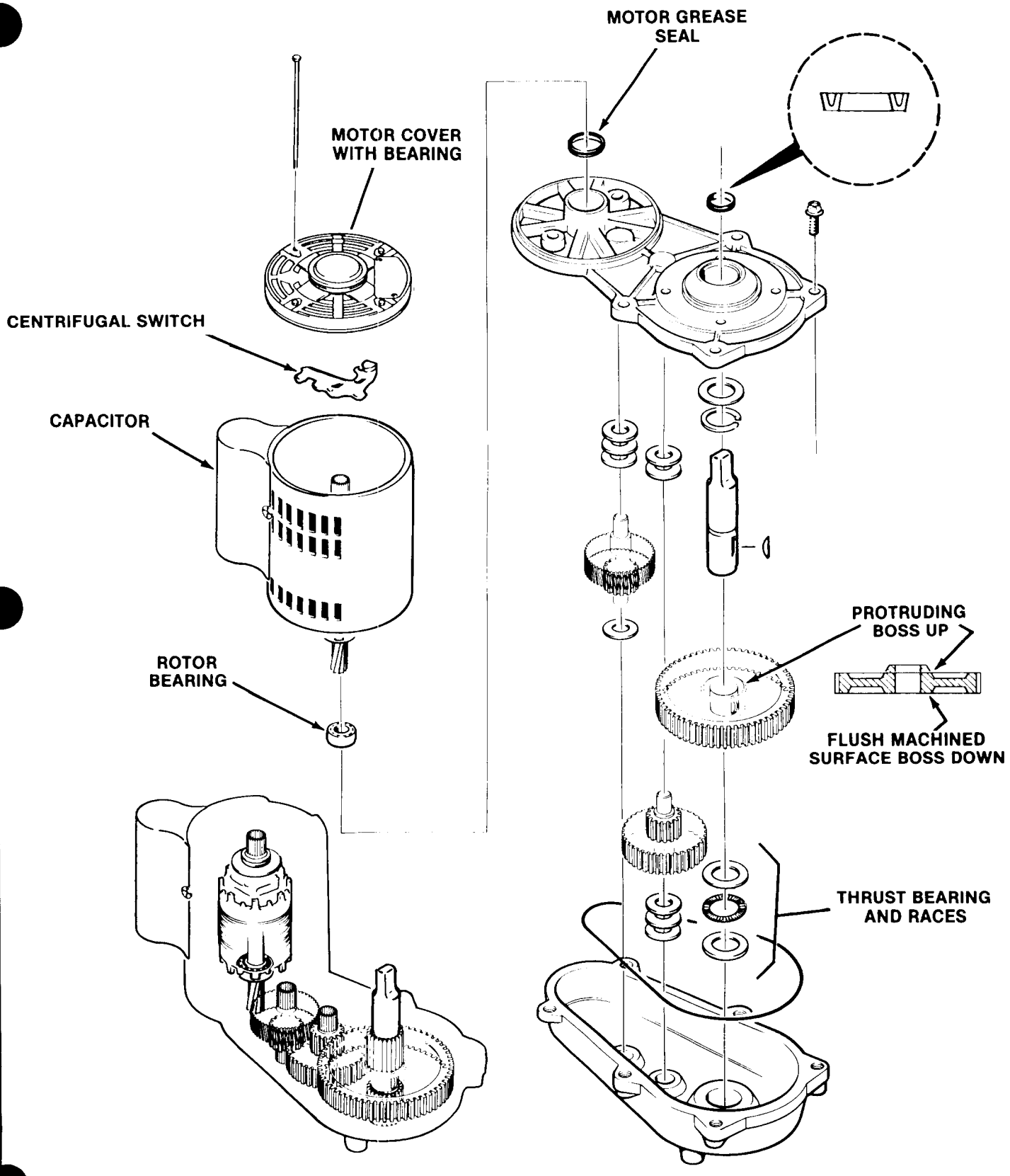

HQD650

TABLE OF CONTENTS

GENERAL INFORMATION & INSTALLATION
Introduction 2
For the Installer 3
KWB3 Wall Mount Kit 6
KV5H-3DA Valve Kit 8
For the Electrician 9
For the Plumber 10
Final Check List 10

OPERATION
Start-Up 12
Dispensing System 14
Icemaker 15
Electrical/Refrigeration 15

COMPONENT DESCRIPTION 17

MAINTENANCE & CLEANING INSTRUCTIONS
Icemaker 23
Cleaning 25
Sanitizing 26

SERVICE DIAGNOSIS 27

ADJUSTMENT PROCEDURES
Leg Levelers 31
Water Regulator Assembly 31
Water Reservoir Float 31

REMOVAL AND REPLACEMENT PROCEDURES
Auger, Water Seal, O-Ring, Ice Breaker Assembly and Freezer Assembly 32
Compressor Assembly 35
Condenser Assembly - Air-Cooled 35
Condenser Assembly - Water-Cooled 35
Drier 37
Inner Bin Drive Motor 37
Fan Motor Assembly 37
Elbow & Switch Assembly 38
Water Pressure Switch Assembly 39
Water Regulator Assembly - Water-Cooled Models 39
Water Reservoir Assembly 39
Gear Motor Assembly 40

LIST OF ILLUSTRATIONS

Specifications 3
HQD650 - Component Location 4
Location and Leveling 5
KWB3 Wall Mount Kit 6
Electrical Connections 9
Water and Drain Connections 10
Final Checklist 11
Operation 13
Component Description 16
Maintenance and Cleaning 24
Removal and Replacement 33-41

PARTS LIST AND WIRING DIAGRAMS 1
(Printed in Yellow)

PARTS LIST:
Cabinet Assembly 3
Potable Water and Drainage System 4
Ice Dispensing System 5
Air-Cooled Condenser Assembly 6
Water-Cooled Condenser Assembly 7
Elbow and Switch Assembly 8
Freezer Assembly 9
Drivemotor Assembly 10
Compressor Assembly 11
Bin Top Assembly 12
Control Box Assembly 13
KV5H-30A Valve Kit 14

WIRING DIAGRAMS:
HQD650AE-1B (115/60/1) Air-Cooled 16
HQD650WE-1B (115/60/1) Water-Cooled 17
HQD650AE-1C (115/60/1) Air-Cooled 18
HQD650WE-1C (115/60/1) Water-Cooled 19

THIS PAGE
INTENTIONALLY
LEFT BLANK

HQD650 GENERAL INFORMATION AND INSTALLATION

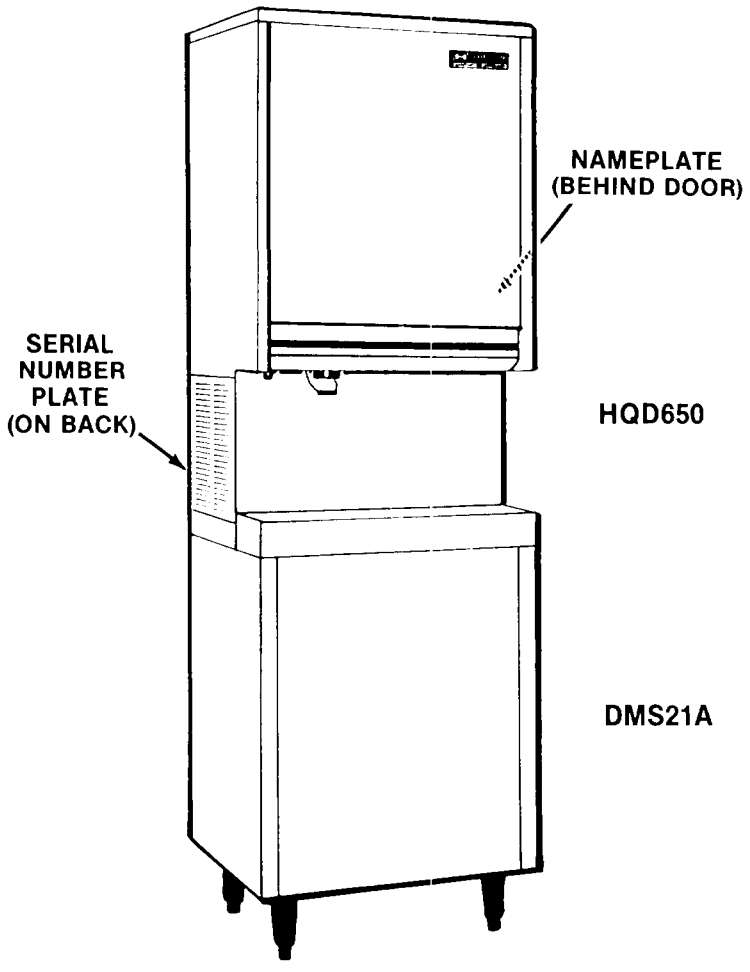

DESCRIPTION

This attractive compact cabinet has textured metal with a sandalwood enamel finish, cork pattern vinyl upper front panel and sienna accent trim. Also, an optional stainless steel cabinet finish is available. Both cabinets have up-to-date styling, and easily removable panels for easy access to electrical and mechanical components.

SELF-CONTAINED STORAGE BIN

These high quality ice dispensers store their own ice supply in a cylindrical insulated ice storage bin.

NAME PLATE

MODEL NUMBER
SERIAL NUMBER
A.C. SUPPLY VOLTAGE
MINIMUM CIRCUIT AMPACITY — WIRES
MAXIMUM FUSE SIZE * — HERTZ
HEATER WATTS — PHASE
REFRIGERANT — CHARGE — OZ

MOTORS	VOLTS	R.L.A./F.L.A.	W/HP.	L.R.A.
COMPRESSOR				
FAN				
DRIVE				
OTHER				

DESIGN PRESSURE — LOW — HIGH
* OR HACR TYPE CIRCUIT BREAKER

SCOTSMAN

SERIAL NUMBER PLATE

MODEL NUMBER
SERIAL NUMBER
VOLTS/HERTZ/PHASE
MAXIMUM FUSE SIZE
REFRIGERANT — CHARGE — OZ

INTRODUCTION

This manual provides the specifications and the step-by-step procedures for the installation, start-up and operation, and the maintenance and cleaning for the SCOTSMAN HQD650 high quality ice dispenser.

This product qualifies for the following listings

This icemaker has been engineered to our rigid safety and performance standards. The National Sanitation Foundation (NSF) seal, signifies that it is listed with the NSF and that it complies with the materials and construction standards of the NSF. In addition, the Underwriters Laboratories, Inc., (UL) Listing Mark and the Canadian Standards Association (CSA) Monogram, both signify that its construction and design have been inspected and tested by them. NSF, UL and CSA inspectors also periodically examine production icemakers at the factory, to assure continued compliance.

To retain the safety and performance built into this icemaker, it is important that installation and maintenance be conducted in the manner outlined in this manual.

HQD650 FOR THE INSTALLER

HQD650(A or W)E-1C
UTILITY CONNECTIONS AND CABINET SIZES.

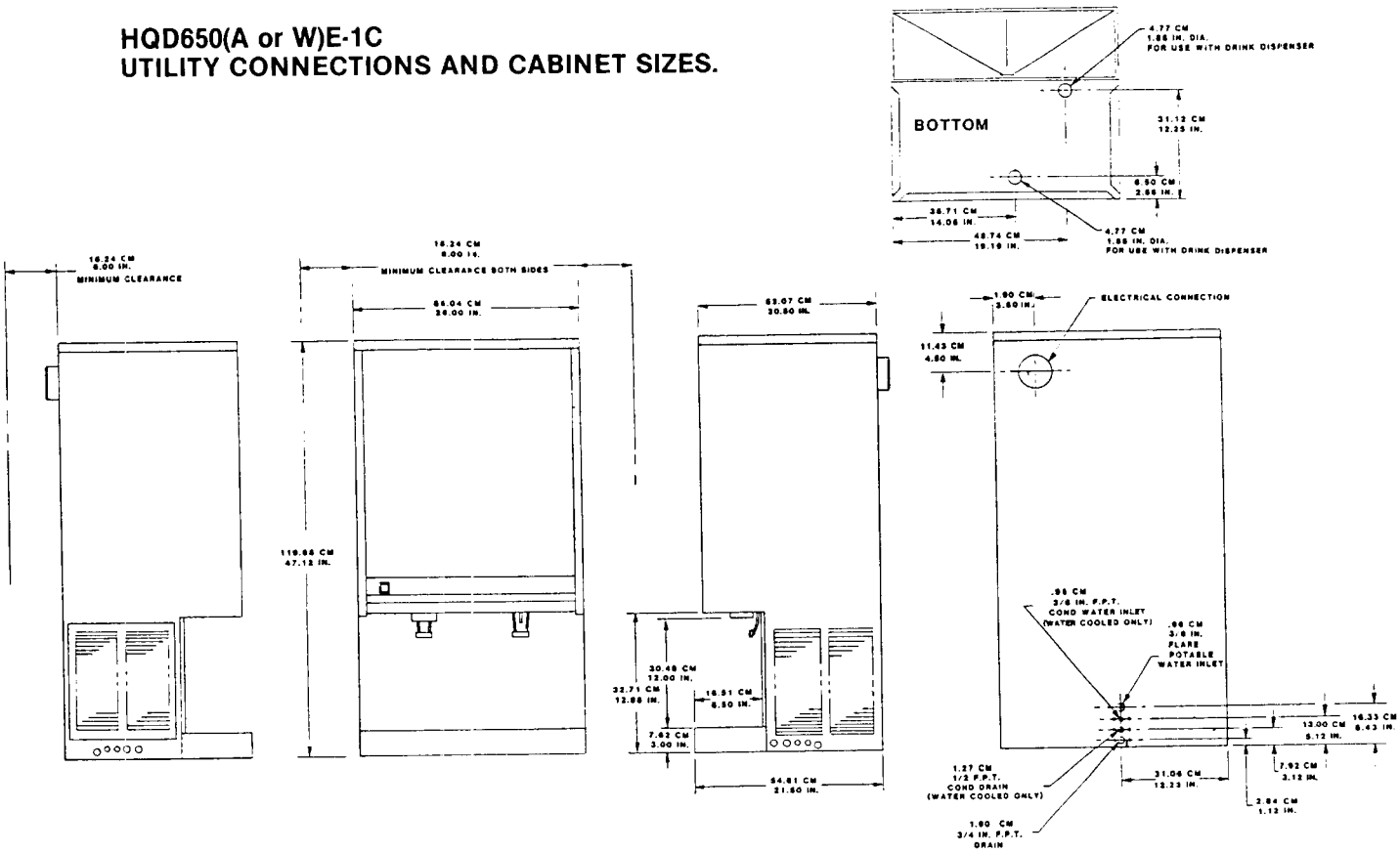

We reserve the right to make product improvements at any time. Specifications and design are subject to change without notice.

SPECIFICATIONS

Model Number	(Height - w/o Legs) Dimensions H" x W" x D"	Bin Cap.	Cube Size	Cond. Unit	Finish **	Basic Electrical	Comp. H.P.	No. of Wires	Min. Circuit Ampacity †	★ Max. Fuse Size	Ship. Wt. lbs./kg.
HQD650AE-1C	47⅛ x 26 x 21½	35 lbs	Nugget	Air	ES	115/60/1	3/4	2	21.0	30	314/142
HQD650AS-1C	47⅛ x 26 x 21½	35 lbs.	Nugget	Air	SS	115/60/1	3/4	2	21.0	30	314/142
HQD650WE-1C	47⅛ x 26 x 21½	35 lbs.	Nugget	Water	ES	115/60/1	3/4	2	20.7	30	314/142
HQD650WS-1C	47⅛ x 26 x 21½	35 lbs.	Nugget	Water	SS	115/60/1	3/4	2	20.7	30	314/142

Ice production capacity at 90° A / 70° W Air-Cooled 468 lbs.

** (ES) Sandalwood Leathergrain embossed steel with high gloss baked enamel finish

† Use this value to determine minimum wire size as per National Electric Code Standards

★ Or HACR type circuit breakers.

IMPORTANT OPERATING REQUIREMENTS

	MINIMUM	MAXIMUM
Air Temperatures	50°F (10.0°C)	100°F (38°C)
Water Temperatures	40°F (4.4°C)	100°F (38°C)
Water Pressures	20 lbs. gauge	120 lbs. gauge
Single Voltage Units	-10%	-10%

(Voltage rating specified on nameplate)

Extended periods of operation exceeding these limitations constitutes misuse under the terms of Scotsman Manufacturer's Limited Warranty, resulting in a loss of warranty coverage.

DMS21A Machine Stand: Available in baked enamel or stainless steel finish. 26-inches wide, 21-1/2-inches deep, 30-inches high — add 6-inches to height when optional legs are installed.

KSP1 Splash Panel Kit: For use when sink assembly is not used, covers sink mounting.

KV5H-30A: Four valve drink head for use with a remote carbonation system. Offers a choice of four soft drinks, carbonated water and non-carbonated water.

SEE NAMEPLATE, shown at left, for electrical and refrigeration specifications. Locate the NAMEPLATE on the left side shelf forward of the freezer and drivemotor assembly.

OPTIONAL WALL MOUNTING KIT KWB3: For use when mounting on wall.

HQD650 FOR THE INSTALLER

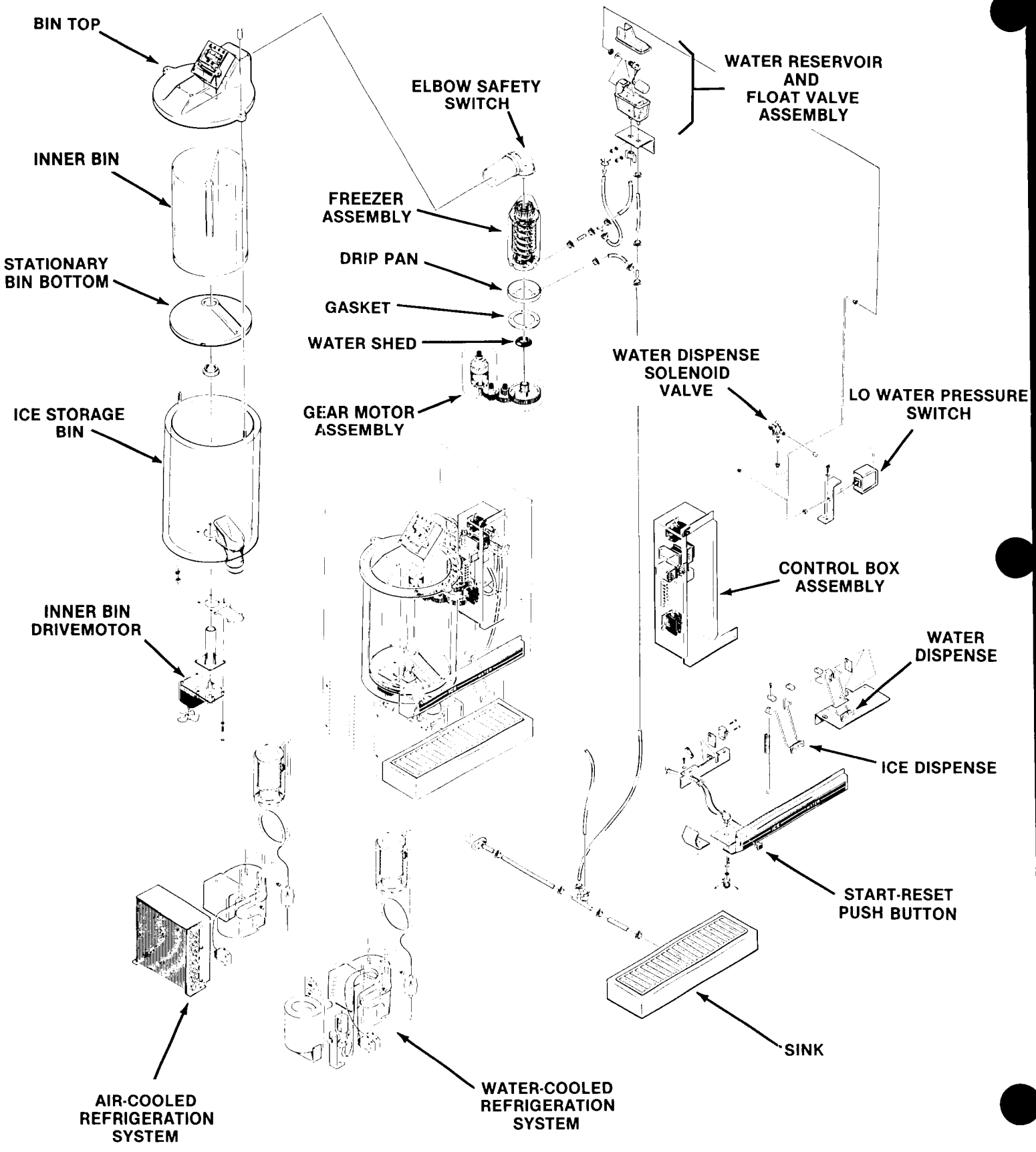

HQD650 FOR THE INSTALLER

LOCATION AND LEVELING

////////////////////// CAUTION //////////////////////

This icemaker is NOT designed for outoor installations where air temperatures are below 50-degrees F., or above 100-degrees F., and water temperature is below 40-degrees F. or above 100-degrees F. Extended periods of operation at temperatures exceeding these limitations will constitute misuse, under the terms of the SCOTSMAN Manufacturer's limited warranty, resulting in LOSS of warranty coverage.

//

Prior consideration for location site shall include:

Minimum room temperature 50-degrees F.
Maximum room temperature 100-degrees F.

Water inlet temperatures:

Minimum 40-degrees F.
Maximum 100-degrees F.

Well ventilated location for air-cooled model, advising user to frequently clean air-cooled condenser, located directly behind the front service panel.

SERVICE ACCESS: Adequate space for all service connections, located at the rear of the cabinet. A six-inch minimum clearance at the side panels, for routing cooling air drawn into the air-cooled condenser air-cooled models and exhausted out the right side panel to maintain proper condensing operation of the air-cooled condenser.

1. Position the HQD650 dispenser in the permanent location.
2. Level the HQD650 dispenser in both the left-to-right and front-to-back directions.

The HQD650 "feet" fit into the DMS21A matching holes in the machine stand.

1. Remove shipping tape and packing.
2. Lay machine stand on back or side and install leg kit, if ordered.
3. Position machine stand in selected permanent location and level from front-to-back and side-to-side directions with the open section to the back.
4. Set dispenser onto machine stand, tabs on the bottom of the dispenser match indentations and holes in the machine stand.
5. Wipe cabinet clean using damp cloth.

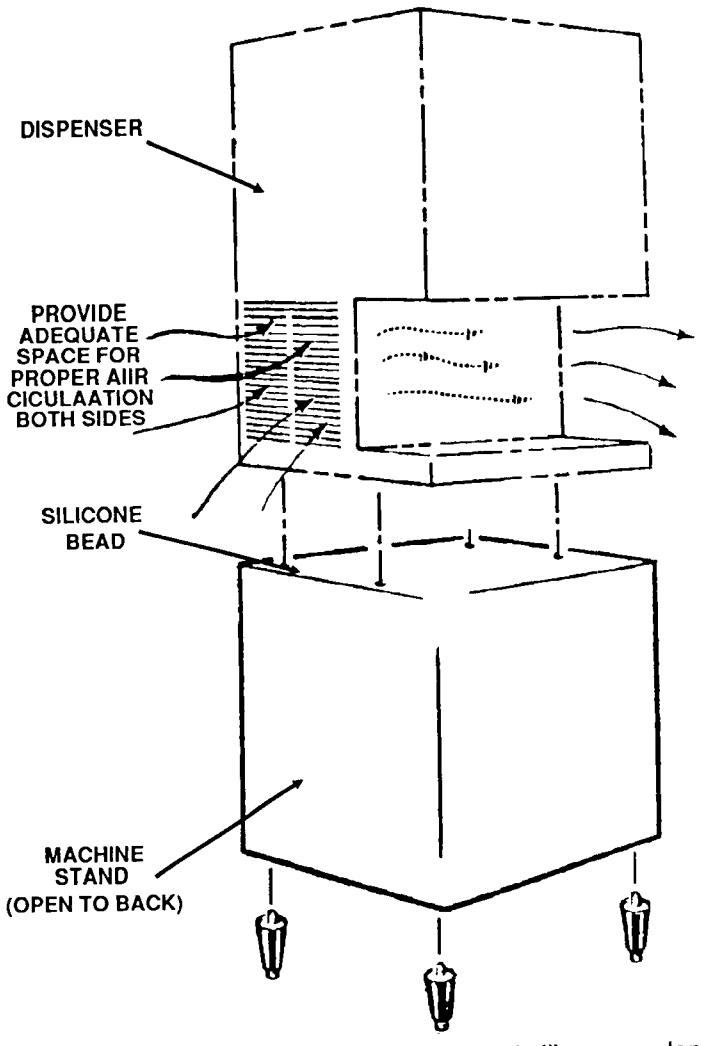

Apply a 1/4" wide (minimum) bead of silicone sealant outlining the base of the dispenser (do not include the sink) to the top of the machine stand or counter as shown.

HQD650 FOR THE INSTALLER

KWB3 WALL MOUNT INSTRUCTIONS

WARNING

We recommend the wall mounting installation be done by an experienced contractor. The weights of the machines when in use are over 350 lbs. They should be mounted on a solid, rigid wall with proper fasteners for that type of wall and of adequate strength to support the weight of the machine during operation.

Clearance between wall and icemaker is a maximum of 1 inch.

A 6″ minimum clearance is required at both sides of icemaker for airflow. (Air-cooled models)

Utility connection considerations include:
- Removal of junction box.
- Routing of plumbing connections and electrical source.

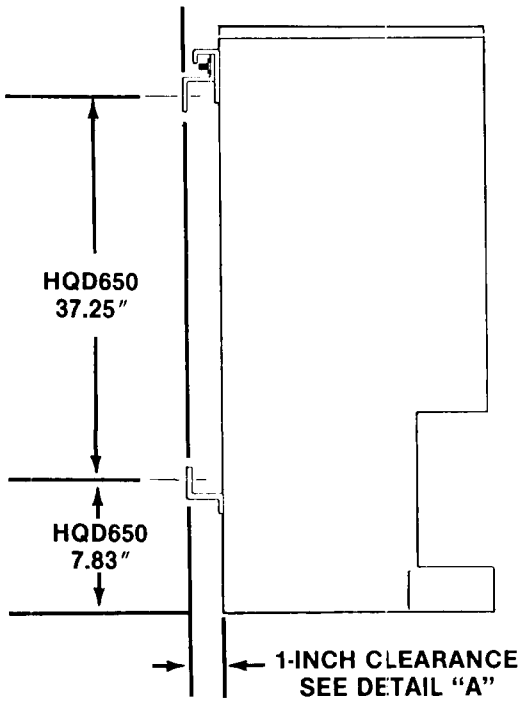

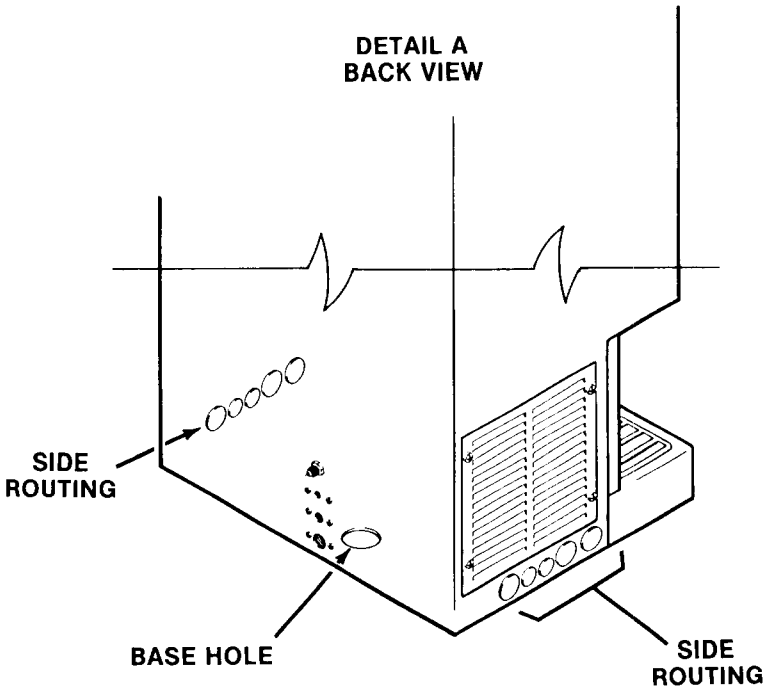

Utility connections may be made through the base or at either side through the pre-punched and plugged holes, using standard plumbing and electrical practices. See Detail A.

Interior plumbing lines must be disconnected from the original connections when routing utility connections through the side or base of icemacker.

HQD650 FOR THE INSTALLER

KWB3 WALL MOUNTING INSTRUCTIONS (Continued)

(See WARNING)

1. Remove machine top. Attach bracket "A" to machine using (3) nuts, (3) flat washers, (3) lockwashers and (3) 5/16-18 bolts received with kit.
2. Mount brackets "B" and "C" to wall at dimensions shown for specific unit. (Hardware for this not included.)

*USE FASTENERS AND WALL OF SUFFICIENT STRENGTH TO CARRY THE USE AND WEIGHT OF THE ICEMAKER.

3. Lift unit up and hook bracket "A" over bracket "B". Slide unit until the two remaining holes are aligned and secure with remaining (2) 1/4-20 bolts, (2) flat washers and (2) lockwashers.

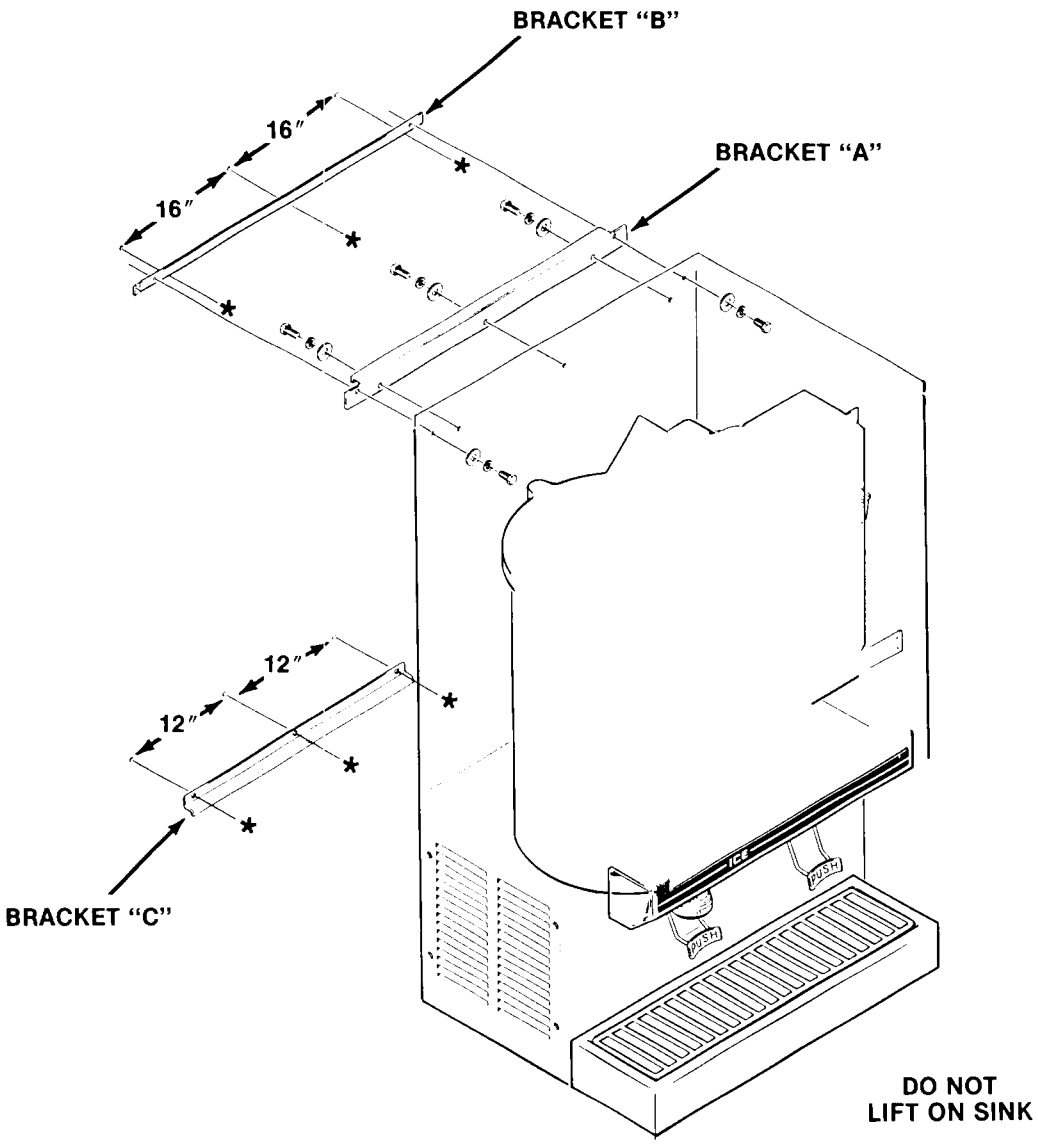

HQD650 FOR THE INSTALLER

INSTALLATION INSTRUCTIONS
KV5H-30A VALVE KIT TO HQD650
FOR USE WITH A CARBONATION SYSTEM.

////////////////////// **CAUTION** //////////////////////

Before proceeding with installation, disconnect all electrical power to HQD650.

//

1. Remove cabinet top panel, front panel and splash panel to prepare to install drink valve kit.
2. Remove screws and remove filler plate and water valve lever from icemaker dispenser.
3. Remove plug button from base of ice machine.
4. Install valve assembly in the ice machine with two screws through the same holes that held on valve cover plate. Install 1-3/8" I.D. insulation tube covering over syrup and carbonated lines.
5. Route product lines through hole in base of unit.
6. Bundle all carbonated water lines and product lines together and cover with a good insulating tubing, (lines and insulating tube to be supplied by customer). Connect these lines to the valve kit lines making sure all product lines and connections are insulated. A carbonated water recirculating line is provided and recommended, this insures that high quality drinks are dispensed.
7. Install transformer in HQD650 upper compartment base using screws provided, it may be necessary to pre-drill holes.
8. Route drink valve head electrical leads up into the upper compartment to 24v Class II transformer location.
9. Connect wire leads from drink valves to 24 volt output side of transformer.
10. Locate a 115 volt continuous power source from within the icemaker control box. Route white and black wire leads from 115 volt input side at transformer and connect to 115 volt power source.

NOTE: Carbonator and carbonated product cooling system must be field supplied.

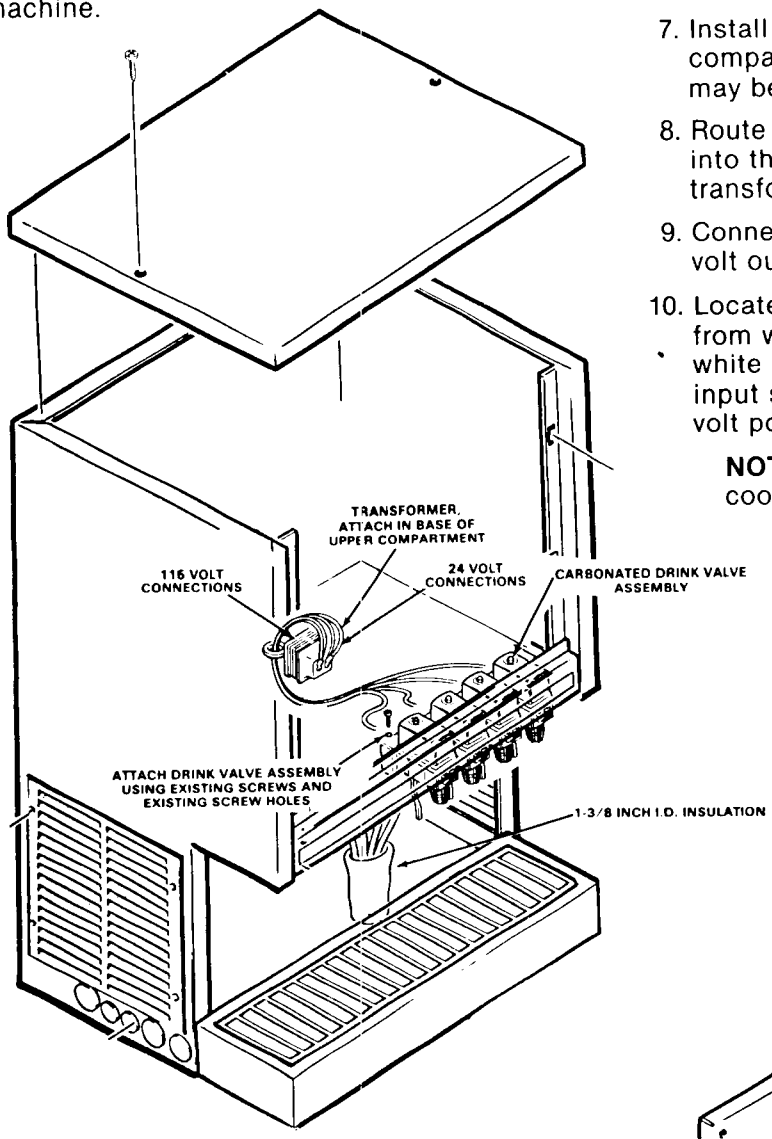

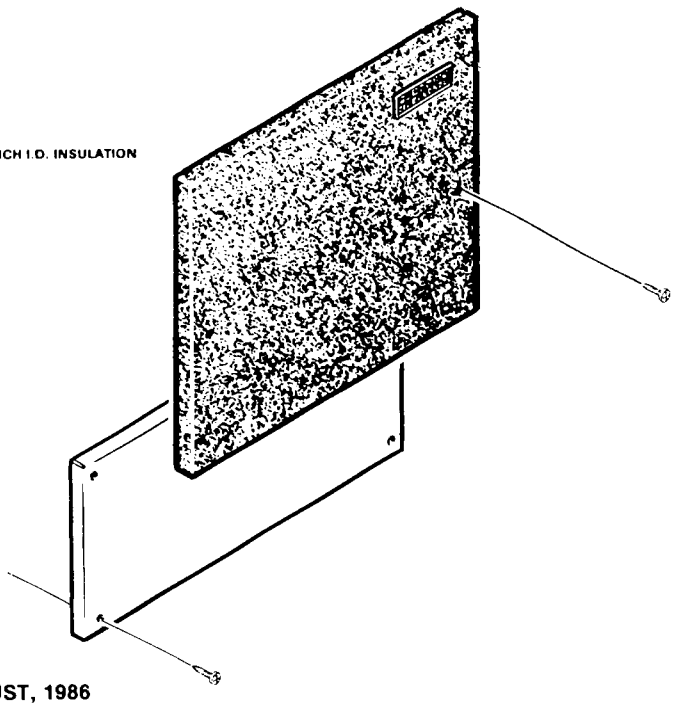

HQD650 FOR THE ELECTRICIAN

ELECTRICAL CONNECTIONS

////////////////////// WARNING //////////////////////

This icemaker requires a SOLID EARTH GROUND that meets the national, state and local electrical code requirements. To prevent possible SEVERE ELECTRICAL SHOCK INJURY to individuals, or extensive damage to equipment, install an approved SOLID EARTH GROUND wire to this icemaker. SEE wiring diagram.

//

SEE NAMEPLATE for current requirements to determine wire size to be used for electrical hookup.

Be certain the dispenser is connected to its own electrical circuit and individually fused. The maximum allowable voltage variation should not exceed ten percent of the nameplate rating, even under starting conditions. Low voltages can cause erratic operation and may be responsible for serious damage to the overload switch and motor windings.

All external wiring should conform to the national, state and local electrical code requirements. Usually an electrical permit and services of a licensed electrician will be required.

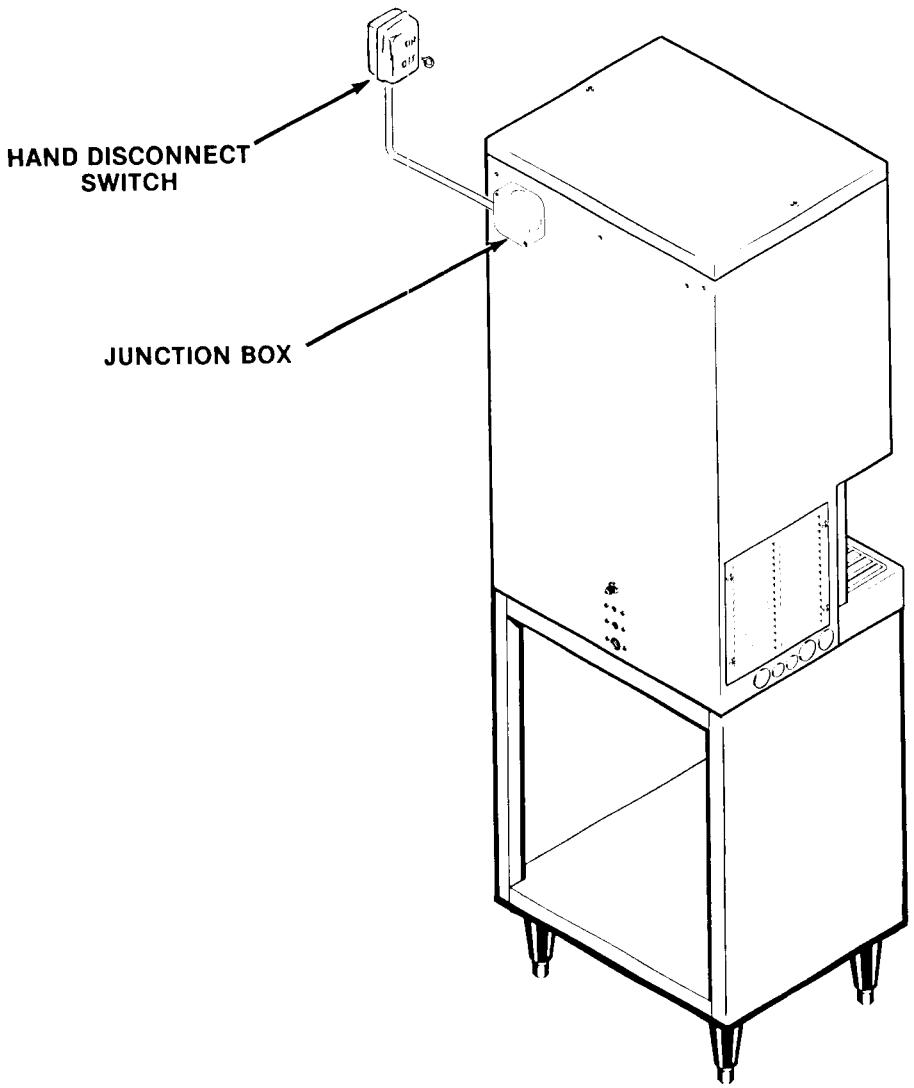

HQD650 FOR THE PLUMBER

WATER SUPPLY AND DRAIN CONNECTIONS

1. AIR-COOLED MODELS: The recommended water supply line is a 3/8 inch O.D. copper tubing. Connect to cold water supply line with standard plumbing fittings with a shutoff valve installed in an accessible place between the water supply and the dispenser.

   A wire mesh optional strainer is available, and when used, must be installed with the cleanout plug down. Locate the strainer in the water supply line, next to the dispenser with the arrow on the strainer, in the direction of the water flow. The strainer protects against large particles of rust, scale, etc., which may be loosened in the water supply pipe at the time of installation.

CAUTION

This icemaker is equipped with a low water pressure safety device which in the event of low water pressure will automatically stop the icemaker to prevent damage. The icemaker will automatically restart with increased water pressure.

2. WATER-COOLED MODELS: On water-cooled models a separate connection to the condenser is required. A 3/8 inch O.D. copper tubing is recommended for a separate water inlet line and a 1/2" O.D. separate drain line.

NOTE: The CAUTION in the text for the Air-Cooled models equally applies for the Water-Cooled models. In both type installations, water supply must be installed to conform with local plumbing codes. In some cases, a plumbing permit and services of a licensed plumber will be required.

3. DRAIN CONNECTIONS: All drains are gravity type and must be 1/4-inch fall per foot on horizontal runs. Drains are to be installed to conform with local code. The drain receptacle should be an open, trapped, or vented construction.

   Recommended bin drain is 3/4-inch O.D. copper tubing. It should be vented and run separately. Run a separate drain line to 1/2-inch O.D. drain tube from the Water-Cooled Condenser on Water-Cooled models.

4. Insert sink drain tube into dispenser drain tube located in the center bottom of the dispenser. Secure drain tube with hose clamp and snap sink into tabs located on the dispenser base. Drop grill into sink.

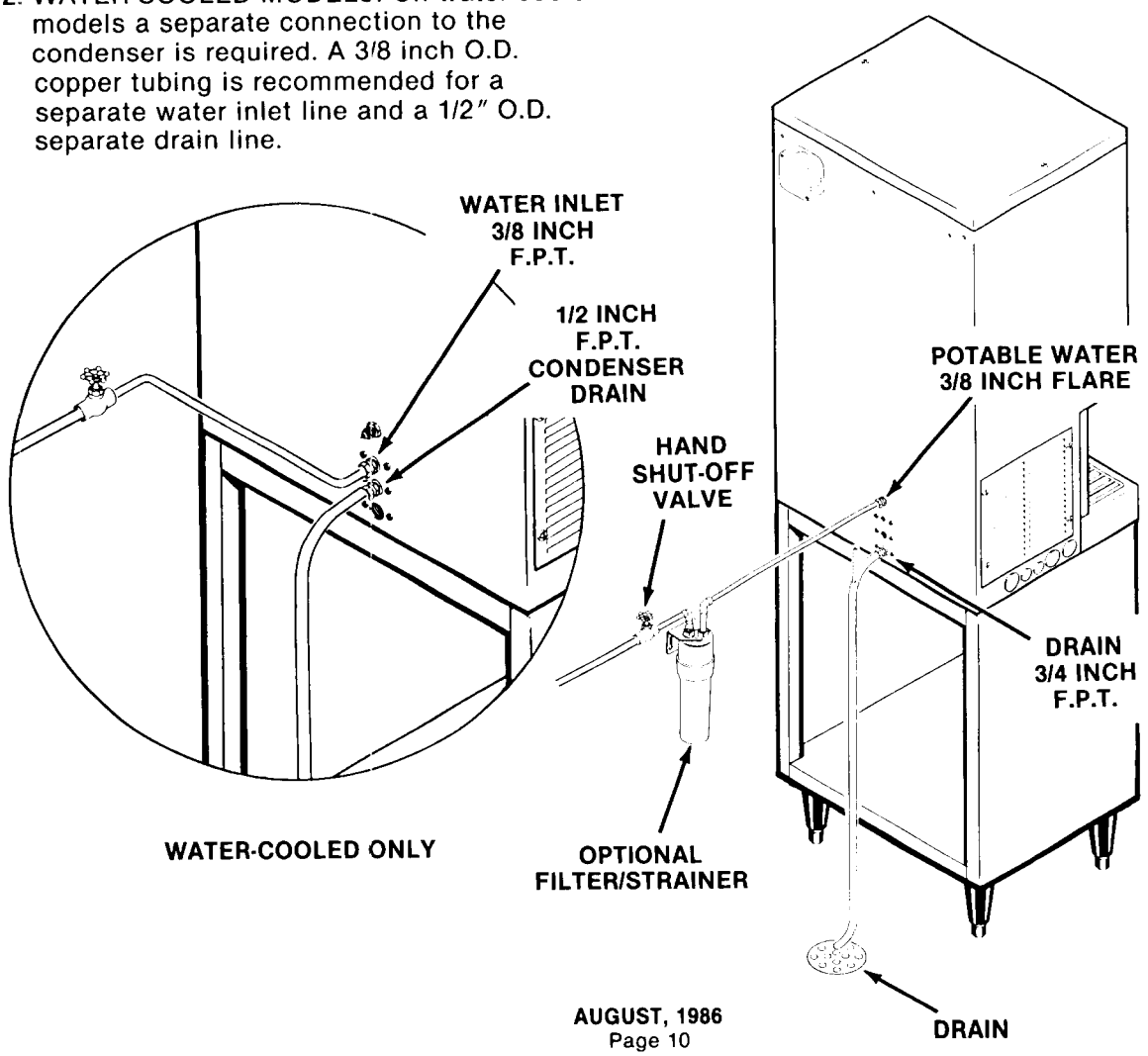

HQD650 FOR THE INSTALLER

FINAL CHECK LIST

1. Is the Dispenser level? (IMPORTANT)
2. Is the Dispenser in a room where ambient temperatures are a minimum of 50-degrees F. all year around?
3. Is there at least a six-inch clearance behind and around the cabinet for all connections and for proper air circulation?
4. All shipping tape removed from panels, doors, styrofoam blocks, etc?
5. Have all electrical and piping connections been made?
6. Has the electrical power supply wiring been properly connected, and the voltage tested and checked against the nameplate rating?
7. Has proper Chassis-to-earth ground been installed?
8. Is the water supply line shut-off valve installed and opened and has the inlet water supply pressure been checked to ensure a minimum of 20 PSIG?
9. Have the Compressor hold down bolts been checked to be sure the compressor is snug on the mounting pads?
10. Check that the Bin Ice Level and Bin Ice Level safety switches work.
11. Check that air flow from the air-cooled condenser does not return and recirculate into the condenser. A baffle may have to be fabricated behind the machine tc prevent this recirculation problem.
12. Have the Dispenser and the Bin been wiped clean with clean damp cloths?
13. Has the owner/user been given the User Manual and instructed on how to operate the icemaker and the importance of periodic maintenance?
14. Has the owner/user been given the name and telephone number of the Authorized SCOTSMAN Distributor or Service Agency serving him?
15. Has the Manufacturer's Registration Card been properly filled out? Check for correct Model and Serial Numbers from nameplate, then mail the completed card to the SCOTSMAN factory.

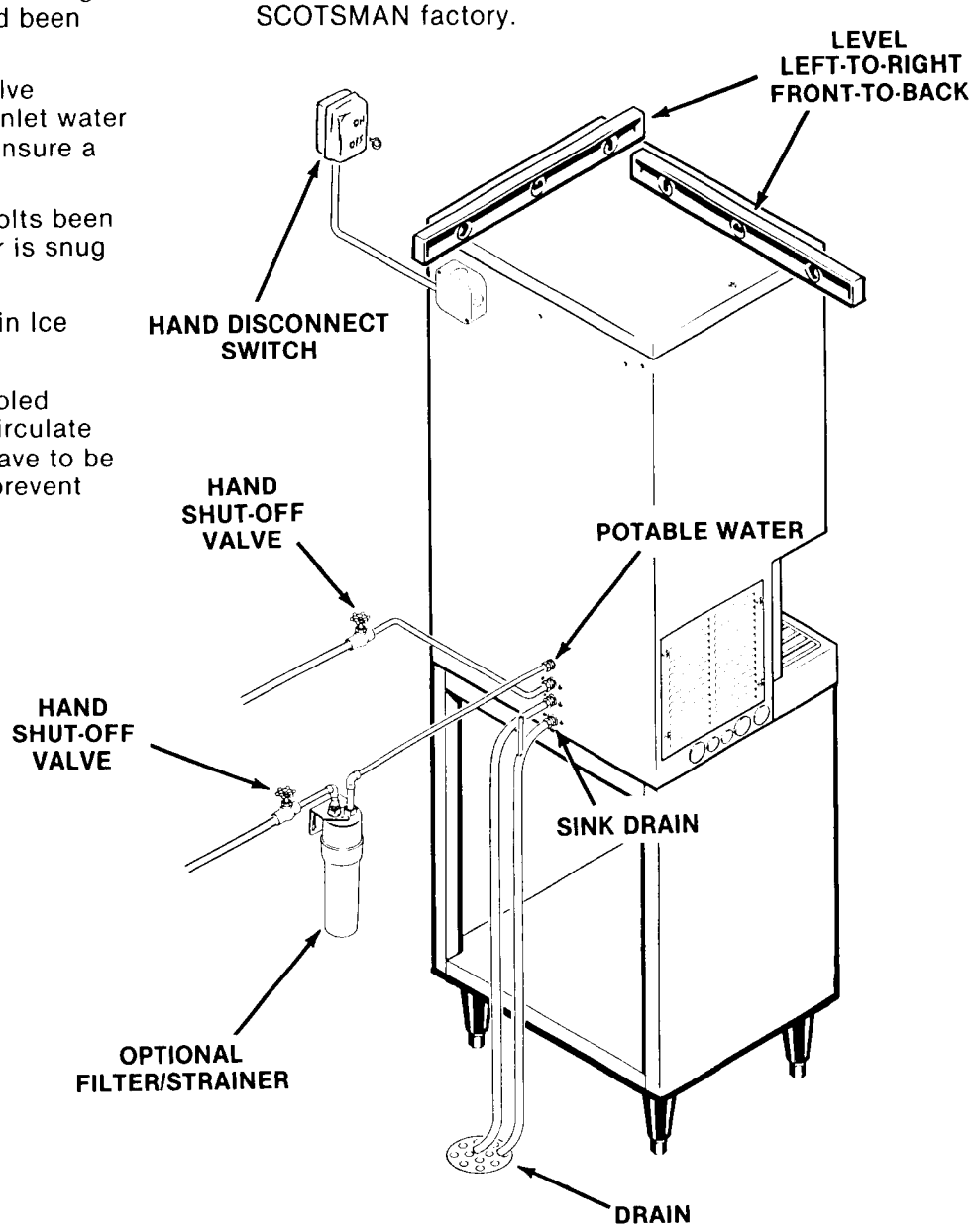

HQD650 START-UP

START UP

1. Remove two screws and push UP to unsnap catches and remove the top panel.
2. Remove two screws and pull OUT to unsnap catches and remove front panel.
3. Remove screws and back splash panel.
4. OPEN the inlet water supply line shut-off valve.
5. Observe the water filling operation.
   a. Water flows into water reservoir.
   b. Float moves up as water rises.
   c. Water flows through the water feed line to the bottom of the freezer assembly.
   d. Float STOPS water flow when level reaches 3/8-inches below the molded horizontal line on the body of the water reservoir.
6. Connect electrical power to ON position.
7. Press the illuminated START-RESET pushbutton to START the automatic ice making process. Listen for the sound the compressor start-up.
8. After four or five minutes of operation, observe that random lengths of cylindrical broken chunks of high quality ice begins dropping out of the open end of the ice spout, above the cylindrical ice storage bin.
9. Let the system operate for about 30 minutes or, until ice fills about one-fourth of the bin. Check for any excess noises beyond normal compressor noise:
   a. Fan noises, Air-Cooled: Blades touch other surfaces; blades bent, or out-of-balance.
   b. Vibrating type: From touching lines.
   c. Chattering: Lack of water in freezer.
   d. Compressor loose at one or more holddown bolts.
10. Rotate the ice portion control knob, on the front of the switch mount, fully CLOCKWISE, to the section labeled MAXIMUM.
11. With an ice drink glass, push IN on the glass filler level assembly, under the ice spout, and check that DESIRED amount of ice is dispensed.
12. After a few seconds, RELEASE pressure on the glass filler lever assembly and check that ice dispensing STOPS.
13. Rotate the ice portion control knob, on the control panel, to about MID-RANGE on the dial; then, with a standard ice drink glass, push IN on the glass filler lever assembly, under the ice spout, and observe that a measured amount of ice is dispensed and dispensing STOPS.
14. Check the ice portion dispensed in the glass to determine whether the amount of ice is:
    CORRECT ICE PORTION
    TOO SMALL ICE PORTION
    TOO LARGE ICE PORTION
15. Rotate the ice portion control knob, CLOCKWISE, about one-eighth of a turn, to INCREASE the ice portion; or, COUNTER-CLOCKWISE, about one-eighth of a turn, to DECREASE the ice portion.
16. Dispense several ice portions, in the glass to be used for standard example, and repeat steps to achieve the desired correct portion.
17. Check the bin ice level switch.

    NOTE: The bin ice level switch is an ON-OFF switch, that shuts OFF the compressor to stop icemaking, while the freezer assembly drivemotor continues to operate, in order to clear all ice from the auger. Then, when the refrigerant pressure equalizes, a refrigerant lo-pressure control will shut OFF the drivemotor. When the ice flow pushes the actuator arm of the switch IN, the compressor is shut OFF and when the action of the melting or dispensed ice releases the actuator arm, the switch CLOSES the circuit and RESTARTS the compressor and the icemaking process.

    The bin ice level safety switch is mounted next to bin ice level switch and is actuated by the movement against the switch actuator. The safety switch acts as a backup safety switch, should the bin ice level switch fail and cause ice to jam up in the ice spout. The safety switch will shut off the icemaker only when actuated. It is an immediate and complete shut down of the entire icemaker. The bin ice level safety switch must be manually reset.
18. Thoroughly explain to the owner/user the significant specifications of the icemaker, the start up and operation, going through the procedures for the operating instructions. Answer all questions about the icemaker, by the owner; and, inform the owner of the name and telephone number of the authorized SCOTSMAN Service Agency serving him.

HQD650 START-UP

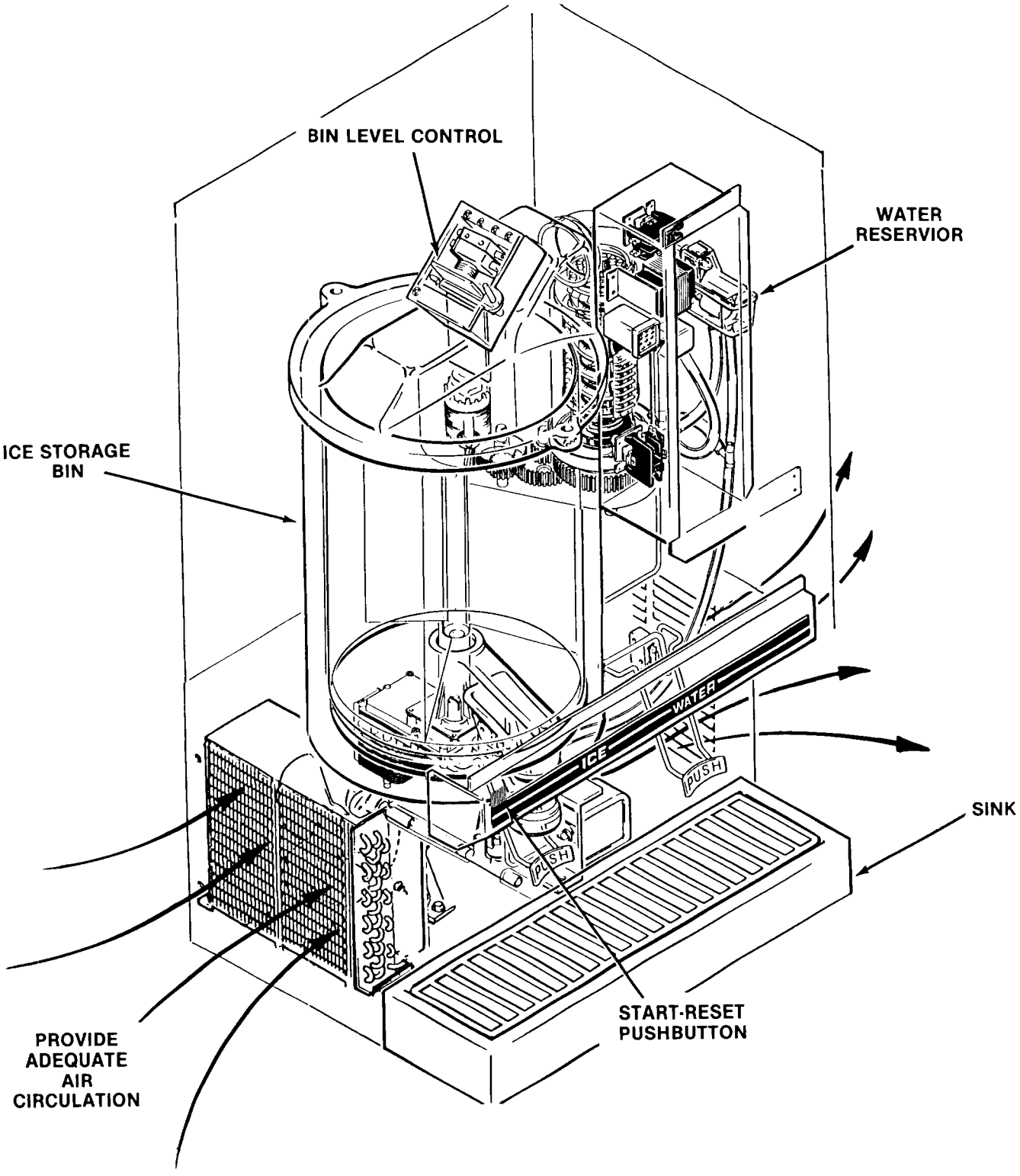

HQD650 OPERATION

DISPENSING SYSTEM

STANDBY—In the STANDBY mode, the refrigeration system is in automatic operation, ice is being made and dispensed into the cylindrical ice storage bin, or the bin is full and the refrigeration system is shutdown. The electrical circuit in the dispensing control circuit has an ice vend switch and an ice portion timing module, both in the open position.

ICE DISPENSE—With a container, push in a glass filler lever and dispense ice, the circuit is completed through the ice vend switch and the ice portion timing module and the bin drive motor, which causes ice to be dispensed. Then one of the two sequences next occur:

1. After a complete vend has been made the ice portion timing module removes power, which OPENS the circuit to the bin drive motor and STOPS the ice dispensing, and returns the circuit to the STANDBY condition.
2. When the container is removed, before a complete vend has been made, releasing the glass filler lever assembly, power is interrupted through the ice vend switch, which STOPS the ice dispensing, and returns the circuit to the STANDBY condition.

WATER DISPENSE—With a container, push in glass filler lever and dispense water, the circuit is completed through the water vend switch to the coil of the water solenoid, which energizes the coil and OPENS the water solenoid valve letting a metered flow of water dispensed.

When the container is removed, releasing the glass filler lever assembly, the circuit through the water vend switch OPENS, interrupting power to the coil of the water solenoid; which de-energizes the coil and CLOSES the water solenoid valve, shutting OFF the flow of water being dispensed.

With an ice drink glass, pitcher or container, push IN on the glass filler lever assembly, under the water spout, and check that water is CONTINUOUSLY dispensed.

After a few seconds, RELEASE pressure on the glass filler lever assembly and check that water dispensing STOPS.

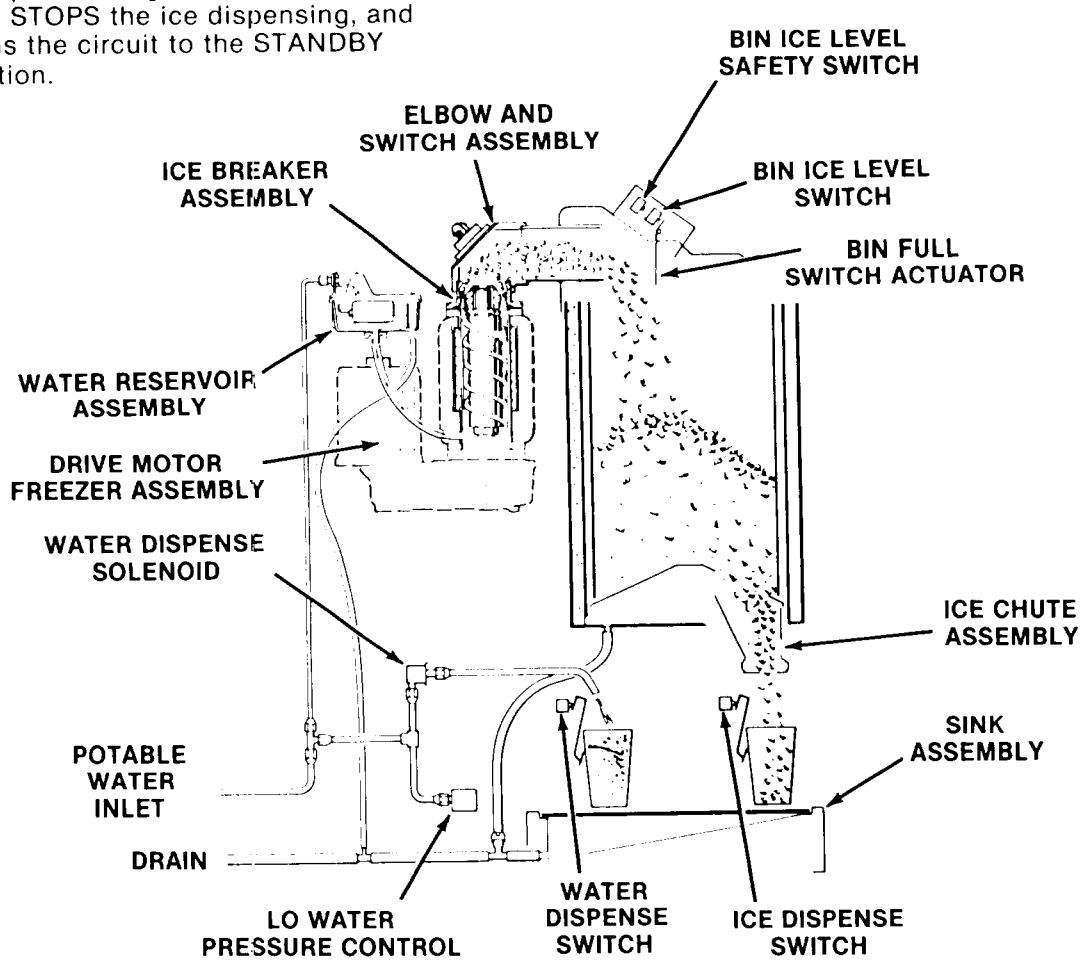

HQD650 OPERATION

ICEMAKER

The water supply flows from the building source through the inline water strainer, enters the cabinet and on to the water reservoir. The water reservoir functions to maintain a constant water level inside the freezer assembly. Water from the water reservoir enters at the bottom of the freezer assembly and is changed into ice by low temperatures inside the freezer.

A stainless steel auger within the freezer is powered by the drivemotor assembly, a direct-drive gearmotor, and the rotating auger carries the ice upward to the end of the auger, where excess water is pressed out of the ice, as it is extruded and broken into random length chunks of ice and pushed out through the ice spout and into the ice storage bin.

Connecting electrical power starts the automatic and continuous icemaking process. When the cylindrical ice storage bin has been filled with ice, up to the level of the bin ice level switch actuator, the actuator depresses bin ice level switch and shuts off the icemaking process.

As the ice is removed from the cylindrical ice storage bin, the actuator releases the bin ice level switch restarting the automatic icemaking process.

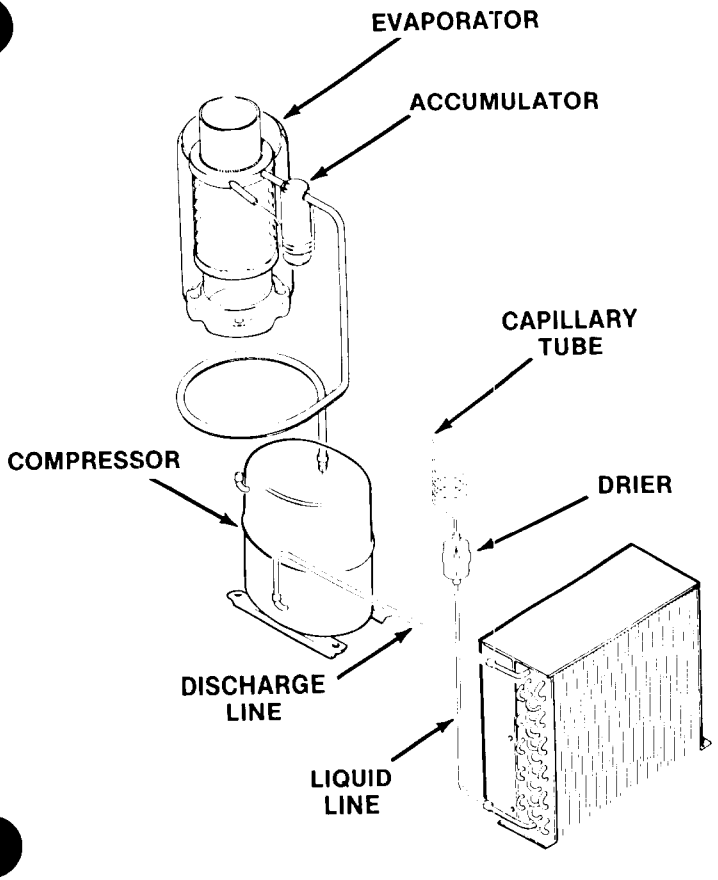

ELECTRICAL/REFRIGERATION

The Model HQD650 Dispensers are designed to operate on standard electrical supply 115 volts, 60 Hertz, single phase.
Therefore, always CHECK NAMEPLATE for electrical information BEFORE proceeding with electrical wiring connections to the icemaker.

Cold ambient temperatures and interruptions in water supply are conditions that can cause excessively hard ice and overloads within the freezer assembly, which is directly transmitted to the drivemotor; and in turn, will cause speed reduction or ultimate freezeup.

When the drivemotor is slowed to a predetermined RPM, a sensing switch mounted on top of the motor is designed to open the electrical circuit to the compressor. The compressor stops operating, no more ice is produced, and the drivemotor continues to operate, rotating the auger to clear the overload and gradually building up of full speed.

At a pre-determined higher RPM drivemotor speed, the speed sensing switch closes the electrical circuit to the compressor, causing the normal icemaking process to resume.

Refer to the appropriate Wiring Diagram and trace circuitry and control functions, as described in the following paragraph:

As shown on all SCOTSMAN wiring diagrams, the controls are in the ICEMAKING MODE. Thus, the 1-2 contacts are CLOSED. At START-UP, the 1-2 contacts are OPEN and the 3-2 contacts are CLOSED. As the icemaker begins to operate, the low side pressure starts to decrease from the stabilized or at-rest pressure. As soon as the pressure is reduced to 20 PSIG, the 3-2 contacts OPEN and the 1-2 contacts CLOSE.

This removes the operating controls, such as the bin ice level switch, from the gearmotor circuit. If one of the operating controls OPENS, it will SHUT OFF the compressor circuit. The gearmotor will operate until the low side pressure increases to 32 PSIG. Then, the 1-2 contacts OPEN and SHUT OFF the gearmotor, usually within one or two minutes, depending upon ambient conditions. This brief period of time allows the auger to transport all the ice out of the freezing chamber. Consequently, when called on to STARTUP again, there is no ice load to start up against. Again, on STARTUP, the 1-2 contacts are OPEN and the 3-2 contacts are CLOSED.

HQD650 COMPONENT DESCRIPTION

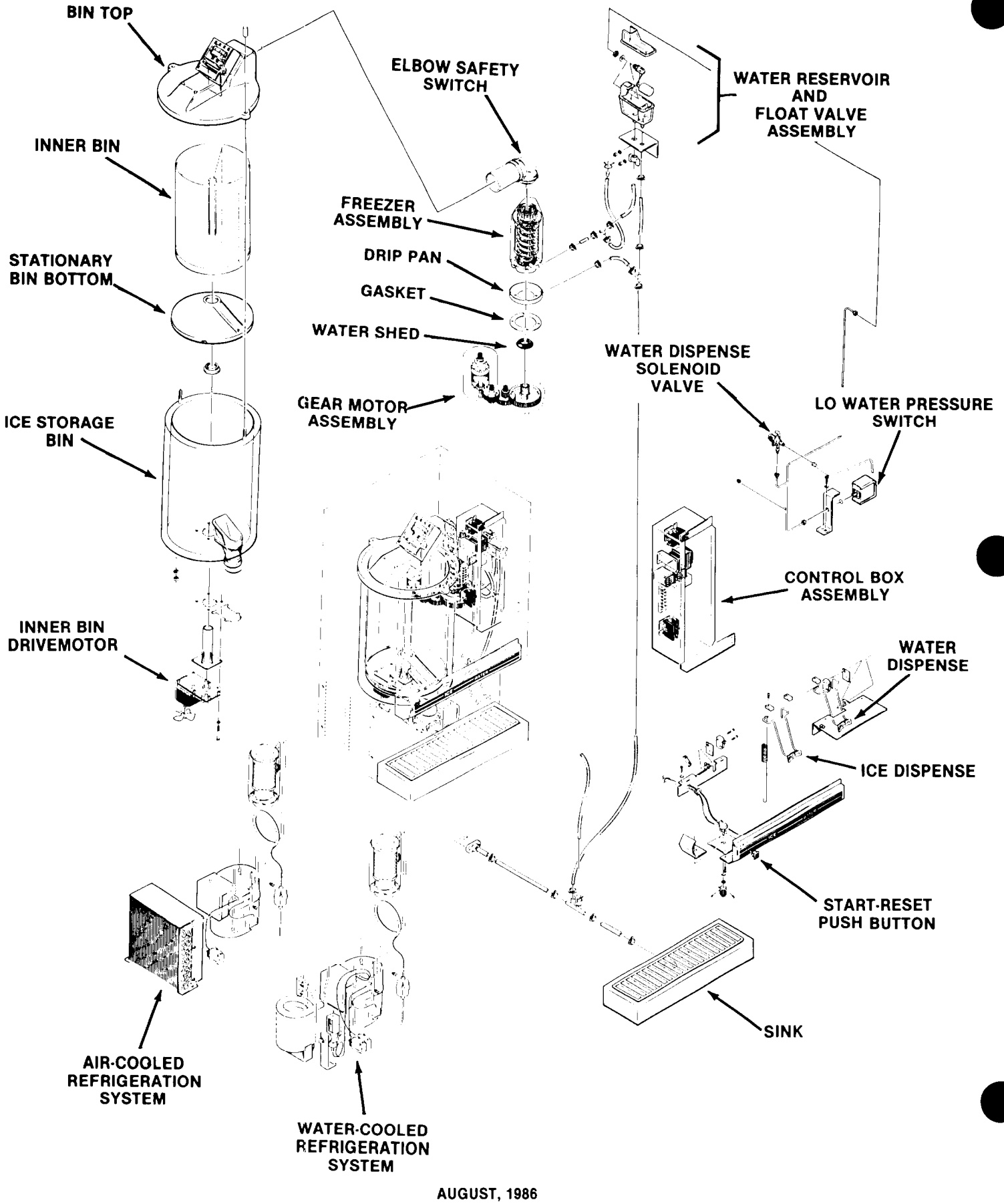

HQD650 COMPONENT DESCRIPTION

BIN ICE LEVEL SAFETY SWITCH

The bin ice level safety switch is mounted next to bin ice level switch and is actuated by the movement against the switch actuator. The safety switch acts as a backup safety switch, should the bin ice level switch fail and cause ice to jam up in the ice spout. The safety switch will shut off the icemaker only when actuated. It is an immediate and complete shut down of the entire icemaker. The bin ice level safety switch must be manually reset.

BIN TOP

The bin top assembly protects the ice supply and provides a mount for the bin ice level switch and the bin ice level safety switch.

BIN ICE LEVEL SWITCH

The bin ice level switch is an ON-OFF switch, that shuts OFF the compressor to stop icemaking, while the freezer assembly drivemotor continues to operate, in order to clear all ice from the auger. Then, when the refrigerant pressure equalizes, the refrigerant lo-pressure control will shut OFF the drivemotor. When the ice flow pushes the actuator arm of the switch IN, the compressor is shut OFF and when the action of the melting or dispensed ice releases the actuator arm, the switch CLOSES the circuit and RESTARTS the compressor and the icemaking process.

The proper cut in position of the bin ice level switch is when the bin fill switch actuator arm is hanging straight down.

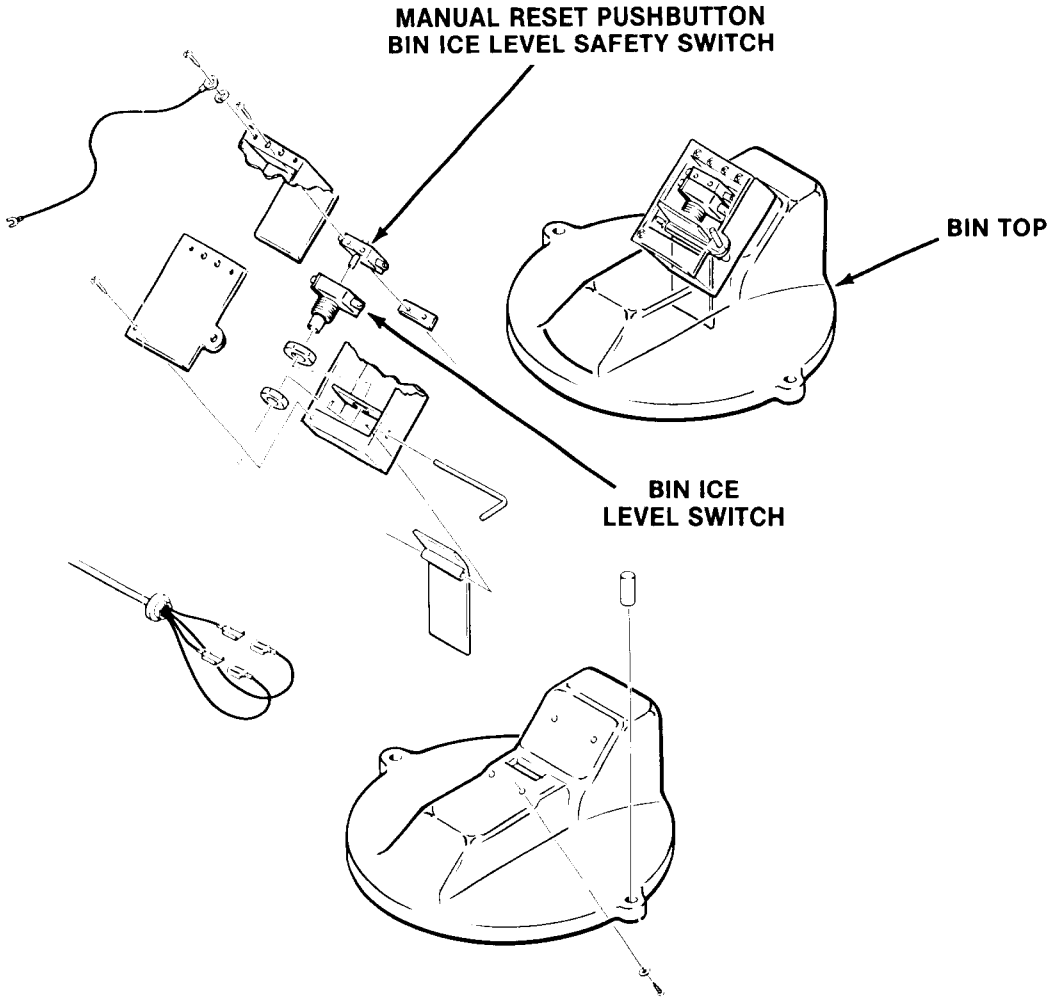

HQD650 COMPONENT DESCRIPTION

There are three additional SAFETY CONTROL DEVICES within the HQD650 that protect the machine from expensive damage and down time.

WATER PRESSURE SAFETY SWITCH installed in the potable water inlet line is set to electrically open at zero to four PSIG and stop the entire icemaker. The AUTOMATIC RESET will restart the icemaking process when water pressure rises to 20 PSIG.

AUGER DELAY SWITCH, a single-pole double throw (SPDT) switch, allows the gearmotor to rotate the Auger and clear the freezing chamber after the bin ice level switch circuit to compressor is OFF. When the icemaker restarts, the gearmotor starts in a no load condition, preventing excessive loading of gearmotor and bearings.

REFRIGERANT LO PRESSURE CONTROL is factory set to automatically SHUT DOWN the icemaker if the low-side pressure drops below 4 PSIG or low ambient or water temperatures exist. This is a AUTOMATIC RESET control.

Water-cooled icemakers have two refrigerant pressure switches, hi refrigerant pressure and low refrigerant pressure.

START-RESET PUSHBUTTON

When pushed completes the electrical circuit through the icemaker electrical components. The START-RESET PUSHBUTTON must be pressed to restart the icemaking process whenever any of the safety controls have functioned to stop the icemaker or an interruption in the electrical supply has occurred.

ELBOW SAFETY SWITCH

The elbow safety switch is an ON-OFF switch that shuts off the compressor when an ice jam presses against the rubber diaphragm depressing the switch and opening the circuit. Melting action relieves pressure closing the circuit, lighting the start-reset pushbutton. The start-reset switch must then be pressed to start the automatic icemaking process.

ICE BREAKER ASSEMBLY

The ice breaker assembly, bolted to the top of the freezer, contains the bearing and seal for the top of the auger. Flaked ice created by the freezer is carried by the auger to the ice breaker assembly and the flaked ice is pushed by the auger through the tapered holes in the ice breaker. Flaked ice is compressed by auger pressure as it is pushed through the ice breaker assembly and the shafts of compressed ice ar broken into random lengths of Ice Nuggets by the taper on the top of the ice breaker.

WATER REGULATOR VALVE
WATER-COOLED MODELS

The water regulator valve functions to maintain a constant head pressure, by regulating the amount of incoming water flow through the condenser, on water-cooled models. The valve operates through the refrigerant system high side pressure. Rotating the adjusting screw, located on top of the valve, can INCREASE or DECREASE the operating head pressure.

HQD650 COMPONENT DESCRIPTION

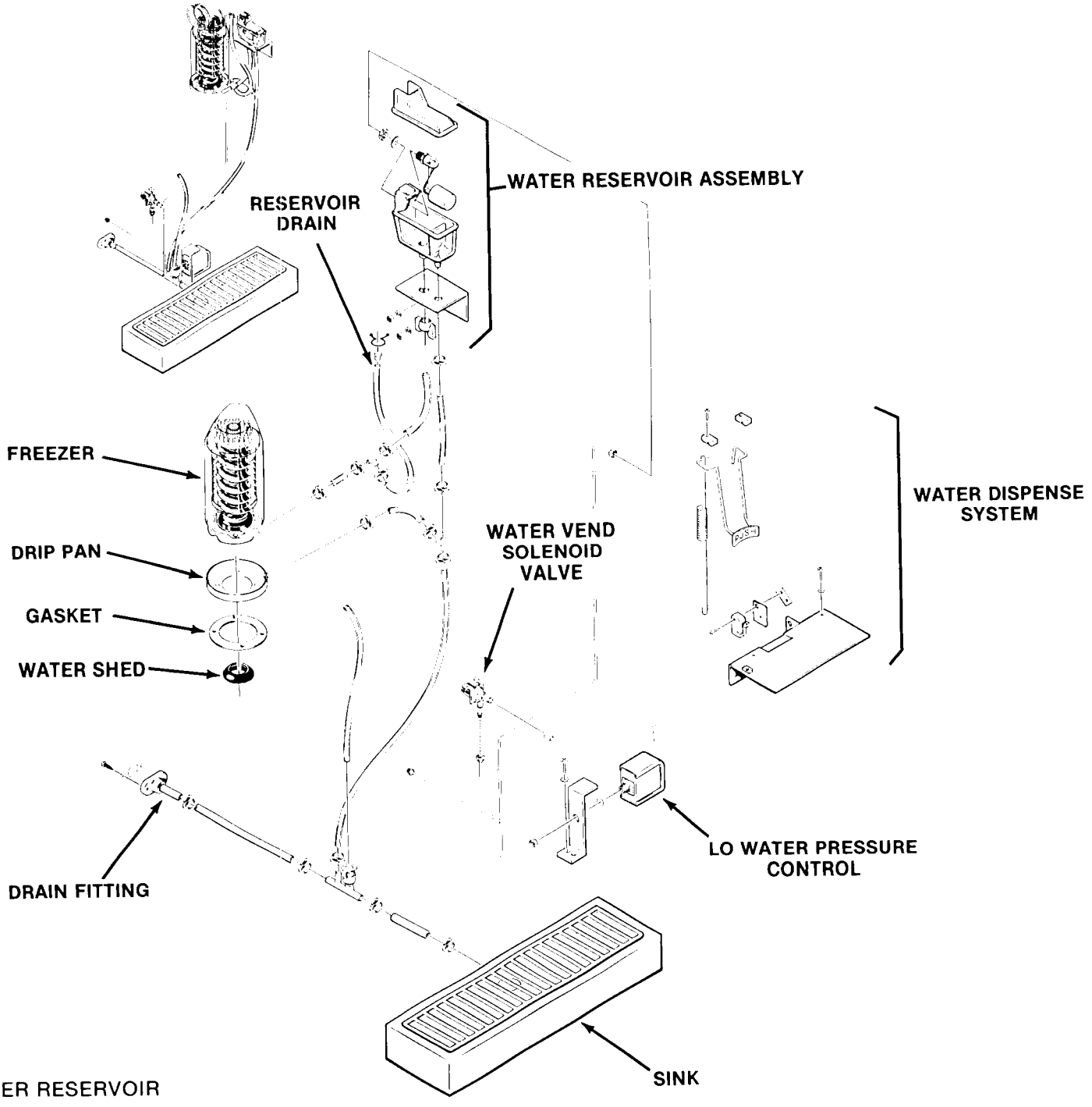

WATER RESERVOIR

The water reservoir, with a float valve assembly, maintains a constant water supply within the freezer assembly. The water level in the reservoir is the same water level as in the freezer and the correct water level in the freezer is level with the top of the auger flights. The water level in the freezer can be adjusted by raising or lowering the water reservoir with the bracket.

RESERVOIR DRAIN

The reservoir drain is for use to drain the water reservoir when cleaning or maintenance of the icemaking system.

HQD650 COMPONENT DESCRIPTION

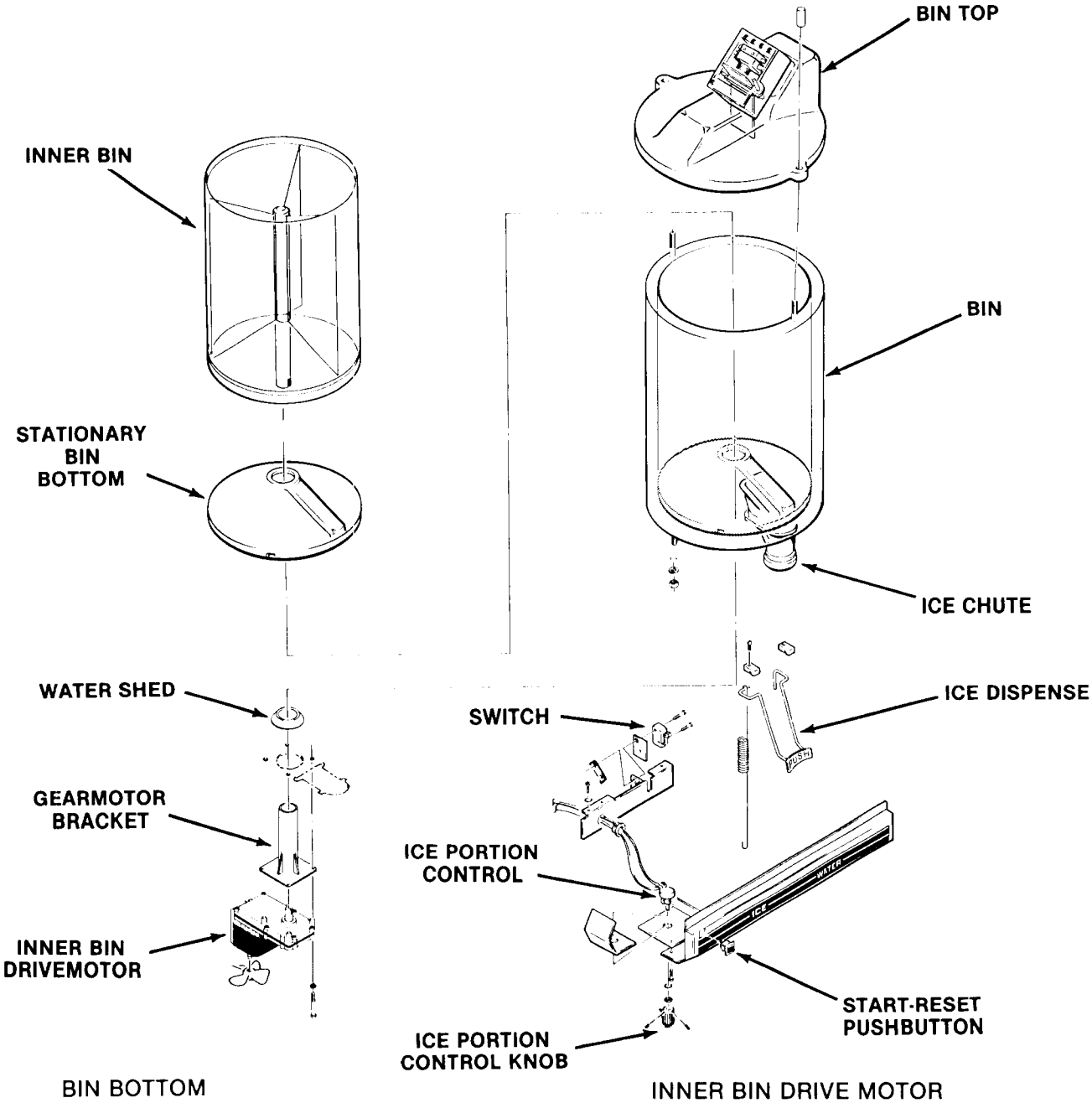

BIN BOTTOM

The cone shaped stationary bin bottom holds the ice supply, and when the inner bin is rotated the ice supply rotates and ice is shaved off from the bottom and drops, by gravity, through the ice dispense spout.

INNER BIN

Rotates when drivemotor is energized, causing ice pile to rotate over bin bottom, dispensing ice.

INNER BIN DRIVE MOTOR

The inner bin drive motor and reduction gear assembly, located below the bin, is controlled with the ice vend switch and portion control timing module. The inner bin drive motor rotates the inner bin and ice supply to vend a metered amount of ice into a container.

HQD650 COMPONENT DESCRIPTION

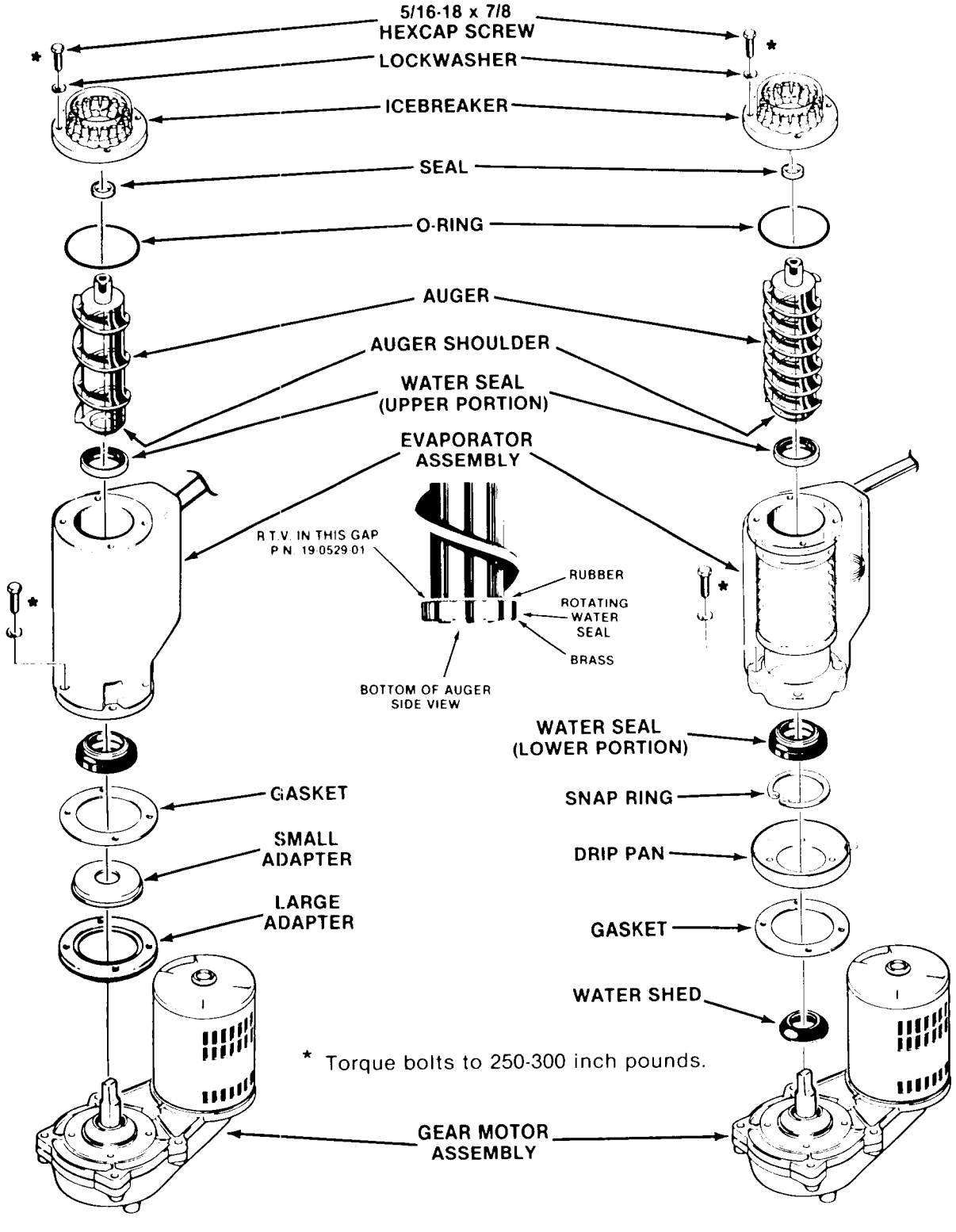

A and B MODELS

C MODEL

HQD650 COMPONENT DESCRIPTION

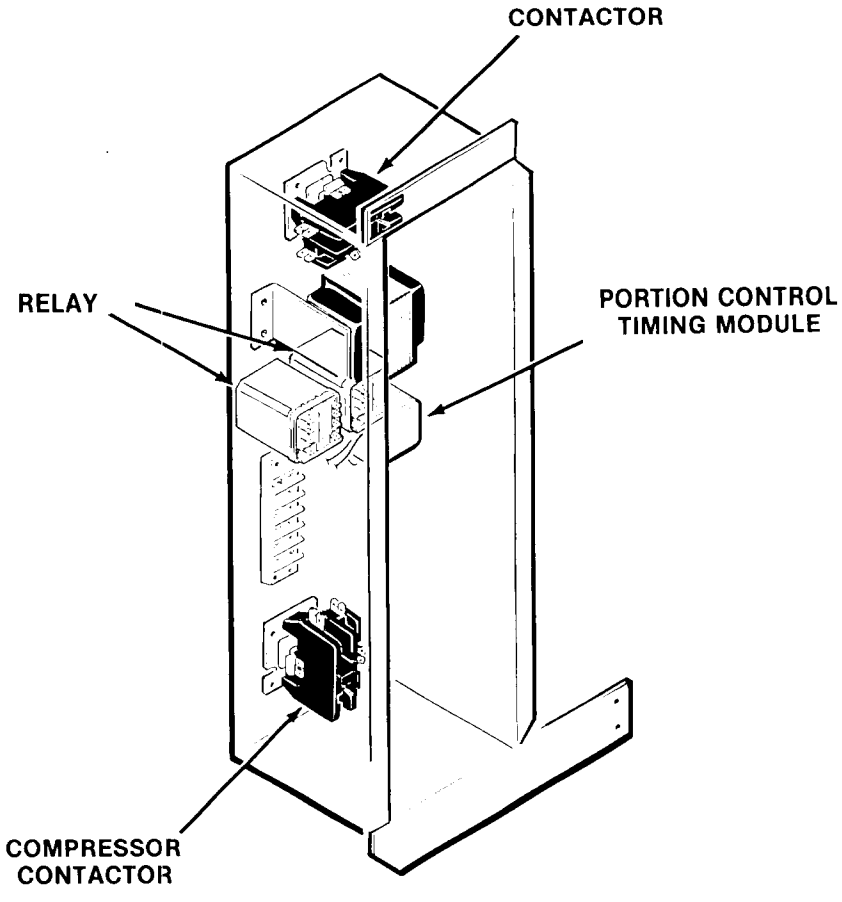

COMPRESSOR CONTACTOR

A single-pole contactor is used to supply current to the compressor; and, is wired so any control in the pilot circuit, such as the bin thermostat and high pressure control, etc., will cause the contactor coil to be de-energized, when the control contact OPENS, thereby breaking the circuit to the compressor through the contactor points.

ELBOW SAFETY SWITCH RELAY "A"

The elbow safety switch relay "A" maintains a circuit through the elbow safety switch until the elbow safety switch opens and switches the current through the lamp of the start reset pushbutton, which must be pushed and reset to restart the automatic icemaking process.

RELAY "B"

Relay "B" protects the compressor contactor from chattering during operation of the icemaking system.

COMPRESSOR START RELAY
(ON COMPRESSOR)

The compressor start relay completes the circuit to the compressor from the start capacitor to provide enough energy to start the compressor. When the compressor motor has reached the proper RPM's, the compressor relay opens and removes the start capacitor from the circuit.

ICE PORTION CONTROL TIMING MODULE

The ice portion control timing module operates in conjunction with the ice portion control Potentiometer and times the run of the ice agitator motor to meter the amount of ice dispensed. The system is adjustable from approximately 1 ounce to 7 ounces by volume.

HQD650 MAINTENANCE AND CLEANING INSTRUCTIONS

A Scotsman Ice System represents a sizable investment of time and money in any company's business. In order to receive the best return for that investment, it MUST receive periodic maintenance.

It is the USERS RESPONSIBILITY to see that the unit is properly maintained. It is always preferable; and less costly in the long run, to avoid possible down time by keeping it clean, adjusting it as needed and by replacing worn parts before they can cause failure. The following is a list of recommended maintenance that will help keep your machine running with a minimum of problems.

Maintenance and Cleaning should be scheduled at a MINIMUM of twice per year.

ICEMAKER

THE FOLLOWING MAINTENANCE SHOULD BE SCHEDULED AT LEAST TWO TIMES PER YEAR ON THIS ICEMAKER. CALL YOUR AUTHORIZED SCOTSMAN SERVICE AGENCY.

1. Check and clean water line strainers.
2. Check that the water level in the water reservoir is at the molded line on the side of the float.
3. Remove cover from water reservoir and depress the float to insure that a full stream of water enters the reservoir.
4. Check that the icemaker cabinet is level, in side-to-side and front-to-back directions.
5. Clean the water reservoir and interior of the freezer assembly, using a solution of SCOTSMAN Ice Machine Cleaner. Refer to CLEANING-Icemaker.
6. When doubtful about refrigerant charge, install refrigerant gauges on Schrader valves and perform steps 6 and 7. Check gauge for compressor head pressure:

   AIR-COOLED MODELS: Varies between 130 and 145 PSIG.

   WATER-COOLED MODELS: Set at 135 PSIG. Adjust screw on top of water regulator valve to raise or lower head pressure.
7. Check gauge for suction line pressure:

   Varies between 9 to 12 PSIG, depending upon inlet water temperature and ambient air temperature.

AFTER SERVICING REFRIGERATION SYSTEM:
TORQUE REFRIGERATION ACCESS VALVE CAPS TO 60-75 INCH POUNDS.

8. Check drivemotor operation:

   Oil motor once per year.

   Normal operating temperatures are about 160-degrees F., which is hot to touch.

WARNING

Disconnect electrical power supply before removal procedures.

9. Check the elbow safety switch by removing the insulation halves, twisting the locking ring 90° and pulling out the switch assembly. The switch action can then be tested.

NOTE

The elbow safety switch is an ON-OFF switch that shuts off the compressor when an ice jam presses against the rubber diaphragm depressing the switch and opening the circuit. Melting action relieves pressure closing the circuit, lighting the start-reset pushbutton. The start-reset switch must then be pressed to start the automatic icemaking process.

10. Clean the air-cooled condenser, using vacuum cleaner, whisk broom or brush. Instruct customer to clean frequently and to be sure icemaker and fan motor are OFF.
11. Check that fan blades move freely, are not touching any surfaces and are not bent or out of balance.
12. Check for water leaks. Pour water down bin drain to be sure that drain line is open and clear.
13. Check the bin ice level switch.

NOTE

The bin ice level switch is an ON-OFF switch, that shuts OFF the compressor, when the ice pushes the actuator arm of thw switch IN. When the pressure releases the actuator arm, the switch CLOSES the circuit and RESTARTS the icemaker process.

14. Check the spout safety switch.

NOTE

The spout safety switch is manual reset and functions to immediately STOP the icemaking process if the bin ice level switch were to fail and begin to cause ice to jam up in the spout.

HQD650 MAINTENANCE AND CLEANING INSTRUCTIONS

NOTE

If the unit being serviced is equipped with a STEEL NEEDLE bearing, the breaker assembly should be REPLACED. Contact your local Scotsman Distributor for further information. Breakers with a NON-METALLIC bearing should be cleaned and the seal replaced TWICE PER YEAR. If the type of breaker bearing is not known, the breaker should be inspected. All A and B models were equipped with steel needle bearings. Most C Models have the non-metallic bearings.

15. Remove elbow insulation and remove three Allen head screws and spout retaining brackets from the freezer assembly end of the elbow and switch assembly.
16. Remove three Allen head screws and spout retaining brackets from the freezer assembly end of the elbow and switch assembly.

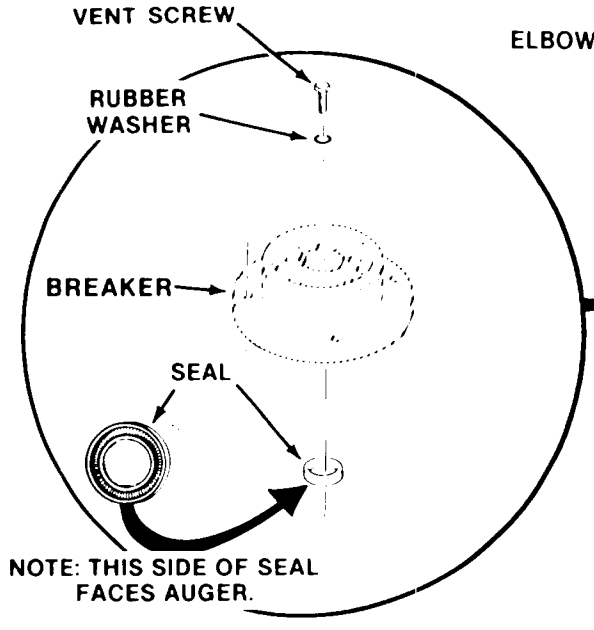

NOTE

In order to accomplish removal of the elbow and switch assembly in the next step, it may be necessary to further remove panels and disassemble the ice transport tube.

17. Lift the elbow and switch assembly and set aside to gain access to the top of the freezer assembly.
18. Remove four capscrews, lockwashers and the ice breaker assembly from the top of the freezer assembly for inspection.
19. Retain the O-ring for replacement during reassembly. Inspect the O-ring for cuts, tears or excessive wear, causes for replacement.
20. Replace the lip seal and inspect the top bearing seated in the ice breaker, wipe clean of mineral build up. Remove auger. Check seal and check auger for stains.

CAUTION

DO NOT force the auger and breaker together without having the vent hole open because pushing the breaker on with no air relief will cause the internal air pressure to force the grease seal away from the breaker.

(Continued on pg. 25)

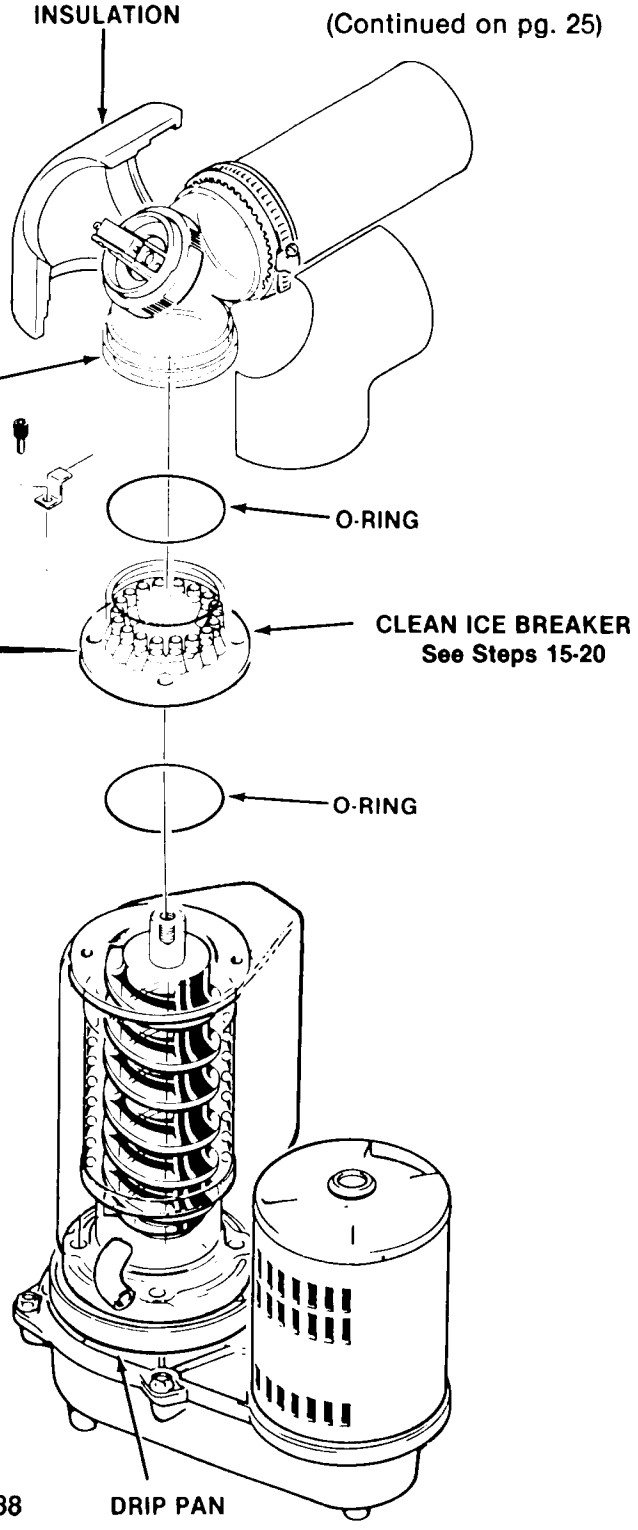

HQD650 MAINTENANCE AND CLEANING INSTRUCTIONS

CLEANING

1. Remove screws and push UP to unsnap catches and remove the top panel.
2. Remove screws and push OUT to unsnap catches and remove front panel.
3. Remove screws and back splash panel.
4. Remove screws and the left side panel.
5. Remove all ice from the cylindrical storage bin.

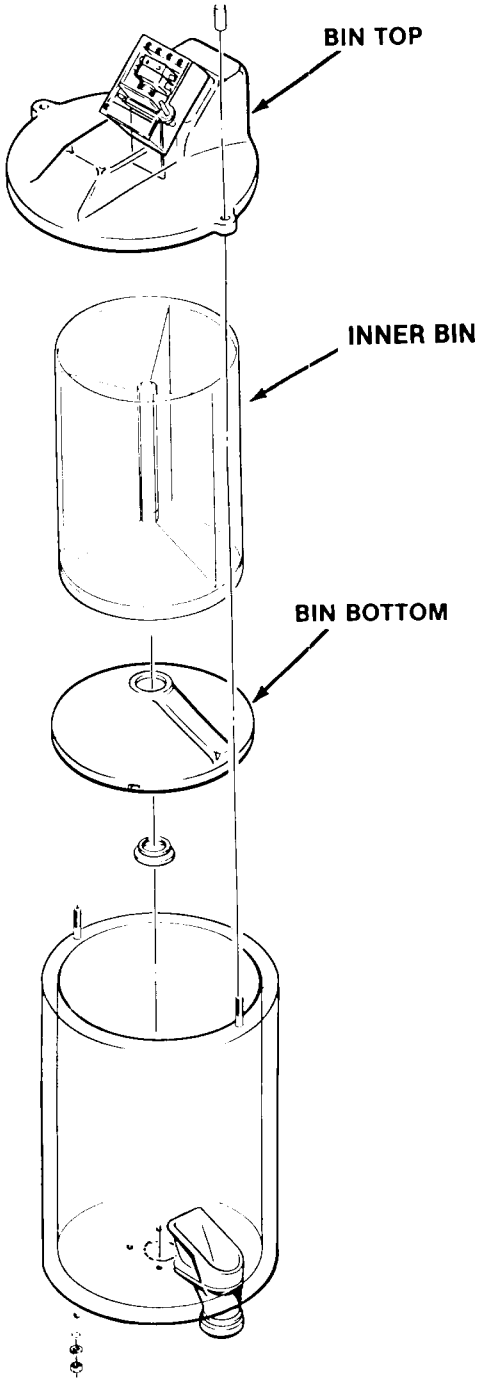

6. CLOSE the water supply shutoff valve or block the float in the water reservoir.
7. Use drain hose provided in the water feed tube and drain the reservoir.

////////////////////// WARNING //////////////////////

SCOTSMAN Ice Machine Cleaner contains Phosphoric and Hydroxyacetic acids. These compounds are corrosive and may cause burns. If swallowed, DO NOT induce vomiting. Give large amounts of water or milk. Call Physician immediately. In case of external contact flush with water. KEEP OUT OF THE REACH OF CHILDREN.

//

8. Prepare cleaning solution: Mix eight ounces of SCOTSMAN Ice Machine Cleaner with two quarts of hot water. (95^0F.-115^0F.)
9. Remove the cover to the water reservoir.
10. Slowly pour the cleaning solution into the water reservoir.
11. Reconnect electrical power.
12. Continue to slowly pour the solution into the water reservoir; maintain level just below the reservoir overflow.

REMOVE INNER BIN, AND BIN BOTTOM. CLEAN INNER BIN, BIN BOTTOM AND INSIDE OF BIN. POUR WATER INTO BIN TO RINSE DRAIN AND BE ASSURED DRAIN DRAINS IMMEDIATELY AND COMPLETELY.

13. Continue icemaking, using the cleaning solution, until all the solution is used up and the water reservoir is almost empty. DO NOT allow the icemaker to operate with empty reservoir.
14. Disconnect electical power, OFF.
15. Wash and rinse the water reservoir.
16. OPEN the water supply shutoff valve or remove the block from the float in the water reservoir.
17. Connect electrical power, ON.
18. Continue icemaking for at least 15 minutes, to flush out any cleaning solution. Check ice for acid taste — continue icemaking until ice tastes sweet.

HQD650 MAINTENANCE AND CLEANING INSTRUCTIONS

////////////////////////////////////WARNING////////////////////////////////////

DO NOT USE ice produced from the cleaning solution. Be sure none remains in the cylindrical storage bin.

//

19. Remove all ice from the cylindrical storage bin.

20. Add hot (95^0F. -115^0F.) water to the cylindrical storage bin and removable bin bottom. Throughly wash and rinse all surfaces within the bin.

21. Clean and sanitze the cylindrical storage bin and removable bin bottom each week.

SANITIZING

Sanitizing is an important phase of the icemaking and dispensing operation. The following sanitizing procedure should be performed after every repair or replacement of parts in the icemaker/dispenser in or through which water flows or drains and ice is made, spouted, stored or dispensed. Additional requirements for performing the sanitizing procedure should be followed in accordance with the requirements of the local Health Authorities.

////////////////////////////////////WARNING////////////////////////////////////

This WARNING applies to the use of diluted household bleach as a sanitizing solution. Read this WARNING thoroughly before preparing sanitizing solution. DANGER: KEEP OUT OF THE REACH OF CHILDREN. If sanitizing solution should come in contact with eyes, flood with water. If taken internally, feed milk, contact a physician. If in contact with skin, flood with water. Do not use with other household cleaners, especially ammonia.

//

The following are directions for sanitizing with diluted household bleach, most local codes allow this type of sanitizer. Follow the directions of your local health department and use the sanitizer that is approved. Follow the directions and warnings of that sanitizer.

1. Mix one tablespoon of household bleach to two gallons of water in a container large enough to use with the parts that need to be sanitized.

2. Using rubber gloves, immerse the parts in the sanitizing solution and wash the parts, flushing the solution thoroughly in, over and through all parts and surfaces of the dispenser/icemaker parts being sanitized.

Note: If using a sanitizer that requires a contact time, be sure to allow the parts to soak for that time period.

3. Allow the parts to air dry.

4. Replace the sanitized parts in the reverse order of their removal.

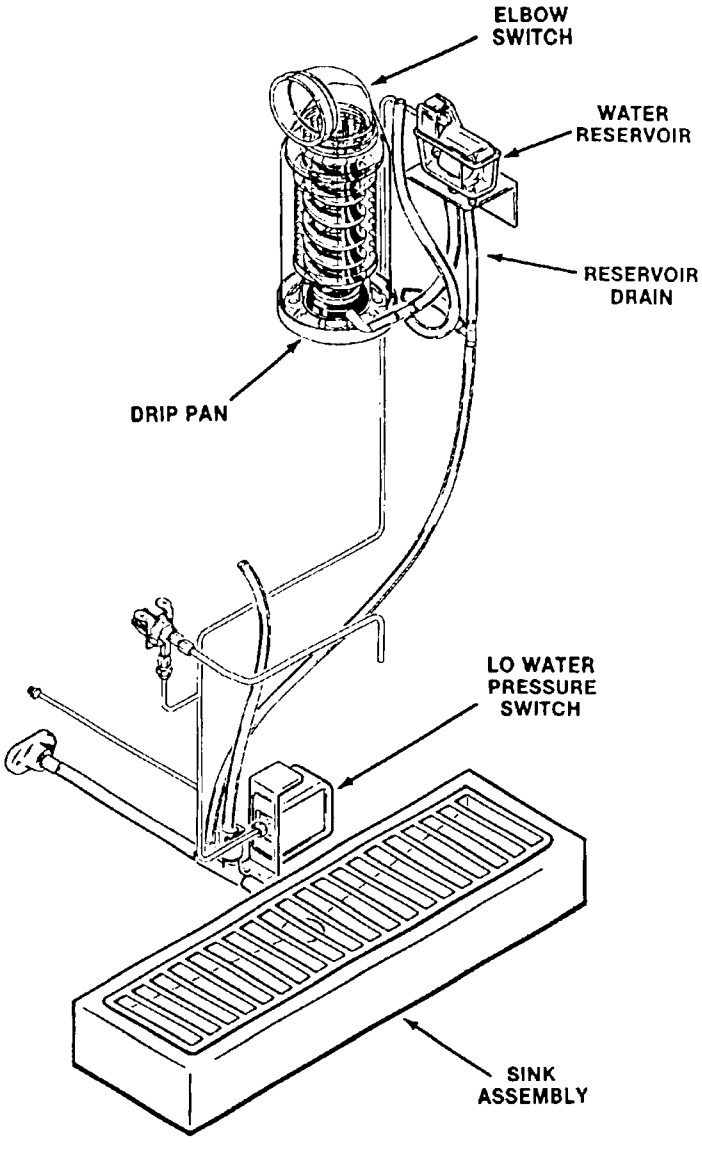

HQD650 SERVICE DIAGNOSIS

The Service Diagnosis Section is for use in aiding the serviceman in diagnosing a particular problem for pin-pointing the area in which the problem lies, thus an ever available reference for proper corrective action.

The following charts lists corrective actions for the causes of known symptoms of certain problems that can occur in the Dispensing System and the Icemaking - Refrigeration System.

DISPENSING SYSTEM

SYMPTOM	POSSIBLE CAUSE	CORRECTION
No water is dispensed.	Electrical power OFF.	Connect electrical power.
	Building water valve off.	Open valve.
	Defective water vend switch.	Replace switch.
	Defective water solenoid valve.	Replace defective valve.
No ice is dispensed.	Ice bin empty.	Check refrigeration system.
	Defective ice vend switch.	Replace switch.
	Broken or disconnected linkage.	Replace linkage.
	Bin drive motor defective.	Check, replace if defective.
	Jam in ice chute.	Remove obstruction.
Portion Control does not operate properly. Continues to operate when glass filler lever Assembly is held IN.	Timing module defective.	Replace defective timing module.
	Potentiometer switch defective. Loose connections or open wire leads to potentiometer.	Replace defective potentiometer. Check terminal wiring, tighten connection, repair wiring.
Icemaker will not run, red light on.	Bin has over filled due to:	
	Failed bin switch.	Replace switch.
	Compressor contactor stuck on.	Replace contactor.
	Bin Switch differential too short - unit cuts in too soon.	Replace Switch.
	Holding relay has been de-energized due to:	
	Power interruption.	Check power supply.
	Voltage drop at a holding circuit switch.	Check all switch contacts in holding circuit.

HQD650 SERVICE DIAGNOSIS

ICEMAKING — REFRIGERATION SYSTEM

SYMPTOM	POSSIBLE CAUSE	CORRECTION
Water Leaks.	Water level in reservoir too high.	Adjust water level to 1/4-inch below reservoir overflow pipe.
	Defective water seal.	Replace water seal.
	Gravity feed line leaking.	Check hose clamps, tubing.
	O-ring in spout casting leaks.	Remove spout casting, install replacement o-ring.
Excessive noise or chattering.	Mineral or scale deposit on auger and inner freezing walls.	For severe deposits, remove and manually polish auger, sand inner chamber walls of freezer barrel. For lighter concentration, use SCOTSMAN Ice Machine Cleaner periodically.
	Dirty air-cooled condenser.	Clean condenser and fan blades.
	Improper refrigerant pressures.	Adjust head pressure control W/C only to recommend setting or balance refrigerant charge.
	Intermittent water supply.	Check and clean optional water strainer. Check gravity feed line for air lock and remove air lock.
	Water level in reservoir too low.	See CORRECTION for water leaks above.
	Gearmotor loose on frame.	Tighten gearmotor mounting bolts.
	Gearmotor end-play or worn bearing.	Repair or replace worn bearing
	Top bearing worn.	Check/replace breaker.
	Compressor not snug on rubber mounts.	Repair or replace rubber mounts.
Squeal noises in freezer.	Ice is too hard in freezer.	Raise water level in reservoir. Check suction pressure and adjust as necessary.

HQD650 SERVICE DIAGNOSIS

ICEMAKING — REFRIGERATION SYSTEM

SYMPTOM	POSSIBLE CAUSE	CORRECTION
Low ice production.	Loss of refrigerant. Under or over-charge of refrigerant.	Check system and recharge. See NAMEPLATE for correct charge.
	Drive motor weak.	Replace drivemotor.
	Dirty or plugged condenser.	Clean condenser.
	Low water level in reservoir.	Check float.
	Partial restriction in capillary tube or drier.	Moisture in system. Overcharge of oil in system. Remove charge. by blowing back thru cap tube. Replace drier and recharge. See NAMEPLATE.
	Optional water strainer partially plugged.	Remove and clean strainer screen.
	Corroded to stained auger, due to water condition. Lime build up in freezer.	Remove and clean auger, or use SCOTSMAN Ice Machine Cleaner. See Maintenance & Cleaning.
Icemaker operates, but makes no ice.	Loss or undercharge of refrigerant.	Check for gas leaks, evacuate & recharge.
	Water not entering freezing Chamber. Plugged strainer or water inlet line.	Check and clean. Check, remove possible air lock in gravity feed line.
	Moisture in system.	Check, evacuate, replace drier, SEE NAMEPLATE & recharge system.
	Water seal leaks.	Replace water seal.
	Water turned OFF while icemaker was operating.	Freezer inlet water line froze shut. Shutdown and defrost icemaker.
Icemaker will not operate.	Manual safety switch tripped.	Reset switch.
	Blown fuse.	Replace fuse and check for cause of blown fuse.
	Low pressure control activiated.	Check for cause.
	Head pressure control activated.	Check cause of decreased or loss of water to water-cooled condenser.
	Bin ice level switch stuck, pushed IN.	Repair or replace switch.
	Electrical power disconnected.	Connect electrical power ON.

HQD650 ADJUSTMENT PROCEDURES

ADJUSTMENT OF THE LEG LEVELERS

When the Icemaker is installed with legs, the legs must be adjusted to level the cabinet. The cabinet must be leveled in the front-to-back and side-to-side directions. This adjustment should be performed during initial installation of the cabinet and anytime the cabinet is moved from the original location to another site.

1. Using a 1-1/8" open-end wrench, and a carpenter's bubble level, rotate the threaded leveler in each leg to RAISE or LOWER the cabinet until the cabinet is level in the front-to-back direction.
2. Repeat step A, for leveling in the side-to-side direction.
3. Recheck both the front-to-back and the side-to-side leveling and repeat adjustments, as necessary.

ADJUSTMENT OF THE WATER REGULATOR ASSEMBLY

The correct head pressure on water-cooled models is 135 PSIG. Adjustments can be performed on the water regulator assembly to increase or decrease the head pressure.

To adjust the water regulator assembly:

1. To INCREASE the head pressures: Rotate the adjusting screw, on the water regulator assembly COUNTER-CLOCKWISE.
2. To DECREASE the head pressure: Rotate the adjusting screw, on the water regulator assembly CLOCKWISE.

ADJUSTMENT OF THE WATER RESERVOIR FLOAT

The correct water level in the water reservoir should be at the level of the raised molded line, on the side of the body of the water reservoir. When the water line level is above or below the raised molded line, adjustment can be performed to raise or lower the water level by bending the metal arm of the float inside the water reservoir.

To adjust the water reservoir float:

1. To RAISE the water level:
   Hold one end of the metal arm of the float and slightly bend the float up.
2. To LOWER the water level:
   Hold one end of the metal arm of the float and slightly bend the float DOWN.
3. To perform MAJOR adjustment:
   When repair or replacement has been performed and the water level line betweeen the water reservoir and the freezer assembly has been substantially altered:
   a. Loosen the three screws and lockwashers which attach the reservoir bracket and water reservoir to the freezer mount.
   b. Move the reservoir bracket UP or DOWN to properly position the water line level within the freezer. The proper water level within the freezer is 1/2" - 3/4" below the top of the auger.
   c. When proper water level within the freezer is adjusted, re-tighten screws attaching the water reservoir bracket to the freezer mount.

HQD650 REMOVAL AND REPLACEMENT PROCEDURES

HQD650's have been manufactured in "A", "B" and "C" Models (as in model HQD650AE-1A vs. HQD650AE-1C.) The following instructions are designated for either "A" ,"B" or "C" models. Be certain to check your model number and refer to the appropriate steps.

Read the instructions thoroughly before performing any Adjustment or Removal and Replacement Procedures.

//////////////////// **WARNING** ////////////////////

Be sure the electrical power supply and the water supply are OFF, BEFORE starting any of the following REMOVAL AND REPLACEMENT procedures as a precaution to prevent possible personal injury or damage to equipment.

//

REMOVAL AND REPLACEMENT OF THE AUGER, WATER SEAL, O-RING, ICE BREAKER ASSEMBLY AND FREEZER ASSEMBLY (A ,B and C MODELS)

To remove the auger, water seal, o-ring and ice breaker assembly:

1. Shut off water supply to the icemaker/dispenser at the building source.
2. Disconnect or shut-off electrical power to the icemaker at the building source.
3. Remove screws and push UP to unsnap catches and remove top panel.
4. Remove screws and remove the front panel.
5. Remove retaining nuts and remove bin top.
6. Separate insulation halves and remove from the elbow safety switch.
7. Remove three socket head screws and spout retaining brackets from the end of the spout assembly at the top of the freezer assembly.

NOTE 1: *To service icebreaker/top bearing only, do steps 1-9 and 11 only. Refer to page 36 for ice breaker service. Reverse disassembly procedures to re-assemble.*

NOTE 2: *The control box may be removed from its mounting position for better access to the gearmotor and freezer assembly.*

8. Lift the elbow safety switch and spout UP, off of the freezer assembly.
9. Retain the o-ring for replacement during reassembly. Inspect for cuts, tears or excessive wear, causes for replacement.
10. Remove hose clamp and disconnect the water feeder tube from the reservoir, at the freezer to drain the reservoir and freezer of water.
11. Remove four capscrews, lockwashers and the ice breaker assembly from the top of the freezer assembly.
12. Retain the o-ring for replacement during reassembly. Inspect for cuts, tears or excessive wear, causes for replacement.
13. Remove the auger. If necessary a bolt can be threaded into the top end of the auger from the freezer and a hand tool used to pull on the bolt to remove the auger.

To remove Water Seal only, omit steps 15, 16, and 17.

TO REMOVE FREEZER ASSEMBLY:

14. Pull back permagum around freezer base mounting bolts and remove four screws and flatwashers. Separate the freezer assembly, gasket and adapters, from the drivemotor assembly.
15. Bleed off or blow the refrigerant charge through the Schrader valve.
16. Unsolder and disconnect the refrigerant suction line at the compressor, and the associated capillary line at the drier.
17. Remove the freezer assembly from the chassis.

A and B MODELS

18. Using a suitable length and size wooden dowel or stick inserted through the top of the open freezer assembly, tap the stationary piece water seal out the bottom of the freezer assembly.

C MODEL

18. Remove snap ring from inside bottom of evaporator assembly. Using a suitable length and size of wooden dowel or punch inserted through the top of the open freezer assembly, tap the stationary portion of the water seal out the bottom of the freezer assembly.

HQD650 REMOVAL AND REPLACEMENT PROCEDURES

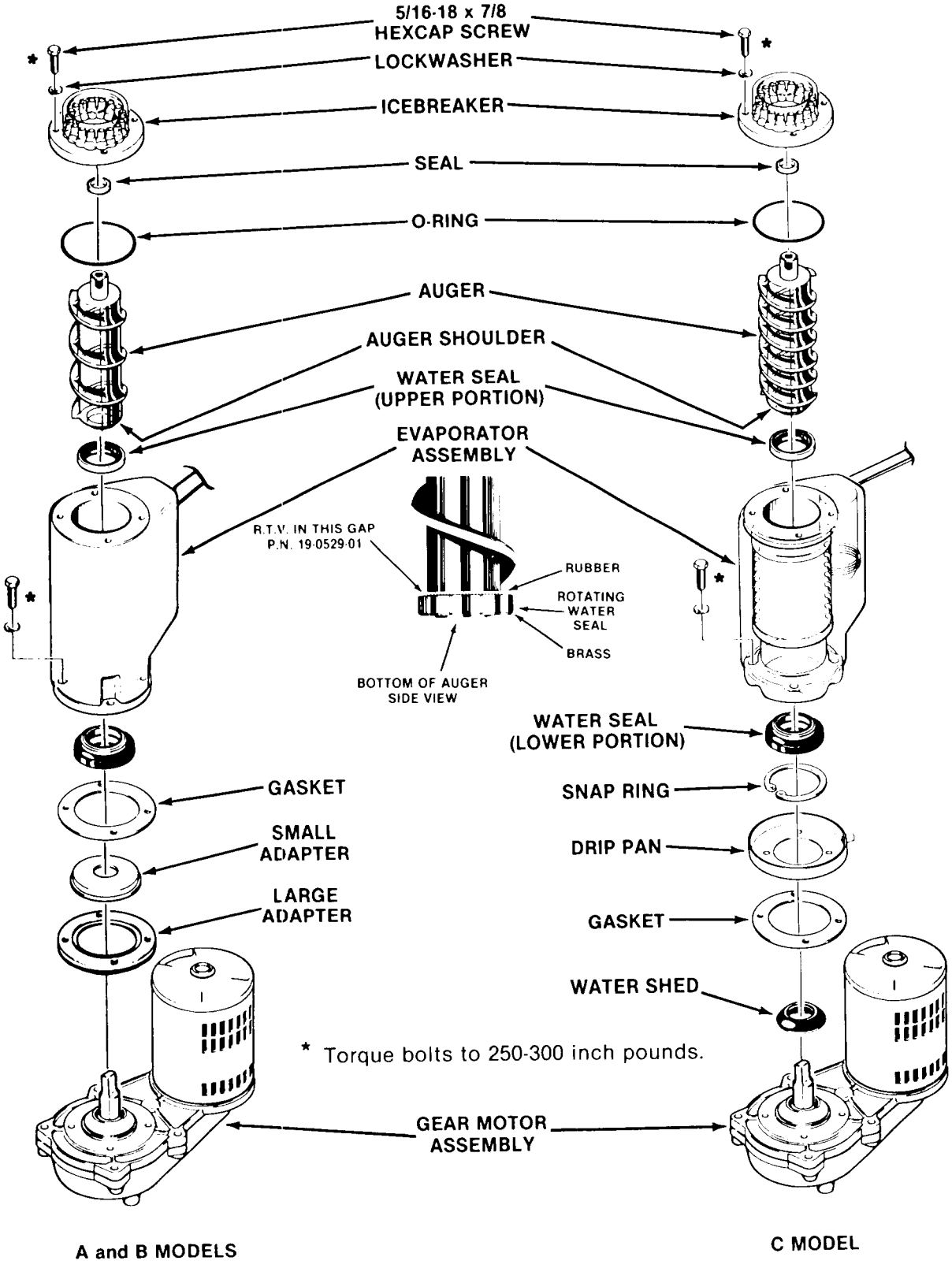

19. Replace the water seal any time it has been removed.

CAUTION

The lower two-part water seal is a precise seal and fitting. Any damage or wear will cause a failure. It is recommended that the lower two-part water seal be replaced any time there is a question of condition.

A and B MODELS

20. Replace the parts starting with the stationary part of the water seal. Carefully inspect it prior to assembly. Insert this half of the water seal into the bottom of the freezer. Then insert the brass freezer adapter into the bottom of the freezer tube and push it in as far as it will go.

C MODEL - OR REPLACEMENT FREEZER

20. Replace the new stationary portion of the two-part water seal in the bottom of the freezer assembly and press in far enough to install the snap ring. **IMPORTANT:** pull water seal back down against snap ring all the way around the freezer.

A and B MODELS

21. Mount the freezer and gasket to the gear motor case. Be certain that the gearmotor is in good working condition and that the large plastic adapter is in place on the gearbox.

C MODEL - OR REPLACEMENT FREEZER

21. Mount the freezer, drip pan and gasket to the gearmotor case. Check to be sure the gearmotor is in good condition and the water shed is in place around the output shaft.

22. Apply Scotsman part number 19-0529-01 RTV silicone rubber to the auger shoulder before pushing on the water seal. Place just enough silicone on to the auger, so that when the water seal is placed on the auger, the gap between the auger shoulder and water seal is completely filled with silicone.

    The silicone must be allowed to "set-up" or dry on the surface before any water can be added to the freezer.

CAUTION

If any silicone gets onto the mating surfaces of the water seal, the seal is ruined, and cannot be used.

23. Install auger.

24. Replace breaker.

25. Reassemble ice transport tube, insulation, and bin top assembly in reverse order of disassembly.

CAUTION

DO NOT force the auger and breaker together without having the vent hole open because pushing the breaker on with no air relief will cause the internal air pressure to force the grease seal away from the breaker.

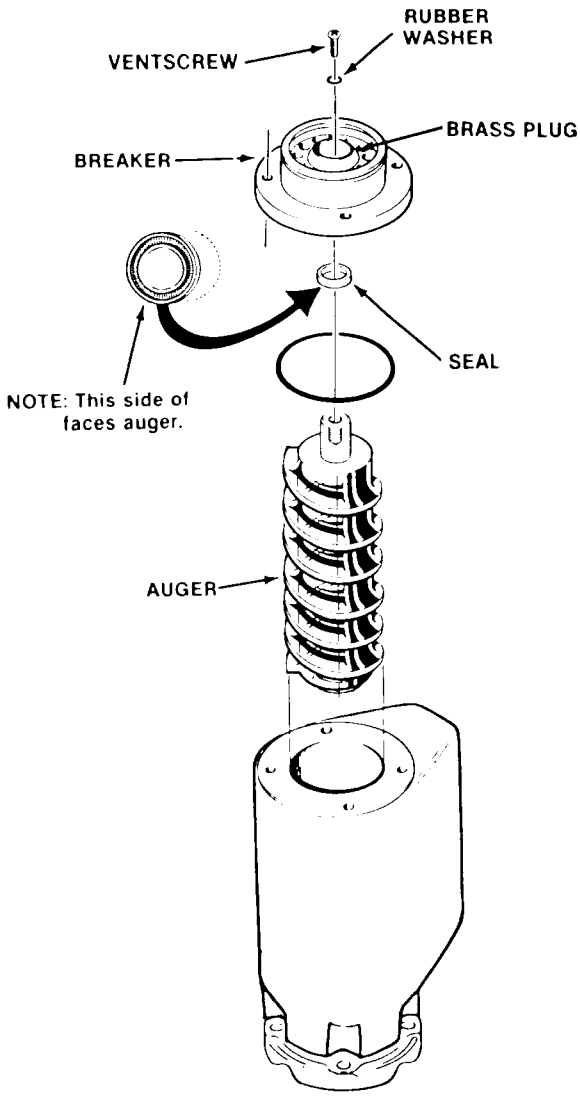

HQD650 REMOVAL AND REPLACEMENT PROCEDURES

WARNING

Disconnect electrical power supply before removal procedures.

REMOVAL AND REPLACEMENT OF THE COMPRESSOR ASSEMBLY

To remove the compressor assembly:

1. Remove two screws, push UP to unsnap catches and remove the top panel.
2. Remove two screws, pull OUT to unsnap catches and remove front panel.
3. Remove screws and back splash panel.
4. Remove screws and sink assembly; then, remove hose clamp and disconnect drain hose. Remove the sink assembly and grill from the cabinet.
5. Bleed off or blow the refrigerant charge through the schrader valve.
6. Remove the cover from the terminal box on the compressor; then, disconnect electrical leads from the compressor.
7. Unsolder and disconnect the refrigerant suction line and the discharge line from the compressor.
8. Unsolder the process header from the compressor and retain for installation on the replacement compressor.
9. Remove three nuts, washers, mounting sleeves and grommets and the compressor from the chassis base.

To replace the compressor assembly, reverse the removal procedure.

REMOVAL AND REPLACEMENT OF THE CONDENSER ASSEMBLY — AIR-COOLED

To remove the condenser assembly:

1. Remove screws and left side panel; then, remove screws and splash panel to gain access to the condenser assembly. Bleed off refrigerant charge.
2. Unsolder and disconnect refrigeration lines from the condenser.
3. Unsolder and remove the drier from the refrigerant line connected to the condenser.
4. Remove screws, lockwashers and air-cooled condenser from the chassis base.

To replace the air cooled condenser, reverse the removal procedure.

REMOVAL AND REPLACEMENT OF THE CONDENSER ASSEMBLY — WATER-COOLED

To remove the condenser assembly:

1. Remove screws and left side panel; then, remove screws and splash panel to gain access to the condenser assembly. Bleed off refrigerant charge.
2. Check to be sure building source water inlet supply shutoff valve is OFF.
3. Disconnect the water-cooled condenser inlet water line at the water regulator assembly outlet fitting.
4. Unsolder the refrigerant capillary tube at the drier.
5. Disconnect the water drain line at the top of the water-cooled condenser.
6. Unsolder the refrigerant line connecting the top of the water-cooled condenser to the process header.
7. Remove two screws and washers and the water-cooled condenser from the chassis base.

To replace the water-cooled condenser, reverse the removal procedure.

NOTE

Always install a replacement drier, anytime the sealed refrigeration system is opened. Do not replace the drier until all other repair or replacement has been completed.

HQD650 REMOVAL AND REPLACEMENT
BREAKER/BEARING/WATER SEAL ASSEMBLY

INSPECTION:

If, when the breaker is removed from the evaporator, the yellow water seal stays on the auger, replace the breaker. If the auger shaft is rough or scored, it and the ice breaker must be replaced. If the auger shaft can be cleaned up, do NOT use an abrasive material; a nylon scouring pad used for cleaning dishes will do a very good job.

The bearing in the breaker is not replaceable. The breaker must be replaced when the bearing is worn past 1.009"ID.

The method of retaining the water seal in the nugget ice breaker was changed in early 1988.

The newest breakers have, at the water seal mounting location, a "lip" protruding into the inner diameter of the breaker.

This "lip" is at the bottom of the seal, retaining the seal in the breaker. The seal is retained so positively, that it cannot be removed without ruining it.

TO REPLACE THE SEAL IN THE BREAKER:

1. Pull old seal out with a pliers.
2. Place new seal on auger shaft, open side down.
3. Push breaker onto auger and seal as far as it will go.
4. Remove breaker and seal from auger, use your thumbs to push the seal all the way into the breaker.

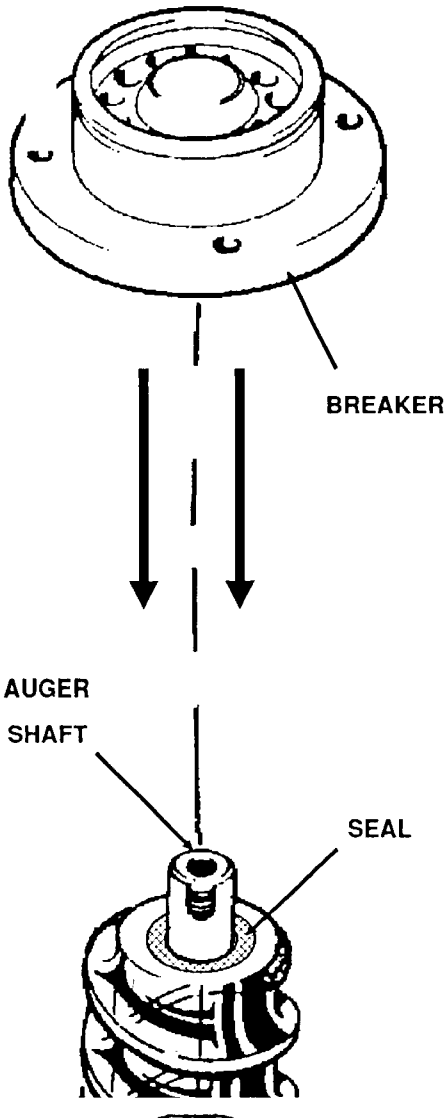

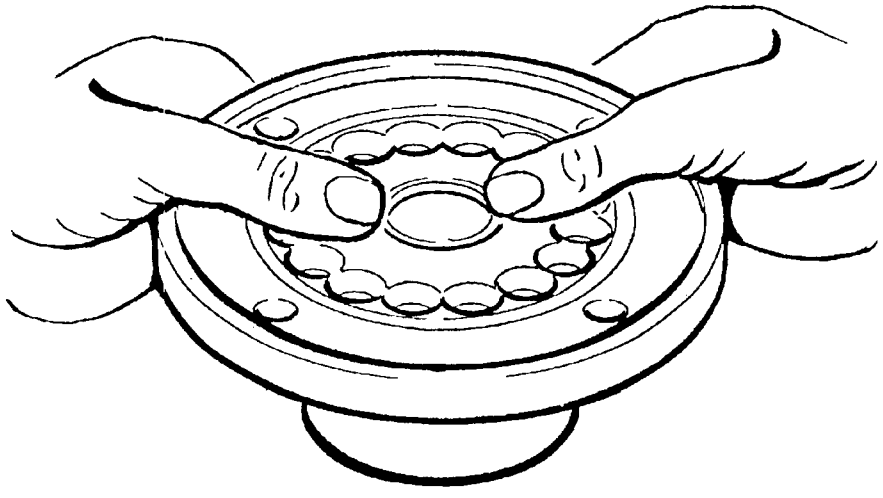

HQD650 REMOVAL AND REPLACEMENT PROCEDURES

WARNING

Disconnect electrical power supply before removal procedures.

REMOVAL AND REPLACEMENT OF THE DRIER

NOTE: Always install a replacement drier, anytime the sealed refrigeration system is opened. Do not replace the drier until all other repair or replacement has been completed.

To replace the drier:

1. Remove four screws and slide the backsplash assembly out from behind the dispensing assembly.
2. Remove screws attaching sink assembly to cabinet, then, remove hose clamps and disconnect drain hose, behind the sink assembly. Remove the sink assembly and grill from the cabinet.
3. Bleed off or blow the refrigerant charge through the Schrader valve.
4. Remove attaching hardware and drier brace or strap from the drier.
5. Unsolder refrigeration lines at both ends of the drier.

To replace the drier:

CAUTION

1. **If the factory seal is broken on the replacement drier, exposing it to the atmosphere more than a few minutes, the drier will absorb moisture from the atmosphere and lose substantial ability for moisture removal.**
2. **Be sure the replacement drier is installed with the arrow positioned in the direction of the refrigerant flow.**

1. Remove the factory seals from the replacement drier and install the drier in the refrigerant lines with the arrow positioned in the direction of the refrigerant flow.
2. Solder the drier into the lines, two places.
3. Secure drier with the drier brace or strap.
4. Purge the system and check for leaks.
5. Thoroughly evacuate the system to remove moisture and non-condensables.
6. Charge the system with refrigerant, by weight. SEE NAMEPLATE.
7. Replace and attach the sink assembly and backsplash assembly.

REMOVAL AND REPLACEMENT OF THE INNER BIN DRIVE MOTOR ASSEMBLY

To remove the drive motor:

1. Remove screws and splash panel to prepare for removal of the drive motor.
2. Remove four mounting plate screws and remove the drive motor from the cabinet.

To replace the drive motor assembly, reverse the removal procedure.

REMOVAL AND REPLACEMENT OF THE FAN MOTOR ASSEMBLY

To remove the fan motor assembly:

1. Remove four screws and slide the backsplash assembly from behind the dispensing assembly.
2. Disconnect electrical lead from the fan motor.
3. Remove two screws and lockwashers securing the fan motor bracket to the chassis base and remove the fan motor assembly and bracket from the cabinet.
4. Remove the nut from the end of the fan motor shaft and remove the fan blade.
5. Remove four screws securing the fan motor to the motor bracket and separate the motor from the bracket.

To replace the fan motor assembly, reverse the removal procedure.

HQD650 REMOVAL AND REPLACEMENT PROCEDURES

REMOVAL AND REPLACEMENT OF THE ELBOW AND SWITCH ASSEMBLY

To remove the elbow and switch assembly:

1. Disconnect the electrical supply to the icemaker at the circuit breaker or fuse box.

WARNING

Be sure the electrical power supply to the icemaker is OFF before proceeding with removal procedures.

2. Remove screws and remove top panel.
3. Remove insulation halves from the elbow switch assembly.
4. Loosen the screw on the screw clamp and U-channel securing the ice transport tube to the elbow and safety switch.
5. Separate the ice transport tube from the elbow.
6. Remove bolt and washer and remove switch support from the ice breaker.
7. Remove three Allen head screws and spout retaining brackets from the freezer assembly and elbow and switch assembly.
8. Lift the elbow and switch assembly UP to clear the top of the freezer assembly.
9. Remove screws and the switch from the switch actuator housing.
10. Rotate the retainer ring 90-degrees to unlock the retainer ring and the switch actuator housing from the elbow assembly and separate the parts from the elbow.
11. Inspect the rubber diaphragm for cuts, tearing or excessive wear.

To replace the elbow and switch assembly, reverse the removal procedure.

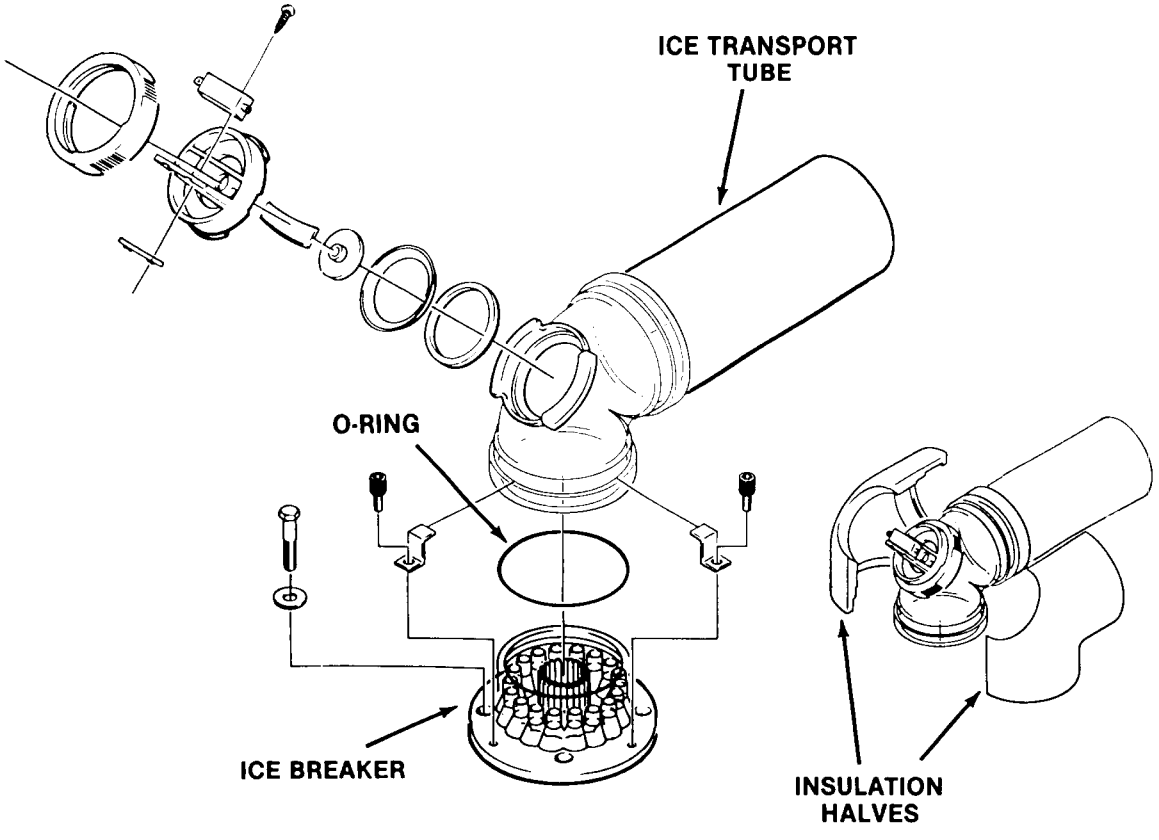

HQD650 REMOVAL AND REPLACEMENT PROCEDURES

WARNING

Disconnect electrical power supply before removal procedures.

REMOVAL AND REPLACEMENT OF THE WATER PRESSURE SWITCH ASSEMBLY

To remove the low water pressure switch assembly:

1. Remove screws and the splash panel.
2. Disconnect electrical leads in the control box from the low pressure switch.
3. Unscrew the flare nut fitting and disconnect the low pressure control and washer from the bracket.

To replace the low water pressure control assembly, reverse the removal procedure.

REMOVAL AND REPLACEMENT OF THE WATER REGULATOR ASSEMBLY — WATER-COOLED MODELS

To remove the water regulator assembly:

NOTE: Always install a replacement drier, anytime the sealed refrigeration system is opened. Do not replace the drier until all other repair or replacement has been completed.

1. Remove screws and splash panel.
2. Bleed off or blow the refrigerant charge through the schrader valve.
3. Unsolder the capillary line from the water regulator, at the process header.
4. Disconnect the water inlet line at the pipe fitting on the pipe nipple assembly bracket.
5. Unscrew the flare nut fitting, on the water regulator, and disconnect the water line from the water regulator to the water-cooled condenser.
6. Remove screws, lockwashers and the water regulator assembly from the chassis base.

To replace the water regulator assembly, reverse the removal procedure.

REMOVAL AND REPLACEMENT OF THE WATER RESERVOIR ASSEMBLY

To remove the water reservoir assembly:

1. Push UP to unsnap catches and remove the top panel.
2. Pull OUT to unsnap catches and remove the front panel.

NOTE: Be prepared with container or rags, to catch water left in lines, when lines are disconnected in next steps, to prevent draining water on parts, components, electrical lines, etc.

3. Disconnect the water inlet tube from the water reservoir assembly.
4. Remove two corbin clamps and two tubes from the bottom of the water reservoir assembly.
5. Unscrew and remove the plastic wingnut from the bottom of the water reservoir assembly.
6. Lift and remove the water reservoir assembly from the mounting bracket.

To replace the water reservoir assembly, reverse the removal procedure.

NOTE: Check that the installed replacement water reservoir assembly float moves freely. The correct water level in the water reservoir is 3/8-inch below the raised molded line, on the side of the body of the water reservoir.

HQD650 REMOVAL AND REPLACEMENT PROCEDURES

REMOVAL AND REPLACEMENT OF THE GEAR MOTOR

WARNING

Be sure the electrical power supply to the icemaker is OFF before proceeding with removal procedures.

To remove the auger drivemotor:

1. Disconnect electrical power leads from the motor.
2. Unscrew four capscrews securing motor to gearcase.
3. Lift off motor winding from the gear reducer.
4. Use a pry bar to remove rotor and rotor bearing from the gearcase.
5. Examine grease seal in gearcase. Replace if worn. Add grease to seal and bearing housing before re-assembly.

To replace, reverse the removal procedures.

NOTE

Motors must be exchanged complete. DO NOT mix rotors, housings or windings.

REMOVAL AND REPLACEMENT OF THE GEAR MOTOR ASSEMBLY

WARNING

Be sure the electrical power supply to the icemaker is OFF before proceeding with removal procedures.

CAUTION

SHUT OFF water supply to icemaker.

To remove the gear motor assembly:

1. Refer to Removal and Replacement of the Elbow & Switch Assembly and perform steps to gain access to the freezer assembly.
2. Thread suitable length bolts, having No. 5/16-18 UNC-2B threads, into thread hold in the top of the auger. Grasp bolt head with hand tool and pull auger out.
3. Unbolt freezer from gear motor assembly, lift up and off gear motor.
4. Remove the drivemotor cover and disconnect the three electrical wire leads.
5. Remove bolts holding gear motor plate to the machine base.
6. Lift the gear motor from the machine base.

To replace the gear motor assembly, reverse the removal procedure.

*Torque bolts to 250-300 inch pounds.

REPAIR OF THE GEAR MOTOR ASSEMBLY

1. Remove (6) cap screws to prepare to open gearcase.
2. Pry the two cases apart. Inspect the internal parts, look for:
   -Condition and quality of lubricant. (The proper oil level is flush with the top of the output (biggest) gear.)
   -Gear and gear shaft condition Woodruff key between output gear and shaft
   -Grease seals, back to back
   -Vent hole open
   -Thrust bearing intact.

   Be sure to count and retain the spacer washers as they come out of the gearbox.

   Replace the parts as required, using the part numbers found in the parts list section of this manual. Replace the gears into a CLEAN bottom gearcase, replacing the spacer washers in the same quantity as they were upon disassembly. If no count was kept, refer to the parts illustration.

NOTE: Some bearing grease should be placed in all bearings before assembly to insure proper lubrication upon start-up.

To reassemble:

1. Set top gearcase on gears and spacers and oil. Output gear when installed must be assembled with the flush, machined side DOWN and the protruding bossed center UP. Be sure O-ring is in place.
2. Replace gearcase cover. Drive in alignment pins before tightening cap screws and torque at 250-300 inch pounds.
3. Bench test the gearmotor assembly.

   Test for noise, amp draw (must not be in excess of icemaker nameplate for gearmotor) and oil leaks.

   Return gearbox to the unit. Be certain all mounting surfaces are clean and reassemble gearbox to chassis and freezer assembly.

   If the freezer water seal begins to leak, removal of the auger is required in order to replace the top bearing and water seal. AT THE SAME TIME, it would be recommended to remove the gearmotor assembly, open it up and inspect it.

HQD650 REMOVAL AND REPLACEMENT PROCEDURES

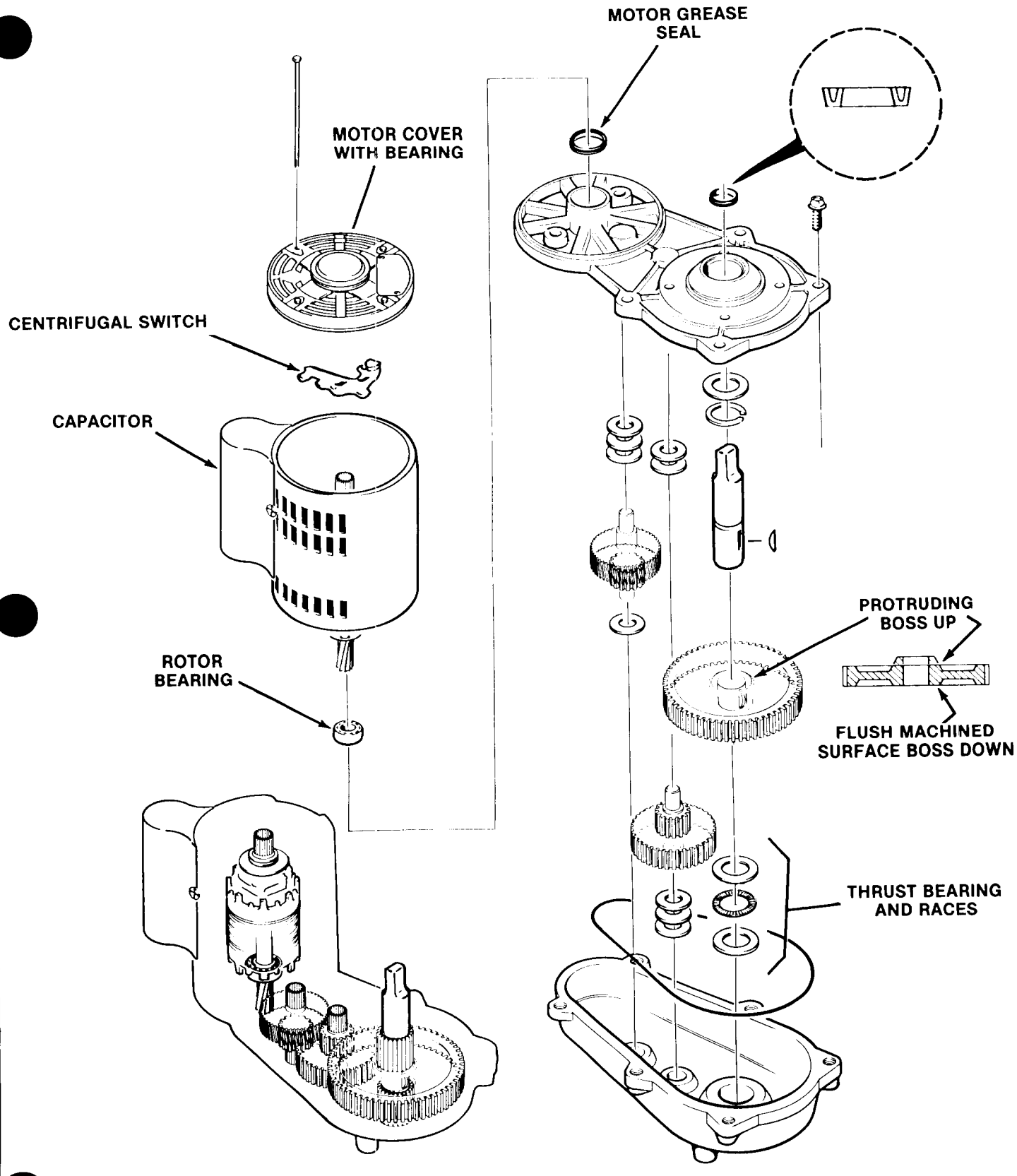

HQD750

TABLE OF CONTENTS

GENERAL INFORMATION & INSTALLATION
- Introduction 2
- For the Installer 3
- For the Electrician 6
- For the Plumber 7
- Final Checklist 8

OPERATING INSTRUCTIONS
- Start-Up 10
- Dispensing System 13
- Icemaker/Operation 14
- Electrical/Refrigeration 15

COMPONENT DESCRIPTION 17

MAINTENANCE & CLEANING INSTRUCTIONS
- Dispenser 21
- Icemaker 24
- Sanitizing 26
- Chlorination 27

SERVICE DIAGNOSIS 28

ADJUSTMENT PROCEDURES
- Leg Levelers 32
- Water Regulator Assembly 32
- Water Reservoir Float 32
- Shutter Motor Switches 33

REMOVAL AND REPLACEMENT PROCEDURES
- Auger, Water Seal, O-Ring and Ice Breaker Assembly 34
- Compressor Assembly 38
- Condenser Assembly, Air-Cooled 39
- Condenser Assembly, Water-Cooled 39
- Rotating Bin 40
- Drier 41
- Safety Controls, High Pressure, Low Pressure, Auger Delay 41
- Elbow and Safety Switch 42
- Drive Unit 43
- Gear Drivemotor 44

LIST OF ILLUSTRATIONS

- Specifications 3
- HQD750 - Component Location 4
- Location 5
- Electrical 6
- Plumbing 7
- Final Checklist 9
- Operation 11
- Component Description 16
- Maintenance and Cleaning 23-25
- Removal and Replacement 35-45

PARTS LIST AND WIRING DIAGRAMS 1
(Printed in Yellow)

PARTS LIST:
- Component Location 3
- Cabinet Assembly I 4
- Cabinet Assembly II 5
- Air-Cooled Assembly 6
- Water-Cooled Assembly 7
- Compressor Assembly 8
- Water System 9
- Elbow and Switch Assembly 10
- Bin Assembly 11
- Bin Ice Level Assembly 12
- Dispenser Assembly 13
- Shutter Actuator Assembly 14
- Freezer Assembly 15
- Drivemotor Assembly 16
- Control Box Assembly 17

WIRING DIAGRAMS:
- HQD750AE-1A (115/60/1) .....
- HQD750WE-1A (115/60/1) .....
- HQD750AE-1C (115/60/1) 22
- HQD750WE-1C (115/60/1) 23

THIS PAGE
INTENTIONALLY
LEFT BLANK

HQD750 FOR THE INSTALLER

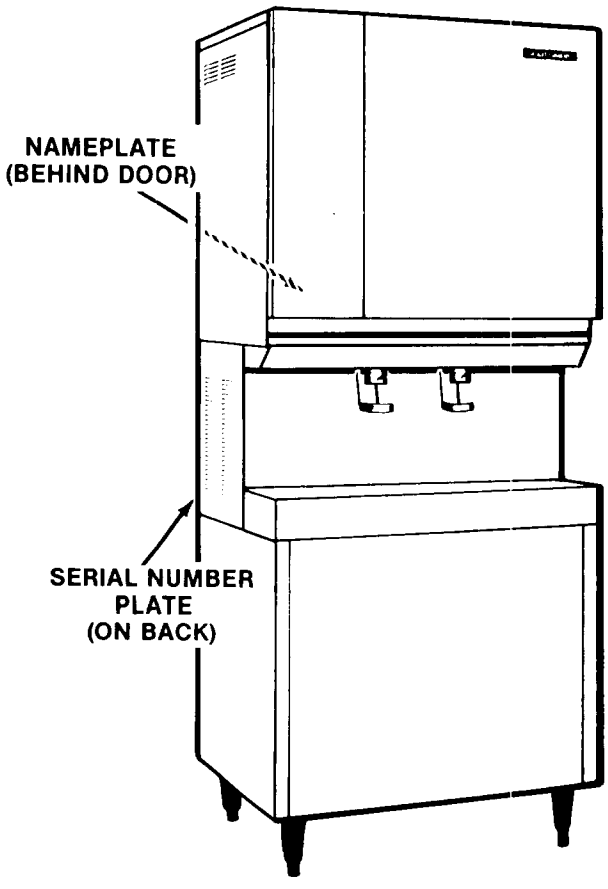

HQD750

DMS31

DESCRIPTION

This attractive compact cabinet has textured metal with a sandalwood enamel finish, cork pattern vinyl upper front panel and sienna accent trim. Also, an optional stainless steel cabinet finish is available. Both cabinets have up-to-date styling, and easily removable panels for easy access to electrical and mechanical components.

SELF-CONTAINED STORAGE BIN

These high quality ice dispensers store their own ice supply in a cylindrical stainless steel ice storage bin.

NAME PLATE

MODEL NUMBER
SERIAL NUMBER
A.C. SUPPLY VOLTAGE
MINIMUM CIRCUIT AMPACITY WIRES
MAXIMUM FUSE SIZE * HERTZ
HEATER WATTS PHASE
REFRIGERANT CHARGE OZ

MOTORS	VOLTS	R.L.A./F.L.A.	W/HP	L.R.A.
COMPRESSOR				
FAN				
DRIVE				
OTHER				

DESIGN PRESSURE LOW HIGH
* OR HACR TYPE CIRCUIT BREAKER

SCOTSMAN

SERIAL NUMBER PLATE

MODEL NUMBER
SERIAL NUMBER
VOLTS/HERTZ/PHASE
MAXIMUM FUSE SIZE
REFRIGERANT CHARGE OZ

INTRODUCTION

This manual provides the specifications and the step-by-step procedures for the installation, start-up and operation, and the maintenance and cleaning for the SCOTSMAN HQD750 high quality ice dispenser.

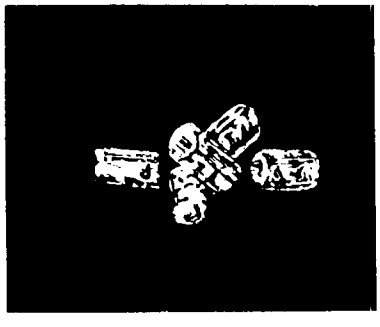

This product qualifies for the following listings:

This icemaker has been engineered to our rigid safety and performance standards. The National Sanitation Foundation (NSF) seal, signifies that it is listed with the NSF and that it complies with the materials and construction standards of the NSF. In addition, the Underwriters Laboratories, Inc., (UL) Listing Mark and the Canadian Standards Association (CSA) Monogram, both signify that its construction and design have been inspected and tested by them. NSF, UL and CSA inspectors also periodically examine production icemakers at the factory, to assure continued compliance.

To retain the safety and performance built into this icemaker, it is important that installation and maintenance be conducted in the manner outlined in this manual.

HQD750 FOR THE INSTALLER

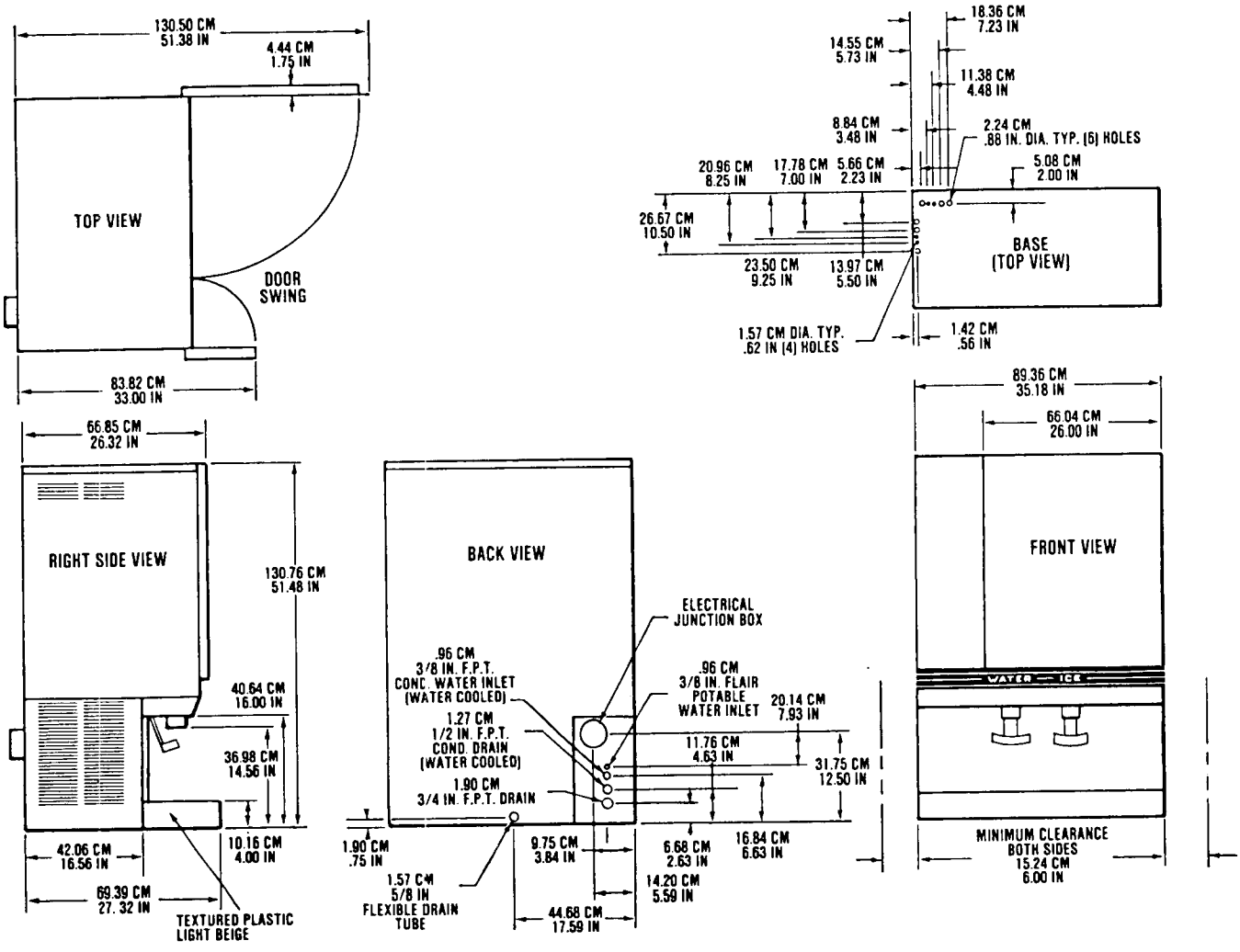

We reserve the right to make product improvements at any time. Specifications and design are subject to change without notice.

SPECIFICATIONS

Model Number	(Height - w/o Legs) Dimensions H" x W" x D"	Bin Cap.	Cube Size	Cond. Unit	Finish **	Basic Electrical	Comp. H.P.	No. of Wires	Min. Circuit Ampacity †	★ Max. Fuse Size	Ship. Wt. lbs./kg.
HQD750AE-1C	51⅛ x 35⅞ x 27⅛	90 lbs	Nugget	Air	ES	115/60/1	3/4	2	27.1	30	448/203
HQD750WE-1C	51⅛ x 35⅞ x 27⅛	90 lbs	Nugget	Water	ES	115/60/1	3/4	2	27.0	30	450/204

Ice production capacity at 90° A / 70° W Air-Cooled 502 lbs.

**ES Sandalwood high-gloss, baked enamel finish on leathergrain embossed steel.

†Use this value to determine minimum wire size as per National Electric Code Standards.

★ Or HACR type circuit breakers.

IMPORTANT OPERATING REQUIREMENTS

	MINIMUM	MAXIMUM
Air Temperatures	50°F (10.0°C)	100°F (38°C)
Water Temperatures	40°F (4.4°C)	100°F (38°C)
Water Pressures	20 lbs. gauge	120 lbs. gauge
Electrical Voltage Variations Voltage rating specified on nameplate	-10%	10%

Extended periods of operation exceeding these limitations constitutes misuse under the terms of Scotsman Manufacturer's Limited Warranty, resulting in a loss of warranty coverage.

DMS31 MACHINE STAND:
Available in enamel or stainless steel. Four black metal legs screw into mounting plates on cabinet base. Provide 6" minimum height including adjustable leveling feet.

OPTIONAL LEG KIT FOR MACHINE STAND:
KLP2S: Nickel plated, brushed metal finish with stainless steel foot. Recommended for stainless steel cabinets.

OPTIONAL PANEL KIT:
SPKHD7: Stainless steel panel kit includes top, sides and front panels. Not factory installed.

SEE NAMEPLATE for electrical and refrigeration specifications. Locate the NAMEPLATE on the left side shelf forward of the freezer and drivemotor assembly.

HQD750 FOR THE INSTALLER

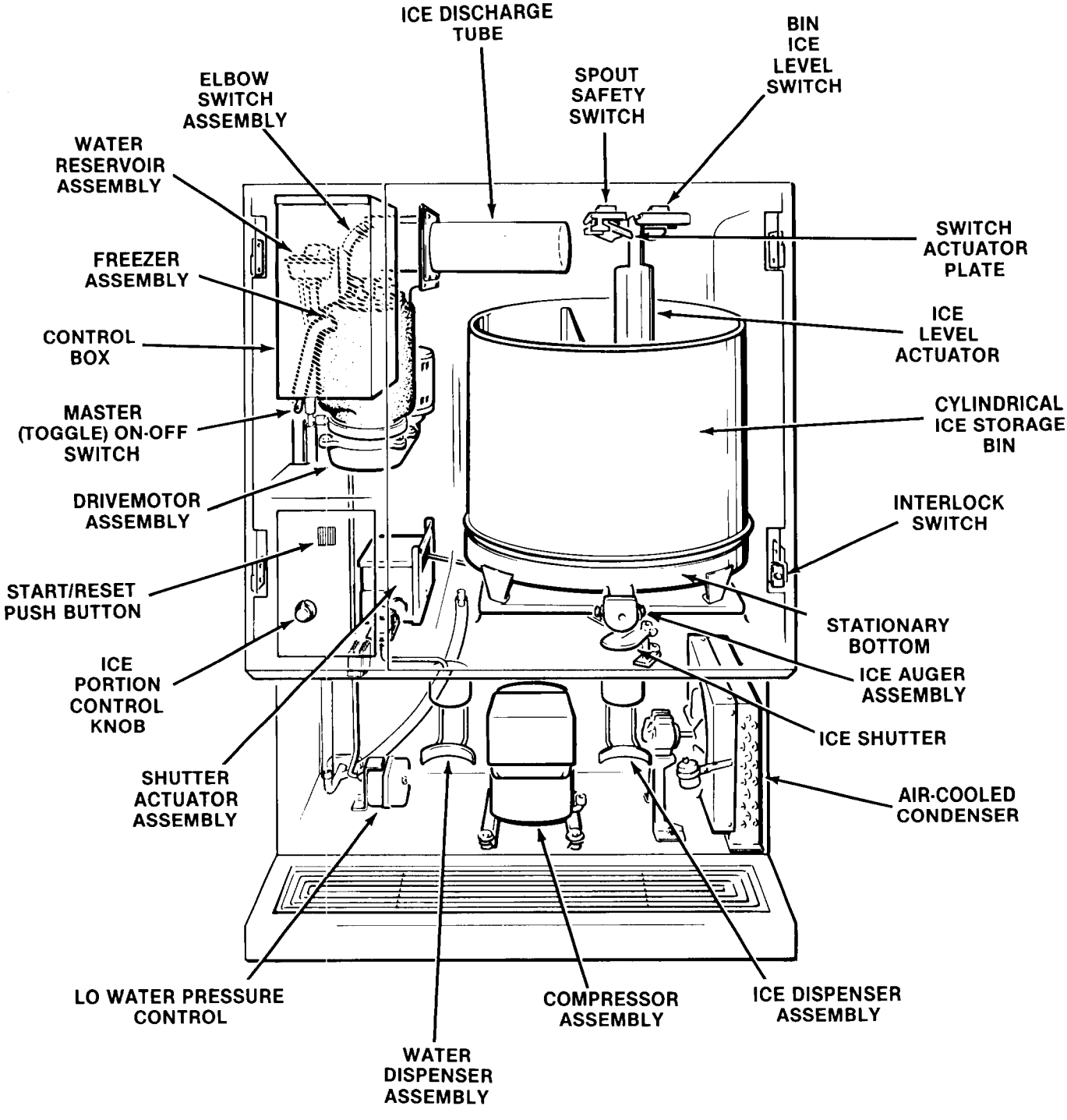

Component Location

HQD750 FOR THE INSTALLER

SELECT LOCATION

CAUTION

This icemaker is designed for indoor installations ONLY where air temperatures are above 50 degrees F. and water temperatures are above 40 degrees F. or below 100 degrees F. Extended periods of operation at temperatures exceeding these limitations will constitute misuse, under the terms of the SCOTSMAN manufacturer's limited warranty, resulting in LOSS of warranty coverage.

Prior consideration for location site shall include:

Minimum room temperature 50 degrees F.
Maximum room temperature 100 degrees F.

Water inlet temperatures:

Minimum 40 degrees F.
Maximum 100 degrees F.

Well-ventilated location for air-cooled model, advising user to frequently clean air-cooled condenser, located directly behind the right louvered panel.

SERVICE ACCESS: Reserve adequate space for all service connections, located at the rear of the cabinet. A six-inch minimum clearance at both side panels is mandatory for routing cooling air drawn into the air-cooled condenser and exhausted out the left side panel to maintain proper condensing operation of the air-cooled condenser.

MOUNT ON MACHINE STAND or a counter of sufficient strength to hold the HQD750. The use of a mechanical lift is recommended to raise the HQD750 to it's installed height.

The HQD750 and the DMS31 are matched companions and bolt together.

1. Remove shipping tape and packing.
2. Lay machine stand on back or side and install leg kit, if ordered.
3. Position machine stand in selected permanent location and level from front to back and side to side directions with the open section to the back.
4. Lift and attach HQD750 to the stand using the four capscrews and lockwashers provided with the DMS31.
5. Wipe cabinet clean using damp cloth.

UNPACK

1. After mounting the unit to the machine stand in the selected location, the shipping material must be removed.
2. Swing open the front doors and
   a. Remove styrofoam blocks from either side of the storage bin.
   b. Remove tape from the storage bin and bin control lever.
   c. Remove tape from ice delivery auger end plate.
   d. Unlock spout safety from it's retaining clip.

INSTALL SINK ASSEMBLY

1. Bolt mounting brackets found in the sink carton to the lower front edge of the HQD750.
2. With stainless steel splash panel removed, slip sink onto mounting brackets and install sink drain onto the tubing inside of the base.
3. Replace splash panel.

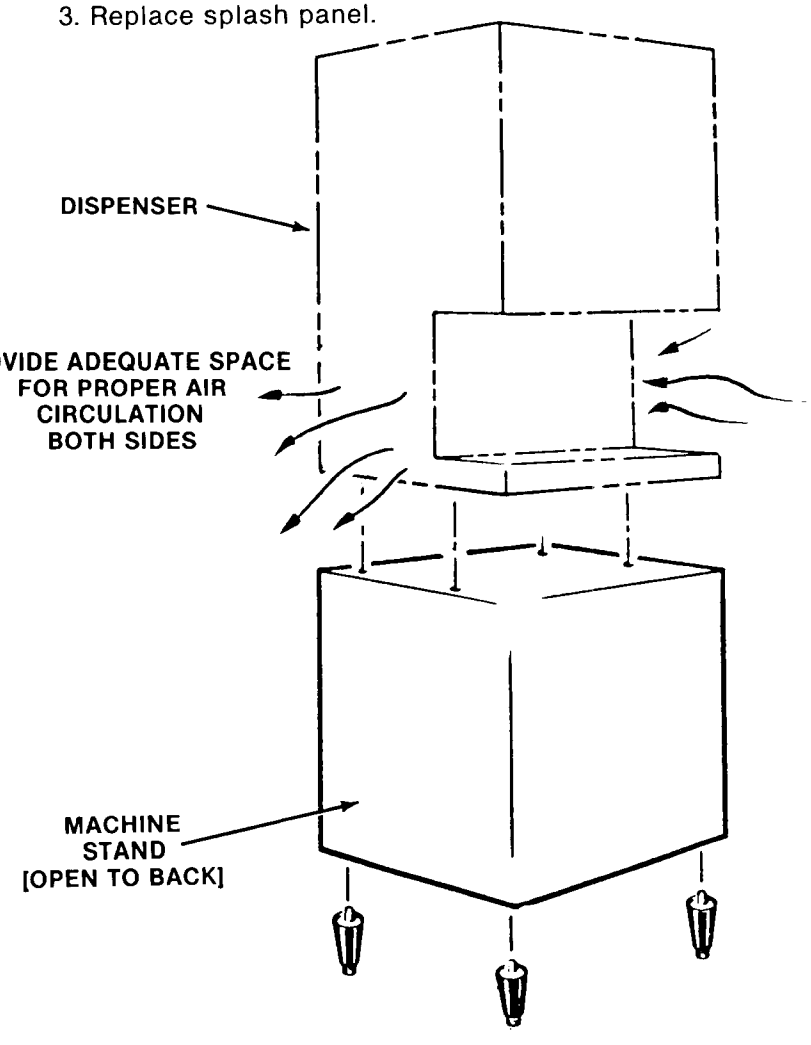

HQD750 FOR THE ELECTRICIAN

ELECTRICAL CONNECTIONS

//////////////////// WARNING ////////////////////

This icemaker requires a SOLID EARTH GROUND that meets the national, state and local electrical code requirements. To prevent possible SEVERE ELECTRICAL SHOCK INJURY to individuals, or extensive damage to equipment, install an approved SOLID EARTH GROUND wire to this icemaker. SEE wiring diagram.

//

SEE NAMEPLATE for current requirements to determine wire size to be used for electrical hookup.

Be certain the dispenser is connected to its own electrical circuit and individually fused. The maximum allowable voltage variation should not exceed ten percent of the nameplate rating, even under starting conditions. Low voltages can cause erratic operation and may be responsible for serious damage to the overload switch and motor windings.

All external wiring should conform to the national, state and local electrical code requirements. Usually an electrical permit and services of a licensed electrician will be required.

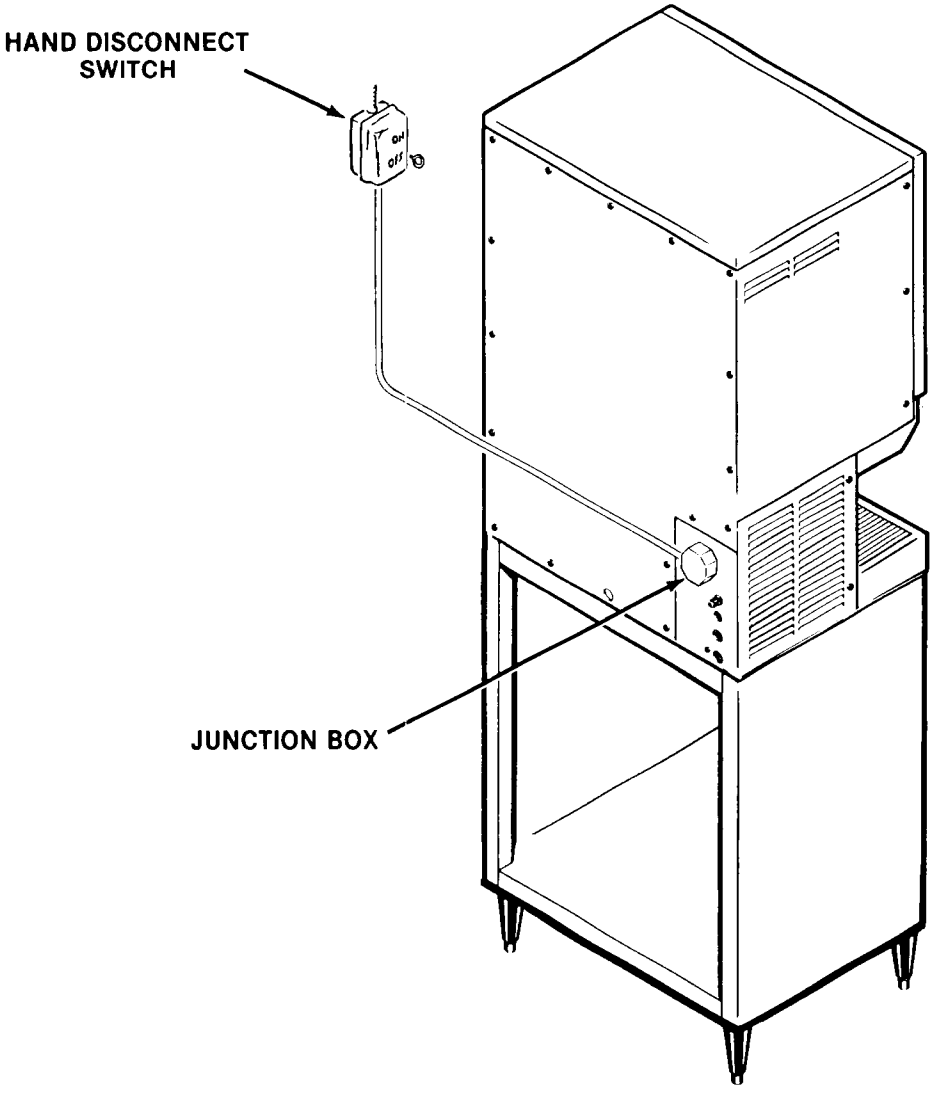

HQD750 FOR THE PLUMBER

WATER SUPPLY AND DRAIN CONNECTIONS

1. AIR-COOLED MODELS: The recommended water supply line is a 3/8 inch O.D. copper tubing. Connect to cold water supply line with standard plumbing fittings with a shutoff valve installed in an accessible place between the water supply and the dispenser.

   A wire mesh (installer supplied) strainer is recommended, and when used, must be installed with the cleanout plug down. Locate the strainer in the water supply line, next to the dispenser with the arrow on the strainer, in the direction of the water flow. The strainer protects against large particles of rust, scale, etc., which may be loosened in the water supply pipe at the time of installation.

////////////////// CAUTION //////////////////

This icemaker is equipped with a low water pressure safety device which in the event of low water pressure will automatically stop the icemaker to prevent damage. The icemaker will automatically restart with increased water pressure.

//

2. WATER-COOLED MODELS: On water-cooled models a separate connection to the condenser is required. A 3/8 inch O.D. copper tubing is recommended for a separate water inlet line and a 1/2" O.D. separate drain line.

NOTE: The CAUTION in the text for the Air-Cooled models equally applies for the Water-Cooled models. In both type installations, water supply must be installed to conform with local plumbing codes. In some cases, a plumbing permit and services of a licensed plumber will be required.

3. DRAIN CONNECTIONS: All drains are gravity type and must be 1/4-inch fall per foot on horizontal runs. Drains are to be installed to conform with local code. The drain receptacle should be an open, trapped, or vented construction.

   Recommended bin drain is 3/4-inch O.D. drain tubes. It should be vented and run separately. Run a separate drain line to 1/2-inch O.D. drain tube from the Water-Cooled Condenser on Water-Cooled models.

NOTE: left side panel is Removed by a) taking out the three screws b) pushing the panel toward the back of the unit.

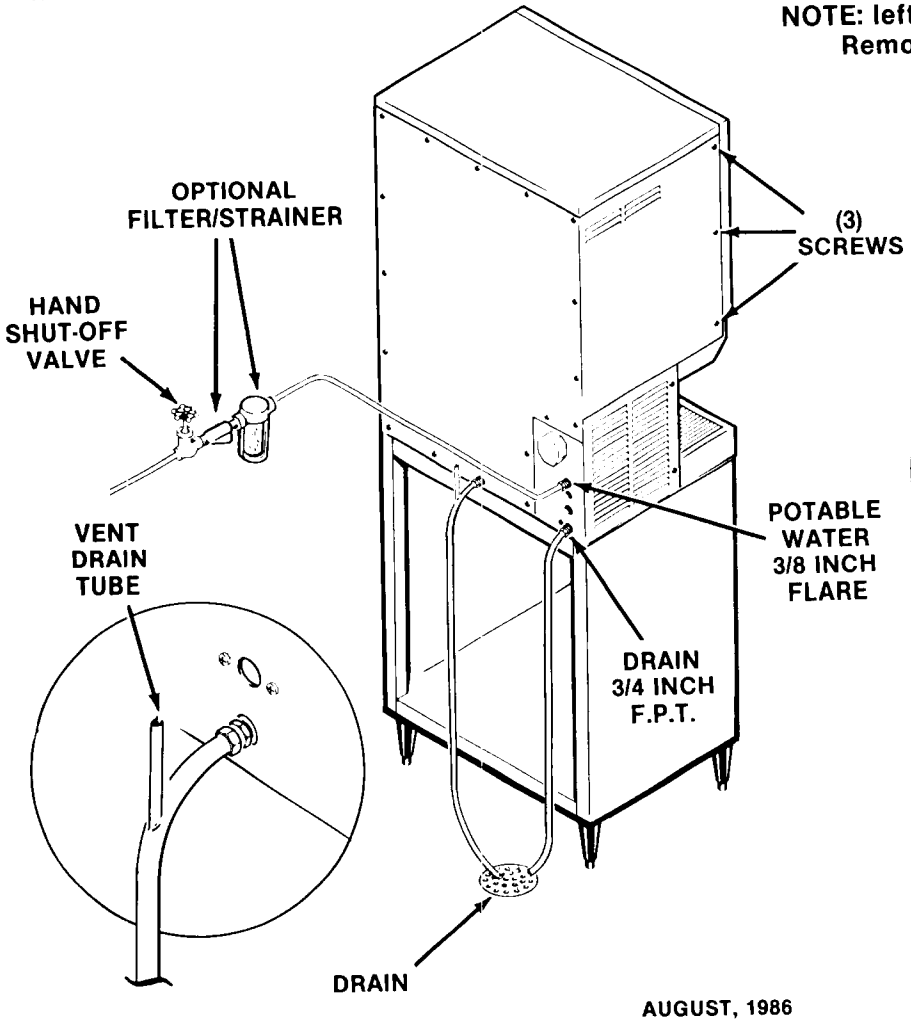

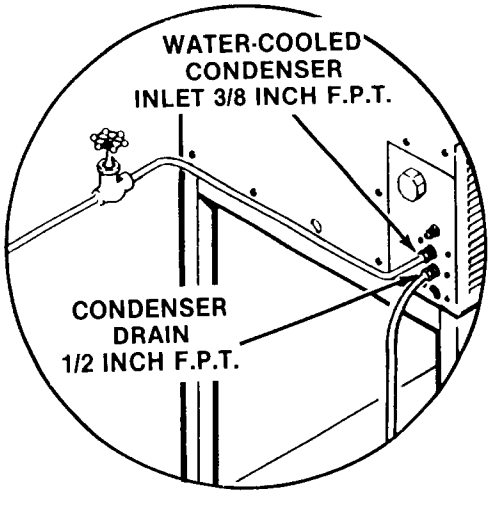

WATER-COOLED ONLY

HQD750 FOR THE INSTALLER

FINAL CHECK LIST

1. Is the cabinet in a room where ambient temperatures are within the minimum and maximum temperatures specified?
2. Is there at least six inches clearance at both sides of the cabinet for proper air circulation?
3. Has water supply pressure been checked to insure a minimum of 20 PSIG and a maximum of 120 PSIG operating pressure?
4. Is the cabinet level?
5. Have all electrical and piping connections been made?
6. Is the water supply line shut-off valve installed and electrical wiring properly connected?
7. Has the shipping block been removed from under the compressor. Have the compressor hold-down nuts been checked to be sure the compressor is snug on the mounting pads?
8. Has shipping material been removed from the ice storage bin and the bin control levers?
9. Check all refrigerant lines and conduit lines, to guard against vibration or rubbing and possible failure.
10. Have the bin and cabinet been wiped clean?
11. Has the Manufacturer's Registration Card been properly filled out? Check for correct model and serial numbers from Serial nameplate, then mail the completed card to the SCOTSMAN factory.
12. Has the owner/user been given the Service Manual and instructed how to operate and maintain the icemaker?
13. Has the owner been given the name and telephone number of the authorized SCOTSMAN Service Agency serving him?

HQD750 FOR THE INSTALLER

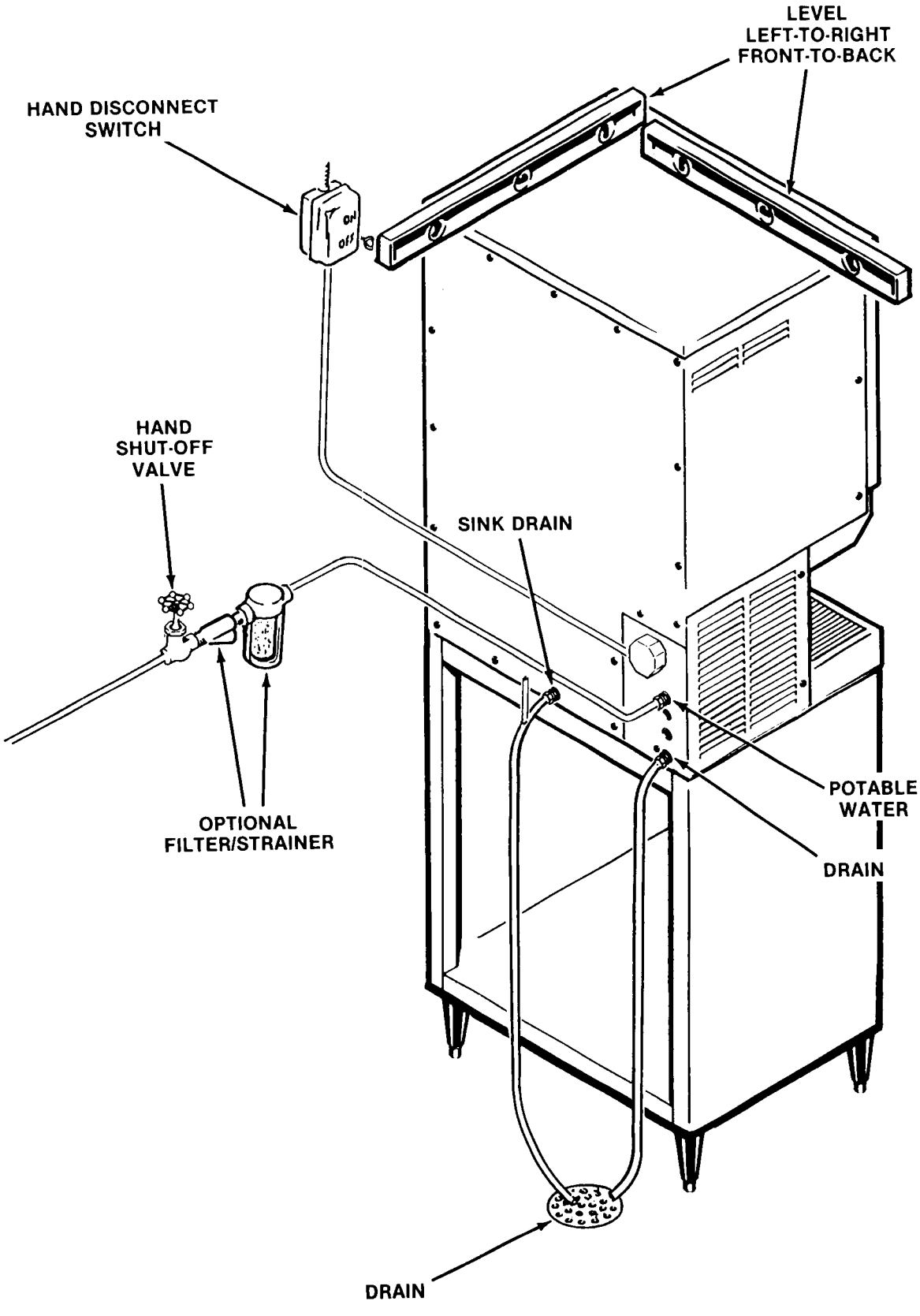

HQD750 START-UP

START UP

1. Pull the left front panel out and rotate to OPEN.
2. Loosen two wing head screws and rotate the door assembly to OPEN.
3. Remove screws and left side panel.
4. OPEN the inlet water supply line shut-off valve.
5. Observe the water filling operation.
   a. Water flows into water reservoir.
   b. Float moves up as water rises.
   c. Water flows through the water feed line to the bottom of the freezer assembly.
   d. Float STOPS water flow when level reaches 3/8-inches below the molded horizontal line on the body of the water reservoir.
6. Connect electrical power to ON position.
7. The Master ON-OFF switch is located under the control box. Move the Master ON-OFF switch to ON position.
8. Press the illuminated START-RESET pushbutton to START the automatic ice making process. Listen for the sound the compressor start-up.

NOTE

Unit stops making ice when door is opened. Also, it will NOT dispense!

9. After four or five minutes of operation, observe that random lengths of cylindrical broken chunks of high quality ice begins dropping out of the open end of the ice spout, above the cylindrical ice storage bin.
10. Let the system operate for about 30 minutes or, until ice fills about one-fourth of the bin. Check for any excess noises beyond normal compressor noise:
    a. Fan noises, Air-Cooled: Blades touch other surfaces; blades bent, or out-of-balance.
    b. Vibrating type: From touching lines.
    c. Chattering: Lack of water in freezer.
    d. Compressor loose at one or more holddown bolts.

NOTE

The bin ice level switch is an ON-OFF switch, that shuts OFF the compressor to stop icemaking, while the freezer assembly drivemotor continues to operate, in order to clear all ice from the auger. Then, when the refrigerant pressure equalizes the refrigerant lo-pressure control will shut OFF the drivemotor. When the ice level control pushes the switch IN, the compressor is shut OFF and when the action of the ice level control releases the actuator arm, the switch CLOSES the circuit and RESTARTS the compressor and the icemaking process.

11. Rotate the ice portion control knob, on the front of the switch mount, fully CLOCKWISE, to the section labeled MAXIMUM.
12. With an ice drink glass, push IN on the glass filler level assembly, under the ice spout, and check that DESIRED amount of ice is dispensed.
13. After a few seconds, RELEASE pressure on the glass filler lever assembly and check that ice dispensing STOPS.
14. Rotate the ice portion control knob, on the control panel, to about MID-RANGE on the dial; then, with a standard ice drink glass, push IN on the glass filler lever assembly, under the ice spout, and observe that a measured amount of ice is dispensed and dispensing STOPS.
15. Check the ice portion dispensed in the glass to determine whether the amount of ice is:
    CORRECT ICE PORTION
    TOO SMALL ICE PORTION
    TOO LARGE ICE PORTION
16. Rotate the ice portion control knob, CLOCKWISE, about one-eighth of a turn, to INCREASE the ice portion; or, COUNTER-CLOCKWISE, about one-eighth of a turn, to DECREASE the ice portion.
17. Dispense several ice portions, in the glass to be used for standard example, and repeat steps to achieve the desired correct portion.
18. Check the bin ice level switch.

HQD750 START-UP

NOTE

The spout safety switch is manually reset and functions to immediately STOP the entire icemaker, if the bin ice level switch were to fail and begin to cause ice to jam up in the spout. Once SHUT OFF, the spout safety switch is reset, when the actuator plate is released from the locking bracket, which holds the plate tight against the depressed actuator arm of the spout safety switch.

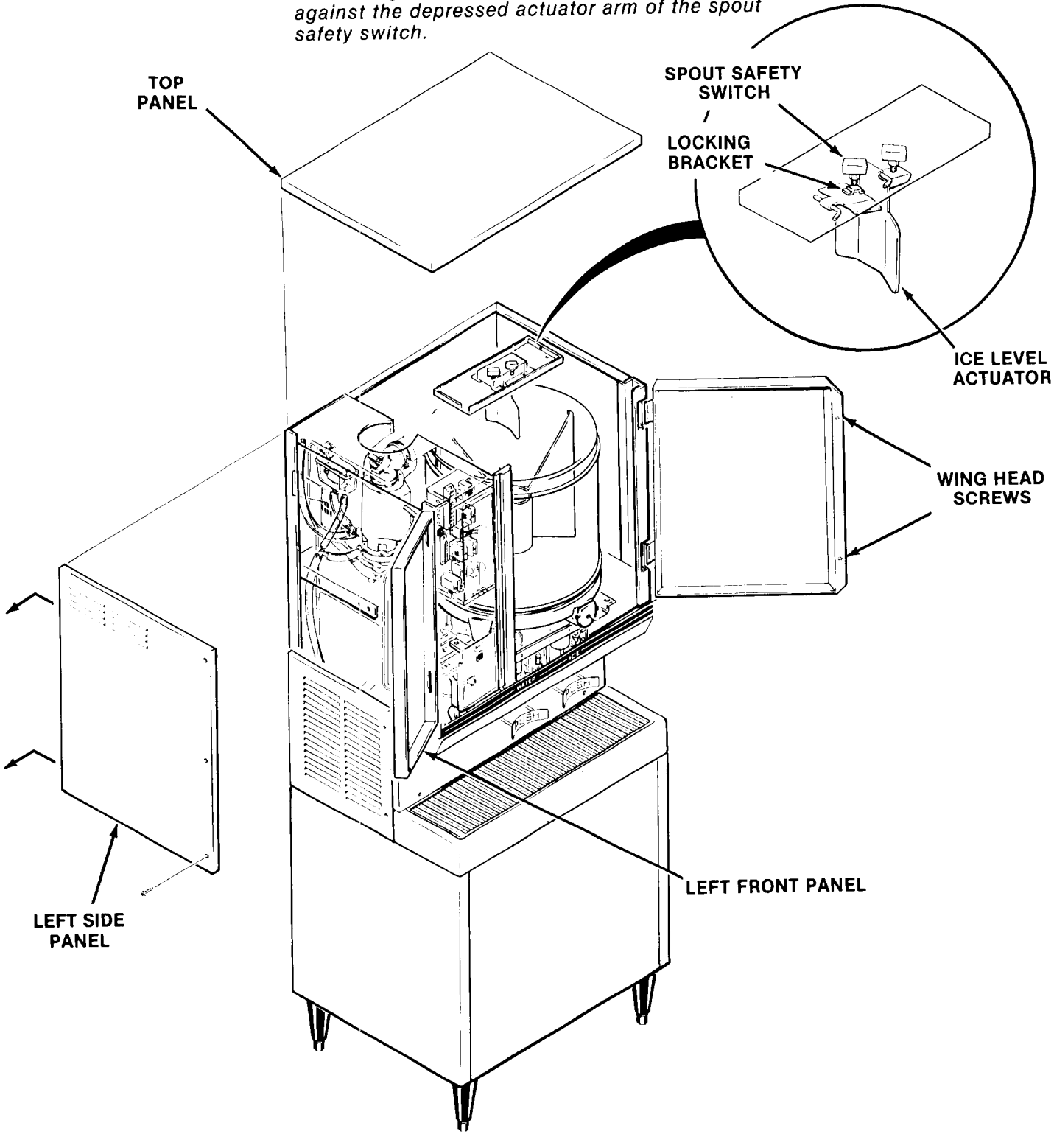

HQD750 OPERATION

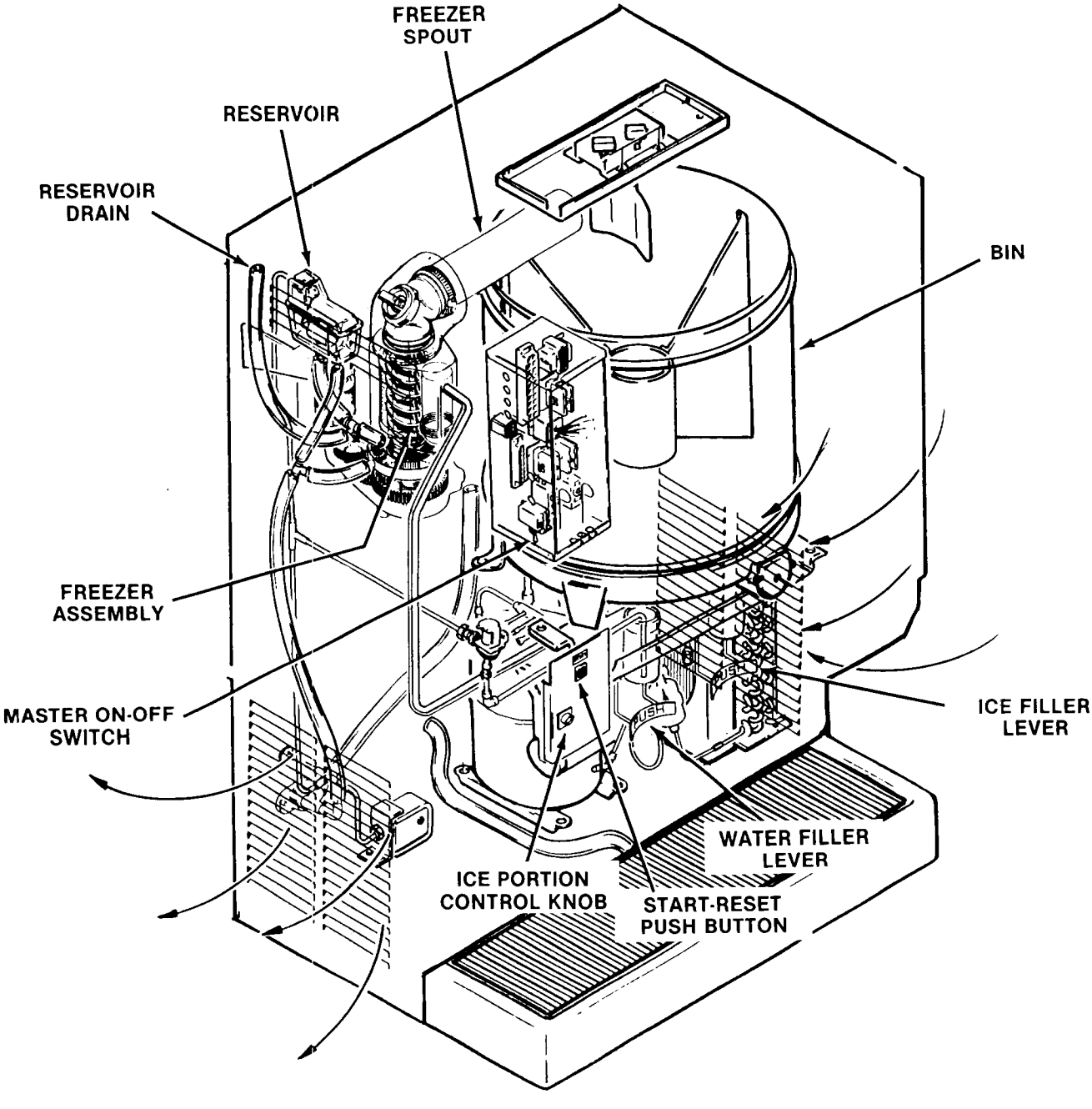

AIR-CIRCULATION
(AIR-COOLED MODELS)

HQD750 OPERATION

ICE LEVEL CONTROLS

The bin ice level switch is an ON-OFF switch, that shuts OFF the compressor to stop icemaking, while the freezer assembly drivemotor continues to operate, in order to clear all ice from the auger. Then, when the refrigerant pressure equalizes, the refrigerant lo-pressure control will shut OFF the drivemotor. When the ice flow pushes the actuator arm of the switch IN, the compressor is shut OFF and when the action of the melting or dispensed ice releases the actuator arm, the switch CLOSES the circuit and RESTARTS the compressor and the icemaking process.

The bin ice level safety switch is mounted next to bin ice level switch and is actuated by the movement against the switch actuator. The safety switch acts as a backup safety switch, should the bin ice level switch fail and cause ice to jam up in the ice spout. The safety switch will shut off the icemaker only when actuated. It is an immediate and complete shut down of the entire icemaker. The bin ice level safety switch must be manually reset.

DISPENSING SYSTEM

STANDBY—In the STANDBY mode, the refrigeration system may or may not be making ice. The ice vend switch is in it's normal position, with contact between common and NC.

ICE DISPENSE — With a container, push in the glass filler lever and dispense ice. The circuit is completed through the ice vend switch and cam-1 switch, which actuates the coil of the shutter relay, giving power to the shutter motor, which begins to rotate. Rotating half a turn, OPENS the ice shutter, cam-1 switch opens to the N/C position and the ice shutter STOPS, as cam-2 switch closes to N/O and cam-3 closes to the N/C positions. Cam-2 switch applies power to the time delay relay, and in turn, to the coil of the dispensing contactor, which CLOSES the contactor, providing power to the auger drive motor and the bin drive motor, which causes ice to be dispensed. Then one of two sequences next occur:

PORTION CONTROLLED —

1. The time delay relay removes power from the coil of the dispensing contactor, which OPENS the circuit to the auger drive motor and the bin drive motor and STOPS the ice dispensing; or, removing container and releasing the glass filler lever assembly, OPENS the ice vend switch N/O to cam-2 switch and transfers power through cam-3 switch to the coil of the shutter relay, which CLOSES: and, the shutter motor continues to operate until the ice shutter is rotated to the CLOSED position and STOPS, which OPENS cam-3 and returns the circuit to the STANDBY condition.

CONTINUOUS DISPENSING —

2. When the container is removed, releasing the glass filler lever assembly, power is interrupted through cam-2 switch, to the time delay relay, the coil of the dispensing contactor drops out, which STOPS the ice dispensing; and, power is transferred to cam-3, and in turn, to the coil of the shutter relay, which CLOSES, and the shutter motor continues to operate until the ice shutter is rotated to the CLOSED position and STOPS, which OPENS cam-3 and returns the circuit to the STANDBY condition.
3. Thoroughly explain to the owner/user the significant specifications of the icemaker, the start up and operation, going through the procedures for the operating instructions. Answer all questions about the icemaker, by the owner; and, inform the owner of the name and telephone number of the authorized SCOTSMAN Service Agency serving him.

REFRIGERATION PRESSURES

The head pressure is normal about 135-140 PSIG, however, it will vary depending upon ambient air temperature.

Suction pressure should be 10 to 12 PSIG with proper refrigerant charge and the frost line should extend out from the accumulator to within no closer than eight to twelve inches of the compressor. Suction pressure will vary about two PSIG plus or minus, depending upon ambient temperatures and incoming water supply temperatures to the freezer assembly.

Model	HQD750 Refrig. Chg.
Air-Cooled	24 oz. R-12 (Approx.)
Water-Cooled	21 oz. R-12 (Approx.)

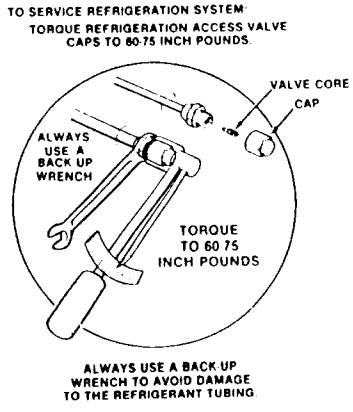

HQD750 OPERATION

ICEMAKER

The water supply flows from the building source through the inline water strainer, enters the cabinet and on to the water reservoir. The water reservoir functions to maintain a constant water level inside the freezer assembly. Water from the water reservoir enters at the bottom of the freezer assembly and is changed into ice by low temperatures inside the freezer.

A stainless steel auger within the freezer is powered by the drivemotor assembly, a direct-drive gearmotor, and the rotating auger carries the ice upward to the end of the auger, where excess water is pressed out of the ice, as it is extruded and broken into random length chunks of ice and pushed out through the ice spout and into the ice storage bin.

Connecting electrical power starts the automatic and continuous icemaking process. When the cylindrical ice storage bin has been filled with ice, up to the level of the bin ice level switch actuator, the actuator depresses bin ice level switch and shuts off the icemaking process.

As the ice is removed from the cylindrical ice storage bin, the actuator releases the bin ice level switch restarting the automatic icemaking process.

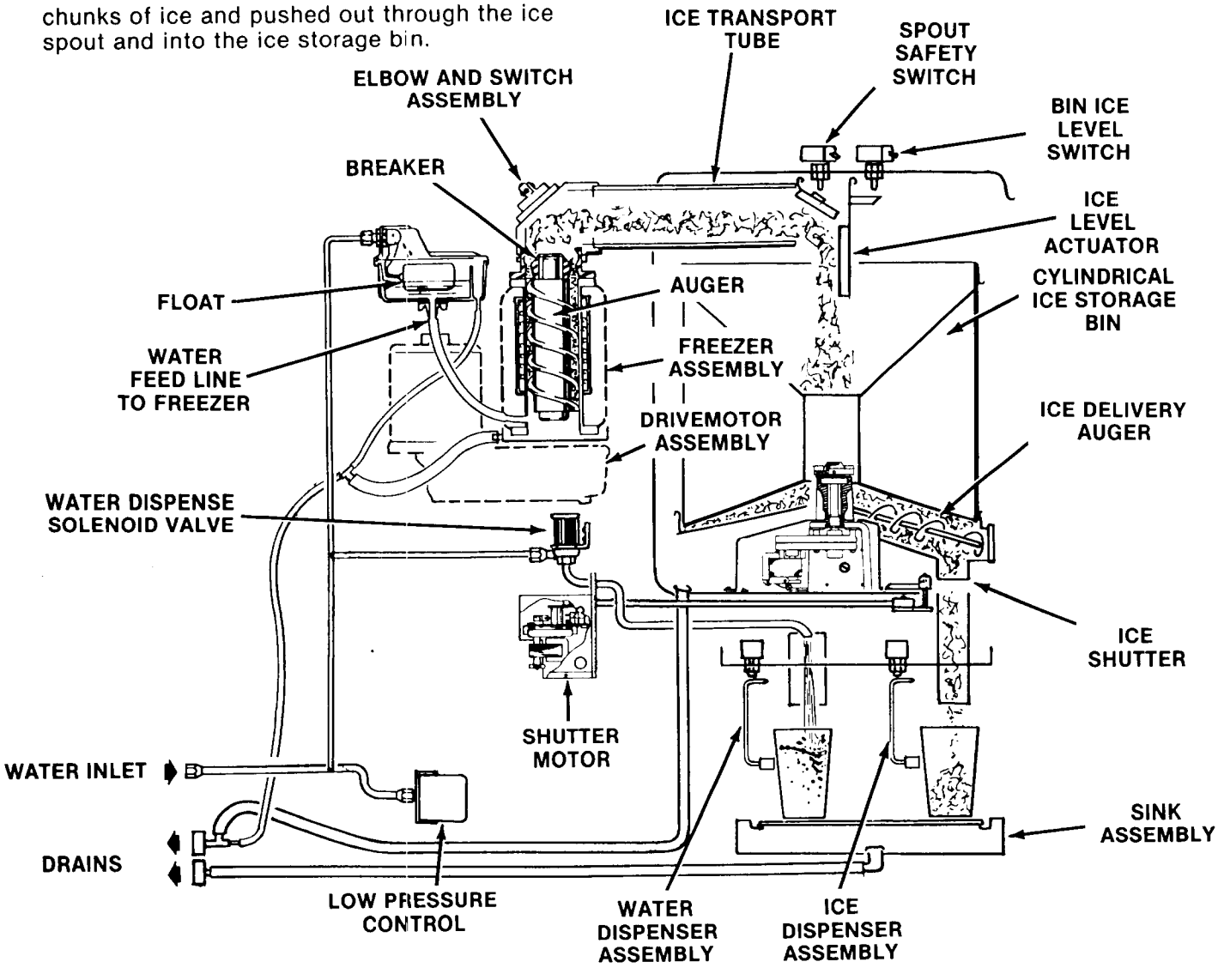

Water Schematic

HQD750 OPERATION

ELECTRICAL/REFRIGERATION

The Model HQD750 Dispensers are designed to operate on standard electrical supply 115 volts, 60 Hertz, single phase.
Therefore, always CHECK NAMEPLATE for electrical information BEFORE proceeding with electrical wiring connections to the icemaker.

Cold ambient temperatures and interruptions in water supply are conditions that can cause excessively hard ice and overloads within the freezer assembly, which is directly transmitted to the drivemotor; and in turn, will cause speed reduction or ultimate freezeup.

When the drivemotor is slowed to a predetermined RPM, a sensing switch mounted on top of the motor is designed to open the electrical circuit to the compressor. The compressor stops operating, no more ice is produced, and the drivemotor continues to operate, rotating the auger to clear the overload and gradually building up of full speed.

At a pre-determined higher RPM drivemotor speed, the speed sensing switch closes the electrical circuit to the compressor, causing the normal icemaking process to resume.

Refer to the appropriate Wiring Diagram and trace circuitry and control functions, as described in the following paragraph:

As shown on all SCOTSMAN wiring diagrams, the controls are in the ICEMAKING MODE. Thus, the 1-2 contacts are CLOSED. At START-UP, the 1-2 contacts are OPEN and the 3-2 contacts are CLOSED. As the icemaker begins to operate, the low side pressure starts to decrease from the stabilized or at-rest pressure. As soon as the pressure is reduced to 20 PSIG, the 3-2 contacts OPEN and the 1-2 contacts CLOSE.

This removes the operating controls, such as the bin control, from the gearmotor circuit. If one of the operating controls OPENS, it will SHUT OFF the compressor circuit. The gearmotor will operate until the low side pressure increases to 32 PSIG. Then, the 1-2 contacts OPEN and SHUT OFF the gearmotor, usually within one or two minutes, depending upon ambient conditions. This brief period of time allows the auger to transport all the ice out of the freezing chamber. Consequently, when called on to STARTUP again, there is no ice load to start up against. Again, on STARTUP, the 1-2 contacts are OPEN and the 3-2 contacts are CLOSED.

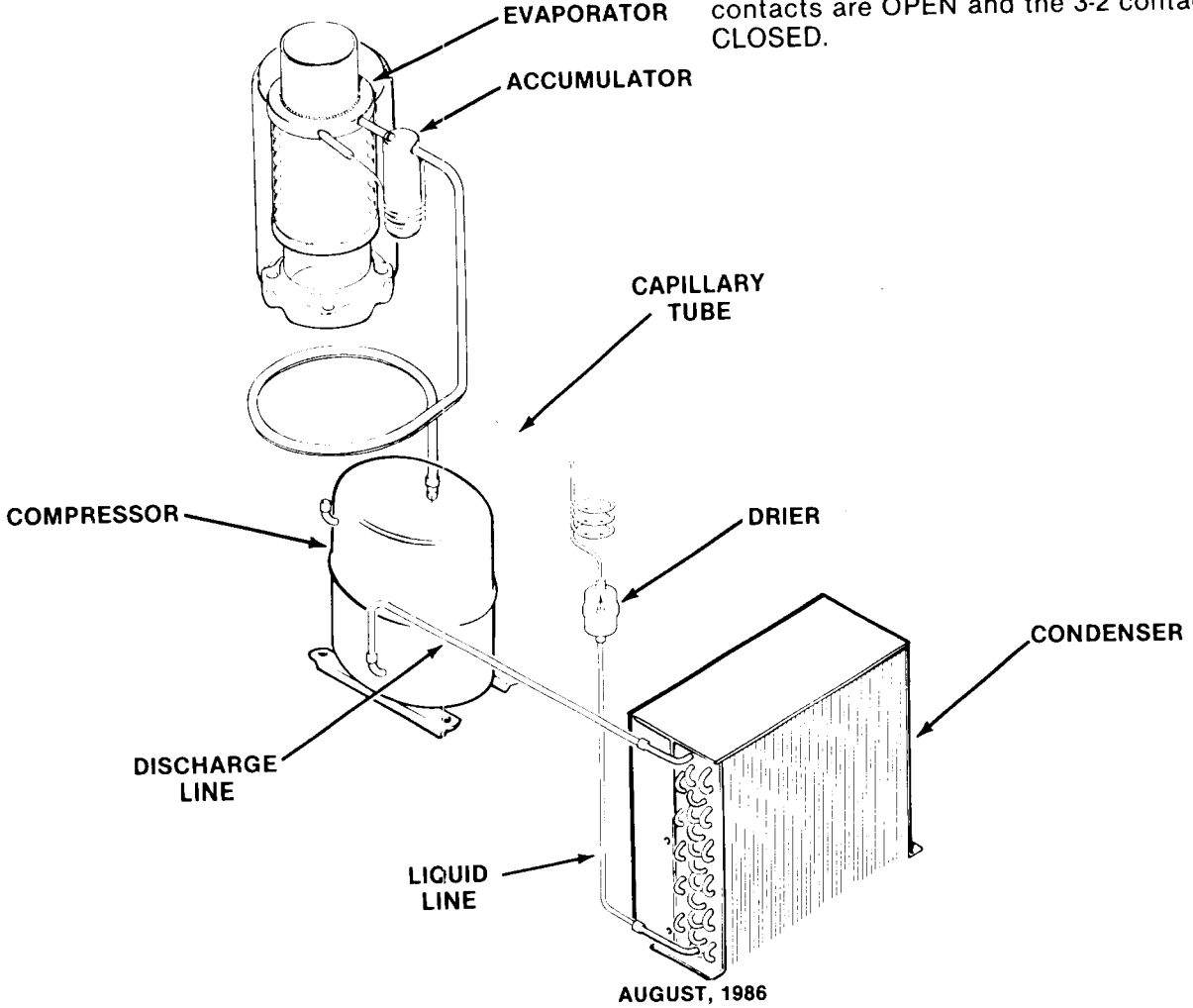

HQD750 COMPONENT DESCRIPTION

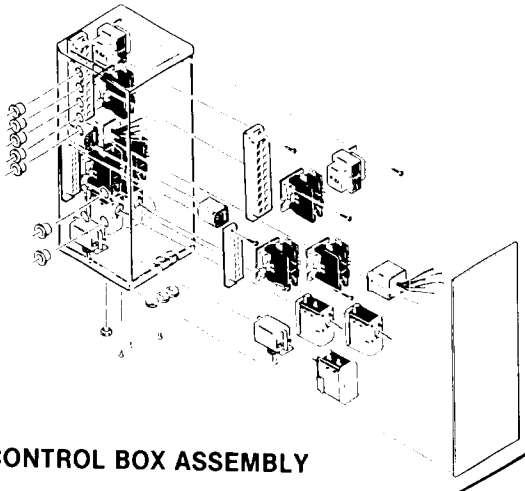

CONTROL BOX ASSEMBLY

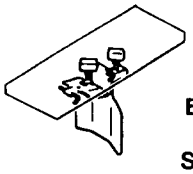

BIN ICE LEVEL
AND
SPOUT SAFETY
SWITCHES

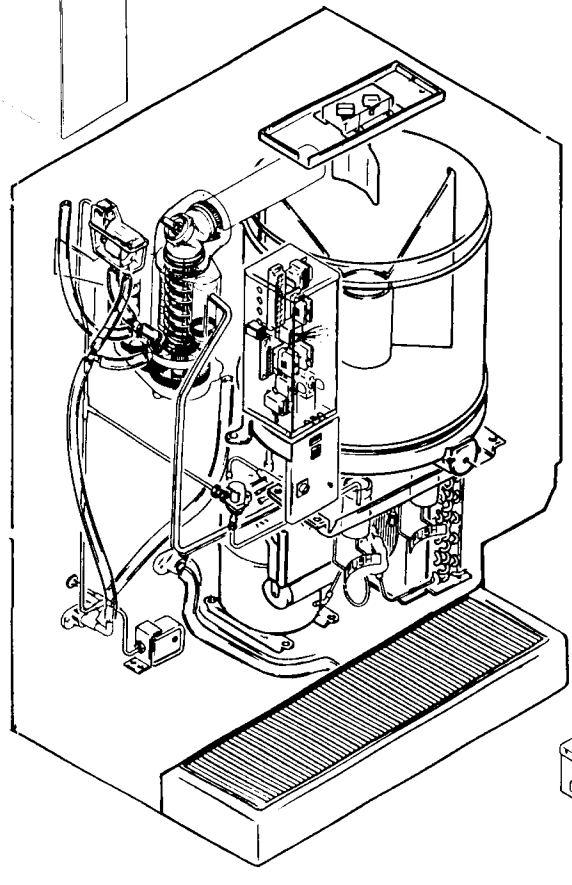

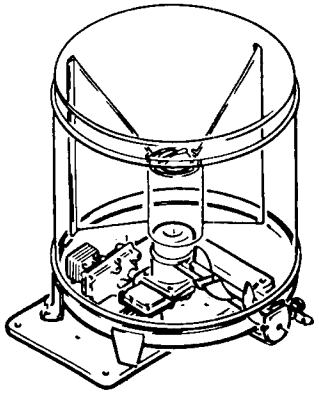

BIN ASSEMBLY

AIR-COOLED
REFRIGERATION
SYSTEM

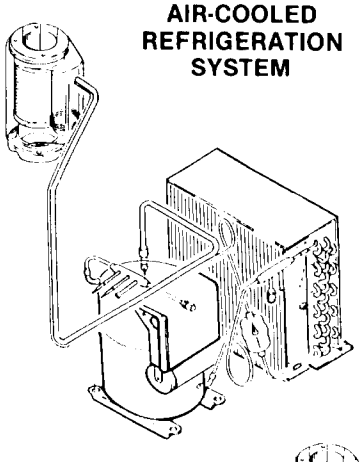

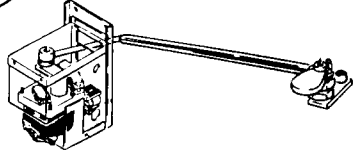

SHUTTER ACTUATOR
ASSEMBLY

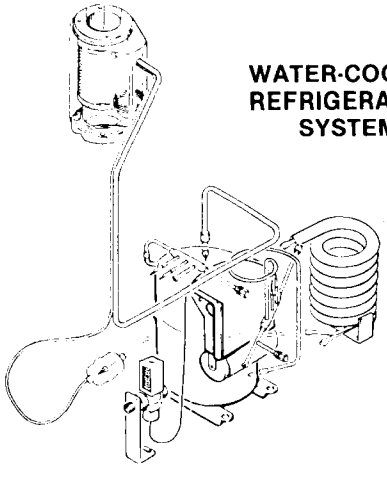

WATER-COOLED
REFRIGERATION
SYSTEM

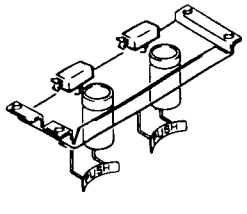

DISPENSER ASSEMBLY

HQD750 COMPONENT DESCRIPTION

BIN ICE LEVEL SWITCH

The bin ice level switch is an ON-OFF switch, that shuts OFF the compressor to stop icemaking, while the freezer assembly drivemotor continues to operate, in order to clear all ice from the auger. When the refrigerant pressure equalizes, a refrigerant lo pressure control will shut OFF the drivemotor. When the ice level actuator pushes the switch IN, the compressor is shut OFF and when the action of the ice level actuator releases the switch, it CLOSES the circuit and RESTARTS the compressor and the icemaking process.

SPOUT SAFETY SWITCH

The spout safety switch is manually reset and functions to immediately STOP the entire icemaker, if the bin ice level switch were to fail and begin to cause ice to jam up in the spout. Once SHUT OFF, the spout safety switch is reset, when the actuator plate is released from the locking bracket, which holds the plate tight against the depressed actuator arm of the spout safety switch.

WATER PRESSURE SAFETY SWITCH (See page 18) installed in the potable water inlet line is set to electrically open below 20 PSIG and stop the entire icemaker. The AUTOMATIC RESET will restart the icemaking process when water pressure rises to 20 PSIG.

AUGER DELAY SWITCH, (See page 20) a single-pole double throw (SPDT) switch, allows the gearmotor to rotate the Auger and clear the freezing chamber after the bin ice level switch circuit to compressor is OFF. When the icemaker restarts, the gearmotor starts in a no load condition, preventing excessive loading of gearmotor and bearings.

REFRIGERANT LO PRESSURE CONTROL (See page 20) is factory set to automatically SHUT DOWN the icemaker if the low-side pressure drops below 4 PSIG or low ambient or water temperatures exist. This is an AUTOMATIC RESET control.

Water-cooled icemakers have two refrigerant pressure switches, hi refrigerant pressure and low refrigerant pressure.

RESET PUSHBUTTON (See page 20)

When pushed completes the electrical circuit through the icemaker electrical components. The RESET PUSHBUTTON must be pressed to restart the icemaking process whenever any of the safety controls have functioned to stop the icemaker or an interruption in the electrical supply has occurred.

ELBOW SAFETY SWITCH (See page 18)

The elbow safety switch is an ON-OFF switch that shuts off the compressor when an ice jam presses against the rubber diaphragm depressing the switch and opening the circuit. Melting action relieves pressure closing the circuit, lighting the start-reset pushbutton. The start-reset switch must then be pressed to start the automatic icemaking process.

ICE BREAKER ASSEMBLY (See page 18)

The ice breaker assembly, bolted to the top of the freezer, contains the bearing and seal for the top of the auger. Flaked ice created by the freezer is carried by the auger to the ice breaker assembly and the flaked ice is pushed by the auger through the tapered holes in the ice breaker. Flaked ice is compressed by auger pressure as it is pushed through the ice breaker assembly and the shafts of compressed ice ar broken into random lengths of Ice Nuggets by the taper on the top of the ice breaker.

WATER REGULATOR VALVE
WATER-COOLED MODELS (See page 16)

The water regulator valve functions to maintain a constant head pressure, by regulating the amount of incoming water flow through the condenser, on water-cooled models. The valve operates through the refrigerant system high side pressure. Rotating the adjusting screw, located on top of the valve, can INCREASE or DECREASE the operating head pressure.

DRIVEMOTOR ASSEMBLY (See page 18)

A stainless steel auger within the freezer is powered by the drivemotor assembly, a direct-drive gearmotor, and the rotating auger carries the ice upward to the end of the auger, where excess water is pressed out of the ice, as it is extruded and broken into random length chunks of ice and pushed out through the ice spout and into the cylindrical ice storage bin.

HQD750 COMPONENT DESCRIPTION

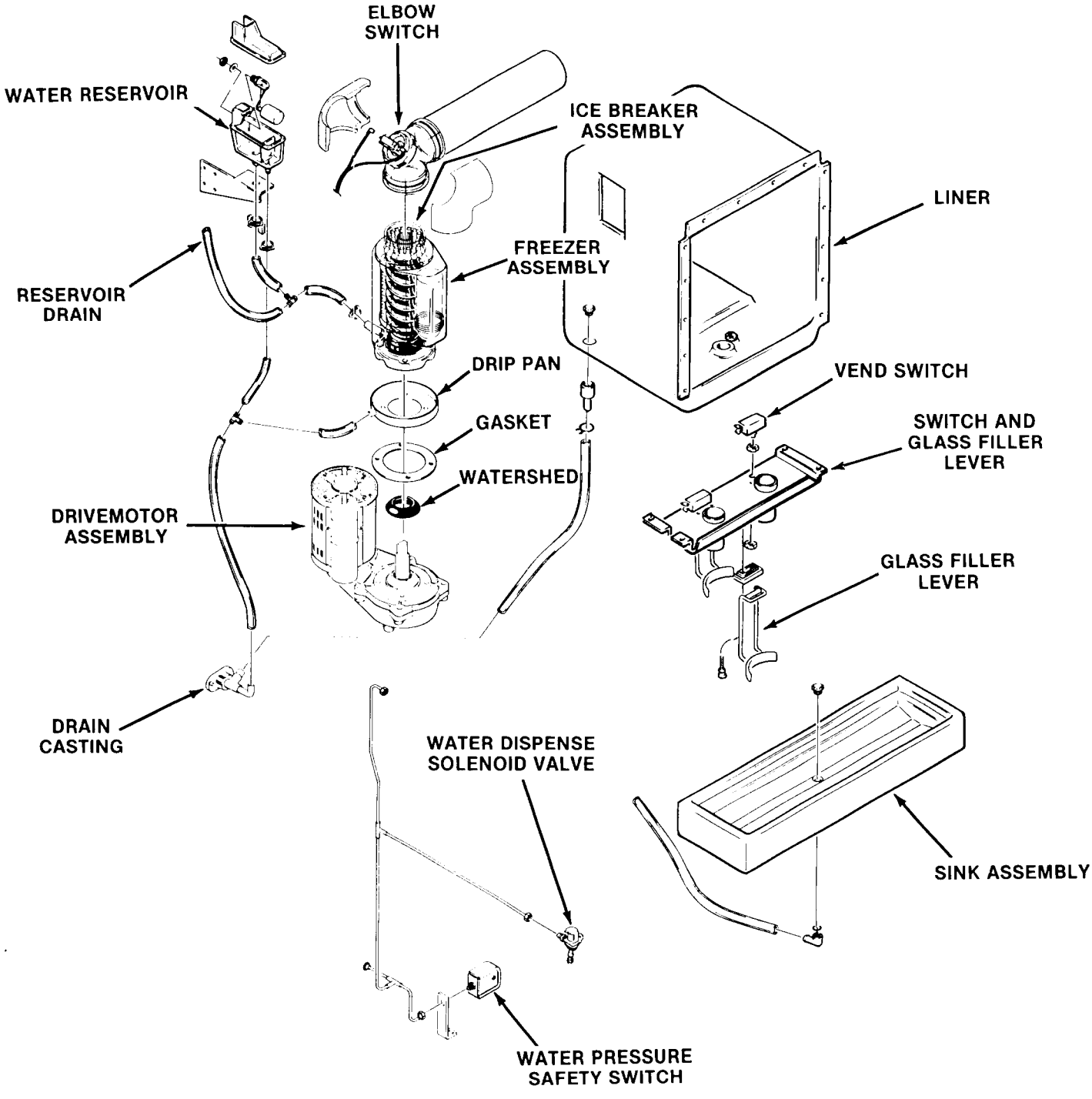

WATER RESERVOIR

The water reservoir, with a float valve assembly, maintains a constant water supply within the freezer assembly. The water level in the reservoir is the same water level as in the freezer and the correct water level in the freezer is level with the top of the auger flights. The water level in the freezer can be adjusted by raising or lowering the water reservoir with the bracket.

RESERVOIR DRAIN

The reservoir drain is for use to drain the water reservoir when cleaning or maintenance of the icemaking system.

HQD750 COMPONENT DESCRIPTION

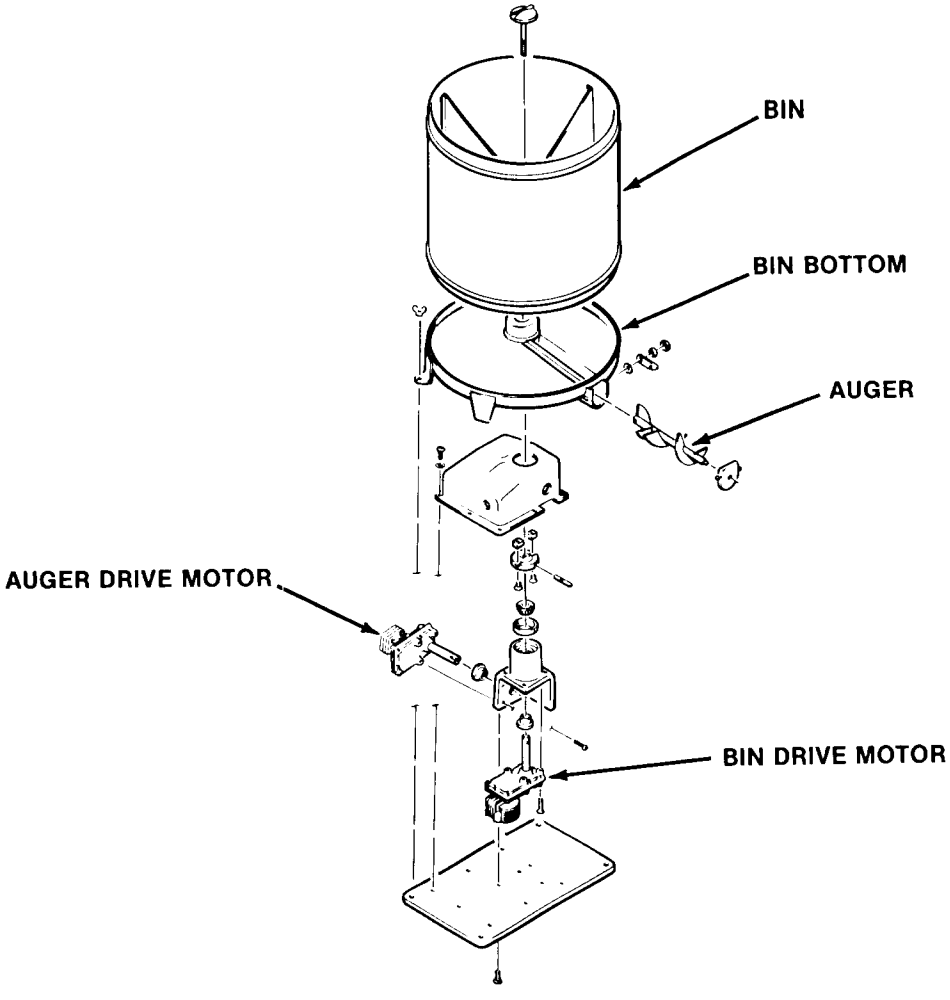

INNER BIN

The cylindrical stainless steel inner bin contains the ice supply in storage until the ice vend switch is activated, bin drive motor operates and rotates the inner bin over the bin bottom.

BIN BOTTOM

The cone shaped stationary bin bottom holds the ice supply, and when the inner bin is rotated the ice supply rotates and ice is shaved off from the bottom and drops into the ice delivery auger.

AUGER DRIVE MOTOR

The auger drive motor located under the stationary bin bottom rotates the auger which pushes ice supply to the shutter. The ice falls through the ice dispense spout.

BIN DRIVE MOTOR

The bin drive motor and reduction gear assembly, located below the bin, is controlled with the ice vend switch and portion control timing module. The bin drive motor rotates the inner bin and ice supply to vend a metered amount of ice.

SHUTTER ACTUATOR ASSEMBLY (See page 16)

Activated by pushing ice glass filler lever. Motor operates opening shutter, cam action and switches control this movement. When ice vend is complete, shutter closes.

HQD750 COMPONENT DESCRIPTION

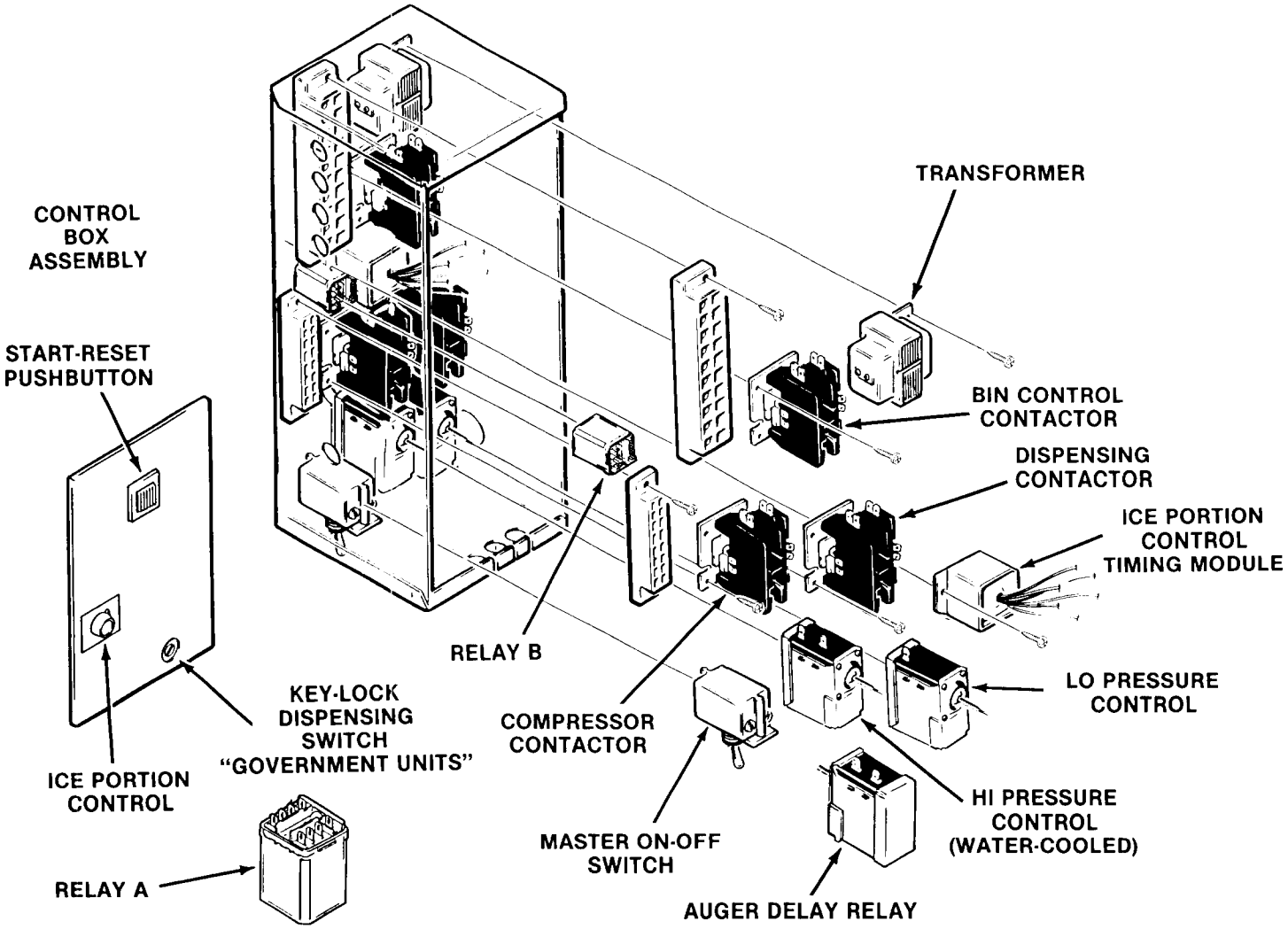

COMPRESSOR CONTACTOR

A single-pole contactor is used to supply current to the compressor; and, is wired so any control in the pilot circuit, such as the bin control and high pressure control, etc., will cause the contactor coil to be de-energized, when the control contact OPENS, thereby breaking the circuit to the compressor through the contactor points.

ELBOW SAFETY SWITCH RELAY "A"

The elbow safety switch relay "A" maintains a circuit through the elbow safety switch until the elbow safety switch opens and switches the current through the lamp of the start reset pushbutton, which must be pushed and reset to restart the automatic icemaking process.

RELAY "B"

Relay "B" protects the compressor contactor from chattering during operation of the icemaking system.

ICE PORTION CONTROL TIMING MODULE

The ice portion control timing module operates in conjunction with the ice portion control Potentiometer and times the run of the bin drive motor to meter the amount of ice dispensed. This system is adjustable from approximately 1/2 ounce to continuous.

BIN CONTROL CONTACTOR

Controlled by the bin level control; controls the compressor contactor coil.

DISPENSING CONTACTOR

Controlled by the portion control module, controls the bin and auger drive motors.

KEY-LOCK DISPENSING SWITCH

On U.S. Government units only, controls ice dispensing circuit.

HQD750 MAINTENANCE AND CLEANING INSTRUCTIONS

A Scotsman Ice System represents a sizable investment of time and money in any company's business. In order to receive the best return for that investment, it MUST receive periodic maintenance.

It is the USERS RESPONSIBILITY to see that the unit is properly maintained. It is always preferable; and less costly in the long run, to avoid possible down time by keeping it clean, adjusting it as needed and by replacing worn parts before they can cause failure. The following is a list of recommended maintenance that will help keep your machine running with a minimum of problems.

Maintenance and Cleaning should be scheduled at a MINIMUM of twice per year.

DISPENSER

THE FOLLOWING MAINTENANCE SHOULD BE SCHEDULED EVERY THREE MONTHS ON THIS DISPENSER. CALL YOUR AUTHORIZED SCOTSMAN SERVICE AGENCY.

WARNING

During maintenance or cleaning procedures, it is sometimes necessary to observe, adjust or clean machinery or components while electrical power is ON. Extra care is required to prevent personal injury from electrical shock or moving parts.

1. Dispense all the ice from the bin.
2. Clean and sanitize the spout, bin level switch actuator, by using a solution of SCOTSMAN Ice Machine cleaner. Refer to CLEANING — Icemaker.
3. Sanitizing of the ice storage bin and related components should be scheduled once per week. See page 26.

NOTE

1. Cleaning requirements vary according to local water conditions and individual user operation.
2. During reassembly of parts, be sure to rotate the ice storage bin until it engages in the output coupling of the drivemotor.

ICEMAKER

THE FOLLOWING MAINTENANCE SHOULD BE SCHEDULED AT LEAST TWO TIMES PER YEAR ON THIS ICEMAKER. CALL YOUR AUTHORIZED SCOTSMAN SERVICE AGENCY. COMBINE THIS SERVICE WITH CLEANING OF THE DISPENSER, WHEN POSSIBLE.

1. Check and clean any water line strainer.
2. Remove cover from water reservoir and depress the float to ensure that a full stream of water enters the reservoir.
3. Check that the dispenser is level, in the side-to-side and front-to-back directions.
4. Check that the water level in the water reservoir is below the overflow, and level with the molded line on the side of the reservoir.

NOTE: It is normal for some water to emerge from the ice spout with the ice during normal ice production.

5. Clean the water reservoir and interior of the freezer assembly, using a solution SCOTSMAN Ice Machine Cleaner. Refer to CLEANING — Icemaker.

NOTE: Cleaning requirements vary according to local water conditions and individual user operation. Visual inspection of the auger before and after cleaning will indicate frequency and procedure to be followed in local areas.

6. When doubtful about refrigerant charge, install refrigerant gauges on Schrader valves and check gauge for compressor head pressure:
   AIR-COOLED MODELS: Varies between 130 and 145 PSIG.
   WATER-COOLED MODELS: Set at 135 PSIG.
   Adjust screw on top of water regulator valve to raise or lower head pressure.
7. Check gauge for suction line pressure:

   Varies between 10 to 12 PSIG, depending upon inlet water temperature and ambient air temperature.

AFTER SERVICING REFRIGERATION SYSTEM:

TORQUE REFRIGERATION ACCESS VALVE CAPS TO 60-75 INCH POUNDS.

8. Check the elbow safety switch by removing the insulation halves, twisting the locking ring 90° and pulling out the switch assembly. The switch action can then be tested.

NOTE

The elbow safety switch is an ON-OFF switch that shuts off the compressor when an ice jam presses against the rubber diaphragm depressing the switch and opening the circuit. Melting action relieves pressure closing the circuit, lighting the start-reset pushbutton. The start-reset switch must then be pressed to start the automatic icemaking process.

9. Check drivemotor operation, check for noise and amp draw, compare to unit nameplate.
   Normal motor operating temperatures are very hot to touch.
10. Oil drivemotor once per year.

////////////////////// **WARNING** //////////////////////

Disconnect electrical power supply before removal procedures.

//

NOTE

BEFORE next step, move the manual ON-OFF toggle switch, on the bottom of the control box, to the OFF position to stop the fan motor and the icemaker.

11. Clean the air-cooled condenser, using vacuum cleaner, whisk broom or brush. DO NOT USE A WIRE BRUSH. Instruct customer to clean the condenser frequently; and to BE SURE the icemaker and fan motor are OFF.
12. Check that the fan blades move freely, are not touching any surfaces, and are not bent or out of balance. Wipe off any accumulation of dust or grease.
13. Check for refrigerant leaks and for proper frostline, which should frost out of the accumulator to within no closer than eight to twelve inches of the compressor.
14. Check for water leaks and tighten drain line connections. Pour water down bin drain to be sure that drain line is open and clear.
15. Check the quality of ice. Ice particles should be wet when formed, but will cure rapidly to high quality hard bits of ice in the bin.
16. Check the bin ice level switch.

NOTE

The bin ice level switch is an ON-OFF switch, that shuts OFF the compressor, when the ice level control pushes the switch IN. When the action of the bottom hinge releases the actuator arm, the switch CLOSES the circuit and RESTARTS the icemaking process.

17. Check the spout safety switch.

NOTE

The spout safety switch is manually reset and functions to immediately STOP the icemaking process if the bin ice level switch were to fail and begin to cause ice to jam up in the spout. Once SHUT OFF, the spout safety switch is reset, when the actuator plate is released from the locking bracket, which holds the plate tight against the depressed actuator arm of the spout safety switch.

(Continued)

HQD750 MAINTENANCE AND CLEANING INSTRUCTIONS

NOTE

If the unit being serviced is equipped with a STEEL NEEDLE bearing, the breaker assembly should be REPLACED. Contact your local Scotsman Distributor for further information. Breakers with a NON-METALLIC bearing should be cleaned and the seal replaced ONCE PER YEAR. If the type of breaker bearing is not known, the breaker should be inspected. All A and B models were equipped with steel needle bearings. Most C Models have the non-metallic bearings.

18. Remove elbow insulation and remove three Allen head screws and spout retaining brackets from the freezer assembly end of the elbow and switch assembly.
19. Remove three Allen head screws and spout retaining brackets from the freezer assembly end of the elbow and switch assembly.

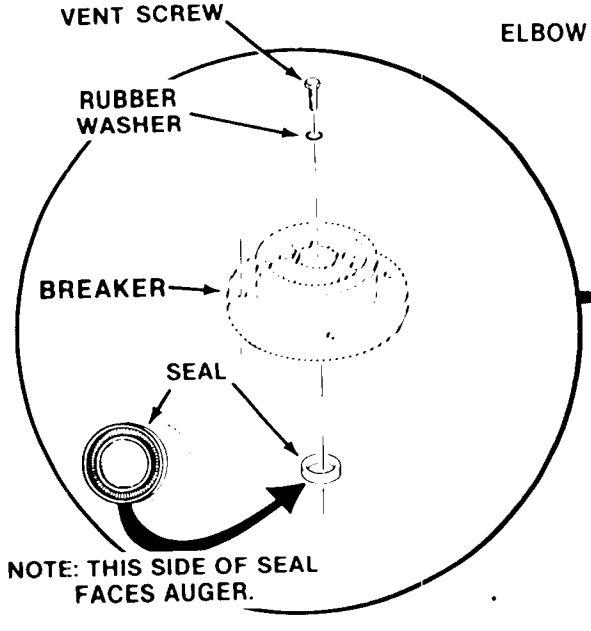

NOTE

In order to accomplish removal of the elbow and switch assembly in the next step, it may be necessary to further remove panels and disassemble the ice transport tube.

20. Lift the elbow and switch assembly and set aside to gain access to the top of the freezer assembly.
21. Remove four capscrews, lockwashers and the ice breaker assembly from the top of the freezer assembly for inspection.
22. Retain the O-ring for replacement during reassembly. Inspect the O-ring for cuts, tears or excessive wear, causes for replacement.
23. Replace the lip seal and inspect the top bearing seated in the ice breaker, wipe clean of mineral build up. Remove auger. Check seal and check auger for stains.

CAUTION

DO NOT force the auger and breaker together without having the vent hole open because pushing the breaker on with no air relief will cause the internal air pressure to force the grease seal away from the breaker.

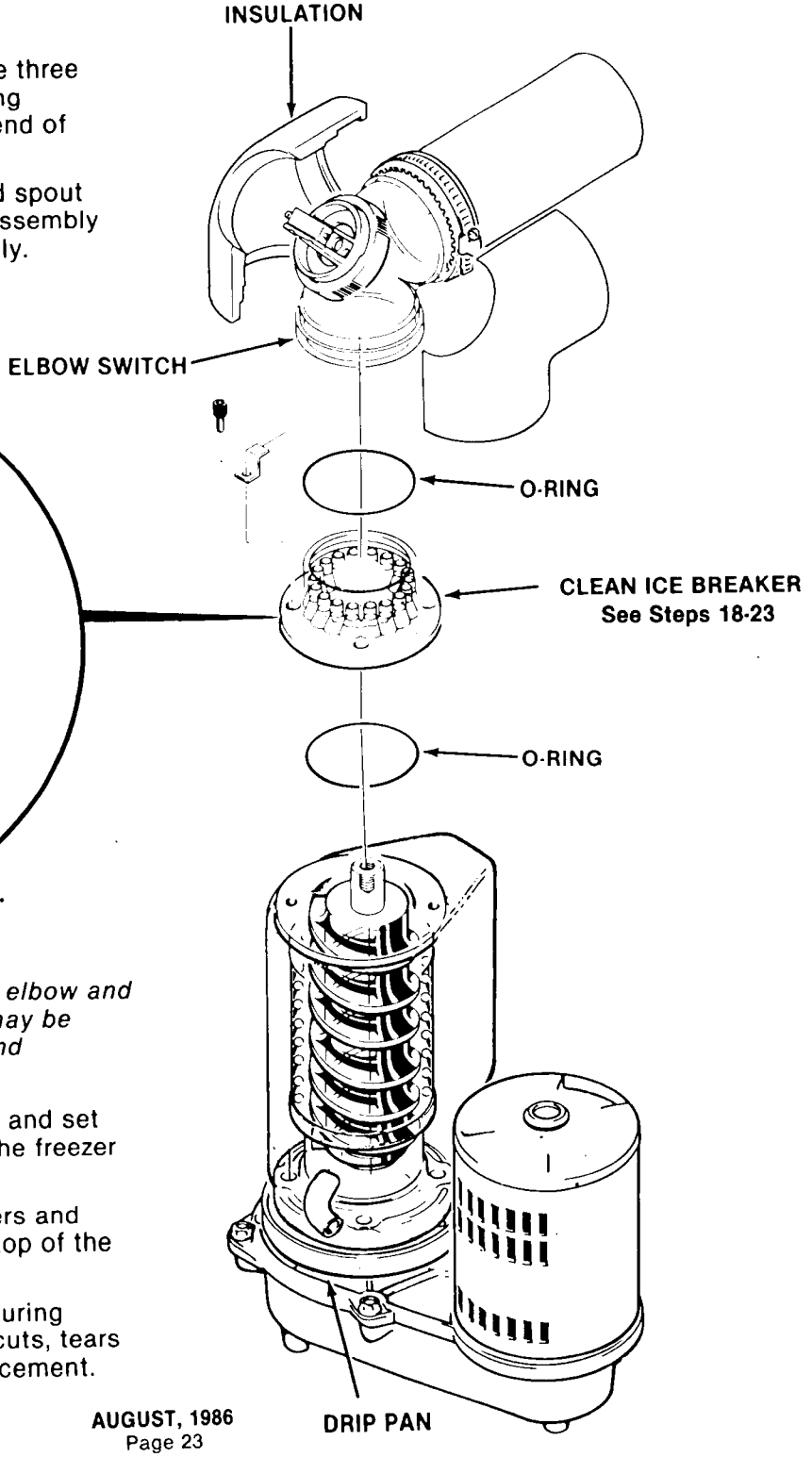

HQD750 MAINTENANCE AND CLEANING INSTRUCTIONS

CLEANING ICEMAKER

1. Dispense all ice from ice storage bin.
2. Pull the left front panel out and rotate to OPEN.
3. Move the manual ON-OFF toggle switch, on the bottom of the control box, to the OFF position.
4. Remove screws and the left side panel.
5. Block the float up in the water reservoir.
6. Drain the water reservoir and freezer using drain tube attached to the freezer inlet tube. Return drain tube to normal operating position and replace end cap.

WARNING

SCOTSMAN Ice Machine Cleaner contains Phosphoric and Hydroxyacetic acids. These compounds are corrosive and may cause burns. If swallowed, DO NOT induce vomiting. Give large amounts of water or milk. Call Physician immediately. In case of external contact, flush with water. KEEP OUT OF THE REACH OF CHILDREN.

7. Prepare cleaning solution: Mix eight ounces of SCOTSMAN Ice Machine cleaner with 3 quarts of hot water.
8. Slowly pour the cleaning solution into the water reservoir until full.
9. Move the manual ON-OFF toggle switch, on the bottom of the control box, to the ON position.
10. Slowly pour the remaining solution into the water reservoir; maintaining a level just below the reservoir overflow.
11. Continue icemaking procedure until all the solution is used up and the water reservoir is almost empty. DO NOT allow the icemaker to operate with empty reservoir.
12. Move the manual ON-OFF toggle switch, on the bottom of the control box, to the OFF position.
13. Wash and rinse the water reservoir following procedure from Step 7.
14. Remove the block from the float in the water reservoir.
15. Move the manual ON-OFF toggle switch, on the bottom of the control box, to the ON position.
16. Continue icemaking for at least 15 minutes, to flush out any cleaning solution. Check ice for acid taste - continue making until ice tastes sweet.

CAUTION

DO NOT use ice produced from the cleaning solution. Be sure no ice remains in the cylindrical storage bin.

17. Dispense all ice produced from the cleaning solution from the ice storage bin.
18. Move the manual ON-OFF toggle switch, on the bottom of the control box, to the OFF position.
19. Loosen two wing head screws and rotate the right door assembly to OPEN.
20. Remove the cap nut from the center of the cylindrical ice storage bin and lift up and remove the cylindrical ice storage bin.
21. Remove all ice from bottom of the cylindrical storage bin and the auger-dispensing mechanism.
22. Add hot water to the cylindrical storage bin and the auger-dispensing mechanism; and, thoroughly wash and rinse all surfaces within the bin.
23. Clean and sanitize the cylindrical storage bin and the auger-dispensing mechanism each week. Refer to SANITIZING.

(Continued)

HQD750 MAINTENANCE AND CLEANING INSTRUCTIONS

NOTE: Door must be closed to make ice and clean icemaker.

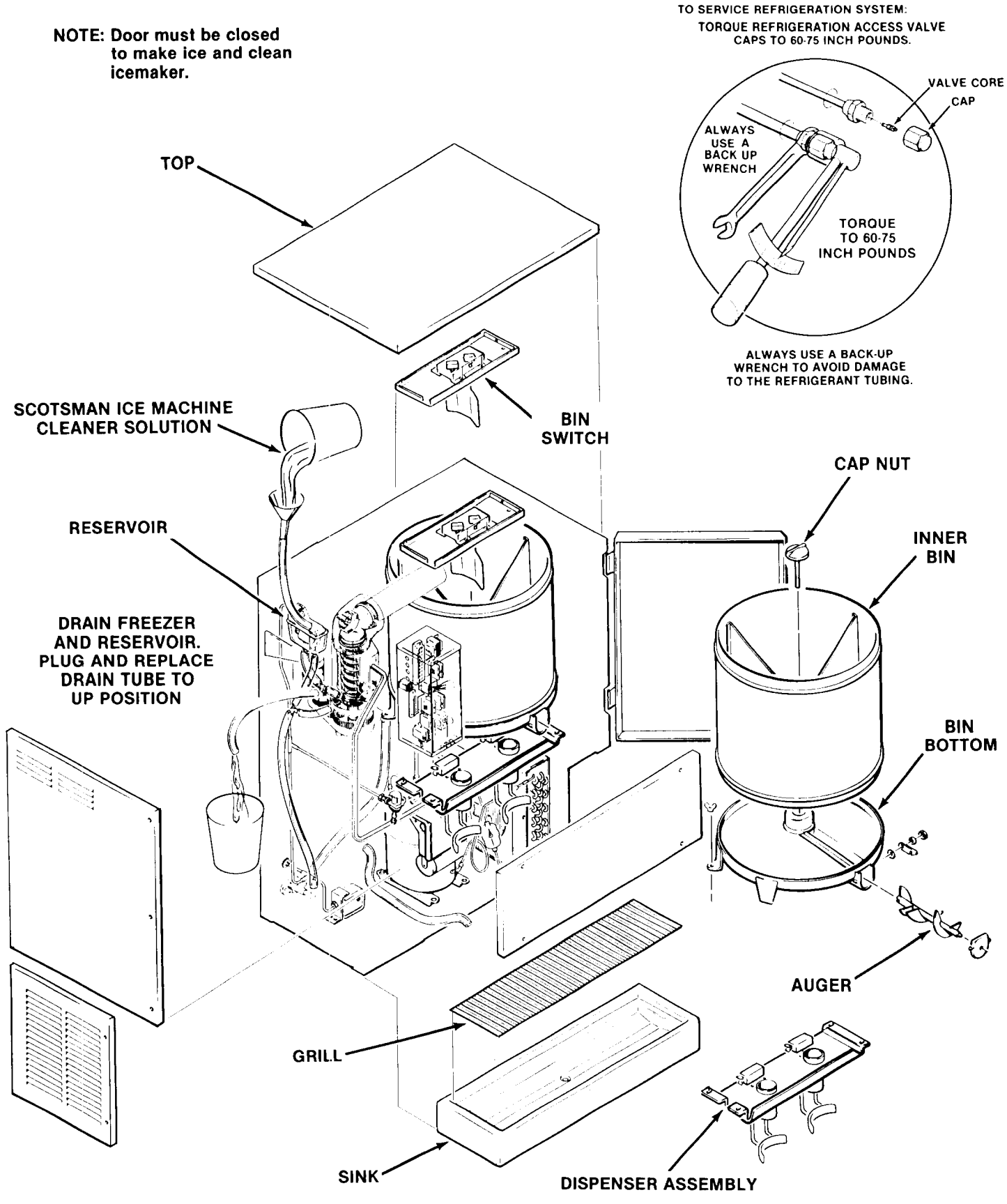

HQD750 MAINTENANCE AND CLEANING INSTRUCTIONS

SANITIZING

Sanitizing is an important phase of the icemaking and dispensing operation. The following sanitizing procedure should be performed after every repair or replacement of parts in the HQD750 in/or through which water flows or drains and ice is made, spouted, stored or dispensed. Additional requirements for performing the sanitizing procedure should be followed in accordance with the requirements of the local Health Authorities.

//////////////////// WARNING ////////////////////

Read WARNING thoroughly BEFORE preparing sanitizing solution, in next step.

1. **STERILAX 3-Q SANITIZING TABLETS.**

   DANGER: KEEP OUT OF REACH OF CHILDREN. Tablets may be harmful or fatal if swallowed. May cause skin irritation or eye damage. Avoid prolonged skin contact. Do not get in eyes. In case of contact, flush with plenty of water. If irritation persists get medical attention. Avoid contamination of food.

   FIRST AID: If tablets are swallowed, drink promptly a large quantity ol milk, egg whites or gelatin solution. Avoid alcohol.

   NOTE TO PHYSICIAN: Probable mucusal damage may contraindicate the use of gastric lavage. Measures against circulator shock, respiratory depression and convulsion may be needed.

   Rinse empty carton container thoroughly with water and discard. Always follow your health department regulation.

2. **MIKRO-QUAT**

   DANGER: Causes high damage and skin irritation. Do not get into eyes, or on skin, or on clothing. Protect eyes when handling concentrated product. Harmful if swallowed. Avoid contamination of food.

   FIRST AID: In case of contact, immediately flush eyes or skin with plenty of water for at least 15 minutes. For eyes, call a physician. Remove and wash contaminated clothing before reuse. If swallowed, drink promptly a large quantity of milk, egg whites or gelatin solution, or if these are not available, drink a large quantity of water. Call physician immediately.

NOTE: Contact your local Health Authorities and obtain their approval of the sanitizer you intend to use when sanitizing the HQD750.

Prior to performing the santitizing procedure, it is assumed the cleaning procedure has been performed.

1. Prepare one gallon of sanitizing solution composed of 450 PPM active quaternary ammonium germicide solution, using a quaternary ammonium sanitizing solution.

NOTE: Carefully follow directions and observe all precautions on the container of the compound.

Three *Sterilax 3-Q sanitizing tablets per gallon of water; or, 2/3 ounce of *Mikro-Quat per gallon of water will yield a solution of about 450 PPM active quaternary.

2. Immerse the parts in the sanitizing solution and wash the parts, flushing the solution thoroughly in, over and through all parts and surfaces of the HQD750 parts being sanitized.
3. Allow the parts to drain and air dry.
4. Replace the sanitized parts in the reverse order of removal.

*Sterilax 3-Q sanitizing tablets are distributed by Pittsburgh Chemical Laboratory, Inc., Pittsburgh, PA 15222, and may be obtained through most restaurant supply houses.

*Mikro-Quat is manufactured by Economics Laboratory, Inc., Osborn Building, St. Paul, MN 55102, and may be obtained from them through their Magnus Division, The Klensade Division, or from restaurant supply houses.

HQD750 MAINTENANCE & CLEANING INSTRUCTIONS

CHLORINATION OF STAINLESS STEEL BIN LINERS

The stainless steel part of a bin will require periodic cleaning. Chemicals in the water supply, such as chlorine, can cause brown staining to appear on the surface of stainless steel. The brown stains should be removed immediately to avoid deterioration of the metal. Chlorine gas, coming off the ice in the bin will combine with water vapor and condense on the liner walls and pit the stainless steel.

The brown stains will appear at the top of the bin. Lower portions of the bin stay clean, due to the "washing" action of water from melting ice draining down it.

To prevent the staining from causing pitting of the stainless steel, the bin liner should be cleaned every three to six months. More frequent cleaning may be required depending on water conditions.

1. General Cleaning — when the staining is light, it can usually be removed by washing with ordinary cleaning powder, such as Bon-Ami or Copper-Glo and water. (Do not use cleaners that contain bleaching agents, as most of these are compounds of chlorine.) After cleaning, rinse thoroughly with clear water. It may be necessary to use a stainless steel wool to remove bad stains. DO NOT USE plain steel wool, as the steel particles will get imbedded in the liner and cause more serious staining.
2. Cleaning of Heavy Deposits — If the bin has not been cleaned for a long time, and heavy deposits and pitting have occurred, a chemical cleaner may be necessary. Follow instructions printed on the container of the cleaner.
3. Water treatment — chlorine can be removed from the ice machine's water source. This is accomplished by installing an activated carbon filter on the ice machine's inlet water line. Please consult your local water treatment specialist, other water treatment may be advised due to other possible water problems.

HQD750 SERVICE DIAGNOSIS

The Service Diagnosis Section is for use in aiding the serviceman in diagnosing a particular problem for pin-pointing the area in which the problem lies, thus an ever available reference for proper corrective action.

The following charts lists corrective actions for the causes of known symptoms of certain problems that can occur in the Dispensing System and the Icemaking - Refrigeration System.

DISPENSING SYSTEM

SYMPTOM	POSSIBLE CAUSE	CORRECTION
No water is dispensed.	Electrical power OFF.	Connect electrical power.
	Building water valve off.	Open valve.
	Defective water vend switch.	Replace switch.
	Defective water solenoid valve.	Replace defective valve.
No ice is dispensed.	Ice bin empty.	Check refrigeration system.
	Defective ice vend switch.	Replace switch.
	Broken or disconnected linkage.	Replace linkage.
	Bin drive motor defective.	Check, replace if defective.
	Jam in ice chute.	Remove obstruction.
Portion control does not operate properly. Continues to operate when glass filler lever assembly is held IN.	Timing module defective.	Replace defective timing module.
	Potentiometer switch defective.	Replace defective potentiometer.
	Loose connections or open wire leads to potentiometer.	Check terminal wiring, tighten connection, repair wiring.
Icemaker will not run, red light on.	Bin has over filled due to:	
	Failed bin switch.	Replace switch.
	Compressor contactor stuck on.	Replace contactor.
	Bin switch differential too short - unit cuts in too soon.	Replace switch.
	Holding relay has been de-energized due to:	
	Power interruption.	Check power supply.
	Voltage drop at a holding circuit switch.	Check all switch contacts in holding circuit.

(Continued)

HQD750 SERVICE DIAGNOSIS

SYMPTOM	POSSIBLE CAUSE	CORRECTION
When glass filler lever assembly is pushed, ice shutter does not open.	Lever assembly does not depress plunger of microswitch.	Loosen two hex nuts on microswitch and adjust to LOWER the plunger.
	Defective actuator microswitch.	Replace microswitch.
	Loose thumb screws.	Tighten thumb screws.
	Ice shutter rubs on plastic bin liner.	Remove shutter and install washer on shaft to raise shutter.
	Actuator rod is bent.	Replace actuator rod. Do not attempt to bend rod to adjust.
	Actuator motor or relay defective.	Check motor & relay and replace if defective
	Actuator motor cam on No. 1 switch needs adjustment or is defective.	Adjust or replace defective part.
	Shutter motor relay is defective.	Replace defective relay.
When glass filler lever assembly is pushed, ice shutter opens, but nothing is dispensed.	Cam switch of shutter control box out of adjustment or is defective.	Adjust or replace cam switch.
	Vend relay in control box is defective.	Replace defective relay.
	Vend switch out of adjustment or is defective.	Adjust switch or replace defective part.
	Timing module in control box is open.	Check, replace if defective.
	Bin drive motor is defective.	Check, replace if defective.
	Auger drive motor is defective.	Check, replace if defective.
	Ice jammed in discharge spout.	Remove auger and clear ice from spout and auger.
	Pin securing bin drive hub to shaft of drive unit motor, sheared.	Replace sheared pin.
Ice auger will not rotate.	Drive end of auger is sheared.	Remove and replace auger.
	Auger drive motor does not turn.	Remove and replace auger drive motor.
Vend relay energized, but no ice is dispensed.	Contacts on relay bent, or wire leads to relay loose.	Replace Relay. Tighten wire lead connections.
	Bin drive unit motor defective.	Repair or replace defective motor.
	Ice auger motor defective.	Repair or replace defective motor.
Ice shutter opens and closes continuously, motor will not stop.	Cam switches out of adjustment.	Adjust three cam switches as necessary.
	Brake on shutter motor worn.	Replace shutter motor.

HQD750 SERVICE DIAGNOSIS

SYMPTOM	POSSIBLE CAUSE	CORRECTION
Water Leaks.	Defective water seal.	Replace seal.
	Gravity feed line leaking.	Check hose clamp.
	Water level in reservoir too high.	Adjust water level to molded line on the float assembly.
	Storage bin drain and connecting fittings.	Check and repair.
Excessive noise or chattering.	Mineral or scale deposit on auger and inner freezing chamber walls.	For severe deposit, remove and manually polish auger, sand inner chamber walls of freezer barrel.
		For lighter concentration, use Scotsman Ice Machine Cleaner periodically.
	Intermittent water supply.	Check and clean water strainer.
		Check gravity feed line for air lock.
		Check to be sure float orifice is not restricted
		Check incoming water supply.
		Remove air lock.
	Water level in reservoir too low.	See CORRECTION for Water Leaks above.
	Gear reducer loose on frame.	Tighten gear reducer.
	Motor compressor not solid on rubber mounts.	Repair or replace rubber mounts.
	Gearmotor thrust bearing worn.	Check/replace bearing.
	Top bearing worn.	Check/replace breaker.
	Water interruption.	Check for frozen water inlet to freezer.
Drivemotor makes high pitched noise.	Rotor bearing dry or worn.	Replace motor or bearing.
	Dry grease seal under rotor bearing.	Grease seal.

HQD750 SERVICE DIAGNOSIS

ICEMAKING — REFRIGERATION SYSTEM

SYMPTOM	POSSIBLE CAUSE	CORRECTION
Low ice production.	Loss of refrigerant. Under or over-charge of refrigerant.	Check system and recharge. See NAMEPLATE for correct charge.
	Drive motor weak.	Replace drivemotor.
	Dirty or plugged condenser.	Clean condenser.
	Low water level in reservoir.	Check float.
	Partial restriction in capillary tube or drier.	Moisture in system. Overcharge of oil in system. Remove charge. by blowing back thru cap tube. Replace drier and recharge. See NAMEPLATE.
	Optional water strainer partially plugged.	Remove and clean strainer screen.
	Corroded to stained auger, due to water condition. Lime build up in freezer.	Remove and clean auger, or use SCOTSMAN Ice Machine Cleaner. See Maintenance & Cleaning.
Icemaker operates, but makes no ice.	Loss or undercharge of refrigerant.	Check for gas leaks, evacuate & recharge.
	Water not entering freezing Chamber. Plugged strainer or water inlet line.	Check and clean. Check, remove possible air lock in gravity feed line.
	Moisture in system.	Check, evacuate, replace drier, SEE NAMEPLATE & recharge system.
	Water seal leaks.	Replace water seal.
	Water turned OFF while icemaker was operating.	Freezer inlet water line froze shut. Shutdown and defrost icemaker.
Icemaker will not operate.	Manual safety switch tripped.	Reset switch.
	Blown fuse.	Replace fuse and check for cause of blown fuse.
	Low pressure control activiated.	Check for cause.
	Head pressure control activated.	Check cause of decreased or loss of water to water-cooled condenser.
	Bin ice level switch stuck, pushed IN.	Repair or replace switch.
	Electrical power disconnected.	Connect electrical power ON.

HQD750 ADJUSTMENT PROCEDURES

ADJUSTMENT OF THE LEG LEVELERS

When the Icemaker/Dispenser is ordered with the optional DMS31 Machine Stand, the cabinet must be leveled in the front-to-back and side-to-side directions. This adjustment should be performed during initial installation of the cabinet and anytime the cabinet is moved from the original location of another site.

1. Using a 1-1/8" open-end wrench, and a carpenter's bubble level, rotate the threaded leveler in each leg to RAISE or LOWER the cabinet until the cabinet is level in the front to back direction.
2. Repeat step A, for leveling in the side-to-side direction.
3. Recheck both the front-to-back and the side-to-side leveling and repeat adjustments, as necessary.

ADJUSTMENT OF THE WATER REGULATOR ASSEMBLY

The correct head pressure on water-cooled models is 135 PSIG. Adjustments can be performed on the water regulator assembly to increase or decrease the head pressure.

To adjust the water regulator assembly:

1. To INCREASE the head pressures: Rotate the adjusting screw, on the water regulator assembly COUNTER-CLOCKWISE.
2. To DECREASE the head pressure: Rotate the adjusting screw, on the water regulator assembly CLOCKWISE.

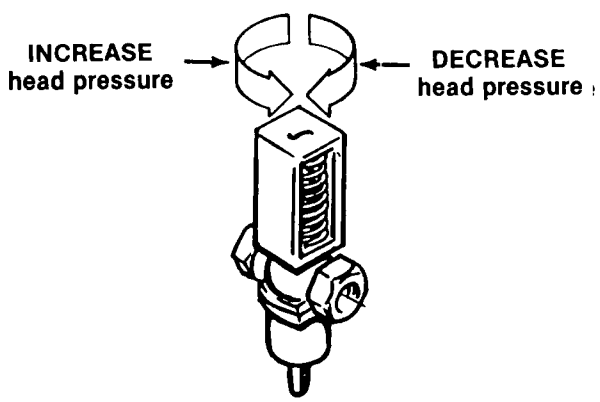

ADJUSTMENT OF THE WATER RESERVOIR FLOAT

The correct water level in the water reservoir should be at the level of the raised molded line, on the side of the body of the water reservoir. When the water line level is above or below the raised molded line, adjustment can be performed to raise or lower the water level by bending the metal arm of the float inside the water reservoir.

To adjust the water reservoir float:

1. To RAISE the water level:
   Hold one end of the metal arm of the float and slightly bend the float up.
2. To LOWER the water level:
   Hold one end of the metal arm of the float and slightly bend the float DOWN.
3. To perform MAJOR adjustment:
   When repair or replacement has been performed and the water level line between the water reservoir and the freezer assembly has been substantially altered:
   a. Loosen the three screws and lockwashers which attach the reservoir bracket and water reservoir to the frame.
   b. Move the reservoir bracket UP or DOWN to properly position the water line level should be flush with the top of the auger flights.
   c. When proper water level within the freezer is adjusted, re-tighten screws attaching the water reservoir bracket to the frame. mount.

HQD750 ADJUSTMENT PROCEDURES

ADJUSTMENT OF THE SHUTTER MOTOR SWITCHES

NOTE

Adjustment of the shutter motor switches should not be performed by anyone other than a qualified serviceman.

Illustration A shows the positions of the cam and actuator arms of the switches within the shutter actuator assembly, when the ice shutter is in the CLOSED position, the dispenser STANDBY condition.

Illustration B shows the positions of the cam and actuator arms of the switches within the shutter actuator assembly, when the ice shutter is in the OPEN position, the dispenser in the ice VEND condition.

Adjustment to the cam switches can correct the following potential problems:

A. SHUTTER CONTINUES TO OPERATE
(When glass filler lever is PUSHED IN):

1. CAUSE: Cam Switch-1 actuator arm DOES NOT touch cam for complete cycle.
2. ADJUSTMENT: Loosen screws on stacked switches and move cam switch-1 toward cam, or bend actuator arm, so cam depresses arm same as cam switch-2, tighten screws.

B. SHUTTER CONTINUES TO OPERATE
(After glass filler lever has been released):

1. CAUSE: Cam switch-3 actuator arm DOES NOT touch cam for complete cycle.
2. ADJUSTMENT: Loosen screws on cam switch-3 and move cam switch-3 toward cam, or bend actuator arm, so cam depresses arm, tighten screws.

C. SHUTTER DOES NOT OPERATE
(When glass filler lever is PUSHED IN):

1. CAUSE: Cam switch-1 actuator arm is DEPRESSED by cam, in STANDBY condition.
2. ADJUSTMENT: Loosen screws on stacked switches and move cam switch-1 away from cam, or bend actuator arm, so arm is NOT depressed, DOES NOT touch CAM, tighten screws.

NOTE

Cam Switch #1 is the bottom switch of the stacked switches.

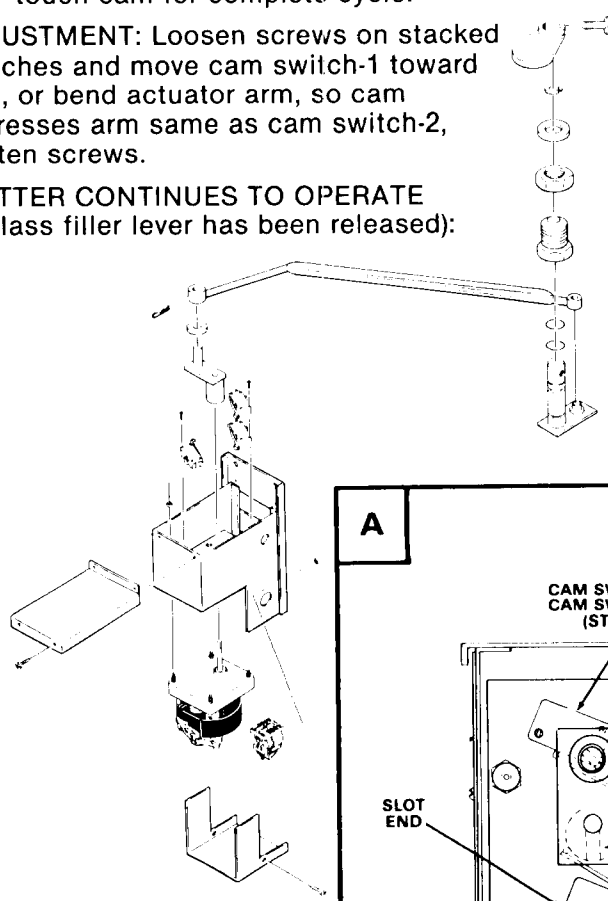

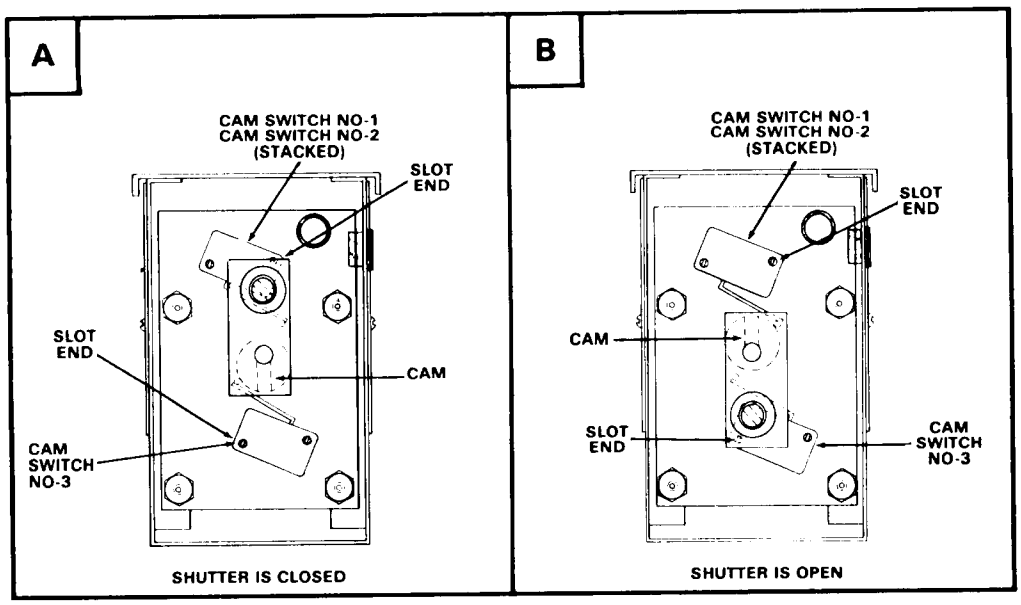

HQD750 REMOVAL AND REPLACEMENT PROCEDURES

HQD750's have been manufactured in "A" and "C" Models (as in model HQD750AE-1A vs. HQD750AE-1C.) The following instructions are designated for either "A" or "C" models. Be certain to check your model number and refer to the appropriate steps.

Read the instructions thoroughly before performing any Adjustment or Removal and Replacement Procedures.

////////////////////// **WARNING** //////////////////////

Be sure the electrical power supply and the water supply are OFF, BEFORE starting any of the following REMOVAL AND REPLACEMENT procedures as a precaution to prevent possible personal injury or damage to equipment.

//

REMOVAL AND REPLACEMENT OF THE AUGER, WATER SEAL, O-RING, ICE BREAKER ASSEMBLY AND FREEZER ASSEMBLY (A and C MODELS)

To remove the auger, water seal, o-ring and ice breaker assembly:

1. Shut off water supply to the icemaker/dispenser at the building source.
2. Disconnect or shut-off electrical power to the icemaker at the building source.
3. Push UP to unsnap catches and remove the top panel.
4. Pull the left front panel out and rotate to OPEN.
5. Loosen two wing head screws and rotate the door assembly to OPEN.
6. Remove screws and the left side panel.
7. Loosen screws on the slotted spout mounting plate, so the plate can be moved up and down in the slots. See illustration.
8. Remove three socket head screws and spout retaining brackets from the end of the spout assembly at the top of the freezer assembly.

NOTE

In order to accomplish removal of the spout in the next step, it may be necessary to remove all screws from the slotted spout mounting plate and the spout entry plate and slide these plates away from the hole in the left wall of the inner cabinet.

9. Separate insulation halves and remove from the elbow safety switch.
10. Remove three socket head screws and spout retaining brackets from the end of the spout assembly at the top of the freezer assembly.
11. Lift the elbow safety switch and spout UP, off of the freezer assembly.
12. Retain the o-ring for replacement during reassembly. Inspect for cuts, tears or excessive wear, causes for replacement.
13. Remove four capscrews, lockwashers and the ice breaker assembly from the top of the freezer assembly.

To remove ice breaker only, omit steps 14 thru 26.

14. Remove hose clamp and disconnect the water feeder tube from the resevoir, at the freezer to drain the reservoir and freezer of water.
15. Retain the o-ring for replacement during reassembly. Inspect for cuts, tears or excessive wear, causes for replacement.
16. Remove the auger. If necessary a bolt can be threaded into the top end of the auger from the freezer and a hand tool used to pull on the bolt to remove the auger.

To remove Water Seal only, omit steps 18, 19 and 20.

TO REMOVE FREEZER ASSEMBLY:

17. Pull back permagum around freezer base mounting bolts and remove four screws and flatwashers. Separate the freezer assembly, gasket and adapters, from the drivemotor assembly.
18. Bleed off or blow the refrigerant charge through the Schrader valve.
19. Unsolder and disconnect the refrigerant suction line at the compressor, and the associated capillary line at the drier.
20. Remove the freezer assembly from the chassis.

A MODEL

21. Using a suitable length and size wooden dowel or stick inserted through the top of the open freezer assembly, tap the stationary piece water seal out the bottom of the freezer assembly.

C MODEL

21. Remove snap ring from inside bottom of evaporator assembly. Using a suitable length and size of wooden dowel or punch inserted through the top of the open freezer assembly, tap the stationary portion of the water seal out the bottom of the freezer assembly.

HQD750 REMOVAL AND REPLACEMENT PROCEDURES

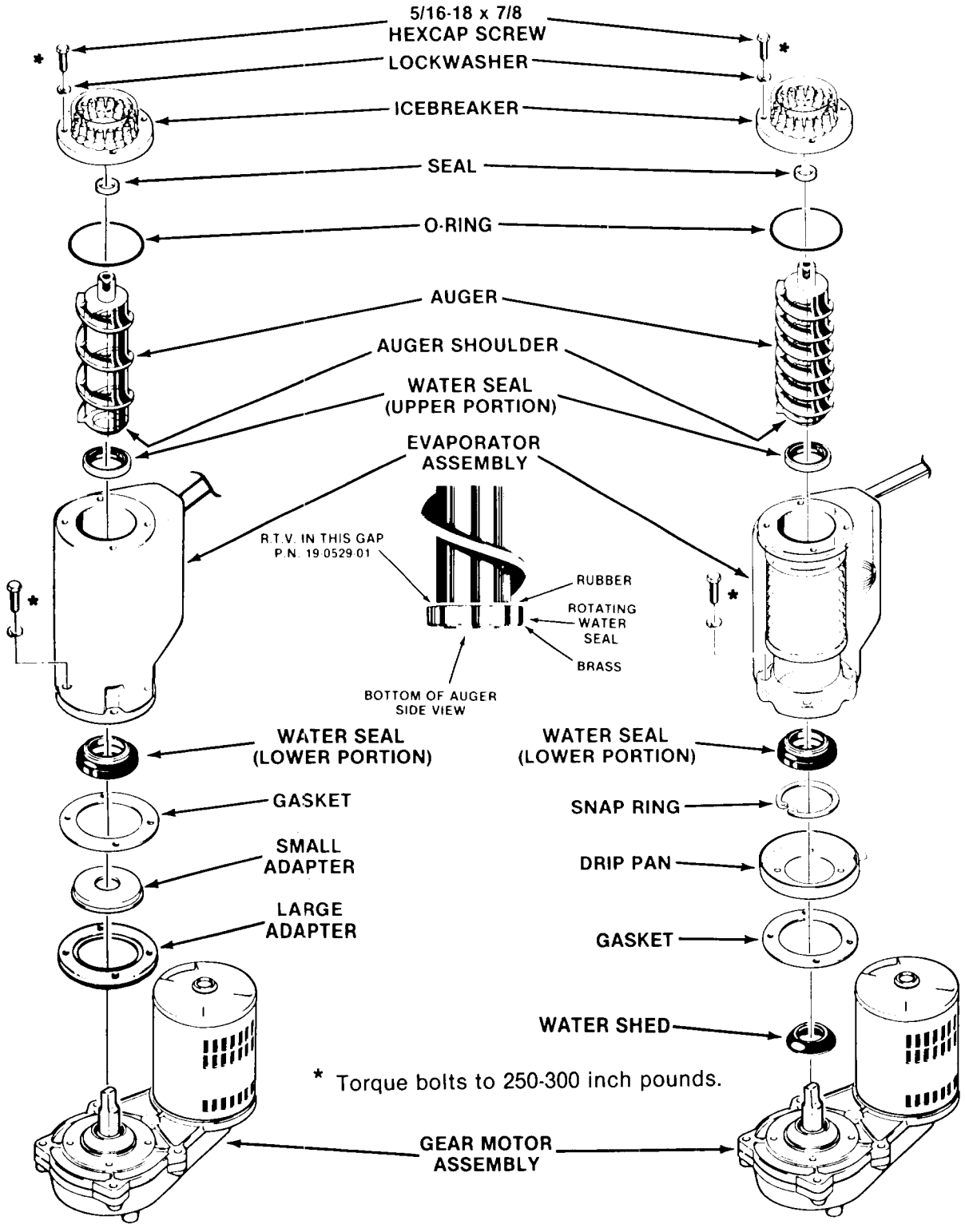

A and B MODELS

C MODEL

22. Replace the water seal any time it has been removed.

CAUTION

The lower two-part water seal is a precise seal and fitting. Any damage or wear will cause a failure. It is recommended that the lower two-part water seal be replaced any time there is a question of condition.

A MODEL

23. Replace the parts starting with the stationary part of the water seal. Carefully inspect it prior to assembly. Insert this half of the water seal into the bottom of the freezer. Then insert the brass freezer adapter into the bottom of the freezer tube and push it in as far as it will go.

C MODEL - OR REPLACEMENT FREEZER

23. Replace the new stationary portion of the two-part water seal in the bottom of the freezer assembly and press in far enough to install the snap ring. **IMPORTANT:** pull water seal back down against snap ring all the way around the freezer.

A MODEL

24. Mount the freezer and gasket to the gear motor case. Be certain that the gearmotor is in good working condition and that the large plastic adapter is in place on the gearbox.

C MODEL - OR REPLACEMENT FREEZER

24. Mount the freezer, drip pan and gasket to the gearmotor case. Check to be sure the gearmotor is in good concition and the water shed is in place around the output shaft.

25. Apply Scotsman part number 19-0529-01 RTV silicone rubber to the auger shoulder before pushing on the water seal. Place just enough silicone on to the auger, so that when the water seal is placed on the auger, the gap between the auger shoulder and water seal is completely filled with silicone.

    The silicone must be allowed to "set-up" or dry on the surface before any water can be added to the freezer.

CAUTION

If any silicone gets onto the mating surfaces of the water seal, the seal is ruined, and cannot be used.

26. Install auger.

27. Install breakers, see page 37.

HQD750 REMOVAL AND REPLACEMENT PROCEDURES

CAUTION

DO NOT force the auger and breaker together without having the vent hole open because pushing the breaker on with no air relief will cause the internal air pressure to force the grease seal away from the breaker.

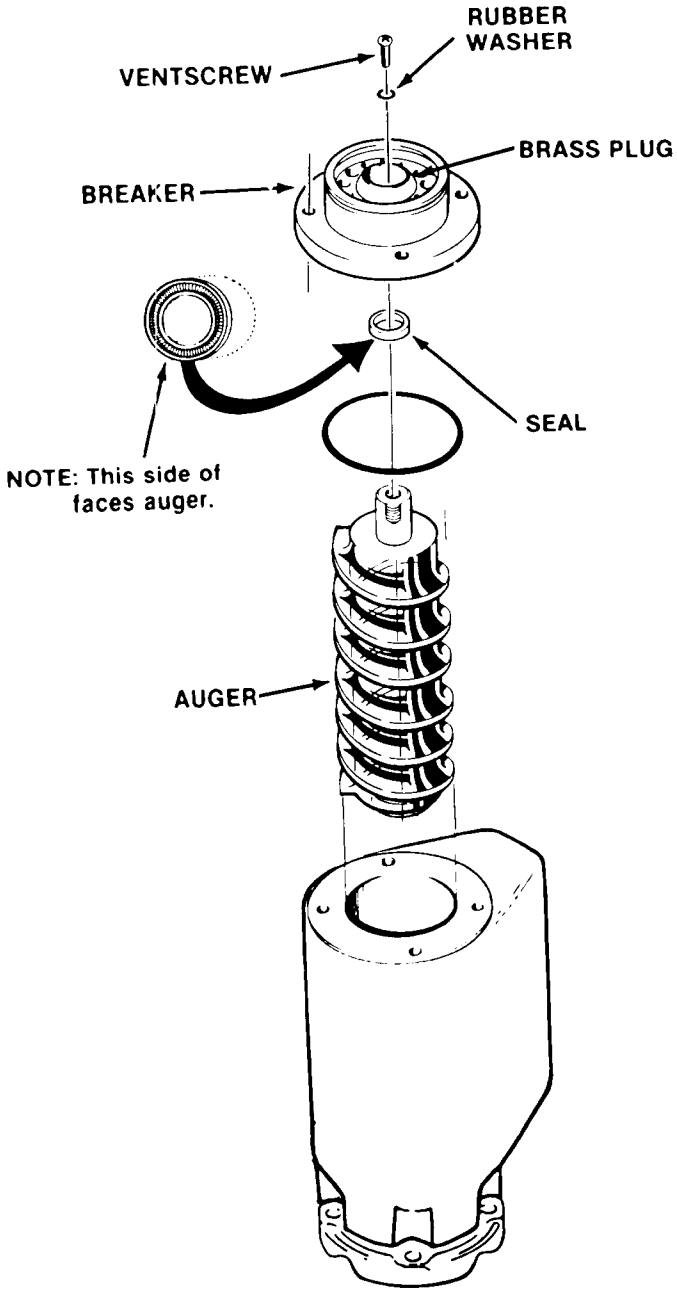

HQD750 REMOVAL AND REPLACEMENT PROCEDURES

WARNING

Be sure the electrical power supply to the icemaker is OFF before proceeding with removal procedures.

REMOVAL AND REPLACEMENT OF THE COMPRESSOR ASSEMBLY

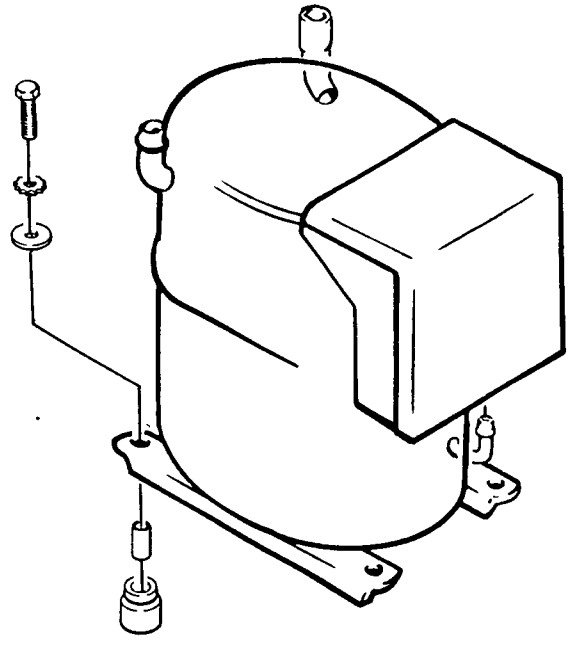

1. Remove five screws and the decor spout cover, carefully lowering the cover around the two dispensing assemblies.
2. Remove four thumbscrews and the entire dispensing assembly from the cabinet and disconnect electrical leads from the two switches.
3. Remove four screws and the backsplash assembly.
4. Lift the sink assembly to disengage from the left and right sink supports; then, remove hose clamp and disconnect drain hose, to remove the sink assembly and grill from the cabinet.
5. Remove the cover from the terminal box on the compressor; then, disconnect electrical leads from the compressor.
6. Bleed off or blow the refrigerant charge through the Schrader valve.
7. Unsolder the suction line from the compressor.
8. Unsolder the discharge line from the compressor.
9. Unsolder the process header tube from the compressor and retain for installation on the replacement compressor.
10. Remove four bolts, washers, mounting sleeves and grommets and the compressor from the chassis base.
11. Remove the compressor from the chassis.
12. To replace the compressor assembly, reverse the removal procedures.
13. When recharging the system with refrigerant, always check the nameplate for the specified refrigerant charge.

NOTE

Always install a replacement drier, anytime the sealed refrigeration system is opened. Do not replace the drier until all other repair or replacement has been completed.

Thoroughly evacuate the system to remove moisture and non-condensables.

HQD750 REMOVAL AND REPLACEMENT PROCEDURES

WARNING

Be sure the electrical power supply to the icemaker is OFF before proceeding with removal procedures.

REMOVAL AND REPLACEMENT OF THE CONDENSER — AIR-COOLED MODELS

1. Remove five screws and the decor spout cover, carefully lowering the cover around the two dispensing assemblies.
2. Remove four thumbscrews and the entire dispensing assembly from the cabinet and disconnect electrical leads from the two switches.
3. Remove four screws and the backsplash assembly.
4. Lift the sink assembly to disengage from the left and right sink supports. Then remove hose clamp and disconnect drain hose, to remove the sink assembly and grill from the cabinet.
5. Remove screws and remove lower side panel from right side of the dispenser.
6. Bleed off or blow the refrigerant charge through the Schrader valve.
7. Remove one screw and disconnect the drier brace and drier from the condenser shroud.
8. Unsolder and disconnect the condenser inlet tube at the condenser.
9. Unsolder and disconnect the condenser outlet tube at the condenser.
10. Remove three screws, lockwashers and washers securing the condenser to the chassis base.
11. Remove the condenser from the chassis base.
12. Remove screws and remove shroud from the condenser.
13. To replace the condenser, reverse the removal procedure.
14. When recharging the system with refrigerant always check nameplate for the specified refrigerant charge.

REMOVAL AND REPLACEMENT OF THE CONDENSER — WATER-COOLED MODELS

To remove the water-cooled condenser:

1. Shut off water valve connected to the water-cooled condenser inlet.
2. Remove five screws and the decor spout cover, carefully lowering the cover around the two dispensing assemblies.
3. Remove four thumbscrews and the entire dispensing assembly from the cabinet and disconnect electrical leads from the two switches.
4. Remove four screws and the backsplash assembly.
5. Lift the sink assembly to disengage from the left and right sink supports. Remove hose clamp.
6. Bleed or blow the refrigerant charge through the Schrader valve.
7. Unsolder the refrigerant inlet and outlet lines from the condenser.
8. Unsolder and disconnect the water inlet and outlet lines from the condenser.
9. Remove two bolts, lockwashers and washers which secure the condenser to the chassis mounting base.
10. Remove the condenser from the cabinet.
11. To replace the condenser, reverse the removal procedure.
12. When recharging the system with refrigerant always check nameplate for the specified refrigerant charge.

NOTE

Always install a replacement drier, anytime the sealed refrigeration system is opened. Do not replace the drier until all other repair or replacement has been completed.

Thoroughly evacuate the system to remove moisture and non-condensables.

REMOVAL AND REPLACEMENT OF THE ROTATING BIN

To remove the rotating bin:

1. Remove left side panel by unscrewing 3 Phillips screws at the forward left edge of the panel and then pushing the panel back and up.
2. Remove main bin control lever by rotating pivot bar clockwise until against the top of the bin and pulling it out towards the front.
3. Remove insulation halves. Remove switch assembly from ice discharge elbow. Loosen 3 Allen screws retaining elbow to brass breaker, lift elbow up and rotate 90° (Loosen screws inside bin at spout entry plate to allow spout to move.) Pull ice discharge tube out.
4. Unscrew bin cap nut from bin and lift bin out of machine.

To replace, reverse removal procedures.

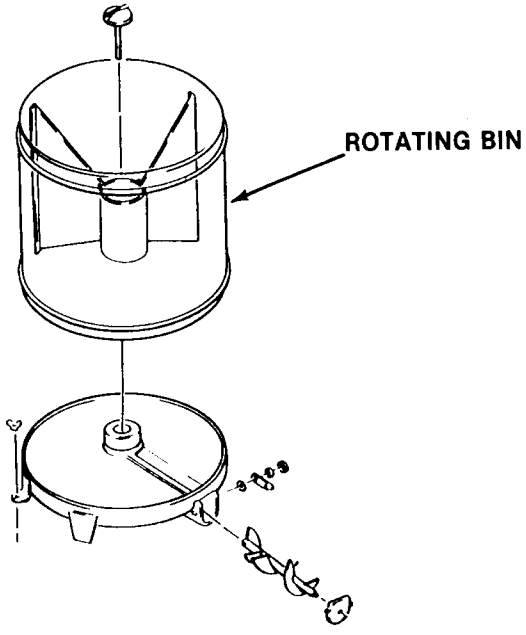

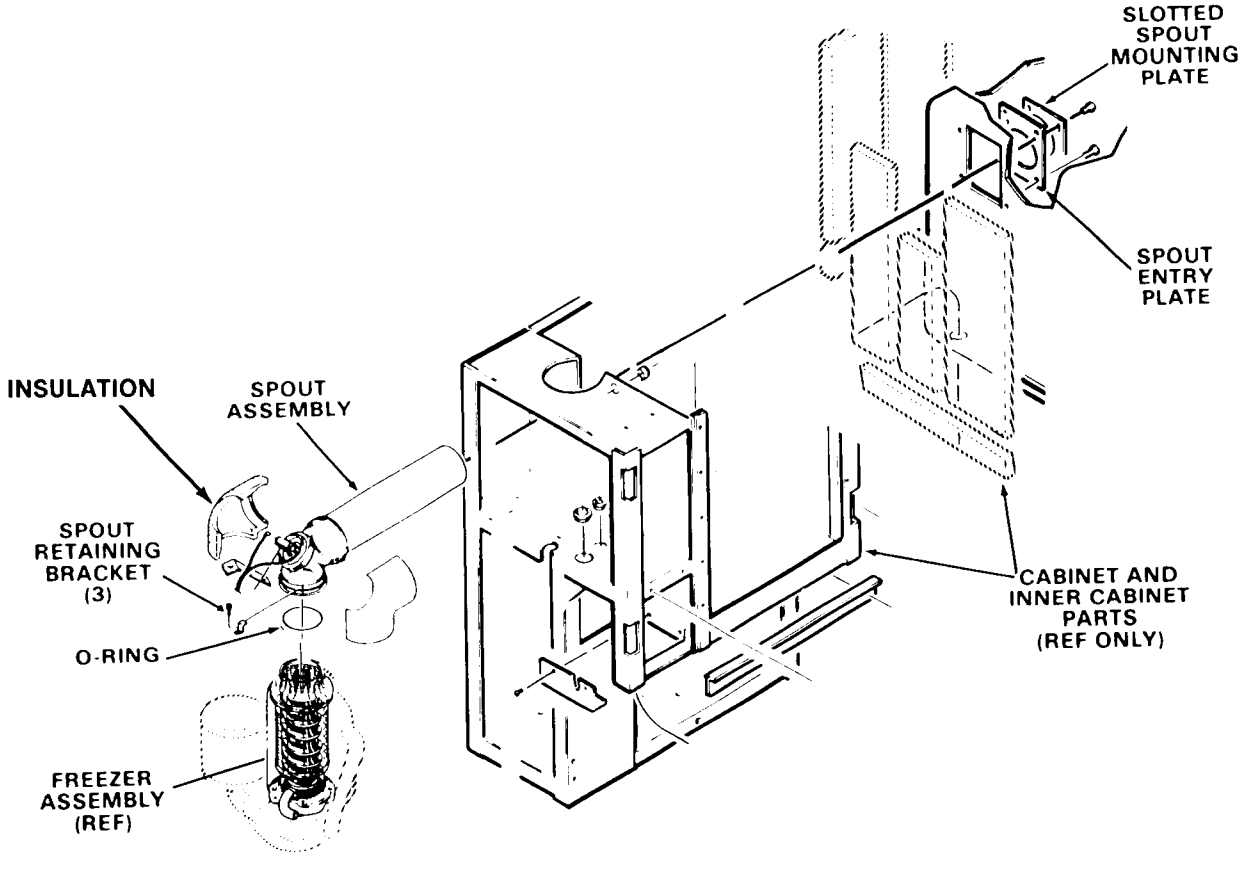

HQD750 REMOVAL AND REPLACEMENT PROCEDURES

WARNING

Be sure the electrical power supply to the icemaker is OFF before proceeding with removal procedures.

REMOVAL AND REPLACEMENT OF THE LIQUID LINE DRIER

1. Remove four screws and slide the backsplash assembly out from behind the dispensing assembly.
2. Lift the sink assembly to disengage from the left and right sink supports; then, remove the hose clamp and disconnect drain hose.
3. Remove screw and drier brace attaching the drier to the condenser shroud on air-cooled models; and, the chassis base on water-cooled models.
4. Bleed off or blow the refrigerant charge through the Schrader valve.
5. Unsolder refrigerant lines at the inlet and outlet of drier, remove the drier and separate the drier from the drier brace.

To replace the drier:

1. Remove the factory seals from the replacement drier and install the drier in the refrigerant lines with the arrow positioned in the direction of the refrigerant flow.

CAUTION

If the factory seal is broken on the replacement drier, exposing it to the atmosphere more than a few minutes, the drier will absorb moisture from atmosphere and lose substantial ability for moisture removal.

Be sure the replacement drier is installed with the arrow positioned in the direction of the refrigerant flow.

2. Install the drier brace on the drier.
3. Solder the drier into the lines, two places.
4. Purge the system.
5. Thoroughly evacuate the system to remove moisture and non-condensables.
6. Charge the system with refrigerant by weight SEE NAMEPLATE for specifications.
7. Leak test the system.
8. Replace and attach the sink assembly and backsplash assembly.

REMOVAL AND REPLACEMENT OF THE SAFETY CONTROLS, HIGH PRESSURE, LOW PRESSURE, AND AUGER DELAY

1. Bleed off or blow the refrigerant charge through the Schrader valve.
2. Unsolder the control capillary tube from its corresponding process header.
3. Replace the control and solder the capillary tube to its corresponding process header.
4. Follow the Removal and Replacement Procedure of the liquid line drier.

NOTE

Always install a replacement drier, anytime the sealed refrigeration system is opened. Do not replace the drier until all other repair or replacement has been completed.

Thoroughly evacuate the system to remove moisture and non-condensables.

HQD750 REMOVAL AND REPLACEMENT PROCEDURES

REMOVAL AND REPLACEMENT OF THE ELBOW AND SWITCH ASSEMBLY

To remove the elbow and switch assembly:

1. Disconnect the electrical supply to the icemaker at the circuit breaker or fuse box.

////////////////////// WARNING //////////////////////

Be sure the electrical power supply to the icemaker is OFF before proceeding with removal procedures.

//

2. Remove screws and remove top panel.
3. Remove insulation halves from the elbow switch assembly.
4. Rotate the retainer ring 90-degrees to unlock the retainer ring and the switch actuator housing from the elbow assembly and separate the parts from the elbow.
5. Remove bolt and washer and remove switch support from the ice breaker.
6. Remove three Allen head screws and spout retaining brackets from the freezer assembly and elbow and switch assembly.
7. Loosen screws inside bin at spout mounting plate, to allow ice transport tube to move up.
8. Lift the elbow assembly UP to clear the top of the freezer assembly.
9. Inspect the rubber diaphragm for cuts, tearing or excessive wear.

To replace the elbow and switch assembly, reverse the removal procedure.

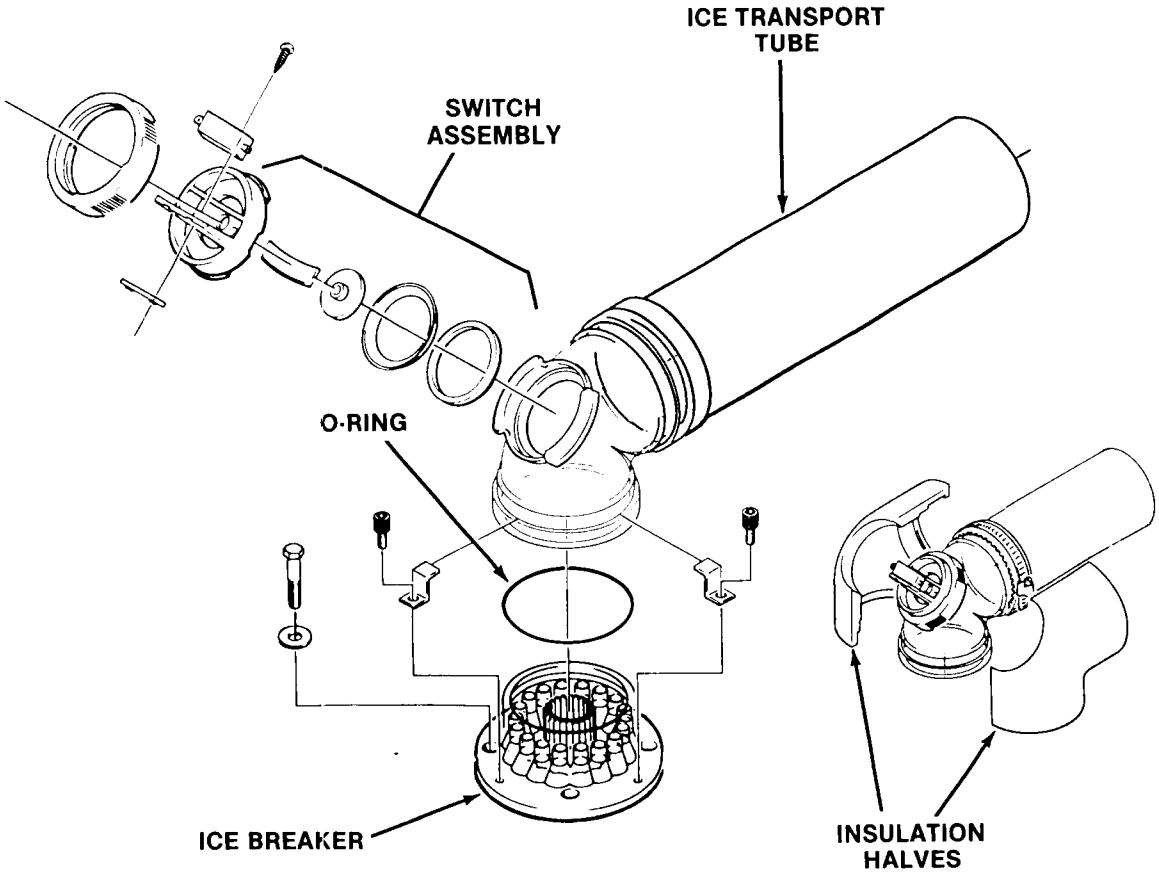

HQD750 REMOVAL AND REPLACEMENT PROCEDURES

WARNING

Be sure the electrical power supply to the icemaker is OFF before proceeding with removal procedures.

REMOVAL AND REPLACEMENT OF THE DRIVE UNIT

To remove the drive unit for the bin and ice delivery auger:

1. Perform steps to remove bin.
2. Unlatch auger drive plate from pins, pull plate up and out. Pull auger out and remove from the stationary bottom.
3. Unscrew wing nuts and lift stationary bottom from machine.
4. Cut away silastic seal between bin wall and conduit and from drive unit housing and conduit.
5. Cut wires at connectors in handy box. Unscrew handy box from wall, pull conduit and hand box out of machine.
6. Cut silastic at drive unit housing to bin drive support, remove screws holding housing to base, lift off housing.

The bin drive and auger drive motor are now exposed for service.

a. To remove auger drive motor, remove screws and pull the motor out.

b. To remove the bin drive motor: Remove four nuts holding drive unit base to bin, unscrew drive unit support from base.

c. Drive out pin and remove drive hub from the motor shaft. Remove screws and motor.

NOTE

Bin drive motor screws are NOT supposed to hold motor assembly tight against support, but should be loose, allowing the bin drive assembly to "float" or hang from the bearing in the drive hub.

To replace, reverse the removal procedure, and add food grade silicone sealant to the three areas indicated.

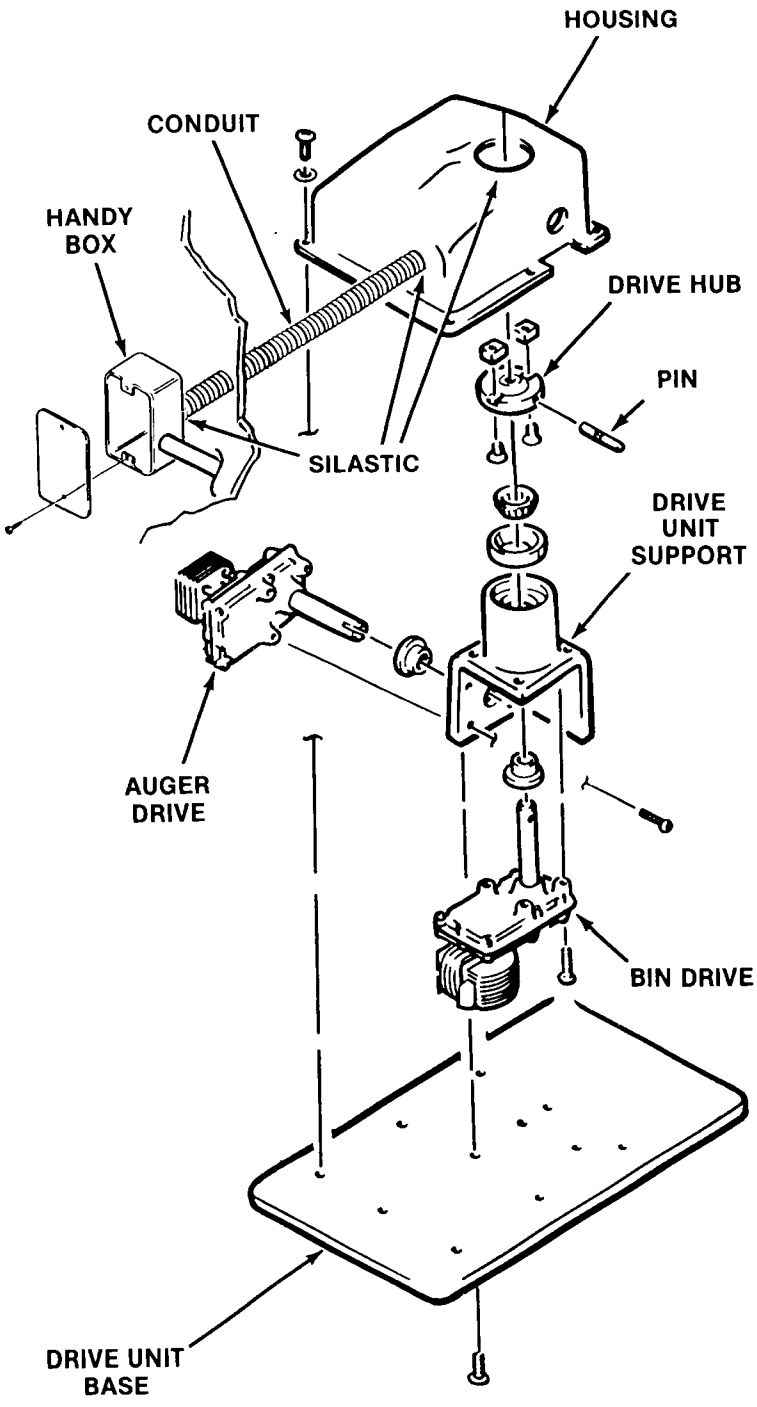

HQD750 REMOVAL AND REPLACEMENT PROCEDURES

WARNING

Be sure the electrical power supply to the icemaker is OFF before proceeding with removal procedures.

REMOVAL AND REPLACEMENT OF THE GEAR DRIVEMOTOR

To remove the auger drivemotor:

1. Disconnect electrical power leads from the motor.
2. Unscrew four capscrews securing motor to gearcase.
3. Lift off motor winding the gear reducer.
4. Use a pry bar to remove rotor and rotor bearing from the gearcase.
5. Examine grease seal in gearcase. Replace if worn. Add grease to seal and bearing housing before re-assembly.

To replace, reverse the removal procedures.

NOTE

Motors must be exchanged complete. DO NOT mix rotors, housings or windings.

REMOVAL AND REPLACEMENT OF THE GEAR MOTOR ASSEMBLY

To remove the gear motor assembly:

1. Refer to Removal and Replacement of the Elbow & Switch Assembly and perform steps to gain access to the freezer assembly.
2. Thread suitable length bolt, having No. 5/16-18 UNC-2B threads, into thread hold in the top of the auger. Grasp bolt head with hand tool and pull auger out.
3. Unbolt freezer from gear motor assembly, lift up and off gear motor.
4. Remove the drivemotor cover and disconnect the three electrical wire leads.
5. Remove bolts holding gear motor plate to the machine base.
6. Lift the gear motor from the machine base.

To replace the gear motor assembly, reverse the removal procedure.

* Torque bolts to 250-300 inch pounds.

REPAIR OF THE GEAR MOTOR ASSEMBLY

1. Remove (6) cap screws to prepare to open the gearcase.
2. Pry the two cases apart. Inspect the internal parts, look for:
   - Condition and quality of lubricant. (The proper oil level is flush with the top of the output (biggest) gear.)
   - Gear and gear shaft condition Woodruff key between output gear and shaft
   - Grease seals, back to back
   - Vent hole open
   - Thrust bearing intact.

   Be sure to count and retain the spacer washers as they come out of the gearbox.

   Replace the parts as required, using the part numbers found in the parts list section of this manual. Replace the gears into a CLEAN bottom gearcase, replacing the spacer washers in the same quantity as they were upon disassembly. If no count was kept, refer to the parts illustration.

   Output gear, when installed, must be assembled with the flush, machined side DOWN and the protruding bossed center UP.

NOTE: Some bearing grease should be placed in all bearings before assembly to insure proper lubrication upon start-up.

To reassemble:

1. Set top gearcase on gears and spacers and oil. Be sure O-ring is in place.
2. Replace gearcase cover. Drive in alignment pins before tightening cap screws and torque at 250-300 inch pounds.
3. Bench test the gearmotor assembly.

   Test for noise, amp draw (must not be in excess of icemaker nameplate for gearmotor) and oil leaks.

   Return gearbox to the unit. Be certain all mounting surfaces are clean and reassembly gearbox to chassis and freezer assembly.

   If the freezer water seal begins to leak, removal of the auger is required in order to replace the top bearing and water seal. AT THE SAME TIME, it would be recommended to remove the gearmotor assembly, open it up and inspect it.

HQD750 REMOVAL AND REPLACEMENT PROCEDURES

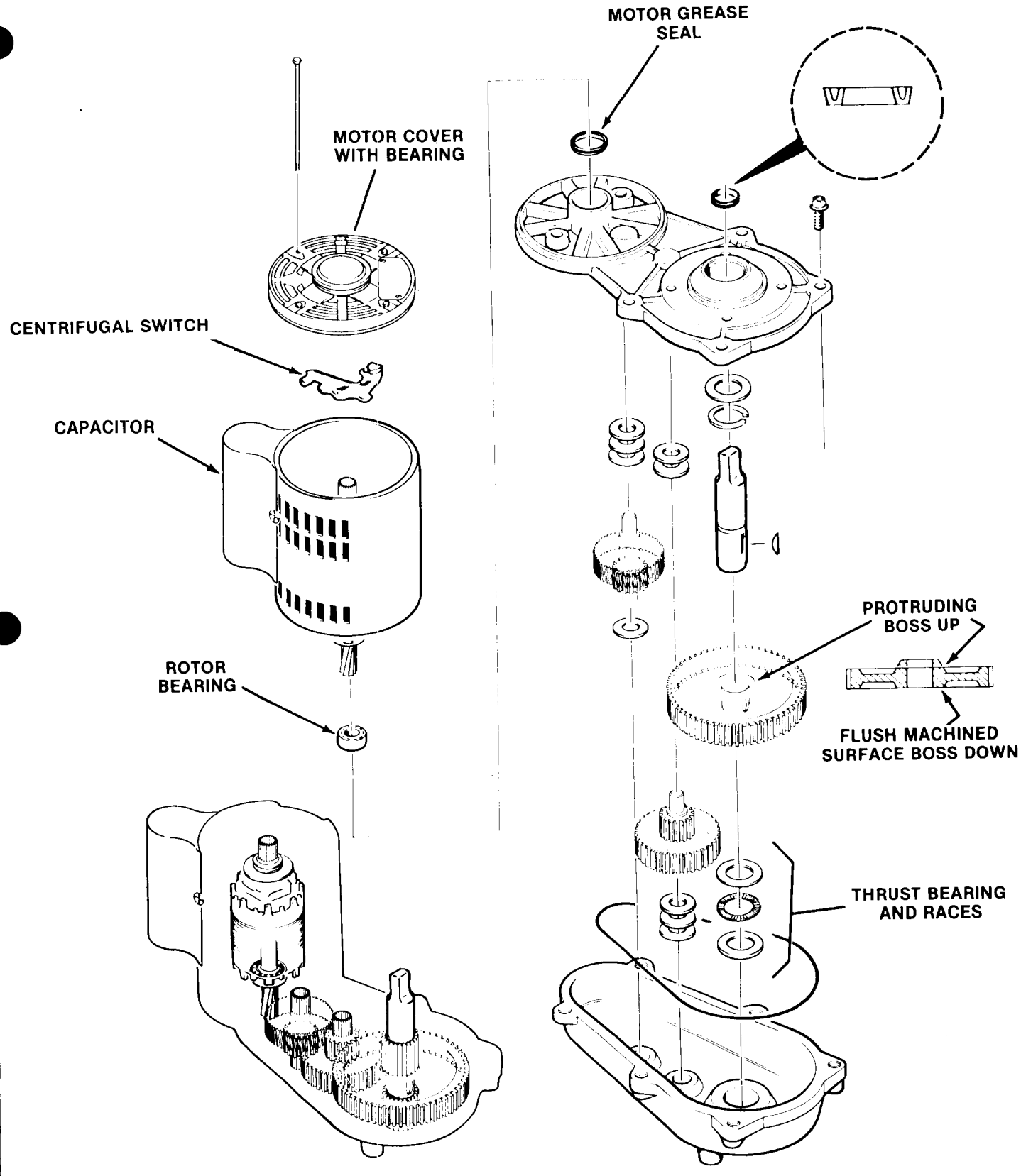

TABLE OF CONTENTS

Photograph & Ice Making Capacity 1
Table of Contents 2
Specifications & Dimensions 3
Installation Instructions 4
Installation Practice 5
Typical Installation 6
Stacking Instructions 7
Cube Deflector Installation Instructions 8
Electrical Connections & Characteristics 9
Installation – Start-Up 10
Final Check List 11
Wiring Diagram 115/60/1 Air Cooled 12
Wiring Diagram 115/60/1 Water Cooled 13
Electrical Components & Functions 14
Freezing Cycle Schematic 15
Harvest Cycle Schematic 16
Service Analysis Section 17-18
Maintenance Procedures Section 19-20
Functional Parts & Maintenance 21-24
Breakdown of Component Parts:
- Air & Water Cooled Right End View 25
- Water Cooled Top View 26
- Water Cooled Front View 27
- Air Cooled Top View 28
- Air Cooled Front View 29
- Cabinet Parts 30
- Freezer Assembly 31
- Freezer & Spray Drive 32
- Complete Pump Assy. 33
- Water Valve Assy. 34
- Control Box Schematic 35
- Motor Compressor – Air & Water 36
- Maintenance and Cleaning Instructions 37

SCOTSMAN BIN MODEL B550

Specification & Dimensions 38
Care of Stainless Steel Liner 39
Cleaning of Stainless Steel Liner 40

THIS PAGE
INTENTIONALLY
LEFT BLANK

THIS PAGE
INTENTIONALLY
LEFT BLANK

MC1 Series

Capacity: Refer to production chart.
Storage Bin: B200, B550
Stainless Steel Lined
Height: 18"
Width: 42-5/16"
Depth: 23-1/8"

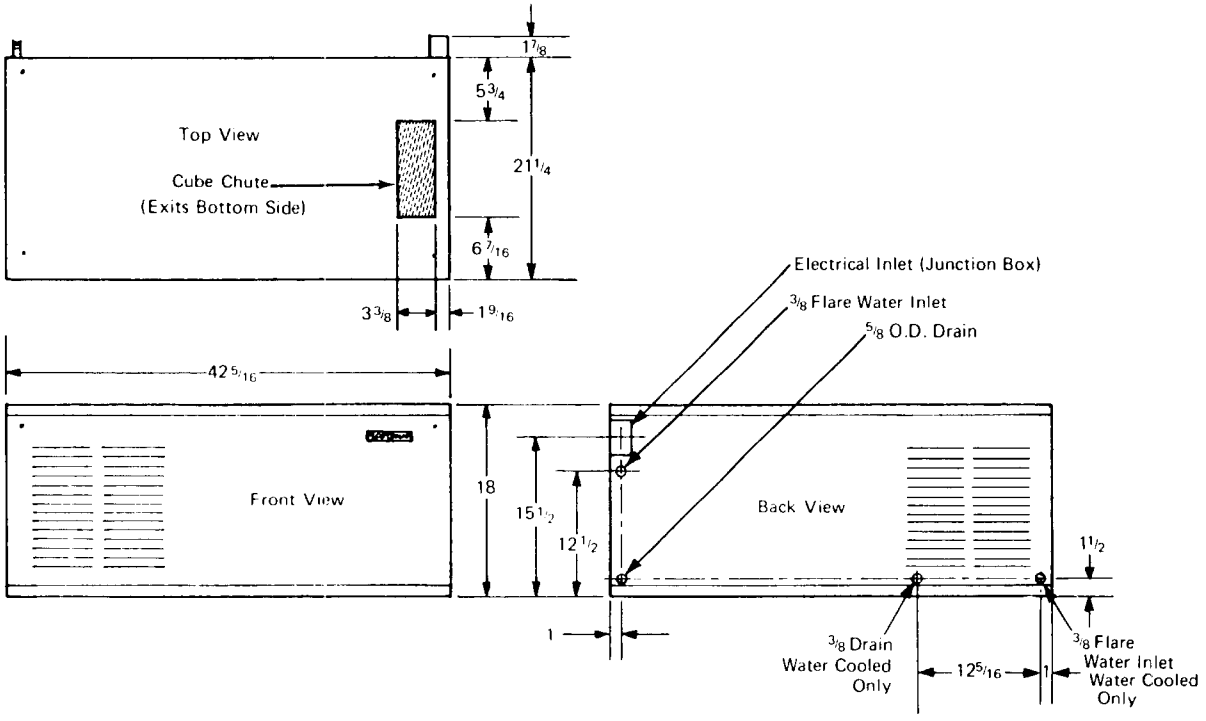

SPECIFICATIONS:

Model	Condensing Unit	Compressor Horsepower	Finish (P-painted) (SS-Stainless Steel)	Shipping Weight (lbs.)
MCL1AE	Air	3/4	P*	230
MCL1AS	Air	3/4	SS	230
MCL1WE	Water	3/4	P*	230
MCL1WS	Water	3/4	SS	230
MCM1AE	Air	3/4	P*	230
MCM1AS	Air	3/4	SS	230
MCM1WE	Water	3/4	P*	230
MCM1WS	Water	3/4	SS	230
MCS1AE	Air	3/4	P*	230
MCS1AS	Air	3/4	SS	230
MCS1WE	Water	3/4	P*	230
MCS1WS	Water	3/4	SS	230

Basic Electricals	Minimum Wire Sizes (w-wire) (g-gauge)			Total Amperages		
	MCL1	MCM1	MCS1	MCL1	MCM1	MCS1
Air Cooled 115/60/1	2w 12g	2w 12g	2w 12g	14.3	14.3	14.3
Water Cooled 115/60/1	2w 12g	2w 12g	2w 12g	13.5	13.5	13.5

*Painted Models have sandlewood micomatte finish with woodgrain front panel.

Specifications subject to change without notice.

INSTALLATION INSTRUCTIONS

1. Uncrate unit using regular hammer and nail puller.

2. Remove top, front, left and right side panels (held by screws).

3. On base of machine at left and right ends are bolts that hold cuber to crate skid. Loosen the bolts to remove skid and save bolts to mount machine to SCOTSMAN Storage Bins.

4. Place unit on top of bin and secure to bin with two bolts taken out in Step 3.

5. Uncoil bin thermostat bulb and run it down thru machine base by pushing end of bulb thru plastic cap located between sump pump and freezing chamber. Next, take combination cube deflector and bulb holder, which is packed in storage bin, and install on upper right side of bin as described on Page 8 of this manual.

   NOTE: Regardless of what type of bin is used, It is essential that bin thermostat bulb be located in area immediately below cube chute opening of machine, in order to prevent ice from backing up into cube chute.

6. Remove shipping tapes and check tubings, wiring, capillary control, lines for rubbing or chafing, refashion as required.

7. Remove junction box from top of cube chute and install on rear of machine. Wires are provided at rear of machine for electrical hookup.

8. Check unit nameplate voltage against building source voltage to be sure they correspond. Caution . . . improper voltage applied to unit will void warranty protection.

9. Make water connection utilizing 3/8" O.D. copper water line.

10. Use clean damp cloth to wipe out storage bin and cabinet exterior.

11. Replace all panels.

12. Check unit to be sure it is level side to side and front to rear.

INSTALLATION PRACTICE

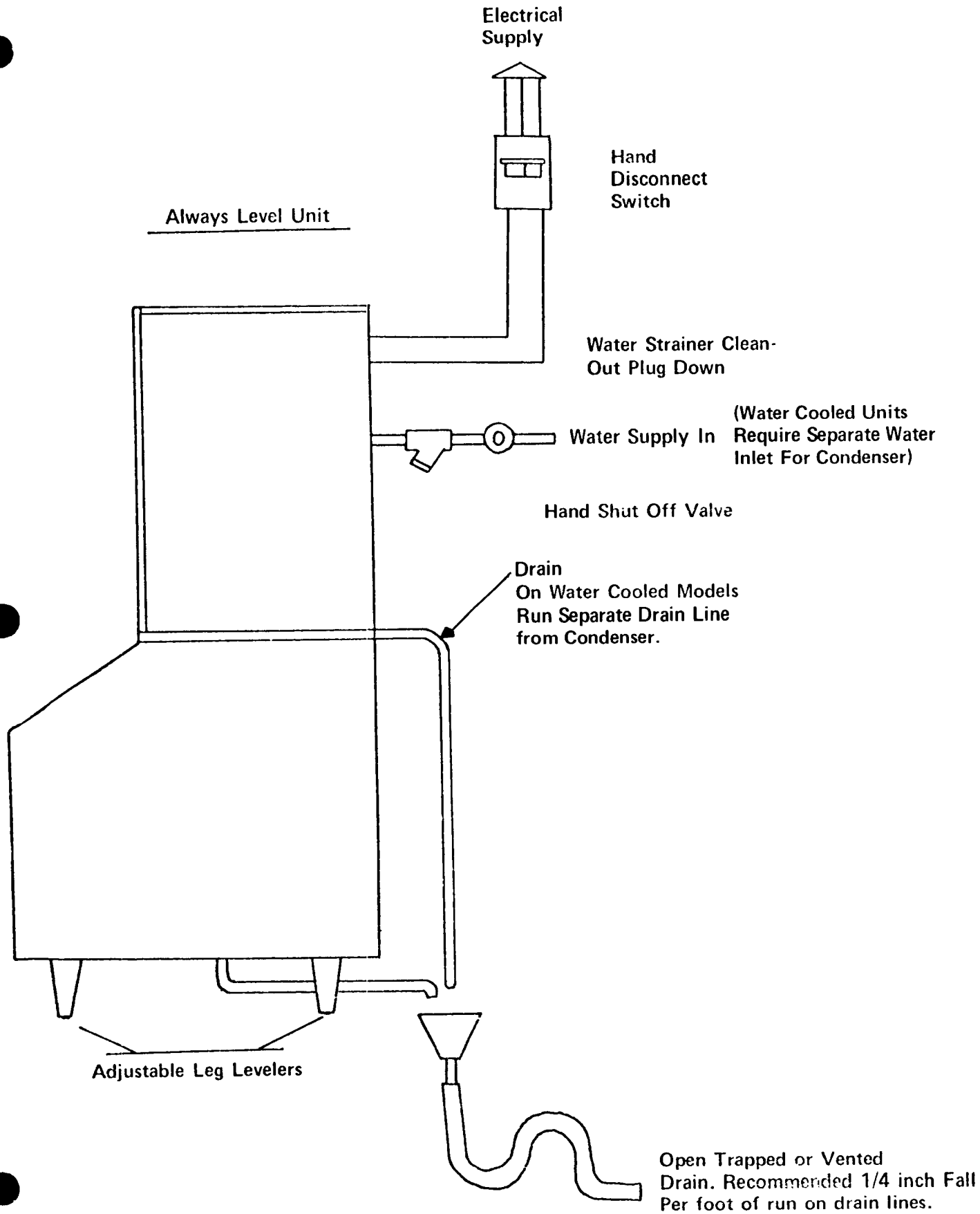

Maximum Ambient Air Temperature Recommended – 100° F.
Minimum Ambient Air Temperature Recommended – 50° F.

Air temperatures ranges above or below those listed may cause serious damage to this *product.*

TYPICAL INSTALLATION

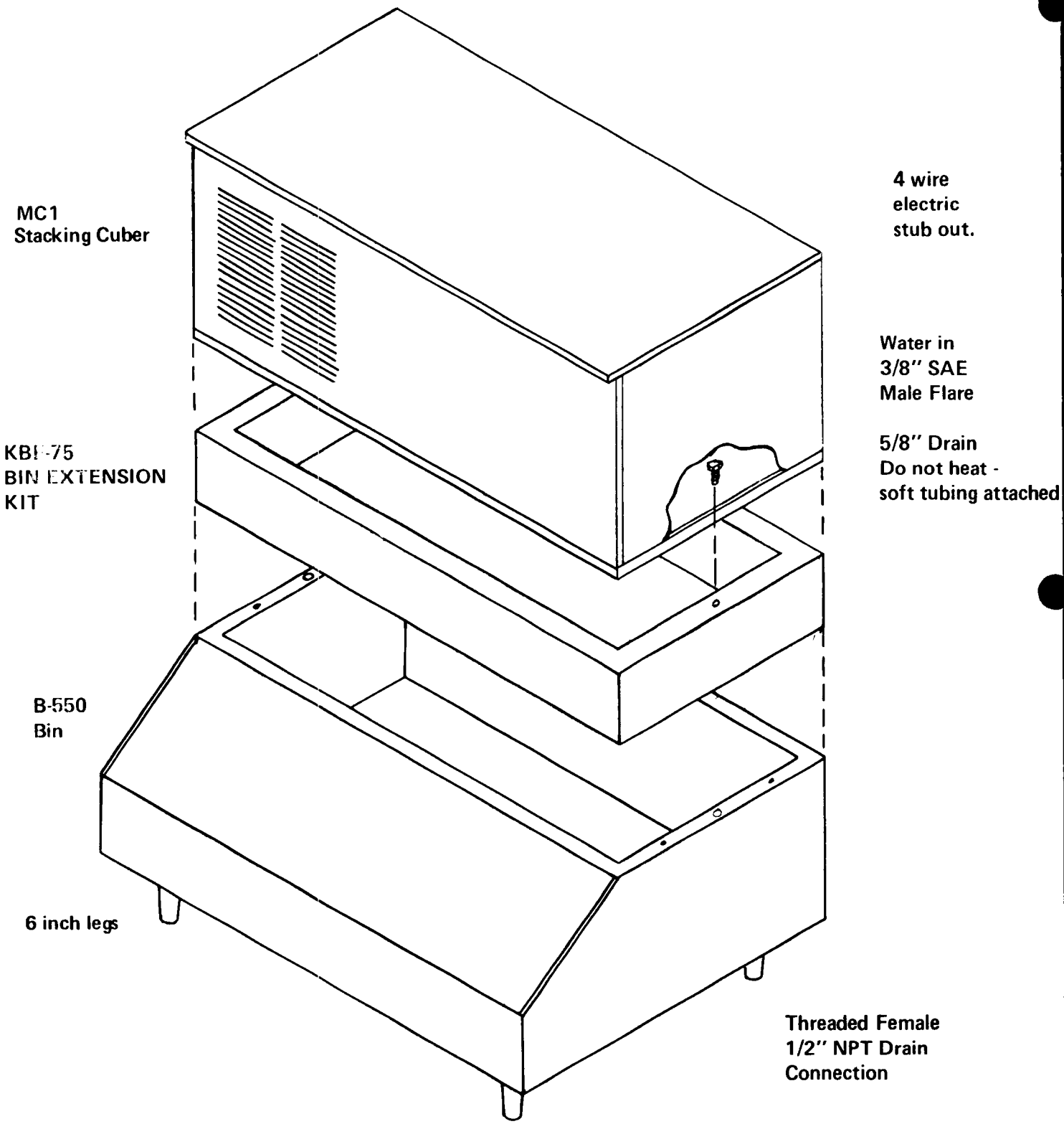

WARNING: THE SCOTSMAN B-550 BIN HAS BEEN SPECIFICALLY ENGINEERED FOR USE WITH THE SCOTSMAN MODULAR CUBERS. USE OF OTHER THAN SCOTSMAN MANUFACTURED BIN MAY RESULT IN COMPONENT FAILURES WITHIN THE MODULAR CUBER.

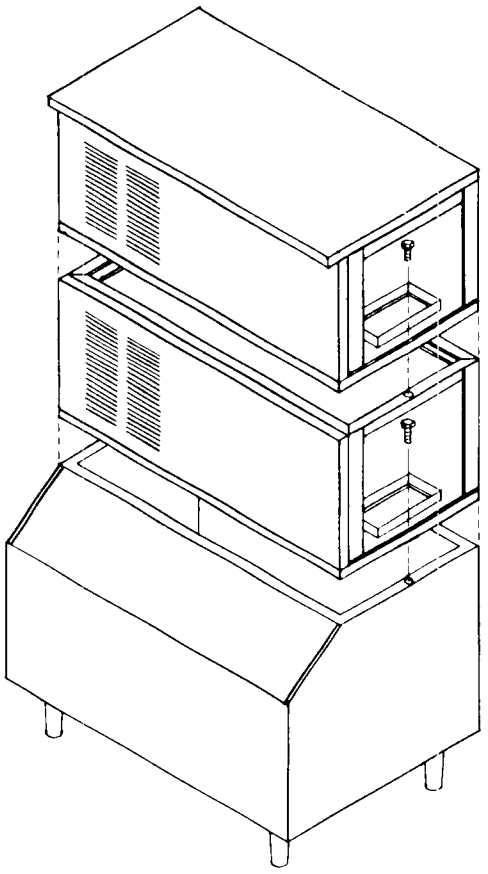

FIG. 1

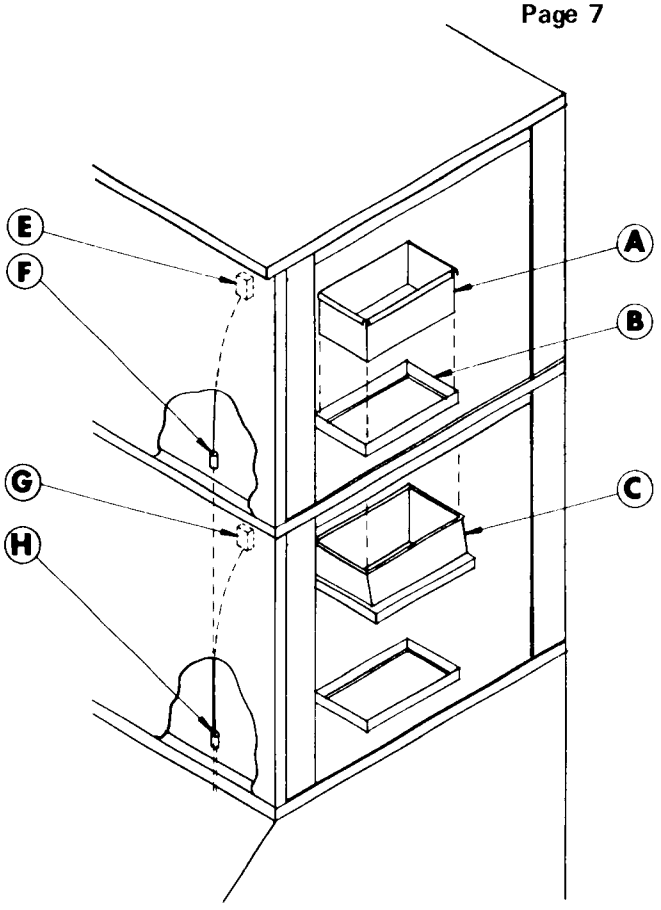

FIG. 2

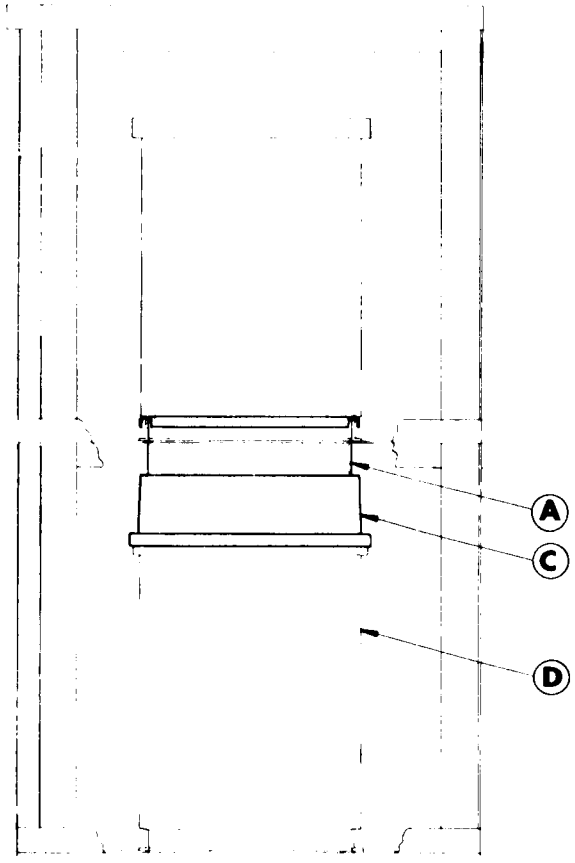

FIG. 3
COMPLETED INSTALLATION

KSC1

STACKING KIT INSTRUCTIONS

1. Remove all panels from both machines. (Top panel of bottom machine may be set aside, as it is not used when machines are stacked) Remove cube chutes from both machines.

2. After mounting bottom cuber to storage bin, place upper machine directly on frame of lower machine. Bolt together with same bolts and holes used in holding machine to crate skid. Fig. 1

3. Insert stainless steel (A) thru cube opening (B) in base of upper cuber. Place stacking kit cover (C) over sleeve as shown and push to top of sleeve. (See Fig. 2)

4. Replace cube chute (D) in bottom cuber and slide cover (C) down over cube chute, as shown in Fig. 3.

5. Route upper machine thermostat bulb (E) thru cap (F) and together with lower machine thermostat bulb (G) push thru cap (H) and feed tubes into combination cube deflector and bulb holder at right side of bin. This will provide two independent ice making systems.

6. Run separate water, drain, and electrical supplies. Test and check out added cuber, ice making, thermostat function, etc.

7. Install cube chute & cover on top machine, and replace panels on both machines.

INSTALLATION INSTRUCTIONS
BIN THERMOSTAT IN BIN

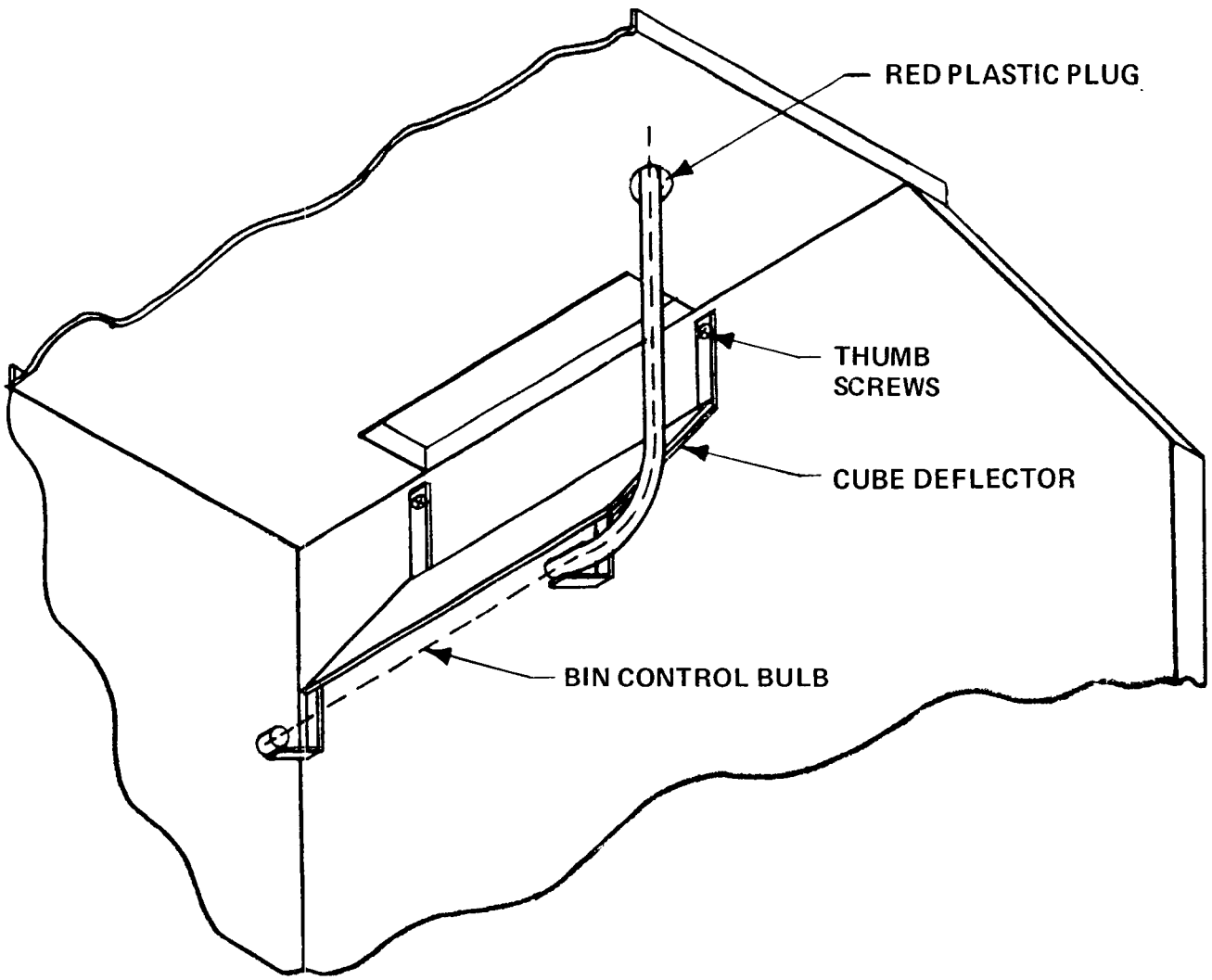

CUBE DEFLECTOR INSTALLATION INSTRUCTIONS
For B200 and B550 Bins, and KBE2 and KBE75 Bin Extension.

1. Install Cube Deflector on upper right side of bin as shown using thumb screws and lockwashers supplied.
2. Push end of bin control bulb through red plastic plug and route bin control bulb as shown by dashed line.
3. When bin extension is used, cube deflector is mounted onto the extension in same manner as noted on items No. 1 and No. 2.

ELECTRICAL CONNECTIONS AND CHARACTERISTICS

115 volts, 60 cycle, single phase	Air Cooled	Water Cooled
Compressor	11.6 Amperes	11.6 Amperes
Sump Motor	1.3 ea. Amperes	1.3 ea. Amperes
Fan-Air Cooled Models	.80 Amperes	NONE
Spray Bar Motor	.60 Amperes	.60 Amperes
TOTAL – Full Load Amperes	14.3 Amperes	13.5 Amperes

This unit should be wired to 35 Amp. circuit. Be certain that the Super Cubers are on their own circuit and individually fused. The maximum allowable voltage variation should not exceed 10 per cent of the nameplate rating even under starting conditions. Low voltage can cause erratic operation, and may be responsible for serious damage to the overload switches and motor windings.

All external wiring should conform with National, State and local code requirements. Check the voltage on the line before connecting the machine.

14 Gauge wire will be adequate for short runs. For runs exceeding 10 feet, go to next heavier gauge. NOTE: All Scotsman cubers require a neutral wire and a solid earth ground wire.

WATER SUPPLY AND DRAIN CONNECTIONS

WATER SUPPLY – Air Cooled Models

The recommended water supply line is 3/8" OD copper tubing for air-cooled units. Connect to a cold water supply line with regular plumbing fittings with a shut-off valve installed in an accessible place between supply line and machine. The water strainer supplied with the unit should be mounted with clean-out plug down. Locate the strainer next to the machine and the arrow in the direction of the flow.

A 3/8" male flare fitting is provided on right rear corner for convenience in hookup.

WATER SUPPLY – Water Cooled Models

Water cooled models have separate inlet water supply for the water cooled condenser.

When choosing the water supply for this cuber, consideration should be given to:

A. Length of run.
B. Water clarity and purity.
C. Adequate supply pressures.

Since water is the most important single ingredient in producing ice, you cannot over emphasize the three items mentioned above. Low water pressure (below 30 pounds) may cause malfunction of the three way water valve. Water containing excessive minerals will tend to produce cloudy colored cubes and scale build up on parts in the water system.

Heavily clorinated water can be controlled using charcoal or carbon filters.

DRAIN: The recommended drain from the bin is 5/8 inch OD copper tubing. Must be run to an open trapped and vented drain. If drain is a long run, allow 1/4 inch pitch per foot. Drain must be installed to conform with local code. Run separate line for condenser discharge water on water-cooled models. Water supply must be installed to conform with local code. In some cases a licensed plumber and/or a plumbing permit will be required.

INSTALLATION – START UP

1. After water and electrical hookup is complete, turn time clock knob (protruding thru control box cover) clockwise until you hear the micro-switch actuator arm click into the cam slot. Turn master switch on. (Compressor switch should remain in off position.) At completion of harvest cycle (Approx. 3 minutes after harvest was started), rotate knob clockwise until once again harvest is initiated. At this point compressor switch should be placed in "ON" position. Unit is now ready for automatic operation.

   NOTE: All cubers have two manual on-off switches. One is for motor compressor only during cleaning operation, one is master switch for complete unit.

2. When both switches are thrown "on", water inlet solenoid will be energized allowing water to enter cuber, thru warm water tank, 3 way water valve and up into back side of freezer cup section. This will "fill" icemaker for the freezing cycle - Check operation of spray bar drive motor thru hood top panel. Spray bar motor should be running during harvest cycle.

3. NOTE: WATER PUMP OPERATES DURING THE DEFROST CYCLE.
   Factory tests prove faster defrosts and increased ice capacity by letting this pump operate continually.

4. Time clock dial does not rotate at the end of the harvest cycle; it is started later by the cube size thermostat control located in the control box.

5. Freezing time will be approximately 20 to 30 minutes in a 70 degree ambient. (Longer if above, and shorter if below.) Average complete cycle time is 25 - 35 minutes.

6. Watch first cube harvest and check to make sure that plastic curtain has not been damaged in shipment. Also that curtain does not swing back into freezer and catch on spray bar.

7. Check size of cubes made: If too small, after a second cycle, adjust cube size control to lower or colder setting - until desired cube size is reached. Normal cube size is with a 1/4" depression in crown.

8. Check texture of cubes made: Partially cloudy cubes throughout suggest unit running short of water near end of freezing, or possibly an extremely bad water condition, which would indicate use of filtering or purifying equipment. Contact SCOTSMAN - Queen Products Division, Ice Machine Service Department, Albert Lea, Minnesota, for further details.

9. With unit on harvest cycle, take a handful of cubes made and hold on storage bin thermostat bulb. Should cut unit off at end of harvest cycle. Remove ice, unit should cut back on automatically in 3 or 4 minutes. Thermostat is factory set at 35 degrees out, 39 degrees in.

10. Install gauges and check head and back pressure: air-cooled models, head pressure after twenty minutes of freezing cycle at 70 degrees ambient will be approximately 125 pounds PSI. The back pressure starts out at approximately 50 pounds PSI and gradually pulls down to approximately 4 pounds PSI just before harvest cycle. Higher ambients and dirty condenser will cause higher pressures. Water-cooled models have water regulating valves factory set at 135 pounds PSI: check reading and adjust if necessary. Back pressure will operate the same as on air-cooled models.

11. Remove gauges, replace control box cover and all service panels.

12. Instruct owner on how to operate and clean machine.

FINAL CHECK LIST

1. Is the unit level? (IMPORTANT)
2. Have all electrical and piping connections been made?
3. Has the voltage been tested and checked against the nameplate rating?
4. Have the compressor hold-down bolts been checked to insure the compressor is snug to its mounting pads?
5. Is the water supply valve open and the electric power properly hooked up?
6. All masking tape removed from doors, panels and inner freezer curtain?
7. Is the unit clean? Has storage bin been wiped clean with cold water cloth?
8. Has the owner been given the operating manual, and has he been instructed on how to operate the machine?
9. Have the installation and warranty cards been filled out? Check for correct model and serial numbers from serial plate on unit then promptly mail card to factory.
10. Check all refrigerant and conduit lines to guard against vibrations and possible failure.
11. Is there 4" clearance behind and around unit for proper air circulation?
12. Is unit in a room where ambient temperatures are minimum 50° F. even in winter months?
13. Has water supply pressure been checked to insure at least a minimum pressure of 30 pounds?

WIRING DIAGRAM
115/60/1
Air Cooled

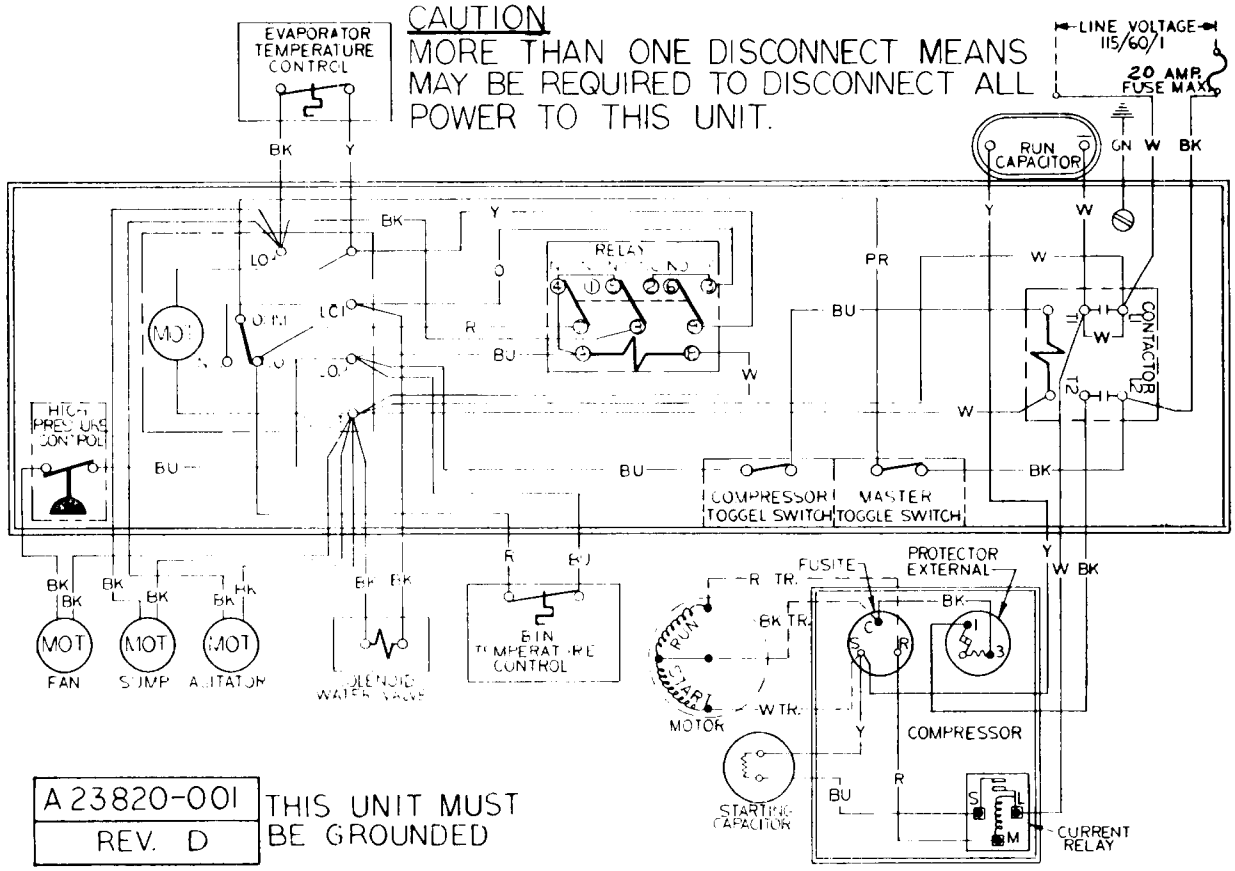

A 23820-001
REV. D

THIS UNIT MUST BE GROUNDED

WIRING DIAGRAM
115/60/1
Water Cooled

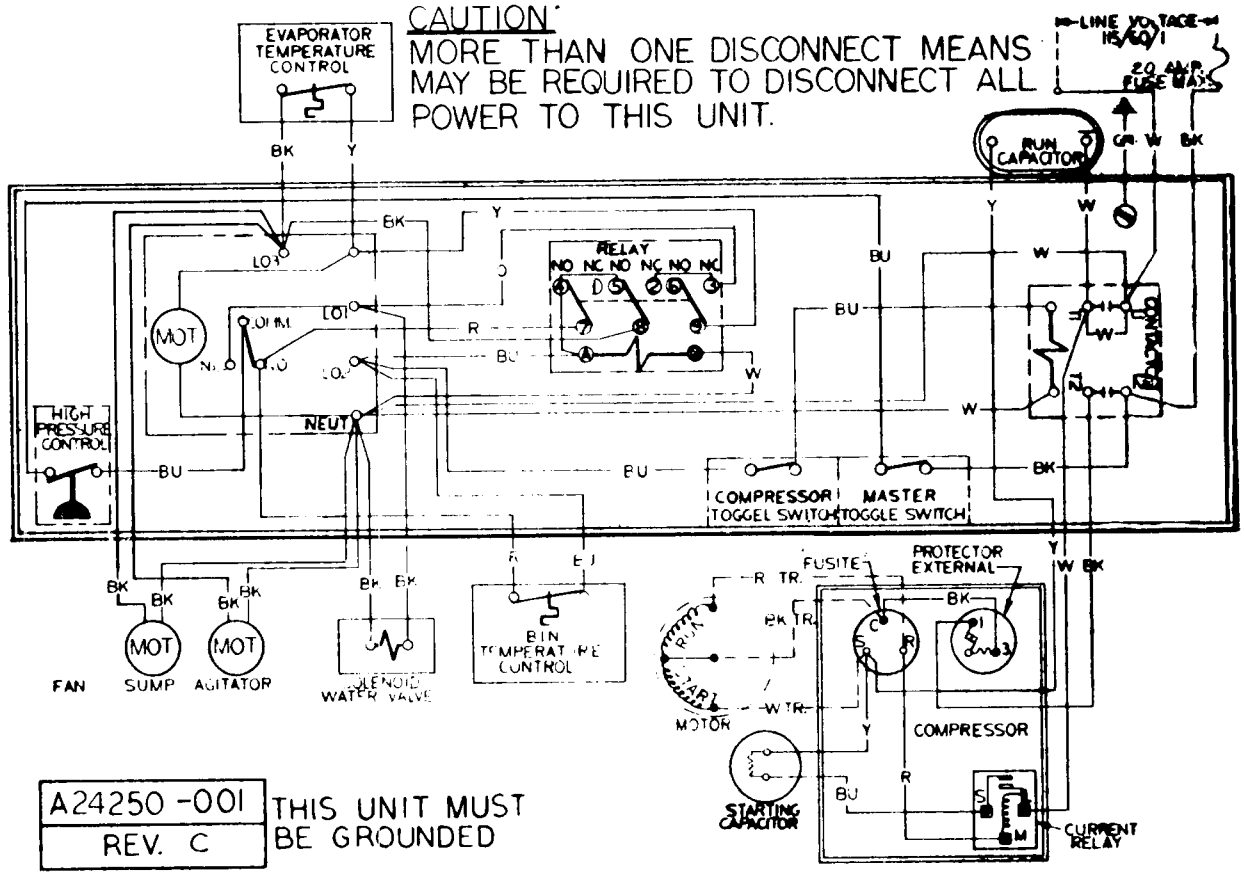

ELECTRICAL COMPONENTS AND FUNCTIONS

1. Bin Temperature Control: Purpose to maintain a supply of ice in storage.

2. Compressor Toggle Switch: Control compressor ON-OFF only.

3. Master Toggle Switch: Manual ON-OFF of whole machine.

4. High Pressure Control: On at 140 PSI OFF at 120 PSI.

5. Magnetic Contactor: To provide across the line starter of ample carrying capacity.

6. Relay: Function to hold unit in freezing and harvest cycles once they have started. This insures full cubes everytime a harvest occurs and prevents short cycling on bin thermostat.

7. Evaporator Temperature Control: Controls size of ice cube produced by machine. To increase cube size turn control to right. To decrease cube size, turn knob to left.

8. Timer: Function is to control harvest and part of freezing cycle. Timer is energized when reverse acting cube size control closes. Timer continues freezing cycle for 12 minutes and then switches unit into harvest cycle which runs for 3 minutes.

FREEZING CYCLE

As the freezing cycle starts, electrically the components operating are the compressor and fan motor, recirculating water pump and the sprayer tube drive motor.

The refrigerant circuit which equalized at about 50 pounds gauge during the "off" or harvest cycle, thru the capillary refrigerant control, now rises rapidly to 125 - 135 pounds head pressure. The suction or low side pressure starting at 50 pounds pulls down fairly quickly to about 25 pounds at which point the ice cubes are starting to form a thin shell in cube cups. Continuing from 25 pounds slowly on down towards the finished cube pressure of approximately 5 pounds takes an average of 20-30 minutes.

During this portion of the freezing cycle the electrical brain is the reverse acting, cube size thermostat. This thermostat electrically is holding the freezing cycle components "live". When the ice cubes are about 3/4 formed, the decreasing suction pressure and temperature, activate the temperature sensing bulb of the reverse acting, cube size control, closing its contacts. This does not interrupt the freezing cycle, the closing of the cube size thermostat contacts electrically transfers the finishing of the freezing cycle to the finishing clock motor or timer as it is sometimes called. One full revolution of the timer dial is 15 minutes as is noted by the numerals on the dial. However, of the total 15 minutes on the timer dial, 3 minutes are used for the defrost or harvest cycle.

This means then that after the cube size contacts close they activate the timer motor. This control takes over and continues freezing cycle for another 12 minutes with timer dial now turning. When the 12 minutes are completed an offset in the timer dial allows a micro switch with activating arm riding on that cam to drop into the slot, electrically stopping the freezing cycle and starting the 3 minutes harvest cycle - The clock motor continues thru harvest cycle. A notch on the timer dial now lifts micro switch arm up on dial, electrically stopping harvest cycle and starts back into a new freezing cycle.

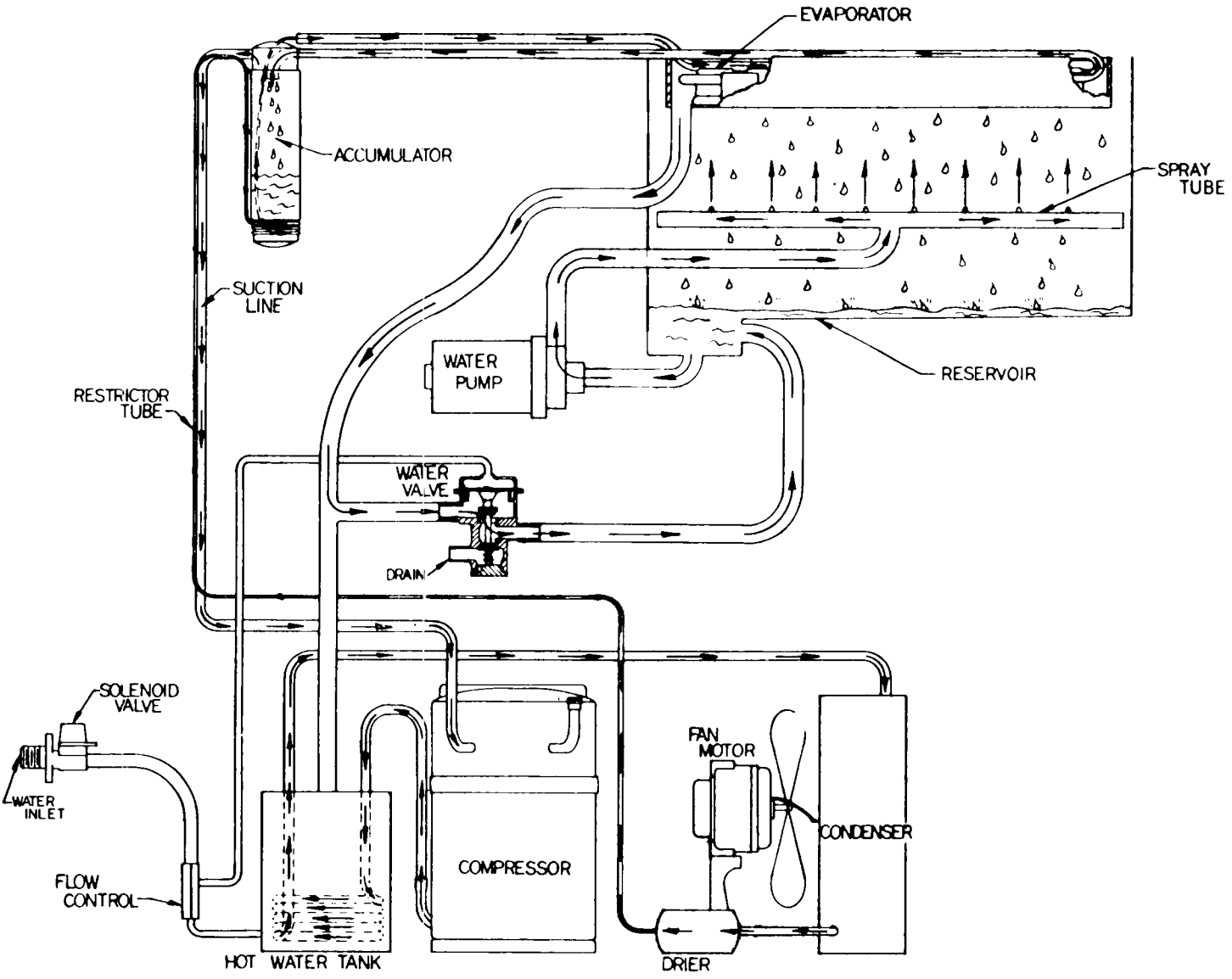

HARVEST CYCLE

At the end of the freezing cycle the time clock operated switch opens compressor, and fan motor circuit, and closes circuit to time clock motor, spray drive motor and solenoid operated inlet water valve. Inlet water pressure at bottom of hot water tank now forces heated water out the top of tank through warm water tubing and into back side of evaporator cup section. At the same time the surplus water from the preceding batch of ice cubes goes through three way water valve and off to drain. Water from the hot water tank flows into the rubber platen holding the evaporator cups and by conduction on back of cups causes the formed ice cubes to defrost or drop out. The platen-evaporator cavity is normally filled to the overflow level in 2 or 2-1/2 minutes. The amount of water running over the overflow pipe is controlled by the size of the flow control orifice and the length of the harvest time setting on the time clock past the overflow point. Over-flow water goes down the drain also.

Meanwhile, cubes released drop by gravity and are mechanically ejected thru curtained opening into ice storage bin by sprayer tube which is being actuated by drive motor. At the completion of harvest cycle, the micro-switch on the timer now drops points holding defrost components in cycle and switches to freezing cycle set of contacts. Timer completes harvest cycle when micro-switch roller lifts out of rear cam slot. Timer clock motor now stops and will not start again until cube size thermostat control closes once more. Electrically harvest cycle components cease, freezing cycle components start up. Chilled defrost water from the upper cavity now flows by gravity back through the three way valve, to the reservoir where the water pump continually recirculates it through sprayer tube to produce the next batch of cubes.

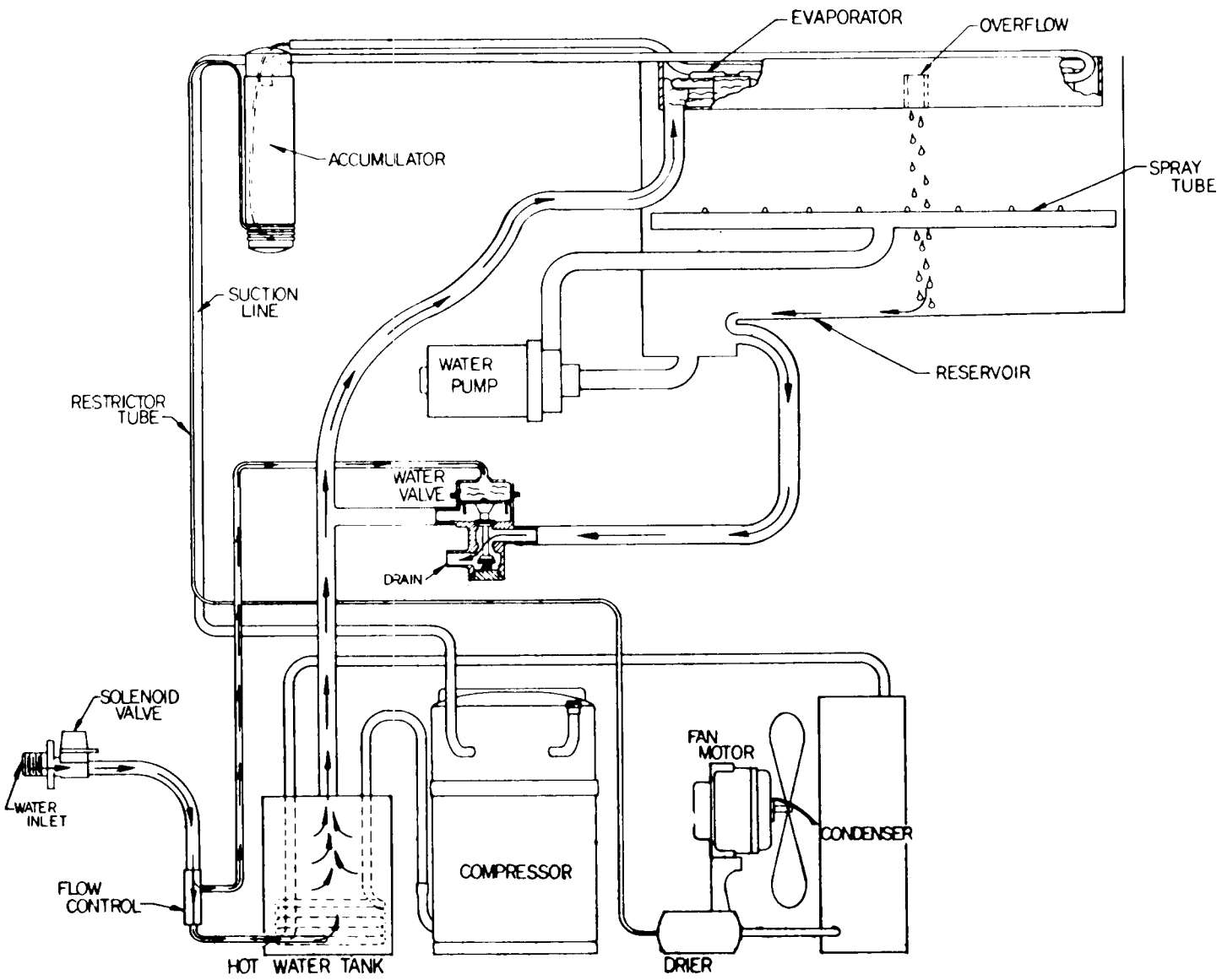

SYMPTOM	POSSIBLE CAUSE	SUGGESTED CORRECTION
Unit will not run.	Blown fuse	Replace fuse & check for cause of blown fuse.
	Bin thermostat set improperly	Replace.
	Switch in Off position	Turn switch to On Position.
	Inoperative master switch	Replace switch
	Timer contacts open	Replace timer micro-switch
Compresser cycles intermittently	Low voltage	Check circuit for overloading.
		Check voltage at the supply to the building. If low, contact the power company.
	Dirty condenser	Clean with vacuum cleaner, air or stiff brush. (DO NOT use wire brush.)
	Air circulation blocked	Allow sufficient air space all around unit.
	Inoperative condenser fan motor	Check to see if defective, If defective, replace.
	Non-condensable gases in system.	Purge the system.
Cubes too small	Cube size control set too high	Lower the setting. Turn towards colder.
	Partially restricted capillary tube	Blow charge, add new gas & drier, after evacuating system with suction pump.
	Moisture in system	Same as above.
	Shortage of water	See remedies for shortage of water.
	Shortage of refrigerant	Check for leaks and recharge.
Cloudy cubes	Shortage of water	See remedies for shortage of water.
	Dirty water supply	Use water softener or water filter.
	Accumulated impurities	Use SCOTSMAN Ice Machine Cleaner.
Shortage of water	Water spraying out through plastic curtain.	Hang curtain in proper position.
	Three-Way water valve leaking	Check the valve for foreign matter. Check valve seats and replace if necessary.
	Water entering hot water tank too slowly	Check pressure at source - 30 lb. required. Dirt in solenoid and flow control - blow out.
	Partial restrictions in water strainer.	Clean Strainer.
Irregular size cubes and some cloudy	Some jets plugged	Clean jets.
	Shortage of water	See Shortage of Water
	Unit not level	Water overflowing air vent holes on low side burning cubes. Level as required.

SYMPTOM	POSSIBLE CAUSE	SUGGESTED CORRECTION
Cubes too large	Cube size control turned too cold	Turn setting on cube size control dial towards warmer
Decreased ice capacity	Inefficient compressor	Replace.
	Leaky water valve	Replace or repair.
	High head pressure	Dirty condenser. Clean. Bad fan motor. Replace.
	Non-condensable gas in the system	Purge the system.
	Poor Air circulation or excessively hot location	Relocate the unit, or provide for ventilation by cutting openings.
	Overcharge of refrigerant	Correct the charge. Purge off slowly.
	Partially restricted cap tube	Purge & replace charge and drier
Hole washed inside cube	Water over the top of the cube cups during harvest.	Level unit.
Poor harvests	Too short defrost time	Check and adjust harvest cycle. Timer should be set at number 3.
	Restriction in incoming water line.	Check water feed line strainer and flow reducing valve. Do not remove flow control washers.
	Insufficient quantity of hot water	Cold ambient - must be 50° minimum. Faulty fan control on air cooled models.
	Solenoid valve not opening the water valve	Solenoid binding or burned out. Replace.
	Air vent holes in upper cube cups plugged	Clean out holes.
Unit won't Harvest.	Insufficient water pressure to energize 3/way water valve	Machine requires minimum of 30 lbs. flowing water pressure. NOTE: If 3 way water valve does not energize, the harvest water will by-pass the evaporator and flow directly down the drain
Excessive Water in Unit base	Cube chute not positioned correctly.	Reposition so that bottom edge of cube chute rests inside of cube guide soldered to the base.
	Water tubing leaking (Check during freeze & harvest cycle)	Check. Tighten or replace.

MAINTENANCE PROCEDURES SECTION

WARNING: ALL STEPS LISTED BELOW SHOULD ONLY BE STARTED WHEN WATER AND ELECTRICAL SUPPLY ARE OFF TO PREVENT ACCIDENTS.

A. To remove cabinet top.
   1. Remove 4 screws in top of panel.
   2. Lift panel off unit.

B. To remove cabinet front.
   1. Remove 2 screws in top front of panel.
   2. Tip top of panel back approximately 6" and lift up.

C. To remove end panels.
   1. Remove 2 screws from top of panel.
   2. Tip top of panel back 6" and lift up.

D. To remove 3/way water valve.
   1. Remove right end panel.
   2. Remove cube chute. (Tip top of cube chute out and lift up. When reinstalling be sure cube chute is inside of guide arrangement soldered to base.)
   3. Drain water from freezer sump tank. (Drain tube is connected to plug on sump pump motor.)
   4. Disconnect all lines to valve.
   5. Remove 2 screws mounting valve to frame.

E. To remove water pump.
   1. Remove right end panel and front panel.
   2. Remove cube chute. (Tip top of cube chute out and lift up. When reinstalling, be sure cube chute rests inside of guide soldered to base.)
   3. Drain water from freezer sump tank. (Drain tube is connected to plug on pump.)
   4. Trace electrical leads to control box and disconnect.
   5. Disconnect hose clamps at pump body.
   6. Remove mounting bolt and mounting strap.
   7. Remove Pump.

NOTE: Screw clamps should be installed on pump discharge tube when unit is reassembled.

F. To remove water inlet solenoid valve.
   1. Remove right end panel.
   2. Disconnect electrical leads.
   3. Disconnect water inlet line from machine.
   4. Remove valve.

G. To remove flow control.
   1. Remove front panel and left end panel.
   2. Drain hot water tanks by removing drain caps on bottom of flow controls.
   3. Replace complete flow control to include brass housing.

NOTE: This machine will not function properly with the flow washers removed. Flow washers are rated at 1/2 GPM.

H. To remove agitator motor.
   1. Remove front panel, right end panel and top panel if possible.
   2. Trace leads to control box and disconnect.
   3. Remove cube chute (Tip top of cube chute out and lift up. When reinstalling be certain cube chute rests inside of guide soldered to base.)
   4. Reach in thru curtained opening and remove spray bar by lifting upward releasing bar from center hub. Next remove drive fork from drive shaft attached to motor. (NOTE: Drive fork has left hand threads and must be removed with drive extension to motor if top panel is not removed from unit.)

5. Remove 4 screws holding drive motor to freezer top.
6. Remove drive motor.

I. To remove Cube size control.
1. Remove front panel and right end panel.
2. Remove 2 screws mounting control to corner gusset.
3. Trace capillary tube to suction line and peel back insulating tape.

NOTE: Do not make any adjustments on new control until control bulb has been reinsulated to suction line.

J. To remove bin control.
1. Remove front panel and right end panel.
2. Remove 2 screws holding control to corner gusset.
3. Trace capillary tube to insure new control capillary tube is routed in same manner.

NOTE: Do not attempt to adjust this control. If storage bin is not filling to the capillary or is filling above the capillary into the cube chute, the control should be replaced.

K. To remove plastic curtain.
1. Remove right end panel.
2. Remove plastic cube chute. (Tip top of chute out and lift up. When reinstalling be certain cube chute rests inside of cube guide soldered to the base.)
3. Pull off 3 retainer clips holding curtain in place.

NOTE: When reinstalling curtain be certain the side with the extruding point is positioned towards the left of opening. Also, that the edge of the curtain lines up with the upper edge of the freezer opening.

L. To remove spray bars.
1. Remove right end panel.
2. Remove cube chute. (Tip top of cube chute out and lift up.)
3. Remove plastic curtain (see item K.)
4. Reach thru ice opening and feel for spray bar.
5. Follow spray bar to center hub, turn spray bar so one end points towards curtain opening.
6. Lift straight up on spray bar, then out after spray bar comes off center hub.

FUNCTIONAL PARTS AND MAINTENANCE

PART NAME: Spray Bar Assembly

NUMBER: A23917-1

FUNCTION: This tube acts as a water distributor for the ice cube cups. The tube has jets over its length. Supply water is forced into the jet tubes by the sump pump and is directed upward in a continuous stream. Drive motor thru drive shaft rotates the spray bars to get a full coverage spray.

REPAIRABLE: Yes, jets replaceable.

MAINTENANCE: All jets should be cleaned by running Scotsman Ice Machine Cleaner through unit. This step will eliminate hand cleaning. Partially plugged jets will produce cloudy or partial cubes. Wholly plugged jet will not produce a cube in cube cups it normally covers.

PART NAME: Spray Tube Drive Linkage

NUMBER: Parts listed in parts section.

FUNCTION: Drive spray tubes during freezing cycle to produce clear cubes and also drive spray tubes during harvest cycle to eject cubes thru ice opening.

REPAIRABLE: No. replace defective parts.

MAINTENANCE: None.

PART NAME: Relay – Ameco or Potter Brumfield – 2 P.D.T.

NUMBER: 12-1598

FUNCTION: Relay is used as a by-pass on the bin thermostat when it tries to cut unit off on a full bin of cubes during a freezing cycle. This insures full cubes every time a harvest occurs and prevents short cycling on bin thermostat.

SETTING: Factory set.

REPAIRABLE: No. Replace when inoperative.

MAINTENANCE: Check electrical connections.

PART NAME: Bin Thermostat

NUMBER: 11-353-3

FUNCTION: To automatically cut machine off when ice level in storage bin reaches thermobulb. Automatically starts machine when ice level in bin falls below bulb location.

SETTING: Factory set.

REPAIRABLE: No. Replace when inoperative or out of adjustment.

MAINTENANCE: Check capillary for cracks or worn spots due to vibration.

PART NAME: Inlet Water Solenoid
NUMBER: 12-1434-1
FUNCTION: During freezing cycle this valve is closed, keeps water from entering heat exchanger tank and also from leaking out of tank.
During harvest or defrost cycle this valve opens and allows inlet water to pass thru flow control orfice and thence to push warm water out of heat exchanger tank into back of cup molds, performing the defrost.
SETTING: Factory set.
REPAIRABLE: Yes
MAINTENANCE: Flush control each six months.

PART NAME: Fan Motor
NUMBER: 12-1681-1

FUNCTION: Maintain proper head pressures by circulating air across air cooled condenser.

REPAIRABLE: No.
MAINTENANCE: None.

PART NAME: Water Regulating Valve (Water cooled models only)
NUMBER: 11-198 – Penn Type V46AA-12
FUNCTION: To maintain constant head pressures by regulating amount of incoming water thru water cooled condenser.
REPAIRABLE: No. however, valve can be flushed out.
MAINTENANCE: None.

PART NAME: Hot WaterTank
NUMBER: A23926-001
FUNCTION: This hot water tank has coils of copper tubing inside thru which the high temperature refrigerant gas flows thus heating the water in the tanks for use during the harvest cycle. During the harvest cycle this hot water is forced into the upper portion of the evaporator to harvest the batch of ice produced during the freezing cycle.
REPAIRABLE: No, however, tank can be flushed out.
MAINTENANCE: Tanks require no maintenance.

PART NAME: Hermetic Motor Compressor.

NUMBER: 18-2400
FUNCTION: Circulates and retrieves refrigerant throughout entire system.

MAINTENANCE: Keeps clean and free of dust, grease, etc.

PART NAME: Contactor

NUMBER: 12-820-1

FUNCTION: Across the line contactor used to provide protection for hi voltage compressor only. Contactor is wired so any of the controls in pilot circuit such as bin thermostat will cause contactor holding coil to drop contact points when actuated. There are no overloads or resets on this control.

SETTINGS: Factory set, no adjustments necessary.

REPAIRABLE: No. Replace.

MAINTENANCE: Check control for loose electrical connections and blow free any dust, dirt, etc.

PART NAME: Reverse Acting Temperature Control

NUMBER: 11-351-3

FUNCTION: Reverse acting temperature control, closes on temperature decrease, opens on temperature rise. Control determines length of freezing cycle and by the same token, the cube size. A lower setting on control will produce larger cubes, a higher setting, smaller cubes. This control actuates time clock motor, Part No. A-23712-1, which then takes over balance of freezing cycle (12 minutes) and also defrost period 3 minutes.

SETTINGS: Adjustable by screw driver slot.

REPAIRABLE: No. Replace when inoperative.

MAINTENANCE: Check electrical connections. Blow points free of dust, dirt, lint, etc.

PART NAME 3 Way Valve

NUMBER: A21029

FUNCTION: To route water for freezing and harvest cycles. Incoming water pressure during harvest flexes rubber diaphram against valve stem assy which opens and closes necessary ports. Stem is spring loaded for return to position during freezing cycle.

SETTING: None.

REPAIRABLE: Yes, diaphram, "O" ring and spring replacable.

MAINTENANCE: Flush during maintenance cleaning.

PART NAME: Sump Pump

NUMBER: 12-1849-01

FUNCTION: Recirculating pump used to pump supply water in reservoir to jet tubes during freezing cycle. and harvest cycle.

SETTING: None

REPAIRABLE: Yes, see parts breakdown.

MAINTENANCE: Flush out reservoir and sump pump intake with Scotsman ice machine cleaner.

PART NAME: Agitator Drive Motor – Merkle Korff

NUMBER: 12-1824-1

FUNCTION: This motor is used to drive the linkage mechanism which in turn drives the rotating jet spray tubes. This provides a constant spray movement to all the inverted cube molds and by so doing also aerates the water producing clear, solid Scotsman cubes. Also ejects cubes thru ice opening during harvest cycle.

SETTING: No settings on motor.

REPAIRABLE: Yes - to some extent. Not recommended although front bearings and windings could possibly be replaced by electric motor shop. Normally replace motors.

MAINTENANCE: Oil every six months or less as use indicates. Use SAE 20 oil. There are two wick oil cups on the motor and a gear case slotted screw which has to be removed to add or change oil in gear case proper. Drive linkage should be inspected to insure free movement with no bindings or drag on drive motor.

PART NAME: Time-Finishing Clock – Manufactured by Queen Products Div.

NUMBER: A23712-1

FUNCTION: Heart of cyclematic control system is the reverse acting cube size control, No. 11-351-3, and the time clock it actuates. All electrical components are connected to the time clock terminal board and are shunted by means of a double pole single throw micro-switch to either the freezing cycle or harvest cycle. Micro-switch is in turn actuated by a brass cam that is directly connected to the electric timer clock motor. Timer has 15 minute cycle, 12 minutes on freezing cycle after being cut on by lo temperature control and 3 minutes on defrost cycle.

The cam assembly on the timer consists of two brass discs which can be adjusted to lengthen or shorten the defrost cycle.

SETTING: Normal setting for defrost is on No. 3 which is 3 minutes.

REPAIRABLE: Yes. Micro-switch, Part No. 12-1721-50 is replaceable.

MAINTENANCE: Check all electrical connections, blow contact points free of dust, dirt, etc.

MC1 RIGHT END VIEW

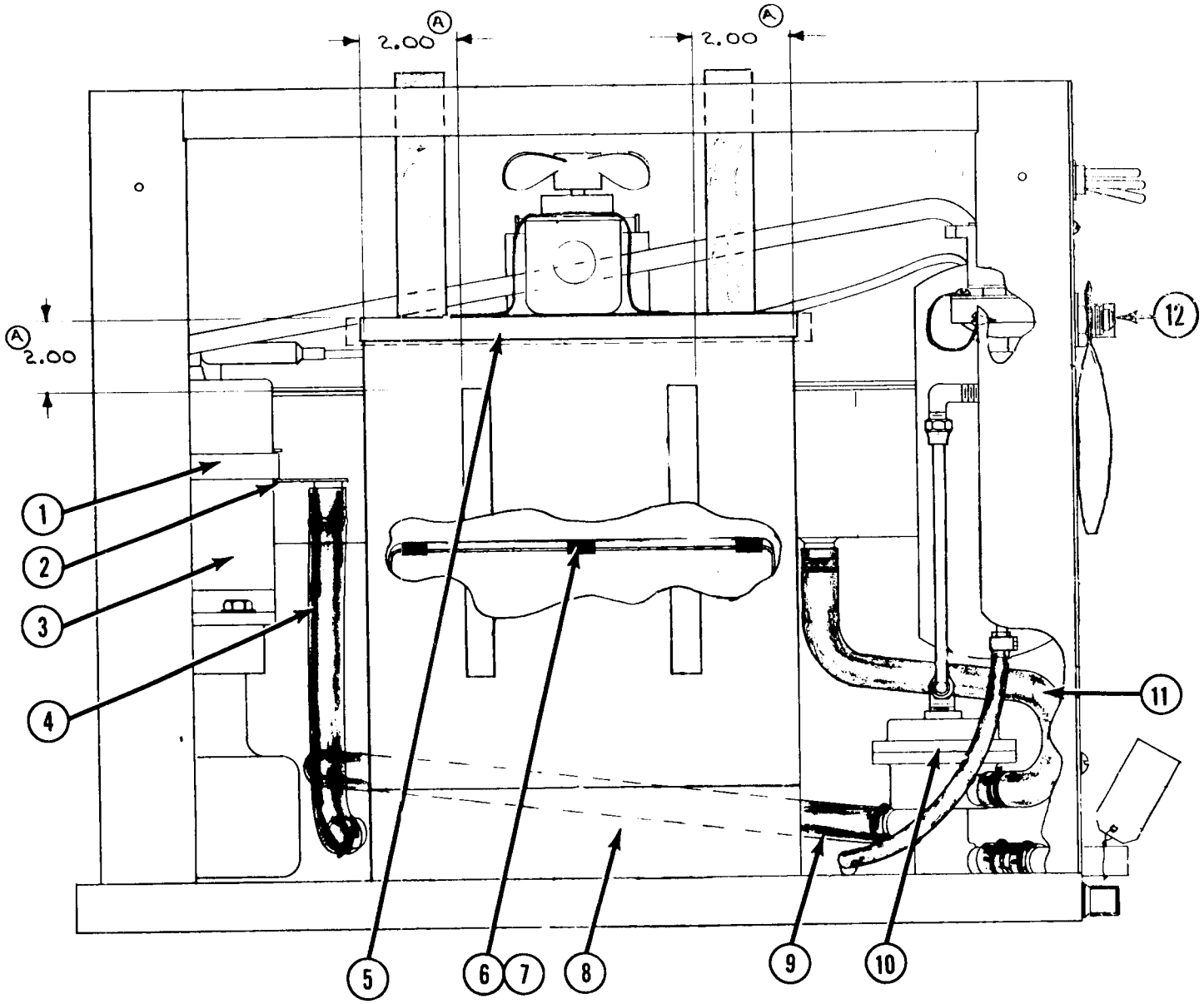

ITEM NO.	PART NO.	DESCRIPTION
1.	2-706	Clamp
2.	A24056-1	Tube Bracket
3.	12-1849-01	Water Pump
4.	A20250-01	Tube
5.	2-2075-1	Cover, Cube Chute
6.	3-1526-1	Curtain Clips
7.	2-2038-1	Curtain Assy.
8.	2-2073-1	Cube Chute
9.	5-501-01	Tube
10.	A21029-02	3 Way Valve
11.	5-509-1	Tube Platen Drain
12.	12-1434-01	Solenoid Valve

MC1 WATER COOLED
Top View

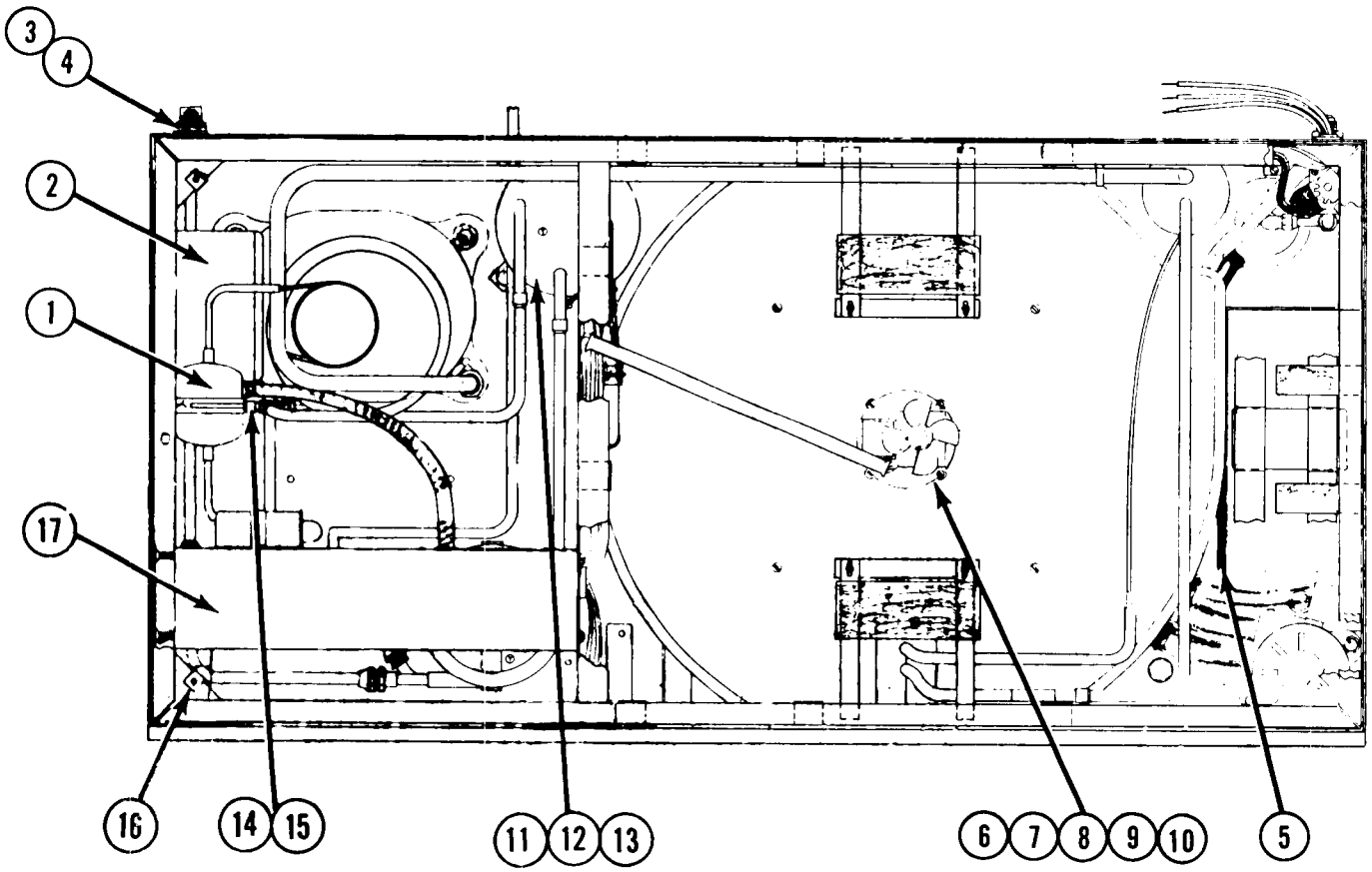

ITEM NO.	PART NO.	DESCRIPTION
1.	2-544-1	Drier
2.	18-2400-1	Compressor
3.	3-1409-6	Fiber Washer
4.	3-1394-1	Pal Nut
5.	13-595-00	Gasket
6.	12-1824-1	Agitator Motor
7.	A23830-1	Drive Shaft
8.	S6900	Drive Arm Assy.
9.	3-1403-6	Screw
10.	13-176	Drive Motor Gasket
11.	A19233	Bracket Tank
12.	3-571	Screw
13.	A23790-01	Tank Assy.
14.	16-560	Valve Core
15.	16-563	Valve Cap
16.	3-1423-2	Speed Nut
17.	See separate listing	Control Box

MC1 WATER COOLED
Front View

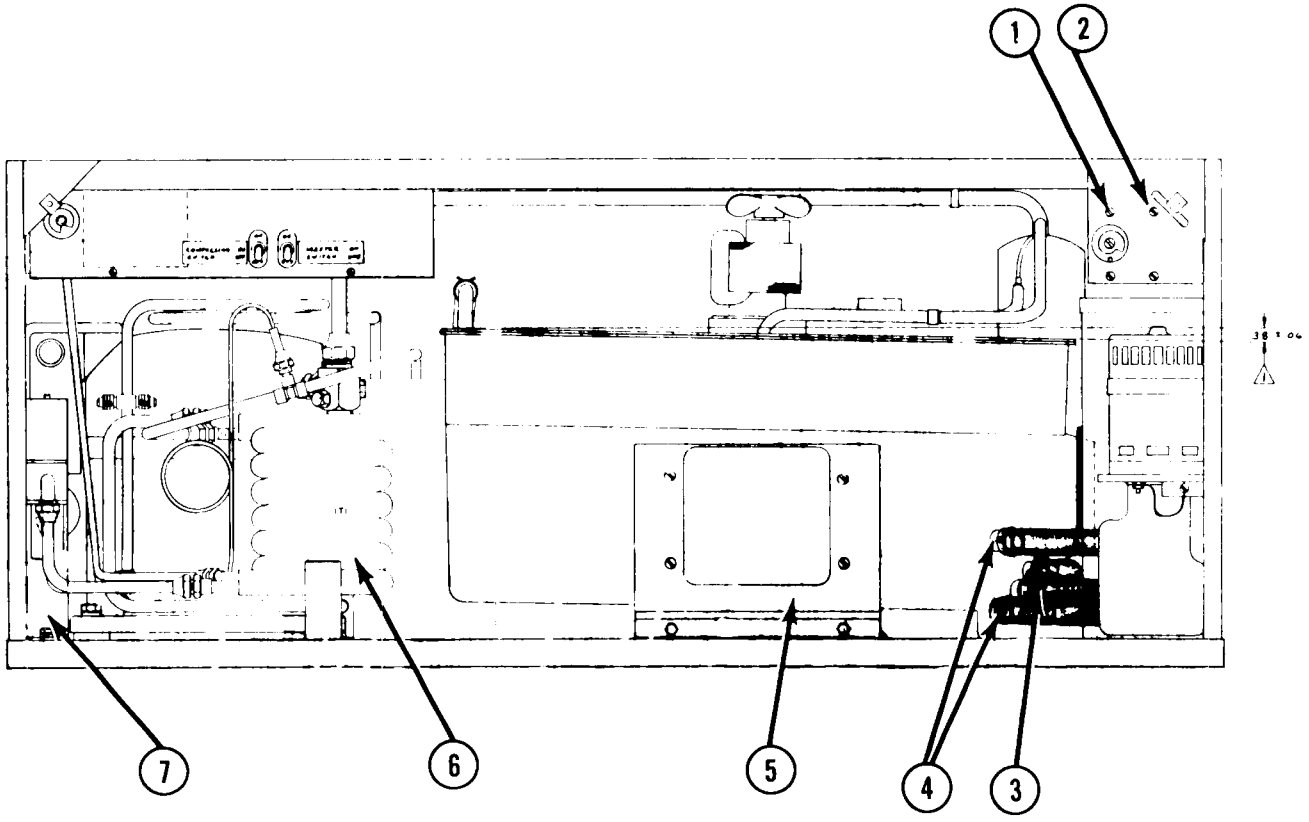

ITEM NO.	PART NO.	DESCRIPTION
1.	11-345-2	MCL & MCM Cube Size Control
	11-351-3	MCS Cube Size Control
2.	11-353-03	Bin Control
3.	2-179	Screw Type Hose Clamp
4.	2-2013-4	Spring Hose Clamp
5.	See Separate Parts List	Freezer Assy.
6.	18-3305-01	Condenser Assy.
7.	11-198	Water Regulator

MC1 AIR COOLED
Top View

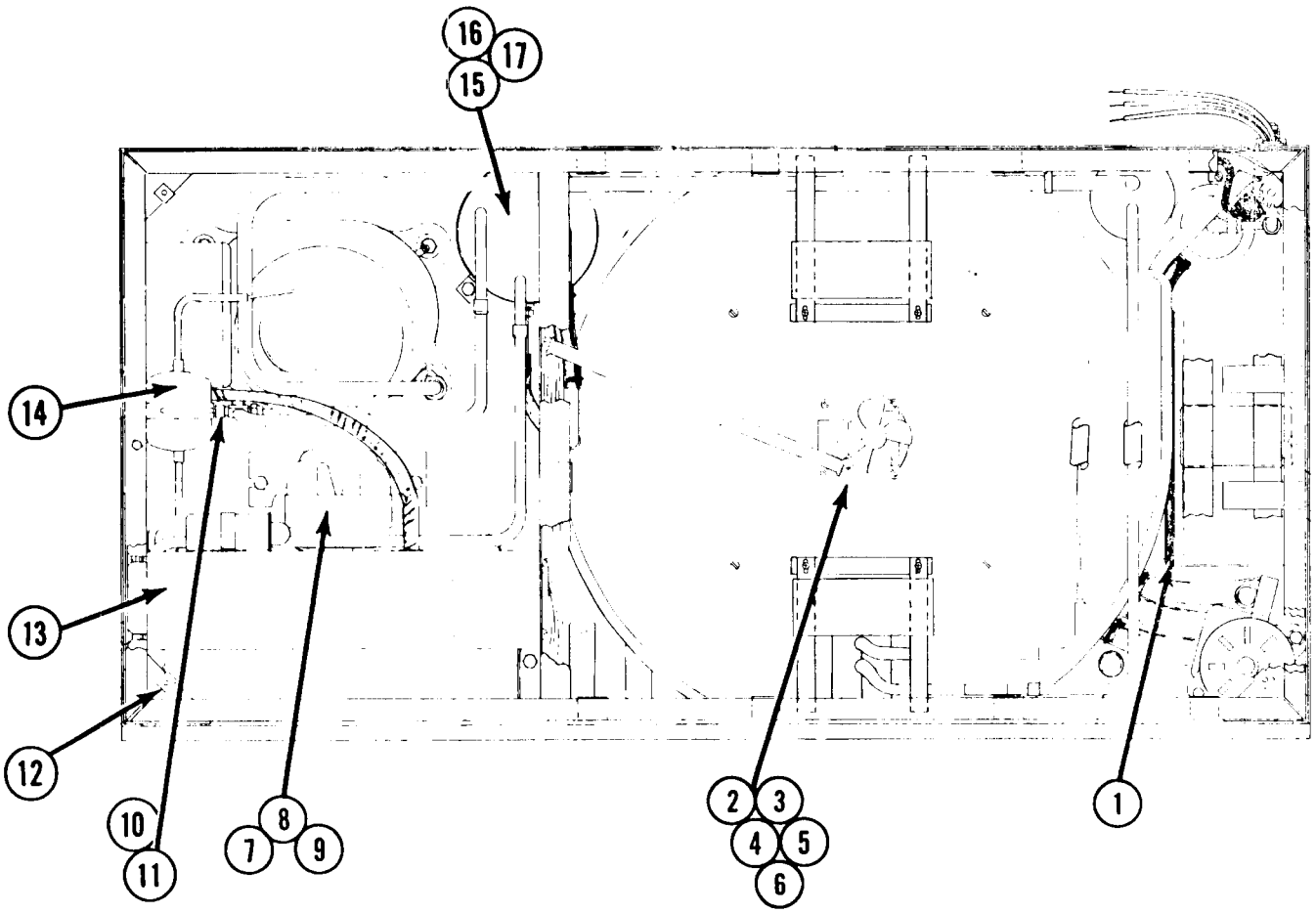

ITEM NO.	PART NO.	DESCRIPTION
1.	13-595-00	Gasket
2.	12-1824-1	Agitator Motor
3.	A23830-1	Drive Shaft
4.	3-1403-6	Screw
5.	13-176	Drive Motor Gasket
6.	S6900	Drive Arm Assy
7.	12-1681-1	Fan Motor
8.	18-625	Fan Blade
9.	18-388	Fan Motor Bracket
10.	16-560	Valve Core
11.	16-563	Valve Cap
12.	3-1423-02	Speed Nut
13.	See separate Parts List	Control Box
14.	2-544-1	Drier
15.	A19233	Tank Bracket
16.	3-571	Screw
17.	A23790-1	Tank Assy.

MC1 AIR COOLED
Front View

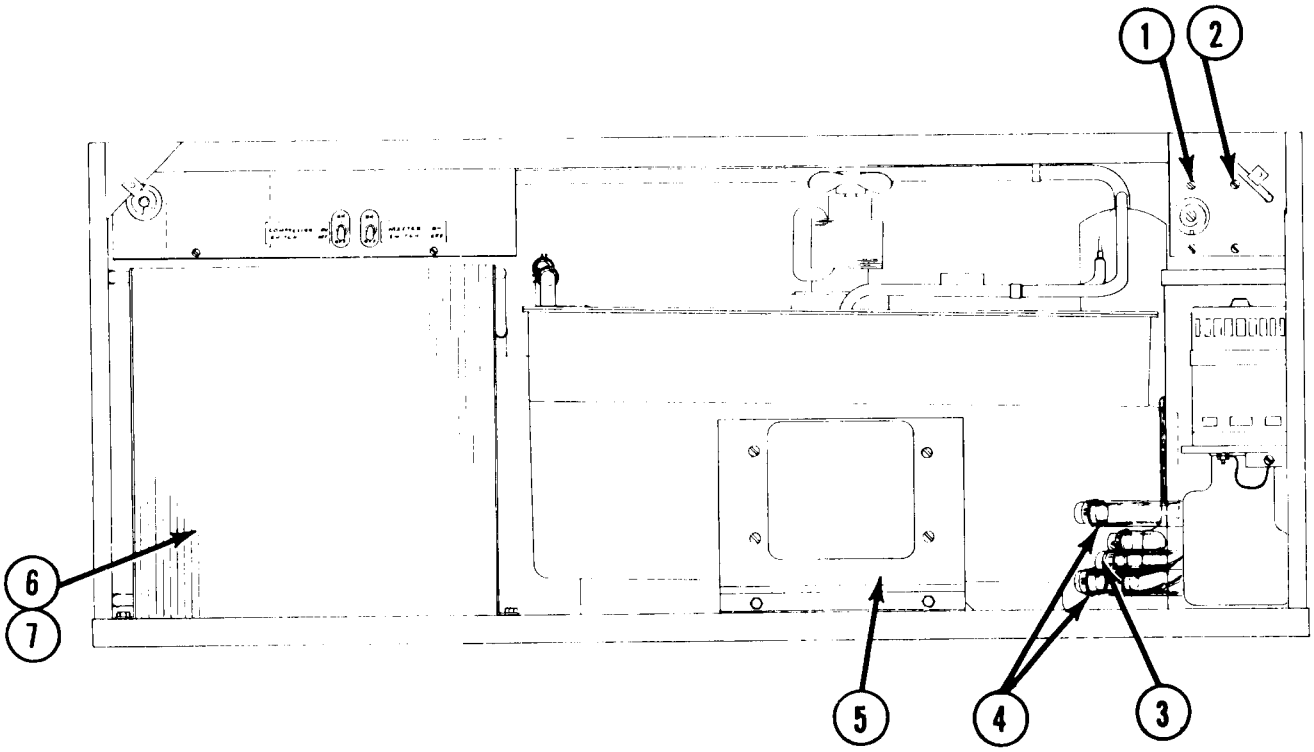

ITEM NO.	PART NO.	DESCRIPTION
1.	11-345-2	MCM & MCL Cube Size Control
2.	11-351-3	MCS Cube Size Control
2.	11-353-3	Bin Control
3.	2-179	Screw Type Hose Clamp
4.	2-2013-4	Spring Hose Clamp
5.	See Separate Parts List.	Freezer Assy.
6.	18-394	Condenser
7.	A23825-1	Shroud

CABINET PARTS

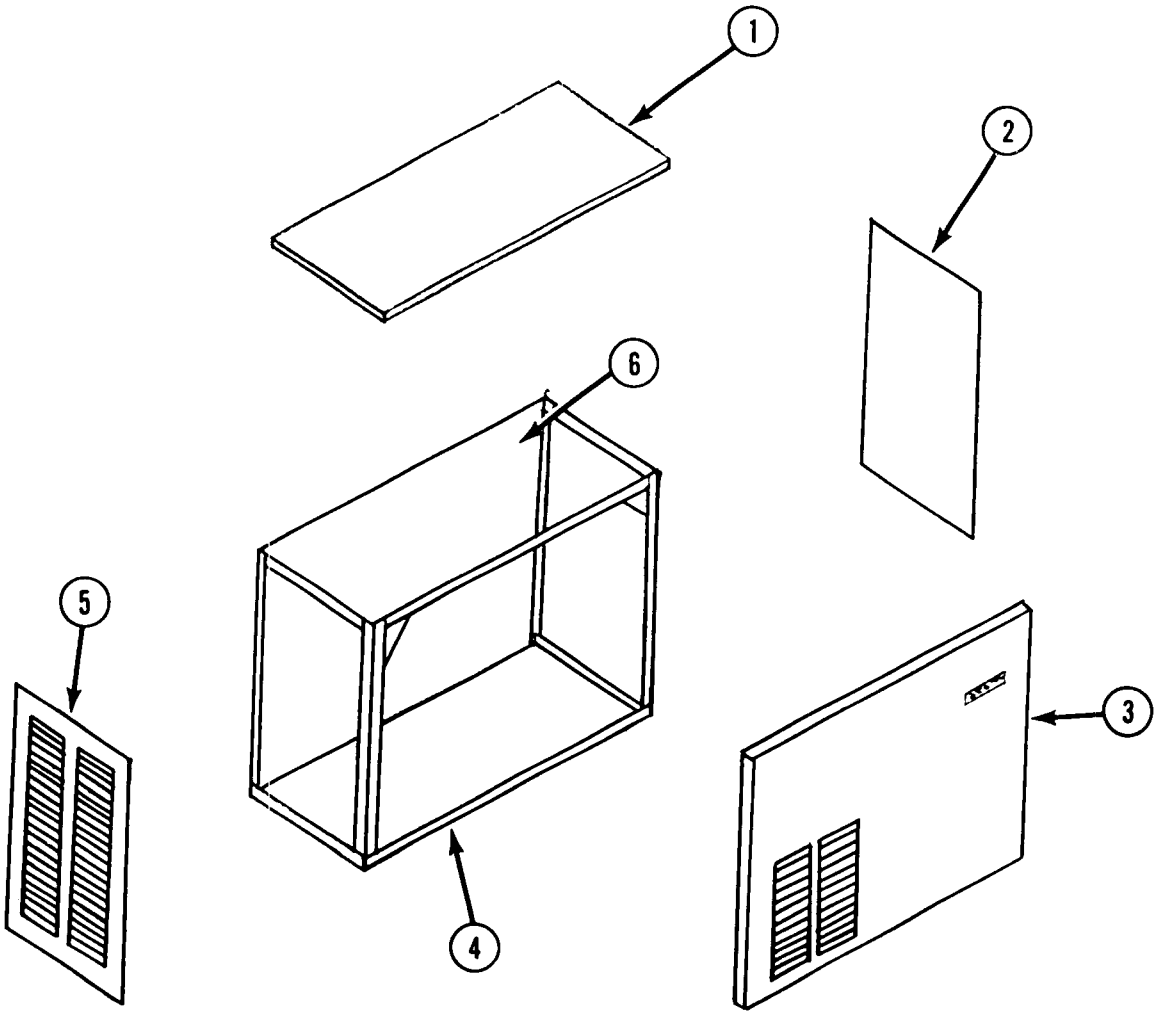

	Enamel	Stainless Steel
1. Top Panel	A23784-001	A23784-002
2. Panel, Right Side	A23783-001	A23783-002
3. Panel, Front	A23785-001 Vinyl	A23785-002
4. Cabinet Assy.	A23770-001	A23770-001
5. Panel left side	A23782-001	A23782-002
6. Back Panel	Fixed	A24833-001

*Panel Conversion Kit (Enamel to Stainless Steel) (Kit Includes Items 1, 2, 3, 5 and 6) — Part No. SPK-MC1

FREEZER ASSY

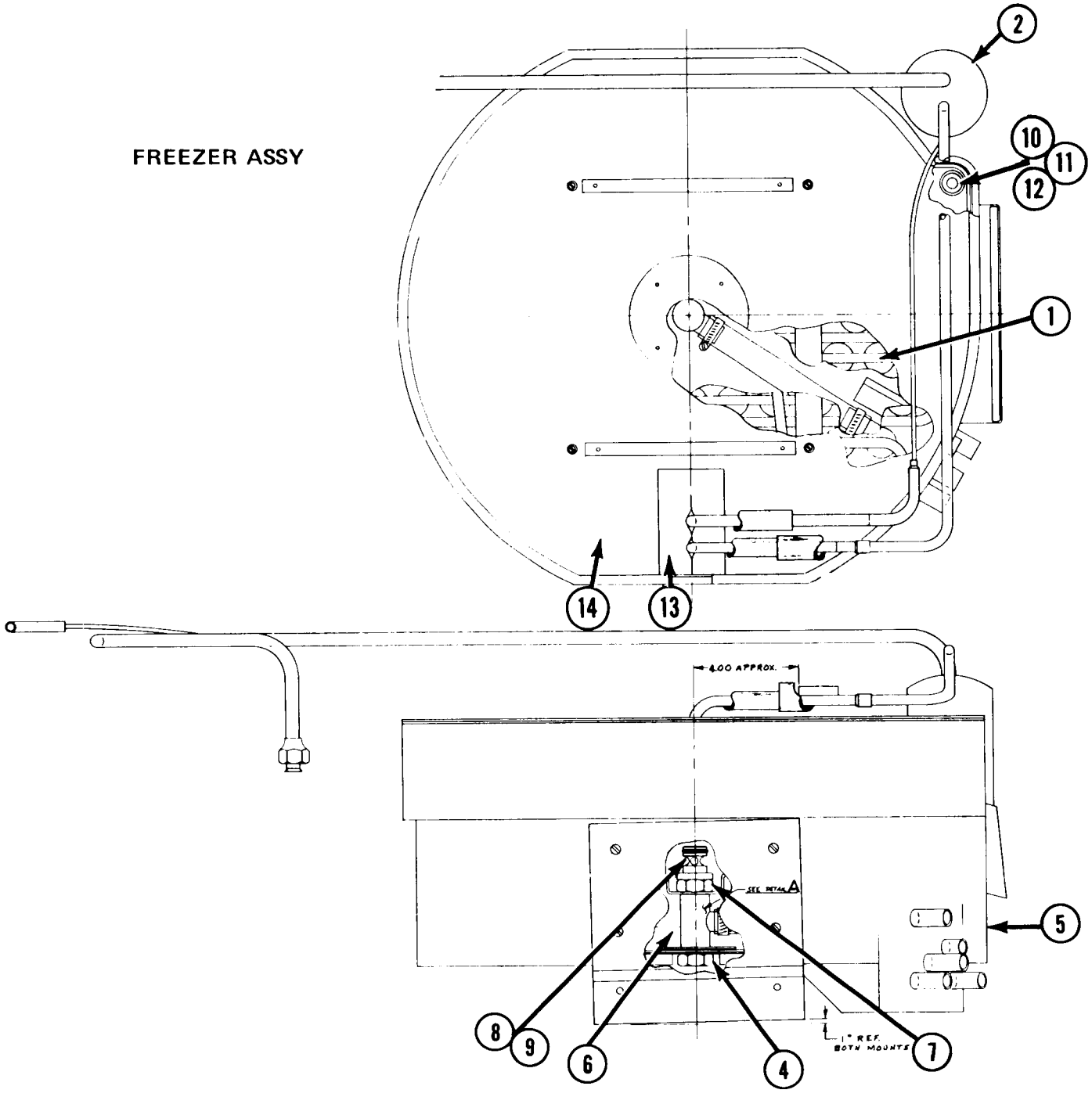

ITEM NO.	NAME	MCL1	MCM1	MCS1
1.	Freezing Chamber Assy.	A24129-01	A23880-01	A23803-01
2.	Heat Exchanger	A23881-01	A23881-01	A23796-01
3.	Spray bar	A23917-01	SAME	SAME
4.	Bottom Plug	A24515-01		
5.	Foamed Sump Tank	A24054-001		
6.	Inlet Housing	A24521-01	ON	ON
7.	Upper Nut	A23819-01		
8.	Jet Bearing Shaft	A19508	ALL	ALL
9.	O'Ring	13-617-25		
10.	Freezer Hot Water Tube	A16238-01	MODELS	MODELS
11.	Fiber Washer	3-1409-03		
12.	Adaptor Plug	S7434		
13.	Grommet	13-772-1		
14.	Freezer Cover	A24187-01		

FREEZER – SPRAY DRIVE

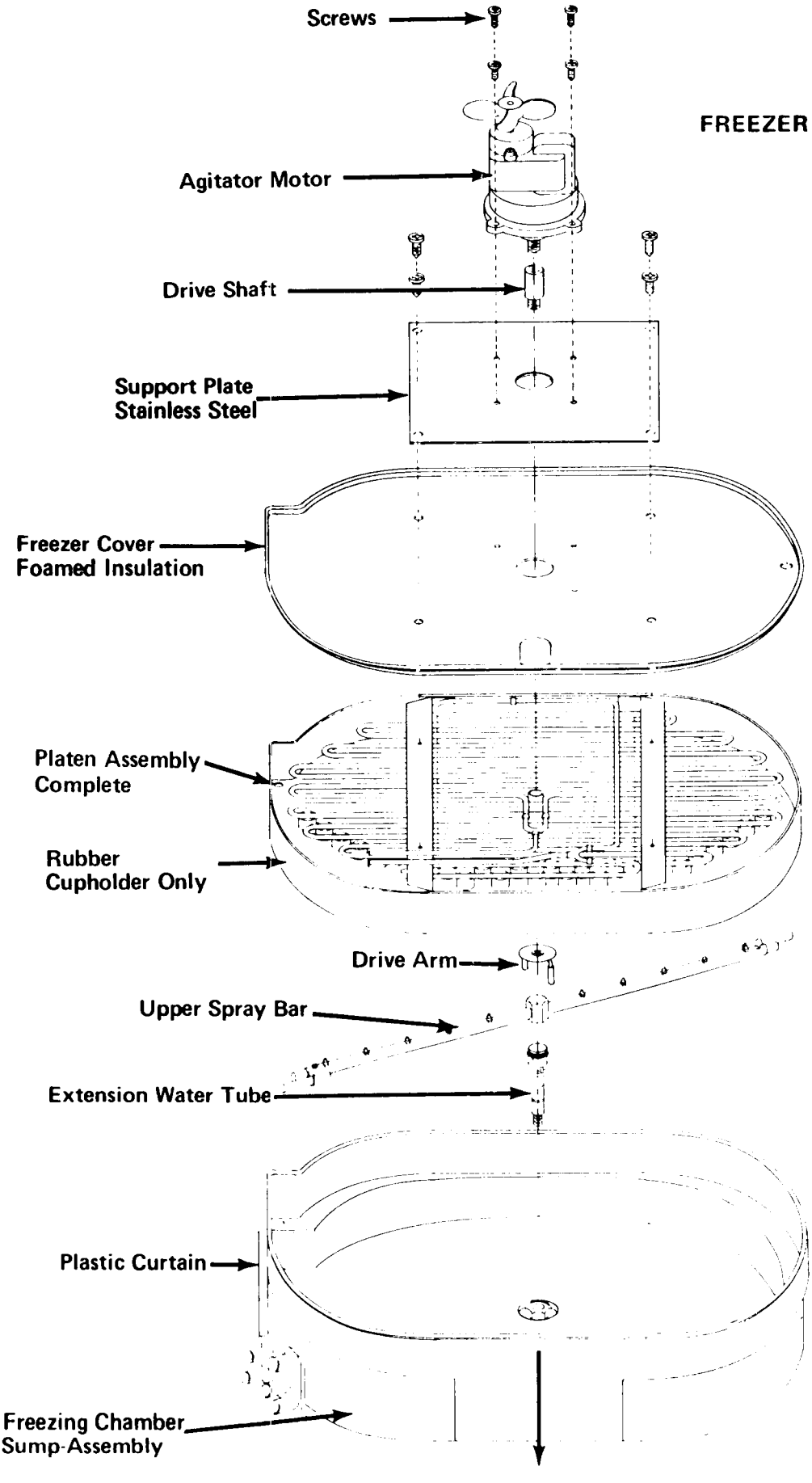

COMPLETE PUMP ASSY. – 12-1849-1

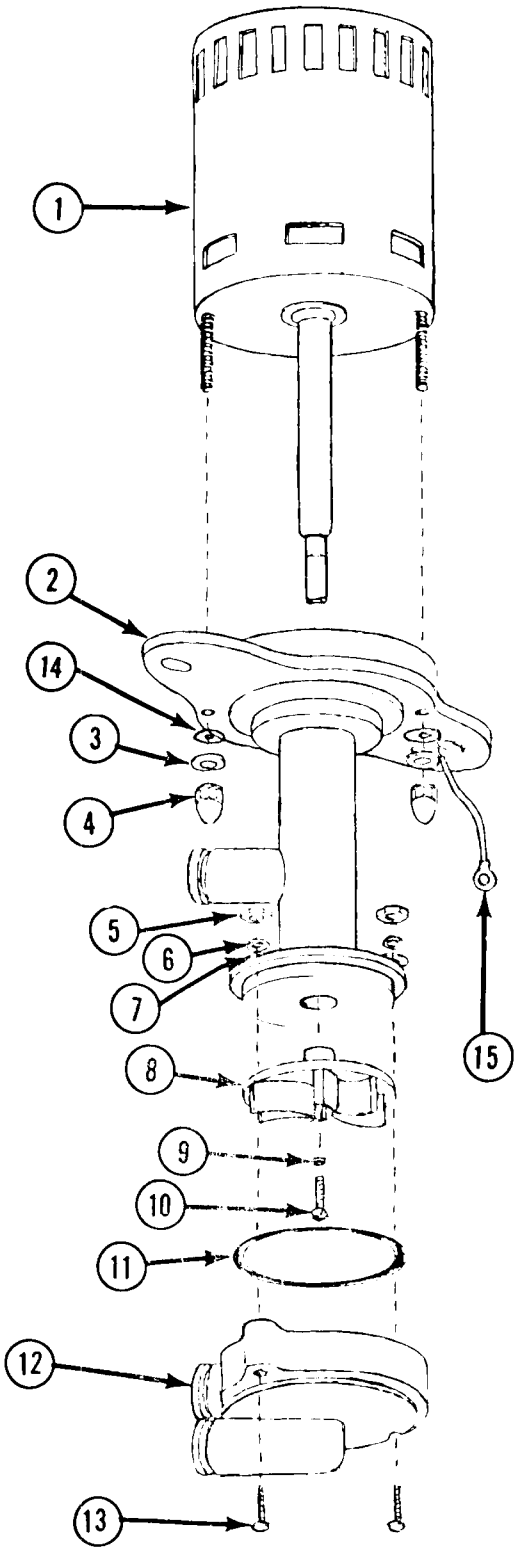

ITEM NO.	PART NO.	DESCRIPTION
1.	12-1849-50	Motor 115/60 or 50/1
	12-1849-49	Motor 230/50 or 60/1
2.	12-1849-51	Pump Body
3.	12-1849-52	Lockwasher
4.	12-1849-53	Nut (Acorn)
5.	12-1849-54	Nut (Hex)
6.	12-1849-55	Lock Washer
7.	12-1849-56	Washer
8.	12-1849-57	Impeller
9.	12-1849-58	Lockwasher
10.	12-1849-59	Screw
11.	12-1849-60	"O" Ring Seal
12.	12-1849-61	Pump Housing
13.	12-1849-62	Screw
14.	12-1849-63	Washer
15.	12-1849-64	Ground Wire

CORRECT DISASSEMBLY PROCEDURE

1. Remove nuts (5), lock washers (6), washers (7) and screws (13)
2. Remove Housing (12)
3. Remove screw (10) and lock washer (9)
4. Remove Impeller (8) and "O" ring (11)
5. Remove cap nuts (4), lock washers (3), ground lead (15) and washer (14)
6. Remove body (2)

CORRECT ASSEMBLY PROCEDURE

1. Assemble body (2) to motor(1)
2. To motor studs, assemble washers (14), ground lead (15) lock washers (3) and cap nuts (4)
3. Put "O" ring (11) on body (2)
4. Assemble impeller (8) onto motor shaft and fasten with lock-washer (9) and screw (10)
5. Push housing (12) over "O" ring (11) onto body (2)
6. Fasten housing (12) with screws (13), washers (7), lock washers (6) and nuts (5)

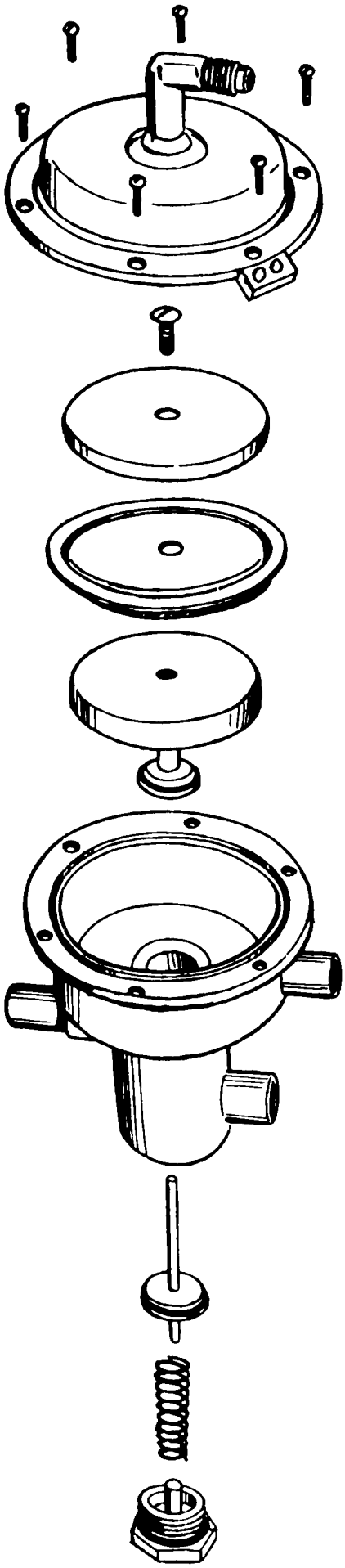

WATER VALVE ASSEMBLY

A21029 (Less Top Fitting)

1.	13-0617-22	O-Ring
2.	02-1766-00	Valve Cap Bottom
3.	02-1545-00	Spring
4.	13-0617-01	O-Ring
5.	A-17942-000	Lower Plunger Rod
6.	03-1465-00	Screws (6)
7.	2-1765-00	Valve Top Cover
8.	03-1506-01	Screw
9.	A-17941-000	Upper Plunger
10.	13-606-00	Upper Diaphragm
11.	A-18312-00	Diaphragm Cover
12.	02-1764-00	Valve Body

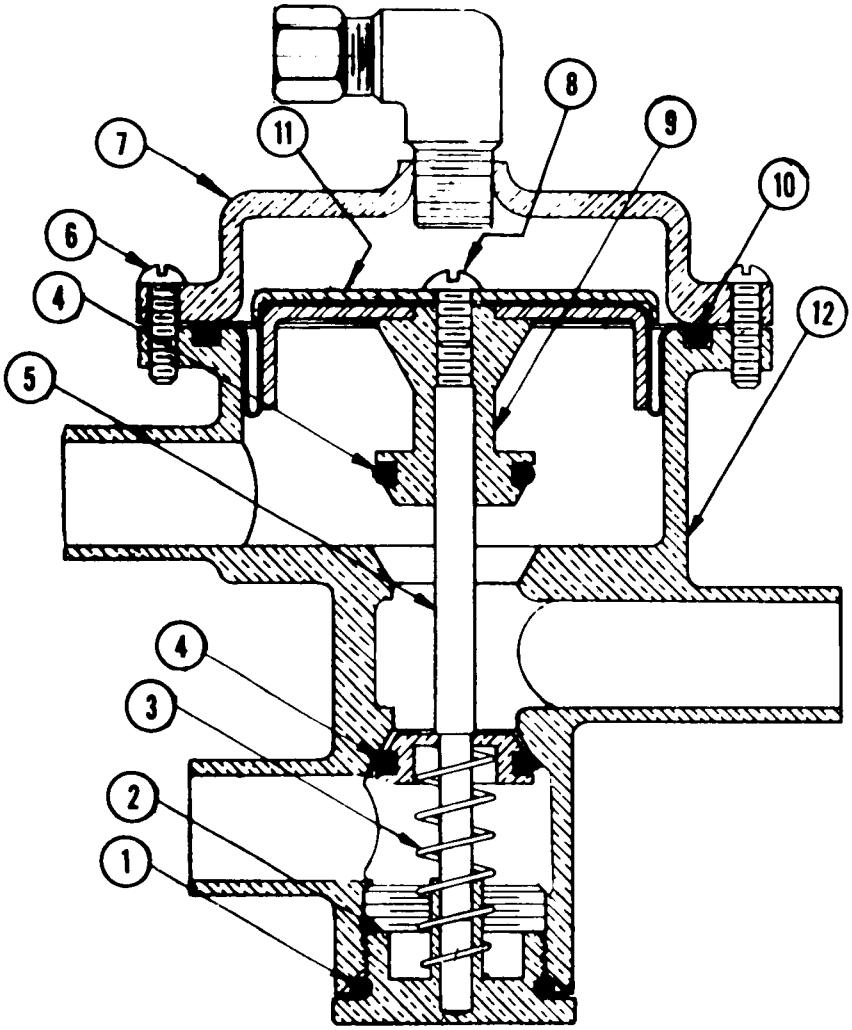

CONTROL BOX ASSY.

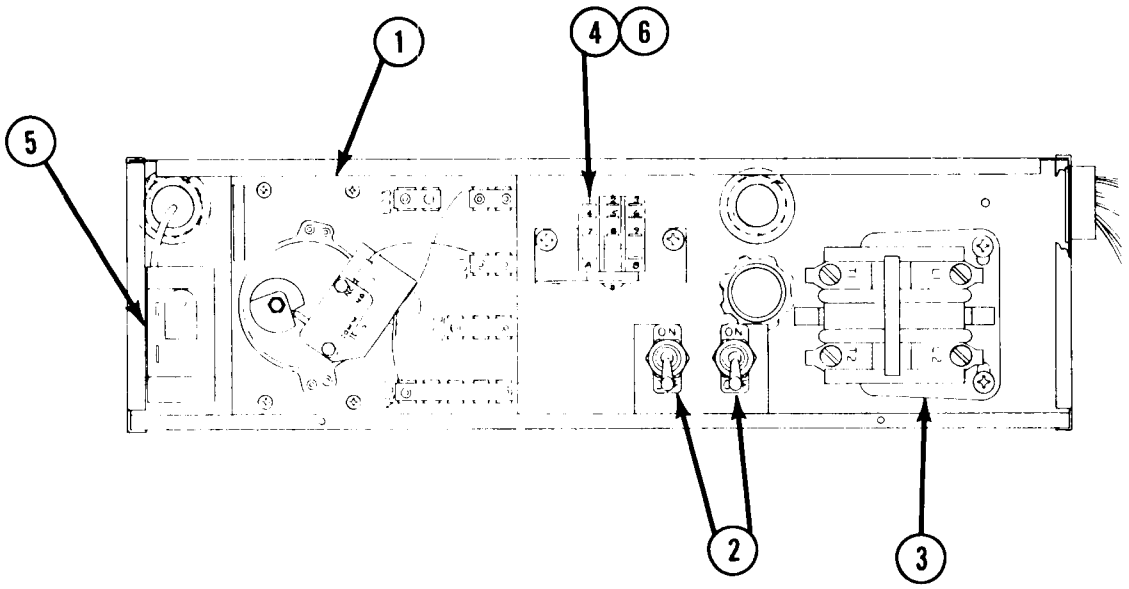

ITEM NO.	PART NO.	DESCRIPTION
1.	A23712-01	Timer
2.	12-426-01	Toggle Switch
3.	12-820-01	Contactor
4.	12-1598-00	Holding Relay
5.	11-357	Pressure Control – Water Cooled
	11-365	Pressure Control – Air Cooled
6.	A23965-01	Relay Bracket

Control Box – A24251-001 – Water Cooled 115/60/1
A23821-001 – Air Cooled 115/60/1

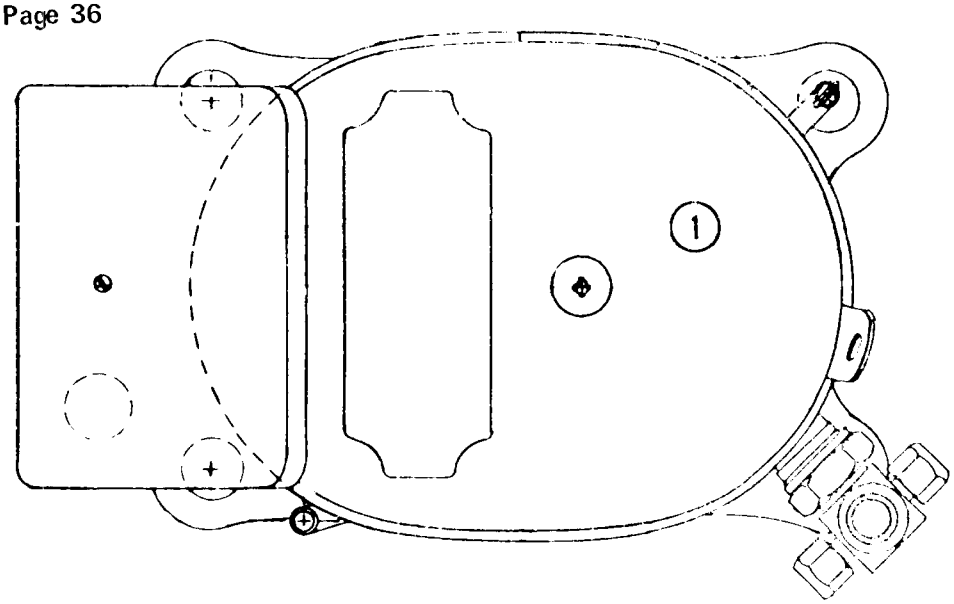

MOTOR COMPRESSOR
Air and Water
115/60/1 3500 RPM

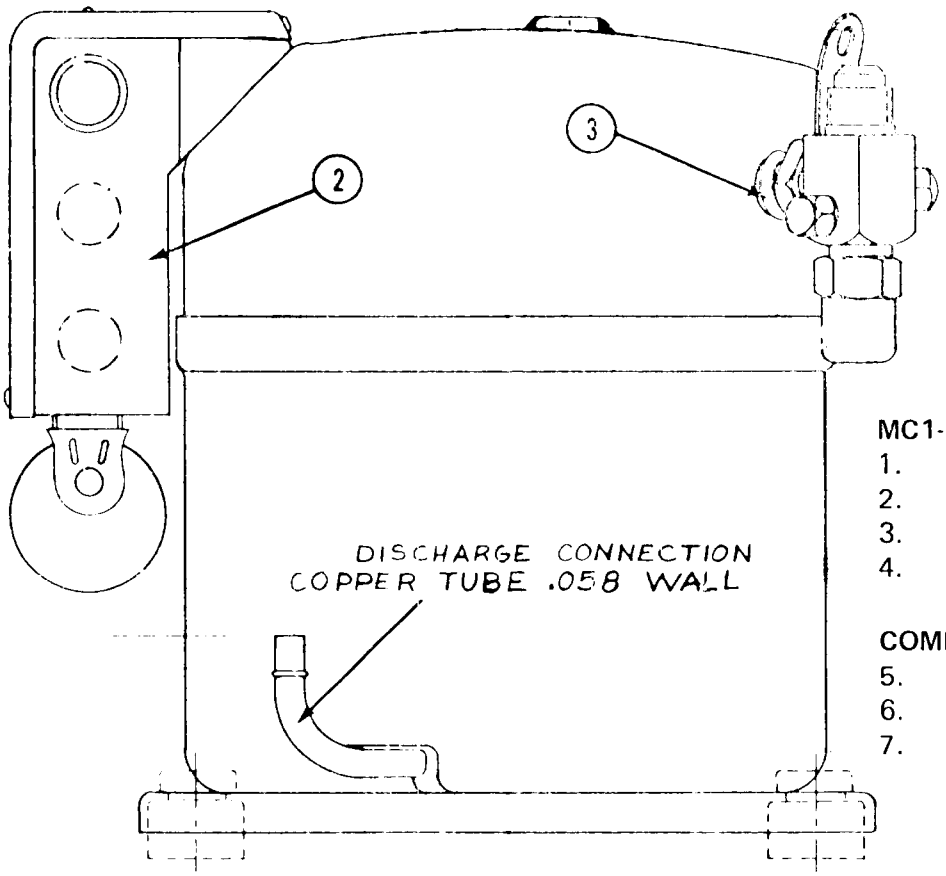

MC1-1 (115/60/1)

1.	18-2400-001	Compressor
2.	18-1902-17	Run Capacitor
3.	18-2410-00	Potential Relay
4.	18-2420-00	Start Capacitor

COMMON TO ALL COMPRESSORS

5.	18-2201-30	Rotolock Valve
6.	18-2300-29	Valve Seal
7.	18-2200-27 & 28	Mounting sleeves & grommets

18-2420-00 -- General Electric No. 35F1441BC8 Copeland No. 014-0008-69, 282-340 MFD, 110 VAC 60 CPS.

18-1902-17 -- Copeland No. 014-0001-00, 370 Volt, 10 MFD.

18-2410-00 -- Copeland No. 040-0098-01

MAINTENANCE INSTRUCTION FOR SCOTSMAN SUPER CUBERS

THE FOLLOWING MAINTENANCE SHOULD BE SCHEDULED EACH (6) SIX MONTHS ON ALL SCOTSMAN SUPER CUBERS. CALL YOUR AUTHORIZED SCOTSMAN SERVICE DEPARTMENT.

1. Clean air-cooled condenser. This is to be done frequently with the machine shut off.
2. Clean water system and evaporator, sump tank and screen, using Scotsman Ice Machine Cleaner or equivalent.
3. Remove jet tube and manually clean jets by unscrewing jets.
4. Check curtain assembly.
5. Tighten all electrical connections.
6. Tighten all bolts.
7. Check water supply. Check water pressure flow through flow control. Clean water strainer.
8. Oil jet tubes drive motor three (3) places. Use SAE 20 oil - 3 oil cups.
9. Oil Condenser fan motor. Punch sealed cap or remove screws where possible.
10. Check for refrigeration leaks with halide torch.
11. Check for water leaks. Tighten drain line connections.
12. Check size and condition of cubes. Adjust as required.
13. Check to insure bleed tube on top of hot water tanks are open. Clean with 3/16" drill bit.

PROCEDURE FOR USE OF SCOTSMAN ICE MACHINE CLEANER

1. Remove front panel, right side panel, and cube chute.
2. Locate control box with time clock knob protruding thru cover. Turn master and compressor switches to off position.
3. Start unit thru harvest cycle manually. This is done by slowly turning time clock knob clockwise until you hear the micro-switch actuator arm drop into the cam slot.
4. Locate and remove defrost water tube which protrudes thru each freezing chamber cover at top left of freezing chamber.
5. For each freezing chamber, dilute 16 ozs. of Scotsman Ice Machine Cleaner in 11 pints of fresh potable water in a clean container. Pour this cleaning solution into freezing chamber thru defrost tube hole. Replace defrost tubes and IMMEDIATELY TURN ON MASTER SWITCH.
6. Let unit operate normally for 20 minutes into the freezing cycle. No ice will be made because the compressor is not in operation.
7. At the end of this time, rotate the timer knob until the harvest cycle starts again.
   Allow the machine to run normally thru this harvest cycle.
   When the harvest has been completed, then rotate knob manually thru the freeze cycle until the harvest cycle starts once again.
   Do this 3 times.
   Cube chute and curtain(s) should be washed in solution of household bleach and water (1 oz. of bleach in 1 gal. of water)
8. Turn the compressor switch back on. Use a damp cloth to wipe off curtain(s) and cube chute. Place cube chute and curtain(s) in position.
9. Check each new batch of cubes until they are clear and until acid taste has been removed from cubes.
10. Pour hot water in storage bin to melt the cubes and thereby clean the bin and drains with the same solution that has just cleaned the unit.
11. Replace all doors.
12. Unit is now ready for continued automatic operation.

SCOTSMAN® ice MACHINES

PRODUCT NAME:

SCOTSMAN® BIN MODEL B550 SERIES

MANUFACTURER:

QUEEN PRODUCTS DIVISION
KING-SEELEY THERMOS CO.
ALBERT LEA, MINNESOTA 56007

SERIES B550

Use with MC1 and MC2 series cubers or MF3, MF4 and MF5 series flakers. Holds up to 550 pounds of Scotsman ice. Width: 42-1/4", Depth: 30-1/2", Height: (With legs) 38" to 38-3/4", Height: (Without legs) 32". Hinged door opening 9-3/4" x 39". Drain fitting 1/2 NPT.

B550: Heavy-gauge steel with sandlewood micomatte finish, stainless steel interior. Shipping weight: 193 lbs.

B550SS: Heavy-gauge stainless steel inside and out, chrome-plated legs. Shipping weight: 193 lbs.

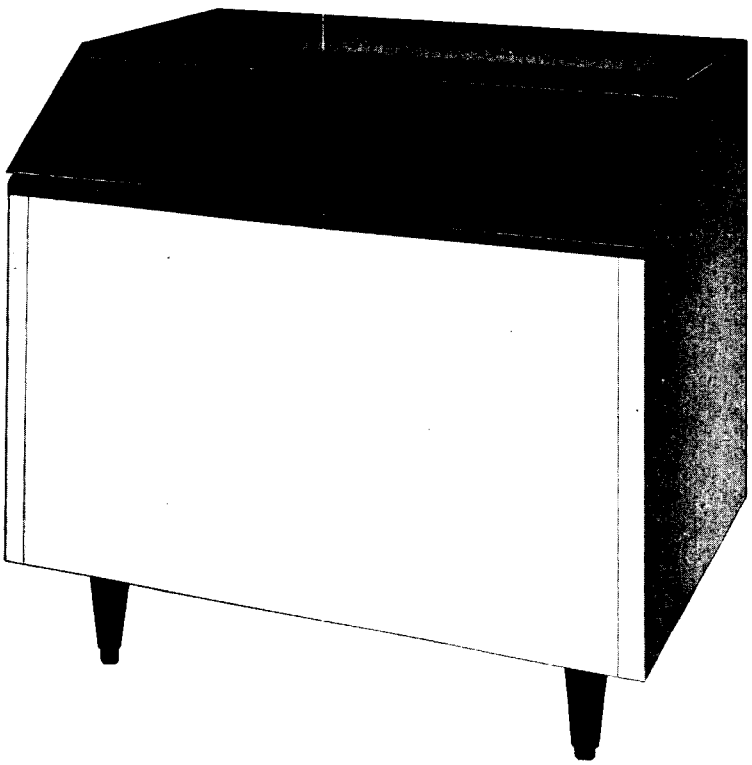

NOTE: Optional Bin Extension Kit Model KBE75 adds approximately 75 lbs. of ice storage. Width 42-1/4", Depth 21", Height 6".

Optional insulated stainless steel top kit KBT1 provides cover for bin or extension kit. Also provides base for mounting MF model flakers. Width 42-1/4", Depth 21", Height 1-5/8".

PARTS LIST FOR B550

1. Cube deflector Assy	A24146-1
2. Thumb screws for mounting	3-727
3. Gasket, machine to bin	19-503-4
4. Bin Door Assy.	A23997-1
5. Door frame fab assy.	A23992-1

DRAIN IN RIGHT REAR CORNER

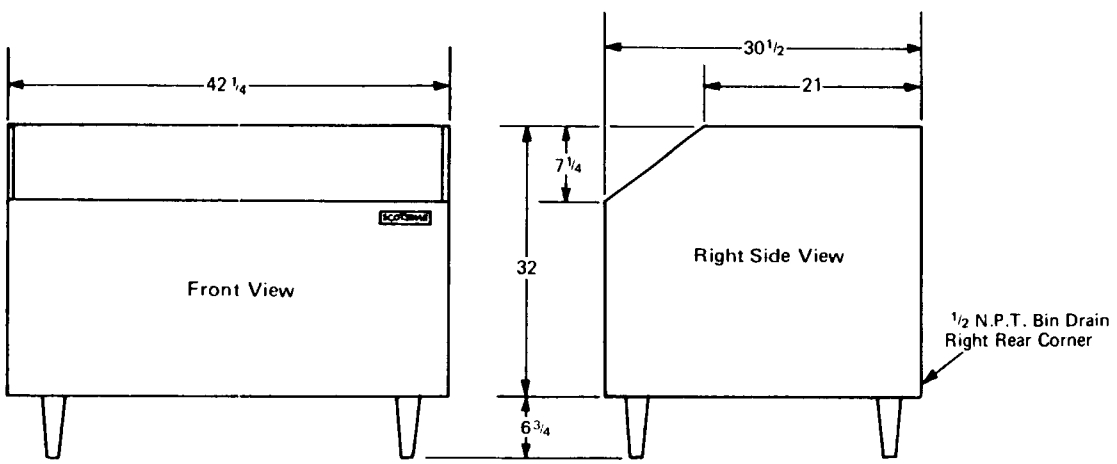

Specifications subject to change without notice.

CARE OF STAINLESS STEEL STORAGE BIN LINERS

All commercial grades of stainless steel will corrode or rust when in contact with certain chemicals or salts. **One element that attacks stainless readily, is chlorine,** and most compounds of chlorine, such as hydrocholic acid, and certain salts containing chlorine. The "speed" with which this corrosion takes place depends on the concentration of the chlorine, and the length of time it is left in contact with the stainless steel.

ICE BIN LINER RUSTING

In many ice bin applications, **a rust stain, or brown deposit, will appear at the top of the side and rear walls of the bin liner, and also on any exposed stainless parts inside the bin, which do not normally get covered with ice; such as stainless steel door back pans.** The lower portions of the liner walls usually stay clean if the bin is being used regularly, due to the "washing" action of the ice and meltage water draining down these walls. This brown staining on the liner may appear more rapidly in some installations than other, depending on the way the ice is being made in the ice machine, and the water conditions.

This staining or rusting, can come from basically two sources:

1. **Foreign materials** – For example, **many ice machine casings are made of painted steel. If this steel should be exposed at the joint where the ice machine sits on the bin, it could rust,** and the rust stain could "drip" down the liner walls. Also, particles of plain steel could fall down into the bin and, inturn, start rusting.

2. **Materials expelled during ice making** – Practically all icemakers produce clear ice by "freezing out the impurities" normally found in tap water. Chlorine gas, other gases and solids, are expelled during the making of ice. Being heavier than air, these foreign materials drop down into the bin through the same opening that the ice enters the bin. (This oftentimes explains why this staining is more noticeable on an installation where the opening on the bottom of the ice machine is quite large). **The chlorine gas will combine with water vapor and condense on the liner walls as a mild hydrochloric acid.** Above the normal ice level, this never gets removed by the action of the ice, and will eventually form a brown stain.

CLEANING OF A STAINLESS STEEL BIN LINER

Because the brown staining or rusting is due to expelled material during ice-making, **every bin liner should be cleaned periodically,** to prevent this staining from causing pitting of the stainless steel. The time between cleanings will depend on the water conditions, type of ice machine, etc. **It may be necessary only every 3 to 6 months.**

1. **General Cleaning** -- When the staining is light, it can usually be removed by washing with ordinary cleaning powder, such as Bon-Ami, or Copper-Glo, and water. (Do not use cleaners that contain bleaching agents, as most of these are compounds of chlorine.) After cleaning, rinse thoroughly with clear water.

   It may be necessary to use a stainless steel wool to remove bad stains. DO NOT USE plain steel wool, as the steel particles will get imbedded in the liner and cause more serious rusting.

2. **Cleaning of heavy deposits**—If the liner has not been cleaned for a long time, and heavy deposits and pitting have occurred, a chemical cleaner may be necessary. Several of these are as follows:

   Oakite No. 33, Oakite Products, Inc., 19 Rector St., New York, N.Y. Texo No. 12, and Texo-NY, Texo Corp., 2200 Dana Ave. Cincinnati 7, Ohio. Metalprep No. 10, Nelson Chem. Co., 6564 Benson St., Detroit 7, Mich, Dilac, Diversey Corp., 1820 Roscoe St., Chicago 13, Illinois.

   A solution of one part cleaner and two parts water is used. First, wash the bin liner thoroughly with water and soap as described above. Then simply swab the solution on the area to be cleaned, and allow to stand for about 20 minutes. Rinse with clear water. If this doesn't completely remove the deposit, repeat the procedure.

   Syntheitc rubber gloves should be used by the operator, and goggles and aprons are advisable even though the solution is relatively nonhazardous.

   These cleaners may possibly harm paint, wood, or fabrics, They will probably cause a dull grey color on galvanized steel and should not be allowed to remain long in contact with rubber. Therefore, provision should be made to avoid contact with such materials when cleaning stainless.

3. **Protection of Stainless Steel against further staining** — After the stainless steel has been cleaned, installations where the staining is recurring so frequently, the surface should be rejuvenated. This process restores the characterisitc to the surface of the stainless, that best prevents corrosion.

   First, be sure that the liner is clean and is thoroughly rinsed with water. Then use a nitric acid solution of two parts water to one part nitric acid (by volume). Swab this on the liner and allow to stand for about 30 minutes. Rinse the liner with clean water. This will then provide maximum corrosion resistance.

TABLE OF CONTENTS

Photograph & Ice Making Capacity 1
Table of Contents 2
Specifications & Dimensions 3
Installation Instructions 4
Installation Practice 5
Typical Installation 6
Stacking Instructions 7
Cube Deflector Installation Instructions 8
Electrical Connections & Characteristics 9
Installation – Start-Up 10
Final Check List 11
Wiring Diagram 230-115/60/1 Air Cooled 12
Wiring Diagram 230-115/60/1 Water Cooled 13
Wiring Diagram 208/60/1 Air Cooled 14
Wiring Diagram 208/60/1 Water Cooled 15
Electrical Components & Functions 16
Wiring Diagram 208-220/60/3 Air Cooled 17
Wiring Diagram 208-220/60/3 Water Cooled 18
Freezing Cycle Schematic 19
Harvest Cycle Schematic 20
Service Analysis Section 21-22
Maintenance Procedures Section 23-24
Functional Parts & Maintenance 25-26-27-28
Breakdown of Component Parts:
- Air & Water Cooled Left End View 29
- Water Cooled Top View 30
- Water Cooled Front View 31
- Air Cooled Top View 32
- Air Cooled Front View 33
- Cabinet Parts 34
- Freezer Assembly 35
- Dual Freezer-Drive Schematic 36
- Inlet Water Supply Assembly 37
- Dual Drive Assembly 38
- Freezer & Spray Drive – Top Freezer 39
- Complete Pump Assy. 40
- Water Valve Assy. 41
- Control Box Schematic 42
- Motor Compressor – Air & Water 43
- Maintenance & Cleaning Instructions 44

SCOTSMAN BIN MODEL B550

Specification & Dimensions 45
Care of Stainless Steel Liner 46
Cleaning of Stainless Steel Liner 47

THIS PAGE
INTENTIONALLY
LEFT BLANK

THIS PAGE
INTENTIONALLY
LEFT BLANK

MC2 series

Capacity: Refer to page 1.

Storage Bin: B200, B550
Stainless Steel Lined

Height: 28-3/4"

Width: 42-5/16"

Depth: 23-1/8"

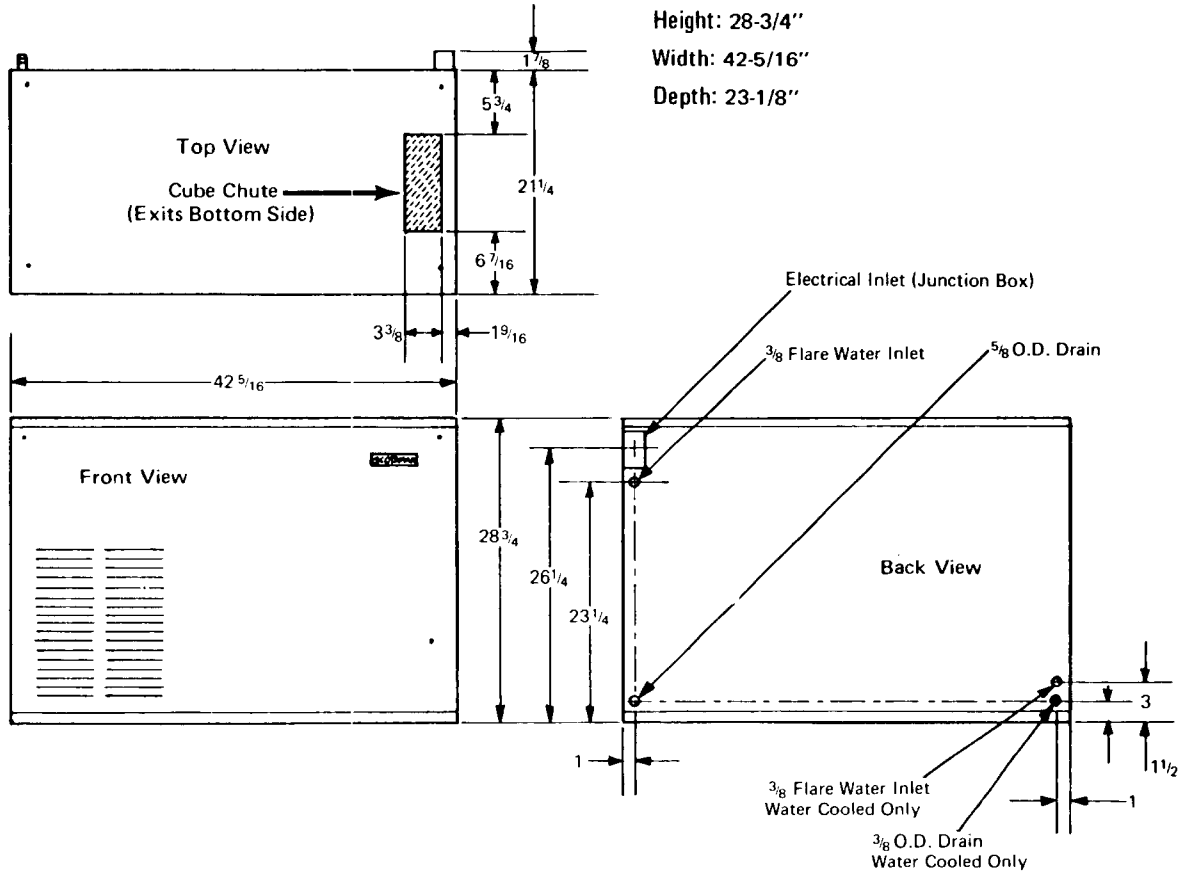

SPECIFICATIONS:

Model	Condensing Unit	Compressor Horsepower	Finish (P-painted) (SS-Stainless Steel)	Shipping Weight (lbs.)
MCL2AE	Air	1	P*	318
MCL2AS	Air	1	SS	318
MCL2WE	Water	1	P*	308
MCL2WS	Water	1	SS	308
MCM2AE	Air	1	P*	318
MCM2AS	Air	1	SS	318
MCM2WE	Water	1	P*	308
MCM2WS	Water	1	SS	308
MCS2AE	Air	1	P*	318
MCS2AS	Air	1	SS	318
MCS2WE	Water	1	P*	308
MCS2WS	Water	1	SS	308

Basic Electricals	Minimum Wire Sizes (w-wire) (g-gauge)			Total Amperages		
	MCL2	MCM2	MCS2	MCL2	MCM2	MCS2
Air Cooled						
115/230/60/1	3w 14g	3w 14g	3w 14g	11.6	11.6	11.6
115/208-220/60/3	4w 14g	4w 14g	4w 14g	9.9	9.9	9.9
115/208/60/1	3w 14g	3w 14g	3w 14g	12.9	12.9	12.9
Water Cooled						
115/230/60/1	3w 14g	3w 14g	3w 14g	10.9	10.9	10.9
115/208-220/60/3	4w 14g	4w 14g	4w 14g	9.2	9.2	9.2
115/208/60/1	3w 14g	3w 14g	3w 14g	12.2	12.2	12.2

*Painted Models have sandlewood micomatte Finish with woodgrain front panel.

Specifications subject to change without notice.

INSTALLATION INSTRUCTIONS

1. Uncrate unit using regular hammer and nail puller.

2. Remove top, front, left and right side panels (held by screws).

3. On base of machine at left and right ends are bolts that hold cuber to crate skid. Loosen the bolts to remove skid and save bolts to mount machine to SCOTSMAN Storage Bins.

4. Place unit on top of bin and secure to bin with two bolts taken out in Step 3.

5. Uncoil bin thermostat bulb and run it down thru machine base by pushing end of bulb thru plastic cap located between sump pump and freezing chamber. Next, take combination cube deflector and bulb holder, which is packed in storage bin, and install on upper right side of bin as described on Page 4 of User's Manual.

   NOTE: Regardless of what type of bin is used, It is essential that bin thermostat bulb be located in area immediately below cube chute opening of machine, in order to prevent ice from backing up into cube chute.

6. Remove shipping tapes and check tubings, wiring, capillary control, lines for rubbing or chafing, refashion as required.

7. Remove junction box from top of cube chute and install on rear of machine. Wires are provided at rear of machine for electrical hookup.

8. Check unit nameplate voltage against building source voltage to be sure they correspond. Caution . . . improper voltage applied to unit will void warranty protection.

9. Make water connection utilizing 3/8" O.D. copper water line.

10. Use clean damp cloth to wipe out storage bin and cabinet exterior.

11. Replace all panels.

12. Check unit to be sure it is level side to side and front to rear.

13. Locate and tear out registration card from front of this booklet, and fill out card completely including model and serial numbers as taken from aluminum plate found behind front service panel. Forward to Scotsman Factory using self-mailing card for your personal registration certificate.

14. Call your local authorized Scotsman Service Agency for hook-up, start-up and check out. He's listed under "Ice Making Machinery & Equipment" in your telephone book, yellow pages.

INSTALLATION PRACTICE

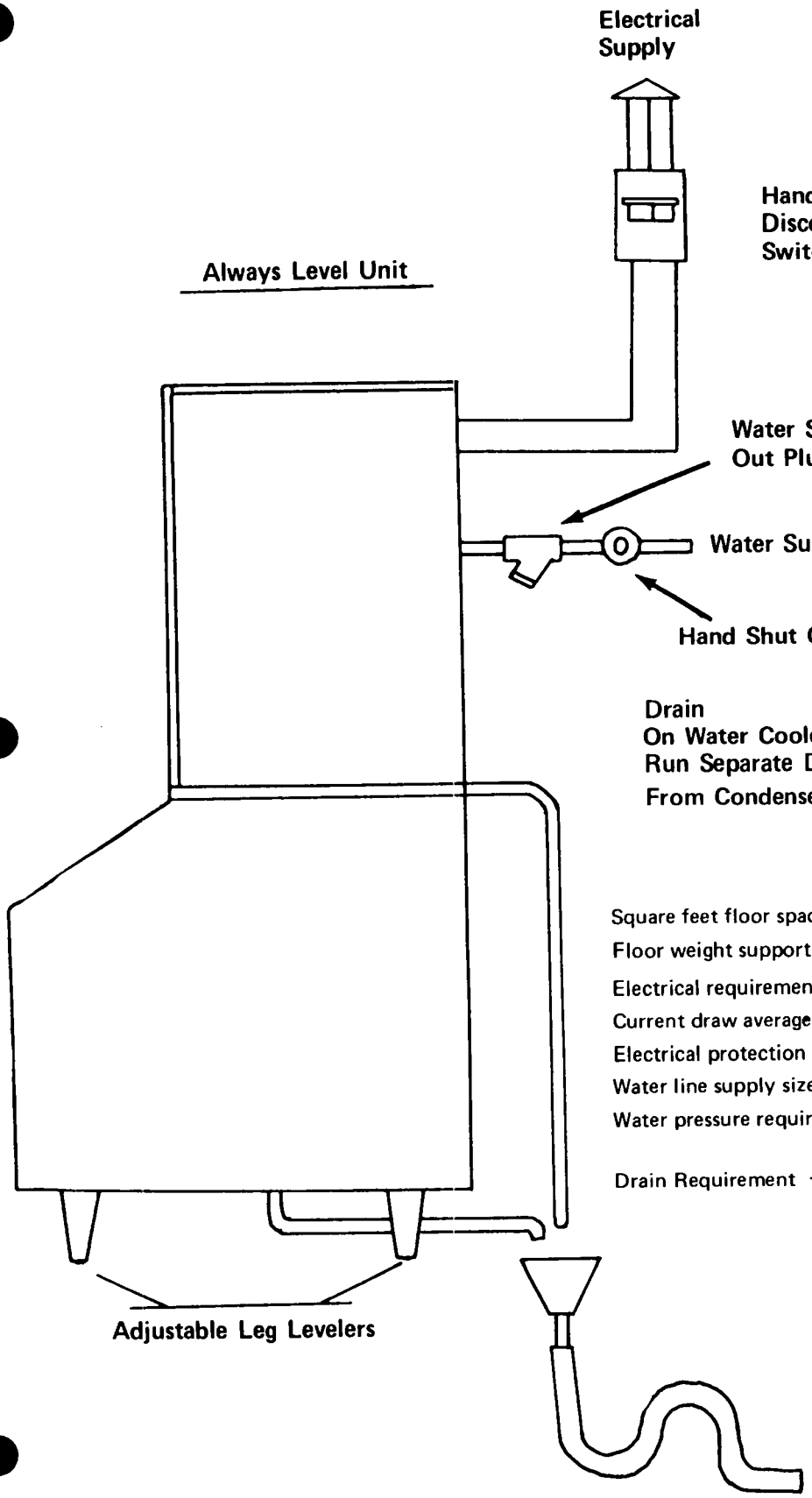

Square feet floor space required	8.75 sq. ft.
Floor weight support	700 pounds
Electrical requirement	115/230/60/1
Current draw average	13.5 amps
Electrical protection supply	20 amp - maximum
Water line supply size	3/8" copper, minimum
Water pressure required	30 pounds flowing pressure, minimum
Drain Requirement -	5/8" O.D. stub on cuber drain
	1/2 N.P.T. female thread casting on bin.

Maximum Ambient Air Temperature Recommended – 100° F.
Minimum Ambient Air Temperature Recommended – 50° F.

Air temperature ranges above or below those listed may cause serious damage to this product.

TYPICAL INSTALLATION

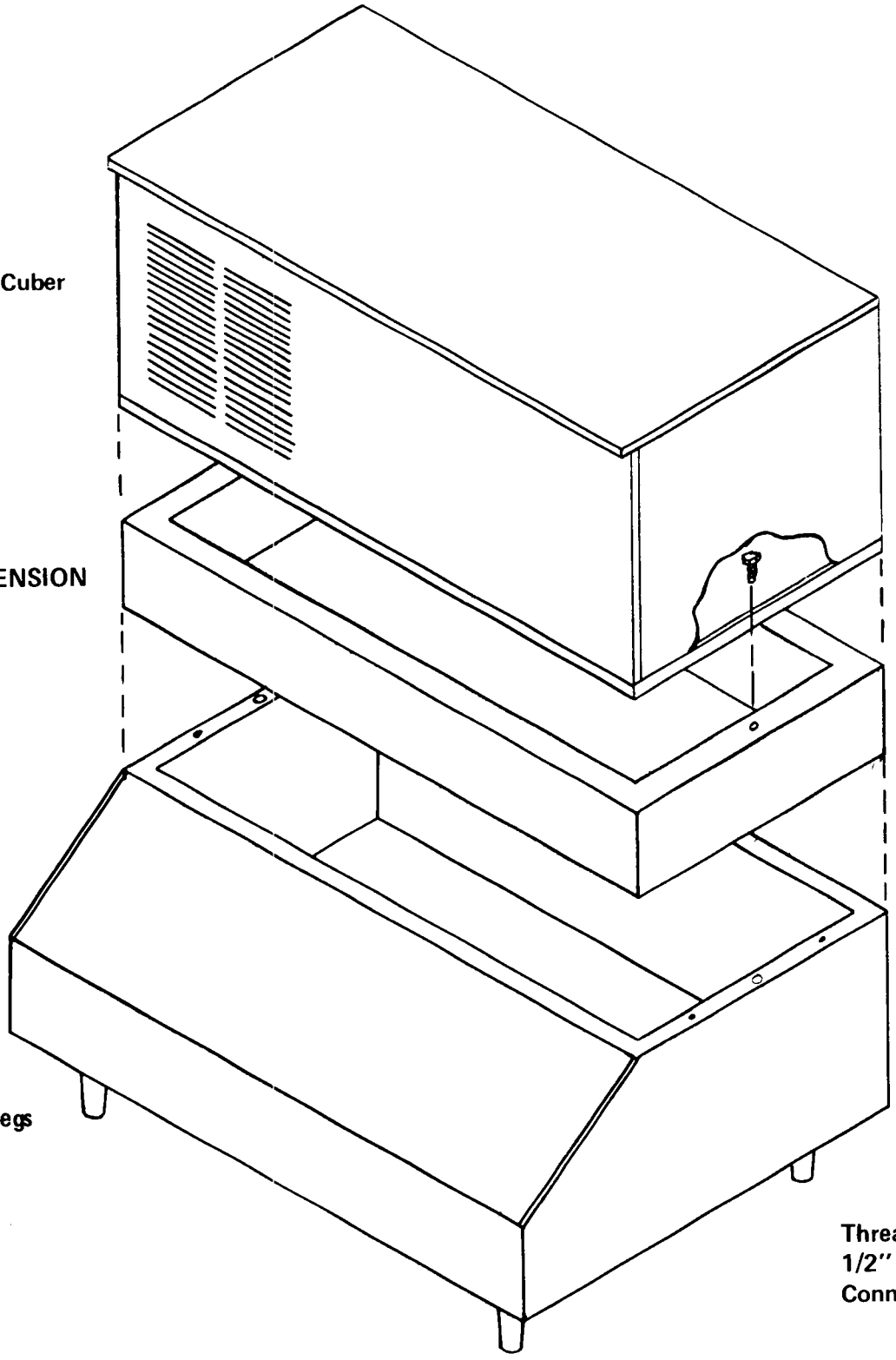

WARNING: THE SCOTSMAN B-550 BIN HAS BEEN SPECIFICALLY ENGINEERED FOR USE WITH THE SCOTSMAN MODULAR CUBERS. USE OF OTHER THAN SCOTSMAN MANUFACTURED BIN MAY RESULT IN COMPONENT FAILURES WITHIN THE MODULAR CUBER.

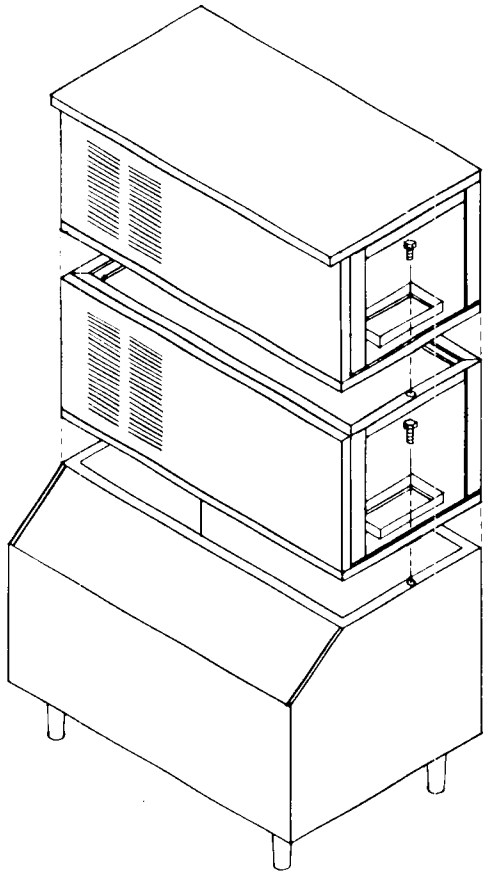

FIG. 1

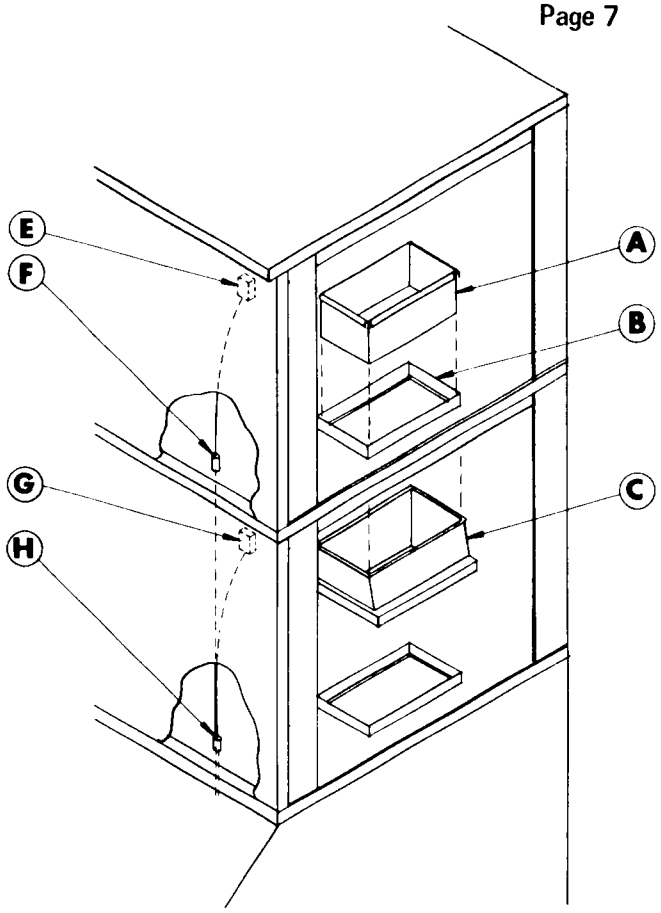

FIG. 2

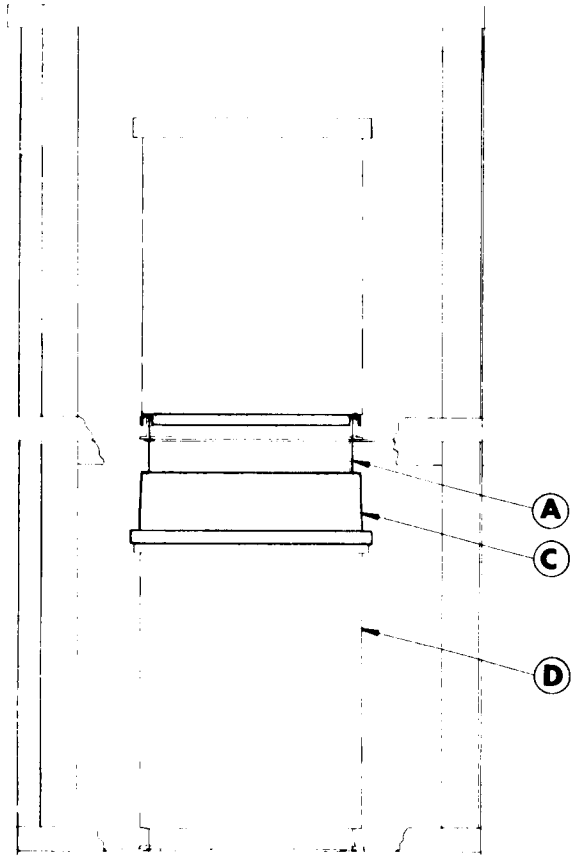

FIG. 3
COMPLETED INSTALLATION

KSC1

STACKING KIT INSTRUCTIONS

1. Remove all panels from both machines. (Top panel of bottom machine may be set aside, as it is not used when machines are stacked) Remove cube chutes from both machines.

2. After mounting bottom cuber to storage bin, place upper machine directly on frame of lower machine. Bolt together with same bolts and holes used in holding machine to crate skid. Fig. 1

3. Insert stainless steel (A) thru cube opening (B) in base of upper cuber. Place stacking kit cover (C) over sleeve as shown and push to top of sleeve. (See Fig. 2)

4. Replace cube chute (D) in bottom cuber and slide cover (C) down over cube chute, as shown in Fig. 3.

5. Route upper machine thermostat bulb (E) thru cap (F) and together with lower machine thermostat bulb (G) push thru cap (H) and feed tubes into combination cube deflector and bulb holder at right side of bin. This will provide two independent ice making systems.

6. Run separate water, drain, and electrical supplies. Test and check out added cuber, ice making, thermostat function, etc.

7. Install cube chute & cover on top machine, and replace panels on both machines.

INSTALLATION INSTRUCTIONS

Bin Thermostat in Bin

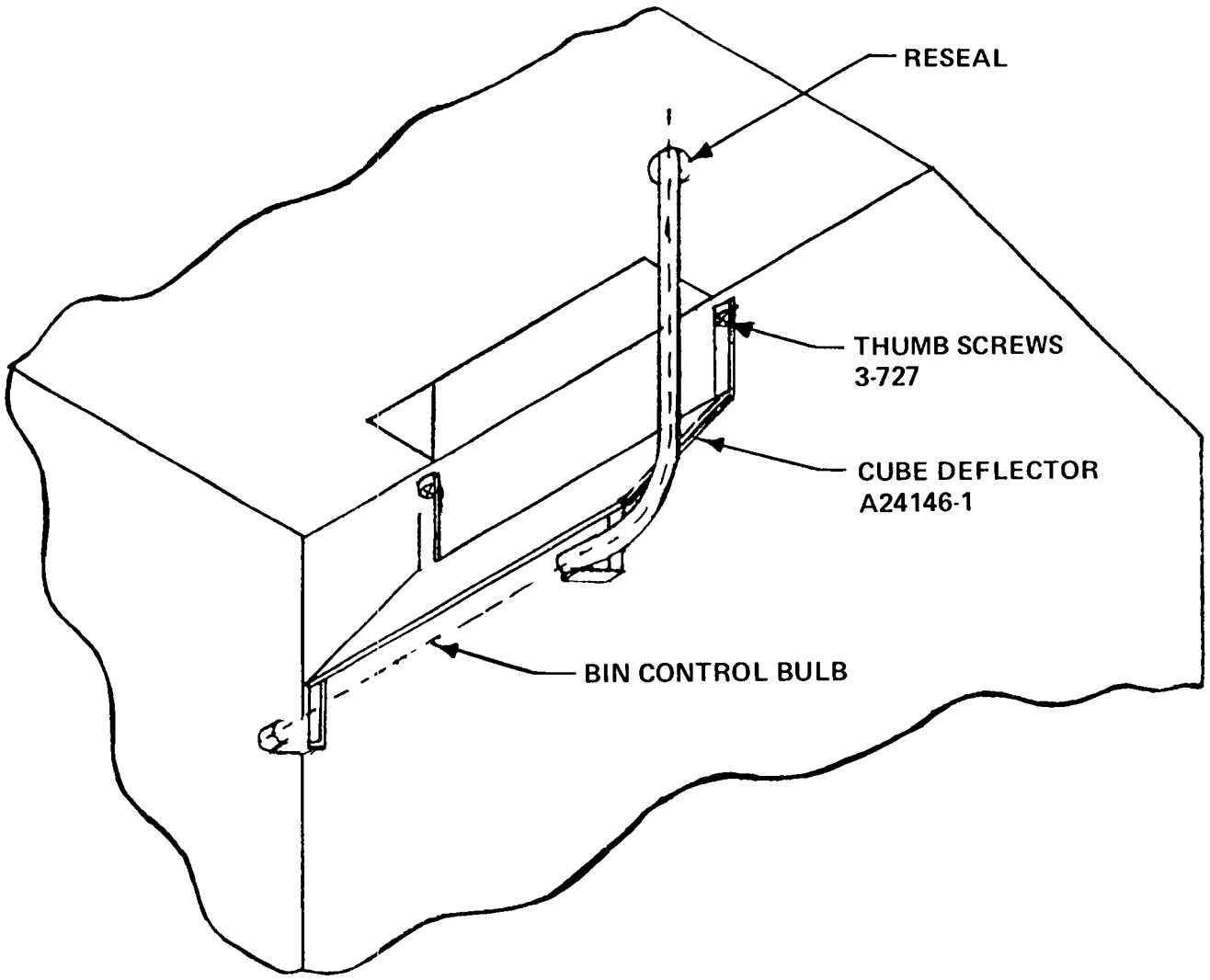

CUBE DEFLECTOR INSTALLATION INSTRUCTIONS FOR B220, B550, and KBE-75 BIN EXTENSION

1. INSTALL CUBE DEFLECTOR ON UPPER RIGHT SIDE OF BIN AS SHOWN USING THUMB SCREWS AND LOCKWASHERS SUPPLIED.
2. PUSH END OF BIN CONTROL BULB THRU PLASTIC CAP AND ROUTE BIN CONTROL BULB AS SHOWN BY DASHED LINE.
3. WHEN BIN EXTENSION KBE-75 IS USED, CUBE DEFLECTOR IS MOUNTED ONTO THE EXTENSION IN SAME MANNER AS NOTED ON ITEMS No. 1, and No. 2.

ELECTRICAL CONNECTIONS AND CHARACTERISTICS

230 volts, 60 cycle, single phase-4	Air Cooled	Water Cooled
Compressor	7.7 Amperes	7.7 Amperes
Sump Motor (2)	1.3 ea. Amperes	1.3 ea. Amperes
Fan-Air Cooled Models	.70 Amperes	NONE
Spray Bar Motor	.60 Amperes	.60 Amperes
TOTAL – Full Load Amperes	11.6 Amperes	10.9 Amperes

This unit should be wired to 15 Amp. circuit. Be certain that the Super Cubers are on their own circuit and individually fused. The maximum allowable voltage variation should not exceed 10 per cent of the nameplate rating even under starting conditions. Low voltage can cause erratic operation, and may be responsible for serious damage to the overload switches and motor windings.

All external wiring should conform with National State and local code requirements. Check the voltage on the line before connecting the machine.

14 Gauge wire will be adequate for short runs. For runs exceeding 10 feet, go to next heavier gauge. NOTE: All Scotsman cubers require a neutral wire and a solid earth ground wire.

WATER SUPPLY AND DRAIN CONNECTIONS

WATER SUPPLY – Air Cooled Models

The recommended water supply line is 3/8" OD copper tubing for air-cooled units. Connect to a cold water supply line with regular plumbing fittings with a shut-off valve installed in an accessible place between supply line and machine. The water strainer supplied with the unit should be mounted with clean-out plug down. Locate the strainer next to the machine and the arrow in the direction of the flow.

A 3/8" male flare fitting is provided on right rear corner for convenience in hookup.

WATER SUPPLY – Water Cooled Models

Water cooled models have separate water inlet for water cooled condenser, in addition to the same plumbing required for air cooled units.

When choosing the water supply for this cuber, consideration should be given to:

A. Length of run.
B. Water clarity and purity
C. Adequate supply pressures.

Since water is the most important single ingredient in producing ice, you cannot over emphasize the three items mentioned above. Low water pressure (below 30 pounds) may cause malfunction of the three way water valve. Water containing excessive minerals will tend to produce cloudy colored cubes and scale build up on parts in the water system. Water supply must be installed to conform with local code. In some cases a licensed plumber and/or a plumbing permit will be required.

Heavily clorinated water can be controlled using charcoal or carbon filters.

DRAIN: The recommended drain from the bin is 5/8 inch OD copper tubing. Must be run to an open trapped and vented drain. If drain is a long run, allow 1/4 inch pitch per foot. Drain must be installed to conform with local code. Run separate 3/8" line for condenser discharge water on water-cooled models.

INSTALLATION – START UP

1. After water and electrical hookup is complete, turn time clock knob (protruding thru control box cover) clockwise until you hear the micro-switch actuator arm click into the cam slot. Turn master switch on. (Compressor switch should remain in off position.) At completion of harvest cycle (Approx. 3 minutes after harvest was started), rotate knob clockwise until once again harvest is initiated. At this point compressor switch should be placed in "ON" position. Unit is now ready for automatic operation.

   NOTE: All cubers have two manual on-off switches. One is for motor compressor only during cleaning operation, one is master switch for complete unit.

2. When both switches are thrown "on", water inlet solenoid will be energized allowing water to enter cuber, thru warm water tank, 3 way water valve and up into back side of freezer cup section. This will "fill" icemaker for the freezing cycle - Check operation of spray bar drive motor thru hood top panel. Spray bar motor should be running during harvest cycle.

3. NOTE: WATER PUMP OPERATES DURING THE DEFROST CYCLE.
   Factory tests prove faster defrost and increased ice capacity by letting this pump operate continually.

4. Time clock dial does not rotate at the end of the harvest cycle; it is started latter by the cube size thermostat control located in the control box.

5. Freezing time will be approximately 20 to 30 minutes in a 70 degree ambient. (Longer if above, and shorter if below.) Average complete cycle time is 25 - 35 minutes.

6. Watch first cube harvest and check to make sure that plastic curtains have not been damaged in shipment. Also that curtains do not swing back into freezer and catch on spray bar.

7. Check size of cubes made: If too small, after a second cycle, adjust cube size control to lower or colder setting - until desired cube size is reached. Normal cube size is with a 1/4" depression in crown.

8. Check texture of cubes made: Partially cloudy cubes throughout suggest unit running short of water near end of freezing, or possibly an extremely bad water condition, which would indicate use of filtering or purifying equipment. Contact SCOTSMAN - Queen Products Division, Ice Machine Service Department, Albert Lea, Minnesota, for further details.

9. With unit on harvest cycle, take a handful of cubes made and hold on storage bin thermostat bulb. Should cut unit off at end of harvest cycle. Remove ice, unit should cut back on automatically in 3 or 4 minutes. Thermostat is factory set at 35 degrees out, 39 degrees in.

10. Install gauges and check head and back pressure: air-cooled models, head pressure after twenty minutes of freezing cycle at 70 degrees ambient will be approximately 125 pounds PSI. The back pressure starts out at approximately 50 pounds PSI and gradually pulls down to approximately 4 pounds PSI just before harvest cycle. Higher ambients and dirty condenser will cause higher pressures. Water-cooled models have water regulating valves factory set at 135 pounds PSI: check reading and adjust if necessary. Back pressure will operate the same as on air-cooled models.

11. Remove gauges, replace control box cover and all service panels.

12. Instruct owner on how to operate and clean machine.

FINAL CHECK LIST

1. Is the unit level? (IMPORTANT)
2. Have all electrical and piping connections been made?
3. Has the voltage been tested and checked against the nameplate rating?
4. Have the compressor hold-down bolts been checked to insure the compressor is snug to its mounting pads?
5. Is the water supply valve open and the electric power properly hooked up?
6. All masking tape removed from doors, panels and inner freezer curtain?
7. Is the unit clean? Has storage bin been wiped clean with cold water cloth?
8. Has the owner been given the operating manual, and has he been instructed on how to operate the machine?
9. Have the installation and warranty cards been filled out? Check for correct model and serial numbers from serial plate on unit then promptly mail card to factory.
10. Check all refrigerant and conduit lines to guard against vibrations and possible failure.
11. Is there 4" clearance behind and around unit for proper air circulation?
12. Is unit in a room where ambient temperatures are minimum 50° F. even in winter months?
13. Has water supply pressure been checked to insure at least a minimum pressure of 30 pounds?

WIRING DIAGRAM
230-115/60/1
Air Cooled

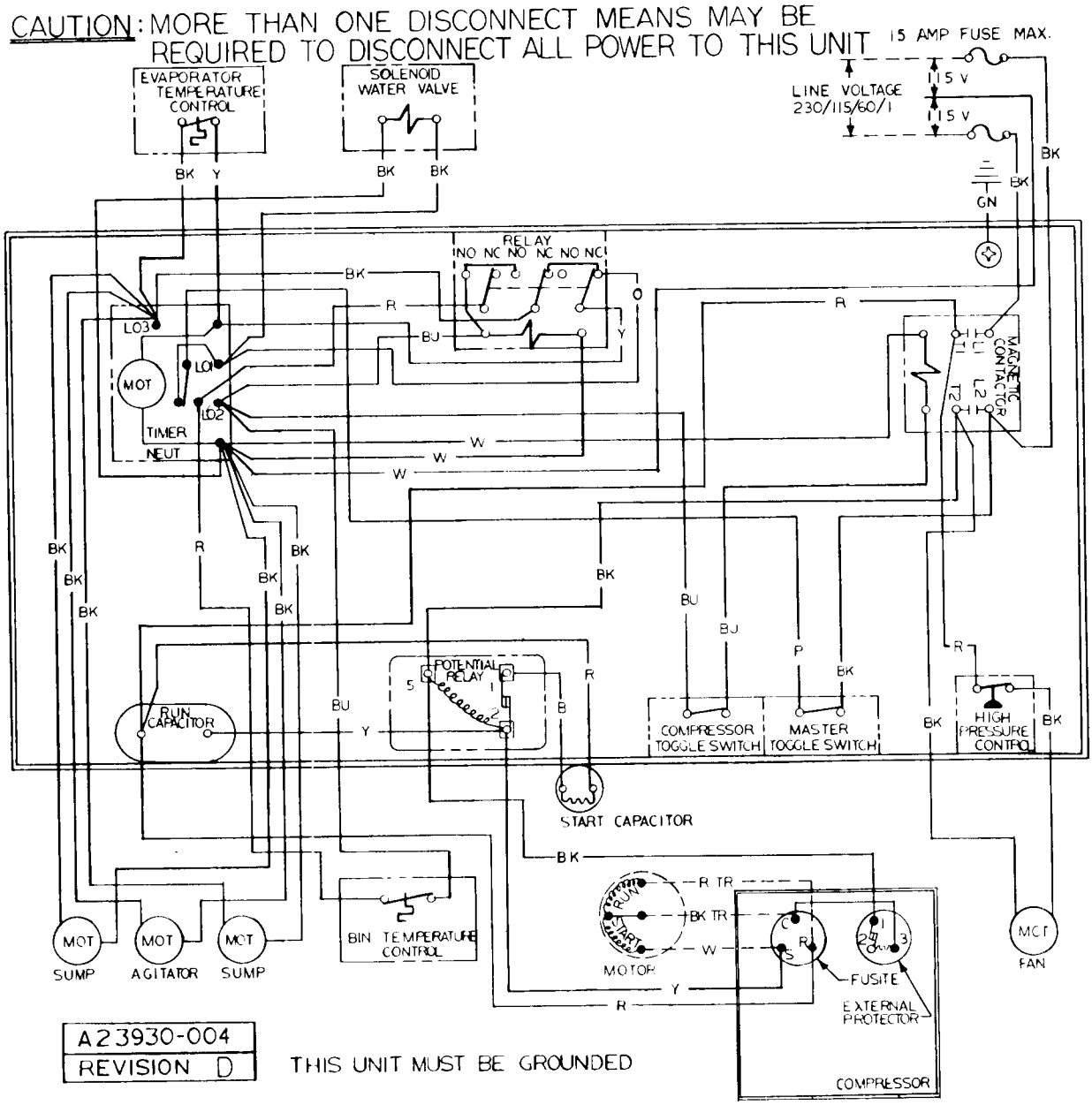

WIRING DIAGRAM
230-115/60/1
Water Cooled

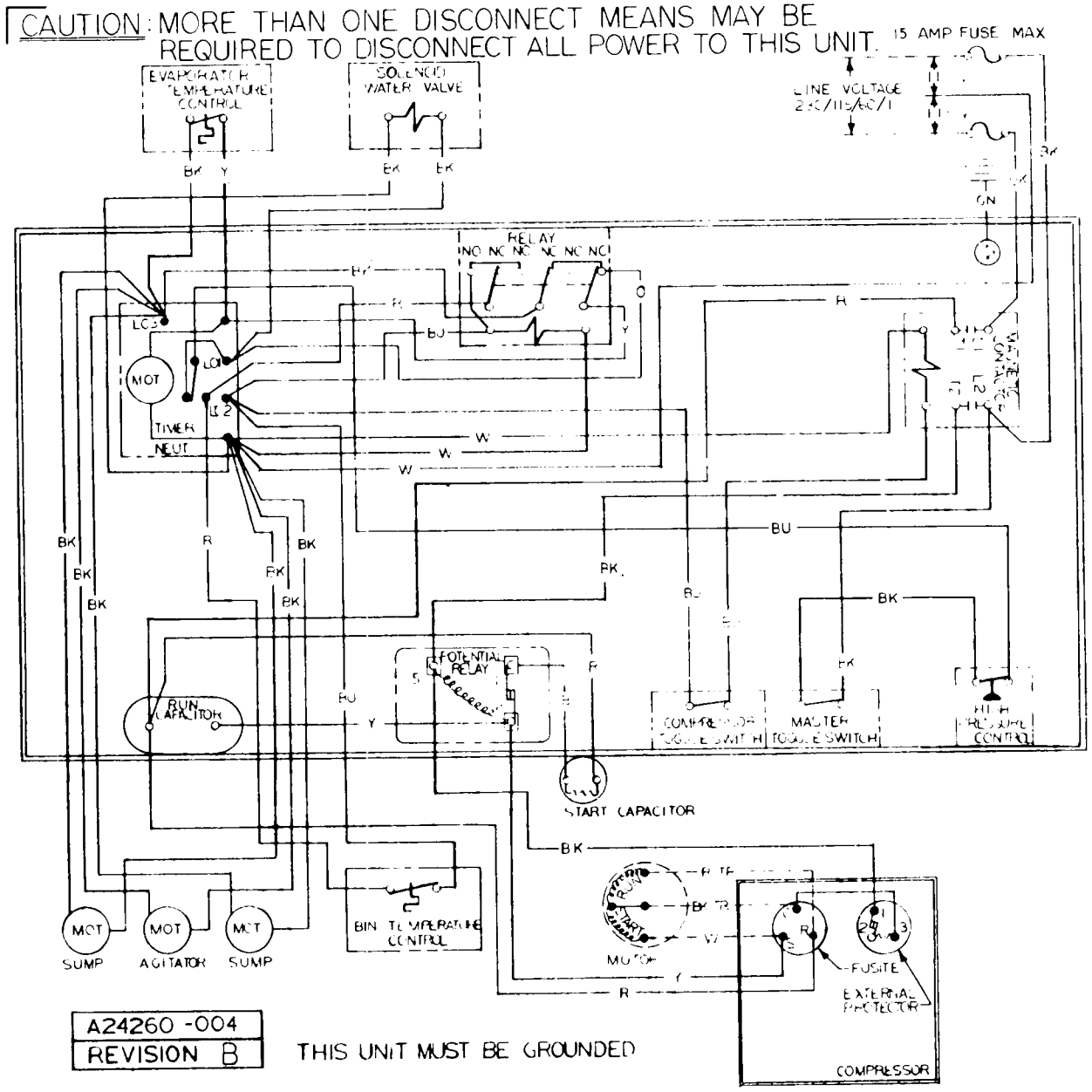

WIRING DIAGRAM
208/60/1
Air Cooled

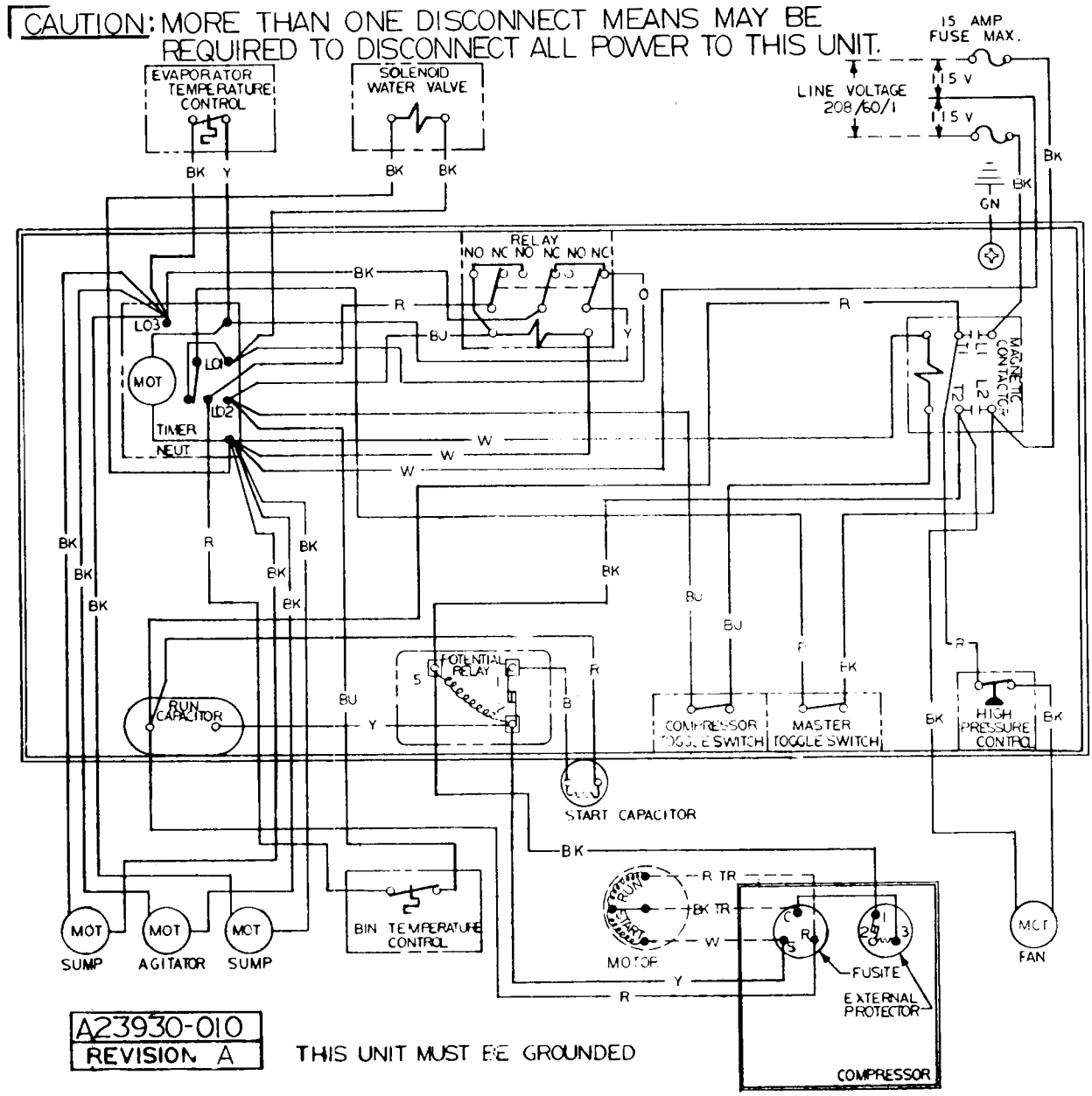

WIRING DIAGRAM
208/60/1
Water Cooled

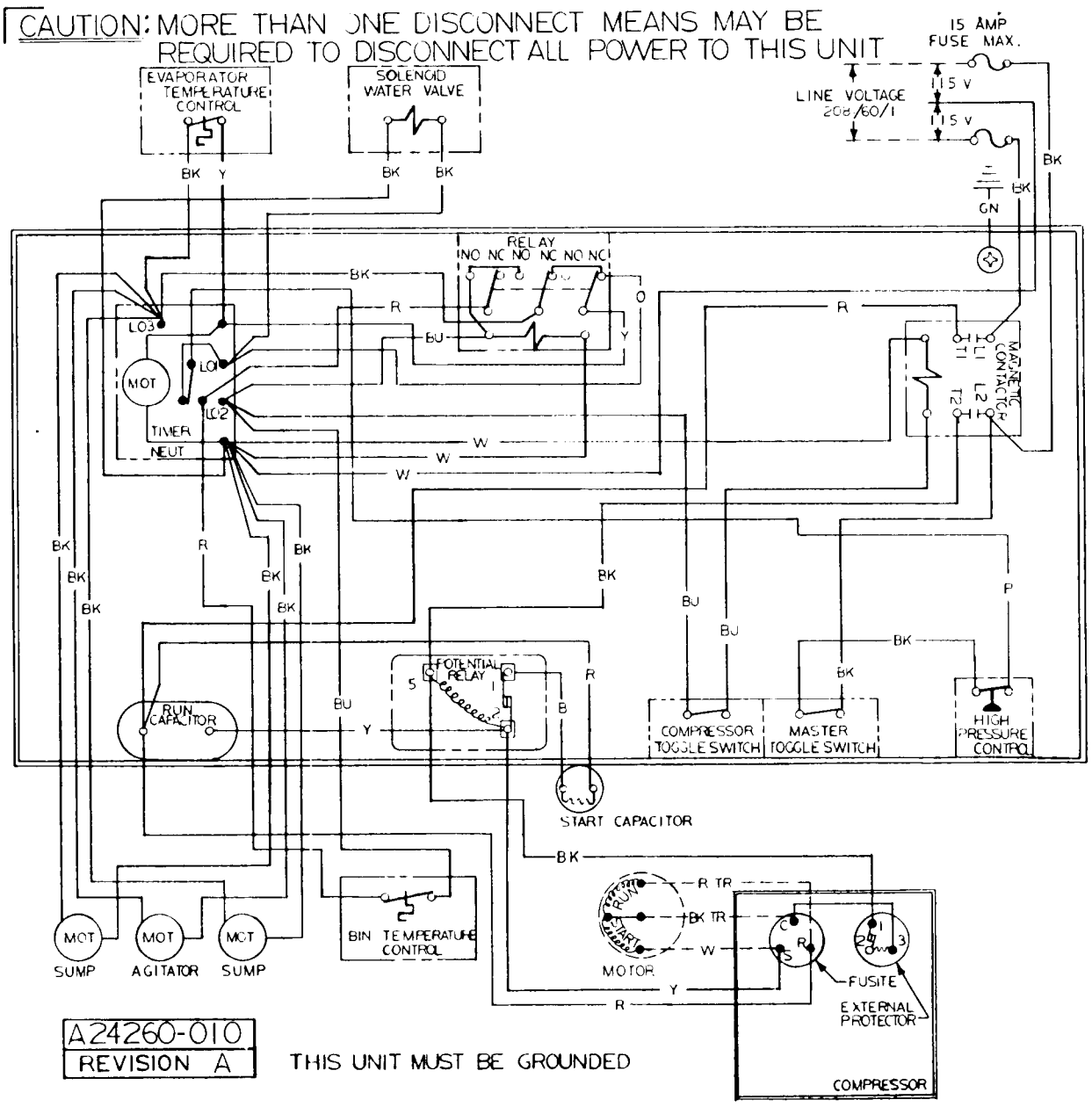

A24260-010
REVISION A

THIS UNIT MUST BE GROUNDED

ELECTRICAL COMPONENTS AND FUNCTIONS

1. Bin Temperature Control: Purpose to maintain a supply of ice in storage.

2. Compressor Toggle Switch: Control compressor ON-OFF only.

3. Master Toggle Switch: Manual ON-OFF of whole machine.

4. High Pressure Control: On at 140 PSI OFF at 120 PSI.

5. Magnetic Contactor: To provide across the line starter of ample carrying capacity.

6. Relay: Function to hold unit in freezing and harvest cycles once they have started. This insures full cubes everytime a harvest occurs and prevents short cycling on bin thermostat.

7. Evaporator Temperature Control: Controls size of ice cube produced by machine. To increase cube size turn control to right. To decrease cube size, turn knob to left.

8. Timer: Function is to control harvest and part of freezing cycle. Timer is energized when reverse acting cube size control closes. Timer continues freezing cycle for 12 minutes and then switches unit into harvest cycle which runs for 3 minutes.

WIRING DIAGRAM
208-220/60/3
Air Cooled

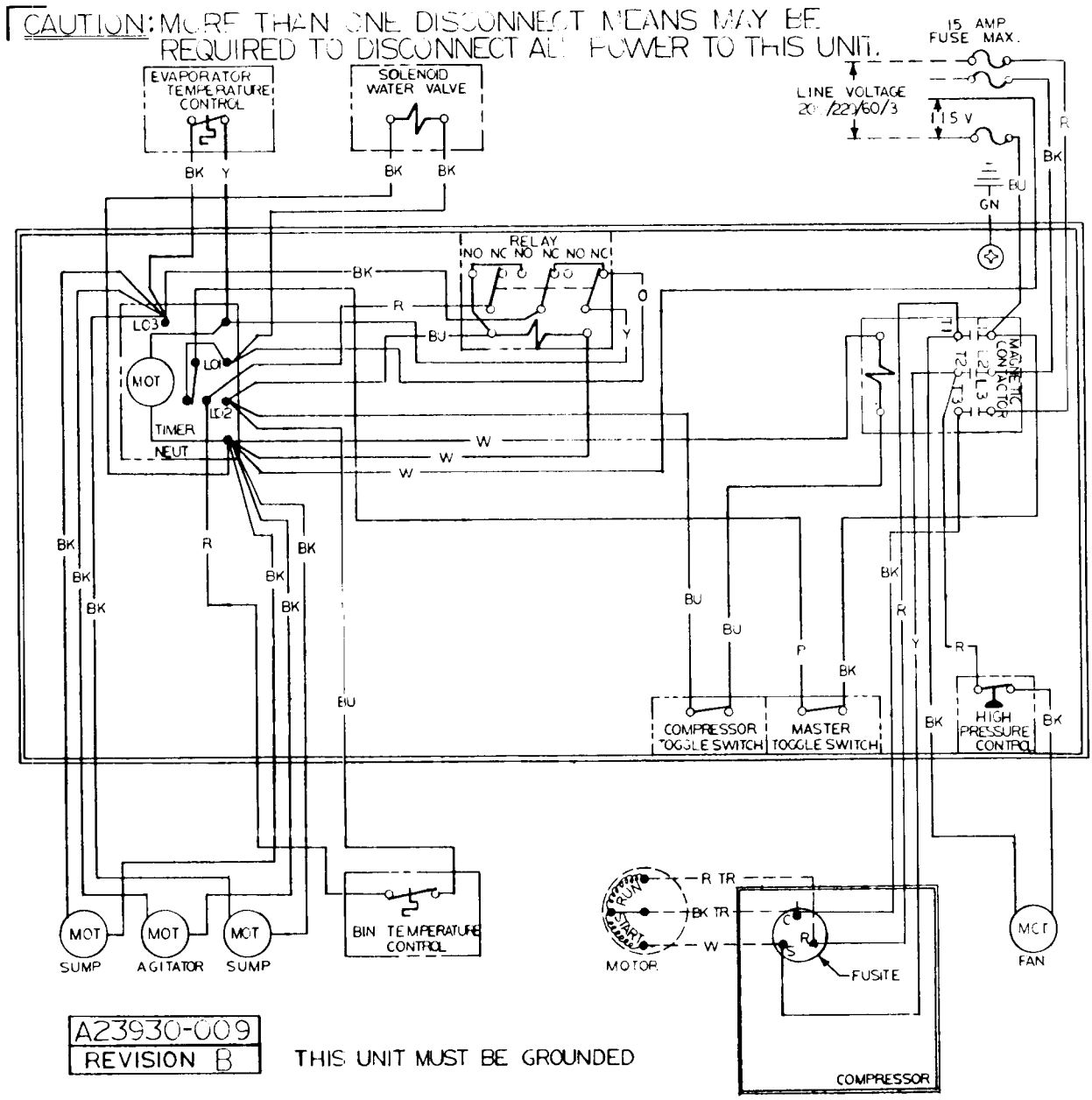

A23930-009
REVISION B

THIS UNIT MUST BE GROUNDED

WIRING DIAGRAM
208-220/60/3
Water Cooled

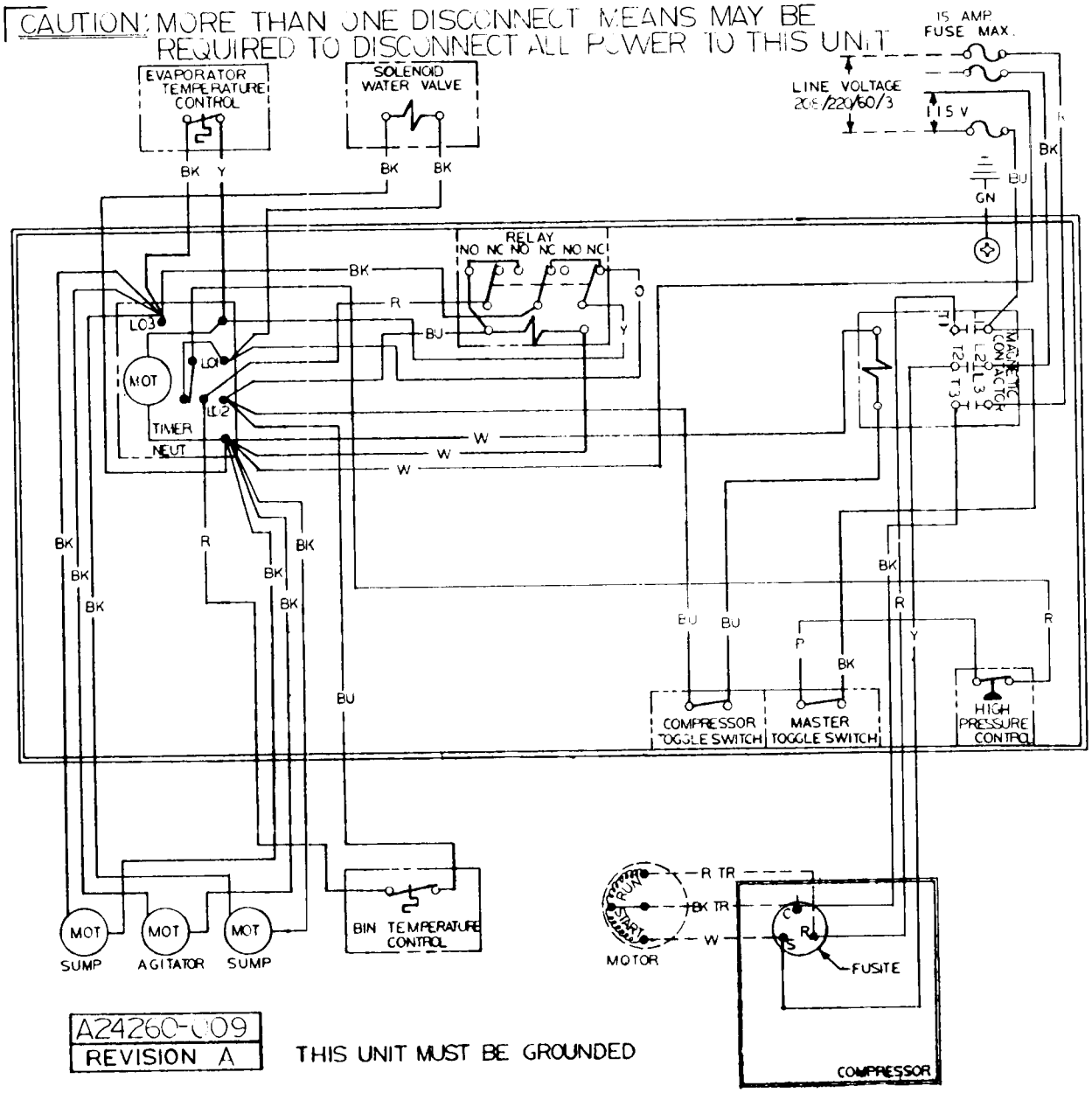

A24260-009
REVISION A

THIS UNIT MUST BE GROUNDED

FREEZING CYCLE

As the freezing cycle starts, electrically the components operating are the compressor and fan motor, recirculating water pump and the sprayer tube drive motor.

The refrigerant circuit which equalized at about 50 pounds gauge during the "off" or harvest cycle, thru the capillary refrigerant control, now rises rapidly to 125 - 135 pounds head pressure. The suction or low side pressure starting at 50 pounds pulls down fairly quickly to about 25 pounds at which point the ice cubes are starting to form a thin shell in cube cups. Continuing from 25 pounds slowly on down towards the finished cube pressure of approximately 5 pounds takes an average of 20-30 minutes.

During this portion of the freezing cycle the electrical brain is the reverse acting, cube size thermostat. This thermostat electrically is holding the freezing cycle components "live". When the ice cubes are about 3/4 formed, the decreasing suction pressure and temperature, activate the temperature sensing bulb of the reverse acting, cube size control, closing its contacts. This does not interrupt the freezing cycle, the closing of the cube size thermostat contacts electrically transfers the finishing of the freezing cycle to the finishing clock motor or timer as it is sometimes called. One full revolution of the timer dial is 15 minutes as is noted by the numerals on the dial. However, of the total 15 minutes on the timer dial, 3 minutes are used for the defrost or harvest cycle.

This means then that after the cube size contacts close they activate the timer motor. This control takes over and continues freezing cycle for another 12 minutes with timer dial now turning. When the 12 minutes are completed an offset in the timer dial allows a micro switch with activating arm riding on that cam to drop into the slot, electrically stopping the freezing cycle and starting the 3 minutes harvest cycle - The clock motor continues thru harvest cycle. A notch on the timer dial now lifts micro switch arm up on dial, electrically stopping harvest cycle and starts back into a new freezing cycle.

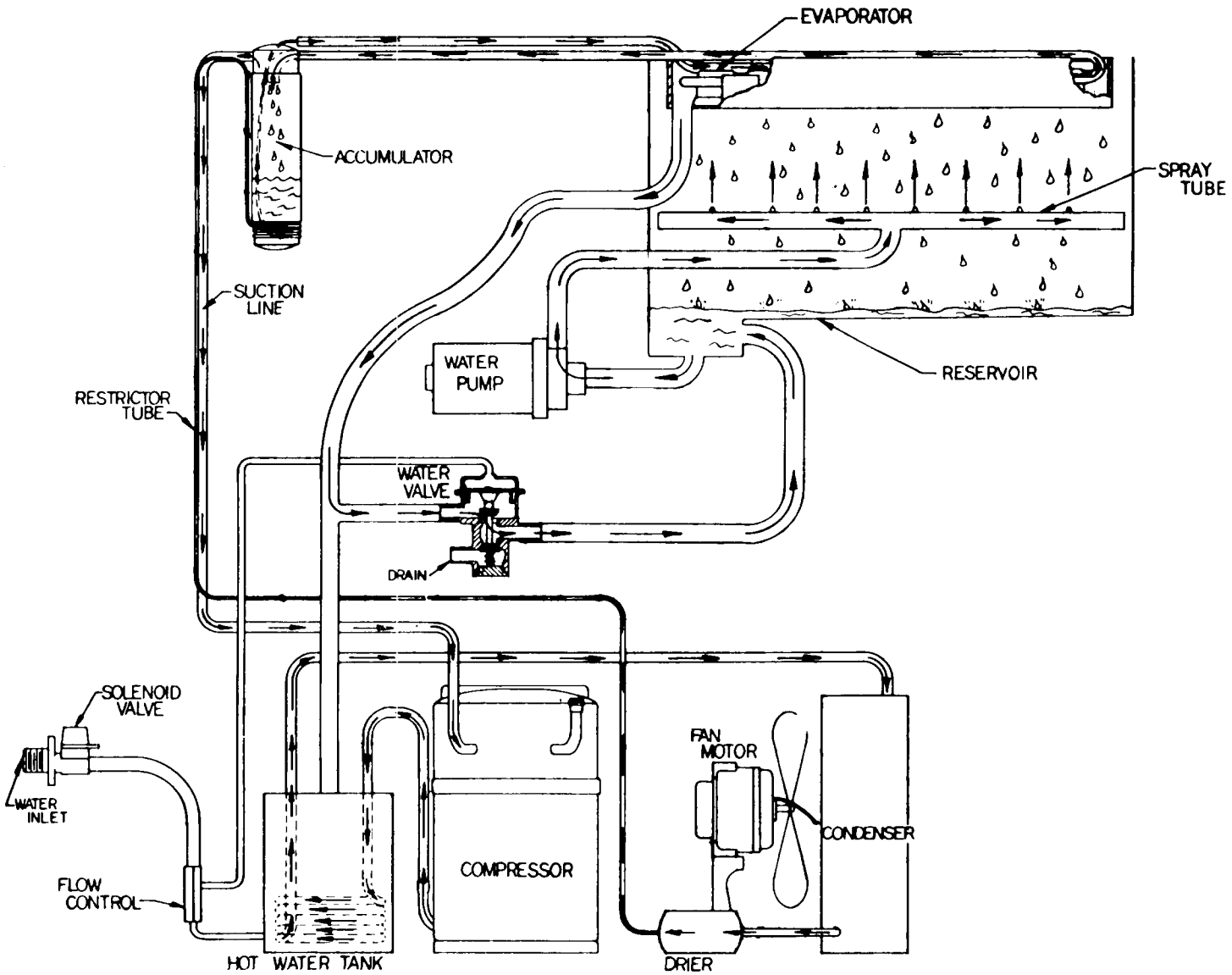

HARVEST CYCLE

At the end of the freezing cycle the time clock operated switch opens compressor, and fan motor circuit, and closes circuit to time clock motor, spray drive motor and solenoid operated inlet water valve. Inlet water pressure at bottom of hot water tank now forces heated water out the top of tank through warm water tubing and into back side of evaporator cup section. At the same time the surplus water from the preceding batch of ice cubes goes through three way water valve and off to drain. Water from the hot water tank flows into the rubber platen holding the evaporator cups and by conduction on back of cups causes the formed ice cubes to defrost or drop out. The platen-evaporator cavity is normally filled to the overflow level in 2 or 2-1/2 minutes. The amount of water running over the overflow pipe is controlled by the size of the flow control orifice and the length of the harvest time setting on the time clock past the overflow point. Over-flow water goes down the drain also.

Meanwhile, cubes released drop by gravity and are mechanically ejected thru curtained opening into ice storage bin by sprayer tube which is being actuated by drive motor. At the completion of harvest cycle, the micro-switch on the timer now drops points holding defrost components in cycle and switches to freezing cycle set of contacts. Timer completes harvest cycle when micro-switch roller lifts out of rear cam slot. Timer clock motor now stops and will not start again until cube size thermostat control closes once more. Electrically harvest cycle components cease, freezing cycle components start up. Chilled defrost water from the upper cavity now flows by gravity back through the three way valve, to the reservoir where the water pump continually recirculates it through sprayer tube to produce the next batch of cubes.

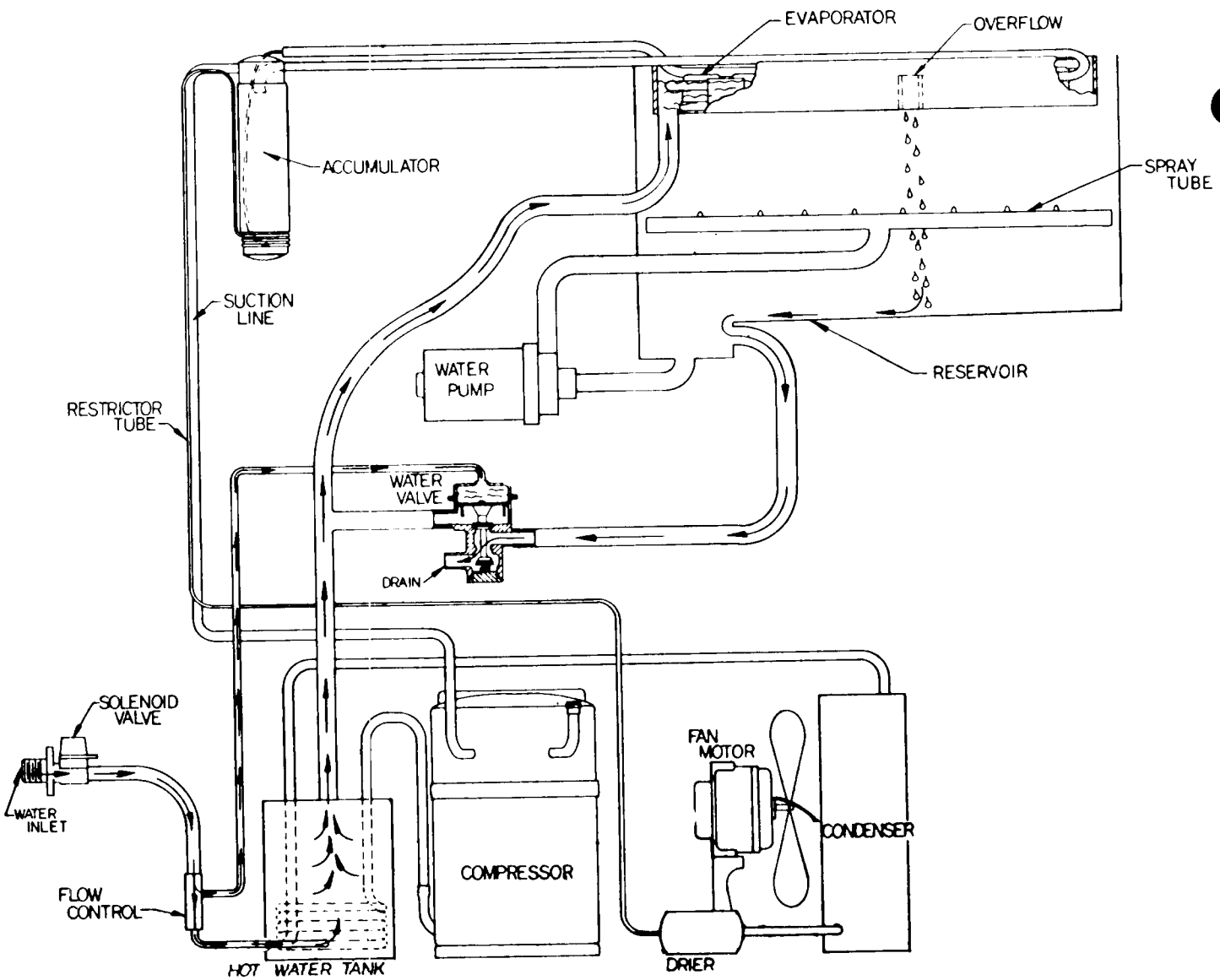

SYMPTOM	POSSIBLE CAUSE	SUGGESTED CORRECTION
Unit will not run.	Blown fuse	Replace fuse & check for cause of blown fuse.
	Bin thermostat set improperly	Replace.
	Switch in Off position	Turn switch to On Position.
	Inoperative master switch	Replace switch
	Timer contacts open	Replace timer micro-switch
Compresser cycles intermittently	Low voltage	Check circuit for overloading. Check voltage at the supply to the building. If low, contact the power company.
	Dirty condenser	Clean with vacuum cleaner, air or stiff brush. (DO NOT use wire brush.)
	Air circulation blocked	Allow sufficient air space all around unit.
	Inoperative condenser fan motor	Check to see if defective, If defective, replace.
	Non-condensable gases in system.	Purge the system.
Cubes too small	Cube size control set too high	Lower the setting. Turn towards colder.
	Partially restricted capillary tube	Blow charge, add new gas & drier, after evacuating system with suction pump.
	Moisture in system	Same as above.
	Shortage of water	See remedies for shortage of water.
	Shortage of refrigerant	Check for leaks and recharge.
Cloudy cubes	Shortage of water	See remedies for shortage of water.
	Dirty water supply	Use water softener or water filter.
	Accumulated impurities	Use SCOTSMAN Ice Machine Cleaner.
Shortage of water	Water spraying out through curtains	Hang curtain in proper position.
	Three-Way water valve leaking	Check the valve for foreign matter. Check valve seats and replace if necessary.
	Water entering hot water tank too slowly	Check pressure at source - 30 lb. required. Dirt in solenoid and flow control - blow out.
	Partial restrictions in water strainer.	Clean Strainer.
Irregular size cubes and some cloudy	Some jets plugged	Clean jets.
	Shortage of water	See Shortage of Water
	Unit not level	Water overflowing air vent holes on low side burning cubes. Level as required.

SYMPTOM	POSSIBLE CAUSE	SUGGESTED CORRECTION
Cubes too large	Cube size control turned too cold	Turn setting on cube size control dial towards warmer
Decreased ice capacity	Inefficient compressor	Replace.
	Leaky water valve	Replace or repair.
	High head pressure	Dirty condenser. Clean. Bad fan motor. Replace.
	Non-condensable gas in the system	Purge the system.
	Poor Air circulation or excessively hot location	Relocate the unit, or provide for ventilation by cutting openings.
	Overcharge of refrigerant	Correct the charge. Purge off slowly.
	Partially restricted cap tube	Purge & replace charge and drier
Hole washed inside cube	Water over the top of the cube cups during harvest.	Level unit.
Poor harvests	Too short defrost time	Check and adjust harvest cycle. Timer should be set at number 3.
	Restriction in incoming water line.	Check water feed line strainer and flow reducing valve. Do not remove flow control washers.
	Insufficient quantity of hot water	Cold ambient - must be 50° minimum. Faultyfan control on air cooled models.
	Solenoid valve not opening the water valve	Solenoid binding or burned out. Replace.
	Air vent holes in upper cube cups plugged	Clean out holes.
Lower spray bar not turning.	Upper and lower spray bars interchanged.	Spray bar with holes in center nut must be installed in upper freezing chamber.
Unit won't Harvest.	Insufficient water pressure to energize 3/way water valve	Machine requires minimum of 30 lbs. flowing water pressure. NOTE: If 3 way water valve does not energize, the harvest water will by-pass the evaporator and flow directly down the drain.
Excessive Water in Unit base	Cube chute not positioned correctly.	Reposition so that bottom edge of cube chute rests inside of cube guide soldered to the base.
	Water tubing leaking (Check during freeze & harvest cycle)	Check. Tighten or replace.
Shortage of water in upper freezing chamber	Lower seal in upper freezing chamber defective.	Replace.

MAINTENANCE PROCEDURES SECTION

WARNING: ALL STEPS LISTED BELOW SHOULD ONLY BE STARTED WHEN WATER AND ELECTRICAL SUPPLY ARE OFF TO PREVENT ACCIDENTS.

A. To remove cabinet top.
   1. Remove 4 screws in top of panel.
   2. Lift panel off unit.

B. To remove cabinet front.
   1. Remove 2 screws in top front of panel.
   2. Tip top of panel back approximately 6" and lift up.

C. To remove end panels.
   1. Remove 2 screws from top of panel.
   2. Tip top of panel back 6" and lift up.

D. To remove 3/way water valve.
   1. Remove right end panel.
   2. Remove cube chute. (Tip top of cube chute out and lift up. When reinstalling be sure cube chute is inside of guide arrangement soldered to base.)
   3. Drain water from freezer sump tank. (Drain tube is connected to plug on sump pump motor.)
   4. Disconnect all lines to valve.
   5. Remove 2 screws mounting valve to frame.

E. To remove water pump.
   1. Remove right end panel and front panel.
   2. Remove cube chute. (Tip top of cube chute out and lift up. When reinstalling, be sure cube chute rests inside of guide soldered to base.)
   3. Drain water from freezer sump tank. (Drain tube is connected to plug on pump.)
   4. Trace electrical leads to control box and disconnect.
   5. Disconnect hose clamps at pump body.
   6. Remove mounting bolt and mounting strap.
   7. Remove Pump.

NOTE: Screw clamps should be installed on pump discharge tube when unit is reassembled.

F. To remove water inlet solenoid valve.
   1. Remove right end panel.
   2. Disconnect electrical leads.
   3. Disconnect water inlet line from machine.
   4. Remove valve.

G. To remove flow controls.
   1. Remove front panel and left end panel.
   2. Drain hot water tanks by removing drain caps on bottom of flow controls.
   3. Replace complete flow control to include brass housing.

NOTE: This machine will not function properly with the flow washers removed. Flow washers are rated at 1/2 GPM.

H. To remove agitator motor.
   1. Remove front panel, right end panel and top panel if possible.
   2. Trace leads to control box and disconnect.
   3. Remove cube chute (Tip top of cube chute out and lift up. When reinstalling be certain cube chute rests inside of guide soldered to base.)
   4. Reach in thru curtained opening and remove spray bar by lifting upward releasing bar from center hub. Next remove drive fork from drive shaft attached to motor. (NOTE: Drive fork has left hand threads and must be removed with drive extension to motor if top panel is not removed from unit.)

5. Remove 4 screws holding drive motor to freezer top.
6. Remove drive motor.

I. To remove Cube size control.
1. Remove front panel and right end panel.
2. Remove 2 screws mounting control to corner gusset.
3. Trace capillary tube to suction line and peel back insulating tape.

NOTE: Do not make any adjustments on new control until control bulb has been reinsulated to suction line.

J. To remove bin control.
1. Remove front panel and right end panel.
2. Remove 2 screws holding control to corner gusset.
3. Trace capillary tube to insure new control capillary tube is routed in same manner.

NOTE: Do not attempt to adjust this control. If storage bin is not filling to the capillary or is filling above the capillary into the cube chute, the control should be replaced.

K. To remove plastic curtain.
1. Remove right end panel.
2. Remove plastic cube chute. (Tip top of chute out and lift up. When reinstalling be certain cube chute rests inside of cube guide soldered to the base.)
3. Pull off 3 retainer clips holding curtain in place.

NOTE: When reinstalling curtain be certain the side with the extruding point is positioned towards the left of opening. Also, that the edge of the curtain lines up with the upper edge of the freezer opening.

L. To remove spray bars.
1. Remove right end panel.
2. Remove cube chute. (Tip top of cube chute out and lift up.)
3. Remove plastic curtain (see item K.)
4. Reach thru ice opening and feel for spray bar.
5. Follow spray bar to center hub, turn spray bar so one end points towards curtain opening.
6. Lift straight up on spray bar, then out after spray bar comes off center hub.

NOTE: Upper spray bar must interlock on drive pins when reinstalled.

M. To remove upper freezing chamber sump tank.
1. Remove front panel and right end panel. If possible, remove top panel.
2. Remove agitator motor (See H) NOTE: It is not necessary to disconnect electrical leads in control box.
3. Remove drive fork from spray bar drive in upper and lower freezing chambers.
4. Remove tygon tubes from pump to freezing chamber and set aside.
5. Unscrew harvest water fitting in rear right hand corner of freezing chamber assy.
6. Remove cube chute.
7. Disconnect water line to 3 way water valve.
8. Remove 4 screws holding upper freezer to back panel. Do not remove lower four screws.
9. Remove front bracket attached to lower freezing chamber. It is not necessary to remove upper bracket from upper freezing chamber.
10. Lift whole freezing chamber up and prop in place using two 2 x 4 on edge between lower chamber and upper chamber. Remove E ring in spray bar drive shaft. (See page 36 for exact location of E ring.
11. Remove 2 x 4's.
12. Reach in thru upper ice chute opening, lift up spray bar drive. Insert half of 5/8 ID 4-1/4 inches long to hold drive shaft up.
13. Stand on right front corner of machine. Reach right hand thru ice opening and gently force evaporator assembly up and out of freezer sump. As bottom of evaporator clears the front of freezer sump, pivot freezing chamber sump out of machine.

NOTE: When replacing the foamed plastic chamber, with a new plastic chamber, it is necessary to drill holes thru the front freezer bracket and the back panel into the bracket foamed onto the freezer assy. Drill depth must not exceed 3/8". Freezer assy should slope 3/8" down towards the ice cube opening.[

FUNCTIONAL PARTS AND MAINTENANCE

PART NAME: Spray Bar Assemblies

NUMBER: A23917-1 Upper and Lower.

FUNCTION: These tubes act as water distributors for the ice cube cups. Each tube has jets over its length. Supply water is forced into the jet tubes by the sump pump and is directed upward in a continuous stream. Drive motor thru drive shaft rotates the spray bars to get a full coverage spray.

REPAIRABLE: Yes, jets replaceable.

MAINTENANCE: All jets should be cleaned by running Scotsman Ice Machine Cleaner through unit. This step will eliminate hand cleaning. Partially plugged jets will produce cloudy or partial cubes. Wholly plugged jet will not produce a cube in cube cups it normally covers.

PART NAME: Spray Tube Drive Linkage

NUMBER: Parts listed in parts section.

FUNCTION: Drive spray tubes during freezing cycle to produce clear cubes and also drive spray tubes during harvest cycle to eject cubes thru ice opening.

REPAIRABLE: No. replace defective parts.

MAINTENANCE: None.

PART NAME: Relay – Ameco or Potter Brumfield – 2 P.D.T.

NUMBER: 12-1598

FUNCTION: Relay is used as a by-pass on the bin thermostat when it tries to cut unit off on a full bin of cubes during a freezing cycle. This insures full cubes every time a harvest occurs and prevents short cycling on bin thermostat.

SETTING: Factory set.

REPAIRABLE: No. Replace when inoperative.

MAINTENANCE: Check electrical connections.

PART NAME: Bin Thermostat

NUMBER: 11-353-3

FUNCTION: To automatically cut machine off when ice level in storage bin reaches thermobulb. Automatically starts machine when ice level in bin falls below bulb location.

SETTING: Factory set.

REPAIRABLE: No. Replace when inoperative or out of adjustment.

MAINTENANCE: Check capillary for cracks or worn spots due to vibration.

NOTE: Hold an ice cube against thermostat capillary tube to check operation of the control.

PART NAME: Inlet Water Solenoid

NUMBER: 12-1434-1

FUNCTION: During freezing cycle this valve is closed, keeps water from entering heat exchanger tank and also from leaking out of tank.
During harvest or defrost cycle this valve opens and allows inlet water to pass thru flow control orfice and thence to push warm water out of heat exchanger tank into back of cup molds, performing the defrost.

SETTING: Factory set.

REPAIRABLE: Yes

MAINTENANCE: Flush control each six months.

PART NAME: Fan Motor

NUMBER: 18-788-2 (230/60/1)
50 Watt - Thermally Protected

FUNCTION: Maintain proper head pressures by circulating air across air cooled condenser.

REPAIRABLE: No.

MAINTENANCE: None.

PART NAME: Water Regulating Valve (Water cooled models only)

NUMBER: 11-198 – Penn Type V46AA-12

FUNCTION: To maintain constant head pressures by regulating amount of incoming water thru water cooled condenser.

REPAIRABLE: No. however, valve can be flushed out.

MAINTENANCE: None.

PART NAME: Hot WaterTank

NUMBER: 2 per unit – A23926-001

FUNCTION: These two hot water tanks have coils of copper tubing inside thru which the high temperature refrigerant gas flows thus heating the water in the tanks for use during the harvest cycle. During the harvest cycle this hot water is forced into the upper portion of the evaporator to harvest the batch of ice produced during the freezing cycle.

REPAIRABLE: No, however, tank can be flushed out.

MAINTENANCE: Tanks require no maintenance.

PART NAME: Hermetic Motor Compressor.

NUMBER: 18-2300

FUNCTION: Circulates and retrieves refrigerant throughout entire system.

MAINTENANCE: Keeps clean and free of dust, grease, etc.

PART NAME: Contactor

NUMBER: 12-820-1 (-4 & -10 voltage) 12-739-1 (-9 voltage)

FUNCTION: Across the line contactor used to provide protection for hi voltage compressor only. Contactor is wired so any of the controls in pilot circuit such as bin thermostat will cause contactor holding coil to drop contact points when actuated. There are no overloads or resets on this control.

SETTINGS: Factory set, no adjustments necessary.

REPAIRABLE: No. Replace.

MAINTENANCE: Check control for loose electrical connections and blow free any dust, dirt, etc.

PART NAME: Reverse Acting Temperature Control

NUMBER: 11-351-3

FUNCTION: Reverse acting temperature control, closes on temperature decrease, opens on temperature rise. Control determines length of freezing cycle and by the same token, the cube size. A lower setting on control will produce larger cubes, a higher setting, smaller cubes. This control actuates time clock motor, Part No. A-23712-1, which then takes over balance of freezing cycle (12 minutes) and also defrost period 3 minutes.

SETTINGS: Adjustable by screw driver slot.

REPAIRABLE: No. Replace when inoperative.

MAINTENANCE: Check electrical connections. Blow points free of dust, dirt, lint, etc.

PART NAME 3 Way Valve

NUMBER: A21029

FUNCTION: To route water for freezing and harvest cycles. Incoming water pressure during harvest flexes rubber diaphram against valve stem assy which opens and closes necessary ports. Stem is spring loaded for return to position during freezing cycle.

SETTING: None.

REPAIRABLE: Yes, diaphram, "O" ring and spring replacable.

MAINTENANCE: Flush during maintenance cleaning.

PART NAME: Sump Pump

NUMBER: 2 per unit – 12-1849-01

FUNCTION: Recirculating pump used to pump supply water in reservoir to jet tubes during freezing cycle. and harvest cycle.

SETTING: Factory set.

REPAIRABLE: Yes, see parts breakdown.

MAINTENANCE: Flush out reservoir and sump pump intake with Scotsman ice machine cleaner.

PART NAME: Agitator Drive Motor – Merkle Korff

NUMBER: 12-1824-1

FUNCTION: This motor is used to drive the linkage mechanism which in turn drives the rotating jet spray tubes. This provides a constant spray movement to all the inverted cube molds and by so doing also aerates the water producing clear, solid Scotsman cubes. Also ejects cubes thru ice opening during harvest cycle.

SETTING: No settings on motor.

REPAIRABLE: Yes - to some extent. Not recommended although front bearings and windings could possibly be replaced by electric motor shop. Normally replace motors.

MAINTENANCE: Oil every six months or less as use indicates. Use SAE 20 oil. There are two wick oil cups on the motor and a gear case slotted screw which has to be removed to add or change oil in gear case proper. Drive linkage should be inspected to insure free movement with no bindings or drag on drive motor.

PART NAME: Time-Finishing Clock – Manufactured by Queen Products Div.

NUMBER: A23712-1

FUNCTION: Heart of cyclematic control system is the reverse acting cube size control, No. 11-351-3, and the time clock it actuates. All electrical components are connected to the time clock terminal board and are shunted by means of a double pole single throw micro-switch to either the freezing cycle or harvest cycle. Micro-switch is in turn actuated by a brass cam that is directly connected to the electric timer clock motor. Timer has 15 minute cycle, 12 minutes on freezing cycle after being cut on by lo temperature control and 3 minutes on defrost cycle.

The cam assembly on the timer consists of two brass discs which can be adjusted to lengthen or shorten the defrost cycle.

SETTING: Normal setting for defrost is on No. 3 which is 3 minutes.

REPAIRABLE: Yes. Micro-switch, Part No. 12-1721-50 is replaceable.

MAINTENANCE: Check all electrical connections, blow contact points free of dust, dirt, etc.

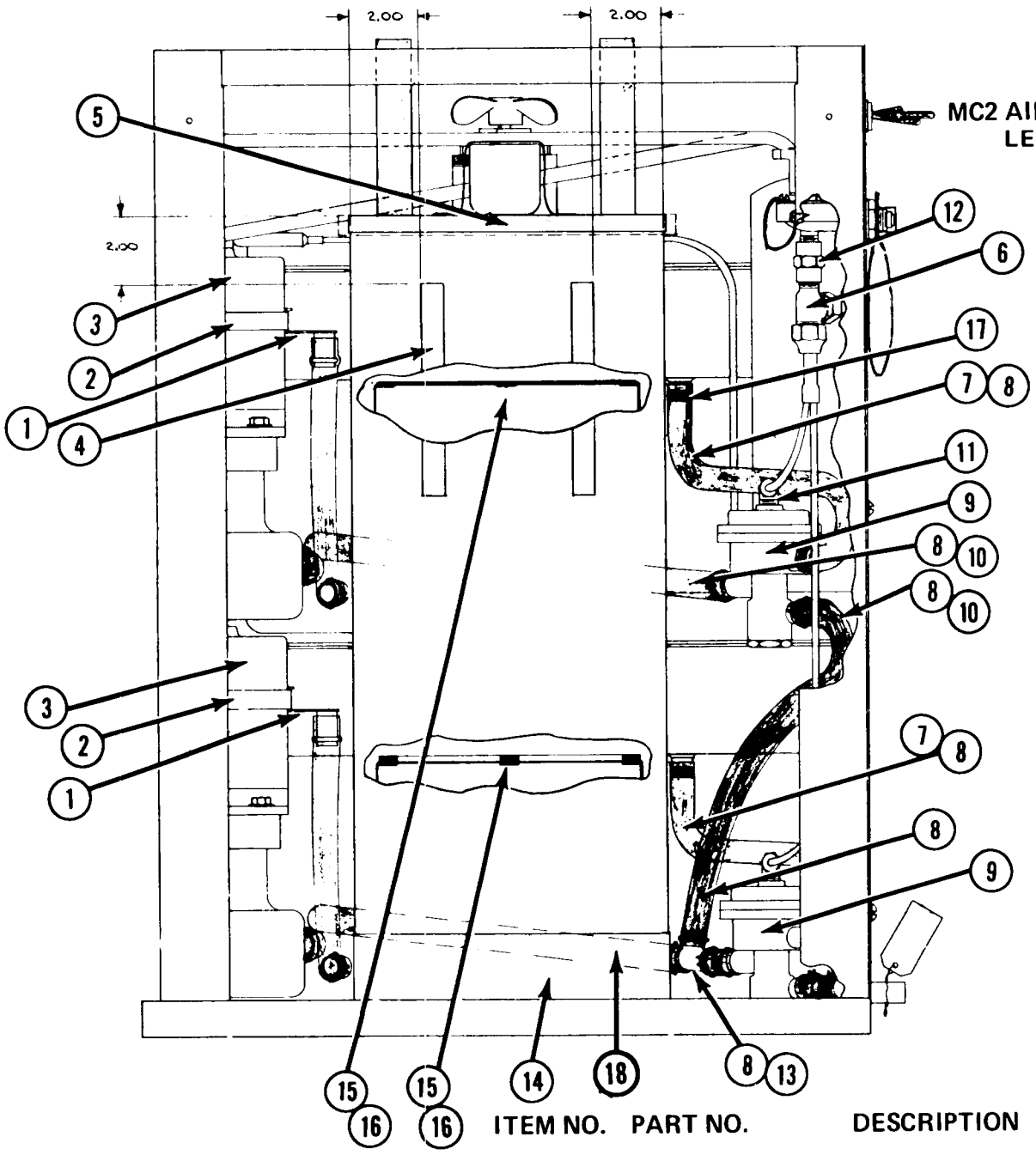

MC2 AIR & WATER COOLED
LEFT END VIEW

ITEM NO.	PART NO.	DESCRIPTION
1.	A24056-001	Tube & Bracket Assy.
2.	2-706	Clamp
3.	12-1849-01	Water Pump Assy.
4.	13-595	Gasket (Specify feet)
5.	2-2075-01	Cover, Cube Chute
6.	12-1434-1	Solenoid Valve
7.	5-509-01	Tube platen drain
8.	2-2013-03	Hose Clamp
9.	A21029	3/Way Valve
10.	5-501-01	Tube
11.	16-620-7	Elbow
12.	16-540	Coupling (pipe)
13.	A13169-001	Tee Assy.
14.	2-2074-01	Cube Chute
15.	3-1526-01	Clips, U Type
16.	2-2038-01	Curtain Assy.
17.	A16238-1	Harvest Water Fittings
18.	S7434 A24096-001	Tube NOTE: Same as Item No. 10 except 2 inches shorter.

MC2 WATER COOLED

TOP VIEW

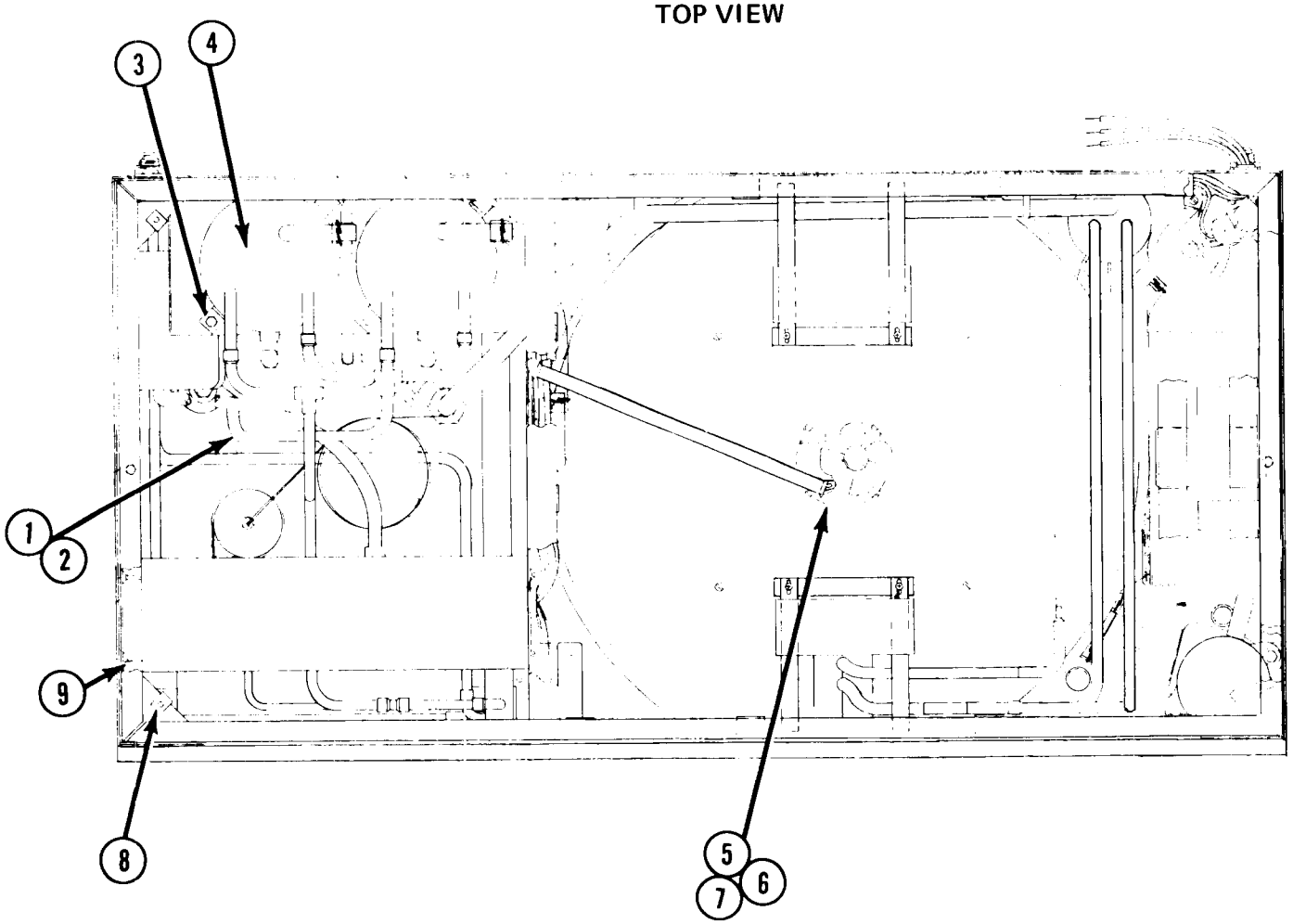

ITEM NO.	PART NO.	DESCRIPTION
1.	16-560	Valve Core
2.	16-563	Brass Cap
3.	A19233	Bracket Tank
4.	A23838-001	Tank & Flow Control Assy.
5.	12-1824-01	Agitator Motor
6.	S6900	Drive Arm Assy
7.	A23830-001	Drive Shaft
8.	3-1423-02	Speed nut

MC2 WATER COOLED
FRONT VIEW

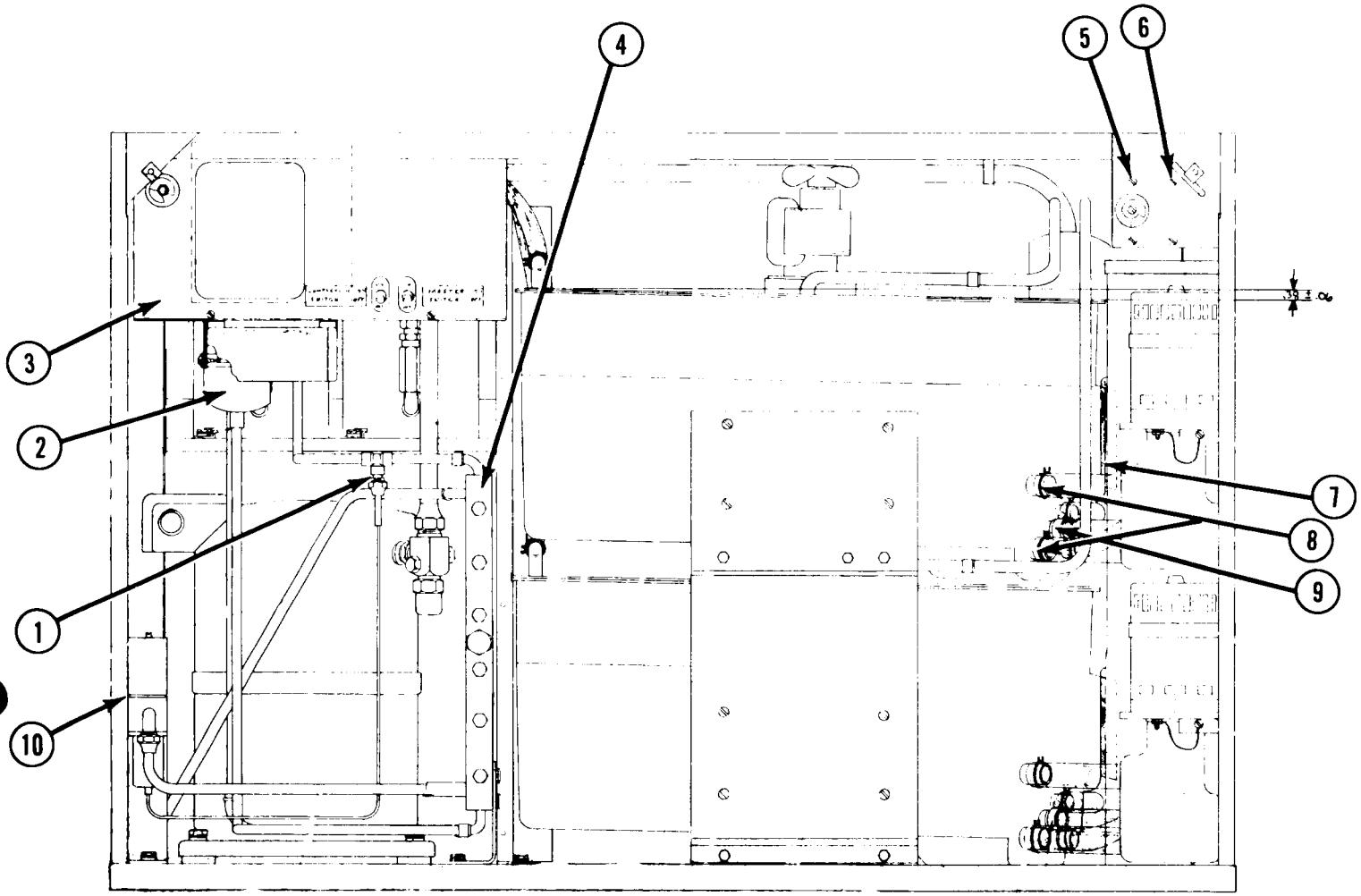

ITEM NO.	PART NO.	DESCRIPTION
1.	16-652-01	Adapter
2.	2-677-01	Drier
3.	A24065-01	Cover, Control Box
* 4.	18-3308-1	Condenser (Edwards Condenser)
5.	11-345-2	Cube Size Control (MCL-MCM)
	11-351-3	Cube Size Control (MCS)
6.	11-353-03	Bin Control
7.	13-595	Gasket, Cube Chute
8.	2-2013-02	Hose Clamp
9.	2-179-00	Hose Clamp
10.	11-198	Water Regulator

* NOTE: Condenser, Part Number 18-3308-01, Halsted Mitchell Condenser, was used on water cooled models up to Serial Number 5N-038143.

MC2 AIR COOLED
TOP VIEW

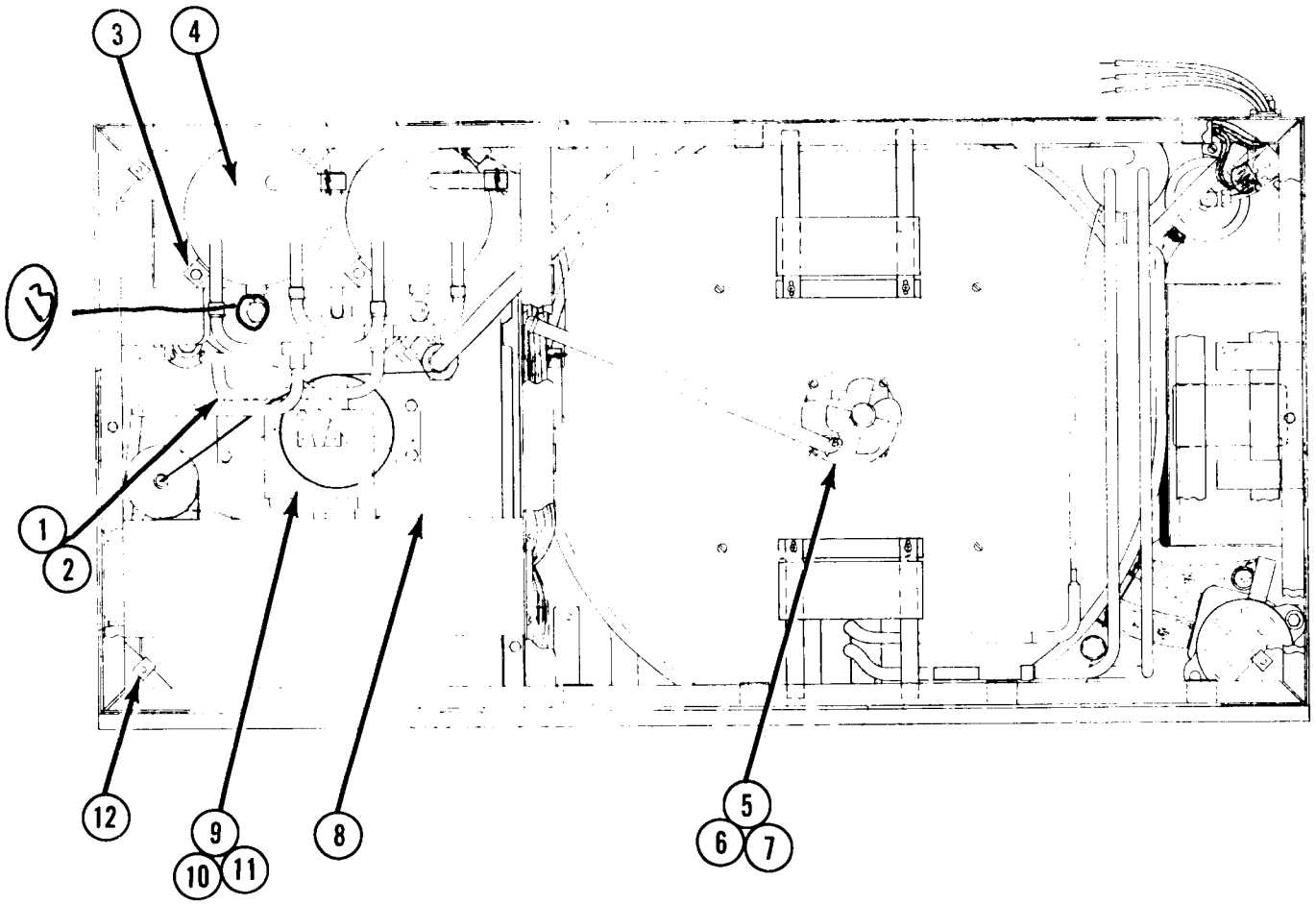

ITEM NO.	PART NO.	NAME
1.	16-563	Brass Cap
2.	16-560	Valve Core
3.	A19233	Bracket Tank
4.	A23926-001	Tank Assembly
5.	12-1824-01	Agitator Motor
6.	S-6900	Drive Arm Assy
7.	A23830-001	Drive Shaft
8.	18-787	Fan Blade
9.	18-788	Fan Motor (Specify Voltage)
10.	18-597	Mount, Fan Motor
11.	A24068-001	Spacer, Fan Motor
12.	3-1423-02	Speed Nut

A13346-002 Flow Control

MC2 AIR COOLED
FRONT VIEW

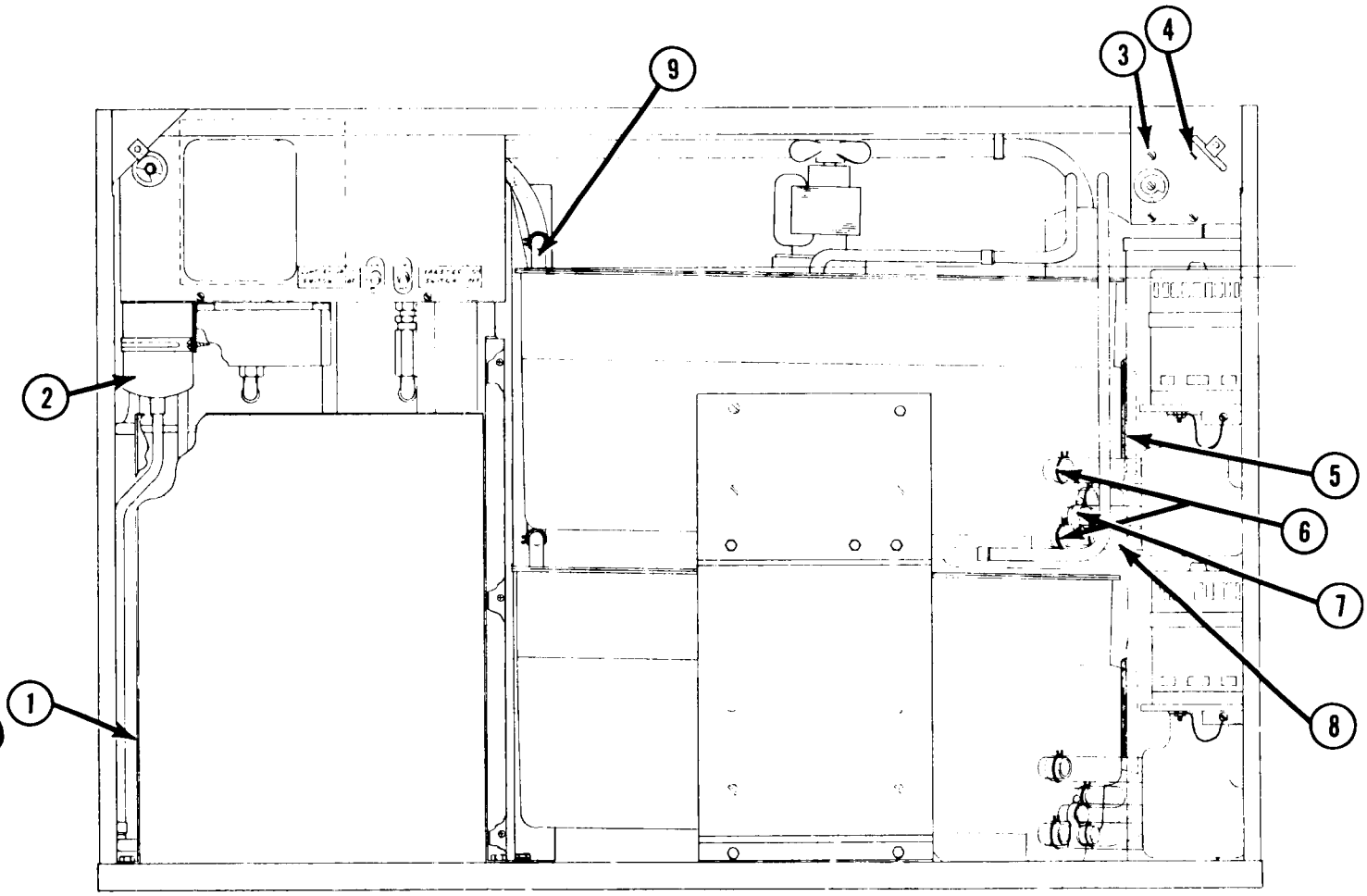

ITEM NO.	PART NO.	DESCRIPTION
1.	18-393	Condenser, Air Cooled
2.	2-677-01	Drier
3.	11-345-02	Cube Size Control (MCL-MCM)
	11-351-03	Cube Size Control (MCS)
4.	11-353-03	Bin Control
5.	13-595	Gasket, Cube Chute (Specify feet)
6.	2-2013-04	Hose Clamp
7.	2-179	Hose Clamp
8.	13-674-7	Pump Tubing (Specify Feet)
9.	A23837-1	Harvest Elbows

CABINET PARTS

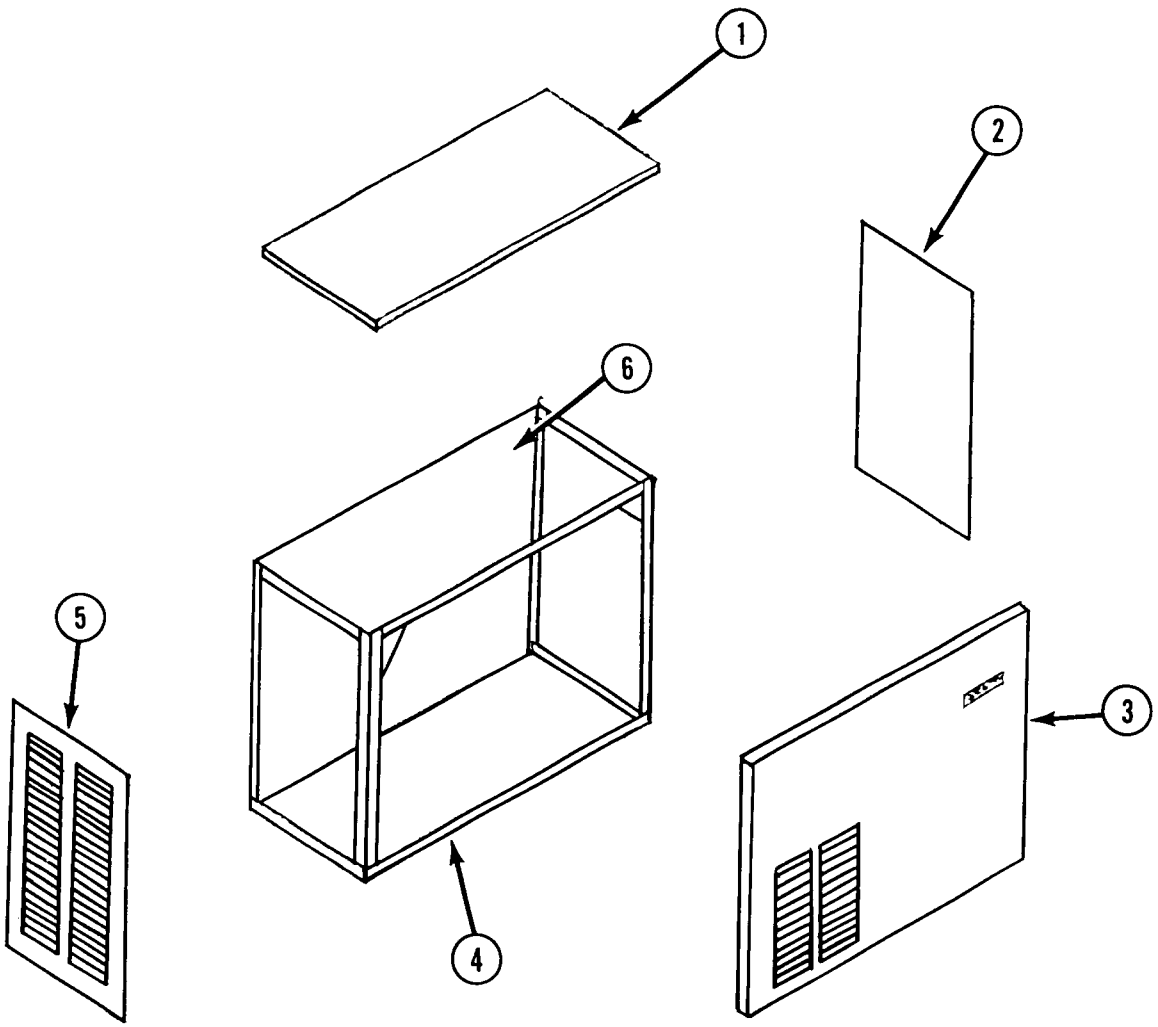

	Enamel	Stainless Steel
1. Top Panel	A23784-001	A23784-002
2. Panel, Right Side	A23900-001	A23900-002
3. Panel, Front	A23898-001 Vinyl	A23898-002
4. Cabinet Assy.	A23890-001	A23890-001
5. Panel left side	A23899-001	A23899-002
6. Back Panel	Fixed	A23833-001

*Panel Conversion Kit (Enamel to Stainless Steel) (Kit Includes Items 1, 2, 3, 5 and 6) — Part No. KPCS-2A.

FREEZER ASSEMBLY

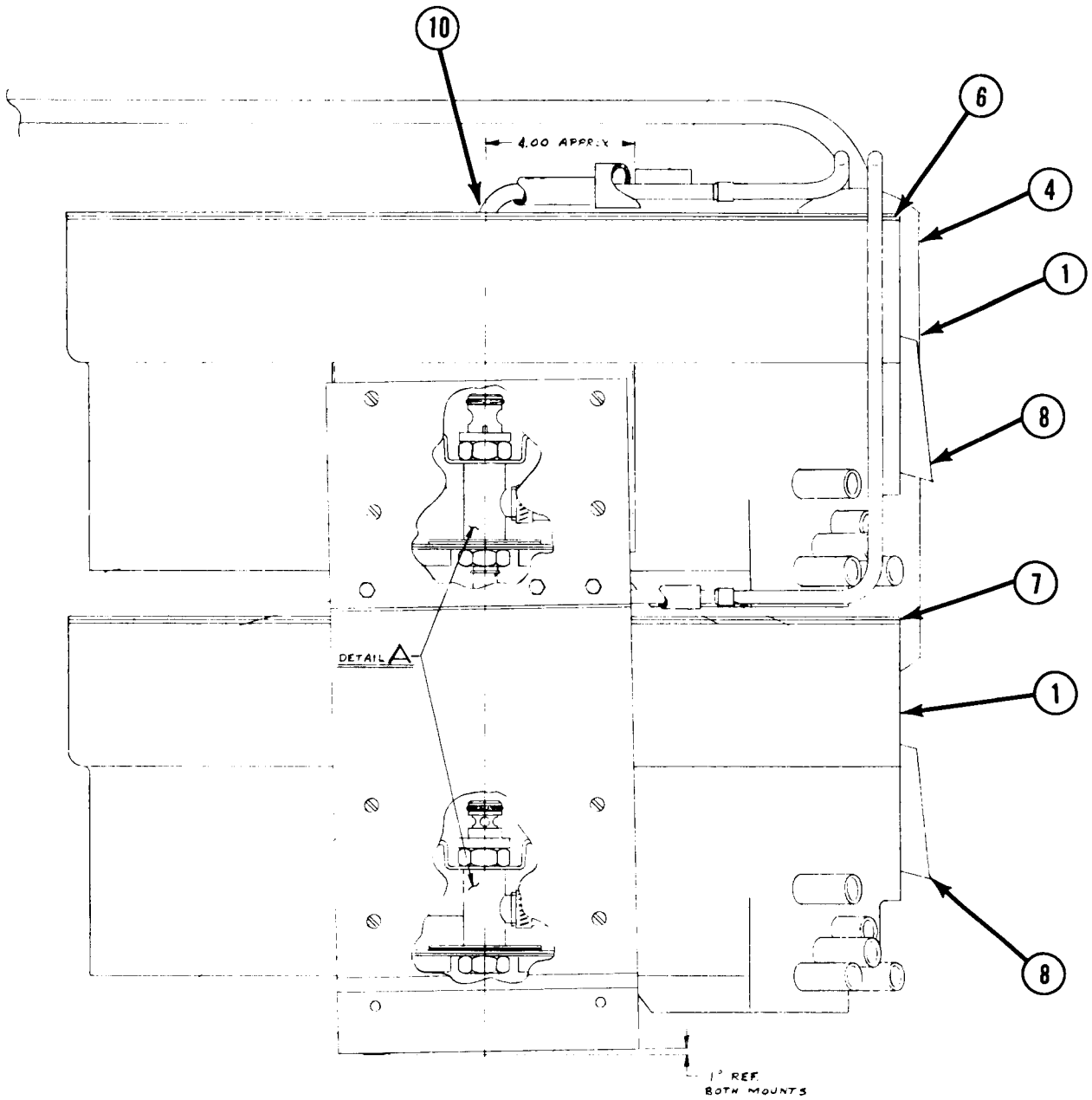

ITEM NO.	NAME	MCL2	MCM2	MCS2
1.	Freezing Chamber Assembly	A23907-003	A23907-002	A23907-001
2.*	Platen Assy. (2 reqd.)	A24129-001	A23880-001	A23803-001
3.*	Rubber Cup Holder	13-758-1	13-757-1	13-756-1
4.	Heat Exchange Assy.	A23902-001	A23902-001	A23902-001
5.*	Spray Bar (2 reqd.)	A23917-001	A23917-001	A23917-001
6.	Platen Cover, Top	A24187-001	Same	Same
7.	Platen Cover, Bottom	A24187-002	as	as
8.	Freezing Chamber	A24054-001	MCL2	MCL2
9.*	Inner Bottom	2-2028-01		
10.	Grommet, Freezing Cover	13-772-01		

* Not Shown

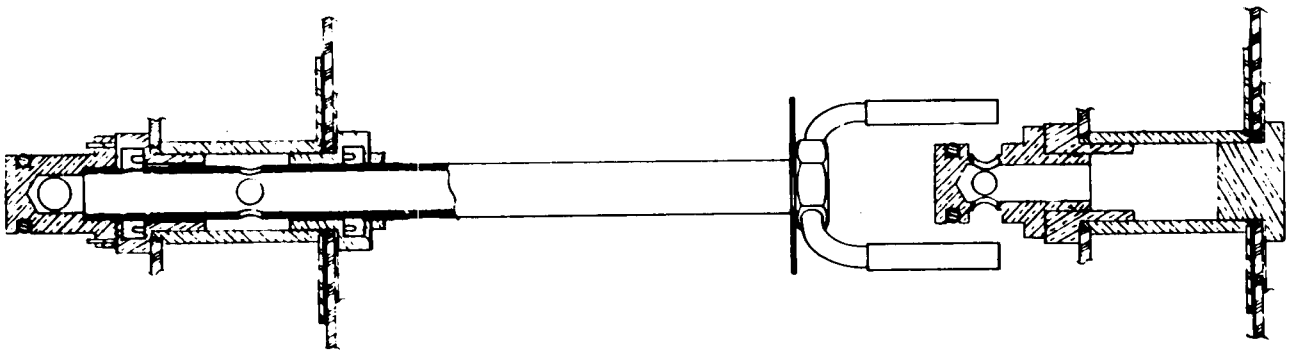

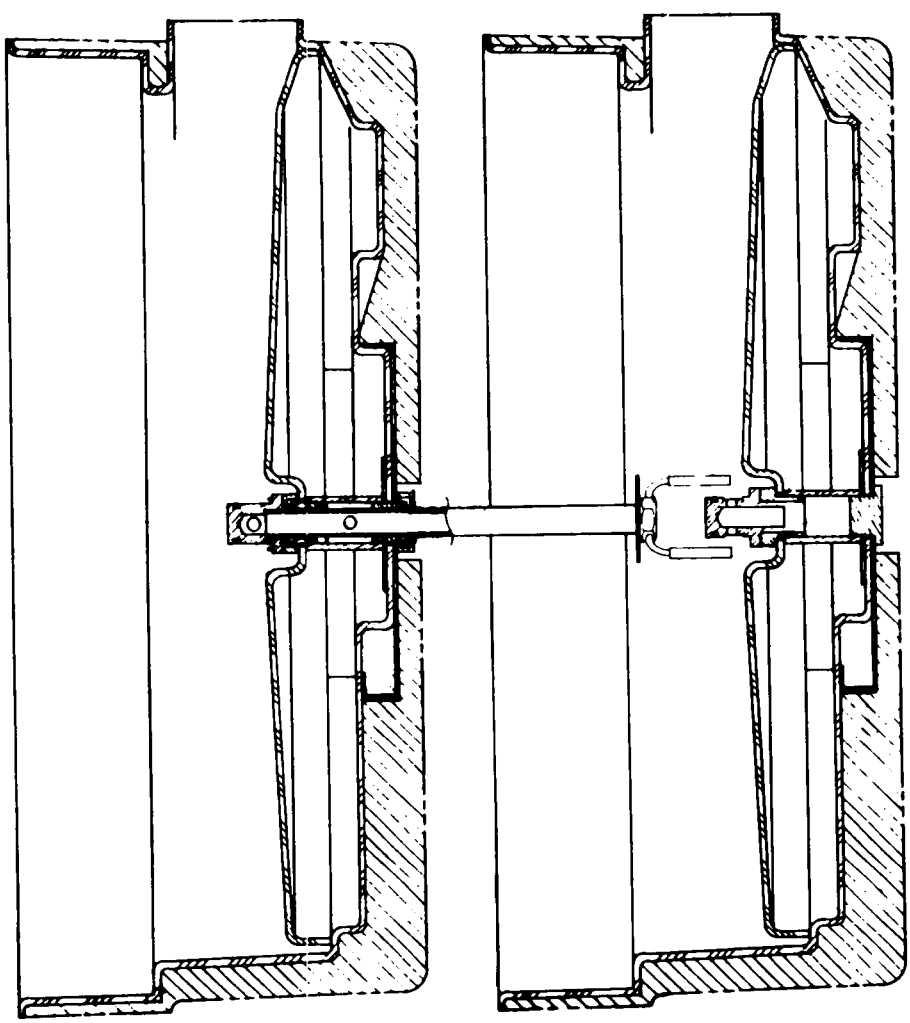

MC2 CUBER

DUAL FREEZER – DRIVE SCHEMATIC

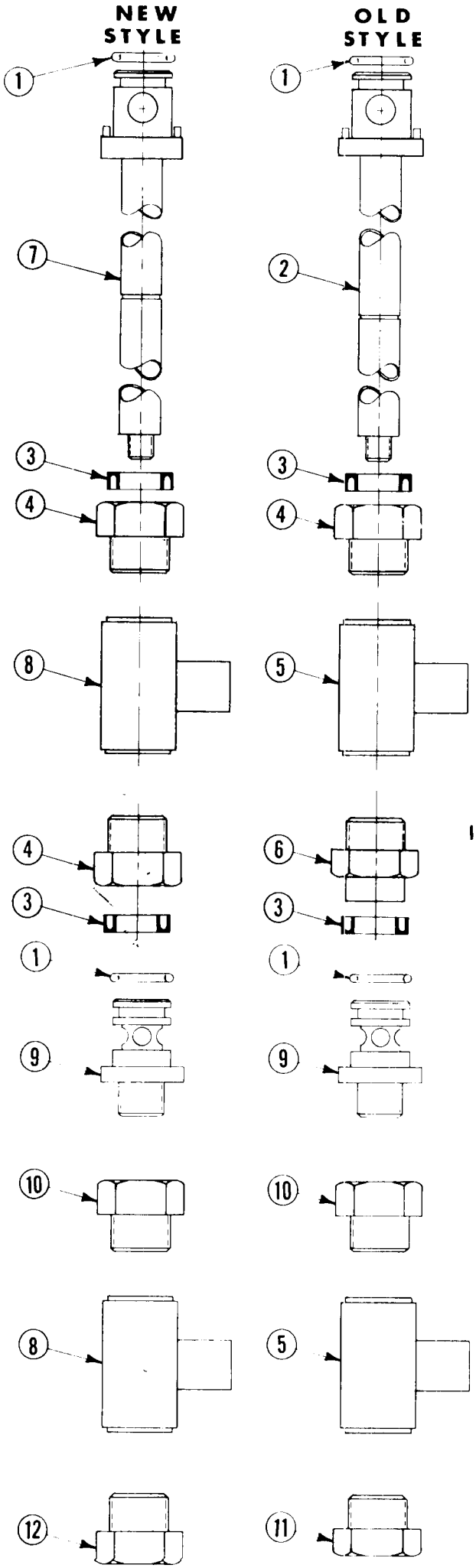

INLET WATER SUPPLY ASSEMBLY
MC2 SERIES CUBERS

NOTE: Old style units incorporated a right hand thread on items (4) and (5).

New style units incorporate a left hand thread throughout. Plus a change in the water tube "E" ring location. To convert old style to new style, order one each parts (8), (7), & (4).

Old style assembly used on units thru serial No. GT395246. All units produced after this serial number incorporate the new style assy.

ITEM NO.	PART NO.	DESCRIPTION
1.	13-0617-25	"O" Ring
2.	A23912-001	Water Tube Fab. Assy (Left Hand Thread)
3.	13-0168-00	Water Seal
4.	A23910-001	Nut-Bushing Ass'y with Seal (Left Hand Thread)
5.	A23817-001	Inlet Housing Fab. Ass'y (Left & Right Hand Thread)
6.	A23908-001	Lower Bushing Ass'y with Seal (Right Hand Thread)
7.	A24518-001	Water Tube Fab. Ass'y
8.	A24521-001	Inlet Housing Fab. Ass'y (Left Hand Threads)
9.	A19508-000	Jet Bearing (Left Hand Thread)
10.	A23819-001	Upper Nut (Left Hand Thread)
11.	A23829-001	Bottom Plug (Right Hand Thread)
12.	A24515-001	Bottom Plug (Left Hand Thread)

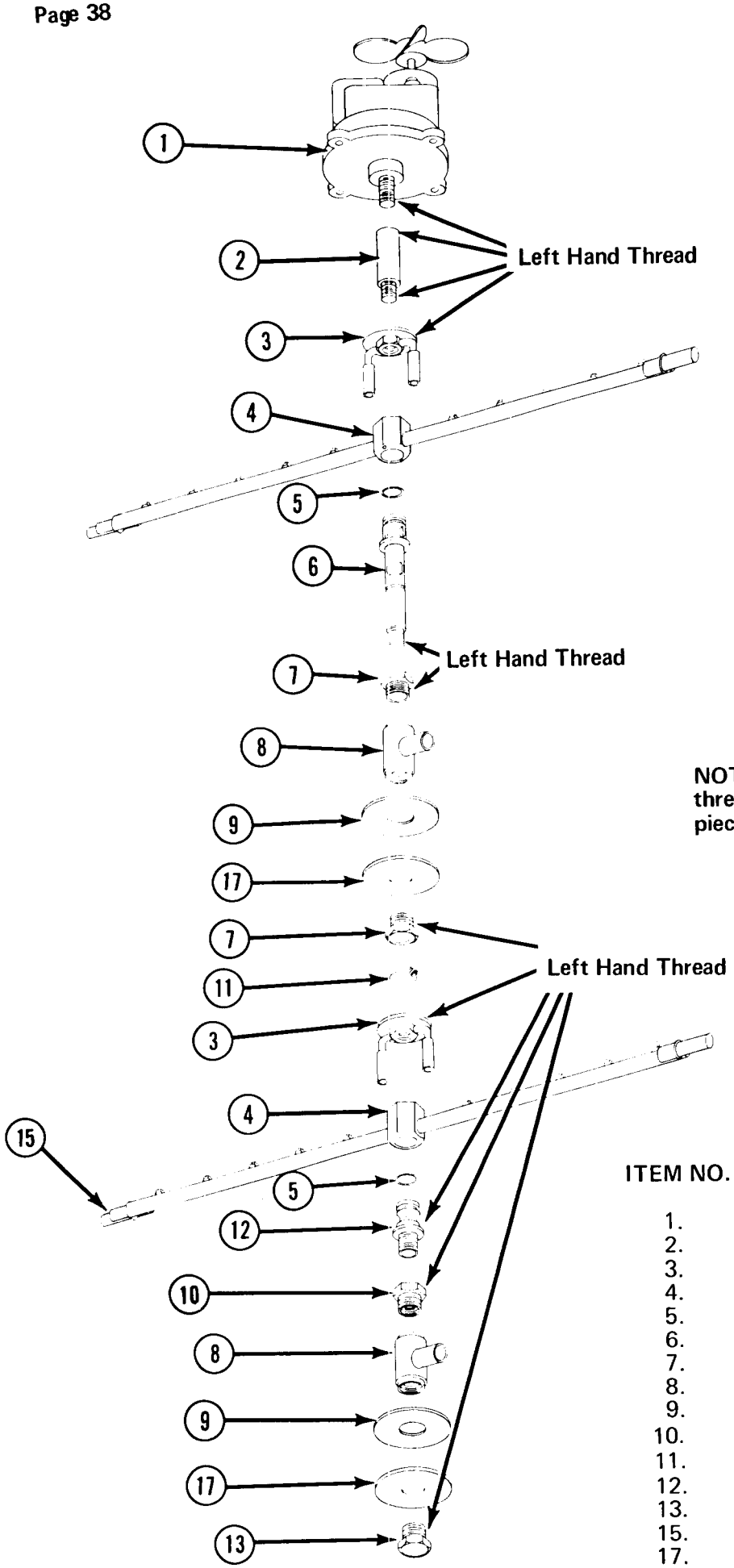

MC2 CUBER

DUAL DRIVE ASSEMBLY

NOTE: Spray bars have 10 jets that are threaded and removable. Jets in end pieces are drilled holes one at a 20° Angle.

All thread are left hand.

ITEM NO.	PART NO.	NAME
1.	12-1824-01	Agitator - Drive Motor
2.	A-23830-01	Drive Shaft - Upper
3.	S-6900-000	Drive Fork
4.	A-23917-1	Spray Bar
5.	13-0617-25	O-Ring
6.	A24518-001	Water Tube Fab. Ass'y
7.	A-23910-001	Nut-Bushing Ass'y
8.	A24521-001	Inlet Housing Ass'y
9.	A-23827-001	Support Plate
10.	A23819-001	Upper Nut
11.	02-1444-40	Retainer Ring
12.	A-19508-000	Jet Bearing Shaft
13.	A24515-001	Bottom Pan Plug
15.	13-0653-00	Rubber Tips
17.	03-1409-11	Rubber Washer

FREEZER – SPRAY DRIVE

Top Half

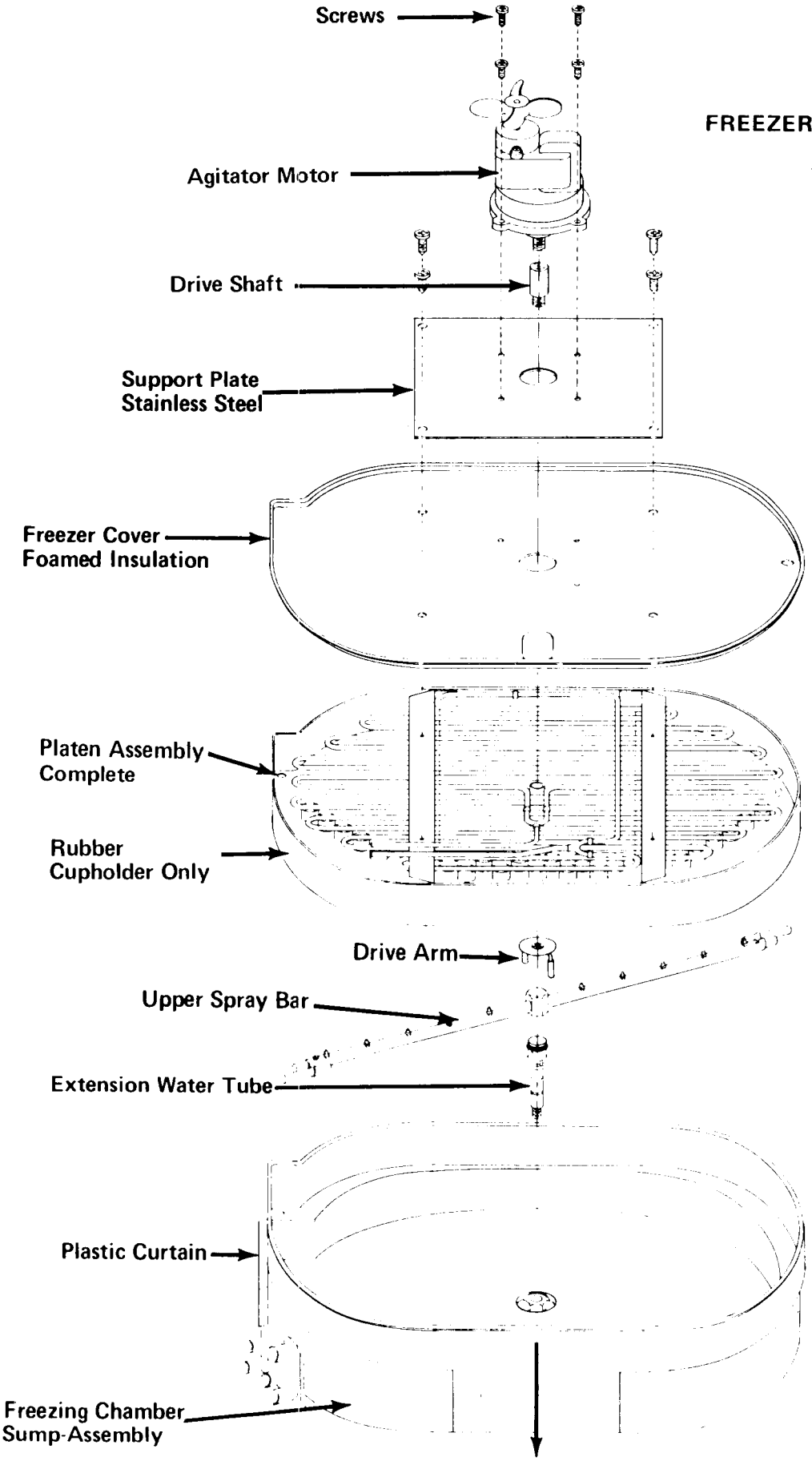

To Lower Freezer Assembly

COMPLETE PUMP ASSY. – 12-1849-1

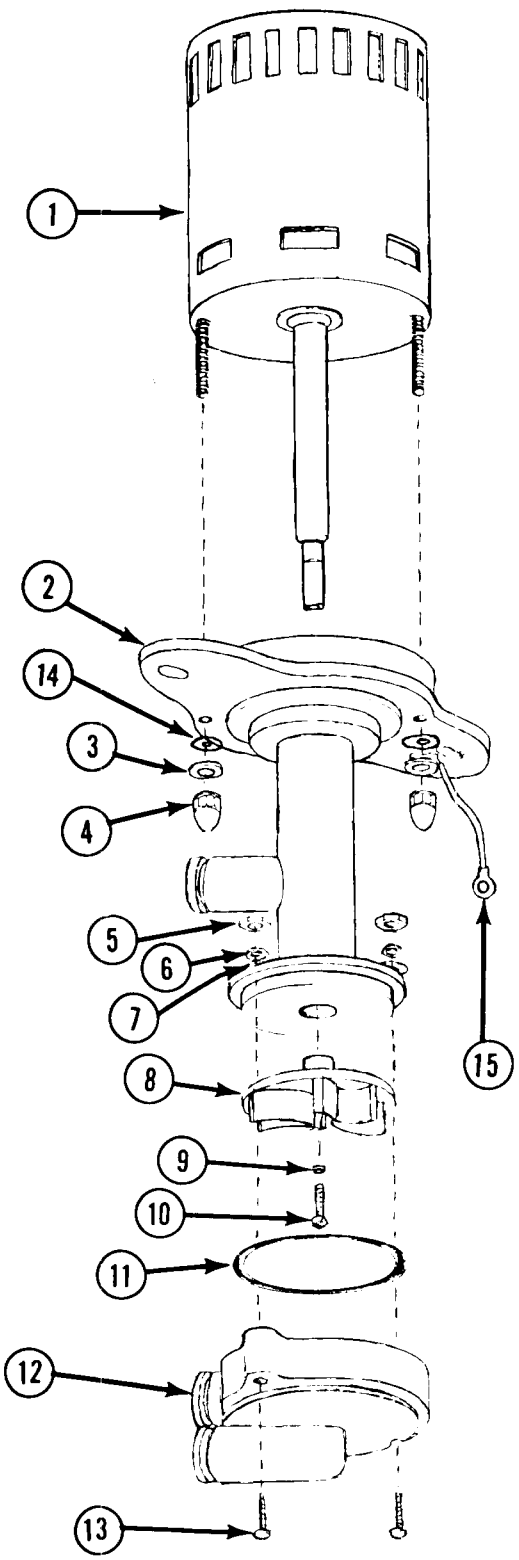

ITEM NO.	PART NO.	DESCRIPTION
1.	12-1849-50	Motor 115/60 or 50/1
	12-1849-49	Motor 230/50 or 60/1
2.	12-1849-51	Pump Body
3.	12-1849-52	Lockwasher
4.	12-1849-53	Nut (Acorn)
5.	12-1849-54	Nut (Hex)
6.	12-1849-55	Lock Washer
7.	12-1849-56	Washer
8.	12-1849-57	Impeller
9.	12-1849-58	Lockwasher
10.	12-1849-59	Screw
11.	12-1849-60	"O" Ring Seal
12.	12-1849-61	Pump Housing
13.	12-1849-62	Screw
14.	12-1849-63	Washer
15.	12-1849-64	Ground Wire

CORRECT DISASSEMBLY PROCEDURE

1. Remove nuts (5), lock washers (6), washers (7) and screws (13)
2. Remove Housing (12)
3. Remove screw (10) and lock washer (9)
4. Remove Impeller (8) and "O" ring (11)
5. Remove cap nuts (4), lock washers (3), ground lead (15) and washer (14)
6. Remove body (2)

CORRECT ASSEMBLY PROCEDURE

1. Assemble body (2) to motor(1)
2. To motor studs, assemble washers (14), ground lead (15) lock washers (3) and cap nuts (4)
3. Put "O" ring (11) on body (2)
4. Assemble impeller (8) onto motor shaft and fasten with lock-washer (9) and screw (10)
5. Push housing (12) over "O" ring(11) onto body (2)
6. Fasten housing (12) with screws (13), washers (7), lock washers (6) and nuts (5)

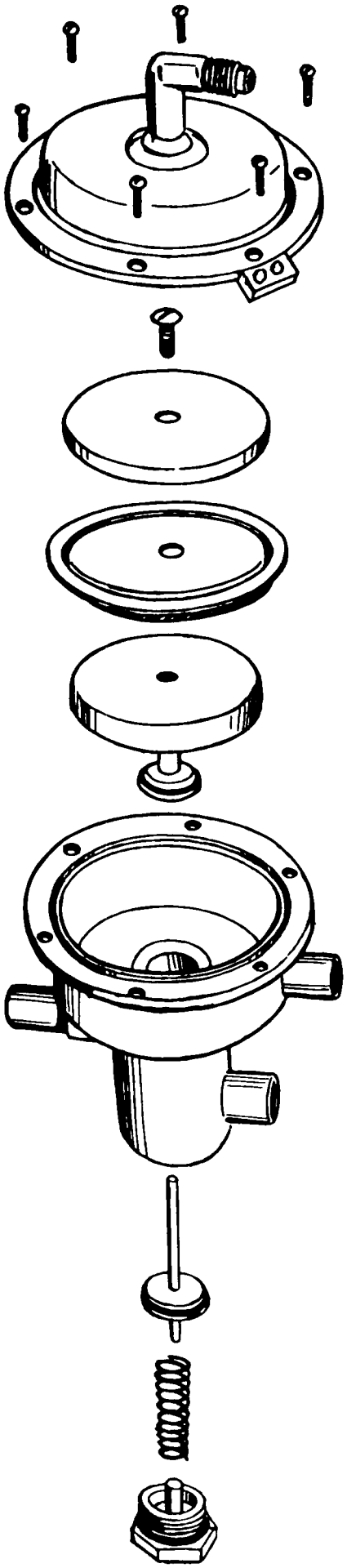

WATER VALVE ASSEMBLY

A21029 (Less Top Fitting)

1.	13-0617-22	O-Ring
2.	02-1766-00	Valve Cap Bottom
3.	02-1545-00	Spring
4.	13-0617-01	O-Ring
5.	A-17942-000	Lower Plunger Rod
6.	03-1465-00	Screws (6)
7.	2-1765-00	Valve Top Cover
8.	03-1506-01	Screw
9.	A-17941-000	Upper Plunger
10.	13-606-00	Upper Diaphragm
11.	A-18312-00	Diaphragm Cover
12.	02-1764-00	Valve Body

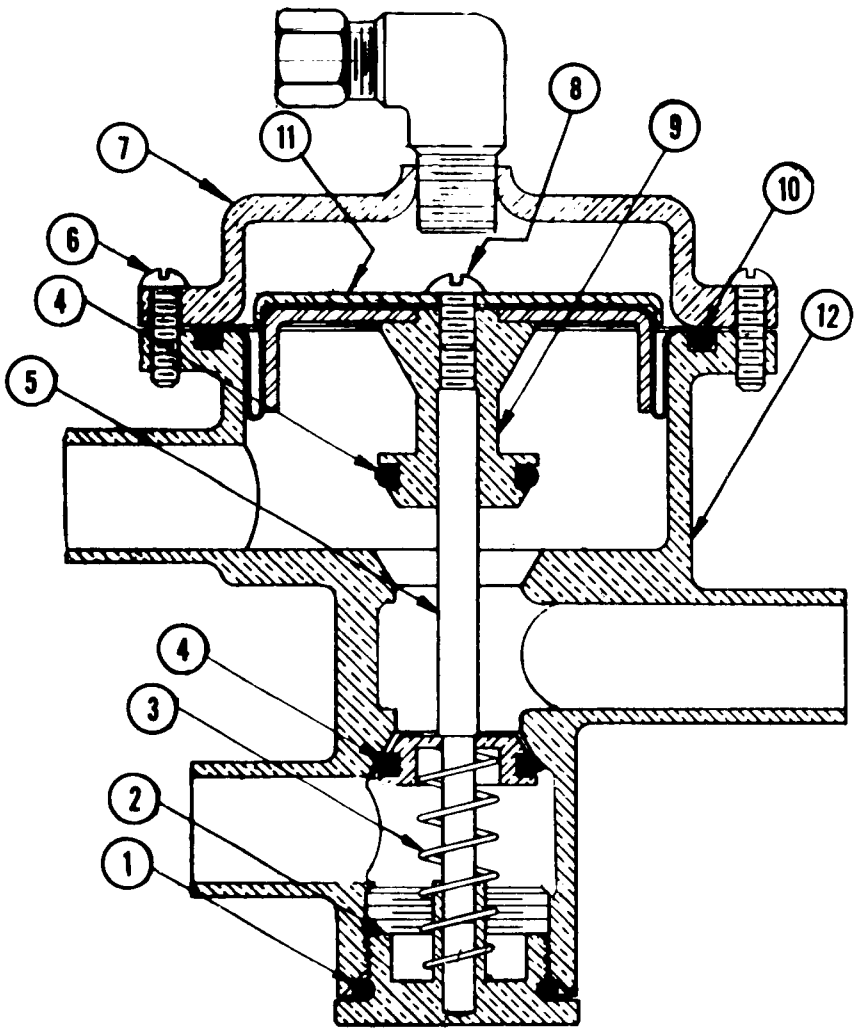

CONTROL BOX SCHEMATIC
Air Cooled Models

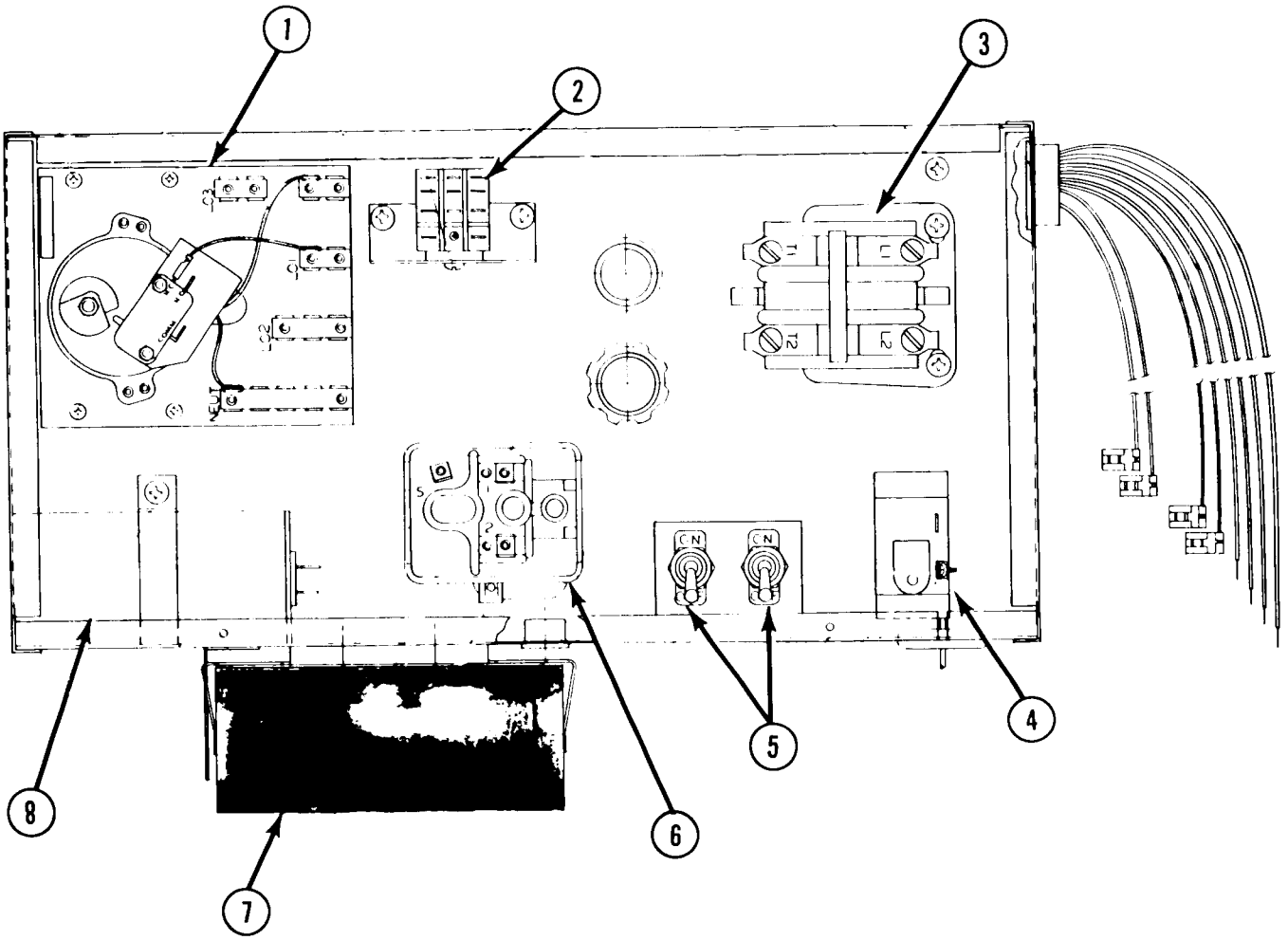

PART NO.

ITEM NO.	PART NO.	DESCRIPTION
1.	A23712-1	Timer Assy.
2.	12-1598	Relay
3.	12-820-1	Contactor
4.	11-365	Pressure Control (Air Cooled)
	11-357	Pressure Control (Water Cooled)
5.	12-426-1	Switch
6.	See Compressor	Potential Relay
7.		Start Capacitor
8.	Spec Sheet	Run Capacitor
Control Box Complete (Specify Voltage)		A24060 (Air Cooled) A24061 (Water Cooled)

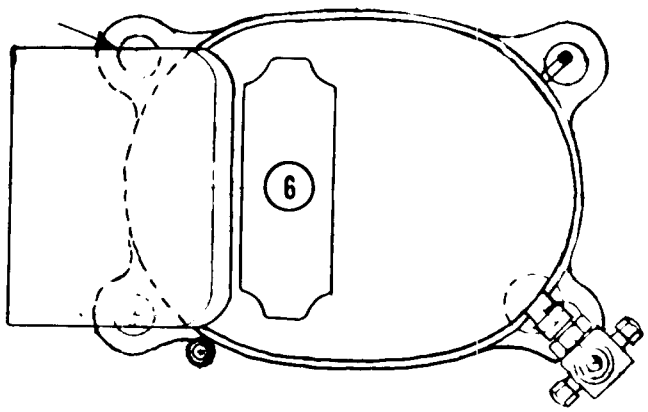

MOTOR COMPRESSOR – AIR & WATER

3500 RPM

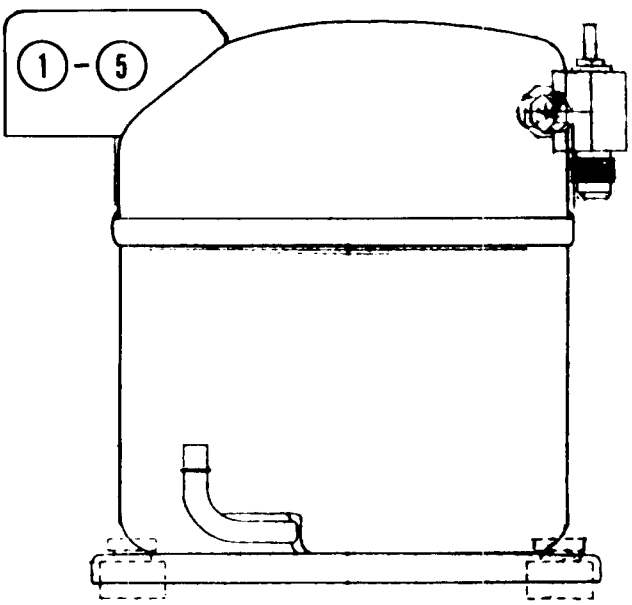

MC2-10 (115/208/60/1)

1.	18-2300-7	Compressor
2.	18-1902-34	Run Capacitor
3.	18-1903-34	Potential Relay
4.	18-1901-15	Start Capacitor

MC2 - 9 (115/208-220/60/3)

1.	18-2300-3	Compressor

MC2-4 (115/230/60/1)

1.	18-2300-2	Compressor
2.	18-1902-29	Run Capacitor
3.	18-1903-29	Potential Relay
4.	18-1901-15	Start Capacitor

COMMON TO ALL COMPRESSORS

5.	18-2300-28	Rotolock Valve
6.	18-2300-29	Valve Seal
7.	18-2300-26 & 27	Mounting sleeves & grommets

SPECIFICATIONS

18-1901-15 --	Sprague No. A7928 - Copeland No. 014-0008-51-4 145-175 MFD; 220 VAC; 60 CPS; 18,000 OKM Resistor.
18-1902-29	Copeland No. 014-0002-02 370 Volt; 20 MFD
18-1902-34	Copleland No. 014-0001-04-2 370 Volt; 15 MFD
18-1903-29	Copeland No. 040-0001-19
18-1903-34	Copeland No. 040-0001-16-3

MAINTENANCE INSTRUCTION FOR SCOTSMAN SUPER CUBERS

THE FOLLOWING MAINTENANCE SHOULD BE SCHEDULED EACH (6) SIX MONTHS ON ALL SCOTSMAN SUPER CUBERS. CALL YOUR AUTHORIZED SCOTSMAN SERVICE DEPARTMENT.

1. Clean air-cooled condenser. This is to be done frequently with the machine shut off.
2. Clean water system and evaporator, sump tank and screen, using Scotsman Ice Machine Cleaner or equivalent.
3. Remove jet tube and manually clean jets by unscrewing jets.
4. Check curtain assembly.
5. Tighten all electrical connections.
6. Tighten all bolts.
7. Check water supply. Check water pressure flow through flow control. Clean water strainer.
8. Oil jet tubes drive motor three (3) places. Use SAE 20 oil - 3 oil cups.
9. Oil Condenser fan motor. Punch sealed cap or remove screws where possible.
10. Check for refrigeration leaks with halide torch.
11. Check for water leaks. Tighten drain line connections.
12. Check size and condition of cubes. Adjust as required.
13. Check to insure bleed tube on top of hot water tanks are open. Clean with 3/16" drill bit.

PROCEDURE FOR USE OF SCOTSMAN ICE MACHINE CLEANER

1. Remove front panel, right side panel, and cube chute.
2. Locate control box with time clock knob protruding thru cover. Turn master and compressor switches to off position.
3. Start unit thru harvest cycle manually. This is done by slowly turning time clock knob clockwise until you hear the micro-switch actuator arm drop into the cam slot.
4. Locate and remove defrost water tube which protrudes thru each freezing chamber cover at top left of freezing chamber.
5. For each freezing chamber, dilute 16 ozs. of Scotsman Ice Machine Cleaner in 11 pints of fresh potable water in a clean container. Pour this cleaning solution into freezing chamber thru defrost tube hole. Replace defrost tubes and IMMEDIATELY TURN ON MASTER SWITCH.
6. Let unit operate normally for 20 minutes into the freezing cycle. No ice will be made because the compressor is not in operation.
7. At the end of this time, rotate the timer knob until the harvest cycle starts again.
   Allow the machine to run normally thru this harvest cycle.
   When the harvest has been completed, then rotate knob manually thru the freeze cycle until the harvest cycle starts once again.
   Do this 3 times.
   Cube chute and curtain(s) should be washed in solution of household bleach and water (1 oz. of bleach in 1 gal. of water)
8. Turn the compressor switch back on. Use a damp cloth to wipe off curtain(s) and cube chute. Place cube chute and curtain(s) in position.
9. Check each new batch of cubes until they are clear and until acid taste has been removed from cubes.
10. Pour hot water in storage bin to melt the cubes and thereby clean the bin and drains with the same solution that has just cleaned the unit.
11. Replace all doors.
12. Unit is now ready for continued automatic operation.

PRODUCT NAME:

SCOTSMAN BIN MODEL B550 SERIES

MANUFACTURER:

QUEEN PRODUCTS DIVISION
KING SEELEY THERMOS CO.
ALBERT LEA, MINNESOTA 56007

SERIES B550

Use with MC1 and MC2 series cubers or MF3, MF4 and MF5 series flakers. Holds up to 550 pounds of Scotsman ice. Width: 42-1/4", Depth: 30-1/2", Height: (With legs) 38" to 38-3/4", Height: (Without legs) 32". Hinged door opening 9-3/4" x 39". Drain fitting 1/2 NPT.

B550: Heavy-gauge steel with sandlewood micomatte finish, stainless steel interior. Shipping weight: 193 lbs.

B550SS: Heavy-gauge stainless steel inside and out, chrome-plated legs. Shipping weight: 193 lbs.



NOTE: Optional Bin Extension Kit Model KBE75 adds approximately 75 lbs. of ice storage. Width 42-1/4", Depth 21", Height 6".

Optional insulated stainless steel top kit KBT1 provides cover for bin or extension kit. Also provides base for mounting MF model flakers. Width 42-1/4", Depth 21", Height 1-5/8".

PARTS LIST FOR B550

1. Cube deflector Assy	A24146-1
2. Thumb screws for mounting	3-727
3. Gasket, machine to bin	19-503-4
4. Bin Door Assy.	A23997-1
5. Door frame fab assy.	A23992-1

DRAIN IN RIGHT REAR CORNER

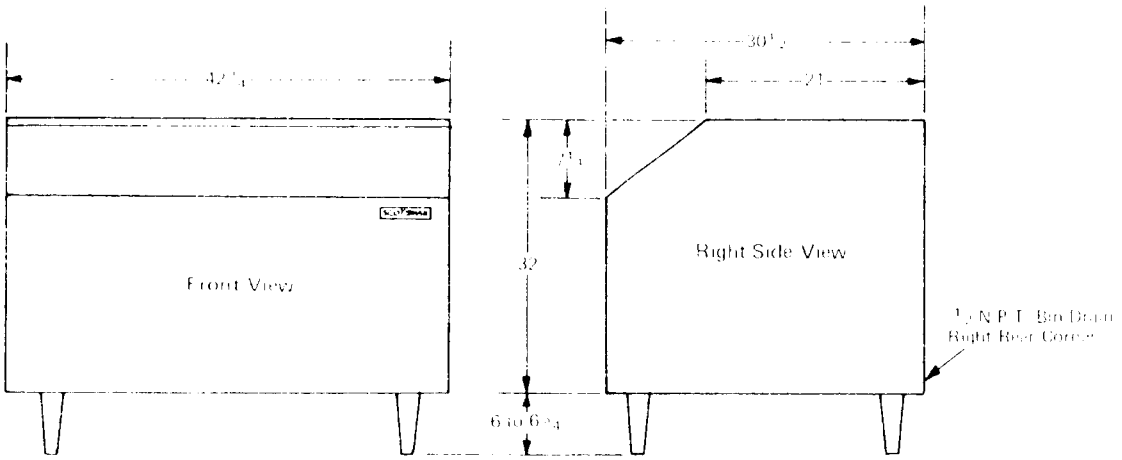

Specifications subject to change without notice.

CARE OF STAINLESS STEEL STORAGE BIN LINERS

All commercial grades of stainless steel will corrode or rust when in contact with certain chemicals or salts. **One element that attacks stainless readily, is chlorine,** and most compounds of chlorine, such as hydrocholic acid, and certain salts containing chlorine. The "speed" with which this corrosion takes place depends on the concentration of the chlorine, and the length of time it is left in contact with the stainless steel.

ICE BIN LINER RUSTING

In many ice bin applications, **a rust stain, or brown deposit, will appear at the top of the side and rear walls of the bin liner, and also on any exposed stainless parts inside the bin, which do not normally get covered with ice; such as stainless steel door back pans.** The lower portions of the liner walls usually stay clean if the bin is being used regularly, due to the "washing" action of the ice and meltage water draining down these walls. This brown staining on the liner may appear more rapidly in some installations than other, depending on the way the ice is being made in the ice machine, and the water conditions.

This staining or rusting, can come from basically two sources:

1. **Foreign materials** -- For example, **many ice machine casings are made of painted steel. If this steel should be exposed at the joint where the ice machine sits on the bin, it could rust,** and the rust stain could "drip" down the liner walls. Also, particles of plain steel could fall down into the bin and, inturn, start rusting.

2. **Materials expelled during ice making** — Practically all icemakers produce clear ice by "freezing out the impurities" normally found in tap water. Chlorine gas, other gases and solids, are expelled during the making of ice. Being heavier than air, these foreign materials drop down into the bin through the same opening that the ice enters the bin. (This oftentimes explains why this staining is more noticeable on an installation where the opening on the bottom of the ice machine is quite large). **The chlorine gas will combine with water vapor and condense on the liner walls as a mild hydrochloric acid.** Above the normal ice level, this never gets removed by the action of the ice, and will eventually form a brown stain.

CLEANING OF A STAINLESS STEEL BIN LINER

Because the brown staining or rusting is due to expelled material during ice-making, **every bin liner should be cleaned periodically,** to prevent this staining from causing pitting of the stainless steel. The time between cleanings will depend on the water conditions, type of ice machine, etc. **It may be necessary only every 3 to 6 months.**

1. **General Cleaning** — When the staining is light, it can usually be removed by washing with ordinary cleaning powder, such as Bon-Ami, or Copper-Glo, and water. (Do not use cleaners that contain bleaching agents, as most of these are compounds of chlorine.) After cleaning, rinse thoroughly with clear water.

   It may be necessary to use a stainless steel wool to remove bad stains. DO NOT USE plain steel wool, as the steel particles will get imbedded in the liner and cause more serious rusting.

2. **Cleaning of heavy deposits**—If the liner has not been cleaned for a long time, and heavy deposits and pitting have occurred, a chemical cleaner may be necessary. Several of these are as follows:

   Oakite No. 33, Oakite Products, Inc., 19 Rector St., New York, N.Y. Texo No. 12, and Texo-NY, Texo Corp., 2200 Dana Ave. Cincinnati 7, Ohio. Metalprep No. 10, Nelson Chem. Co., 6564 Benson St., Detroit 7, Mich, Dilac, Diversey Corp., 1820 Roscoe St., Chicago 13, Illinois.

   A solution of one part cleaner and two parts water is used. First, wash the bin liner thoroughly with water and soap as described above. Then simply swab the solution on the area to be cleaned, and allow to stand for about 20 minutes. Rinse with clear water. If this doesn't completely remove the deposit, repeat the procedure.

   Syntheitc rubber gloves should be used by the operator, and goggles and aprons are advisable even though the solution is relatively nonhazardous.

   These cleaners may possibly harm paint, wood, or fabrics, They will probably cause a dull grey color on galvanized steel and should not be allowed to remain long in contact with rubber. Therefore, provision should be made to avoid contact with such materials when cleaning stainless.

3. **Protection of Stainless Steel against further staining** — After the stainless steel has been cleaned, installations where the staining is recurring so frequently, the surface should be rejuvenated. This process restores the characterisitc to the surface of the stainless, that best prevents corrosion.

   First, be sure that the liner is clean and is thoroughly rinsed with water. Then use a nitric acid solution of two parts water to one part nitric acid (by volume). Swab this on the liner and allow to stand for about 30 minutes. Rinse the liner with clean water. This will then provide maximum corrosion resistance.

TABLE OF CONTENTS

Photograph & Ice Making Capacity 2
Specifications & Dimensions 3
Installation Instructions 4
Installation Practice 5
Typical Installation 6
Stacking Instructions 7
Cube Deflector Installation Instructions 8
Installation LImitations 9
Electrical Connections & Characteristics 10
Final Check List 11
Installation — Start-Up 12
Wiring Diagram 115/60/1 Air Cooled 13
Wiring Diagram 115/60/1 Water Cooled 14
Electrical Components and Functions 15
Harvest Cycle Schematic 16
Freezing Cycle Schematic 17
Service Analysis Section 18-19
Maintenance Procedures Section 20-21
Functional Parts and Maintenance 22-25
Breakdown of Component Parts:
- Air and Water Cooled Right End View 26
- Water Cooled Top View 27
- Air Cooled Top View 28
- Water Cooled Front View 29
- Air Cooled Front View 30
- Freezer Assembly 31
- Freezer-Spray Drive 32
- Drive Assembly 33
- Platen Assembly 34
- Copelaweld Compressor 35
- Control Box — Air Cooled 36
- Control Box — Water Cooled 37

Water Pump Assembly 38-39
Cabinet Parts 40
Freezer Chamber - Sump 41
SCOTSMAN BIN MODELS B-40 AND B-60
Specifications and Dimensions 42
Maintenance-Cleaning 43
Maintenance of Stainless Steel Liner 44
Cleaning of Stainless Steel Liner 45

THIS PAGE
INTENTIONALLY
LEFT BLANK

SCOTSMAN®

MODULAR CUBER
MC30 SERIES

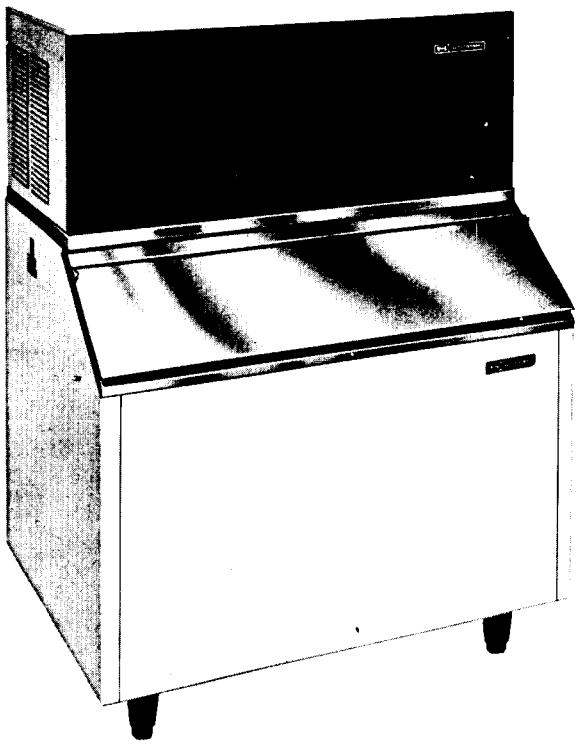

ice making capacity

Daily Ice Capacity is directly related to condenser air inlet temperature, water temperature, and age of machine. To keep you SCOTSMAN MODULAR CUBER performing at it's maximum capacity, it is necessary to perform periodic maintenance as outlined on page 43 of this manual.

MC30
modular cuber

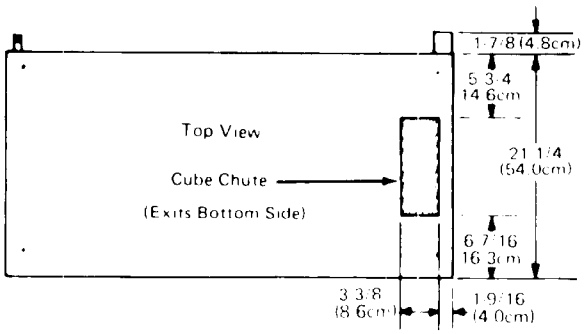

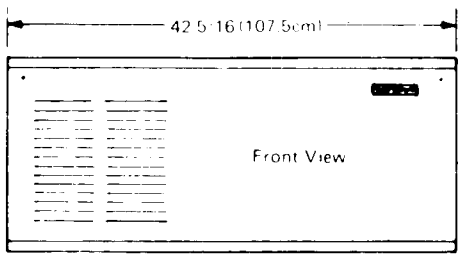

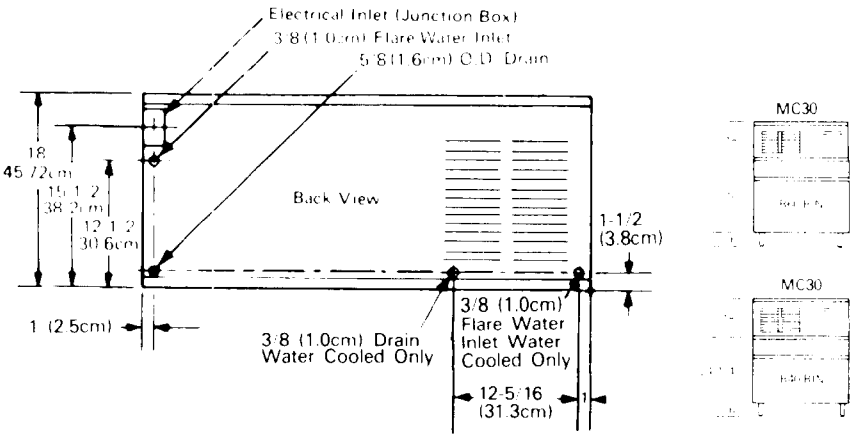

MC30 MODULAR CUBER SPECIFICATIONS

Model	Condensing Unit	Compressor Horsepower	Finish *	Shipping Weight lbs.	kg.
MC30MAE	Air	1	Enamel	250	114
MC30MWE	Water	1	Enamel	250	114
MC30SAE	Air	1	Enamel	250	114
MC30SWE	Water	1	Enamel	250	114

* Stainless steel panels available in kit form SPKMC1. Painted models have Sandalwood enamel micomatte finish, with walnut woodgrain vinyl front panel.

Basic Electricals	Total Amperages	
	MC30M	MC30S
Air Cooled - 115/60/1	15.4	15.4
Water Cooled - 115/60/1	14.5	14.5

We reserve the right to make product improvements at any time. Specifications and design are subject to change without notice.

INSTALLATION INSTRUCTIONS

1. The following installation instructions pages 4 through 10 were written for use by an authorized tradesman only, not the user or customer. We suggest you call your local authorized Scotsman Service Agency for hook-up, start-up, and check out. He's listed under "Ice Making Machinery & Equipment" in your telephone book, yellow pages.

2. Uncrate unit using regular hammer and nail puller.

3. Remove top, front, left and right side panels (held by screws).

4. On base of machine at left and right ends are bolts that hold cuber to crate skid. Loosen the bolts to remove skid and save bolts to mount machine to SCOTSMAN Storage Bins.

5. Place unit on top of bin and secure to bin with two bolts taken out in Step 3.

6. Uncoil bin thermostat bulb and run it down thru machine base by pushing end of bulb thru plastic cap located between sump pump and freezing chamber. Next, take combination cube deflector and bulb holder, which is packed in storage bin, and install on upper right side of bin as described on Page 8.

NOTE: Regardless of what type of bin is used, it is essential that bin thermostat bulb be located in area immediately below cube chute opening of machine, in order to prevent ice from backing up into cube chute.

7. Remove junction box from top of cube chute and install on rear of machine. Wires are provided at rear of machine for electrical hookup.

8. Check unit nameplate voltage against building source voltage to be sure they correspond. Scotsman, like most manufacturers, purchases electrical motors that are rated to operate within a 10% variance above or below nameplate ratings. Improper voltages applied to Scotsman equipment can cause premature failures and burnouts. Failures of this type are not considered as factory fault or defect.

9. Remove shipping tape and check tubing, wiring and capillary control lines for rubbing or chafing; refashion as required.

10. Make water connection utilizing 3/8" O.D. copper water line.

11. Install drains and base drain cup. Per instruction tag 17-1278-01.

12. Use clean damp cloth to wipe out storage bin and cabinet exterior.

13. Replace all panels.

14. Check unit to be sure it is level side to side and front to rear.

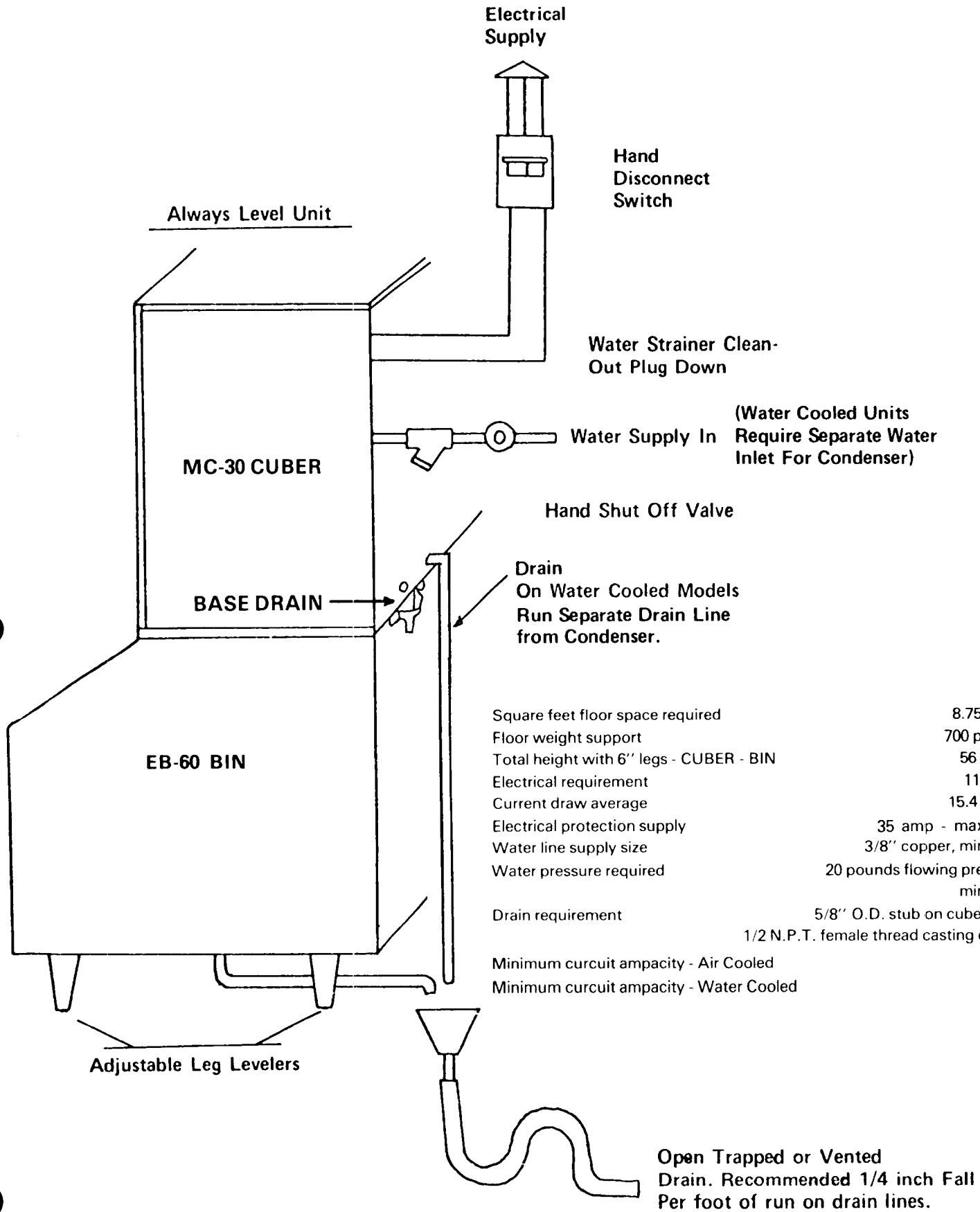

Square feet floor space required	8.75 sq. ft.
Floor weight support	700 pounds
Total height with 6" legs - CUBER - BIN	56 inches
Electrical requirement	115/60/1
Current draw average	15.4 amps
Electrical protection supply	35 amp - maximum
Water line supply size	3/8" copper, minimum
Water pressure required	20 pounds flowing pressure, minimum
Drain requirement	5/8" O.D. stub on cuber drain 1/2 N.P.T. female thread casting on bin.
Minimum curcuit ampacity - Air Cooled	34.7
Minimum curcuit ampacity - Water Cooled	33.9

TYPICAL INSTALLATION

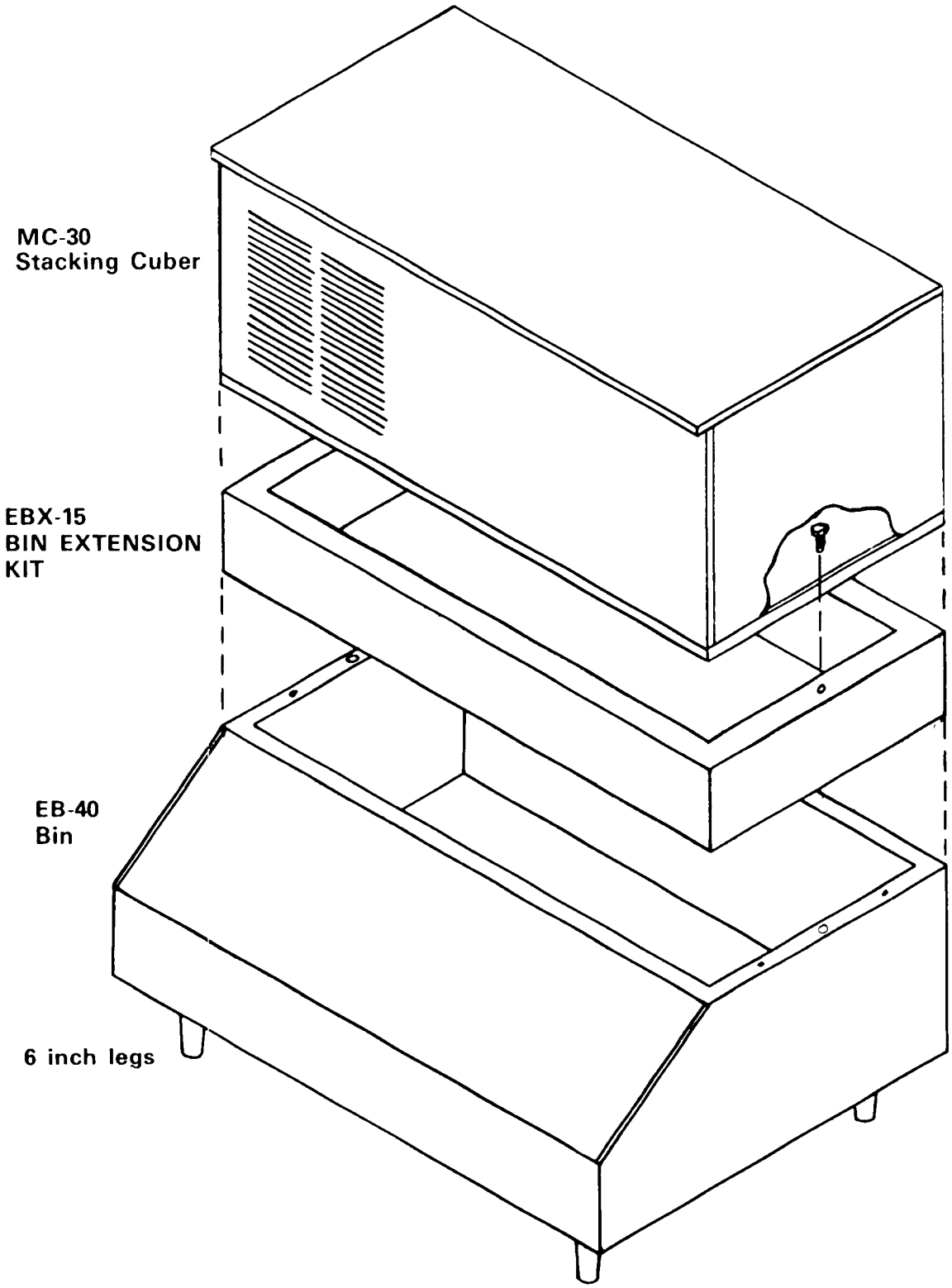

WARNING: SCOTSMAN BINS ARE SPECIFICALLY ENGINEERED FOR USE WITH THE SCOTSMAN MODULAR CUBERS. USE OF OTHER THAN SCOTSMAN MANUFACTURED BIN MAY RESULT IN COMPONENT FAILURES WITHIN THE MODULAR CUBER.

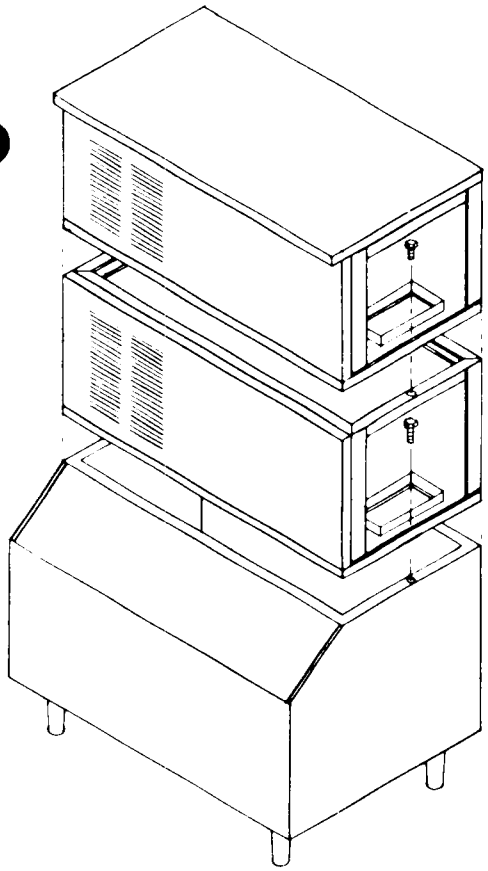

FIG. 1

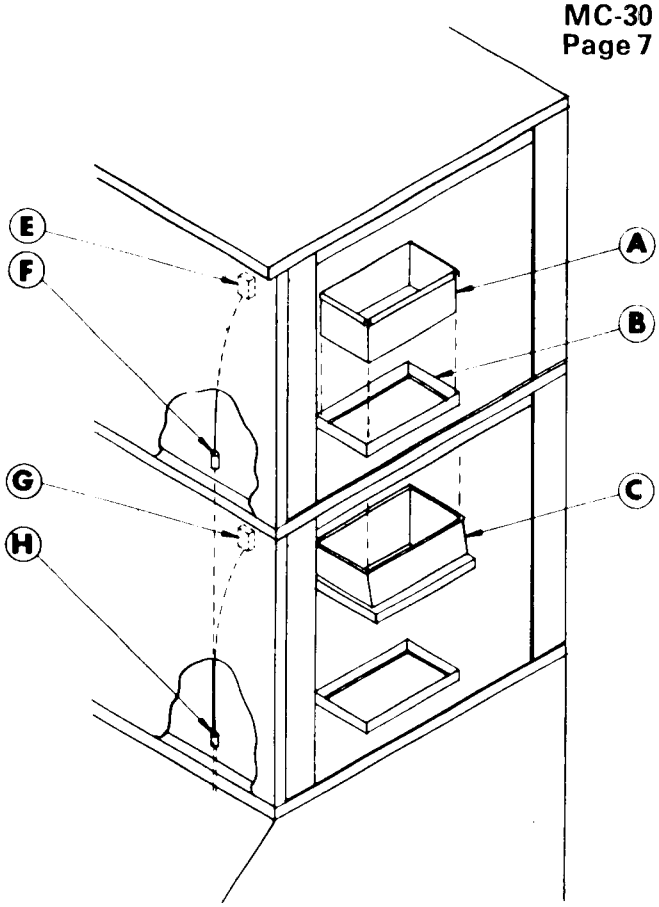

FIG. 2

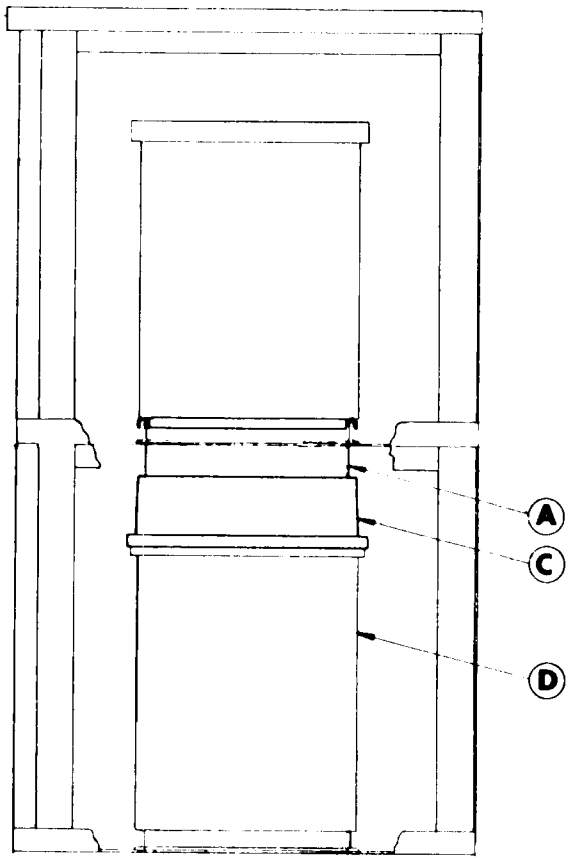

FIG. 3
COMPLETED INSTALLATION

KSC1

STACKING KIT INSTRUCTIONS

1. Remove all panels from both machines. (Top panel of bottom machine may be set aside, as it is not used when machines are stacked) Remove cube chutes from both machines.

2. After mounting bottom cuber to storage bin, place upper machine directly on frame of lower machine. Bolt together with same bolts and holes used in holding machine to crate skid. Fig. 1

3. Insert stainless steel (A) thru cube opening (B) in base of upper cuber. Place stacking kit cover (C) over sleeve as shown and push to top of sleeve. (See Fig. 2)

4. Replace cube chute (D) in bottom cuber and slide cover (C) down over cube chute, as shown in Fig. 3.

5. Route upper machine thermostat bulb (E) thru cap (F) and together with lower machine thermostat bulb (G) push thru cap (H) and feed tubes into combination cube deflector and bulb holder at right side of bin. This will provide two independent ice making systems.

6. Run separate water, drain, and electrical supplies. Test and check out added cuber, ice making, thermostat function, etc.

7. Install cube chute & cover on top machine, and replace panels on both machines.

CUBE DEFLECTOR INSTALLATION INSTRUCTIONS

To install cube deflector, ice machine cube chute must be removed so cube deflector can be hooked over flange on base.

FRONT VIEW

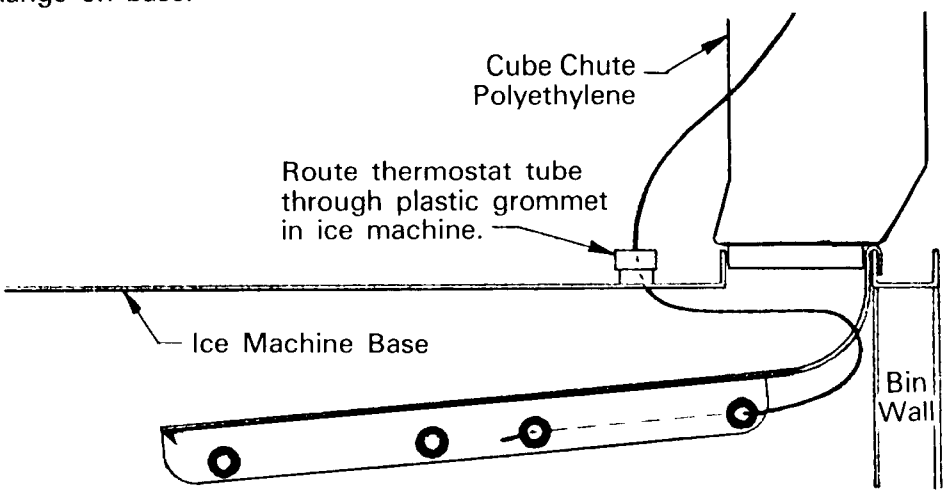

BOTTOM VIEW

Thermostat tube to be routed along the underside of the ice machine until it is located under cube deflector.

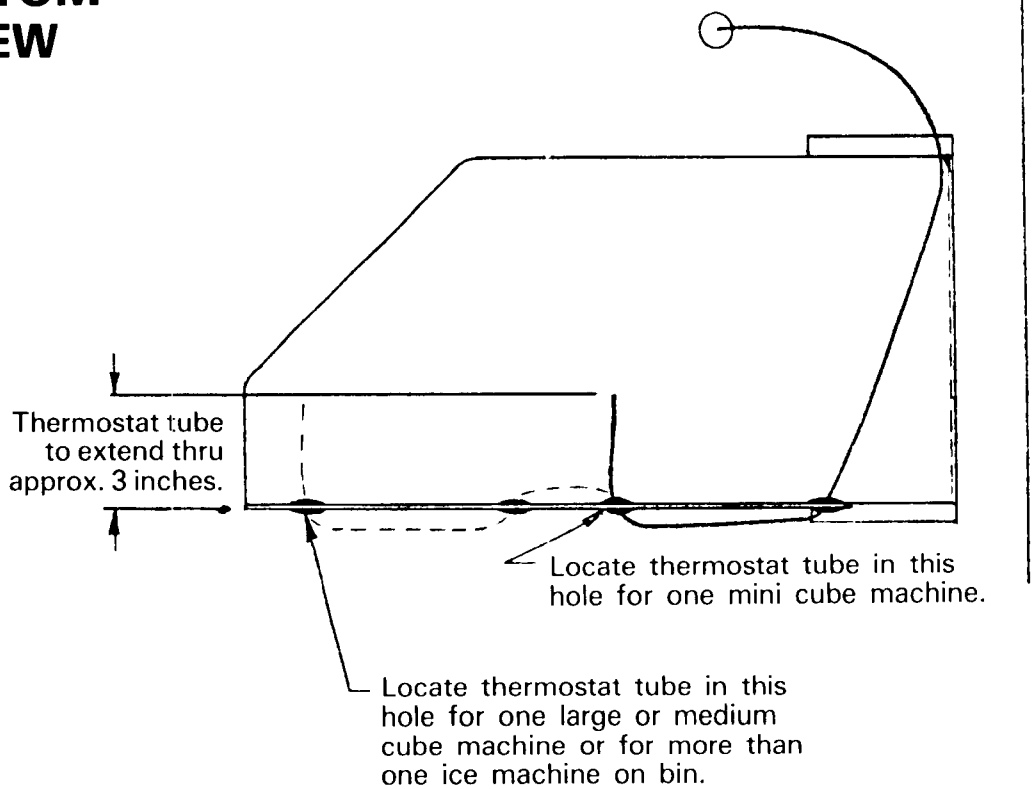

CAUTION: Thermostat tube can be located in any hole for maximum bin fill. However, when located, the ice machines must shut off before cubes can back up into the cube chute or extensive damage may result.

INSTALLATION LIMITATIONS

ELECTRICAL

1. Scotsman, like most manufacturers, purchases electrical motors that are rated to operate within 10% variance above or below nameplate ratings.

   Improper voltages applied to Scotsman equipment can cause premature failures and burnouts. Failures of this type are not considered as factory fault or defect.

AMBIENT

2. WARNING – This machine is not designed for outdoor installations. This machine will not operate when air temperatures are below 50° F. or above 100° F.

   NOTE: This unit incorporates a "hot gas" defrost system, therefore, it is vitally important that the operation head pressure are in the 135-155 pound PS1 guage range. Water cooled models pose no problem since pressure can be regulated by adjustment to the water regulating valve.

   Air cooled units require a minimum 50° fahrenheit ambient air, otherwise, the hot gas system will not defrost the formed ice cubes, resulting in a freeze up that will ruin the freezer section, necessitating a costly repair.

   This unit was not fabricated nor intended to be installed outdoors.

WATER

3. Scotsman Ice Systems require 20 pounds flowing water pressure to operate satisfactorily. Pressures lower than 20 pounds or interruptions in the water supply can cause serious mechanical damage to this product.

   This machine will not operate when water supply temperatures are below 40° F. or above 100° F.

ELECTRICAL CONNECTIONS AND CHARACTERISTICS

115 volts, 60 cycle, single phase	Air Cooled	Water Cooled
Compressor	25.6 Amperes	25.6 Amperes
Sump Motor	1.3 ea. Amperes	1.3 ea. Amperes
Fan - Air Cooled Models	.80 Amperes	None
Spray Bar Motor	.60 Amperes	.60 Amperes
TOTAL -- Full Load Amperes	28.3 Amperes	27.5 Amperes
Minimum Current Ampacity (Air Cooled)	34.7 Amperes	
Minimum Current Ampacity (Water Cooled)		33.9 Amperes

This unit should be wired to 35 Amp. circuit. Be certain that the Super Cubers are on thier own circuit and individually fused. The maximum allowable voltage variation should not exceed 10 per cent of the nameplate rating even under starting conditions. Low voltage can cause erratic operation, and may be responsible for serious damage to the overload switches and motor windings.

All external wiring should conform with National, State and local code requirements. Check the voltage on the line before connecting the machine.

NOTE: All Scotsman cubers require a neutral wire and a solid earth ground wire.

WATER SUPPLY AND DRAIN CONNECTIONS

WATER SUPPLY — Air Cooled Models

The recommended water supply line is 3/8" OD copper tubing for air-cooled units. Connect to a cold water supply line with regular plumbing fittings with a shut-off valve installed in an accessible place between supply line and machine. The water strainer supplied with the unit should be mounted with clean-out plug down. Locate the strainer next to the machine and the arrow in the direction of the flow.

A 3/8" male flare fitting is provided on right rear corner for convenience in hook-up.

WATER SUPPLY — Water Cooled Models

Water Cooled models have separate inlet water supply for the water cooled condenser.

When choosing the water supply for this cuber, consideration should be given to:

A. Length of run.
B. Water clarity and purity.
C. Adequate supply pressures.

Since water is the most important single ingredient in producing ice, you cannot over emphasize the three items mentioned above. Low water pressure (below 20 pounds) may cause malfunction of the unit. Water containing excessive minerals will tend to produce cloudy colored cubes and scale build-up on parts in the water system.

Heavily clorinated water can be controlled using charcoal or carbon filters.

DRAIN: The recommended drain from the bin is 5/8 inch OD copper tubing. Must be run to an open trapped and vented drain. If drain is a long run, allow 1/4 inch pitch per foot. Drain must be installed to conform with local code. Run separate line for condenser discharge water on water-cooled models. Water supply must be installed to conform with local code. In some cases a licensed plumber and/or a plumbing permit will be required.

FINAL CHECK LIST

1. Is the unit level? (IMPORTANT)
2. Have all electrical and piping connections been made?
3. Has the voltage been tested and checked against the nameplate rating?
4. Have the compressor hold-down bolts been checked to insure the compressor is snug to its mounting pads?
5. Is the water supply valve open and the electric power properly hooked up?
6. All masking tape removed from doors, panels and inner freezer curtain?
7. Is the unit clean? Has storage bin been wiped clean with cold water cloth?
8. Has the owner been given the operating manual, and has he been instructed on to operate the machine?
9. Has the registration form been filled out? Check for correct model and serial numbers from serial plate on unit then promptly mail to factory.
10. Check all refrigerant and conduit lines to guard against vibrations and possible failure.
11. Is there 4" clearance behind and around unit for proper air circulation?
12. Is unit in a room where ambient temperatures are minimum 50° F. even in winter months?
13. Has water supply pressure been checked to insure at least a minimum pressure of 20 pounds?

INSTALLATION – START UP

1. After water and electrical hookup is complete, turn time clock knob (protruding thru control box cover) clockwise until you hear the micro-switch actuator arm click into the cam slot. Turn master switch on. (Compressor switch should remain in off position.) At completion of harvest cycle (Approx. 3 minutes after harvest was started), rotate knob clockwise until once again harvest is initiated. At this point compressor switch should be placed in "ON" position. Unit is now ready for automatic operation.

   NOTE: All cubers have two manual on-off switches. One is for motor compressor only during cleaning operation, one is master switch for complete unit.

2. When both switches are thrown "on", water inlet solenoid will be energized allowing water to enter cuber, thru solenoid and up into back side of freezer cup section. This will "fill" icemaker for the freezing cycle - Check operation of spray bar drive motor thru hood top panel. Spray bar motor should be running during harvest cycle.

3. NOTE: WATER PUMP OPERATES DURING THE DEFROST CYCLE.
   Factory tests prove faster defrost and increased ice capacity by letting this pump operate continually.

4. Time clock dial does not rotate at the end of the harvest cycle; it is started latter by the cube size thermostat control located in the control box.

5. Freezing time will be approximately 20 to 30 minutes in a 70 degree ambient. (Longer if above, and shorter if below.) Average complete cycle time is 25 - 35 minutes.

6. Watch first cube harvest and check to make sure that plastic curtains have not been damaged in shipment. Also that curtains do not swing back into freezer and catch on spray bar.

7. Check size of cubes made: If too small, after a second cycle, adjust cube size control to lower or colder setting - until desired cube size is reached. Normal cube size is with a 1/4" depression in crown.

8. Check texture of cubes made: Partially cloudy cubes throughout suggest unit running short of water near end of freezing, or possibly an extremely bad water condition, which would indicate use of filtering or purifying equipment. Contact SCOTSMAN - Queen Products Division, Ice Machine Service Department, Albert Lea, Minnesota, for further details.

9. With unit on harvest cycle, take a handful of cubes made and hold on storage bin thermostat bulb. Should cut unit off at end of harvest cycle. Remove ice, unit should cut back on automatically in 3 or 4 minutes. Thermostat is factory set at 35 degrees out, 39 degrees in.

10. Install gauges and check head and back pressure: air-cooled models, head pressure after twenty minutes of freezing cycle at 70 degrees ambient will be approximately 125 pounds PSI. The back pressure starts out at approximately 50 pounds PSI and gradually pulls down to approximately 4 pounds PSI just before harvest cycle. Higher ambients and dirty condenser will cause higher pressures. Water-cooled models have water regulating valves factory set at 135 pounds PSI: check reading and adjust if necessary. Back pressure will operate the same as on air-cooled models.

11. Remove gauges, replace control box cover and all service panels.

12. Instruct owner on how to operate and clean machine.

WIRING DIAGRAM
115/60/1
Air Cooled

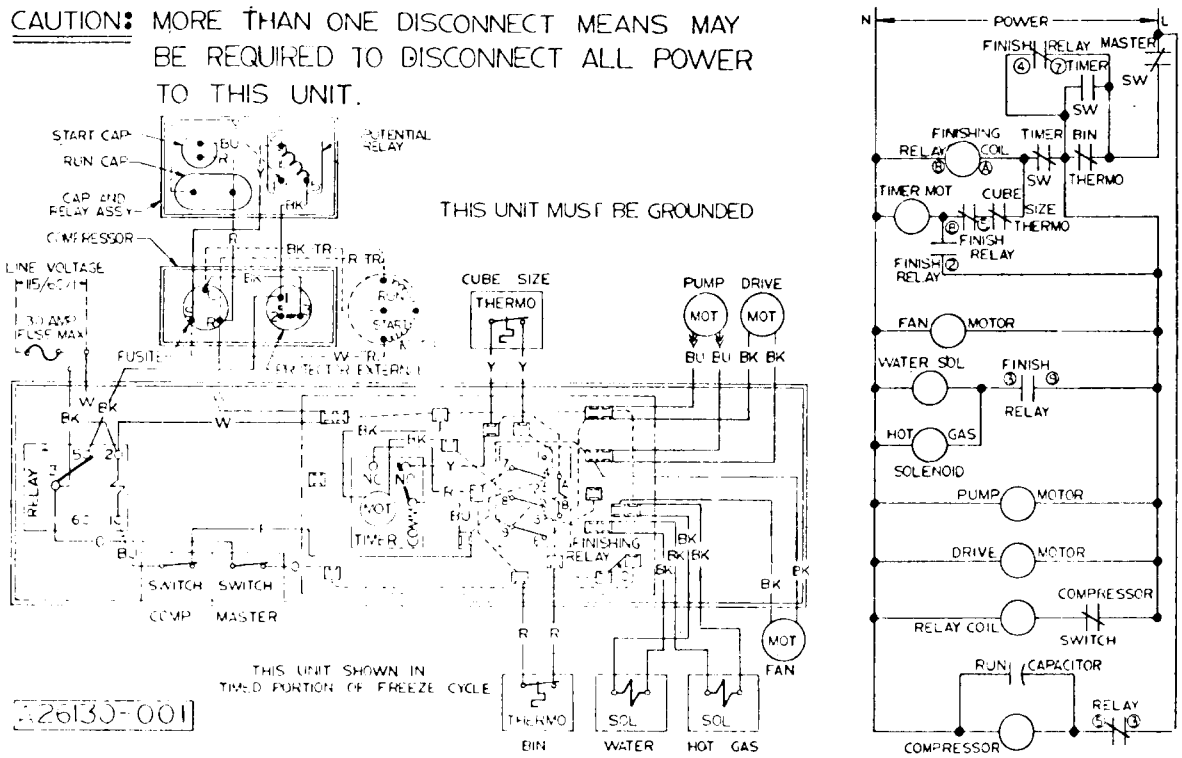

WIRING DIAGRAM
115/60/1
Water Cooled

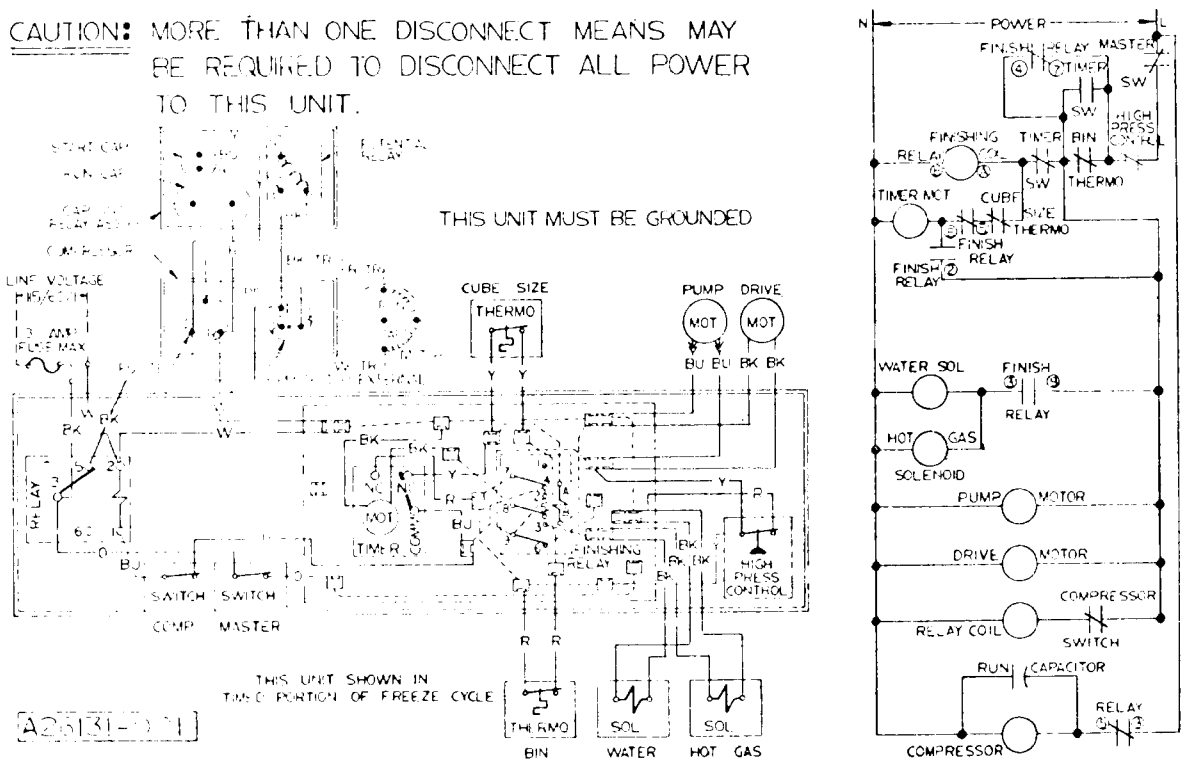

ELECTRICAL COMPONENTS AND FUNCTIONS

1. Bin Temperature Control: Purpose to automatically maintain a supply of ice in storage.

2. Compressor Toggle Switch: Control compressor ON-OFF only.

3. Master Toggle Switch: Manual ON-OFF of whole machine.

4. High Pressure Control: Cuts unit off in case of interupted water to condenser. Water cooled models only.

5. Magnetic Contactor: To provide across the line starter of ample carrying capacity.

6. Relay: Function to hold unit in freezing and harvest cycles once they have started. This insures full cubes everytime a harvest occurs and prevents short cycling on bin thermostat.

7. Evaporator Temperature Control: Controls size of ice cube produced by machine. To increase cube size turn control to right. To decrease cube size, turn knob to left.

8. Timer: Function is to control harvest and part of freezing cycle. Timer is energized when reverse acting cube size control closes. Timer continues freezing cycle for 6 minutes and then switches unit into harvest cycle which runs for 2 minutes.

9. Refrigerant Used: R-12. Charge is, 20 oz. for Air Cooled. 18 oz. for Water Cooled.

10. Refrigerant Metering Device: Capillary Tube.

HARVEST CYCLE

When the finishing timer reaches the last 2 minutes of its cycle, the machine defrosts with hot gas from the compressor. Electrically, the components in circuit are the compressor, fan motor, water pump, spray bar drive motor and both the water and hot gas solenoid.

The water flows from the solenoid valve, through the top of the freezing chamber, into the reservoir. The level in the reservoir is controlled by a stand pipe which directs the excess water to the drain. This overflow "washes" the mineral concentration out of the reservoir area.

The refrigerant is now following the path of least resistance. The capillary tube restricts the normal route enough to force hot, uncondensed gas from the compressor to flow through the hot gas solenoid valve. From there it passes directly into the evaporator inlet, through the coils and down the suction line to the compressor.

The cubes, which are released by the hot gas, are ejected through the chute and into the bin by the rotating spray bar. After the two minute defrost, the finishing timer switches the electrical circuit back through the cube size control and a new freezing cycle begins.

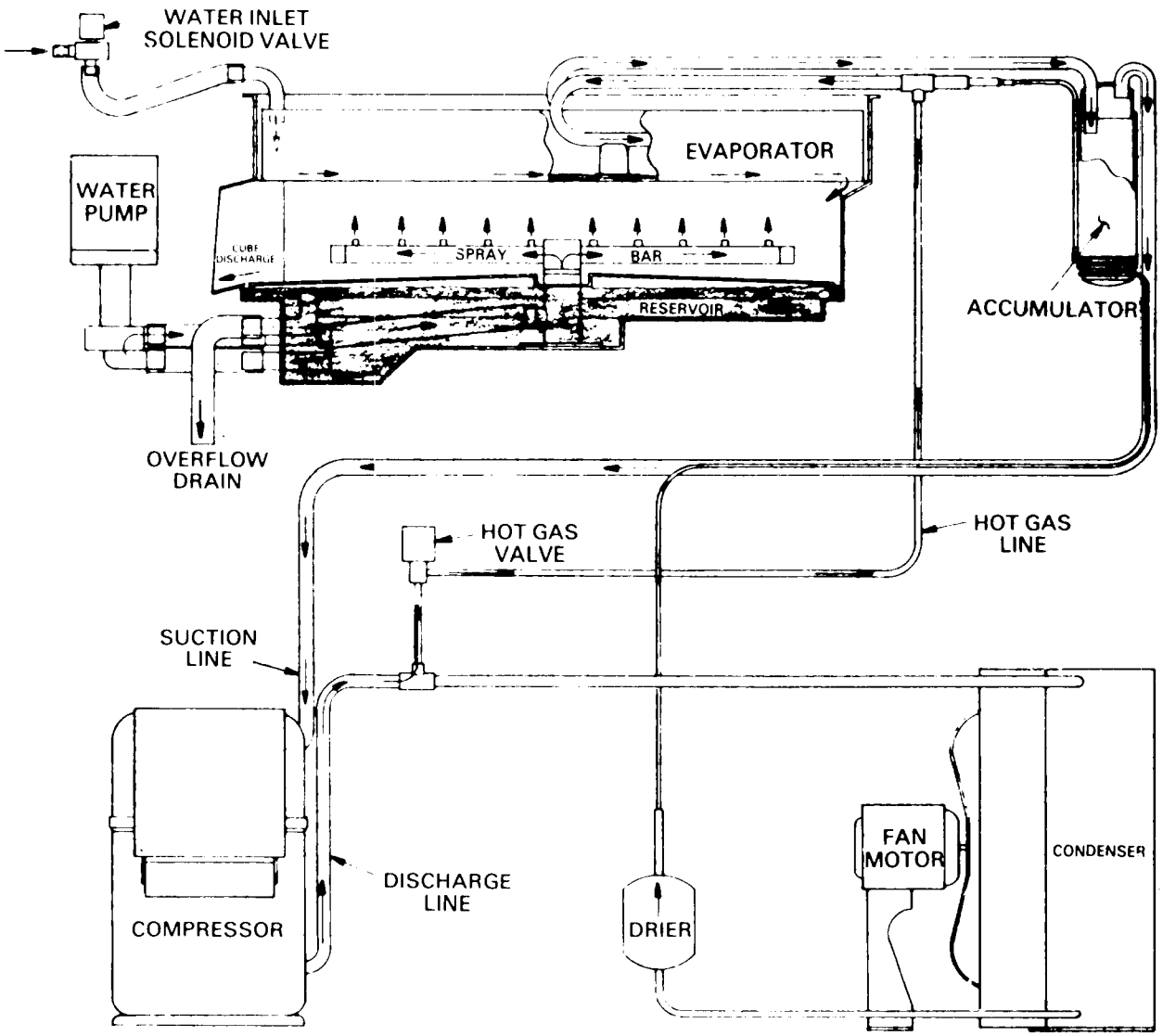

FREEZING CYCLE

As the freezing cycle starts, electrically the components operating are the compressor and fan motor, recirculating water pump and the sprayer tube drive motor.

During this portion of the freezing cycle the electrical brain is the reverse acting, cube size thermostat. This thermostat electrically is holding the freezing cycle components "live". When the ice cubes are about 3/4 formed, the decreasing suction pressure and temperature, activate the temperature sensing bulb of the reverse acting, cube size control, closing its contacts. This does not interrupt the freezing cycle, the closing of cube size thermostat contacts electrically transfers the finishing of the freezing cycle to the finishing clock motor or timer as it is sometimes called. One full revolution of the timer dial is 8 minutes. However, of the total 8 minutes on the timer dial, 2 minutes are used for the defrost or harvest cycle.

This means then that after the cube size contacts close they activate the timer motor. This control takes over and continues freezing cycle for another 6 minutes with timer dial now turning. When the 6 minutes are completed, an offset in the timer dial allows a micro switch with activating arm riding on that cam to drop into the slot, electrically stopping the freezing cycle and starting the 2 minutes harvest cycle - the clock motor continues thru harvest cycle. A notch on the timer dial now lifts mocro switch arm up on dial, electrically stopping harvest cycle and starts back into a new freezing cycle.

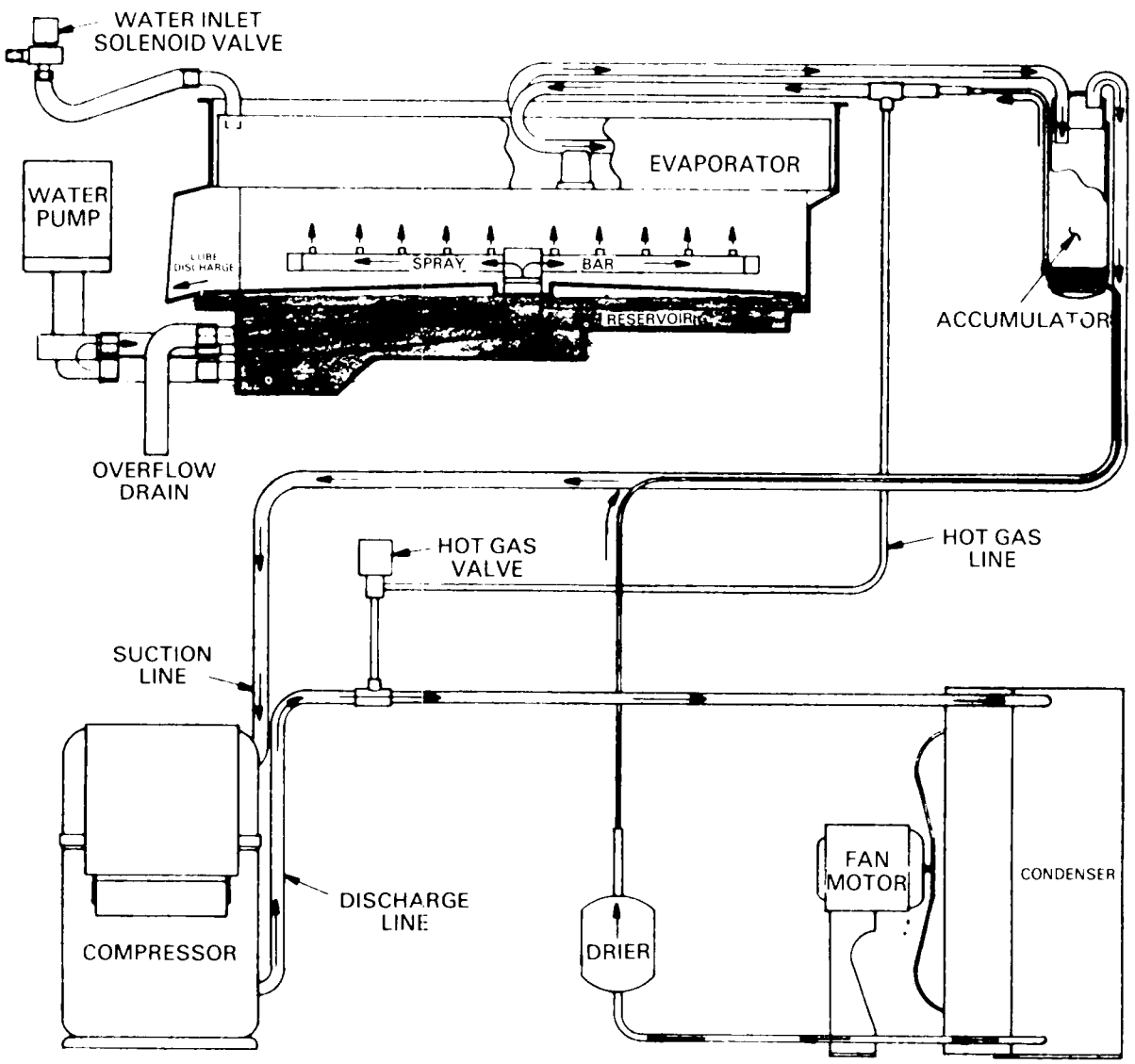

SYMPTOM	POSSIBLE CAUSE	SUGGESTED CORRECTION
Unit will not run.	Blown fuse	Replace fuse & check for cause of blown fuse.
	Bin thermostat set improperly	Replace.
	Switch in Off position	Turn switch to On Position.
	Inoperative master switch	Replace switch
	Timer contacts open	Replace timer micro-switch
Compresser cycles intermittently	Low voltage	Check circuit for overloading. Check voltage at the supply to the building. If low, contact the power company.
	Dirty condenser	Clean with vacuum cleaner, air or stiff brush. (DO NOT use wire brush.)
	Air circulation blocked	Allow sufficient air space all around unit.
	Inoperative condenser fan motor	Check to see if defective, If defective, replace.
	Non-condensable gases in system.	Purge the system.
Cubes too small	Cube size control set too high	Lower the setting. Turn towards colder.
	Partially restricted capillary tube	Blow charge, add new gas & drier, after evacuating system with suction pump.
	Moisture in system	Same as above.
	Shortage of water	See remedies for shortage of water.
	Shortage of refrigerant	Check for leaks and recharge.
Cloudy cubes	Shortage of water	See remedies for shortage of water.
	Dirty water supply	Use water softener or water filter.
	Accumulated impurities	Use SCOTSMAN Ice Machine Cleaner.
Shortage of water	Water spraying out through curtains	Hang curtain in proper position.
	Water entering system too slowly	Check pressure at source - 20 lb. required. Dirt in solenoid and flow control - blow out.
	Partial restrictions in water strainer.	Clean Strainer.
Irregular size cubes and some cloudy	Some jets plugged	Clean jets.
	Shortage of water	See Shortage of Water
	Unit not level	Water overflowing air vent holes on low side burning cubes. Level as required.

SYMPTOM	POSSIBLE CAUSE	SUGGESTED CORRECTION
Cubes too large	Cube size control turned too cold	Turn setting on cube size control dial towards warmer
Decreased ice capacity	Inefficient compressor	Replace.
	High head pressure	Dirty condenser. Clean. Bad fan motor. Replace.
	Non-condensable gas in the system	Purge the system.
	Poor Air circulation or excessively hot location	Relocate the unit, or provide for ventilation by cutting openings.
	Overcharge of refrigerant	Correct the charge. Purge off slowly.
	Partially restricted cap tube	Purge & replace charge and drier
Hole washed inside cube	Water over the top of the cube cups during harvest.	Level unit.
Poor harvests	Too short defrost time	Check and adjust harvest cycle. Timer should be set at 2 minutes.
	Restriction in incoming water line.	Check water feed line strainer and flow reducing valve. Do not remove flow control washers.
	Insufficient quantity of hot gas.	Cold ambient - must be 50° minimum.
	Water solenoid valve not opening.	Solenoid binding or burned out. Replace.
	Air vent holes in upper cube cups plugged	Clean out holes.
Unit won't Harvest.	Insufficient water pressure to ice maker.	Machine requires minimum of 20 lbs. flowing water pressure.
Excessive Water in Unit base	Cube chute not positioned correctly.	Reposition so that bottom edge of cube chute rests inside of cube guide soldered to the base.
	Water tubing leaking (Check during freeze & harvest cycle)	Check. Tighten or replace.

MAINTENANCE PROCEDURES SECTION

WARNING: ALL STEPS LISTED BELOW SHOULD ONLY BE STARTED WHEN WATER AND ELECTRICAL SUPPLY ARE OFF TO PREVENT ACCIDENTS.

A. To remove Cabinet top.
   1. Remove 4 screws in top of panel.
   2. Lift panel off unit.

B. To remove cabinet front.
   1. Remove 2 screws in top front of panel.
   2. Tip top of panel back approximately 6" and lift up.

C. To remove end panels.
   1. Remove 2 screws from top of panel.
   2. Tip top of panel back 6" and lift up.

D. To remove water pump.
   1. Remove right end panel and front panel.
   2. Remove cube chute. (Tip top of cube chute out and lift up. When reinstalling, be sure cube chute rests inside of guide soldered to base.)
   3. Drain water from freezer sump tank. (Drain tube is connected to plug on pump.)
   4. Trace electrical leads to control box and disconnect.
   5. Disocnnect hose clamps at upmp body. Disconnect pump
   6. Remove mounting bolt and mounting strap.
   7. Remove Pump.

NOTE: Screw clamps should be installed on pump discharge tube when unit is reassembled.

E. To remove water inlet solenoid valve.
   1. Remove right end panel.
   2. Disconnect electrical leads.
   3. Disconnect water inlet line from machine.
   4. Remove valve.

F. To remove agitator motor.
   1. Remove front panel, right end panel and top panel if possible.
   2. Trace leads to control box and disconnect.
   3. Remove cube chute (Tip top of cube chute out and lift up. When reinstalling be certain cube chute rests inside of guide soldered to base.)
   4. Reach in thru curtained opening and remove spray bar by lifting upward releasing bar from center hub. Next remove drive fork from drive shaft attached to motor. (NOTE: Drive fork has left hand threads and must be removed with drive extension to motor if top panel is not removed from unit.)
   5. Remove 4 screws holding drive motor to freezer top.
   6. Remove drive motor.

G. To remove Cube size control.
   1. Remove front panel and right end panel.
   2. Remove 2 screws mounting control to corner gusset.
   3. Trace capillary tube to suction line and peel back insulating tape.

NOTE: do not make any adjustments on new control until control bulb has been reinsulated to suction line.

H. To remove bin control.
1. Remove front panel and right end panel.
2. Remove 2 screws holding control to corner gusset.
3. Trace capillary tube to insure new control capillary tube is routed in same manner.

NOTE: do not attempt to adjust this control. If storage bin is not filling to the capillary or is filling above the capillary into the cube chute, the control should be replaced.

I. To remove plastic curtain.
1. Remove right end panel.
2. Remove plastic cube chute. (Tip top of chute out and lift up. When reinstalling be certain cube chute rests inside of cube guide soldered to the base.)
3. Pull off 3 retainer clips holding curtain in place.

NOTE: When reinstalling curtain be certain the side with the extruding point is positioned towards the left of opening. Also, that the edge of the curtain lines up with the upper edge of the freezer opening.

J. To remove spray bar.
1. Remove right end panel.
2. Remove cube chute. (Tip top of cube chute out and lift up.)
3. Remove plastic curtain.
4. Reach thru ice opening and feel for spray bar.
5. Follow spray bar to center hub, turn spray bar so one end points towards curtain opening.
6. Lift striaght up on spray bar, than out after spray bar comes off center hub.

K. To remove freezing chamber sump tank.
1. Remove front panel and right end panel. If possible, remove top panel.
2. Remove agitator motor. NOTE: It is not necessary to disconnect electrical leads in control box.
3. Remove drive fork from spray bar drive in freezing chamber.
4. Remove tygon tubes from pump to freezing chamber and set aside.
5. Remove harvest water fitting from top corner of freezing chamber assy.
6. Remove cube chute.
7. Disconnect water line from flow control to freezer.
8. Remove 4 screws holding freezer to back panel.
9. Remove front bracket attached to freezing chamber.
10. Lift whole freezing chamber up and out.

NOTE: When replacing the foamed plastic chamber, with a new plastic chamber, it is necessary to drill holes thru the front freezer bracket and the back panel into the bracket foamed onto the freezer assy. Drill depth must not exceed 3/8". Freezer assy should slope 3/8" down towards the ice cube opening.)

FUNCTIONAL PARTS AND MAINTENANCE

PART NAME: Spray Bar Assembly

NUMBER: A-25480-001

FUNCTION: This tube acts as a water distributor for the ice cube cups. The tube has jets over its length. Supply water is forced into the jet tubes by the sump pump and is directed upward in a continuous stream. Drive motor thru drive shaft rotates the spray bar to get a full coverage spray.

REPAIRABLE: No.

MAINTENANCE: All jets should be cleaned by running Scotsman Ice Machine Cleaner through unit. This step will eliminate hand cleaning. Partially plugged jets will produce cloudy or partial cubes. Wholly plugged jet will not produce a cube in cube cups it normally covers.

PART NAME: Spray Tube Drive Fork.

NUMBER: 02-2194-01

FUNCTION: Drives spray tube during freezing cycle to produce clear cubes and also drives spray tube during harvest cycle to eject cubes thru ice opening.

REPAIRABLE: No. Replace defective parts. Left hand thread.

MAINTENANCE: None.

PART NAME: Relay – Ameco or Potter Brumfield – 2 P.D.T.

NUMBER: 12-1879-02

FUNCTION: Relay is used as a by-pass on the bin thermostat when it tries to cut unit off on a full bin of cubes during a freezing cycle. This insures full cubes every time a harvest occurs and prevents short cycleing on bin thermostat.

SETTING: Factory set.

REPAIRABLE: No. Replace when inoperative.

MAINTENANCE: Check electrical connections.

PART NAME: Bin Thermostat.

NUMBER: 11-353-3

FUNCTION: To automatically cut machine off when ice level in storage bin reaches thermobulb. Automatically starts machine when ice level in bin falls below bulb location.

SETTING: Factory set.

REPAIRABLE: No. Replace when inoperative or out of adjustment.

MAINTENANCE: Check capillary for cracks or worn spots due to vibration.

PART NAME: Inlet Water Solenoid

NUMBER: 12-1900-07

FUNCTION: During freezing cycle this valve is closed, keeps water from entering sump tank and also from leaking out of tank.
During harvest or defrost cycle this valve opens and allows inlet water to pass thru flow control orifice and thence to push water across back of cup molds, to assist the hot gas in defrosting cubes.

SETTING: Factory set. (.75 gallons per minute flow rate.)

REPAIRABLE: Yes.

MAINTENANCE: Flush control each six months.

PART NAME: Fan Motor.

NUMBER: 12-1681-01 ESPL-16EMI
Electric Motor Specialties Co.

FUNCTION: Maintain proper head pressures by circulating air across air cooled condenser.

REPAIRABLE: No.

MAINTENANCE: None.

PART NAME: Water Regulating Valve (Water Cooled Models only).

NUMBER: 11-198-02 – Penn or Singer.

FUNCTION: To maintain constant head pressures by regulating amount of incoming water thru water cooled condenser.

REPAIRABLE: No, however, valve can be flushed out.

MAINTENANCE: None.

PART NAME: Hermetic Motor Compressor – Copelaweld SSC4-0100-CAA

NUMBER: 18-4200-01

FUNCTION: Circulates and retrieves refrigerant throughout entire system.

MAINTENANCE: Keeps clean and free of dust, grease, etc.

PART NAME: Contactor - Relay

NUMBER: 12-419-

FUNCTION: Across the line contactor used to provide protection for hi voltage compressor only. Contactor is wired so any of the controls in pilot circuit such as bin thermostat will cause contactor holding coil to drop contact points when actuated. There are no overloads or resets on this control.

SETTINGS: Factory set, no adjustments necessary.

REPAIRABLE: No. Replace.

MAINTENANCE: Check control for loose electrical connections and blow free any dust, dirt, etc.

PART NAME: Reverse Acting Temperature Control - Cube Size

NUMBER: 11-345-02

FUNCTION: Reverse acting temperature control, closes on temperature decrease, opens on temperature rise. Control determines length of freezing cycle and by the same token, the cube size. A lower setting on control will produce larger cubes, a higher setting, smaller cubes, This control actuates time clock motor, which then takes over balance of freezing cycle (6 minutes) and also defrosts period 2 minutes.

SETTINGS: Adjustable by screw driver slot.

REPAIRABLE: No. Replace when inoperative.

MAINTENANCE: Check electrical connections. Blow points free of dust, dirt, lint, etc.

PART NAME: Sump Pump

NUMBER: 12-1930-01

FUNCTION: Recirculating pump used to pump supply water in reservoir to jet tube during freezing cycle and harvest cycle.

SETTING: Factory set.

REPAIRABLE: Yes, see parts breakdown.

MAINTENANCE: Flush out reservoir and sump pump intake with Scotsman ice machine cleaner.

PART NAME: High pressure cut out control.

NUMBER: 11-388-02 Water cooled models.
S.P.S.T. Manual reset - Adjustable.

FUNCTION: Control opens at 250 pounds PSIG due to interruptions in water supply.

MAINTENANCE: None.

PART NAME: Agitator Drive Motor — Merkle Korff

NUMBER: A24656-001

FUNCTION: This motor is used to drive the linkage machanism which in turn drives the rotating jet spray tubes. This provides a constant spray movement to all the inverted cube molds and by so doing also aerates the water producing clear, solid Scotsman cubes. Also ejects cubes thru ice opening during harvest cycle.

SETTING: No settings on motor.

REPAIRABLE: Yes - to some extent. Not recommended although front bearings and windings could possibly be replaced by electric motor shop. Normally replace motors.

MAINTENANCE: Oil every six months or less as use indicates. Use SAE 20 oil. There are two wick oil cups on the motor and a gear case slotted screw which has to be removed to add or change oil in gear case proper. Drive linkage should be inspected to insure free movement with no bindings or drag on drive motor.

PART NAME: Time-Finishing Clock — Assembled by Queen Products Div.

NUMBER: 12-1980-01

FUNCTION: Heart of cyclematic control system is the reverse acting cube size control, No.11-345-02, and the time clock it actuates. All electrical components are connected to the time clock terminal board and are shunted by means of a double pole single throw micro-switch to either the freezing cycle or harvest cycle. Micro-switch is in turn actuated by a cam that is directly connected to the electric timer clock motor. Timer has 8 minute cycle, 6 minutes on freezing cycle after being cut on by lo temperature control and 2 minutes on defrost cycle.

The cam assembly on the timer consists of two discs which can be adjusted to lengthen or shorten the defrost cycle. consists

SETTING: Normal setting for defrost is 2 minutes.

REPAIRABLE: No - replace.

MAINTENANCE: Check all electrical connections, blow contact points free of dust, dirt, etc.

MC30 RIGHT END VIEW

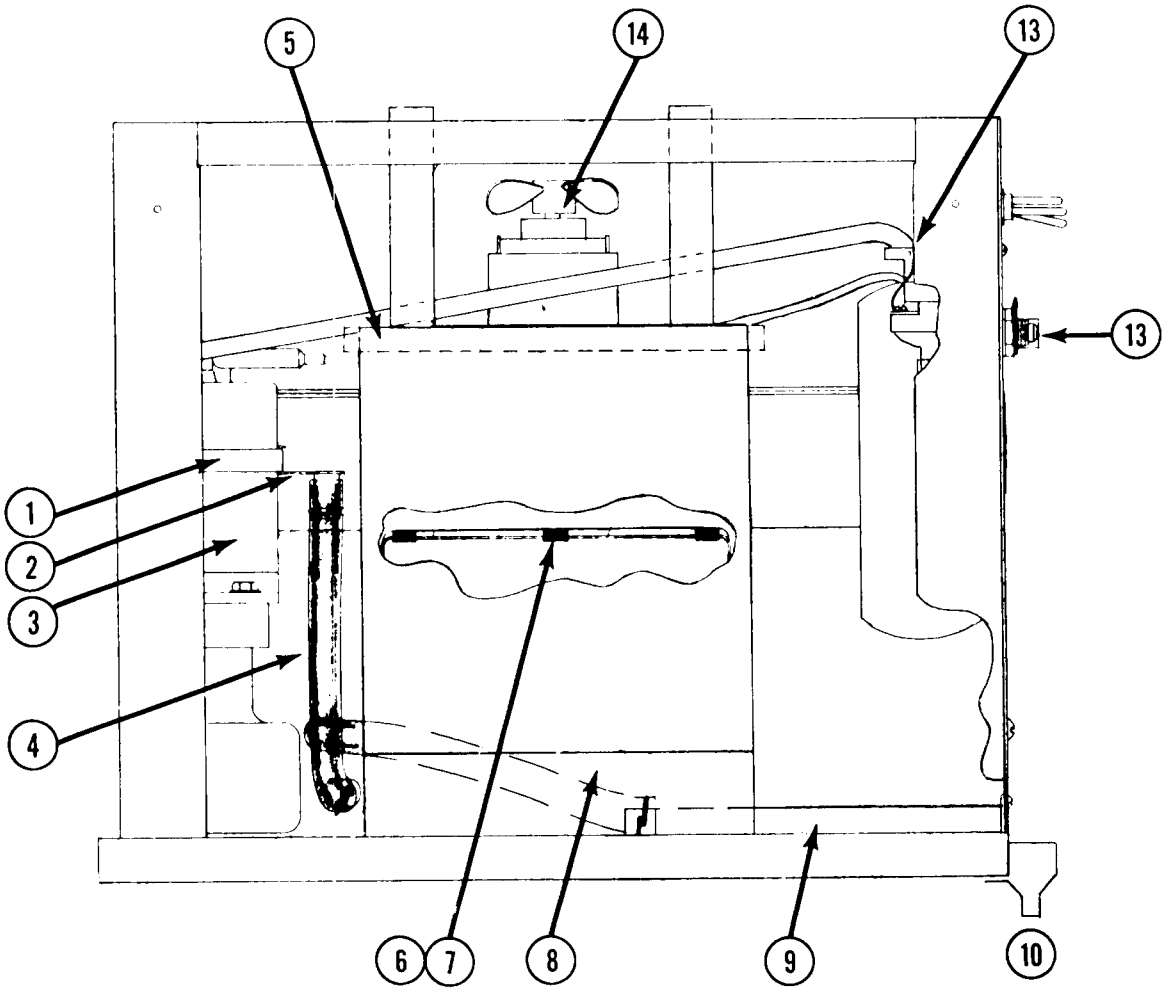

ITEM NO.	PART NO.	DESCRIPTION
1.	2-706	Clamp
2.	A24056-1	Tube Bracket
3.	12-1930-01	Water Pump
4.	13-674-7/per ft.	Tube
5.		
6.	3-1526-1	Curtain Clips
7.	2-2038-1	Curtain Assy.
8.	02-2148-01	Cube Chute/with cover
9.		Sump Drain
10.	02-2296-01	Drain Cup
13.	12-1900-07	Water Inlet Solenoid
14.	A24656-001	Agitator Motor

MC30 WATER COOLED
Top View

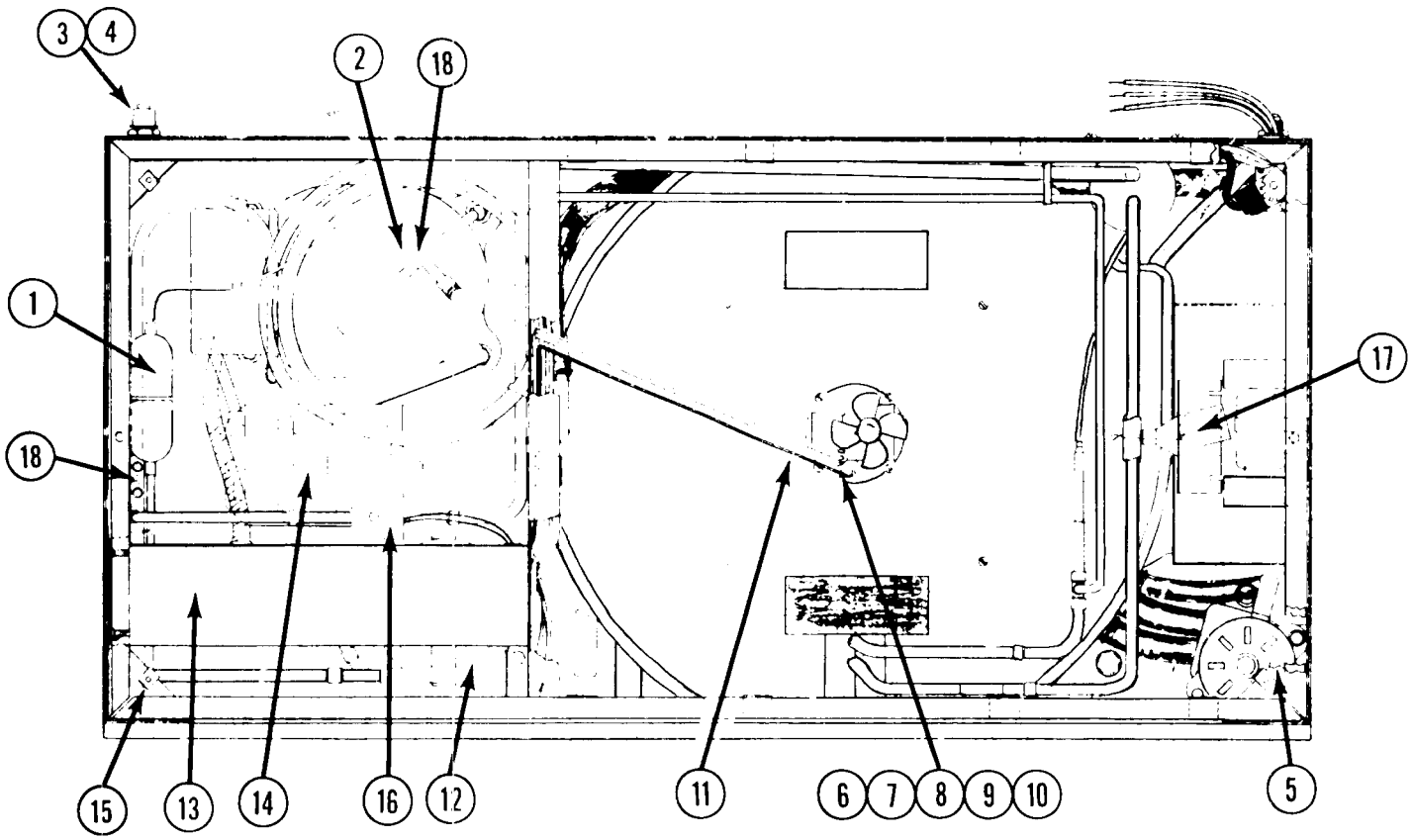

ITEM NO.	PART NO.	DESCRIPTION
1.	2-544-1	Drier
2.	18-4200-01	compressor
3.	3-1409-6	Fiber Washer
4.	3-1394-1	Pal Nut
5.	12-1930-01	Water Pump
6.	A24656-001	Agitator Mtor
7.	A23830-1	Drive Shaft
8.	2-2194-01	Drive Arm Assy.
9.	3-1403-6	Screw
10.	13-176	Drive Motor Gasket
11.	A23835-01	Wire Guard No Longer Used.
12.	18-3306-02	Water Cooled Condenser
13.		Control Box
14.		Capacitor - Relay Ass'y. See page 35.
15.	3-1423-02	Speed Nut
16.	12-2023-01	Hot Gas Solenoid
17.	02-2296-01	Base Drain Cup.
18.		Service Valve Ports

MC30 AIR COOLED
Top View

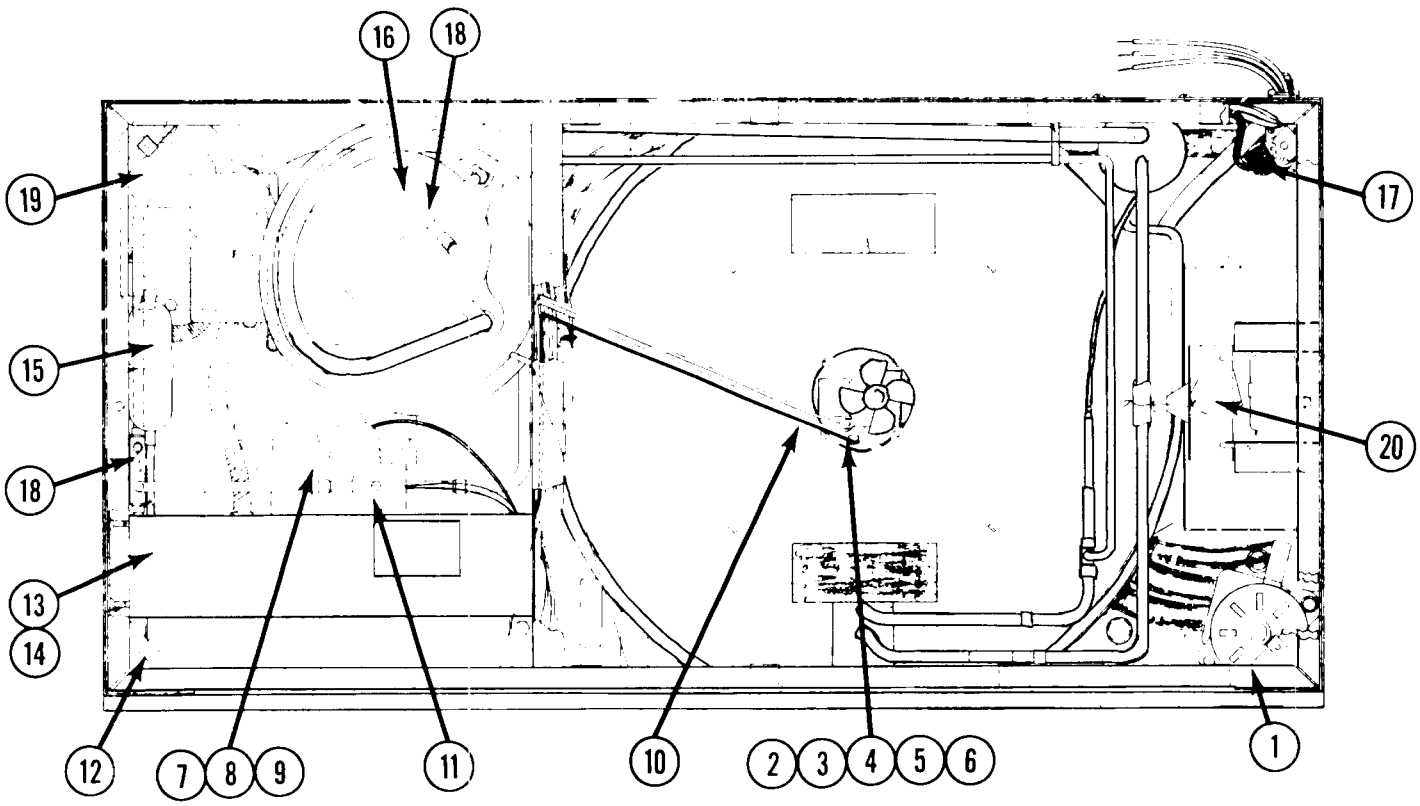

ITEM NO.	PART NO.	DESCRIPTION
1.	12-1930-01	Water Pump
2.	A24656-001	Agitator Motor
3.	A23830-1	Drive Shaft
4.	3-1403-6	Screw
5.	13-176	Drive Motor Gasket
6.	2-2194-01	Drive Arm Assy.
7.	12-1681-1	Fan Motor
8.	18-625-00	Fan Blade
9.	A25548-01	Fan Motor Bracket
10.	A23835-01	Wire Guard
11.	12-2023-01	Hot Gas Solenoid
12.	3-1423-02	Speed Nut
13.	18-3703-01	Condenser
14.	A23825-01	Condenser Shroud
15.	2-544-1	Drier
16.	18-4200-01	Compressor
17.	12-1900-07	Water Inlet Solenoid
18.		Service Valve Ports
19.		Capacitor - Relay Assy. See Page 35.
20.	02-2296-01	Base Drain Cup

MC30 WATER COOLED
Front View

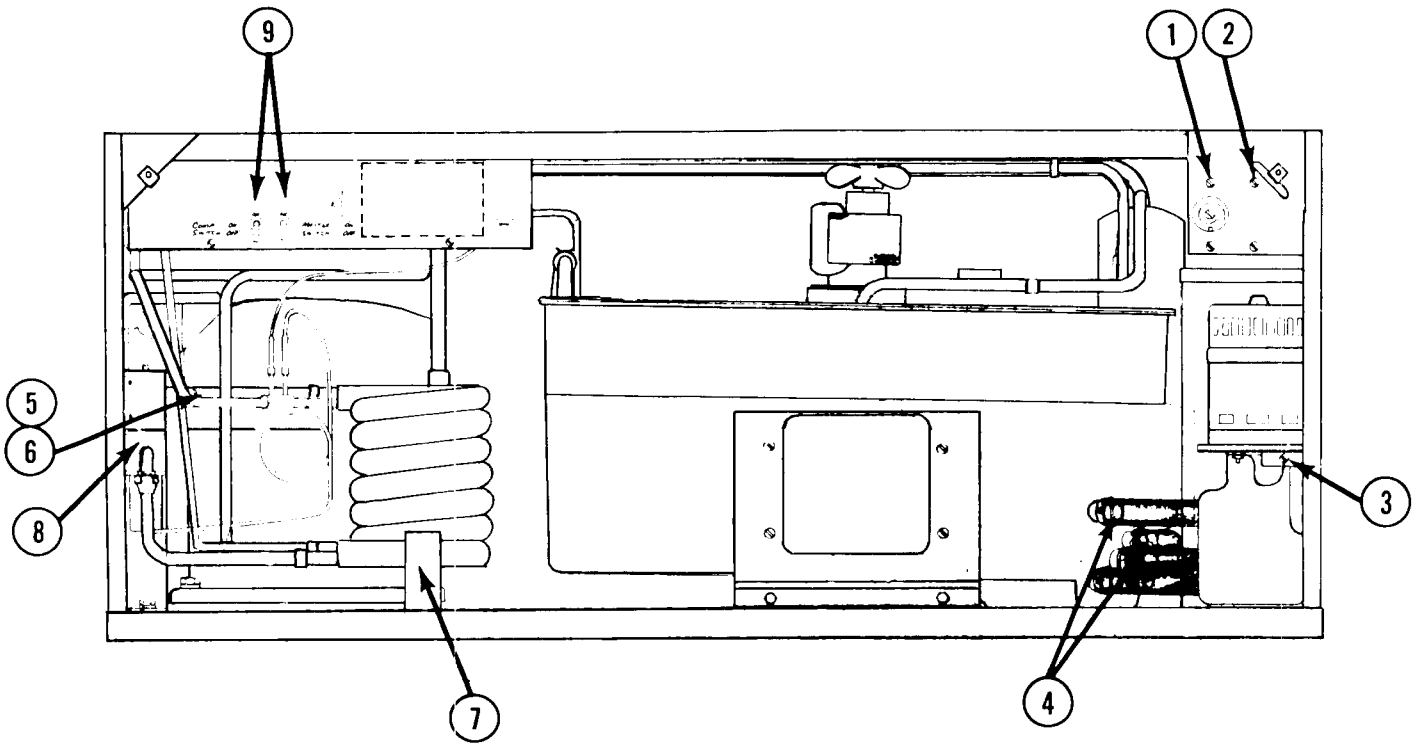

ITEM NO.	PART NO.	DESCRIPTION
1.	11-0345-02	Cube Size Control
2.	11-353-03	Bin Thermostat - All
3.	12-1930-01	Water Pump
4.	2-1358	Hose Clamps (4)
5.	16-560	Service Valve Core
6.	16-563	Service Valve Cap
7.	18-3306-02	W.C. Condenser
8.	11-198-02	Water Regulating Valve
9.	12-426-01	Toggle Switches

MC30 AIR COOLED
Front View

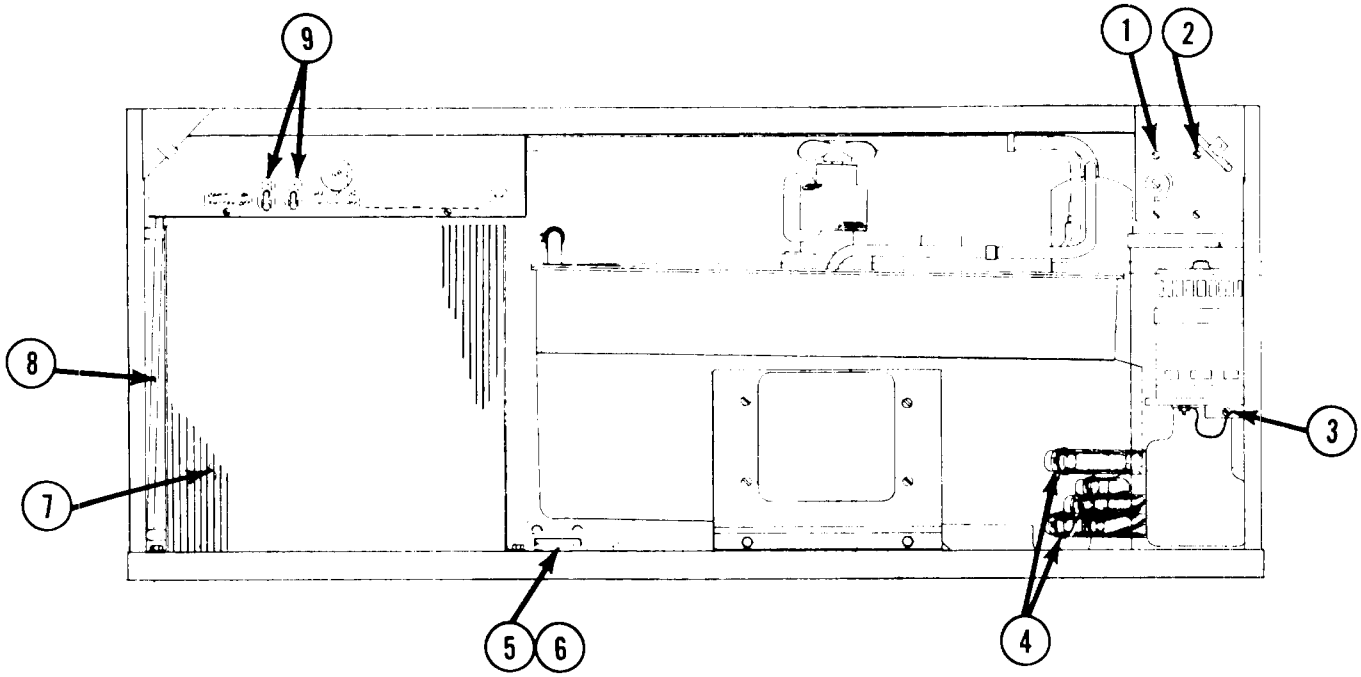

ITEM NO.	PART NO.	DESCRIPTION
1.	11-345-02	Cube Size control
2.	11-353-03	Bin Thermostat - All
3.	12-1930-01	Water Pump
4.	2-1358	Hose Clamps (4)
5.	16-560	Service Valve Core
6.	16-563	Service Valve Cap
7.	18-3703-01	Consenser
8.	A23825-01	Condenser Shroud
9.	12-0426-01	Toggle Switches

MC30 FREEZER ASSEMBLY

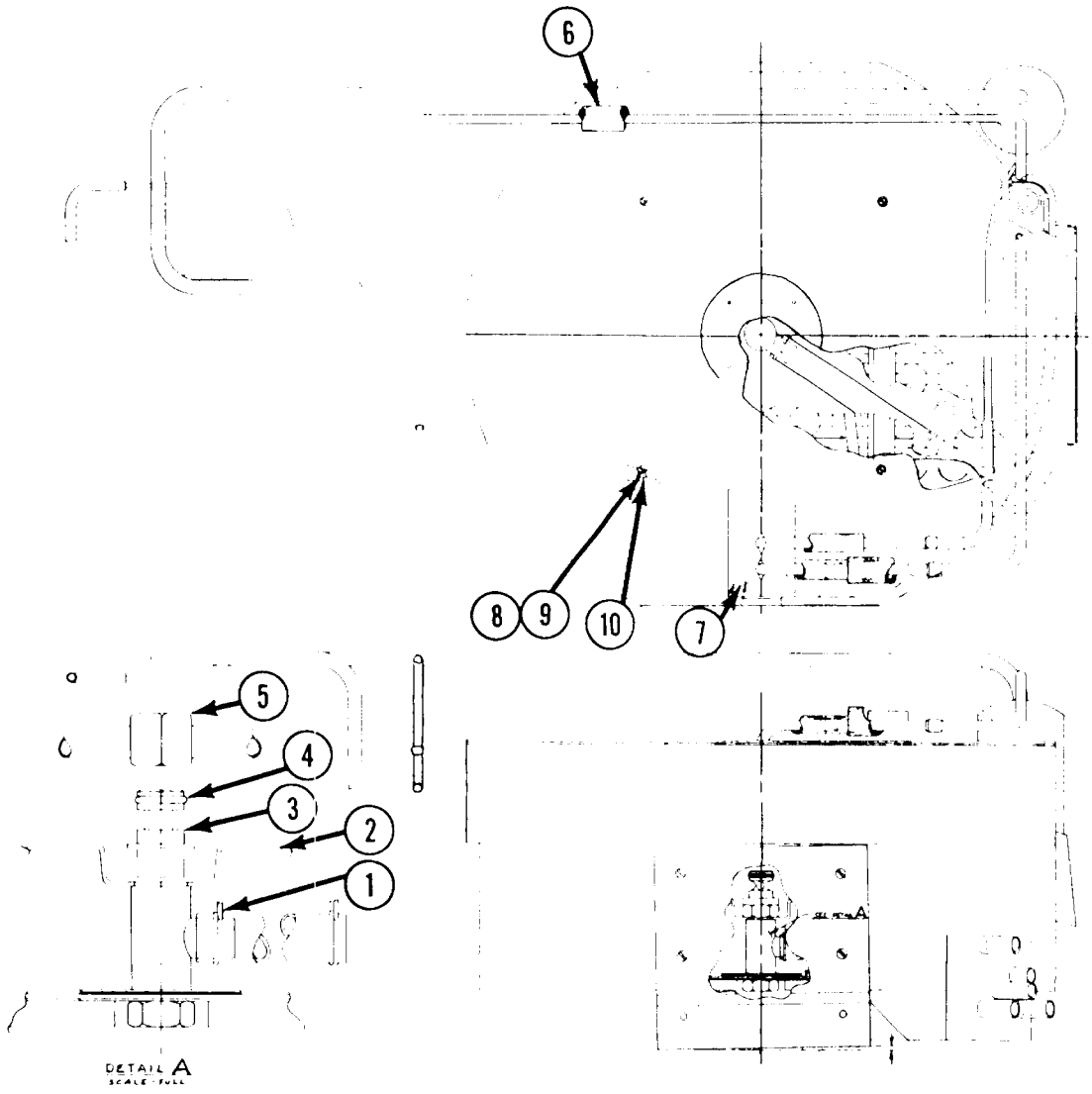

ITEM NO.	PART NO.	DESCRIPTION
1.	2-1358-01	Hose Clamps
2.	02-2028-01	Inner Bottom
3.	02-2120-01	Spray Bar Bearing
4.	13-0617-25	O-Ring
5.	A25480-01	Spray Bar
6.		Rubber Insulation
7.	2-2065-02	Hole Plug
8.	3-1422-04	Speed Nut
9.	A24830-01	Centering Washer
10.	3-1404-10	St. St. Screw

FREEZER – SPRAY DRIVE

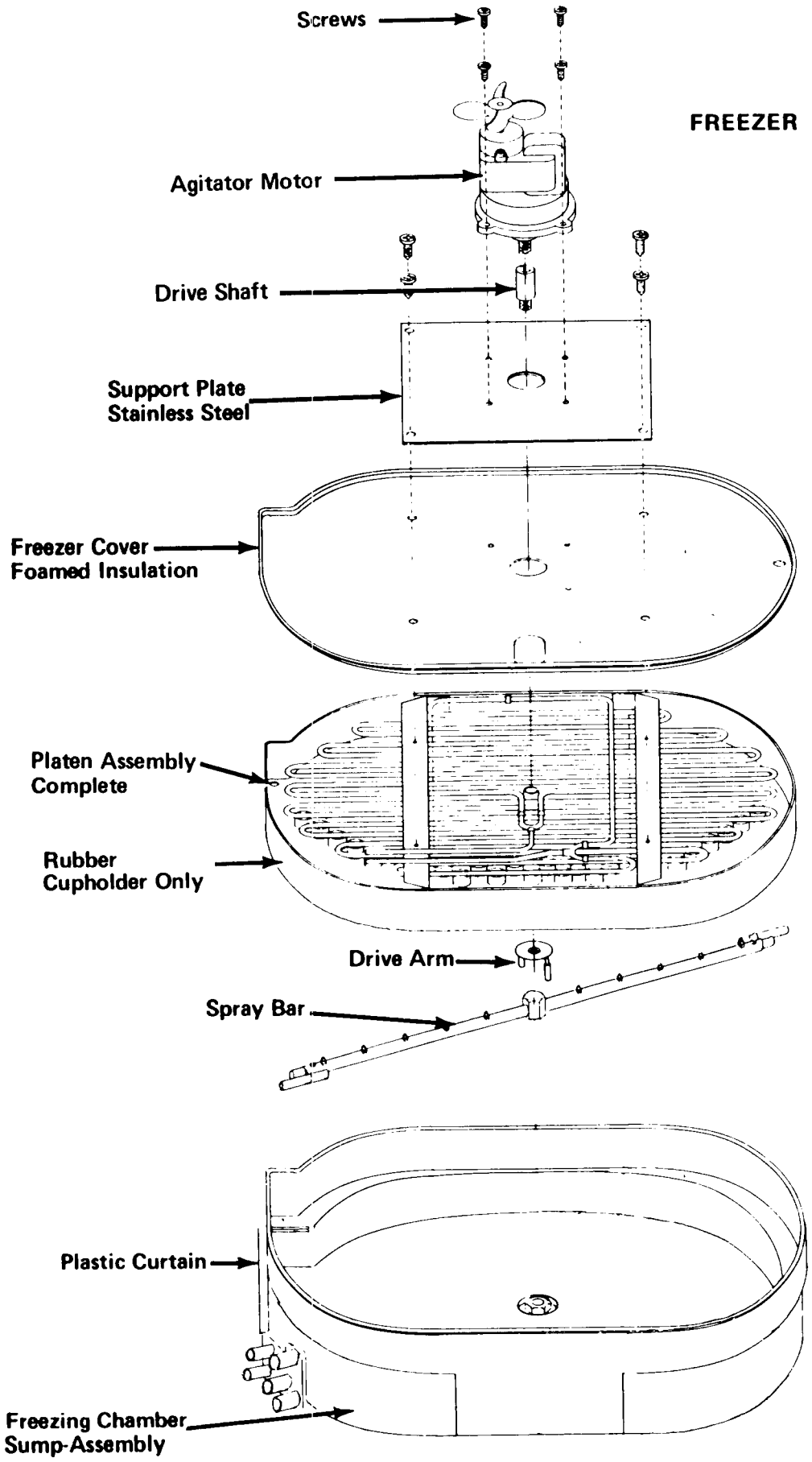

MC30 CUBER
DRIVE ASSEMBLY

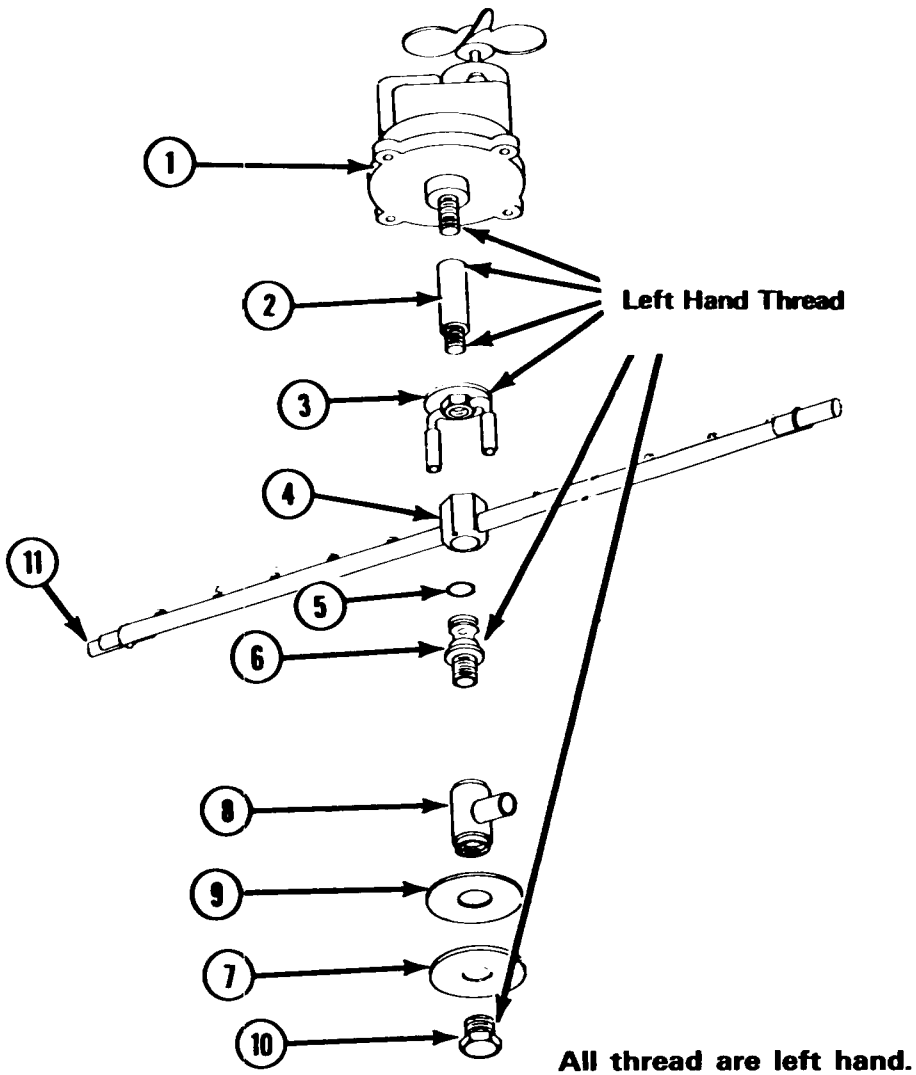

ITEM NO.	PART NO.	DESCRIPTION
1.	A24656-001	Agitator - Drive Motor
2.	A-23830-01	Drive Shaft
3.	2-2194-01	Drive Fork
4.	A25480-001	Spray Bar
5.	13-0617-25	O-Ring
6.	2-2120-01	Jet Bearing Shaft
7.	03-1409-11	Rubber Washer
8.	2-2121-01	Inlet Housing Assy.
9.	A-23827-001	Support Plate
10.	2-2122-01	Bottom Pan Plug
11.	13-0653-00	Rubber Tips

PLATEN ASSEMBLY
MC30 Series

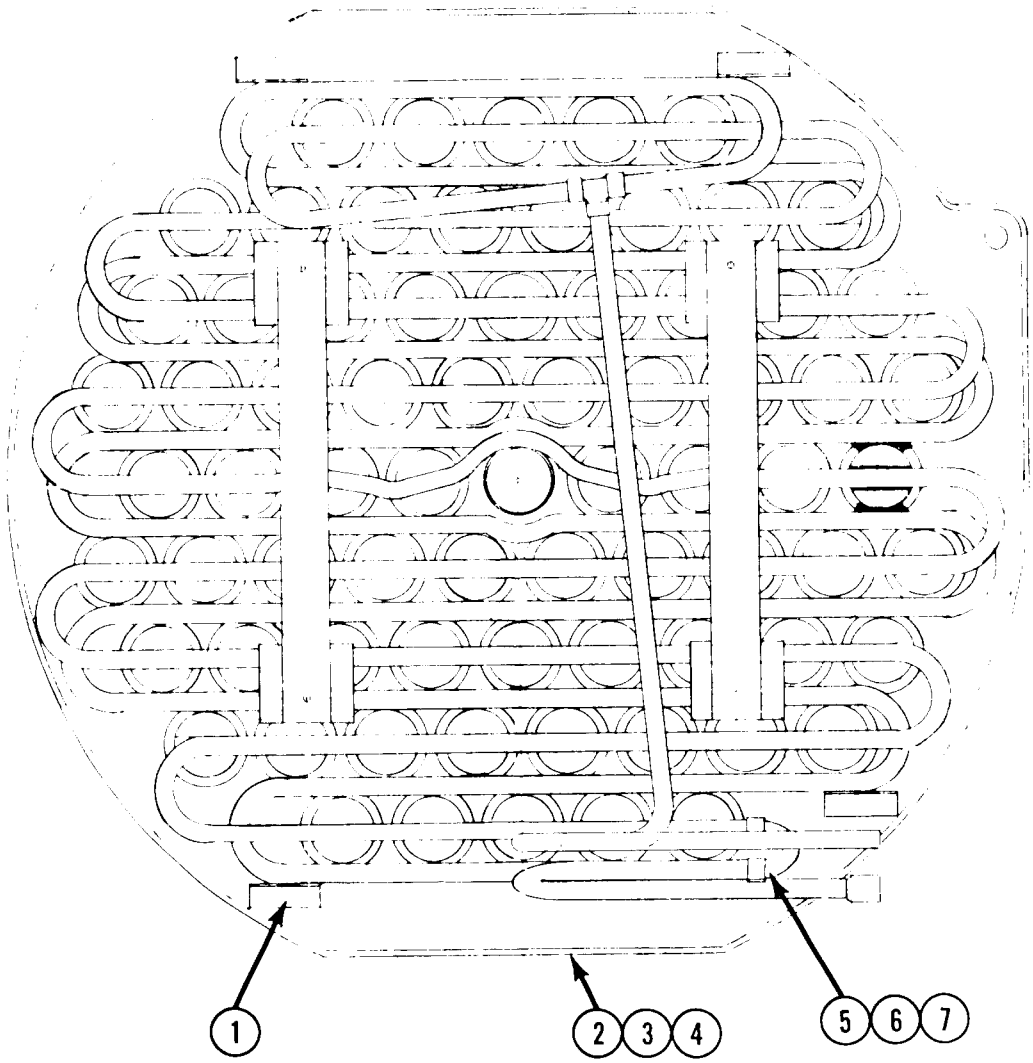

ITEM NO.	PART NO.	DESCRIPTION
1.		Coil Support
2.	13-756-01	Rubber Cupholder MC30 S
3.	13-757-01	Rubber Cupholder MC30 M
4.	13-758-01	Rubber Cupholder MC30 L
5.	A-23803-002	Cup Platen For MC30 S
6.	A-23880-002	Cup Platen For MC30 M
7.	A-24129-002	Cup Platen For MC30 L

COPELAWELD COMPRESSOR
3500 RPM

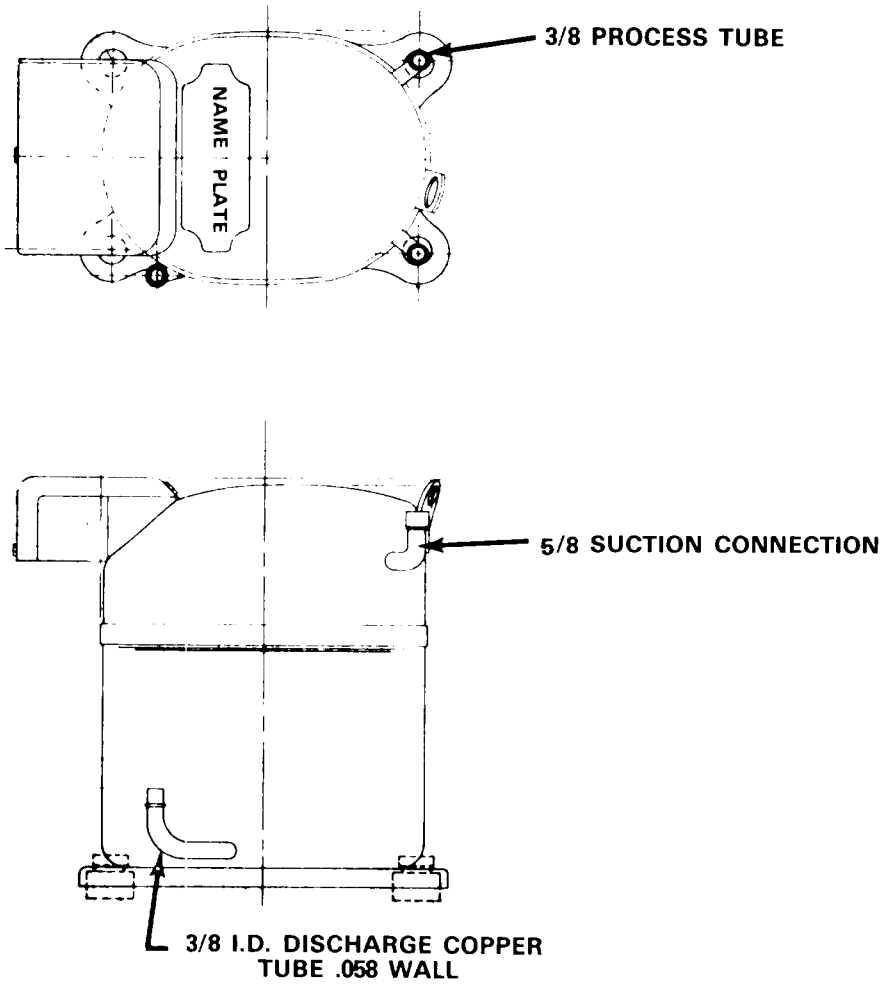

115/60/1

18-4200-01	Compressor Cope No. SSC4-0100-CAA
18-4200-40	Compressor Overload
18-1901-09	Start Capacitor
18-1902-45	Run Capacitor
18-1903-33	Relay

CONTROL BOX
Air Cooled
115/60/1

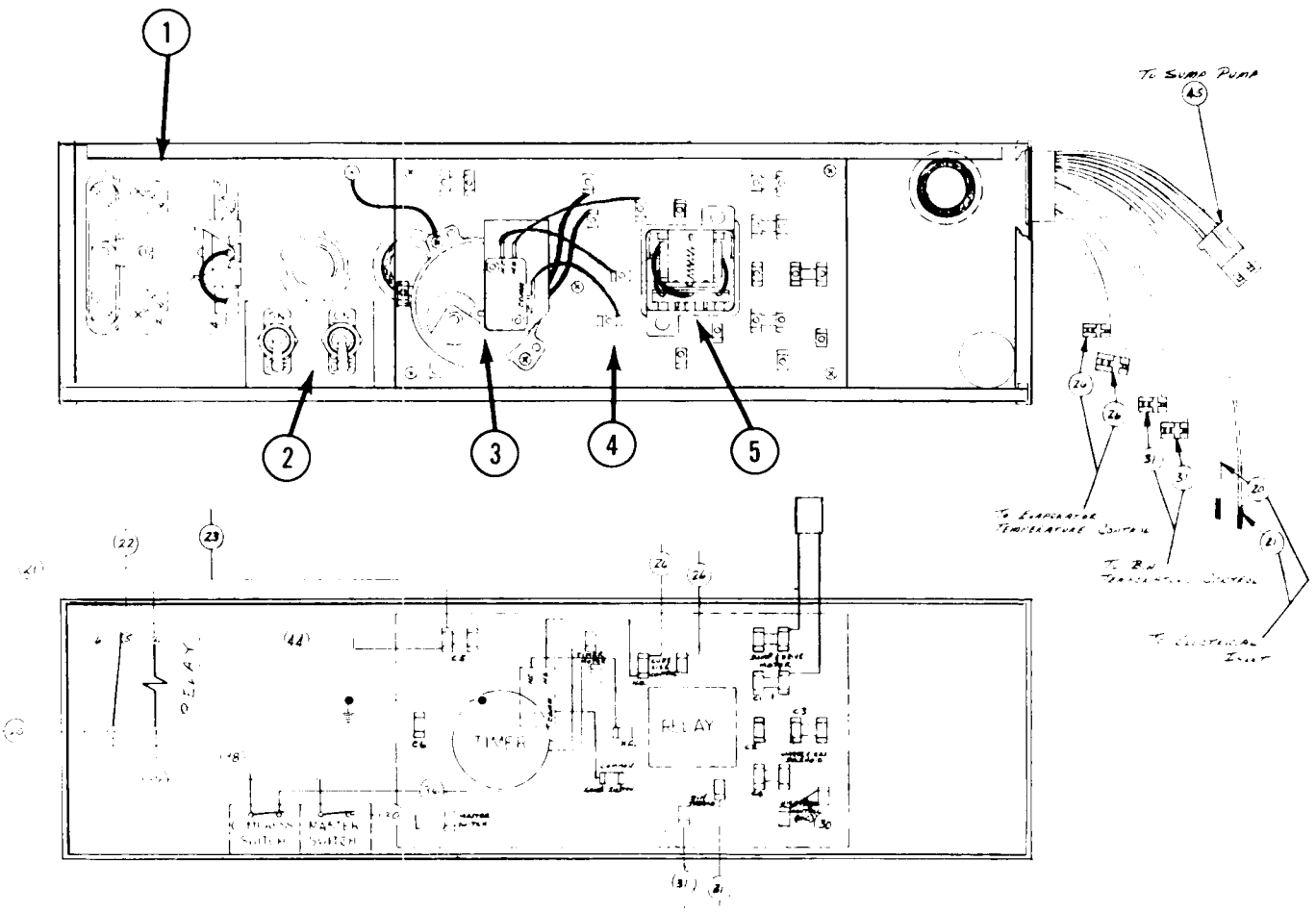

ITEM NO.	PART NO.	DESCRIPTION
1.	12-419-00	Relay - Contactor
2.	12-426-01	Switches
3.	12-1980-01	Timer
4.	12-1912-01	P.C. Board
5.	12-1879-02	Relay

CONTROL BOX
Water Cooled
115/60/1

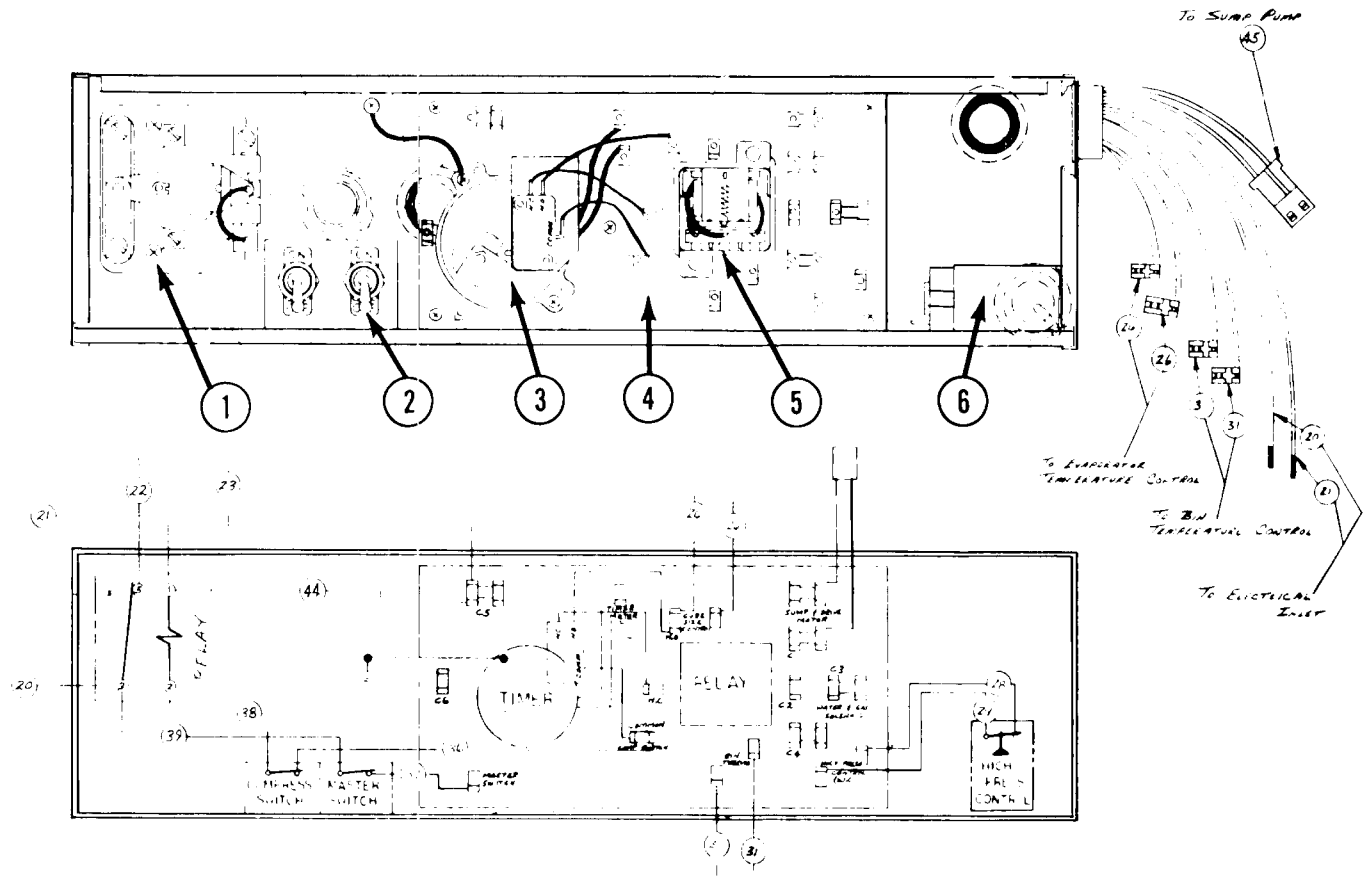

ITEM NO.	PART NO.	DESCRIPTION
1.	12-419-00	Relay - Contactor
2.	12-426-01	Switches
3.	12-1980-01	Timer
4.	12-1912-01	P.C. Board
5.	12-1879-02	Relay
6.	11-388-02	Hi Pressure Control

PS-1-75
2-15-75

TO: ALL MASTER MANUAL HOLDERS

SUBJECT: WATER PUMP ASSEMBLY
12-1849 and 12-1930

It is impractical to replace the Motor only or the Pump Body on these Water Pumps at the field level.

In the assembly procedure of the Motor and Body, it is necessary that the motor be centered properly to avoid damage to the impeller.

The supplier of these pumps uses special tools in assembly to center the motor body correctly.

On page thirty-nine is a listing of the replacement parts that are available and can be replaced on these pumps at the field level.

These pumps 12-1849 and 12-1930 are identical except for the length and design of the electrical leads.

12-1849 60" electrical leads with 1/4" quick connect ends.

12-1930 6" electrical lead with pin plug connection

Wire assemblies used with 12-1930 pump.

12-1940-02 12" electrical lead with pin plug socket

Usage: AC30
12-1940-02 40" electrical lead with pin plug socket

Usage: MC25 and Top Chamber MC35
12-1940-03 50" electrical lead with pin plug socket

Usage: MC35 Lower Chamber

COMPLETE PUMP ASSY. — 12-1930-01 (115/60/1)

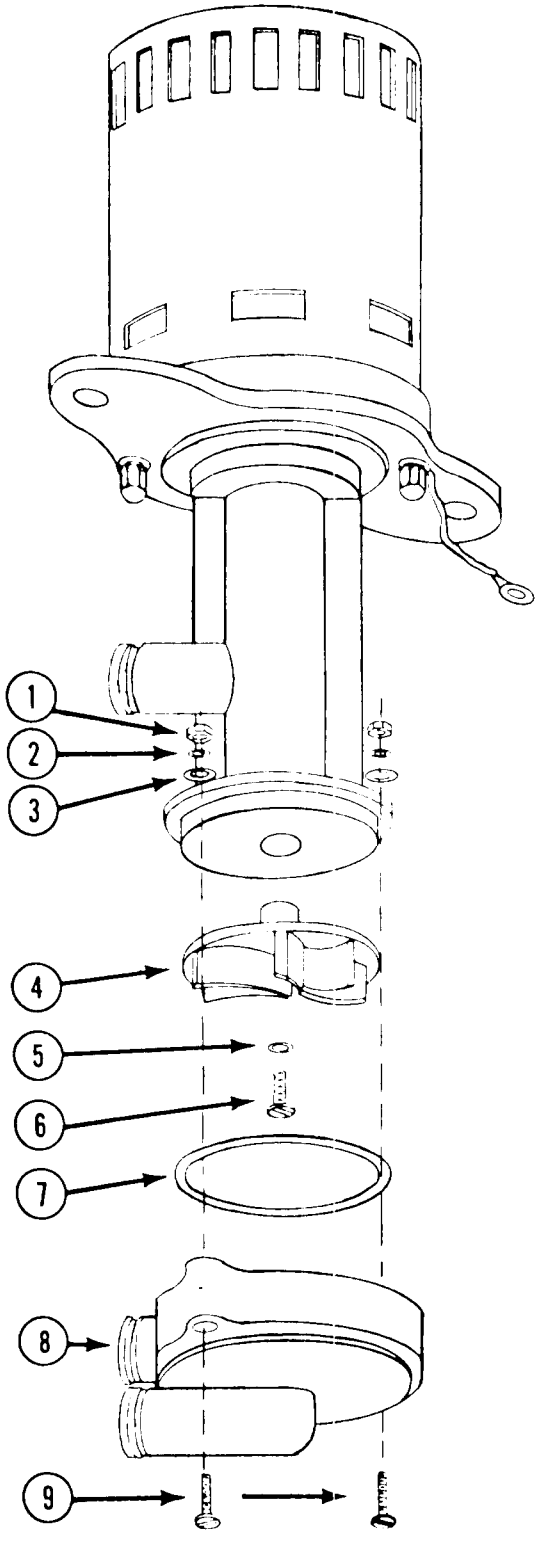

ITEM NO.	PART NO.	DESCRIPTION
1.	12-1849-54	Nut (Hex)
2.	12-1849-55	Washer
3.	12-1849-56	Washer
4.	12-1849-57	Impeller
5.	12-1849-58	Lockwasher
6.	12-1849-59	Screw
7.	12-1849-60	O-Ring
8.	12-1849-61	Pump Housing
9.	12-1849-62	Screw

CABINET PARTS

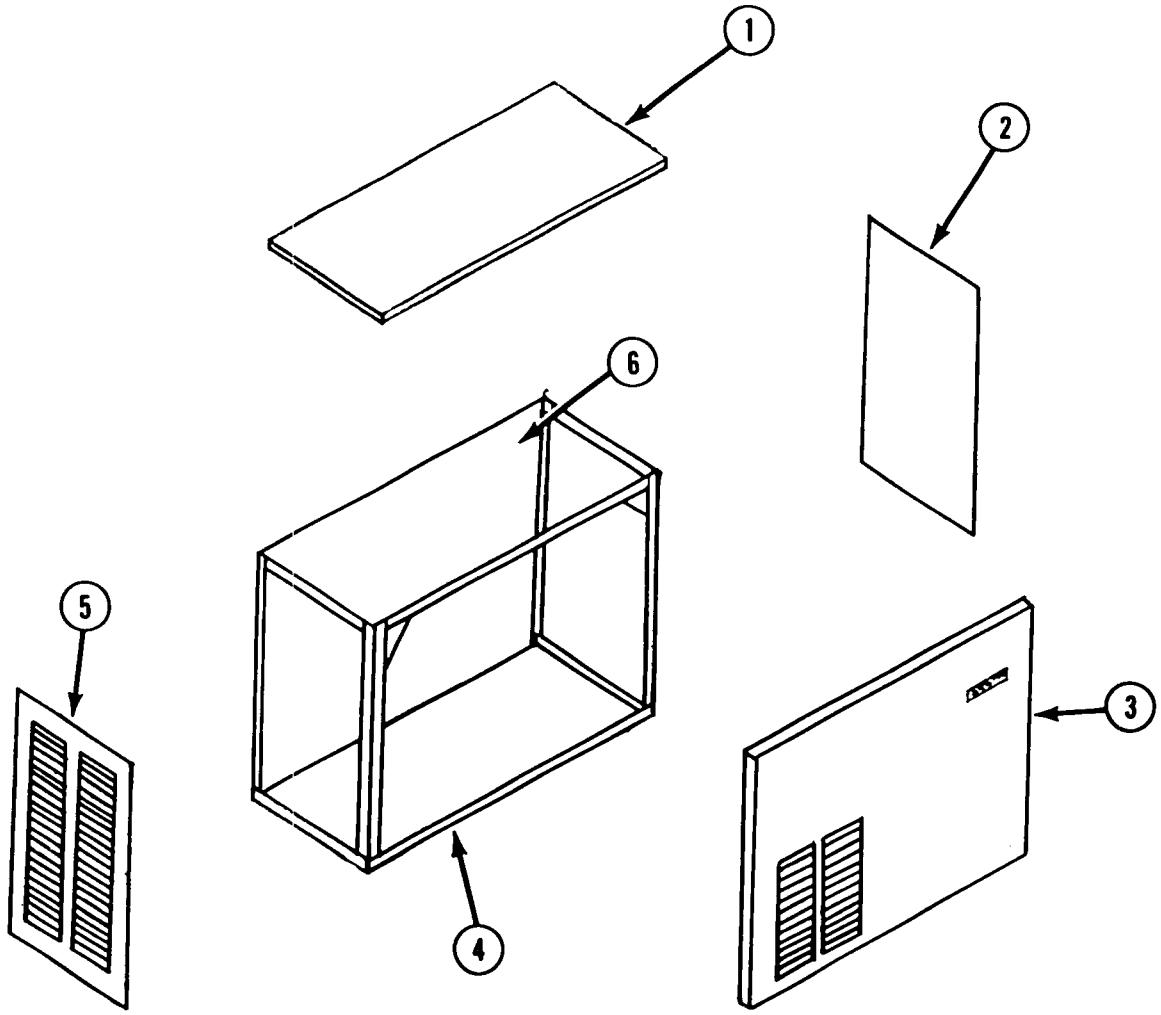

	Enamel	Stainless Steel
1. Top Panel	A23784-001	A23784-002
2. Panel, Right Side	A23783-001	A23783-002
3. Panel, Front	A23785-001 Vinyl	A23785-002
4. Cabinet Assy.	A23770-001	A23770-001
5. Panel left side	A23782-001	A23782-002
6. Back Panel	Fixed	A24833-001

*Panel Conversion Kit (Enamel to Stainless Steel) (Kit Includes Items 1, 2, 3, 5 and 6) — Part No. SPK-MC1

FREEZER CHAMBER – SUMP

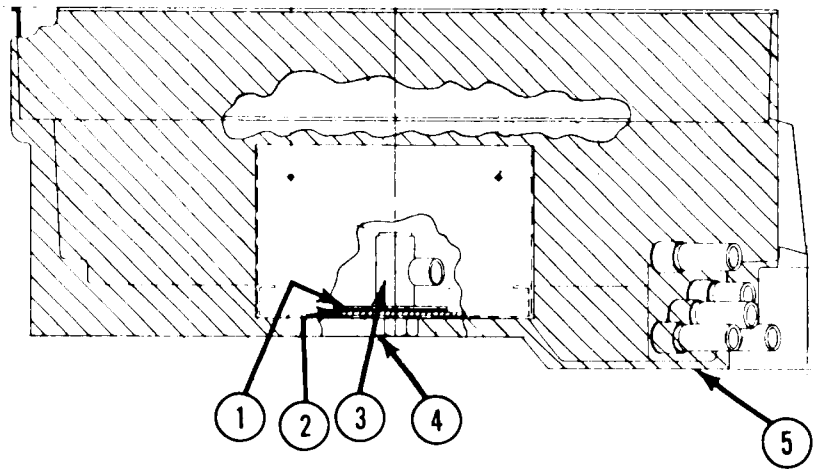

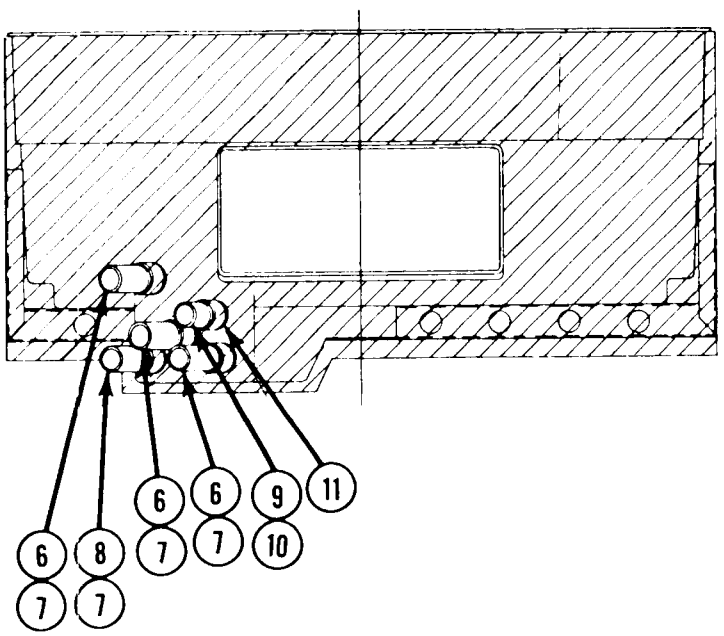

ITEM NO.	PART NO.	DESCRIPTION
1.	A-23827-01	Metal Plate Support
2.	3-1409-11	Rubber Washer
3.	2-2121-01	Water Inlet Housing
4.	2-2122-01	Plug Nut
		Foam Insulation
6.	2-2080-01	Tube - Male
7.	2-2081-01	Tube - Female
8.	2-2082-01	Tube - Pump Pick-up
		Position With Opening Down
9.	2-2125-01	90° Standpipe - Position up
10.	A-24379-01	Tube - Female
11.	13-617-02	O-Rings - 5/Unit

SCOTSMAN

ICE STORAGE BINS

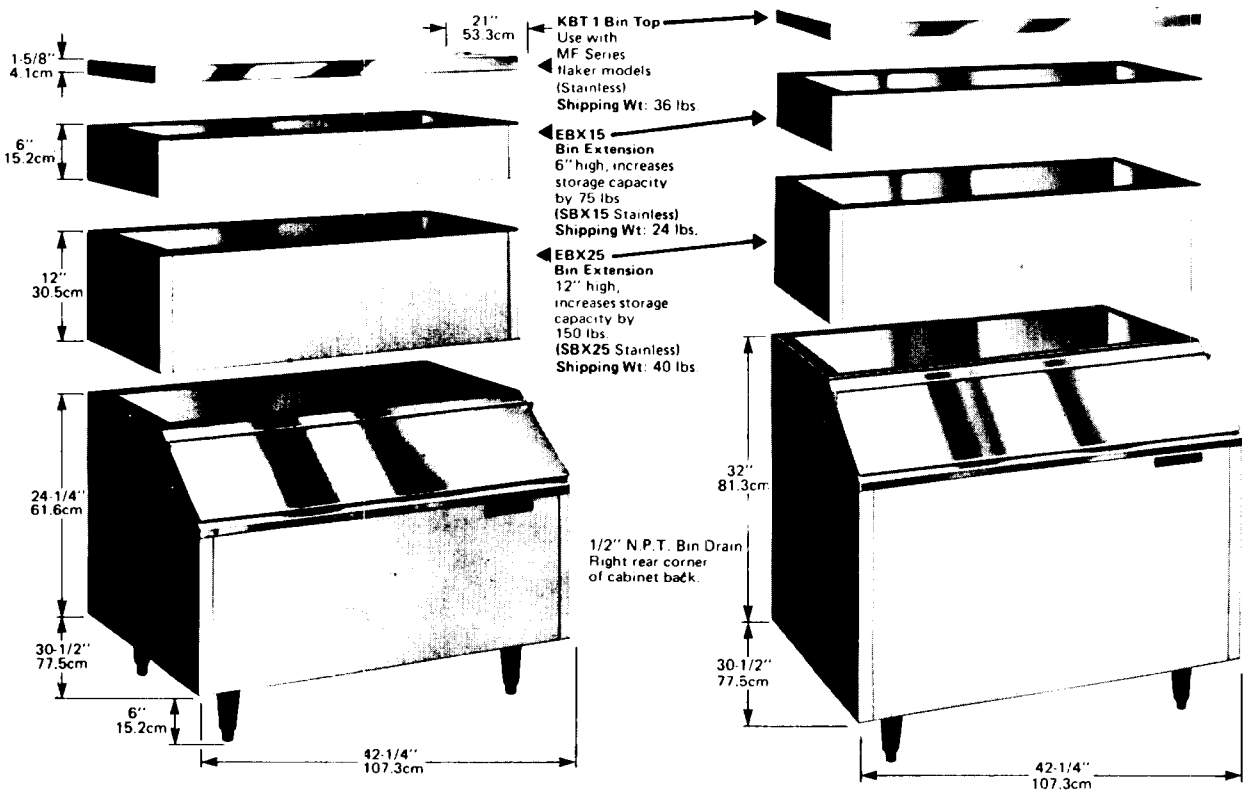

B40 Bin

Has a 350-lb. storage capacity, hinged door opening 9¾" x 39". Designed to accept the MC25 and MC35 Series cubers or MF3, MF4 and MF5 Series flakers. Ice makers can be mounted on top of bin or flake ice can be transported from a remote location. Stainless steel bin liner.

EB40: Sandalwood enamel exterior, black enamel legs.
SB40: Stainless steel exterior, chrome plated legs.

Shipping Wt: 156 lbs.

B60 Bin

Has a 550-lb. storage capacity, hinged door opening, 9¾" x 39". Designed to accept the MC25 and MC35 Series cubers or MF3, MF4 and MF5 Series flakers. Ice makers can be mounted on top of bin or flake ice can be transported from a remote location. Stainless steel bin liner.

EB60: Sandalwood enamel exterior, black enamel legs.
SB60: Stainless steel exterior, chrome plated legs.

Shipping Wt: 194 lbs.

MAINTENANCE INSTRUCTION FOR SCOTSMAN CUBERS

THE FOLLOWING MAINTENANCE SHOULD BE SCHEDULED EACH (6) SIX MONTHS ON ALL SCOTSMAN CUBERS. CALL YOUR AUTHORIZED SCOTSMAN SERVICE DEPARTMENT.

1. Clean air-cooled condenser; This is to be done frequently with the machine shut off.
2. Clean water system and evaporator, sump tank and screen, using Scotsman Ice Machine Cleaner or equivalent.
3. Remove jet tube and manually clean jets.
4. Check curtain assembly.
5. Tighten all electrical connections.
6. Tighten all bolts.
7. Check water supply. Check water pressure flow through flow control. Clean water strainer.
8. Oil jet tubes drive motor two (2) places. Use SAE 20 oil - 2 oil cups.
9. Oil Condenser fan motor. Punch sealed cap or remove screws where possible.
10. Check for refrigeration leaks.
11. Check for water leaks. Tighten drain line connections.
12. Check size and condition of cubes. Adjust as required.
13. Check bin thermostat setting. Factory set at 35 degrees out, 39 degrees in.

PROCEDURE FOR USE OF SCOTSMAN ICE MACHINE CLEANER

1. Remove front panel, right side panel, and cube chute.
2. Locate control box with time clock knob protruding thru cover. Turn master and compressor switches to off position.
3. Start unit thru harvest cycle manually. This is done by slowly turning time clock knob clockwise until you hear the micro-switch actuator arm click into the cam slot.
4. Locate and remove defrost water tube which protrudes thru freezing chamber cover at top left of freezing chamber.
5. Dilute 16 oz. of Scotsman Ice Machine Cleaner in 1 quart of fresh hot potable water in a clean container. Pour this cleaning solution into freezing chamber thru defrost tube hole. Replace defrost tubes and IMMEDIATELY TURN ON MASTER SWITCH.
6. Let unit operate normally for 20 minutes into the freezing cycle. No ice will be made because the compressor is not in operation.
7. At the end of this time, rotate the timer knob until the harvest cycle starts again.
   Allow the machine to run normally thru this harvest cycle.
   When the harvest has been completed, then rotate knob manually thru the freeze cycle until the harvest cycle starts once again.
   Do this 3 times.
   Cube chute should be washed in solution of household bleach and water (1 oz. of bleach in 1 gal. of water)
8. Turn the compressor switch back on. Use a damp cloth to wipe off curtain and cube chute. Place cube chute and curtain in position.
9. Check each new batch of cubes until they are clear and until acid taste has been removed from cubes.
10. Pour hot water in storage bin to melt the cubes and thereby clean the bin and drains with the same solution that has just cleaned the unit.
11. Replace all doors.
12. Unit is now ready for continued automatic operation.

CARE OF STAINLESS STEEL STORAGE BIN LINERS

All commercial grades of stainless steel will corrode or rust when in contact with certain chemicals or salts. **One element that attacks stainless readily, is chlorine,** and most compounds of chlorine, such as hydrocholic acid, and certain salts containing chlorine. The "speed" with which this corrosion takes place depends on the concentration of the chlorine, and the length of time it is left in contact with the stainless steel.

ICE BIN LINER RUSTING

In many ice bin applications, **a rust stain, or brown deposit, will appear at the top of the side and rear walls of the bin liner, and also on any exposed stainless parts inside the bin, which do not normally get covered with ice; such as stainless steel door back pans.** The lower portions of the liner walls usually stay clean if the bin is being used regularly, due to the "washing" action of the ice and meltage water draining down these walls. This brown staining on the liner may appear more rapidly in some installations than other, depending on the way the ice is being made in the ice machine, and the water conditions.

This staining or rusting, can come from basically two sources:

1. **Foreign materials** – For example, **many ice machine casings are made of painted steel. If this steel should be exposed at the joint where the ice machine sits on the bin, it could rust,** and the rust stain could "drip" down the liner walls. Also, particles of plain steel could fall down into the bin and, inturn, start rusting.

2. **Materials expelled during ice making** – Practically all icemakers produce clear ice by "freezing out the impurities" normally found in tap water. Chlorine gas, other gases and solids, are expelled during the making of ice. Being heavier than air, these foreign materials drop down into the bin through the same opening that the ice enters the bin. (This oftentimes explains why this staining is more noticeable on an installation where the opening on the bottom of the ice machine is quite large). **The chlorine gas will combine with water vapor and condense on the liner walls as a mild hydrochloric acid.** Above the normal ice level, this never gets removed by the action of the ice, and will eventually form a brown stain.

CLEANING OF A STAINLESS STEEL BIN LINER

Because the brown staining or rusting is due to expelled material during ice-making, **every bin liner should be cleaned periodically,** to prevent this staining from causing pitting of the stainless steel. The time between cleanings will depend on the water conditions, type of ice machine, etc. **It may be necessary only every 3 to 6 months.**

1. **General Cleaning** – When the staining is light, it can usually be removed by washing with ordinary cleaning powder, such as Bon-Ami, or Copper-Glo, and water. (Do not use cleaners that contain bleaching agents, as most of these are compounds of chlorine.) After cleaning, rinse thoroughly with clear water.

   It may be necessary to use a stainless steel wool to remove bad stains. DO NOT USE plain steel wool, as the steel particles will get imbedded in the liner and cause more serious rusting.

2. **Cleaning of heavy deposits**–If the liner has not been cleaned for a long time, and heavy deposits and pitting have occurred, a chemical cleaner may be necessary. Several of these are as follows:

   Oakite No. 33, Oakite Products, Inc., 19 Rector St., New York, N.Y. Texo No. 12, and Texo-NY, Texo Corp., 2200 Dana Ave. Cincinnati 7, Ohio. Metalprep No. 10, Nelson Chem. Co., 6564 Benson St., Detroit 7, Mich, Dilac, Diversey Corp., 1820 Roscoe St., Chicago 13, Illinois.

   A solution of one part cleaner and two parts water is used. First, wash the bin liner thoroughly with water and soap as described above. Then simply swab the solution on the area to be cleaned, and allow to stand for about 20 minutes. Rinse with clear water. If this doesn't completely remove the deposit, repeat the procedure.

   Syntheitc rubber gloves should be used by the operator, and goggles and aprons are advisable even though the solution is relatively nonhazardous.

   These cleaners may possibly harm paint, wood, or fabrics, They will probably cause a dull grey color on galvanized steel and should not be allowed to remain long in contact with rubber. Therefore, provision should be made to avoid contact with such materials when cleaning stainless.

3. **Protection of Stainless Steel against further staining** – After the stainless steel has been cleaned, installations where the staining is recurring so frequently, the surface should be rejuvenated. This process restores the characterisitc to the surface of the stainless, that best prevents corrosion.

   First, be sure that the liner is clean and is thoroughly rinsed with water. Then use a nitric acid solution of two parts water to one part nitric acid (by volume). Swab this on the liner and allow to stand for about 30 minutes. Rinse the liner with clean water. This will then provide maximum corrosion resistance.

MC35 SERVICE MANUAL

TABLE OF CONTENTS

Specifications ..... Page 2

General Information ..... Page 3

Location & Stacking ..... Page 4

Bin Thermostat Installation ..... Page 5

Electrical & Water Installation ..... Page 6

Final Check List ..... Page 7

Start Up ..... Pages 8-11

Operation ..... Pages 12-13

Adjustment, Removal , and Replacement ..... Pages 14-20

Service Diagnosis ..... Pages 21-23

Maintenance and Cleaning ..... Pages 24-26

Service Parts lists and wiring diagrams are located in the center of this manual, printed on yellow paper.

THIS PAGE
INTENTIONALLY
LEFT BLANK

SCOTSMAN

MC35 SERIES

Storage Bin: B40, B60, B80 and B90
Stainless Steel Lined

Height: 28-3/4"

Width: 42-5/16"

Depth: 23-1/8"

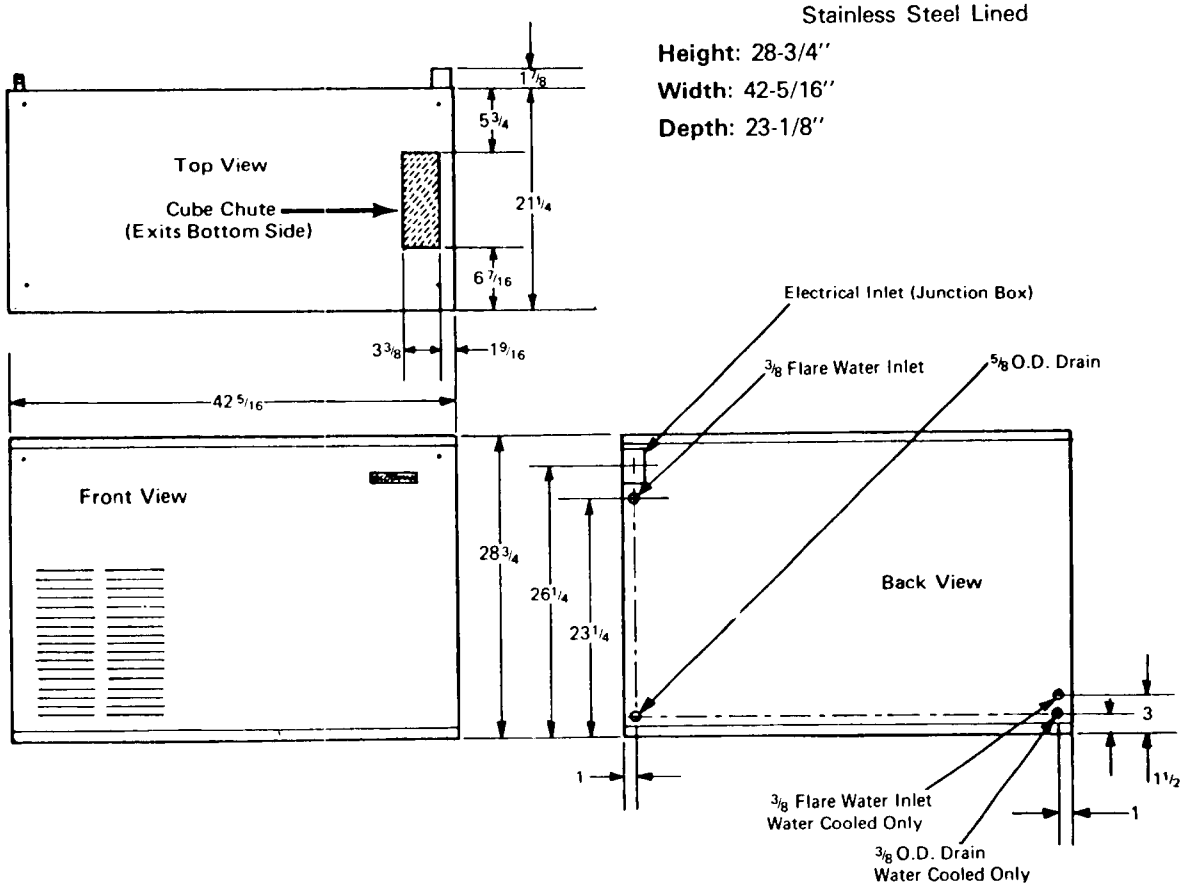

SPECIFICATIONS:

Model	Condensing Unit	Compressor Horsepower	Finish (P-painted) (SS-Stainless Steel)	Shipping Weight (lbs.)
MCL35AE	Air	1	P*	318
MCL35AS	Air	1	SS	318
MCL35WE	Water	1	P*	308
MCL35WS	Water	1	SS	308
MCM35AE	Air	1	P*	318
MCM35AS	Air	1	SS	318
MCM35WE	Water	1	P*	308
MCM35WS	Water	1	SS	308
MCS35AE	Air	1	P*	318
MCS35AS	Air	1	SS	318
MCS35WE	Water	1	P*	308
MCS35WS	Water	1	SS	308

Basic Electricals	Minimum Wire Sizes (w-wire) (g-gauge)			Total Amperages		
	MCL35	MCM35	MCS35	MCL35	MCM35	MCS35
Air Cooled						
115/230/60/1	3w 14g	3w 14g	3w 14g	11.6	11.6	11.6
115/208-220/60/3	4w 14g	4w 14g	4w 14g	9.9	9.9	9.9
115/208/60/1	3w 14g	3w 14g	3w 14g	12.9	12.9	12.9
Water Cooled						
115/230/60/1	3w 14g	3w 14g	3w 14g	10.9	10.9	10.9
115/208-220/60/3	4w 14g	4w 14g	4w 14g	9.2	9.2	9.2
115/208/60/1	3w 14g	3w 14g	3w 14g	12.2	12.2	12.2

*Painted Models have sandlewood micomatte Finish with woodgrain front panel.

Specifications subject to change without notice.

GENERAL INFORMATION AND INSTALLATION

INTRODUCTION

These instructions provide the specifications and the step-by-step procedures for the installation, start up and operation for the Scotsman Model MC35 modular cuber.

The Model MC35 Modular Cubers are quality designed, engineered and constructed, and are thoroughly tested icemaking systems, providing the utmost in flexibility to fit the needs of a particular user.

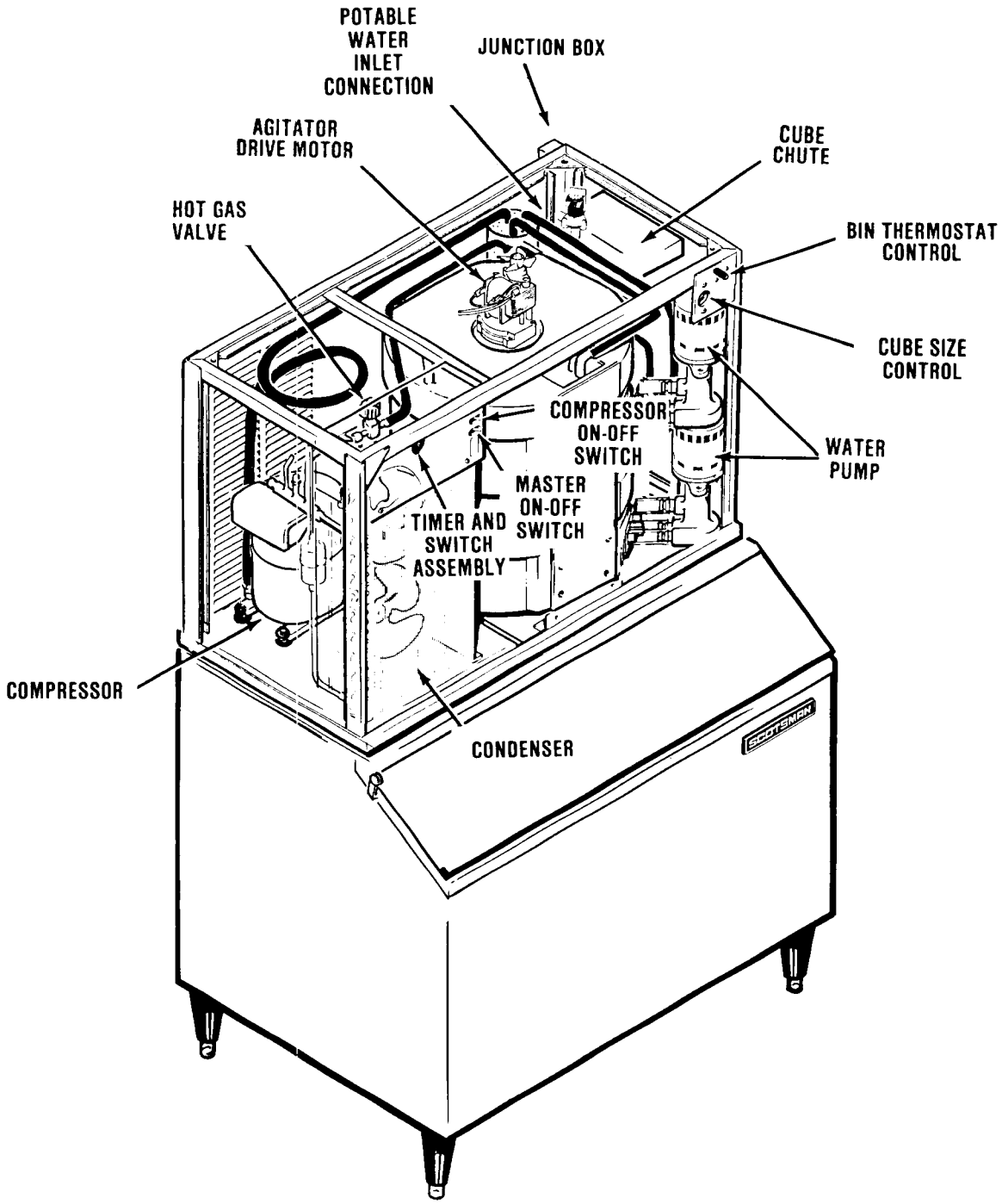

- Component Location

LOCATION & LEVELING

1. Position the selected bin in the permanent location, which should have a minimum room temperature of 50-degrees F., and maximum room temperature of 100-degrees F. Level the bin, adjusting the leg levelers in both the front-to-rear and side-to-side directions. Select a well-ventilated location for the air-cooled models.
2. Inspect the bin top mounting gasket, which should be flat, with no wrinkles, to provide a good seal when the MC35 Cuber is installed on top of the bin.
3. Install the MC35 modular cuber on top of the selected bin, using care to be sure a good seal is made between the two cabinets.
4. Remove screws, top panel, front panel, and both side panels.
5. Remove cube chute from the machine.
6. Bolt the cuber to the bin using the two hex head bolts, retained from the shipping skid. Thread the bolts down through the cuber base into the top edge of both storage bin side panels.
7. Install cube deflector. Hook the cube deflector over the flange in base of the icemaker. See Detail.

STACKING

1. Top panel of bottom machine may be set aside, as it is not used when machines are stacked. Remove the cube chute from top machine. Place upper machine directly on frame of lower machine. Bolt together with 2 bolts used to hold machine to the crate skid.
2. Slide cube chute into cube chute opening of bottom icemaker.
3. Position stacking kit cover over cube chute of bottom icemaker.
4. Slide the stainless steel sleeve through cube chute opening of upper icemaker and into the stacking kit cover.
5. Slide cube chute into cube chute opening of upper icemaker.
6. See Installing Bin Thermostat Capillary Tube with steps to thread the capillary tube from each icemaker into the cube deflector.
7. Install cube chute and cover on top machine, and replace all cabinet panels on both machines.

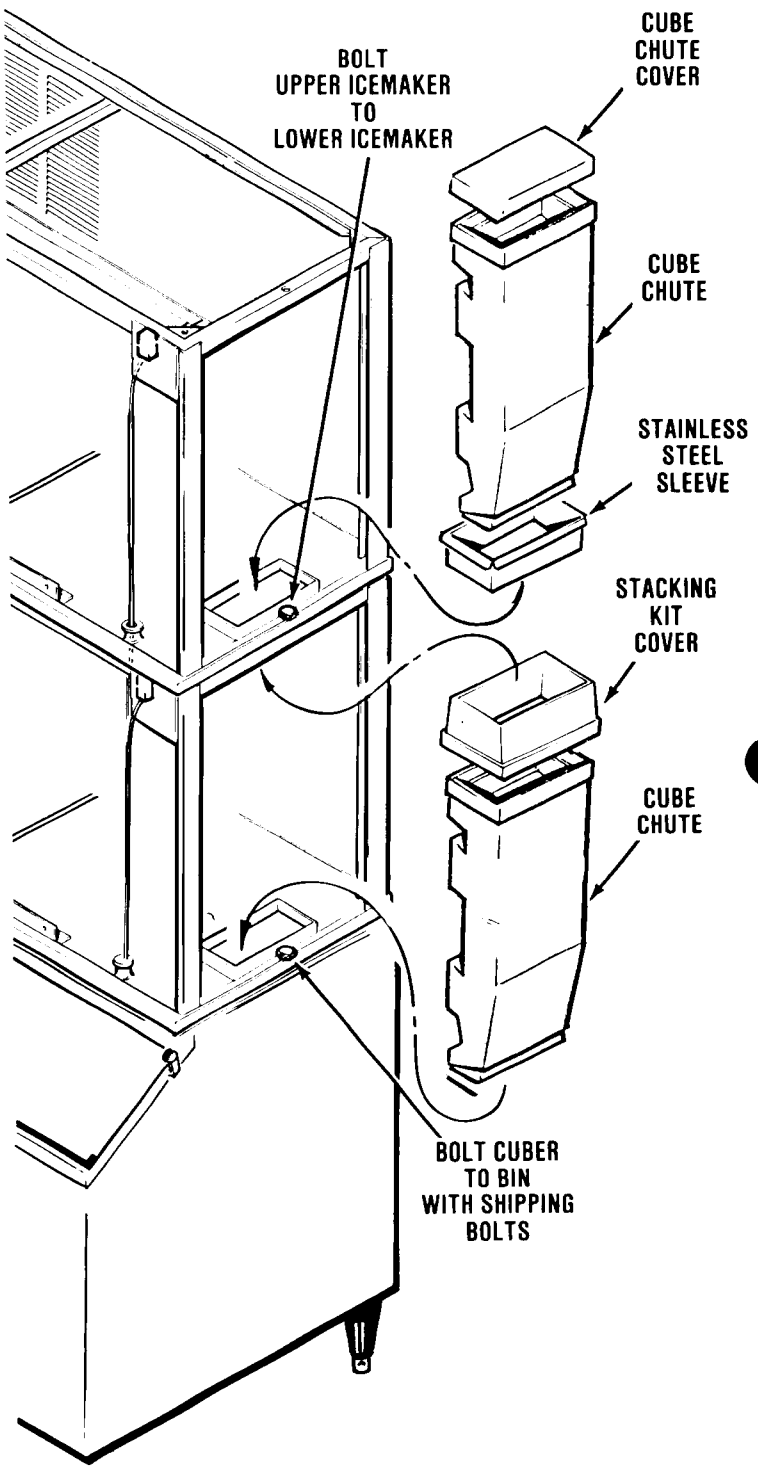

INSTALL BIN THERMOSTAT CAPILLARY TUBE

CAUTION

Careful handling of the bin thermostat capillary tube is required.

1. Uncoil the bin thermostat capillary tube and route from the bin thermostat control down through the plastic grommet in the icemaker base and under the cube deflector.
2. Thread the capillary tube through the grommets in the cube deflector as indicated. See *Installing the Capillary Tube* illustration.

   Stacking modular MC35 cubers: Route the bin thermostat capillary tube from the upper icemaker through the plastic grommet and into the chassis of the lower icemaker, through the plastic grommet of the lower icemaker, under and into the cube deflector.

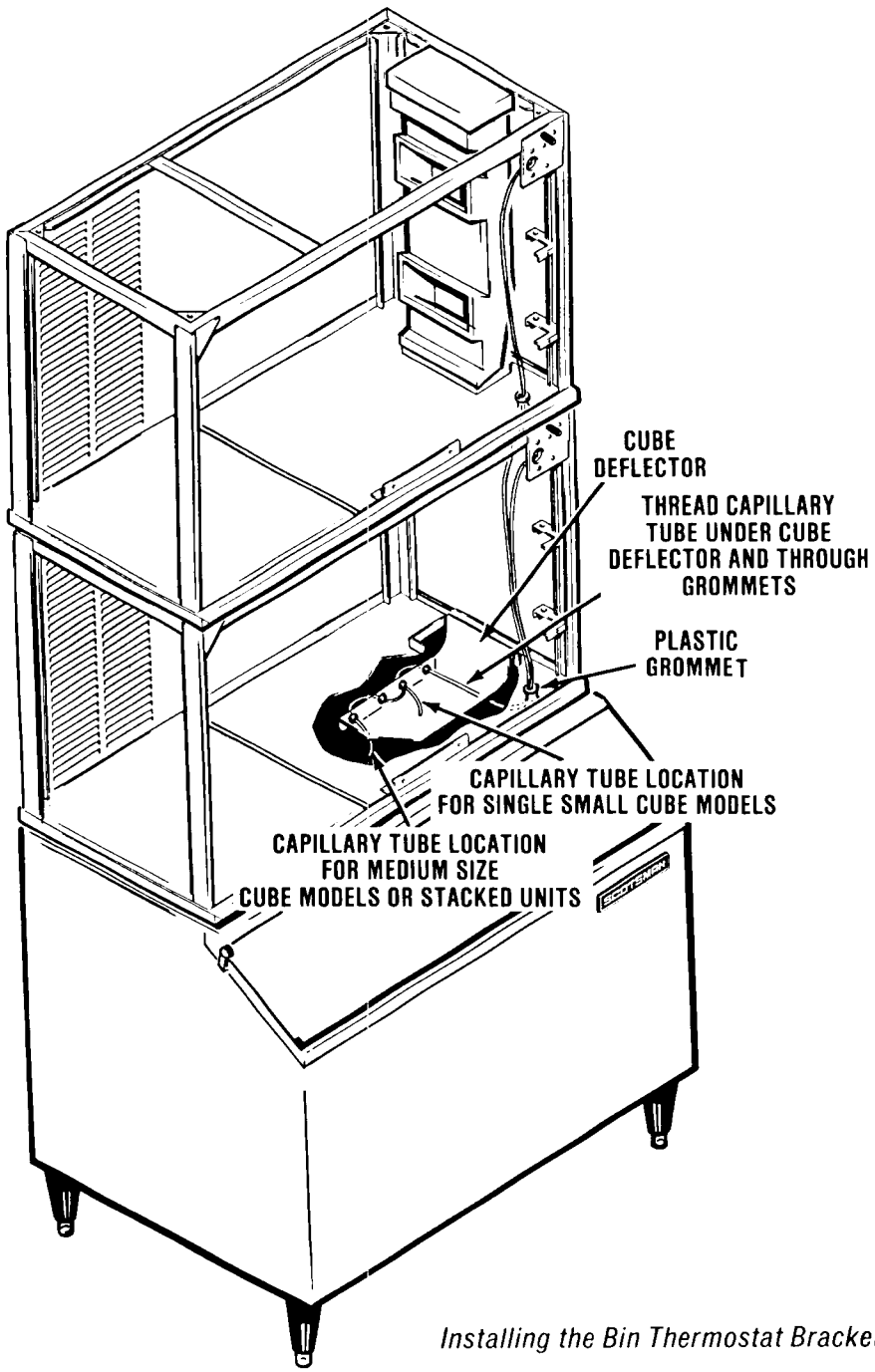

Installing the Bin Thermostat Bracket.

ELECTRICAL CONNECTIONS

SEE NAMEPLATE for current requirements to determine wire size to be used for electrical hookup. The cuber requires a solid chassis-to-earth ground wire. See Wiring Diagram.

Be certain the cuber is connected to its own electrical circuit and individually fused. Voltage variation should not exceed ± ten percent of the nameplate rating, even under starting conditions. Low voltages can cause erratic operation and may be responsible for serious damage to the icemaker.

All external wiring should conform to the national, state and local electrical code requirements. Usually an electrical permit and services of a licensed electrician will be required.

WATER SUPPLY AND DRAIN CONNECTIONS

AIR-COOLED MODELS: The recommended water supply line is a 3/8-inch O.D. copper tubing with a minimum operating pressure of 20 PSIG and a maximum of 120 PSIG. Connect to cold water supply line with standard plumbing fittings, with a shutoff valve installed in an accessible place between the water supply and the cuber. In some cases a plumbing permit and services of a licensed plumber will be required.

WATER-COOLED MODELS: On water-cooled models, a separate cold water supply inlet is required, to be connected to a second 1/2-inch O.D. male flare fitting at the rear of the cabinet. Additional drain lines are required to drain the water-cooled condenser.

DRAIN CONNECTIONS: All drains are gravity type and must have a minimum of 1/4-inch fall per foot on horizontal runs. The drains to be installed to conform with the local plumbing code. Install separate drain line for discharge water from the water-cooled condenser. The drain receptacle should be an open, trapped or vented construction.

Recommended bin drain is 5/8-inch O.D. copper tubing and should be vented and run separately.

Install Drain Cup. A drain hole is located at the cabinet rear base lower left corner and a Drain Cup is provided and must be installed. Coat both inside corners of Drain Cup with a small amount of sealant to insure a proper water seal, and attach Drain Cup to icemaker base using screws. Attach suitable length of 1/2-inch O.D. drain tube and route tubing to drain.

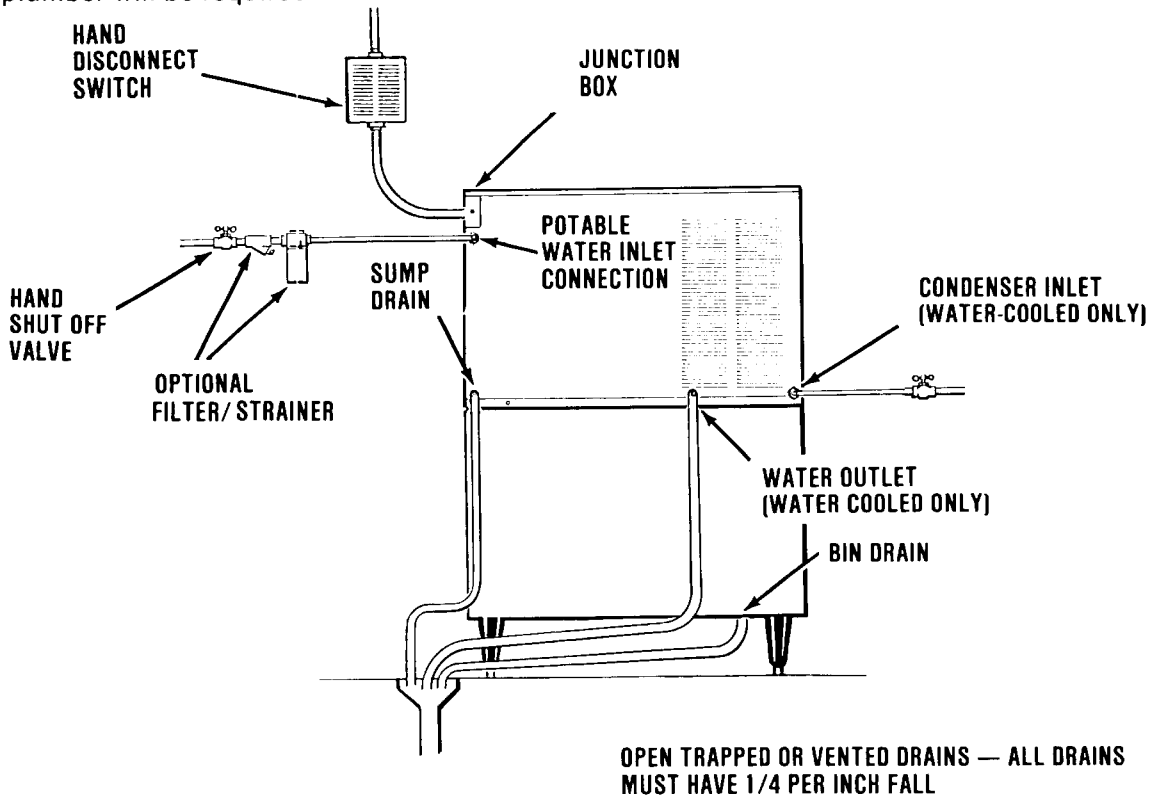

Installation, Electrical, Water Supply and Drain Connection

FINAL CHECK LIST

1. Is the cabinet/bin level and the cuber bolted to the bin? (IMPORTANT)
2. Is the cuber in a location where ambient temperatures are a minimum of 50-degrees F. all year around and do not exceed a maximum of 100°F?
3. Is there at least a six-inch clearance behind and around the cabinet for all connections and for proper air circulation?
4. Have all electrical and piping connections been made?
5. Has the electrical power supply wiring been properly connected, and the voltage tested and checked against the nameplate rating? Has proper chassis-to-earth ground been installed?
6. Is the water supply line shutoff valve installed and opened and has the inlet water supply pressure been checked to ensure a minimum of 20 PSIG and a maximum pressure of 120 PSIG?
7. All masking tape removed from doors and panels? Have styrofoam blocks been removed from the top of the freezing chamber?
8. Have the compressor holddown bolts been checked to be sure the compressor is snug on the mounting pads?
9. Check all refrigerant lines and conduit lines to guard against vibration and possible failure.
10. Has the bin thermostat capillary tube been properly installed in the cube deflector?
11. Has the cuber and the bin been wiped clean with clean damp cloths?
12. Has the owner/user been given the User Manual and instructed on how to operate the icemaker and the importance of periodic maintenance?
13. Has the owner/user been given the name and telephone number of the Authorized Scotsman Distributor or Service Agency serving him?
14. Has the Manufacturer's Registration Card been properly filled out? Check for correct Model and Serial Numbers from nameplate, then mail the completed card to the SCOTSMAN factory.

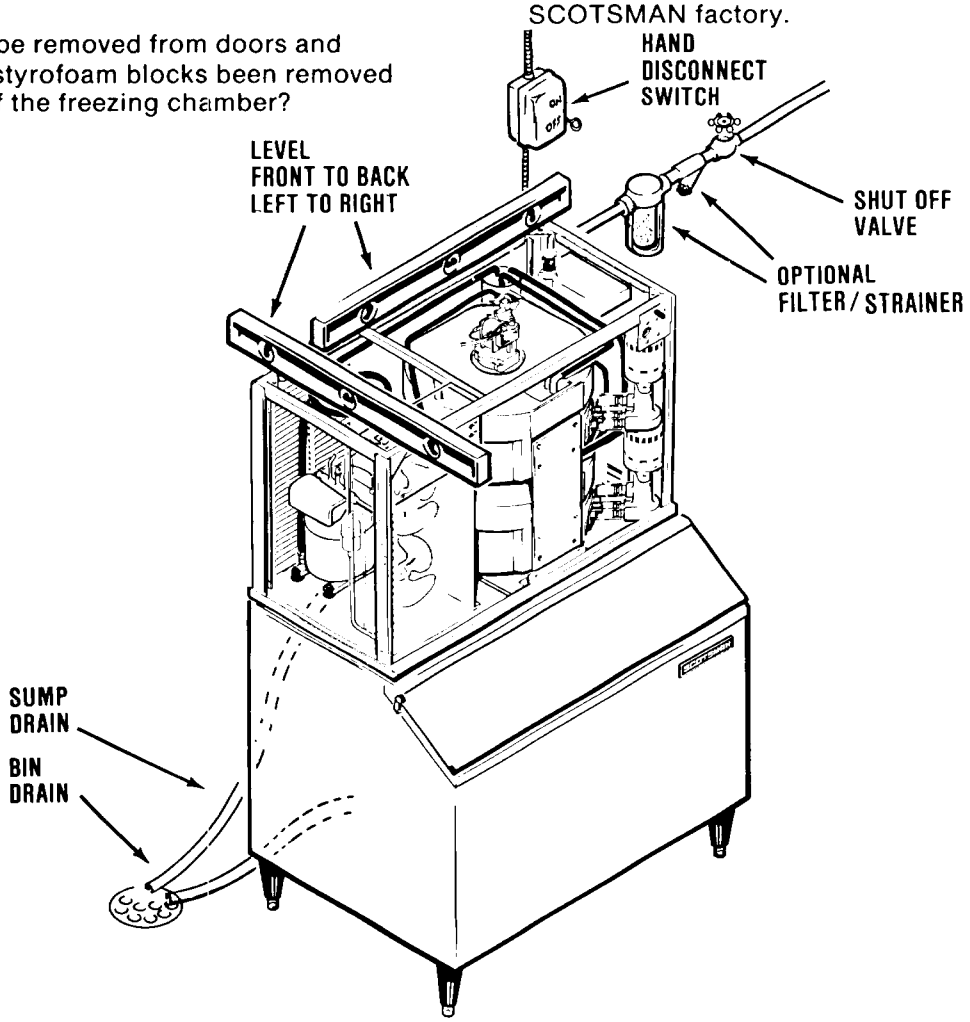

Final Checklist

OPERATING INSTRUCTIONS

START—UP

1. Remove screws and remove the top and front panels.
2. Check that the two toggle switches, the MASTER ON-OFF toggle switch and the COMPRESSOR ON-OFF toggle switch are in the OFF position, on the control box.
3. OPEN the water supply line shutoff valve.
4. Protruding through the control box cover is the shaft of the timer and the switch assembly. Rotate the shaft of the timer and switch assembly clockwise until the actuator arm on the microswitch drops off outer cam into cam slot, the start of the harvest cycle. See Timer Cam Positions. An audible click can be heard, but in a noisy area, look at the cam and switch to observe the event.

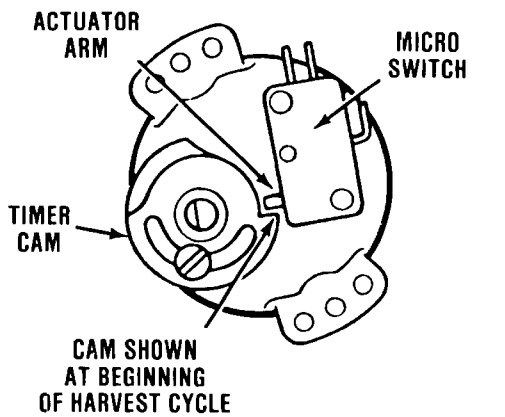

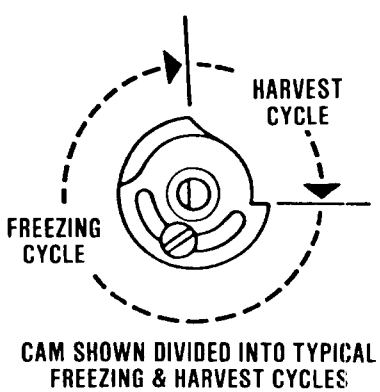

Timer Cam Positions

5. Move the master ON-OFF toggle switch, the bottom toggle switch, to the ON position.
6. Observe that the water inlet solenoid valve OPENS and inlet water flows from the valve through tubing and can be seen flowing to the defrost water tube, at the top rear of the freezing chamber, where the water then flows around the inverted ice cube cups and drains into the freezing chamber sump. Excess water is overflowed through the stand pipe and drain tube. This cycle will take about three minutes, when the Timer will CLOSE the water inlet solenoid valve.

   Advancing the shaft of the timer and switch assembly through the remaining cycles into a new harvest cycle, restarts the timer and allows a check that: Water inlet solenoid valve OPENS and the reservoir overflows through the stand pipe. Water inlet valve CLOSES, stopping water overflow.
7. When the second harvest cycle is completed, move the compressor ON-OFF toggle switch, to the ON position.
8. Check operation of freezing cycle:

   Agitator motor is operating, as seen by fan rotating on top of the freezing chamber.

   Water pump is operating, as seen at Tygon tubes on pump and looking at water being sprayed into inverted ice cube cups, from rotating spray bar, seen inside freezing chamber.

   The icemaking process begins; feeling the metal parts of the evaporator reveals cold temperature, very shortly ice begins to form. Tubing will become frosted at the top of the evaporator inlet located on the top front portion at the freezing chamber.

   Freezing time will range between 20 and 30 minutes in a 70-degree F. ambient temperature. Longer time for temperatures above 70-degrees F., and shorter time required when temperatures are below 70-degrees F. Average complete cycle range is about 17 to 22 minutes.
9. Replace the plastic cube chute before the harvest cycle begins.

(Continued on page 10)

OPERATING INSTRUCTIONS

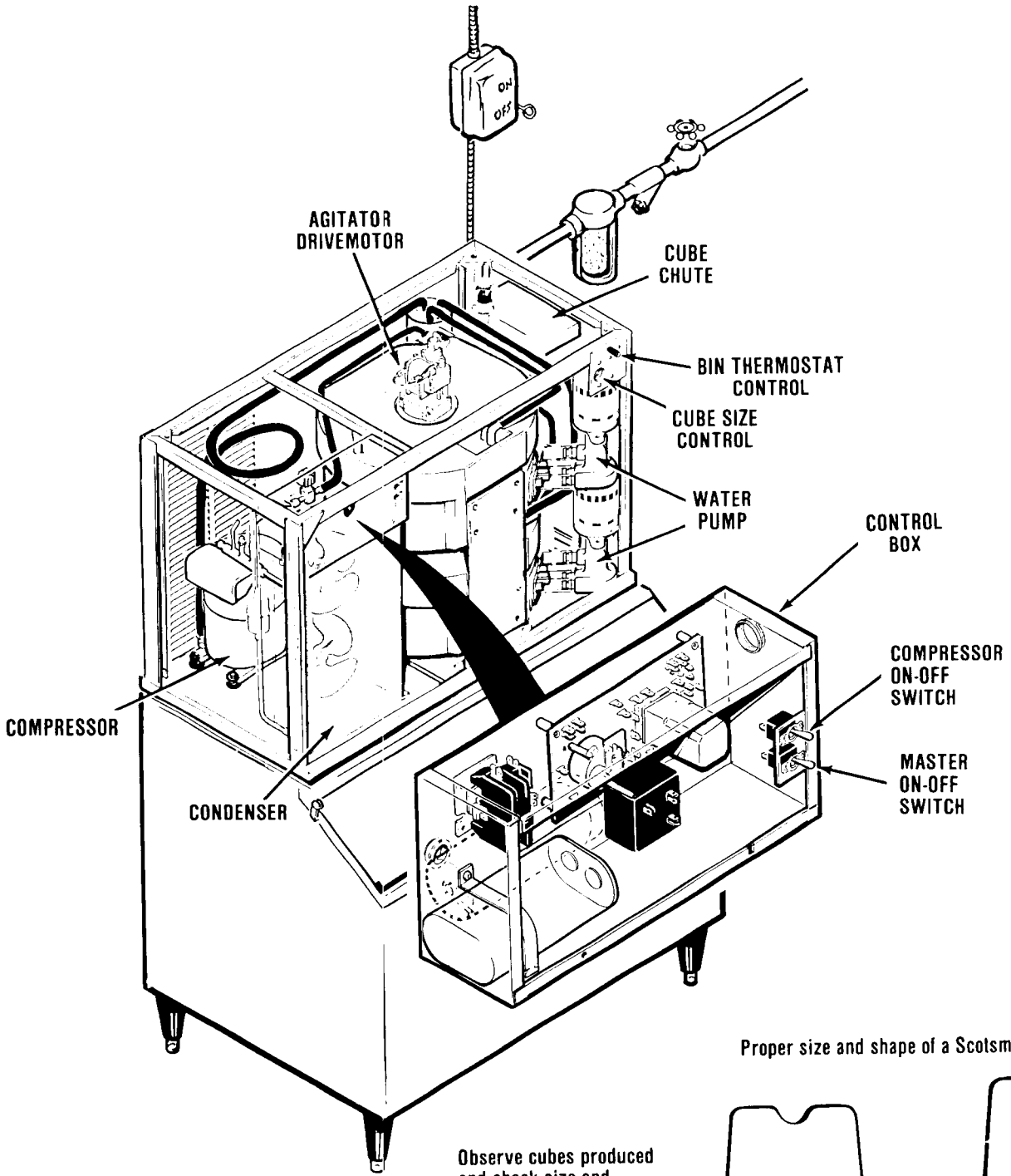

Observe cubes produced and check size and shape — compare cubes to example on page 10.

Proper size and shape of a Scotsman Round Cube:

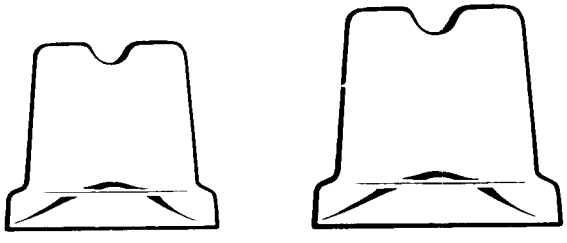

SMALL SIZE MEDIUM SIZE

Normal cube size is with a one-quarter inch depression in the crown.

10. Observe first ice cube harvests:

    All cubes should drop from the freezing chamber by the end of the timed portion of the harvest cycle. If required, the harvest time should be adjusted.

    Check size of ice cubes:

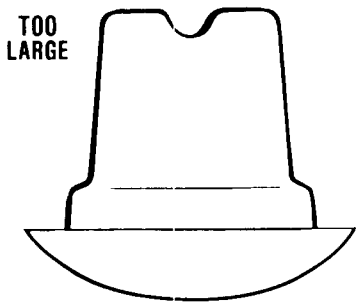

A cube this size and shape is TOO LARGE and requires longer freezing cycle which may cause evaporator freeze ups.

Adjust cube size control counter clockwise to produce a smaller cube.

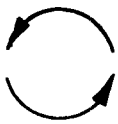

Proper size and shape of a Scotsman Round Cube:

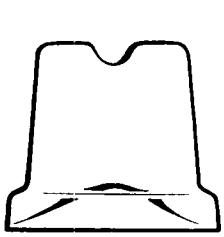

SMALL SIZE

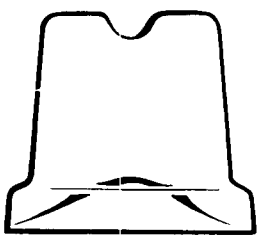

MEDIUM SIZE

PROPER SIZE AND SHAPE of the round cube. Icemaker operates at peak efficiency when a cube this size and shape is produced.

NOTE

Normal cube size is with a one-quarter inch depression in the crown.

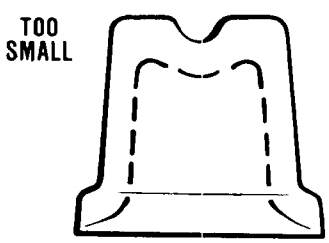

A cube this size and shape is TOO SMALL. Adjust cube size control clockwise to produce a larger cube. Cubes this size or shape are too small and cause excessive cycling.

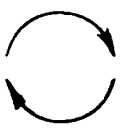

OPERATING INSTRUCTIONS

ADJUSTMENT OF CUBE SIZE

To produce LARGER sized ice cubes:

Locate cube size control, in the top right end the of icemaker chassis.

Rotate the adjusting screw one-eighth of a turn CLOCKWISE to COLDER.

Observe size of ice cubes in the next two cube harvests and adjust in one-eighth turn or less increments, until correct ice cube size is achieved.

To produce SMALLER sized ice cubes:

Locate cube size control, in the top right section of the chassis.

Rotate the adjusting screw one-eighth of a turn COUNTERCLOCKWISE to WARMER.

Observe size of the ice cubes in the next two ice cube harvests and adjust in one-eighth turn or less increments, until correct ice cube size is achieved.

Check texture of ice cubes; when partially cloudy throughout, suggests icemaker is operating short of water; or, possibly an extreme problem water condition exists, wherein filtering or purifying equipment is recommended. Contact SCOTSMAN ICE SYSTEMS, Service Department, Albert Lea, Minnesota 56007 for further details.

11. With the icemaker in the harvest cycle, hold ice against the bin thermostat control bulb to test shutoff, which should cause the icemaker to shut OFF at the END OF THE HARVEST CYCLE.

    Within minutes after the ice is removed from the sensing bulb, the bulb will warm up and cause the icemaker to restart. This control is factory set and should not be reset until testing is performed.

12. Replace control box cover and all cabinet panels and screws.

13. Thoroughly explain to the owner/user the significant specifications of the icemaker, the start up and operation, going through the procedures in the operating instructions. Answer all questions about the icemaker by the owner; and inform the owner of the name and telephone number of the authorized SCOTSMAN Distributor, or service agency serving him.

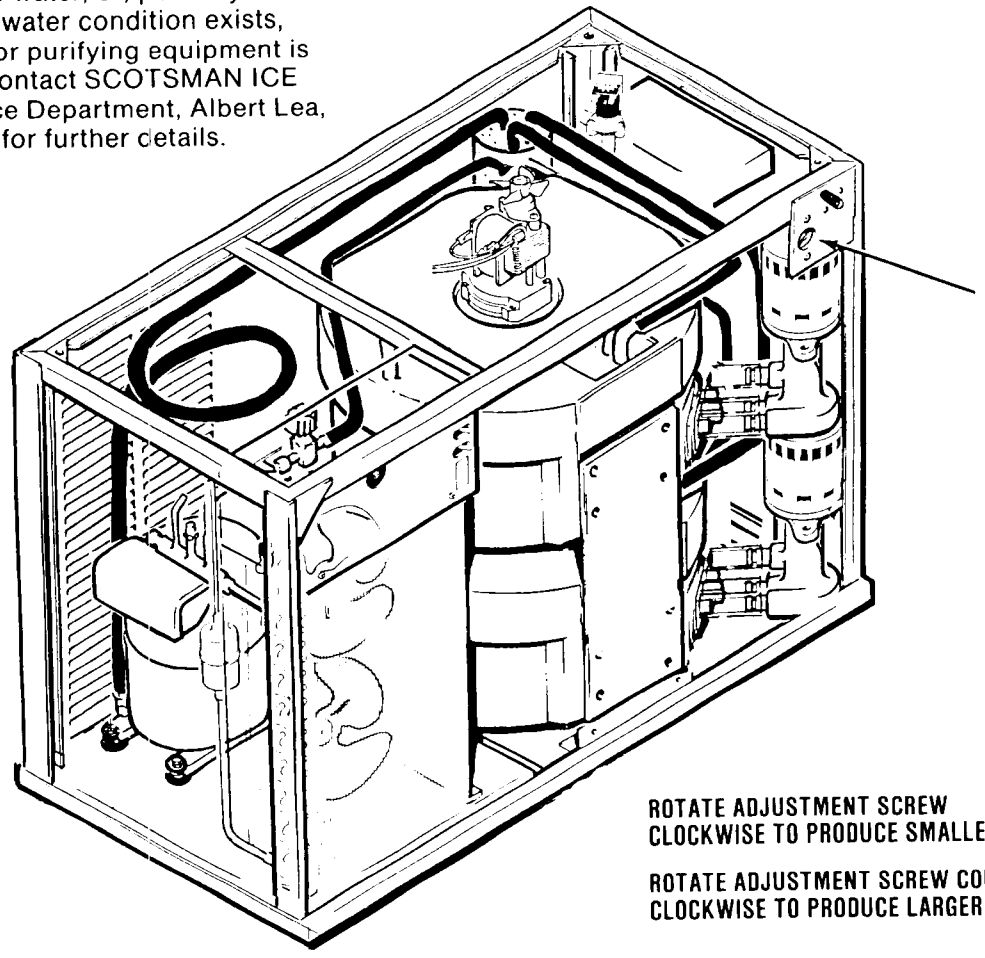

Cube Size Control Adjustment

FREEZING CYCLE

Water from the sump in the reservoir of the freezing chamber is pumped to a rotating spray bar assembly, which is powered by the agitator drivemotor on top of the freezing chamber. The spray bar assembly has ten jets through which water is uniformly sprayed up into the inverted ice cube cup molds of the freezing chamber evaporator. See *Freezing cycle* illustration. At the beginning of the freezing cycle, the electrical circuit is completed to the compressor, the gas. agitator drivemotor and the water pump. The water pump and the agitator drivemotor operate continuously, through both the freezing cycle and the harvest cycle.

In the compressor, gaseous refrigerant is compressed and discharged into the condenser, as a high pressure, high temperature The refrigerant is cooled and condensed, by either air or water, into a high pressure, medium temperature liquid. This liquid refrigerant is then distributed through the capillary tube where the temperature and pressure of the liquid refrigerant are lowered and enters the evaporator. The refrigerant is warmed by the water sprayed up into the ice cube molds of the evaporator and begins to boil off and become a gas. The refrigerant next travels through the heat exchange area of the suction line and into the accumulator, where any remaining liquid refrigerant boils off and returns to the compressor as a low pressure, low temperature gas, and the cycle starts again.

During the freezing cycle, the hot gas solenoid valve is CLOSED and the water inlet solenoid valve is CLOSED.

When the ice cubes are about three-quarters formed, the cube size control bulb located on the suction line coming out of the evaporator platen assembly, will sense the temperature at which it is preset to Close. This will complete the electrical circuit to the timer. The timer then controls the remainder of the cycle.

The timer will keep the icemaker operating in the freezing cycle for a selected length of time. This will give the ice cubes time to fully form. After that selected length of time, the timer will switch the icemaker into the harvest cycle, through the contacts of the timer assembly microswitch.

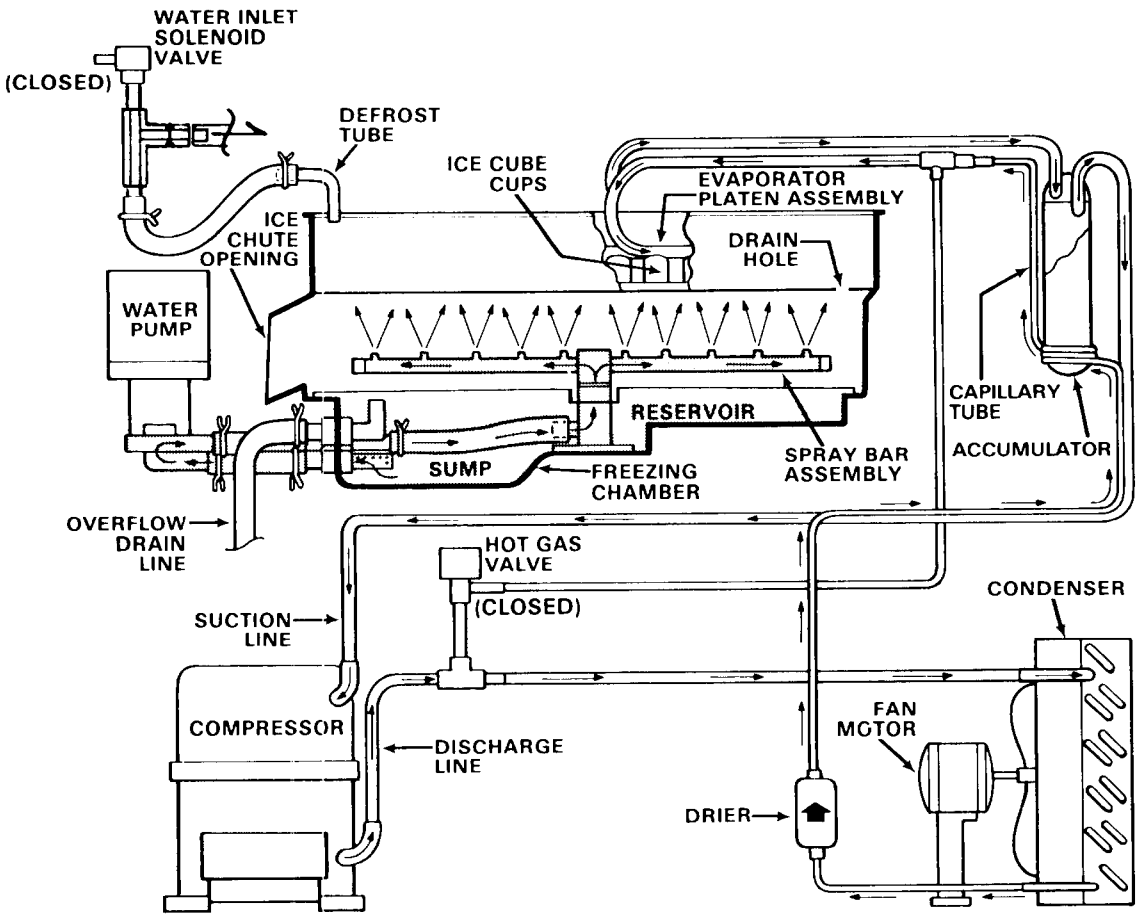

Freezing Cycle

HARVEST CYCLE

When the timer switches the icemaker into the harvest cycle, high pressure, high temperature gaseous refrigerant being discharged from the compressor is diverted from the condenser through the hot gas solenoid valve into the evaporator. During this cycle, the gaseous refrigerant bypasses the condenser and the capillary tube.

In the electrical circuit, the compressor agitator drivemotor and the water pump operate and the hot gas solenoid valve is energized and OPEN and the water inlet solenoid valve is OPEN.

On air-cooled models, the bottom fan is de-energized.

The water inlet solenoid valve OPENS and allows a fresh water supply to be discharged into the top of each evaporator platen assembly. The finished ice cubes are released from the evaporator by the warming effect of the hot gas flowing through the evaporator tubes and the water flow around the ice cube molds. The released ice cubes drop into the inner bottom of the freezing chamber and are pushed by the rotating spray bar assembly out the slanted ice chute opening, down the plastic cube chute and into the ice storage bin.

At the end of the harvest cycle, the timer cam will push the actuator arm of the microswitch IN. If the bin thermostat is still CLOSED, a whole new cycle will begin. If the bin thermostat is OPEN, the icemaker will shut OFF, at this time.

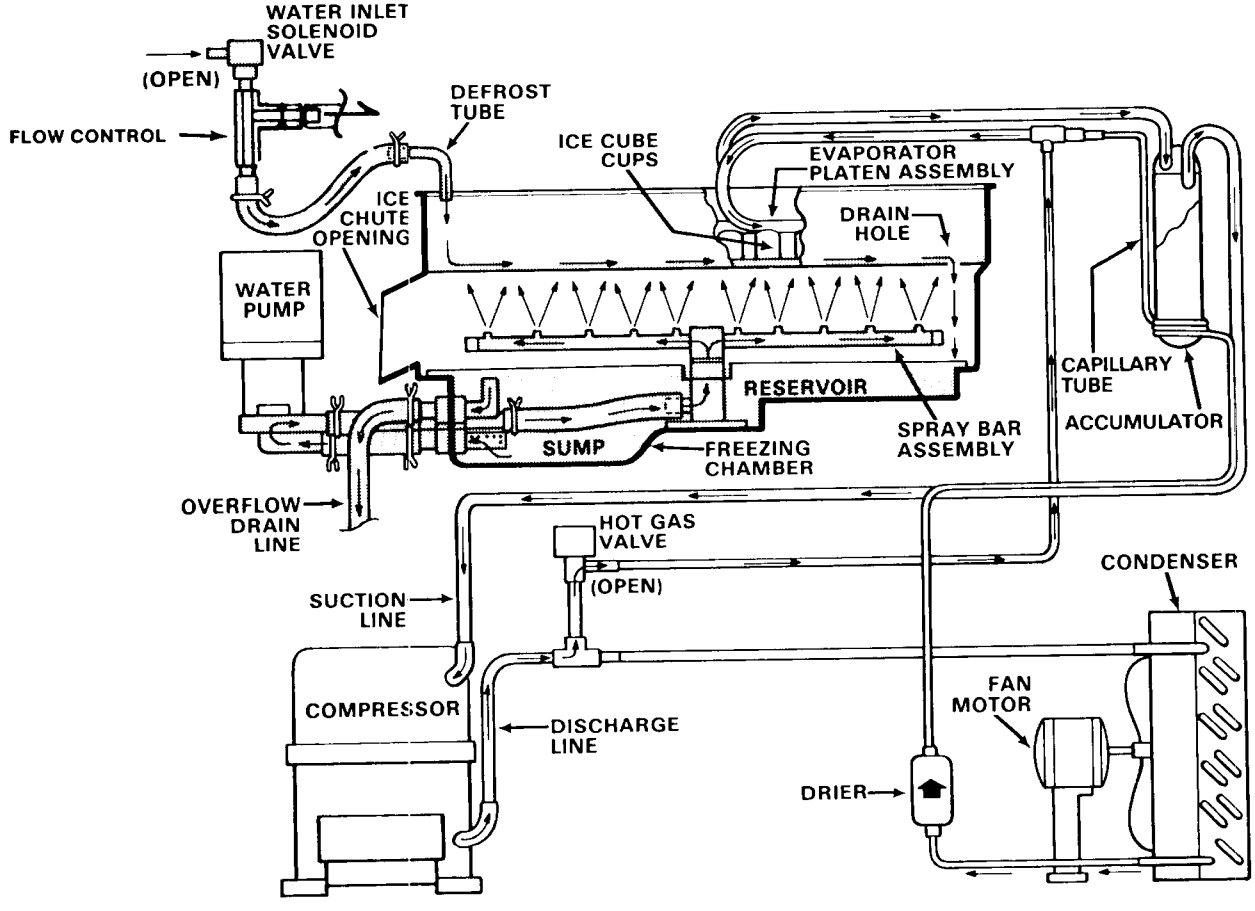

Harvest Cycle

ADJUSTMENT AND REMOVAL AND REPLACEMENT

The procedures provided in this Section are arranged in alphabetical order, to make specific Adjustment and Removal and Replacement information easy to locate.

Read the instructions thoroughly before performing any Adjustment or Removal and Replacement Procedures.

ADJUSTMENT OF THE BIN THERMOSTAT CONTROL

The control for the Bin Thermostat is the Temperature Control, located in the right side of the gusset in the front upper corner of the Chassis frame.

See Adjustment of the Temperature Control Illustration for location and direction of rotation, clockwise (CW) or counterclockwise (CCW), of the adjusting screws on the Temperature Control, the Adjustment is to be towards warmer as altitude increases.

WARNING

The adjusting screws on the Temperature Control device have very sensitive response to adjustment. DO NOT attempt to adjust the screw until after thoroughly reading and understanding the following instructions and illustration. Over-adjusting or erratic guessing, can foul the instrument and cause ultimate delay and part replacement, WHICH COULD HAVE BEEN PREVENTED.

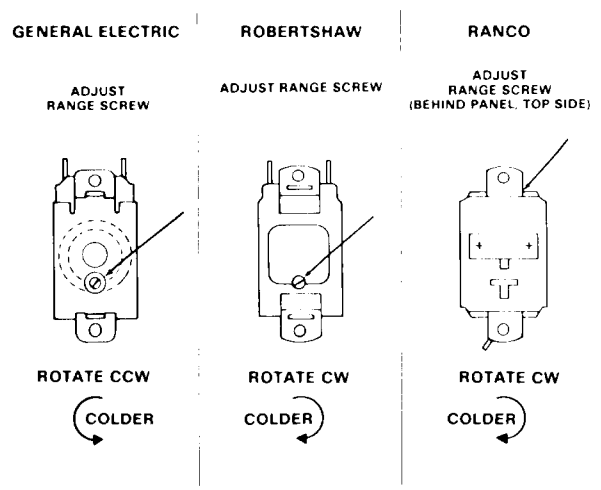

Adjustment of the Temperature Control.

ADJUSTMENT OF THE CUBE SIZE CONTROL

CAUTION

BEFORE performing actual adjustment to the Cube Size Control, check other possible causes for cube size problems, refer to SERVICE DIAGNOSIS section for problem review and analysis.

DO NOT perform adjustment when a new Cube Size Control is installed, until the control bulb has been properly installed in the tube well, on the refrigerant tube of the Platen Assembly and the Icemaker has progressed through several complete freezing and harvest cycles, to observe size and quality of ice cubes and whether or not a cube size problem exists.

As a reverse acting temperature control, adjustment on the Cube Size Control is performed to either cause larger sized ice cubes or smaller sized ice cubes to be produced.

To Produce LARGER Sized Ice Cubes:

Locate the Cube Size Control, in the left side of the gusset in the front upper corner of the Chassis frame.

Rotate the adjusting screw one-eighth of a turn CLOCKWISE toward COLDER.

Observe size of ice cubes in next two ice cube harvests and repeat step 2 above, in one-eighth turn increments, until desired ice cube size is achieved.

To Produce SMALLER Sized Ice Cubes:

Locate the Cube Size Control, in the left side of the gusset in the front upper corner of the Chassis frame.

Rotate the adjusting screw one-eighth of a turn COUNTERCLOCKWISE.

Observe size of ice cubes in next two ice cube harvests and repeat step 2 above, in one-eighth turn increments, until desired ice cube size is achieved.

ADJUSTMENT OF THE TIMER & SWITCH ASSEMBLY

The timer and switch assembly is factory set, so one complete revolution of the cam on the timer represents eight minutes. Five and one-half minutes comprise the freezing cycle event during cam rotation, and the final two and one-half minutes program the defrost and harvest cycle. Rotating the shaft of the timer cam CLOCKWISE will allow positioning the actuator arm of the microswitch on the cam at the selected start position for either the freezing cycle or harvest cycle, as required in the CLEANING instructions.

WARNING

Disconnect electrical power supply to icemaker whenever adjustment procedures are performed.

TO ADJUST THE TIMER & SWITCH ASSEMBLY:

A. HARVEST CYCLE: Slowly rotate the shaft of the timer and switch assembly, located in the control box, CLOCKWISE, until the actuator arm on the microswitch initiates the harvest cycle. An audible click can be heard, but in a noisy area, look at the cam and switch to observe the event.

B. FREEZING CYCLE: Slowly rotate the shaft of the timer and switch assembly, located in the control box, CLOCKWISE, until the actuator arm on the microswitch initiates the freezing cycle.

C. The length of the harvest cycle can be changed by loosening the adjustment screw on the cam. The minimum harvest setting is two minutes; the maximum is three and one-half minutes. It is important that the length of the harvest cycle allow enough time for all the ice cubes to fall from the evaporator. Too short of a time will cause the evaporator to freeze up and stop ejecting ice into the bin. Too much time wastes icemaking capacity, energy and water. Adjustment of the harvest cycle may require a corresponding adjustment of the cube size control.

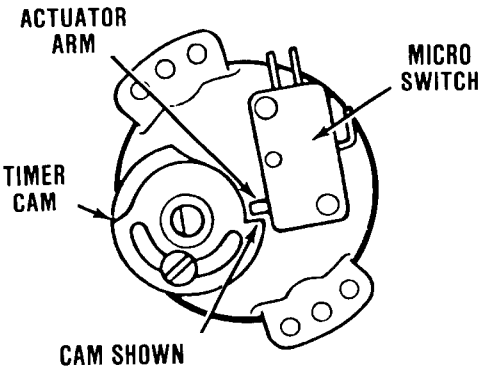

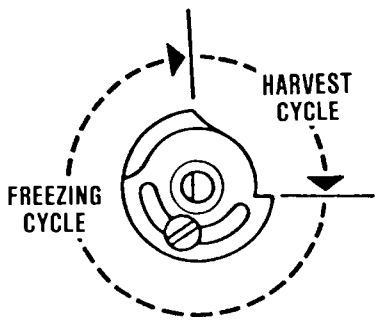

CAM SHOWN DIVIDED INTO TYPICAL FREEZING & HARVEST CYCLES

Adjustment of the Timer & Switch Assembly

WARNING

Be sure the electrical power open circuit breaker supply and the inlet water supply are OFF, BEFORE starting any of the following REMOVAL AND REPLACEMENT procedures as a precaution to prevent possible personal injury or damage to equipment.

ADJUSTMENT AND REMOVAL AND REPLACEMENT

ADJUSTMENT OF THE WATER REGULATOR ASSEMBLY — WATER-COOLED MODELS

The correct Compressor head pressure on Water-Cooled Models is 135 PSIG. Adjusting the Water Regulator Valve increases or decreases the rate of flow of water, through the Water-Cooled Condenser; which increases or decreases the affected temperature/pressure of the Compressor head pressure. INCREASED water flow, results in DECREASED or LOWER head pressure; while, DECREASED water flow, results in INCREASED or HIGHER head pressure.

To adjust the Water Regulator Assembly:

To INCREASE the head pressure: Rotate the adjusting screw COUNTERCLOCKWISE.

To DECREASE the head pressure: Rotate the adjusting screw CLOCKWISE.

Check change in Compressor head pressure, and adjust as necessary to achieve desired operating head pressure.

WARNING

Be sure the electrical power supply and the water supply are OFF BEFORE starting any of the following REMOVAL AND REPLACEMENT procedures as a precaution to prevent possible personal injury or damage to equipment.

REMOVAL AND REPLACEMENT OF THE AGITATOR MOTOR ASSEMBLY

The Agitator Motor in the Cuber is installed on top of the upper Freezing Chamber.

To Remove the Agitator Motor Assembly:

1. Remove screws and the Top Panel and Front Panel to gain access to the Agitator Motor.
2. Tilt the top of the plastic Cube Chute forward slightly, then, lift the Cube Chute up for removal.
3. Remove three U-Type Clips and the plastic Curtain Assembly.
4. Reach through the ice chute opening in the Freezing Chamber and feel or the Spray Bar.
5. Move hand to the center hub and rotate the Spray Bar, so one end is aligned with the ice chute opening.
6. Lift the Spray Bar up, off the jet bearing hub, then, remove the Spray Bar through the ice chute opening.
7. Disconnect electrical leads and ground wire from terminals on the Agitator Motor.
8. Reach through the same ice chute opening, and grasp the Drive Fork with one hand, and the Agitator Motor Fan, on top of the Freezing Chamber, with the other hand.

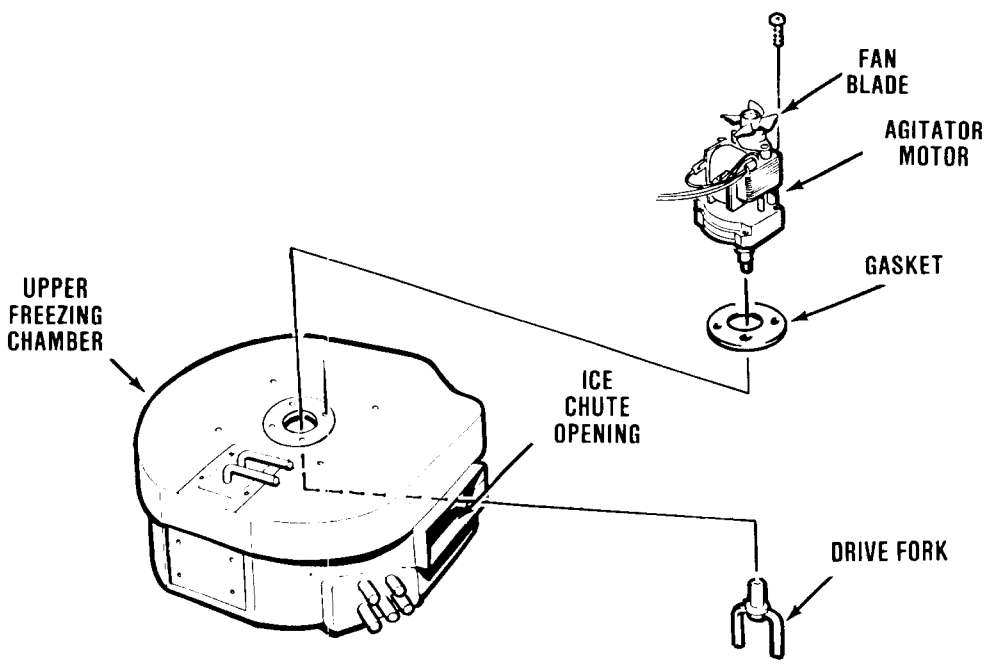

Removal of the Agitator Motor Assembly

9. Hold the Fan blades still and rotate the left-hand Drive Fork to the right, COUNTERCLOCKWISE, and unscrew the Drive Fork from the Agitator Motor.
10. Remove four screws and lift the Agitator Motor off the Freezing Chamber.

To replace the Agitator Motor Assembly, reverse the removal procedure.

REMOVAL AND REPLACEMENT OF THE BIN THERMOSTAT CONTROL

WARNING

Be sure the electrical power supply to the icemaker is OFF before proceeding with removal procedures.

To remove the Bin Thermostat Control:

1. Remove screws and the Front Panel to gain access to the Bin Thermostat Control.
2. Trace capillary tube, from the Bin Thermostat Control, down to the Cube Deflector.
3. Carefully remove the capillary tube from the bulb holder holes on the side of the Cube Deflector.
4. Carefully withdraw the capillary tube from the Bin, up through the Chassis Base.
5. Remove electrical leads from the Bin Thermostat Control.
6. Remove screws and the Bin Thermostat Control.

To replace the Bin Thermostat Control, reverse the removal procedures.

REMOVAL AND REPLACEMENT OF THE COMPRESSOR ASSEMBLY

WARNING

Be sure the electrical power supply to the icemaker is OFF before proceeding with removal procedures.

To remove the Compressor Assembly:

1. Remove screws and the Top, Front and Left Side Panels.
2. Bleed off or blow the refrigerant charge through the Schrader valve.
3. Remove the cover from the terminal box on the Compressor; then, remove electrical leads from the Compressor.
4. Unsolder the refrigerant suction line and the discharge line from the Compressor.
5. Unsolder the process header from the Compressor and retain for installation on the replacement Compressor.
6. Remove four bolts and washers which secure the Compressor to the Chassis mounting base.
7. Slide and remove the Compressor from the Cabinet.

To replace the Compressor Assembly, reverse the removal procedure.

Always install a replacement Drier, any time the sealed refrigerant system is opened. Do not replace the Drier until all other repair or replacement has been completed.

REMOVAL AND REPLACEMENT OF THE CONDENSER — AIR-COOLED MODELS

WARNING

Be sure the electrical power supply to the icemaker is OFF before proceeding with removal procedures.

To remove the Condenser:

1. Remove screws and the Left Side Panel and Front Panel.
2. Bleed off or blow the refrigerant charge through the Schrader valve.
3. Unsolder and disconnect refrigerant lines from the Condenser.
4. Unsolder and remove the Drier from the refrigerant lines connecting to the Condenser.
5. Remove screws, lockwashers and the Condenser from the Chassis base.

To replace the Air-Cooled Condenser, reverse the removal procedure.

Always install a replacement Drier, any time the sealed refrigerant system is opened. Do not replace the Drier until all other repair or replacement has been completed.

REMOVAL AND REPLACEMENT OF THE CONDENSER — WATER-COOLED MODELS

To remove the Condenser:

1. Remove screws and the Front Panel.
2. Bleed off or blow the refrigerant charge through the Schrader valve.
3. Check to be sure building source water inlet supply shutoff valve to rear of Chassis is OFF.
4. Disconnect water inlet supply line at the left bottom rear of Chassis.

5. Disconnect Water-Cooled Condenser inlet water line at the Water Regulator Assembly outlet fitting.
6. Unsolder the refrigerant capillary tube at the Drier.
7. Unsolder the Compressor discharge line, at the top of the Water-Cooled Condenser.
8. Unsolder the Condenser refrigerant outlet line, at the bottom of the Water-Cooled Condenser.
9. Remove two screws and washers and the Water-Cooled Condenser from the Cabinet.

To replace the Water-Cooled Condenser, reverse the removal procedures.

Always install at replacement Drier, any time the sealed refrigerant system is opened. Do not replace the Drier until all other repair or replacement has been completed.

REMOVAL AND REPLACEMENT OF THE CUBE SIZE CONTROL

WARNING

Be sure the electrical power supply to the icemaker is OFF before proceeding with removal procedures.

To remove the Cube Size Control:

1. Remove screws and the Front Panel to gain access to the Cube Size Control.
2. Trace capillary Tube, from the Cube Size Control, to the refrigerant suction line on the Evaporator Platen Assembly; then peel back the insulation.
3. Remove clips and the coiled capillary tube bulb out of the Freezer section of the Cabinet.
4. Remove electrical leads from the Cube Size Control.
5. Remove screws and the Cube Size Control.

To replace the Cube Size Control, reverse the removal procedure.

REMOVAL AND REPLACEMENT OF THE CURTAIN ASSEMBLY (TWO)

To remove the Curtain Assembly:

1. Remove screws and the Right Side Panel to gain access to the Curtain Assembly to be removed.
2. Tilt the top of the plastic Cube Chute forward slightly, then, lift the Cube Chute up for removal.

Before removing the Curtain Assembly in the next step, look inside the ice chute opening to note the irregular end of the plastic stiffener of the Curtain Assembly is installed at the left side of the opening.

3. Remove three U-Type Clips and the plastic Curtain Assembly from the top lip of the chute opening.

To replace the Curtain Assembly, reverse the removal procedure.

Be sure to install the replacement Curtain Assembly with the irregular end of the plastic stiffener positioned at the left side of the ice chute opening; and, the edge of the Curtain is dressed evenly with the top lip of the ice chute opening and secured with three U-Type Clips. The thin, clear plastic sheet of the curtain should hang down evenly.

CAUTION

1. **If the factory seal is broken on the replacement Drier, exposing it to the atmosphere more than a few minutes, the Drier will absorb moisture from the atmosphere and lose substantial ability for moisture removal.**
2. **Be sure the replacement Drier is installed with the arrow positioned in the direction of the refrigerant flow.**

1. Remove the factory seals from the replacement Drier and install the Drier in the refrigerant lines with the arrow positioned in the direction of the refrigerant flow.
2. Solder the Drier into the lines, two places.
3. Secure Drier to Chassis with the drier brace.
4. Purge the system and check for leaks.
5. Thoroughly evacuate the system to remove moisture and non-condensables.
6. Charge the system with refrigerant, by weight. SEE NAMEPLATE.
7. Replace and attach the Left Side Panel and the Front Panel.

REMOVAL AND REPLACEMENT OF THE FAN MOTOR ASSEMBLY — AIR-COOLED MODELS

WARNING

Be sure the electrical power supply to the icemaker is OFF before proceeding with removal procedures.

To remove the Fan Motor Assembly:

1. Remove screws and the Left Side Panel and the Front Panel.
2. Disconnect the two electrical leads from the Fan Motor at the Control Box Assembly.
3. Remove screws and the Fan Motor Assembly; and remove the Fan Motor and Bracket from the Condenser shroud.
4. Loosen set screws on the Fan Blade and remove the Fan Blade from the Fan Motor.
5. Remove screws and lockwashers and separate the Fan Motor from the Fan Motor Bracket.

To replace the Fan Motor Assembly, reverse the removal procedure.

Be sure to replace the Fan Blade with the hub of the Fan Blade facing the Fan Motor, to ensure air flow is toward the Fan Motor.

REMOVAL AND REPLACEMENT OF THE FREEZING CHAMBER (TWO)

WARNING

Be sure the electrical power supply to the icemaker is OFF before proceeding with removal procedures.

To remove the Freezing Chamber:

1. Remove screws and the Top Panel, Front Panel and the Right Side Panel to gain access to the Freezing Chamber.
2. Tilt the top of the plastic Cube Chute forward slightly, then lift the Cube Chute up for removal.
3. Remove three U-type Clips and the plastic Curtain Assembly.
4. Reach through the ice chute opening in the upper Freezing Chamber and feel for the Spray Bar.
5. Move hand to the center hub and rotate the Spray Bar so one end is aligned with the ice chute opening.
6. Lift the Spray Bar up, off of the jet bearing hub, then remove the Spray Bar through the ice chute opening.
7. Disconnect electrical leads and ground wire from terminals on the Agitator Motor.
8. Reach through the same ice chute opening, as before, and grasp the Drive Fork with one hand, and the Agitator Motor Fan on top of the Freezing Chamber, with the other hand.
9. Hold the Fan Blades still and rotate the left-hand thread Drive Fork to the right, and unscrew the Drive Fork from the Agitator Motor.
10. Remove four screws and lift out the Agitator Motor.
11. Insert and hold firm, a screwdriver through a hole in the top jet bearing, then reach through the ice chute opening of the lower Freezing Chamber and rotate the left-hand thread Drive Fork to the right, COUNTERCLOCKWISE, to unscrew the bottom Drive Fork from the Water Tube.
12. Raise the screwdriver and top jet bearing up, an inch or so, to expose the hole in the Water Tube; next, insert and hold firm, a second screwdriver in the hole in the upper end of the Water Tube; then, rotate the screwdriver in the top jet bearing to the left, CLOCKWISE, to unscrew the bearing from the Water Tube.
13. Remove bearing, both screwdrivers and push the Water Tube UP, and remove the tube through the hole in the Platen and Cover Assembly.
14. Remove hose clamps and work loose four Tygon Tubes from the Freezing Chamber, three from the Water Pump and one drain tube.
15. Remove hose clamps and work loose four Tygon Tubes from the Freezing Chamber, three from the Water Pump and one drain tube.
16. Carefully lift the Platen and Cover Assembly, and tie off or use a board to support and give ample space to allow removal of the Freezing Chamber.
17. Remove screws, lockwashers, bolts, and the front Freezer Mount Plate; also 2 screws and lockwashers from rear Freezer Mount Plate.
18. Carefully work the upper Freezing Chamber out of the Chassis.

To replace the Freezing Chamber, reverse the removal procedure.

REMOVAL AND REPLACEMENT OF THE WATER PUMP ASSEMBLY (TWO)

WARNING

Be sure the electrical power supply to the icemaker is OFF before proceeding with removal procedures.

To remove the Water Pump Assembly:

1. Remove screws and the Right Side Panel and the Front Panel.
2. Unclip and disconnect electrical leads from water pump motor.
3. Remove one screw and one end of the ground wire from the Water Pump Bracket.

4. Remove two screws and washers attaching the Water Pump Assembly to the Water Pump Bracket.
5. Remove three spring type clamps and one screw type hose clamp connecting the four Tygon Tubes to the Freezing Chamber; then lift the Water Pump Assembly off of the Water Pump Bracket and work loose the attached Tygon Tubes from the Freezing Chamber.

To replace the Water Pump Assembly, reverse the removal procedure.

REMOVAL AND REPLACEMENT OF THE WATER REGULATOR ASSEMBLY — WATER-COOLED MODELS

WARNING

Be sure the electrical power supply to the icemaker is OFF before proceeding with removal procedures.

To remove the Water Regulator Assembly:

1. Remove screws and the Left Side Panel and the Front Panel.
2. Check to be sure building source water inlet supply shutoff valve to rear of Chassis is OFF.
3. Bleed off or blow the refrigerant charge through the Schrader valve.
4. Disconnect water inlet supply line at the left bottom rear of the Chassis.
5. Disconnect water line at the inlet and outlet fittings on the Water Regulator Assembly.
6. Unsolder the Water Regulator Valve capillary tube from the Compressor refrigerant discharge line.

Always install a replacement Drier, any time the sealed refrigeration system is opened. Do not replace the Drier until all other repair or replacement has been completed.

7. Remove the Water Regulator Assembly from the Chassis Base.

To replace the Water Regulator Assembly, reverse the removal procedure.

REMOVAL AND REPLACEMENT OF THE SPRAY BAR AND WATER TUBE ASSEMBLY

To remove the Spray and Water Tube Assembly:

1. Remove screws and the Right Side Panel to gain access to the Spray Bar Assemblies.
2. Tilt the top of the plastic Cube Chute forward slightly, then, lift the Cube Chute up for removal.
3. Remove three U-type Clips and the plastic Curtain Assembly.
4. Reach through the ice chute opening in the Freezing Chamber and feel for the Spray Bar.
5. Move hand to the center hub and rotate the Spray Bar, so one end is aligned with the ice chute opening.
6. Lift the Spray Bar up, off of the jet bearing hub, then, remove the Spray Bar through the ice chute opening.
7. Disconnect electrical leads and ground wire from terminals on the Agitator Motor.
8. Reach through the upper ice chute opening, and grasp the Top Fork with one hand, and the Agitator Motor Fan on top of the Freezing Chamber, with the other hand.
9. Hold the Fan Blades still and rotate the left-hand thread Drive Fork to the right, COUNTERCLOCKWISE, and unscrew the Drive Fork from the Agitator Motor.
10. Remove four screws and lift out the Agitator Motor.
11. Insert and hold firm, a screwdriver through a hole in the top bearing; then, reach through the ice chute opening of the lower Freezing Chamber and rotate the left-hand thread Drive Fork to the right, COUNTERCLOCKWISE, to unscrew and remove the bottom Drive Fork from the Water Tube. Remove the lower Spray Bar.

SERVICE DIAGNOSIS

The Service Diagnosis Section is for use in aiding the serviceman in diagnosing a particular problem and for pin-pointing the area in which the problem lies. It is an ever available reference for proper corrective action.

The following charts list corrective actions for the causes of known symptoms of certain problems that can occur in the Icemaking-Refrigeration system.

ICEMAKING - REFRIGERATION SYSTEM

SYMPTOM	POSSIBLE CAUSE	CORRECTION
Irregular shape cubes and some cloudy.	Some jets plugged.	Clean jets.
	Shortage of water.	See Shortage of water CORRECTION.
	Unit not level. Water overflowing vent holes on low side, burning cubes.	Level cabinet, as required.
Cube improper size.	Cube Size Control set too cold.	Rotate Cube Size Control dial toward WARMER.
	Cube Size Control set too warm.	Rotate Cube Size Control dial toward COLDER.
	Partially restricted capillary tube.	Blow refrigerant charge; replace drier; evaculate system; add refrigrant charge.
	Moisture in system.	Same as above CORRECTION.
	Shortage of water.	See Shortage of water CORRECTION.
	Loss of refrigerant.	Check for refrigerant leaks, correct leaks; recharge system.
Cloudy Cubes.	Shortage of water.	See Shortage of water SYMPTOM.
	Dirty water supply.	Install water filter or softener.
	Accumulated impurities.	Use SCOTSMAN Ice Machine Cleaner.
Shortage of water.	Water spraying out through curtain.	Hang curtain in proper position.
	Water solenoid not opening.	Repair or replace solenoid.
	Water leak in sump area.	Locate leak and repair or correct condition.
	Partial restriction in water strainer, located within water inlet of water solenoid.	Clean or replace strainer.
	Flow control plugged.	

SERVICE DIAGNOSIS

SYMPTOM	POSSIBLE CAUSE	CORRECTION
Decreased ice capacity	Poor circulation or extreme hot location.	Relocate the cabinet; or provide ventilation by cutting openings.
	Dirty Air-cooled condenser or faulty fan motor.	Clean Air-cooled condenser, or replace or repair fan motor.
	Lo water pressure to Water-cooled condenser.	Restore water pressure.
	Improper charge of refrigerant.	Refer to refrigerant charge indicated on name plate and correct.
	Non-condensable gas in the system.	Purge the system.
	Hot gas solenoid valve leaking.	Replace valve.
	Partially restricted capillary tube.	See Cubes too small CORRECTION.
	Defective compressor.	Replace compressor.
	Leaky inlet water valve.	Repair or replace valve.
Poor harvests.	Too short defrost time.	Check and adjust harvest cycle.
		Check Timer 3.5-minute setting.
	Restriction in water inlet line.	Check strainer and flow check valve. DO NOT remove flow control washers.
	Hot gas solenoid does not open.	Binds or burned out. Replace.
	Plugged air vent holes in upper part of cube cups.	Clean out air vent holes.
	Improper refrigerant charge.	Check or recharge system.
	Water pressure too low.	Check for 20 PSI flowing water.
Compressor cycles intermittently.	Dirty condenser.	Clean condenser with vacuum cleaner or brush. NO WIRE BRUSH.
	Air circulation blocked.	Locate cabinet with adequate air space for proper air flow.
	Low voltage.	Check for circuit overload.
		Check building supply voltage; if low, contact power company.
	Defective Fan Motor.	Replace Fan Motor.
	Non-condensable gases in system.	Purge the system.
	Check compressor, start components.	Replace defective components.

SERVICE DIAGNOSIS

SYMPTOM	POSSIBLE CAUSE	CORRECTION
Icemaker will not operate.	Blown fuse in line.	Replace fuse and check for cause.
	Master switch in OFF position.	Set switch to ON position.
	Hi head pressure reset open.	Reset control.
	Faulty Master switch.	Replace switch.
	Timer contacts open.	Replace Timer microswitch.
	Faulty Bin thermostat.	Replace faulty Bin thermostat.
Freeze-up.	Dirty condenser coil (Air-cooled)	Clean coil.
	Loss of water or water pressure.	Restore water pressure.
	High Ambient.	Adjust cube size control warmer.
	Faulty water solenoid.	Replace water solenoid.
	Faulty hot gas solenoid.	Replace hot gas solenoid.
	Faulty agitator motor.	Replace agitator motor.
	Faulty timer.	Replace timer.
	Faulty cube size control.	Replace cube size control.
	Loss of refrigerant. (Leak)	Repair leak and recharge.
	Harvest cycle too short.	Adjust harvest cycle time.
	Cold air temp. and cold water.	

MAINTENANCE & CLEANING INSTRUCTIONS

GENERAL

The periods and procedures for maintenance and cleaning are given as guides and are not to be construed as absolute or invariable. Cleaning especially will vary, depending upon local water conditions and the ice volume produced; and, each icemaker must be maintained individually, in accordance with its own particular location requirements.

ICEMAKER

THE FOLLOWING MAINTENANCE SHOULD BE SCHEDULED AT LEAST TWO TIMES PER YEAR ON THIS ICEMAKER. CALL YOUR AUTHORIZED SCOTSMAN SERVICE AGENCY.

1. Check and clean or service any optional water treatment devices, if any installed.
2. Check the MC35 cabinet is level, in the side-to-side and front-to-back directions.
3. Clean the water system, evaporator freezing chamber reservoir and spray bar using a solution of SCOTSMAN Ice Machine Cleaner. Refer to CLEANING.
4. Check that the plastic curtain hangs down evenly within the opening.
5. Check and tighten all bolts and screws.
6. Check and tighten all electrical connections.
7. Check hot gas solenoid valve for correct operation.
8. With MASTER ON-OFF switch and COMPRESSOR ON-OFF switch in the OFF position, clean the condenser using vacuum cleaner, whisk broom or brush. Instruct customer to clean condenser frequently. DO NOT USE A WIRE BRUSH.
9. Check for water leaks and make corrections.
10. Check the bin thermostat control bulb to test shut off. Holding ice against bin thermostat control bulb should cause the icemaker to shut off at the end of the harvest cycle.

    Within minutes after ice is removed from the bin thermostat control bulb, the icemaker will restart.

Cleaning requirements vary according to local water conditions and individual user operation. Continuous check of the clarity of ice cubes and visual inspection of the water system parts, evaporator and the sump assembly before and after cleaning will indicate frequency and procedure to be followed in local areas.

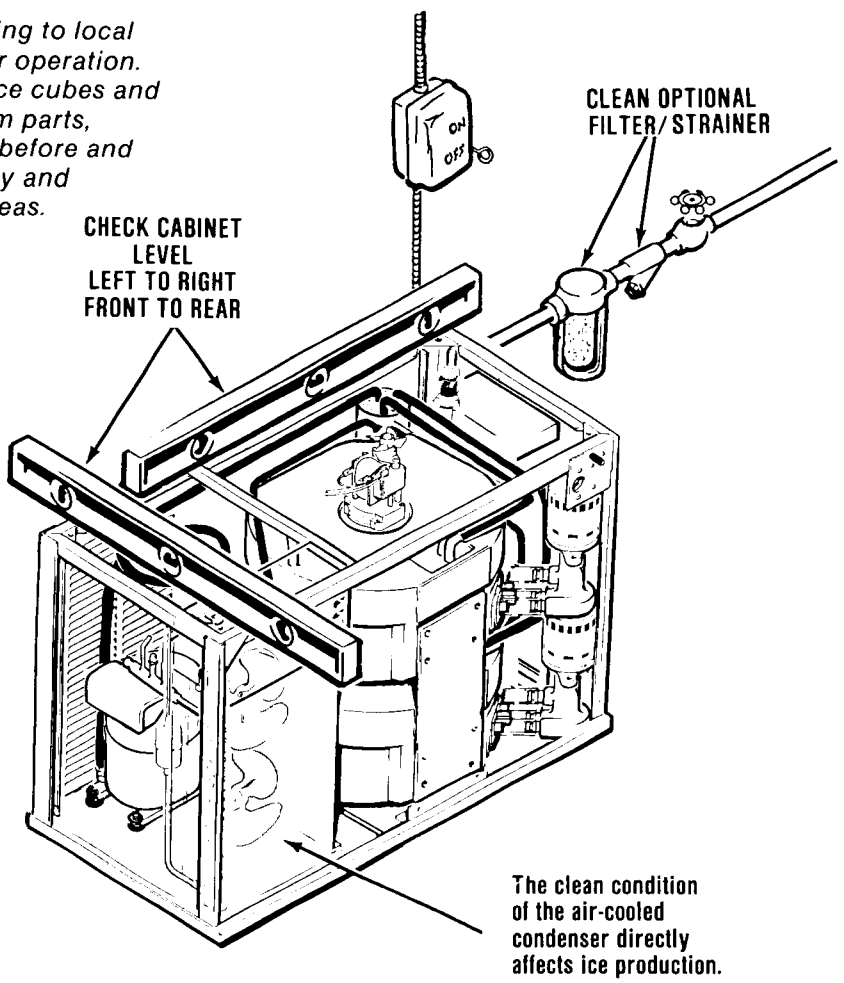

MAINTENANCE & CLEANING INSTRUCTIONS

CLEANING - Icemaker

1. Remove screws and front, top, and right side panel.
2. Move the Master ON-OFF switch and the compressor ON-OFF switch, on the control box, to the OFF positions.
3. Tilt the top of the plastic cube chute forward slightly, then lift the cube chute up for removal.
4. Drain sumps using drain hose clipped to pumps, then re-attach drain hose.
5. Prepare the following cleaning solution: Mix 16-ounces of SCOTSMAN Ice Machine Cleaner with eleven pints of fresh, potable water in a clean container.

WARNING

SCOTSMAN Ice Machine Cleaner contains Phosphoric and Hydroxyacetic acids. These compounds are corrosive and may cause burns. If swallowed, DO NOT induce vomiting. Give large amounts of water or milk. Call physician immediately. In case of external contact, flush with water. KEEP OUT OF THE REACH OF CHILDREN.

6. Pour the batch of prepared cleaning solution into the upper and lower freezing chamber through each curtain opening.
7. Immediately replace the defrost water tube; then, move the master ON-OFF switch, on the control panel, to ON.
8. Allow the icemaking system to operate normally for twenty minutes in the freezing cycle. NO ICE CUBES will be made, because the compressor has been switched OFF.
9. At the end of twenty minutes, rotate the shaft of the timer and switch assembly, CLOCKWISE, to start a second harvest cycle. See *Start Positions* illustration.

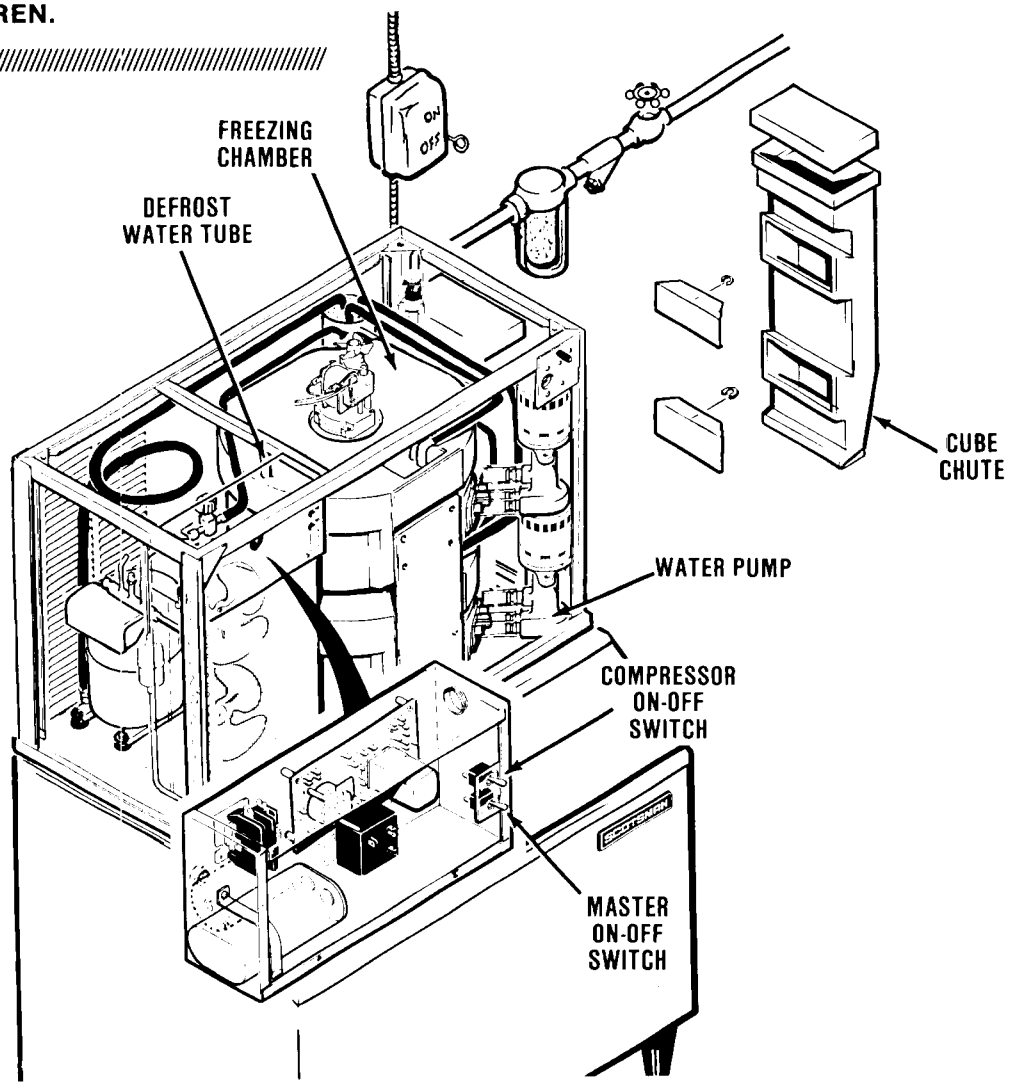

10. Rotate the shaft of the timer and switch assembly, protruding through the hole in the front of the control box cover, until the microswitch actuator arm drops into the cam slot, the START POSITION of the harvest cycle, then stop. See *Start Positions* illustration.
11. Allow the icemaking system to operate normally through the harvest cycle; then, when the harvest cycle is completed, rotate the timer again THROUGH the freezing cycle to START another harvest cycle. Perform this harvest cycle operation three times. During each harvest cycle, fresh inlet water is introduced into the water system and acts to rinse all water-related parts and to wash away most mineral concentration through the drain.
12. Wash the curtain assembly and the cube chute in a solution of one ounce of household bleach in one gallon of water.
13. Using a clean, damp cloth or disposable paper wiper, wipe off the curtain assembly and the cube chute.
14. Replace the curtain assembly and the cube chute.
15. Move the compressor ON-OFF switch, on the control box, to the ON position.
16. Check each ice cube harvest, until the ice cubes are clear and the acid taste is eliminated.

WARNING

DO NOT USE ice cubes produced from the cleaning solution. Be sure no ice remains in the bin. Rinse and wipe clean inside bin walls.

17. Pour hot water over ice cubes in the bin, to melt the ice cubes and allow the same cleaning solution to be used to thoroughly wash the inner surfaces of the bin and the solution to help clean the drain lines as it drains. Rinse inner surfaces of bin.
18. Replace all panels and screws.
19. Clean and sanitize the interior bin surfaces each week.

TABLE OF CONTENTS

Photograph and Ice Making Capacity 2
Specifications and Dimensions 3
Installation Instructions 4
Installation Practice 5
Typical Installation 6
Stacking Instructions 7
Cube Deflector Installation Instructions 8
Installation Limitations 9
Electrical Connections and Characteristics 10
Final Check List 11
Installation — Start-Up 12
Wiring Diagram 230-115/60/1 Air Cooled 13
Wiring Diagram 230-115/60/1 Water Cooled 14
Wiring Diagram 208-220/60/3 Water Cooled 15
Wiring Diagram 208-220/60/3 Air Cooled 16
Freezing Cycle Schematic 17
Harvest Cycle Schematic 18
Service Analysis Section 19-20
Maintenance Procedures Section 21-22
Functional Parts and Maintenance 23-26
Breakdown of Component Parts:
- Air and Water Cooled Right End View 27
- Water Cooled Top View 28
- Water Cooled Front View 29
- Air Cooled Top View 30
- Air Cooled Front View 31
- Freezer Sump 32
- Complete Freezer 33
- Inlet Water Supply Assembly 34
- Dual Drive Schematic 35
- Top Freezer View 36
- Compressor 37
- Control Box — Air Cooled 1 Phase 38
- Control Box — Water Cooled 1 Phase 39
- Control Box — Air Cooled 3 Phase 40
- Control Box — Water Cooled 3 Phase 41

Freezer Spray Drive 42
Water Pump — Instructions 43-44
Cabinet Parts 45
Maintenance Cleaning 46
Ice Storage Bins 47
Care of Stainless Steel Liner 48
Cleaning of Stainless Steel Liner 49

THIS PAGE
INTENTIONALLY
LEFT BLANK

SCOTSMAN

MODULAR CUBER
MC40 SERIES

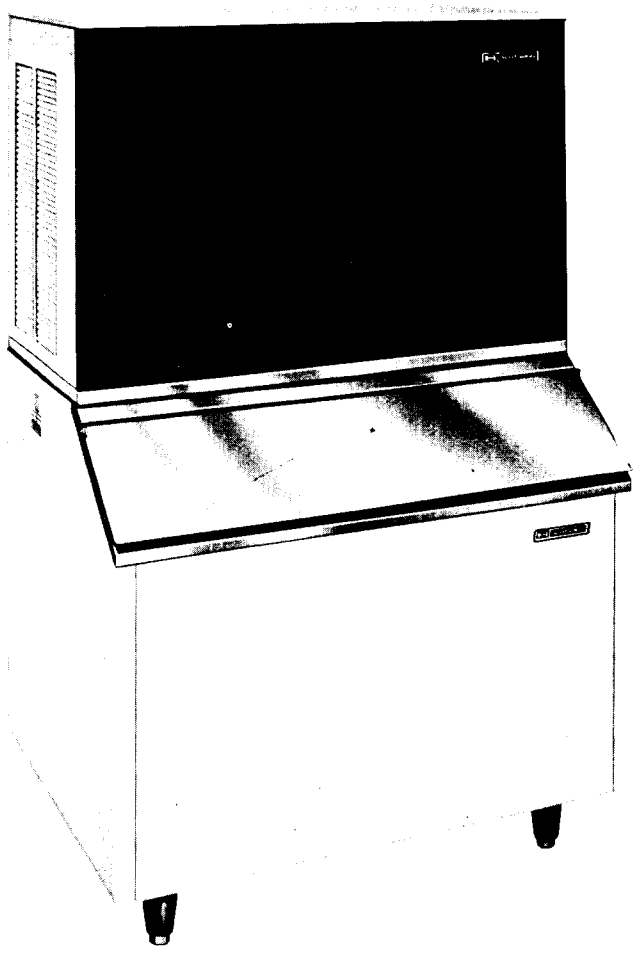

ice making capacity

Daily Ice Capacity is directly related to condenser air inlet temperature, water temperature, and age of machine. To keep your SCOTSMAN MODULAR CUBER performing at it's maximum capacity, it is necessary to perform periodic maintenance as outlined on page 46 of this manual.

MC40
modular cuber

***Capacity:** Refer to Ice Making Capacity chart.
Storage Bin: The MC40 will stack onto a variety of Scotsman Modular Bins such as the B40, B60, B80 and B90.

Height: 28-3/4" (73.0cm) **Width:** 42-5/16" (107.5cm)
Depth: 23-1/8" (58.8cm)
Shipping Wt: Air 346 lbs. (157 kg.) Water 336 lbs. (153 kg.)

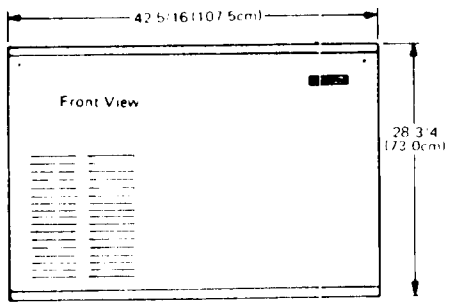

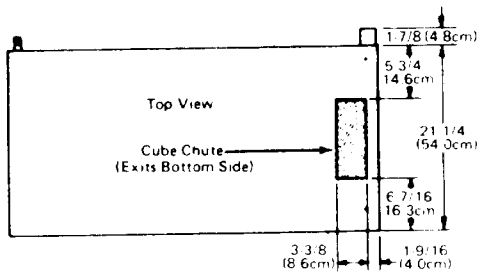

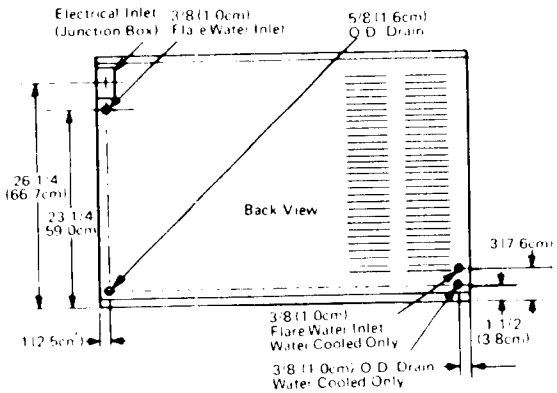

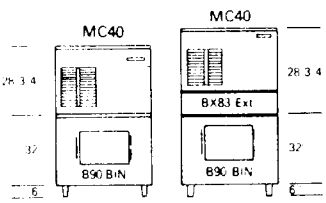

MC40 MODULAR CUBER SPECIFICATIONS

Model	Condensing Unit	Compressor Horsepower	Finish *	Shipping Weight lbs.	kg.
MC40MAE	Air	1.5	Enamel	346	157
MC40MWE	Water	1.5	Enamel	336	153
MC40SAE	Air	1.5	Enamel	346	157
MC40SWE	Water	1.5	Enamel	336	153

* Stainless steel panels available in kit form SPKMC2. Painted models have Sandalwood enamel micomatte finish, with walnut woodgrain vinyl front panel.

Basic Electricals	Curcuit Ampacity	Maximum Fuse Size
Air Cooled:		
115/208-230/60/1	26.4	25.0
115/208-220/60/3	18.0	20.0
Water Cooled:		
115/208-230/60/1	25.9	25.0
115/208-220/60/3	17.5	20.0

INSTALLATION INSTRUCTIONS

1. Uncrate unit using regular hammer and nail puller.

2. Remove top, front, left and right side panels (held by screws).

3. On base of machine at left and right ends are bolts that hold cuber to crate skid. Loosen the bolts to remove skid and save bolts to mount machine to SCOTSMAN Storage Bins.

4. Place unit on top of bin and secure to bin with two bolts taken out in Step 3.

5. Uncoil bin thermostat bulb and run it down thru machine base by pushing end of bulb thru plastic cap located between sump pump and freezing chamber. Next, take combination cube deflector and bulb holder, which is packed in storage bin, and install on upper right side of bin as described on Page 8.

   NOTE: Regardless of what type of bin is used, It is essential that bin thermostat bulb be located in area immediatley below cube chute opening of machine, in order to prevent ice from backing up into cube chute.

6. Remove shipping tapes and check tubings, wiring, capillary control, lines for rubbing or chafing, refashion as required.

7. Remove junction box from top of cube chute and install on rear of machine. Wires are provided at rear of machine for electrical hookup.

8. Check unit nameplate voltage against building source voltage to be sure they correspond. Scotsman, like most manufacturers, purchases electrical motors that are rated to operate within a 10% variance above or below nameplate ratings.
   Improper voltages applied to Scotsman equipment can cause premature failures and burnouts. Failures of this type are not considered as factory fault or defect.

9. Make water connection utilizing 3/8" O.D. copper water line.

10. Use clean damp cloth to wipe out storage bin and cabinet exterior.

11. Replace all panels.

12. Check unit to be sure it is level side to side and front to rear.

13. User manual contains registration card. Fill out card completely including model and serial numbers as taken from aluminum plate found behind front service panel. Forward to Scotsman Factory.

14. Call your local authorized Scotsman Service Agency for hook-up, start-up and check out. He's listed under "Ice Making Machinery & Equipment" in your telephone book, yellow pages.

INSTALLATION INSTRUCTIONS

1. Center drain cup (2-2296-01) over drain hole in base.
2. Put a light amount of sealant at both inside corners to insure water seal, before securing to base.
3. Drain tube is 1/2" O.D. Attach suitable drain line.

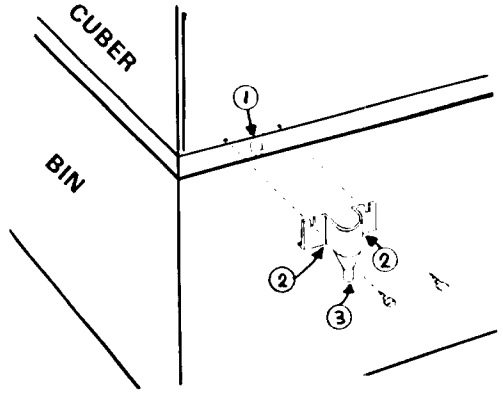

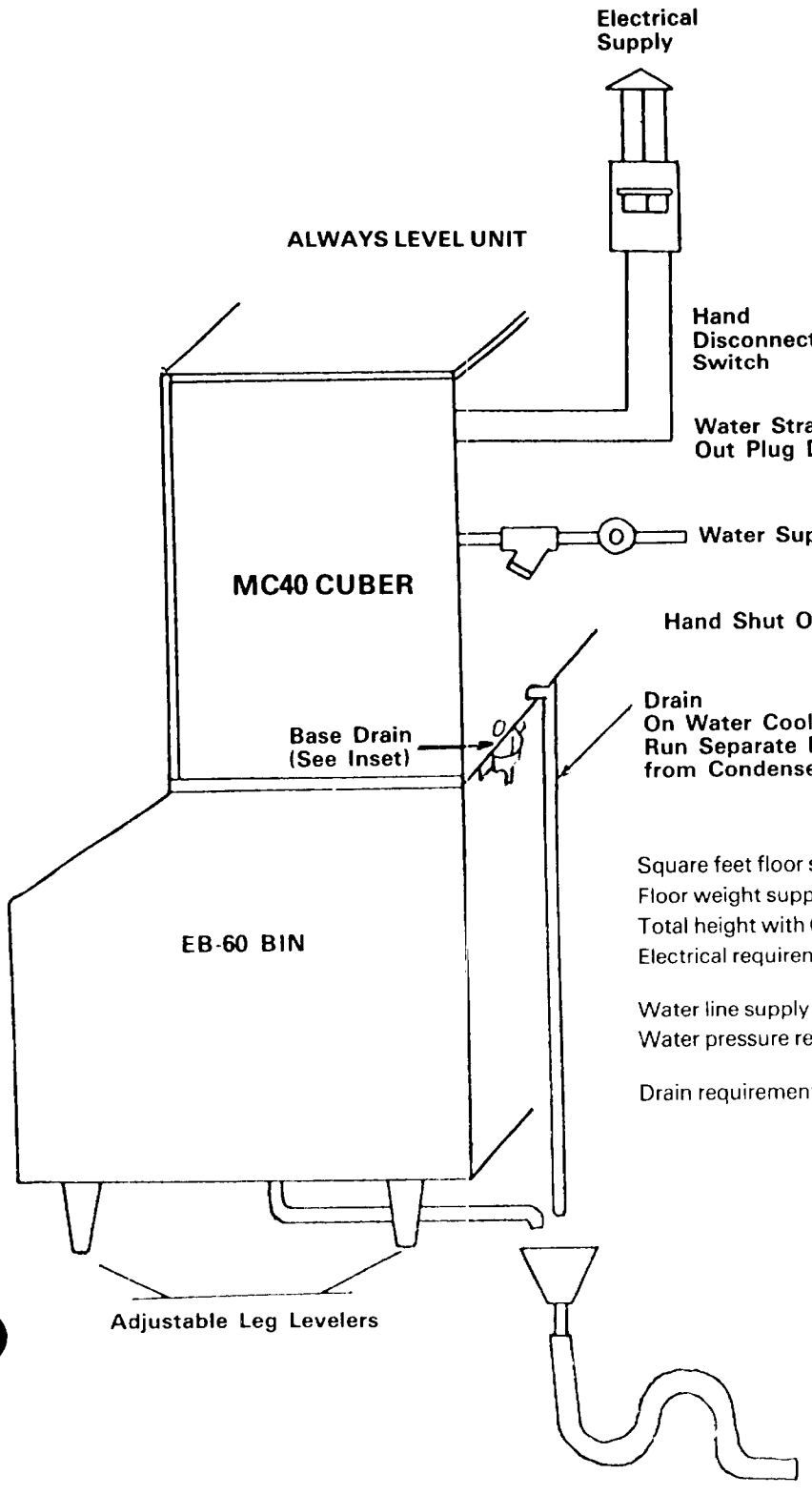

Square feet floor space required	8.75 sq. ft.
Floor weight support	900 pounds
Total height with 6" legs - CUBER - BIN	67 inches
Electrical requirement	230/60/1 or 208-220/60/3
Water line supply size	3/8" copper, minimum
Water pressure required	20 pounds flowing pressure, minimum
Drain requirement	5/8" O.D. stub on cuber drain 1/2 N.P.T. female thread casting on bin

TYPICAL INSTALLATION

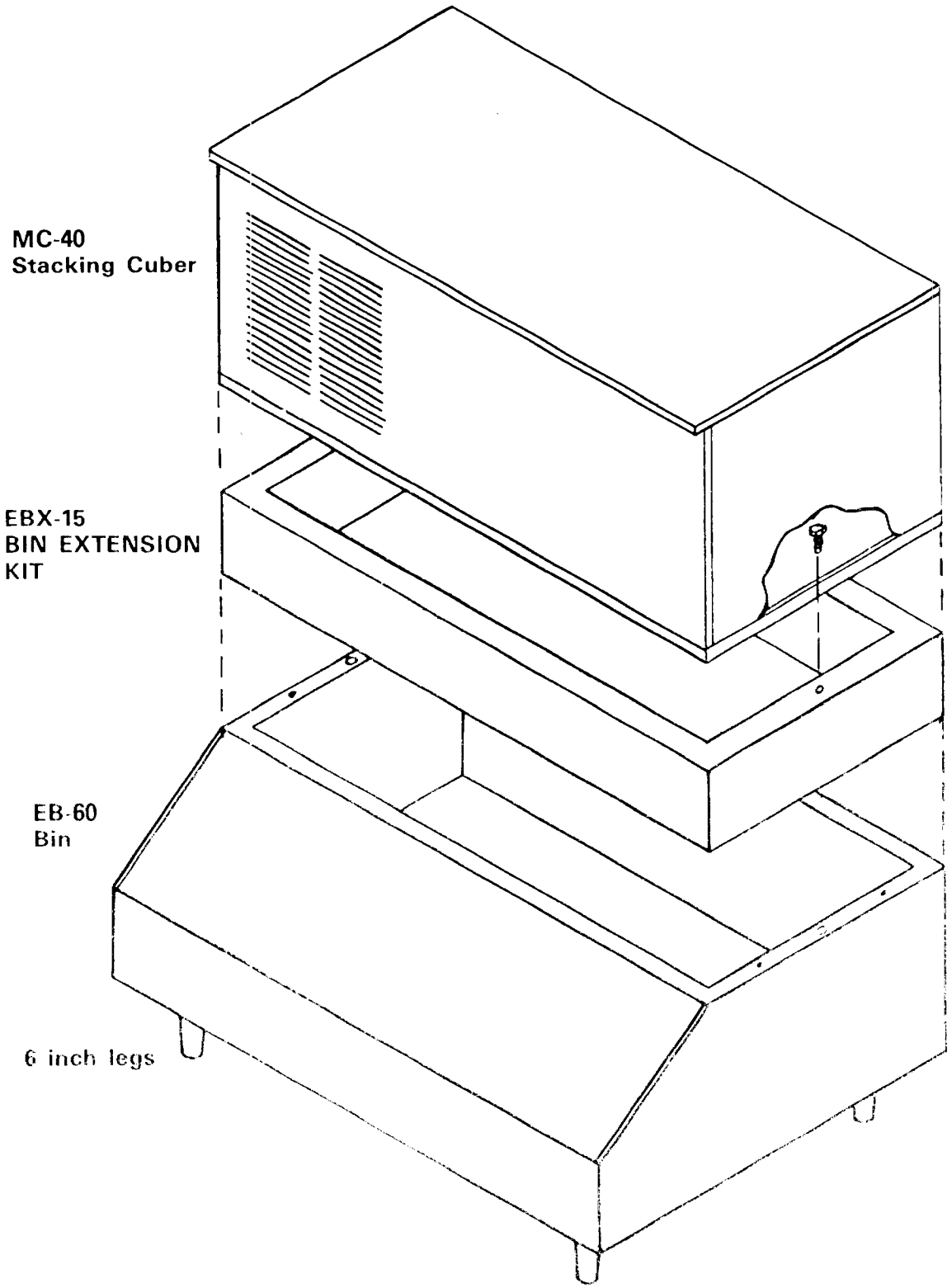

WARNING: SCOTSMAN BINS ARE SPECIFICALLY ENGINEERED FOR USE WITH THE SCOTSMAN MODULAR CUBERS. USE OF OTHER THAN SCOTSMAN MANUFACTURED BIN MAY RESULT IN COMPONENT FAILURES WITHIN THE MODULAR CUBER.

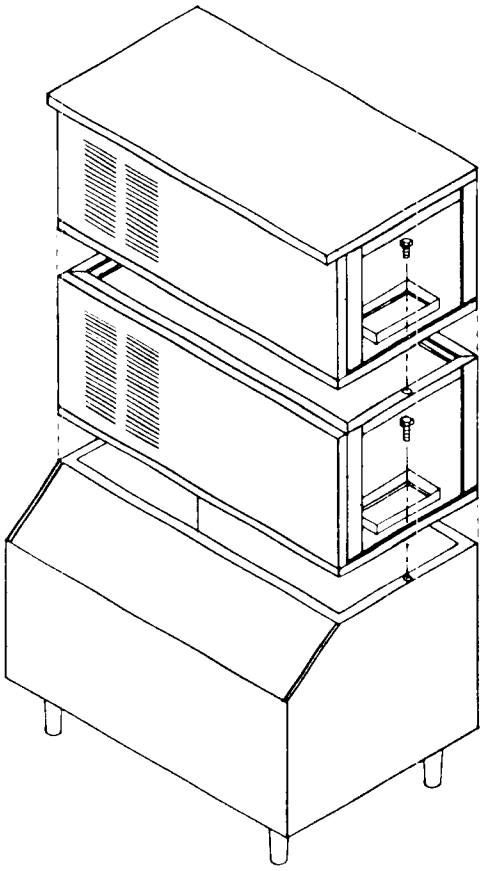

FIG. 1

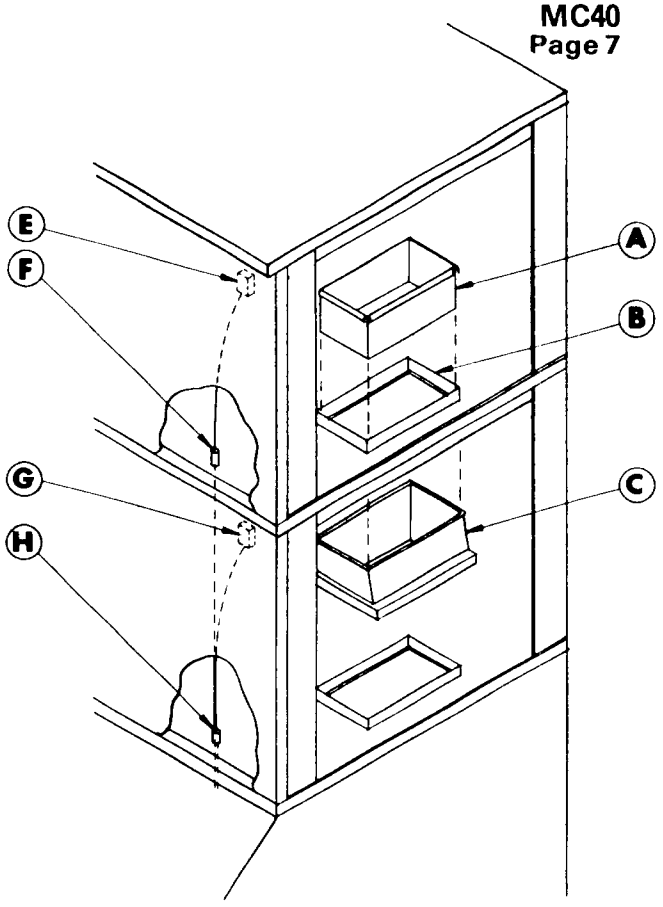

FIG. 2

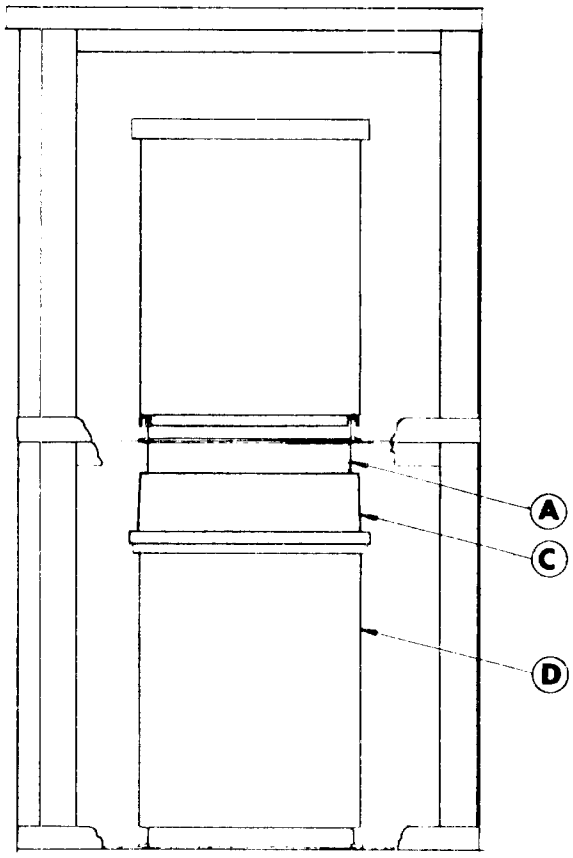

FIG. 3
COMPLETED INSTALLATION

KSC1

STACKING KIT INSTRUCTIONS

1. Remove all panels from both machines. (Top panel of bottom machine may be set aside, as it is not used when machines are stacked) Remove cube chutes from both machines.

2. After mounting bottom cuber to storage bin, place upper machine directly on frame of lower machine. Bolt together with same bolts and holes used in holding machine to crate skid. Fig. 1

3. Insert stainless steel (A) thru cube opening (B) in base of upper cuber. Place stacking kit cover (C) over sleeve as shown and push to top of sleeve. (See Fig. 2)

4. Replace cube chute (D) in bottom cuber and slide cover (C) down over cube chute, as shown in Fig. 3.

5. Route upper machine thermostat bulb (E) thru cap (F) and together with lower machine thermostat bulb (G) push thru cap (H) and feed tubes into combination cube deflector and bulb holder at right side of bin. This will provide two independent ice making systems.

6. Run separate water, drain, and electrical supplies. Test and check out added cuber, ice making, thermostat function, etc.

7. Install cube chute & cover on top machine, and replace panels on both machines.

CUBE DEFLECTOR INSTALLATION INSTRUCTIONS

To install cube deflector, ice machine cube chute must be removed so cube deflector can be hooked over flange on base.

FRONT VIEW

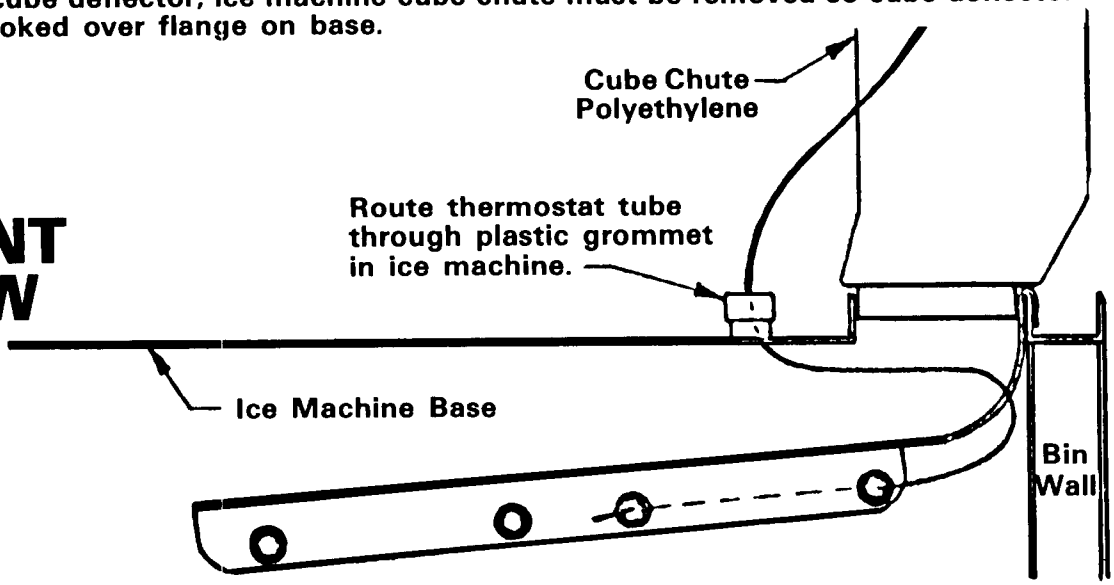

Thermostat tube to be routed along the underside of the ice machine until it is located under cube deflector.

BOTTOM VIEW

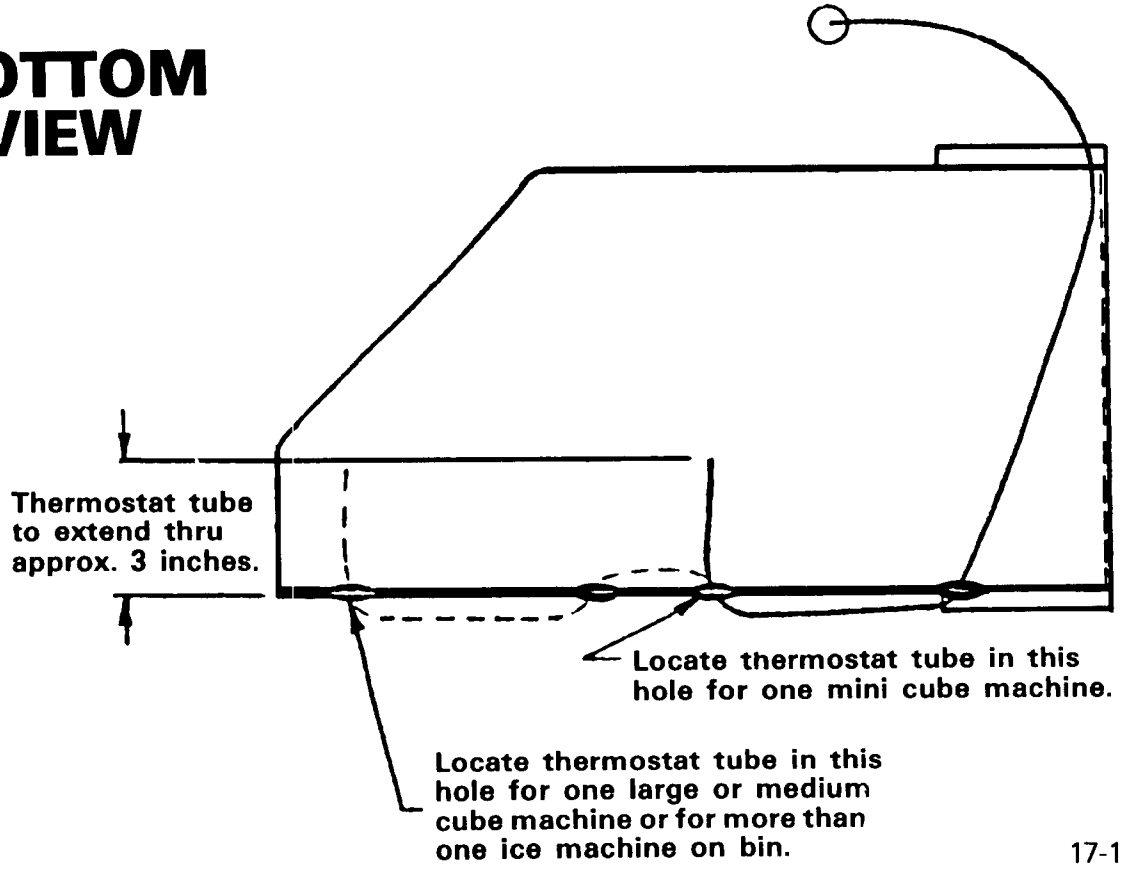

17-1274-01

CAUTION: Thermostat tube can be located in any hole for maximum bin fill. However, when located, the ice machines must shut off before cubes can back up into the cube chute or extensive damage may result.

INSTALLATION LIMITATIONS

ELECTRICAL

1. Scotsman, like most manufacturers, purchases electrical motors that are rated to operate within 10% variance above or below nameplate ratings.

   Improper voltages applied to Scotsman equipment can cause premature failures and burnouts. Failures of this type are not considered as factory fault or defect.

AMBIENT

2. WARNING – This machine is not designed for outdoor installations. This machine will not operate when air temperatures are below 50° F. or above 100° F.

   NOTE: This unit incorporates a "hot gas" defrost system, therefore, it is vitally important that the operation head pressure are in the 135-155 pound PS1 guage range. Water cooled models pose no problem since pressure can be regulated by adjustment to the water regulating valve.

   Air cooled units require a minimum 50° fahrenheit ambient air, otherwise, the hot gas system will not defrost the formed ice cubes, resulting in a freeze up that will ruin the freezer section, necessitating a costly repair.

   This unit was not fabricated nor intended to be installed outdoors.

WATER

3. Scotsman Ice Systems require 20 pounds flowing water pressure to operate satisfactorily. Pressures lower than 20 pounds or interruptions in the water supply can cause serious mechanical damage to this product.

   This machine will not operate when water supply temperatures are below 40° F. or above 100° F.

ELECTRICAL CONNECTIONS AND CHARACTERISTICS

230 volts, 60 hertz, single phase	Air Cooled	Water Cooled
Compressor	18.2 Amperes	18.2 Amperes
Sump Motor (2)	1.3 ea. Amperes	1.3 ea. Amperes
Fan-Air Cooled Models (2)	.70 Amperes	NONE
Spray Bar Motor	.60 Amperes	.60 Amperes
TOTAL — Full Load Amperes	23.4 Amperes	22.0 Amperes

See page 3 for minimum curcuit ampacity. Be certain that the Cubers are on their own circuit and individually fused. The maximum allowable voltage variation should not exceed 10 per cent of the nameplate rating even under starting conditions. Low voltage can cause erratic operation, and may be responsible for serious damage to the overload switches and motor windings.

All external wiring should conform with National State and local code requirements. Check the voltage on the line before connecting the machine.

NOTE: All Scotsman cubers require a neutral wire and a solid earth ground wire.

WATER SUPPLY AND DRAIN CONNECTIONS

WATER SUPPLY — Air Cooled Models

The recommended water supply line is 3/8" OD copper tubing for air-cooled units. Connect to a cold water supply line with regular plumbing fittings with a shut-off valve installed in an accessible place between supply line and machine. The water strainer supplied with the unit should be mounted with clean-out plug down. Locate the strainer next to the machine and the arrow in the direction of the flow.

A 3/8" male flare fitting is provided on right rear corner for convenience in hookup.

WATER SUPPLY — Water Cooled Models

Water cooled models have separate water inlet for water cooled condenser, in addition to the same plumbing required for air cooled units.
When choosing the water supply for this cuber, consideration should be given to:

A. Length of run.
B. Water clarity and purity.
C. Adequate supply pressures.

Since water is the most important single ingredient in producing ice, you cannot over emphasize the three items mentioned above. Low water pressure (below 20 pounds) may cuase malfunction of the Harvest Cycle. Water containing excessive minerals will tend to produce cloudy colored cubes and scale build up on parts in the water system. Water supply must be installed to conform with local code. In some cases a licensed plumber and/or plumbing permit will be required.

Heavily clorinated water can be controlled using charcoal or carbon filters.

DRAIN: The recommended drain from the bin is 5/8 inch OD copper tubing. Must be run to an open trapped and vented drain. If drain is a long run, allow 1/4 inch pitch per foot. Drain must be installed to conform with local code. Run separate 3/8" line for condenser discharge water on water cooled models.

FINAL CHECK LIST

1. Is the unit level? (IMPORTANT)

2. Have all electrical and piping connections been made?

3. Has the voltage been tested and checked against the nameplate rating?

4. Have the compressor hold-down bolts been checked to insure the compressor is snug to its mounting pads?

5. Is the water supply valve open and the electric power properly hooked up?

6. All masking tape removed from doors, panels and inner freezer curtain?

7. Is the unit clean? Has storage bin been wiped clean with cold water cloth?

8. Has the owner been given the operating manual, and has he been instructed on how to operate the machine?

9. Has the registration form been filled out? Check for correct model and serial numbers from serial plate on unit then promptly mail card to factory.

10. Check all refrigerant and concuit lines to guard against vibrations and possible failure.

11. Is there 4" clearance behind and around unit for proper air circulation?

12. Is unit in a room where ambient temperatures are minimum 60° F. even in winter months?

13. Has water supply pressure been checked to insure at least a minimum pressure of 20 pounds?

14. Refrigerant Charge:
    Air Cooled Models - 43 oz. R-12.
    Water Cooled Models - 35 oz. R-12

15. Refrigerant metering Device: capilliary tubes (2).

INSTALLATION – START UP

1. After water and electrical hookup is complete, turn time clock knob (protruding thru control box cover) clockwise until you hear the micro-switch actuator arm click into the cam slot. Turn master switch on. (Compressor switch should remain in off position.) At completion of harvest cycle (Approx. 3 minutes after harvest was started), rotate knob clockwise until once again harvest is initiated. At this point compressor switch should be placed in "ON" position. Unit is now ready for automatic operation.

   NOTE: All cubers have two manual on-off switches. One is for motor compressor only during cleaning operation, one is master switch for complete unit.

2. When both switches are thrown "on", water inlet solenoid will be energized allowing water to enter cuber, thru solenoid and up into back side of freezer cup section. This will "fill" icemaker for the freezing cycle - Check operation of spray bar drive motor thru hood top panel. Spray bar motor should be running during harvest cycle.

3. NOTE: WATER PUMP OPERATES DURING THE DEFROST CYCLE.
   Factory tests prove faster defrost and increased ice capacity by letting this pump operate continually.

4. Time clock dial does not rotate at the end of the harvest cycle; it is started later by the cube size thermostat control located in the control box.

5. Freezing time will be approximately 20 to 30 minutes in a 70 degree ambient. (Longer if above, and shorter if below.) Average complete cycle time is 25 - 35 minutes.

6. Watch first cube harvest and check to make sure that plastic curtains have not been damaged in shipment. Also that curtains do not swing back into freezer and catch on spray bar.

7. Check size of cubes made: If too small, after a second cycle, adjust cube size control to lower or colder setting - until desired cube size is reached. Normal cube size is with a 1/4" depression in crown.

8. Check texture of cubes made: Partially cloudy cubes throughout suggest unit running short of water near end of freezing, or possibly an extremely bad water condition, which would indicate use of filtering or purifying equipment. Contact SCOTSMAN - Queen Products Division, Ice Machine Service Department, Albert Lea, Minnesota, for further details.

9. With unit on harvest cycle, take a handful of cubes made and hold on storage bin thermostat bulb. Should cut unit off at end of harvest cycle. Remove ice, unit should cut back on automatically in 3 or 4 minutes. Thermostat is factory set at 35 degrees out, 39 degrees in.

10. Install gauges and check head and back pressure: air-cooled models, head pressure after twenty minutes of freezing cycle at 70 degrees ambient will be approximately 125 pounds PSI. The back pressure starts out at approximately 50 pounds PSI and gradually pulls down to approximately 4 pounds PSI just before harvest cycle. Higher ambients and dirty condenser will cause higher pressures. Water-cooled models have water regulating valves factory set at 135 pounds PSI: check reading and adjust if necessary. Back pressure will operate the same as on air-cooled models.

11. Remove gauges, replace control box cover and all service panels.

12. Instruct owner on how to operate and clean machine.

WIRING DIAGRAM
208-230-115/60/1
Air Cooled

CAUTION: MORE THAN ONE DISCONNECT MEANS MAY BE REQUIRED TO DISCONNECT ALL POWER TO THIS UNIT.

THIS UNIT MUST BE GROUNDED

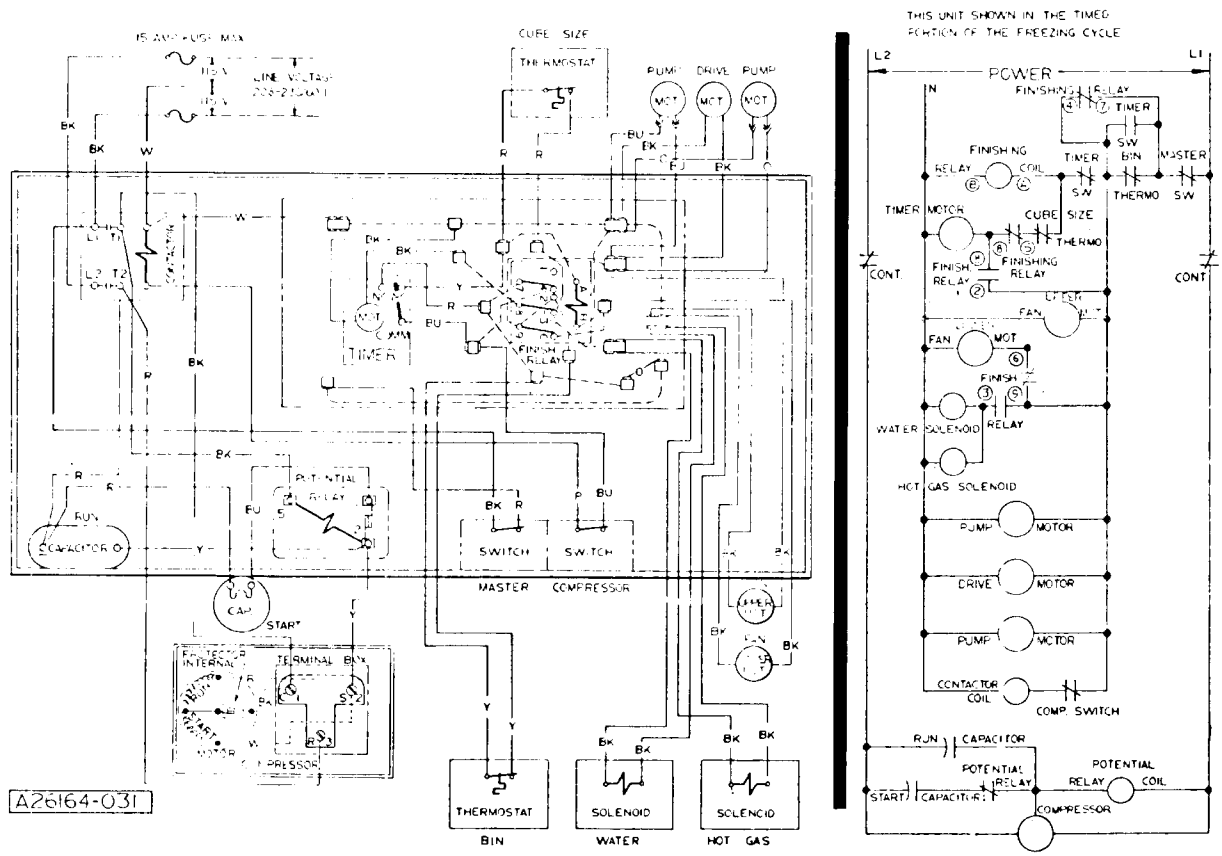

WIRING DIAGRAM
208-230-115/60/1
Water Cooled

CAUTION: MORE THAN ONE DISCONNECT MEANS MAY BE REQUIRED TO DISCONNECT ALL POWER TO THIS UNIT.

THIS UNIT MUST BE GROUNDED

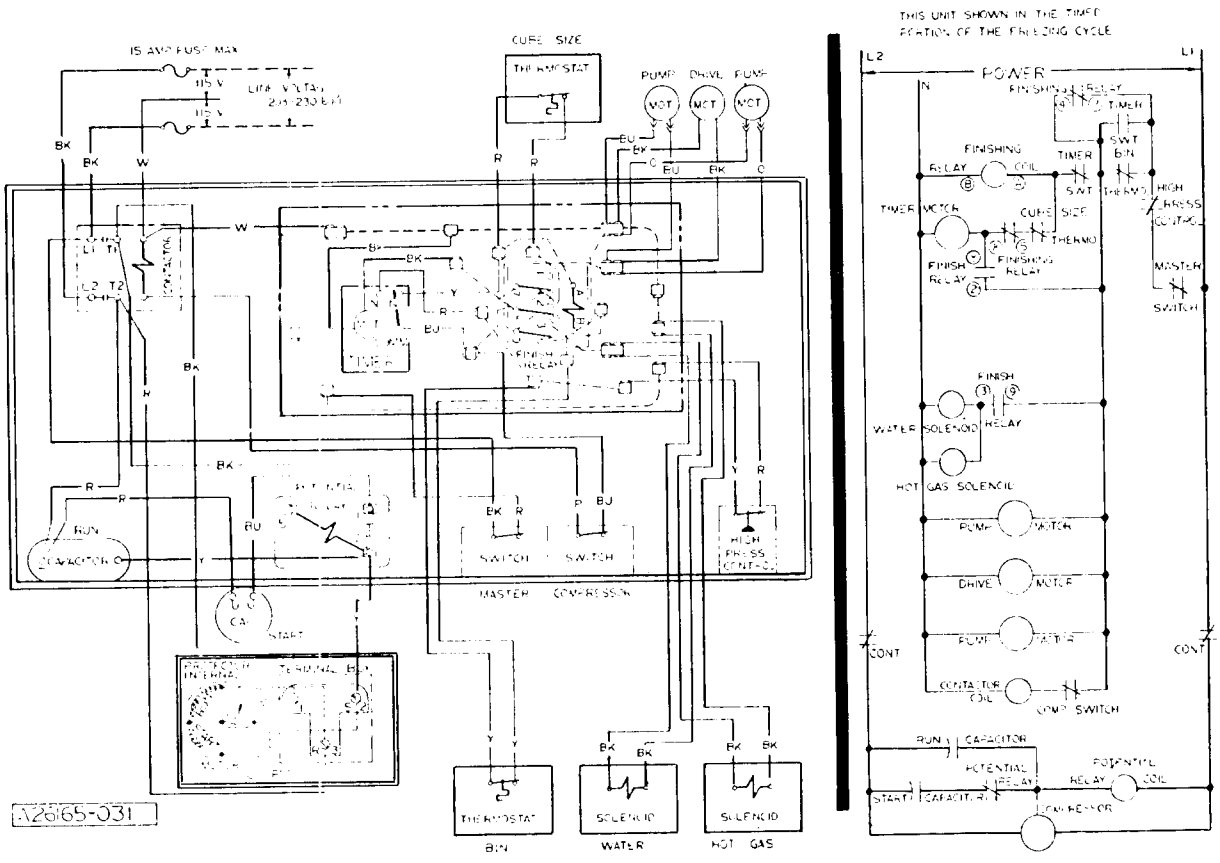

WIRING DIAGRAM
208-220/60/30
Water Cooled

CAUTION: MORE THAN ONE DISCONNECT MEANS MAY BE REQUIRED TO DISCONNECT ALL POWER TO THIS UNIT.

THIS UNIT MUST BE GROUNDED

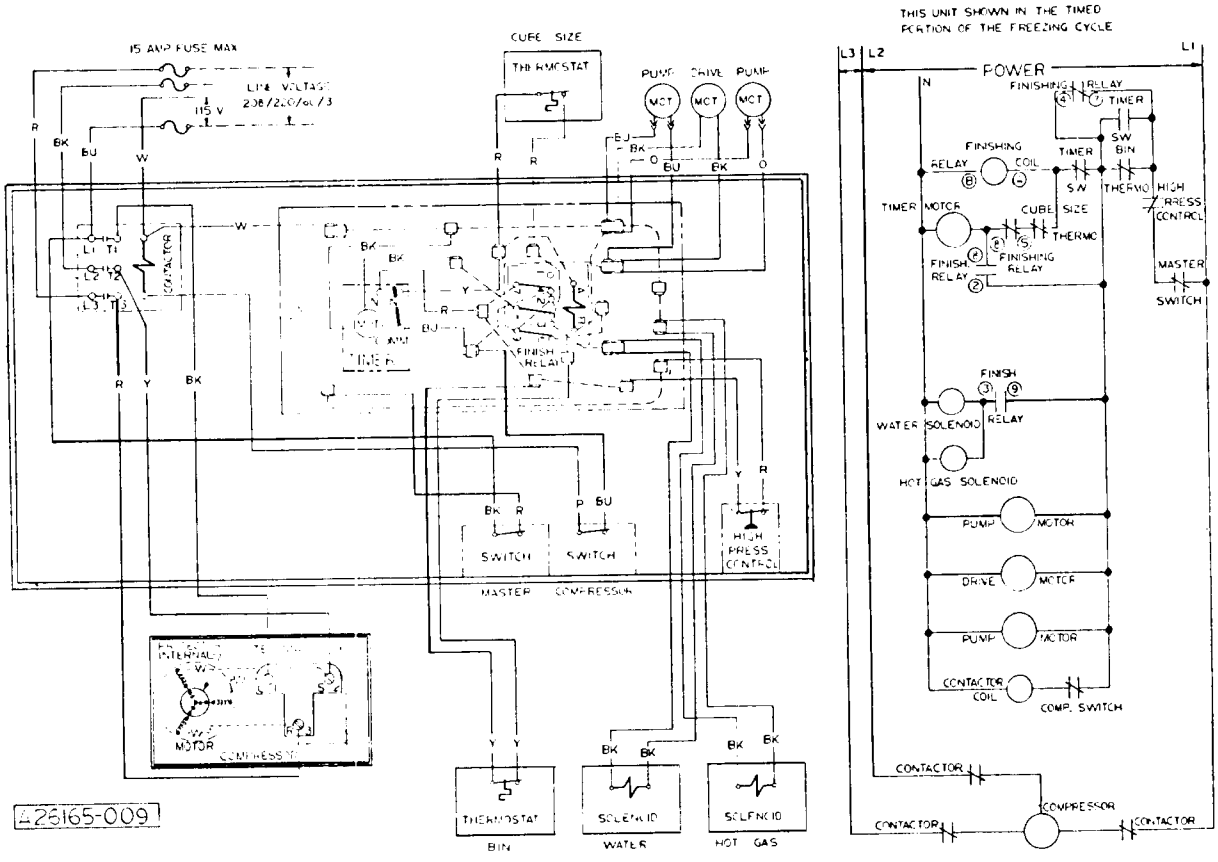

A26165-009

WIRING DIAGRAM
208-220/60/3
Air Cooled

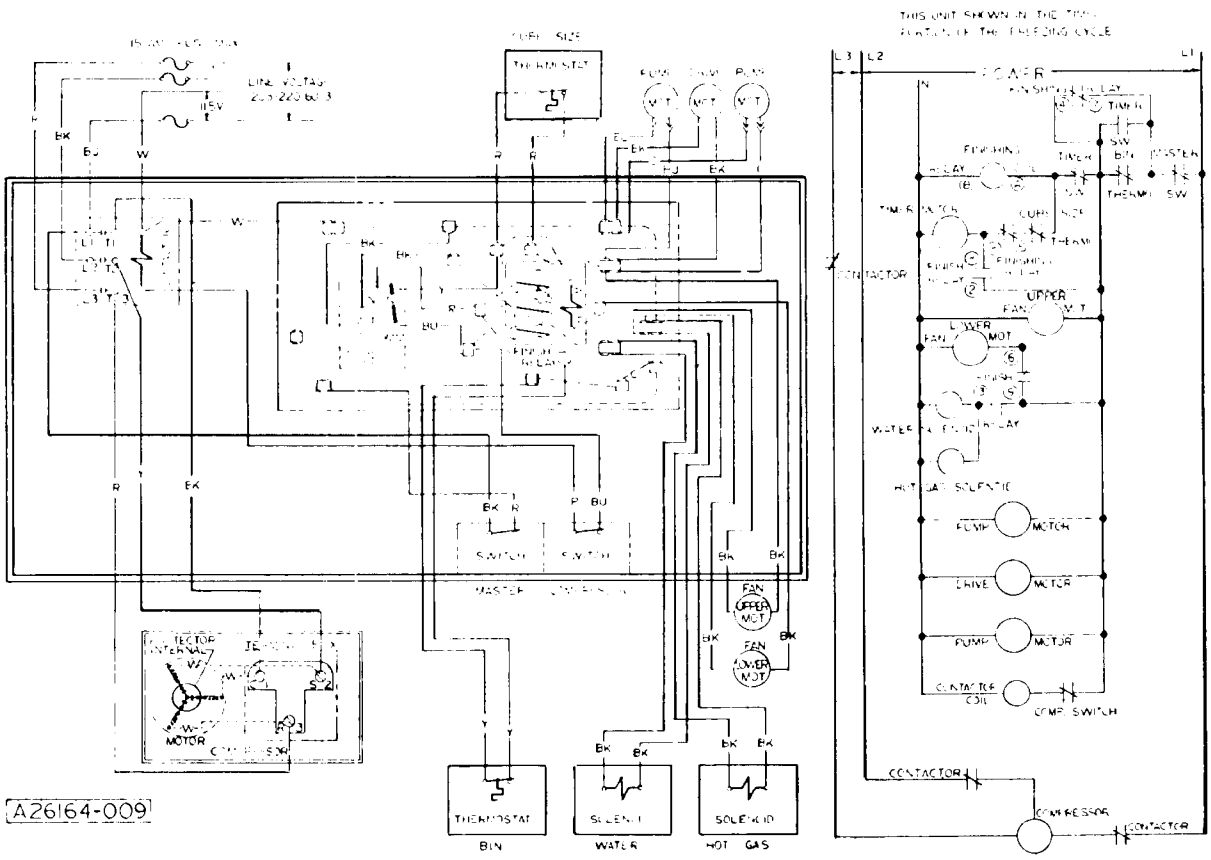

FREEZING CYCLE

As the freezing cycle starts, electrically the components operating are the compressor and fan motor, recirculating water pump and the sprayer tube drive motor.

The refrigerant circuit now seeks a 125-135 pounds head pressure. The suction or low side pressure pulls down fairly quickly to about 25 pounds at which point the ice cubes are starting to form a thin shell in cube cups. Continuing from 25 pounds slowly on down towards the finished cube pressure of approximately 5 pounds takes an average of 20-30 minutes.

Diring this portion of the freezing cycle the electrical brain is the reverse acting, cube size thermostat. This thermostat electrically is holding the freezing cycle components "live". When the ice cubes are about 3/4 formed, the decreasing suction pressure and temperature, activate the temperature sensing bulb of the reverse acting, cube size control, closing its contacts. This does not interrupt the freezing cycle, the closing of the cube size thermostat contacts electrically transfers the finishing of the freezing cycle to the finishing clock motor or timer as it is sometimes called. One full revolution of the timer dial is 8 minutes. However, of the total 8 minutes on the timer dial, 2 minutes are used for the defrost or harvest cycle.

This means then that after the cube size contacts close they activate the timer motor. This control takes over and continues freezing cycle for another 6 minutes with timer dial now turning. When the 6 minutes are completed, an offset in the timer dial allows a micro switch with activating arm riding on that cam to drop into the slot, electrically stopping the freezing cycle and starting the 2 minutes harvest cycle. The clock motor continues thru harvest cycle. A notch on the timer dial now lifts micro switch arm up on dial, electrically stopping harvest cycle and starts back into a new freezing cycle.

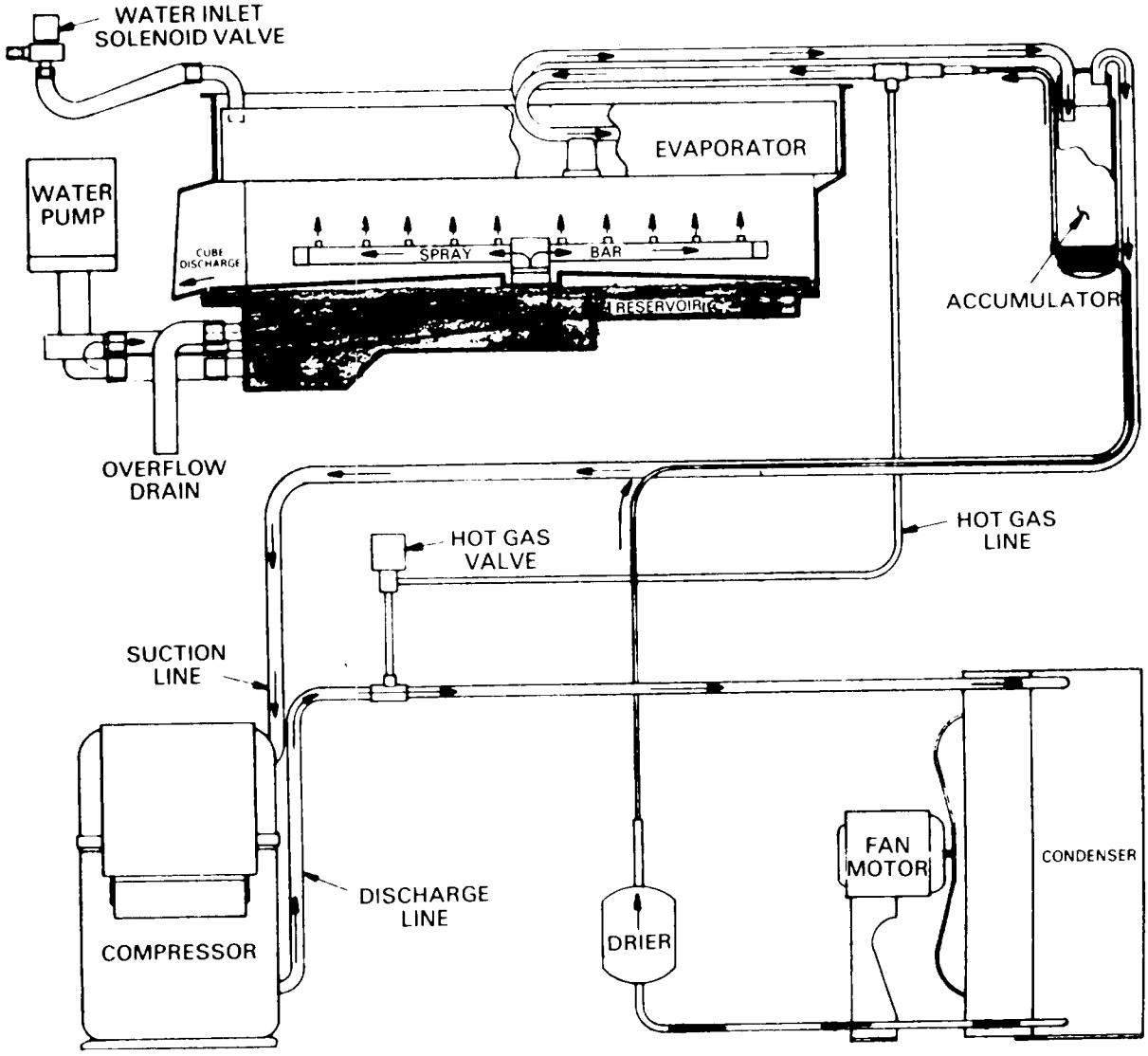

HARVEST CYCLE

NOTE: Illustration shows single freezer for clarity. MC-40 models have two freezers, one above the other. See Page 33.

When the finishing timer reaches the last 2 minutes of its cycle, the machine defrosts with hot gas from the compressor. Electrically, the components in circuit are the compressor, fan motor, water pump, spray bar drive motor and both the water and hot gas solenoid.

The water flows from the solenoid valve, through the top of the freezing chamber, into the reservoir. The level in the reservoir is controlled by a stand pipe which directs the excess water to the drain. This overflow "washes" the mineral concentration out of the reservoir area.

The refrigerant is now following the path of least resistance. The capillary tube restricts the normal route enough to force hot, uncondensed gas from the compressor to flow through the hot gas solenoid valve. From there it passes directly into the evaporator inlet, through the coils and down the suction line to the compressor.

The cubes, which are released by the hot gas, are ejected through the chute and into the bin by the rotating spray bar. After the two minute defrost, the finishing timer switches the electrical circuit back through the cube size control and a new freezing cycle begins.

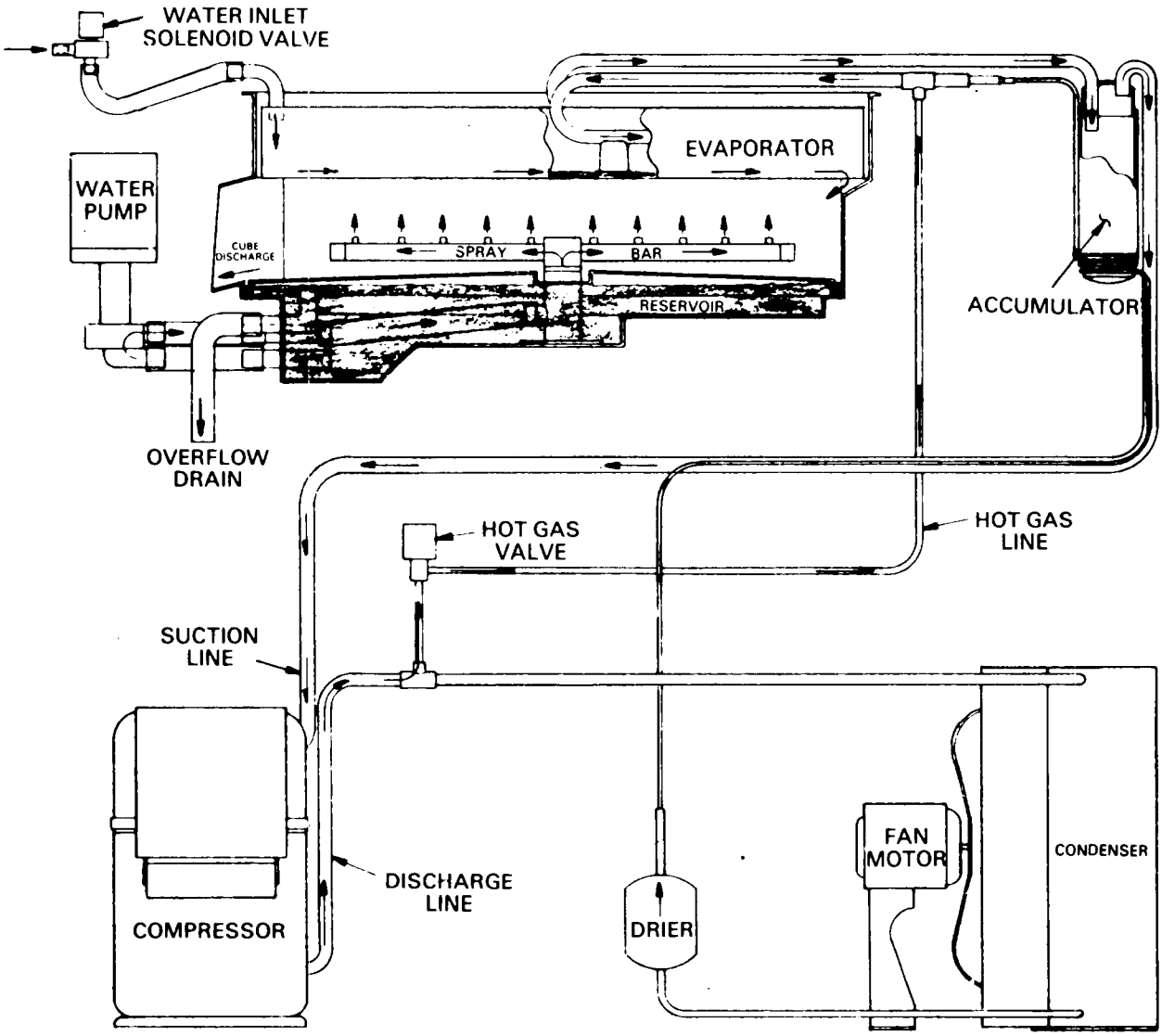

SYMPTOM	POSSIBLE CAUSE	SUGGESTED CORRECTION
Unit will not run.	Blown fuse	Replace fuse & check for cause of blown fuse.
	Bin thermostat set improperly	Replace.
	Switch in Off position	Turn switch to On Position.
	Inoperative master switch	Replace switch
	Timer contacts open	Replace timer micro-switch
Compresser cycles intermittently	Low voltage	Check circuit for overloading.
		Check voltage at the supply to the building. If low, contact the power company.
	Dirty condenser	Clean with vacuum cleaner, air or stiff brush. (DO NOT use wire brush.)
	Air circulation blocked	Allow sufficient air space all around unit.
	Inoperative condenser fan motor	Check to see if defective, If defective, replace.
	Non-condensable gases in system.	Purge the system.
Cubes too small	Cube size control set too high	Lower the setting. Turn towards colder.
	Partially restricted capillary tube	Blow charge, add new gas & drier, after evacuating system with suction pump.
	Moisture in system	Same as above.
	Shortage of water	See remedies for shortage of water.
	Shortage of refrigerant	Check for leaks and recharge.
Cloudy cubes	Shortage of water	See remedies for shortage of water.
	Dirty water supply	Use water softener or water filter.
	Accumulated impurities	Use SCOTSMAN Ice Machine Cleaner.
Shortage of water	Water spraying out through curtains	Hang curtain in proper position.
	Water entering water tank too slowly	Check pressure at source - 20 lb. required. Dirt in solenoid and flow control - blow out.
	Partial restrictions in water strainer.	Clean Strainer.
Irregular size cubes and some cloudy	Some jets plugged	Clean jets.
	Shortage of water	See Shortage of Water
	Unit not level	Water overflowing air vent holes on low side burning cubes. Level as required.

SYMPTOM	POSSIBLE CAUSE	SUGGESTED CORRECTION
Cubes too large	Cube size control turned too cold	Turn setting on cube size control dial towards warmer
Decreased ice capacity	Inefficient compressor	Replace.
	High head pressure	Dirty condenser. Clean. Bad fan motor. Replace.
	Non-condensable gas in the system	Purge the system.
	Poor Air circulation or excessively hot location	Relocate the unit, or provide for ventilation by cutting openings.
	Overcharge of refrigerant	Correct the charge. Purge off slowly.
	Partially restricted cap tube	Purge & replace charge and drier
Hole washed inside cube	Water over the top of the cube cups during harvest.	Level unit.
Poor harvests	Too short defrost time	Check and adjust harvest cycle. Timer should be set for 2 minutes.
	Restriction in incoming water line.	Check water feed line strainer and flow reducing valve. Do not remove flow control washers.
	Insufficient quantity of hot gas.	Cold ambient - must be 50° minimum. Faulty fan on air cooled models.
	Water solenoid valve not opening.	Solenoid binding or burned out. Replace.
	Air vent holes in upper cube cups plugged	Clean out holes.
Unit won't Harvest.	Insufficient water pressure to ice maker.	Machine requires minimum of 20 lbs. flowing water pressure.
Excessive Water in Unit base	Cube chute not positioned correctly.	Reposition so that bottom edge of cube chute rests inside of cube guide soldered to the base.
	Water tubing leaking (Check during freeze & harvest cycle)	Check. Tighten or replace.
Shortage of water in upper freezing chamber	Lower seal in upper freezing chamber defective.	Replace. See inlet water supply drawing in this manual.

MAINTENANCE PROCEDURES SECTION

WARNING: ALL STEPS LISTED BELOW SHOULD ONLY BE STARTED WHEN WATER AND ELECTRICAL SUPPLY ARE OFF TO PREVENT ACCIDENTS.

A. To remove cabinet top.
   1. Remove 4 screws in top of panel.
   2. Lift panel off unit.

B. To remove cabinet front.
   1. Remove 2 screws in top front of panel.
   2. Tip top of panel back approximately 6" and lift up.

C. To remove end panels.
   1. Remove 2 screws from top of panel.
   2. Tip top of panel back 6" and lift up.

D. To remove water pump.
   1. Remove right end panel and front panel.
   2. Remove cube chute. (Tip top of cube chute out and lift up. When reinstalling, be sure cube chute rests inside of guide soldered to base.)
   3. Drain water from freezer sump tank. (Drain tube is connected to plug on pump.)
   4. Trace electrical leads to control box and disconnect.
   5. Disconnect hose clamps at pump body.
   6. Remove mounting bolt and mounting strap.
   7. Remove Pump.

NOTE: Screw clamps should be installed on pump discharge tube when unit is reassembled.

E. To remove water inlet solenoid valve.
   1. Remove right end panel.
   2. Disconnect electrical leads.
   3. Disconnect water inlet line from machine.
   4. Remove valve.

F. To remove flow controls.
   1. Remove top and front panels.
   2. Both controls are on common tee at rear wall and retainer junction.
   3. Remove 3/8" water line flow nut from top of controls.
   4. Pull up and remove two hose clamp connections on outlet side. Controls now free.

NOTE: This machine will not function properly with the flow washers removed. Flow washers are rated at .30 GPM for MCL-MCS models, .50 GPM for MCM models.

G. To remove agitator motor.
   1. Remove front panel, right end panel and top panel if possible.
   2. Trace leads to control box and disconnect.
   3. Remove cube chute (Tip top of cube chute out and lift up. When reinstalling be certain cube chute rests inside of guide soldered to base.)
   4. Reach in thru curtained opening and remove spray bar by lifting upward releasing bar from center hub. Next remove drive fork from drive shaft attached to motor. (NOTE: Drive fork has left hand threads and must be removed with drive extension to motor if top panel is not removed from unit.)

5. Remove 4 screws holding drive motor to freezer top.
6. Remove drive motor.

H. To remove Cube size control.
1. Remove front panel and right end panel.
2. Remove 2 screws mounting control to corner gusset.
3. Trace capillary tube to suction line and peel back insulating tape

NOTE: Do not make any adjustments on new control until control bulb has been reinsulated to suction line.

I. To remove bin control.
1. Remove front panel and right end panel.
2. Remove 2 screws holding control to corner gusset.
3. Trace capillary tube to insure new control capillary tube is routed in same manner.

NOTE: Do not attempt to adjust this control. If storage bin is not filling to the capillary or is filling above the capillary into the cube chute, the control should be replaced.

J. To remove plastic curtain.
1. Remove right end panel.
2. Remove plastic cube chute. (Tip top of chute out and lift up. When reinstalling be certain cube chute rests inside of cube guide soldered to the base.)
3. Pull off 3 retainer clips holding curtain in place.

NOTE: When reinstalling curtain be certain the side with the extruding point is positioned towards the left of opening. Also, that the edge of the curtain lines up with the upper edge of the freezer opening.

K. To remove spray bars.
1. Remove right end panel.
2. Remove cube chute. (Tip top of cube chute out and lift up.)
3. Remove plastic curtain.
4. Reach thru ice opening and feel for spray bar.
5. Follow spray bar to center hub, turn spray bar so one end points towards curtain opening.
6. Lift straight up on spray bar, then out after spray bar comes off center hub.

NOTE: Upper spray bar must interlock on drive pins when reinstalled.

L. To remove upper freezing chamber sump tank.
1. Remove front panel and right end panel. If possible, remove top panel.
2. Remove agitator motor. NOTE: It is not necessary to disconnect electrical leads in control box.
3. Remove drive fork from spray bar drive in upper and lower freezing chambers.
4. Remove tygon tubes from pump to freezing chamber and set aside.
5. .Unscrew harvest water fitting in rear right hand corner of freezing chamber assy.
6. Remove cube chute.
7. Disconnect water line from flow controls to freezers.
8. Remove 4 screws holding upper freezer to back panel. Do not remove lower four screws.
9. Remove front bracket attached to lower freezing chamber. It is not necessary to remove upper bracket from upper freezing chamber.
10. Lift whole freezing chamber up and prop in place using two 2 x 4 on edge between lower chamber and upper chamber. Remove E ring in spray bar drive shaft. (See page 34 for exact location of E ring.
11. Remove 2 x 4's.
12. Reach in thru upper ice chute opening, lift up spray bar drive. Insert half of 5/8 ID 4-1/4 inches long to hold drive shaft up.
13. Reach right hand thru ice opening and gently force evaporator assembly up and out of freezer sump. As bottom of evaporator clears the front of freezer sump, pivot freezing chamber sump out of machine.

NOTE: When replacing the foamed plastic chamber, with a new plastic chamber, it is necessary to drill holes thru the front freezer bracket and the back panel into the bracket foamed onto the freezer assy. Drill depth must not exceed 3/8". Freezer assy should slope 3/8" down towards the ice cube opening.[

FUNCTIONAL PARTS AND MAINTENANCE

PART NAME: Spray Bar Assemblies

NUMBER: A-25480-001 Upper and Lower.

FUNCTION: These tubes act as water distributors for the ice cube cups. Each tube has jets over its length. Supply water is forced into the jet tubes by the sump pump and is directed upward in a continuous stream. Drive motor thru drive shaft rotates the spray bars to get a full coverage spray.

REPAIRABLE: Yes, on rubber tips.

MAINTENANCE:
All jets should be cleaned by running Scotsman Ice Machine Cleaner through unit. This step will eliminate hand cleaning. Partially plugged jets will produce cloudy or partial cubes. Wholly plugged jet will not produce a cube in cube cups it normally covers.

PART NAME: Spray Tube Drive Linkage

NUMBER: Parts listed in parts section.

FUNCTION: Drive spray tubes during freezing cycle to produce clear cubes and also drive spray tubes during harvest cycle to eject cubes thru ice opening.

REPAIRABLE: No. replace defective parts.

MAINTENANCE: None.

PART NAME: Relay – Ameco or Potter Brumfield – 2 P.D.T.

NUMBER: 12-1879-02

FUNCTION: Relay is used as a by-pass on the bin thermostat when it tries to cut unit off on a full bin of cubes during a freezing cycle. This insures full cubes every time a harvest occurs and prevents short cycling on bin thermostat.

SETTING: Factory set.

REPAIRABLE: No. Replace when inoperative.

MAINTENANCE: Check electrical connections.

PART NAME: Bin Thermostat

NUMBER: 11-353-3

FUNCTION: To automatically cut machine off when ice level in storage bin reaches thermobulb. Automatically starts machine when ice level in bin falls below bulb location.

SETTING: Factory set.

REPAIRABLE: No. Replace when inoperative or out of adjustment.

MAINTENANCE: Check capillary for cracks or worn spots due to vibration.

NOTE: Hold an ice cube against thermostat capillary tube to check operation of the control.

PART NAME: Inlet Water Solenoid
NUMBER: 12-1434-1
FUNCTION: During freezing cycle this valve is closed, keeps water from entering sump tank and also from leaking out of tank.
During harvest or defrost cycle this valve opens and allows inlet water to pass thru flow control orfice and thence to push water across back of cup molds, to assist the hot gas in defrosting cubes.
SETTING: Factory set.
REPAIRABLE: Yes
MAINTENANCE: Flush control each six months.

PART NAME: Fan Motor - Morrill SP-B6 PEM -1
NUMBER: 12-1575-01 (115/60/1)
6 Watt - 2 per unit.
FUNCTION: Maintain proper head pressures by circulating air across air cooled condenser.
REPAIRABLE: No.
MAINTENANCE: None.

PART NAME: Water Regulating Valve (Water cooled models only)
NUMBER: 11-198 — Penn Type V46AA-12
FUNCTION: To maintain constant head pressures by regulating amount of incoming water thru water cooled condenser.
REPAIRABLE: No. however, valve can be flushed out.
MAINTENANCE: None.

PART NAME: Hermetic Motor Compressor — Copelaweld YSB4-0150-CFV-207
NUMBER: 18-4300-02 (230/60/1) or (208/60/1).
FUNCTION: Circulates and retrieves refrigerant throughout entire system.
MAINTENANCE: Keeps clean and free of dust, grease, etc.
18-4300-03 (208-220/60/3) Copelaweld YSB4-0150-TFC-202

PART NAME: Contactor

NUMBER: 12-820-1 (-4 & -10 voltage) 12-739-1 (-9 voltage)

FUNCTION: Across the line contactor used to provide protection for hi voltage compressor only. Contactor is wired so any of the controls in pilot circuit such as bin thermostat will cause contactor holding coil to drop contact points when actuated. There are no overloads or resets on this control.

SETTINGS: Factory set, no adjustments necessary.

REPAIRABLE: No. Replace.

MAINTENANCE: Check control for loose electrical connections and blow free any dust, dirt, etc.

PART NAME: Cube Size Control 11-345-02

NUMBER: 11-345-02

FUNCTION: Reverse acting temperature control, closes on temperature decrease, opens on temperature rise. Control determines length of freezing cycle and by the same token, the cube size. A lower setting on control will produce larger cubes, a higher setting, smaller cubes. This control actuates time clock motor, which then takes over balance of freezing cycle (6 minutes) and also defrosts period 2 minutes.

SETTINGS: Adjustable by screw driver slot.

REPAIRABLE: No. Replace when inoperative.

MAINTENANCE: Check electrical connections. Blow points free of dust, dirt, lint, etc.

PART NAME: Sump Pump

NUMBER: 2 per unit — 12-1930-01

FUNCTION: Recirculating pump used to pump supply water in reservoir to jet tubes during freezing cycle. and harvest cycle.

SETTING: Factory set.

REPAIRABLE: Yes, see parts breakdown.

MAINTENANCE: Flush out reservoir and sump pump intake with Scotsman ice machine cleaner.

PART NAME: Agitator Drive Motor – Merkle Korff

NUMBER: 12-1824-01

FUNCTION: This motor is used to drive the linkage mechanism which in turn drives the rotating jet spray tubes. This provides a constant spray movement to all the inverted cube molds and by so doing also aerates the water producing clear, solid Scotsman cubes. Also ejects cubes thru ice opening during harvest cycle.

SETTING: No settings on motor.

REPAIRABLE: Yes - to some extent. Not recommended although front bearings and windings could possibly be replaced by electric motor shop. Normally replace motors.

MAINTENANCE: Oil every six months or less as use indicates. Use SAE 20 oil. There are wick oil cups on the motor and a gear case slotted screw which has to be removed to add or change oil in gear case proper. Drive linkage should be inspected to insure free movement with no bindings or drag on drive motor.

PART NAME: Time-Finishing Clock – Assembled by Queen Products Div.

NUMBER: 12-1980-01

FUNCTION: Heart of cyclematic control system is the reverse acting cube size control, No. 11-345-02, and the time clock it actuates. All electrical components are connected to the time clock printed curcuit board and are shunted by means of a double pole single throw micro-switch to either the freezing cycle or harvest cycle. Micro-switch is in turn actuated by a cam that is directly connected to the electric timer clock motor. Timer has 8 minute cycle, 6 minutes on freezing cycle after being cut on by lo temperature control and 2 minutes on defrost cycle.

The cam assembly on the timer consists of two discs which can be adjusted to lengthen or shorten the defrost cycle.

SETTING: Normal setting for defrost is 2 minutes.

REPAIRABLE: Yes. Part No. 12-1980-01 is replaceable.

MAINTENANCE: Check all electrical connections, blow contact points free of dust, dirt, etc.

MC40 AIR AND WATER COOLED
Right End View

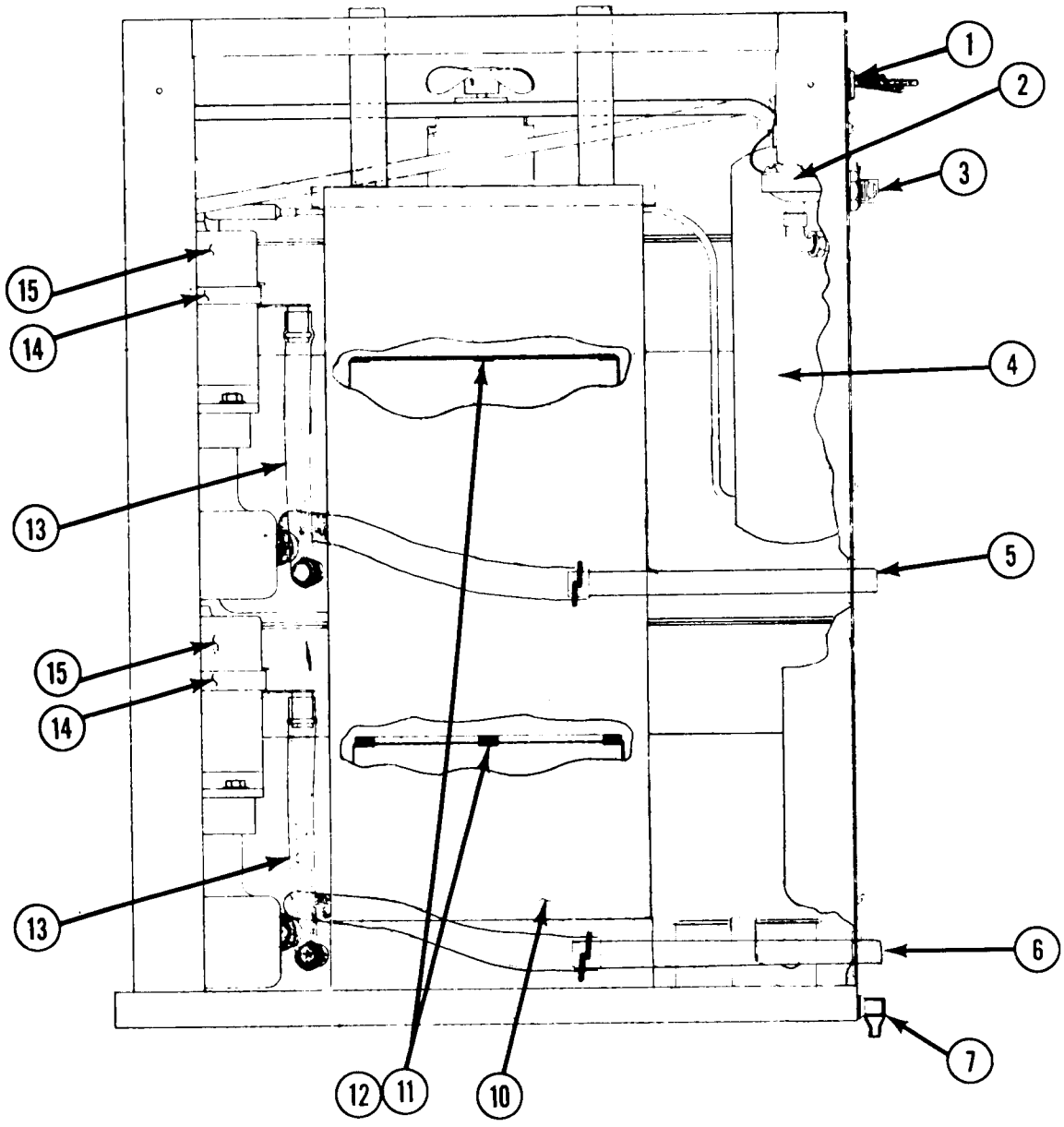

ITEM NO.	PART NO.	DESCRIPTION
1.		Electrical Supply
2.	12-1434-1	Water Inlet Solenoid
3.		Water Hook-up
4.		Refrigerant Accumulator
5.		Upper Freezer Drain
6.		Lower Freezer Drain
7.	2-2296-01	Base Drain Cup
10.	2-2149-01	Cube Chute
11.	2-2038-01	Upper-Lower Curtain
12.	3-1526-01	Curtain Clips
13.		Freezer Drain — Cleaning
14.	2-706	Pump Clamp
15.	12-1930-01	Water Pump

MC40 WATER COOLED
TOP VIEW

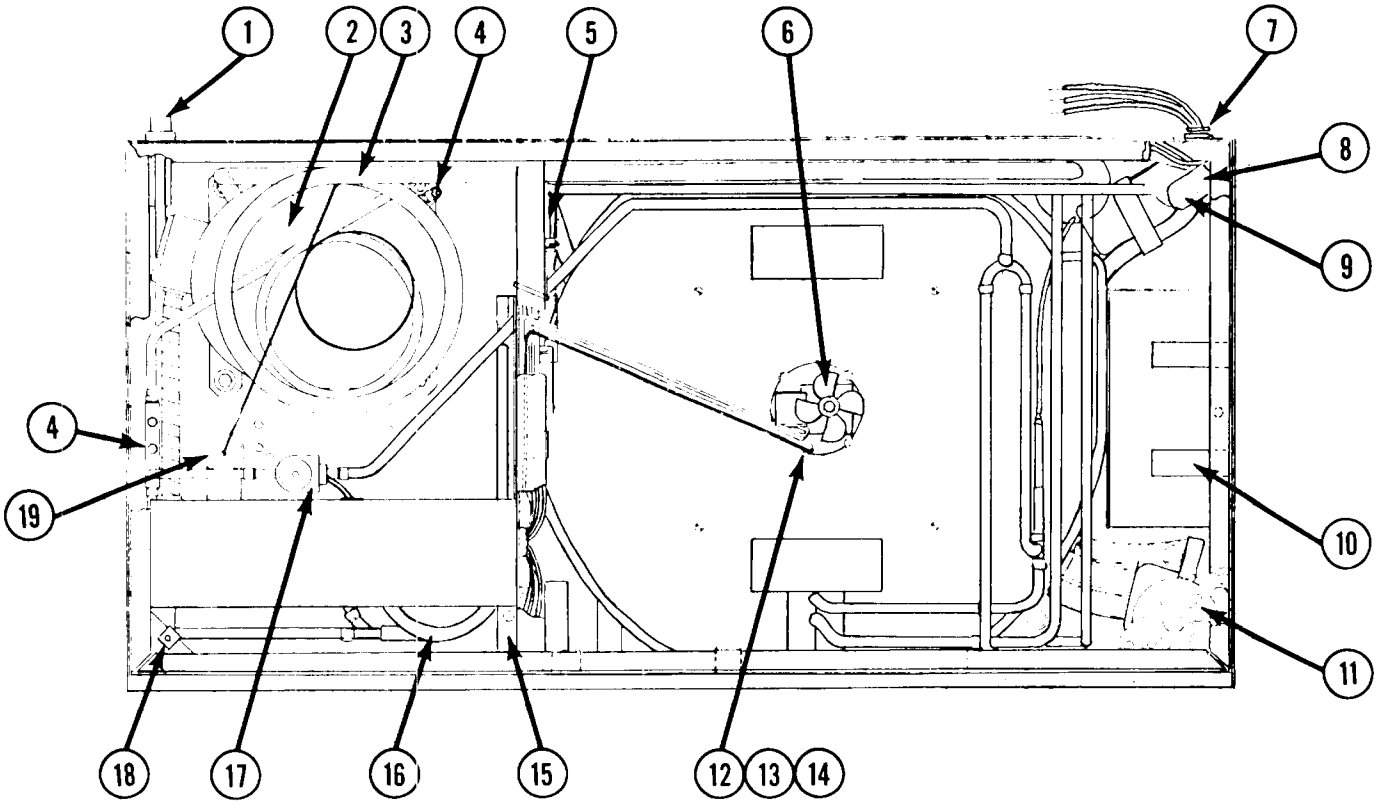

ITEM	PART NO.	DESCRIPTION
1.	Connections	Water In-Out From Condenser
2.	18-4300-02	Compressor 230 or 208/60/1
3.		Suction Line
4.	16-0563-00	Schrader Valve Cap
4.	16-0560-00	Schrader Valve Core
5.	A-25213-002	Flow Controls .30 GPM MCL-MCS
5.	A-25213-001	Flow Controls .50 GPM MCM
6.	12-0675-25	Fan Blade
7.		Water In — Ice Making
8.	12-1434	Water Inlet Solenoid
9.	12-1589-01	Solenoid Cord - Cap.
10.	2-2149-01	Cube Chute
11.	12-1930-01	Water Pump
12.	12-1824-01	Agitator Motor
13.	3-1404-28	Motor Screws 4/Unit
14.	13-176	Motor Gasket
15.		Model - Serial # Plate
16.	18-3306-02	W.C. Condenser
17.	12-2023-01	Hot Gas Solenoid
18.	3-1423-02	Speed Nut
19.	2-0677-01	Drier

MC40 WATER COOLED
FRONT VIEW

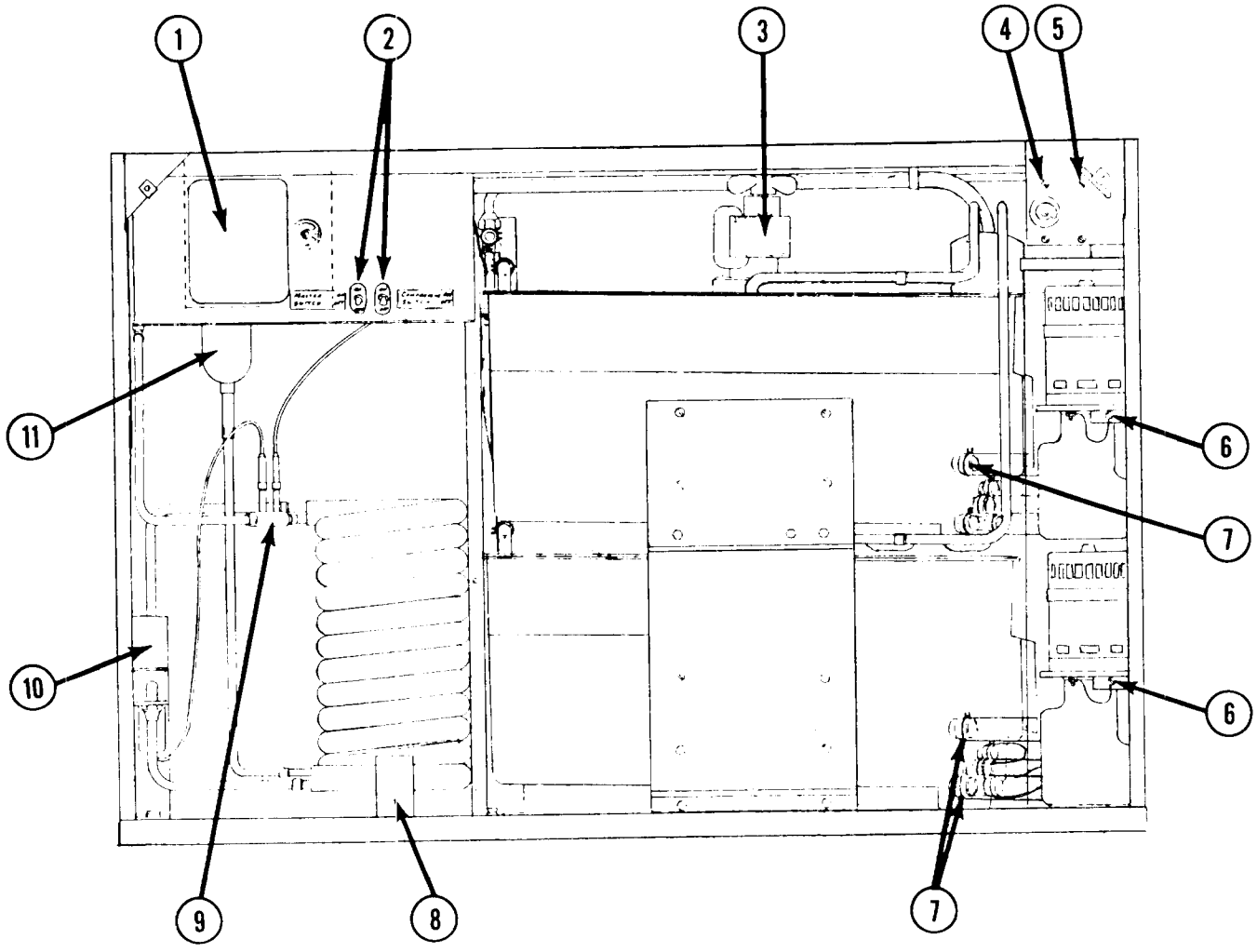

ITEM	PART NO.	DESCRIPTION
1.		Cleaning Instructions
2.	12-426	On-Off Switches
3.	12-1824-01	Agitator Motor
4.	11-345-02	Cube Size Control
5.	11-353-03	Bin Thermostat
6.	12-1930-01	Water Pump
7.	2-1358	Hose Clamps
8.	18-3306-02	Water Cooled Condenser
9.		Processing Tubing
10.	11-198-02	Water Regulating Valve
11.	2-0677-01	Drier

MC40 AIR COOLED
TOP VIEW

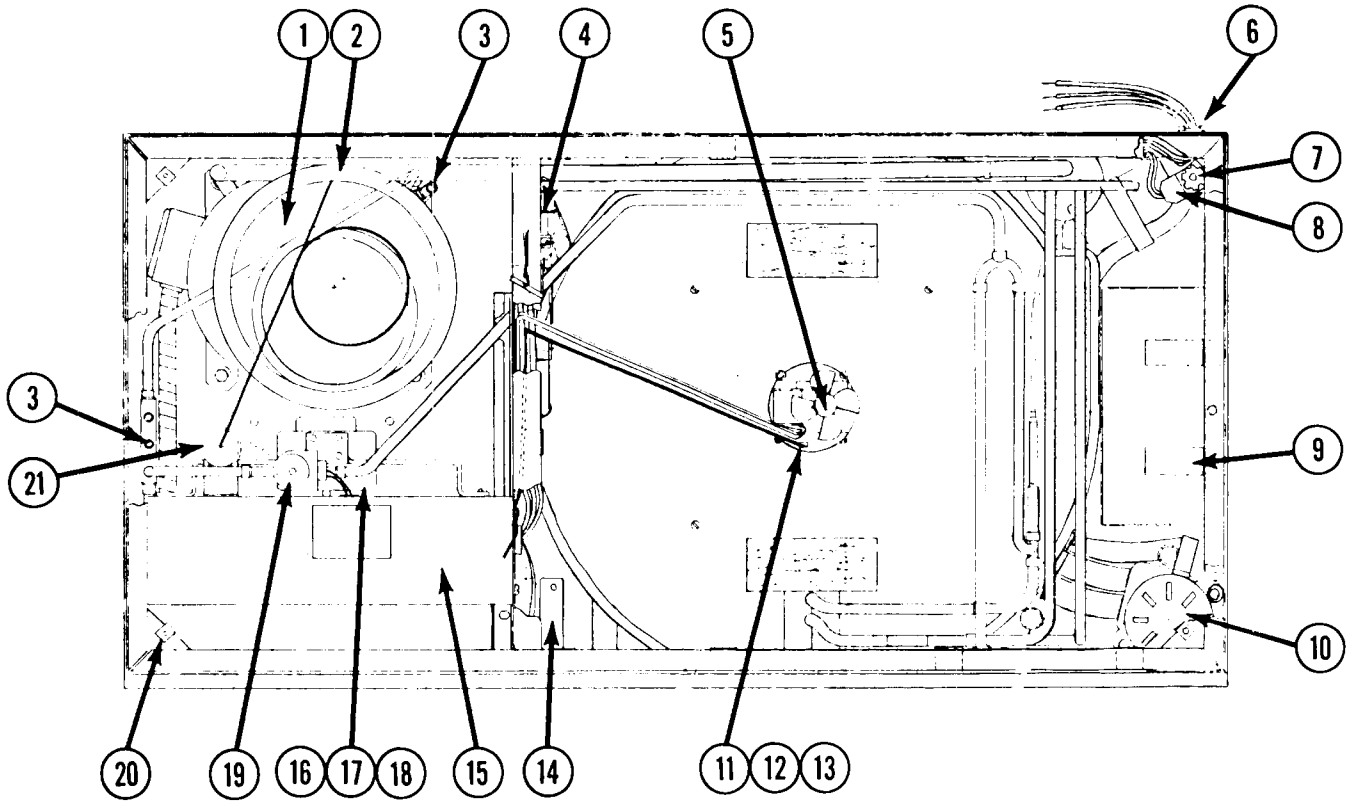

ITEM	PART NO.	DESCRIPTION
1.	18-4300-02	Compressor 208 or 220/60/1
2.		Suction Line
3.	16-0563-00	Schrader Valve Cap
3.	16-0560-00	Schrader Valve Core
4.	A-25213-002	Flow Controls .30 GPM MCL - MCS
4.	A-25213-001	Flow Controls .50 GPM MCM
5.	12-0675-25	Fan Blade
6.		Water In - Ice Making
7.	12-1434	Water Inlet Solenoid
8.	12-1589-01	Solenoid Cord - Cap
9.	2-2149-01	Cube Chute
10.	12-1930-01	Water Pump
11.	12-1824-01	Agitator Motor
12.	3-1404-28	Motor screws 4/Unit
13.	13-176	Motor Gasket
14.		Model - Serial # Plate
15.	18-3709-01	Air Cooled Condenser
16.	12-1575-01	Fan Motor 2/Unit
17.	18-0231-00	Fan Blade 2/Unit
18.	A-26174-001	Fan Motor Mount 2/Unit
19.	12-2023-01	Hot Gas Solenoid
20.	3-1423-02	Speed Nut
21.	2-0677-01	Drier

MC40 AIR COOLED
FRONT VIEW

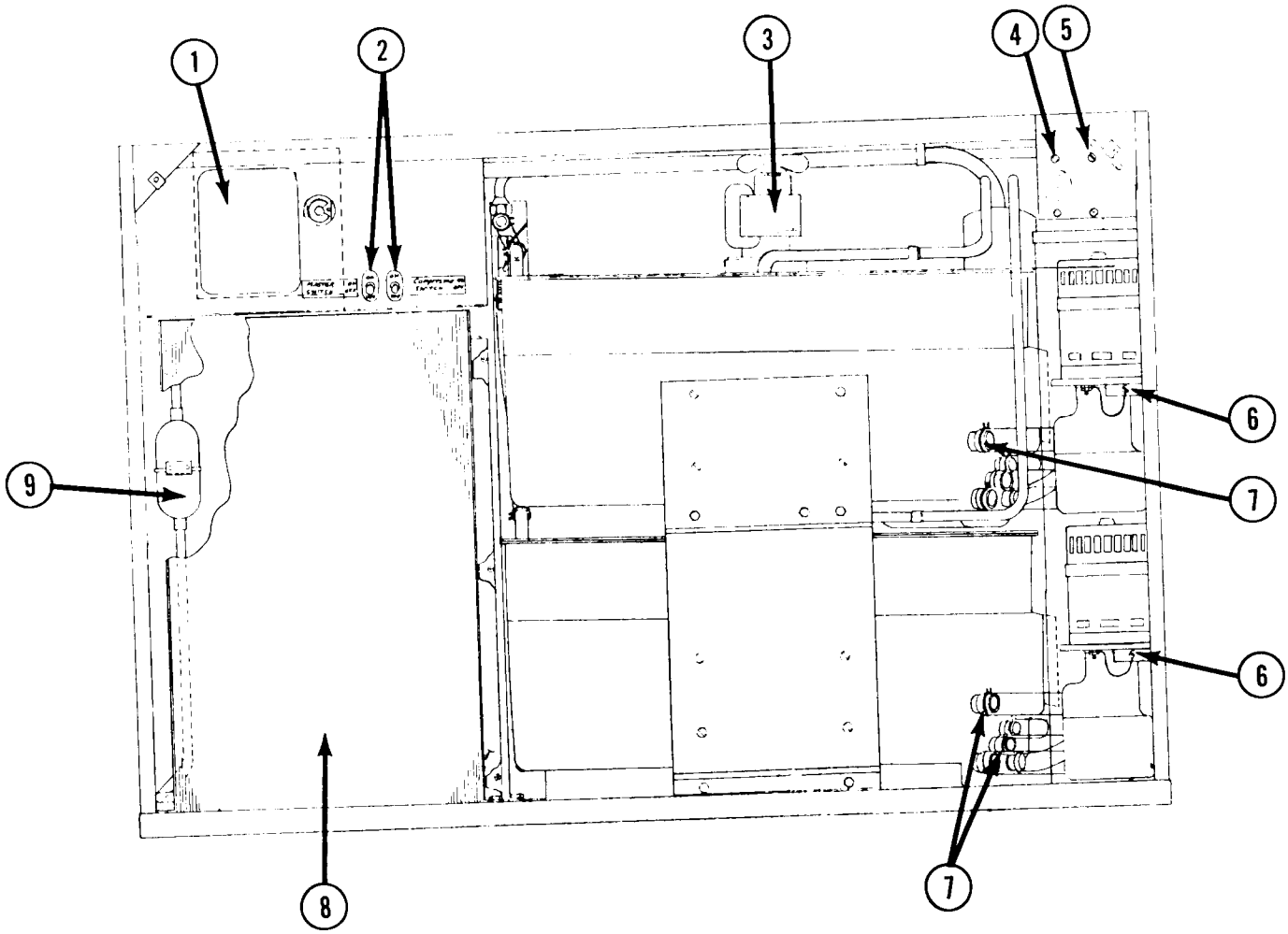

ITEM	PART NO.	DESCRIPTION
1.		Cleaning Instructions
2.	12-426	On-Off Switches
3.	12-1824-01	Agitator Motor
4.	11-345-02	Cube Size Control
5.	11-353-03	Bin Thermostat
6.	12-1930-01	Water Pump
7.	2-1358	Hose Clamps
8.	18-3709-01	Air Cooled Condenser
9.	02-0677-01	Drier

FREEZER CHAMBER – SUMP

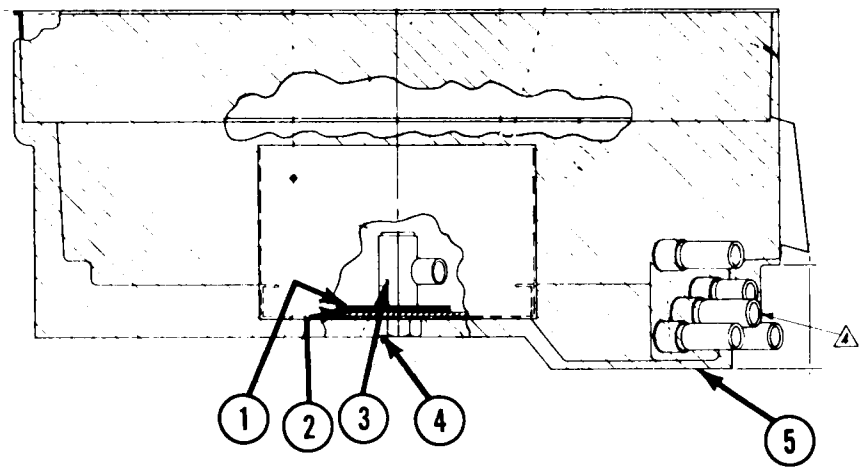

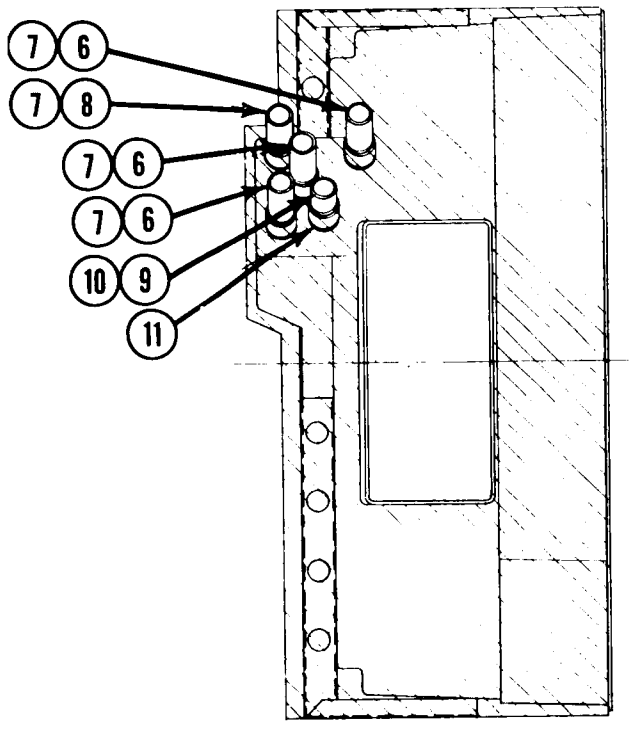

ITEM NO.	PART NO.	DESCRIPTION
1.	A-23827-01	Metal Plate Support
2.	3-1409-11	Rubber Washer
3.	2-2121-01	Water Inlet Housing
4.	2-2122-01	Plug Nut
5.		Foam Insulation
6.	2-2080-01	Tube - Male
7.	2-2081-01	Tube - Female
8.	2-2082-01	Tube - Pump Pick-up Position With Opening Down
9.	2-2125-01	90° Standpipe - Position up
10.	A-24379-01	Tube - Female
11.	13-617-02	O-Rings - 5/Unit

COMPLETE FREEZER ASSEMBLY
MC40 Models

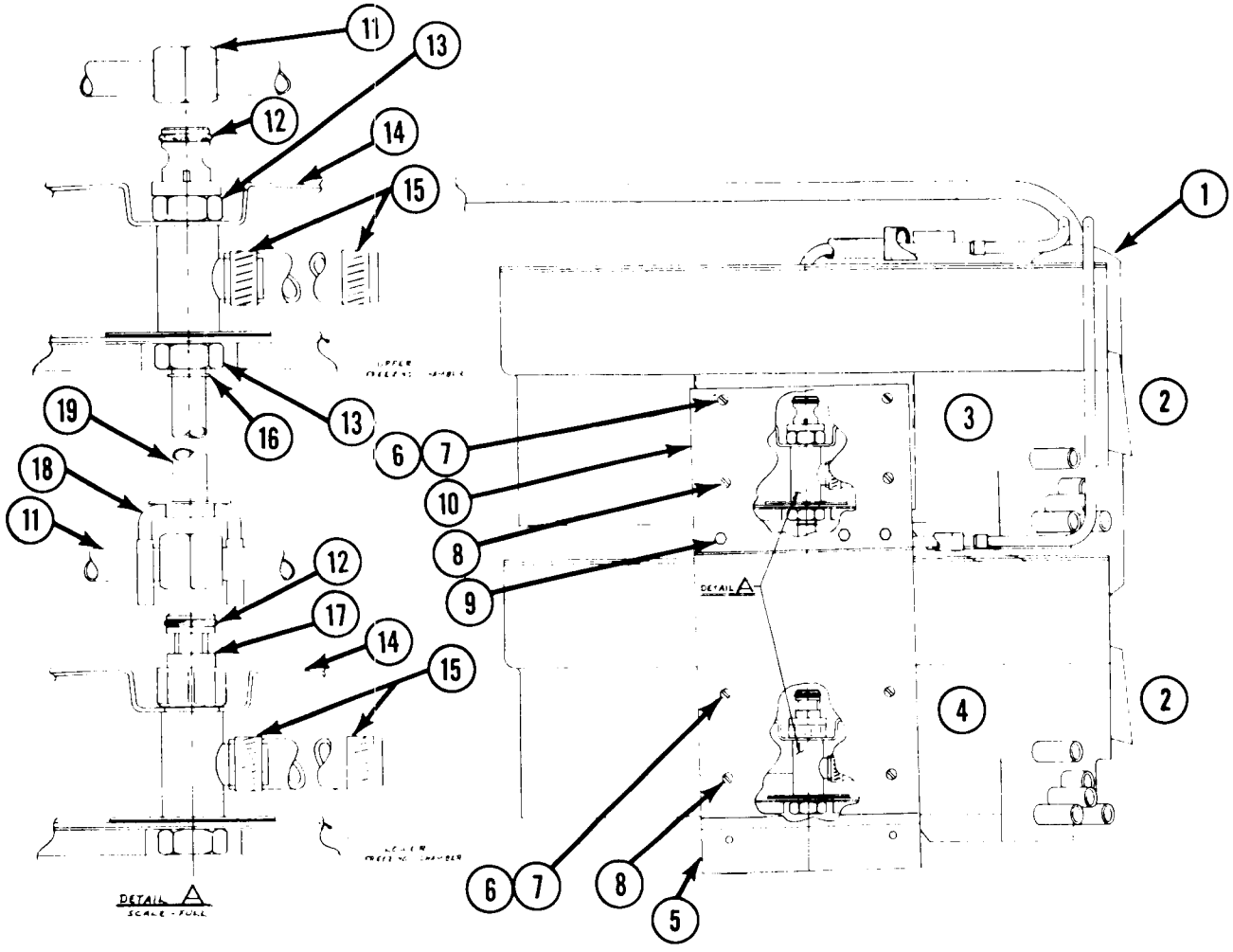

ITEM NO.	PART NO.	DESCRIPTION
1.		Suction Cap Tube Line
2.		Cube Chute Openings
3.		Upper Freezer
4.		Lower Freezer
5.	A-24500-01	Front Lower Mount Plate
6.	3-1404-18	Screw
7.	3-1417-05	Lock Washer
8.	3-1360-00	Screw
9.	3-571-00	Screw
10.	A-24502-01	Front Upper Mount Plate
11.	A-25480-1	Spray Bar
12.	13-617-25	O-Ring
13.	A-23910-01	Bushing Seal Assembly
14.	2-2028-01	Inner Pan
15.	2-179	Screw Clamp
16.	3-1559-01	E-Ring
17.	2-2120-01	Spray Bar Bearing
18.	2-2194-01	Drive Fork
19.	A-24518-01	Drive Water Tube

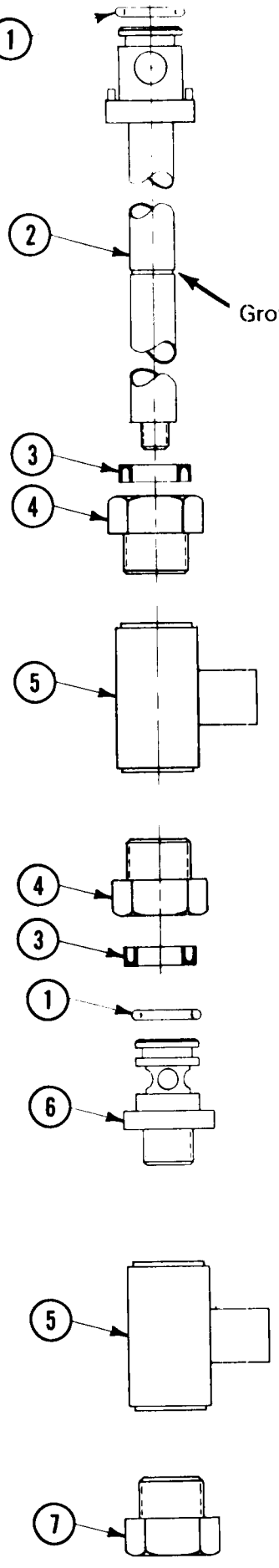

INLET WATER SUPPLY ASSEMBLY

ITEM NO.	PART NO.	DESCRIPTION
1.	13-0617-25	"O" Ring
2.	A24518-001	Water Tube Fab. Ass'y
3.	13-0168-00	Water Seal
4.	A23910-001	Nut-Bushing Ass'y with Seal (Left Hand Thread)
5.	2-2121-01	Inlet Housing Fab. Ass'y (Left Hand Threads)
6.	2-2120-01	Jet Bearing (Left Hand Thread)
7.	2-2122-01	Bottom Plug (Left Hand Thread)

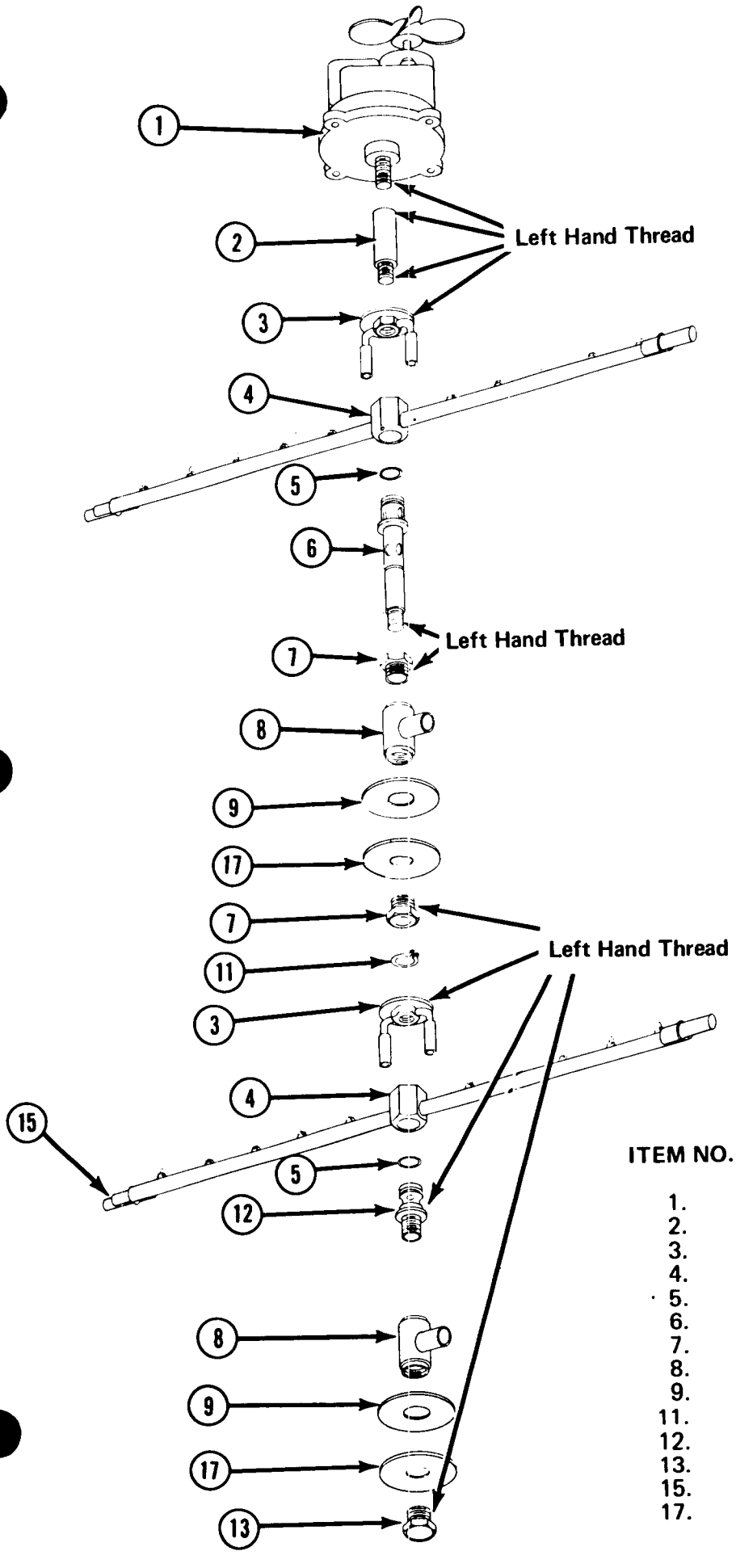

MC40 CUBER

DUAL DRIVE ASSEMBLY

All thread are left hand.

ITEM NO.	PART NO.	NAME
1.	12-1824-01	Agitator - Drive Motor
2.	A-23830-01	Drive Shaft - Upper
3.	2-2194-01	Drive Fork
4.	A-25480-1	Spray Bar
5.	13-0617-25	O-Ring
6.	A24518-001	Water Tube Fab. Ass'y
7.	A-23910-001	Nut-Bushing Ass'y
8.	2-2121-01	Inlet Housing Ass'y
9.	A-23827-001	Support Plate
11.	3-1559-01	Retainer Ring
12.	2-2120-01	Jet Bearing Shaft
13.	2-2122-01	Bottom Pan Plug
15.	13-0653-00	Rubber Tips
17.	03-1409-11	Rubber Washer

FREEZER ASSEMBLY MC40

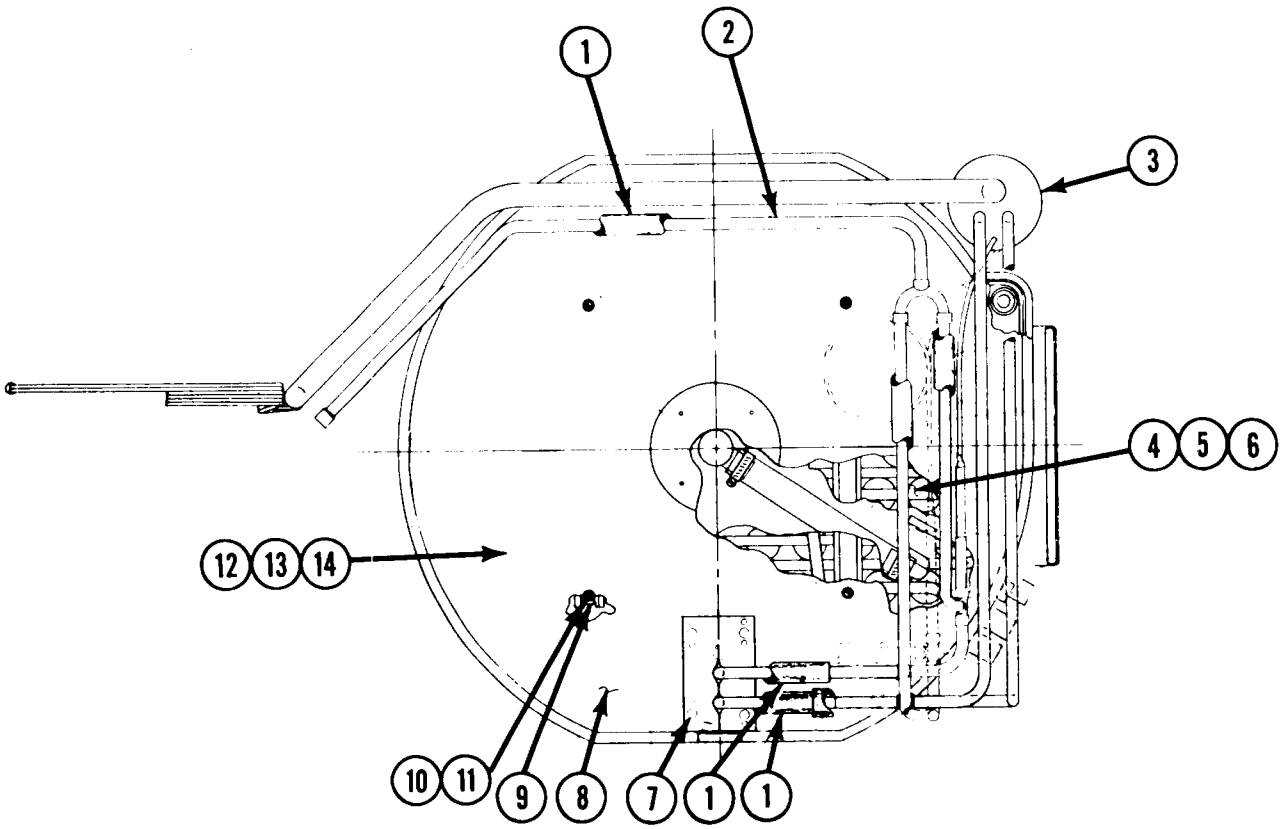

ITEM NO.	PART NO.	DESCRIPTION
1.		Rubber Insulation
2.		Hot Gas Line
3.	A-25234-01	Cap Tube - Suction Line Assembly
4.	A-23803-01	Cup Platen For MC40 S
5.	A-23880-01	Cup Platen For MC40 M
6.	A-24129-01	Cup Platen For MC40 L
7.	2-2065-02	Hole Plug
8.	2-2124-01	Cover Insulation
9.	3-1422-04	Speed Nut
10.	A-24830-01	Centering Washer
11.	3-1404-10	ST ST Screw
12.	13-756-01	Rubber Cupholder MC40 S
13.	13-757-01	Rubber Cupholder MC40 M
14.	13-758-01	Rubber Cupholder MC40 L

COPELAWELD COMPRESSOR

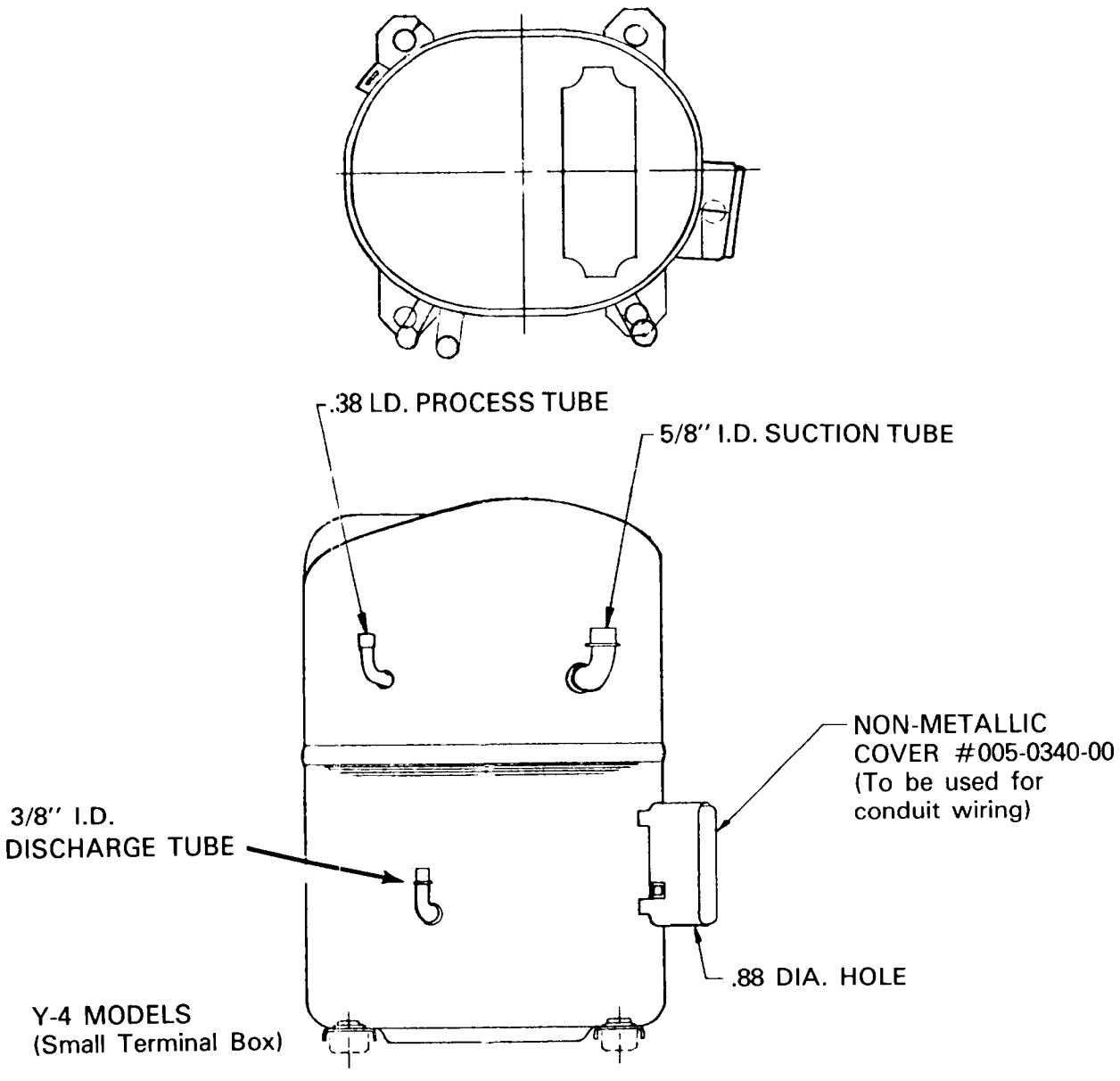

208/60/1 or 230/60/1
Air or Water Cooled

18-4300-02	Compressor Cope # YSB4-0150-CFV
18-1903-34	Potential Relay
18-1902-45	Capacitor — Run
18-1901-23	Capacitor — Start

208-220/60/3
Air or Water Cooled

18-4300-03	Compressor — Cope # YSB4-0150-TFC

CONTROL BOX — AIR COOLED
208-230/60/1

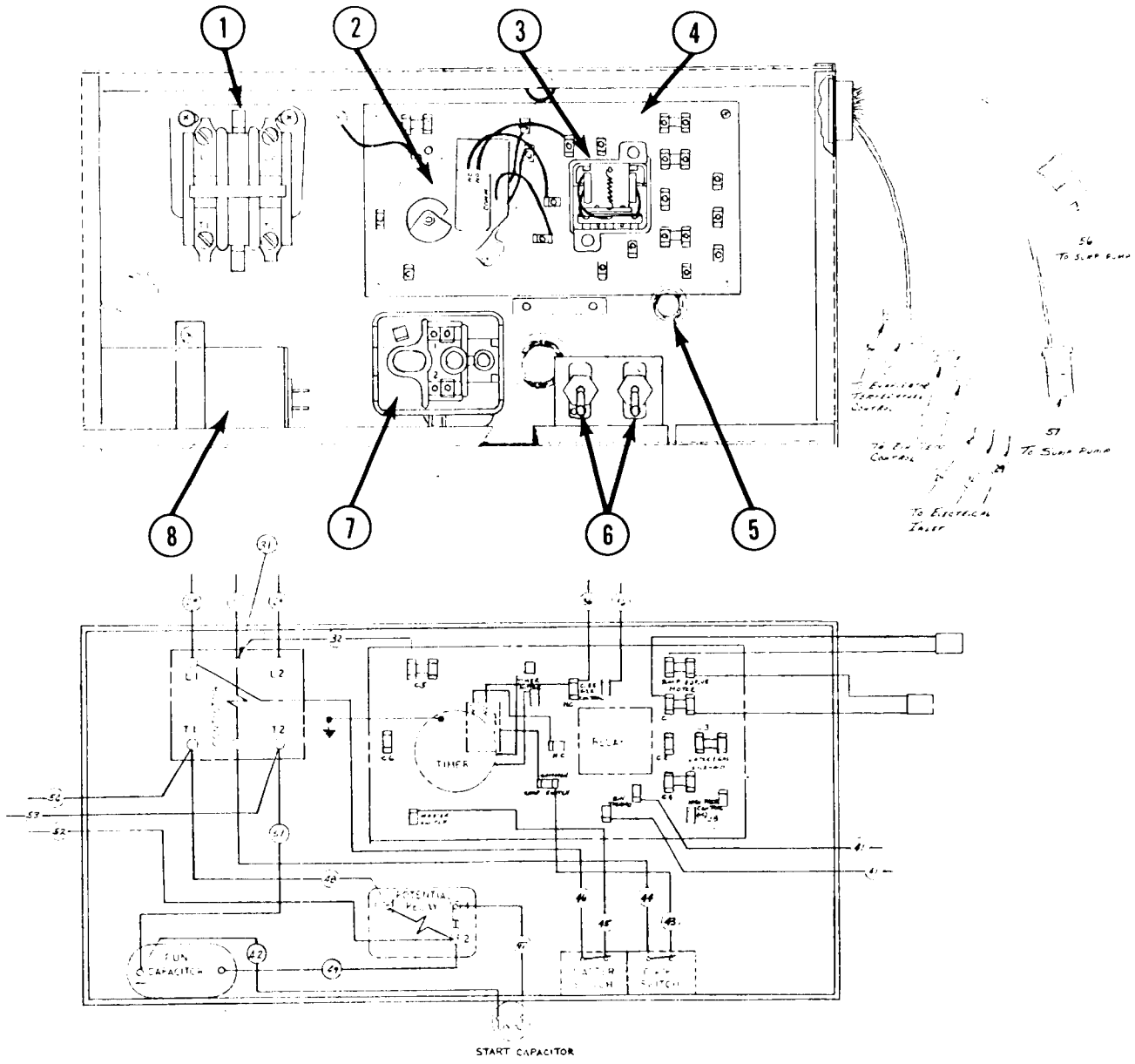

ITEM	PART NO.	DESCRIPTION
1.	12-820-01	Contactor
2.	12-1980-01	Timer
3.	12-1879-02	Relay
4.	12-1912-01	P.C. Board
5.	18-1901-23	Capacitor Start (On Back of Control Box)
6.	12-426-01	On - Off Switches
7.	18-1903-34	Relay - Compressor
8.	18-1902-45	Capacitor — Run

CONTROL BOX — WATER COOLED
208-220/60/1

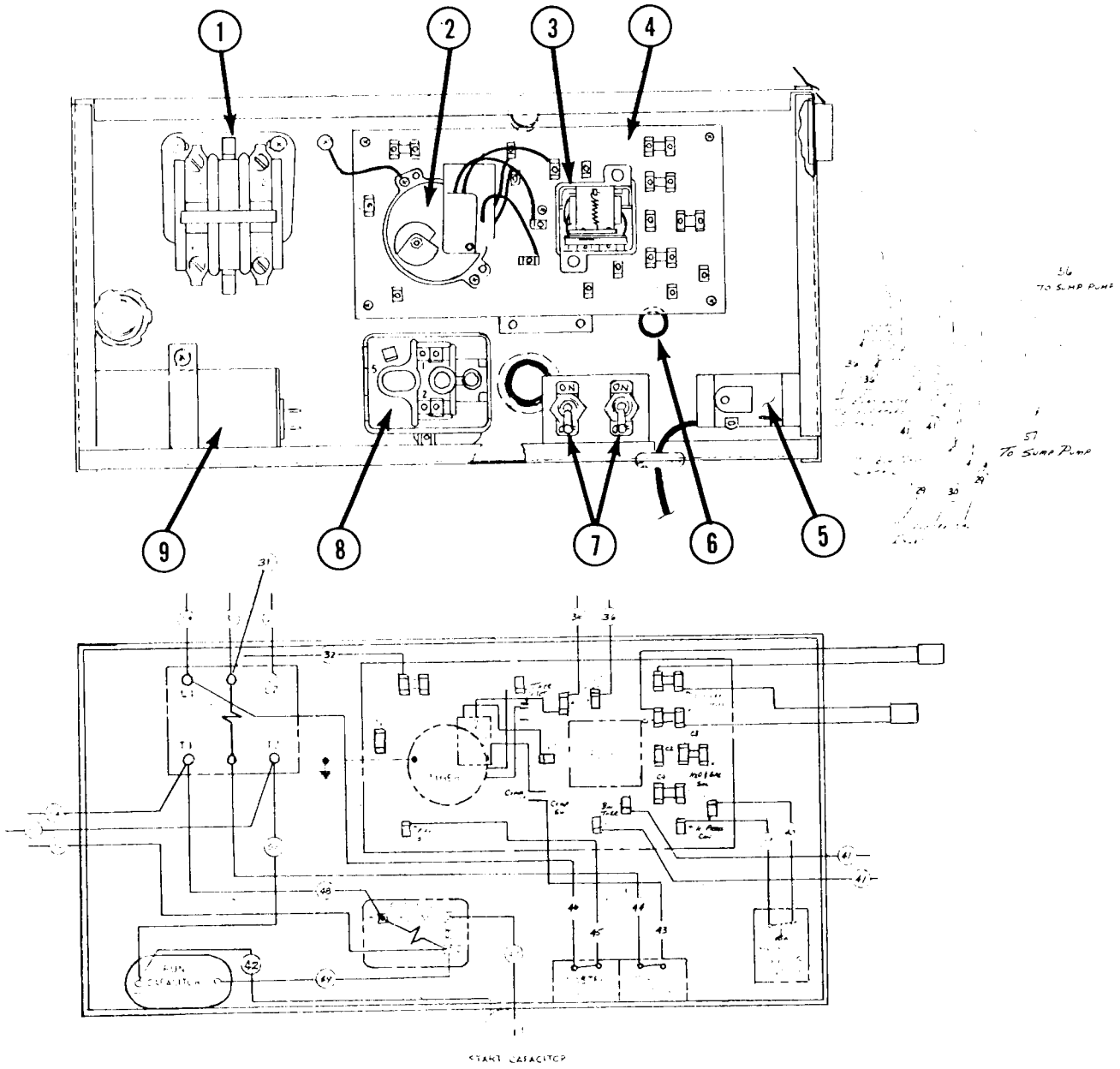

ITEM	PART NO.	DESCRIPTION
1.	12-820-01	Contactor
2.	12-1980-01	Timer
3.	12-1879-02	Relay
4.	12-1912-01	P.C. Board
5.	11-0388-02	Hi Pressure Control
6.	18-1901-23	Capacitor Start (On Back of Control Box)
7.	12-0426-01	On - Off Switches
8.	18-1903-34	Relay - Compressor
9.	18-1902-45	Capacitor - Run

CONTROL BOX — AIR COOLED
208-220/60/3

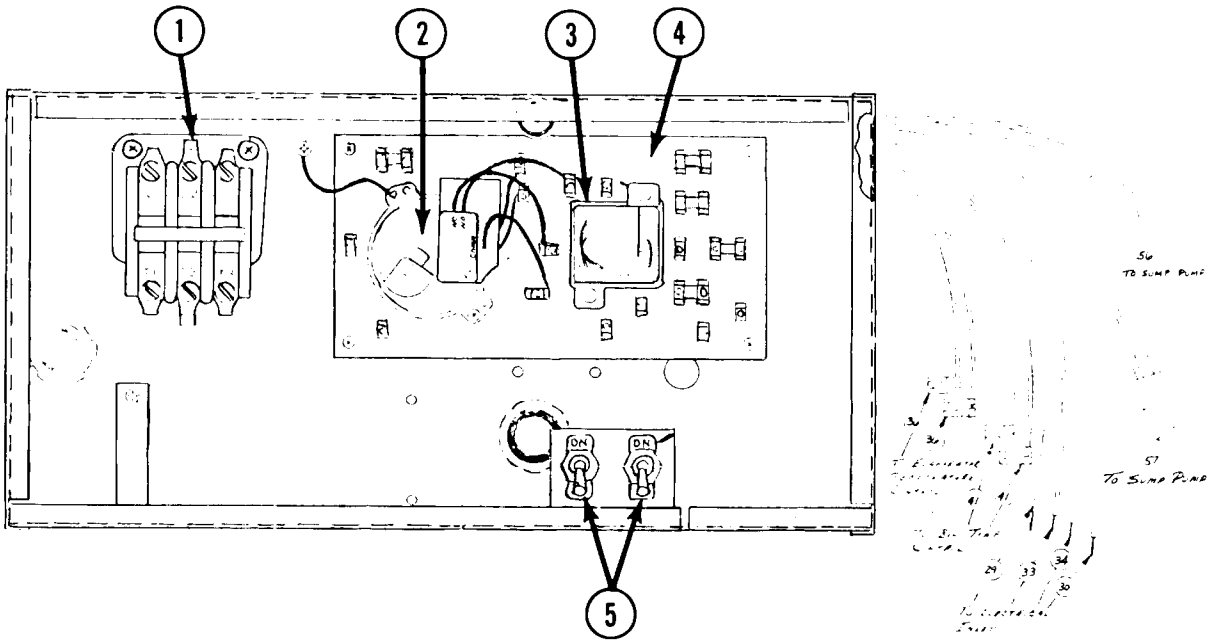

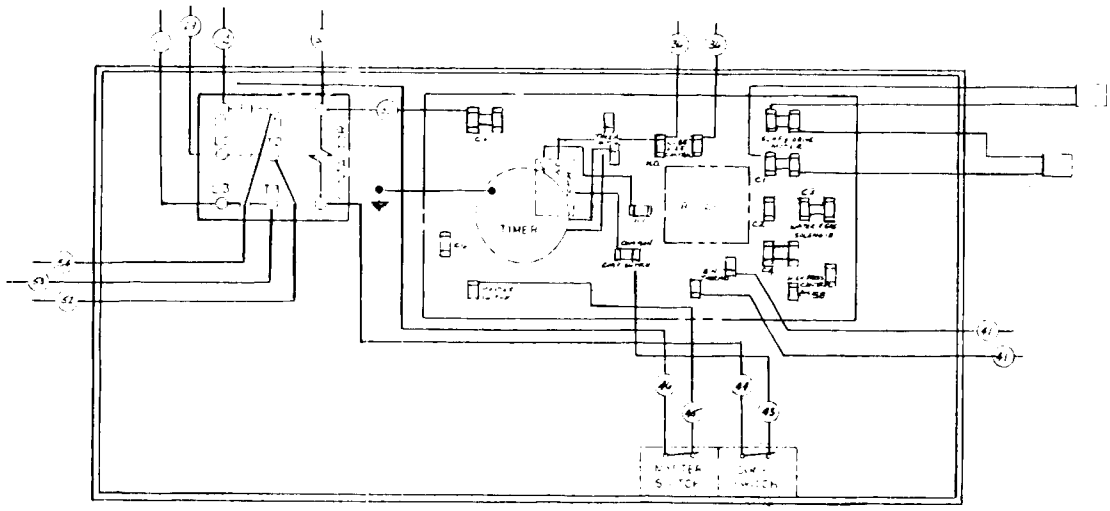

1.	12-0739-01	Contactor
2.	12-1980-01	Timer
3.	12-1879-02	Relay
4.	12-1912-01	P.C. Board
5.	12-0426-01	On - Off Switches

CONTROL BOX – WATER COOLED
208-220/60/3

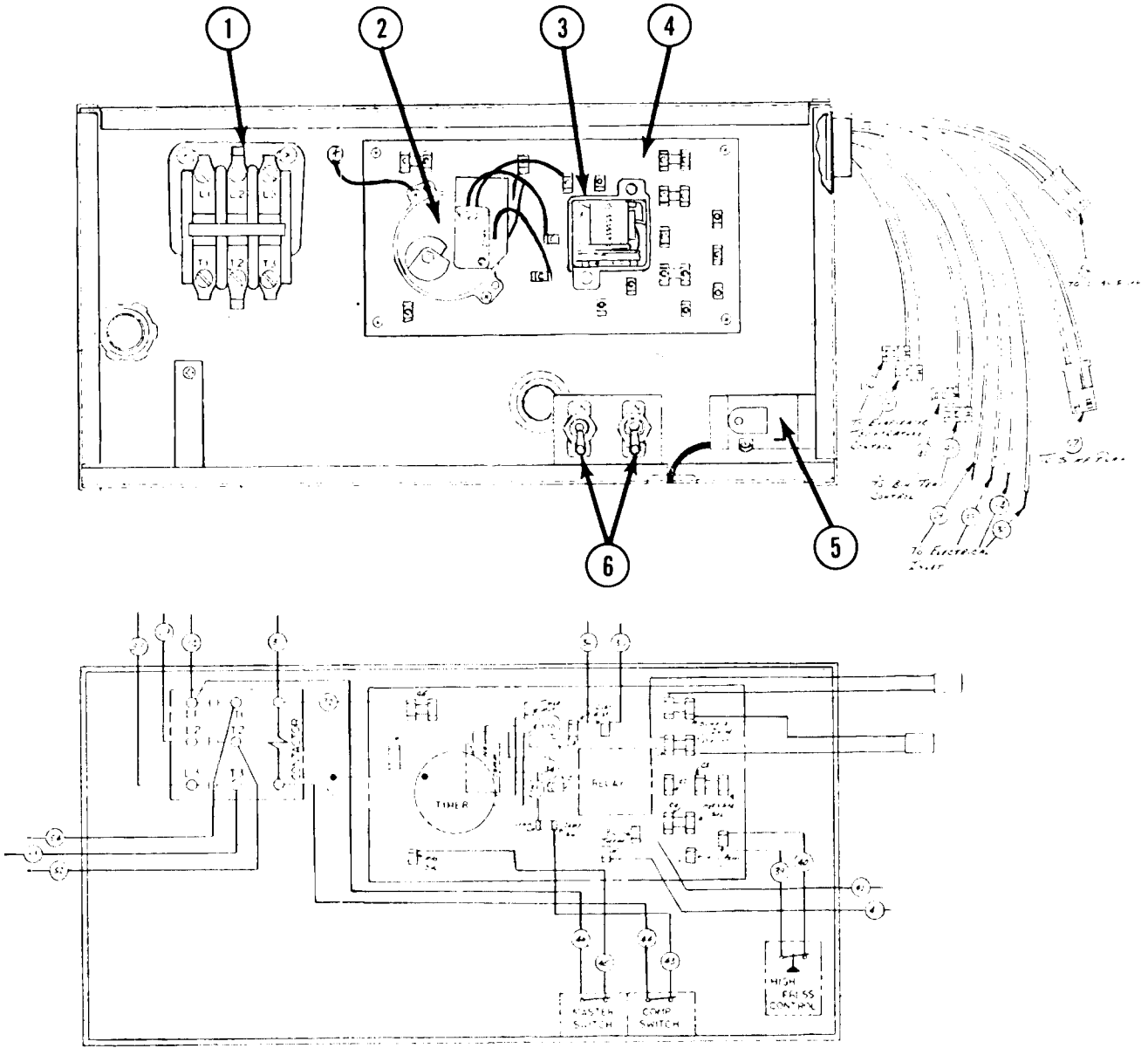

ITEM	PART NO.	DESCRIPTION
1.	12-0739-01	Contactor
2.	12-1980-01	Timer
3.	12-1879-02	Relay
4.	12-1912-01	P.C. Board
5.	11-0388-02	Hi Pressure Control
6.	12-0426-01	On - Off Switches

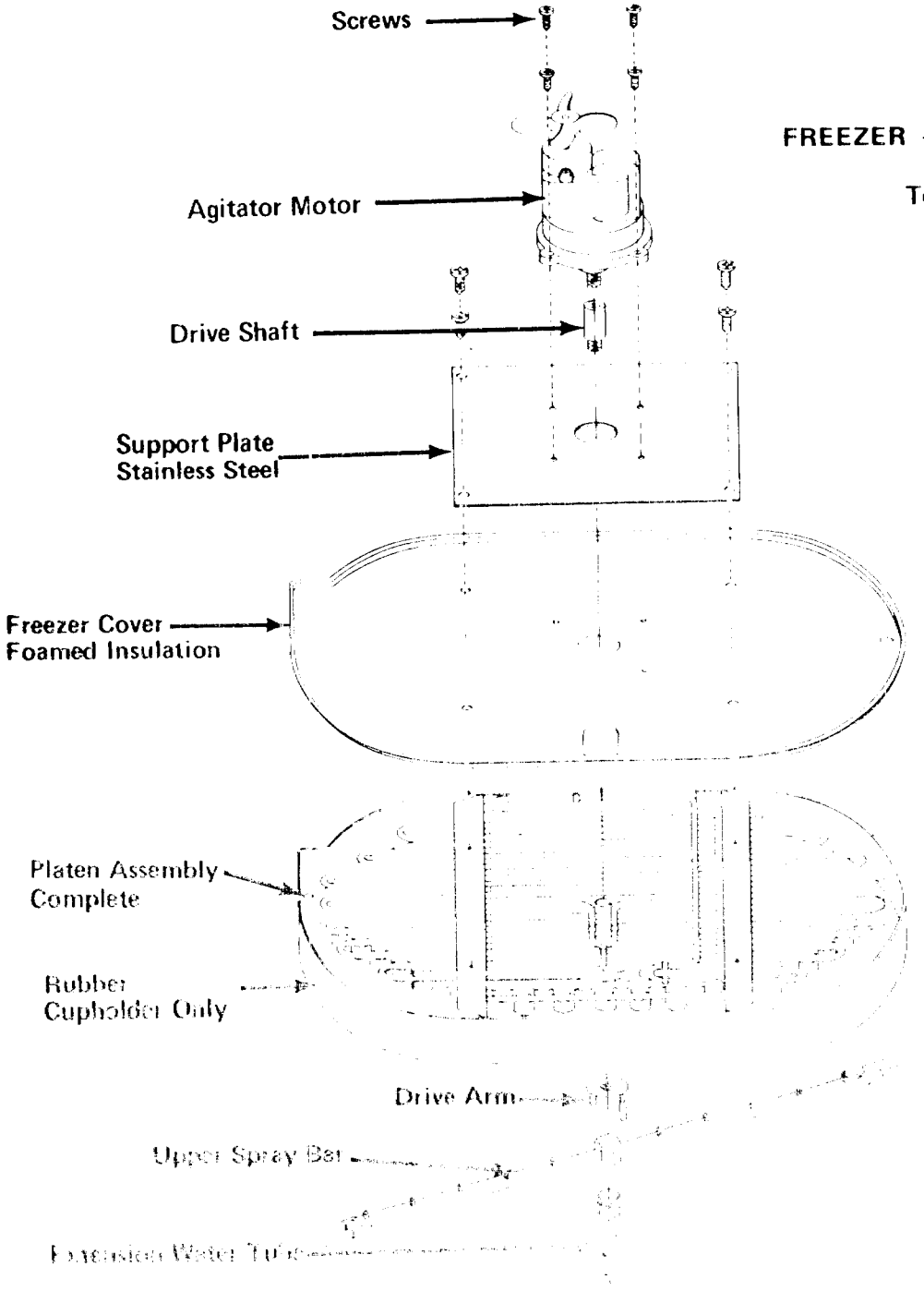

FREEZER – SPRAY DRIVE

Top Half

PS-1-75
2-15-75

TO: ALL MASTER MANUAL HOLDERS

SUBJECT: WATER PUMP ASSEMBLY
12-1849 and 12-1930

It is impractical to replace the Motor only or the Pump Body on these Water Pumps at the field level.

In the assembly procedure of the Motor and Body, it is necessary that the motor be centered properly to avoid damage to the impeller.

The supplier of these pumps uses special tools in assembly to center the motor body correctly.

On page (44) forty-four is a listing of the replacement parts that are available and can be replaced on these pumps at the field level.

These pumps 12-1849 and 12-1930 are identical except for the length and design of the electrical leads.

12-1849 60" electrical leads with 1/4" quick connect ends.

12-1930 6" electrical lead with pin plug connection

Wire assemblies used with 12-1930 pump.

12-1940-02 12" electrical lead with pin plug socket

Usage: AC30
12-1940-02 40" electrical lead with pin plug socket

Usage: MC25 and Top Chamber MC35
12-1940-03 50" electrical lead with pin plug socket

Usage: MC35 Lower Chamber

COMPLETE WATER PUMP
115/60/1
12-1930-01

ITEM NO.	PART NO.	DESCRIPTION
1.	12-1849-54	Nut (Hex)
2.	12-1849-55	Washer
3.	12-1849-56	Washer
4.	12-1849-57	Impeller
5.	12-1849-58	Lockwasher
6.	12-1849-59	Screw
7.	12-1849-60	O-Ring
8.	12-1849-61	Pump Housing
9.	12-1849-62	Screw

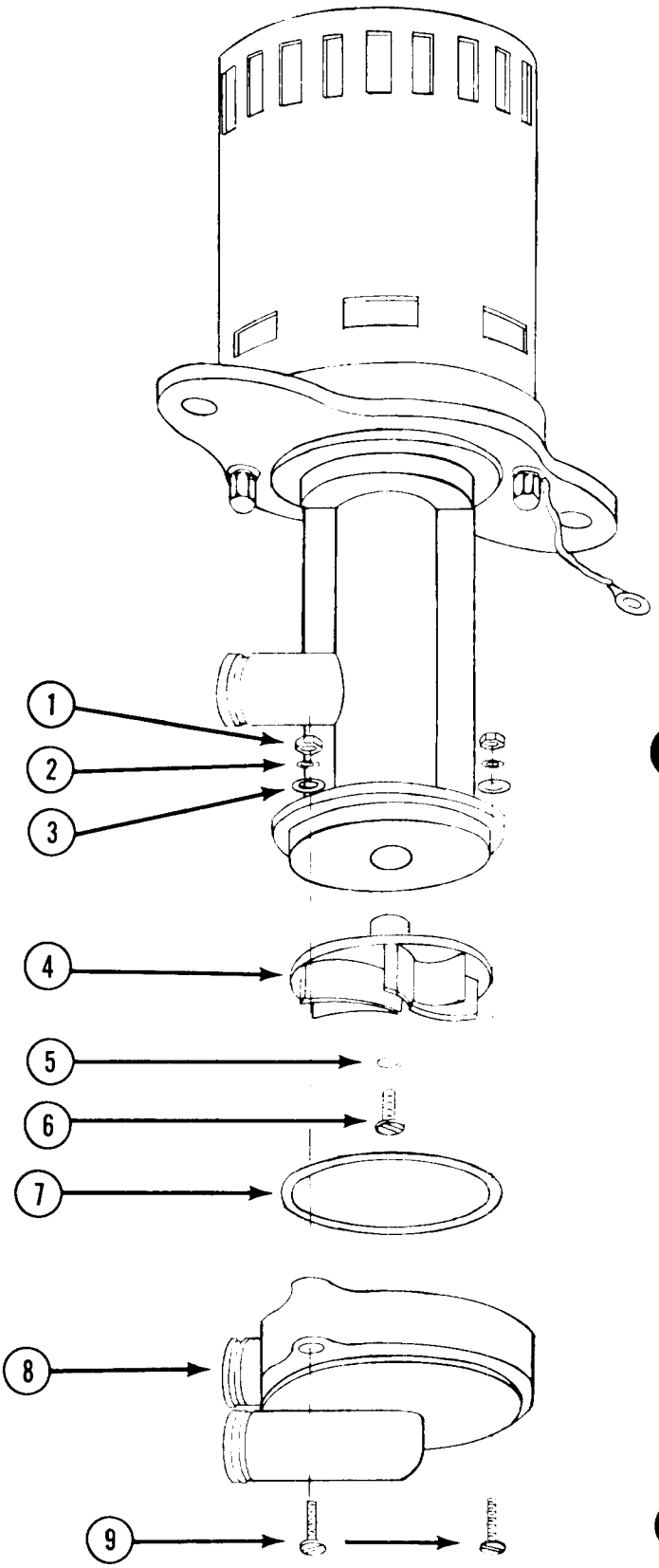

CABINET PARTS

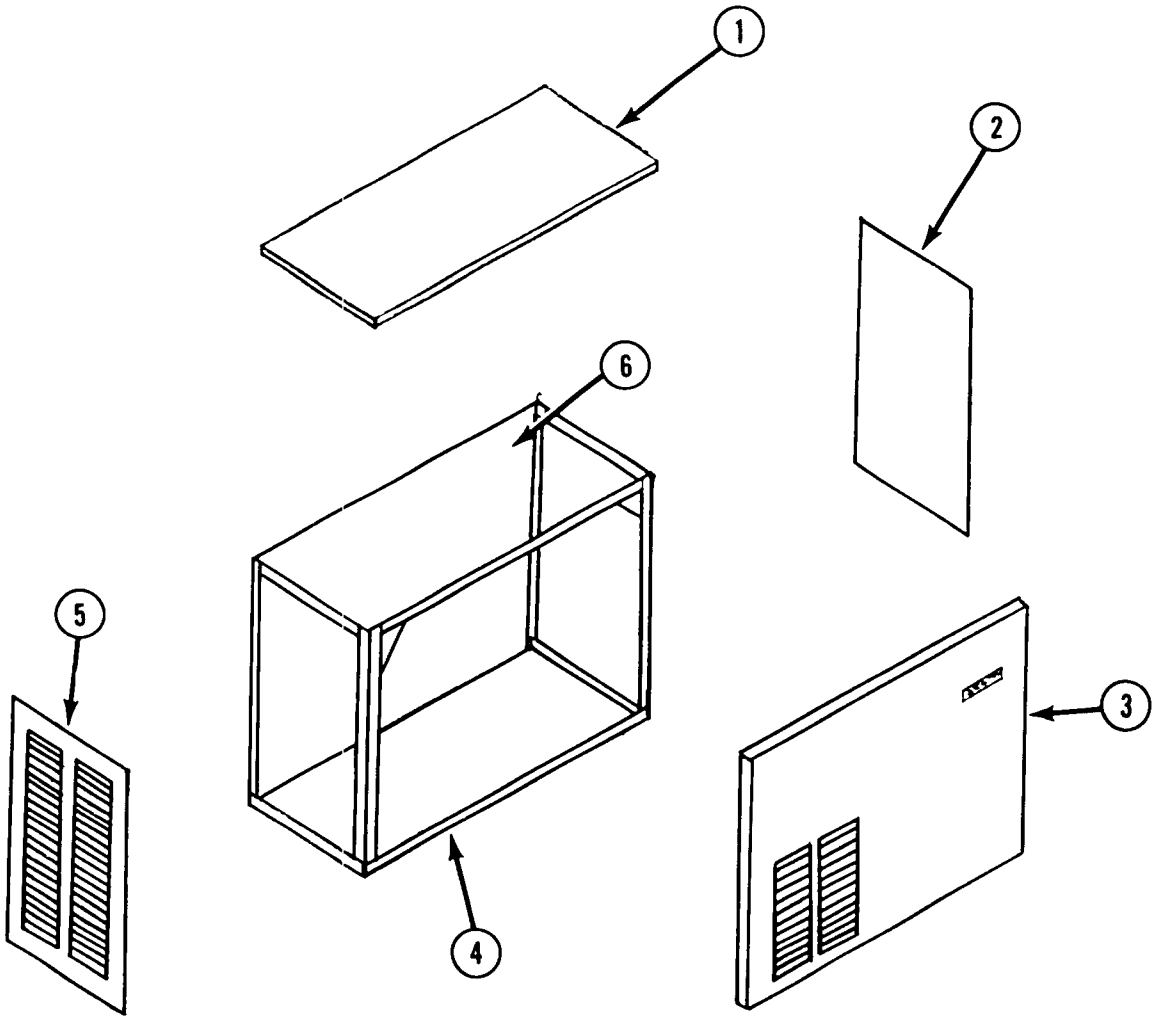

	Enamel	Stainless Steel
1. Top Panel	A23784-001	A23784-002
2. Panel, Right Side	A23900-001	A23900-002
3. Panel, Front	A26183-001 Vinyl	A26183-002
4. Cabinet Assy.	A26179-001	A26179-001
5. Panel left side	A23899-001	A23899-002
6. Back Panel	Fixed	A-25274-001

*Panel Conversion Kit (Enamel to Stainless Steel) (Kit Includes Items 1, 2, 3, 5 and 6) – Part No. KPCS-2A.

MAINTENANCE INSTRUCTION FOR SCOTSMAN CUBERS

THE FOLLOWING MAINTENANCE SHOULD BE SCHEDULED EACH (6) SIX MONTHS ON ALL SCOTSMAN CUBERS. CALL YOUR AUTHORIZED SCOTSMAN SERVICE DEPARTMENT.

1. Clean air-cooled condenser; This is to be done frequently with the machine shut off.
2. Clean water system and evaporator, sump tank and screen, using Scotsman Ice Machine Cleaner or equivalent.
3. Remove jet tube and manually clean jets.
4. Check curtain assembly.
5. Tighten all electrical connections.
6. Tighten all bolts.
7. Check water supply. Check water pressure flow through flow control. Clean water strainer.
8. Oil jet tubes drive motor. Use SAE 20 oil.
9. Oil Condenser fan motor. Punch sealed cap or remove screws where possible.
10. Check for refrigeration leaks with halide torch.
11. Check for water leaks. Tighten drain line connections.
12. Check size and condition of cubes. Adjust as required.
13. Check bin thermostat setting. Factory set at 35 degrees out, 39 degrees in.

PRODEDURE FOR USE OF SCOTSMAN ICE MACHINE CLEANER

1. Remove front panel, right side panel, and cube chute.
2. Locate control box with time clock knob protruding thru cover. Turn master and compressor switches to off position.
3. Start unit thru harvest cycle manually. This is done by slowly turning time clock knob clockwise until you hear the micro-switch actuator arm drop into the cam slot.
4. Locate and remove defrost water tube which protrudes thru each freezing chamber cover at top left of freezing chamber.
5. For each freezing chamber, dilute 16 ozs. of Scotsman Ice Machine Cleaner in 11 pints of fresh hot potable water in a clean container. Pour this cleaning solution into freezing chamber thru defrost tube hole. Replace defrost tubes and IMMEDIATELY TURN ON MASTER SWITCH.
6. Let unit operate normally for 20 minutes into the freezing cycle. No ice will be made because the compressor is not in operation.
7. At the end of this time, rotate the timer knob until the harvest cycle starts again.
   Allow the machine to run normally thru this harvest cycle.
   When the harvest has been completed, then rotate knob manually thru the freeze cycle until the harvest cycle starts once again.
   Do this 3 times.
   Cube chute and curtain(s) should be washed in solution of household bleach and water. (1 oz. of bleach in 1 gal. of water)
8. Turn the compressor switch back on. Use a damp cloth to wipe off curtain(s) and cube chute. Place cube chute and curtain(s) in position.
9. Check each new batch of cubes until they are clear and until acid taste has been removed from cubes.
10. Pour hot water in storage bin to melt the cubes and thereby clean the bin and drains with the same solution that has just cleaned the unit.
11. Replace all doors.
12. Unit is now ready for continued automatic operation.

SCOTSMAN

ICE STORAGE BINS

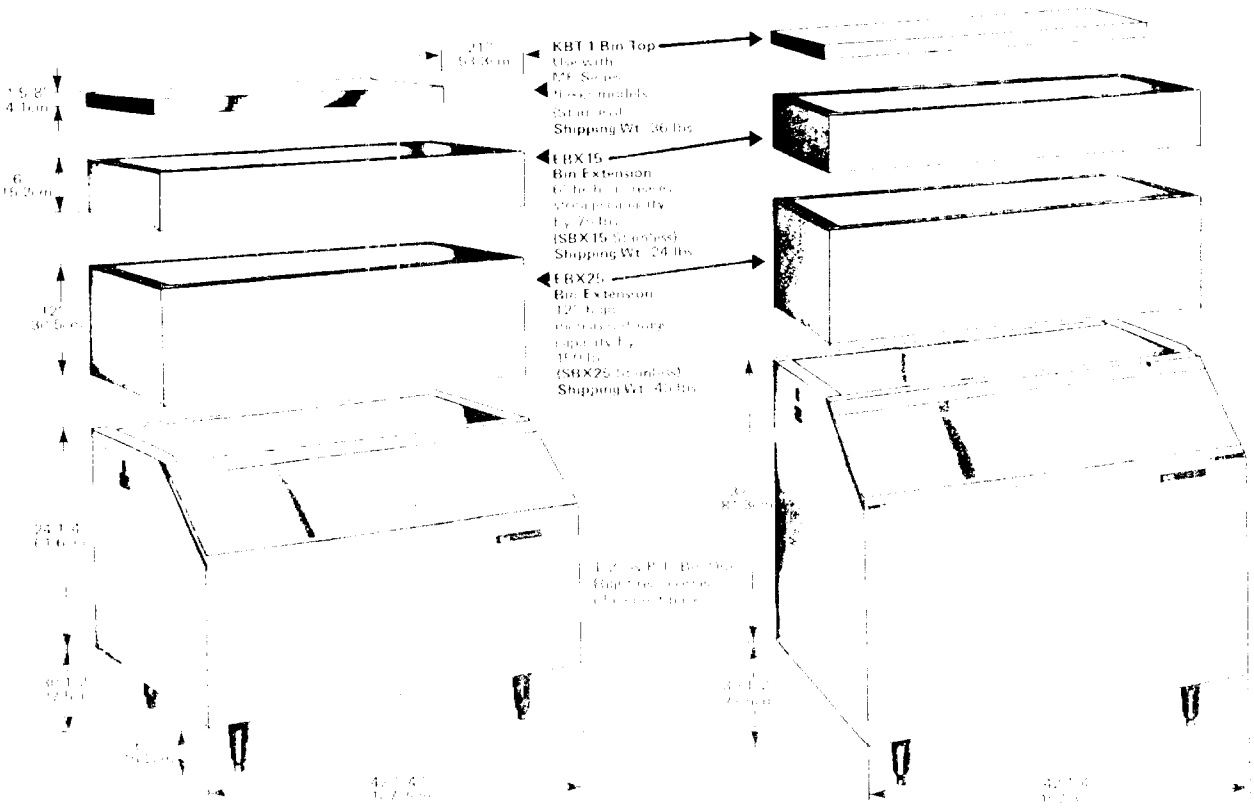

B40 Bin

B60 Bin

CARE OF STAINLESS STEEL STORAGE BIN LINERS

All commercial grades of stainless steel will corrode or rust when in contact with certain chemicals or salts. **One element that attacks stainless readily, is chlorine,** and most compounds of chlorine, such as hydrocholic acid, and certain salts containing chlorine. The "speed" with which this corrosion takes place depends on the concentration of the chlorine, and the length of time it is left in contact with the stainless steel.

ICE BIN LINER RUSTING

In many ice bin applications, **a rust stain, or brown deposit, will appear at the top of the side and rear walls of the bin liner, and also on any exposed stainless parts inside the bin, which do not normally get covered with ice; such as stainless steel door back pans.** The lower portions of the liner walls usually stay clean if the bin is being used regularly, due to the "washing" action of the ice and meltage water draining down these walls. This brown staining on the liner may appear more rapidly in some installations than other, depending on the way the ice is being made in the ice machine, and the water conditions.

This staining or rusting, can come from basically two sources:

1. **Foreign materials** -- For example, **many ice machine casings are made of painted steel. If this steel should be exposed at the joint where the ice machine sits on the bin, it could rust,** and the rust stain could "drip" down the liner walls. Also, particles of plain steel could fall down into the bin and, inturn, start rusting.

2. **Materials expelled during ice making** — Practically all icemakers produce clear ice by "freezing out the impurities" normally found in tap water. Chlorine gas, other gases and solids, are expelled during the making of ice. Being heavier than air, these foreign materials drop down into the bin through the same opening that the ice enters the bin. (This oftentimes explains why this staining is more noticeable on an installation where the opening on the bottom of the ice machine is quite large). **The chlorine gas will combine with water vapor and condense on the liner walls as a mild hydrochloric acid.** Above the normal ice level, this never gets removed by the action of the ice, and will eventually form a brown stain.

CLEANING OF A STAINLESS STEEL BIN LINER

Because the brown staining or rusting is due to expelled material during ice-making, **every bin liner should be cleaned periodically,** to prevent this staining from causing pitting of the stainless steel. The time between cleanings will depend on the water conditions, type of ice machine, etc. **It may be necessary only every 3 to 6 months.**

1. **General Cleaning** – When the staining is light, it can usually be removed by washing with ordinary cleaning powder, such as Bon-Ami, or Copper-Glo, and water. (Do not use cleaners that contain bleaching agents, as most of these are compounds of chlorine.) After cleaning, rinse thoroughly with clear water.

   It may be necessary to use a stainless steel wool to remove bad stains. DO NOT USE plain steel wool, as the steel particles will get imbedded in the liner and cause more serious rusting.

2. **Cleaning of heavy deposits**–If the liner has not been cleaned for a long time, and heavy deposits and pitting have occurred, a chemical cleaner may be necessary. Several of these are as follows:

   Oakite No. 33, Oakite Products, Inc., 19 Rector St., New York, N.Y. Texo No. 12, and Texo-NY, Texo Corp., 2200 Dana Ave. Cincinnati 7, Ohio. Metalprep No. 10, Nelson Chem. Co., 6564 Benson St., Detroit 7, Mich, Dilac, Diversey Corp., 1820 Roscoe St., Chicago 13, Illinois.

   A solution of one part cleaner and two parts water is used. First, wash the bin liner thoroughly with water and soap as described above. Then simply swab the solution on the area to be cleaned, and allow to stand for about 20 minutes. Rinse with clear water. If this doesn't completely remove the deposit, repeat the procedure.

   Syntheitc rubber gloves should be used by the operator, and goggles and aprons are advisable even though the solution is relatively nonhazardous.

   These cleaners may possibly harm paint, wood, or fabrics, They will probably cause a dull grey color on galvanized steel and should not be allowed to remain long in contact with rubber. Therefore, provision should be made to avoid contact with such materials when cleaning stainless.

3. **Protection of Stainless Steel against further staining** – After the stainless steel has been cleaned, installations where the staining is recurring so frequently, the surface should be rejuvenated. This process restores the characterisitc to the surface of the stainless, that best prevents corrosion.

   First, be sure that the liner is clean and is thoroughly rinsed with water. Then use a nitric acid solution of two parts water to one part nitric acid (by volume). Swab this on the liner and allow to stand for about 30 minutes. Rinse the liner with clean water. This will then provide maximum corrosion resistance.

MCD200C

TABLE OF CONTENTS

GENERAL INFORMATION & INSTALLATION
Introduction 4
Unpacking and Inspection 4
Location and Leveling 4
Installation on DMS Machine Stand 5
Electrical Connections 6
Water Supply and Drain Connections 6
Final Checklist 6

OPERATING INSTRUCTIONS
Start-Up 8
Adjustment of the Cube Size Control 11
Freezing Cycle 11
Harvest Cycle 12
Ice Dispensing Cycle 13
Component Description 14

ADJUSTMENT AND REMOVAL AND REPLACEMENT PROCEDURES
Adjustment of the Bin Thermostat Control 16
Adjustment of the Cube Size Control 16
Adjustment of the Timer & Switch Assembly 17
Adjustment of the Water Regulator Assembly 17
Removal and Replacement of the Agitator Drive Assembly 18
Removal and Replacement of the Condenser - Air-Cooled 19
Removal and Replacement of the Condenser - Water-Cooled 19
Removal and Replacement of the Cylindrical Bin and Internal Parts 19
Removal and Replacement of the Drier 21
Removal and Replacement of the Drivemotor Assembly 21
Removal and Replacement of the Fan Motor Assembly - Air-Cooled Model 22
Removal and Replacement of the Freezing Chamber, Platen Assembly and Spray Bar Assembly 22
Removal and Replacement of the Sink and Splash Panel Assembly 23
Removal and Replacement of the Water Pump Assembly 24
Removal and Replacement of the Water Regulator Assembly - Water-Cooled Models 24

SERVICE DIAGNOSIS 26

MAINTENANCE & CLEANING INSTRUCTIONS
General 30
Icemaker 30
Cleaning 30
Sanitizing 31
Cleaning of a Stainless Steel Bin Liner 34

LIST OF ILLUSTRATIONS

Specifications 2
Sink Drain Tube Installation 5
Installation Practice 7
Timer Cam Positions 8
MCD200 Dispenser - Component Location 9
Freezing Cycle 12
Harvest Cycle 13
Adjustment of the Temperature Control 17
Adjustment of the Timer & Switch Assembly 18
Ice Breaker, Agitator, Storage Bin, Exploded View 20

PARTS LIST & WIRING DIAGRAMS
(Printed in Yellow) 1

PARTS LIST:
Cabinet Assembly 3
Air-Cooled Assembly 5
Water-Cooled Assembly 7
Evaporator Assembly 9
Freezing Chamber Assembly 11
Agitator Drive Assembly 12
Water Pump 13
Drivemotor Assembly 15
Agitator - Cylindrical Bin Assembly 17
Storage Bin and Dispensing Assembly 19
Compressor Assembly 20
Control Box 21

WIRING DIAGRAMS:
MCD200SAE-1C Air-Cooled (115/60/1) 23
MCD200SWE-1C Water-Cooled (115/60/1) 24

Freezing Chamber - Exploded View 23
Start Positions for the Freeze/Harvest Cycles 31
Ice Breaker, Agitator, Storage Bin - Exploded View 32

THIS PAGE
INTENTIONALLY
LEFT BLANK

MCD200 CUBER - DISPENSER

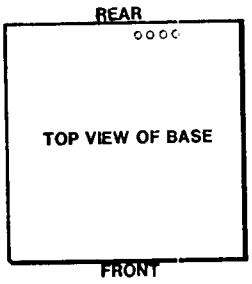

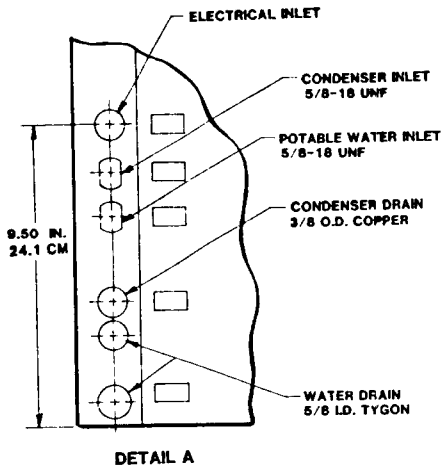

DETAIL A

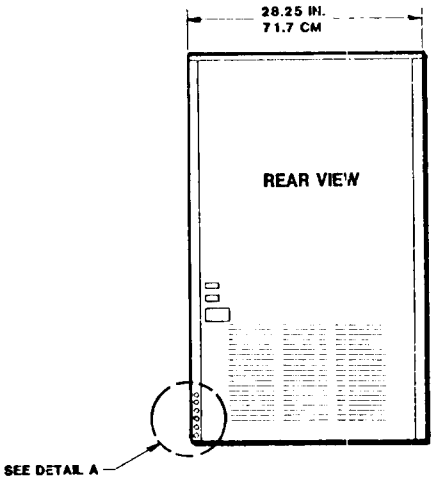

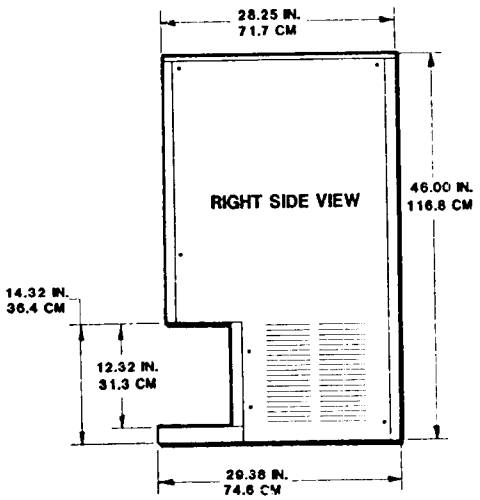

SPECIFICATIONS

Model Number	(Height - w/o Legs) Dimensions H" x W" x D"	Bin Cap.	Cube Size	Cond. Unit	Finish **	Basic Electrical	Comp. H.P.	No. of Wires	Min. Circuit Ampacity †	Max. Fuse Size	Ship. Wt. lbs./kg.
MCD200SAE-1C	46 x 28¼ x 29½	90 lbs.	Small	Air	EC	115/60/1	½	2	14.8	15	358/162
MCD200SWE-1C	46 x 28¼ x 29½	90 lbs.	Small	Water	EC	115/60/1	½	2	13.2	15	358/162

Electrical and plumbing connections in lower right side of back panel.

IMPORTANT OPERATING REQUIREMENTS

	MINIMUM	MAXIMUM
Air Temperatures	50° F (10.0° C)	100° F (38° C)
Water Temperatures	40° F (4.4° C)	100° F (38° C)
Water Pressures	20 lbs. gauge	120 lbs. gauge
Fixed Voltage Variation	-10%	+10%

(Voltage rating specified on nameplate)

Extended periods of operation exceeding these limitations constitutes misuse under the terms of Scotsman Manufacturer's Limited Warranty, resulting in a loss of warranty coverage.

DMS50 MACHINE STAND

Height: 28" (71.1 cm), Width: 28½" (72.4 cm), Depth: 29½" (75.0 cm). Shipping Weight: 110 lbs. (50 kg.)

DMS50E-B: Charcoal brown gloss enamel on leather-grain embossed steel. Includes black enamel legs.
DMS50S-B: Stainless steel cabinet with brushed finish and matching nickel plated legs.

OPTIONAL STAINLESS STEEL PANEL KIT:

SPKPCD1: Contains stainless steel sides, top and front panel. Not factory installed.

STANDARD LEGS: Furnished with Machine Stand. Four metal legs screw into mounting plates on cabinet base. Provide 6" minimum height including adjustable leveling foot. Black enamel finish.

OPTIONAL LEG KIT, KLP2S:
Nickel plated, brushed metal finish with stainless steel foot. Recommended for stainless steel cabinets.

MCD200
CUBER DISPENSER

OPTIONAL
DMS50
MACHINE STAND

BLACK ENAMEL LEGS
FURNISHED WITH
MACHINE STAND.
(SHIPPED SEPARATELY)

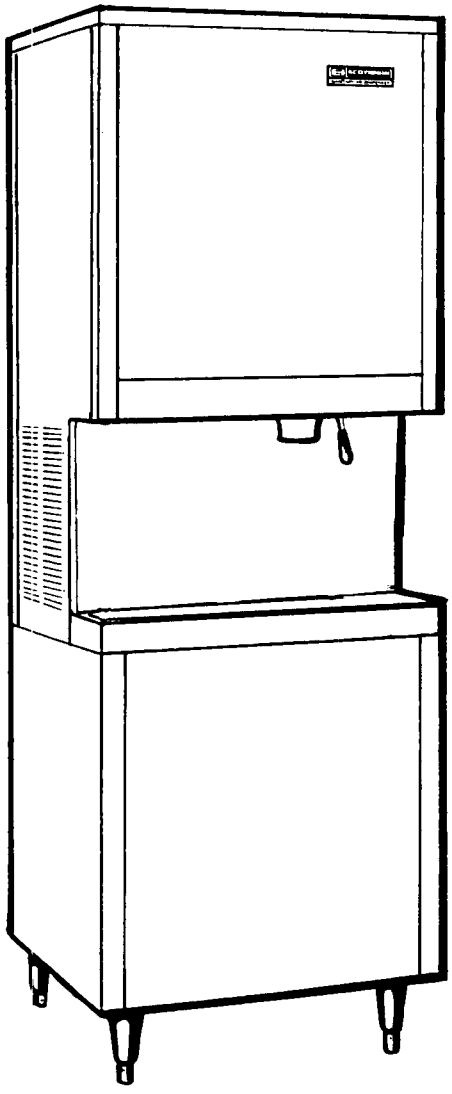

This icemaker has been engineered to our own rigid safety and performance standards. The National Sanitation Foundation (NSF) seal, signifies that it is listed with the NSF and that it complies with the materials and construction standards of the NSF. In addition, the Underwriters Laboratories, Inc., (UL) Listing Mark and the Canadian Standards Association (CSA) Monogram, both signify that its construction and design have been inspected and tested by them. NSF, UL and CSA inspectors also periodically examine production icemakers at the factory, to assure continued compliance.

To retain the safety and performance built into this icemaker, it is important that installation and maintenance be conducted in the manner outlined in this manual.

MCD200C
GENERAL INFORMATION & INSTALLATION

INTRODUCTION

This manual provides specifications and the step-by-step procedures for the installation, start-up, operation, and the maintenance and cleaning for the SCOTSMAN Model MCD200 Motel Cuber Dispenser.

The Model MCD200 Motel Cuber Dispensers are quality designed, engineered and constructed, and thoroughly tested icemaking and ice storage systems, providing the utmost in flexibility to fit the needs of a particular user.

With the Splash Panel, Sink Assembly and Rear Panel removed, access can be gained to the refrigeration systems for on-the-spot repair.

DESCRIPTION

This attractive motel ice dispenser has a compact cabinet with a high gloss baked enamel finish. Also, an optional stainless steel cabinet finish is available. Both cabinets have up-to-date styling, and easily removable front panels for easy access to electrical and mechanical components.

SEALED REFRIGERATION SYSTEM

To provide quiet efficient operation of the Icemaker, the Compressor motor is internally spring-mounted. The Compressor motor is covered by a five year parts warranty.

SELF-CONTAINED STORAGE BIN

These Cube Dispensers store their own ice supply in a stainless steel ice storage bin cylinder inside the insulated cabinet.

OVERALL DIMENSIONS

The overall dimensions of the Dispenser depth, height, etc., allows the Cuber to be installed in harmony with the existing counter equipment.

UNPACKING AND INSPECTION

1. Call your authorized SCOTSMAN Distributor or Dealer, for proper installation. He's listed under ICE MAKING EQUIPMENT and MACHINERY in the yellow pages of the telephone book.
2. Visually inspect the exterior of the shipping container and skid and any severe damage noted, should be reported to the delivering carrier; and, a concealed damage claim filed subject to internal inspection, with carrier representative present.
3. BEFORE removel of any panels or packing, carefully lay the Dispenser on its back and remove the shipping bolts and the shipping base or skid.
4. Remove screws and shipping tape, and the Lower and Front Panels from the cabinet, and inspect for any concealed damage. Notify carrier of any concealed damage claims, as stated in step 2.
5. Remove all internal support packing and tape in machinery compartment.
6. Check that refrigerant lines do not rub or touch lines or other surfaces, and that fan blades, if any, move freely.
7. Check that the Compressor is snug on all mounting pads.
8. Use clean damp cloth or disposable paper wiper to wipe clean the interior surfaces of the ice storage Bin and the exterior surfaces of the cabinet.
9. See NAMEPLATE on the lower left section of the rear service panel of the cabinet and check that the location source voltage corresponds with the voltage specified on the nameplate.

CAUTION

Improper voltage supplied to the Icemaker will void your parts replacement program.

10. Complete the Manufacturer's Registration Card by filling in all spaces including Model Number and Serial Number taken from the Nameplate. Forward the completed, self addressed, registration card to the SCOTSMAN factory.

LOCATION AND LEVELING

WARNING

This Cuber Dispenser is NOT designed for outdoor installations where air temperatures are below 50-degrees F., or above 100-degrees F., and the water temperature is below 40-degrees F. or above 100-degrees F. Extended periods of operation at temperatures exceeding these limitations will constitute misuse, under the terms of the SCOTSMAN Manufacturer's limited warranty, resulting in LOSS of warranty coverage.

1. Install sink drain: Remove sink drain tubing packed in ice storage bin. Insert plain end of sink drain tubing through lowest center hole in front of icemaker base, then tip icemaker back to gain access and slide backing nut over sink drain tube and route plain end out through lower hole in rear corner post. Tighten backing nut against inside front edge of icemaker base.

   Observe sink assembly drain connection. O-ring must seat in groove provided in sink drain fitting.

   Push sink assembly back to snap in position.

2. Position the Dispenser in the selected permanent location.
3. Level the Dispenser in both the left-to-right and front-to-rear directions. Metal shims may have to be added to corner or side, to achieve the level required.

INSTALLATION OF MCD200 ON DMS50 MACHINE STAND

1. Lay machine stand on back or side and install leg kit.
2. Position machine stand in selected permanent location and level from front to back and side to side directions with the open section to the back.
3. Attach dispenser to machine stand using screws and lock washers provided.
4. Wipe cabinet clean using damp cloth.

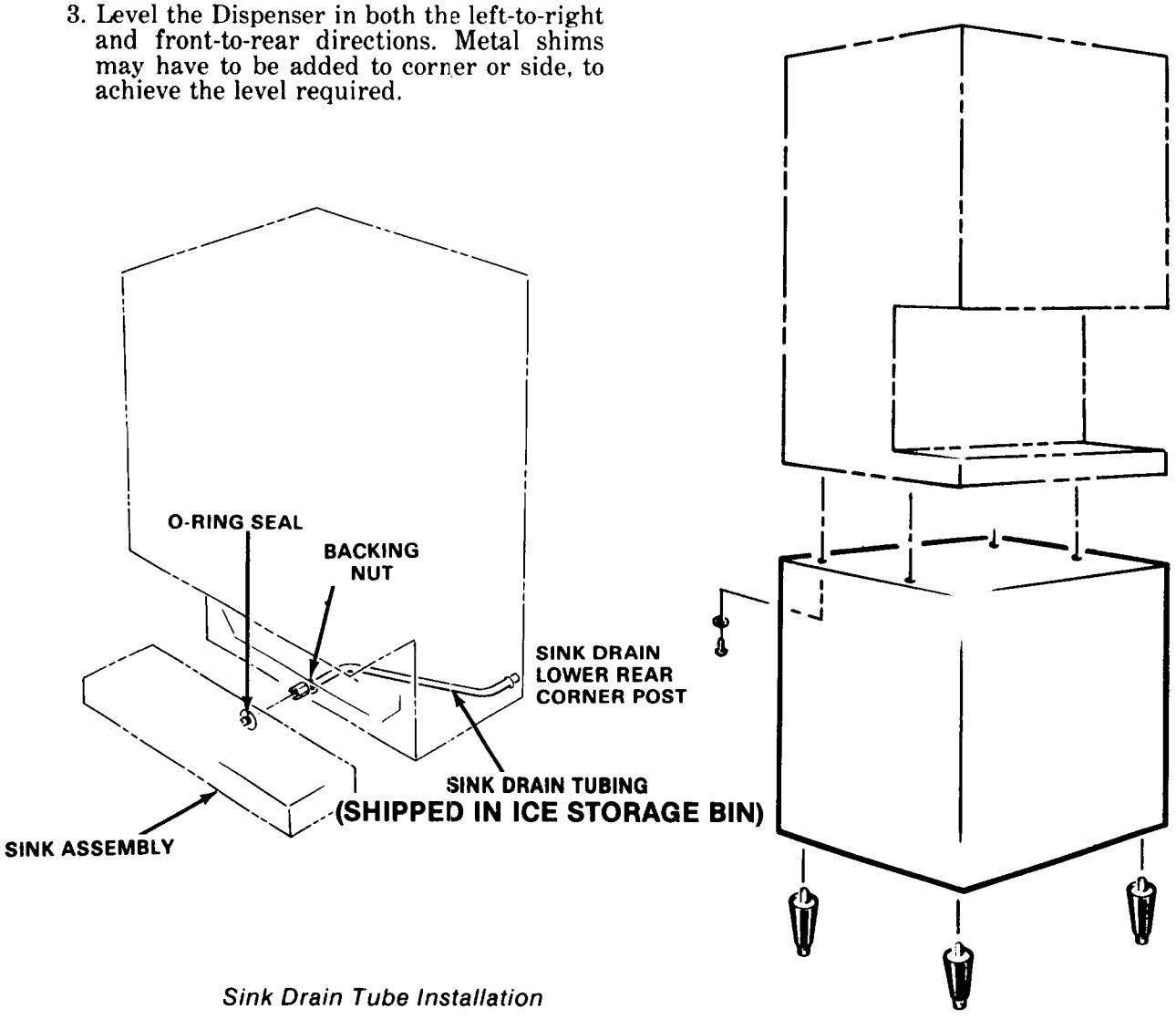

Sink Drain Tube Installation

NOTE

Prior consideration for location site shall include:

1. *Minimum room temperature 50-degrees F. and maximum room temperature 100-degrees F.*
2. *Water inlet temperatures: Minimum 40-degrees F. and Maximum 100-degrees F.*
3. *Well ventilated location for Air-Cooled model, advising user to frequently clean Condenser, located directly behind the Sink Assembly.*
4. *SERVICE ACCESS: Adequate space for all service connections, through the rear of the Cabinet. A six-inch minimum clearance at back and both side louvered panels, for routing cooling air drawn into and exhausted out of the compartment, to maintain proper condensing operation on Air-Cooled Models.*

ELECTRICAL CONNECTIONS

SEE NAMEPLATE for current requirement to determine wire size to be used for electrical hookup. The Dispenser requires a solid earth ground wire. See wiring diagram.

Be certain the Dispenser is connected to its own electrical circuit and individually fused. The maximum allowable voltage variation should not exceed ten percent of the nameplate rating, even under starting conditions. Low voltages can cause erratic operation and may be responsible for serious damage to the overload switch and motor windings.

All external wiring should conform to the National, State and local electrical code requirements. Usually an electrical permit and services of a licensed electrician will be required.

WATER SUPPLY AND DRAIN CONNECTIONS

AIR-COOLED MODELS: The recommended water supply line is a 1/4-inch O.D. copper tubing with a minimum operating pressure of 20 PSIG and a maximum of 120 PSIG.

Connect to cold water supply line with standard plumbing fittings, with a shutoff valve installed in an accessible place between the water supply and the cuber. In some cases a plumbing permit and services of a licensed plumber will be required.

WATER-COOLED MODELS: On water-cooled models, a separate cold water supply inlet is required, to be connected to a second 3/8-inch O.D. male flare fitting at the rear of the cabinet. Additional drain lines are required to drain the water-cooled condenser.

DRAIN CONNECTIONS: All drains are gravity type and must have a minimum of 1/4-inch fall per foot on horizontal runs. The drains to be installed to conform with the local plumbing code. Install separate drain line for discharge water from the water-cooled condenser. Install a vertical open vent on drain line to ensure good venting. The drain receptacle should be an open, trapped or vented construction.

Recommended bin drain is 5/8-inch O.D. copper tubing and should be vented and run separately.

FINAL CHECK LIST

1. Is the Dispenser level? (IMPORTANT)
2. Have all electrical and piping connections been made?
3. Has the voltage been tested and checked against the nameplate rating?
4. Solid earth Ground properly installed?
5. Is the water supply line shutoff valve installed and electrical wiring properly connected?
6. Have the Bin and Cabinet been wiped clean?
7. Have the Compressor hold down nuts been checked, to be sure the Compressor is snug on the mounting pads?
8. Has the owner/user been given the User Manual and instructed on how to operate the Icemaker/Dispenser.
9. Has the Manufacturer's Registration Card been properly filled out? Check for correct Model and Serial numbers for Serial nameplate then mail the completed card to the SCOTSMAN factory.
10. Check all refrigerant lines and conduit lines, to guard against vibration or rubbing and possible failure.
11. Is there at least six inches clearance behind and around Dispenser for proper air circulation?
12. Is the Dispenser in a room where ambient temperatures are a minimum of 50-degrees F. all year around?
13. Has water supply pressure been checked to insure a minimum of 20 PSI?
14. Has the owner been given name and telephone number of the authorized SCOTSMAN Service Agency serving him?

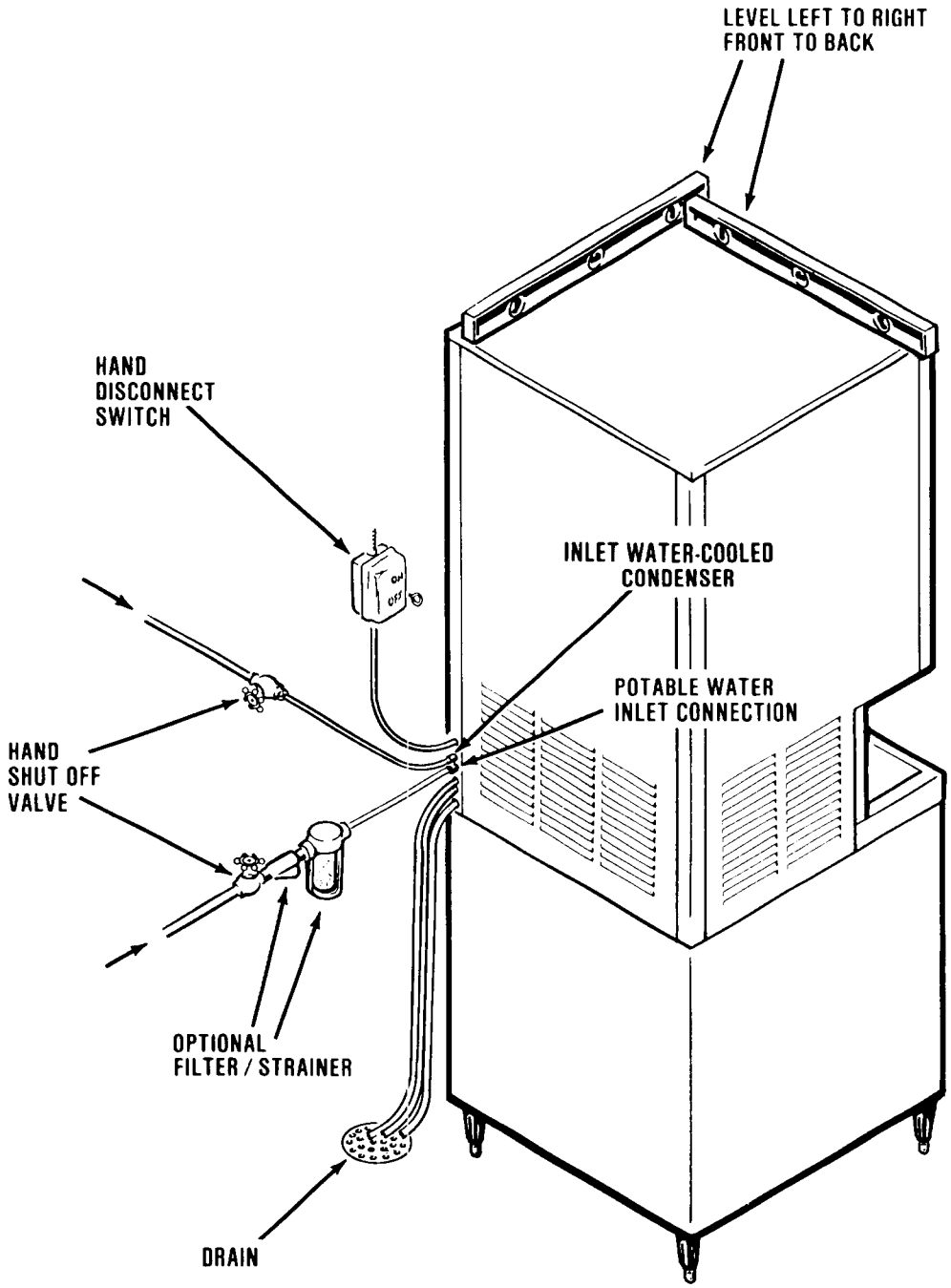

Installation Practice

MCD200C
OPERATING INSTRUCTIONS

START UP

1. Remove two screws and tilt the top of the front panel out slightly, then lift the panel off two alignment pins. Remove front panel from dispenser.
2. Remove two screws and pull bottom of splash panel out to unsnap catches, sink removal may ease splash panel removal-pull out to remove sink. Remove splash panel from dispenser to locate control box.
3. Check the left end of the control box, see both ON-OFF toggle switches are in OFF position.
4. Just inside the hole in the control box cover is the shaft of the timer and switch assembly. Rotate the shaft of the timer and switch assembly clockwise to start the timer. An audible click can be heard, but in a noisy area, look at the cam and switch to observe the event. The timer starts when the actuator arm on the microswitch drops off outer cam into cam slot. See Timer Cam Positions.
5. Open water supply valve to icemaker and move the master ON-OFF toggle switch, the front toggle switch, to the ON position.
6. Observe water fill cycle: Water inlet solenoid valve OPENS, incoming water flows from valve through tubing to top of freezing chamber. Water flows around inverted ice cube cups and drains through holes into reservoir, reservoir fills. Excess water is overflowed through stand pipe. This cycle will take about three minutes. Timer will close water inlet solenoid valve and water fill cycle is complete.

NOTE

Advancing shaft of timer and switch assembly through remaining cycle into a new harvest cycle restarts the timer and allows a check that: Water inlet solenoid valve OPENS and reservoir overflows through stand pipe. Water inlet valve CLOSES, stopping water overflow.

7. Check that the left cube chute and the right cube chute are properly positioned: with the rear edges resting on the rear shoulder of the freezing chamber; the left cube chute fits snug around the left side part of the freezing chamber; the left edge of the right cube chute aligns with the right edge of the left cube chute, and; both cube chutes are fastened at the bottom of the opening at the front of the freezing chamber.
8. Check that the ends of all the plastic parts of the curtain assembly hang down, contacting the front edges of the two cube chutes.

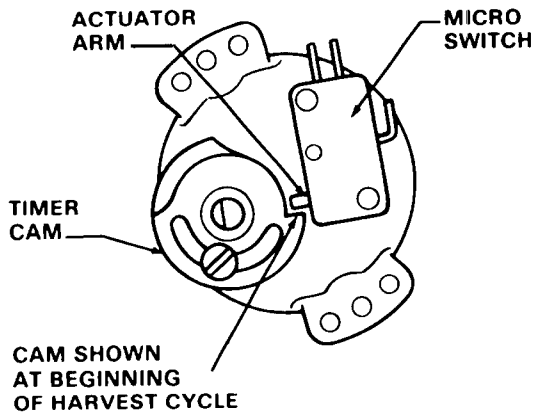

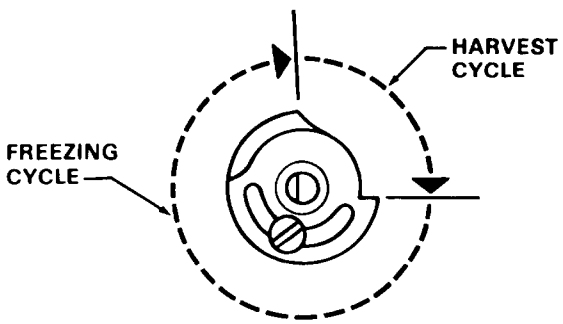

CAM SHOWN DIVIDED INTO TYPICAL FREEZING & HARVEST CYCLES.

Timer Cam Positions.

9. When the second cycle is completed, move the compressor ON-OFF toggle switch, to the ON position.
10. Check operation of the Freezing cycle:
    a. Compressor is in operation.
    b. Agitator Drive Assembly is operating and the Spray Bar oscillates back and forth.
    c. Water Pump is operating and water is being sprayed through all nozzles on the oscillating Spray Bar, into all inverted ice cube cups.
    d. Icemaking process begins: feeling inside ice cube cups reveals cold temperatures and very shortly ice begins to form.

NOTE

Freezing time, in a 70-degree F. ambient atmosphere, will range between 14 and 18 minutes. Longer times for temperatures above 70-degrees F. and shorter, when below. Average times for complete cycles, range between 17 to 25 minutes.

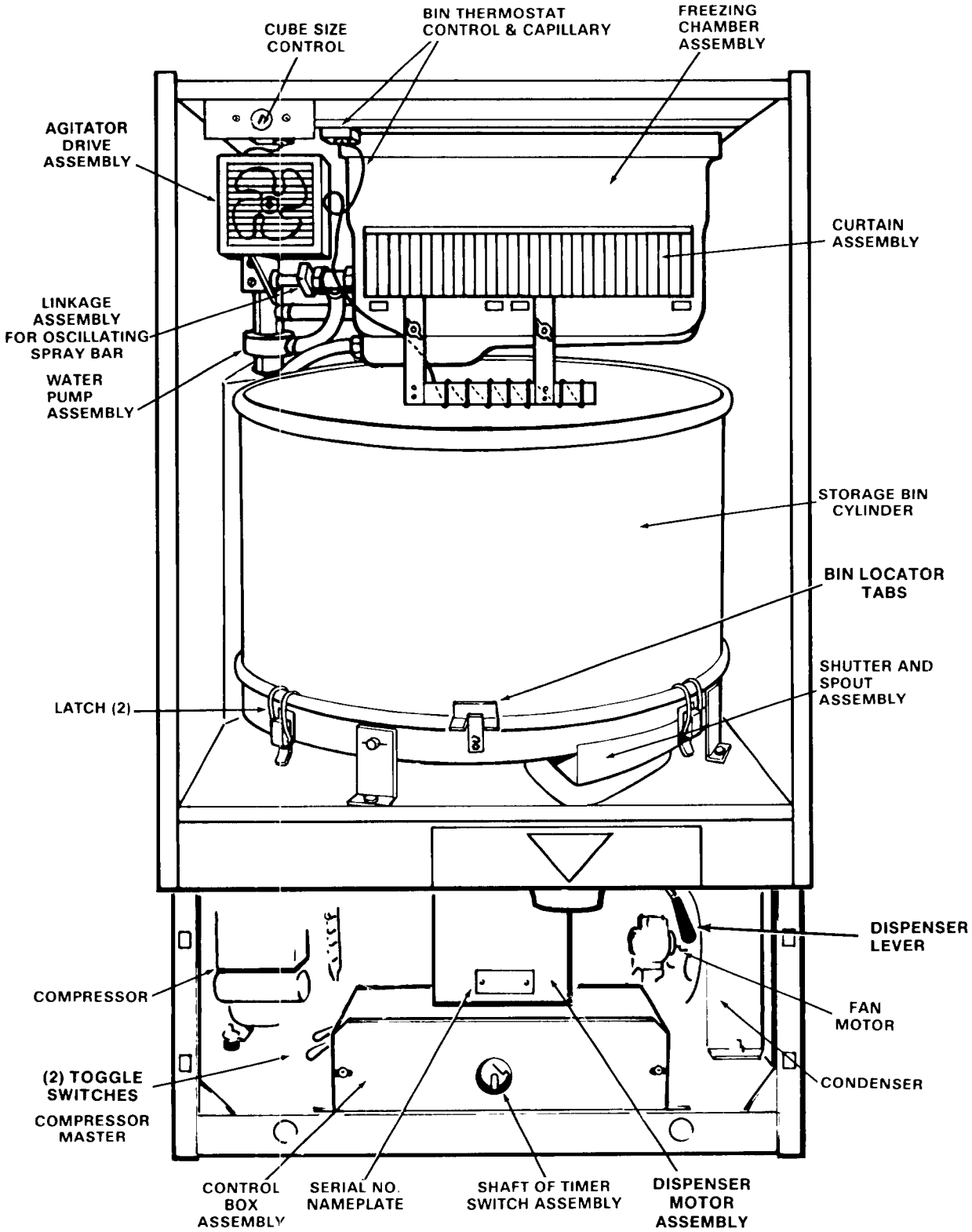

MCD200 Dispenser - Component Location

11. Observe first ice cube harvests:

    All cubes should drop from the freezing chamber by the end of the timed portion of the harvest cycle. If required, the harvest time should be adjusted.

    Check size of ice cubes:

TOO LARGE

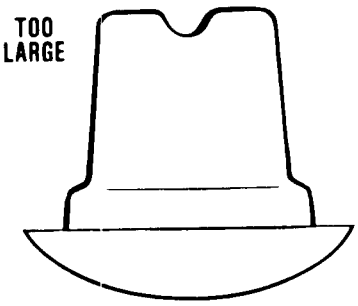

A cube this size and shape is TOO LARGE and requires longer freezing cycle which may cause evaporator freeze ups.

Adjust cube size control counter clockwise to produce a smaller cube.

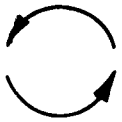

Proper size and shape of a Scotsman Round Cube:

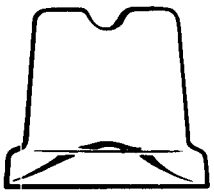

PROPER SIZE AND SHAPE of the round cube. Icemaker operates at peak efficiency when a cube this size and shape is produced.

NOTE

Normal cube size is with a one-quarter inch depression in the crown.

TOO SMALL

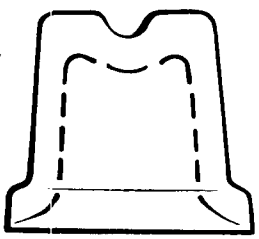

A cube this size and shape is TOO SMALL. Adjust cube size control clockwise to produce a larger cube. Cubes this size or shape are too small and cause excessive cycling.

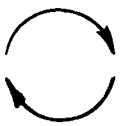

ADJUSTMENT OF CUBE SIZE

To produce SMALLER sized ice cubes:

(1)Locate Cube Size Control, in the top left section of the storage bin compartment.

(2)Rotate the adjusting screw one-eighth of a turn COUNTERCLOCKWISE to WARMER.

(3)Observe size of ice cubes in next two ice cube harvests and repeat step (2) above, in one eighth turn increments, until desired ice cube size is achieved.

To produce LARGER sized ice cubes:

(1)Locate Cube Size Control, in the top left section of the storage bin compartment.

(2)Rotate the adjusting screw one-eighth of a turn CLOCKWISE to COLDER.

(3)Observe size of ice cubes in next two ice cube harvests and repeat step (2) above, in one-eighth turn increments, until desired ice cube size is achieved.

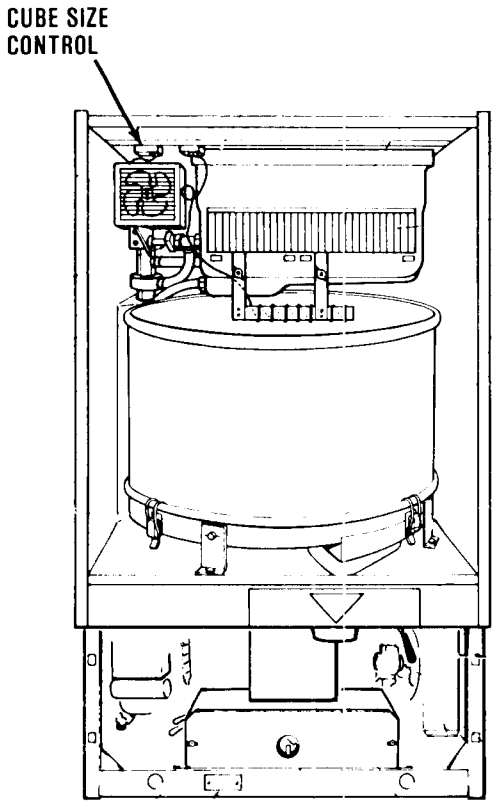

Check texture of ice cubes: When partially cloudy throughout, suggests unit operating short of water near end of freezing cycle, or possibly an extreme water condition, wherein filtering or purifying equipment is recommended. Contact SCOTSMAN - Queen Products Division, Service Department, Albert Lea, Minnesota, for further details.

12. With the icemaker in the Harvest Cycle, make contact using ice cubes on the Bin Thermostat Control Bulb, to test shutoff. The ice should cause the Icemaker to shut OFF, at the end of the Harvest Cycle.

13. ICE DISPENSE

When bin is adequately filled with ice, place container beneath ice dispense spout. Move and hold ice dispense lever. Observe, ice continuously falls into container. Release ice dispense lever and ice flow stops. Repeat test several times.

14. Throughly explain to the owner/user the significant specifications of the Icemaker, the start up and operation, maintenance and cleaning procedures. Answer all questions about the icemaker, and inform the owner of the name and telephone number of the authorized SCOTSMAN Service Agency serving him.

FREEZING CYCLE

Water from the sump in the Reservoir is pumped through the oscillating Spray Bar Assembly, which consists of a spray bar and 12 jets, through which water is sprayed into the inverted cube molds of the Freezer Assembly Evaporator. See Freezing Cycle Illustration. At the beginning of the Freeze Cycle the electrical circuit is completed to the compressor, Water Pump, and the coil of the Finish Relay. The Water Pump operates continuously during the Freeze Cycle through contacts of the Finish Relay. In Water-Cooled models water also flows through the Condenser and out the drain. While in the Condenser, water removes heat from the refrigerant and allows the refrigerant to condense from a gas to a liquid.

Refrigerant is compressed in the Compressor and discharged into the Condenser as a high pressure, high temperature gas. The refrigerant is cooled and condensed by either air or water and condenses to a high pressure, high temperature liquid. This liquid refrigerant then passes through a small capillary tube where the temperature and pressure of the liquid refrigerant are lowered. The low pressure, low temperature liquid refrigerant, then enters the Evaporator. The refrigerant is warmed by water being sprayed against the Evaporator and begins to boil off, to become a gas. The refrigerant next travels through the Accumulator where any remaining liquid refrigerant then returns to the Compressor as a low pressure, low temperature gas and the cycle starts again.

During the Freezing Cycle, both the Water Inlet Solenoid Valve and the Hot Gas Solenoid Valve are CLOSED.

When the ice cubes are about 3/4 formed, the Cube Size Control Bulb located on the suction line will sense the temperature at which it is preset to CLOSE. This will complete the electrical circuit to the Timer. The Timer then controls the remainder of the cycle.

The Timer will keep the icemaker operating in the Freeze Cycle for the next five minutes. This will give the cubes time to fully form. After five minutes, the Timer will switch the icemaker into the Harvest Cycle, through the contacts of the Timer Assembly microswitch.

HARVEST CYCLE

When the Timer switches the Icemaker into the Harvest Cycle, hot gas being discharged from the Compressor is diverted through the Hot Gas Solenoid Valve into the Evaporator.

During this cycle, the hot gas circulates from the Compressor to the Evaporator and back again, bypassing the Condenser and capillary tube. In the electrical circuit, the Compressor is operating and both the Water Inlet Solenoid Valve and the Hot Gas Solenoid Valve are energized. See Harvest Cycle Illustration. Opening the Water Inlet Solenoid Valve allows a fresh water supply to be discharged into the top of the Platen Assembly Evaporator. The finished ice cubes are released from the Evaporator by the warming effect of the hot gas flowing through the Evaporator tubes and the water flow around the ice cube molds. The released ice cubes drop onto the slanted Cube Chute and into the ice storage bin. At the end of the three minute Harvest Cycle, the Timer cam will push the actuator arm of the microswitch IN. If the Bin Thermostat is still CLOSED, a whole new cycle will begin. If the Bin Thermostat is OPEN, the Icemaker will shut OFF at this time.

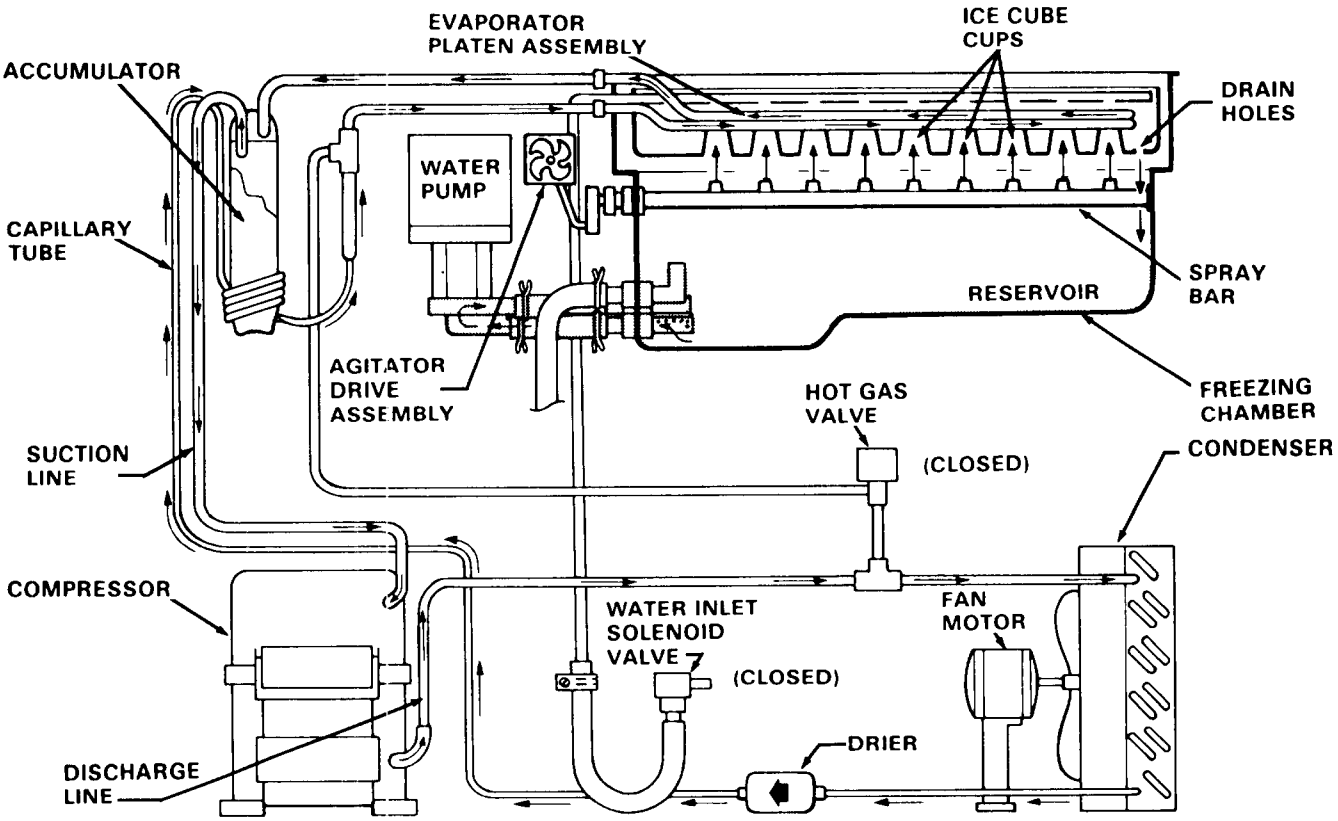

Freezing Cycle

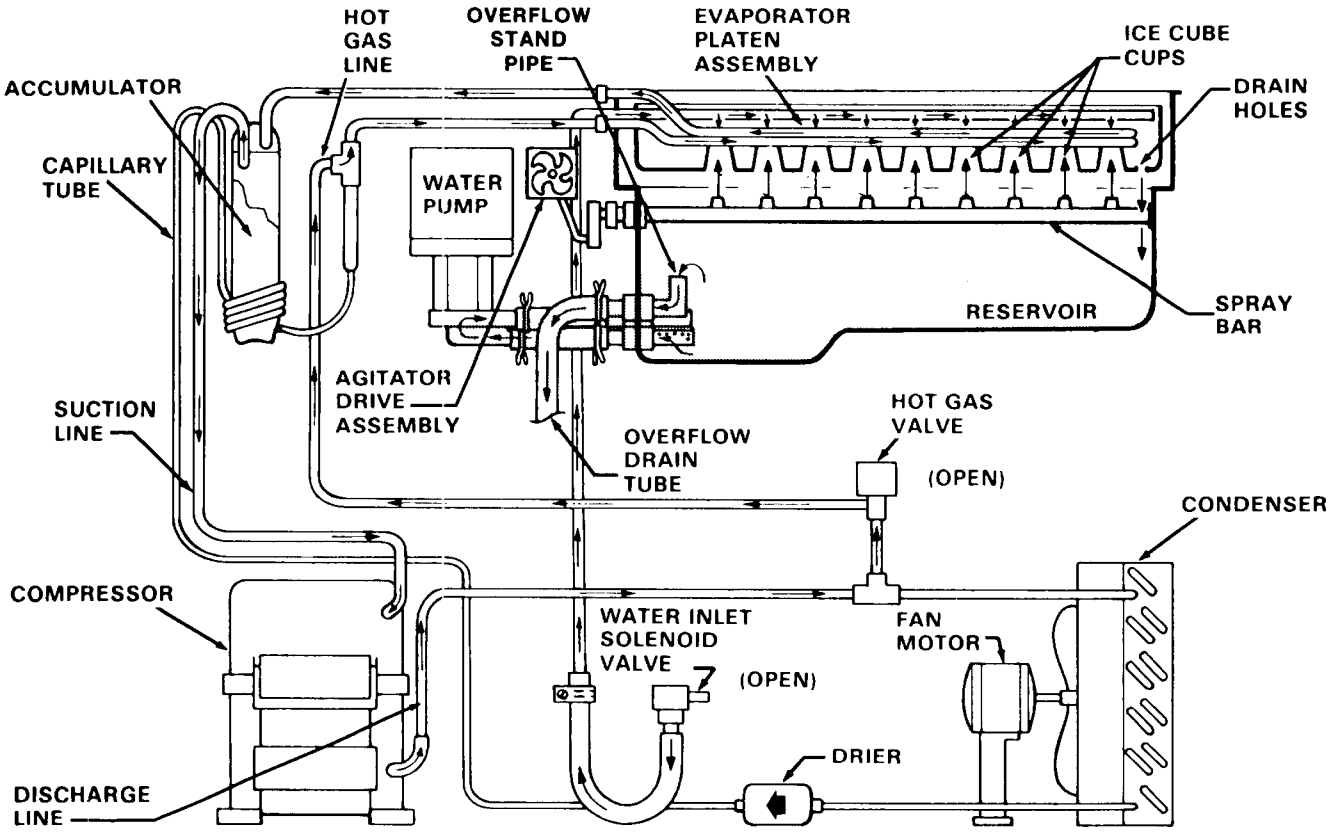

1. On Air-Cooled Models, the Water Pump Motor and Fan Motor may cycle intermittently during the Harvest Cycle.

   On Water-Cooled Models, the Water Pump Motor is OFF during the Harvest Cycle.

Harvest Cycle

ICE DISPENSING CYCLE

Moving the ice dispenser lever completes an electrical circuit to the bin drive motor. The bin drive motor rotates the agitator which pushes cubes through open ice dispense chute and cubes fall into the container. Releasing ice dispense lever opens an electrical circuit, stopping the bin dispense motor and the dispense system returns to stand by mode.

COMPONENT DESCRIPTIONS

BIN THERMOSTAT CONTROL

The Bin Thermostat Control is located to the right of the Cube Size Control on the left section of the Freezer support, above the front of the Freezing Chamber. The sensing capillary tube of the control is routed and wrapped around the Cube Chute Bulb Holder, located below the front opening of the Freezing Chamber and extending down into the ice storage bin. The Control functions to automatically SHUT OFF the Icemaker, when the ice storage bin is filled and ice contacts the capillary tube. It also signals the RESTART of the Icemaker when the capillary tube starts to warm up after ice has been removed from the bin. Factory settings are 35-degrees F. CUT-OUT and 40-degrees F. CUT-IN. ALWAYS CHECK a replacement Bin Thermostat Control BEFORE installing the Control in the Cuber. Prepare a container of ice and water and insert a thermometer. As temperature indications on the thermometer decrease to 35-degrees F., insert the capillary tube of the Bin Thermostat Control and determine temperature of CUT-OUT when an audible click is heard in the Control. Slowly add hot water to container and check audible click in the Control for CUT-IN while observing increase in temperature of water to 40-degrees F. Refer to procedure to adjust Bin Thermostat Control.

NOTE

The Bin Thermostat Control is wired through the holding relay and will not CUT-OUT the Icemaker until the end of the Harvest Cycle. Altitude adjustment should ONLY be performed on Icemakers installed at 2,000-foot level locations and ABOVE, and adjust only in increments of one-fourth turn of screw at a time.

COMPRESSOR CONTACTOR

A single-pole contactor is used to supply current to the Compressor; and, is wired so any control in the pilot circuit, such as the Bin Thermostat and High Pressure Control, etc., will cause the contactor coil to be de-energized, when the control contact OPENS, thereby breaking the circuit to the Compressor through the contactor points.

CUBE SIZE CONTROL

The temperature sensing Cube Size Control affects the length of the Freezing Cycle prior to initiating the Finishing Timer. The Cube Size Control closes its contacts when the Evaporator reaches a preset temperature, starting the Finishing Timer. A variation in either ambient air or incoming water temperature will affect the efficiency of the refrigeration system. This will vary the length of time it takes the Evaporator to reach the temperature at which the Cube Size Control is preset to CLOSE; which, in turn, will affect the overall cycle time.

NOTE

Be sure to refer to Adjustment of the Cube Size Control, BEFORE attempting to adjust the control.

FINISHING TIMER - Timer & Switch Assembly

The function of the Finishing Timer begins when activated by the Cube Size Control. The Timer controls an eight minute dual function: five minutes are programmed to finish freezing the ice cubes and the final three minute portion is for the defrost operation and harvest of the ice cubes. All electrical circuitry is connected through the printed circuit board and the Finishing Timer and shunted by the single-pole, double-throw microswitch to either the Freezing Cycle or the Harvest Cycle. The microswitch is actuated by a Cam Assembly directly connected to the Timer Motor. The Timer Cam can be adjusted to vary the defrost time, as required.

HIGH PRESSURE CONTROL - Water-Cooled Model

The High Pressure Control, a safety control, is factory set at 190 PSIG. The Control functions as a precautionary device, to shut OFF electrical power to the Icemaker, should a loss of water occur to the water-cooled Condenser. In addition to being a manual reset Control, there is an adjusting screw for raising or lowering the CUT-IN pressure.

HIGH PRESSURE FAN CONTROL-Air-Cooled Model

The High Pressure Fan Control functions only during the harvest cycle, to maintain head pressure. As an automatic reset device, the Control is mechanically connected to the refrigerant system high side; and, electrically has both the Water Pump and the Condenser Fan Motor wired into control contacts. The control settings CLOSE at 150 PSIG and OPEN at 130 PSIG. During defrost, the Control will usually cycle once, causing the Fan Motor and the Water Pump to briefly operate during this time.

HOT GAS SOLENOID VALVE

The Hot Gas Solenoid Valve functions only during the harvest cycle, to divert the hot

discharge gas from the Compressor, bypassing the Condenser and capillary tube, for direct flow to the Evaporator Platen Assembly to release ice cubes from the inverted ice cube molds. The Hot Gas Solenoid Valve is comprised of two parts, the Body & Plunger and the Coil & Frame assemblies. Installed in the discharge line of the Compressor, the energized solenoid coil lifts the valve stem within the valve body to cause the hot discharge gas to be diverted when the Finishing Timer has advanced to the start of the harvest cycle.

FINISH RELAY

The multi-function, three-pole, double-throw, plug-in relay is installed directly into a receptacle on the printed circuit board in the Control Box. The relay functions, in part, to by-pass the Bin Thermostat, to prevent the Icemaker from shutting OFF, when a filled-bin condition occurs, during the Freezing Cycle. The by-pass action serves to ensure full-sized ice cubes with each harvest cycle; and, to prevent short cycling on the Bin Thermostat. The relay also redirects the current flow through the High Pressure Fan Control to the Condenser Fan Motor and the Water Pump during the harvest cycle.

SPRAY BAR ASSEMBLY

The Spray Bar Assembly is designed to channel recirculating water to twelve water jets for uniformly spraying the water into the inverted ice cube cup molds.

NOTE

Refer to CLEANING - Icemaker; and, for problems requiring removal of parts refer to details for removing Spray Bar Assembly and associated parts.

WATER INLET SOLENOID VALVE

The Water Inlet Solenoid Valve functions only during the Harvest Cycle, when it is energized to permit a metered, one-third gallon-per-minute rate of incoming water, to flow through the Defrost Tube onto the top of the plastic Platen Assembly, assisting in the harvest of ice cubes. The water drains through holes in the Platen Assembly into the Reservoir in the lower section of the Freezing Chamber; and there, the water is recirculated through the Water Pump for return to the Spray Bar Assembly.

WATER REGULATOR VALVE - Water-Cooled Models

The Water Regulator Valve functions to maintain a constant head pressure, by regulating the amount of incoming water flow through the Condenser, on water-cooled models. The valve operates through the refrigerant system high side pressure. Rotating the adjusting screw, located on top of the valve, can INCREASE or DECREASE the operating head pressure.

NOTE

When installing a replacement Water Regulator Valve, be sure the replacement valve is installed with the arrow positioned in the direction of the water flow.

REFRIGERANT CHARGE

MODEL	MCD200 Refrig. Chg.
Air-Cooled	26 oz. R-12 (Approx.)
Water-Cooled	25 oz. R-12 (Approx.)

NOTE

Always CHECK NAMEPLATE on individual Icemaker for specific refrigerant charge, BEFORE charging the refrigeration system. The above listed refrigerant charges are approximate charges for the MCD200 Cuber Dispenser, however it is important to CHECK NAMEPLATE for each Icemaker, especially when there are different Compressors.

MCD200C
ADJUSTMENT AND REMOVAL AND REPLACEMENT PROCEDURES

The procedures provided in this Section are arranged in alphabetical order, to make specific Adjustment and Removal and Replacement information easy to locate.

Read the instructions thoroughly before performing any Adjustment or Removal and Replacement Procedures.

ADJUSTMENT OF THE BIN THERMOSTAT CONTROL

The control for the Bin Thermostat is the Temperature Control, located to the right of the Cube Size Control on the left Section of the Gasket Support above the front of the Freezing Chamber.

WARNING

The adjusting screws on the Temperature Control device have very sensitive response to adjustment. DO NOT atternpt to adjust the screw until after thoroughly reading and understanding the following instructions and illustrations. Over-adjusting or erratic guessing, can foul the instrument and cause ultimate delay and part replacement, WHICH COULD HAVE BEEN PREVENTED.

Adjustment for ALTITUDE CORRECTION should only be performed for installations at 2000-feet and ABOVE. Carefully adjust only in one-fourth turn of screw at a time. NO ALTITUDE CORRECTION adjustments should be performed BELOW the 2000-feet level.

See Figure 4-1 for location and direction of rotation, clockwise (CW) or counterclockwise (CCW), of the adjusting screw on the Temperature Control, in the particular Control Box the adjustment is to be performed.

ADJUSTMENT OF THE CUBE SIZE CONTROL

CAUTION

BEFORE performing actual adjustment to the Cube Size Control, check other possible causes for cube size problems, refer to Section VI, SERVICE DIAGNOSIS for problem review and analysis.

DO NOT perform adjustment when a new Cube Size Control is installed, until the control bulb has been properly installed in the tube well, on the refrigerant tube of the Platen Assembly and the Icemaker has progressed through several complete freezing and harvest cycles, to observe size and quality of ice cubes and whether or not a cube size problem exists.

As a reverse acting temperature control, adjustment on the Cube Size Control is performed to either cause larger sized ice cubes or smaller sized ice cubes to be produced.

IF ICE CUBES ARE SHALLOW SIZE (Indentation is too deep):

1. Locate the Cube Size Control to the left of the Temperature Control, the left Section of the Gasket Support Bracket above the front opening of the Freezing Chamber.
2. Rotate the adjusting screw one-eighth of a turn CLOCKWISE toward COLDER.
3. Observe size of ice cubes in next two ice cube harvests and repeat step 2 above, in one-eighth turn increments, until proper ice cube size is achieved.

IF ICE CUBES ARE OVERSIZE (Indentation is too full):

1. Locate the Cube Size Control under the left Section of the Gasket Support bracket above the front opening of the Freezing Chamber.
2. Rotate the adjusting screw one-eighth of a turn COUNTERCLOCKWISE toward WARMER.
3. Observe size of ice cubes in next two ice cube harvests and repeat step 2 above, in one-eighth turn increments, until proper ice cube size is achieved.

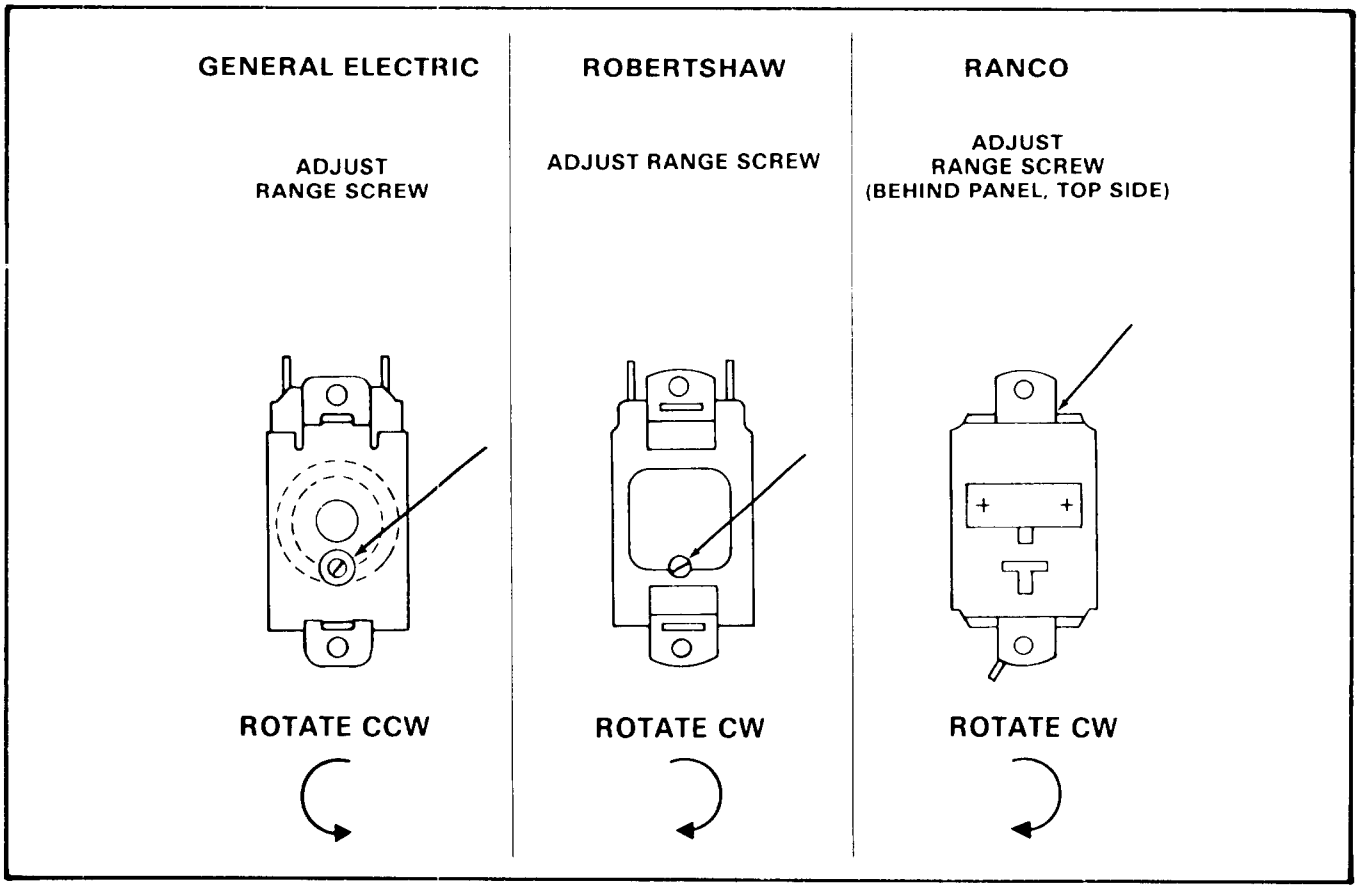

Adjustment of the Temperature Control.

ADJUSTMENT OF THE TIMER & SWITCH ASSEMBLY

The Timer & Switch Assembly is factory set, so that one complete revolution of the cam on the Timer represents eight minutes. Six minutes comprise the freezing cycle event during cam rotation, and the final two minutes program the defrost and harvest cycle. Rotating the shaft of the Timer Cam, CLOCKWISE will allow positioning the actuator arm of the microswitch on the cam at the selected start position for either the freezing cycle or harvest cycle, as required, during the START UP procedures and in the CLEANING instructions. Rotating the shaft COUNTERCLOCKWISE will unscrew the shaft from the threaded stud on the Timer Cam.

To Adjust the Timer Switch Assembly:

HARVEST CYCLE: Slowly rotate the shaft of the Timer & Switch Assembly, located in the hole in the front of the Control Box Cover, CLOCKWISE, until the actuator arm on the microswitch drops off of the outer cam into the cam slot. An audible click can be heard, but in a noisy area, look at the cam and switch to observe the event.

FREEZING CYCLE: Slowly rotate the shaft of the Timer & Switch Assembly, located in the hole in the front of the Control Box Cover, CLOCKWISE, until the actuator arm on the microswitch rides up out of the cam slot to the start of the surface of the outer cam.

ADJUSTMENT OF THE WATER REGULATOR ASSEMBLY

The correct head pressure on Water-Cooled models is 135 PSIG. Adjustments can be performed on the Water Regulator Assembly to increase or decrease head pressure.

To Adjust Water Regulator Assembly:

To INCREASE the Head Pressure: Rotate the adjusting Screw, on the Water Regulator Assembly COUNTERCLOCKWISE.

To DECREASE the Head Pressure: Rotate the adjusting Screw, on the Water Regulator Assembly CLOCKWISE.

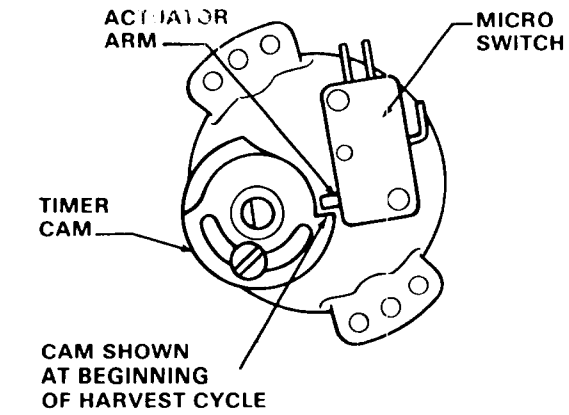

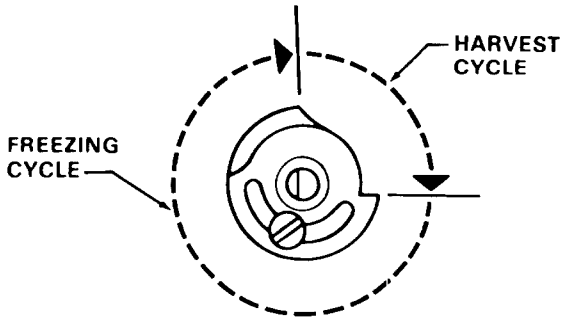

CAM SHOWN DIVIDED INTO TYPICAL FREEZING & HARVEST CYCLES.

Adjustment of the Timer & Switch Assembly.

WARNING

Be sure the electrical power supply and the water supply are OFF, BEFORE starting any of the following REMOVAL AND REPLACEMENT procedures as a precaution to prevent possible personal injury or damage to equipment.

REMOVAL AND REPLACEMENT OF THE AGITATOR DRIVE ASSEMBLY

To Remove the Agitator Drive Assembly:

1. Remove screws and the top Lid Assembly.
2. Remove two screws and tilt the top of the Front Panel out slightly, then lift the Panel off of the two alignment pins on the front of the Dispenser.
3. Remove three screws and the Channel Cover from the Channel, to gain access to remove the single screw attaching the Channel to the Agitator Cover. Tag or otherwise identify the electrical leads to the Agitator and disconnect.
4. Remove three screws, lockwashers and washers attaching the Support Bracket to the bottom of the Agitator Box Assembly; then, slide the Support Bracket to the left and off of the shaft of the Spray Bar Journal.
5. Remove the screws from each end of the Gasket Support and the screws attaching the top side and rear flanges of the Freezing Chamber to the sides and rear of the foamed bin wall liner.
6. Unsnap one of the End Linkage connectons of the Linkage Assembly; then, carefully lift the Freezing Chamber and attached Platen Assembly and Gasket Support, so the right end lifts clear of the right bin wall just enough to allow the left end of the Gasket Support to be lowered a couple inches or so, which will widen the space at the left end of the Freezing Chamber enough for removal of the Agitator Drive Assembly.
7. Remove two screws attaching the flange of the Agitator Box Assembly and a bonding strap to the left wall of the bin liner; then, carefully remove the Agitator Drive Assembly from the Dispenser.

NOTE

During this removal step, the Bushing inside the Channel will disconnect from the Agitator Cover. Reinsert during reassembly.

B. To replace the Agitator Drive Assembly, reverse the removal procedure.

REMOVAL AND REPLACEMENT OF THE COMPRESSOR ASSEMBLY

NOTE

Always install a replacement Drier, any time the sealed refrigeration system is opened. Do not replace the Drier until all other repair or replacement has been completed.

To Remove the Compressor Assembly:

1. Remove screws and the Left Side Panel and the Rear Panel.
2. Disconnect the leads at the Compressor Junction Box, that originate from the Control Box.
3. Bleed off or blow the refrigerant charge through the Schrader valve.

4. Unsolder and disconnect both the suction line and the discharge line from the Compressor.
5. Unsolder the process header tube from the Compressor and retain for installation on the replacement Compressor.
6. Remove four bolts, washers, mounting sleeves and grommets attaching the Compressor to the Chassis Base.
7. Remove the Compressor from the MCD200.

NOTE

Thoroughly evacuate the system to remove moisture and non-condensables.

To replace the Compressor Assembly, reverse the removal procedure.

REMOVAL AND REPLACEMENT OF THE CONDENSER - AIR-COOLED MODELS

NOTE

Always install a replacement Drier, anytime the sealed refrigeration system is opened. Do not replace the Drier until all other repair or replacement has been completed.

To Remove The Condenser:

1. Remove screws and the Right Side Panel and the Rear Panel.
2. Bleed off or blow the refrigerant charge through the Schrader valve.
3. Unsolder and disconnect both the inlet and outlet tubes at the Condenser.
4. Remove two screws attaching the Condenser to the Chassis Base.
5. Remove the Condenser from the MCD200.

NOTE

Thoroughly evacuate the system to remove moisture and non-condensables.

To replace the Condenser, reverse the removal procedure.

REMOVAL AND REPLACEMENT OF THE CONDENSER - WATER-COOLED MODELS

NOTE

Always install a replacement Drier, anytime the sealed refrigeration system is opened. Do not replace the Drier until all other repair or replacement has been completed.

To Remove the Condenser:

1. Remove screws and the Right Side Panel and the Rear Panel.
2. Bleed off and disconnect both the inlet and outlet tubes at the Condenser.
2. Bleed off or blow the refrigerant charge through the Schrader valve.
3. Unsolder and disconnect both the inlet and outlet tubes at the Condenser.
4. Remove two screws attaching the Consenser to the Chassis Base.
5. Remove the Condenser from the MCD200.

NOTE

Thoroughly evacuate the system to remove moisture and non-condensables.

To replace the Condenser, reverse the procedure.

REMOVAL AND REPLACEMENT OF THE CYLINDRICAL BIN AND INTERNAL PARTS

To Remove the Cylindrical Bin:

1. Remove two screws and tilt the top of the Front Panel out slightly, then lift the Panel off of the two alignment pins on the front of the Dispenser.
2. Unlock the Ice Breaker from the two brackets on the inner wall of the cylindrical Bin and remove the Ice Breaker.
3. Unscrew and remove the Cap Assembly; then, lift out the Ice Agitator Cone, Ice Agitator and Ice Agitator Assembly.
4. Unlock the two Latches at the front of the Cylindrical bin and remove the Bin from the Dispenser, using care not to contact or possibly damage the Bin Thermo capillary line and other parts.

To replace the Cylindrical Bin and internal parts, reverse the removal procedure.

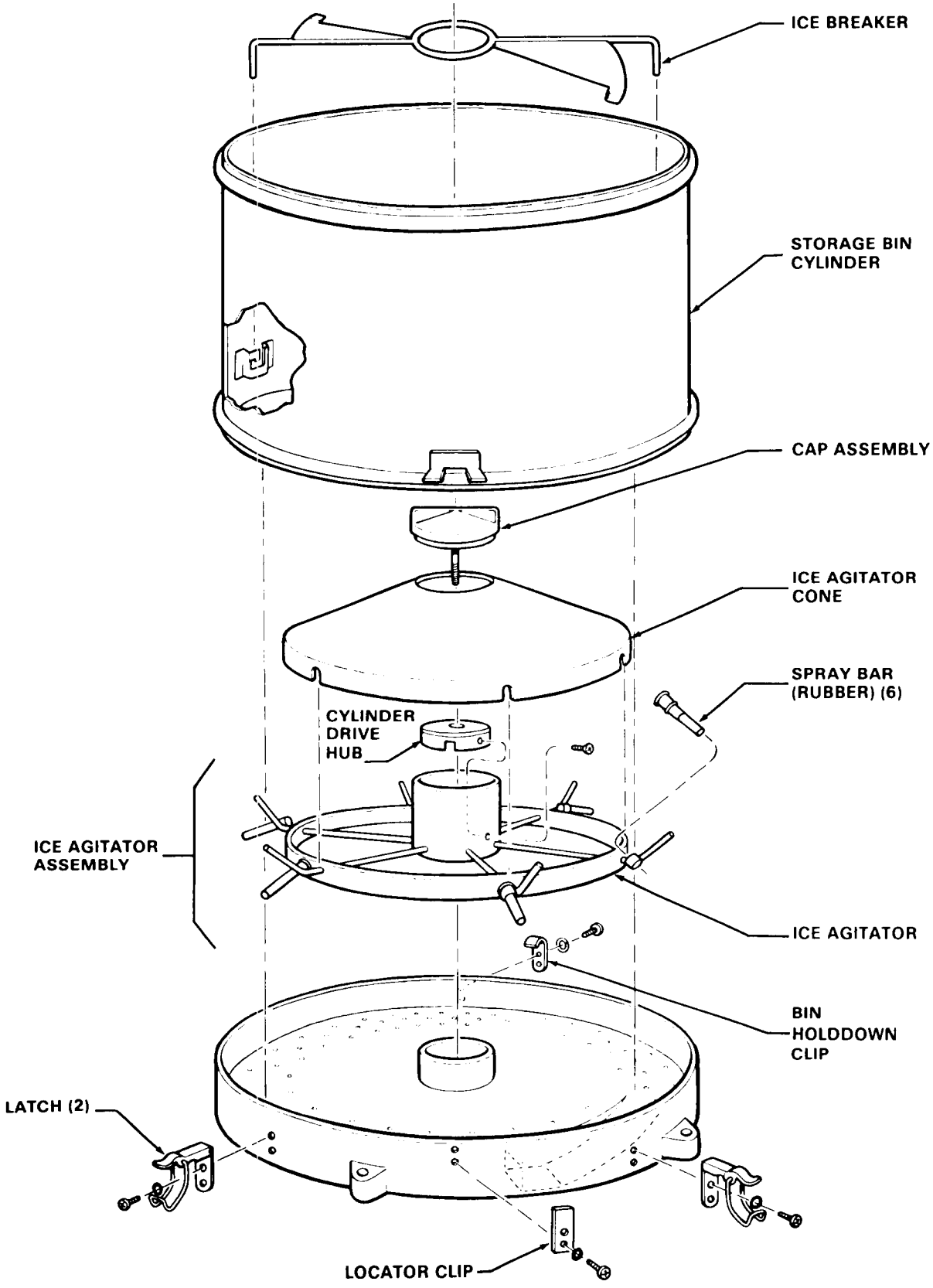

Ice Breaker, Agitator, Storage Bin - Exploded View.

REMOVAL AND REPLACEMENT OF THE DRIER

NOTE

Always install a replacement Drier, anytime the sealed refrigeration system is opened. Do not replace the Drier until all other repair or replacement has been completed.

To Remove the Drier:

1. Remove screws and the Rear Panel.
2. Remove screw and Drier Brace attaching the Drier to the Chassis Base.
3. Bleed off or blow the refrigerant charge through the Schrader valve.
4. Unsolder refrigeration lines at each end of the Drier, remove the Drier and separate the Drier from the Drier Brace.

To replace the Drier:

CAUTION

1. If the factory seal is broken on the replacement Drier, exposing it to the atmosphere more than a few minutes, the Drier will absorb moisture from the atmosphere and lose substantial ability for moisture removal.

2. Be sure the replacement Drier is installed with the arrow positioned in the direction of the refrigerant flow.

1. Remove the factory seals from the replacement Drier and install the Drier in the refrigerant lines, with the arrow positioned in the direction of the refrigerant flow.
2. Install the Drier Brace on the Drier.
3. Solder the Drier into the lines, two places.
4. Purge the system and check for leaks.
5. Thoroughly evacuate the system to remove moisture and non-condensables.
6. Charge the system with refrigerant, by weight. SEE NAMEPLATE.
7. Replace the Rear Panel and attaching screws.

REMOVAL AND REPLACEMENT OF THE DRIVEMOTOR ASSEMBLY

To Remove the Drivemotor Assembly:

1. Remove two screws and tilt top of the Front Panel out slightly, then, lift the Panel off of the two alignment pins on the front of the Dispenser.
2. Pull the Sink and Splash Panel out and remove from the Dispenser.
3. Remove screws and the Rear Panel from the Dispenser.
4. Remove and retain the screw and lockwasher attaching the left end of the Control Box Assembly to the Dispenser Base; then, loosen the screw at the right end of the Control Box Assembly.
5. Use extra care not to damage or pull loose the capillary line and pivot the left end of the Control Box Assembly out, far enough to allow removal of the Gearmotor Mounting Bracket and Drivemotor Assembly in the next steps.
6. Remove and retain two screws attaching the Hot Gas Valve and Bracket to the rear of the Gearmotor Mounting Bracket.
7. Remove and retain three screws and lockwashers from each end of the Gearmotor Mounting Bracket and lower the Bracket and Drivemotor Assembly to disengage the Drivemotor coupling shaft from the Bin Shaft Assembly.
8. Carefully work the Gearmotor Mounting Bracket and Drivemotor Assembly out through the opening provided by pivoting the left end of the Control Box Assembly.

To replace the Drivemotor Assembly, reverse the removal procedure.

REMOVAL AND REPLACEMENT OF THE FAN MOTOR ASSEMBLY - AIR-COOLED MODELS

NOTE

Before beginning this procedure, observe the Fan Blade position on the shaft of the Fan Motor and mark the Fan Blade, so it will be correctly positioned during reassembly. Direction of air flow should be toward the Fan Motor.

To Remove the Fan Motor Assembly:

1. Remove screws and the Rear Panel from the Dispenser.
2. Disconnect the two electrical leads from the Fan Motor from inside the Control Box Assembly.
3. Remove two screws and lockwashers from each leg of the Fan Mounting Bracket and remove the Fan Motor and Bracket out the rear of the Dispenser.
4. Remove the nut from the end of the Fan Motor Shaft and remove the Fan Blade.
5. Remove four screws securing the Fan Motor to the Fan Mounting Bracket and separate the Fan Motor from the Bracket.

To replace the Fan Motor Assembly, reverse the removal procedure.

REMOVAL AND REPLACEMENT OF THE FREEZING CHAMBER, PLATEN ASSEMBLY AND SPRAY BAR ASSEMBLY

NOTE

Always install a replacement Drier, anytime the sealed refrigeration system is opened. Do not replace the Drier until all other repair or replacement has been completed.

To Remove:

1. Remove two screws and tilt the top of the Front Panel out slightly, then lift the Panel off of the two alignment pins on the front of the Dispenser.
2. Remove screws and the top Lid Assembly, and the Rear Panel from the Dispenser.
3. Remove hose clamp and Tygon tube from the lower end of the Defrost Tube and drain water at rear of the Dispenser.
4. Slide the Styrene Sheet off the top of the Platen Assembly; then, lift the Defrost Tube out the top of the Dispenser.
5. Carefully remove the coiled capillary bulb from the Bulb Holder Clip(s) attached to the inlet line of the Platen Assembly; and position out of the remaining work area.
6. Bleed off or blow the refrigerant charge through the Schrader valve.
7. Unsolder both the inlet and outlet refrigerant lines at the Platen Assembly and lift the Platen Assembly out of the top of the Freezing Chamber.
8. Remove the Curtain Assembly, and the Left and Right Cube Chutes from the Freezing Chamber.
9. Remove two Wingnuts and Retainers and unclip the Bulb Holder Assembly from the lower front opening of the Freezing Chamber, and carefully position the capillary and Bulb Holder Assembly out of the work area.
10. Unsnap the lower end Linkage connected to the Linkage Arm secured to the shaft of the Spray Bar Journal.
11. Remove hose clamps connecting Tygon tubes to four Female Tubes and the Drive Shaft Housing Assembly at the lower left section of the Freezing Chamber; then, work each tube loose allowing any water to drain into the Cylindrical Bin.
12. Remove the Retaining Clip, Spray Bar End, O-Ring, and the Spray Bar from the Freezing Chamber; then, remove the Spray Bar Plug and O-Ring from the end of the Spray Bar.
13. Remove three screws, lockwashers and washers attaching the Support Bracket to the bottom of the Agitator Box Assembly; then, slide the Support Bracket to the left, off of the shaft of the Spray Bar Drive Journal.
14. Remove screws attaching the upper rear and right flanges of the Freezing Chamber to the rear and right side Bin Liner walls and the front flange and the two Tube Clips to the Gasket Support; then, remove the Freezing Chamber.
15. Unscrew four Female Tubes and O-Rings from the left outside of the Freezing Chamber, connected to two Male Tubes, one Pump Pick-up Tube and one Stand Pipe, installed from inside the Freezing Chamber.

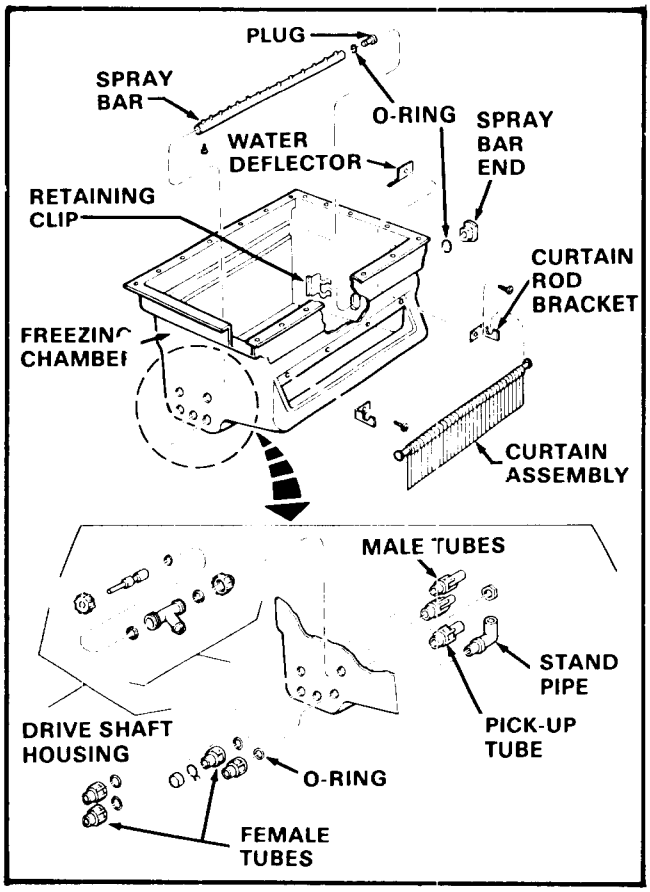

Freezing Chamber - Exploded View.

16. Unscrew the Hex Nut, inside the Freezing Chamber, and remove the Drive Shaft Housing Assembly.
17. Disassemble the Drive Shaft Housing Assembly for inspection. Replace any cut, torn or badly worn O-Rings or Water Seals.

To replace, reverse the removal procedure.

REMOVAL AND REPLACEMENT OF THE SINK AND SPLASH PANEL ASSEMBLY

To Remove the Sink and Splash Panel Assembly:

1. Pull the Sink and Splash Panel out and remove them from the Dispenser.
2. Remove and inspect the O-ring on the Sink Drain fitting and inspect and replace if cut, torn or worn. Apply coating of petroleum jelly on O-ring when replaced on Sink Drain Fitting.

To replace the Sink and Splash Panel Assembly, reverse the removal procedure.

REMOVAL AND REPLACEMENT OF THE WATER PUMP ASSEMBLY

To Remove the Water Pump Assembly:

1. Refer to Removal and Replacement of the ice storage Cylindrical Bin and Internal Parts.
2. Remove screws and the top Lid Assembly.
3. Lift and remove the ends of the Curtain Assembly from the Curtain Rod Brackets, at the front opening of the Freezing Chamber.
4. Remove screws attaching the top rear, right and front flanges of the Freezing Chamber to the bin liner walls and the cross-member Support Gasket; and, two screws at each end of the Support Gasket and one screw attaching Bonding Strap.
5. Remove the Left and Right Cube Chutes from within the Freezing Chamber.
6. Remove the Retaining Clip and Spray Bar End from the right wall of the Freezing Chamber; then, move the Spray Bar to the right and remove the Spray Bar from the Drive Shaft Housing Assembly.
7. Remove single screw and the Channel Cover from the wire Channel housing.
8. Remove the screws that attach the bottom of the Channel to the top of the Water Pump Enclosure and the Agitator Cover.
9. Unsnap the End Linkage, connecting the Linkage Assembly to the Linkage Arm on the Drive Journal, at the left wall of the Freezing Chamber.
10. Remove hose clamps connecting Tygon tubes to four Female Tubes and the Drive Shaft Housing Assembly at the lower left section of the Freezing Chamber; then, work each tube loose allowing any water to drain into the Bin Liner.
11. Remove three screws, lockwashers and washers attaching the Support Bracket to the bottom of the Agitator Box Assembly; then, slide the Support Bracket to the left, off of the Spray Bar Drive Journal.
12. Remove two screws attaching the Bonding Strap and Agitator Box Assembly to the Bin Liner left wall.
13. Remove two screws attaching the Bonding Strap and the flange of the Pump Mounting Bracket to the Bin Liner left wall.
14. Carefully move the Freezing Chamber slightly up and to the right just enough to allow the Water Pump Assembly to be removed; then, remove the Water Pump Assembly.
15. Remove screws and separate the Pump Enclosure, Pump Mounting Bracket and the Pump Box Bracket from the Water Pump.
16. Disassemble the Water Pump for inspection and replacement of worn or defective parts.

To replace the Water Pump Assembly, reverse the removal procedure.

REMOVAL AND REPLACEMENT OF THE WATER REGULATOR ASSEMBLY - WATER-COOLED MODELS

NOTE

Always install a replacement Drier, anytime the sealed refrigeration system is opened. Do not replace the Drier until all other repair or replacement has been completed.

To Remove the Water Regulator Assembly:

1. Remove screws and the Rear Panel from the Dispenser.
2. Bleed off or blow the refrigerant charge through the Schrader valve.
3. Unsolder the capillary tube from the Water Regulator Assembly, where connected at the process header.
4. Disconnect the water inlet line at the rear of the Water Regulator.
5. Disconnect the Condenser water inlet tube at the front of the Water Regulator.
6. Remove two screws and lockwashers which attach the Water Regulator Assembly bracket to the Chassis Base and remove the Water Regulator and bracket from the Dispenser.

NOTE

Thoroughly evacuate the system to remove moisture and non-condensables.

To replace the Water Regulator Assembly, reverse the removal procedures.

MCD200C
SERVICE DIAGNOSIS

The Service Diagnosis Section is for use in aiding the serviceman in diagnosing a particular problem for pin-pointing the area in which the problem lies, thus an ever available reference for proper corrective action.

The following charts list corrective actions for the causes of known symptoms of certain problems that can occur.

SYMPTOM	POSSIBLE CAUSE	CORRECTION
Irregular size cubes and some cloudy.	Some jets plugged.	Clean jets.
	Shortage of water.	See Shortage of water CORRECTION.
	Unit not level. Water overflowing vent holes on low side, burning cubes.	Level cabinet, as required.
	Spray Bar linkage out of adjustment.	Adjust for full ice cube spray coverage.
Cubes too large.	Cube Size Control set too cold.	Rotate Cube Size Control dial toward WARMER.
Cubes too small.	Cube Size Control set too warm.	Rotate Cube Size Control dial toward COLDER.
	Partially restricted capillary tube.	Blow refrigerant charge; replace drier; evacuate system; add refrigerant charge.
	Moisture in system.	Same as above CORRECTION.
	Shortage of water.	See Shortage of water CORRECTION.
	Loss of refrigerant.	Check for refrigerant leaks, correct leaks; recharge system.
Cloudy Cubes.	Shortage of water.	See Shortage of water SYMPTOM.
	Dirty water supply.	Install water filter or softener.
	Accumulated impurities.	Use SCOTSMAN Ice Machine Cleaner.
Shortage of water.	Water spraying out through curtain.	Hang curtain in proper position.
	Water solenoid not opening.	Repair or replace solenoid.
	Water leak in sump area.	Locate leak and repair or correct condition.

MCD200C
SERVICE DIAGNOSIS

SYMPTOM	POSSIBLE CAUSE	CORRECTION
Decreased ice capacity.	Defective compressor.	Replace compressor.
	Leaky water valve.	Repair or replace valve.
	High head pressure, result of dirty condenser or faulty Fan Motor.	Clean condenser. Repair or replace Fan Motor.
	Non-condensable gas in the system.	Purge the system.
	Poor air circulation or extreme hot location.	Relocate the cabinet; or, provide ventilation by cutting openings.
	Overcharge of refrigerant.	Slowly purge off to correct charge.
	Hot gas solenoid valve leaking.	Replace valve.
	Partially restricted capillary tube.	See Cubes too small CORRECTION.
	Restrictor clogged or missing.	Clean or replace restrictor.
Poor harvests.	Too short defrost time.	Check and adjust harvest cycle. Check Timer two-minute setting.
	Restriction in water inlet line.	Check strainer and flow check valve. DO NOT remove flow control washers.
	Hot gas solenoid does not open.	Binds or burned out. Replace.
	Plugged air vent holes in upper part of cube cups.	Clean out air vent holes.
Icemaker does not harvest.	Water pressure too low.	Check for 20 PSI flowing water.
Compressor cycles intermittently.	Low voltage.	Check for circuit overload. Check building supply voltage, if low, contact power company.
	Dirty condenser.	Clean condenser with vacuum cleaner or brush. NO WIRE BRUSH.
	Air circulation blocked.	Locate cabinet with adequate air space for proper air flow.
	Defective Fan Motor.	Replace Fan Motor.
	Non-condensable gases in system.	Purge the system.
Icemaker will not operate.	Blown fuse in line.	Replace fuse and check for cause.
	Master switch in OFF position.	Set switch to ON position.
	Faulty Master switch.	Replace Switch.
	Timer contacts open.	Replace Timer microswitch.
Ice cubes stuck together in Bin.	Ice Breaker missing in Bin.	Install Ice Breaker in Bin.
	Infrequent operation of dispenser.	Dispense ice more frequently.

MCD200C
SERVICE DIAGNOSIS

SYMPTOM	POSSIBLE CAUSE	CORRECTION
Does not dispense ice cubes.	Defective Ice Vend switch.	Replace Ice Vend switch.
	Defective Agitator Motor	Replace defective motor.
	Agitator Motor is OUT on thermal overload - too hot.	Let motor COOL.
	Master switch is in OFF position.	Move switch to ON position.
	Ice Vend switch connector contact incomplete.	Check all plug contacts mate and seat properly.
Shutter does not fully close over ice chute opening.	Ice cube lodged between Shutter and Chute.	None required. Ice will melt and spring linkage will close Shutter.
Ice cubes continuously dispensed.	Vend Switch stuck closed.	Replace Switch.

MCD200C
MAINTENANCE & CLEANING INSTRUCTIONS

GENERAL

The periods and procedures for maintenance and cleaning are given as guides and are not to be construed as absolute or invariable. Cleaning especially will vary, depending upon local water conditions and the ice volume produced; and, each icemaker must be maintained individually, in accordance with its own particular location requirements.

ICEMAKER

THE FOLLOWING MAINTENANCE SHOULD BE SCHEDULED AT LEAST TWO TIMES PER YEAR ON THIS ICE-MAKER. CALL YOUR AUTHORIZED SCOTSMAN SERVICE AGENCY.

1. Check and clean or service any optional water treatment devices, if any installed.
2. Check that the Dispenser is level, in side-to-side and front-to-rear directions.
3. Clean the water system Evaporator, Freezing Chamber Reservoir and Spray Bar, using a solution of SCOTSMAN Ice Machine Cleaner. Refer to CLEANING-Icemaker.

NOTE

Cleaning requirements vary according to local water conditions and individual user operation. Continuous check of the clarity of ice cubes and visual inspection of the water spray bar and jets, before and after cleaning will indicate frequency and procedure to be followed in local areas.

4. Check that the ends of all the plastic parts of the Curtain Assembly hang down, contacting the front edges of the two Cube Chutes.
5. Check and tighten all bolts.
6. Check and tighten all electrical connections.
7. Check Hot Gas Solenoid Valve for correct operation and high pressure controls for cut-in and cut-out pressures.
8. With Icemaker and Fan Motor OFF on Air-Cooled Models, clean Condenser, using vacuum cleaner, whisk broom or brush. Instruct customer to clean frequently.
9. Check that Fan Blades move freely, are not touching any surfaces and are not bent or out of balance. Wipe Fan Blades clean of grease or dirt.
10. Check for refrigerant leaks and tighten line connections.
11. Check for water leaks and tighten drain line connections. Pour water down Bin drain line to be sure that drain line is open and clear.
12. Check size, condition, and texture of ice cubes. Perform adjustments as required.
13. Check Bin Thermostat Control Bulb to test shutoff. With the Icemaker in the harvest cycle, hold ice cubes on the Bulb, which should cause the Icemaker to shut OFF at the end of the harvest cycle.

NOTE

Within minutes after the ice is removed from the sensing bulb, the bulb will warm up and cause the Icemaker to restart. This control is factory set and should not be reset until testing is performed. Normal setting is about 35-degrees F. CUT-OUT and 40-degrees F. CUT-IN.

CLEANING - Icemaker

1. Remove two screws and tilt the top of the front panel out slightly, then lift the panel off two alignment pins. Remove front panel from dispenser.
2. Remove two screws and pull bottom of splash panel out to unsnap catches, sink removal may ease splash panel removal—pull out to remove sink. Remove splash panel from dispenser to locate control box.
3. Check the left end of the Control Box and move both the Master ON-OFF toggle switch and the Compressor ON-OFF toggle switch to the OFF position.
4. Rotate the shaft of the Timer & Switch Assembly, located in the hole in the front of the Control Box Cover, CLOCKWISE, until the actuator arm on the mocroswitch rides up out of the cam slot, to the outer surface of the cam, then stop. This is the start position for the freezing cycle.

WARNING

SCOTSMAN Ice Machine Cleaner contains Phosphoric and Hydroxyacetic acids. These compounds are corrosive and may cause burns. If swallowed, DO NOT induce vomiting. Give large amounts of water or milk. Call physician immediately. In case of external contact, flush with water. KEEP OUT OF THE REACH OF CHILDREN.

5. Position container under left side of Freezing Chamber, remove Hose Clamp and Rubber Cap from center Female Tube and drain water from Reservoir. Replace Rubber Cap and Hose Clamp.

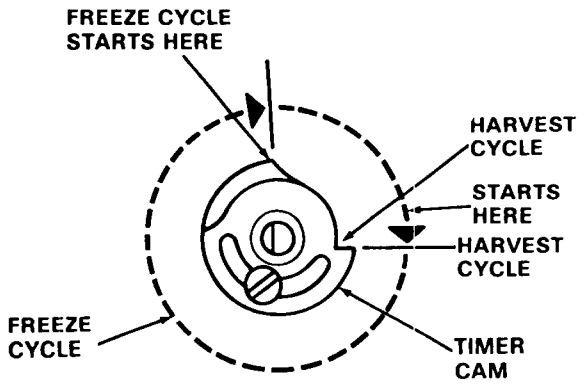

Start Positions for the Freeze/Harvest Cycles

6. Prepare cleaning solution: Mix eight ounces of SCOTSMAN Ice Machine Cleaner with six pints of fresh potable water.
7. Carefully pour the cleaning solution into the Freezing Chamber through the front opening.
8. Immediately move the Master ON-OFF toggle switch to the ON position.
9. Allow the system to operate for about twenty minutes.

NOTE

No ice cubes will be made, because the Compressor switch is OFF.

10. At end of twenty minutes, rotate the shaft of Timer & Switch Assembly, CLOCKWISE, to start a second harvest cycle. Repeat procedure to effect four complete harvest cycles.

NOTE

During each harvest cycle, fresh inlet water is introduced into the water system and acts to rinse all water-related parts and to wash away most mineral concentration through the Reservoir overflow drain.

11. Move the Compressor ON-OFF toggle switch to the ON position.
12. Check each ice cube harvest, until the ice cubes are clear and the acid taste eliminated.

WARNING

DO NOT use ice cubes produced from the cleaning solution. Be sure none remains in the Bin.

13. Add hot water to the Bin to melt the ice cubes; or, remove and discard all ice cubes.

WARNING

Use same precautions given in WARNING preceding step 5, above.

14. Prepare cleaning solution: Mix six ounces of SCOTSMAN Ice Machine Cleaner with three quarts of hot water.
15. Move both the Master ON-OFF toggle switch and the Compressor ON-OFF toggle switch to the OFF position.
16. Remove the Ice Breaker, Ice Agitator, and all Bin parts, including the Storage Bin cylinder.
17. Immerse all parts removed in the cleaning solution; or, if too large for the container of cleaning solution, thoroughly wash the solution over all surfaces of all parts.
18. Rinse all parts with clear hot water, to flush away all cleaning solution. Drain Parts.
19. Clean and rinse the Shutter mechanism, the Ice Delivery Spout, the Sink and Grill, and the Splash Panel Assembly.
20. Clean and rinse all panels and the Cabinet inner plastic surfaces.
21. Pour remainder of the hot cleaning solution into the Bin drain and the Sink drain, to flush our any deposits or unwanted substance. Rinse with clean hot water.
22. Sanitize all bins, parts and ice contact parts removed for cleaning. Refer to SANITIZING PROCEDURE.
23. Reassemble all air-dried Bin parts in the Dispenser.
24. Move both the Master ON-OFF toggle switch and the Compressor toggle switch to the ON position to restart the Icemaker.
25. Fit the two holes, in the bottom of the Front Panel, over the two alignment pins on the front of the Dispenser, and push the Panel into place, securing with two screws and replace splash panel.

SANITIZING

Sanitizing is an important phase of the icemaking and dispensing operation. the following sanitizing procedure should be performed after every repair or replacement of parts in the Dispenser, in or through which ice is stored or dispensed and water is drained. Additional requirements for performing the sanitizing procedure should be followed in accordance with the requirements of the Local Health Authorities.

NOTE

Contact your Local Health Authorities and obtain their approval of the sanitizer you intend to use when sanitizing the Dispensers.

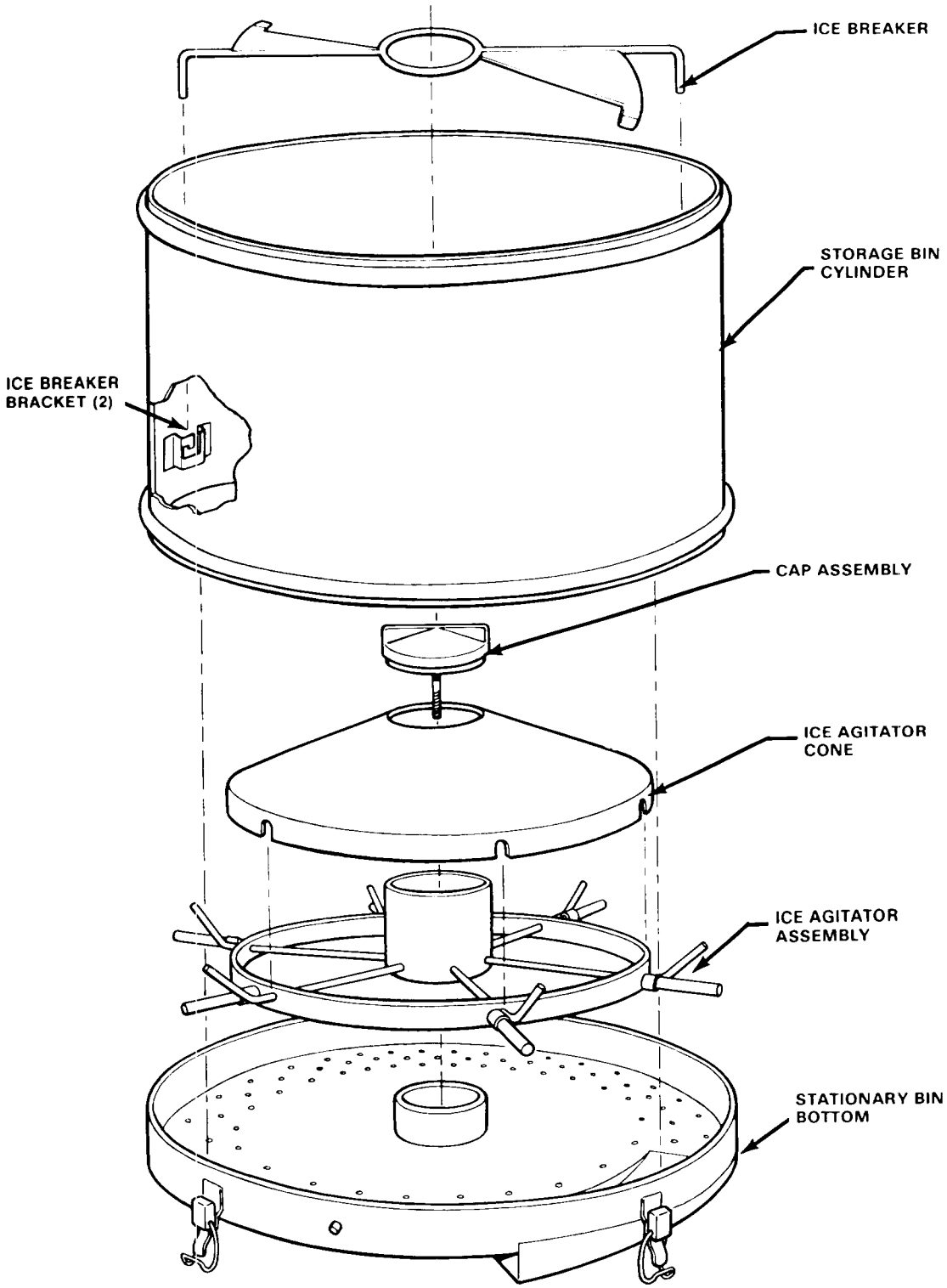

Ice Breaker, Agitator, Storage Bin - Exploded View

WARNING

Read WARNING thoroughly BEFORE preparing sanitizing solution, in next step.

1. STERILEX 3-Q SANITIZING TABLETS

DANGER: KEEP OUT OF REACH OF CHILDREN. Tablets may be harmful or fatal if swallowed. May cause skin irritation or eye damage. Avoid prolonged skin contact. Do not get in eyes. In case of contact, flush with plenty of water. If irritation persists get medical attention. Avoid contamination of food.

FIRST AID: If tablets are swallowed, drink promptly a large quantity of milk, egg whites or gelatin solution. Avoid alcohol.

NOTE TO PHYSICIAN: Probable mucosal damage may contraindicate the use gastric lavage. Measures against circulatory shock, respiratory depression and convulsion may be needed. Rinse empty carton container thoroughly with water and discard. Always follow your health department regulations.

2. MIKRO-QUAT

DANGER: Causes high damage and skin irritation. Do not get in eyes, on skin, or on clothing. Protect eyes when handling concentrated product. Harmful if swallowed. Avoid contamination of food.

FIRST AID: In case of contact, immediately flush eyes or skin with plenty of water for at least 15 minutes. For eyes, call a physician. Remove and wash contaminated clothing before reuse. If swallowed, drink promptly a large quantity of milk, egg whites or gelatin solution or if these are not available, drink a large quantity of water. Call a physician immediately.

1. Prepare a sanitizing solution using a quaternary ammonium sanitizing compound.

NOTE

1. *Carefully follow directions and observe all precautions on the sanitizing compound container.*
2. *One *Sterilex 3-Q sanitizing tablet per three quarts of water yields 200 ppm active quaternary; or, one-third ounce of *Mikro-Quat to one gallon of water yields 235 ppm active quaternary.*
3. *The taste of ice and water will not be affected by the sanitizing of parts using the above mixed sanitizing solutions. Rinsing of parts is not required with this relatively mild solution, but air drying of the parts is suggested before reassembly.*
2. Immerse all parts, earlier removed and cleaned, in the sanitizing solution; or, if too large for the container of sanitizing solution, thoroughly wash the solution over all surfaces of all parts.
3. Drain all parts and allow to air dry.
4. Pour some of the sanitizing solution into the Bin drain and the Sink Assembly drain. Observe drains for proper operation.
5. Reassemble all air-dried Bin parts in the Dispenser.
6. Move both ON-OFF toggle switches on the left end of the Control Box, to the ON position. Replace back splash panel.
7. Fit the two holes, in the bottom of the Front Panel, over the two alignment pins on the front of the Dispenser, and push the Panel into place, securing with two screws.
8. Clean and sanitize the interior Bin parts and surfaces each week.

* *Sterilex 3-Q sanitizing tablets are distributed by Pittsburgh Chemical Laboratory, Inc., Pittsburgh, PA 15222, and may be obtained through most restaurant supply houses.*

* *Mikro-Quat, is manufactured by Economics Laboratory, Inc., Osborn Building, St. Paul, MN 55102, and may be obtained from them through their Magnus Division. The Klenzade Division, or from restaurant supply houses.*

CHLORINATION OF STAINLESS STEEL BIN LINERS

The stainless steel liner of a bin will require periodic cleaning. Chemicals in the water supply, such as chlorine, can cause brown staining to appear on the surface of stainless steel. The brown stains should be removed immediately to avoid deterioration of the metal. Chlorine gas, coming off the ice in the bin will combine with water vapor and condense on the liner walls as a mild HYDROCHLORIC ACID. This is what may pit the stainless steel.

The brown stains will appear at the top of the side or rear walls of the bin liner. Lower portions of the walls stay clean, due to the "washing" action of water from melting ice draining down them.

To prevent the staining from causing pitting of the stainless steel, the bin liner should be cleaned every three to six months. More frequent cleaning may be required depending on water conditions.

1. General Cleaning — when the staining is light, it can usually be removed by washing with ordinary cleaning powder, such as Bon-Ami or Copper-Glo and water. (Do not use cleaners that contain bleaching agents as most of these are compounds of chlorine.) After cleaning, rinse thoroughly with clear water.

   It may be necessary to use a stainless steel wool to remove bad stains. DO NOT USE plain steel wool, as the steel particles will get imbedded in the liner and cause more serious staining.

2. Cleaning of Heavy Deposits — If the liner has not been cleaned for a long time, and heavy deposits and pitting have occurred, a chemical cleaner may be necessary. Follow instructions printed on the container of the cleaner.

3. Protection of Stainless Steel against Further Staining — After the stainless steel has been cleaned, the surface should be rejuvenated. This process restores the characteristic to the surface of the stainless steel that best prevents corrosion.

   First be sure that the liner is clean and is thoroughly rinsed with water. Then use a nitric acid solution of two parts water to one part nitric acid (by volume). Swab this on the liner and allow to stand for about 30 minutes. Rinse the liner with clean water. This will then provide maximum corrosion resistance.

4. Water treatment — chlorine can be removed from the ice machine's water source. This is accomplished by installing an activated carbon filter on the ice machine's inlet water line. Please consult your local water treatment specialist, other water treatment may be advised due to other possible water problems.

TABLE OF CONTENTS

Table of Contents 1
Photograph and Ice Making Capacity 2
Specifications and Dimensions 3
Description 4
Preparation for Installation 5
Installation 6
Installation Practices 7
Starting the machine 8
Refrigerant Charge 8
Final Check List 8
Refrigeration Cycle 9
Water Schematic 10
Ice Discharge Tube and Bin Thermostat Installation 11
Wiring Diagram – Air Cooled 12
Wiring Diagram – Water Cooled 13
Service Analysis 14-15
Maintenance Instructions 16
SERVICE:
- Gear Motor 17
- Freezer Assembly 17
- Freezer Worm Shaft 17
- Freezer Assembly Top Bearing 18
- Freezer Assembly Bottom Bearing & Water Seal 18
- Bin Thermostat 18
- Head Pressure Control (Water Cooled) 19
- Head Pressure Control (Air Cooled) 19
- Low Pressure Control 19
- Water Regulating Valve (Water Cooled Models) 19
- Water Reservoir 19

PARTS BREAKDOWN:
- Chassis Assembly – Air Cooled 20
- Chassis Assembly – Water Cooled 21
- Freezer Assembly 22
- Gear Motor Assembly 23
- Compressor Assembly 24
- Control Box Assembly 25
- Reservoir Assembly 26
- Cabinet Assembly 27

Flaked Ice Transport System 28-30

THIS PAGE
INTENTIONALLY
LEFT BLANK

SCOTSMAN

MODULAR FLAKER
MF3
SERIES
Continuous Flow

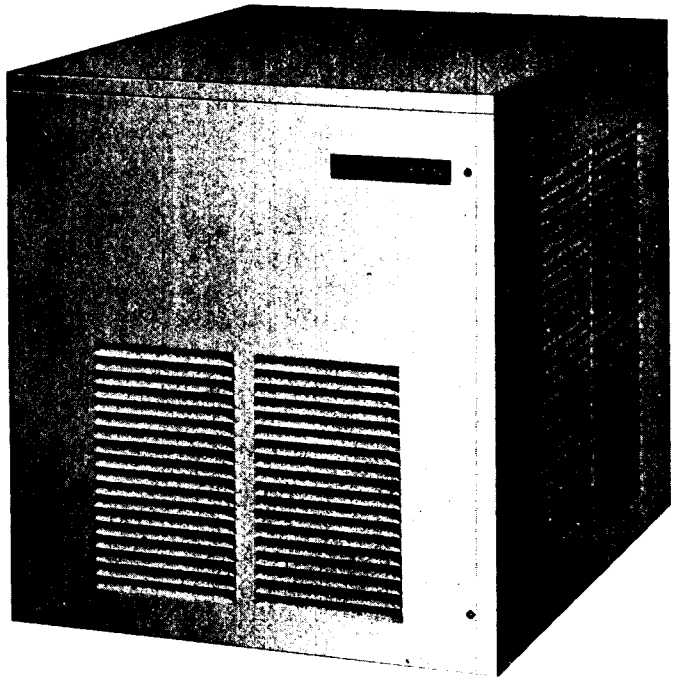

ice making capacity

Daily Ice Capacity is directly related to condenser air inlet temperature, water temperature, and age of machine.

NOTE: To keep your SCOTSMAN MODULAR FLAKER performing at it's maximum capacity, it is necessary to perform periodic maintenance as outlined on page 16 of this manual.

SPECIFICATIONS:

MF3 SERIES

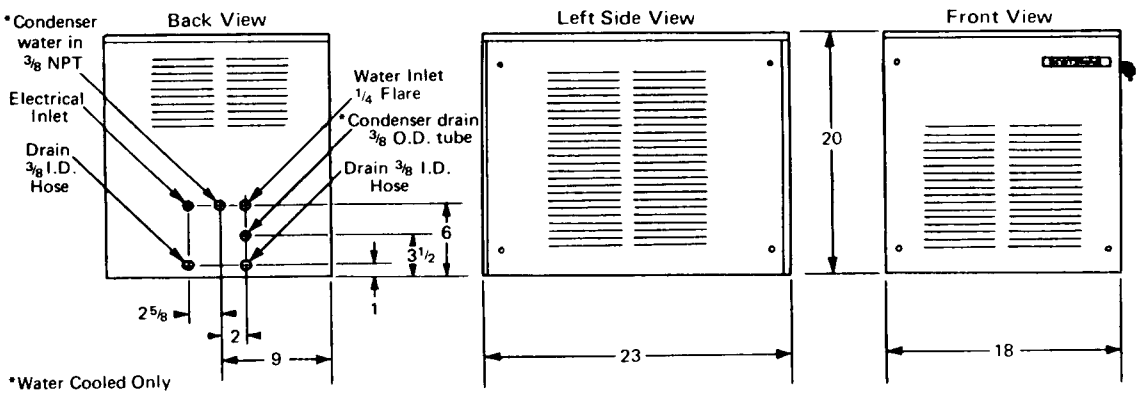

MECHANICAL	MF3AE	MF3WE
Compressor (Copelaweld)	1/2 H.P.	1/2 H.P.
Gear Drive Motor	1/10 H.P.	1/10 H.P.
Gear Drive Motor Output	10 RPM	10 RPM
Condenser	Air Cooled	Water Cooled
Refrigerant Control	Capillary Tube	Capillary Tube
Refrigerant Charge R-12	23 oz.	20 oz.
ELECTRICAL		
Basic Electricals	115/60/1	115/60/1
Minimum Wire Size	2w 12g	2w 14g
Total Amperage	11.8	11.0
Compressor Amperage	8.0	7.8
Gear Drive Motor Amperage	3.2	3.2
Condenser Fan Motor Amperage	.6	.0
WATER		
Inlet Water Line (Freezer)	1/4" Flare	1/4" Flare
Inlet Water Line (Condenser)		3/8" NPT
Water consumption – Freezer (gal/hr.)	2.5	2.5
Water consumption – Condenser (gal./mn.)		.75 to 2
Drain Line	3/8" I.D.	3/8" I.D.
Drain Line – Water Cooled Condenser		3/8" O.D.
CABINET		
Width	18"	18"
Depth	23"	23"
Height	20"	20"
Weight	176 lbs.	171 lbs.
Finish (P-Painted, SS-Stainless Steel)	P/SS	P/SS

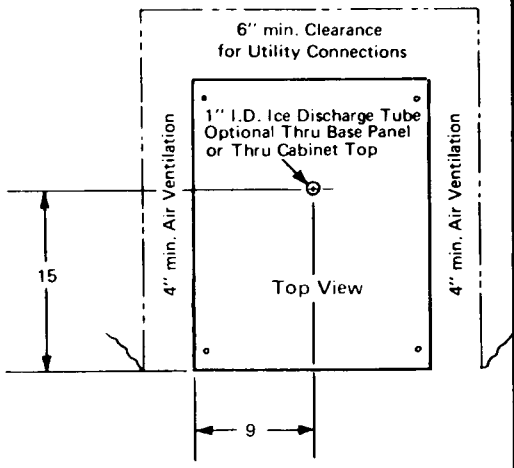

Storage Bin: B500, B750, B1000, B1500, B200, B550.

NOTE: Requires additional installation space fo
air ventilation - 4" right & left side
utility connection - 6" back side

DESCRIPTION

SCOTSMAN Modular Flakers are designed for restaurants, super markets, soda fountains, hospitals, bakeries, fish markets, poultry stores, packing plants, etc. It is the finest Ice Maker on the market today. It will work 24 hours a day for you, or only as needed. It produces the highest quality ice available at any price.

SCOTSMAN Modular Flakers are easily installed requiring only standard water, drain and electrical connections.

ATTRACTIVE COMPACT CABINET. Sandlewood or stainless steel removable panels makes for easy access to mechanical parts.

SEALED REFRIGERATION SYSTEM. Provides quiet, efficient operation of the machine. Compressor motor is internally spring mounted for quiet operation. Compressor motor is covered by a full 5-Year Warranty.

HOW IT WORKS. An exclusive patented ice-making system, wherein water in the constant level float reservoir is fed to the bottom end of the freezing cylinder and turns to ice on the inside of this cylinder. Ice from the refrigerated walls of this cylinder is extruded past the ice breaker at the top of the cylinder through a side opening by means of a stainless steel auger driven by a gearmotor drive.

Model No. MF-3 is a continuous flow type machine, and is manually started by an OFF and ON switch located inside the cabinet. Since the MF3 does not have its own attached bin, it is necessary to use an auxillary bin such as the Model SB-500 SCOTSMAN Super Bin for ice storage. A bin thermostat is mounted in each continuous flow type machine for the purpose of mounting control bulb from machine to bin.

The MF Series Flakers are also designed for remote type installations, whereby, ice can be transported from the flaker via plastic tubing to a bin located several feet away. Refer to section "Flaked Ice Transport System" for installation requirements.

SCOTSMAN MODULAR FLAKERS
PREPARATION FOR INSTALLATION

1. Select unit location prior to hook up of water drain and electrical in accordance with local and national codes. Minimum room temperatures is 50° Fahrenheit, maximum room temperature 100° Fahrenheit. On air cooled models, select well ventilated location.

2. Install bin for use with modular flaker in its permanent location following instructions included with the storage bin.

3. Level bin with adjustable legs and wipe storage bin liner clean with damp cloth.

4. After uncrating modular flaker, remove front, side and top panels and inspect for any concealed damage. Notify carrier of any concealed damage claims.

5. Before placing flaker unit on bin, holes in rubber gasket on bin top must be cut to allow passage of ice discharge tube and bin thermostat control tube into bin. This can be done by using holes in bin top as a template.

6. Remove rubber grommets from miscellaneous parts package and insert into place. A good seal must be made between grommet and base panel and between grommet and inner bin. See page 11 cutaway drawing.

7. The flaker unit may now be placed on the bin. Insure that the holes in the base panel line up with the holes in the bin top.

8. Install ice discharge tube assembly, taped to freezer body,through large grommet in base & attach to spout using groove in spout casting as guide. See page 11.

9. Attach bulb holder to ice discharge tube grommet in direction shown on page 11. Route bin control tube through smaller grommet then insert tube into tube holder as shown.

10. Thru cabinet top, locate metal reservoir. Remove water reservoir cover and take out paper packing around float ball.

11. Check motor compressor hold down nuts to insure motor compressor rides snug on mounting pads.

12. Remove water strainer from envelope for installation in water supply line feeding unit.

13. Open electrical control box cover and check unit nameplate voltage against building source voltage and make sure they correspond. Caution - Improper voltage supplied to units will void your parts replacement program.

14. Locate and tear out registration card from front of owners guide and fill out card completely including model and serial numbers as taken from aluminum plate found behind front service panel. Forward to Scotsman factory using self mailing card, for your personal registration certificate.

15. Call you local authorized Scotsman Service Agency for hook-up, start-up and check-out. He's listed under "Ice Making Machinery & Equipment" in your telephone book, yellow pages.

INSTALLATION
ELECTRICAL CONNECTIONS:
MF3AE-1A
115 Volts, 60 Cycle, 1 Phase
20 Amp. Circuit

12 Gauge wire should be used for electrical hook-up. All Scotsman Modular Flakers require a solid earth ground wire.

Be certain that the Super Flaker is on its own circuit and individually fused. The maximum allowable voltage variation should not exceed 10 per cent of the nameplate rating even under starting conditions. Low voltage can cause erratic operation and may be responsible for serious damage to the overload switch and motor windings.

All external wiring should conform to the National, State and local Electrical Code requirements. Usually an electrical permit and the services of a licensed electrician will be required.

ELECTRICAL INSTALLATION
MF3AE-1A

Compressor	1/2 HP	Copelaweld: RSF2-0050-1AA-207
		2 pole, 3500 RPM
	Voltage	115
	Amp. rating F.L.A.	10.0
	Cycle	60
	Phase	Single
Gear Drive Motor	1/10 HP	Queen Products
	Voltage	115
	Amp. Rating	4.0
	Cycle	60
	Phase	Single
		Thermally Protected

WATER SUPPLY: The recommended water supply line is 1/4 inch I.D. copper tubing for the MF3. Connect to cold water supply line with regular plumbing fittings, with a shut-off valve installed in an accessible place between supply line and machine. A water strainer must be installed with the unit and mounted with clean-out plug down. Locate the strainer next to the machine with the arrow in the direction of the flow. Most plumbing codes also call for double check valves in the supply water line, particularly for water-cooled models.

On air-cooled models the water supply line connects to the 1/4 inch flare fitting on the machine. On water-cooled models connections are made to a 3/8 inch male pipe nipple inside of the machine compartment. Incoming water goes through the water regulating valve first and then to the water-cooled condenser. Observe arrow on water regulating valve. Water supply must be installed to conform with local code. In some cases a licensed plumber and/or a plumbing permit will be required.

WARNING: This machine must not be allowed to operate when the water supply is shut off, or at below recommended water pressure. Turn master switch to 'OFF" position when water supply is off, or when water pressure is below recommended operating pressure.

DRAIN: The recommended drain from the bin is 3/8 inch OD copper tubing. Must be run to an open trapped and vented drain. If drain is a long run, allow 1/4 inch pitch per foot. Drain must be installed to conform with local code. Run separate line for condenser discharge water on water-cooled models.

INSTALLATION PRACTICES

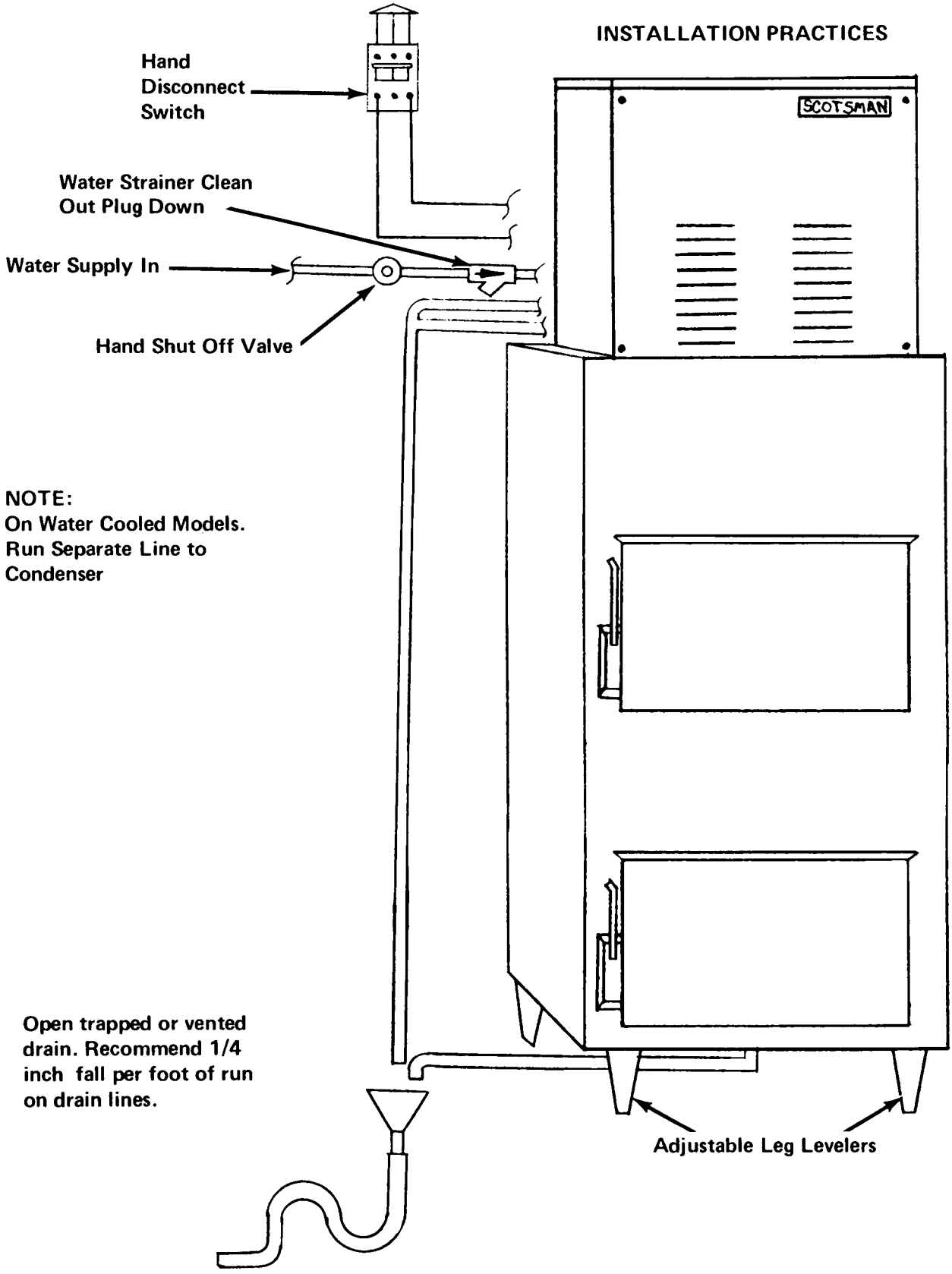

Maximum Ambient Air Temperature Recommended – 100° Fahrenheit
Minimum Ambient Air Temperature Recommended – 50° Fahrenheit

NOTE: Air temperature ranges above or below those listed may cause serious damage to the product.

STARTING THE MACHINE:

When the machine is placed and inspected as per instructions and all plumbing and electrical connections are completed and tested, turn on the water supply. Be sure the float cover is removed to check on the float operation and water level in the water reservoir. Be sure the water reservoir is filled before starting the machine. Water level should be 1/4 inch below the reservoir overflow.

When this is completed, turn on the manual switch located behind front panel of the cabinet and the machine is in automatic operation. In two to three minutes ice will start dropping off the worm shaft and out the ice chute. Let the machine operate for at least 30 minutes and check for any excess noise other than the normal compressor noise. Test the ice storage control bulb by holding a handful of ice around the bulb until the machine shuts off. One minute should be normal for the control to function. Within minutes after the ice is removed, the bulb will warm up and the machine will automatically start up. The control is factory set and should not be reset until this test is made. Normal setting of this control should be approximately 35 degrees cut-out and 45 degrees cut-in.

Check pressure settings at the time of start-up. On the water-cooled models set the head pressure at 135 PSI. On the air-cooled models the head pressure will vary between 130 and 145 PSI head pressure. The frost line should extend out of the accumulator if properly charged with refrigerant and suction pressure will range between 12 and 14 PSI with 50° F inlet water.

Check the hand reset low pressure control setting. This safety device should be set at approximately 5 PSI below normal operating suction pressure and should cut off in case of interruption in water supply, shortage of refrigerant, low ambient or any other cause of abnormally low suction pressure.

REFRIGERANT CHARGE:

The below refrigerant charge is approximate. When charging, set at 135 PSI head pressure and charge so that the frost line extends out of the evaporator and into the accumulator after fifteen minutes of operation.

Model	Refrigerant Charge
Air-Cooled	23 oz. R-12
Water Cooled	20 oz. R-12

FINAL CHECK LIST

1. Is the unit level? (IMPORTANT)
2. Have all electrical and piping connections been made?
3. Has the voltage been tested and checked against the nameplate rating?
4. Is the water supply valve open and the electric power on?
5. Is the water reservoir filled and shut off? All packing removed?
6. Have unit and bin been wiped clean?
7. Has owner been given this Operating Instruction Booklet, and has he been instructed on how to operate the machine?
8. Have the installation and registration cards been filled out and mailed to the factory?
9. Check all refrigerant and conduit lines to guard against vibration and possible failure.
10. Installed in a well ventilated room where ambient temperatures do not fall below 50° Fahrenheit.
11. Is unit installed with a minimum 4" air space around sides and back?

WARNING: THIS MACHINE MUST NOT BE ALLOWED TO OPERATE WHEN THE WATER SUPPLY IS SHUT OFF, OR AT BELOW RECOMMENDED WATER PRESSURE. TURN MASTER SWITCH TO "OFF" POSITION WHEN WATER SUPPLY IS OFF, OR WHEN WATER PRESSURE IS BELOW RECOMMENDED OPERATING PRESSURE.

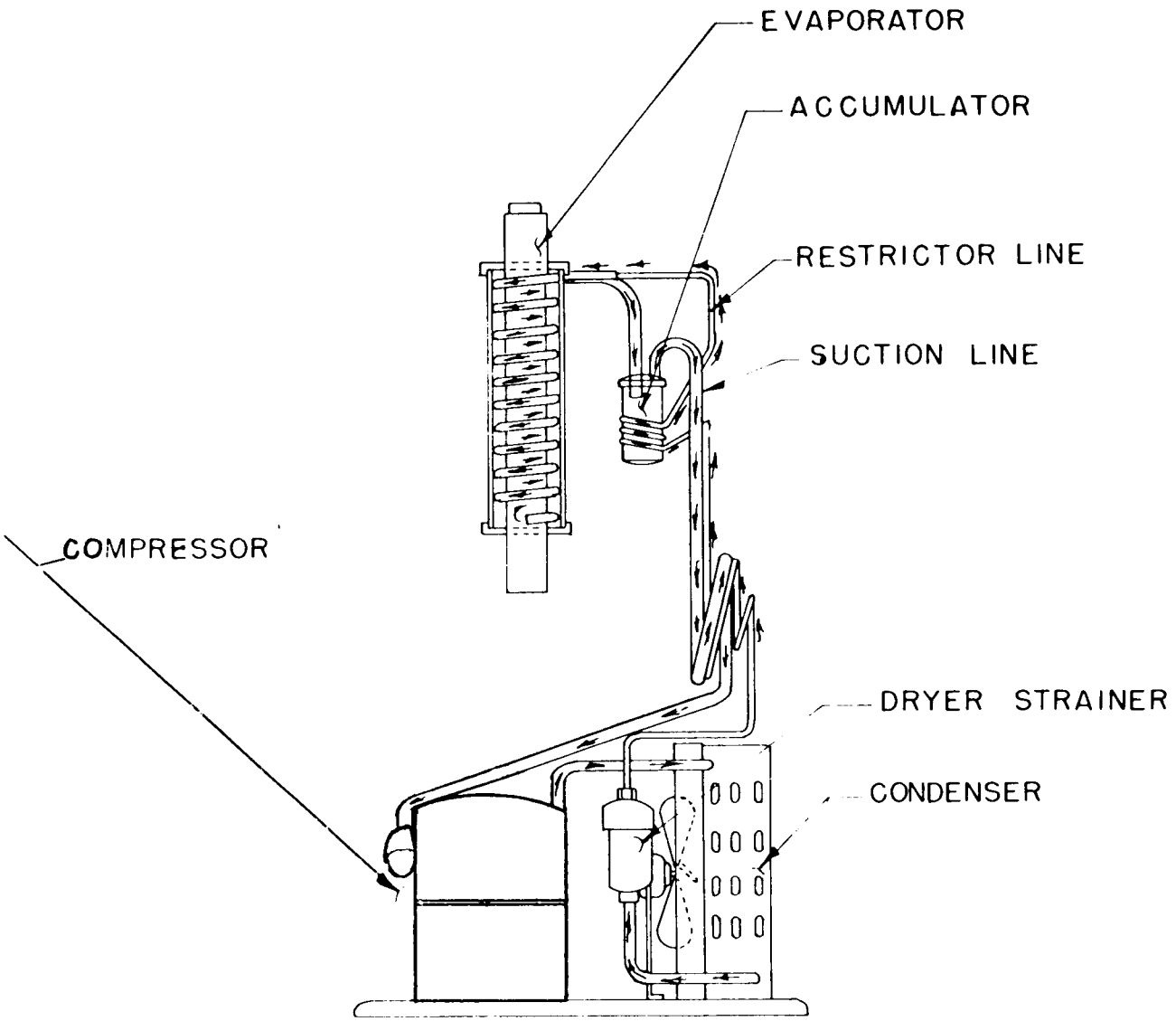

REFRIGERATION CYCLE

WATER SCHEMATIC

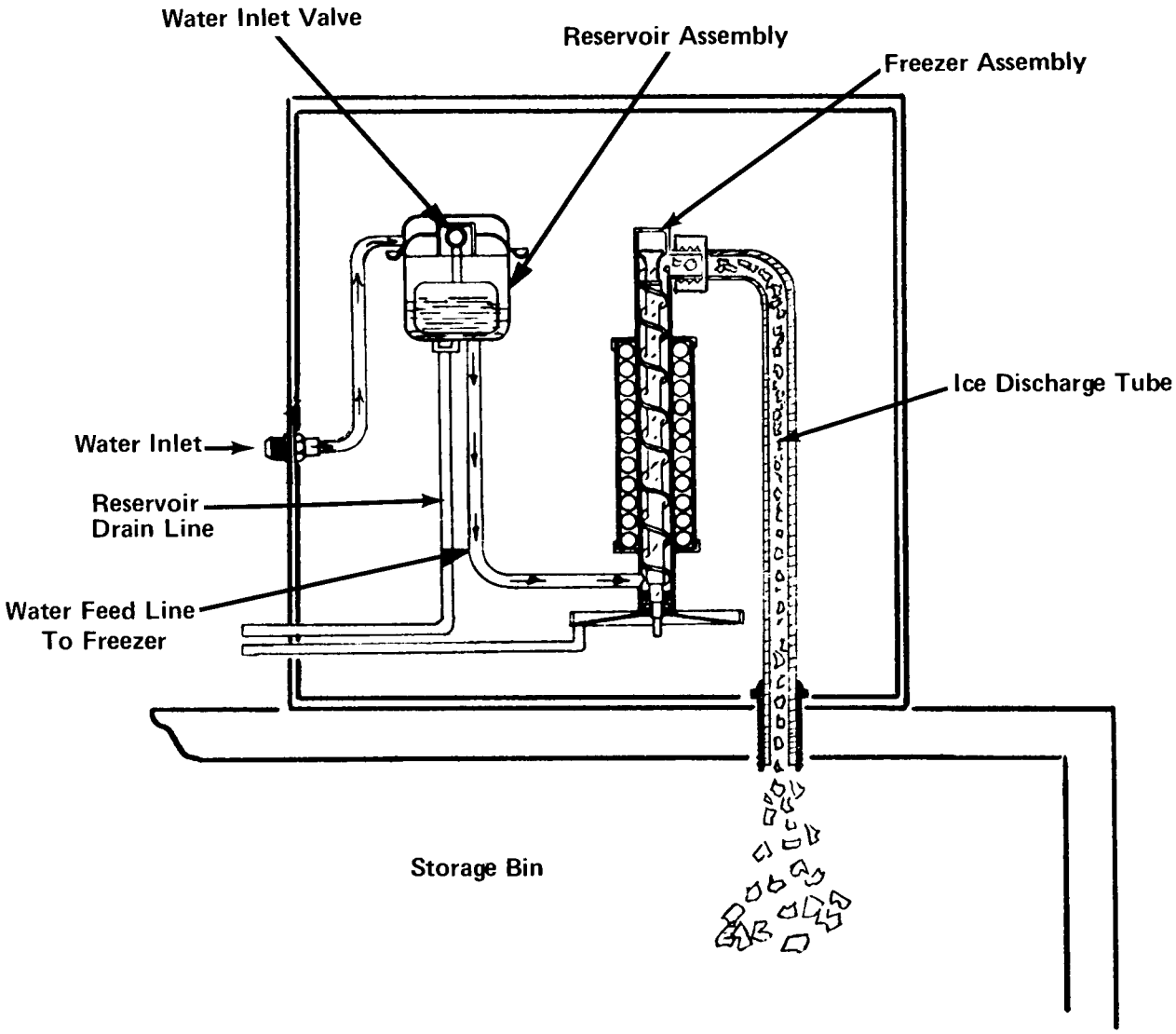

ICE DISCHARGE TUBE

INSTALLATION ILLUSTRATION

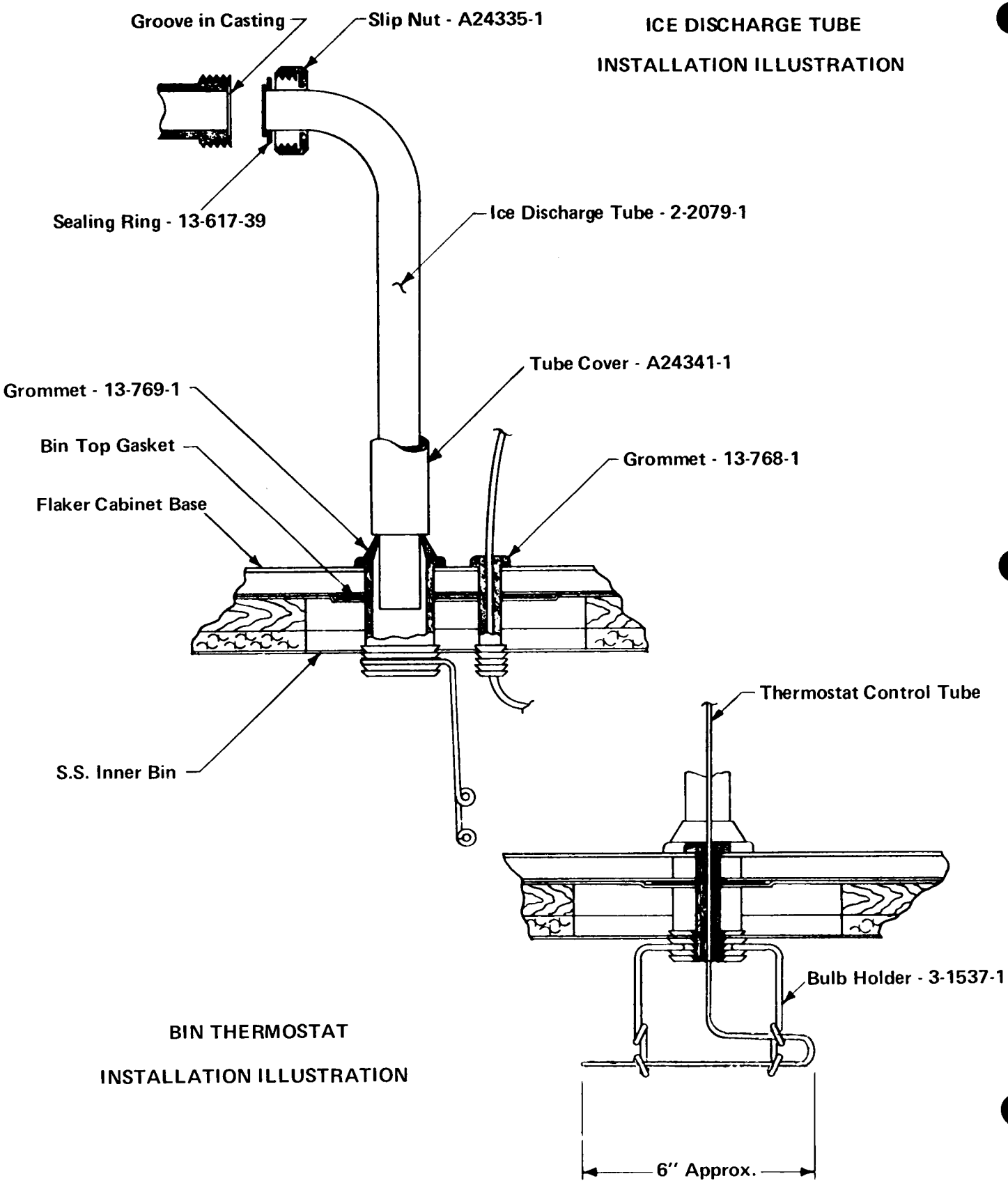

BIN THERMOSTAT

INSTALLATION ILLUSTRATION

WIRING DIAGRAM
A24945-1
(Air Cooled)

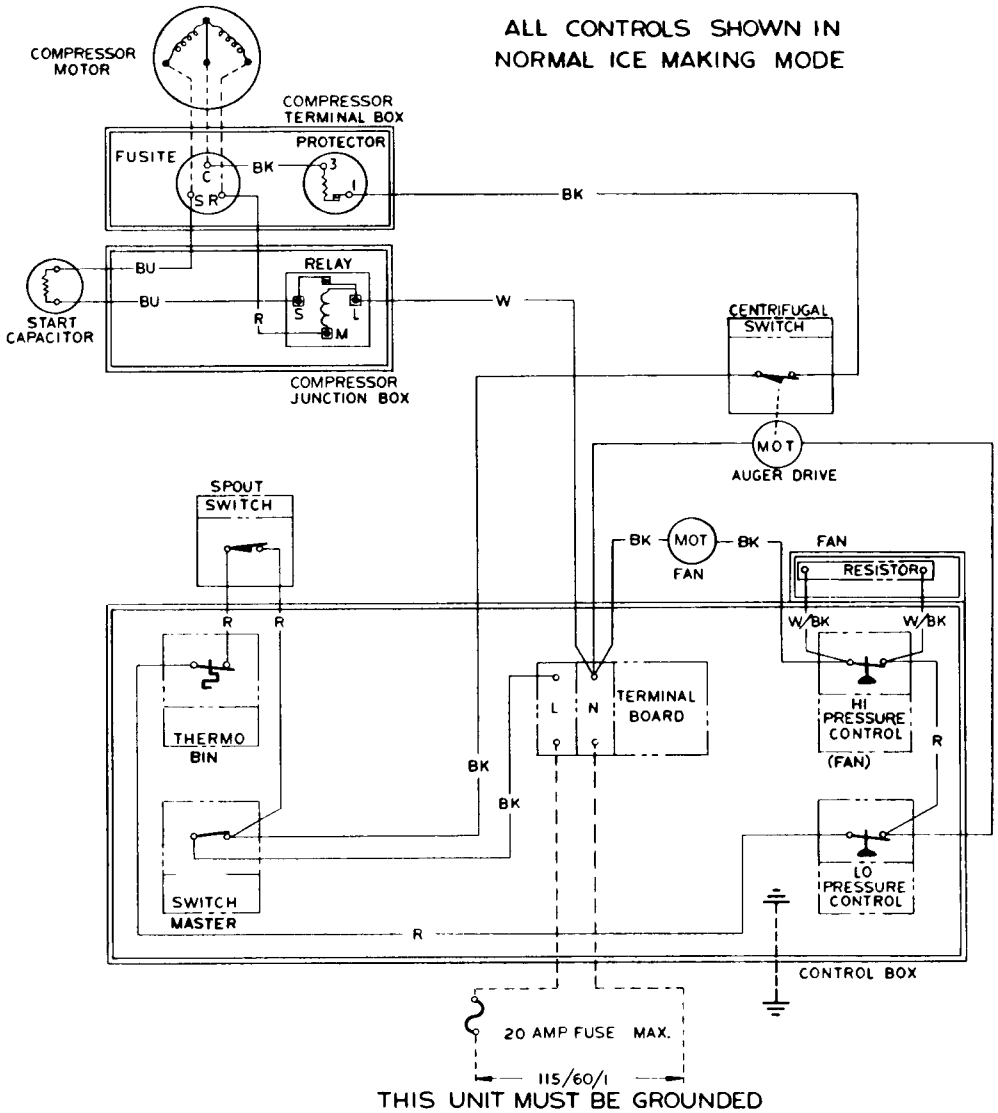

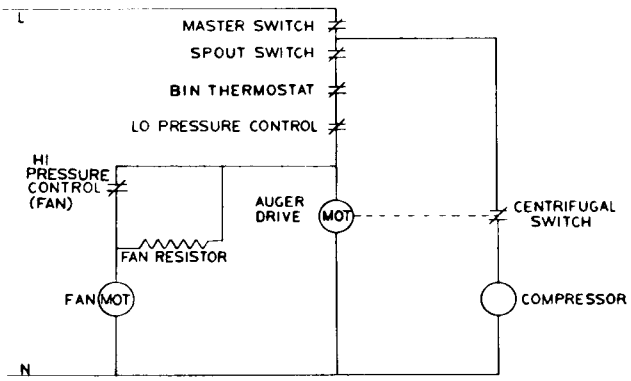

A24945-001

WIRING DIAGRAM

A24946-1

(Water Cooled)

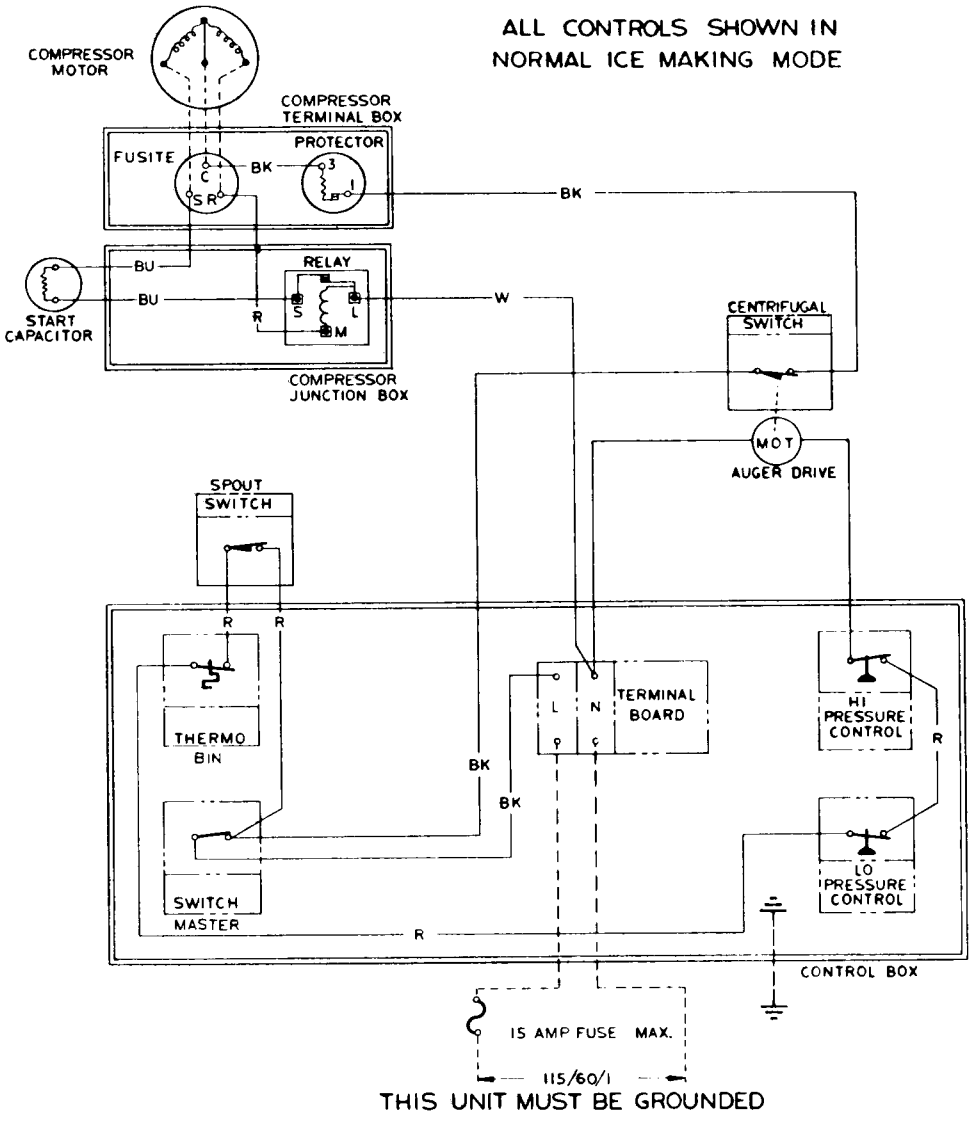

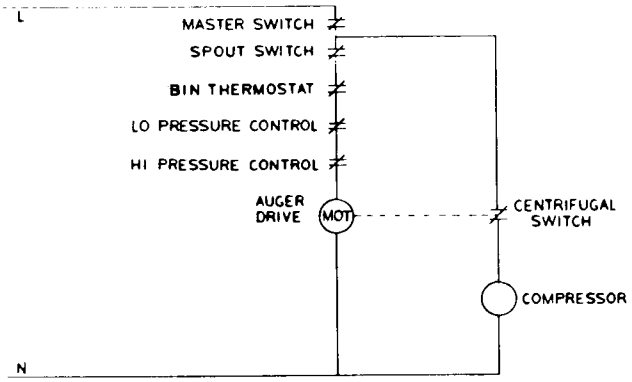

A24946-001

SERVICE ANALYSIS

SYMPTOM	POSSIBLE CAUSE	CORRECTION
Unit will not run	Blown Fuse	Replace fuse and check for cause of blown fuse.
	Thermostat set too high	Adjust thermostat. 35° cut-out and 45° cut-in.
	Loose electrical connection	Check wiring.
	Switch in OFF position	Turn switch to ON.
	Inoperative master switch	Replace switch.
Compressor cycles intermittently	Low voltage	Check for overloading.
	Dirty Condenser	Clean.
	Air circulation blocked	Move unit to correct
	Inoperative condenser motor	Replace.
	Non-condensable gases in system	Purge off.
Making wet ice	Surrounding air temperature	Correct or move unit to cooler location.
	Under or over-charge of refrigerant	Recharge with the proper amount.
	High water level in water reservoir	Lower to 1/4 inch below overflow pipe.
	Faulty compressor	Repair or replace.
Low ice production	Loss of refrigerant, under or over-charge of refrigerant.	Check and recharge with proper amount of refrigerant.
	Dirty or plugged condenser	Clean condenser
	Low water level in water reservoir	Adjust to 1/4 inch below overflow pipe.
	Partial restriction in capillary tube or drier	Moisture in system. Overcharge of oil in System. Remove charge and drier. Replace and recharge system.
	Inlet water strainer partially plugged.	Remove screen and clean.
	Corroded or stained worm shaft due to water condition.	Remove worm shaft and clean.
Machine runs but makes no ice	Loss or under-charge of refrigerant	Check for leaks and recharge
	Drive gearmotor or drive coupling stripped.	Check. Repair and/or replace.
	Water not entering freezing chamber	Plugged strainer or supply line. Check and clean. Air lock in gravity feed line. Check and remove air lock.
	Moisture in system	Check and remove charge and drier.
	Water seal leaking	Replace seal
	Water supply to unit off	Restore water supply to icemaker.

SYMPTOM	POSSIBLE CAUSE	CORRECTION
Water Leaks	Defective water seal Gravity feed line leaking "O" ring in spout casting leaking. Storage bin drain & connecting fittings leaking. Water level in reservoir too high	Replace Check hose clamps Remove spout casting and install new "O" ring. Check and repair. Adjust to 1/4 inch below overflow pipe
Excessive noise or chattering	Mineral or scale deposit on auger and inner freezing chamber walls. Low suction Intermittent water supply Water level in reservoir too low. Gearmotor loose on frame Gearmotor end-play or worn bearings.	Remove and manually polish auger, polish inner chamber walls of freezer barrel. For lighter concentrations use Scotsman Ice Machine Cleaner periodically. Add gas to raise suction pressure. Check & clean water strainer. Check gravity feed line for air lock. Remove air lock. Adjust to 1/4 inch below overflow pipe. Tighten. Repair or replace.
Machine continues to run with full storage bin	Storage bin thermostat not properly set.	Reset or replace. 35° cut-out, 45° cut-in Check operation with handful of ice.
Gearmotor noise	Low on oil	Remove case cover to check for proper oil level. Top of gears should be covered. Use Sun Oil Co. Prestige 50 EP.
Gearmotor Off, Compressor On.	Micro switch on gearmotor sticking or defective.	Check - Insure centrifical switch plate activates switch.

MAINTENANCE INSTRUCTIONS – FLAKERS

THE FOLLOWING MAINTENANCE SHOULD BE SCHEDULED THREE TIMES PER YEAR ON ALL SCOTSMAN MODULAR FLAKERS. CALL YOUR AUTHORIZED SCOTSMAN SERVICE DEPARTMENT.

1. Check and clean water strainers and float valve. Depress float valve to insure full stream of water.
2. Check water level and machine level, keep water level below overflow, but as high as possible and still not run out of spout opening with machine off. Water droplets come out of spout with ice at all times. Adjust as required.
3. Clean reservoir and interior of freezer using SCOTSMAN Ice Machine Cleaner.
   If machine has been cleaned regularly and no problems such as dry ice or chatter are noticed, clean as per the following instructions:
   a. Set main switch to OFF.
   b. Remove all ice from storage bin.
   c. Turn off water supply or block float. Drain reservoir by disconnecting tube between reservoir and freezer. After draining, reconnect tubing.
   d. Set main switch to ON and pour cleaning solution into reservoir. Do not fill above overflow tube.
      Use 6 oz. of Scotsman cleaner and 1-1/2 qts. hot water.
   e. Continue to make ice on solution until the solution is used up and reservoir is empty.
   f. Set main switch to OFF Remove overflow tube, wash and rinse reservoir, replace overflow tube, turn water on or remove float block.
   g. Turn MAIN SWITCH to ON. Let unit run for at least (15) minutes to flush out any cleaning fluid. Check ice for acid taste – run until ice tastes sweet.
   h. Turn MAIN SWITCH to OFF. Add hot water to ice bin, using the melt water, thoroughly wash and rinse all surfaces within the storage bin.
   i. Turn MAIN SWITCH to ON. Replace Service Door. Unit is ready for normal operation.

NOTE: Cleaning requirements vary according to local water conditions. Visual inspection of the auger before and after cleaning will indicate best procedure to be followed in local areas.

4. Check high and low side pressures. On air-cooled models head pressures range between 130 and 145 PSI. Suction pressure should be above 12 PSI and will range up to 15 PSI depending upon water and ambient temperatures.
5. Check gear motor operation. Normal running temperatures are in the area of 160° Fahrenheit, which is hot to the touch.
6. Check top bearing of freezing tube. Remove retainer ring around edge of stamped brass cap. If moisture is around bearing, wipe up and remove grease. Add new grease. Use Beacon No. 325. Replace cap and retainer ring.
7. Clean air-cooled condenser. Inform customer to clean frequently. Always shut off machine when cleaning.
8. Oil condenser fan motor when possible.
9. Check for refrigerant leaks and proper frost line. Should frost out of accumulator at least one-half way to compressor, and in some areas back to service valve.
10. Check for water leaks. Tighten drain line connections. Run water down bin drain line to make sure it is open.
11. Check quality of ice. Ice should be wet when formed, but will cure rapidly to normal hardness in bin.
12. Check thermostat and *pressure plate cut off in spout. Micro switch cuts off only compressor. Bin thermostat should be set at 10 ° differential 35° cut out, 45° cut in.

* Safety pressure switch not incorporated on all models.

FREEZER GEARMOTOR

Model MF3 is equipped with a 1/10 horsepower direct drive gearmotor. A speed sensing switch mounted on top of the motor of the gear unit will open and stop the compressor when the RPM of the gearmotor is less than 900. At 1200 RPM it will close, starting the compressor.

In an actual operation any condition that may cause excessively hard ice and overloads within the freezer assembly, water interruptions, cold ambients, etc. is transmitted to the gearmotor reducing it's speed. When gearmotor slows down to approximately 900 RPM the speed sensing switch opens the electrical circuit to the compressor. The compressor stops and no more ice is produced, meanwhile the gearmotor continues to run, clearing the overload condition and gradually resumes full speed. At 1200 RPM gearmotor speed sensing switch closes compressor circuit causing the normal icemaking process to begin once more.

Any freeze up possibility is thereby automatically cleared out by the gearmotor.

TO REPLACE:

1. Remove top, front and side panels.
2. Shut off water supply and disconnect electrical power to unit.
3. Remove electrical leads (2 from micro switch on top of motor and 2 from motor to control box.)
4. Remove slip nut attaching ice discharge tube to freezer spout casting.
5. Next remove 3 bolts securing base adapter to gear motor cover and the 4 bolts holding the gear motor bracket to the cabinet base.
6. Lift freezer and adapter assembly off gear motor and pull gear motor and mounting bracket out of cabinet.

FREEZER ASSEMBLY

TO REPLACE:

1. To remove freezer first remove cabinet top, front and side panels.
2. Shut off water supply and disconnect electrical power to unit.
3. Drain reservoir and freezer of water by removing tygon tubing entering base of freezer.
4. Remove slip nut attaching ice discharge tube to freezer spout casting.
5. Purge off refrigerant and unsweat suction line. Disconnect capillary line at drier. Cap off all lines so no moisture can enter system.
6. Remove the 3 bolts securing freezer base adapater to top of gear motor cover.
7. Freezer assembly now can be lifted off gear motor and out of cabinet.
8. To re-install reverse procedure. Refer to section "Specifications" for proper refrigerant charge and to page 8 for Head and Back pressure settings.

FREEZER WORM SHAFT (AUGER)

TO REPLACE:

1. Disconnect electrical supply and shut off water to unit.
2. Remove top and front panel of cabinet.
3. Drain reservoir and freezer of water by removing tygon tubing entering base of freezer.
4. Next remove slip nut attaching ice discharge tube to freezer spout casting and insulation covering top of freezer chamber.
5. Remove the 2 bolts attaching the freezer spout casting to the spout bracket and remove spout casting. Also remove bracket by removing the stainless steel screw which secures the bracket to the freezer chamber.
6. By lifting up on the freezer cap pull ring, the complete worm shaft and bearing retainer can be removed from freezer chamber. NOTE: Top half of water seal is attached to the lower end of the worm shaft.

FREEZER ASSEMBLY TOP BEARING

TO REPLACE:

1. Follow steps 1 thru 6, freezer worm shaft removal.
2. To remove bearing and retainer from worm shaft, first remove retaining ring in top of bearing retainer.
3. Remove freezer cap and pull ring from bearing retainer.
4. Unscrew cap screw holding shaft to inner race of bearing and pull worm shaft free from bearing and retainer.
5. When replacing with a new bearing add new grease (Beacon No. 325) to top of bearing.

FREEZER ASSEMBLY BOTTOM BEARING AND WATER SEAL

TO REPLACE:

1. To replace, follow steps 1 through 6 under Worm Shaft Removal.
2. Remove 3 bolts holding freezer to mounting adapter.
3. Lift freezer off adapter just high enough to allow bottom bearing and bottom half of water seal to be removed from bottom of freezer tube.
4. Lightly grease bottom half of new water seal and insert face up approximately 1/2" in bottom of freezer tube.
5. Insert bottom bearing in bottom of freezer tube, force approximately 1/8" past bottom tube end. This will allow the positioning ring on adaptor to properly position freezer tube when tightening up the three mounting bolts.
6. After securing mounting bolts, put new top half of water seal on worm shaft the same way as the old seal was removed. When reassembling, put a small amount of Vaseline on shaft end. This will allow shaft to slide smoothly through rubber bottom half of water seal without tearing it.
7. Carefully insert worm shaft assembly in freezer tube and into spline coupling on bottom.
8. Replace spout casting, screws, insulation pieces and unit is ready to resume operation.

BIN THERMOSTAT:

Thermostat control body is located in electrical control box. The thermostat sensing tube is threaded into the ice storage bin where it automatically stops the icemaker when ice bin fills to sensing tube level and restarts icemaker when ice is removed. Factory settings are 35° cut out, 45° cut in.

Altitude correction begins at 2,000 feet, cut in and cut out screws should be adjusted equally, not more than 1/4 turn at a time.

IMPORTANT – Refer to page 11 for proper location of bin control capillary.

TO REPLACE:

1. Disconnect electrical supply.
2. Remove bin thermostat capillary tube from bin location.
3. Remove front panel and control box cover.
4. Disconnect two spade type electrical leads.
5. Loosen two screws in control mounting bracket.
6. Replace with new control and reassemble in reverse of above.
7. CAUTION: Always check new control power element charge before installation to assure receiving an operative control. A handful of ice on bulb will register on audible 'click' at cut off.

HEAD PRESSURE CONTROL (WATER COOLED MODELS)

The head pressure safety control is factory preset at 190 lb. PSIG. This is a manual reset control with an adjustment screw for raising or lowering the cut out pressure. The control is placed in the system as a safety precaution, to terminate power to the unit should loss of water occur to the water cooled condenser.

HEAD PRESSURE CONTROL (AIR COOLED MODELS)

A reverse acting high pressure control is used and connected electrically to the fan motor. As the head pressure drops below the cut-out setting, the control opens allowing the current to pass entirely through a resistor in the line feeding the fan motor. This slows the shaded pole motor down to approximately 1/4 speed thus increasing the head pressure. When the control cuts in the full voltage again flows directly to the fan motor allowing it to operate at full speed. This feature protects unit against low ambient conditions. Cut out and cut in pressures are normally set at 130 lb. and 145 lb.

LOW PRESSURE CONTROL

Control is located in the control box. Factory settings cut-out at 5 PSI. Safety device to cutoff machine and keep it off in case of water supply failure, loss of refrigerant, low ambient temperature or other causes of low pressure. This is a manual reset control.

WATER REGULATING VALVE (Water Cooled Models Only)

The Water Regulating Valve is designed to maintain a constant head pressure by regulating the amount of incoming water flow through the water cooled condenser. This valve is operated by high side pressure and may be adjusted by the adjusting screw on top of the valve to raise or lower the operating head pressure.

TO REPLACE:

1. Shut off water supply to machine and disconnect electrical power.
2. Disconnect old valve from water supply line and install new valve.
   NOTE: Be sure arrow on side of valve points in direction of water flow.
3. Purge off refrigerant and disconnect valve capillary line from high side fitting and immediately attach capillary from new valve.
4. Recharge system. Refer to page 8 for proper refrigerant charge and head and back pressure settings.

WATER RESERVOIR

A water level is maintained in the water reservoir by a float operated valve. Water is piped from the water reservoir to the freezing chamber by a gravity feed line maintaining an equal water level.

The water reservoir is equipped with a 2 inch air gap to prevent back siphoning and meet all health codes.

The water level in the water reservoir is adjusted by bending float arm. The water level should be set 1/4 inch below the overflow standpipe.

A water strainer must be installed in the supply line. Use strainer sent with machine.

TO REPLACE:

1. Remove cabinet top and side panel.
2. Turn off water supply and drain reservoir.
3. Remove 1/4 inch inlet water line.
4. Remove plastic feed line to freezer.
5. Remove two screws holding reservoir bracket to wall.
6. Lift out reservoir.
7. *To replace, reverse procedure.*

CHASSIS ASSY – MF-3 – AIR COOLED

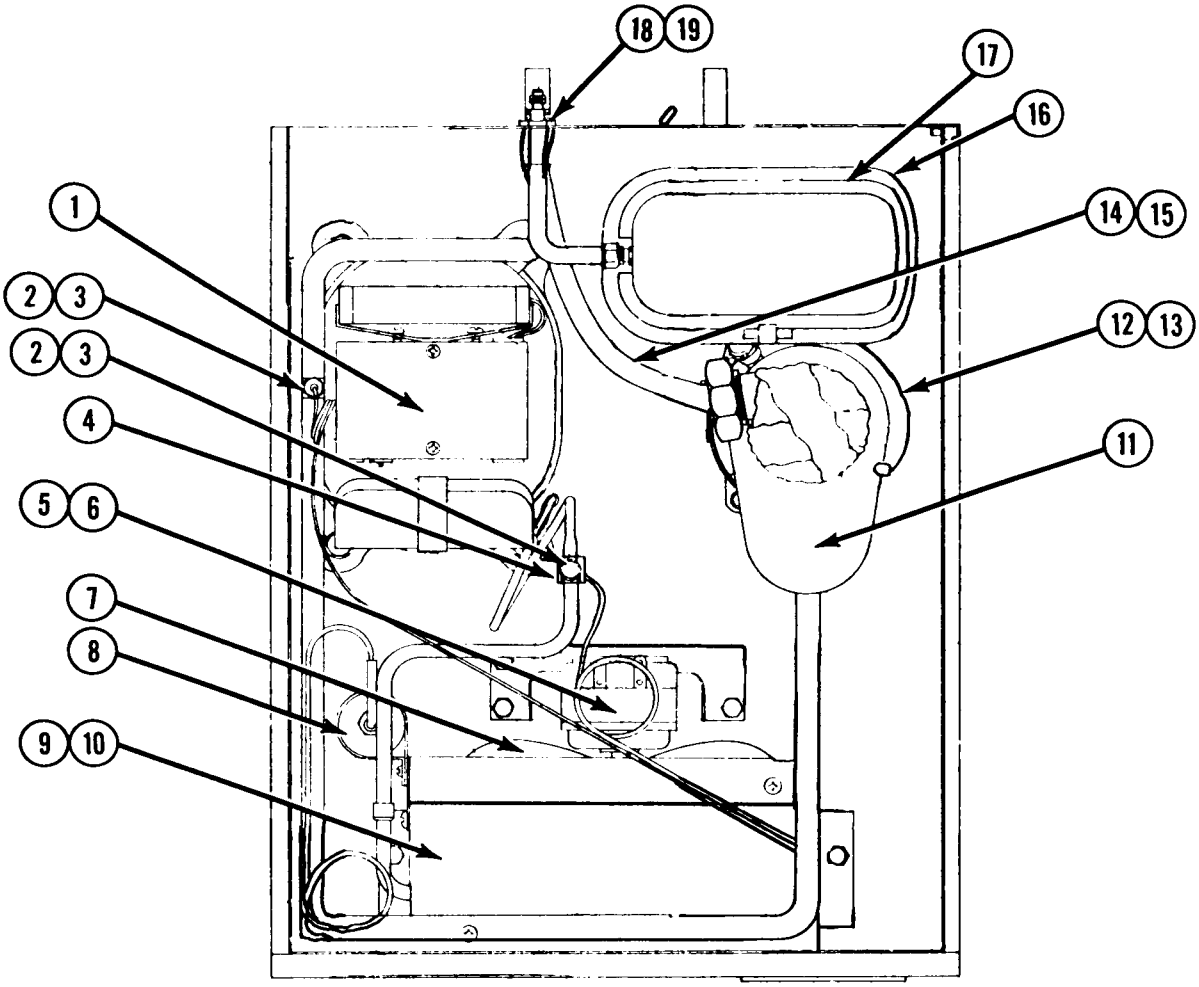

ITEM NO.	PART NO.	DESCRIPTION
1.	A23617-001	Compressor
2.	16-0563-00	Brass Cap
3.	16-0560-00	Valve Core
4.	A20578-002	Adapter
5.	12-1576-01	Fan Motor
6.	18-0422-00	Motor Mount
7.	18-3309-01	Fan Blade & Nut
8.	02-0350-00	Drier
9.	18-1927-00	Condenser
10.	A24385-001	Shroud
11.	A23715-001	Freezer Assy.
12.	A24392-001	Drip Pan Assy.
13.	13-0628-00	Gasket
14.	A21002-022	Tubing
15.	02-0534-00	Clamp
16.	A23410-008	Reservoir Assy.
17.	A16012-000	Reservoir Cover
18.	03-1394-00	Nut
19.	03-1409-04	Washer

CHASSIS ASSY – MF-3 – WATER COOLED

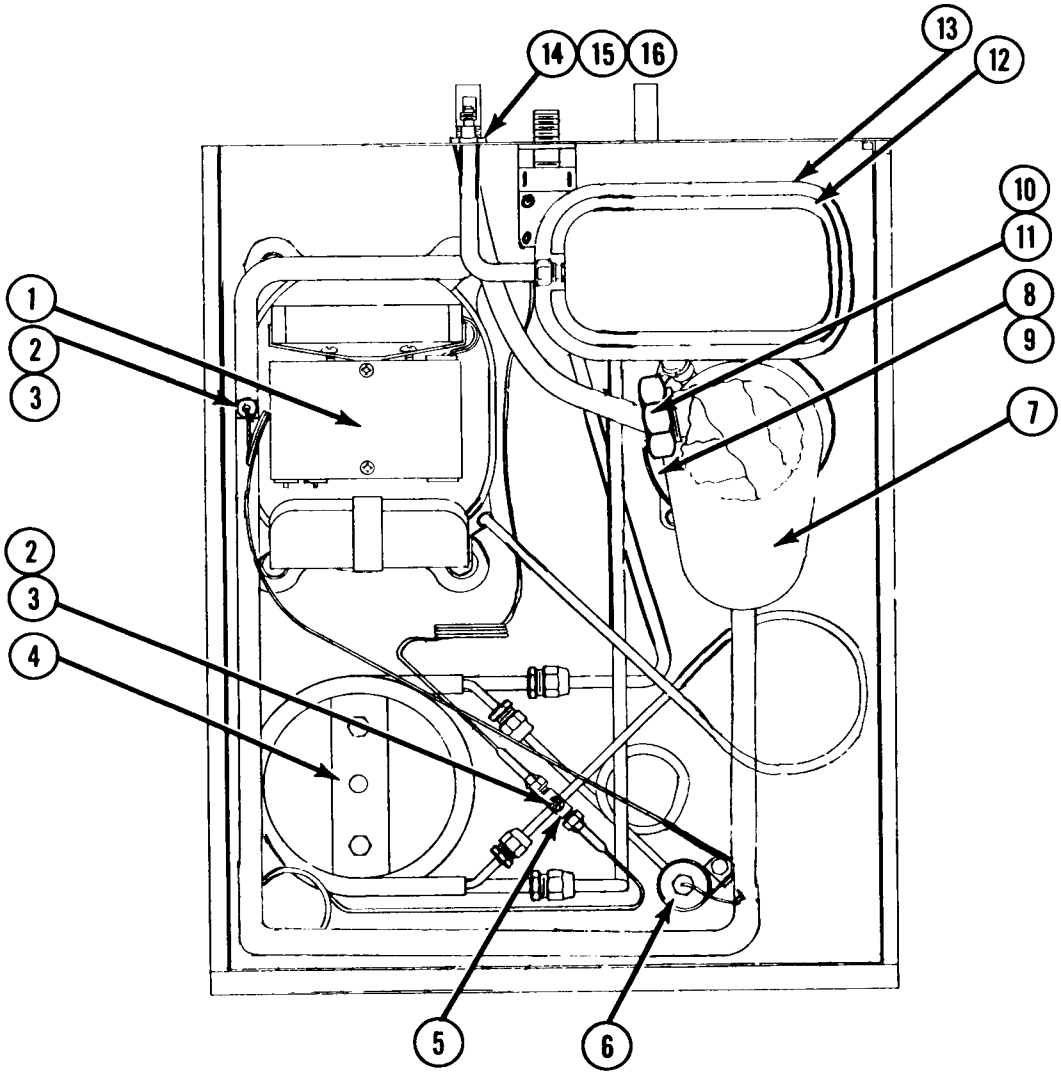

ITEM NO.	PART NO.	DESCRIPTION
1.	A23617-001	Compressor
2.	16-0563-00	Brass Cap
3.	16-0560-00	Valve Core
4.	18-3303-01	Condenser
5.	A20578-008	Adapter
6.	02-0350-00	Drier
7.	A23715-001	Freezer Assy.
8.	A24392-001	Drip Pan Assy.
9.	13-0628-00	Gasket
10.	A21002-022	Tubing
11.	02-0534-00	Clamp
12.	A23410-008	Reservoir Assy.
13.	A16012-000	Reservoir Cover
14.	11-0198-00	Water Regulating Valve
15.	03-1394-00	Nut
16.	03-1409-04	Washer

FREEZER ASSEMBLY - EXPLODED VIEW - MODEL – MF3

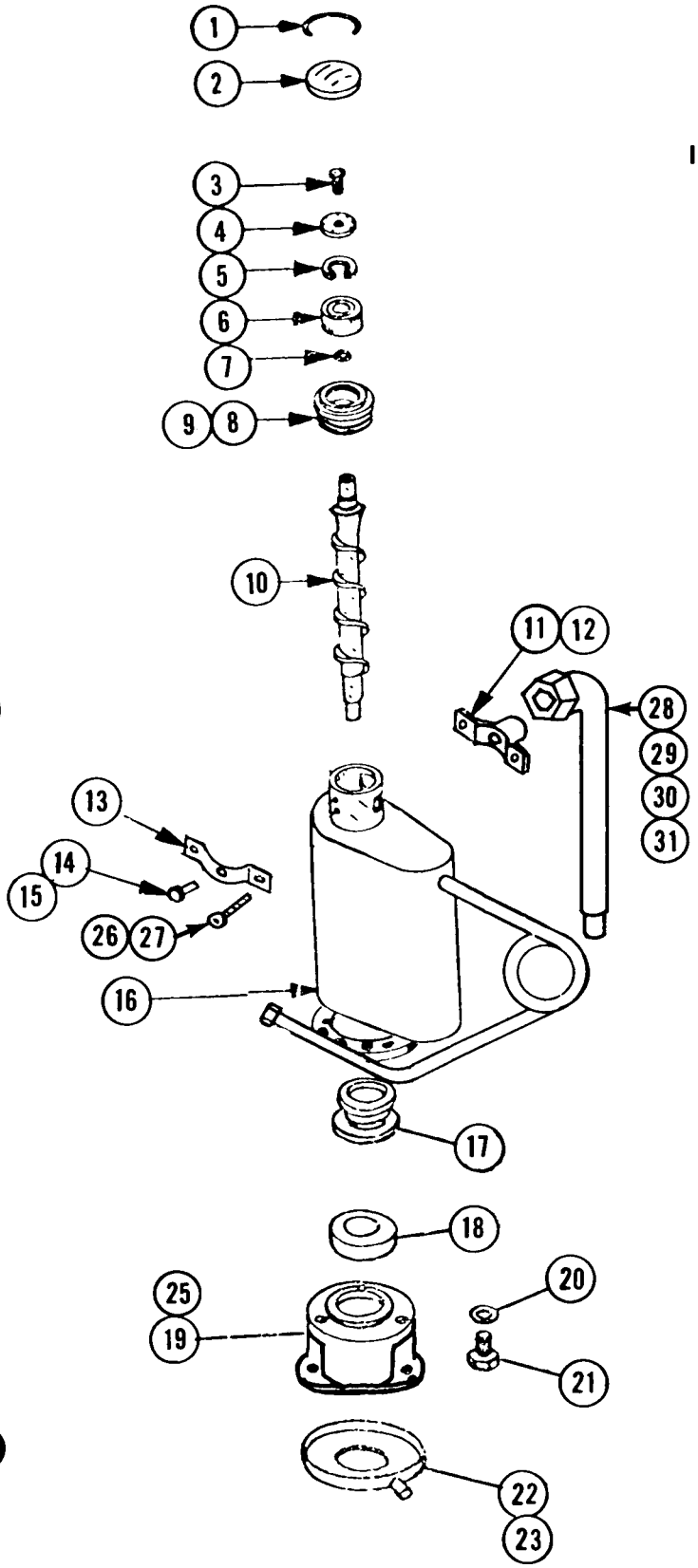

ITEM NO.	PART NO.	DESCRIPTION
1.	A-8162	Cap Hook
2.	A-7701	Cap
3.	3-758	Cap Screw
4.	A-7699	Washer
5.	3-553	Retaining Ring
6.	2-695	Bearing
7.	13-617-16	"O" Ring
8.	A-15508-1	Bearing Retainer
9.	13-617-29	"O" Ring
10.	2-2046-1	Auger
11.	A-23847-1	Breaker/Spout Assy.
12.	13-679	Gasket
13.	A18430-2	Spout Bracket
14.	3-1506-1	Screw
15.	3-1409-14	Washer
16.	A-23762-1	Freezer w/heat Exch.
17.	2-1300	Water Seal
18.	2-417	Lower Bearing
19.	8-595-1	Adapter
20.	3-1410-4	Washer (3)
21.	3-1405-42	Screw (3)
22.	A-24392-1	Drip Pan
23.	13-709-1	Drip Pan Gasket
24.	15-575-1	Drive Coupling
25.	3-1505	Gasket
26.	3-1403-53	Screw (2)
27.	3-1417-7	Washer (2)
28.	2-2079-1	Disch. Tube
29.	A-24335-1	Slip Nut
30.	13-617-39	"O" Ring
31.	A-24341-1	Tube Cover (Specify Length)
*	A-23715-1	Freezer Assy Complete (Less items 23, 25, 25, 29 30, 31 & 32).

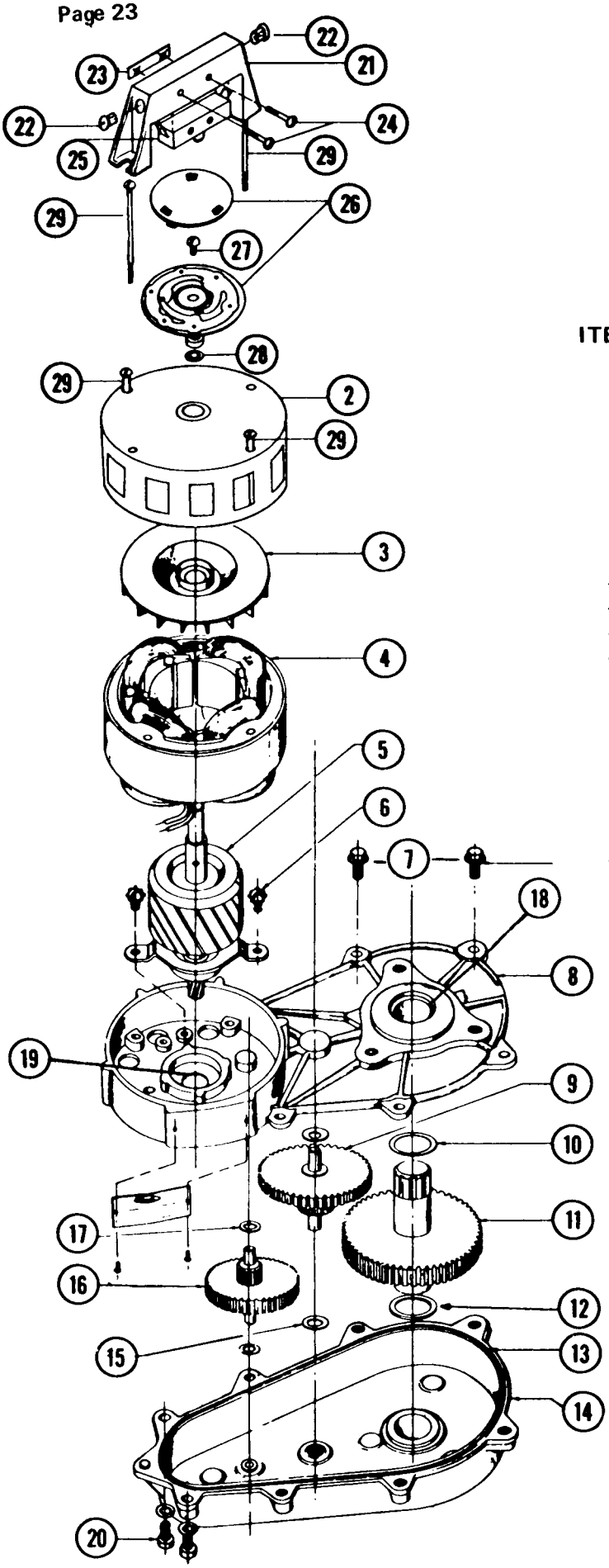

GEAR MOTOR ASSY

ITEM NO.	PART NO.	DESCRIPTION
2.	A-17047	Motor Housing
3.	A-16915	Cooling Fan
4.	12-1400-1	Stator Assy.
5.	A-19884-2	Rotor Assy.
6.	3-1245	Screws
7.	3-1251	Flange Screws
8.	A-16920	Gear Case Cover
9.	2-1521	Gear & Pinion
10.	3-1408-21	Washer
11.	2-1513	Gear & Output Shaft
12.	3-1408-21	Washer
13.	2-1505	"O" Ring
14.	A-16919	Gear Case Assy.
15.	3-1408-6	Washer
16.	2-1520	1st Gear & Pinion
17.	3-1408-20	Washer
	3-1408-19	Washer
18.	2-1503	Grease Seal
19.	2-1504	Grease Seal
20.	3-1252	Screw
21.	8-579	Switch Bracket
22.	12-1213-3	Snap Bushings
23.	3-886	Twin Speed Nut
24.	3-1403-10	Screws
25.	12-1644	Switch
26.	A19898	Synchro Snap Assy.
27.	3-1248-01	Screw
28.	3-1417-6	Washer
29.	3-1403-43	Motor Bolts

A18380-21 Gear Motor Assy. Complete

Output Shaft turns at 10 RPM

COMPRESSOR 115/60/1

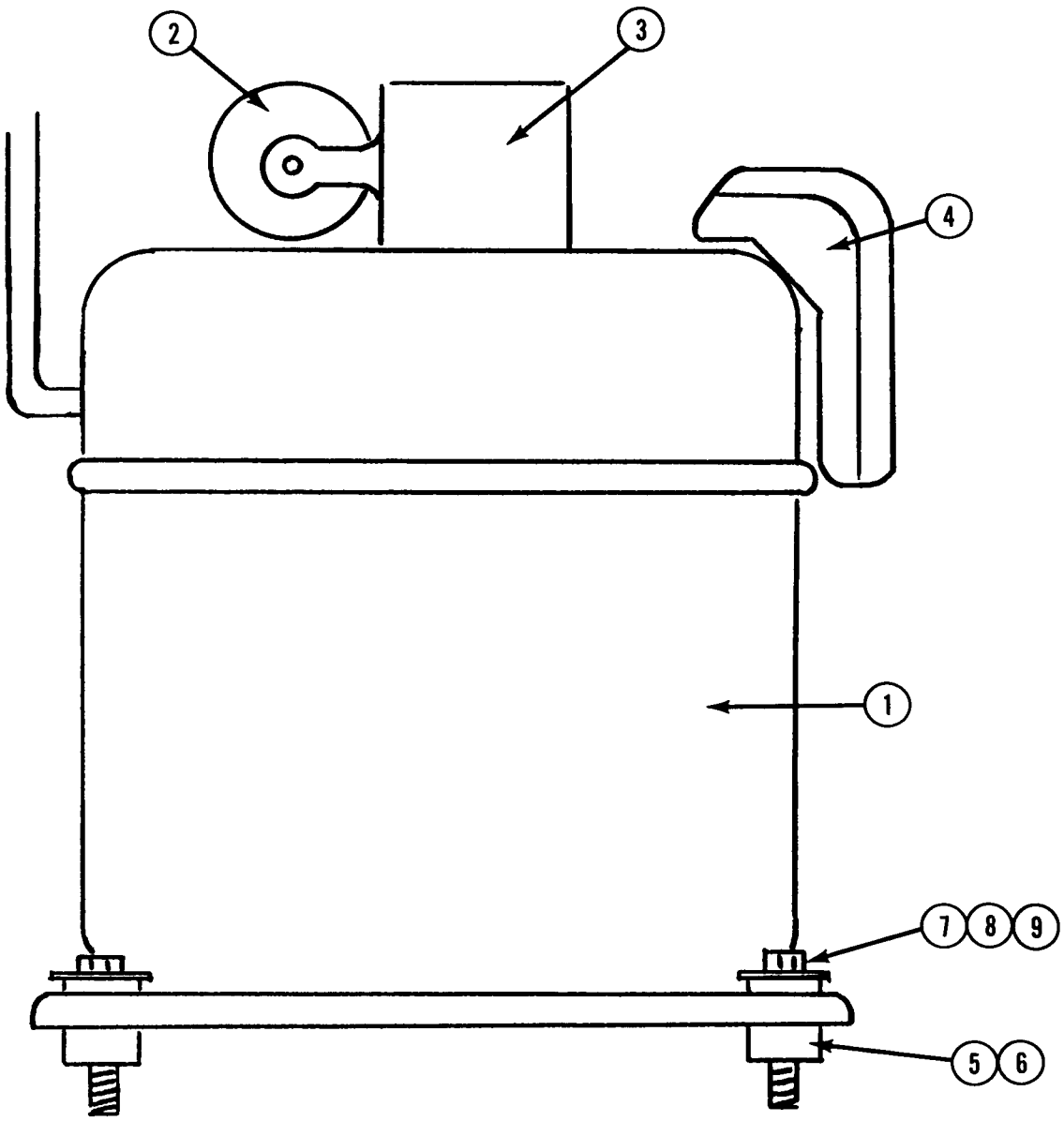

ITEM NO.	PART NO.	DESCRIPTION
1.	18-2200-1	Compressor
2.	18-2200-29	Capacitor
3.	18-2200-26	Relay
4.	18-2200-25	Overload
5.	18-2200-27	Sleeve (4)
6.	18-2200-28	Grommet (4)
7.	3-1405-40	Screw (4)
8.	3-1417-12	Washer (4)
9.	3-1408-2	Washer (4)

CONTROL BOX ASSEMBLY

Water and Air Cooled

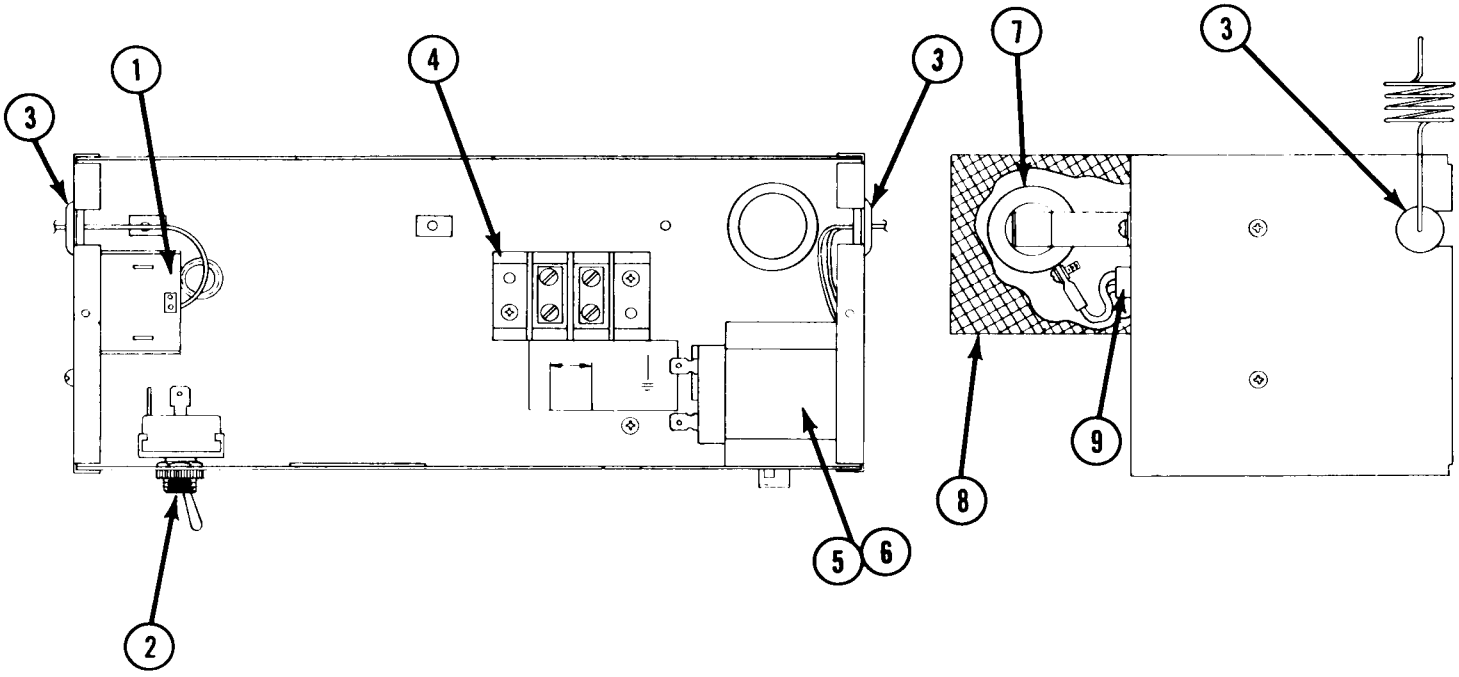

ITEM NO.	PART NO.	DESCRIPTION
1.	11-0354-00	Bin Control
2.	12-426-01	Master Switch
3.	13-0557-00	Grommet
4.	12-0813-04	Terminal Board
5.	11-0358-00	Low Pressure Control
6.	11-0386-01	High Pressure Control (Air Cooled Models Only)
	11-0357-00	High Pressure Control (Water Cooled Models Only)
7.	12-0474-02	Resister (Air Cooled Models Only)
8.	A14384-000	Cover
9.	12-1213-04	Snap Bushing
	A23457-001	Control Box Complete (Air Cooled)
	A23458-000	Control Box Complete (Water Cooled)

RESERVOIR ASSEMBLY

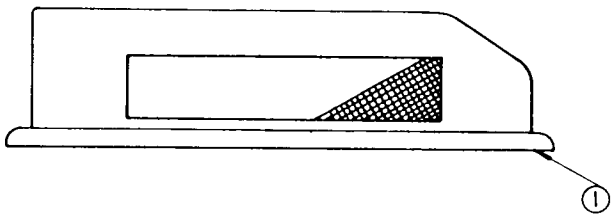

ITEM NO.	PART NO.	NAME
1.	A-16012	Reservoir Cover
2.	2-1259	Valve Pin
3.	2-1320	Deflector
4.	S-8770	Inlet Valve
5.	3-1001	Rivet
6.	A-5777	Valve Seat Holder
7.	S-6947	Valve Seat
8.	3-1394	Nut
9.	A-12869	Bracket
10.	S-6715	Stand Pipe
11.	S-8138	Inlet Valve Ass'y
12.	A-23533-1	Reservoir Body
13.	A-8055	Bracket Nut
14.	A-12067	Float and Arm Ass'y
15.	A-18418-1	Water Deflector
	A-23532-1	Complete-less cover

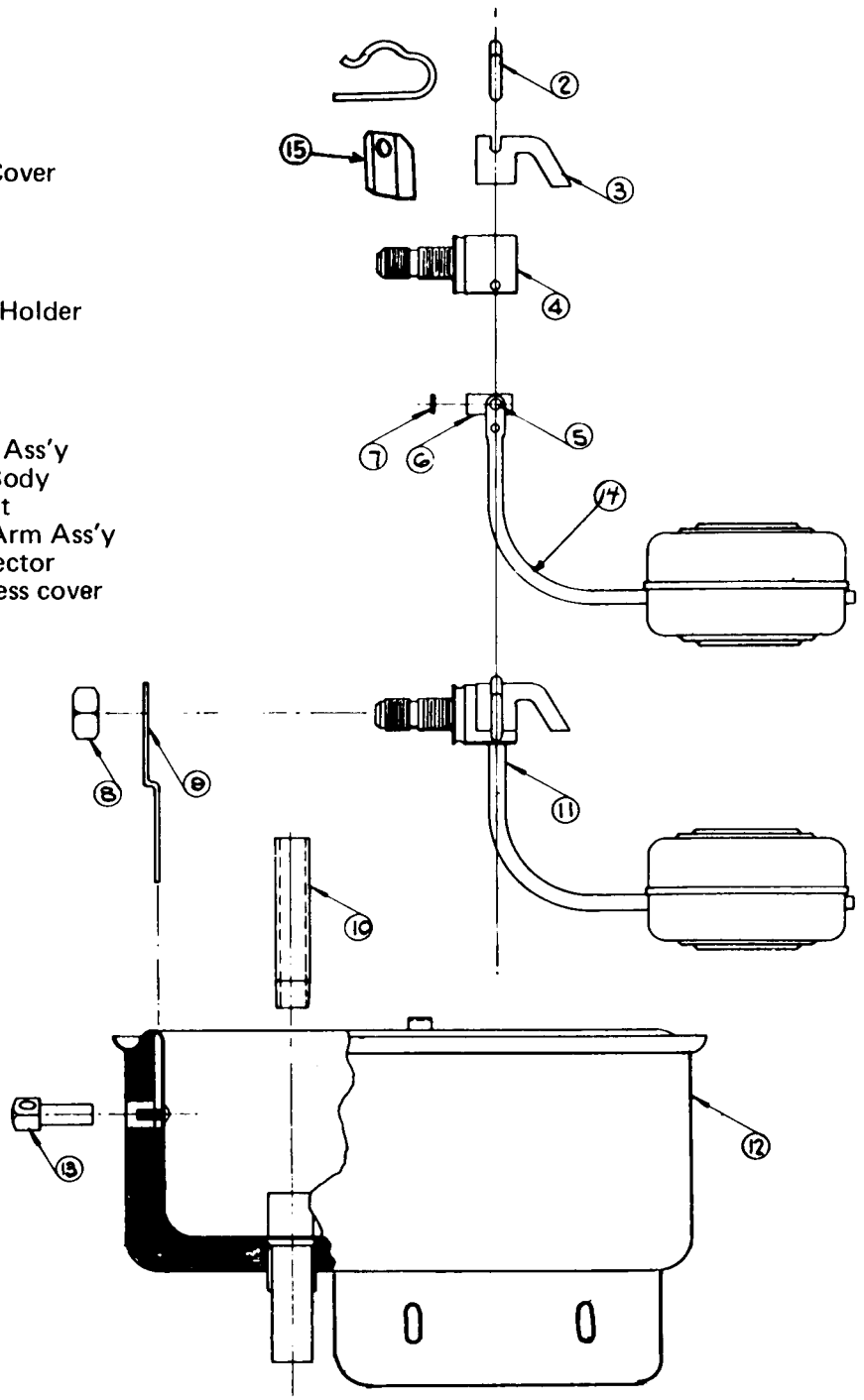

CABINET PARTS

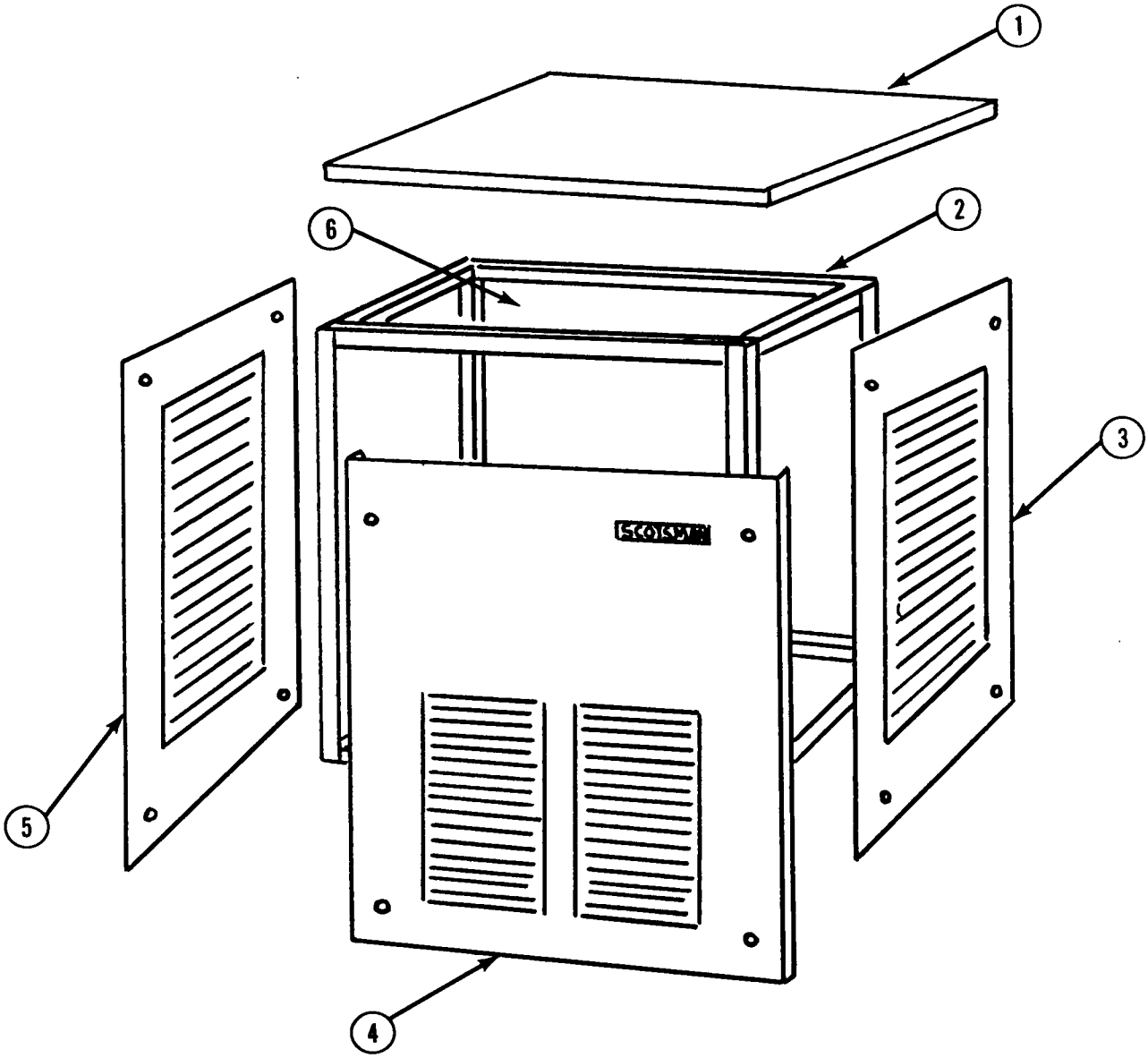

ITEM NO.	DESCRIPTION	ENAMEL	STAINLESS STEEL
1.	Panel Top	A23446-001	A23446-002
2.	Cabinet Frame	A23415-001	A23415-001
3.	Panel, Right Side	A23445-001	A23445-002
4.	Panel, Front	A23451-001	A23451-002
5.	Panel, Left Side	A23445-001	A23445-002
6.	Panel, Rear	A23450-001	A23450-002
*	Mounting Screws	03-1419-09	03-1419-09
*	Speed Nut	03-1507-00	03-1507-00
*	Aerosol Paint (Micromatte)	10-0314-01	

*Parts Not Illustrated

FLAKED ICE TRANSPORT SYSTEM INSTALLATION INSTRUCTIONS

Kit No. KTMF-1 – 115 V. Application
Kit No. KTMF-2 – 230 V. Application

DIAGRAM 'A'

1. Attach ice discharge tube from ice transport kit to freezer spout. Route thru knock out in top panel of the flaker unit.
2. Attach ice discharge tube supplied with the flaker unit to threaded end of ice discharge tube installed above. This tube can be rotated in any direction to suit the specific application.
3. Ice Tube Recommendations:
   A. Ice Tube in 1" nominal size rigid P.V.C. Schedule 40 pipe. This may be purchased at any plumbing supply house.
   B. To make 90° or 45° changes of direction in ice tube use 90° elbow, Queen Products Part No. 02-2102-01. For 45° elbow cut above 90° elbow in two pieces.
   C. To make ice tube connections at ends of straight lengths or at ends of elbows use pipe union, Queen Products Part No. A24563-001. Use cement for P.V.C. pipe and fittings to glue union halves to ends of ice tube.
   D. Caution!! Inside diameter of assembled connections must be clear of any obstructions or burrs. Otherwise ice will not flow through tube!
   E. Maximum length of ice tube permitted is 10 ft. Maximum number of 90° elbows permitted is (3) three.
   F. Insulation for ice tube may be purchased from Queen Products Part No. 13-0279-00. Insulation may also be purchased from plumbing or refrigeration supply houses. Sample material is from:
      Rubatex Corporation
      Bedford, Virginia
      Sponge tubing 1-1/4" I.D. x 1/4" Wall
      Rubatex No. R-180-V
   G. Connection of ice tube to ice discharge tube to be made by swaging end of ice tube using hot air gun or hot water and secured with worm drive clamp as shown. Swage must be at least 1 inch long!
   H. For any deviation from these recommendations consult Queen Products Service Department before installation of KTMF Kit.

DIAGRAM 'B'

1. Fasten transformer box to rear panel of flaker unit as shown.
2. Fasten remote bin thermostat control box near ice storage area.
3. The two leads between remote bin thermostat control & transformer box to be 16 AWG, stranded, 1/32 insulation. This is a 24 VAC low voltage circuit and may be routed along ice transport tube.
4. Route wires provided with transformer box thru rear panel & to the main control box on flaker unit.
5. Lead from gear motor to be disconnected from pressure control terminal & joined with blue wire from transformer box by use of a wire nut.
6. Attach black wire from transformer box to vacated terminal on pressure control.
7. Attach white wire from transformer box to neutral side of power supply or on line opposite side of master switch for 230 volt applications.

DIAGRAM "A"

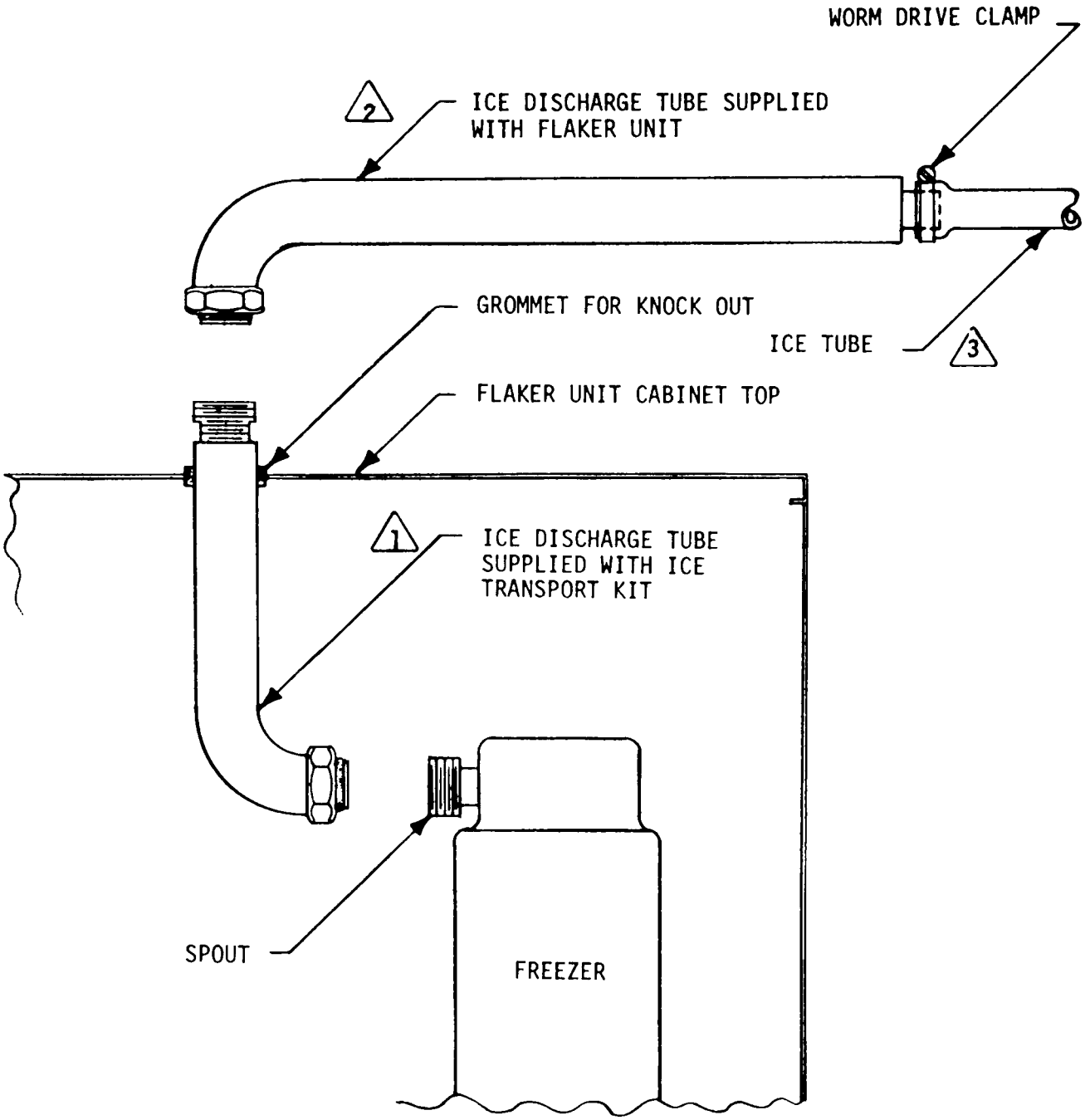
WORM DRIVE CLAMP
2
ICE DISCHARGE TUBE SUPPLIED WITH FLAKER UNIT
GROMMET FOR KNOCK OUT
ICE TUBE
3
FLAKER UNIT CABINET TOP
1
ICE DISCHARGE TUBE SUPPLIED WITH ICE TRANSPORT KIT
SPOUT
FREEZER

DIAGRAM "B"

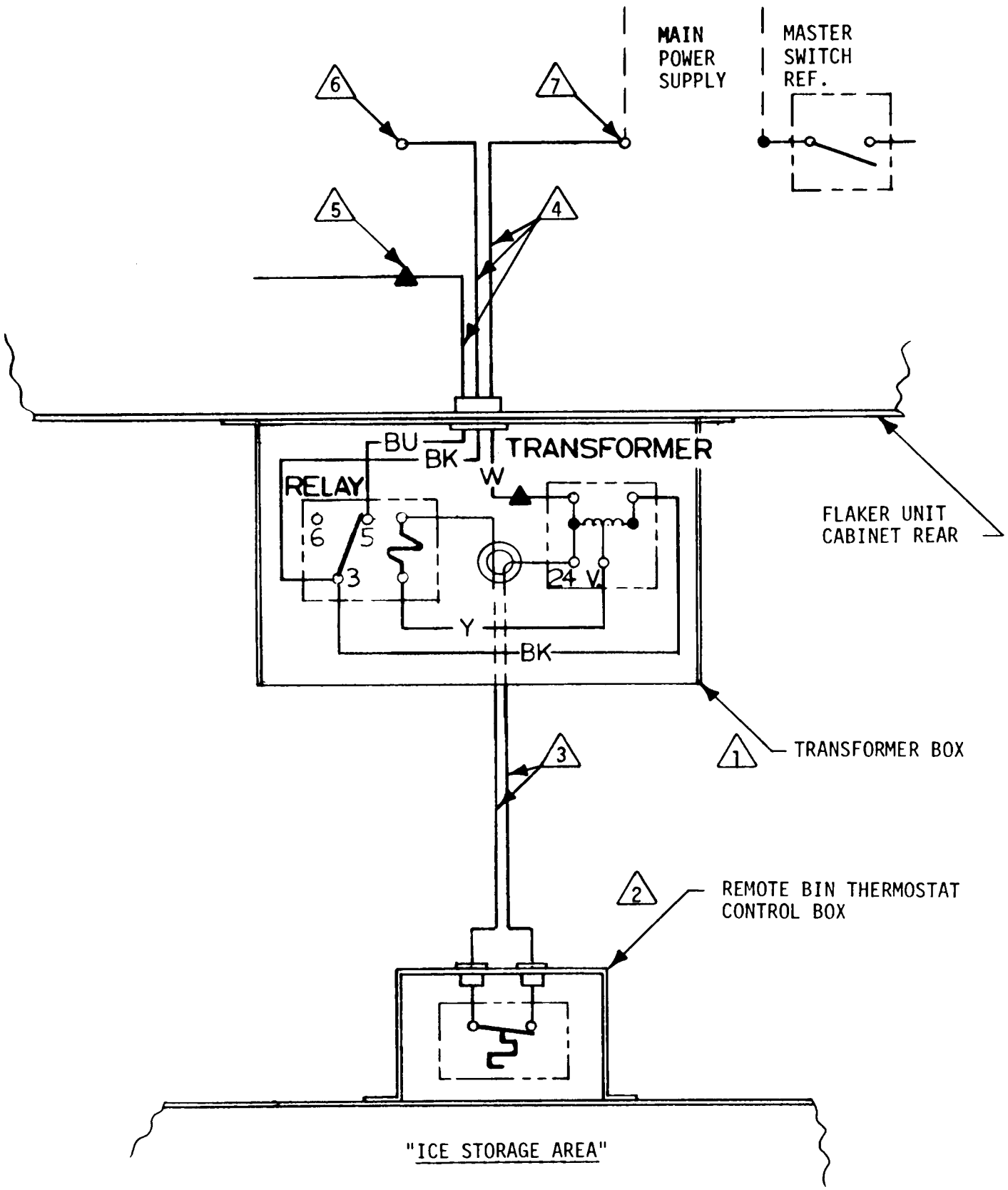
MAIN
POWER
SUPPLY
MASTER
SWITCH
REF.
6
7
5
4
BU
BK
TRANSFORMER
W
RELAY
6
5
3
24 V
Y
BK
FLAKER UNIT
CABINET REAR
1
TRANSFORMER BOX
3
2
REMOTE BIN THERMOSTAT
CONTROL BOX
"ICE STORAGE AREA"

TABLE OF CONTENTS

Foreward 1
Table of Contents 2
Photograph and Ice Making Capacity 3
Specifications and Dimensions 4
Description 5
Installation Practices 6
Ice Discharge Tube and Bin Thermostat Installation 7
Installation Limitations 8
Preparation for Installation 9
Electric Water Drain Connections 10
Starting the Machine - Refrigerant Charge 11
Final Check List 12
Refrigerant Cycle 13
Water Schematic 14
Wiring Diagram—Water Cooled 15
Wiring Diagram—Air Cooled 16
Service Analysis 17-18
PARTS BREAKDOWN:
Chassis Assembly—Air Cooled 19
Chassis Assembly—Water Cooled 20
Freezer Assembly 21
Gear Motor Assembly 22
Compressor Assembly 23
Control Box Assembly 24
Reservoir Assembly 25
Cabinet Parts 26
Spout and Safety Switch 27
Lo Pressure Cycle Control 28
SERVICE:
Gear Motor 29
Freezer Assembly 29
Freezer Worm Shaft 29
Freezer Assembly Top Bearing 30
Freezer Assembly Bottom Bearing & Water Seal 30
Bin Thermostat 30
Head Pressure Control (Water Cooled) 31
Water Regulating Valve (Water Cooled Models) 31
Water Reservoir 31
Maintenance - Cleaning Instructions 32
Gear Motor Assembly 33
Centrifugal Switch Kit 34
Wiring Diagram—Water Cooled 35
Wiring Diagram—Air Cooled 36

THIS PAGE
INTENTIONALLY
LEFT BLANK

THIS PAGE
INTENTIONALLY
LEFT BLANK

SCOTSMAN

MODULAR FLAKER

MF3-C SERIES

Continuous Flow

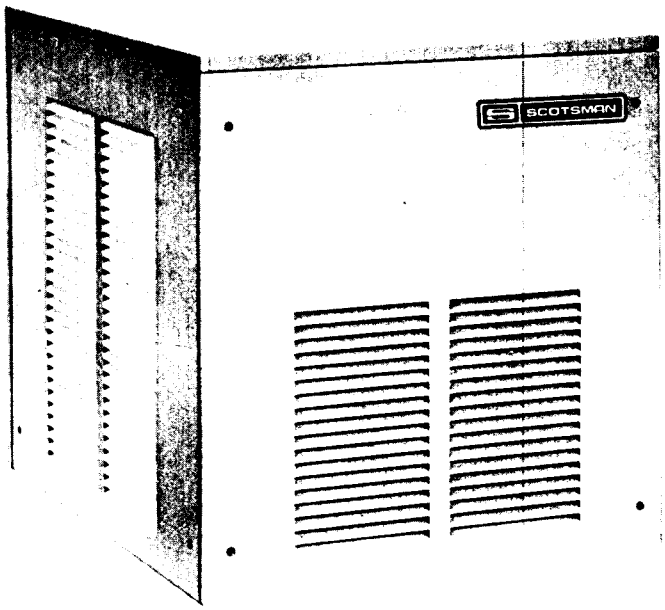

ice making capacity

Daily Ice capacity is directly related to condenser air inlet temperature, water temperature, and age of machine.

NOTE: To keep your SCOTSMAN MODULAR FLAKER performing at it's maximum capacity, it is necessary to perform periodic maintenance as outlined on page 32 of this manual.

SPECIFICATIONS:

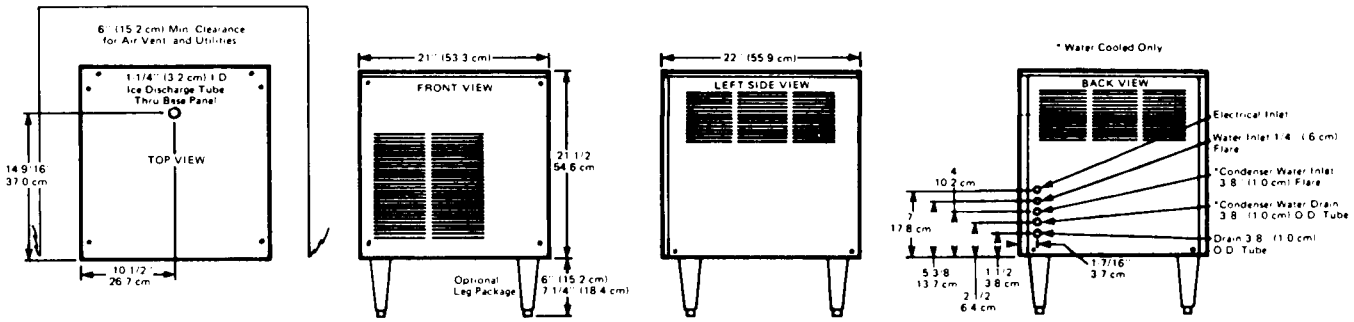

***Capacity:** Refer to Ice Making Capacity chart.
Storage Bin: B20, B40, B60, B80, B90, B500, B750 and extensions.
Height: 21½" (54.6 cm) **Width:** 21" (53.3 cm)
Depth: 22" (55.9 cm)
SPKMF3C: Separate Stainless Steel Panel Kit. Not factory installed.

OPTIONAL LEG KITS –
KLP2E: 6" adjustable Black Enamel Legs.
KLP2S: 6" adjustable Nickel Plated Legs.

IMPORTANT OPERATING REQUIREMENTS:
Electrical Voltage: Machine requires voltage indicated on rating nameplate. Failures caused by improper voltage are not considered factory defects.
Ambient Temperature: Machine is not designed for outdoor installation. Machine will not operate when air temperature is below 50° F. or above 100° F.
Water Pressure & Temperature: Requires 20 lbs. flowing water pressure, without interruption. Machine will not operate when water supply temperature is below 40° F. or above 100° F.

MF3C MACHINE SPECIFICATIONS

Model Number	Condensing Unit	Compressor Horsepower	Finish*	Ship.Wt. lbs./kg.
MF3CAE	Air	1/2	Enamel or	175/79
MF3CWE	Water	1/2	Stainless Steel	175/79

*Sandalwood baked enamel finish or SPKMF3C Stainless Steel Panel Kit.

Basic Electricals		Max. Oper. Amps	No. of Wires	Min.** Circuit Ampacity	Max. Fuse Size
Air-Cooled:	115/60/1	16.1	2	18.9	20
	230/60/1	6.3	2	7.4	15
Water-Cooled:	115/60/1	15.2	2	18.0	20
	230/60/1	5.7	2	.8	15

**Use this value to determine minimum wire size required to meet National Electric Code Standards.

TWO YEAR PARTS WARRANTY

MANUFACTURER'S LIMITED WARRANTY

Scotsman warrants to the original purchaser-user, that any commercial product of its manufacture bearing the name Scotsman will be free from defect in material and/or workmanship, and that if properly installed and serviced in accordance with the User Manual furnished with the product, it will perform adequately under normal use.

This product warranty shall be effective for a period of two years from the date of original installation if such installation is reported on Scotsman's warranty registration form returned to the factory at the time of installation, or for a period of 27 months from date of shipment from the factory if the warranty registration form has not been returned (provided the foregoing warranty periods will be extended for an additional three years as to the motor compressor part). This warranty is applicable only in the United States and Canada.

Scotsman's obligation is limited strictly to replacing without charge, or to repairing, upon return to its factory, transportation charges prepaid, any part or parts that shall be found to be defective in material and/or workmanship during the warranty period. The serial and model numbers and date of original installation of the product must be given. Charges for labor (except labor performed in the Scotsman factory to repair defective parts) are not covered. No part or assembly which has been subject to accident, alteration or misuse, or which is not installed or serviced in accordance with the user manual furnished with the product, or which is from a machine on which the serial number has been altered or removed, shall be covered by this warranty. All decisions regarding defects in material or workmanship or accident, alteration, misuse or improper maintenance or installation shall be made by Scotsman's Service Department and shall be final and binding upon the parties.

Scotsman assumes no liability for incidental or consequential damages of any kind or for any damages resulting in whole or in part from misuse or inadequate maintenance of the product or any part thereof.

THIS WARRANTY IS IN LIEU OF ALL OTHER WARRANTIES OR GUARANTIES OF ANY KIND, EXPRESSED OR IMPLIED, INCLUDING ANY IMPLIED WARRANTY OF MERCHANTABILITY OR FITNESS FOR A PARTICULAR PURPOSE.

We reserve the right to make product improvements at any time. Specifications and design are subject to change without notice.

DESCRIPTION

SCOTSMAN Modular Flakers are designed for restaurants, super markets, soda fountains, hospitals, bakeries, fish markets, poultry stores, packing plants, etc. It is the finest Ice Maker on the market today. It will work 24 hours a day for you, or only as needed. It produces the highest quality ice available at any price.

SCOTSMAN Modular Flakers are easily installed requiring only standard water, drain and electrical connections.

ATTRACTIVE COMPACT CABINET. Sandlewood or stainless steel removable panels makes for easy access to mechanical parts.

SEALED REFRIGERATION SYSTEM. Provides quiet, efficient operation of the machine. Compressor motor is internally spring mounted for quiet operation. Compressor motor is covered by a 5-Year Warranty.

HOW IT WORKS. An exclusive patented ice-making system, wherein water in the constant level float reservoir is fed to the bottom end of the freezing cylinder and turns to ice on the inside of this cylinder. Ice from the refrigerated walls of this cylinder is extruded past the ice breaker at the top of the cylinder through a side opening by means of a stainless steel auger driven by a gearmotor drive.

Model No. MF-3 is a continuous flow type machine, and is manually started by an OFF and ON switch located inside the cabinet. Since the MF3 does not have its own attached bin, it is necessary to use an auxillary bin such as the MODEL SB-500 SCOTSMAN Bin for ice storage. A bin thermostat is mounted in each continuous flow type machine for the purpose of mounting control bulb from machine to bin.

The MF Series Flakers are also designed for remote type installations, whereby, ice can be transported from the flaker via plastic tubing to a bin located several feet away.

INSTALLATION PRACTICES

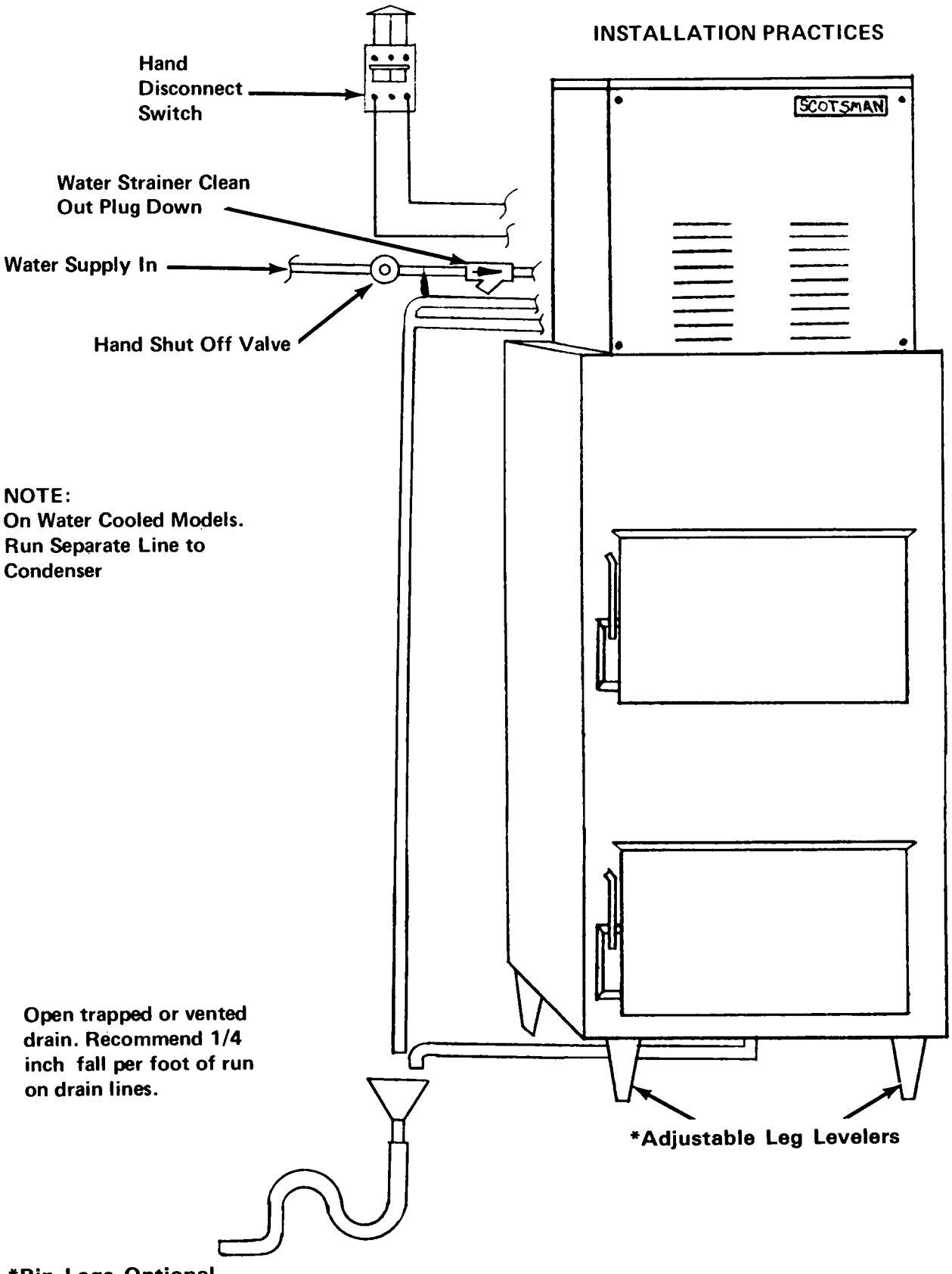

INSTALLATION INSTRUCTIONS

MODULAR FLAKER
ICE DISCHARGE TUBE
MF3 SERIES

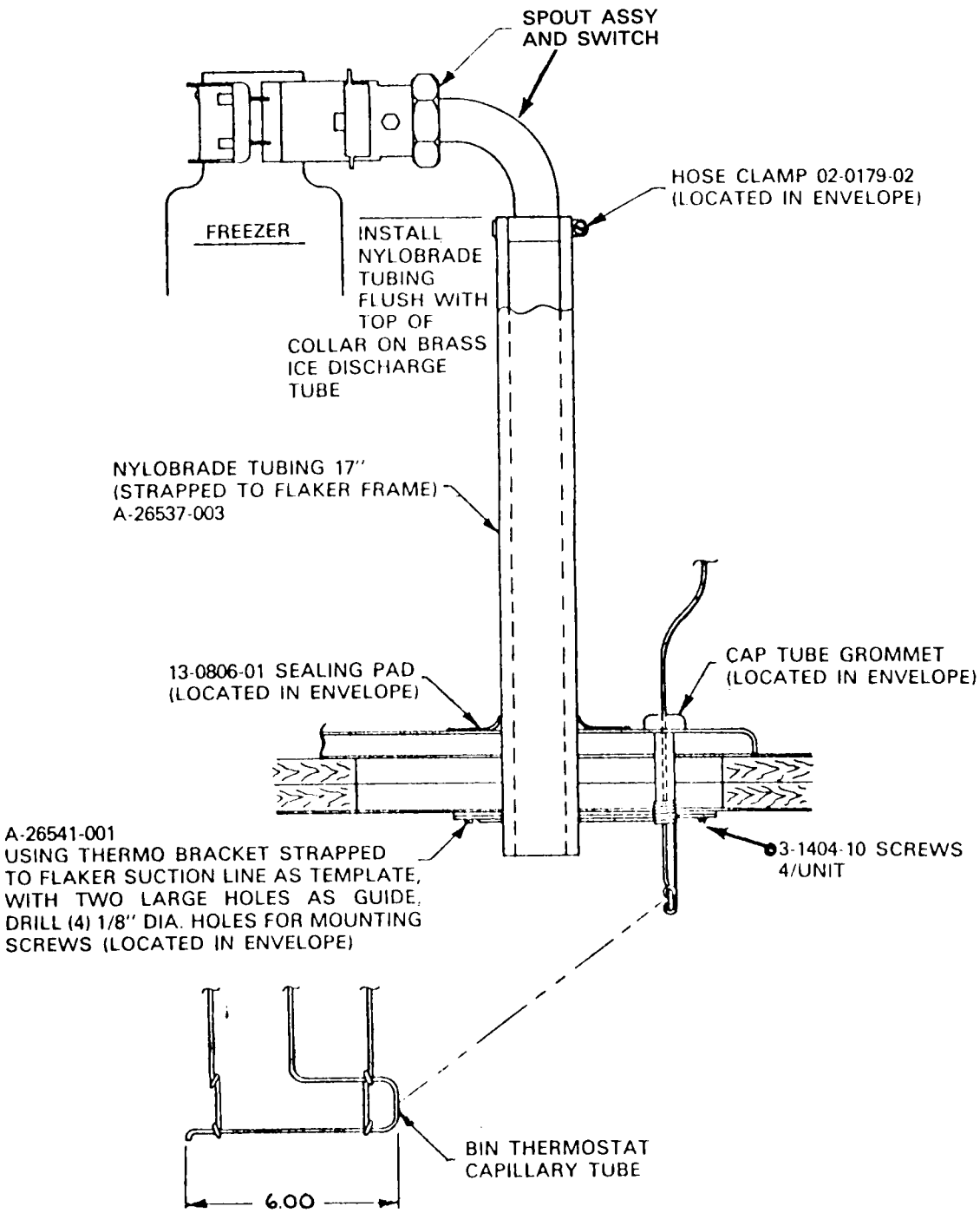

INSTALLATION LIMITATIONS

ELECTRICAL

1. Scotsman purchases electrical motors that are rated to operate within 10% variance above or below nameplate ratings.

2. Improper voltages applied to Scotsman equipment can cause premature failures and burnouts. Failures of this type are not considered as factory fault or defect.

AMBIENT

WARNING — This machine is not designed for outdoor installations. This machine will not operate when air temperatures are below 50° F. or above 100° F.

This unit was not fabricated nor intended to be installed outdoors.

WATER

3. Scotsman Ice Systems require 20 pounds flowing water pressure to operate satisfactorily. Pressures lower than 20 pounds or interruptions in the water supply can cause serious mechanical damage to this product.

   This machine will not operate when water supply temperatures are below 40° F. or above 100° F.

WARNING

This machine is not designed for outdoor installations or installations where air temperatures are below 50° F or above 100° F and the water temperature is below 40° F or above 100° F. Extended periods of operation at temperatures exceeding these limitations will constitute misuse under the terms of the Scotsman manufacturers limited warranty resulting in a loss of warranty coverage.

1. The following installation instructions were written for use by an authorized tradesman only, not the user or customer. We suggest you call your local authorized Scotsman Service Agency for hook-up, start-up, and check out. He's listed under "Ice Making Machinery & Equipment" in your telephone book, yellow pages.

SCOTSMAN MODULAR FLAKERS
PREPARATION FOR INSTALLATION

1. Select unit location prior to hook up of water drain and electrical in accordance with local and national codes. Minimum room temperatures is 50° Fahrenheit, maximum room temperature 100° Fahrenheit. On air cooled models, select well ventilated location.

2. Install bin for use with modular flaker in its permanent location following instructions included with the storage bin.

3. Level bin with adjustable legs and wipe storage bin liner clean with damp cloth.

4. After uncrating modular flaker, remove front, side and top panels and inspect for any concealed damage. Notify carrier of any concealed damage claims.

5. Before placing flaker unit on bin, holes in rubber gasket on bin top must be cut to allow passage of ice discharge tube and bin thermostat control tube into bin. This can be done by using holes in bin top as a template.

6. Remove rubber grommet from miscellaneous parts package and insert into place. A good seal must be made between grommet and base panel and between grommet and inner bin. See page 7 cutaway drawing.

7. The flaker unit may now be placed on the bin. Insure that the holes in the base panel line up with the holes in the bin top.

8. Position ice discharge tube assembly, through large grommet in base & attach to spout. See page 7.

9. Attach bulb holder to ice discharge tube in direction shown on page 7. Route bin control tube through smaller grommet then insert tube into tube holder as shown.

10. Thru cabinet top, locate water reservoir. Remove water reservoir cover and check for free action of float ball.

11. Check motor compressor hold down nuts to insure motor compressor rides snug on mounting pads.

12. Remove water strainer from envelope for installation in water supply line feeding unit.

13. Open electrical control box cover and check unit nameplate voltage against building source voltage and make sure they correspond. Caution - Improper voltage supplied to units will void your parts replacement program.

14. Locate and tear out registration card from front of owners guide and fill out card completely including model and serial numbers as taken from aluminum plate found behind front service panel. Forward to Scotsman factory using self mailing card, for your personal registration certificate.

INSTALLATION
ELECTRICAL CONNECTIONS:
MF3AE-1
115 Volts, 60 Hertz, 1 Phase
20 Amp. Circuit

Code sized wire should be used for electrical hook-up. All Scotsman Modular Flakers require a solid earth ground wire.

Be certain that the Flaker is on its own circuit and individually fused. The maximum allowable voltage variation should not exceed 10 per cent of the nameplate rating even under starting conditions. Low voltage can cause erratic operation and may be responsible for serious damage to the overload switch and motor windings.

All external wiring should conform to the National, State and local Electrical Code requirements. Usually an electrical permit and the services of a licensed electrician will be required.

ELECTRICAL INSTALLATION
MF3AE-1C

Compressor	1/2 HP	Copelaweld: RSF2-0050-1AA-207
		2 pole, 3500 RPM
	Voltage	115
	Amp. rating F.L.A.	10.0
	Hertz	60
	Phase	Single
Gear Drive Motor	1/10 HP	Queen Products
	Voltage	115
	Amp. Rating	4.0
	Hertz	60
	Phase	Single
		Thermally Protected

WATER SUPPLY: The recommended water supply line is 1/4 inch I.D. copper tubing for the MF3. Connect to cold water supply line with regular plumbing fittings, with a shut-off valve installed in an accessible place between supply line and machine. A water strainer must be installed with the unit and mounted with clean-out plug down. Locate the strainer next to the machine with the arrow in the direction of the flow. Most plumbing codes also call for double check valves in the supply water line, particularly for water-cooled models.

On air-cooled models the water supply line connects to the 1/4 inch flare fitting on the machine. On water-cooled models connections are made to a 3/8 inch male pipe nipple inside of the machine compartment. Incoming water goes through the water regulating valve first and then to the water-cooled condenser. Observe arrow on water regulating valve. Water supply must be installed to conform with local code. In some cases a licensed plumber and/or a plumbing permit will be required.

WARNING: This machine must not be allowed to operate when the water supply is shut off, or at below recommended water pressure. Turn master switch to 'OFF" position when water supply is off, or when water pressure is below recommended operating pressure.

DRAIN: The recommended drain from the bin is 1/2" N.P.T. pipe nipple. Must be run to an open trapped and vented drain. If drain is a long run, allow 1/4 inch pitch per foot. Drain must be installed to conform with local code. Run separate line for condenser discharge water on water-cooled models.

STARTING THE MACHINE:

When the machine is placed and inspected as per instructions and all plumbing and electrical connections are completed and tested, turn on the water supply. Be sure the float cover is removed to check on the float operation and water level in the water reservoir. Be sure the water reservoir is filled before starting the machine. Water level should be 1/4 inch below the reservoir overflow.

When this is completed, turn on the manual switch located behind front panel of the cabinet and the machine is in automatic operation. In two to three minutes ice will start dropping off the worm shaft and out the ice chute. Let the machine operate for at least 30 minutes and check for any excess noise other than the normal compressor noise. Test the ice storage control bulb by holding a handful of ice around the bulb until the machine shuts off. One minute should be normal for the control to function. Within minutes after the ice is removed, the bulb will warm up and the machine will automatically start up. The control is factory set and should not be reset until this test is made. Normal setting of this control should be approximately 35 degrees cut-out and 45 degrees cut-in.

Check pressure settings at the time of start-up. On the water-cooled models set the head pressure at 135 PSI. On the air-cooled models the head pressure will vary between 130 and 145 PSI head pressure. The frost line should extend out of the accumulator if properly charged with refrigerant and suction pressure will range between 12 and 14 PSI with 50° F inlet water.

REFRIGERANT CHARGE:

The below refrigerant charge is approximate. When charging, set at 135 PSI head pressure and charge so that the frost line extends out of the evaporator and into the accumulator after fifteen minutes of operation.

Model	Refrigerant Charge
Air-Cooled	23 oz. R-12
Water Cooled	20 oz. R-12

WARNING: THIS MACHINE MUST NOT BE ALLOWED TO OPERATE WHEN THE WATER SUPPLY IS SHUT OFF, OR AT BELOW RECOMMENDED WATER PRESSURE. TURN MASTER SWITCH TO "OFF" POSITION WHEN WATER SUPPLY IS OFF, OR WHEN WATER PRESSURE IS BELOW RECOMMENDED OPERATING PRESSURE.

FINAL CHECK LIST

1. Is the unit level? (IMPORTANT)
2. Have all electrical and piping connections been made?
3. Has the voltage been tested and checked against the nameplate rating?
4. Is the water supply valve open and the electric power on?
5. Is the water reservoir filled and shut off?
6. Have unit and bin been wiped clean?
7. Has owner been given the Users Manual, and has he been instructed on how to operate the machine?
8. Have the installation and registration cards been filled out? This is the owner's protection.
9. Check all refrigerant and conduit lines to guard against vibration and possible failure.
10. Installed in a well ventilated room where ambient temperatures do not fall below 50° Fahrenheit.
11. Is unit installed with a minimum 4" air space around sides and back?
12. Bin thermostat operation and proper shut off level checked?
13. Drain lines checked and open?

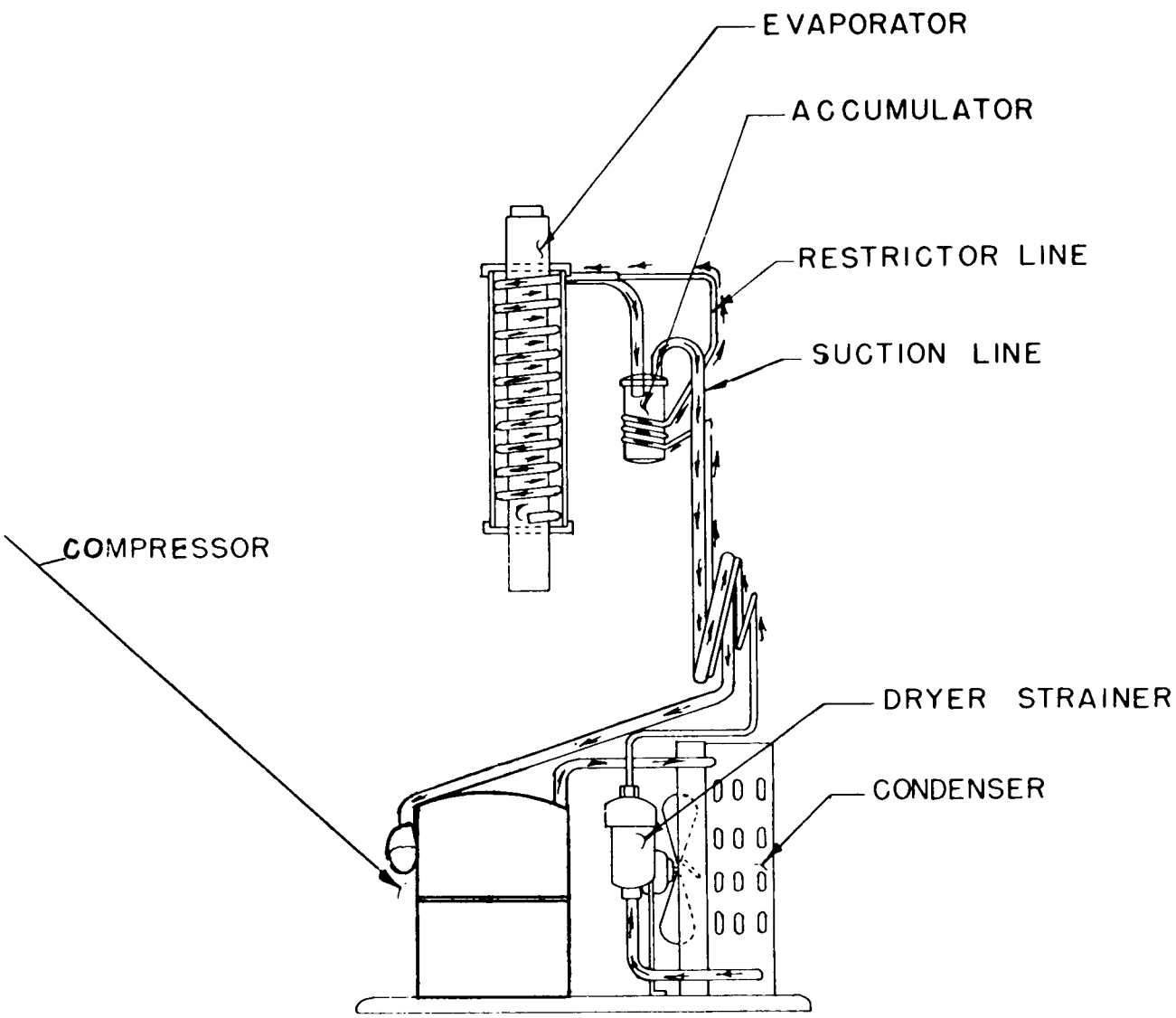

REFRIGERATION CYCLE

WATER SCHEMATIC

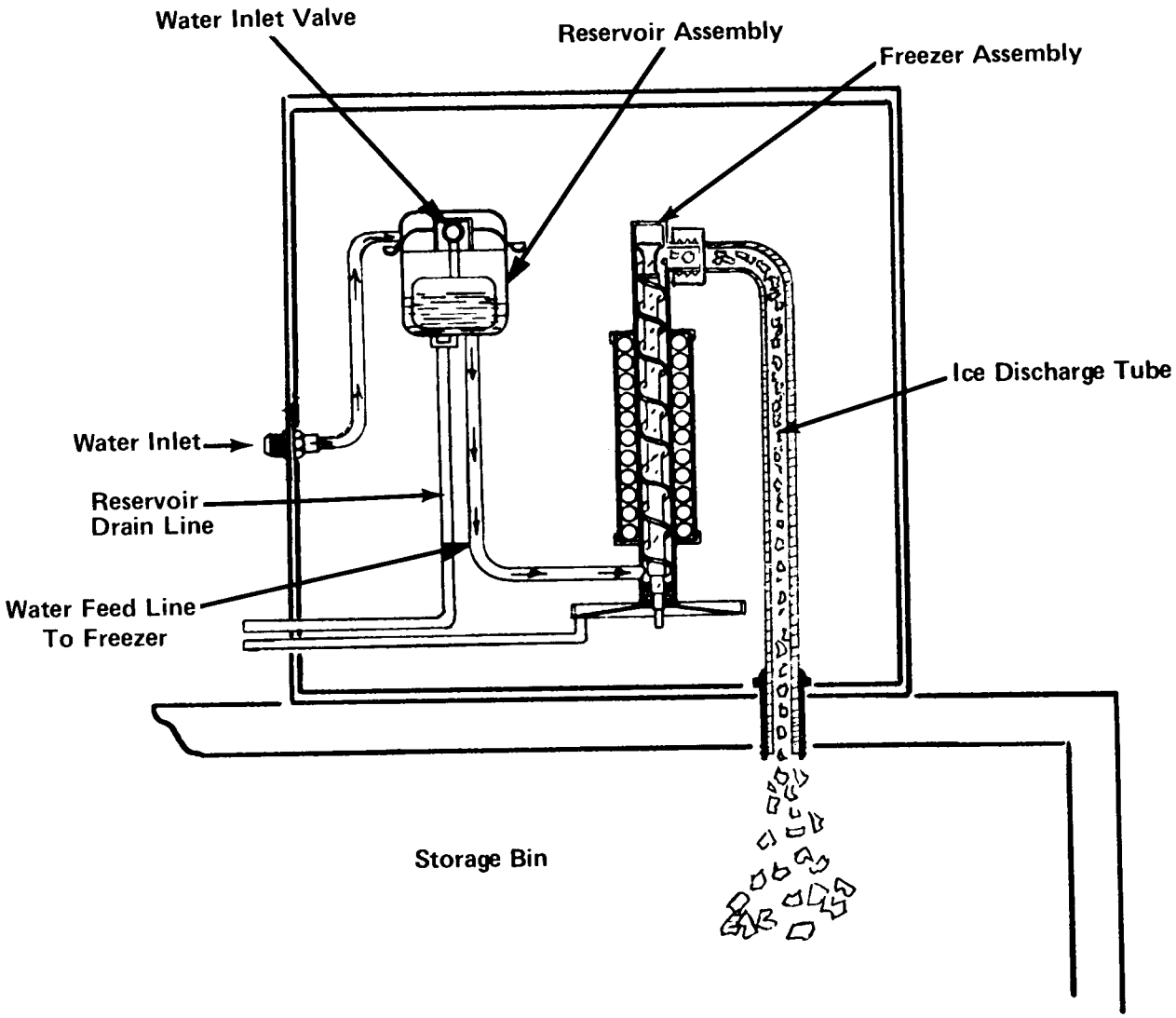

WIRING DIAGRAM
A27045-001
WATER COOLED

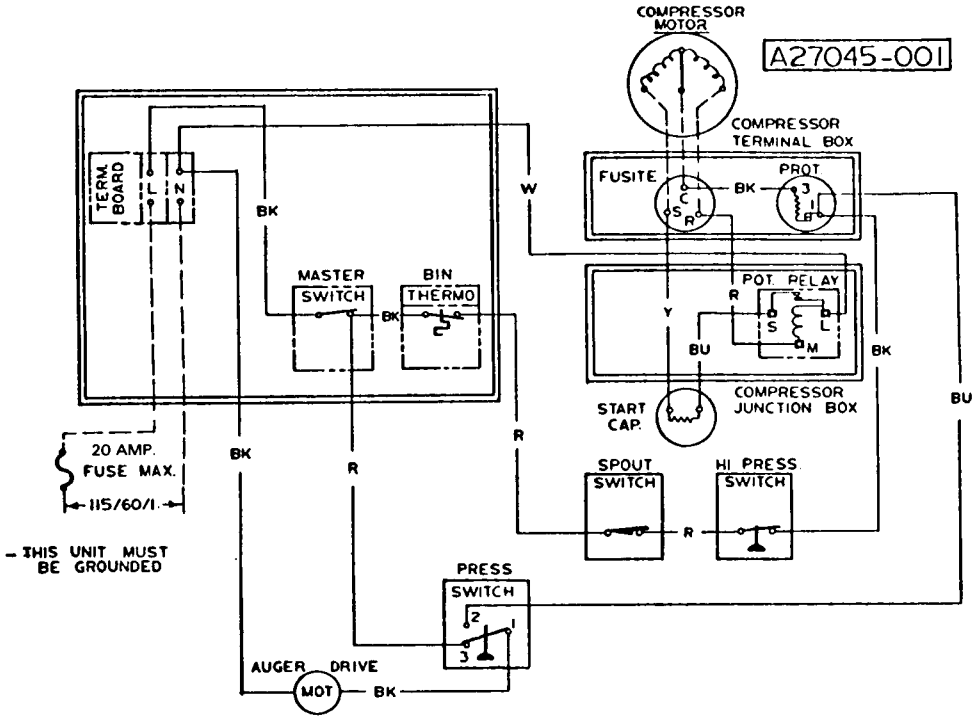

ALL CONTROLS SHOWN IN NORMAL ICE MAKING MODE

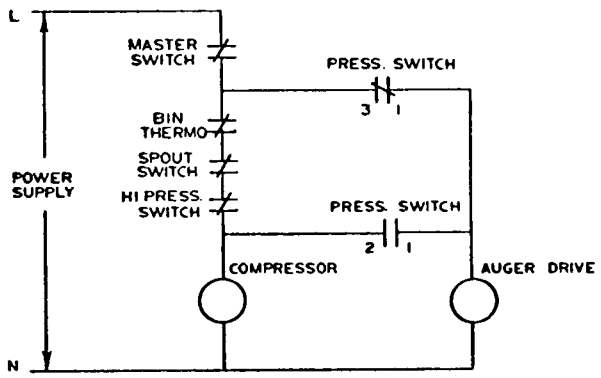

NOTE:

This diagram depicts models which **DO NOT** incorporate a gearmotor centrifugal switch. Refer to pages 33 - 36 for new model information.

WIRING DIAGRAM
A27044-001
AIR COOLED

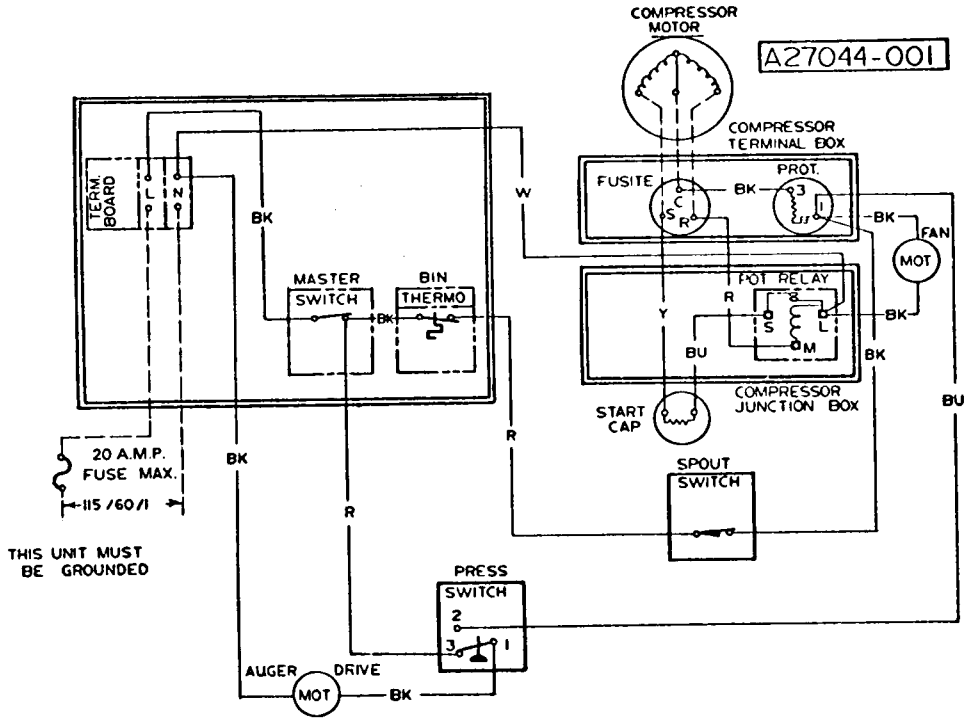

ALL CONTROLS SHOWN IN NORMAL ICE MAKING MODE

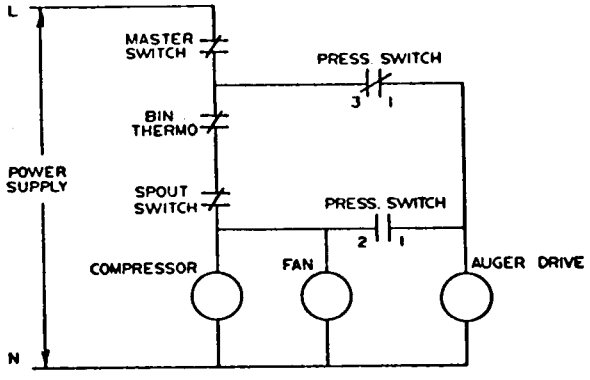

NOTE:

This diagram depicts models which **DO NOT** incorporate a gearmotor centrifugal switch. Refer to pages 33 - 36 for new model information.

SERVICE ANALYSIS

SYMPTOM	POSSIBLE CAUSE	CORRECTION
Unit will not run	Blown Fuse	Replace fuse and check for cause of blown fuse.
	Thermostat set too high	Adjust thermostat. 35° cut-out and 45° cut-in.
	Loose electrical connection	Check wiring.
	Switch in OFF position	Turn switch to ON.
	Inoperative master switch	Replace switch.
Compressor cycles intermittently	Low voltage	Check for overloading.
	Dirty Condenser	Clean.
	Air circulation blocked	Move unit to correct
	Inoperative condenser motor	Replace.
	Non-condensable gases in system	Purge off.
Making wet ice	Surrounding air temperature	Correct or move unit to cooler location.
	Under or over-charge of refrigerant	Recharge with the proper amount.
	High water level in water reservoir	Lower to 1/4 inch below overflow pipe.
	Faulty compressor	Repair or replace.
Low ice production	Loss of refrigerant, under or over-charge of refrigerant.	Check and recharge with proper amount of refrigerant.
	Dirty or plugged condenser	Clean condenser
	Low water level in water reservoir	Adjust to 1/4 inch below overflow pipe.
	Partial restriction in capillary tube or drier	Moisture in system. Overcharge of oil in System. Remove charge and drier. Replace and recharge system.
	Inlet water strainer partially plugged.	Remove screen and clean.
	Corroded or stained worm shaft due to water condition.	Remove worm shaft and clean.
Machine runs but makes no ice	Loss or under-charge of refrigerant	Check for leaks and recharge
	Drive gearmotor or drive coupling stripped.	Check. Repair and/or replace.
	Water not entering freezing chamber	Plugged strainer or supply line. Check and clean. Air lock in gravity feed line. Check and remove air lock.
	Moisture in system	Check and remove charge and drier.
	Water seal leaking	Replace seal
	Water supply to unit off	Restore water supply to icemaker.

SYMPTOM	POSSIBLE CAUSE	CORRECTION
Water Leaks	Defective water seal Gravity feed line leaking "O" ring in spout casting leaking. Storage bin drain & connecting fittings leaking. Water level in reservoir too high	Replace Check hose clamps Remove spout casting and install new "O" ring. Check and repair. Adjust to 1/4 inch below overflow pipe
Excessive noise or chattering	Mineral or scale deposit on auger and inner freezing chamber walls. Low suction Intermittent water supply Water level in reservoir too low. Gearmotor loose on frame Gearmotor end-play or worn bearings.	Remove and manually polish auger, polish inner chamber walls of freezer barrel. For lighter concentrations use Scotsman Ice Machine Cleaner periodically. Add gas to raise suction pressure. Check & clean water strainer. Check gravity feed line for air lock. Remove air lock. Adjust to 1/4 inch below overflow pipe. Tighten. Repair or replace.
Machine continues to run with full storage bin	Storage bin thermostat not properly set.	Reset or replace. 35° cut-out, 45° cut-in Check operation with handful of ice.
Gearmotor noise	Low on oil	Remove case cover to check for proper oil level. Top of gears should be covered. Use Sun Oil Co. Prestige 50 EP, or 600 W Oil.
Gearmotor Off, Compressor On.	Micro switch on gearmotor sticking or defective.	Check - Insure centrifical switch plate activates switch.

MF3C Air Cooled

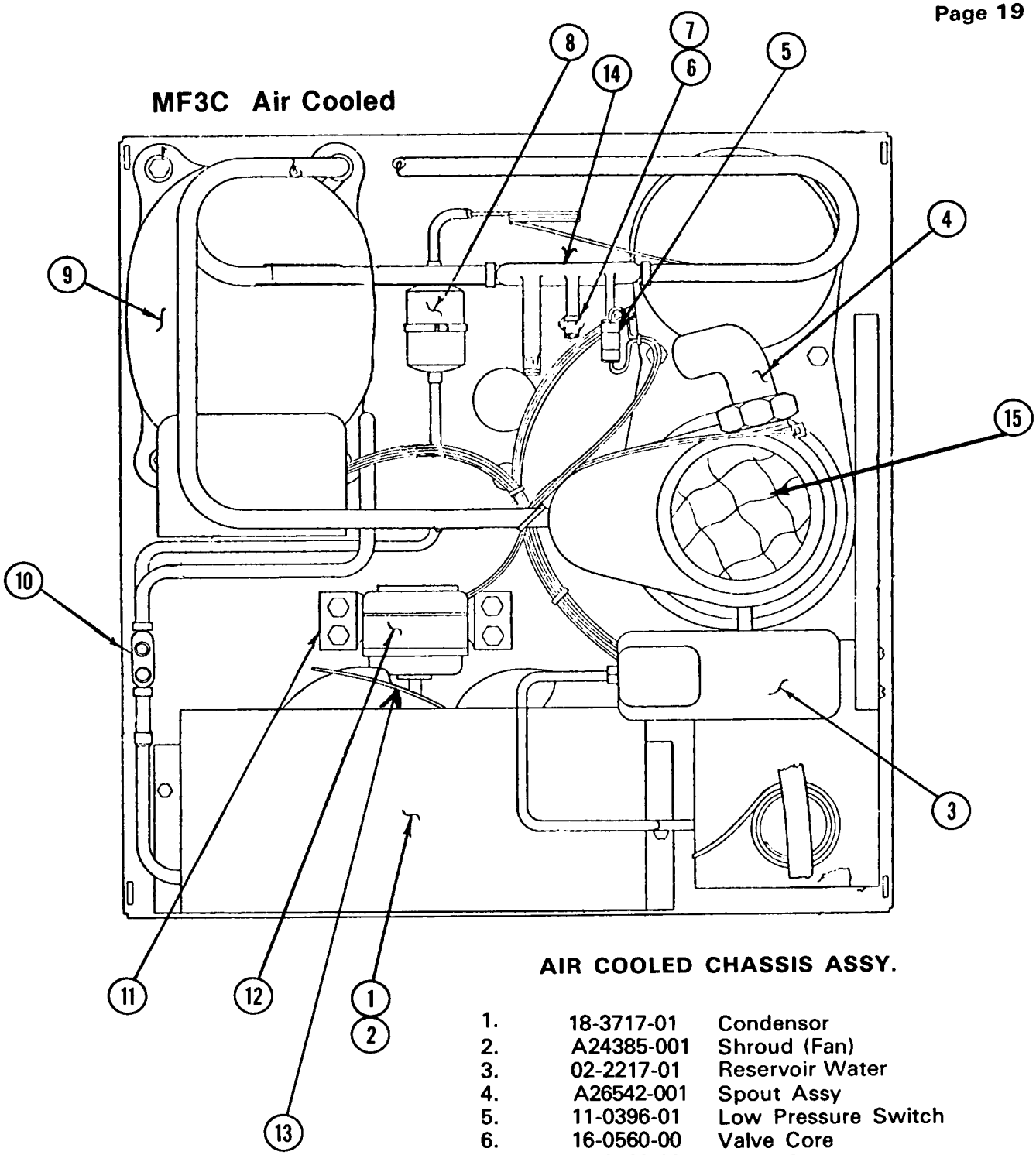

AIR COOLED CHASSIS ASSY.

1.	18-3717-01	Condensor
2.	A24385-001	Shroud (Fan)
3.	02-2217-01	Reservoir Water
4.	A26542-001	Spout Assy
5.	11-0396-01	Low Pressure Switch
6.	16-0560-00	Valve Core
7.	16-0563-00	Brass Cap
8.	02-0831-00	Dryer
9.	18-4500-01	Compressor
10.	16-0673-02	Process Header
11.	18-0422-00	Fan Mounting Bracket
12.	12-1576-01	Fan Motor
13.	18-3309-01	Fan Blade
14.	16-0673-04	Process Header (Low Side)
15.	13-0815-01	Freezer Cap.

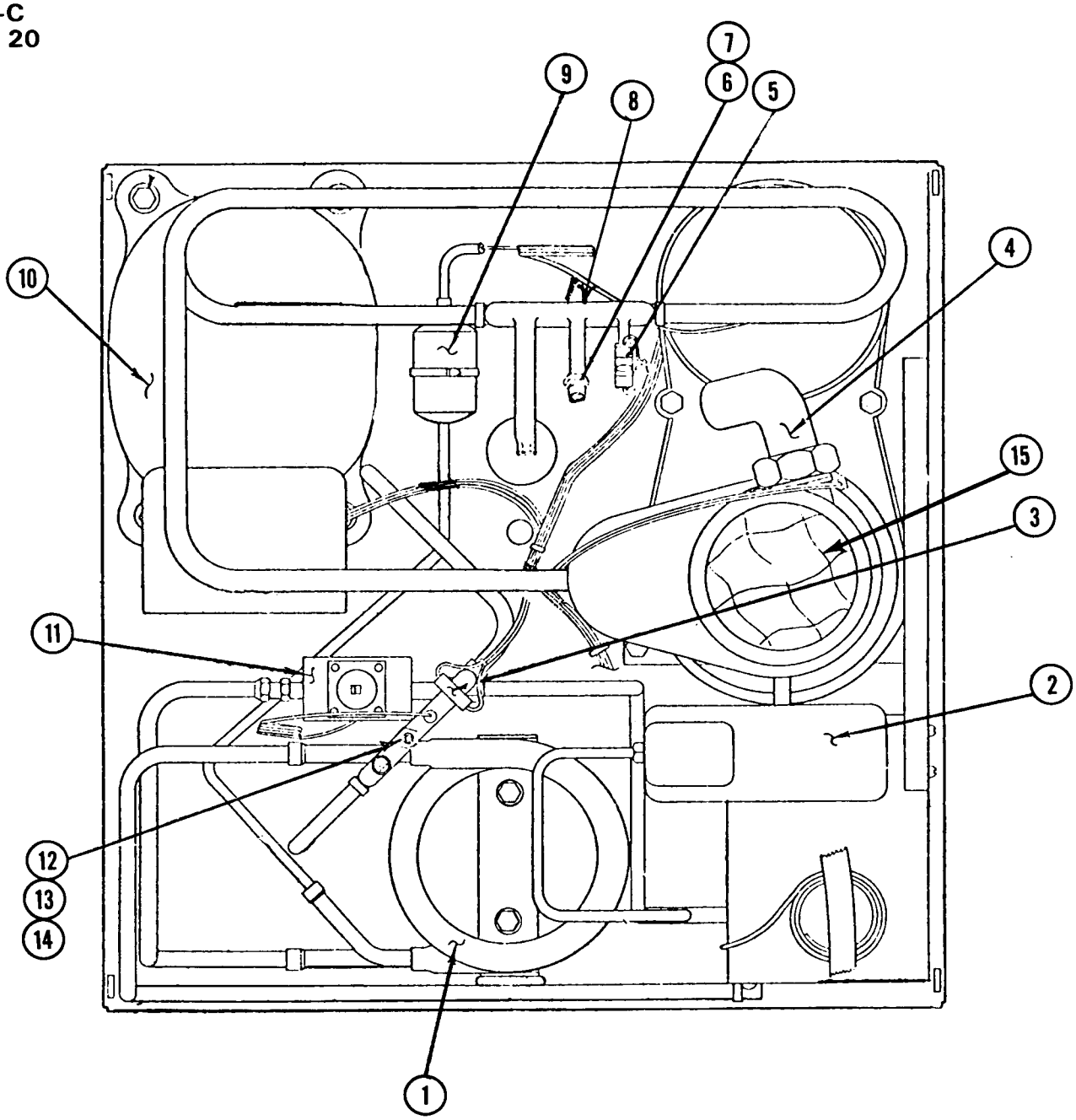

WATER COOLED CHASSIS ASSY

1.	18-3303-02	Condensor
2.	02-2217-01	Reservoir
3.	11-0397-01	High Pressure Switch
4.	A26542-001	Spout Assy
5.	11-0396-01	Low Pressure Switch
6.	16-0560-00	Valve Core
7.	16-0563-00	Brass Cap
8.	16-0673-04	Process Header (Low Side)
9.	02-0831-00	Dryer
10.	18-4500-01	Compressor
11.	11-0198-00	Water regulator
12.	16-0673-02	Process Header
13.	16-0560-00	Valve Core
14.	16-0563-00	Brass Cap
15.	13-0815-01	Freezer Cap

FREEZER ASSEMBLY - EXPLODED VIEW - MODEL — MF3

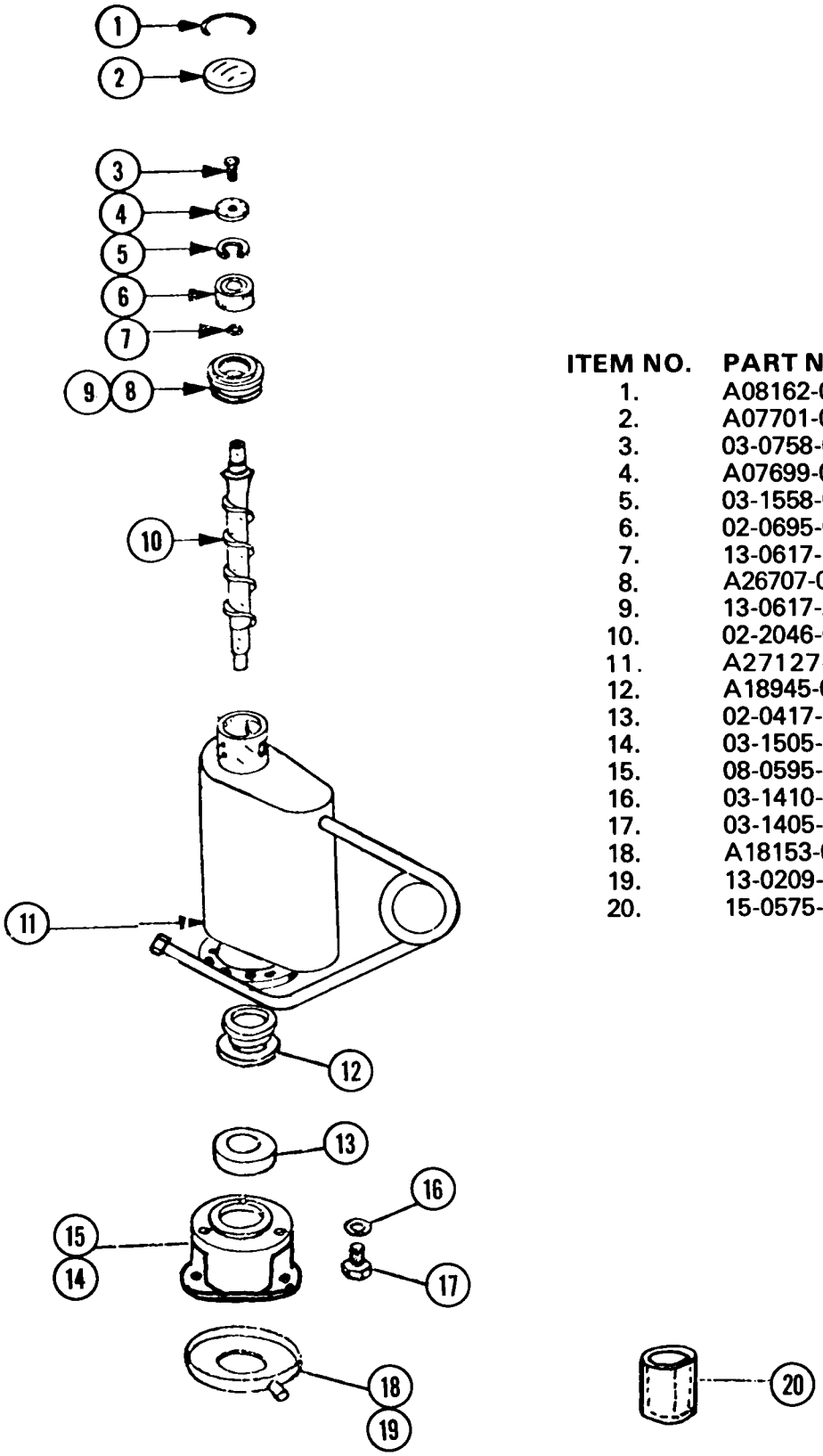

ITEM NO.	PART NO.	DESCRIPTION
1.	A08162-000	Cap Hook
2.	A07701-000	Cap
3.	03-0758-00	Cap Screw
4.	A07699-000	Washer
5.	03-1558-03	Retaining Ring
6.	02-0695-00	Bearing
7.	13-0617-16	"O" Ring
8.	A26707-001	Bearing Retainer w/Bearing
9.	13-0617-29	"O" Ring
10.	02-2046-01	Auger
11.	A27127-020	Worm Tube
12.	A18945-000	Water Seal
13.	02-0417-00	Lower Bearing
14.	03-1505-00	Adapter Gasket
15.	08-0595-01	Adapter
16.	03-1410-04	Washer
17.	03-1405-42	Screw
18.	A18153-000	Drip Pan
19.	13-0209-01	Drip Pan Gasket
20.	15-0575-01	Drive Coupling

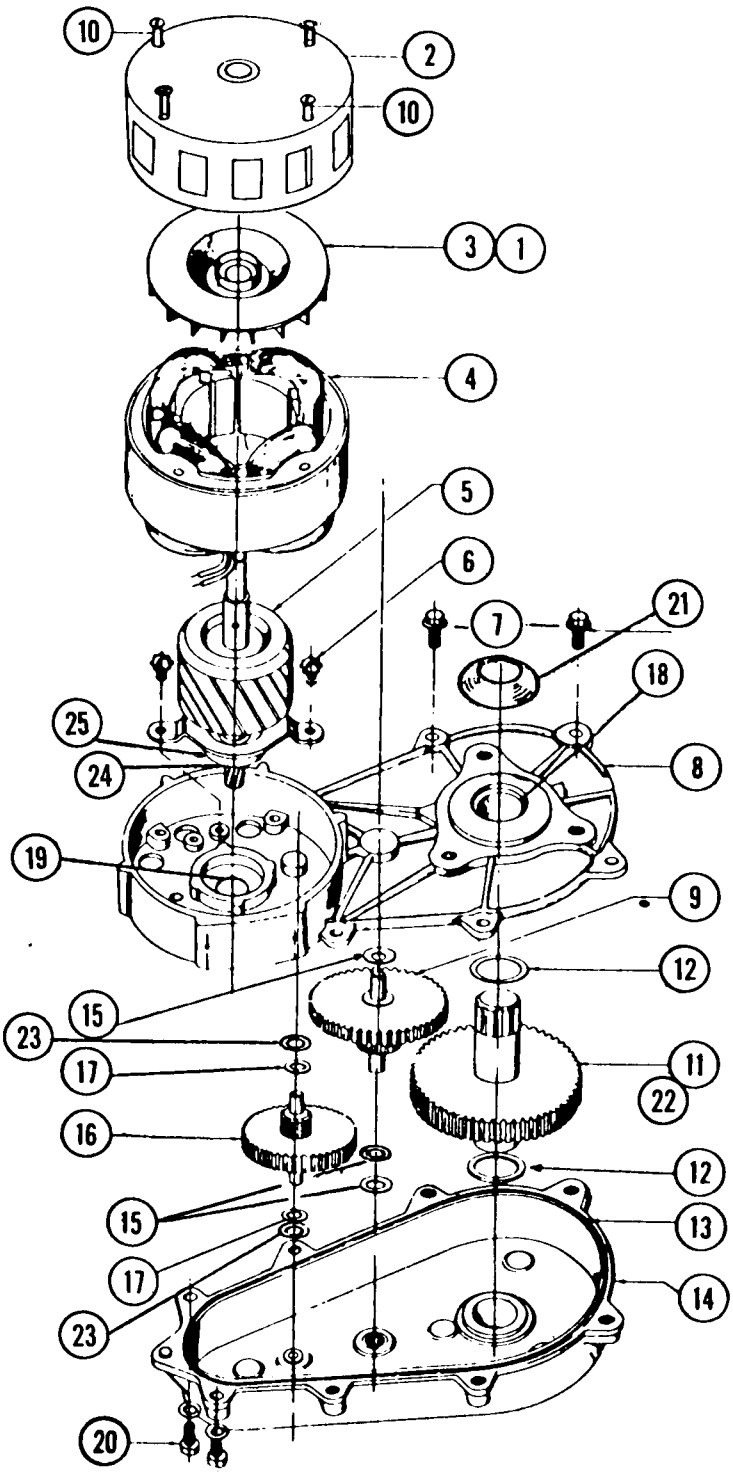

A25995-021
GEAR MOTOR ASSEMBLY
1/10 H.P.
115/60/1
11.5 RPM At Out Put Shaft

ITEM NO.	PART NO.	DESCRIPTION
1.	03-1246-00	Set Screw (2)
2.	A17047-000	Motor Housing
3.	A16915-000	Cooling Fan
4.	12-1400-01	Stator Assy.
⚠2 5.	A26454-001	Rotor & 1st Gear Kit
6.	03-1245-00	Screws (2)
6.		
7.	03-1251-00	Flange Screws (2)
⚠1 8.	A16920-021	Gear Case Cover
9.	02-1521-00	Gear and Pinion
10.	03-1403-43	Motor Bolts (4)
11.	A26650-01	Gear and Output Shaft
12.	03-1408-21	Washer (2)
13.	02-1505-00	"O" Ring
⚠3 14.	A24184-001	Gear Case Kit
15.	03-1408-06	Washer (3)
16.	02-2224-01	1st Gear and Pinion
17.	03-1408-19	Washer (2)
18.	02-1503-00	Grease Seal
19.	02-1504-00	Grease Seal
20.	03-1252-00	Screw (2)
21.	13-0709-01	Water Shed
22.	03-1475-01	Key
23.	03-1408-20	Washer (2)
24.	13-0617-04	Slinger Ring
25.	02-1501-00	Rotor Bearing

⚠1 Cover comes with grease seals items 18 & 19.

⚠2 Fiber gear (item 16) and rotor bearing (item 25) are in the rotor kit.

⚠3 Includes items: 8, 13, 15, 17, 18, 19, 23 plus can of oil.

NOTE:

Refer also to pages 33 - 36 for additional information concerning gearmotor centrifugal switch.

COMPRESSOR 115/60/1

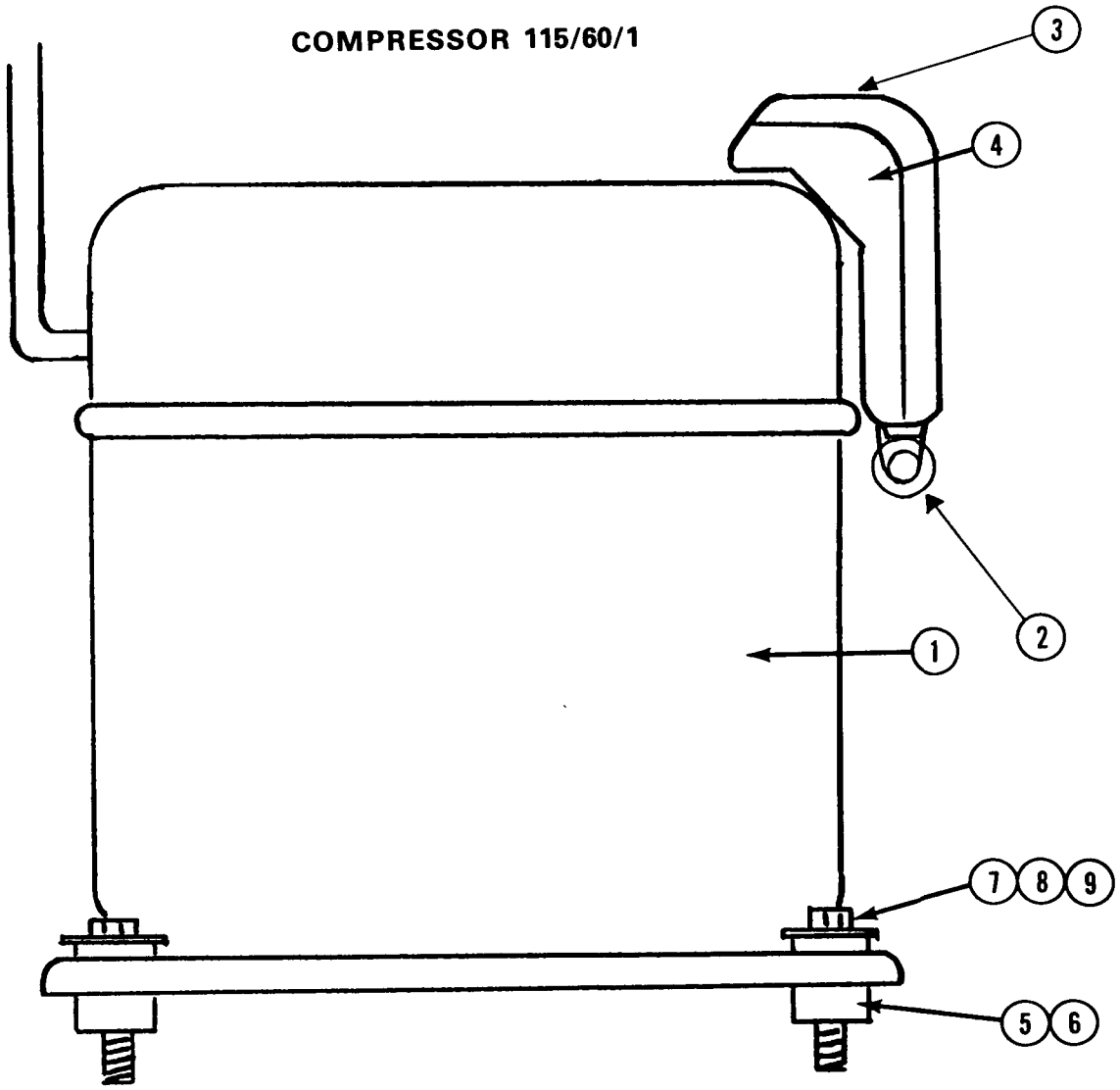

ITEM NO.	PART NO.	DESCRIPTION
1.	18-4500-01	Compressor
2.	18-1901-33	Capacitor
*3.	18-2200-26	Relay
4.	18-2200-25	Overload
5.	18-2200-27	Sleeve (4)
6.	18-2200-28	Grommet (4)
7.	03-1405-40	Screw (4)
8.	03-1417-12	Washer (4)
9.	03-1408-02	Washer (4)

*Not Shown

CONTROL BOX ASSEMBLY
WATER AND AIR COOLED

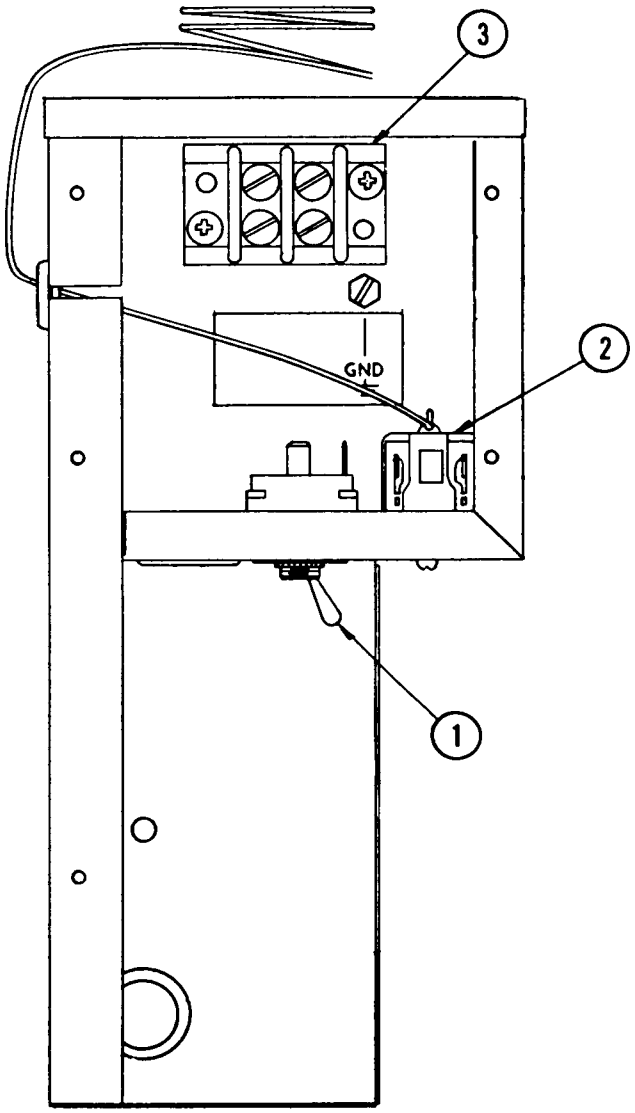

1.	Master Switch	12-0426-01
2.	Temperature	11-0354-00
3.	Terminal Board	12-0813-04

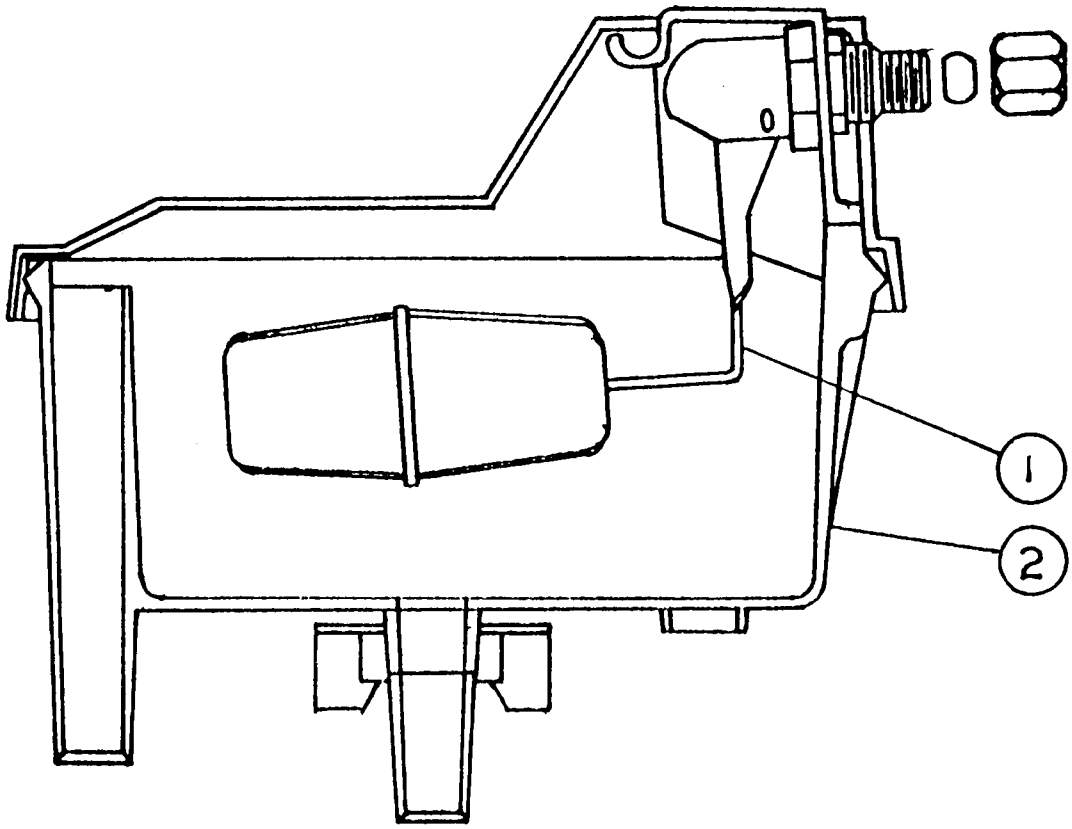

RESERVOIR ASSEMBLY

ITEM NO.	PART NO.	DESCRIPTION
1.	02-2217-02	Valve Assy.
2.	02-2217-01	Reservoir Complete

CABINET PARTS

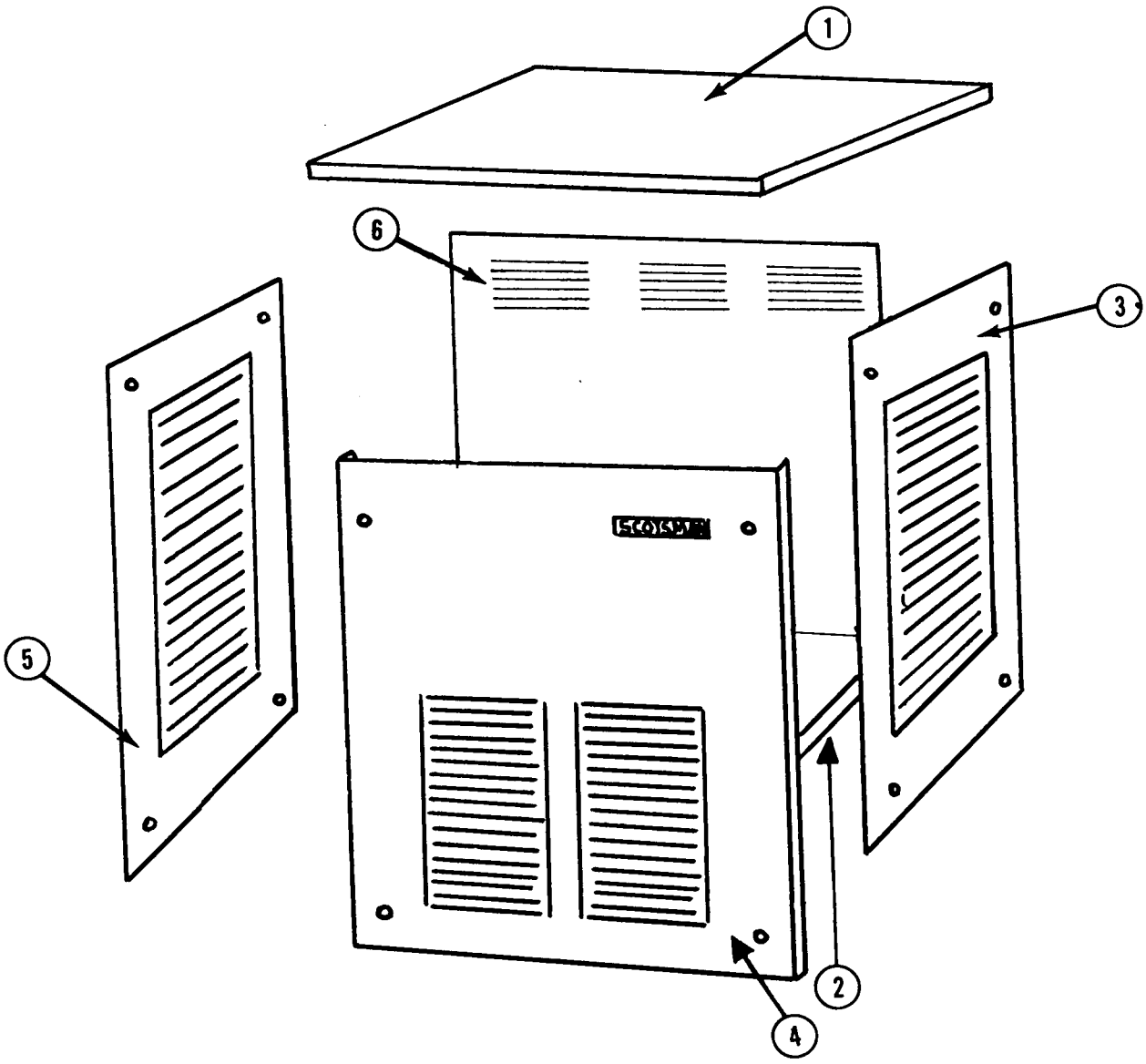

ITEM NO.	DESCRIPTION	ENAMEL	STAINLESS STEEL
1.	Panel Top	A26625-001	A26625-002
2.	Cabinet Base	A27103-001	Same
3.	Panel, Right Side	A26624-001	A26624-002
4.	Panel, Front	A27111-001	A27111-002
5.	Panel, Left Side	A26623-001	A26623-002
6.	Panel, Rear	A26622-001	A26622-002
*	Mounting Screws	03-1414-09	Same 4/Panel
*	Aerosol Paint (micromatte)	10-0314-01	

*Items not illustrated

SPOUT AND SAFETY SWITCH

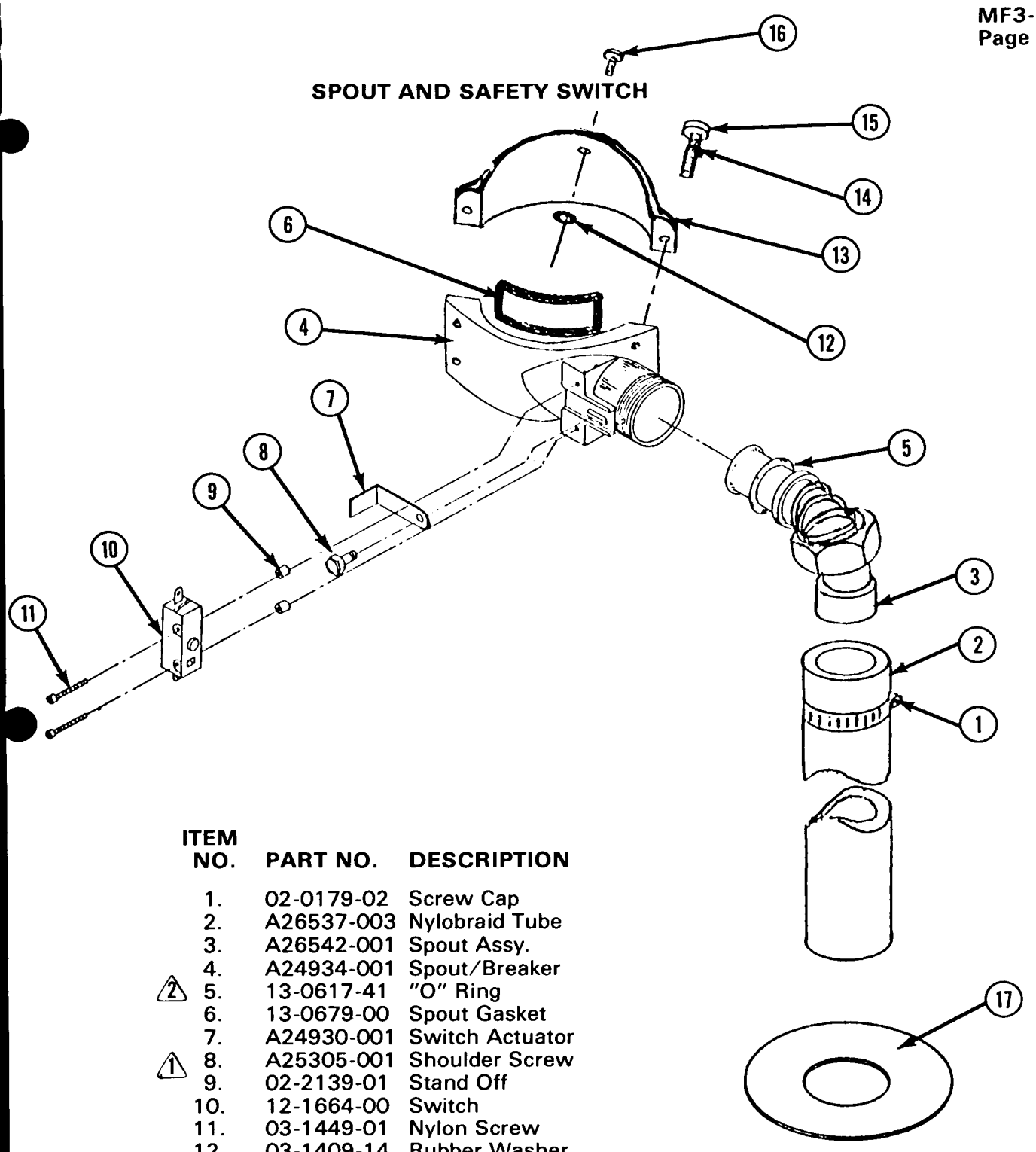

ITEM NO.	PART NO.	DESCRIPTION
1.	02-0179-02	Screw Cap
2.	A26537-003	Nylobraid Tube
3.	A26542-001	Spout Assy.
4.	A24934-001	Spout/Breaker
⚠2 5.	13-0617-41	"O" Ring
6.	13-0679-00	Spout Gasket
7.	A24930-001	Switch Actuator
⚠1 8.	A25305-001	Shoulder Screw
9.	02-2139-01	Stand Off
10.	12-1664-00	Switch
11.	03-1449-01	Nylon Screw
12.	03-1409-14	Rubber Washer
13.	A18430-002	Spout Plate
14.	03-1417-07	Lockwasher (4)
15.	03-1544-03	Socket Head Screw (4)
16.	03-1506-01	Screw
17.	13-0806-01	Sealing Pad

NOTE:

⚠1 Tighten carefully, small thread & brass

⚠2 A light coating of petro-jel required on "O" Ring & Spring

Description of the Function of the Texas Instruments Low Pressure Control Switch When Used on 1/10 H.P. Gear Motors

On all Scotsman units using a 1/10 H.P. gear motor, the centrifugal switch mechanism, mounted on top of the motor, was removed and replaced, in the system, with a low pressure control switch. This is a single pole double throw (SPDT) switch manufactured by Texas Instruments. (Queen Products Part No. 11-0396-01*).

*Refer to a typical wiring diagram, showing contacts, for description of switch function.

On all Queen Products wiring diagrams, the controls are shown in the ice making mode. Thus, the 1-3 contacts are shown as closed. On machine start up the 1-3 contacts are open and the 1-2 contacts are closed. As the unit begins to run, the low side pressure starts to fall from the stabilized or "at rest" pressure. As soon as the pressure drops to 20 Psig, the 1-2 contacts open and the 1-3 contacts close. This removes the operating controls, such as the bin thermostat, from the "gear motor circuit". If one of the operating controls opens, it will shut off the "compressor circuit". The gear motor will run until the low side pressure rises to 32 Psig. At this point the 1-3 contacts open and turns the gear motor off. This usually takes 1-3 minutes depending on ambient conditions. This length of time allows the auger to transport all the ice out of the freezing chamber. Consequently, when called on to start up again, there is no load to start up against. On start up, again, the 1-3 contacts are open and the 1-2 contacts closed.

*Function 11-0396-01 Low Pressure Control Switch

1-3 Contacts - Open on Pressure Rise
Opens at 32 Psig
Closes at 20 Psig

1-2 Contacts - Open on Pressure Fall
Opens at 20 Psig
Closes at 32 Psig

ALL CONTROLS SHOWN IN NORMAL ICE MAKING MODE

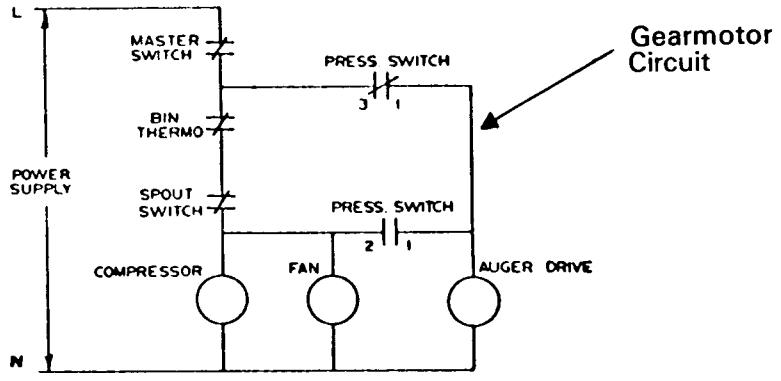

NOTE: Refer also to Pages 33 - 36 for additional information concerning Gearmotor Centrifugal Switch.

TO REPLACE: FREEZER GEAR MOTOR

1. Remove top, front and side panels.
2. Shut off water supply and disconnect electrical power to unit.
3. Remove electrical leads from motor to control box.
4. Remove slip nut attaching ice discharge tube to freezer spout casting.
5. Next remove 3 bolts securing base adapter to gear motor cover and the 4 bolts holding the gear motor bracket to the cabinet base.
6. Lift freezer and adapter assembly off gear motor and pull gear motor and mounting bracket out of cabinet.

FREEZER ASSEMBLY

TO REPLACE:

1. To remove freezer first remove cabinet top, front and side panels.
2. Shut off water supply and disconnect electrical power to unit.
3. Drain reservoir and freezer of water by removing tygon tubing entering base of freezer.
4. Remove slip nut attaching ice discharge tube to freezer spout casting.
5. Purge off refrigerant and unsweat suction line. Disconnect capillary line at drier. Cap off all lines so no moisture can enter system.
6. Remove the 3 bolts securing freezer base adapater to top of gear motor cover.
7. Freezer assembly now can be lifted off gear motor and out of cabinet.
8. To re-install reverse procedure. Refer to section "Specifications" for proper refrigerant charge and to page 11 for Head and Back pressure settings.

FREEZER WORM SHAFT (AUGER)

TO REPLACE:

1. Disconnect electrical supply and shut off water to unit.
2. Remove top and front panel of cabinet.
3. Drain reservoir and freezer of water by removing tygon tubing entering base of freezer.
4. Next remove slip nut attaching ice discharge tube to freezer spout casting and insulation covering top of freezer chamber.
5. Remove the 4 bolts attaching the freezer spout casting to the spout bracket and remove spout casting. Also remove bracket by removing the stainless steel screw which secures the bracket to the freezer chamber.
6. By lifting up on the freezer cap pull ring, the complete worm shaft and bearing retainer can be removed from freezer chamber. NOTE: Top half of water seal is attached to the lower end of the worm shaft.

FREEZER ASSEMBLY TOP BEARING

TO REPLACE:

1. Follow steps 1 thru 6, freezer worm shaft removal.
2. To remove bearing and retainer from worm shaft, first remove retaining ring in top of bearing retainer.
3. Remove freezer cap and pull ring from bearing retainer.
4. Unscrew cap screw holding shaft to inner race of bearing and pull worm shaft free from bearing and retainer.
5. When replacing with a new bearing add new grease (Beacon No. 325) to top of bearing.

FREEZER ASSEMBLY BOTTOM BEARING AND WATER SEAL

TO REPLACE:

1. To replace, follow steps 1 through 6 under Worm Shaft Removal.
2. Remove 3 bolts holding freezer to mounting adapter.
3. Lift freezer off adapter just high enough to allow bottom bearing and bottom half of water seal to be removed from bottom of freezer tube.
4. Lightly grease bottom half of new water seal and insert face up approximately 1/2" in bottom of freezer tube.
5. Insert bottom bearing in bottom of freezer tube, force approximately 1/8" past bottom tube end. This will allow the positioning ring on adaptor to properly position freezer tube when tightening up the three mounting bolts.
6. After securing mounting bolts, put new top half of water seal on worm shaft the same way as the old seal was removed. When reassembling, put a small amount of Vaseline on shaft end. This will allow shaft to slide smoothly through rubber bottom half of water seal without tearing it.
7. Carefully insert worm shaft assembly in freezer tube and into spline coupling on bottom.
8. Replace spout casting, screws, insulation pieces and unit is ready to resume operation.

BIN THERMOSTAT:

Thermostat control body is located in electrical control box. The thermostat sensing tube is threaded into the ice storage bin where it automatically stops the icemaker when ice bin fills to sensing tube level and restarts icemaker when ice is removed. Factory settings are 35° cut out, 45° cut in.

Altitude correction begins at 2,000 feet, cut in and cut out screws should be adjusted equally, not more than 1/4 turn at a time.

IMPORTANT — Refer to page 7 for proper location of bin control capillary.

TO REPLACE:

1. Disconnect electrical supply.
2. Remove bin thermostat capillary tube from bin location.
3. Remove front panel and control box cover.
4. Disconnect two spade type electrical leads.
5. Loosen two screws in control mounting bracket.
6. Replace with new control and reassemble in reverse of above.
7. CAUTION: Always check new control power element charge before installation to assure receiving an operative control. A handful of ice on bulb will register on audible 'click' at cut off.

HEAD PRESSURE CONTROL (WATER COOLED MODELS)

The head pressure safety control is factory preset at 250 lb. PSIG. This is a manual reset control. The control is placed in the system as a safety precaution, to terminate power to the unit should loss of water occur to the water cooled condenser.

WATER REGULATING VALVE (Water Cooled Models Only)

The Water Regulating Valve is designed to maintain a constant head pressure by regulating the amount of incoming water flow through the water cooled condenser. This valve is operated by high side pressure and may be adjusted by the adjusting screw on top of the valve to raise or lower the operating head pressure.

TO REPLACE:

1. Shut off water supply to machine and disconnect electrical power.
2. Disconnect old valve from water supply line and install new valve.
   NOTE: Be sure arrow on side of valve points in direction of water flow.
3. Purge off refrigerant and disconnect valve capillary line from high side fitting and immediately attach capillary from new valve.
4. Recharge system. Refer to page 11 for proper refrigerant charge and head and pressure settings.

WATER RESERVOIR

A water level is maintained in the water reservoir by a float operated valve. Water is piped from the water reservoir to the freezing chamber by a gravity feed line maintaining an equal water level.

The water reservoir is equipped with a 2 inch air gap to prevent back siphoning and meet all health codes.

The water level in the water reservoir is adjusted by bending float arm. The water level should be set 1/4 inch below the overflow standpipe.

A water strainer must be installed in the supply line. Use strainer sent with machine.

TO REPLACE:

1. Remove cabinet top and side panel.
2. Turn off water supply and drain reservoir.
3. Remove 1/4 inch inlet water line.
4. Remove plastic feed line to freezer.
5. Remove two screws holding reservoir bracket to wall.
6. Lift out reservoir.
7. To replace, reverse procedure.

MAINTENANCE INSTRUCTIONS – FLAKERS

THE FOLLOWING MAINTENANCE SHOULD BE SCHEDULED THREE TIMES PER YEAR ON ALL SCOTSMAN MODULAR FLAKERS. CALL YOUR AUTHORIZED SCOTSMAN SERVICE DEPARTMENT.

1. Check and clean water strainers and float valve. Depress float valve to insure full stream of water.
2. Check water level and machine level, keep water level below overflow, but as high as possible and still not run out of spout opening with machine off. Water droplets come out of spout with ice at all times. Adjust as required.
3. Clean reservoir and interior of freezer using SCOTSMAN Ice Machine Cleaner.
   If machine has been cleaned regularly and no problems such as dry ice or chatter are noticed, clean as per the following instructions:
   a. Set main switch to OFF.
   b. Remove all ice from storage bin.
   c. Turn off water supply or block float. Drain reservoir by disconnecting tube between reservoir and freezer. After draining, reconnect tubing.
   d. Set main switch to ON and pour cleaning solution into reservoir. Do not fill above overflow tube.
      Use 6 oz. of Scotsman cleaner and 1-1/2 qts. hot water.
   e. Continue to make ice on solution until the solution is used up and reservoir is empty.
   f. Set main switch to OFF Remove overflow tube, wash and rinse reservoir, replace overflow tube, turn water on or remove float block.
   g. Turn MAIN SWITCH to ON. Let unit run for at least (15) minutes to flush out any cleaning fluid. Check ice for acid taste – run until ice tastes sweet.
   h. Turn MAIN SWITCH to OFF. Add hot water to ice bin, using the melt water, thoroughly wash and rinse all surfaces within the storage bin.
   i. Turn MAIN SWITCH to ON. Replace Service Door. Unit is ready for normal operation.

NOTE: Cleaning requirements vary according to local water conditions. Visual inspection of the auger before and after cleaning will indicate best procedure to be followed in local areas.

4. Check high and low side pressures. On air-cooled models head pressures range between 130 and 145 PSI. Suction pressure should be above 12 PSI and will range up to 15 PSI depending upon water and ambient temperatures.
5. Check gear motor operation. Normal running temperatures are in the area of 160° Fahrenheit, which is hot to the touch.
6. Check top bearing of freezing tube. Remove retainer ring around edge of stamped brass cap. If moisture is around bearing, wipe up and remove grease. Add new grease. Use Beacon No. 325. Replace cap and retainer ring.
7. Clean air-cooled condenser. Inform customer to clean frequently. Always shut off machine when cleaning.
8. Oil condenser fan motor when possible.
9. Check for refrigerant leaks and proper frost line. Should frost out of accumulator at least one-half way to compressor, and in some areas back to service valve.
10. Check for water leaks. Tighten drain line connections. Run water down bin drain line to make sure it is open.
11. Check quality of ice. Ice should be wet when formed, but will cure rapidly to normal hardness in bin.
12. Check thermostat. Bin thermostat should be set at 10° Differential 35° cut out, 45° cut in.

GEAR MOTOR ASSEMBLY/CENTRIFUGAL SWITCH
Part #A25995-001

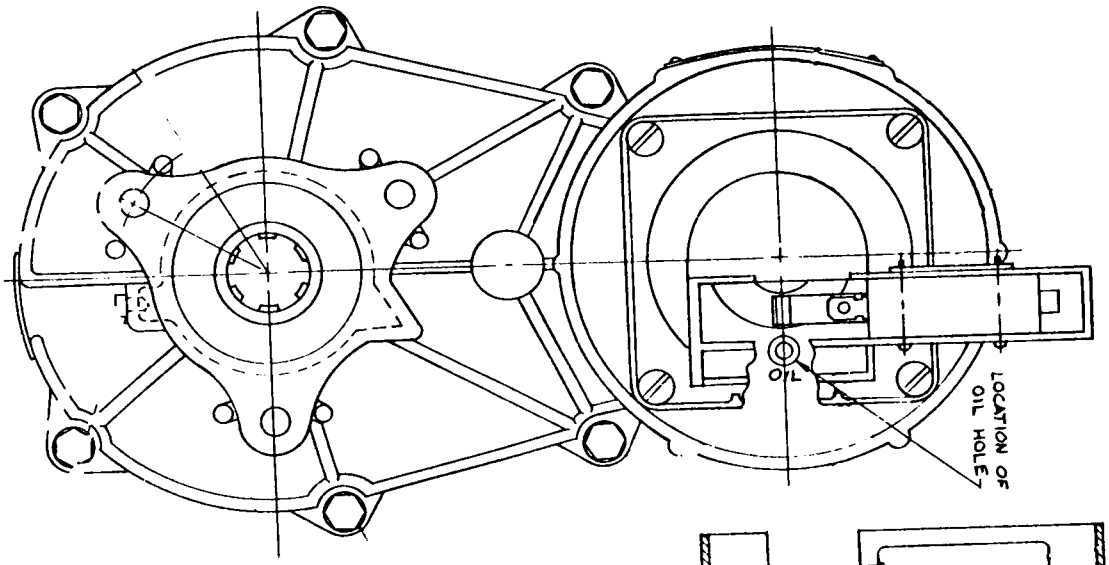

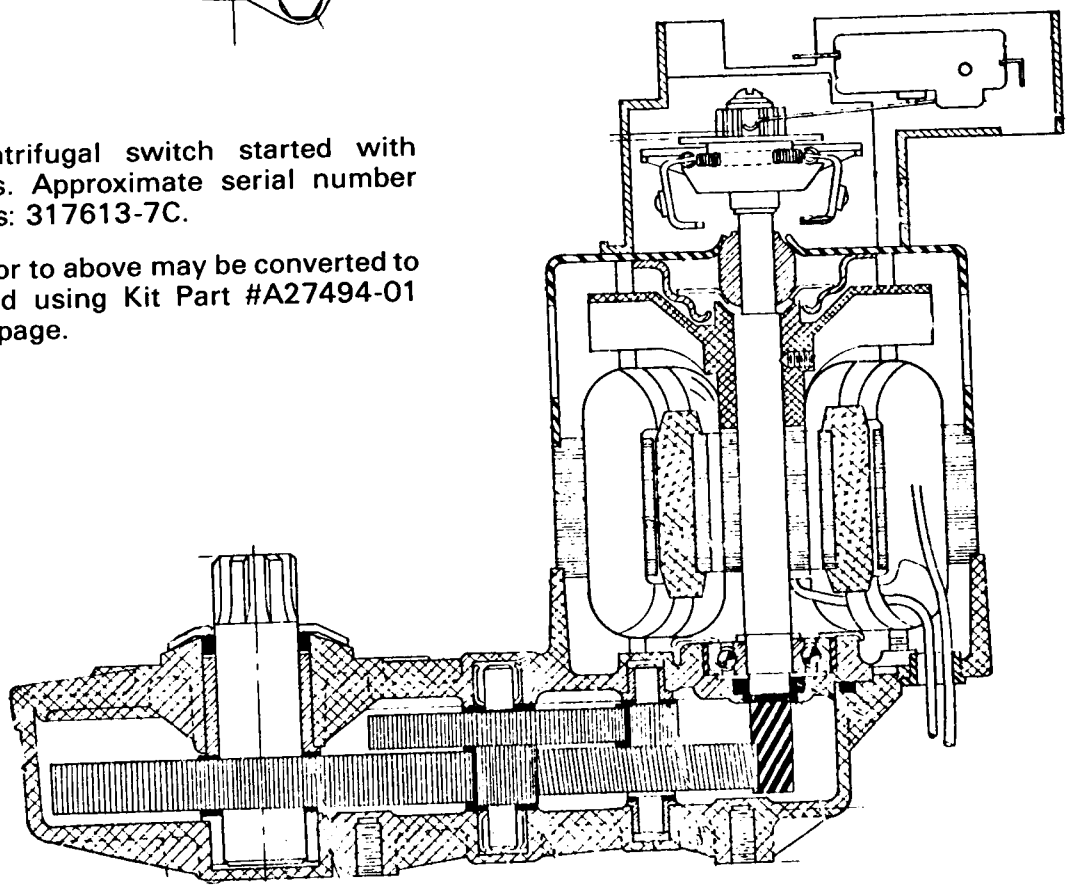

New style centrifugal switch started with MF3"C" models. Approximate serial number starting usage is: 317613-7C.

MF3 models prior to above may be converted to current standard using Kit Part #A27494-01 shown on next page.

CENTRIFUGAL SWITCH KIT INSTALLATION INSTRUCTIONS

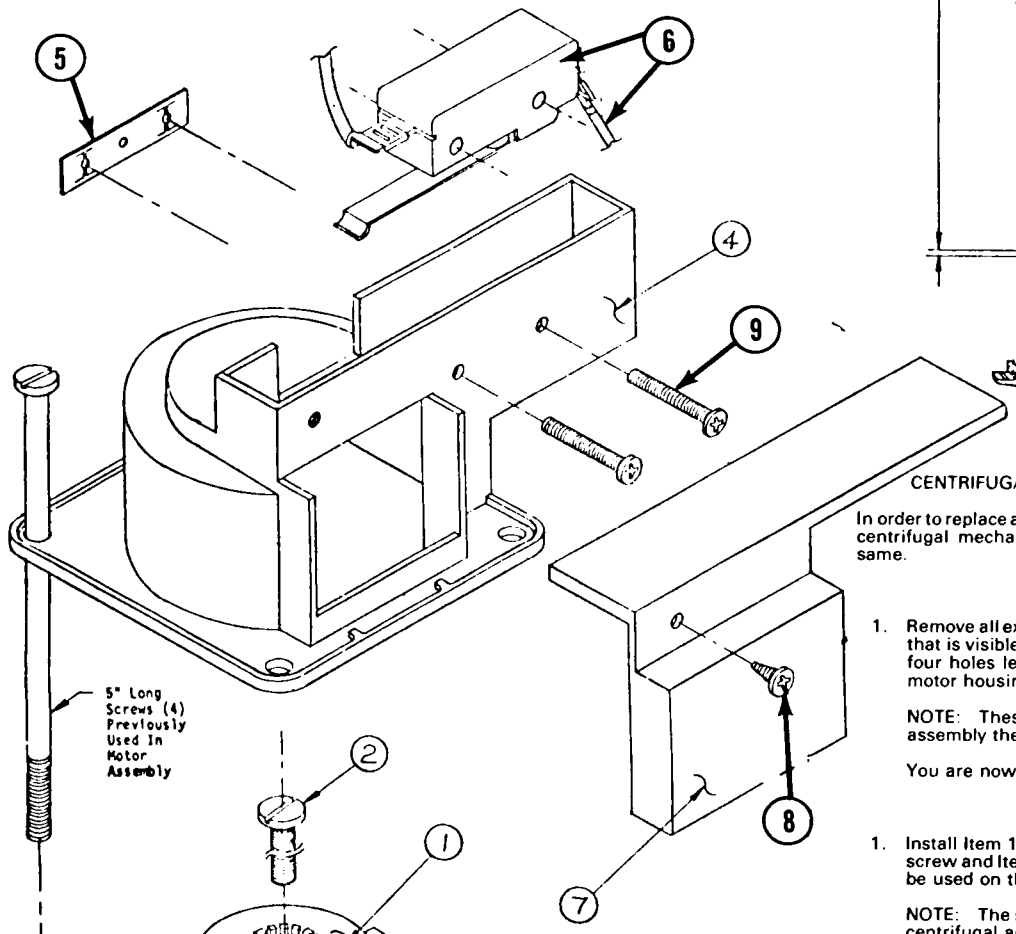

SWITCH ADJUSTMENT

.03 minimum gap between switch lever and mechanism with centrifugal mechanism actuated (motor running). Switch circuit should be closed. When motor is stopped and centrifugal mechanism deactivates, the switch circuit should be broken. There should be enough adjustment by loosening the switch mounting screws and tilting switch in direction required. If this fails, a small amount of bending can be done on the switch lever.

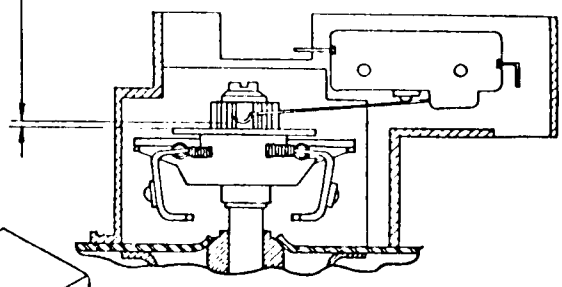

CENTRIFUGAL MECHANISM INSTALLATION INSTRUCTIONS

In order to replace an existing centrifugal mechanism or just adding this new centrifugal mechanism into your unit, the installation procedure is the same.

REMOVAL

1. Remove all existing hardware from the top of the drive motor so that all that is visible on the top of the motor is the shaft of the motor and the four holes left vacant by the motor support screws. Do not remove motor housing cover.

   NOTE: These four screws (approximately 5" long) will be reused to assembly the new mechanism.

   You are now ready to install the new mechanism.

INSTALLATION

1. Install Item 1 centrifugal actuator to motor shaft with Item 2 #10-32 screw and Item 3 small flat washer. A small amount of Locktite should be used on the screw threads to prevent screw from backing out.

   NOTE: The shaft extension shown has been factory installed into the centrifugal actuator for your convenience.

2. Install Item 4 switch case using four 5" long screws previously removed when disassembling unit.

   NOTE: Switch has been factory installed for your convenience.

3. Make any necessary adjustments noted in sketch above.

4. As the purpose of this mechanism is to turn the compressor off when the gear motor slows down, the switch in this mechanism should be wired into the neutral line of the compressor.

   NOTE: Two white wires Items 5 and 6 have been furnished with this kit to ease your assembly. The insulated terminals should terminate at the centrifugal switch. The remaining ends of these wires will connect at the terminals vacated when the neutral wire from the compressor is removed.

5. After wiring has been completed, install Item 7 cover, with Item 8 thread forming screw.

   This unit is now optional.

   NOTE: The intent of this mechanism is not in any way related to the function of the Texas instrument low pressure switch installed in certain models.

ITEM NO.	PART NO.	DESCRIPTION
1.	12-2060-01	Centrifugal Actuator
2.	03-1403-77	Screw
3.	03-1408-36	Washer
*4.		Case
5.	03-0886-00	Twin Speed Nut
6.	12-2059-01	Switch
*7.		Case Cover
8.	03-1404-05	Screw
9.	03-1403-09	Screws 2/Unit

KIT PART #A27494-01

*Items 4 and 7 Supplied in Kit A27895-001.

WIRING DIAGRAM
115/60/1
Water Cooled

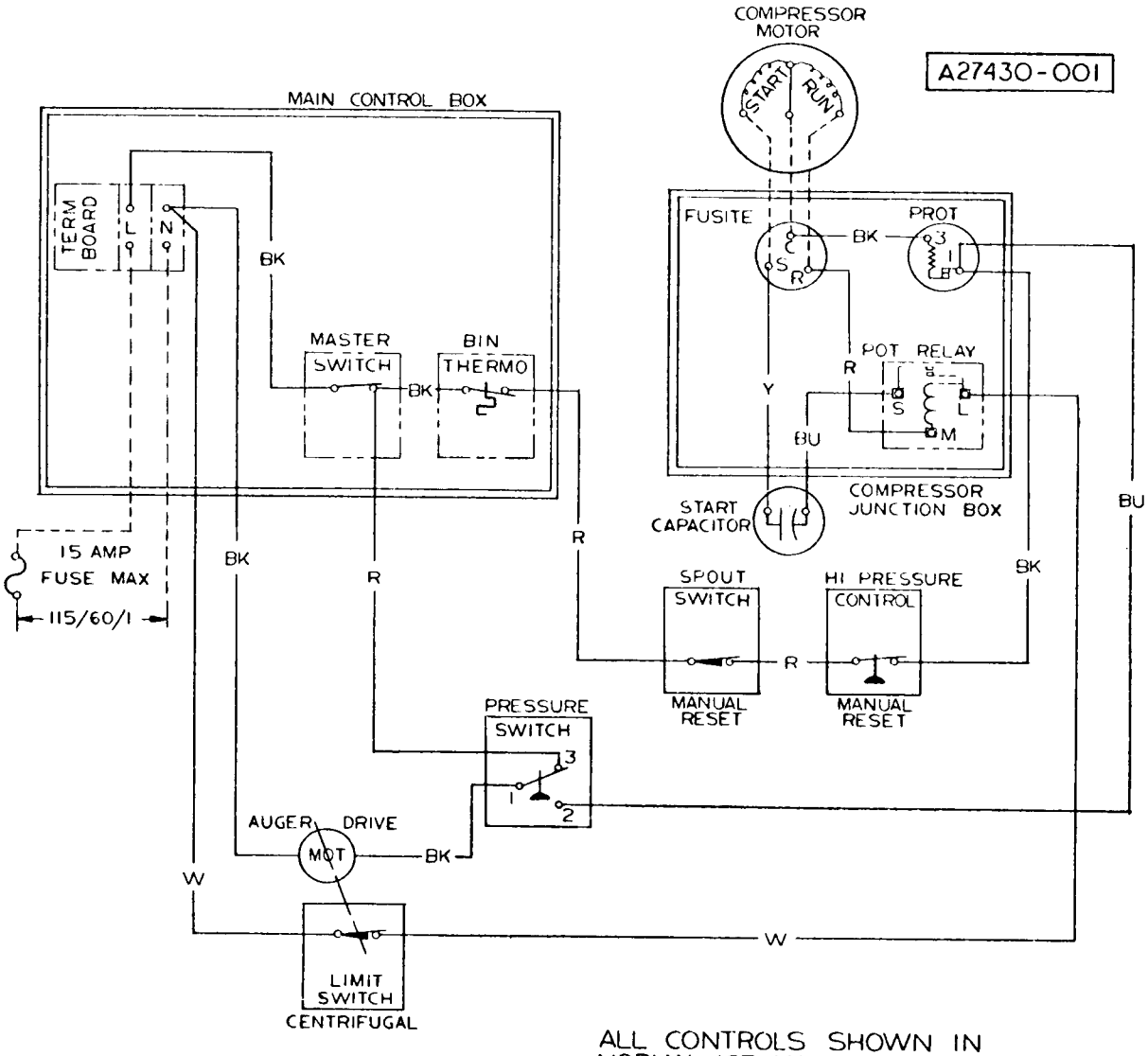

ALL CONTROLS SHOWN IN NORMAL ICE MAKING MODE

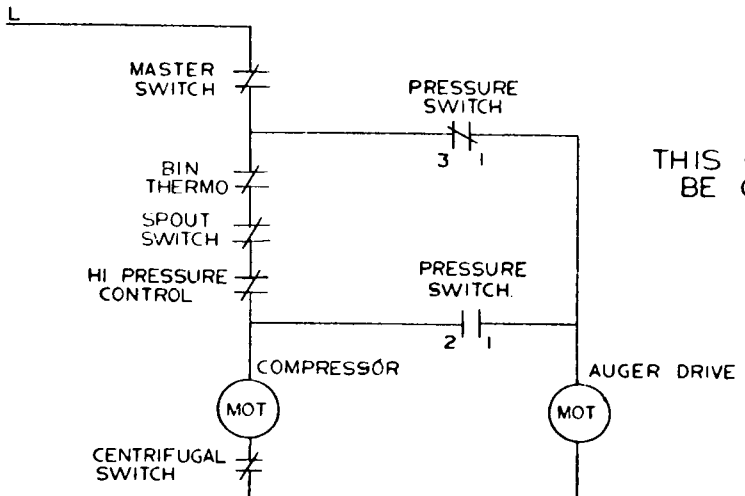

THIS UNIT MUST BE GROUNDED

WIRING DIAGRAM
115/60/1
Air Cooled

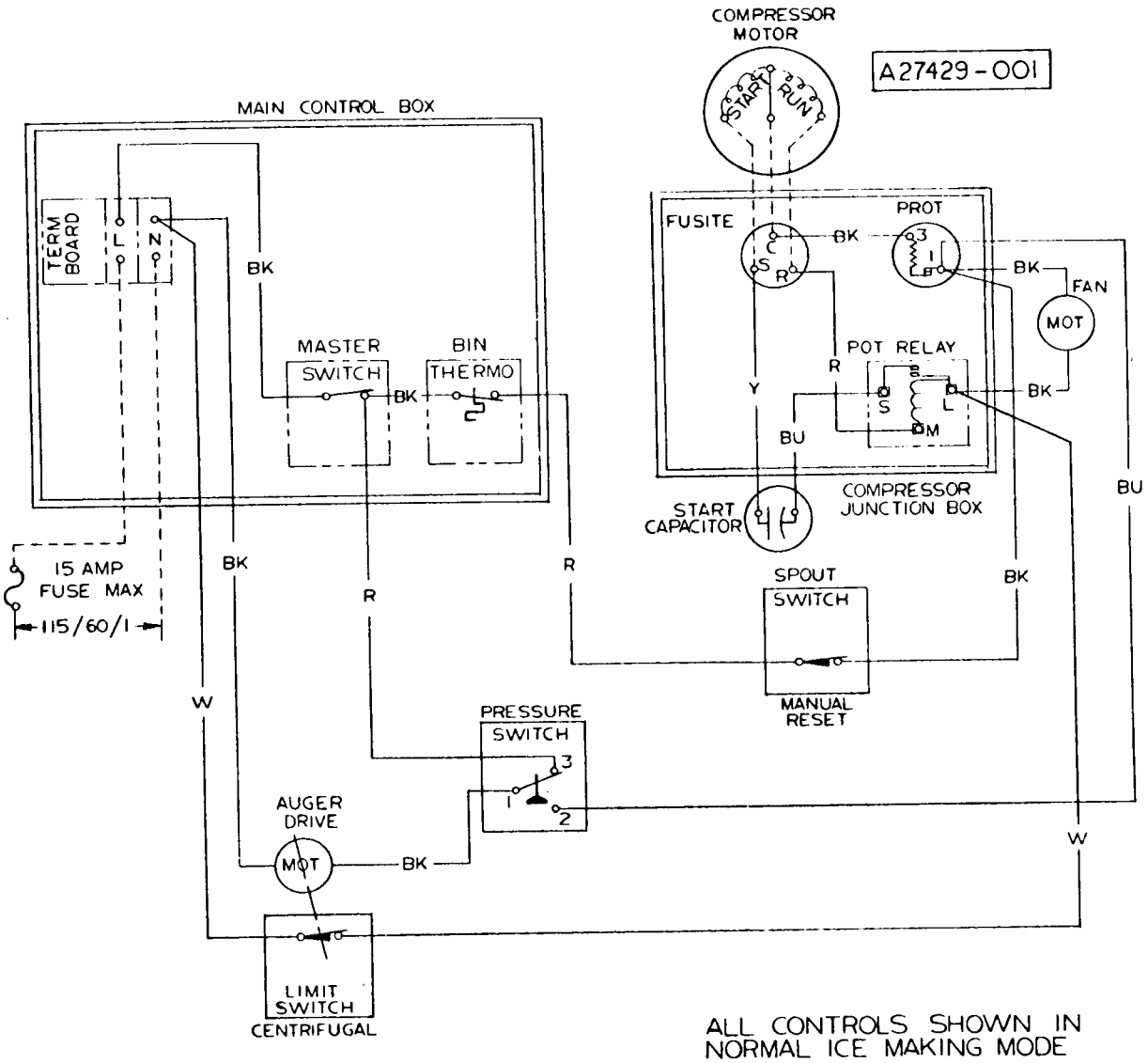

ALL CONTROLS SHOWN IN NORMAL ICE MAKING MODE

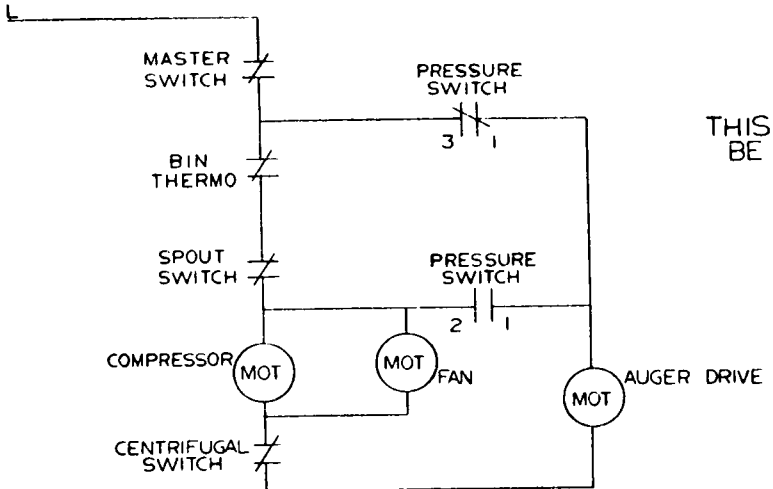

THIS UNIT MUST BE GROUNDED

TABLE OF CONTENTS

Table of Contents 1
Photograph and Ice Making Capacity 2
Specifications and Dimensions 3
Description 4
Preparation for Installation 5
Installation 6
Installation Practices 7
Starting the machine 8
Refrigerant Charge 8
Final Check List 8
Refrigeration Cycle 9
Water Schematic 10
Ice Discharge Tube and Bin Thermostat Installation 11
Wiring Diagram – Air Cooled 12
Wiring Diagram – Water Cooled 13
Service Analysis 14-15
Maintenance Instructions 16
SERVICE:
- Gear Motor 17
- Freezer Assembly 17
- Freezer Worm Shaft 17
- Freezer Assembly Top Bearing 18
- Freezer Assembly Bottom Bearing & Water Seal 18
- Bin Thermostat 18
- Contactor 18
- Head Pressure Control (Water Cooled) 19
- Head Pressure Control (Air Cooled) 19
- Low Pressure Control 19
- Water Regulating Valve (Water Cooled Models) 19
- Water Reservoir 19

PARTS BREAKDOWN:
- Chassis Assembly – Air Cooled 20
- Chassis Assembly – Water Cooled 21
- Freezer Assembly 22
- Gear Motor Assembly 23
- Compressor Assembly 24
- Control Box Assembly 25
- Reservoir Assembly 26
- Cabinet Assembly 27

Flaked Ice Transport System 28-30

THIS PAGE
INTENTIONALLY
LEFT BLANK

SCOTSMAN

MODULAR FLAKER
MF4
SERIES
Continuous Flow

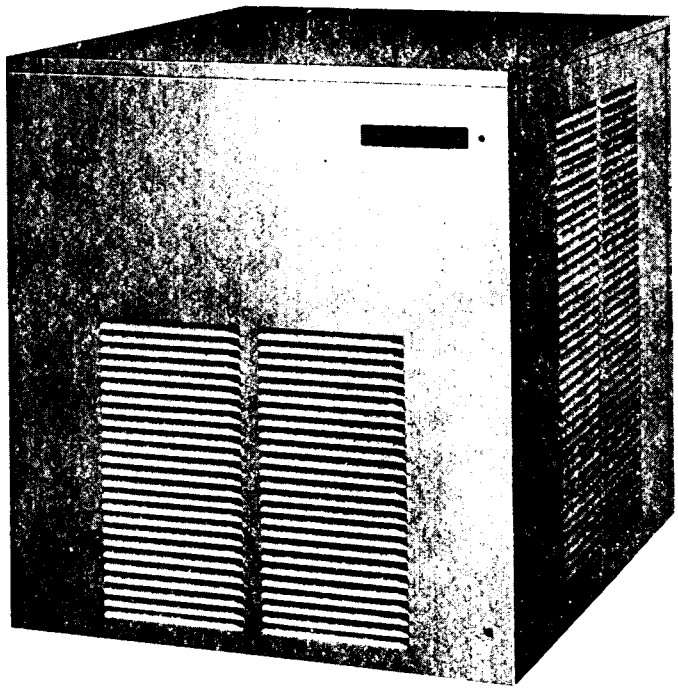

ice making capacity

Daily Ice Capacity is directly related to condenser air inlet temperature, water temperature, and age of machine.

NOTE: To keep your SCOTSMAN MODULAR FLAKER performing at it's maximum capacity, it is necessary to perform periodic maintenance as outlined on page 16 of this manual.

SPECIFICATIONS:

MF4 SERIES

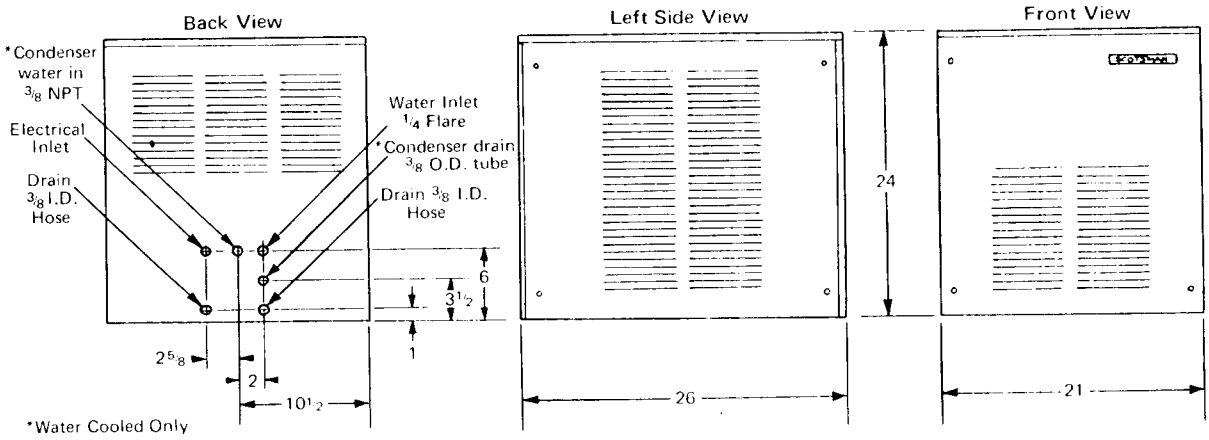

MECHANICAL	MF4AE	MF4WE
Compressor (Copelaweld)	3/4 H.P.	3/4 H.P.
Gear Drive Motor	1/4 H.P	1/4 H.P.
Gear Drive Motor Output	12.2 RPM	12.2 RPM
Condenser	Air Cooled	Water Cooled
Refrigerant Control	Capillary Tube	Capillary Tube
Refrigerant Charge R-12	26 oz.	23 oz.
ELECTRICAL		
Basic Electricals	115/60/1	115/60/1
Minimum Wire Size	2w 12g	2w 12g
Total Amperage	14.8	13.6
Compressor Amperage	11.2	10.8
Gear Drive Motor Amperage	2.8	2.8
Condenser Fan Motor Amperage	.8	
WATER		
Inlet Water Line (Freezer)	1/4" Flare	1/4" Flare
Inlet Water Line (Condenser)		3/8" NPT
Drain Line	3/8" I.D.	3/8" I.D.
Drain Line – Water Cooled Condenser		3/8" O.D.
CABINET		
Width	21"	21"
Depth	26"	26"
Height	24"	24"
Weight	208 lbs.	196 lbs.
Finish (P-Painted, SS-Stainless Steel)	P/SS	P/SS

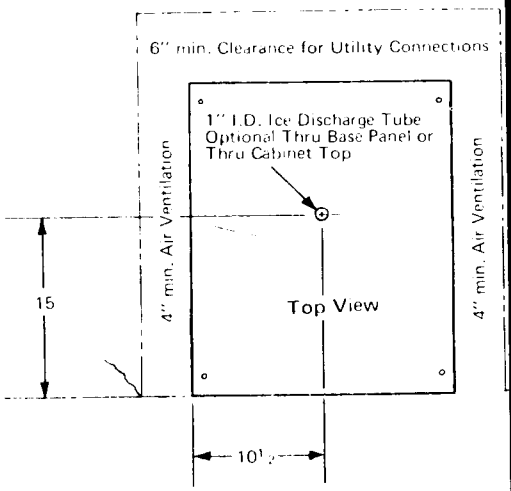

Storage Bin: B500, B750, B1000, B1500, B200, B55
Stainless Steel Lined

NOTE: Requires additional installation space fo
air ventilation - 4" right & left side
utility connections - 6" back side

DESCRIPTION

SCOTSMAN Modular Flakers are designed for restaurants, super markets, soda fountains, hospitals, bakeries, fish markets, poultry stores, packing plants, etc. It is the finest Ice Maker on the market today. It will work 24 hours a day for you, or only as needed. It produces the highest quality ice available at any price.

SCOTSMAN Modular Flakers are easily installed requiring only standard water, drain and electrical connections.

ATTRACTIVE COMPACT CABINET. Sandlewood or stainless steel removable panels makes for easy access to mechanical parts.

SEALED REFRIGERATION SYSTEM. Provides quiet, efficient operation of the machine. Compressor motor is internally spring mounted for quiet operation. Compressor motor is covered by a full 5-Year Warranty.

HOW IT WORKS. An exclusive patented ice-making system, wherein water in the constant level float reservoir is fed to the bottom end of the freezing cylinder and turns to ice on the inside of this cylinder. Ice from the refrigerated walls of this cylinder is extruded past the ice breaker at the top of the cylinder through a side opening by means of a stainless steel auger driven by a gearmotor drive.

Model No. MF-4 is a continuous flow type machine, and is manually started by an OFF and ON switch located inside the cabinet. Since the MF-4 does not have its own attached bin, it is necessary to use an auxillary bin such as the Model SB-500 SCOTSMAN Super Bin for ice storage. A bin thermostat is mounted in each continuous flow type machine for the purpose of mounting control bulb from machine to bin.

The MF Series Flakers are also designed for remote type installations, whereby, ice can be transported from the flaker via plastic tubing to a bin located several feet away. Refer to section "Flaked Ice Transport System" for installation requirements.

SCOTSMAN MODULAR FLAKERS
PREPARATION FOR INSTALLATION

1. Select unit location prior to hook up of water drain and electrical in accordance with local and national codes. Minimum room temperatures is 50° Fahrenheit, maximum room temperature 100° Fahrenheit. On air cooled models, select well ventilated location.

2. Install bin for use with modular flaker in its permanent location following instructions included with the storage bin.

3. Level bin with adjustable legs and wipe storage bin liner clean with damp cloth.

4. After uncrating modular flaker, remove front, side and top panels and inspect for any concealed damage. Notify carrier of any concealed damage claims.

5. Before placing flaker unit on bin, holes in rubber gasket on bin top must be cut to allow passage of ice discharge tube and bin thermostat control tube into bin. This can be done by using holes in bin top as a template.

6. Remove rubber grommets from miscellaneous parts package and insert into place. A good seal must be made between grommet and base panel and between grommet and inner bin. See page 11 cutaway drawing.

7. The flaker unit may now be placed on the bin. Insure that the holes in the base panel line up with the holes in the bin top.

8. Install ice discharge tube assembly, taped to freezer body,through large grommet in base & attach to spout using groove in spout casting as guide. See page 11.

9. Attach bulb holder to ice discharge tube grommet in direction shown on page 11. Route bin control tube through smaller grommet then insert tube into tube holder as shown.

10. Thru cabinet top, locate metal reservoir. Remove water reservoir cover and take out paper packing around float ball.

11. Check motor compressor hold down nuts to insure motor compressor rides snug on mounting pads.

12. Remove water strainer from envelope for installation in water supply line feeding unit.

13. Open electrical control box cover and check unit nameplate voltage against building source voltage and make sure they correspond. Caution - Improper voltage supplied to units will void your parts replacement program.

14. Locate and tear out registration card from front of owners guide and fill out card completely including model and serial numbers as taken from aluminum plate found behind front service panel. Forward to Scotsman factory using self mailing card, for your personal registration certificate.

15. Call you local authorized Scotsman Service Agency for hook-up, start-up and check-out. He's listed under "Ice Making Machinery & Equipment" in your telephone book, yellow pages.

INSTALLATION
ELECTRICAL CONNECTIONS:
MF4AE-1A
115 Volts, 60 Cycle, 1 Phase
30 Amp. Circuit

10 Gauge wire should be used for electrical hook-up. All Scotsman Modular Flakers require a solid earth ground wire.

Be certain that the Super Flaker is on its own circuit and individually fused. The maximum allowable voltage variation should not exceed 10 per cent of the nameplate rating even under starting conditions. Low voltage can cause erratic operation and may be responsible for serious damage to the overload switch and motor windings.

All external wiring should conform to the National, State and local Electrical Code requirements. Usually an electrical permit and the services of a licensed electrician will be required.

ELECTRICAL INSTALLATION
MF4AE-1A

Compressor	3/4 HP	Copelaweld: RSL2-0075-1AA218
		2 pole, 3500 RPM
	Voltage	115
	Amp. rating F.L.A.	14.0
	Cycle	60
	Phase	Single
Gear Drive Motor	1/4 HP	Queen Products
	Voltage	115
	Amp. Rating	4.6
	Cycle	60
	Phase	Single
		Thermally Protected

WATER SUPPLY: The recommended water supply line is 1/4 inch O.D. copper tubing for the MF-4. Connect to cold water supply line with regular plumbing fittings, with a shut-off valve installed in an accessible place between supply line and machine. A water strainer must be installed with the unit and mounted with clean-out plug down. Locate the strainer next to the machine with the arrow in the direction of the flow. Most plumbing codes also call for double check valves in the supply water line, particularly for water-cooled models.

On air-cooled models the water supply line connects to the 1/4 inch flare fitting on the machine. On water-cooled models connections are made to a 3/8 inch male pipe nipple inside of the machine compartment. Incoming water goes through the water regulating valve first and then to the water-cooled condenser. Observe arrow on water regulating valve. Water supply must be installed to conform with local code. In some cases a licensed plumber and/or a plumbing permit will be required.

NOTE: If water supply to unit is to be interrupted for any period of time, the unit must be switched off to prevent damage to freezer mechanism.

DRAIN: The recommended drain from the bin is 3/8 inch OD copper tubing. Must be run to an open trapped and vented drain. If drain is a long run, allow 1/4 inch pitch per foot. Drain must be installed to conform with local code. Run separate line for condenser discharge water on water-cooled models.

INSTALLATION PRACTICES

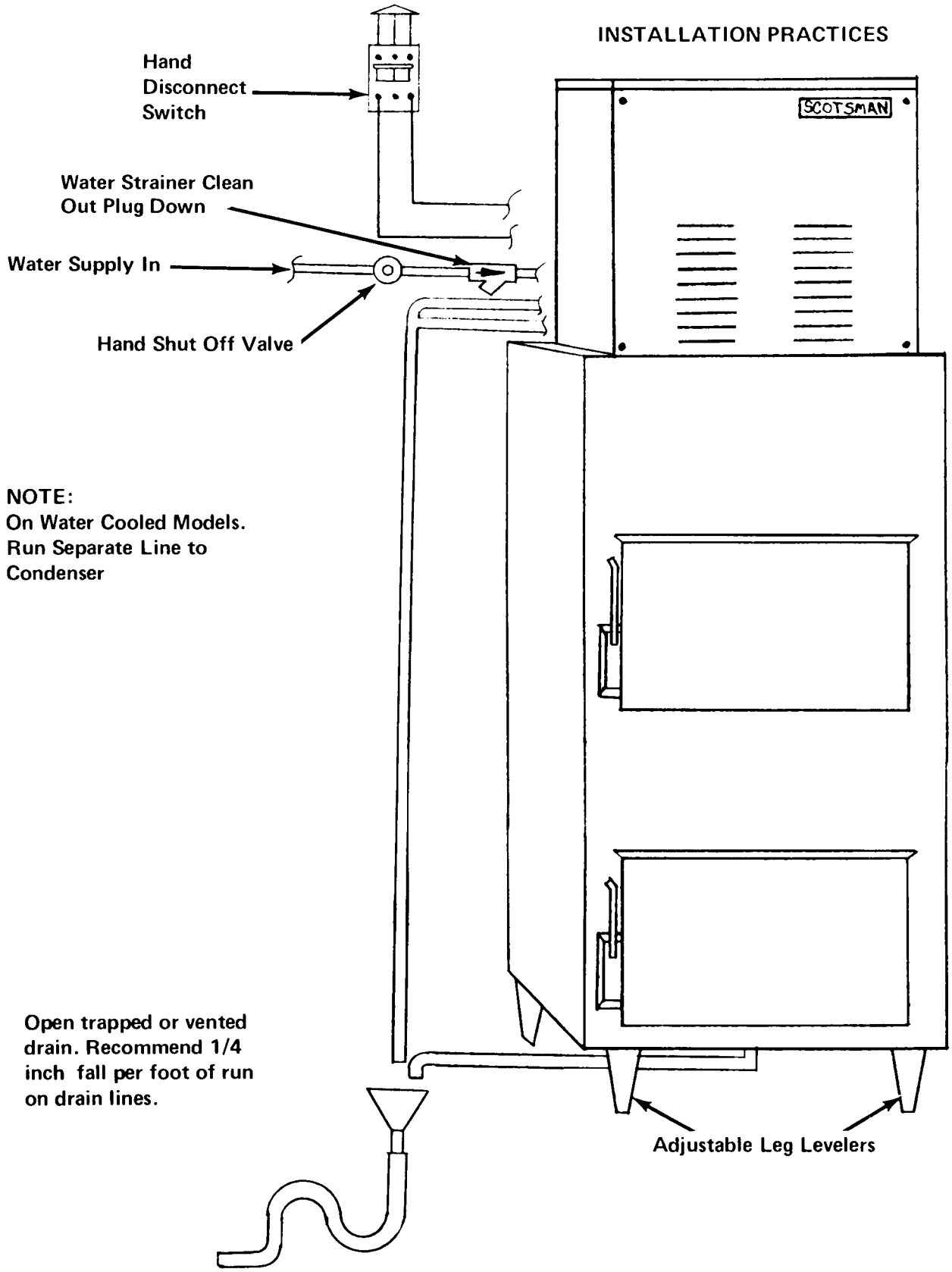

Maximum Ambient Air Temperature Recommended – 100° Fahrenheit
Minimum Ambient Air Temperature Recommended – 50° Fahrenheit

NOTE: Air temperature ranges above or below those listed may cause serious damage to the product.

STARTING THE MACHINE:

When the machine is placed and inspected as per instructions and all plumbing and electrical connections are completed and tested, turn on the water supply. Be sure the float cover is removed to check on the float operation and water level in the water reservoir. Be sure the water reservoir is filled before starting the machine. Water level should be 1/4 inch below the reservoir overflow.

When this is completed, turn on the manual switch located behind front panel of the cabinet and the machine is in automatic operation. In two to three minutes ice will start dropping off the worm shaft and out the ice chute. Let the machine operate for at least 30 minutes and check for any excess noise other than the normal compressor noise. Test the ice storage control bulb by holding a handful of ice around the bulb until the machine shuts off. One minute should be normal for the control to function. Within minutes after the ice is removed, the bulb will warm up and the machine will automatically start up. The control is factory set and should not be reset until this test is made. Normal setting of this control should be approximately 35 degrees cut-out and 45 degrees cut-in.

Check pressure settings at the time of start-up. On the water-cooled models set the head pressure at 135 PSI. On the air-cooled models the head pressure will vary between 130 and 145 PSI head pressure. The frost line should extend out of the accumulator if properly charged with refrigerant and suction pressure will range between 12 and 14 PSI with 50° F inlet water.

Check the hand reset low pressure control setting. This safety device should be set at approximately 5 PSI below normal operating suction pressure and should cut off in case of interruption in water supply, shortage of refrigerant, low ambient or any other cause of abnormally low suction pressure.

REFRIGERANT CHARGE:

The below refrigerant charge is approximate. When charging, set at 135 PSI head pressure and charge so that the frost line extends out of the evaporator and into the accumulator after fifteen minutes of operation.

Model	Refrigerant Charge
Air-Cooled	26 oz. R-12
Water Cooled	23 oz. R-12

FINAL CHECK LIST

1. Is the unit level? (IMPORTANT)
2. Have all electrical and piping connections been made?
3. Has the voltage been tested and checked against the nameplate rating?
4. Is the water supply valve open and the electric power on?
5. Is the water reservoir filled and shut off? All packing removed?
6. Have unit and bin been wiped clean?
7. Has owner been given this Operating Instruction Booklet, and has he been instructed on how to operate the machine?
8. Have the installation and registration cards been filled out and mailed to the factory?
9. Check all refrigerant and conduit lines to guard against vibration and possible failure.
10. Installed in a well ventilated room where ambient temperatures do not fall below 50° Fahrenheit.
11. Is unit installed with a minimum 4" air space around sides and back?

WARNING: THIS MACHINE MUST NOT BE ALLOWED TO OPERATE WHEN THE WATER SUPPLY IS SHUT OFF, OR AT BELOW RECOMMENDED WATER PRESSURE. TURN MASTER SWITCH TO "OFF" POSITION WHEN WATER SUPPLY IS OFF, OR WHEN WATER PRESSURE IS BELOW RECOMMENDED OPERATING PRESSURE.

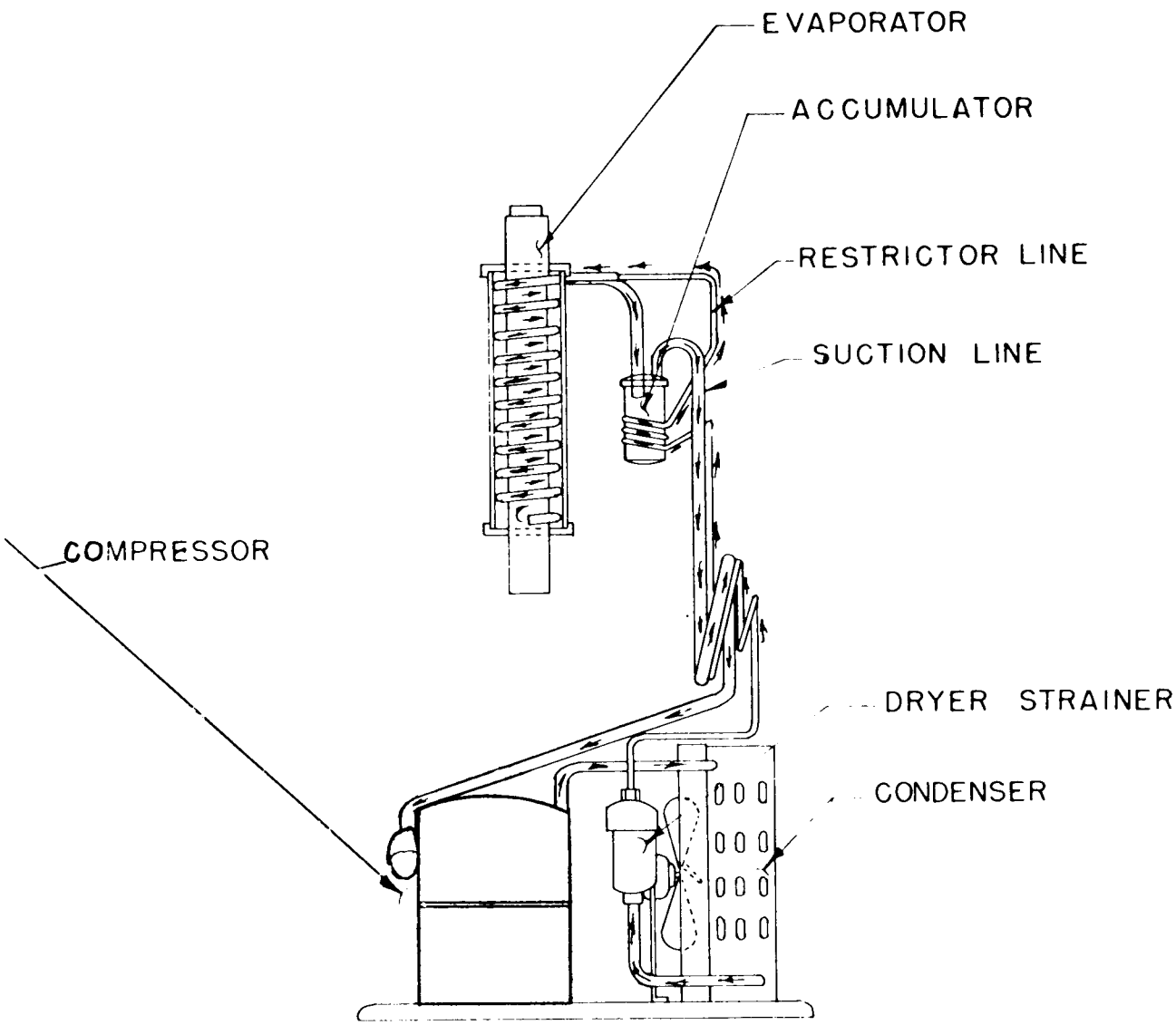

REFRIGERATION CYCLE

WATER SCHEMATIC

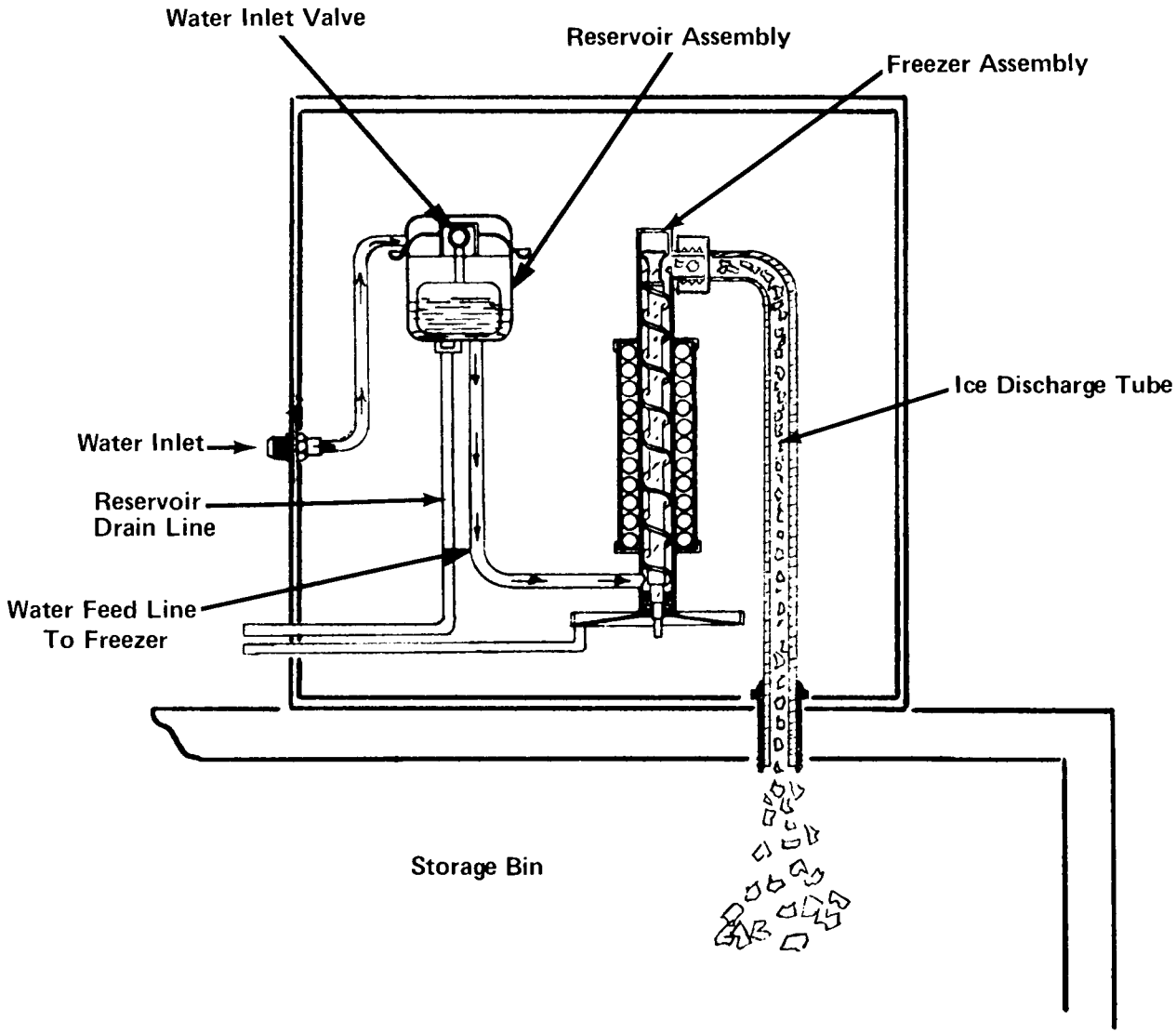

ICE DISCHARGE TUBE

INSTALLATION ILLUSTRATION

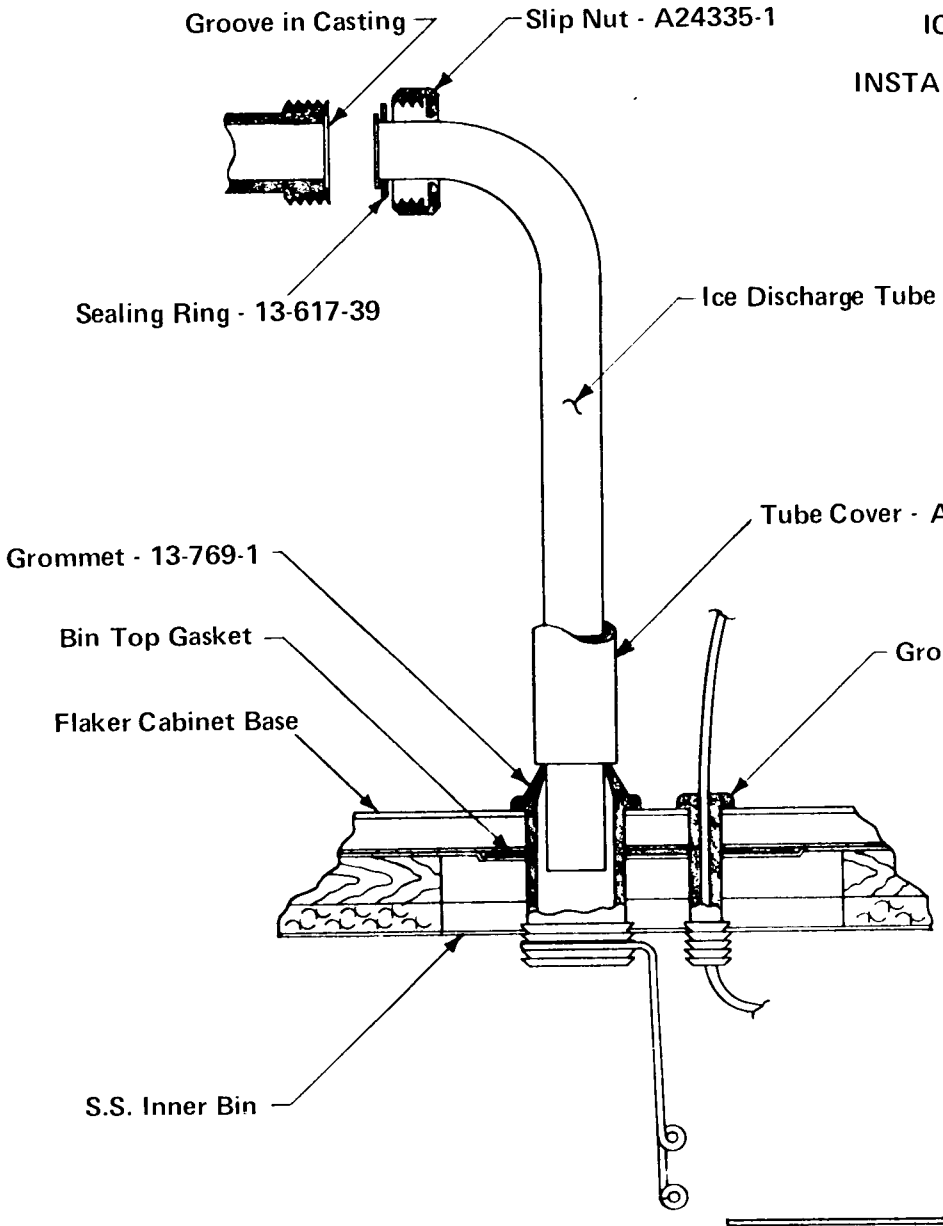

BIN THERMOSTAT

INSTALLATION ILLUSTRATION

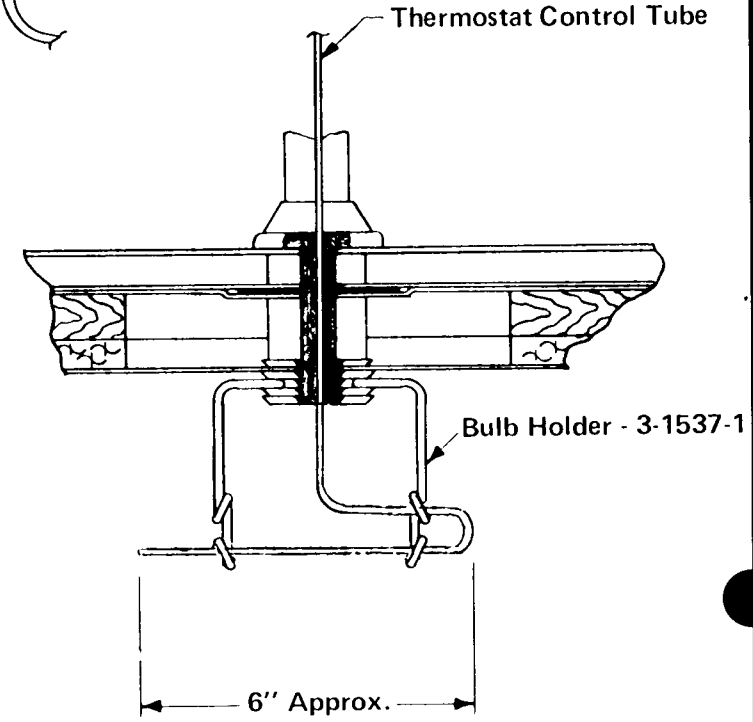

WIRING DIAGRAM
Air Cooled
115/60/1

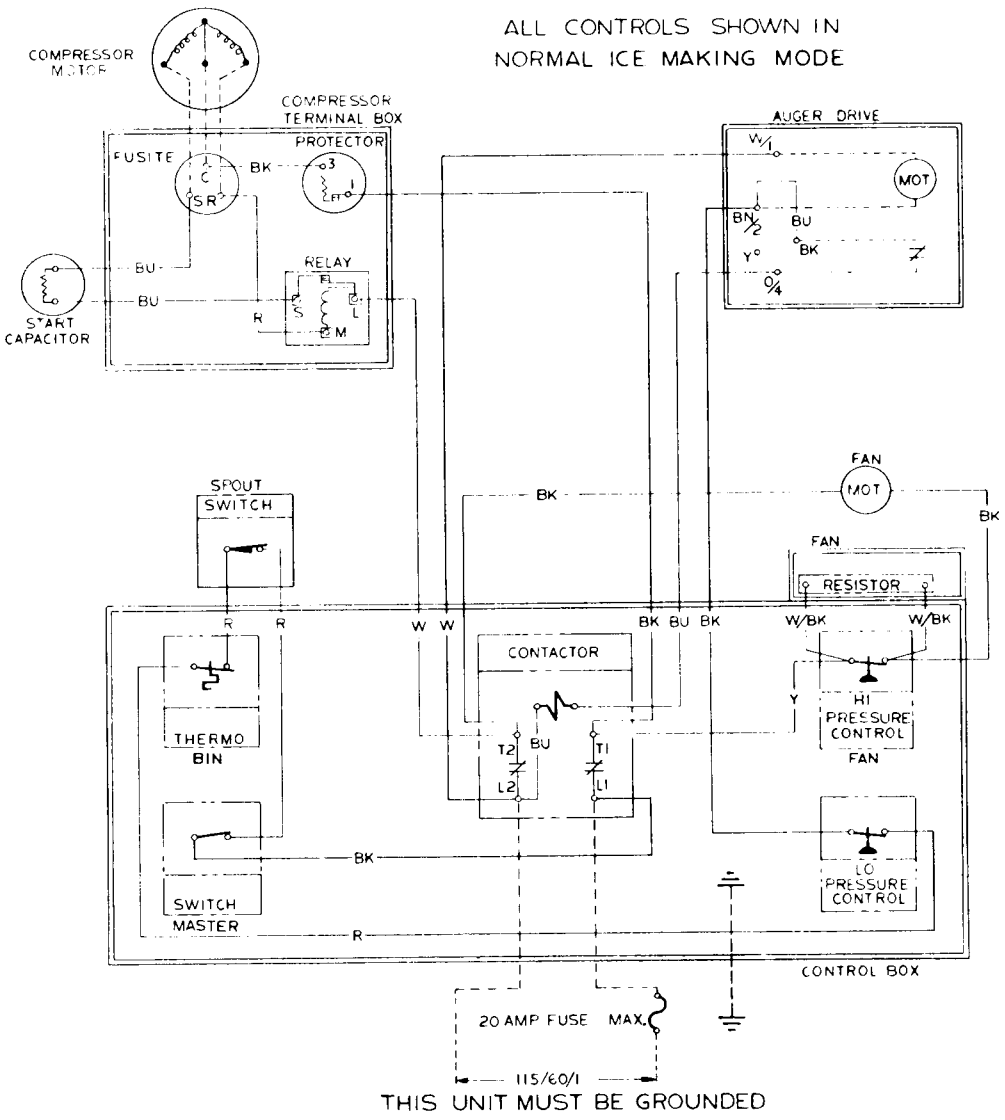

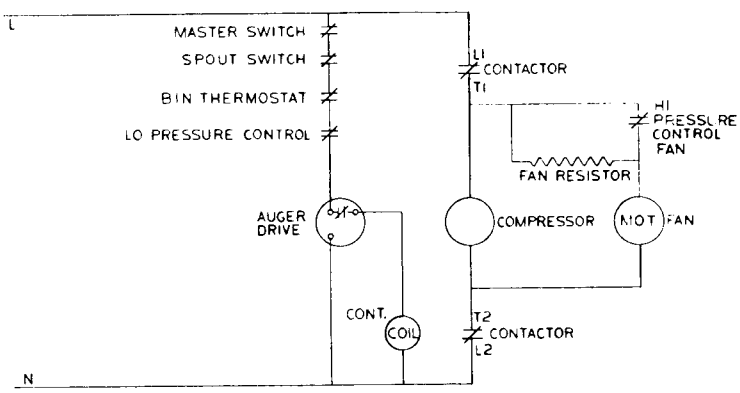

WIRING DIAGRAM

Water Cooled

115/60/1

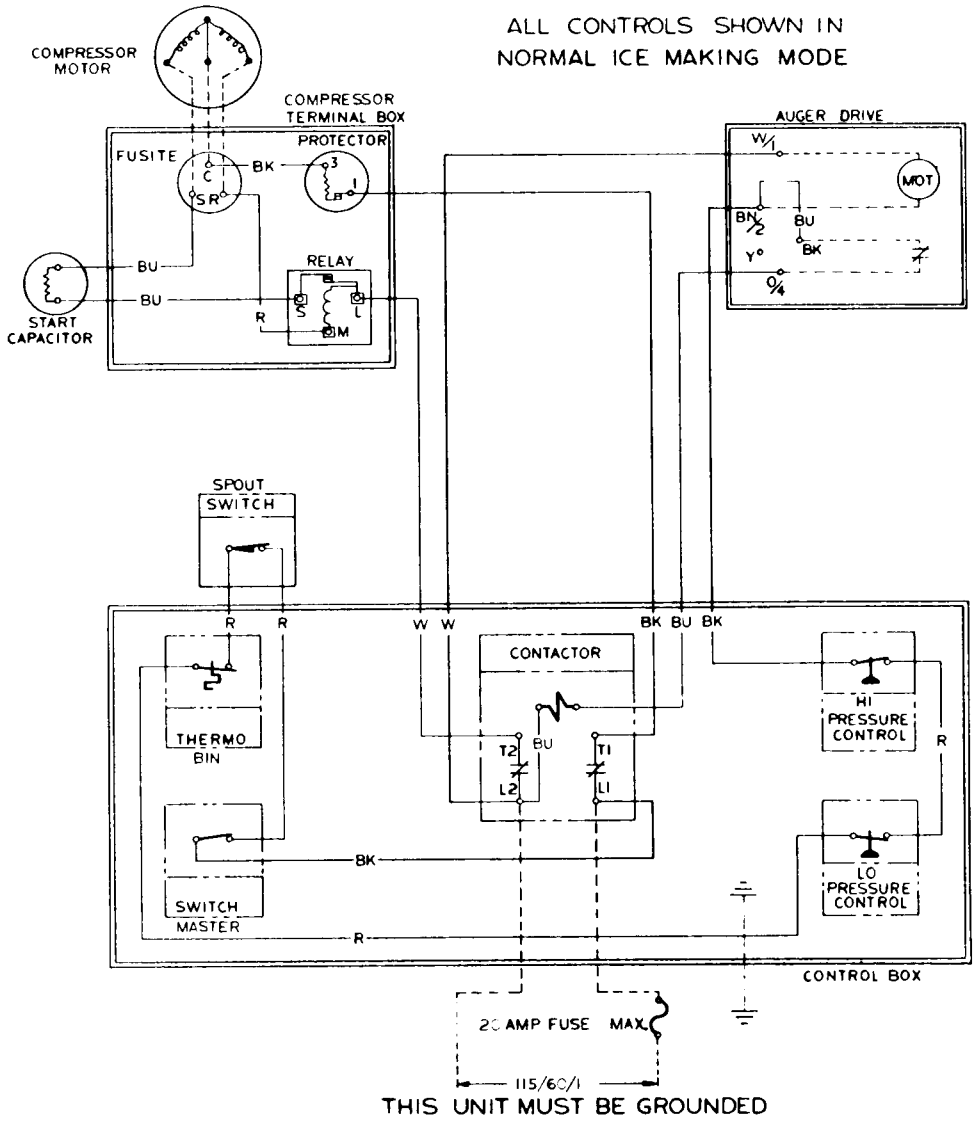

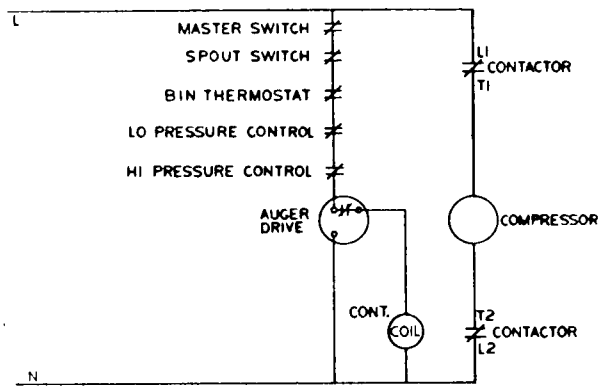

SERVICE ANALYSIS

SYMPTOM	POSSIBLE CAUSE	CORRECTION
Unit will not run	Blown Fuse	Replace fuse and check for cause of blown fuse.
	Thermostat set too high	Adjust thermostat. 35° cut-out and 45° cut-in.
	Loose electrical connection	Check wiring.
	Switch in OFF position	Turn switch to ON.
	Inoperative master switch	Replace switch.
Compressor cycles intermittently	Low voltage	Check for overloading.
	Dirty Condenser	Clean.
	Air circulation blocked	Move unit to correct
	Inoperative condenser motor	Replace.
	Non-condensable gases in system	Purge off.
Making wet ice	Surrounding air temperature	Correct or move unit to cooler location.
	Under or over-charge of refrigerant	Recharge with the proper amount.
	High water level in water reservoir	Lower to 1/4 inch below overflow pipe.
	Faulty compressor	Repair or replace.
Low ice production	Loss of refrigerant, under or over-charge of refrigerant.	Check and recharge with proper amount of refrigerant.
	Dirty or plugged condenser	Clean condenser
	Low water level in water reservoir	Adjust to 1/4 inch below overflow pipe.
	Partial restriction in capillary tube or drier	Moisture in system. Overcharge of oil in System. Remove charge and drier. Replace and recharge system.
	Inlet water strainer partially plugged.	Remove screen and clean.
	Corroded or stained worm shaft due to water condition.	Remove worm shaft and clean.
Machine runs but makes no ice	Loss or under-charge of refrigerant	Check for leaks and recharge
	Drive gearmotor or drive coupling stripped.	Check. Repair and/or replace.
	Water not entering freezing chamber	Plugged strainer or supply line. Check and clean. Air lock in gravity feed line. Check and remove air lock.
	Moisture in system	Check and remove charge and drier.
	Water seal leaking	Replace seal
	Water supply to unit off	Restore water supply to icemaker.

SYMPTOM	POSSIBLE CAUSE	CORRECTION
Water Leaks	Defective water seal Gravity feed line leaking "O" ring in spout casting leaking. Storage bin drain & connecting fittings leaking. Water level in reservoir too high	Replace Check hose clamps Remove spout casting and install new "O" ring. Check and repair. Adjust to 1/4 inch below overflow pipe
Excessive noise or chattering	Mineral or scale deposit on auger and inner freezing chamber walls. Low suction Intermittent water supply Water level in reservoir too low. Gearmotor loose on frame Gearmotor end-play or worn bearings.	Remove and manually polish auger, polish inner chamber walls of freezer barrel. For lighter concentrations use Scotsman Ice Machine Cleaner periodically. Add gas to raise suction pressure. Check & clean water strainer. Check gravity feed line for air lock. Remove air lock. Adjust to 1/4 inch below overflow pipe. Tighten. Repair or replace.
Machine continues to run with full storage bin	Storage bin thermostat not properly set.	Reset or replace. 35° cut-out, 45° cut-in Check operation with handful of ice.
Gearmotor noise	Low on oil	Remove case cover to check for proper oil level. Top of gears should be covered. Use Sun Oil Co. Prestige 50 EP.

MAINTENANCE INSTRUCTIONS – FLAKERS

THE FOLLOWING MAINTENANCE SHOULD BE SCHEDULED THREE TIMES PER YEAR ON ALL SCOTSMAN FLAKERS. CALL YOUR AUTHORIZED SCOTSMAN SERVICE DEPARTMENT.

1. Check and clean water strainers and float valve. Depress float valve to insure full stream of water.
2. Check water level and machine level, keep water level below overflow, but as high as possible and still not run out of spout opening with machine off. Water droplets come out of spout with ice at all times. Adjust as required.
3. Clean reservoir and interior of freezer using SCOTSMAN Ice Machine Cleaner.
   If machine has been cleaned regularly and no problems such as dry ice or chatter are noticed, clean as per the following instructions:
   a. Set main switch to OFF.
   b. Remove all ice from storage bin.
   c. Turn off water supply or block float. Drain reservoir by disconnecting tube between reservoir and freezer. After draining, reconnect tubing.
   d. Set main switch to ON and pour cleaning solution into reservoir. Do not fill above overflow tube.
      Use 6 oz. of Scotsman cleaner and 1-1/2 qts. hot water.
   e. Continue to make ice on solution until the solution is used up and reservoir is empty.
   f. Set main switch to OFF Remove overflow tube, wash and rinse reservoir, replace overflow tube, turn water on or remove float block.
   g. Turn MAIN SWITCH to ON. Let unit run for at least (15) minutes to flush out any cleaning fluid. Check ice for acid taste – run until ice tastes sweet.
   h. Turn MAIN SWITCH to OFF. Add hot water to ice bin, using the melt water, thoroughly wash and rinse all surfaces within the storage bin.
   i. Turn MAIN SWITCH to ON. Replace Service Door. Unit is ready for normal operation.

NOTE: Cleaning requirements vary according to local water conditions. Visual inspection of the auger before and after cleaning will indicate best procedure to be followed in local areas.

4. Check high and low side pressures. On air-cooled models head pressures range between 130 and 145 PSI. Suction pressure should be above 12 PSI and will range up to 15 PSI depending upon water and ambient temperatures.
5. Check gear motor operation. Normal running temperatures are in the area of 160° Fahrenheit, which is hot to the touch.
6. Check top bearing of freezing tube. Remove retainer ring around edge of stamped brass cap. If moisture is around bearing, wipe up and remove grease. Add new grease. Use Beacon No. 325. Replace cap and retainer ring.
7. Clean air-cooled condenser. Inform customer to clean frequently. Always shut off machine when cleaning.
8. Oil condenser fan motor when possible.
9. Check for refrigerant leaks and proper frost line. Should frost out of accumulator at least one-half way to compressor, and in some areas back to service valve.
10. Check for water leaks. Tighten drain line connections. Run water down bin drain line to make sure it is open.
11. Check quality of ice. Ice should be wet when formed, but will cure rapidly to normal hardness in bin.
12. Check thermostat and *pressure plate cut off in spout. Micro switch cuts off only compressor. Bin thermostat should be set at 10 ° differential 35° cut out, 45° cut in.

* Safety pressure switch not incorporated on all models.

FREEZER GEARMOTOR

Model MF4 is equipped with a 1/4 horsepower direct drive gearmotor. A speed sensing switch mounted on top of the motor of the gear unit will open and stop the compressor when the RPM of the gearmotor is less than 900. At 1200 RPM it will close, starting the compressor.

In an actual operation any condition that may cause excessively hard ice and overloads within the freezer assembly such as water interruptions, cold ambients, etc. is transmitted to the gearmotor reducing it's speed. When gearmotor slows down to approximately 900 RPM the speed sensing switch opens the electrical circuit to the compressor. The compressor stops and no more ice is produced. Meanwhile the gearmotor continues to run, clearing the overload condition and gradually resumes full speed. At 1200 RPM gearmotor speed sensing switch closes compressor circuit causing the normal icemaking process to begin once more.

Any freeze up possibility is thereby automatically cleared out by the gearmotor.

TO REPLACE:

1. Remove top, front and side panels.
2. Shut off water supply and electrical power to unit.
3. Remove the electrical leads from the motor to the control box.
4. Remove slip nut attaching ice discharge tube to freezer spout casting.
5. Next remove 3 bolts securing base adapter to gearmotor cover and the 4 bolts holding the gearmotor bracket to the cabinet base.
6. Lift freezer and adapter assembly off gearmotor and pull gearmotor and mounting bracket out of cabinet.

FREEZER ASSEMBLY

TO REPLACE:

1. To remove freezer first remove cabinet top, front and side panels.
2. Shut off water supply and disconnect electrical power to unit.
3. Drain reservoir and freezer of water by removing tygon tubing entering base of freezer.
4. Remove slip nut attaching ice discharge tube to freezer spout casting.
5. Purge off refrigerant and unsweat suction line. Disconnect capillary line at drier. Cap off all lines so no moisture can enter system.
6. Remove the 3 bolts securing freezer base adapater to top of gear motor cover.
7. Freezer assembly now can be lifted off gear motor and out of cabinet.
8. To re-install reverse procedure. Refer to section "Specifications" for proper refrigerant charge and to page 8 for Head and Back pressure settings.

FREEZER WORM SHAFT (AUGER)

TO REPLACE:

1. Disconnect electrical supply and shut off water to unit.
2. Remove top and front panel of cabinet.
3. Drain reservoir and freezer of water by removing tygon tubing entering base of freezer.
4. Next remove slip nut attaching ice discharge tube to freezer spout casting and insulation covering top of freezer chamber.
5. Remove the 2 bolts attaching the freezer spout casting to the spout bracket and remove spout casting. Also remove bracket by removing the stainless steel screw which secures the bracket to the freezer chamber.
6. By lifting up on the freezer cap pull ring, the complete worm shaft and bearing retainer can be removed from freezer chamber. NOTE: Top half of water seal is attached to the lower end of the worm shaft.

FREEZER ASSEMBLY TOP BEARING

TO REPLACE:

1. Follow steps 1 thru 6, freezer worm shaft removal.
2. To remove bearing and retainer from worm shaft, first remove retaining ring in top of bearing retainer.
3. Remove freezer cap and pull ring from bearing retainer.
4. Unscrew cap screw holding shaft to inner race of bearing and pull worm shaft free from bearing and retainer.
5. When replacing with a new bearing add new grease (Beacon No. 325) to top of bearing.

FREEZER ASSEMBLY BOTTOM BEARING AND WATER SEAL

TO REPLACE:

1. To replace, follow steps 1 through 6 under Worm Shaft Removal.
2. Remove 3 bolts holding freezer to mounting adapter.
3. Lift freezer off adapter just high enough to allow bottom bearing and bottom half of water seal to be removed from bottom of freezer tube.
4. Lightly grease bottom half of new water seal and insert face up approximately 1/2" in bottom of freezer tube.
5. Insert bottom bearing in bottom of freezer tube, force approximately 1/8" past bottom tube end. This will allow the positioning ring on adaptor to properly position freezer tube when tightening up the three mounting bolts.
6. After securing mounting bolts, put new top half of water seal on worm shaft the same way as the old seal was removed. When reassembling, put a small amount of Vaseline on shaft end. This will allow shaft to slide smoothly through rubber bottom half of water seal without tearing it.
7. Carefully insert worm shaft assembly in freezer tube and into spline coupling on bottom.
8. Replace spout casting, screws, insulation pieces and unit is ready to resume operation.

BIN THERMOSTAT:

Thermostat control body is located in electrical control box. The thermostat sensing tube is threaded into the ice storage bin where it automatically stops the icemaker when ice bin fills to sensing tube level and restarts icemaker when ice is removed. Factory settings are 35° cut out, 45° cut in.

Altitude correction begins at 2,000 feet, cut in and cut out screws should be adjusted equally, not more than 1/4 turn at a time.

IMPORTANT – Refer to page 11 for proper location of bin control capillary.

TO REPLACE:

1. Disconnect electrical supply.
2. Remove bin thermostat capillary tube from bin location.
3. Remove front panel and control box cover.
4. Disconnect two spade type electrical leads.
5. Loosen two screws in control mounting bracket.
6. Replace with new control and reassemble in reverse of above.
7. CAUTION: Always check new control power element charge before installation to assure receiving an operative control. A handful of ice on bulb will register on audible 'click' at cut off.

CONTACTOR

The electrical contactor is used to carry the compressor line current. It is wired so that any of the controls in the pilot circuit such as the bin thermostat, low and high pressure controls, etc. will cause the contactor holding coil to be de-energized when the control contact open, thereby, breaking the circuit to the compressor through the contactor points.

HEAD PRESSURE CONTROL (WATER COOLED MODELS)

The head pressure safety control is factory preset at 190 lb. PSIG. This is a manual reset control with an adjustment screw for raising or lowering the cut out pressure. The control is placed in the system as a safety precaution, to terminate power to the unit should loss of water occur to the water cooled condenser.

HEAD PRESSURE CONTROL (AIR COOLED MODELS)

A reverse acting high pressure control is used and connected electrically to the fan motor. As the head pressure drops below the cut-out setting, the control opens allowing the current to pass entirely through a resistor in the line feeding the fan motor. This slows the shaded pole motor down to approximately 1/4 speed thus increasing the head pressure. When the control cuts in the full voltage again flows directly to the fan motor allowing it to operate at full speed. This feature protects unit against low ambient conditions. Cut out and cut in pressures are normally set at 130 lb. and 145 lb.

LOW PRESSURE CONTROL

Control is located in the control box. Factory settings cut-out at 5 PSI. Safety device to cutoff machine and keep it off in case of water supply failure, loss of refrigerant, low ambient temperature or other causes of low pressure. This is a manual reset control.

WATER REGULATING VALVE (Water Cooled Models Only)

The Water Regulating Valve is designed to maintain a constant head pressure by regulating the amount of incoming water flow through the water cooled condenser. This valve is operated by high side pressure and may be adjusted by the adjusting screw on top of the valve to raise or lower the operating head pressure.

TO REPLACE:

1. Shut off water supply to machine and disconnect electrical power.
2. Disconnect old valve from water supply line and install new valve.
   NOTE: Be sure arrow on side of valve points in direction of water flow.
3. Purge off refrigerant and disconnect valve capillary line from high side fitting and immediately attach capillary from new valve.
4. Recharge system. Refer to page 8 for proper refrigerant charge and head and back pressure settings.

WATER RESERVOIR

A water level is maintained in the water reservoir by a float operated valve. Water is piped from the water reservoir to the freezing chamber by a gravity feed line maintaining an equal water level.

The water reservoir is equipped with a 2 inch air gap to prevent back siphoning and meet all health codes.

The water level in the water reservoir is adjusted by bending float arm. The water level should be set 1/4 inch below the overflow standpipe.

A water strainer must be installed in the supply line. Use strainer sent with machine.

TO REPLACE:

1. Remove cabinet top and side panel.
2. Turn off water supply and drain reservoir.
3. Remove 1/4 inch inlet water line.
4. Remove plastic feed line to freezer.
5. Remove two screws holding reservoir bracket to wall.
6. Lift out reservoir.
7. Turn over reverse procedure

FINAL ASSEMBLY
(Air Cooled)

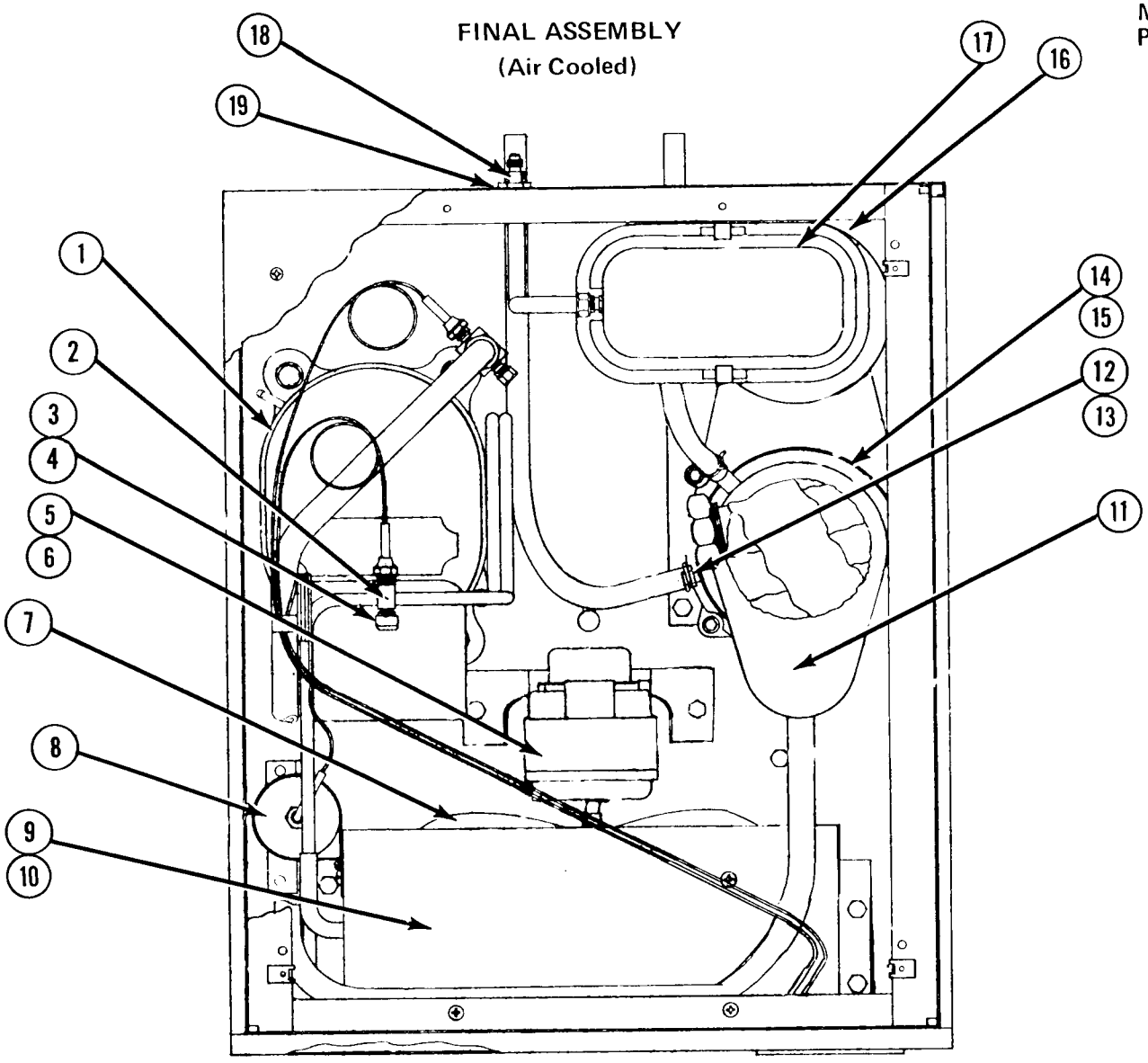

ITEM	PART NO.	DESCRIPTION
1.	18-2400-01	Compressor
2.	A20578-1	Adapter
3.	16-0563-00	Brass Cap
4.	16-0560-00	Valve Core
5.	18-0559-01	Fan Motor
6.	18-0388-00	Fan Motor Mount
7.	18-0625-00	Fan Blade & Nut
8.	2-0544-00	Drier
9.	18-0396-01	Condenser
10.	A23825-001	Shroud
11.	A23543-001	Freezer Assy.
12.	A21290-000	Drip Pan Assy.
13.	13-0704-00	Gasket
14.	A21002-021	Tubing
15.	02-0534-00	Clamp
16.	A23410-003	Reservoir Assy.
17.	A16012-000	Reservoir Cover
18.	03-1394-00	Nut
19.	03-1409-04	Washer

FINAL ASSEMBLY
(Water Cooled)

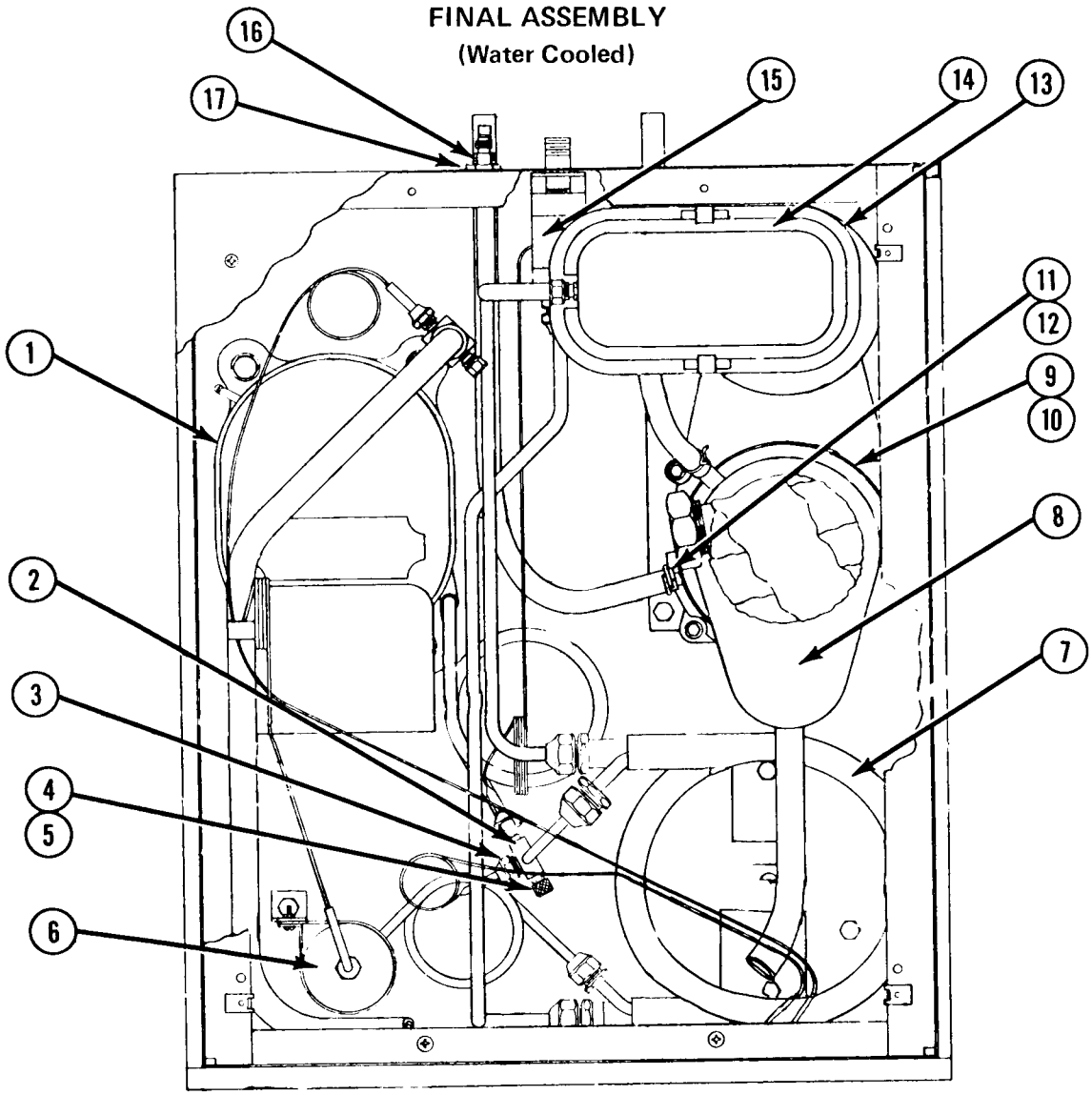

ITEM	PART NO.	DESCRIPTION
1.	18-2400-01	Compressor
2.	A20578-007	Adapter
3.	16-652-1	Adapter
4.	16-0563-00	Brass Cap
5.	16-0560-00	Valve Core
6.	02-0544-00	Drier
7.	18-3305-01	Condenser
8.	A23543-001	Freezer Assembly
9.	A21290-00	Drip Pan Assembly
10.	13-0704-00	Gasket
11.	A21002-021	Tubing
12.	02-0534-00	Clamp
13.	A23410-003	Reservoir Assy.
14.	A16012-000	Reservoir Cover
15.	A21605-003	Water Regulating Valve
16.	3-1394-00	Nut
17.	3-1409-04	Washer

FREEZER ASSEMBLY - EXPLODED VIEW - MODEL – MF4

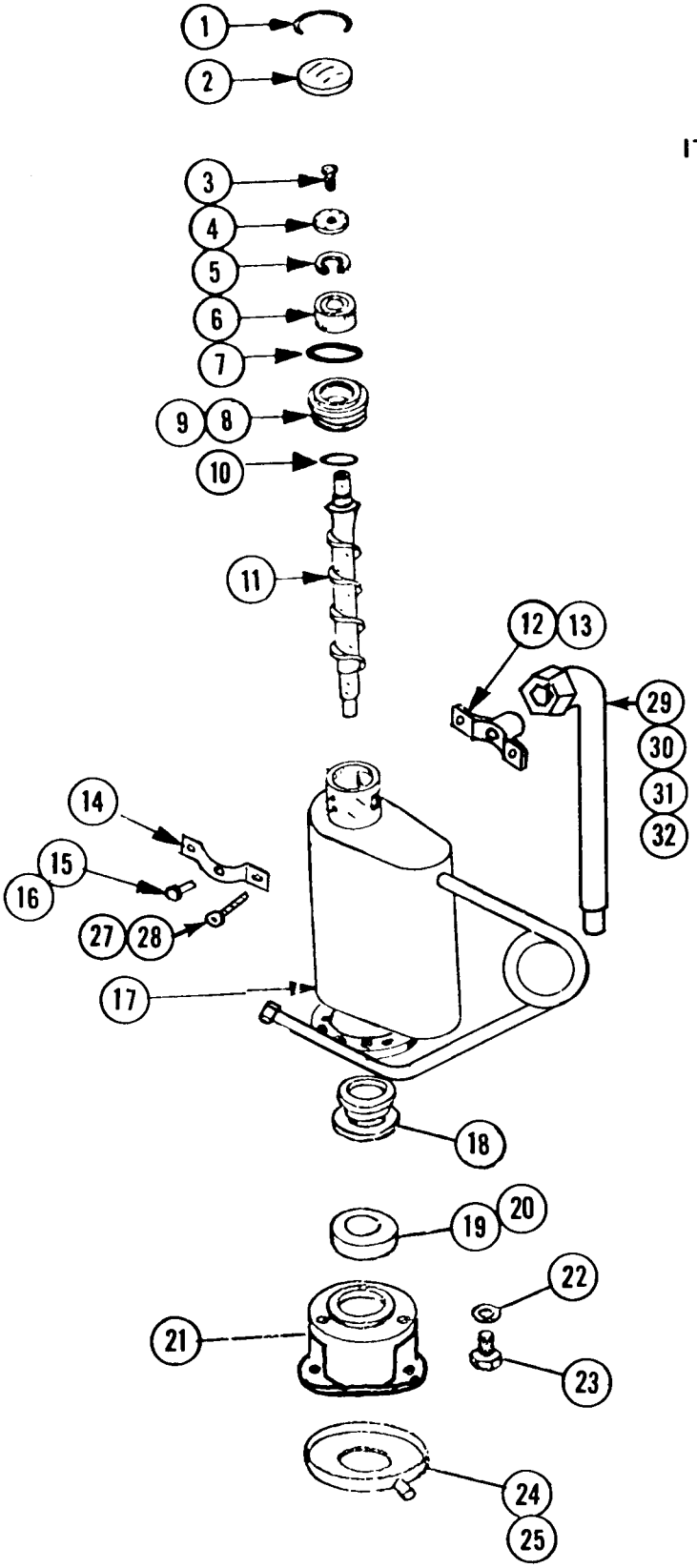

ITEM NO.	PART NO.	DESCRIPTION
1.	A-8582	Cap Hook
2.	A-8581	Cap
3.	3-1405-36	Screw
4.	A-6273	Washer
5.	3-712	Retaining Ring
6.	2-646	Bearing
7.	13-617-20	"O" Ring (Retainer to Cap)
8.	A-23465-1	Bearing Retainer
9.	13-617-40	"O" Ring (Retainer to Freezer)
10.	13-617-15	"O" Ring (Retainer to Auger)
11.	2-2047-1	Auger
12.	A-23554-1	Spout/Breaker
13.	2-1437	Gasket
14.	A-23515-1	Spout Bracket
15.	3-1506-1	Screw
16.	3-1409-14	Washer
17.	A-23558-1	Freezer W/Heat Exch.
18.	2-929	Water Seal
19.	2-619	Lower Bearing
20.	A-10591	Bearing Retainer
21.	2-1629	Base Adapter
22.	3-1408-3	Washer (4)
23.	3-1405-41	Screw (4)
24.	A-21290	Drip Pan Assy.
25.	13-704	Gasket
26.	15-573-1	Coupling
27.	3-1403-69	Screw (2)
28.	3-1417-7	Washer (2)
29.	2-2050-2	Disch. Tube
30.	A-24335-1	Slip Nut
31.	13-617-39	"O" Ring
32.	A-24341-2	Tube Cover

* A-23543-1 Freezer Assy. Complete (Less items 24, 25, 26, 29, 30, 31, & 32)

GEAR MOTOR ASSEMBLY
1/4 HP
OUTPUT SHAFT TURNS
AT 12 RPM

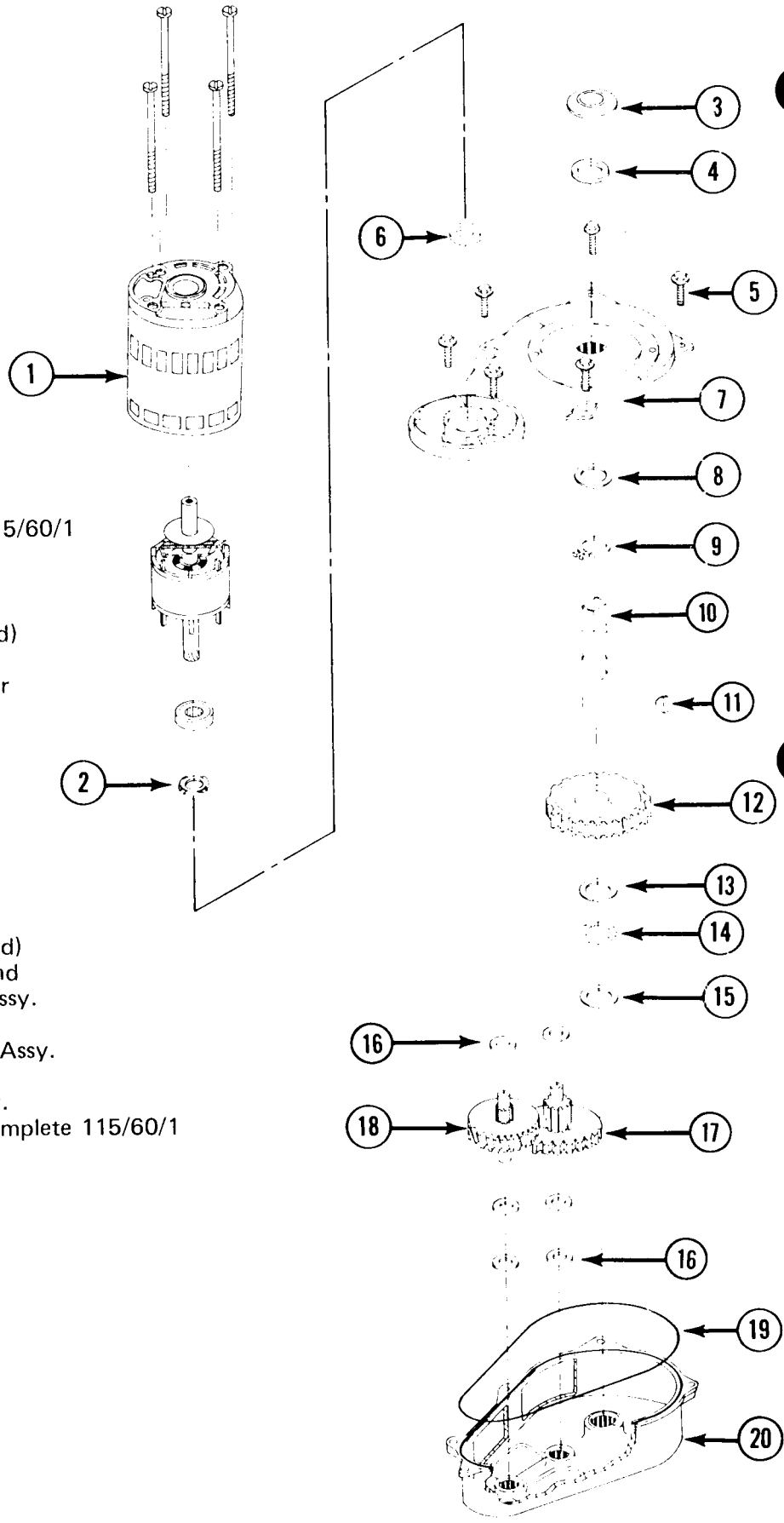

ITEM	PART NO.	DESCRIPTION
1.	12-1741-01	Drive Motor 115/60/1
2.	03-1426-00	Spring Washer
3.	13-0709-02	Water Shed
4.	02-1607-00	Oil Seal
5.	03-1251-01	Screws (6 Req'd)
6.	02-1606-00	Oil Seal
7.	A22200-000	Gear Case Cover Assembly
8.	02-1681-00	Thrust Race
9.	03-1363-00	Retaining Ring
10.	02-1652-00	Output Shaft
11.	03-1364-00	Key
12.	02-1653-00	Output Gear
13.	02-1681-00	Thrust Race
14.	02-1680-00	Bearing
15.	02-1679-00	Thrust Race
16.	03-1408-24	Washer (6 Req'd)
17.	02-2071-00	Second Gear and Third Pinion Assy.
18.	02-2072-00	First Gear and Second Pinion Assy.
19.	13-0617-38	"O" Ring
20.	A22199-000	Gear Case Assy.
	A24317-21	Gear Motor Complete 115/60/1

MOTOR COMPRESSOR

Air and Water

115/60/1 3500 RPM

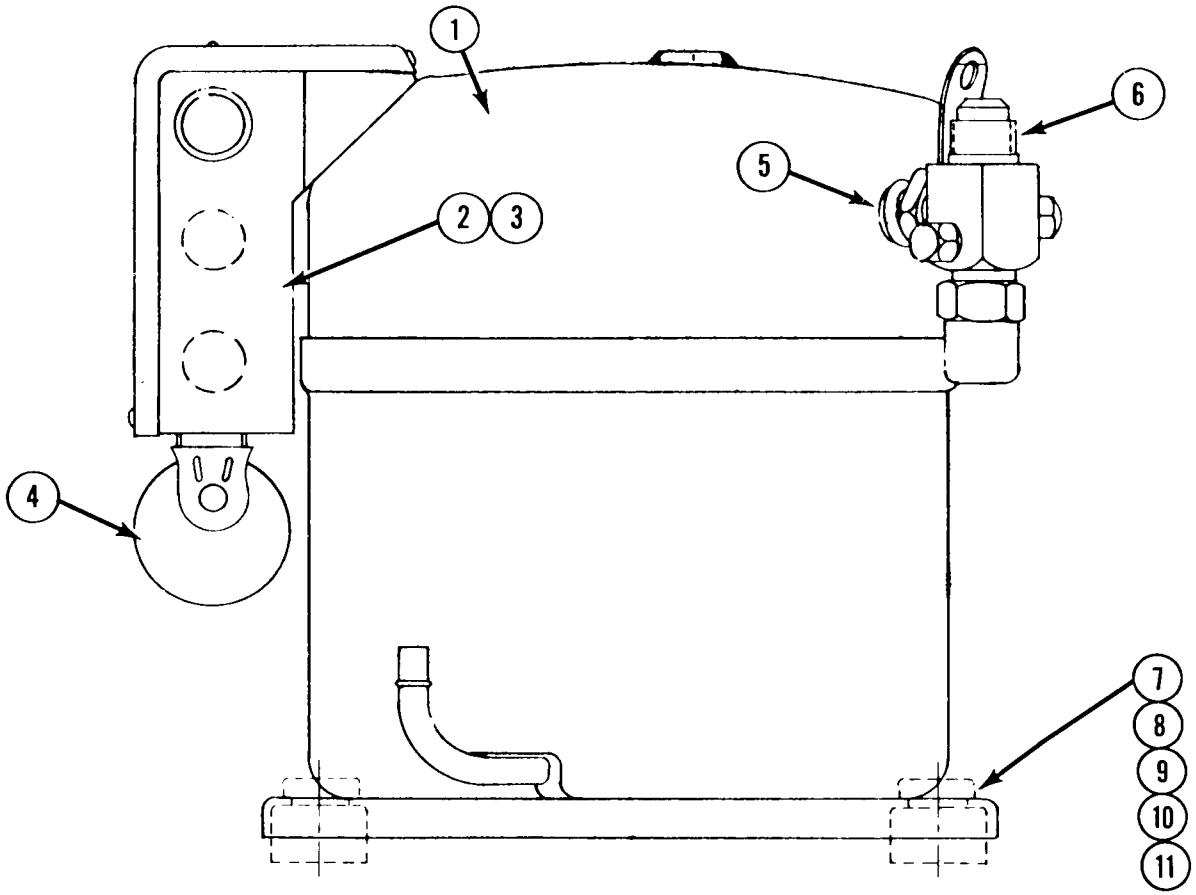

ITEM	PART NO.	DESCRIPTION
1.	18-2400-1	Compressor
2.	18-2410	Relay
3.	18-2400-25	Overload
4.	18-2420	Capacitor
5.	18-2201-30	Rotolock Suction Valve
6.	18-2300-29	Valve Seal
7.	18-2200-28	Grommet
8.	18-2200-27	Sleeve
9.	3-1405-40	Screw
10.	3-1417-12	Washer
11.	3-1408-25	Washer

CONTROL BOX ASSEMBLY

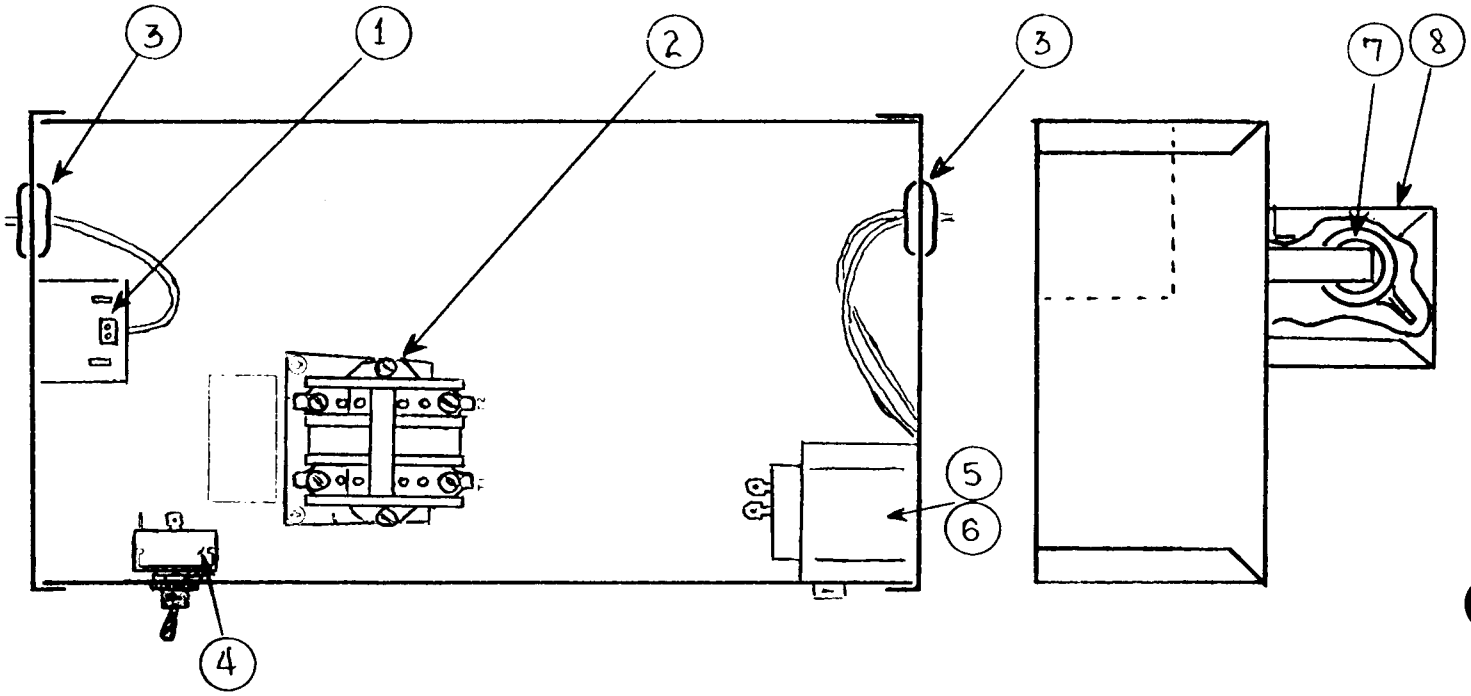

ITEM	PART NO.	DESCRIPTION
1.	11-354	Bin Control
2.	12-820-1	Contactor
3.	13-557	Grommet (3)
4.	12-426-1	Switch
5.	11-358	Lo Pressure Control
6.	11-386-1	Hi Pressure Control (Air Cooled Only)
	11-388-1	Hi Pressure Control (Water Cooled Only)
7.	12-474-1	Resistor (Air Cooled Only)
8.	A14384	Cover (Air Cooled)

RESERVOIR ASSEMBLY

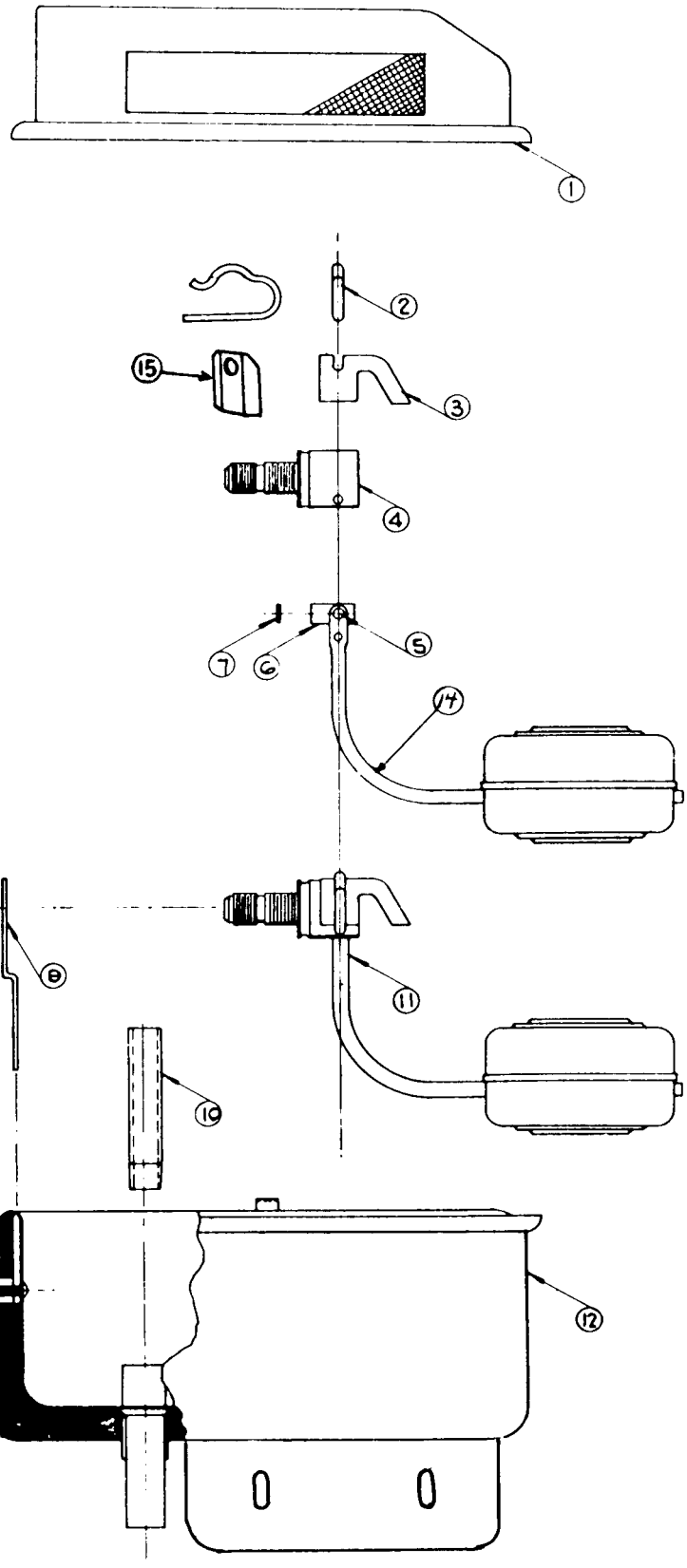

ITEM NO.	PART NO.	NAME
1.	A-16012	Reservoir Cover
2.	2-1259	Valve Pin
3.	2-1320	Deflector
4.	S-8770	Inlet Valve
5.	3-1001	Rivet
6.	A-5777	Valve Seat Holder
7.	S-6947	Valve Seat
8.	3-1394	Nut
9.	A-12869	Bracket
10.	S-6715	Stand Pipe
11.	S-8138	Inlet Valve Ass'y
12.	A-23533-1	Reservoir Body
13.	A-8055	Bracket Nut
14.	A-12067	Float and Arm Ass'y
15.	A-18418-1	Water Deflector
	A-23532-1	Complete-less cover

CABINET PARTS

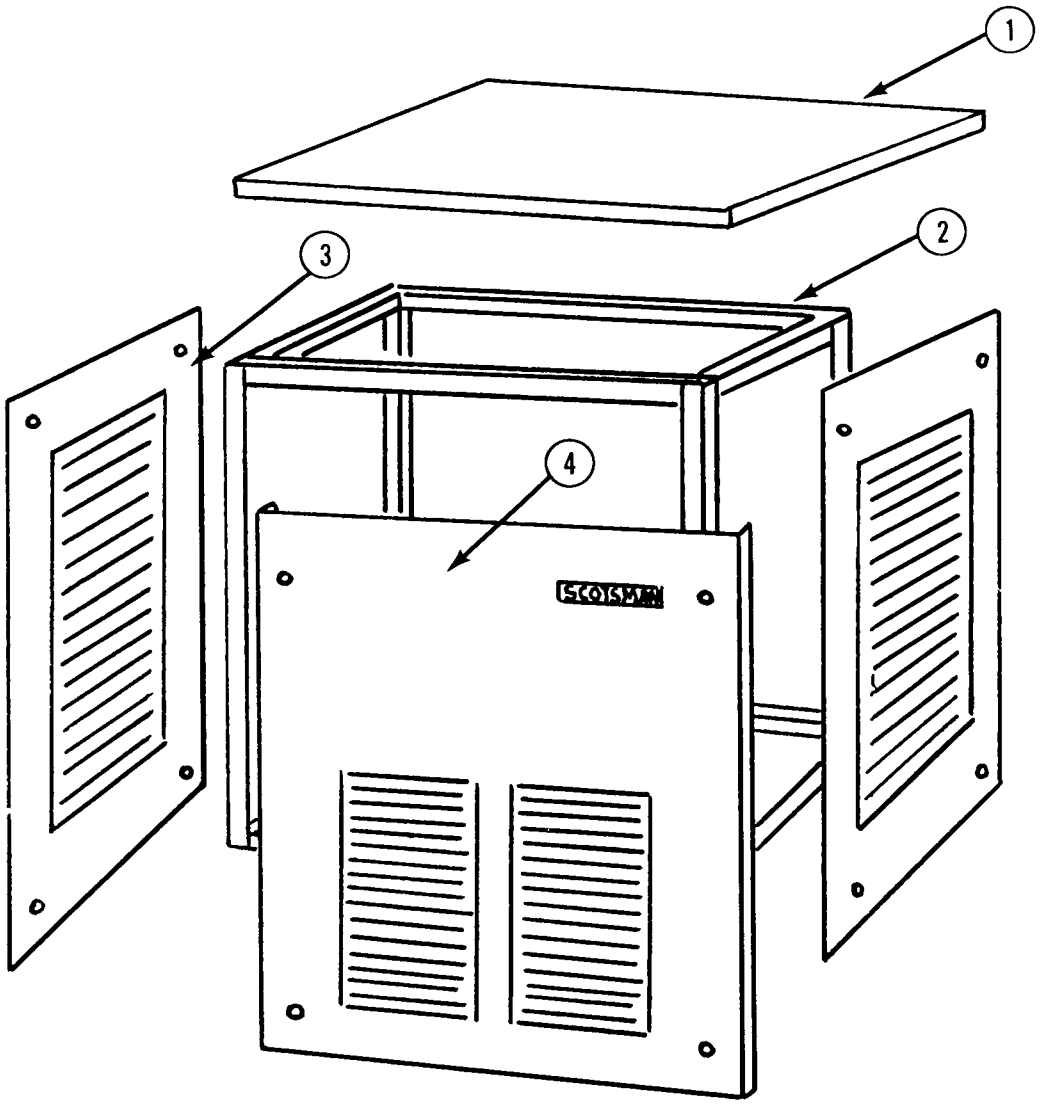

ITEM NO.	DESCRIPTION	ENAMEL	STAINLESS STEEL
1.	Panel Top	A24026-001	A24026-002
2.	Cabinet Frame	A23358-001	A23358-001
3.	Panel, Right Side	A23360-001	A23360-002
4.	Panel, Front	A23362-001	A23362-002
5.	Panel, Left Side	A23360-001	A23360-002
6.	Panel, Rear	A23370-001	A23370-002
*	Mounting Screws	03-1419-09	03-1419-09
*	Speed Nut	03-1507-00	03-1507-00
*	Aerosol Paint (Micromatte)	10-0314-01	

FLAKED ICE TRANSPORT SYSTEM INSTALLATION INSTRUCTIONS

Kit No. KTMF-1 – 115 V. Application
Kit No. KTMF-2 – 230 V. Application

DIAGRAM 'A'

1. Attach ice discharge tube from ice transport kit to freezer spout. Route thru knock out in top panel of the flaker unit.
2. Attach ice discharge tube supplied with the flaker unit to threaded end of ice discharge tube installed above. This tube can be rotated in any direction to suit the specific application.
3. Ice Tube Recommendations:
   A. Ice Tube in 1" nominal size rigid P.V.C. Schedule 40 pipe. This may be purchased at any plumbing supply house.
   B. To make 90° or 45° changes of direction in ice tube use 90° elbow, Queen Products Part No. 02-2102-01. For 45° elbow cut above 90° elbow in two pieces.
   C. To make ice tube connections at ends of straight lengths or at ends of elbows use pipe union, Queen Products Part No. A24563-001. Use cement for P.V.C. pipe and fittings to glue union halves to ends of ice tube.
   D. Caution!! Inside diameter of assembled connections must be clear of any obstructions or burrs. Otherwise ice will not flow through tube!
   E. Maximum length of ice tube permitted is 10 ft. Maximum number of 90° elbows permitted is (3) three.
   F. Insulation for ice tube may be purchased from Queen Products Part No. 13-0279-00. Insulation may also be purchased from plumbing or refrigeration supply houses. Sample material is from:
      Rubatex Corporation
      Bedford, Virginia
      Sponge tubing 1-1/4" I.D. x 1/4" Wall
      Rubatex No. R-180-V
   G. Connection of ice tube to ice discharge tube to be made by swaging end of ice tube using hot air gun or hot water and secured with worm drive clamp as shown. Swage must be at least 1 inch long!
   H. For any deviation from these recommendations consult Queen Products Service Department before installation of KTMF Kit.

DIAGRAM 'B'

1. Fasten transformer box to rear panel of flaker unit as shown.
2. Fasten remote bin thermostat control box near ice storage area.
3. The two leads between remote bin thermostat control & transformer box to be 16 AWG, stranded, 1/32 insulation. This is a 24 VAC low voltage circuit and may be routed along ice transport tube.
4. Route wires provided with transformer box thru rear panel & to the main control box on flaker unit.
5. Lead from gear motor to be disconnected from pressure control terminal & joined with blue wire from transformer box by use of a wire nut.
6. Attach black wire from transformer box to vacated terminal on pressure control.
7. Attach white wire from transformer box to neutral side of power supply or on line opposite side of master switch for 230 volt applications.

DIAGRAM "A"

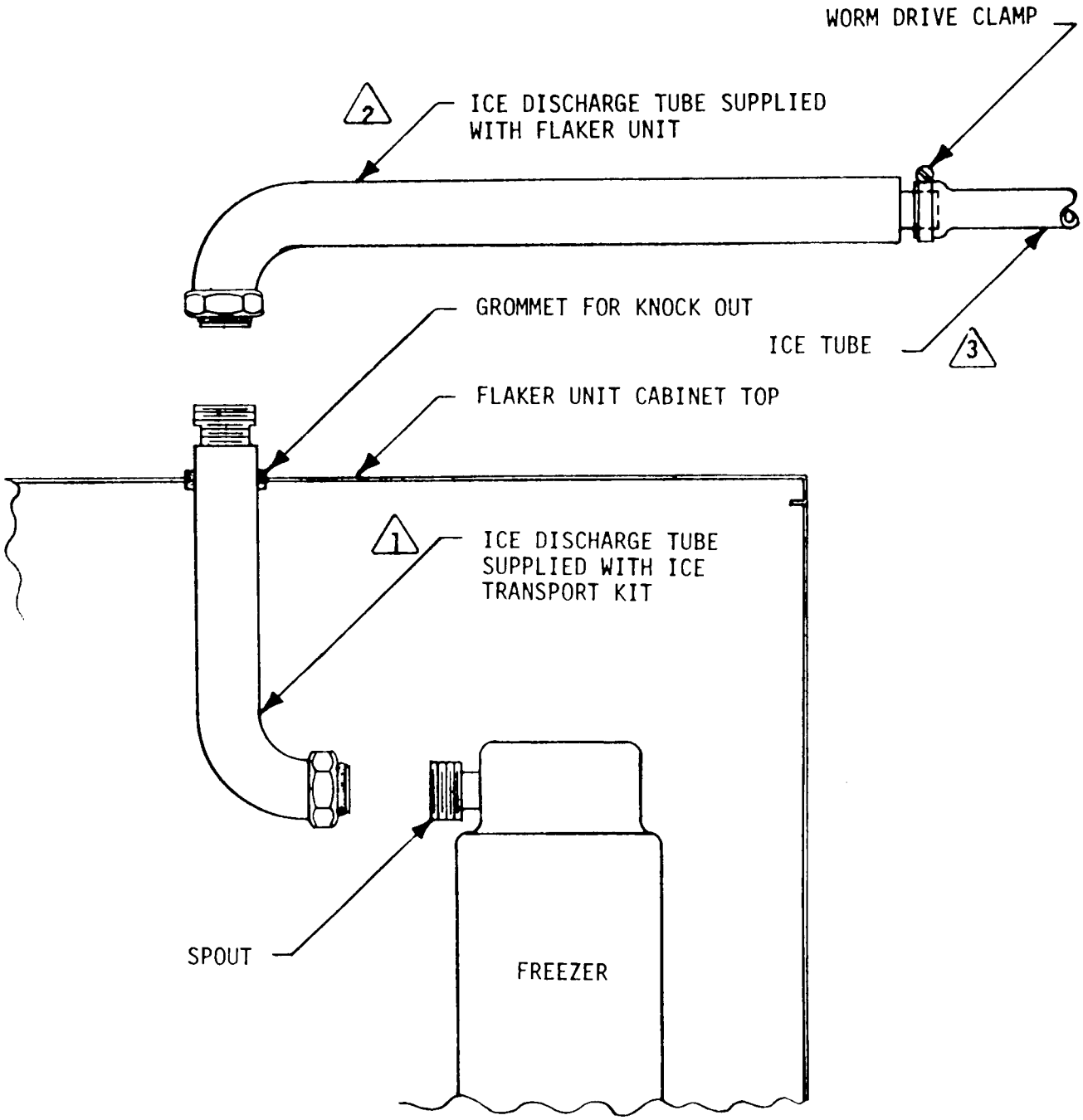
WORM DRIVE CLAMP
2
ICE DISCHARGE TUBE SUPPLIED WITH FLAKER UNIT
GROMMET FOR KNOCK OUT
ICE TUBE
3
FLAKER UNIT CABINET TOP
1
ICE DISCHARGE TUBE SUPPLIED WITH ICE TRANSPORT KIT
SPOUT
FREEZER

DIAGRAM "B"

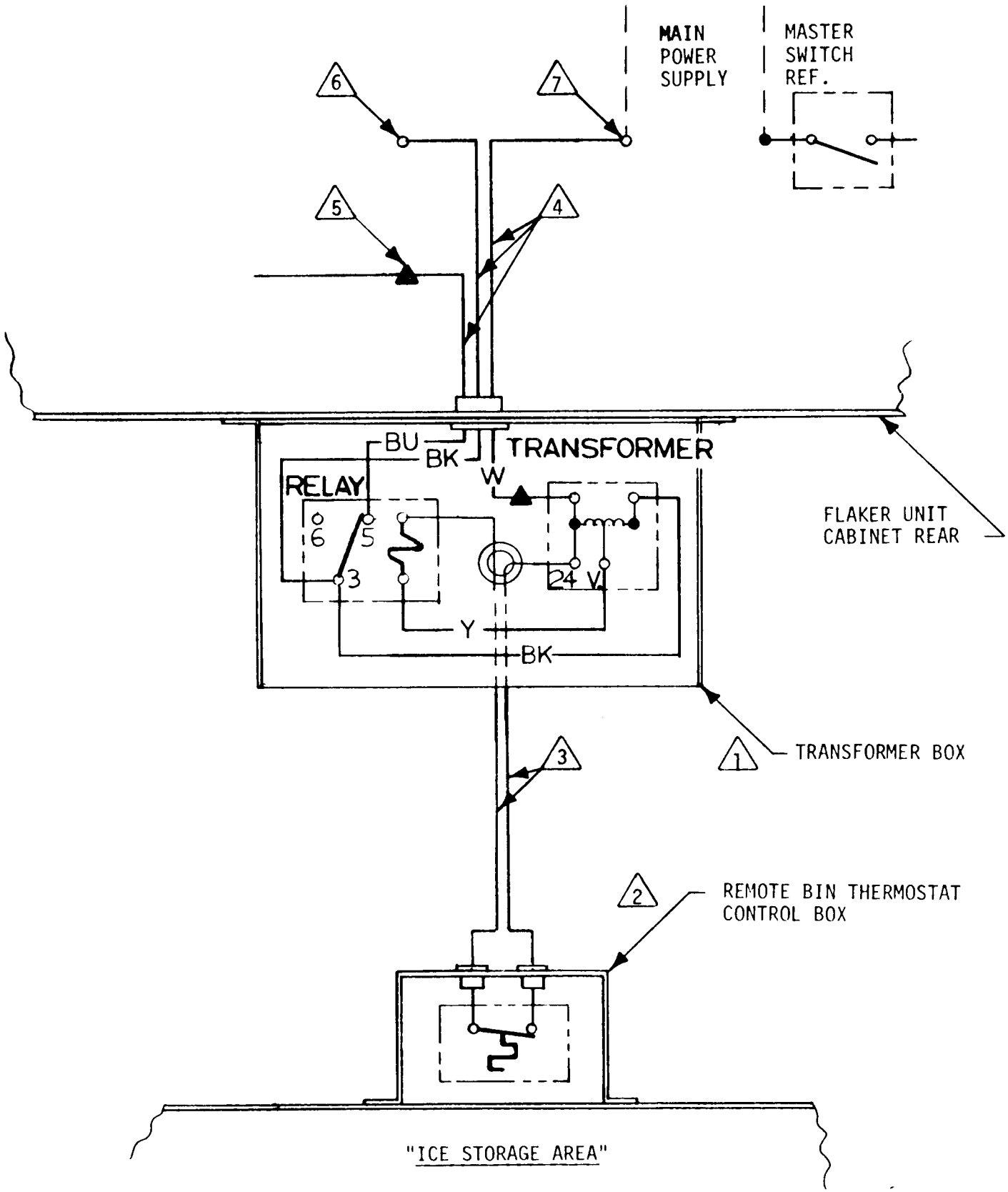
MAIN
POWER
SUPPLY
MASTER
SWITCH
REF.
6
7
5
4
BU
BK
TRANSFORMER
W
RELAY
6
5
3
24 V
Y
BK
FLAKER UNIT
CABINET REAR
1
TRANSFORMER BOX
3
2
REMOTE BIN THERMOSTAT
CONTROL BOX
"ICE STORAGE AREA"

INTRODUCTION

To the owner or user: The service manual you are reading is intended to provide you, and the maintenance or service technician with the information needed to install, start up, clean, maintain, and service this ice system.

TABLE OF CONTENTS

For the Installer

- Specifications . . . . . Page 2
- Location/Assembly . . . . . Page 4

For the Plumber . . . . . Page 5

For the Electrician . . . . . Page 6

Final Check List . . . . . Page 7

Start Up . . . . . Page 8

Component Description . . . . . Page 9

Electrical Sequence . . . . . Page 10

Operation . . . . . Page 11

Maintenance & Cleaning . . . . . Page 13

Service Diagnosis . . . . . Page 15

Removal and Replacement

- Ice Breaker and Auger . . . . . Page 17
- Water Seal . . . . . Page 17
- Gearmotor Assembly . . . . . Page 18

Parts lists and wiring diagrams are located in the center of this manual, printed on yellow paper.

THIS PAGE
INTENTIONALLY
LEFT BLANK

MF400
FOR THE INSTALLER

The MF400 is designed to fit the following Scotsman storage bins.

BH550 with bin top KBT20
HTB500 with bin top KBT20

The normal finish for the machine is enamel sandalwood. An optional stainless steel panel kit (SPKMF400A) may be ordered and field installed to convert the unit to a stainless steel finish.

When installing the new system, check that everything needed is on site:

Correct Ice Machine (voltage and type)
Correct Bin
Correct Bin Top
Legs for the bin

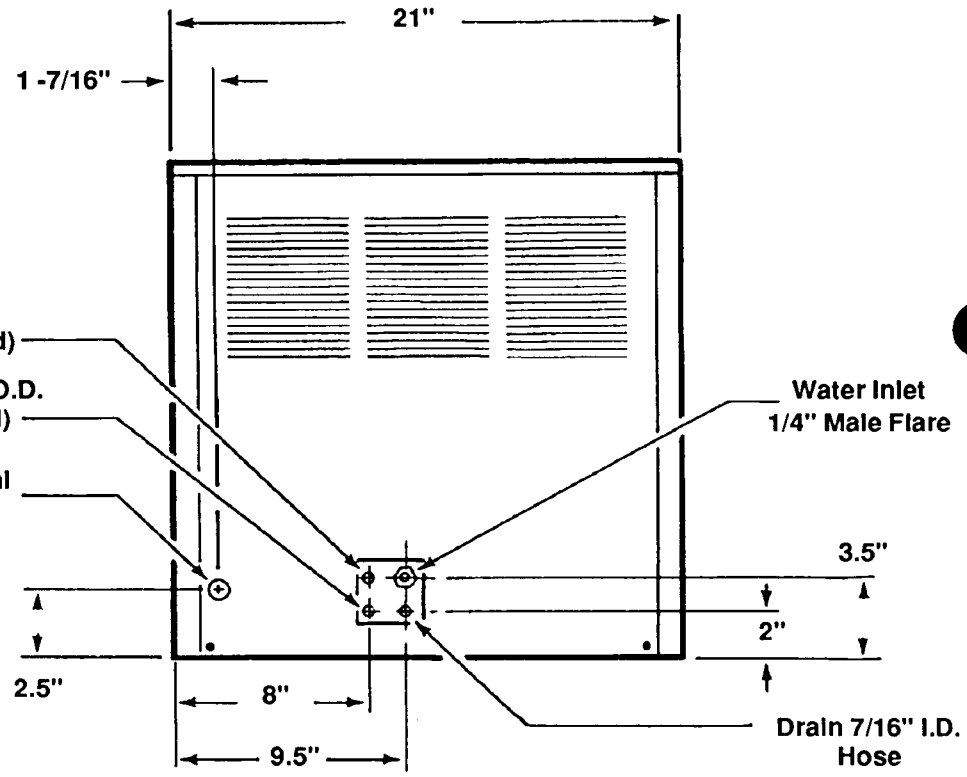

SPECIFICATIONS:
ICEMAKER

Note: This service manual is for the current MF400 "B" model, but applies in general to the prior "A" model. The primary differences are in the evaporator, spout and the ice chute.

Model Number	Dimensions (w/o Bin) H" x W" x D"	Basic Electrical	Condenser Type	Minimum Circuit Ampacity+	Maximum Fuse Size
MF400AE-1B MF400WE-1B	21.5 x 21 x 22 same	115/60/1 same	Air Water	12.7 11.4	15 15

*Minimum Circuit Ampacity is used to determine wire size and type per National Electric Code.

FOR THE INSTALLER

Installation Limitations:

This ice system is designed to be installed indoors, in a controlled environment:

	Min	Max
Air Temperature	50^{0}F.	100^{0}F.
Water Temperature	40^{0}F.	100^{0}F.
Water Pressure	20 psi	80 psi
Voltage	-10%	+10%

(Compared to the Nameplate)

Operating the machine outside of the limitations is misuse and can void the warranty.

Scotsman Ice Systems are designed and manufactured with the highest regard for safety and performance. They meed or exceed the standards of UL, NSF, and CSA.

Scotsman assumes no liability or responsibility of any kind for products manufactured by Scotsman that have been altered in any way, including the use of any part and/or other components not specifically approved by Scotsman.

Scotsman reserves the right to make design changes and/or improvements at any time. Specifications and design changes are subject to change without notice.

Water Limitations:

An ice machine is a food manufacturing plant; it takes in a raw material, water, and turns it into a food product, ice. The purity of the water is very important in obtaining pure ice and in maximizing product life. This section is not intended as a complete resource for water questions, but it does offer these general recommendations:

1. Filter the water used to make ice. That is the water going to the "potable" water connection. Water filters vary greatly in ability and function. Install one that filters out suspended solids to a dimension of 5 microns or smaller. The finer the filter the better, but finer filters will clog sooner that course ones. It may be necessary to add a course filter ahead of the fine filter to prolong filter life.

2. Check with a water treatment specialist for a water test, and recommendations regarding filters and treatment.

Service Limitations:

There must be space above, to at least one side, to the back, and of course the front for service access.

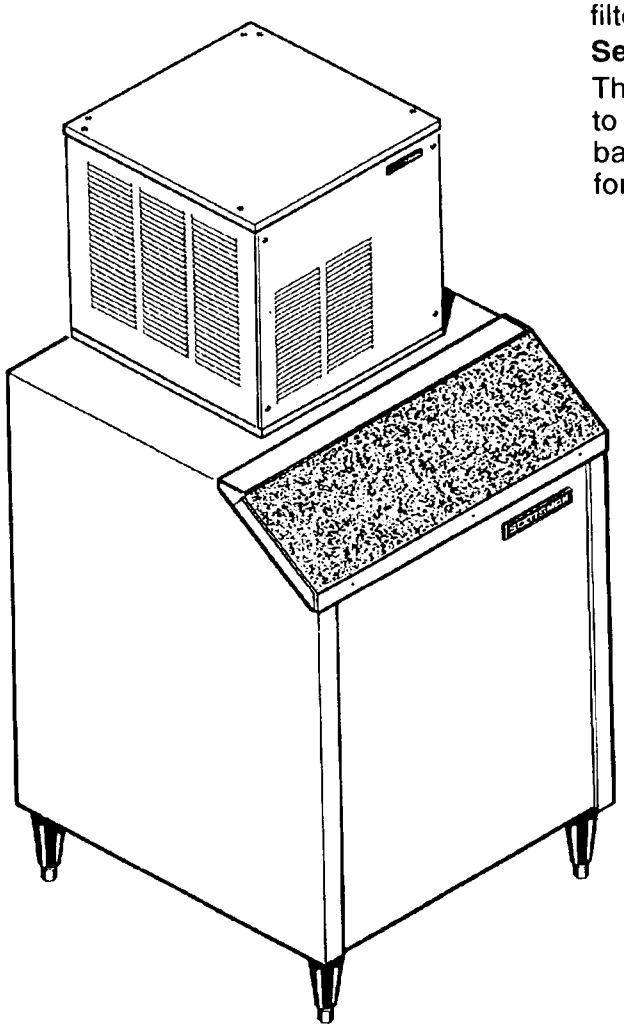

MF400
FOR THE INSTALLER

Location

After uncrating and inspection, the unit is ready to be installed.

It is important that the machine be installed in a location where it has enough space around it for service, and a minimum of 6" be allowed all sides for air circulation. The machine, when air cooled, draws air in the front, and exhausts it out the sides and back.

Try to avoid hot, dirty and crowded locations. Be sure that the location for the machine is within the limitations described on page 3.

Storage Bin

Tip the uncrated storage bin on its back, using parts of the carton to protect the exterior finish. Install the legs into the threaded holes in the bottom of the bin. Turn the leg levelers all the way in preparation for leveling later.

Return the bin to the upright position, remove paper covering the bin gasket.

Install bin top if required.

Note: Do not push bin into position: but lift it there. Pushing a bin, especially one with ice in it, can cause damage to the legs and the leg mounts.

Ice Maker

The machine is heavy, so the use of a mechanical lift is recommended for lifting the machine high enough to install on top of the bin. After the machine is placed on the bin, line it up so that the ice discharge opening in the base of the machine is over the open hole in the bin top.

Ice Chute Installation

After the MF400B has been installed on the ice storage bin, the ice chute needs to be installed:

1. With the top panel off, remove all packing material (bubble pack) from above the ice chute and chute cap. Cut the ty-wrap holding the chute assembly in place.
2. Remove the insulation halves and ty-wrap packed inside the cabinet, retain for later use.
3. Remove the cardboard support from under the ice chute.
4. Insert the ice chute/bin thermostat assembly into the large hole in the bottom of the ice machine. Check that bin thermostat cap tube is free from contact with most components.
5. Remove the rubber cap from the top of the ice chute. Leave one hose clamp on the chute.
6. Push the ice chute against the stainless spout (the end of the spout will go into the chute).
7. Slide the rubber cap over the top of the stainless spout. Push down until it fits tightly around the spout.
8. Secure the rubber cap to the spout with the two hose clamps, in the molded grooves; one above and one below. Keep hose clamp screws away from evaporator.

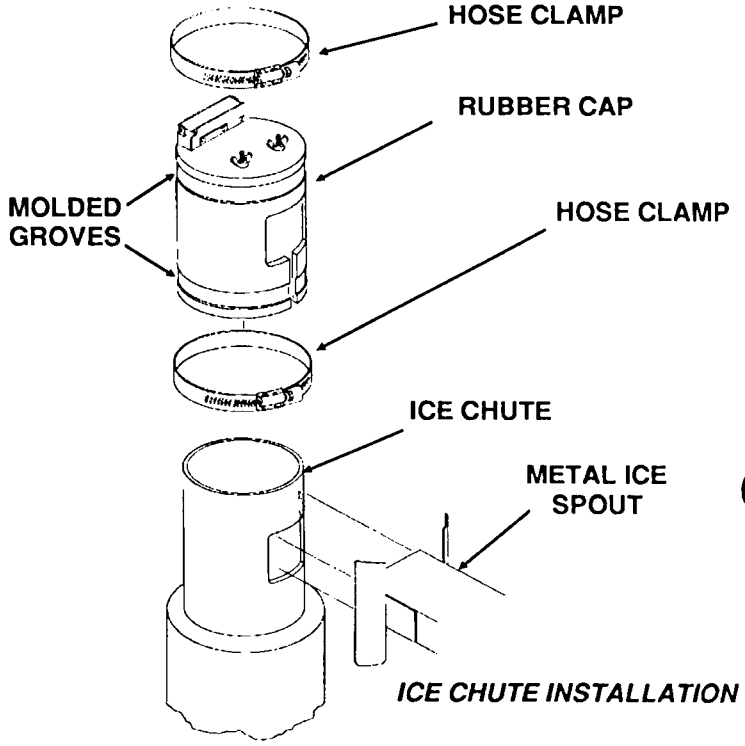

ICE CHUTE INSTALLATION

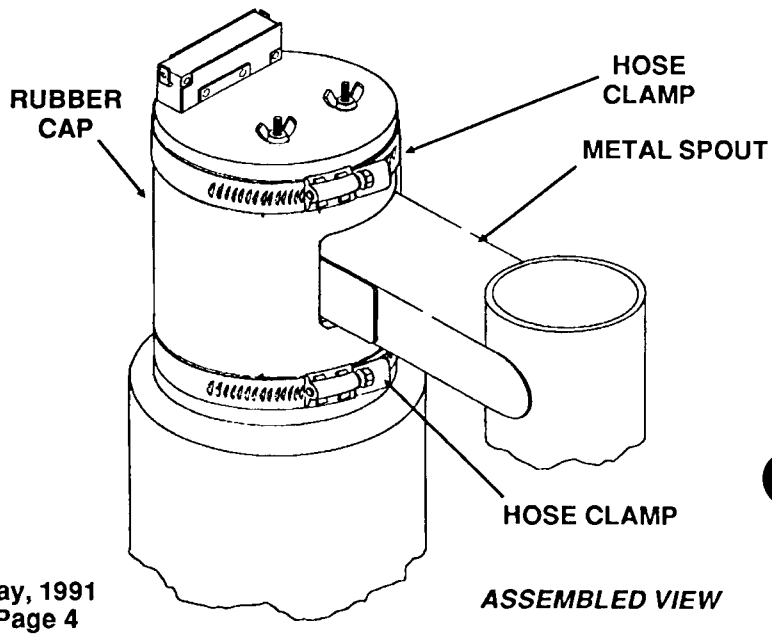

ASSEMBLED VIEW

FOR THE PLUMBER

CONFORM TO ALL APPLICABLE CODES

Water Inlet

Air Cooled: The recommended water supply is cold water. Use ¼" O.D. copper tubing, connect to the ¼" male flare at the back of the cabinet. Install a hand valve near the machine to control the water supply.

Water Cooled: A separate ⅜" O.D. copper tube should be connected to the condenser inlet, with a separate hand valve to control it.

Drains

Air cooled: There is one 7/16" I.D. hose to connect to for a drain. This drain is a gravity drain, and a minimum of ¼" per foot fall is needed for horizontal portions of the drain line.

The ideal drain receptacle is a trapped and vented floor drain.

Use only rigid tubing.

Water Cooled Models: In addition to the above mentioned drain, separate condenser drain must be installed. Connect to the ⅜" condenser drain tube.

Storage Bin: A separate gravity type drain needs to be run. This drain line should be insulated.

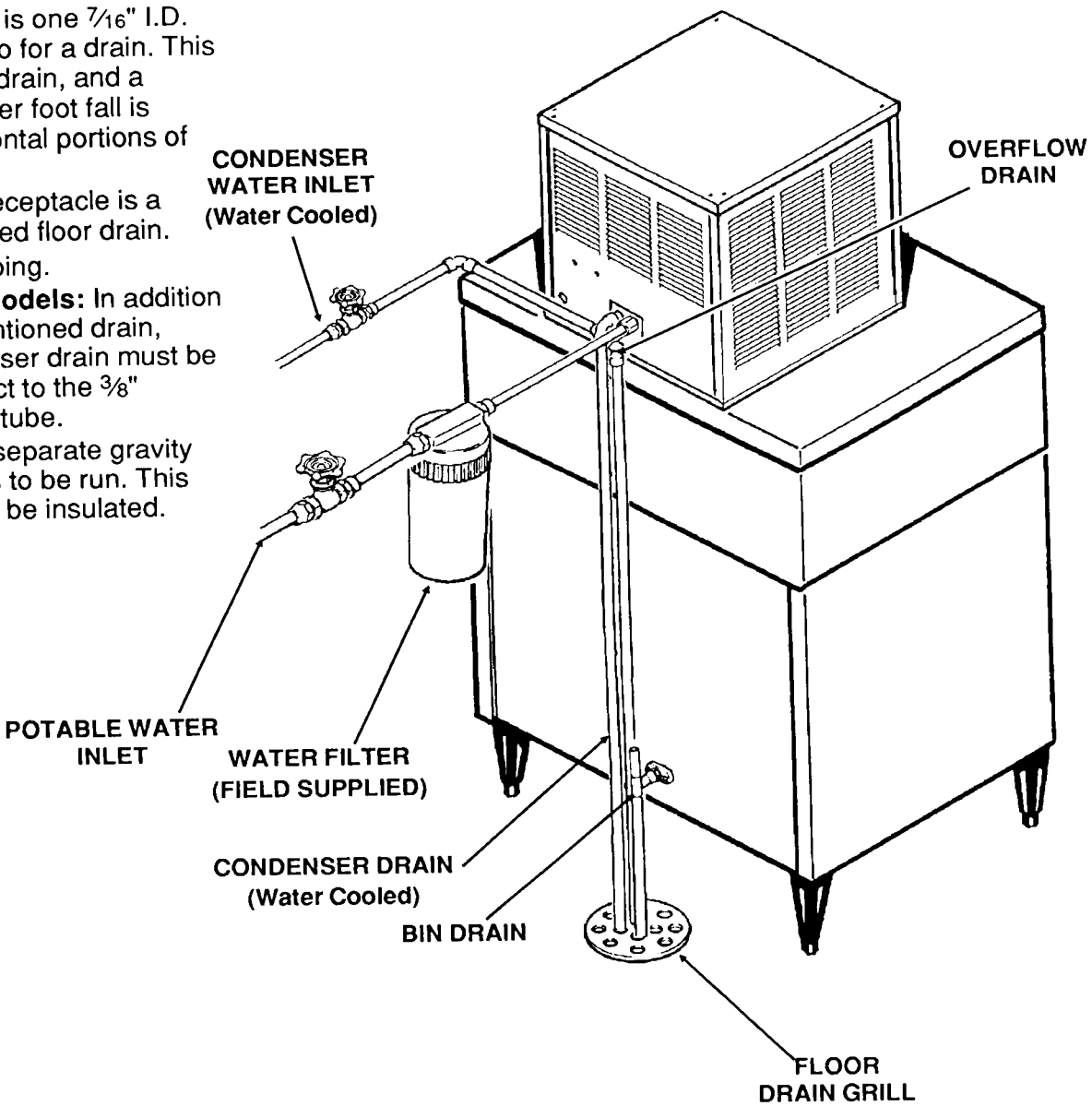

CONFORM TO ALL APPLICABLE CODES

The electrical power to the unit is to be wired through the cabinet to the control box. In the control box, connect to the terminal strip provided.

Check the nameplate (located on the back of the cabinet) for the voltage requirements, and for the minimum circuit ampacity. The machine requires a solid chassis to earth ground wire.

The icemaker should be connected to it's own electrical circuit so that it is individually fused. Voltage variation must remain within design limitations, even under starting conditions.

All external wiring must conform to national, state, and local electrical codes. The use of e licensed electrician is required to perform the electrical installation.

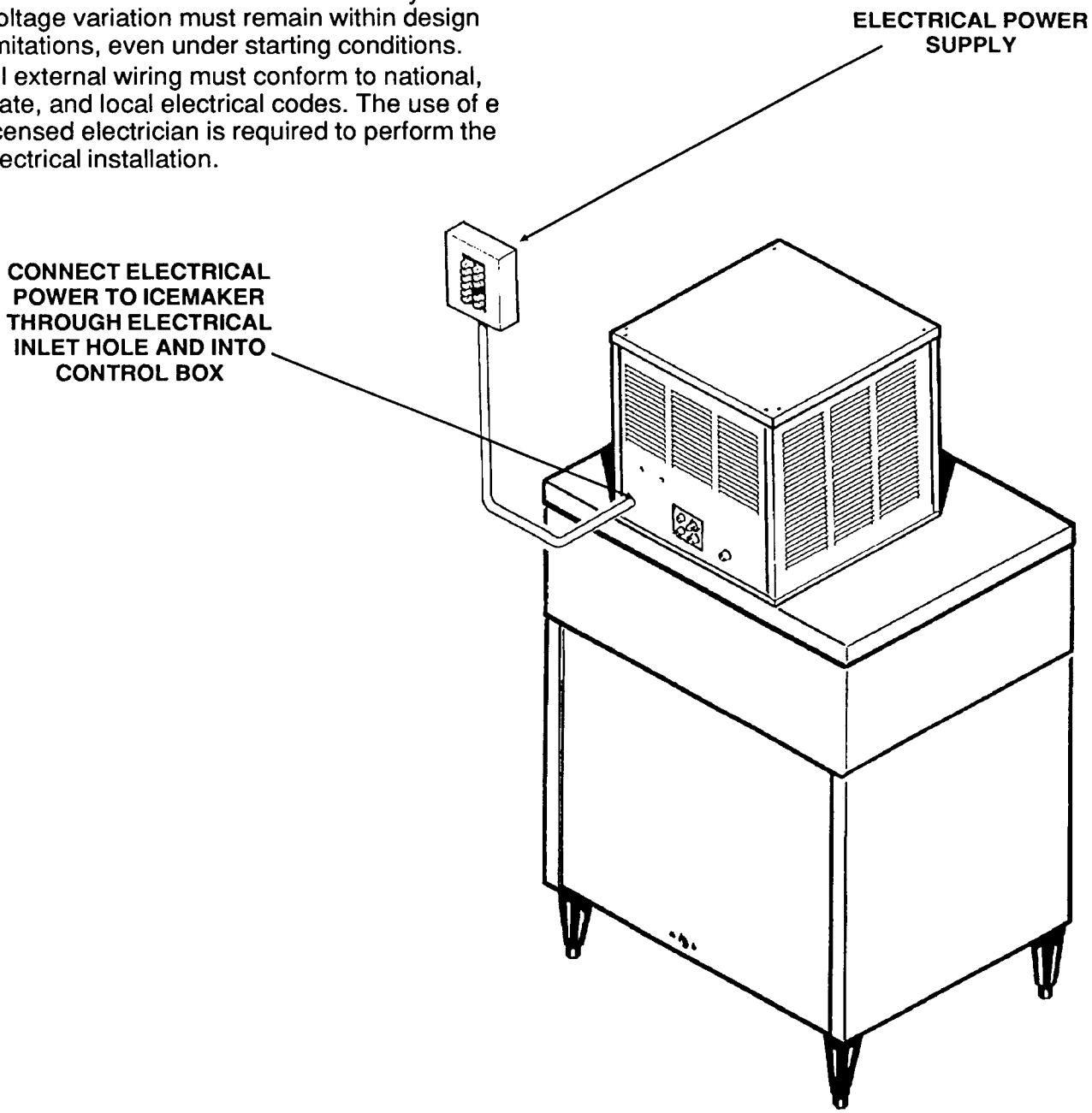

FOR THE INSTALLER: Final Check List

1. Is the ice system installed indoors in a location where the air and water temperatures are controlled, and where they do not exceed the design limitations?
2. Is there an electrical service disconnect within sight of the installed machine?
3. Have all the plumbing connections been made and checked for leaks?
4. Has the machine and bin been leveled?
5. Is there a minimum of 6" clearance around the machine for proper service and air circulation?
6. Is the water pressure a minimum of 20 psig?
7. Has the ice discharge tube been installed?
8. Is there a water shut off installed near the machine?
9. Have all shipping materials been removed?

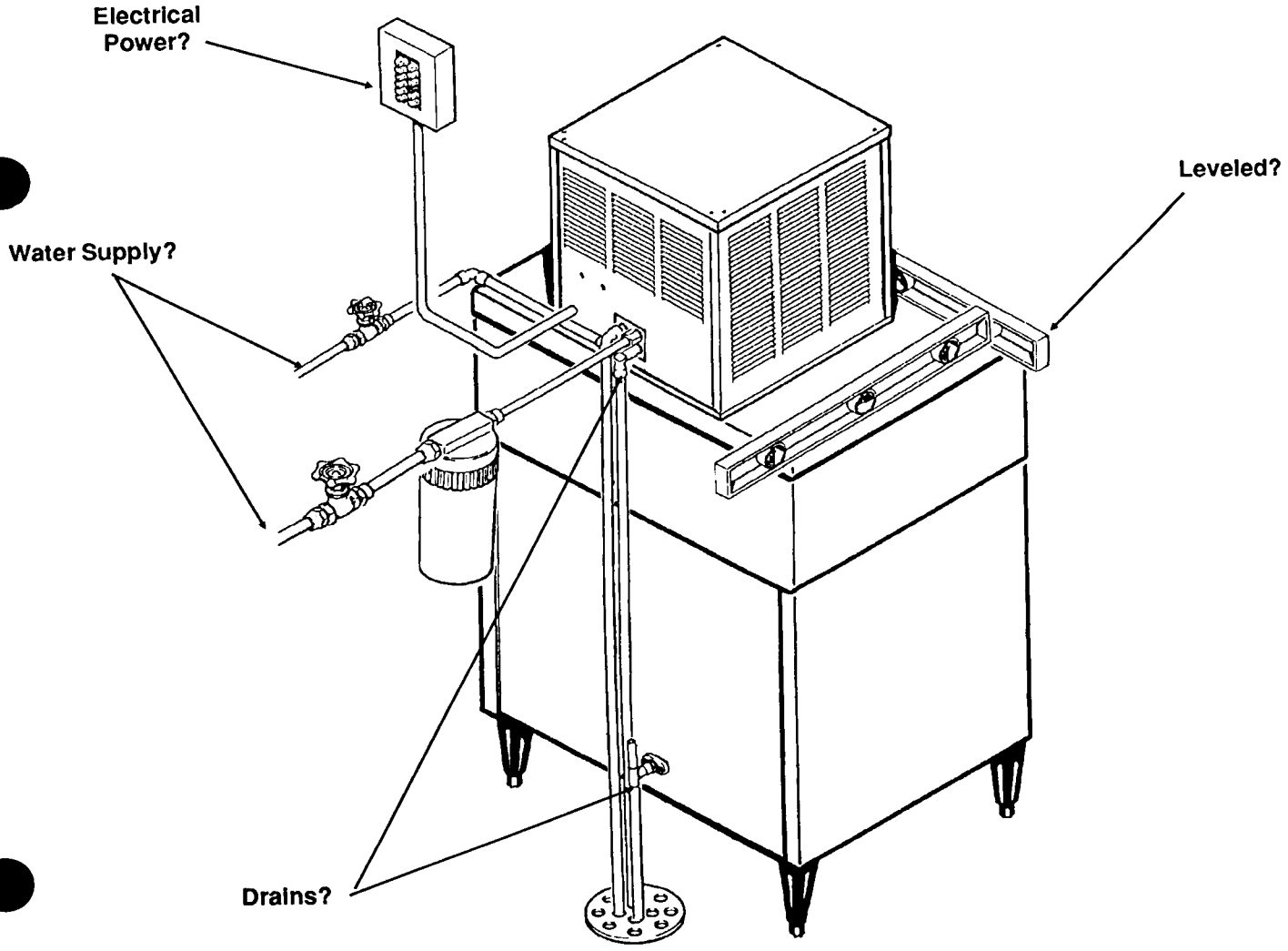

MF400
START UP

1. Remove screws and the front panel.
2. Open the water shut off valve.
3. Observe that the water flows into the water reservoir, fills up the water inlet tube to the evaporator, the float moves up with the water level, and the float shuts off the water flow, about 3/8" below the molded horizontal line on the water reservoir.
4. Switch on the electrical power to the unit.
5. Switch the master switch to ON.
6. After a few minutes of operation: water should begin to flow from the reservoir to the evaporator; the air cooled condenser should begin to discharge warm air, or the water cooled condenser should beginning to discharge warm water; and the unit should begin to drop ice into the storage bin.

If desired, the refrigeration pressures can be checked:

- The air cooled discharge pressure should be about 125-135 PSIG and the suction pressure should be about 12-15 PSIG.
- The water cooled discharge pressure should be set at 135 PSIG.
- Gearmotor amps should be about 2.8 - 3.2.
- Compressor amps should be about 8.5 - 9.

7. Let the unit operate for 15-30 minutes, checking for water leaks, or excessive noise from vibrating components.
8. Block off the ice discharge tube, and check if the bin thermostat shuts off the machine. After it shuts off the compressor, the auger motor should run for a few minutes more. Allow the ice in the tube to fall away, and check that the compressor restarts.
9. Explain the operation and maintenance requirements to the user, inform the user of the telephone number of the service agency servicing the machine, and give the user the service manual.

COMPONENT LOCATION: Control Box

Auger Delay Pressure Control: This pressure switch, connected to the low side of the refrigeration system, controls the auger drive motor.

Low Pressure Control: This pressure switch, connected to the low side of the refrigeration system, is normally closed when the machine is operating. If the low side pressure should drop too low, the control will open (at 0-4 PSIG), stopping the ice maker. It is an automatic reset.

High Pressure Control: The pressure switch, used on water cooled models only, is designed to open and shut off the machine should the high side refrigeration pressure become too high, usually as a result of not enough water through the water cooled condenser. It is a manual reset.

On-Off switch: This toggle switch shuts off the machine. It is not a complete disconnect.

Bin Thermostat: This thermostat turns the machine on and off in response to changes in temperature of the capillary tube. It opens at 35^0 F. and closes at 45^0 F. The capillary tube is mounted on the inside of the ice chute.

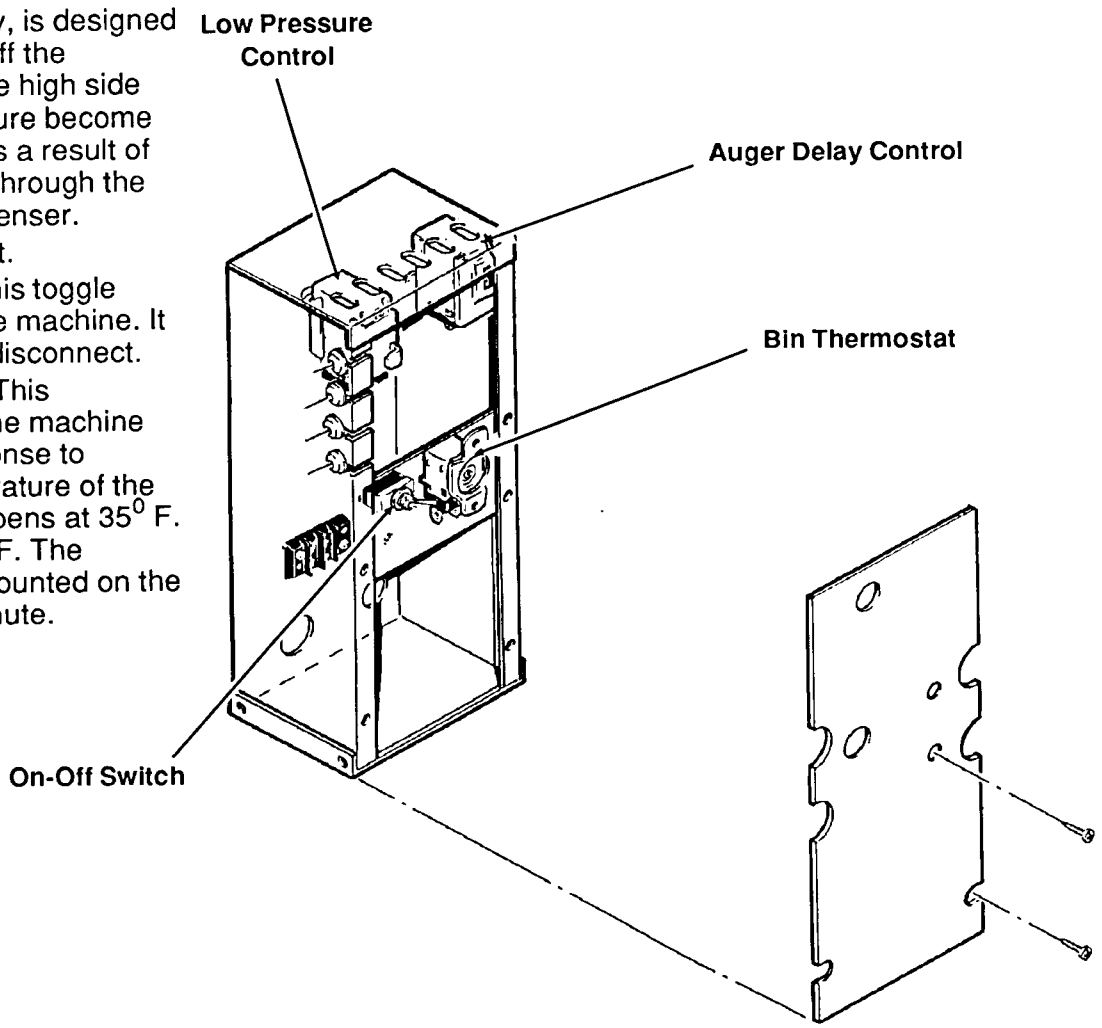

MF400
ELECTRICAL SEQUENCE

There are two circuits in the MF400: one is a series circuit with several switches connected in series to the compressor. The other is a parallel branch of the series circuit, controlling the gear drive motor.

- The series circuit begins at the terminal strip in the control box. From there, the line side power is connected to the Master Switch.
- When the master switch is closed, the power is then connected to the Spout Switch. This switch, located on the top of the ice chute, is closed unless the ice chute has overfilled with ice, it is an automatic reset.
- From the spout switch the line side power now is connected to the Low Pressure Control (air cooled) or the High Pressure Control and then the Low Pressure Control (water cooled). These controls, connected to the refrigeration system, are designed to open whenever higher (high pressure control) pressures or lower (low pressure control) pressures are sensed. The high pressure control is a manual reset, the low pressure control is an automatic reset.
- The line side power is also connected, in a parallel circuit, to terminal 1 of the Auger Delay pressure control. This pressure control, connected to the low side of the refrigeration system, is designed as a by-pass circuit to the auger drive motor whenever the low side refrigerant pressure is at it's normal ice making range. At start up, the contacts between terminals 1 and 2 are open. The line side power does not pass any further through the auger delay pressure control, until the compressor starts, and the low side pressure drops.
- The next control the power is connected to is the Low Water Pressure Control. This switch is designed to open should the water pressure to the machine drop too low.
- The next control is the Bin Thermostat. It is closed when there is no ice on the portion of the control inside the ice chute. It is open when there is ice on the portion of the control inside the ice chute. Closing of the bin thermostat begins the process of making ice, because the line side power now goes to the compressor, gearmotor, and if air cooled, the fan motor.
- Power is initially connected to the gearmotor through contacts 3 and 2 of the auger delay pressure control. This causes the auger motor to start and run. At the same time, if the centrifugal switch on top of the gearmotor closes (meaning the motor is at full speed) the compressor is connected to the neutral side of the power supply, and the compressor begins to run.
- As the compressor runs, the low side or suction pressure begins to fall, when it reaches a preset point, the contacts within it move, opening 3 and 2, then closing 1 and 2. The power for the gearmotor is then connected to a point in the series circuit ahead of the low pressure control, the low water pressure control and the bin thermostat, so that if any of these open, the gearmotor will continue to run, pushing ice out of the evaporator.

OPERATION: Water

Water enters the machine through the 1/4" male flare at the rear of the cabinet, goes past the water pressure switch and then to the water reservoir which it enters through the float valve. The water then goes out the bottom of the reservoir tank to the bottom of the evaporator. Reservoir overflowis routed to the drain. Water cooled models have a separate water circuit for the cooling water: it enters the fitting at the rear, goes to the water regulating valve, then to the water cooled condenser and down the drain.

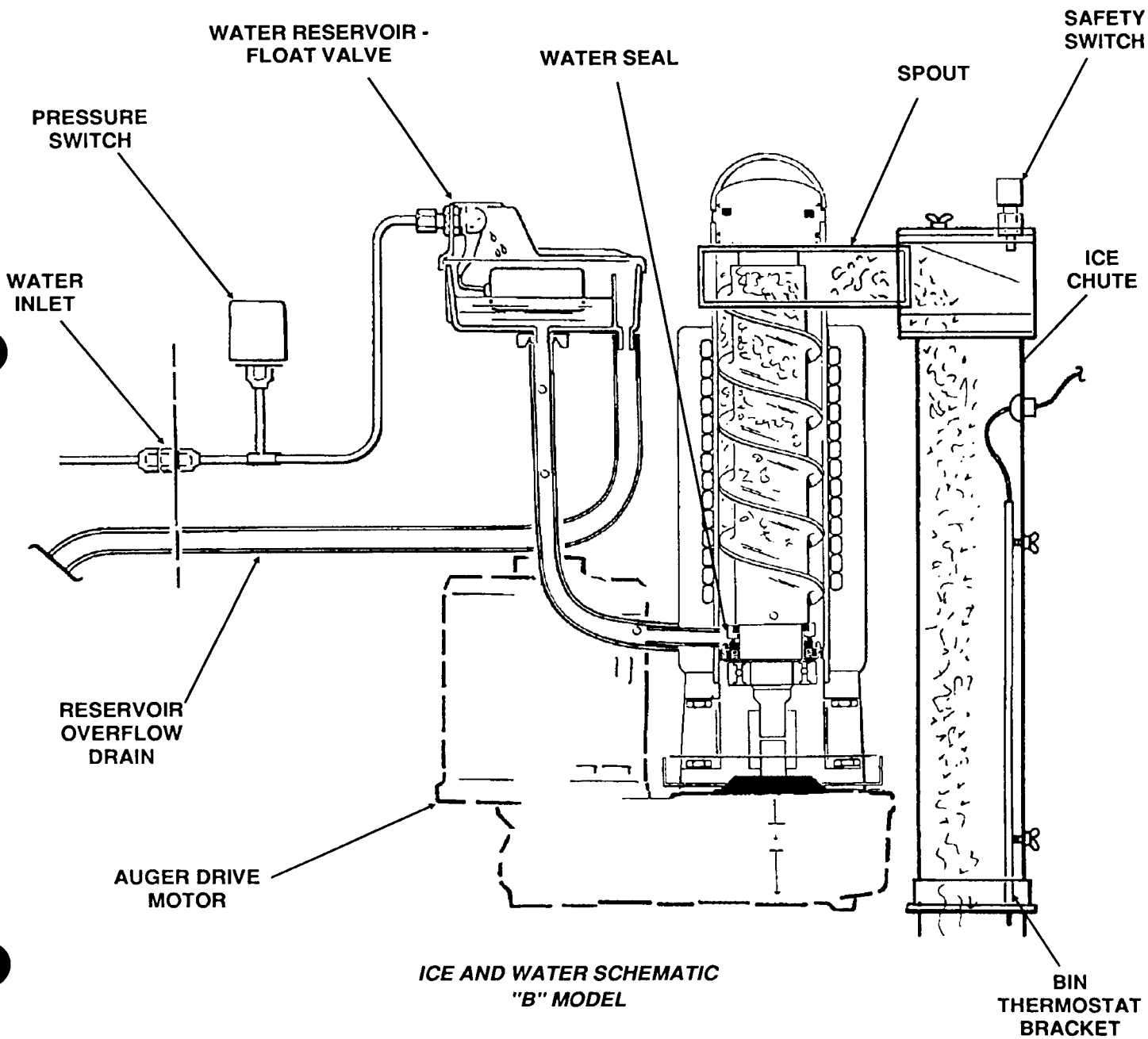

ICE AND WATER SCHEMATIC "B" MODEL

MF400
OPERATION: Refrigeration

Beginning at the compressor, the refrigerant is compressed into a high temperature gas. The discharge line directs this gas to the condenser. At the condenser (air or water cooled) the gas is cooled by either air or water and it then condenses into a liquid. This high pressure liquid then goes through the liquid line to the capillary tube. The capillary tube meters liquid refrigerant into the evaporator, the volume of liquid refrigerant depending upon the temperature of the evaporator; warmer evaporators get more refrigerant and colder evaporators get less.

At the evaporator, the refrigerant enters an area of relatively low pressure, where it can easily "boil off" or evaporate. As it evaporates, it absorbs heat from the evaporator and whatever is in contact with it (such as the water inside it). After the evaporator, the refrigerant, now a low pressure vapor, goes through the suction line back to compressor, where the cycle is repeated.

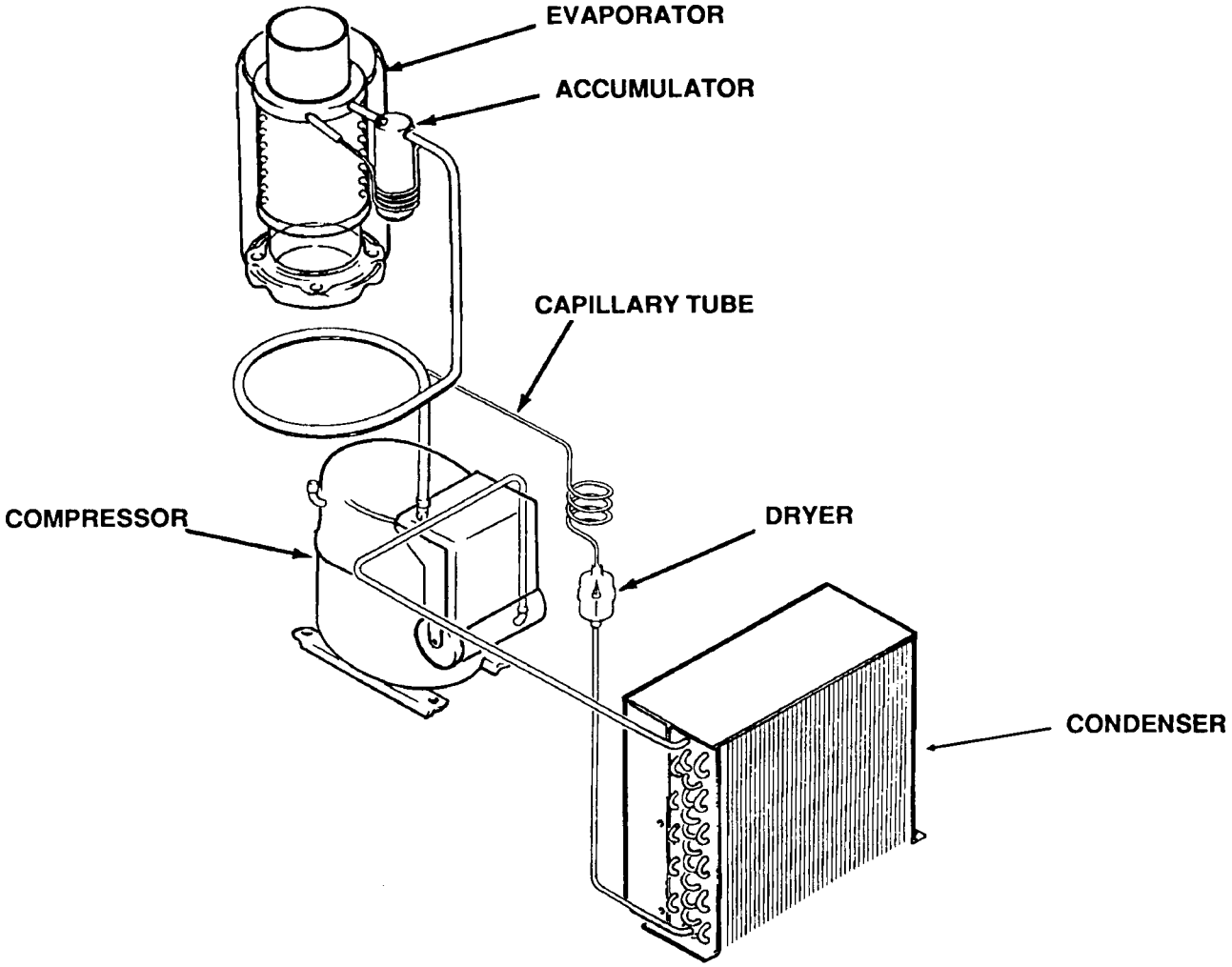

MAINTENANCE AND CLEANING

A Scotsman Ice System represents a sizable investment of time and money in any company's business. In order to receive the best return for that investment, it MUST receive periodic maintenance.

It is the USER'S RESPONSIBILITY to see that the unit is properly maintained. It is always preferable, and less costly in the long run, to avoid possible down time by keeping it clean; adjusting it as needed; and by replacing worn parts before they can cause failure. The following is a list of recommended maintenance that will help keep the machine running with a minimum of problems.

Maintenance and Cleaning should be scheduled at a minimum of twice per year.

WARNING

Electrical power will be ON when doing in place cleaning. Switch it OFF before completing the cleaning procedures.

ICEMAKING SYSTEM: In place cleaning

1. Check and clean any water treatment devices, if any are installed.
2. Remove screws and remove the top and front panels.
3. Move the ON-OFF switch to OFF.
4. Open the door to the ice storage bin, and remove the ice.
5. Remove the cover to the water reservoir and block the float up.
6. Drain the water reservoir and freezer assembly.

WARNING

Scotsman Ice Machine Cleaner contains Phosphoric and Hydroxyacetic acids. These compounds are corrosive and may cause burns. If swallowed, DO NOT induce vomiting. Give large amounts of water or milk. Call Physician immediately. In case of external contact, flush with water. KEEP OUT OF THE REACH OF CHILDREN.

7. Prepare the cleaning solution: Mix eight ounces of Scotsman Ice Machine Cleaner with three quarts of hot water. The water should be between 90-115 degrees F.
8. Slowly pour the cleaning solution into the water reservoir until it is full. Wait 15 minutes, then switch the master switch to ON.
9. As the ice maker begins to use water from the reservoir, continue to add more cleaning solution to maintain a full reservoir.
10. After all of the cleaning solution has been added to the reservoir, and the reservoir is nearly empty, switch the master switch to OFF.
11. After draining the reservoir, as in step 6, wash and rinse the water reservoir.
12. Remove the block from the float in the water reservoir.
13. Switch the master switch to ON
14. Continue ice making for at least 15 minutes, to flush out any cleaning solution. Check ice for acid taste - continue icemaking until ice tastes sweet.

WARNING

DO NOT USE any ice produced from the cleaning solution.

Be sure no ice remains in the bin.

15. Remove all ice from the storage bin.
16. Add warm water to the ice storage bin and thoroughly wash and rinse all surfaces within the bin.
17. Sanitize the bin interior with an approved sanitizer using the directions for that sanitizer.
18. Replace the top and the front panels.

MF400
MAINTENANCE AND CLEANING

////////////////////////WARNING////////////////////////////

Disconnect electrical power and shut off the water before beginning.

//

In some areas, the water supply to the ice maker will contain a high concentration of minerals, and that will result in an evaporator and auger becoming coated with these minerals, requiring a more frequent removal than twice per year. If in doubt about the condition of the evaporator and auger, the auger can be removed so the parts can be inspected.

Note: Water filters can filter out suspended solids, but not dissolved solids. "Soft" water may not be the complete answer. Check with a water treatment specialist regarding water treatment.

For more information on removal of these parts, see REMOVAL AND REPLACEMENT.

To Inspect The Top Bearing:

1. Remove permagum and two screws from the side of the evaporator.
2. Remove the snap ring and cap, and remove the bolt from the ice breaker and auger assembly to separate the ice breaker assembly from the auger. Pull the ice breaker with bearing out of the top of the evaporator: the auger should stay in the evaporator.

The bearings may be inspected for rust, wear, and roughness. Reverse to reassemble.

To Inspect the Auger:

1. Remove permagum and two screws from the side of the evaporator.
2. Pull up on cap hook located in the top of the freezer assembly to remove the ice breaker assembly, auger, and the top portion of the water seal.
3. Inspect the auger and the water seal. Clean the auger of any mineral build up. Scotsman Ice Machine Cleaner and a scouring pad work well to clean the auger. DO NOT USE steel wool.

////////////////////////WARNING////////////////////////////

Scotsman Ice Machine Cleaner contains Phosphoric and Hydroxyacetic acids. These compounds are corrosive and may cause burns. If swallowed, DO NOT induce vomiting. Give large amounts of water or milk. Call Physician immediately. In case of external contact, flush with water. KEEP OUT OF THE REACH OF CHILDREN.

//

4. Replace the water seal, see the instructions under "Removal and Replacement".

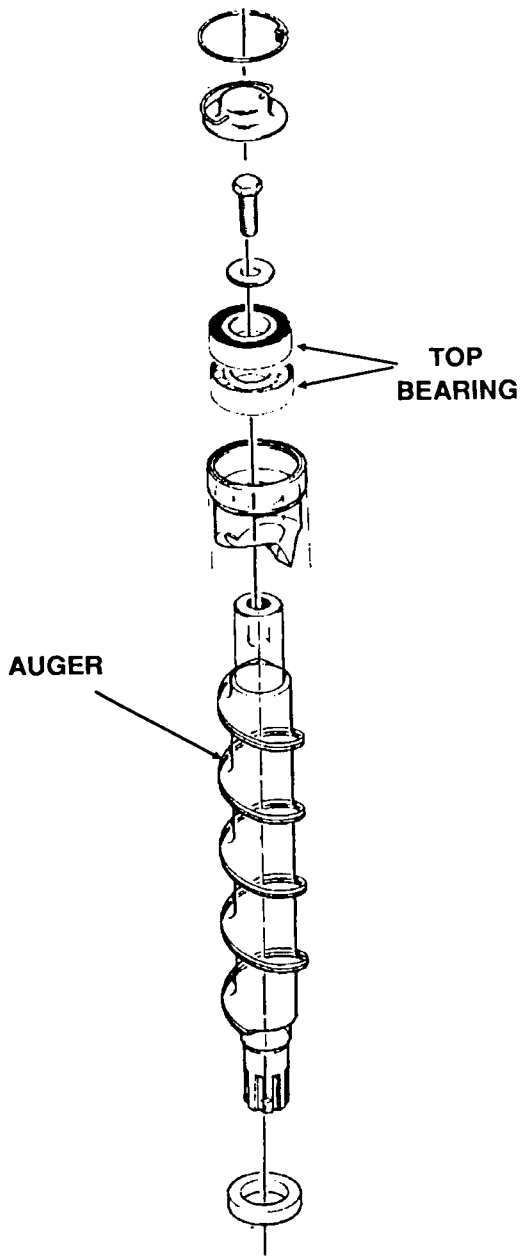

SERVICE DIAGNOSIS: Condition - No Ice Being Produced

STATUS: ***ICE MAKER DOES NOT OPERATE***

A. Check: **Voltage** to the unit, restore it if there is none. Compare to the nameplate.

B. Check: The **master switch**, switch ON if off.

C. Check: The **3 reset switches**, (circuit board, high and low pressure): depress and release each switch. If the still does not start, check: the spout switch; the high and the low side pressures.

D. Check the **low pressure cut out,** if closed, go to **E;** if it is open, it could be due to:

- Low refrigerant charge
- The auger not turning
- Restricted system

1. Check the low side pressure, the low pressure cut out opens at pressure below 4 psig. If open, reset and:

    a. Check if the **auger** is turning, if it is not, remove the **gearbox** and:
        Check for internal damage, repair and replace in the machine.

    b. Check for low charge, add some refrigerant, if the unit will operate,(normal low side pressure being about 13 psig) stop and look for a leak, repair, replace the drier, evacuate, and weigh in the nameplate charge. If, with added charge, the unit does **not** operate:
        Check for a restricted system, replace the drier, evacuate, and weigh in a nameplate charge.

D. On Water Cooled, check the **high pressure cut out,** if closed, go to E; if open:

1.The pressure control opens at 250 psig. **Check** the high side pressure, reset the control, and observe: that water soon begins to flow from the condenser drain; If the unit trips out on pressures below 250 psig, replace the control. If the pressures rise above the trip out point, and the unit shuts down:

    a. Check for adequate water flow on through the condenser, if adequate, clean the interior of the condenser. If the pressures are still too high replace the water regulating valve.

E. Check the **spout switch.** It opens from excess pressure of ice inside the ice chute: this should only happen when the machine does not shut off when the ice storage bin is full. This switch will reset when the ice melts,

F. Check the **water pressure to the unit.** The machine will not run if there is not enough water pressure.

1. Restore/adjust water supply.

SERVICE DIAGNOSIS: Condition - No Ice Being Produced

STATUS: *ICE MAKER DOES NOT OPERATE*

H. Check: The gear **motor**, if it will not run, the compressor will not run. If no power to it:
Check that the Bin Thermostat is closed. If open, with no ice on it, replace the bin thermostat.
Check that the Auger Delay contacts 3-2 are closed. If open, and the low side (suction) pressure is over 32 PSIG, replace the auger delay pressure control.
If power to the auger drive motor, and it does not run, replace the auger drive motor.

STATUS: *GEARMOTOR OPERATES, COMPRESSOR DOES NOT*

A. Check the auger drive motor centrifugal switch. If, when the drive motor is running, the compressor has no power, and all of the above switches have been checked, replace the centrifugal switch.

B. Check the compressor

1. Check the compressor start relay.
2. Check the start capacitor.
3. Check the windings of the compressor for open windings or shorts to ground.

Replace those items found defective.

REMOVAL AND REPLACEMENT

Ice Breaker and Auger Removal

1. Remove permagum and two screws from the side of the evaporator.
2. Pull up on cap hook located in the top of the freezer assembly to remove the ice breaker assembly, auger, and the top portion of the water seal.
3. Remove the snap ring and cap, and remove the bolt from the ice breaker and auger assembly to separate the ice breaker assembly from the auger. The bearings may be replace or the ice breaker and bearings may be replaced as an assembly.

Water Seal Installation

Inspect the water seal in it's package. Do no use if mating surfaces are scratched or cracked.

1. Remove auger, unbolt evaporator from adaptor stand. Drive out old bottom bearing and water seal from the top down.
2. Remove the old rotating half of the water seal from the auger and clean the auger at the seal mounting area.
3. Apply Scotsman part number 19-0529-01 food grade sealant to the auger shoulder before pushing on the water seal. Place just enough sealant onto the shoulder of the auger, so that when the water seal is placed on the auger, the gap between the auger shoulder and the water seal is completely filled with the sealant.
4. Clean the inside of the evaporator at the bottom bearing and water seal mounting area. Lubricate the outside edge of the stationary seal with water.
5. Carefully push the stationary part of the water seal up into the bottom of the evaporator. It must go in straight and must not be pushed in beyond 1/4" past the bottom of the evaporator.
6. Install a new bottom bearing, push it into the evaporator under the new water seal. It must be pushed in straight, but do not push it in past 1/8" from the bottom of the evaporator tube.
7. Mount the adaptor stand to the bottom of the evaporator. Hand tighten the three cap screws until the stand flange is tight against the bottom of the evaporator. Hand tighten the three cap screws until the stand flange is tight against the bottom bearing. Then, tighten the screws in a rotating pattern to insure proper alignment.
8. The top bearing should also be changed at this time. Be sure to mount the top breaker/bearing assembly onto the auger before installing the auger into the evaporator tube.
9. Lower the auger into the evaporator, twist it to engage the splines of the coupling. Secure the breaker and bearing to the evaporator tube with the two screws removed in step 1 of "Ice Breaker and Auger Removal". Test the unit.

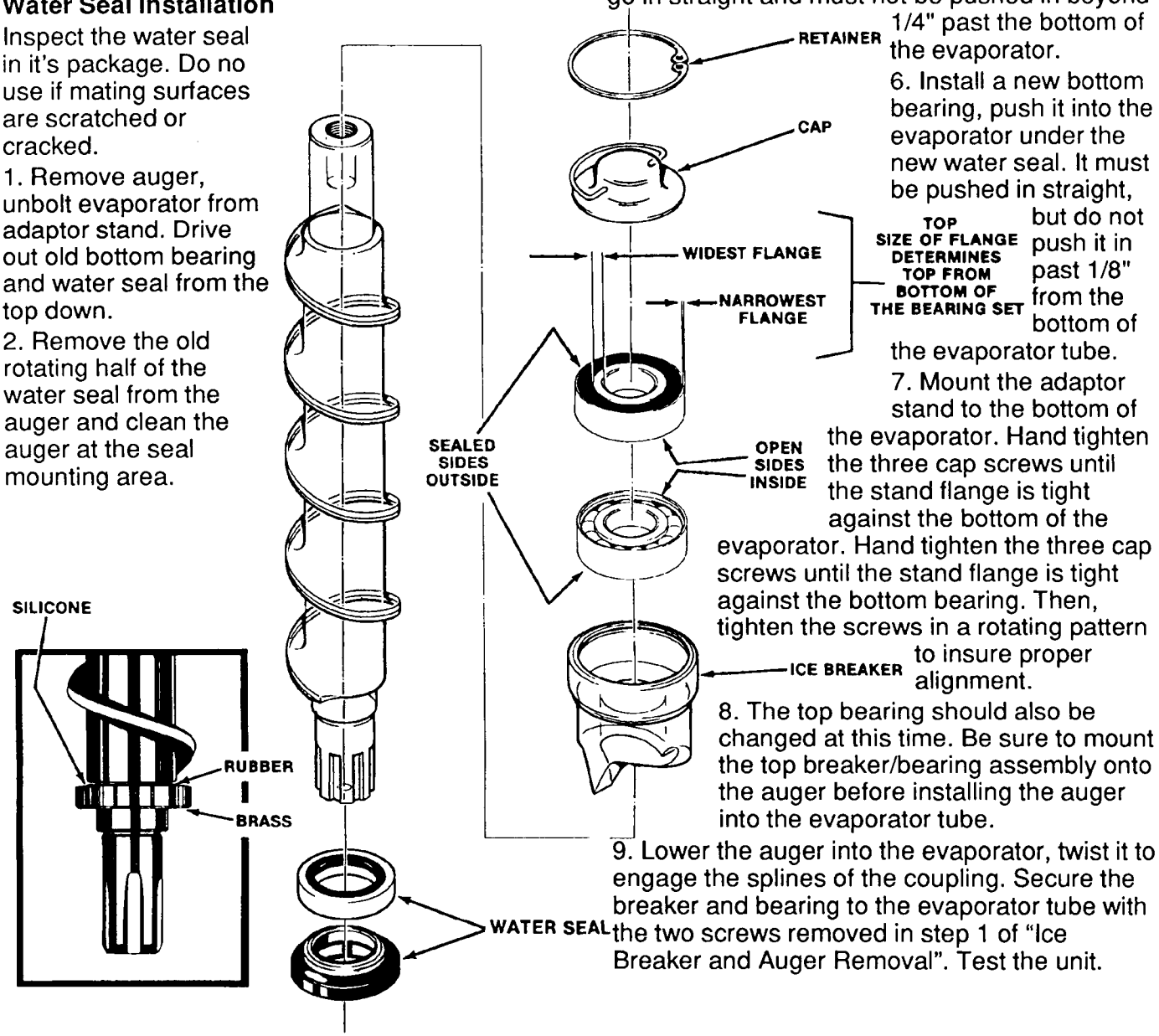

REMOVAL AND REPLACEMENT: Gearmotor Assembly

Rebuilding The Gearmotor Assembly

Drive Motor Parts:

To replace the centrifugal switch and mechanism or the motor winding or the motor rotor, removal of the gearbox assembly is not necessary.

1. Disconnect electrical power.
2. Remove the cover from the top of the centrifugal switch assembly and remove the electric wires from the microswitch. To replace just the centrifugal switch, remove two machine screws retaining the switch, and remove the switch. To replace, reverse the procedure to this point.
3. If the motor is to be removed, the next step is to remove the four screws holding down the plastic switch assembly housing and lift the housing off of the motor top.
4. Remove the centrifugal switch mechanism from the rotor by unscrewing the machine screw at the top of the rotor.
5. The motor and housing may now be removed. Lift off the motor fan housing, and pull off the plastic fan. The next part to be removed is the motor winding. Disconnect the electrical leads of the motor from its control box location and lift off the winding.
6. The rotor is all that remains of the motor in the gear motor assembly. Use a pry bar to carefully pry up the rotor. (The only thing holding it in is the tight fit of the bottom rotor bearing into the top of the gear case.) To replace any of the above parts, reverse the disassembly procedure.

Removal of the Gearmotor Assembly

1. Remove the top and right side panel.
2. Remove the ice chute assembly.
3. Unscrew the three cap screws retaining the evaporator assembly to the gearmotor assembly.
4. Unscrew the bolts holding the gearmotor mounting plate to the ice machine chassis.
5. Remove the motor and centrifugal switch electrical leads from their connections.
6. Raise the evaporator assembly up enough that the output shaft clears the freezer adaptor.
7. Remove the gearmotor assembly from the ice machine.

Gearcase Service

After removal of the gear motor from the unit, inspect the internal parts from this gearmotor.

1. Place the gearbox on a flat surface, covered with rags to absorb any spilled lubricant.
2. Using a punch, drive the roll pins out of the casing.
3. Remove the four cap screws on the top of the gearcase and the two under the motor.
4. Pry the two cases apart.

When inspecting the internal parts, look for:

- Condition and quantity of lubricant. (The proper oil level is near the top of the output (biggest) gear. This takes 5 oz. Use Scotsman oil, part number A25835-001.
- Bearing condition
- Gear and Shaft condition
- Woodruff key between output gear and shaft.
- Grease seals, back to back.
- Vent hole

Be sure to count and retain the spacer washers as they come out of the gearbox.

Replace the parts as required, using the part numbers found in the parts section of this manual. Replace the gears into a CLEAN bottom gearcase, after adding some grease to the bearings. Replace the spacers in the same quantity as they were removed. If no count was kept, use the numbers found in the parts list.

Note: Some bearing grease should be placed in all bearings before assembly to insure proper lubrication upon start up.

Reassembly

1. Set top gearcase on gears and spacers and oil. Be sure O-ring is in place.
2. Drive roll pins back into locating holes.
3. Replace cap screws into gearcase cover, and torque at 80-90 inch pounds.
4. Bench test the gearmotor assembly.

Test for noise, amp draw (must not be in excess of ice maker nameplate for gearmotor) and oil leaks.

Return the gearmotor assembly to the unit. Be certain all mounting surfaces are clean and reassemble to the gearmotor mounting plate. Then bolt back onto ice machine chassis.

Gearmotor Service

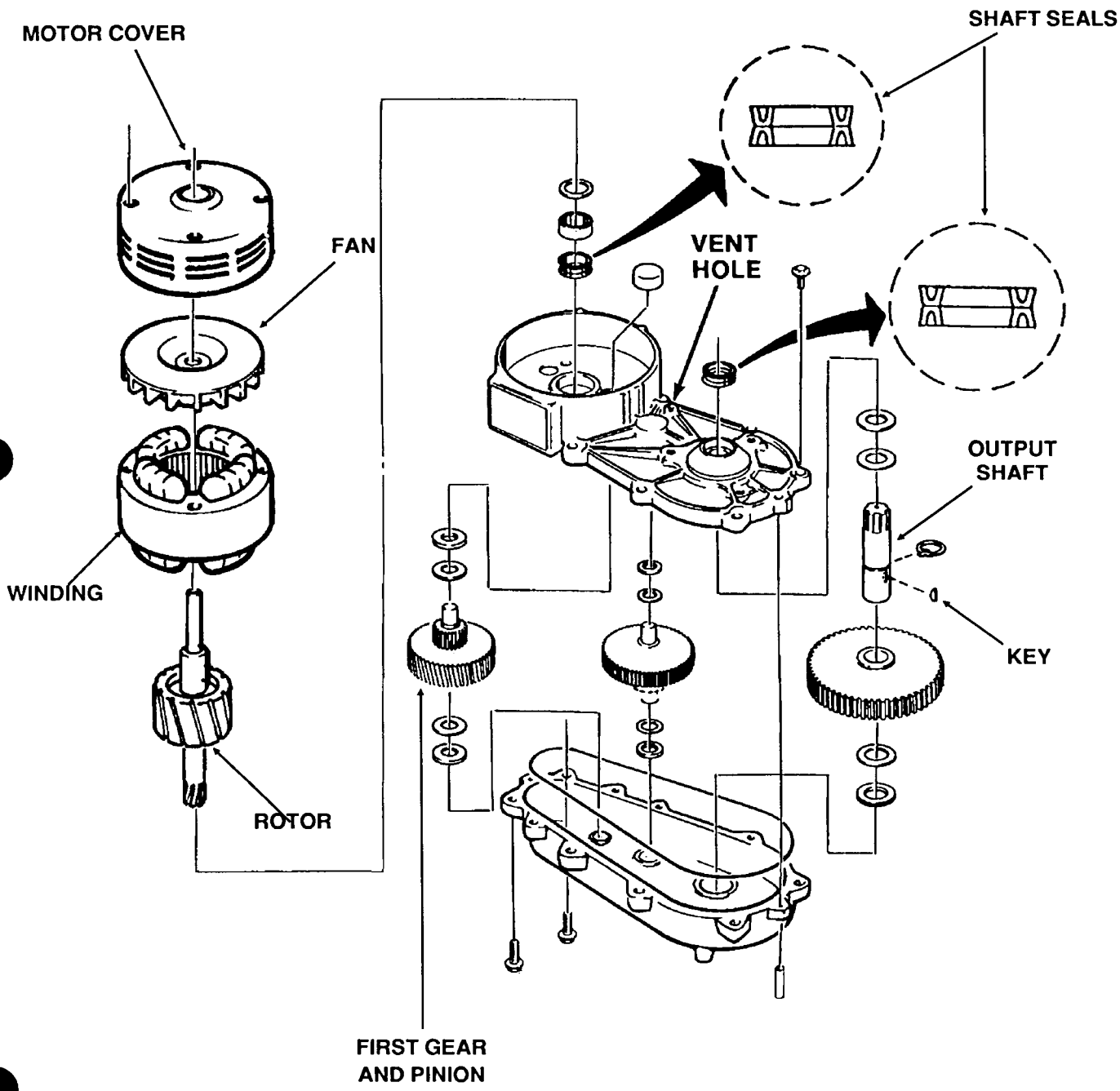

TABLE OF CONTENTS

Forward 1
Table of Contents 2
Photograph 3
Specifications and Dimension 4
Description 5
Installation Instructions 6
Installation Limitations 7-8
Installation Practices 9
Starting the Machine 10
Refrigerant Charge 10
Final Check List 10
Refrigeration Cycle 11
Water Schematic 12
Ice Discharge Tube and Bin Thermostat Installation 13
Wiring Diagram — Air Cooled 14
Wiring Diagram — Water Cooled 15
Service Analysis 16-17
Maintenance Instructions 18
SERVICE:
- Gear Motor 19
- Freezer Assembly 19
- Freezer Worm Shaft 19
- Freezer Assembly Top Bearing 20
- Freezer Assembly Bottom Bearing & Water Seal 20
- Bin Thermostat 20
- Contactor 20
- Head Pressure Control (Water Cooled) 21
- Water Regulating Valve (Water Cooled Models) 21
- Water Reservoir 21

PARTS BREAKDOWN:
- Chassis Assembly—Air Cooled 22
- Chassis Assembly—Water Cooled 23
- Freezer Assembly 24
- Gear Motor Assembly 25
- Spout Safety Switch 26
- Compressor Assembly 27
- Control Box Assembly 28
- Reservoir Assembly 29
- Cabinet Assembly 30

THIS PAGE
INTENTIONALLY
LEFT BLANK

THIS PAGE
INTENTIONALLY
LEFT BLANK

SCOTSMAN

MODULAR FLAKER
MF4
SERIES
Continuous Flow

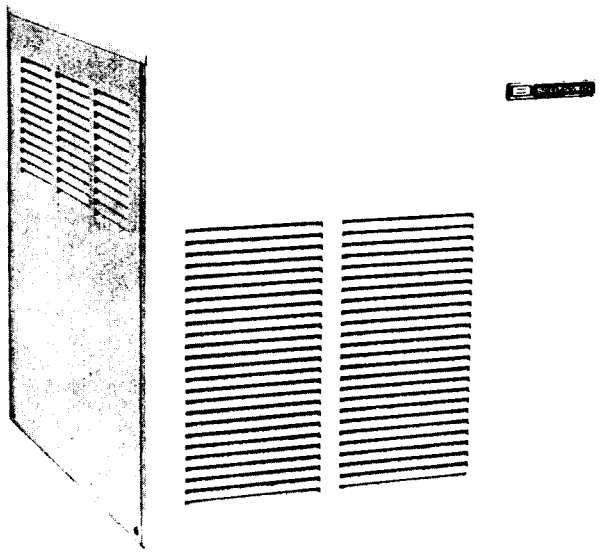

ice making capacity

Daily Ice Capacity is directly related to condenser air inlet temperature, water temperature, and age of machine.

NOTE: To keep your SCOTSMAN MODULAR FLAKER performing at it's maximum capacity, it is necessary to perform periodic maintenance as outlined on page 18 of this manual.

SCOTSMAN

MF4 Series

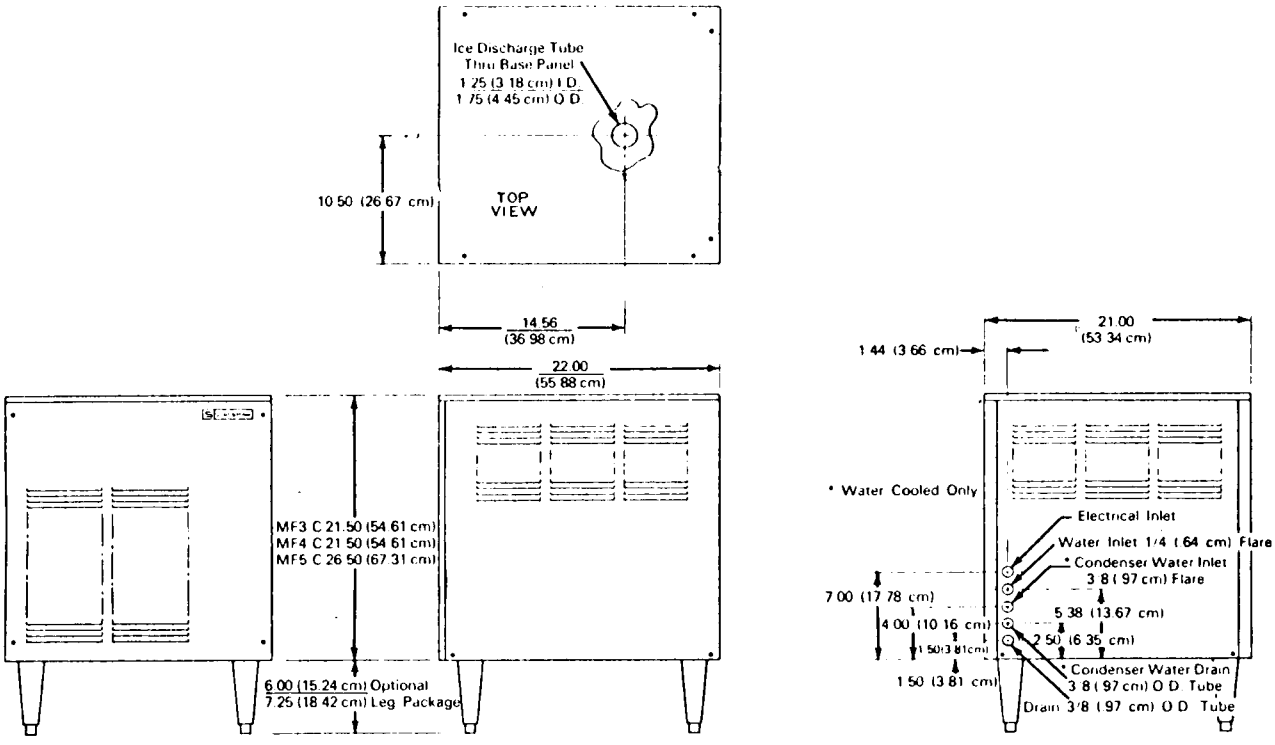

Note: 4" Minimum Air Ventilation on Unit Sides
6" Minimum Clearance for Utility Connections on Unit Back

SPECIFICATIONS:

Model	Condensing Unit	Compressor Horsepower	Finish (P-painted) (SS-Stainless Steel)	Shipping Weight (lbs.)
MF4AE	Air	3/4	P	208
MF4AS	Air	3/4	SS	208
MF4WE	Water	3/4	P	196
MF4WS	Water	3/4	SS	196

Basic Electricals	Minimum Wire Sizes (w-wire) (g-gauge)	Total Amperages
Air Cooled 115/60/1	2w 12g	14.8
Water Cooled 115/60/1	2w 12g	13.6

Specifications subject to change without notice.

DESCRIPTION

SCOTMAN modular Flakers are designed for restaurants, super markets, soda sountains, hospitals, bakeries, fish markets, poultry stores, packing plants, etc. It is the finest Ice Maker on the market today. It will work 24 hours a day for you, or only as needed. It produces the highest quality ice available at any price.

SCOTSMAN Modular Flakers are easily installed requiring only standard water, drain and electrical connections.

ATTRACTIVE COMPACT CABINET. Sandlewood or stainless steel removable panels makes for easy access to mechanical parts.

SEALED REFRIGERATION SYSTEM. Provides quiet, effecient operation of the machine. Compressor motor is internally spring mounted for quiet operation. Compressor motor is covered by a full 5-Year Limited Warranty.

HOW IT WORKS. An exclusive patented ice-making system, wherein water in the constant level float reservoir is fed to the bottom end of the freezing cylinder and turns to ice on the inside of this cylinder. Ice from the refrigerated walls of this cylinder is extruded past the ice breaker at the top of the cylinder through a side opening by means of a stainless steel auger driven by a gearmotor drive.

Model No. MF-4 is a continuous flow type machine, and is manually started by an OFF and ON switch located inside the cabinet. Since the MF-4 does not have its own attached bin, it is necessary to use an auxillary bin such as the Model SB-500 SCOTSMAN Super Bin for storage. A bin thermostat is mounted in each continuous flow type machine for the purpose of mounting control bulb from machine to bin.

INSTALLATION INSTRUCTIONS

The following installation instructions were written for use by an authorized tradesman only, not the user or customer. We suggest you call your local authorized Scotsman Service Agency for hook-up, start-up, and check out. He's listed under "Ice Making Machinery & Equipment" in your telephone book, yellow pages.

1. Select unit location prior to hook up of water drain and electrical in accordance with local and national codes. Minimum room temperatures is 50° Fahrenheit, maximum room temperature 100° Fahrenheit. On air cooled models, select well ventilated location.

2. Install bin for use with modular flaker in its permanent location following instructions included with the storage bin.

*3. Level bin with adjustable legs and wipe storage bin liner clean with damp cloth.

4. After uncrating modular flaker, remove front, side and top panels and inspect for any concealed damage. Notify carrier of any concealed damage claims.

5. Before placing flaker unit on bin, holes must be provided thru bin top to allow passage of ice discharge tube and bin thermostat control tube into bin.

6. Remove rubber grommets from miscellaneous parts package and insert into place. A good seal must be made between grommets from miscellaneous parts package and insert into place. A good seal must be made between grommet and base panel and between grommet and inner bin. See page 13 drawing.

7. The flaker unit may now be placed on the bin. Insure that the holes in the base panel line up with the holes in the bin top.

8. Install ice discharge tube assembly, taped to freezer body, through sealing pad and base and attach to spout. See page 13.

9. Attach bulb holder to underside of storage bin as shown on page 13. Route bin control tube through smaller grommet then insert tube into tube holder as shown.

10. Check motor compressor hold down nuts to insure motor compressor rides snug on mounting pads.

11. Remove water strainer from envelope for installation in water supply line feeding unit.

12. Open electrical control box cover and check unit nameplate voltage against building source voltage and make sure they correspond. **CAUTION**- Improper voltage supplied to units will void your parts replacement program.

13. Locate and tear out registration card from front of owners guide and fill out card completely including model and serial numbers as taken from aluminum plate found behind front service panel.

* Legs are accessory items, order thru Sales Department.

INSTALLATION LIMITATIONS

ELECTRICAL

1. Scotsman, like most manufacturers, purchases electrical motors that are rated to operate within 10% variance above or below name plate ratings.

2. Improper voltages applied to Scotsman equipment can cause premature failures and burnouts. Failures of this type are not considered as factory fault or defect.

AMBIENT

WARNING — This machine is not designed for outdoor installations. This machine will not operate when air temperatures are below 50° F. or above 100° F.

This unit was not fabricated nor intended to be installed outdoors.

WATER

3. Scotsman Ice Systems require 20 pounds flowing water pressure to operate satisfactorily. Pressures lower than 20 pounds or interruptions in the water supply can cause serious mechanical damage to this product.

   This machine will not operate when water supply temperatures are below 40° F. or above 100° F.

INSTALLATION
ELECTRICAL CONNECTIONS:
MF4AE-1

115 Volts, 60 Hertz, 1 Phase
30 Amp. Circuit

12 Gauge wire should be used for electrical hook-up. All Scotsman Modular Flakers require a solid earth ground wire.

Be certain that the Super Flaker is on its own circuit and individually fused. The maximum allowable voltage variation should not exceed 10 per cent of the nameplate rating even under starting conditions. Low voltage can cause erratic operation and may be responsible for serious damage to the overload switch and motor windings.

All external wiring should conform to the National, State and local Electrical Code requirements. Usually and electrical permit and the services of a licensed electrician will be required.

Compressor	3/4 HP	Copelaweld: RSL2-0075-1AA 2 pole, 3500 RPM
	Voltage	115
	Amp. rating F.L.A.	14.0
	Hertz	60
	Phase	Single
Gear Drive Motor	1/4 HP	Queen Products 12.2 R.P.M.
	Voltage	115
	Amp. Rating	4.6
	Hertz	60
	Phase	Single
		Thermally Protected

WATER SUPPLY: The recommended water supply line is 1/4 inch O.D. copper tubing for the MF-4. Connect to cold water supply line with regular plumbing fittings, with a shut-off valve installed in an accessible place between supply line and machine. A water strainer must be installed with the unit and mounted with clean-out plug down. Locate the strainer next for double check valves in the supply water line, particularly for water-cooled models.

On air-cooled models the water supply line connects to the 1/4 inch flare fitting on the machine. On water-cooled models connections are made to a 3/8 inch male pipe nipple inside of the machine compartment. Incoming water goes through the water regulating valve first and then to the water-cooled condenser. Observe arrow on water regulating valve. Water supply must be installed to conform with local code. In some cases a licensed plumber and/or a plumbing permit wil be required.

NOTE: If water supply to unit is to be interrupted for any period of time, the unit must be switched off to prevent damage to freezer mechanism.

DRAIN: The recommended drain from the bin is 3/8 inch OD copper tubing. Must be run to an open trapped and vented drain. If drain is a long run, allow 1/4 inch pitch per foot. Drain must be installed to conform with local code. Run separate line for condenser discharge water on water-cooled models.

INSTALLATION PRACTICES

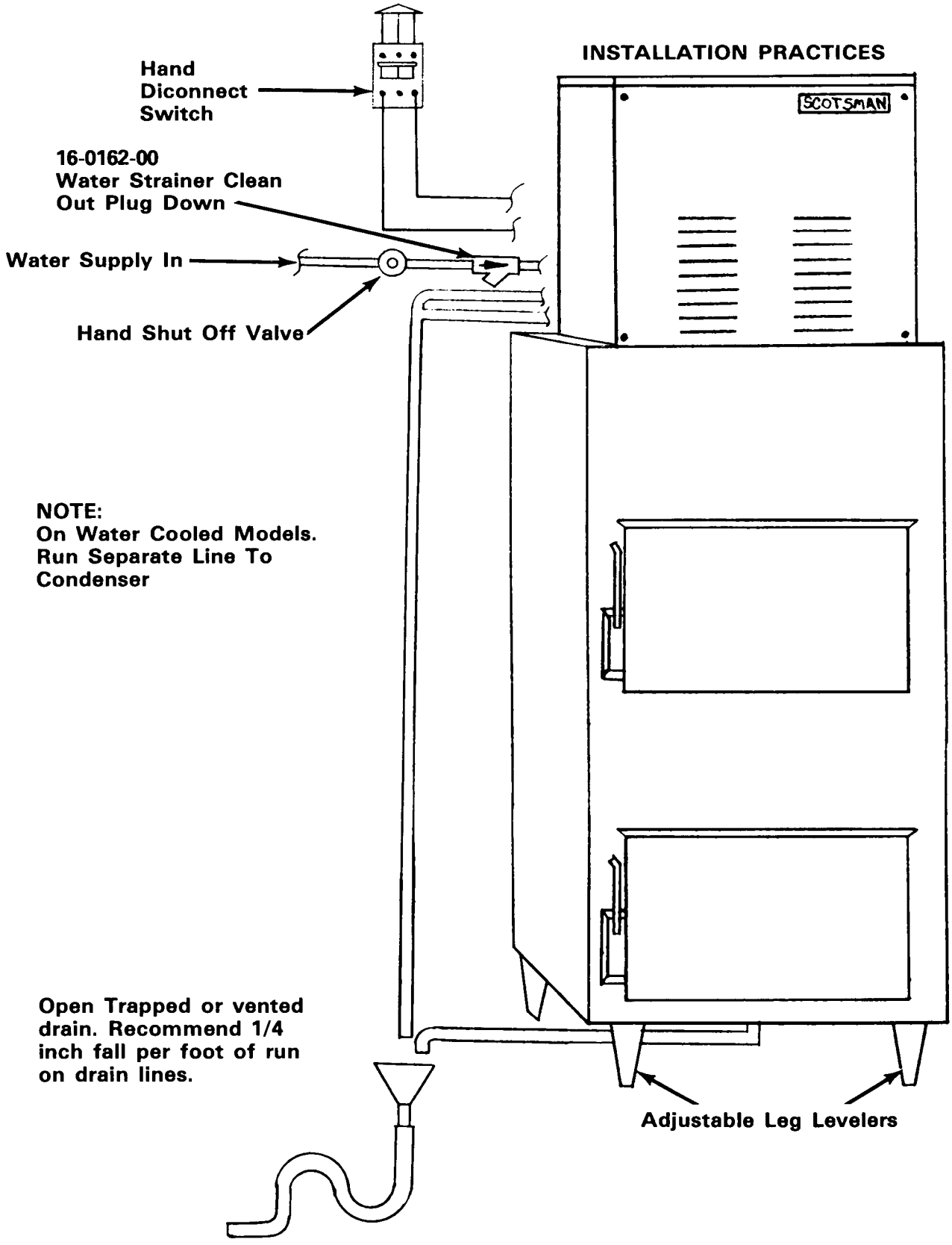

Maximum Ambient Air Temperature Recommended — 100° Fahrenheit
Minimum Ambient Air Temperature Recommended — 50° Fahrenheit

NOTE: Air temperature ranges above or below those listed may cause serious damage to the product.

STARTING MACHINE

When the machine is placed and inspected as per instructions and all plumbing and electrical connections are completed and tested, turn on the water supply. Be sure the float cover is removed to check on the float operation and water level in the water reservoir. Be sure the water reservoir is filled before starting the machine. Water level should be 1/4 inch below the reservoir overflow.

When this is completed, turn on the manual switch located behind front panel of the cabinet and the machine is in automatic operation. In two to three minutes ice will start dropping off the worm shaft and out the ice chute. Let the machine operate for at least 30 minutes and check for any excess noise other than the normal compressor noise. Test the ice storage control bulb by holding a handful of ice around the bulb until the machine shuts off. One minute should be normal for the control to function. Within minutes after the ice is removed, the bulb will warm up and the machine will automatically start up. The control is factory set and should not be reset until this test is made. Normal setting of this control should be approximately 35 degrees cut-out and 45 degrees cut-in.

Check pressure settings at the time of start-up. On the water-cooled models set the head pressure at 135 PSI. On the air-cooled models the head pressure will vary between 130 and 145 PSI head pressure. The frost line should extend out of the accumulator if properly charged with refrigerant and suction pressure will range between 12 and 14 PSI with 50° F inlet water.

Check the hand reset low pressure control setting. This safety device should be set at approximately 5 PSI below normal operating suction pressure and should cut off in case of interruption in water supply, shortage of refrigeranct, low ambient or any other cause of abnormally low suction pressure.

REFRIGERANT CHARGE

When charging, set at 135 PSI head pressure and charge so that the frost line extends out of the evaporator and into the accumulator after fifteen minutes of operation. Check nameplate for R12 Refrigerant Charge.

Model	Refrigerant Charge
Air-Cooled	26 oz. R-12
Water Cooled	23 oz. R-12

FINAL CHECK LIST

1. Is the unit level? **(IMPORTANT)**
2. Have all electrical and piping connections been made?
3. Has the voltage been tested and checked aginst the nameplate rating?
4. Is the water supply valve open and the electric power on?
5. Is the water reservoir filled and shut off?
6. Have unit and bin been wiped clean?
7. Has owner been given this Operating Instruction Booklet, and has he been instructed on how to operate the machine?
8. Have the installation and registration cards been filled out and mailed to the factory?
9. Check all refrigerant and conduit lines to guard against viberation and possible failure.
10. Installed in a well ventilated room where ambient temperatures do not fall below 50° Fahrenheit.
11. Is unit installed with a minimum 4" air space around sides and back?

WARNING: THIS MACHINE MUST NOT BE ALLOWED TO OPERATE WHEN THE WATER SUPPLY IS SHUT OFF, OR AT BELOW RECOMMENDED WATER PRESSURE. TURN MASTER SWITCH TO "OFF" POSITION WHEN WATER SUPPLY IS OFF, OR WHEN WATER PRESSURE IS BELOW RECOMMENDED OPERATING PRESSURE.

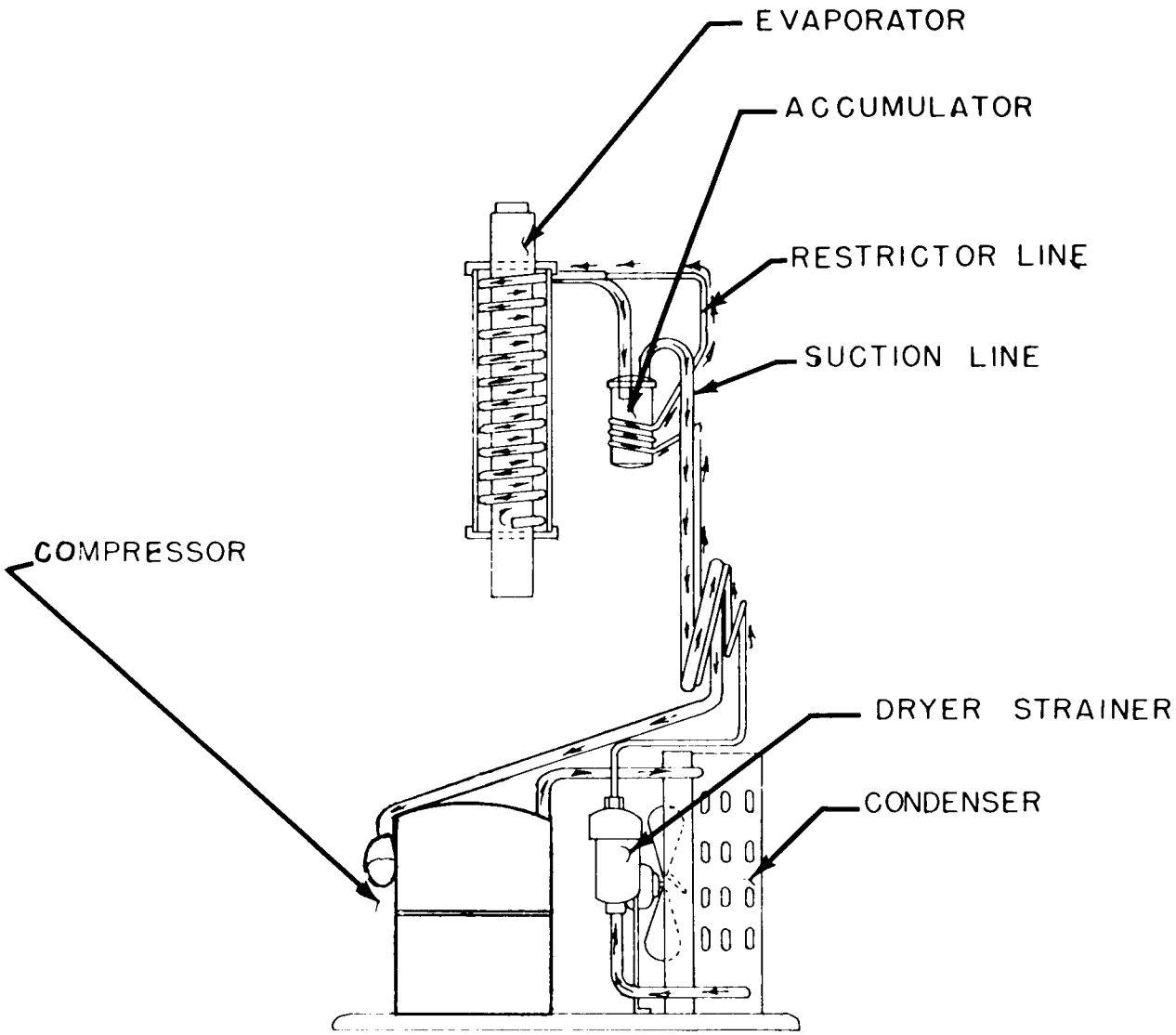

REFRIGERATION CYCLE

WATER SCHEMATIC

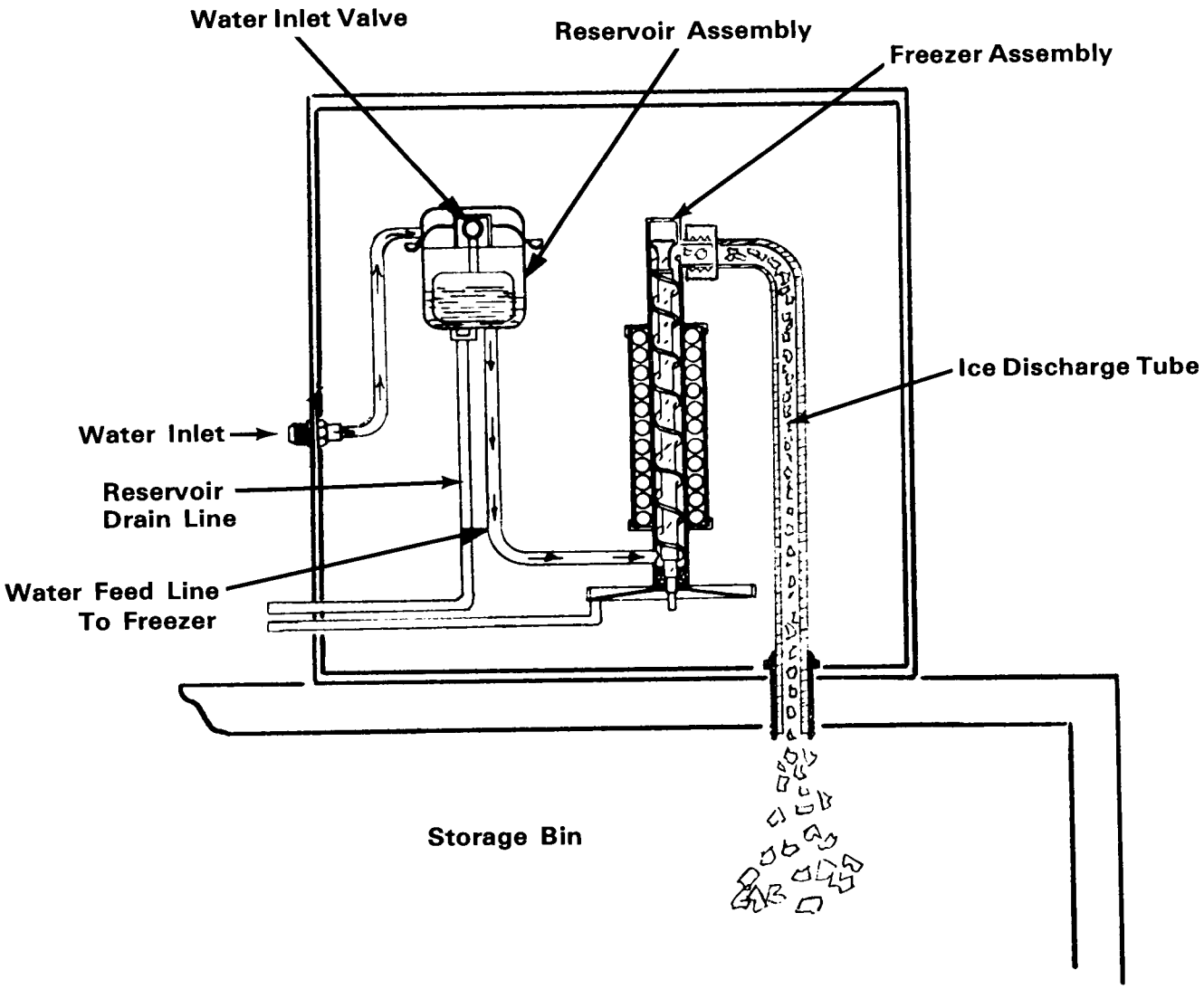

INSTALLATION INSTRUCTIONS

MODULAR FLAKER
ICE DISCHARGE TUBE

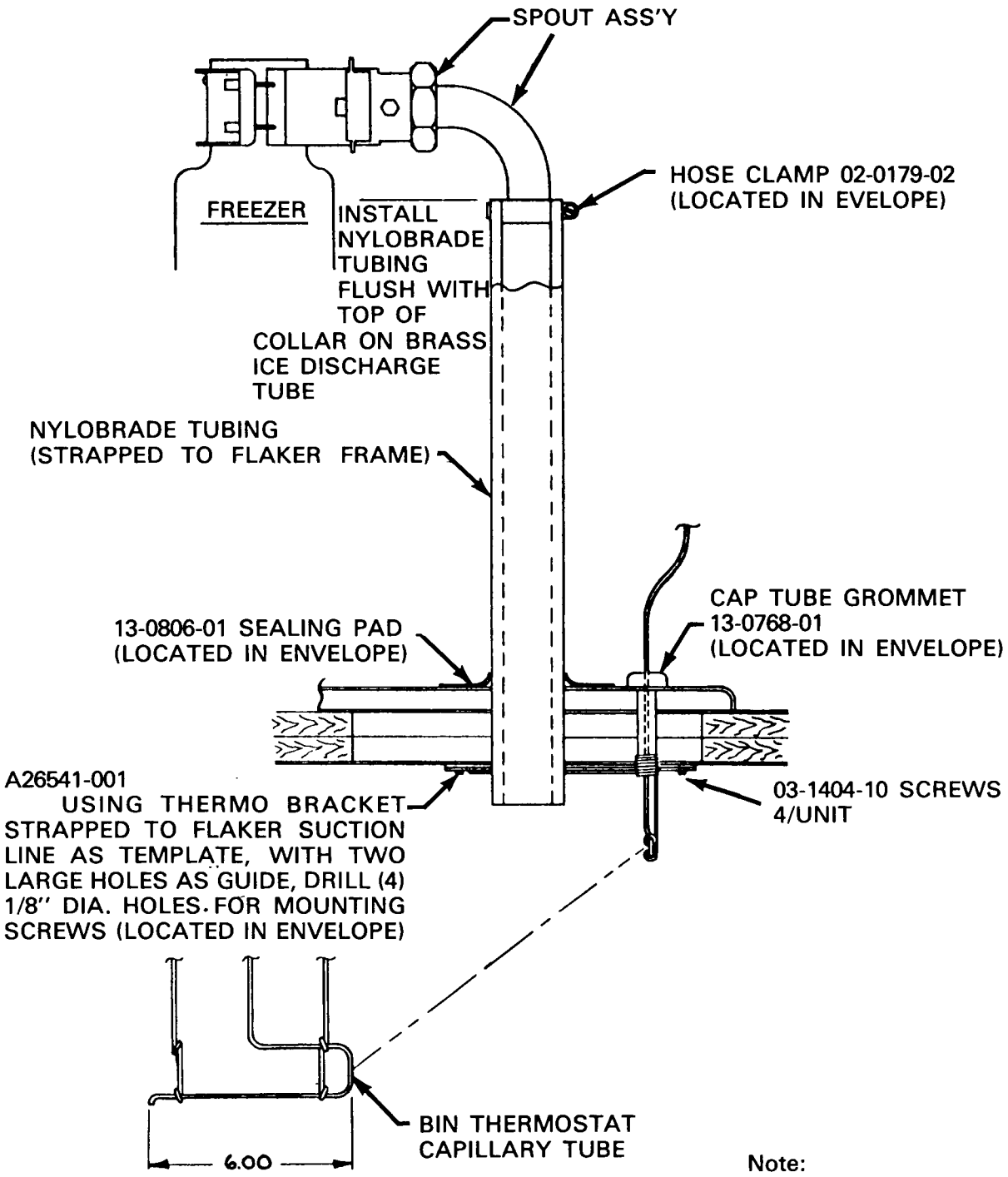

Note:
See page 26 for
Spout Ass'y. Breakdown
(Part No's)

WIRING DIAGRAM

Air Cooled
115/60/1

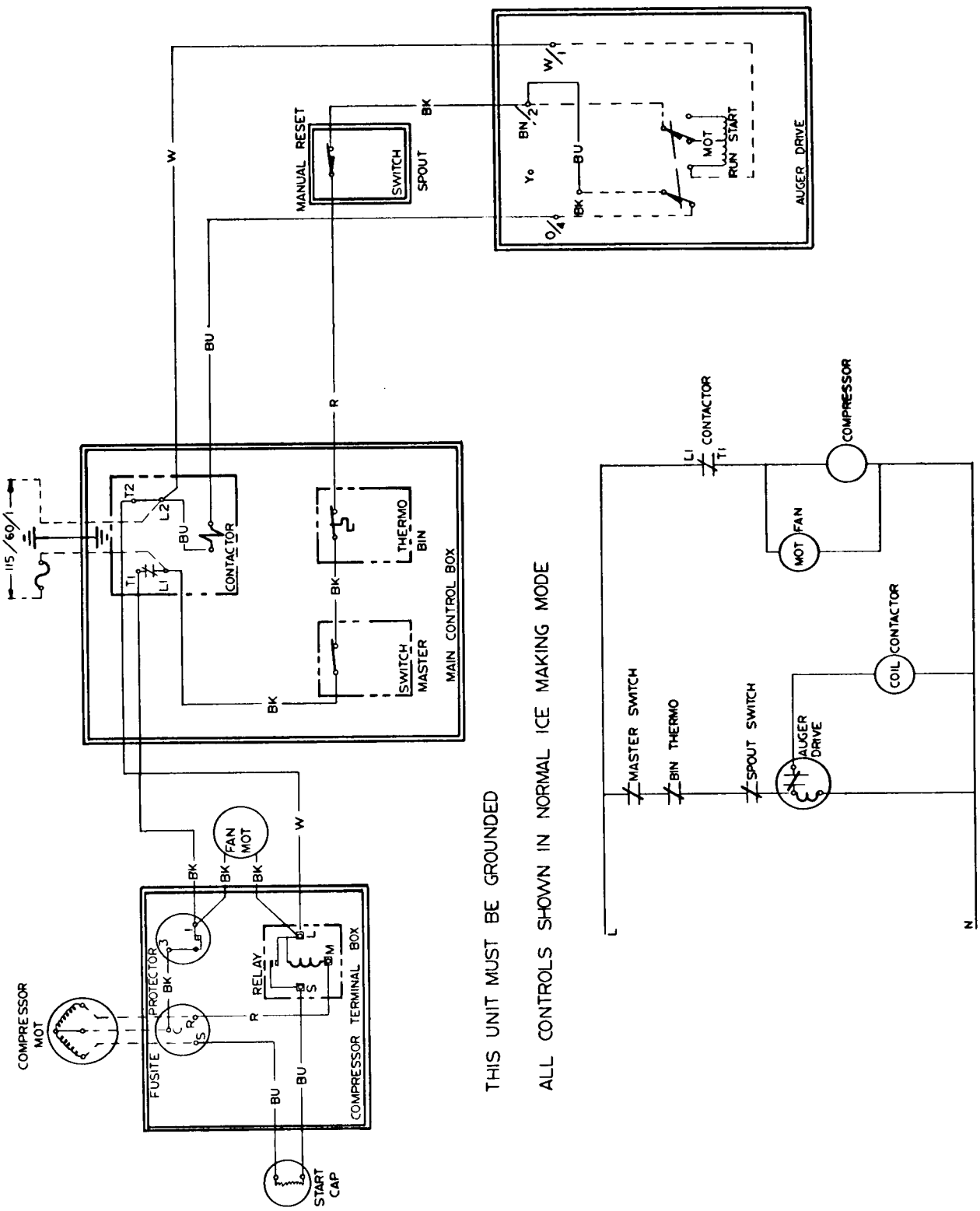

THIS UNIT MUST BE GROUNDED

ALL CONTROLS SHOWN IN NORMAL ICE MAKING MODE

WIRING DIAGRAM

Water Cooled
115/60/1

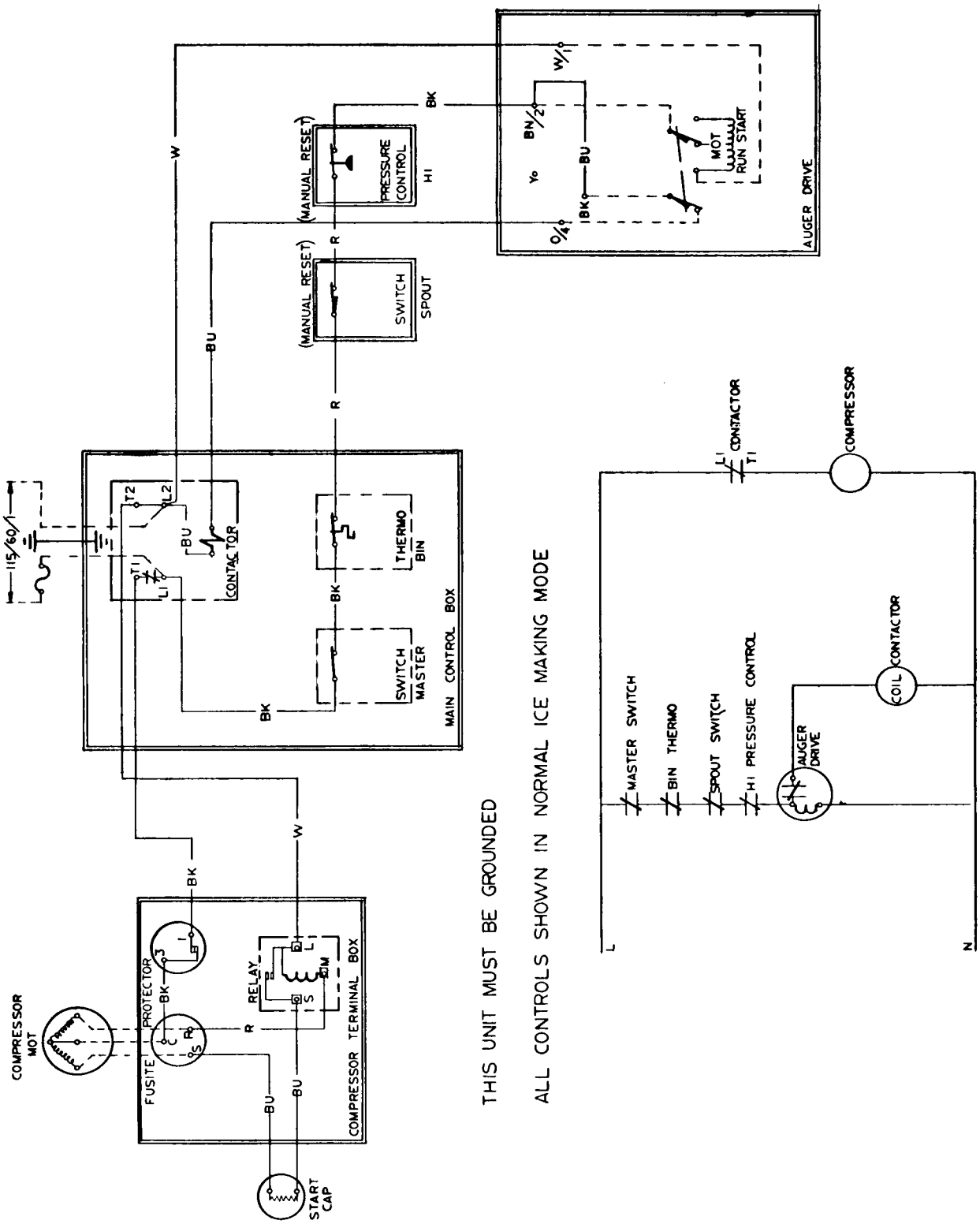

SERVICE ANALYSIS

SYMPTOM	POSSIBLE CAUSE	CORRECTION
Unit will not run	Blown Fuse	Replace fuse and check for cause of blown fuse.
	Thermostat set too high	Adjust thermostat. 35° cut-out and 45° cut-in.
	Loose electrical connection	Check wiring.
	Switch in OFF position	Turn switch to ON.
	Inoperative master switch	Replace switch.
	Spout safety switch tripped	Reset, check actuator and check bin thermostat location.
Compressor cycles intermittently	Low voltage	Check for overloading.
	Dirty Condenser	Clean.
	Air circulation blocked	Move unit to correct location.
	Inoperative condenser motor	Replace.
	Non-condensable gases in system	Purge off.
Making wet ice	Surrounding air temperature	Correct or move unit to cooler location.
	Under or over-charge of refrigerant	Recharge with the proper amount.
	High water level in water resevoir	Lower to 1/4 inch below overflow pipe.
	Faulty compressor	Repair or replace.
Low ice production	Loss of refrigerant, under or over-charge of refrigerant.	Check and recharge with proper amount of refrigerant.
	Dirty or plugged condenser	Clean condenser.
	Low water level in water reservoir	Adjust to 1/4 inch below overflow pipe.
	Partial restriction in capillary tube or drier	Moisture in system. Overcharge of oil in System. Remove charge and drier. Replace and recharge system.
	Inlet water strainer partially plugged.	Remove screen and clean.
	Corroded or stained worm shaft due to water condition.	Remove worm shaft and clean.
Machine runs but makes no ice	Loss or under-charge of refrigerant	Check for leaks and recharge
	Drive gearmotor or drive coupling stripped.	Check. Repair and/or replace.
	Water not entering freezing chamber	Plugged strainer or supply line. Check and clean. Air lock in gravity feed line. Check and remove air lock.
	Moisture in system	Check and remove charge and drier.
	Water seal leaking	Replace seal
	Water supply to unit off	Restore water supply to icemaker.

SYMPTOM	POSSIBLE CAUSE	CORRECTION
Water Leaks	Defective water seal Gravity feed line leaking "O" ring in spout casting leaking. Storage bin drain & connecting fittings leaking. Water level in resevoir too high	Replace Check hose clamps Remove spout casting and install new "O" ring. Check and repair. Adjust to 1/4 inch below overflow pipe
Excessive noise or Chattering	Mineral or scale deposit on auger and inner freezing chamber walls. Low suction Intermittent water supply Water level in resevoir too low. Gearmotor loose on frame Gearmotor end-play or worn bearings.	Remove and manually polish auger, polish inner chamber walls of freezer barrel. For lighter concentrations use Scotsman Ice Machine Cleaner periodically. Add gas to raise suction pressure. Check & clean water strainer. Check gravity feed line for air lock. Adjust to 1/4 inch below overflow pipe. Tighten. Repair or replace.
Machine continues to run with full storage bin	Storage bin thermostat not properly set.	Reset or replace. 35° cut-out, 45° cut-in. Check operation with handful of ice.
Gear motor noise	Low on oil	Remove case cover to check for proper oil level. Top of gears should be covered. Use 600 W. oil or equivalent.

MAINTENANCE INSTRUCTIONS — FLAKERS

THE FOLLOWING MAINTENANCE SHOULD BE SCHEDULED THREE TIMES PER YEAR ON ALL SCOTSMAN FLAKERS. CALL YOUR AUTHORIZED SCOTSMAN SERVICE DEPARTMENT.

1. Check and clean water strainers and float valve. Depress float valve to insure full stream of water.
2. Check water level and machine level, keep water level below overflow, but as high as possibe and still not run out of spout opening with machine off. Water droplets come out of spout with ice at all times. Adjust as required.
3. Clean reservoir and interior of freezer using SCOTSMAN Ice Machine Cleaner.

If machine has been cleaned regularly and no problems such as dry ice or chatter are noticed, clean as per the following instructions:

a. Set main switch to OFF.
b. Remove all ice from storage bin.
c. Turn off water supply or block float. Drain reservoir by disconnecting tube between reservoir and freezer. After draing, reconnect tubing.
d. Set main switch to ON and pour cleaning solution into reservoir. Do not fill above overflow tube.
   Use 6 oz. of Scotsman cleaner and 1- 1/2 qts. hot water.
e. Continue to make ice on solution until the solution is used up and reservoir is empty.
f. Set main switch to OFF. Remove overflow tube, wash and rinse reservoir, replace overflow tube, turn water on or remove float block.
g. Turn MAIN SWITCH to OFF. Add hot water to ice bin, using the melt water, thoroughly wash and rinse all surfaces within the storage bin.
i. Turn MAIN SWITCH to ON. Replace Service Door. Unit is ready for normal operation.

NOTE: Cleaning requirements vary according to local water conditions. Visual inspection of the auger before and after cleaning will indicate best procedure to be followed in local areas.

4. Check high and low side pressures. On air-cooled models head pressure range between 130 and 145 PSI. Suction pressure should be above 12 PSI and will range up to 15 PSI depending upon the water and ambient temperatures.
5. Check hear motor operation. Normal running temperatures are in the area of 160° Fahrenheit, which is hot to the touch.
6. Check top bearing of freezing tube. Remove retainer ring around edge of stamped brass cap. If moisture is around bearing, wipe up and remove grease. Add new grease. Use Beacon No. 325. Replace cap and retainer ring.
7. Clean air-cooled condenser. Inform customer to clean frequently. Always shut off machine when cleaning.
8. Oil condenser fan motor when possible.
9. Check for refrigerant leaks and proper frostline. Should frost out of accumulator at least one-half way to compressor, and in some areas back to service valve.
10. Check for water leaks. Tighten drain line connections. Run water down bin drain line to make sure it is open.
11. Check quality of ice. Ice should be wet when formed, but will cure rapidly to normal hardness in bin.
12. Check thermostat and pressure cut off in spout. Micro switch cuts off complete unit. Bin thermostat should be set at 10° differential 35° cut out, 45° cut in.

FREEZER GEARMOTOR

Model MF4 is equipped with a 1/4 horsepower direct drive gearmotor. A speed sensing switch mounted on top of the motor of the gear unit will open and stop the compressor when the R.P.M. of the gearmotor is less than 900. At 1200 R.P.M. it will close, starting the compressor.

In an actual operation any condition that may cause excessively hard ice and overloads within the freezer assembly such as water interrruptions, cold ambients, etc. is transmitted to the gearmotor reducing it's speed. When gearmotor slows down to approximately 900 R.P.M. the speed sensing switch opens the electrical circuit to the compressor. The compressor stops and no more ice is produced. Meanwhile the gearmotor continues to run, clearing the overload condition and gradually resumes full speed. At 1200 R.P.M. gearmotor speed sensing switch closes compressor circuit causing the normal icemaking process to begin once more.

Any freeze up possibility is thereby automatically cleared out by the gearmotor.

TO REPLACE:
1. Remove top, front and side panels.
2. Shut off water supply and electrical power to unit.
3. Remove the electrical leads from the motor to the control box.
4. Remove slip nut attaching ice discharge tube to freezer spout casting.
5. Next remove 3 bolts securing base adapter to gearmotor cover and the 4 bolts holding the gearmotor bracket to the cabinet base.
6. Lift freezer and adapter assembly off gearmotor and pull gearmotor and mounting bracket out of cabinet.

FREEZER ASSEMBLY

TO REPLACE:
1. To remove freezer first remove cabinet top, front and side panels.
2. Shut off water supply and disconnect electrical power to unit.
3. Drain reservoir and freezer of water by removing tygon tubing entering base of
4. Remove slip nut attaching ice discharge tube to freezer spout casting.
5. Purge off refrigerant and unsweat suction line. Disconnect capillary line at drier. Cap off all lines so no moisture can enter system.
6. Remove the 3 bolts securing freezer base adapater to top of gearmoter and out.
7. Freezer assembly now can be lifted off gear motor and out of cabinet.
8. To re-install reverse procedure. Refer to section "Specifications" for proper refrigerant charge and to page 10 for Head and Back pressure setting.

FREEZER WORM SHAFT (AUGER)

TO REPLACE:
1. Disconnect electrical supply and shut off water to unit.
2. Remove top and front panel of cabinet.
3. Drain reservoir and freezer of water by removing tygon tubing entering base of freezer.
4. Next remove slip nut attaching ice discharge tube to freezer spout casting and insulation covering top of freezer chamber.
5. Remove the 4 bolts attaching the freezer spout casting to the spout bracket and remove spout casting. Also remove bracket by removing the stainless steel screw which secures the bracket to the freezer chamber.
6. By lifting up on the greezer cap pull ring, the complete worm shaft and bearing retainer can be removed from freezer chamber. NOTE: Top half of water seal is attached to the lower end of the worm shaft.

FREEZER ASSEMBLY TOP BEARING

TO REPLACE:
1. Follow stwps 1 thru 6, freezer worm shaft removal.
2. To remove bearing and retainer from worm shaft, first remove retaining ring in top of bearing retainer.
3. Remove freezer sap and pull ring from bearing retainer.
4. Unscrew cap screw holding shaft to inner race of bearing and pull worm shaft free from bearing and retainer.

When replacing with a new bearing add new grease (Beacon No. 325) to top of bearing.

FREEZER ASSEMBLY BOTTOM BEARING AND WATER SEAL

TO REPLACE:
1. To replace, follow steps 1 through 6 under Worm Shaft Removal.
2. Remove 3 bolts holding freezer to mounting adapter.
3. Lift freezer off adapter just high enough to allow bottom bearing and bottom half of water seal to be removed from bottom of freezer tube.
4. Lightly grease bottom half of new water seal and insert face up approximately 1/2'' in bottom of freezer tube.
5. Insert bottom bearing in bottom of freezer tube, force approximately 1/8'' past bottom tube end. This will allow the positioning ring on adaptor to properly position freezer tube when tightening up the three mounting bolts.
6. After securing mounting bolts, put new top half of water seal on worm shaft the same way as the old seal was removed. Then reassembling, put a small amount of Vaseline on shaft end. This will allow shaft to slide smoothly through rubber bottem half of water seal without tearing it.
7. Carefully insert worm shaft assembly in freezer tube and into spline coupling on bottom.
8. Replace spout casting, screws, insulation pieces and unit is ready to resume operation.

BIN THERMOSTAT

Thermostat control body is located in electrical control box. The thermostat sensing tube is threaded into the ice storage bin where it automatically stops the icemaker when ice bin fills to sensing tube level and restarts icemaker when ice is removed. Factory settings are 35° cut out, 45° cut in.
Altitude correction begins at 2,000 feet, cut in and cut out screws should be adjusted equally, not more than 1/4 turn at a time.

IMPORTANT — Refer to page 13 for proper location of bin control capillary.

TO REPLACE:
1. Disconnect electrical supply.
2. Remove bin thermostat capillary tube from bin location.
3. Remove front panel and control box cover.
4. Disconnect two spade type electrical leads.
5. Loosen two screws in control mounting bracket.
6. Replace with new control and reassemble in reverse of above.
7. CAUTION: Always check new control power element charge before installation to assure receiving an operative control. A handful of ice on bulb will register on audible 'click' at cut off.

CONTACTOR

The electrical contactor is used to carry the compressor line current. It is wired so that any of the controls in the pilot circuit such as the bin thermostat, low and high pressure controls, etc. will cause the contactor holding coil to be de-energized when the control contact open, thereby, breaking the circuit to the compressor through the contactor points.

WATER REGULATING VALVE (Water Cooled Models Only)

The Water Regulating Valve is designed to maintain a constant head pressure by regulating the amount of incoming water flow through the water cooled condenser. This valve is operated by high side pressure and may be adjusted by the adjusting screw on top of the valve to raise or lower the operating head

TO REPLACE:

1. Shut off water supply to machine and siconnect electrical power.
2. Disconnect old valve from water supply line and install new valve.
   NOTE: Be sure arrow on side of valve points in direction of water flow.
3. Purge off refrigerant and disconnect valve capillary line from high side fitting and immediately attach capillary from new valve.
4. Recharge system. Refer to page 10 for proper refrigerant charge and head and back pressure settings.

WATER RESERVOIR

A water level is maintained in the water reservoir by a float operated valve. Water is piped from the water reservoir to the freezing chamber by a gravity feed line maintaining an equal water level.

The water reservoir is equipped with a 2 inch air gap to prevent back siphoning and meet all health codes.

The water level in the water reservoir is adjusted by bending float arm. The water level should be set 1/4 inch below the overflow standpipe.

A water strainer must be installed in the supply line. Use strainer sent with machine.

TO REPLACE:

1. Remove cabinet top and side panel.
2. Turn off water supply and drain reservoir.
3. Remove 1/4 inch inlet water line.
4. Remove plastic feed line to freezer.
5. Remove wing nut located beneath reservoir.
6. Lift out reservoir.
7. To replace, reverse procedure.

HEAD PRESSURE CONTROL (WATER COOLED MODELS)

The head pressure safety control is factory preset at 250 lb. PSIG. This is a manual reset control, no adjustment. The control is placed in the system as a safety precaution, to terminate power to the unit should loss of water occure to the water cooled condenser.

CHASSIS ASS'Y
Air Cooled

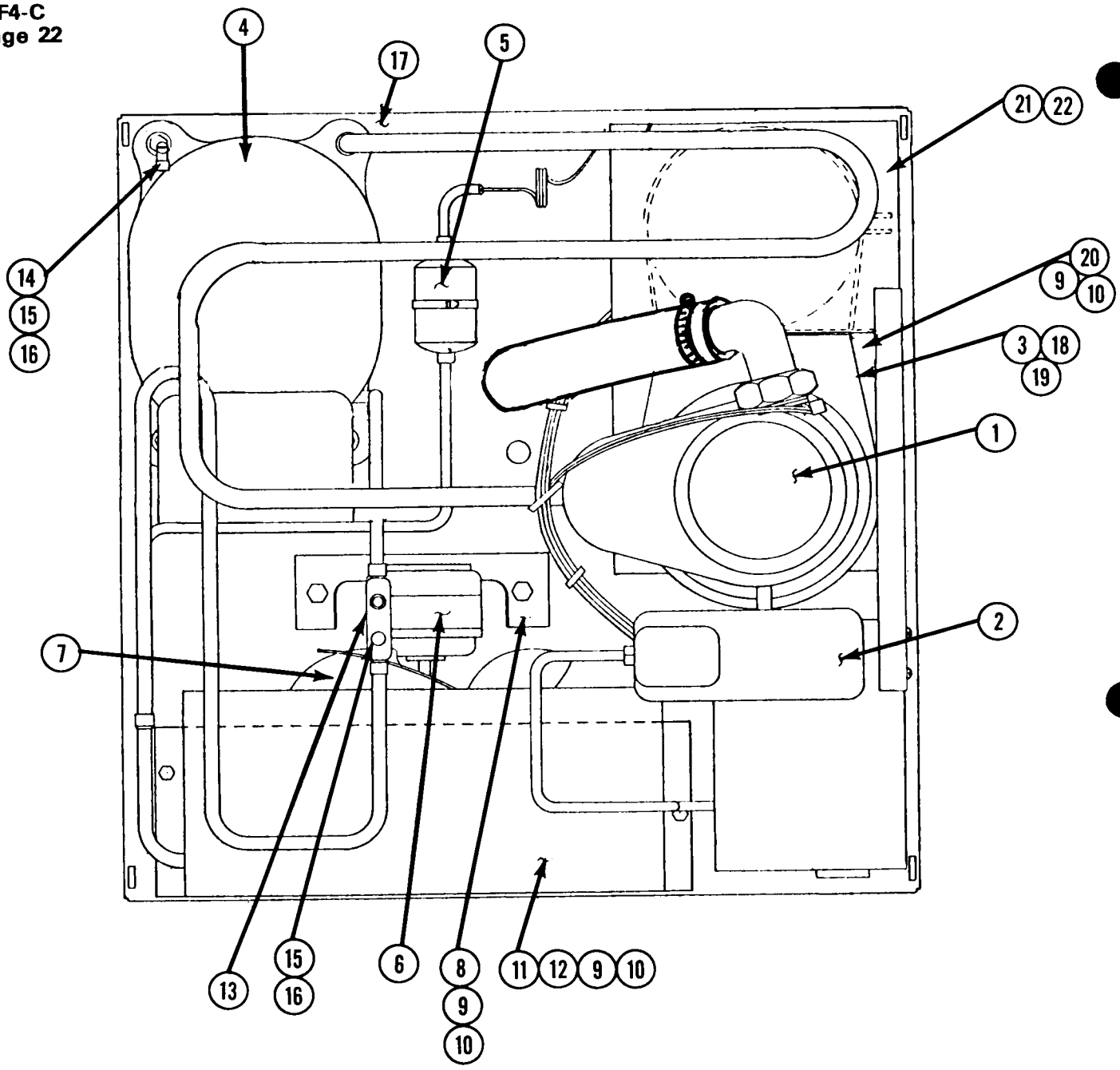

ITEM	PART NO.	DESCRIPTION
1.	See Page 24	Freezer Ass'y.
2.	See Page 29	Reservoir
3.	See Page 25	Gear Reducer
4.	See Page 27	Compressor
5.	02-0544-01	Drier
6.	18-0559-01	Fan Motor
7.	18-0625-00	Fan Blade
8.	A25548-001	Fan Mounting Bracket
9.	03-1405-03	Screw
10.	03-1417-09	Washer
11.	18-0396-01	Condenser
12.	A23825-001	Shroud
13.	16-0673-18	Process Header
14.	16-0673-15	Process Header
15.	16-0560-00	Valve Core
16.	16-0563-00	Brass Cap
17.	A26596-001	Base Ass'y.
18.	03-1405-17	Screw, Plate-Reducer
19.	03-1417-12	Lockwasher
20.	A26599-001	Motor Plate
21.	A26041-001	Motor Shield
22.	A26042-001	Shield Strap

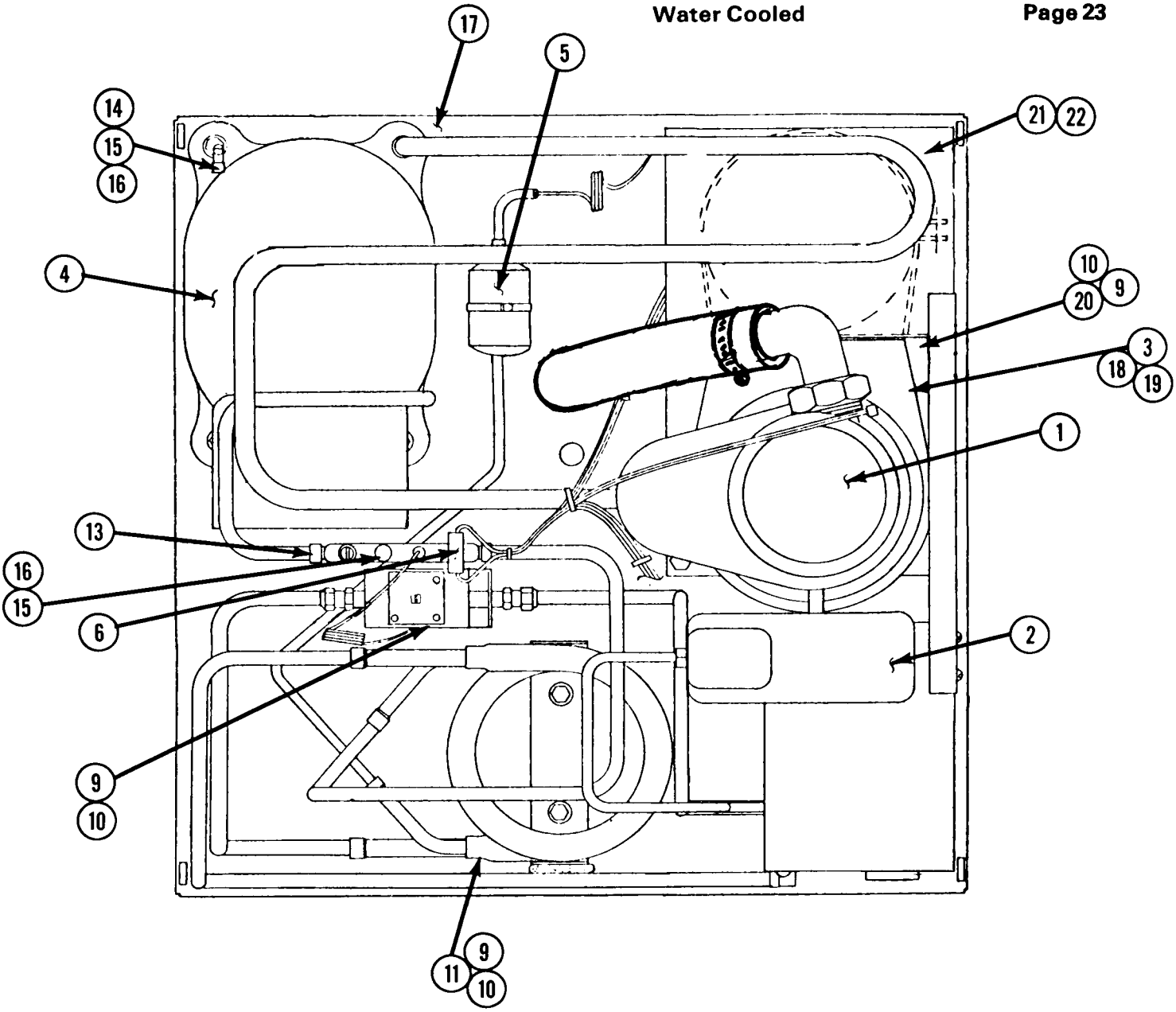

ITEM	PART NO.	DESCRIPTION	ITEM	PART NO.	DESCRIPTION
1.	See Page 24	Freezer Ass'y.	12.		
2.	See Page 29	Reservoir	13.	16-0673-08	Process Header
3.	See Page 25	Gear Reducer	14.	16-0673-15	Process Header
4.	See Page 27	Compressor	15.	16-0560-00	Valve Core
5.	02-0544-01	Drier	16.	16-0563-00	Brass Cap
6.	11-0397-01	Hi-Pressure Switch	17.	A26596-001	Base Ass'y.
7.	11-0198-00	Water Regulator	18.	03-1405-17	Screw, Mtg. Plate-Reducer (3)
8.			19.	03-1417-12	Lockwasher, Plate-Reducer (3)
9.	03-1405-03	Screw	20.	A26599-001	Motor Plate
10.	03-1417-09	Washer	21.	A26041-001	Motor Shield
11.	18-3305-02	Condenser	22.	A26042-001	Shield Strap

FREEZER ASSEMBLY

MF4-C
Page 24

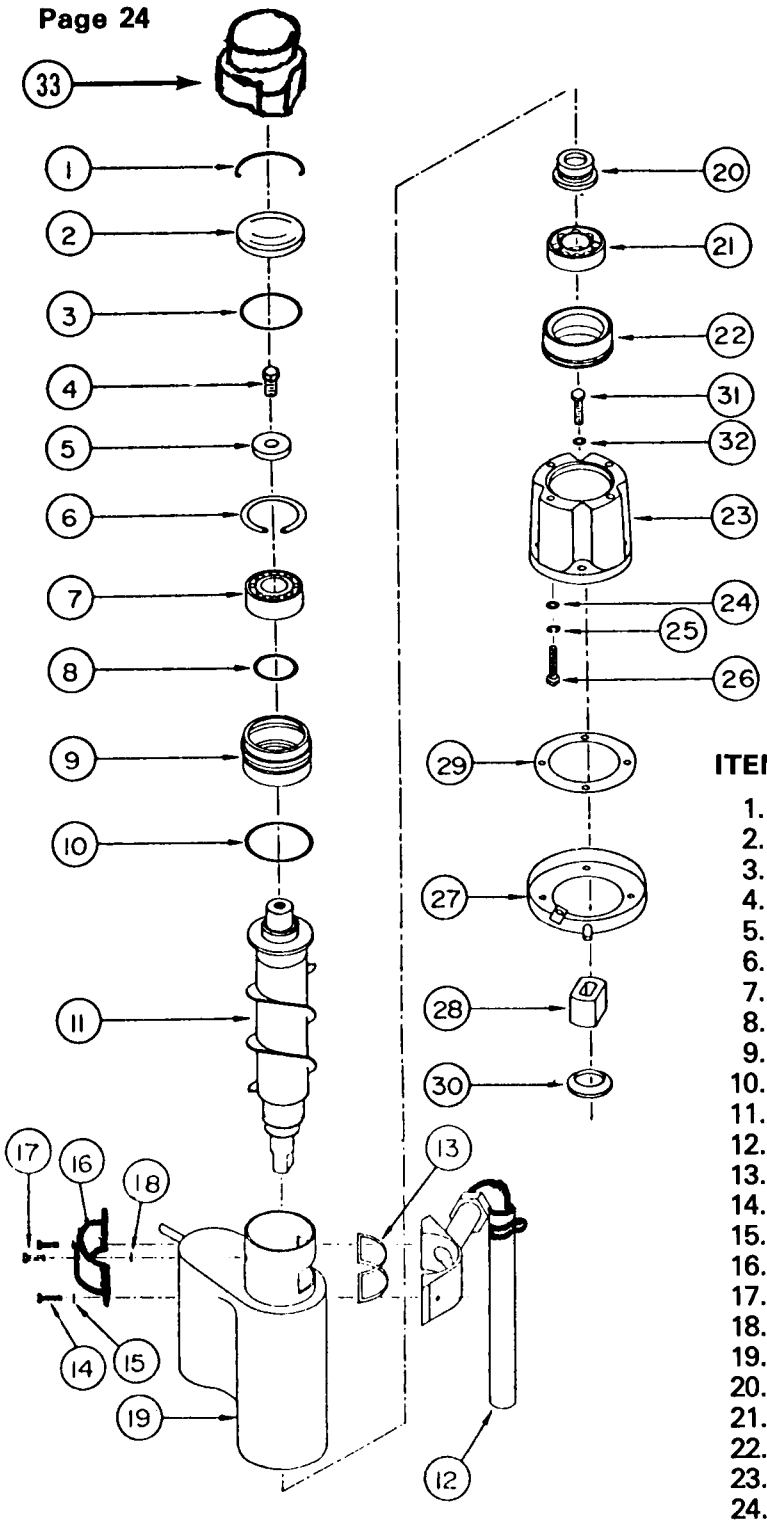

ITEM	DESCRIPTION	PART NO.
1.	A08582-000	Cap Hook
2.	A08581-000	Cap
3.	13-0617-20	"O" Ring
4.	03-1405-36	Cap Screw
5.	A06273-000	Washer
6.	03-1558-04	Retaining Ring
7.	02-0646-00	Bearing
8.	13-1617-15	"O" Ring
9.	A26708-001	Bearing Retainer w/Bearing
10.	13-0617-40	"O" Ring
11.	02-2047-01	Auger
12.	See Page 26	Ice Spout Ass'y.
13.	02-1437-00	Gasket
14.	03-1544-02	Screw (4)
15.	03-1417-07	Lock Washer (4)
16.	A24928-001	Spout Plate
17.	03-1506-01	Screw
18.	03-1409-14	Washer
19.	A26600-001	Freezer Shell w/Heat Exch.
20.	A22569-000	Water Seal
21.	02-0619-00	Lower Bearing
22.	A10591-000	Bearing Retainer
23.	02-1629-00	Adapter
24.	03-1405-41	Screw (4)
25.	03-1410-04	Lock Washer (4)
26.	03-1408-03	Washer (4)
27.	A24156-001	Drip Pan
28.	15-0573-01	Coupling
29.	13-0704-00	Cork Gasket
30.	13-0709-02	Rubber Water Shed
31.	03-1420-03	Screw (4))fl
32.	03-1408-03	Washer (4)
33.	13-0809-01	Rubber Cap

A24317-021
GEAR MOTOR ASSEMBLY
1/4 HP 115/60/1
OUTPUT SHAFT TURNS
AT 12 R.P.M.

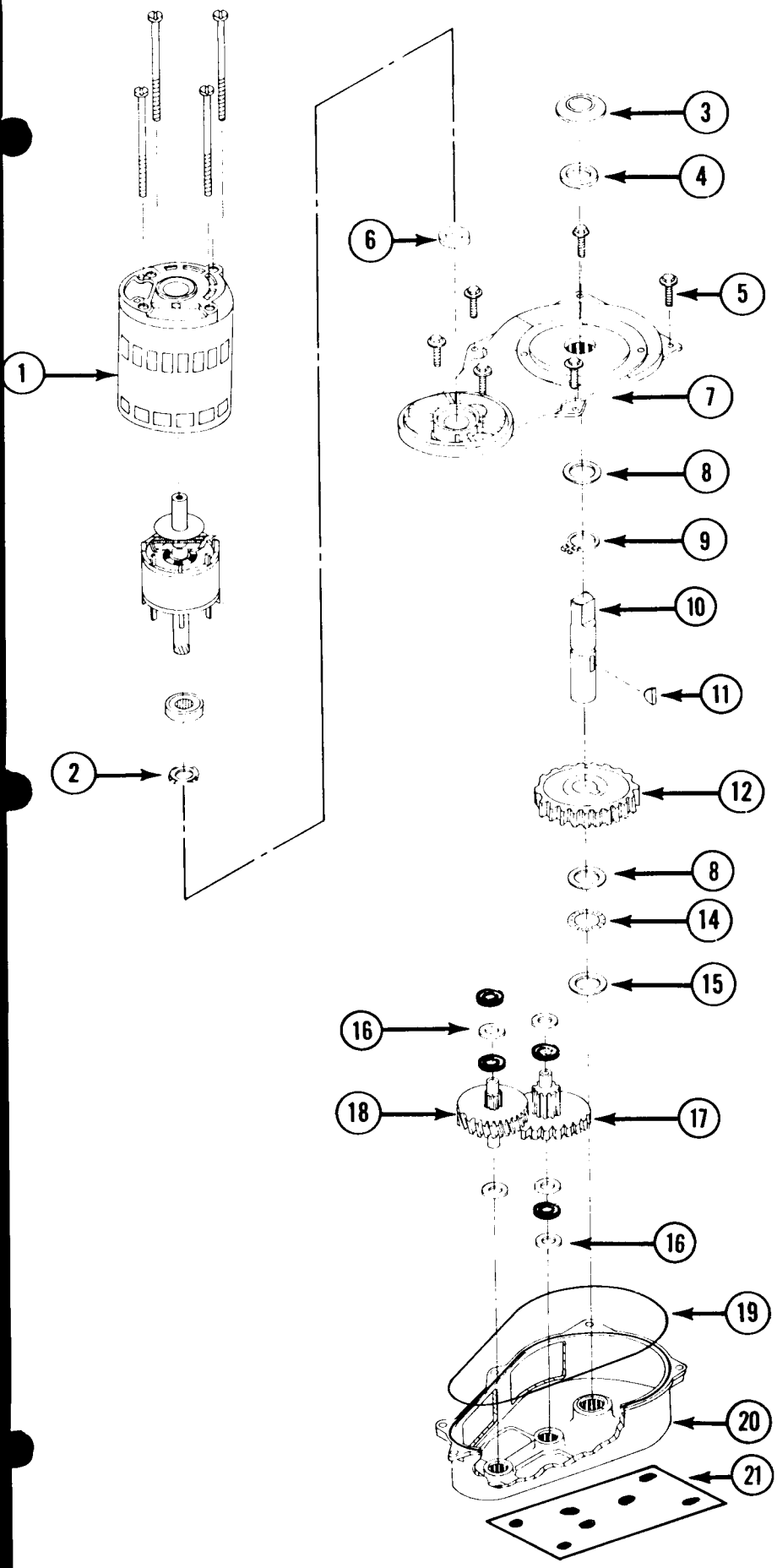

ITEM	PART NO.	DESCRIPTION
1.	A26455-001	Drive Motor 115/60/1
2.	03-1426-00	Spring Washer
3.	13-0709-02	Water Shed
4.	02-1607-00	Oil Seal
5.	03-1251-01	Screws (6 Reqd.)
6.	02-1606-00	Oil Seal
7.	A22200-000	Gear Case Cover Assembly
8.	02-1681-00	Thrust Race
9.	03-1363-00	Retaining Ring
10.	02-1652-00	Output Shaft
11.	03-1364-00	Key
12.	02-1653-00	Output Gear
13.		
14.	02-1680-00	Bearing
15.	02-1679-00	Thrust Race
16.	03-1408-24	Washer (9 Regd.)
17.	02-2071-00	Second Gear and Third Pinion Ass'y.
18.	02-2072-00	First Gear and Second Pinion Ass'y.
19.	A26103-001	"O" Ring
20.	A22199-000	Gear Case Ass'y.
21.	A26599-001	Motor Mounting Plate

SPOUT AND SAFETY SWITCH

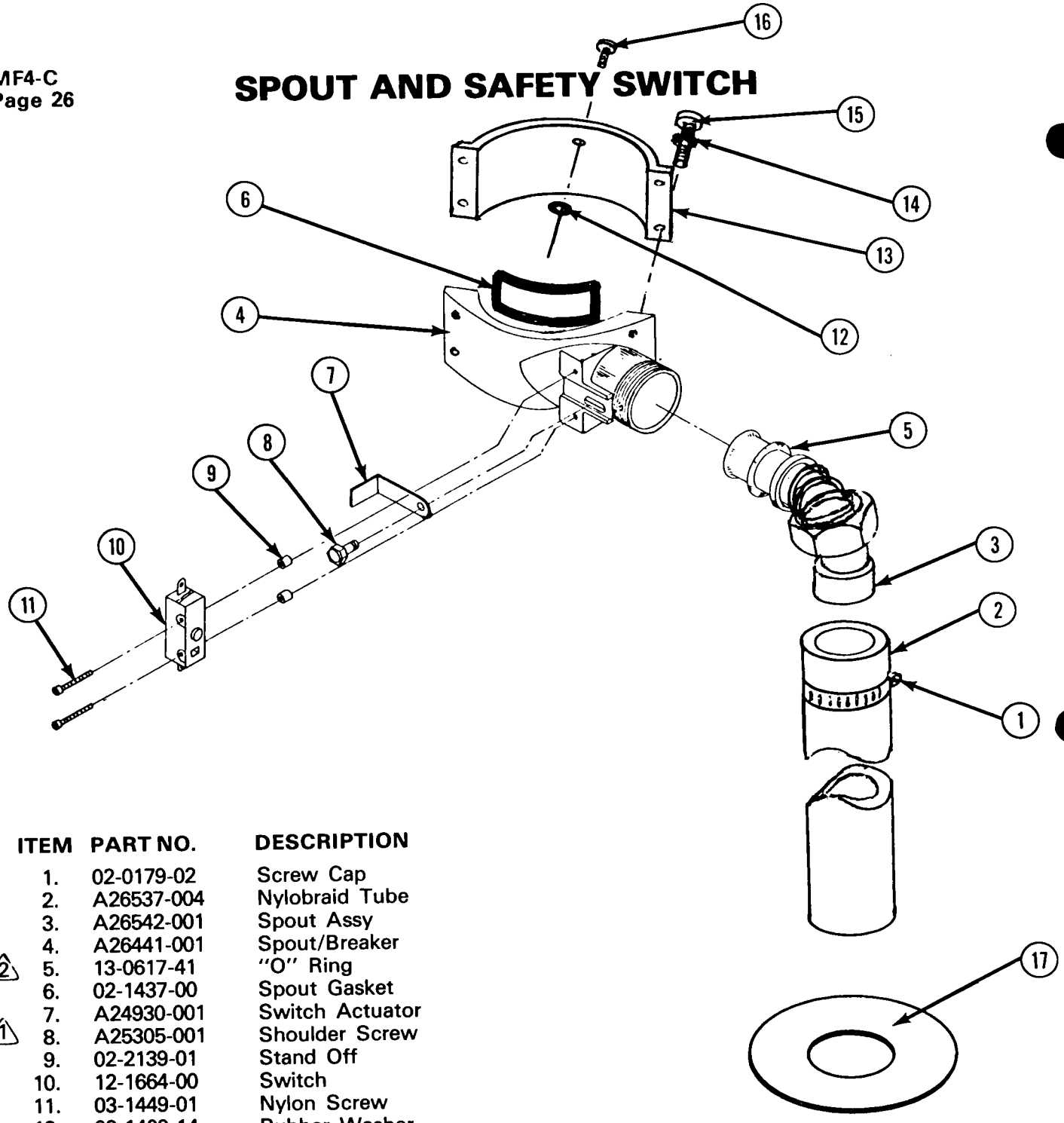

ITEM	PART NO.	DESCRIPTION
1.	02-0179-02	Screw Cap
2.	A26537-004	Nylobraid Tube
3.	A26542-001	Spout Assy
4.	A26441-001	Spout/Breaker
⚠2 5.	13-0617-41	"O" Ring
6.	02-1437-00	Spout Gasket
7.	A24930-001	Switch Actuator
⚠1 8.	A25305-001	Shoulder Screw
9.	02-2139-01	Stand Off
10.	12-1664-00	Switch
11.	03-1449-01	Nylon Screw
12.	03-1409-14	Rubber Washer
13.	A24928-001	Spout Plate
14.	03-1417-07	Lockwasher (4)
15.	03-1544-03	Socket Head Screw (4)
16.	03-1506-01	Screw
17.	13-0806-01	Sealing Pad

Note:

⚠1 Tighten carefully, small thread & brass.

⚠2 A light coating of petro-jel req'd. on "O" Ring & Spring

MOTOR COMPRESSOR
Air and Water
115/60/1 3500 RPM

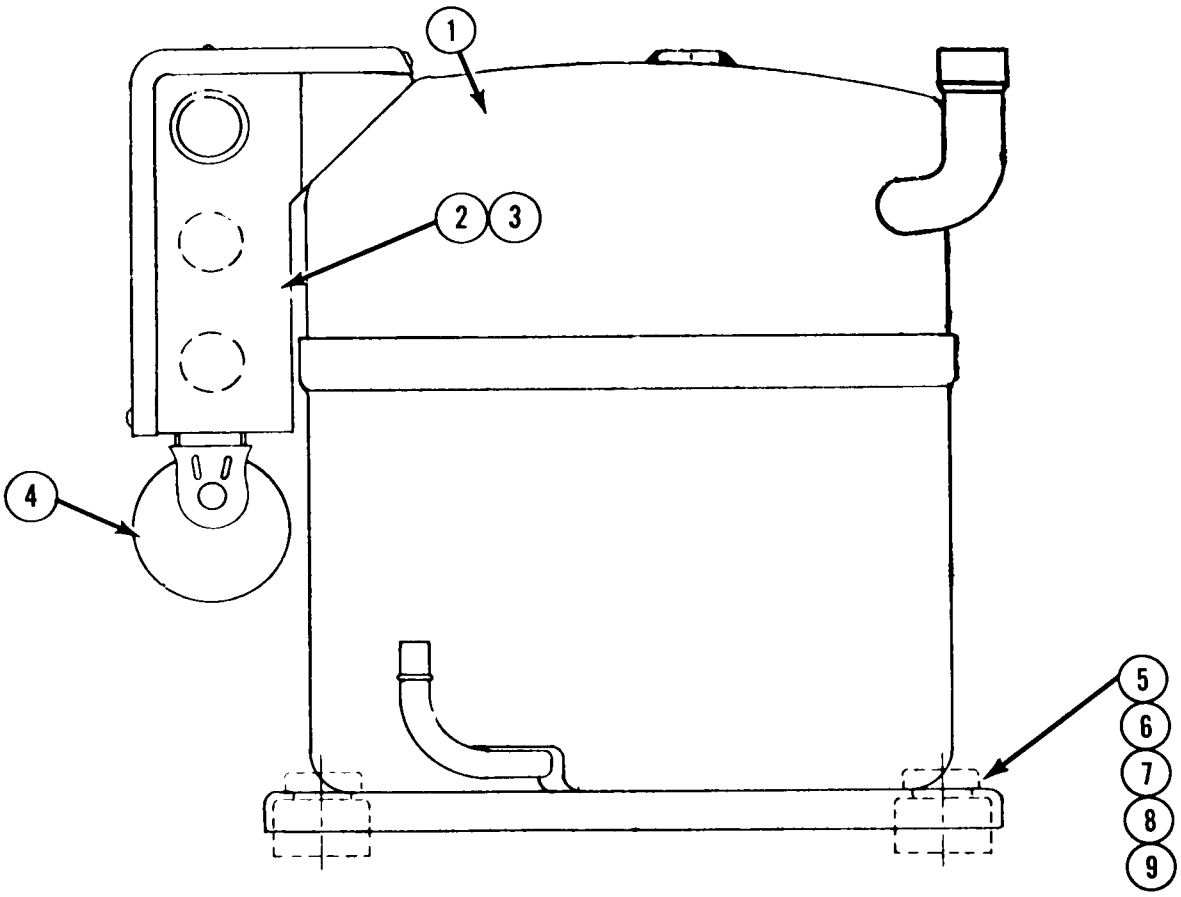

1.	18-3900-01	Compressor Cope. P.N. RSL2-0075-1AA
2.	18-2410-00	Relay Cope. P.N. 040-0098-01
3.	18-2400-25	Overload Cope. P.N. 071-0127-06
4.	18-2420-00	Capacitor Cope. P.N. 014-0008-69
5.	18-2200-28	Mounting Grommet (4)
6.	18-2200-27	Mounting Sleeve (4)
7.	03-1405-40	Screw (4)
8.	03-1417-12	Lockwasher (4)
9.	03-1408-29	Washer (4)

CONTROL BOX ASS'Y
Air and Water
115/60/1

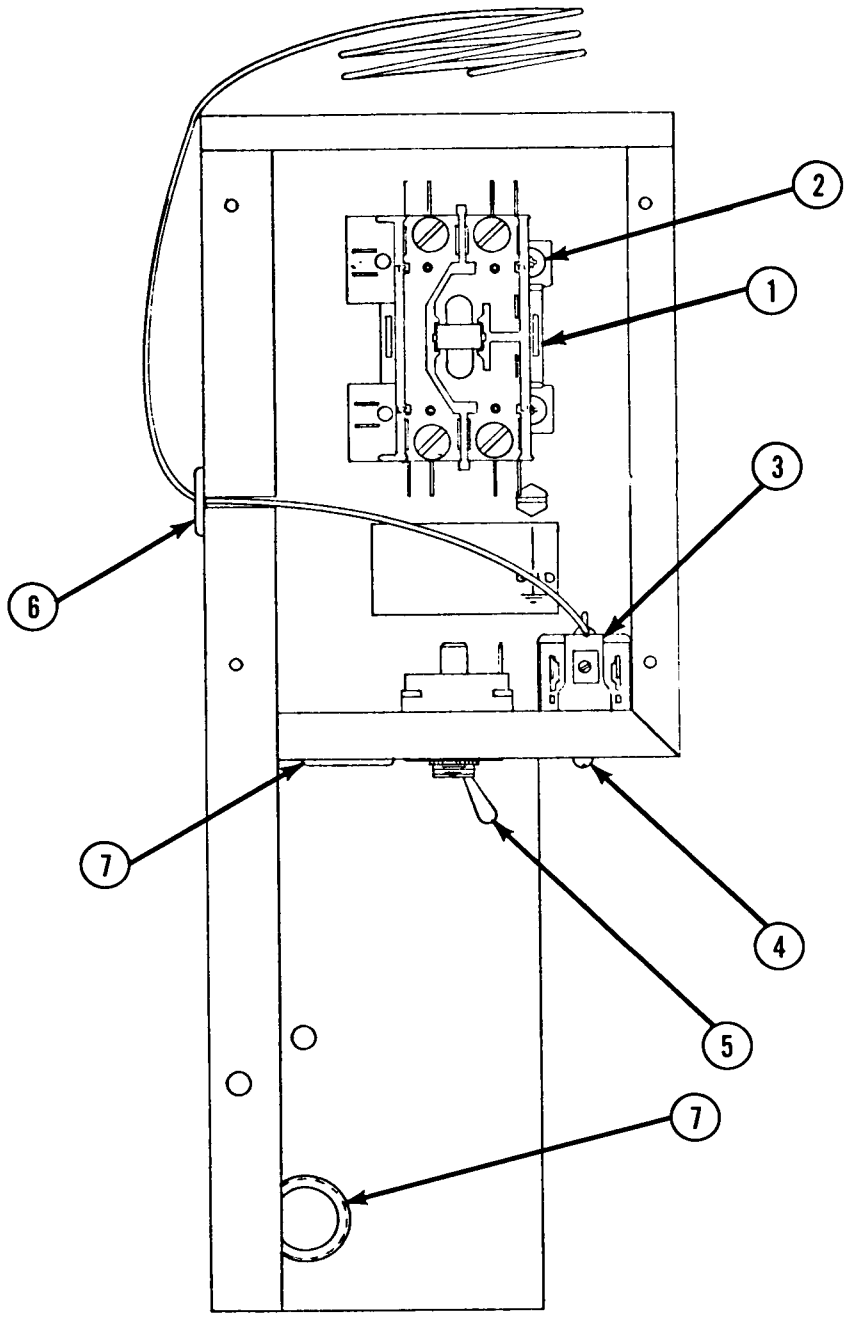

ITEM	PART NO.	DESCRIPTION
1.	12-2037-01	Contactor
2.	03-1403-26	Screw, Contactor (2)
3.	11-0354-00	Bin Control
4.	03-1403-14	Screw, Bin Control (2)
5.	12-0426-01	Master Switch
6.	13-0557-00	Grommet
7.	12-1213-00	Snap Bushing

RESERVOIR ASSEMBLY

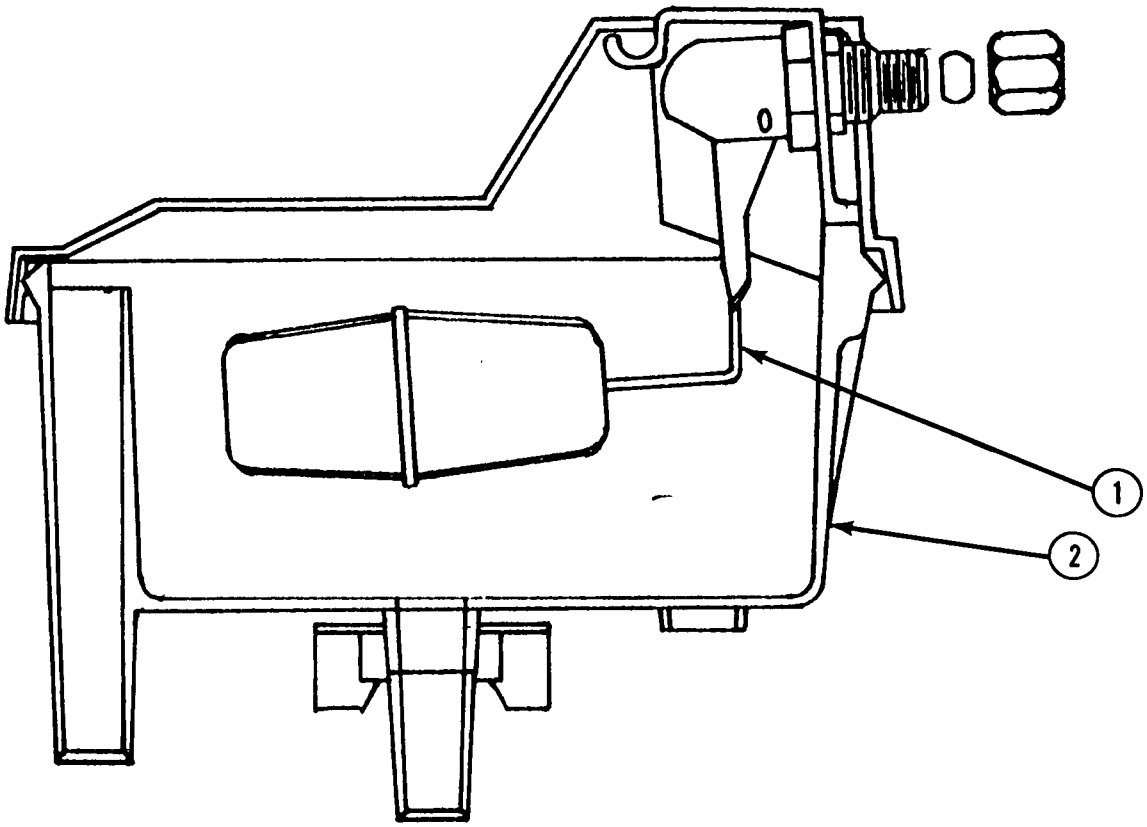

ITEM	PART NO.	DESCRIPTION
1.	02-2217-02	Valve Ass'y.
2.	02-2217-01	Reservoir Complete

CABINET PARTS

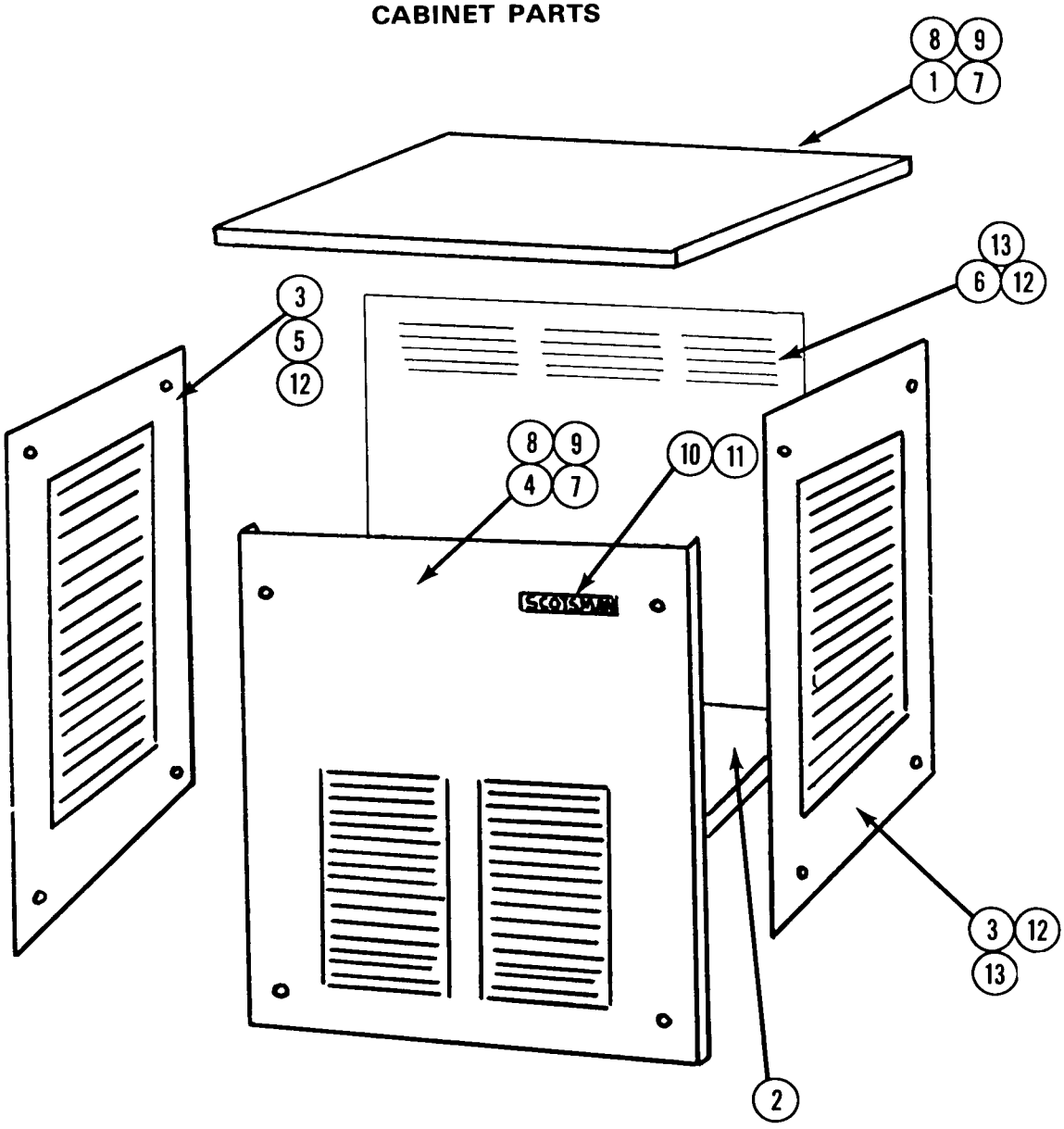

ITEM	DESCRIPTION	ENAMEL	STAINLESS STEEL
1.	Panel Top	A26625-001	A26625-002
2.	Cabinet Base	A26596-001	A26596-001
3.	Panel, Right Side	A26624-001	A26624-002
4.	Panel,Front	A26621-001	A26621-002
5.	Panel, Left Side	A26623-001	A26623-002
6.	Panel, Rear	A26622-001	A26622-002
7.	Screws (10)	03-1419-09	03-1419-09
8.	Lockwashers (10)	03-1417-15	03-1417-15
9.	Speednuts (10)	03-1423-06	03-1423-06
10.	Emblem	15-0580-00	15-0580-00
11.	Speednuts (2)	03-0271-00	03-0271-00
12.	Screw (6)	03-1404-09	03-1404-09
13.	Lockwasher (6)	03-1417-03	03-1417-03
14.	Speednuts (4)	03-1507-01	03-1507-01

TABLE OF CONTENTS

Table of Contents 1
Photograph and Ice Making Capacity 2
Specifications and Dimensions 3
Description 4
Preparation for Installation 5
Installation 6
Installation Practices 7
Starting the machine 8
Refrigerant Charge 8
Final Check List 8
Refrigeration Cycle 9
Water Schematic 10
Ice Discharge Tube and Bin Thermostat Installation 11
Wiring Diagram-Air Cooled 230/60/1 12
Wiring Diagram-Water Cooled 230/60/1 13
Wiring Diagram-Air Cooled 208-220/60/3 14
Wiring Diagram-Water Cooled 208-220/60/3 15
Wiring Diagram-Air Cooled 208/60/1 16
Wiring Diagram-Water Cooled 208/60/1 17
Service Analysis 18-19
Maintenance Instructions 20
Service:
- Gear Motor 21
- Freezer Assembly 21
- Freezer Worm Shaft 21
- Freezer Assembly Top Bearing 22
- Freezer Assy. Bottom Bearing and Water Seal 22
- Bin Thermostat 22
- Contactor 22
- Head Pressure Control (Water Cooled) 23
- Head Pressure Control (Air Cooled) 23
- Low Pressure Control 23
- Water Regulating Valve (Water Cooled Models) 23
- Water Reservoir 23

Parts Breakdown:
- Chassis Assembly-Air Cooled 24
- Chassis Assembly-Water Cooled 25
- Freezer Assembly 26
- Gear Motor Assembly 27
- Compressor Assembly 28
- Control Box Assembly 29
- Reservoir Assembly 30
- Cabinet Assembly 31

Flaked Ice Transport System 32-34

THIS PAGE
INTENTIONALLY
LEFT BLANK

SCOTSMAN

MODULAR FLAKER
MF5
SERIES
Continuous Flow

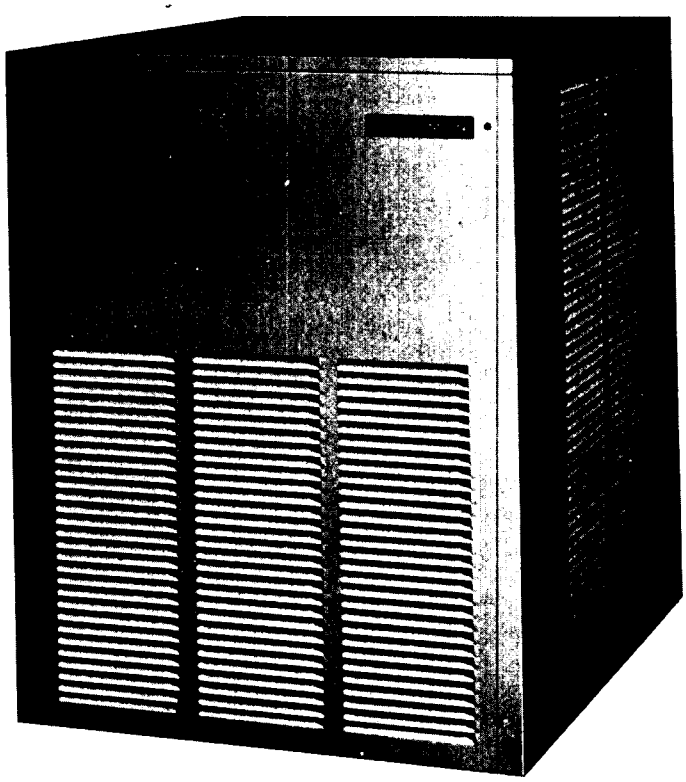

ice making capacity

Daily Ice Capacity is directly related to condenser air inlet temperature, water temperature, and age of machine.

NOTE: To keep your SCOTSMAN MODULAR FLAKER performing at it's maximum capacity, it is necessary to perform periodic maintenance as outlined on page 20 of this manual.

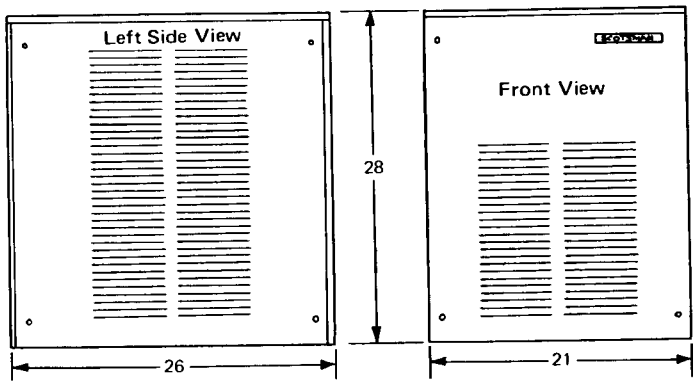

MF5 SERIES

SPECIFICATIONS:

MECHANICAL	MF5 AE	MF5 WE
Compressor (Copelaweld)	1 HP	1 HP
Gear Drive Motor	1/4 H.P.	1/4 H.P.
Gear Drive Motor Output	12.2 RPM	12.2 RPM
Condenser	Air	Water
Refrigerant Control	Capillary Tube	Capillary Tube
Refrigerant Charge R-12	36 oz.	31 oz.
ELECTRICAL		
Basic Electricals	230/60/1	230/60/1
Minimum Wire Size	2 w 14 g	2 w 14 g
Total Amperage	7.8	7.1
Compressor Amperage	5.7	5.6
Gear Drive Motor Amperage	1.4	1.5
Condenser Motor Amperage	.7	
Basic Electricals	208-220/60/3	208-220/60/3
Minimum Wire Size	3 w 14 g	3 w 14 g
Total Amperage	6.3	5.4
Compressor Amperage	4.2	4.0
Gear Drive Motor Amperage	1.4	1.4
Condenser Motor Amperage	.7	
Basic Electricals	208/60/1	208/60/1
Minimum Wire Size	2 w 14 g	2 w 14 g
Total Amperage	7.6	6.9
Compressor Amperage	5.5	5.4
Gear Drive Motor Amperage	1.4	1.5
Condenser Motor Amperage	.7	
WATER		
Inlet Water Line (Freezer)	1/4" Flare	1/4" Flare
Inlet Water Line (Condenser)	3/8" N.P.T.	3/8 N.P.T.
Drain Line	3/8" I.D.	3/8" I.D.
Drain Line-Water Cooled Condenser		3/8" O.D.
CABINET		
Width	21"	21"
Depth	26"	26"
Height	28"	28"
Weight	260 lbs.	245 lbs.
Finish (P-Painted, SS-Stainless steel)	P/SS	P/SS

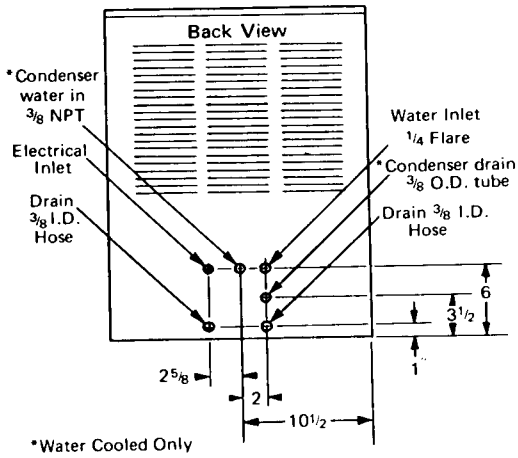

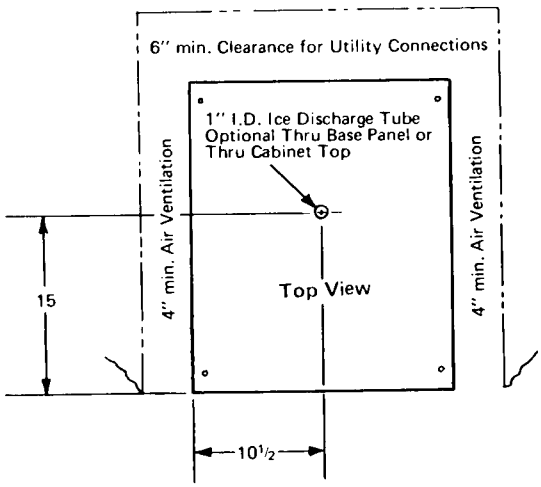

Storage Bin: B500, B750, B1000, B1500, B200, B550
Stainless Steel Lined

NOTE: Requires additional installation space for:
air ventilation - 4" right & left side
utility connections - 6" back side

DESCRIPTION

SCOTSMAN Modular Flakers are designed for restaurants, super markets, soda fountains, hospitals, bakeries, fish markets, poultry stores, packing plants, etc. It is the finest Ice Maker on the market today. It will work 24 hours a day for you, or only as needed. It produces the highest quality ice available at any price.

SCOTSMAN Modular Flakers are easily installed requiring only standard water, drain and electrical connections.

ATTRACTIVE COMPACT CABINET. Sandlewood or stainless steel removable panels makes for easy access to mechanical parts.

SEALED REFRIGERATION SYSTEM. Provides quiet, efficient operation of the machine. Compressor motor is internally spring mounted for quiet operation. Compressor motor is covered by a full 5-Year Warranty.

HOW IT WORKS. An exclusive patented ice-making system, wherein water in the constant level float reservoir is fed to the bottom end of the freezing cylinder and turns to ice on the inside of this cylinder. Ice from the refrigerated walls of this cylinder is extruded past the ice breaker at the top of the cylinder through a side opening by means of a stainless steel auger driven by a gearmotor drive.

Model No. MF5 is a continuous flow type machine, and is manually started by an OFF and ON switch located inside the cabinet. Since the MF5 does not have its own attached bin, it is necessary to use an auxillary bin such as the Model SB-500 SCOTSMAN Super Bin for ice storage. A bin thermostat is mounted in each continuous flow type machine for the purpose of mounting control bulb from machine to bin.

The MF Series Flakers are also designed for remote type installations, whereby, ice can be transported from the flaker via plastic tubing to a bin located several feet away. Refer to section "Flaked Ice Transport System" for installation requirements.

SCOTSMAN MODULAR FLAKERS
PREPARATION FOR INSTALLATION

1. Select unit location prior to hook up of water drain and electrical in accordance with local and national codes. Minimum room temperatures is 50° Fahrenheit, maximum room temperature 100° Fahrenheit. On air cooled models, select well ventilated location.

2. Install bin for use with modular flaker in its permanent location following instructions included with the storage bin.

3. Level bin with adjustable legs and wipe storage bin liner clean with damp cloth.

4. After uncrating modular flaker, remove front, side and top panels and inspect for any concealed damage. Notify carrier of any concealed damage claims.

5. Before placing flaker unit on bin, holes in rubber gasket on bin top must be cut to allow passage of ice discharge tube and bin thermostat control tube into bin. This can be done by using holes in bin top as a template.

6. Remove rubber grommets from miscellaneous parts package and insert into piace. A good seal must be made between grommet and base panel and between grommet and inner bin. See page 11 cutaway drawing.

7. The flaker unit may now be placed on the bin. Insure that the holes in the base panel line up with the holes in the bin top.

8. Install ice discharge tube assembly, taped to freezer body,through large grommet in base & attach to spout using groove in spout casting as guide. See page 11.

9. Attach bulb holder to ice discharge tube grommet in direction shown on page 11. Route bin control tube through smaller grommet then insert tube into tube holder as shown.

10. Thru cabinet top, locate metal reservoir. Remove water reservoir cover and take out paper packing around float ball.

11. Check motor compressor hold down nuts to insure motor compressor rides snug on mounting pads.

12. Remove water strainer from envelope for installation in water supply line feeding unit.

13. Open electrical control box cover and check unit nameplate voltage against building source voltage and make sure they correspond. Caution - Improper voltage supplied to units will void your parts replacement program.

14. Locate and tear out registration card from front of owners guide and fill out card completely including model and serial numbers as taken from aluminum plate found behind front service panel. Forward to Scotsman factory using self mailing card, for your personal registration certificate.

15. Call you local authorized Scotsman Service Agency for hook-up, start-up and check-out. He's listed under "Ice Making Machinery & Equipment" in your telephone book, yellow pages.

INSTALLATION
ELECTRICAL CONNECTIONS:
MF5AE-4A
230 Volts, 60 Cycle, 1 Phase
20 Amp. Circuit

10 Gauge wire should be used for electrical hook-up. All Scotsman Modular Flakers require a solid earth ground wire.

Be certain that the Super Flaker is on its own circuit and individually fused. The maximum allowable voltage variation should not exceed 10 per cent of the nameplate rating even under starting conditions. Low voltage can cause erratic operation and may be responsible for serious damage to the overload switch and motor windings.

All external wiring should conform to the National, State and local Electrical Code requirements. Usually an electrical permit and the services of a licensed electrician will be required.

ELECTRICAL INSTALLATION
MF5AE-4A

Compressor	1 H.P.	Copelaweld: SSE4-0100-CAB-207
		2 pole, 3500 RPM
	Voltage	230
	Amp. rating F.L.A.	8.0
	Cycle	60
	Phase	Single
Gear Drive Motor	1/4 HP	Queen Products
	Voltage	208 - 230
	Amp. Rating	2.4
	Cycle	60
	Phase	Single
		Thermally Protected

WATER SUPPLY: The recommended water supply line is 1/4 inch O.D. copper tubing for the MF-5. Connect to cold water supply line with regular plumbing fittings, with a shut-off valve installed in an accessible place between supply line and machine. A water strainer must be installed with the unit and mounted with clean-out plug down. Locate the strainer next to the machine with the arrow in the direction of the flow. Most plumbing codes also call for double check valves in the supply water line, particularly for water-cooled models.

On air-cooled models the water supply line connects to the 1/4 inch flare fitting on the machine. On water-cooled models connections are made to a 3/8 inch male pipe nipple inside of the machine compartment. Incoming water goes through the water regulating valve first and then to the water-cooled condenser. Observe arrow on water regulating valve. Water supply must be installed to conform with local code. In some cases a licensed plumber and/or a plumbing permit will be required.

NOTE: If water supply to unit is to be interrupted for any period of time, the unit must be switched off to prevent damage to freezer mechanism.

DRAIN: The recommended drain from the bin is 3/8 inch OD copper tubing. Must be run to an open trapped and vented drain. If drain is a long run, allow 1/4 inch pitch per foot. Drain must be installed to conform with local code. Run separate line for condenser discharge water on water-cooled models.

INSTALLATION PRACTICES

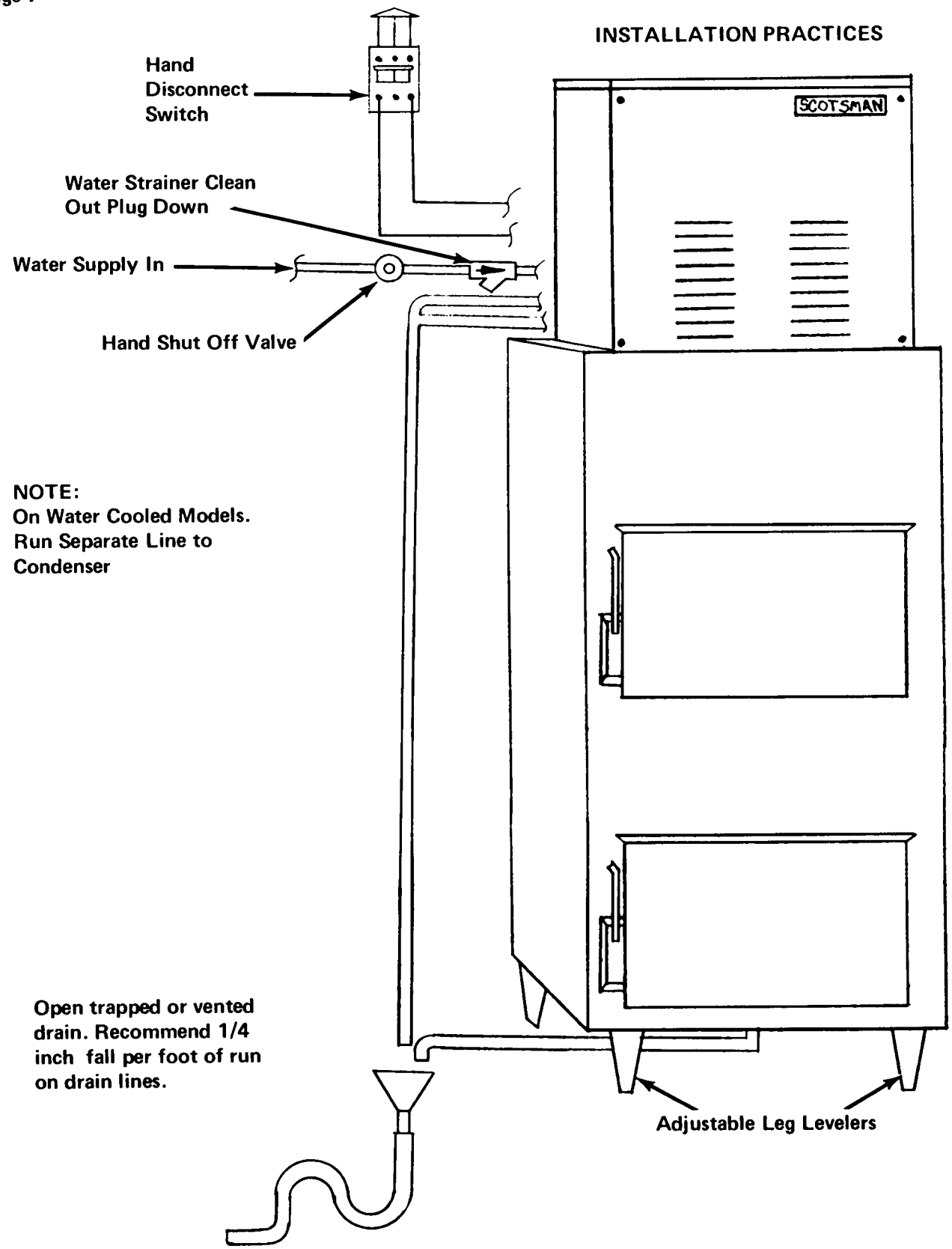

Maximum Ambient Air Temperature Recommended – 100° Fahrenheit
Minimum Ambient Air Temperature Recommended – 50° Fahrenheit

NOTE: Air temperature ranges above or below those listed may cause serious damage to the product.

STARTING THE MACHINE:

When the machine is placed and inspected as per instructions and all plumbing and electrical connections are completed and tested, turn on the water supply. Be sure the float cover is removed to check on the float operation and water level in the water reservoir. Be sure the water reservoir is filled before starting the machine. Water level should be 1/4 inch below the reservoir overflow.

When this is completed, turn on the manual switch located behind front panel of the cabinet and the machine is in automatic operation. In two to three minutes ice will start dropping off the worm shaft and out the ice chute. Let the machine operate for at least 30 minutes and check for any excess noise other than the normal compressor noise. Test the ice storage control bulb by holding a handful of ice around the bulb until the machine shuts off. One minute should be normal for the control to function. Within minutes after the ice is removed, the bulb will warm up and the machine will automatically start up. The control is factory set and should not be reset until this test is made. Normal setting of this control should be approximately 35 degrees cut-out and 45 degrees cut-in.

Check pressure settings at the time of start-up. On the water-cooled models set the head pressure at 135 PSI. On the air-cooled models the head pressure will vary between 130 and 145 PSI head pressure. The frost line should extend out of the accumulator if properly charged with refrigerant and suction pressure will range between 12 and 14 PSI with 50° F inlet water.

Check the hand reset low pressure control setting. This safety device should be set at approximately 5 PSI below normal operating suction pressure and should cut off in case of interruption in water supply, shortage of refrigerant, low ambient or any other cause of abnormally low suction pressure.

REFRIGERANT CHARGE:

The below refrigerant charge is approximate. When charging, set at 135 PSI head pressure and charge so that the frost line extends out of the evaporator and into the accumulator after fifteen minutes of operation.

Model	Refrigerant Charge
Air-Cooled	36 oz. R-12
Water Cooled	31 oz. R-12

FINAL CHECK LIST

1. Is the unit level? (IMPORTANT)
2. Have all electrical and piping connections been made?
3. Has the voltage been tested and checked against the nameplate rating?
4. Is the water supply valve open and the electric power on?
5. Is the water reservoir filled and shut off? All packing removed?
6. Have unit and bin been wiped clean?
7. Has owner been given this Operating Instruction Booklet, and has he been instructed on how to operate the machine?
8. Have the installation and registration cards been filled out and mailed to the factory?
9. Check all refrigerant and conduit lines to guard against vibration and possible failure.
10. Installed in a well ventilated room where ambient temperatures do not fall below 50° Fahrenheit.
11. Is unit installed with a minimum 4" air space around sides and back?

WARNING: THIS MACHINE MUST NOT BE ALLOWED TO OPERATE WHEN THE WATER SUPPLY IS SHUT OFF, OR AT BELOW RECOMMENDED WATER PRESSURE. TURN MASTER SWITCH TO "OFF" POSITION WHEN WATER SUPPLY IS OFF, OR WHEN WATER PRESSURE IS BELOW RECOMMENDED OPERATING PRESSURE.

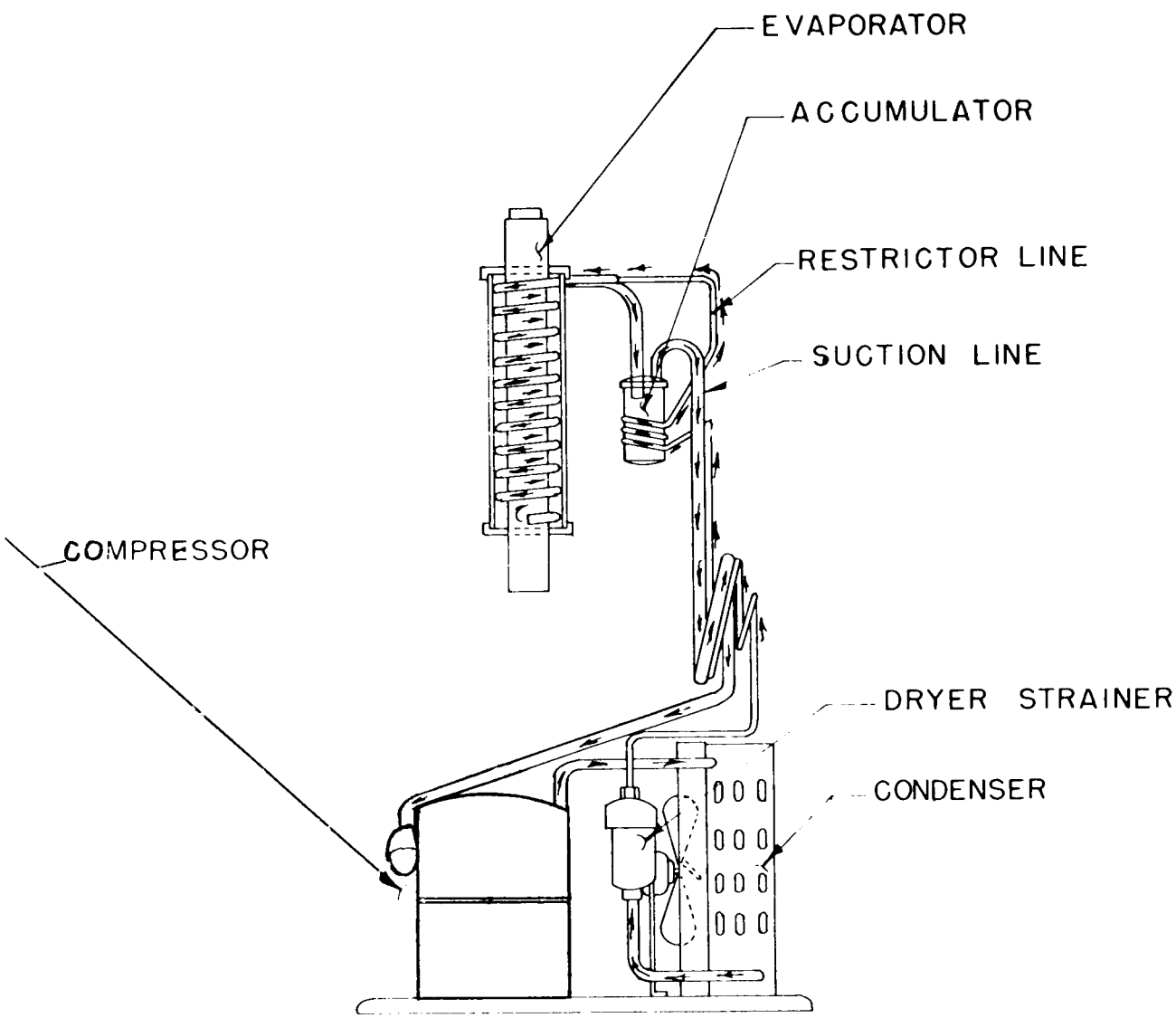

REFRIGERATION CYCLE

WATER SCHEMATIC

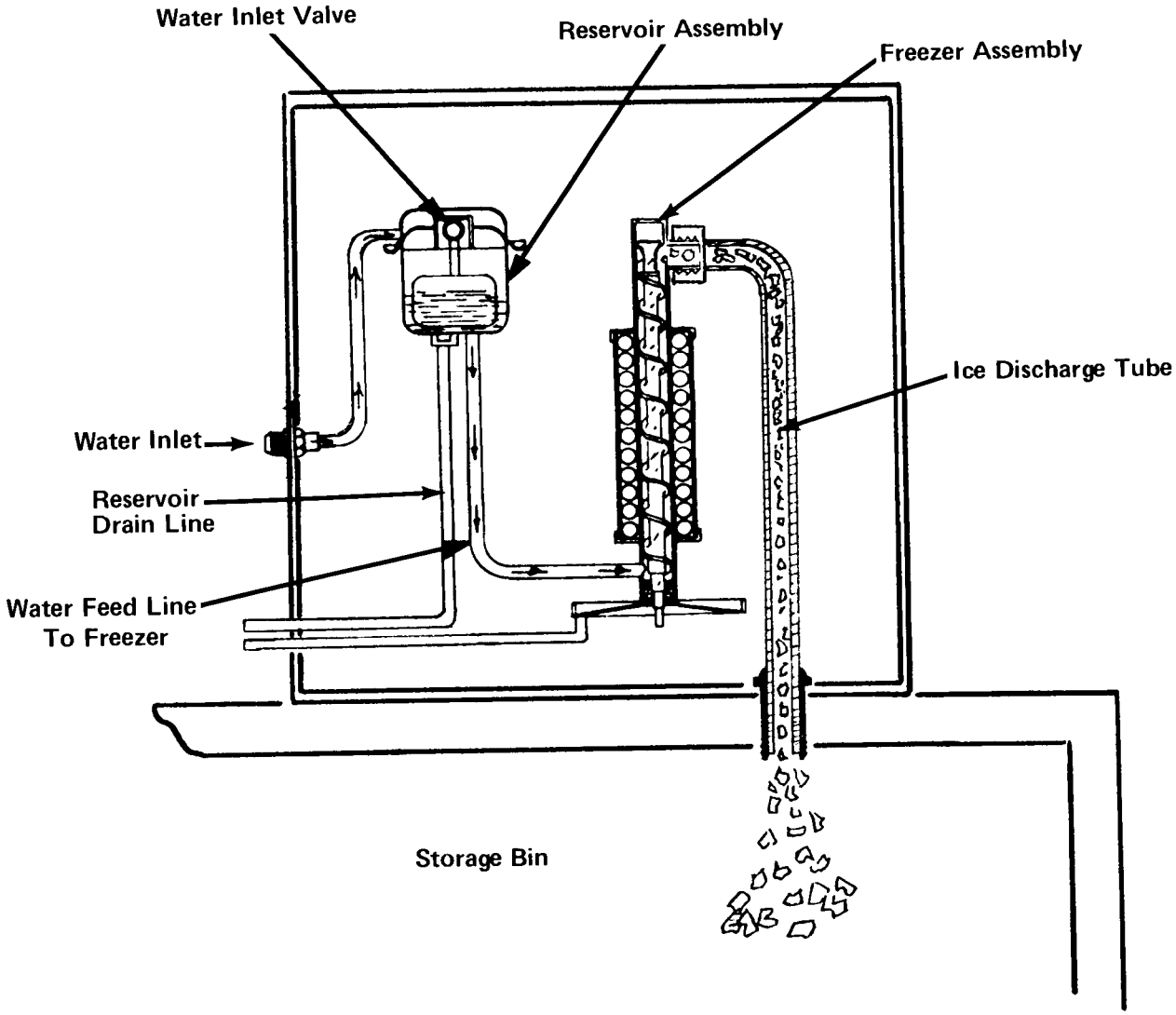

ICE DISCHARGE TUBE

INSTALLATION ILLUSTRATION

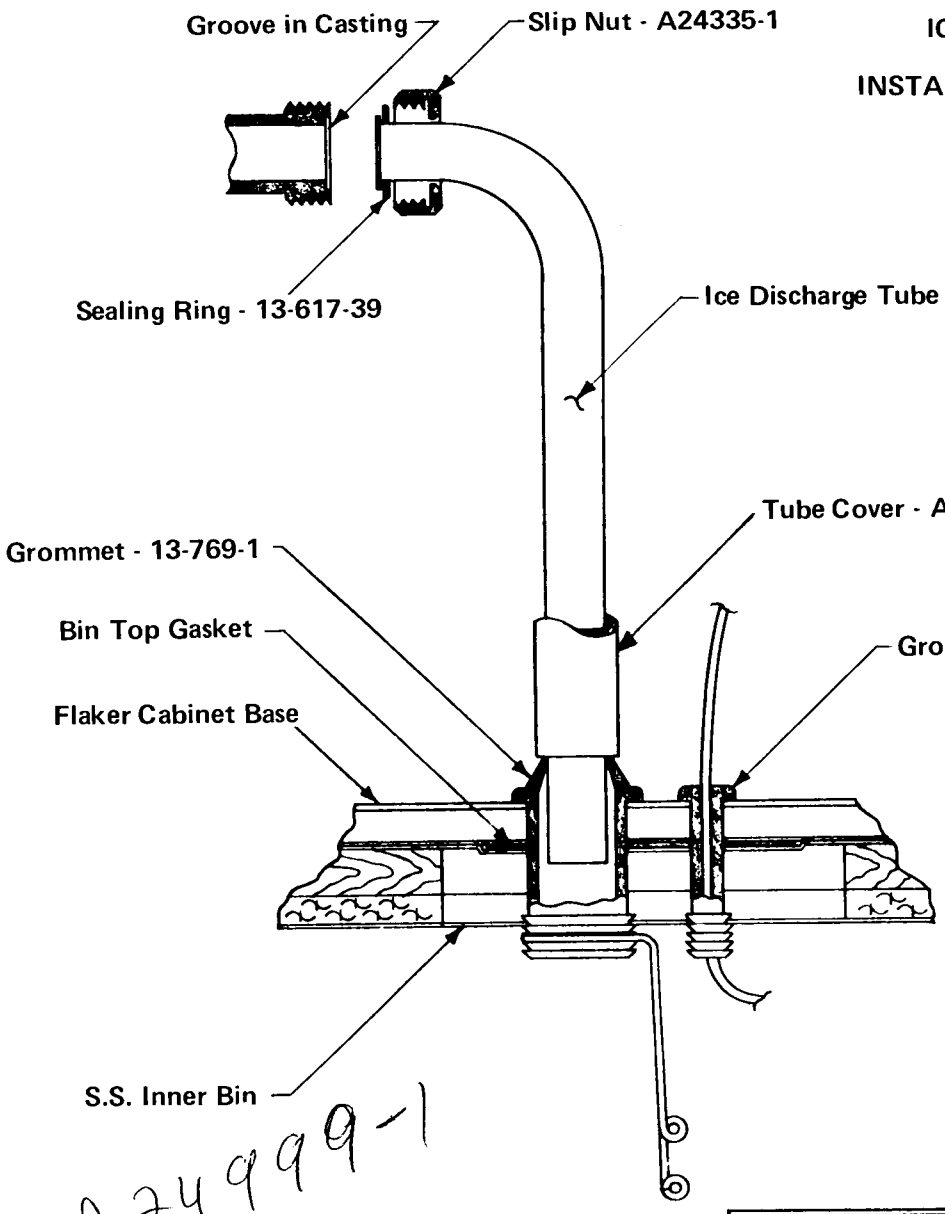

A24999-1

BIN THERMOSTAT

INSTALLATION ILLUSTRATION

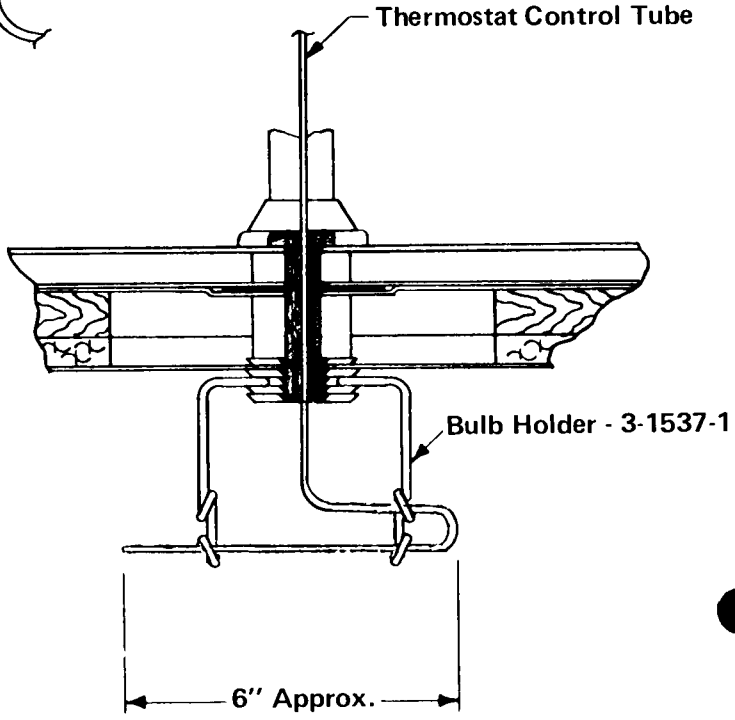

AIR COOLED
230/60/1

A23456-002
REV A

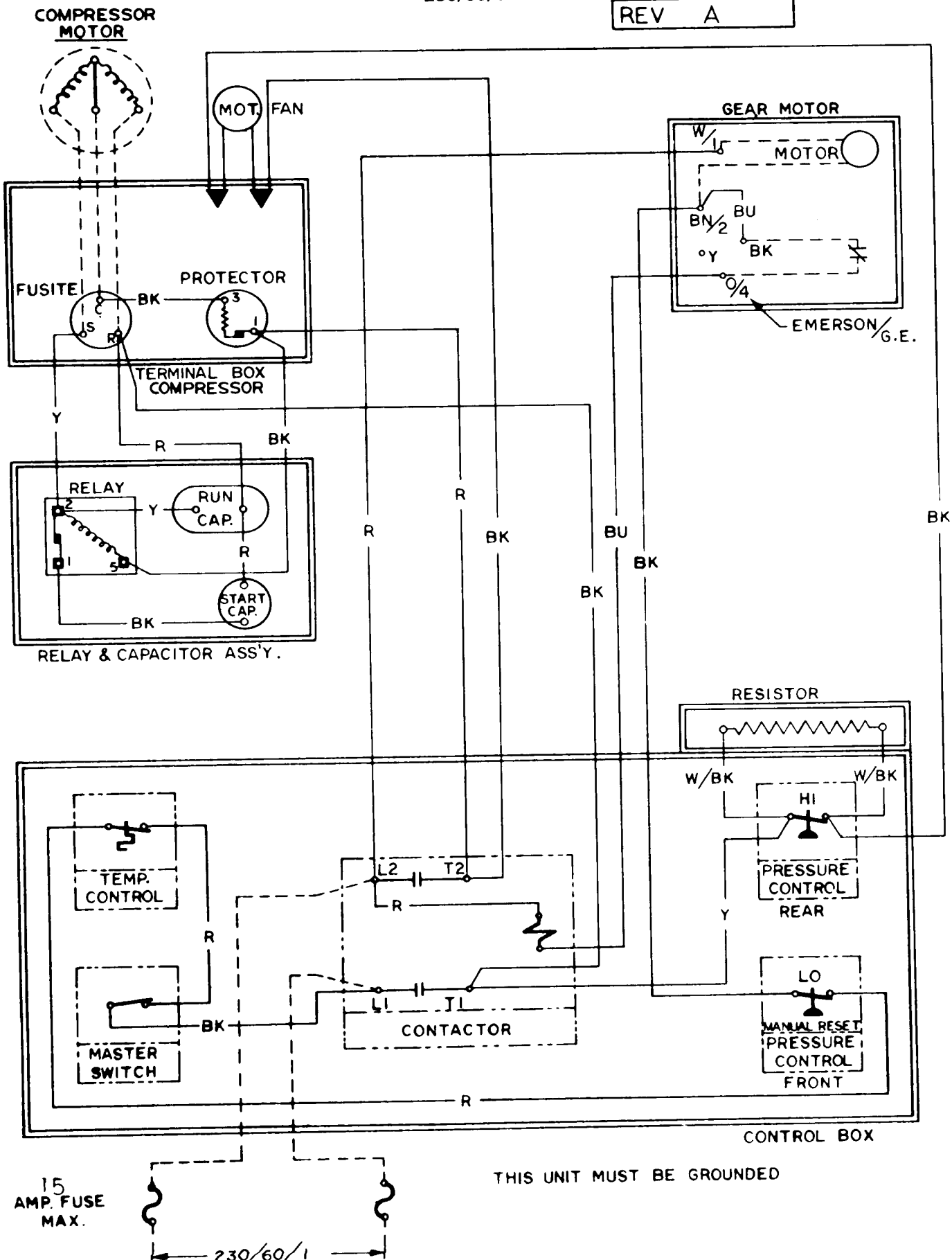

WATER COOLED
230/60/1

A23455-002
REV A

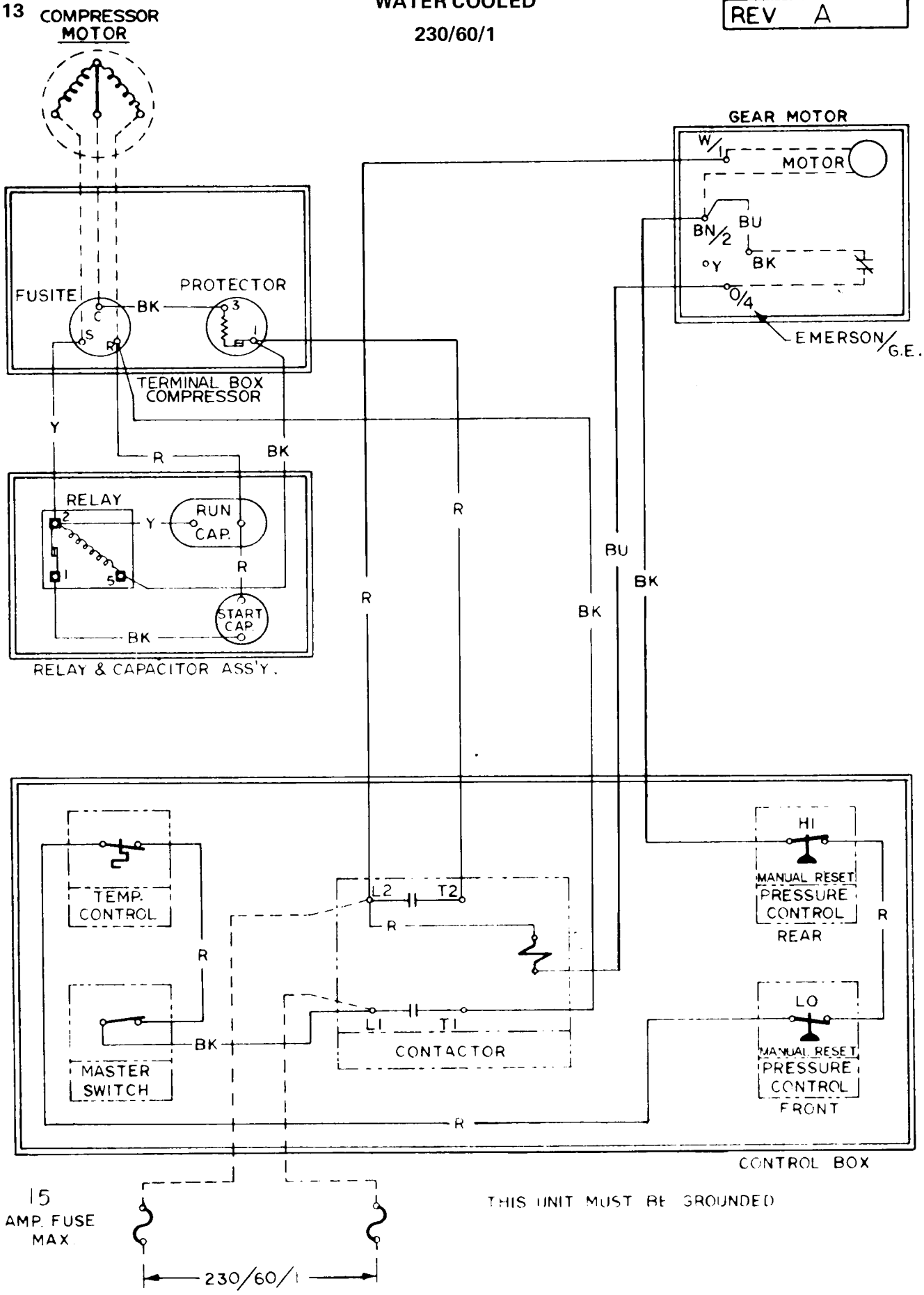

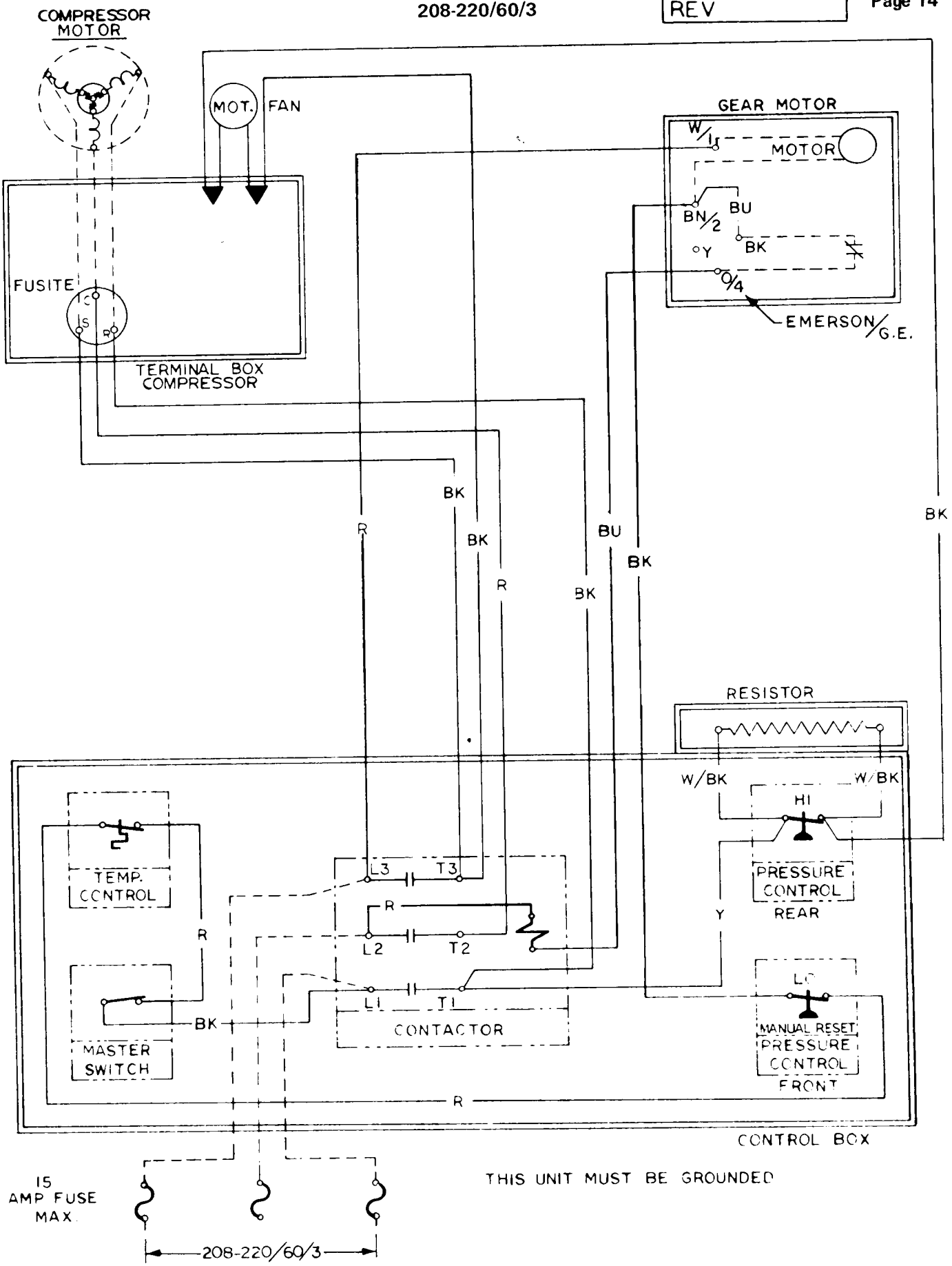
COMPRESSOR MOTOR
MOT.
FAN
GEAR MOTOR
W/L1
MOTOR
BN/2
BU
Y
BK
O/4
EMERSON/G.E.
FUSITE
C
S
R
TERMINAL BOX COMPRESSOR
BK
R
BK
R
BU
BK
BK
BK
RESISTOR
W/BK
W/BK
HI
TEMP. CONTROL
L3
T3
R
L2
T2
PRESSURE CONTROL
REAR
Y
R
L1
T1
CONTACTOR
BK
MASTER SWITCH
LO
MANUAL RESET PRESSURE CONTROL
FRONT
R
CONTROL BOX
15 AMP FUSE MAX.
208-220/60/3
THIS UNIT MUST BE GROUNDED

WATER COOLED

208-220/60/3

A23455-003
REV

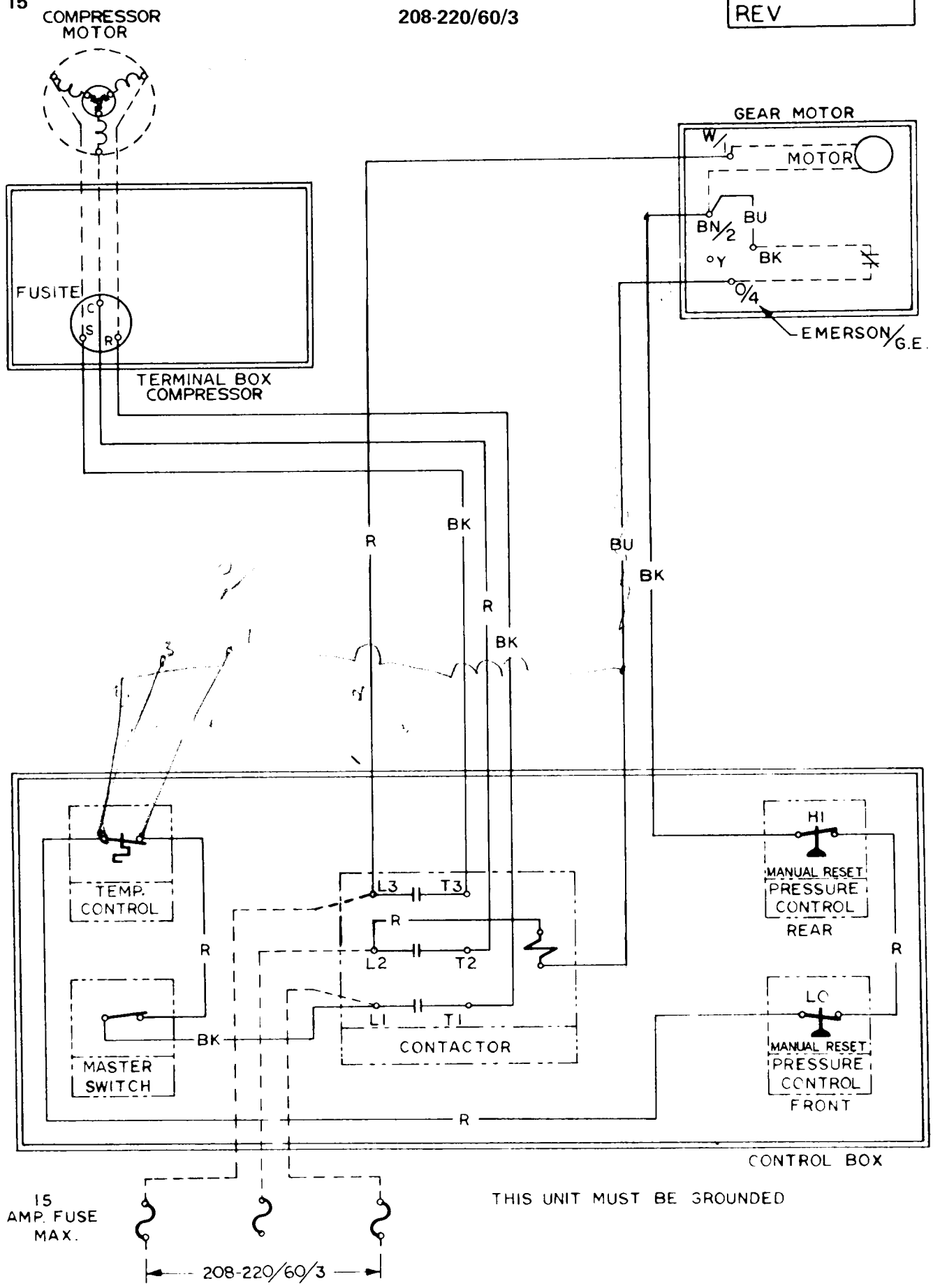

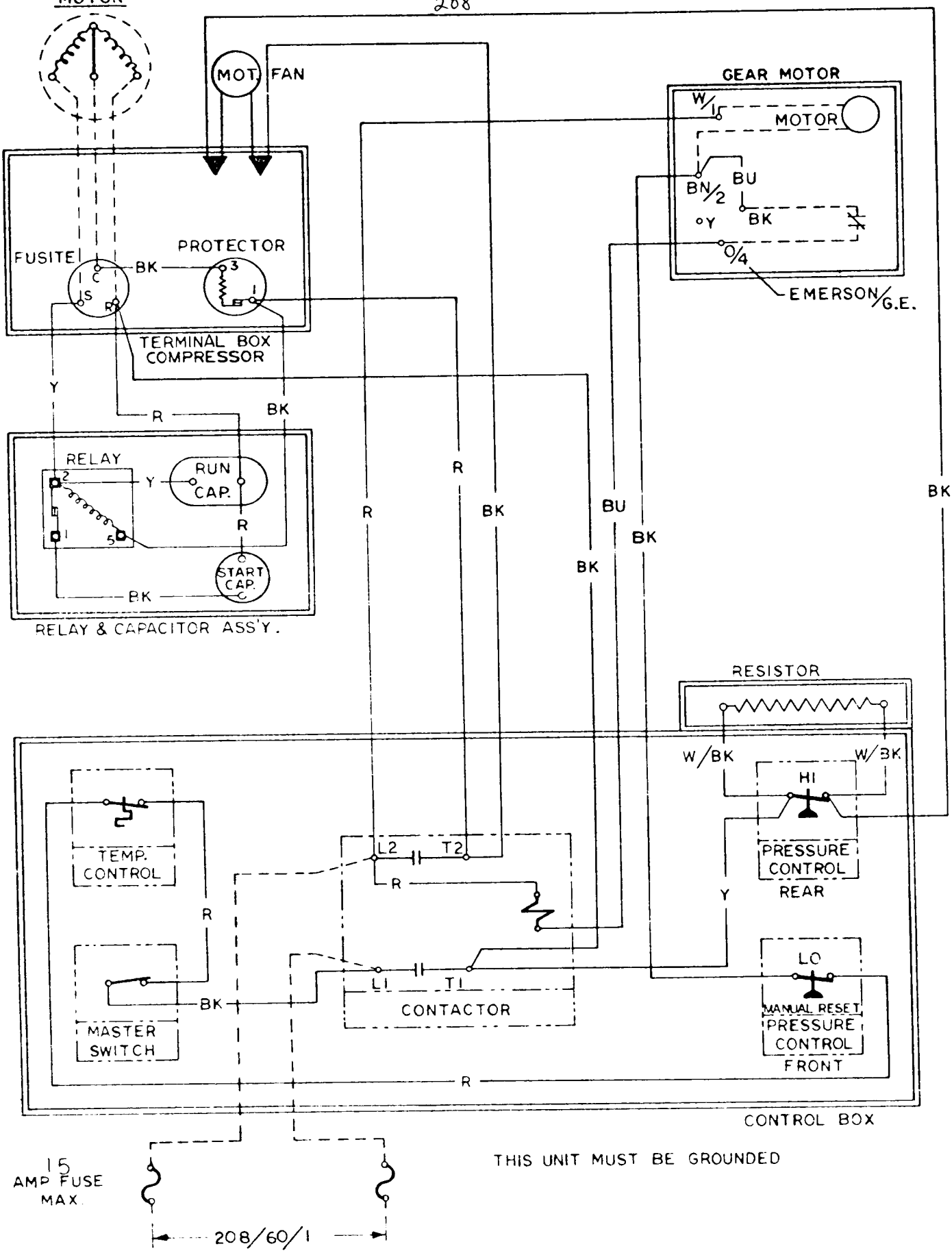
COMPRESSOR MOTOR
MOT.
FAN
GEAR MOTOR
W/1
MOTOR
BN/2
BU
Y
BK
O/4
EMERSON/G.E.
FUSITE
PROTECTOR
C
S
R
BK
3
1
TERMINAL BOX COMPRESSOR
Y
R
BK
RELAY
2
Y
RUN CAP.
1
5
R
START CAP.
BK
RELAY & CAPACITOR ASS'Y.
R
BK
BU
BK
BK
BK
RESISTOR
W/BK
W/BK
HI
PRESSURE CONTROL
REAR
Y
LO
MANUAL RESET
PRESSURE CONTROL
FRONT
TEMP. CONTROL
R
L2
T2
R
L1
T1
CONTACTOR
BK
MASTER SWITCH
R
CONTROL BOX
15 AMP FUSE MAX.
208/60/1
THIS UNIT MUST BE GROUNDED

A23455-007
REV A

WATER COOLED

208/60/1

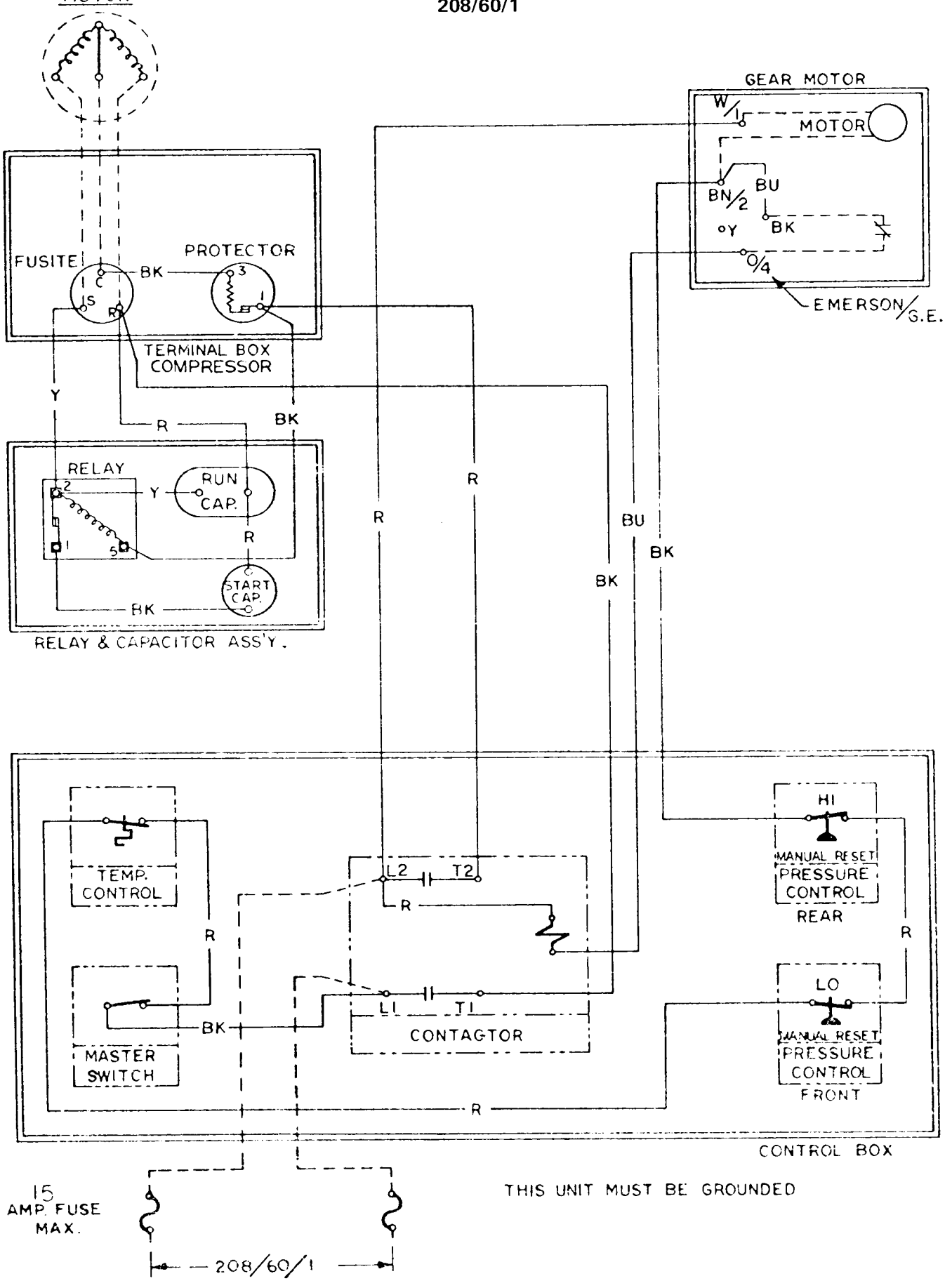

SERVICE ANALYSIS

SYMPTOM	POSSIBLE CAUSE	CORRECTION
Unit will not run	Blown Fuse	Replace fuse and check for cause of blown fuse.
	Thermostat set too high	Adjust thermostat. 35° cut-out and 45° cut-in.
	Loose electrical connection	Check wiring.
	Switch in OFF position	Turn switch to ON.
	Inoperative master switch	Replace switch.
Compressor cycles intermittently	Low voltage	Check for overloading.
	Dirty Condenser	Clean.
	Air circulation blocked	Move unit to correct
	Inoperative condenser motor	Replace.
	Non-condensable gases in system	Purge off.
Making wet ice	Surrounding air temperature	Correct or move unit to cooler location.
	Under or over-charge of refrigerant	Recharge with the proper amount.
	High water level in water reservoir	Lower to 1/4 inch below overflow pipe.
	Faulty compressor	Repair or replace.
Low ice production	Loss of refrigerant, under or over-charge of refrigerant.	Check and recharge with proper amount of refrigerant.
	Dirty or plugged condenser	Clean condenser
	Low water level in water reservoir	Adjust to 1/4 inch below overflow pipe.
	Partial restriction in capillary tube or drier	Moisture in system. Overcharge of oil in System. Remove charge and drier. Replace and recharge system.
	Inlet water strainer partially plugged.	Remove screen and clean.
	Corroded or stained worm shaft due to water condition.	Remove worm shaft and clean.
Machine runs but makes no ice	Loss or under-charge of refrigerant	Check for leaks and recharge
	Drive gearmotor or drive coupling stripped.	Check. Repair and/or replace.
	Water not entering freezing chamber	Plugged strainer or supply line. Check and clean. Air lock in gravity feed line. Check and remove air lock.
	Moisture in system	Check and remove charge and drier.
	Water seal leaking	Replace seal
	Water supply to unit off	Restore water supply to icemaker.

SYMPTOM	POSSIBLE CAUSE	CORRECTION
Water Leaks ·	Defective water seal Gravity feed line leaking "O" ring in spout casting leaking. Storage bin drain & connecting fittings leaking. Water level in reservoir too high	Replace Check hose clamps Remove spout casting and install new "O" ring. Check and repair. Adjust to 1/4 inch below overflow pipe
Excessive noise or chattering	Mineral or scale deposit on auger and inner freezing chamber walls. Low suction Intermittent water supply Water level in reservoir too low. Gearmotor loose on frame Gearmotor end-play or worn bearings.	Remove and manually polish auger, polish inner chamber walls of freezer barrel. For lighter concentrations use Scotsman Ice Machine Cleaner periodically. Add gas to raise suction pressure. Check & clean water strainer. Check gravity feed line for air lock. Remove air lock. Adjust to 1/4 inch below overflow pipe. Tighten. Repair or replace.
Machine continues to run with full storage bin	Storage bin thermostat not properly set.	Reset or replace. 35° cut-out, 45° cut-in Check operation with handful of ice.
Gearmotor noise	Low on oil	Remove case cover to check for proper oil level. Top of gears should be covered. Use Sun Oil Co. Prestige 50 EP.

MAINTENANCE INSTRUCTIONS – FLAKERS

THE FOLLOWING MAINTENANCE SHOULD BE SCHEDULED THREE TIMES PER YEAR ON ALL SCOTSMAN MODULAR FLAKERS. CALL YOUR AUTHORIZED SCOTSMAN SERVICE DEPARTMENT.

1. Check and clean water strainers and float valve. Depress float valve to insure full stream of water.
2. Check water level and machine level, keep water level below overflow, but as high as possible and still not run out of spout opening with machine off. Water droplets come out of spout with ice at all times. Adjust as required.
3. Clean reservoir and interior of freezer using SCOTSMAN Ice Machine Cleaner.
   If machine has been cleaned regularly and no problems such as dry ice or chatter are noticed, clean as per the following instructions:
   a. Set main switch to OFF.
   b. Remove all ice from storage bin.
   c. Turn off water supply or block float. Drain reservoir by disconnecting tube between reservoir and freezer. After draining, reconnect tubing.
   d. Set main switch to ON and pour cleaning solution into reservoir. Do not fill above overflow tube.
      Use 6 oz. of Scotsman cleaner and 1-1/2 qts. hot water.
   e. Continue to make ice on solution until the solution is used up and reservoir is empty.
   f. Set main switch to OFF Remove overflow tube, wash and rinse reservoir, replace overflow tube, turn water on or remove float block.
   g. Turn MAIN SWITCH to ON. Let unit run for at least (15) minutes to flush out any cleaning fluid. Check ice for acid taste – run until ice tastes sweet.
   h. Turn MAIN SWITCH to OFF. Add hot water to ice bin, using the melt water, thoroughly wash and rinse all surfaces within the storage bin.
   i. Turn MAIN SWITCH to ON. Replace Service Door. Unit is ready for normal operation.

NOTE: Cleaning requirements vary according to local water conditions. Visual inspection of the auger before and after cleaning will indicate best procedure to be followed in local areas.

4. Check high and low side pressures. On air-cooled models head pressures range between 130 and 145 PSI. Suction pressure should be above 12 PSI and will range up to 15 PSI depending upon water and ambient temperatures.
5. Check gear motor operation. Normal running temperatures are in the area of 160° Fahrenheit, which is hot to the touch.
6. Check top bearing of freezing tube. Remove retainer ring around edge of stamped brass cap. If moisture is around bearing, wipe up and remove grease. Add new grease. Use Beacon No. 325. Replace cap and retainer ring.
7. Clean air-cooled condenser. Inform customer to clean frequently. Always shut off machine when cleaning.
8. Oil condenser fan motor when possible.
9. Check for refrigerant leaks and proper frost line. Should frost out of accumulator at least one-half way to compressor, and in some areas back to service valve.
10. Check for water leaks. Tighten drain line connections. Run water down bin drain line to make sure it is open.
11. Check quality of ice. Ice should be wet when formed, but will cure rapidly to normal hardness in bin.
12. Check thermostat and *pressure plate cut off in spout. Micro switch cuts off only compressor. Bin thermostat should be set at 10 ° differential 35° cut out, 45° cut in.

* Safety pressure switch not incorporated on all models.

FREEZER GEARMOTOR

Model MF5 is equipped with a 1/4 horsepower direct drive gearmotor. A speed sensing switch mounted within the motor of the gear unit will open and stop the compressor when the RPM of the gearmotor is less than 900. At 1200 RPM it will close, starting the compressor.

In an actual operation any condition that may cause excessively hard ice and overloads within the freezer assembly such as water interruptions, cold ambients, etc. is transmitted to the gearmotor reducing it's speed. When gearmotor slows down to approximately 900 RPM the speed sensing switch opens the electrical circuit to the compressor. The compressor stops and no more ice is produced. Meanwhile the gearmotor continues to run, clearing the overload condition and gradually resumes full speed. At 1200 RPM gearmotor speed sensing switch closes compressor circuit causing the normal icemaking process to begin once more.

Any freeze up possibility is thereby automatically cleared out by the gearmotor.

TO REPLACE:

1. Remove top, front and side panels.
2. Shut off water supply and electrical power to unit.
3. Remove the electrical leads from the motor to the control box.
4. Remove slip nut attaching ice discharge tube to freezer spout casting.
5. Next remove 3 bolts securing base adapter to gearmotor cover and the 4 bolts holding the gearmotor bracket to the cabinet base.
6. Lift freezer and adapter assembly off gearmotor and pull gearmotor and mounting bracket out of cabinet.

FREEZER ASSEMBLY

TO REPLACE:

1. To remove freezer first remove cabinet top, front and side panels.
2. Shut off water supply and disconnect electrical power to unit.
3. Drain reservoir and freezer of water by removing tygon tubing entering base of freezer.
4. Remove slip nut attaching ice discharge tube to freezer spout casting.
5. Purge off refrigerant and disconnect suction line from compressor. Disconnect capillary line at drier. Cap off all lines so no moisture can enter system.
6. Remove the 3 bolts securing freezer base adapater to top of gear motor cover.
7. Freezer assembly now can be lifted off gear motor and out of cabinet.
8. To re-install reverse procedure. Refer to section "Specifications" for proper refrigerant charge and to page 8 for Head and Back pressure settings.

FREEZER WORM SHAFT (AUGER)

TO REPLACE:

1. Disconnect electrical supply and shut off water to unit.
2. Remove top and front panel of cabinet.
3. Drain reservoir and freezer of water by removing tygon tubing entering base of freezer.
4. Next remove slip nut attaching ice discharge tube to freezer spout casting and insulation covering top of freezer chamber.
5. Remove the 2 bolts attaching the freezer spout casting to the spout bracket and remove spout casting. Also remove bracket by removing the stainless steel screw which secures the bracket to the freezer chamber.
6. By lifting up on the freezer cap pull ring, the complete worm shaft and bearing retainer can be removed from freezer chamber. NOTE: Top half of water seal is attached to the lower end of the worm shaft.

FREEZER ASSEMBLY TOP BEARING

TO REPLACE:

1. Follow steps 1 thru 6, freezer worm shaft removal.
2. To remove bearing and retainer from worm shaft, first remove retaining ring in top of bearing retainer.
3. Remove freezer cap and pull ring from bearing retainer.
4. Unscrew cap screw holding shaft to inner race of bearing and pull worm shaft free from bearing and retainer.
5. When replacing with a new bearing add new grease (Beacon No. 325) to top of bearing.

FREEZER ASSEMBLY BOTTOM BEARING AND WATER SEAL

TO REPLACE:

1. To replace, follow steps 1 through 6 under Worm Shaft Removal.
2. Remove 3 bolts holding freezer to mounting adapter.
3. Lift freezer off adapter just high enough to allow bottom bearing and bottom half of water seal to be removed from bottom of freezer tube.
4. Lightly grease bottom half of new water seal and insert face up approximately 1/2" in bottom of freezer tube.
5. Insert bottom bearing in bottom of freezer tube, force approximately 1/8" past bottom tube end. This will allow the positioning ring on adaptor to properly position freezer tube when tightening up the three mounting bolts.
6. After securing mounting bolts, put new top half of water seal on worm shaft the same way as the old seal was removed. When reassembling, put a small amount of Vaseline on shaft end. This will allow shaft to slide smoothly through rubber bottom half of water seal without tearing it.
7. Carefully insert worm shaft assembly in freezer tube and into spline coupling on bottom.
8. Replace spout casting, screws, insulation pieces and unit is ready to resume operation.

BIN THERMOSTAT:

Thermostat control body is located in electrical control box. The thermostat sensing tube is threaded into the ice storage bin where it automatically stops the icemaker when ice bin fills to sensing tube level and restarts icemaker when ice is removed. Factory settings are 35° cut out, 45° cut in.

Altitude correction begins at 2,000 feet, cut in and cut out screws should be adjusted equally, not more than 1/4 turn at a time.

IMPORTANT – Refer to page 11 for proper location of bin control capillary.

TO REPLACE:

1. Disconnect electrical supply.
2. Remove bin thermostat capillary tube from bin location.
3. Remove front panel and control box cover.
4. Disconnect two spade type electrical leads.
5. Loosen two screws in control mounting bracket.
6. Replace with new control and reassemble in reverse of above.
7. CAUTION: Always check new control power element charge before installation to assure receiving an operative control. A handful of ice on bulb will register on audible 'click' at cut off.

CONTACTOR

The electrical contactor is used to carry the compressor line current. It is wired so that any of the controls in the pilot circuit such as the bin thermostat, low and high pressure controls, etc. will cause the contactor holding coil to be de-energized when the control contact open, thereby, breaking the circuit to the compressor through the contactor points.

HEAD PRESSURE CONTROL (WATER COOLED MODELS)

The head pressure safety control is factory preset at 250 lb. PSIG. This is a manual reset control with an adjustment screw for raising or lowering the cut out pressure. The control is placed in the system as a safety precaution, to terminate power to the unit should loss of water occur to the water cooled condenser.

HEAD PRESSURE CONTROL (AIR COOLED MODELS)

A reverse acting high pressure control is used and connected electrically to the fan motor. As the head pressure drops below the cut-out setting, the control opens allowing the current to pass entirely through a resistor in the line feeding the fan motor. This slows the shaded pole motor down to approximately 1/4 speed thus increasing the head pressure. When the control cuts in the full voltage again flows directly to the fan motor allowing it to operate at full speed. This feature protects unit against low ambient conditions. Cut out and cut in pressures are normally set at 95 lb. cutout and 130 lb. cut in.

LOW PRESSURE CONTROL

Control is located in the control box. Factory settings cut-out at 5 PSI. Safety device to cutoff machine and keep it off in case of water supply failure, loss of refrigerant, low ambient temperature or other causes of low pressure. This is a manual reset control.

WATER REGULATING VALVE (Water Cooled Models Only)

The Water Regulating Valve is designed to maintain a constant head pressure by regulating the amount of incoming water flow through the water cooled condenser. This valve is operated by high side pressure and may be adjusted by the adjusting screw on top of the valve to raise or lower the operating head pressure.

TO REPLACE:

1. Shut off water supply to machine and disconnect electrical power.
2. Disconnect old valve from water supply line and install new valve.
   NOTE: Be sure arrow on side of valve points in direction of water flow.
3. Purge off refrigerant and disconnect valve capillary line from high side fitting and immediately attach capillary from new valve.
4. Recharge system. Refer to page 8 for proper refrigerant charge and head and back pressure settings.

WATER RESERVOIR

A water level is maintained in the water reservoir by a float operated valve. Water is piped from the water reservoir to the freezing chamber by a gravity feed line maintaining an equal water level.

The water reservoir is equipped with a 2 inch air gap to prevent back siphoning and meet all health codes.

The water level in the water reservoir is adjusted by bending float arm. The water level should be set 1/4 inch below the overflow standpipe.

A water strainer must be installed in the supply line. Use strainer sent with machine.

TO REPLACE:

1. Remove cabinet top and side panel.
2. Turn off water supply and drain reservoir.
3. Remove 1/4 inch inlet water line.
4. Remove plastic feed line to freezer.
5. Remove two screws holding reservoir bracket to wall.
6. Lift out reservoir.
7. *To replace, reverse procedure.*

FINAL ASSEMBLY
(Air Cooled)

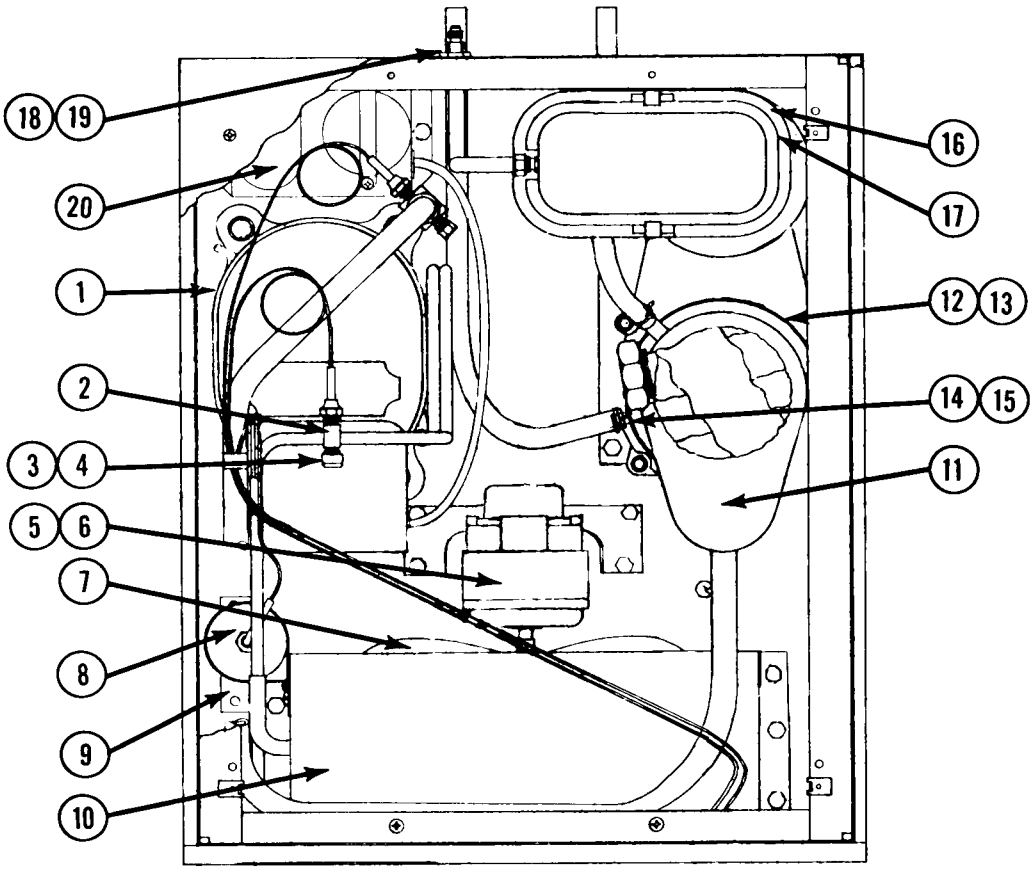

ITEM NO.	PART NO.	DESCRIPTION	
1.	18-2300-2	Compressor 230/60/1	(See Page 28
	18-2300-3	Compressor 208-220/60/3	For Component
	18-2300-7	Compressor 208/60/1	Breakdown)
2.	A20578-1	Adapter	
3.	16-0563-00	Brass Cup	
4.	16-0560-00	Valve Core	
5.	18-0597-00	Fan Motor & Mount	
6.	A23864-1	Fan Motor 230/60/1	
	A23864-3	Fan Motor 208-220/60/3	208/60/1
7.	18-0787-00	Fan Blade	
8.	02-0544-00	Drier	
9.	18-0397-01	Condenser	
10.	A17901-001	Shroud	
11.	A23544-001	Freezer Ass'y	
12.	A21290-000	Drip Pan Ass'y	
13.	13-0704-00	Gasket	
14.	A21002-21	Tubing	
15.	02-534-00	Clamp	
16.	A23410-009	Reservoir Ass'y (See Page 30 For Component Breakdown)	
17.	A16012-00	Reservoir Cover	
18.	03-1394-00	Nut	
19.	03-1409-04	Washer	
20.	18-1900-31	Relay & Capacitor Assy. 230/60/1	(See page 28 For
	18-1900-34	Relay & Capacitor Assy. 208/60/1	Component Breakdown)

FINAL ASSEMBLY
(Water Cooled)

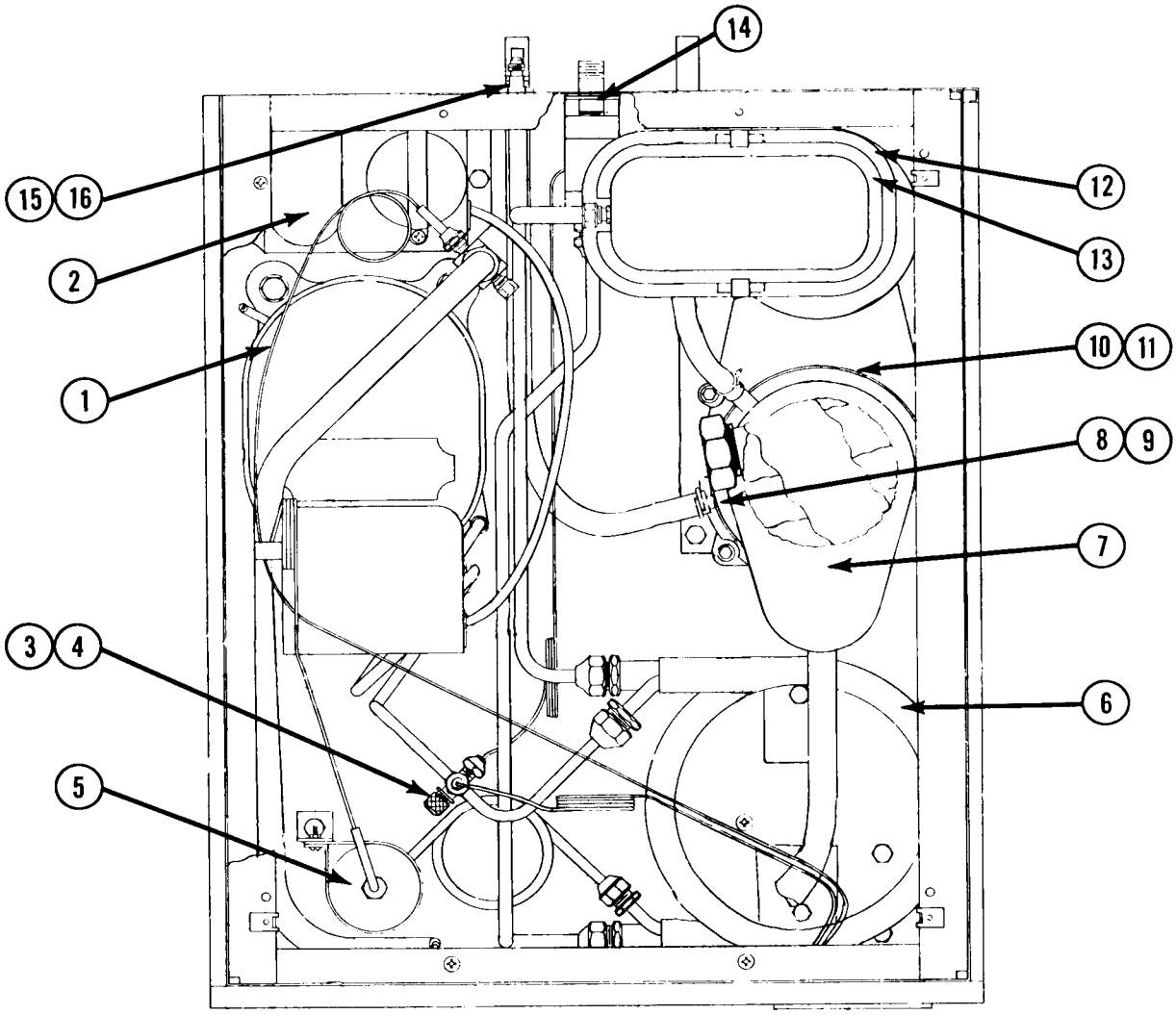

ITEM NO.	PART NO.	DESCRIPTION	
1.	18-2300-2	Compressor 230/60/1	See Page 28
	18-2300-3	Compressor 208-220/60/3	For Component
	18-2300-7	Compressor 208/60/1	Breakdown)
2.	18-1900-31	Relay & Capacitor Assy 230/60/1	See Page 28 For
	18-1900-34	Relay & Capacitor Assy 208/60/1	Component
3.	16-0563-00	Brass Cap	Breakdown
4.	16-0560-00	Valve Core	
5.	02-0544-00	Drier	
6.	18-3306-01	Condenser	
7.	A-23544-001	Freezer Assy (See Page 26 For Component Breakdown)	
8.	A-21002-021	Tubing	
9.	02-0534-00	Clamp	
10.	A21290-000	Drip Pan Assy.	
11.	13-0704-00	Gasket	
12.	A23410-009	Reservoir Assy. (See Page 30 For Component Breakdown)	
13.	A16012-000	Reservoir Cover	
14.	11-0198-00	Water Regulating Valve	
15.	03-1394-00	Nut	
16.	03-1409-04	Washer	

FREEZER ASSEMBLY - EXPLODED VIEW - MODEL — MF5

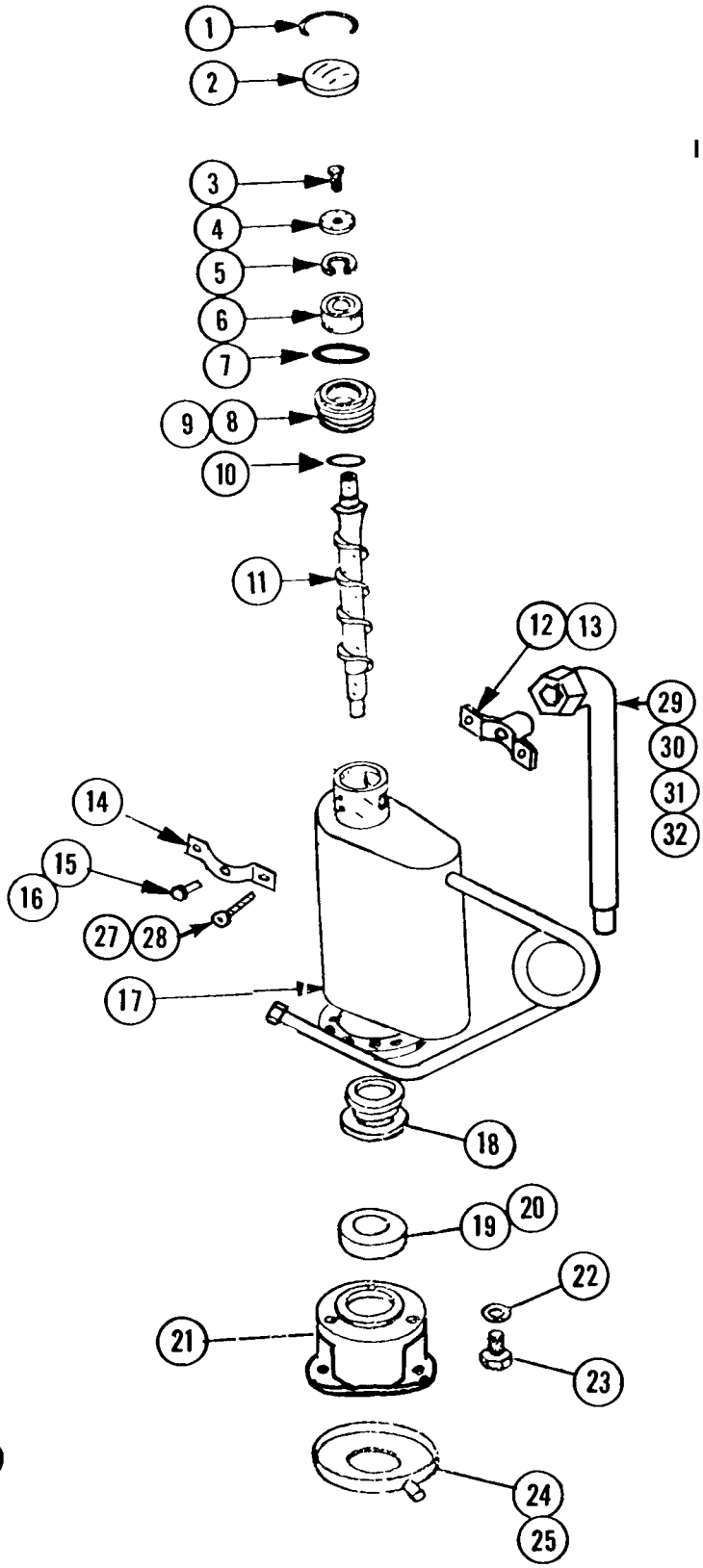

ITEM NO.	PART NO.	DESCRIPTION
1.	A-8582	Cap Hook
2.	A-8581	Cap
3.	3-1405-36	Screw
4.	A-6273	Washer
5.	~~3712~~	Retaining Ring 3-1558-4
6.	2-646	Bearing
7.	13-617-20	"O" Ring (Retainer to Cap)
8.	A-23465-1	Bearing Retainer
9.	13-617-40	"O" Ring (Retainer to Freezer)
10.	13-617-15	"O" Ring (Retainer to Auger)
11.	2-2048-1	Auger
12.	A-23554-1	Spout/Breaker
13.	2-1437	Gasket
14.	A-23515-1	Spout Bracket
15.	3-1506-1	Screw
16.	3-1409-14	Washer
17.	A-23559-1	Freezer W/Heat Exch.
18.	2-929	Water Seal
19.	2-619	Lower Bearing
20.	A-10591	Bearing Retainer
21.	2-1629	Base Adapter
22.	3-1408-3	Washer (4)
23.	3-1405-41	Screw (4)
24.	A-21290	Drip Pan Assy.
25.	13-704	Gasket
26.	15-573-1	Coupling
27.	3-1403-69	Screw (2)
28.	3-1417-7	Washer (2)
29.	2-2050-1	Disch. Tube
30.	A-24335-1	Slip Nut
31.	13-617-39	"O" Ring
32.	A-24341-3	Tube Cover

* A-23544-1 Freezer Assy. Complete (Less items 24, 25, 26,. 29, 30, 31, & 32)

GEAR MOTOR ASSEMBLY
1/4 HP
OUTPUT SHAFT TURNS
AT 12 RPM

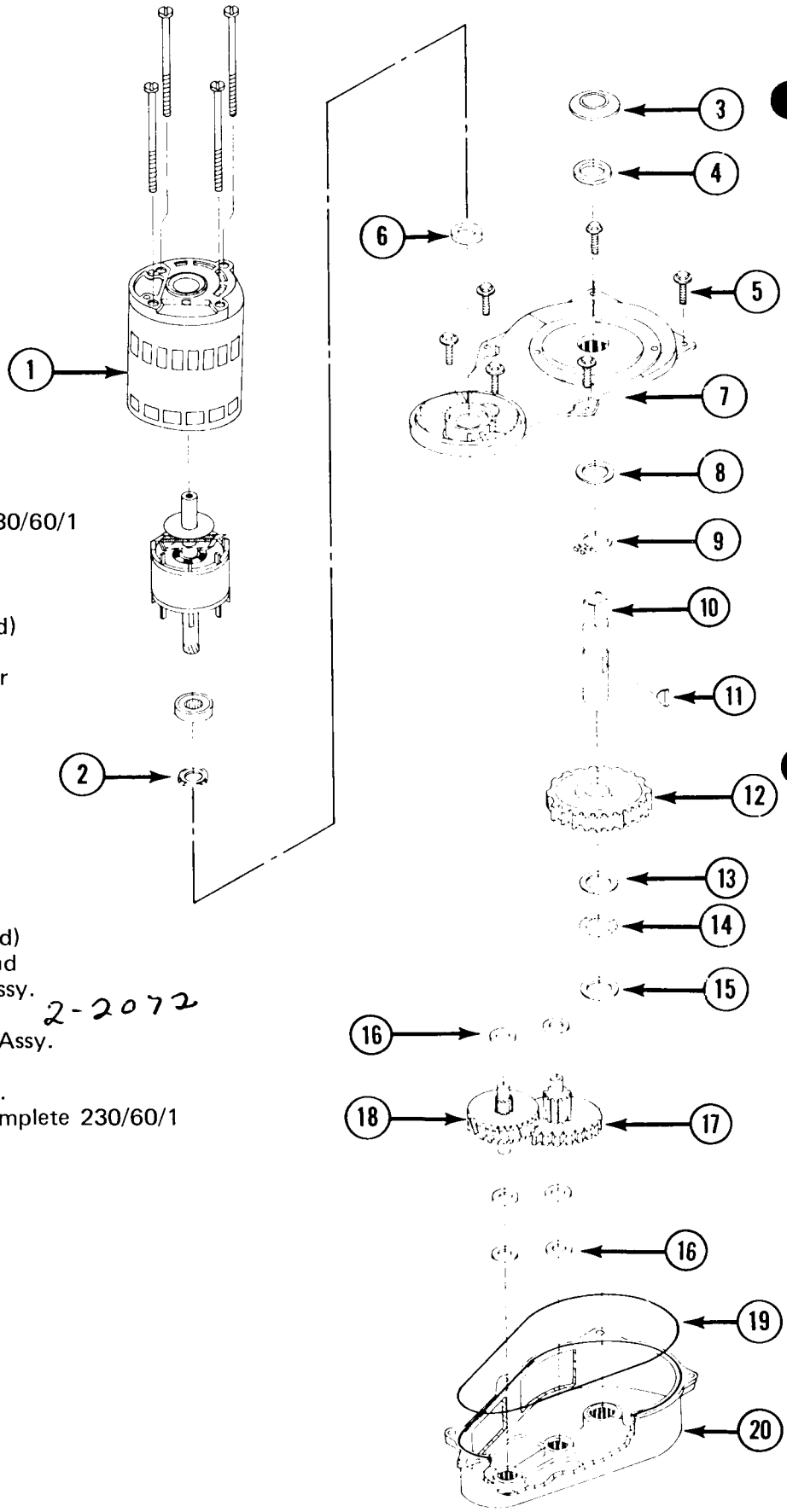

ITEM	PART NO.	DESCRIPTION
1.	12-1741-02	Drive Motor 230/60/1
2.	03-1426-00	Spring Washer
3.	13-0709-02	Water Shed
4.	02-1607-00	Oil Seal
5.	03-1251-01	Screws (6 Req'd)
6.	02-1606-00	Oil Seal
7.	A22200-000	Gear Case Cover Assembly
8.	02-1681-00	Thrust Race
9.	03-1363-00	Retaining Ring
10.	02-1652-00	Output Shaft
11.	03-1364-00	Key
12.	02-1653-00	Output Gear
13.	02-1681-00	Thrust Race
14.	02-1680-00	Bearing
15.	02-1679-00	Thrust Race
16.	03-1408-24	Washer (6 Req'd)
(17.)	~~02-1604-00~~	Second Gear and Third Pinion Assy.
(18)	~~02-1603-00~~	First Gear and Second Pinion Assy. 2-2072
19.	13-0617-38	"O" Ring
20.	A22199-000	Gear Case Assy.
	A24317-22	Gear Motor Complete 230/60/1

MOTOR COMPRESSOR

AIR AND WATER COOLED

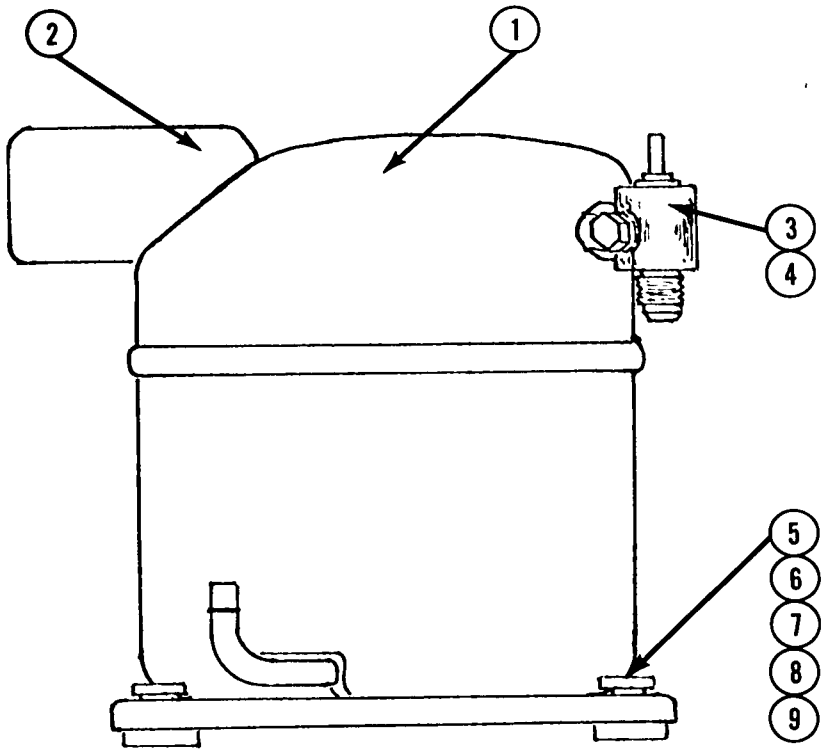

ITEM NO.	PART NO.	DESCRIPTION
1.	18-2300-2	Compressor 230/60/1
	18-2300-3	Compressor 208-240/60/3
	18-2300-7	Compressor 208/60/1
2.	18-2300-25	Overload 230/60/1
	18-2300-32	Overload 208/60/1
3.	18-2300-28	Rotalock Valve
4.	18-2300-29	Valve Seal
5.	18-2300-27	Mounting Grommet (4)
6.	18-2300-26	Mounting Sleeve (4)
7.	3-1405-40	Screw (4)
8.	3-1417-12	Washer (4)
9.	3-1408-29	Washer (4)

BELOW LISTED ITEMS NOT SHOWN

18-1900-31	Relay & Capacitor Assy (230/60/1)
18-1901-15	Start Capacitor
18-1902-29	Run Capacitor
18-1903-29	Relay

18-1900-34	Relay & Capacitor Assy (208/60/1)
18-1901-34	Start Capacitor
18-1902-34	Run Capacitor
18-1903-34	Relay

CONTROL BOX ASSEMBLY

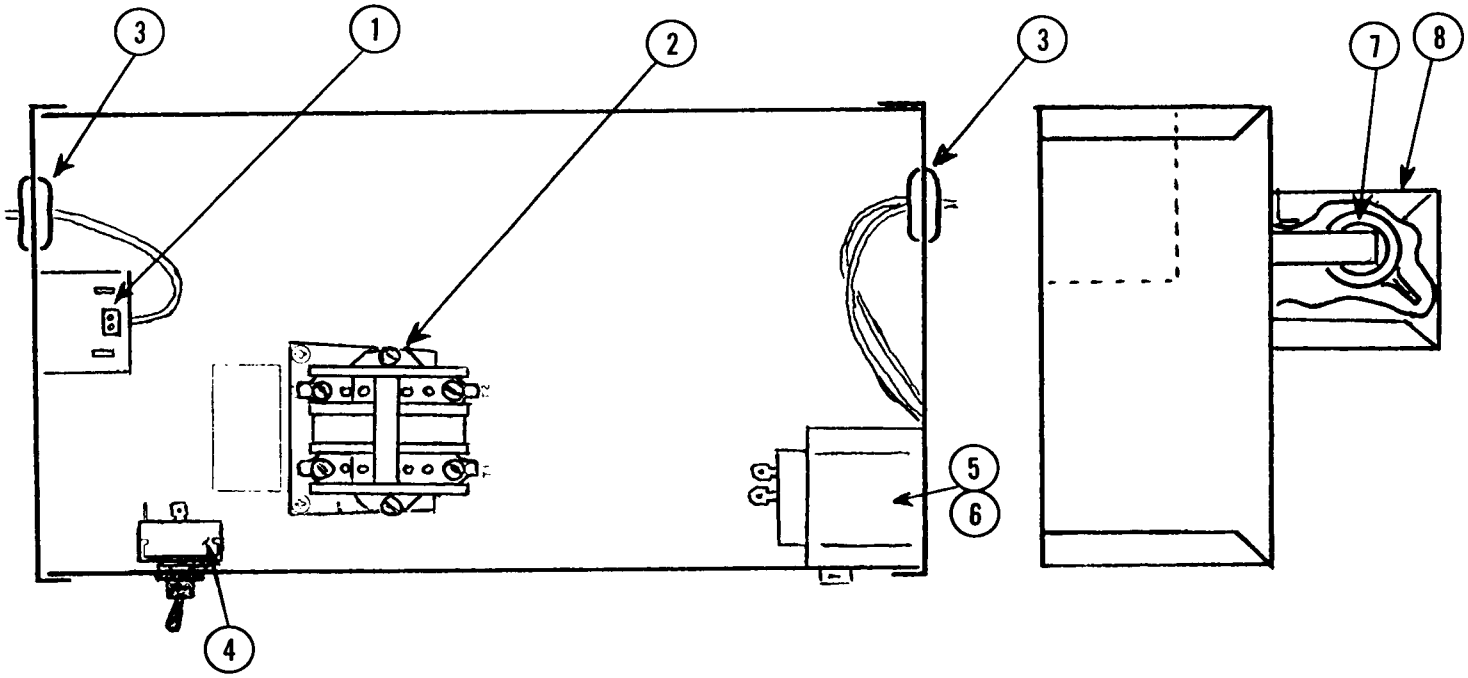

ITEM	PART NO.	DESCRIPTION
1.	11-354	Bin Control
2.	12-820-2	Contactor
3.	13-557	Grommet (3)
4.	12-426-1	Switch
5.	11-358	Lo Pressure Control
6.	11-387-1	Hi Pressure Control (Air Cooled Only)
	11-388-1	Hi Pressure Control (Water Cooled Only)
7.	12-481	Resistor (Air Cooled Only)
8.	A14369	Cover (Air Cooled)

RESERVOIR ASSEMBLY

ITEM NO.	PART NO.	NAME
1.	A-16012	Reservoir Cover
2.	2-1259	Valve Pin
3.	2-1320	Deflector
4.	S-8770	Inlet Valve
5.	3-1001	Rivet
6.	A-5777	Valve Seat Holder
7.	S-6947	Valve Seat
8.	3-1394	Nut
9.	A-12869	Bracket
10.	S-6715	Stand Pipe
11.	S-8138	Inlet Valve Ass'y
12.	A-23533-1	Reservoir Body
13.	A-8055	Bracket Nut
14.	A-12067	Float and Arm Ass'y
15.	A-18418-1	Water Deflector
	A-23532-1	Complete-less cover

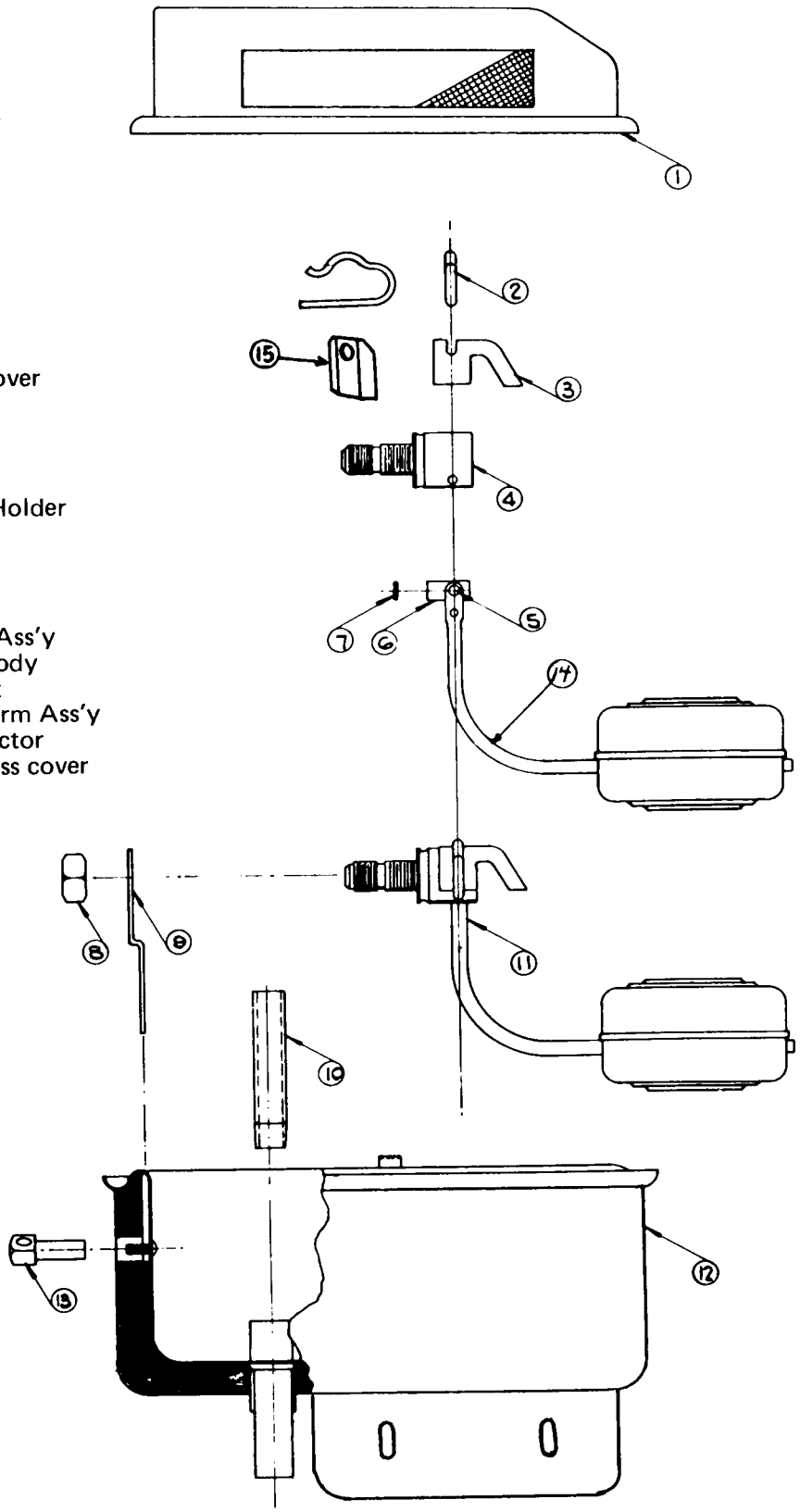

CABINET PARTS

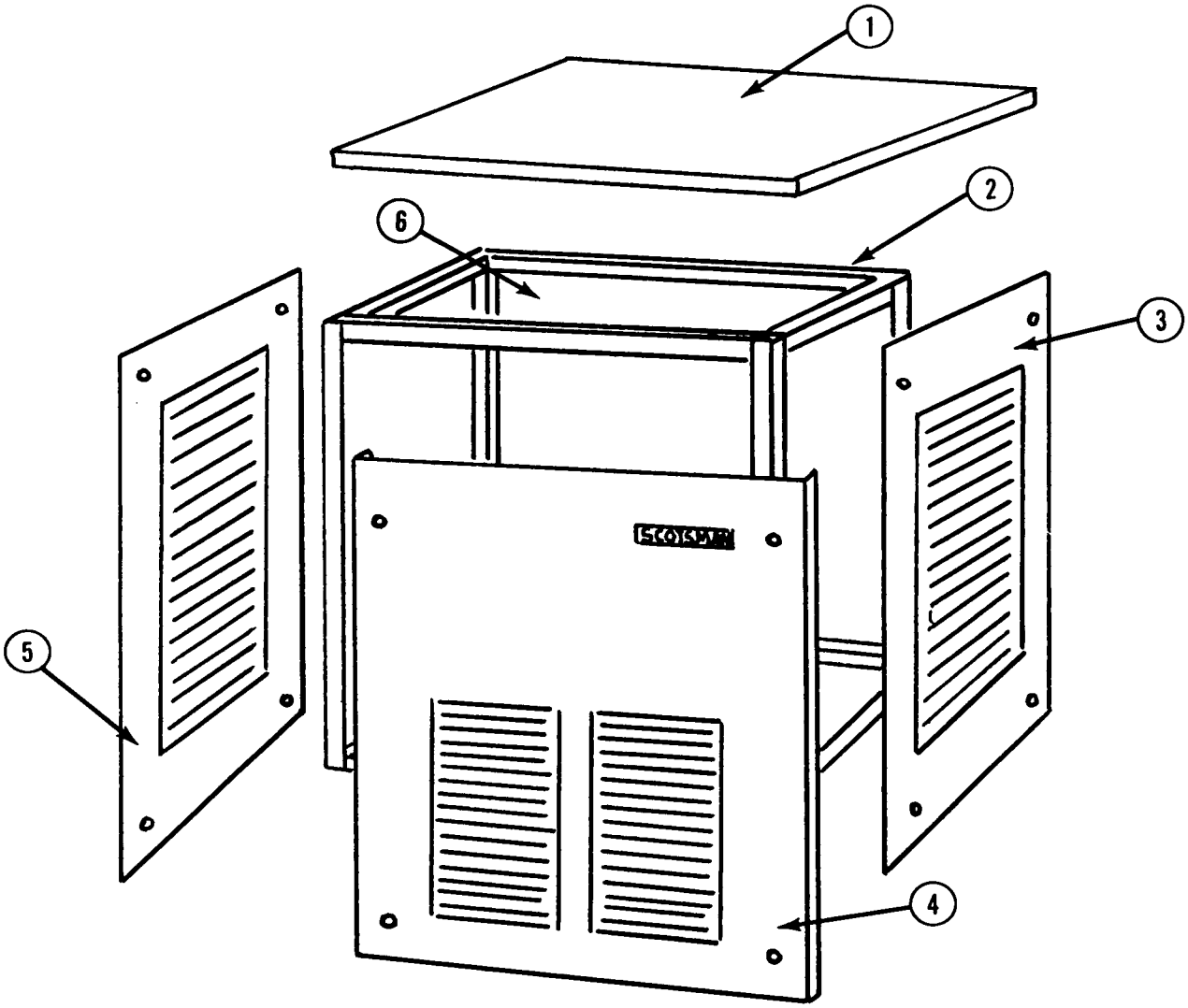

ITEM NO.	DESCRIPTION	ENAMEL	STAINLESS STEEL
1.	Panel Top	A24026-001	A-24026-002
2.	Cabinet Frame	A24025-001	A24025-001
3.	Panel, Right Side	A24029-001	A24029-002
4.	Panel, Front	A24027-001	A24027-002
5.	Panel, Left Side	A24029-001	A24029-002
6.	Panel, Rear	A24018-001	A24018-002
*	Mounting Screws	03-1419-09	03-1419-09
*	Speed Nut	03-1507-00	03-1507-00
*	Aerosol Paint (micromatte)	10-314-01	

* Items not Illustrated

FLAKED ICE TRANSPORT SYSTEM INSTALLATION INSTRUCTIONS

Kit No. KTMF-1 – 115 V. Application
Kit No. KTMF-2 – 230 V. Application

DIAGRAM 'A'

1. Attach ice discharge tube from ice transport kit to freezer spout. Route thru knock out in top panel of the flaker unit.
2. Attach ice discharge tube supplied with the flaker unit to threaded end of ice discharge tube installed above. This tube can be rotated in any direction to suit the specific application.
3. Ice Tube Recommendations:
   A. Ice Tube in 1" nominal size rigid P.V.C. Schedule 40 pipe. This may be purchased at any plumbing supply house.
   B. To make 90° or 45° changes of direction in ice tube use 90° elbow, Queen Products Part No. 02-2102-01. For 45° elbow cut above 90° elbow in two pieces.
   C. To make ice tube connections at ends of straight lengths or at ends of elbows use pipe union, Queen Products Part No. A24563-001. Use cement for P.V.C. pipe and fittings to glue union halves to ends of ice tube.
   D. Caution!! Inside diameter of assembled connections must be clear of any obstructions or burrs. Otherwise ice will not flow through tube!
   E. Maximum length of ice tube permitted is 10 ft. Maximum number of 90° elbows permitted is (3) three.
   F. Insulation for ice tube may be purchased from Queen Products Part No. 13-0279-00. Insulation may also be purchased from plumbing or refrigeration supply houses. Sample material is from:
      Rubatex Corporation
      Bedford, Virginia
      Sponge tubing 1-1/4" I.D. x 1/4" Wall
      Rubatex No. R-180-V
   G. Connection of ice tube to ice discharge tube to be made by swaging end of ice tube using hot air gun or hot water and secured with worm drive clamp as shown. Swage must be at least 1 inch long!
   H. For any deviation from these recommendations consult Queen Products Service Department before installation of KTMF Kit.

DIAGRAM 'B'

1. Fasten transformer box to rear panel of flaker unit as shown.
2. Fasten remote bin thermostat control box near ice storage area.
3. The two leads between remote bin thermostat control & transformer box to be 16 AWG, stranded, 1/32 insulation. This is a 24 VAC low voltage circuit and may be routed along ice transport tube.
4. Route wires provided with transformer box thru rear panel & to the main control box on flaker unit.
5. Lead from gear motor to be disconnected from pressure control terminal & joined with blue wire from transformer box by use of a wire nut.
6. Attach black wire from transformer box to vacated terminal on pressure control.
7. Attach white wire from transformer box to neutral side of power supply or on line opposite side of master switch for 230 volt applications.

DIAGRAM "A"

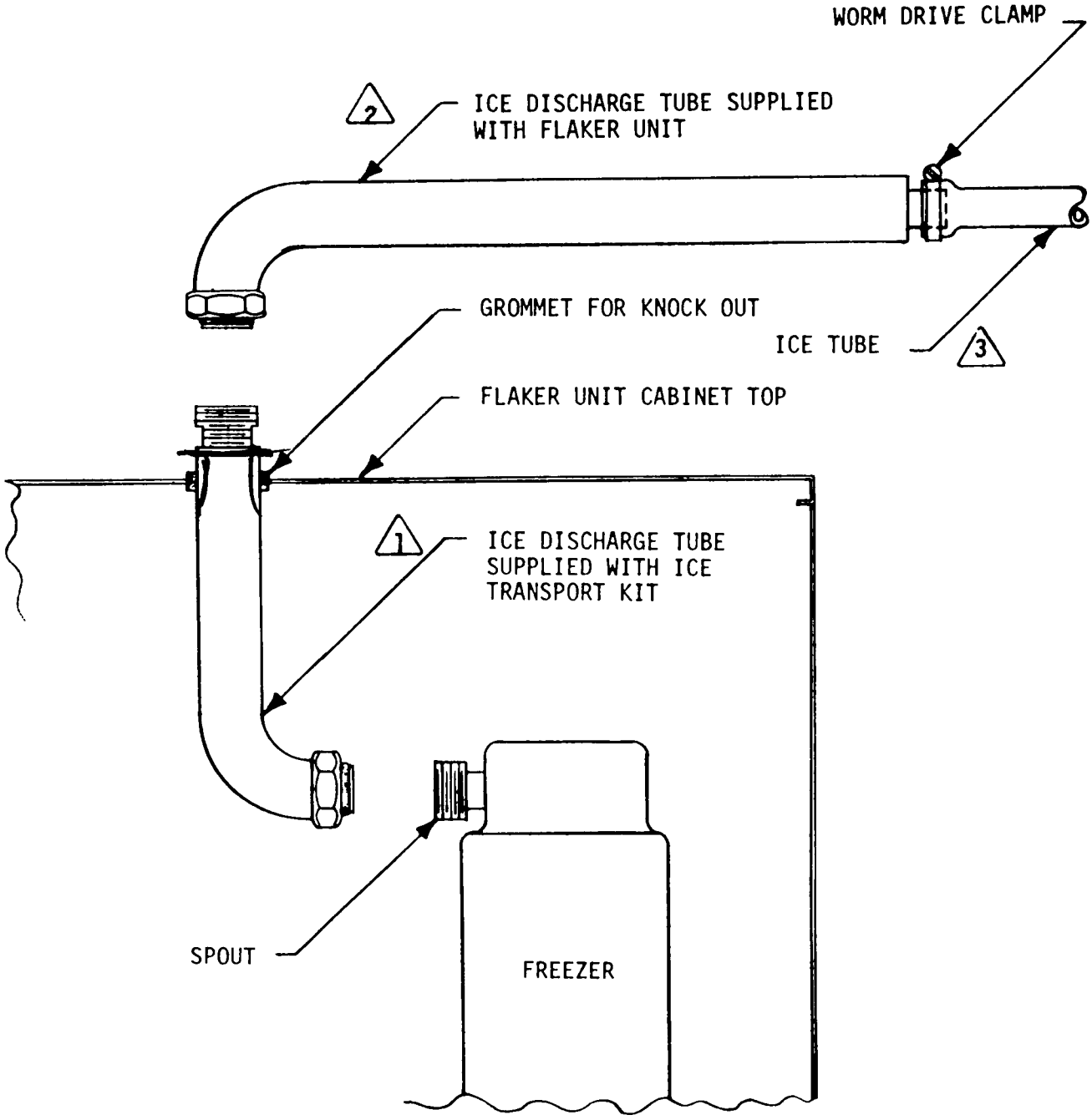
WORM DRIVE CLAMP
2
ICE DISCHARGE TUBE SUPPLIED WITH FLAKER UNIT
GROMMET FOR KNOCK OUT
ICE TUBE
3
FLAKER UNIT CABINET TOP
1
ICE DISCHARGE TUBE SUPPLIED WITH ICE TRANSPORT KIT
SPOUT
FREEZER

DIAGRAM "B"

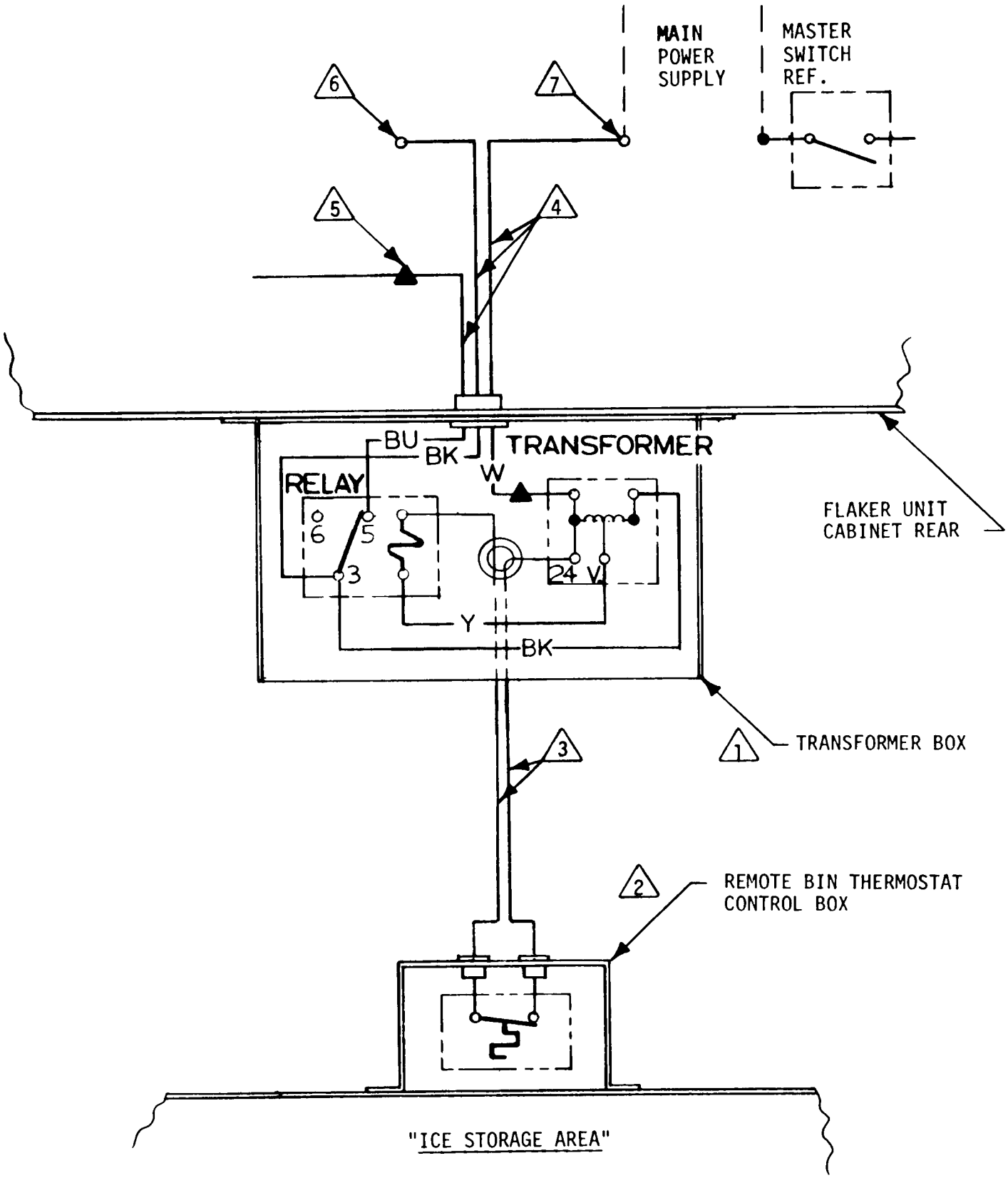
MAIN
POWER
SUPPLY
MASTER
SWITCH
REF.
6
7
5
4
BU
BK
TRANSFORMER
W
RELAY
6
5
3
24 V.
Y
BK
FLAKER UNIT
CABINET REAR
1
TRANSFORMER BOX
3
2
REMOTE BIN THERMOSTAT
CONTROL BOX
"ICE STORAGE AREA"

TABLE OF CONTENTS

Table of Contents 1
Photograph and Ice Making Capacity 2
Specifications and Dimensions 3
Description 4
Preparation for Installation 5
Installation 6
Installation Practices 7
Starting the machine 8
Refrigerant Charge 8
Final Check List 8
Refrigeration Cycle 9
Water Schematic 10
Ice Discharge Tube and Bin Thermostat Installation 11
Wiring Diagram-Air Cooled 230/60/1 12
Wiring Diagram-Water Cooled 230/60/1 13
Wiring Diagram-Air Cooled 208-220/60/3 14
Wiring Diagram-Water Cooled 208-220/60/3 15
Wiring Diagram-Air Cooled 208/60/1 16
Wiring Diagram-Water Cooled 208/60/1 17
Service Analysis 18-19
Maintenance Instructions 20
Service:
- Gear Motor 21
- Freezer Assembly 21
- Freezer Worm Shaft 21
- Freezer Assembly Top Bearing 22
- Freezer Assy. Bottom Bearing and Water Seal 22
- Bin Thermostat 22
- Contactor 22
- Head Pressure Control (Water Cooled) 23
- Head Pressure Control (Air Cooled) 23
- Low Pressure Control 23
- Water Regulating Valve (Water Cooled Models) 23
- Water Reservoir 23

Parts Breakdown:
- Chassis Assembly-Air Cooled 24
- Chassis Assembly-Water Cooled 25
- Freezer Assembly 26
- Gear Motor Assembly 27
- Compressor Assembly 28
- Control Box Assembly 29
- Reservoir Assembly 30
- Cabinet Assembly 31

Flaked Ice Transport System 32-34

THIS PAGE
INTENTIONALLY
LEFT BLANK

THIS PAGE
INTENTIONALLY
LEFT BLANK

SCOTSMAN

MODULAR FLAKER
MF5
SERIES
Continuous Flow

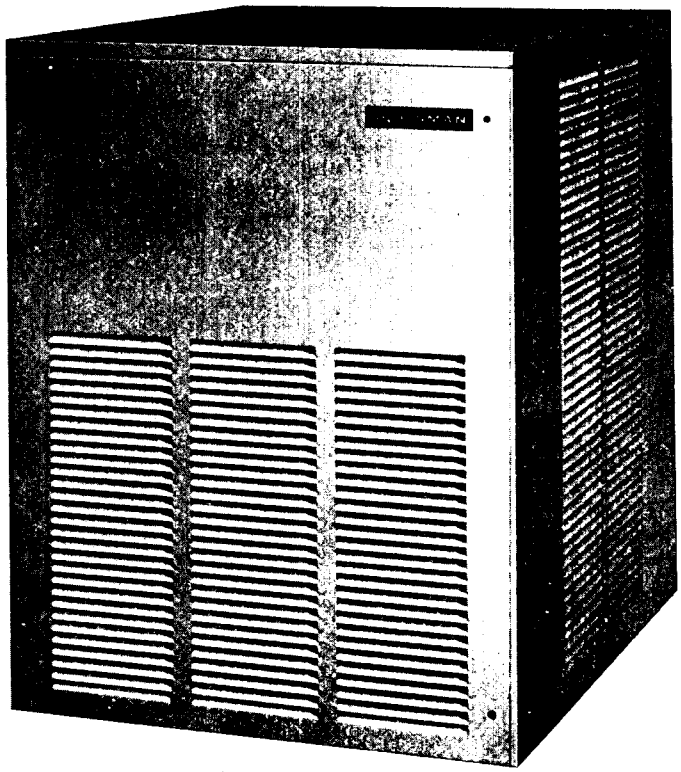

ice making capacity

Daily Ice Capacity is directly related to condenser air inlet temperature water temperature, and age of machine.

NOTE: To keep you SCOTSMAN MODULAR FLAKER performing at it's maximum capacity, it is necessary to perform periodic maintenance as outlined on page 22 of this manual.

MF5C SERIES SPECIFICATIONS:

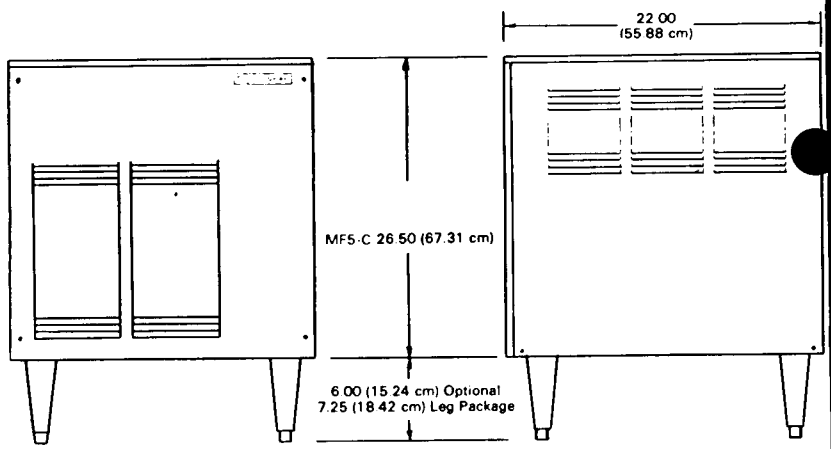

FRONT VIEW SIDE VIEW

MECHANICAL	MF5 AE	MF5 WE
Compressor (Copelaweld)	1 H.P.	1 H.P.
Gear Drive Motor	¼ H.P.	¼" H.P.
Gear Drive Motor Output	12.2 RPM	12.2 RPM
Condenser	Air	Water
Refrigerant Control	Capillary Tube	Capillary Tube
Refrigerant Charge R-12	31 oz.	28 oz.
ELECTRICAL		
Basic Electricals	230/60/1	230/60/1
Minimum Wire Size	2w 10g	2w 10g
Total Amperage	8.2	7.3
Compressor Amperage	6.2	5.7
Gear Drive Motor Amperage	1.6	1.6
*Condenser Motor Amperage	.22	
Basic Electricals	208-220/60/3	208-220/60/3
Minimum Wire Size	3w 10g	3w 10g
Total Amperage	6.1	5.4
Compressor Amperage	4.1	3.9
Gear Drive Motor Amperage	1.5	1.5
* Condenser Motor Amperage	.25	
Basic Electricals	208/60/1	208/60/1
Minimum Wire Size	2w 20g	2w 10g
Total Amperage	8.7	7.0
Compressor Amperage	6.4	5.2
Gear Drive Motor Amperage	1.8	1.8
*Condenser Motor Amperage	.22	
WATER		
Inlet Water Line (Freezer)	¼" Flare	¼" Flare
Inlet Water line (Condenser)	⅜" N.P.T.	⅜ N.P.T.
Drain Line	⅜" I.D.	⅜" I.D.
Drain Line-Water Cooled Condenser		⅜" O.D.
CABINET		
Width	21"	21"
Depth	22"	22"
Height	26.5"	26.5"
Weight	222 Lbs.	222 lbs.
Finish (P-Painted, SS-Stainless steel)	P/SS	P/SS

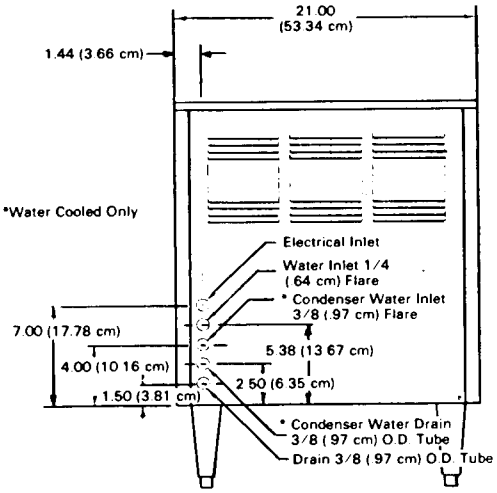

BACK VIEW

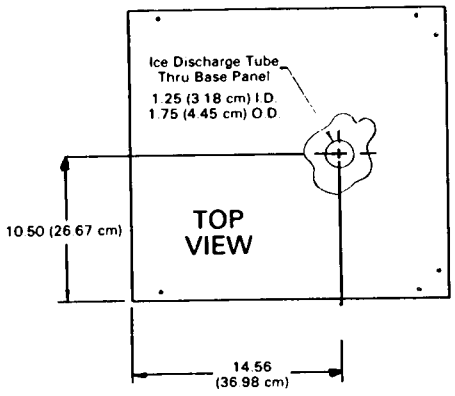

Storage Bin: See Page 5
Stainless Steel Lined

NOTE: Requires additional installation space for:
air ventilation - 4" right & left side
utility connections - 6" back side

*** NOTE: 2/UNIT**

DESCRIPTION

SCOTSMAN Modualr Flakers are designed for restaurants, super markets, soda fountains, hospitals, bakeries, fish markets, poultry stores, packing plants, etc. It is the finest Ice Maker on the market today. It will work 24 hours a day for you, or only as needed. It produces the highest quality ice available at any price.

SCOTSMAN Modular Flakers are easily installed requiring only standard water, drain and electrical connections.

ATTRACTIVE COMPACT CABINET. Sandlewood or stainless steel removable panels makes for easy access to mechanical parts.

SEALED REFRIGERATION SYSTEM. Provides quiet, efficient operation of the machine. Compressor motor is internally spring mounted for quiet operation. Compressor motor is covered by a full 5-Year Warranty.

HOW IT WORKS. An exclusive patented ice-making system, wherin water in the constant level float reservoir is fed to the bottom end of the freezing cylinder and turns to ice on the inside of this cylinder. Ice from the refrigerated walls of this cylinder is extruded past the ice breaker at the top of the cylinder through a side opening by means of a stainless steel auger driven by a gearmotor drive.

Model no. MF5 is a continuous flow type machine, and is manually started by an OFF and ON switch located inside the cabinet. Since the MF5 does not have its own attached bin, it is necessary to use an auxillary bin such as those listed below. A bin thermostat is mounted in each continuous flow type machine for the purpose of mounting control bulb from machine to bin.

USE WITH BIN MODEL ('S) B20, B40, B60, B80, B90, B500, B750, B1000, B1500

ACCESSORIES: BX83, BX85, BX87, BX15, BX25 KBTI, KBT4

INSTALLATION INSTRUCTIONS

The following installation instructions were written for use by a authorized tradesman only, not the user or customer. We suggest you call your local authorized Scotsman Service Agency for hook-up, start-up, and check out. He's listed under "Ice Making Machinery & Equipment" in your telephone book, yellow pages.

1. Select unit location prior to hook up of water drain and electrical in accordance with local and national codes. Minimum room temperatures is 50° Fahrenheit, maximum room temperature 100° Fahrenheit. On air cooled models, select well ventilated location. Minimum water temperature 40° F.

*2. Install bin for use with modular flaker in its permanent location following instructions included with the storage bin.

*3. Level bin with adjustable legs and wipe storage bin liner clean with damp cloth.

4. After uncrating modular flaker, remove front, side and top panels and inspect for any concealed damage. Notify carrier of any concealed damage claims.

5. Scotsman upright or vertical series bins have pre-punched holes in top covered by a rubber boot. To mount modular flaker on these bins, remove appropriate covers (spout and thermostat openings) then position flaker on bin top. Next, slide grommet on end of ice tube into place between flaker base and bin top. **Caution:** Make sure that grommet is not pinched or restricted in any way otherwise flaker will not operate properly, causing trip outs and overloads. Then install thermostat capillary and rubber grommet between flaker base and storage bin, attaching per drawing on page 13.

6. When using horizontal bins (B40, B60 etc.) and KBT-top, you have to drill both holes for ice spout and thermostat then install flaker as per above instructions.

7. Thru cabinet top, locate plastic reservoir. Check for proper water height - adjust if needed - locate level 1/4" below ice discharge opening.

8. Check motor compressor hold down nuts to insure motor compressor rides snug on mounting pads.

9. Remove water strainer from envelope for installation in water supply line feeding unit.

10. Open electrical control box cover and check unit nameplate voltage against building source voltage and make sure they correspond. **Caution:** Improper voltage supplied to units will void your parts replacement program.

11. Locate and tear out registration card from front of owners guide and fill out card completely including model and serial numbers as taken from aluminum plate found behind front service panel. Forward to Scotsman factory using self-mailing card.

*Standard Models do not include legs. Sales department carries leg package under accessory items.

INSTALLATION LIMITATIONS

ELECTRICAL

1. Scotsman, like most manufacturers, purchases electrical motors that are rated to operate within 10% variance above or below nameplate ratings.

2. Improper voltages applied to Scotsman equipment can cause premature failures and burnouts. Failures of this type are not considered as factory fault or defect.

AMBIENT

WARNING — This machine is not designed for outdoor installations. This machine will not operate when air temperatures are below 50° F. or above 100° F.

This unit was not fabricated nor intended to be installed outdoors.

WATER

3. Scotsman Ice Systems require 20 pounds flowing water pressure to operate satisfacotrily. Pressures lower that 20 pounds or interruptions in the water supply can cause serious mechanical damage to this product.

   This machine will not operate when water supply temperatures are below 40° F. or above 100° F.

INSTALLATION
ELECTRICAL CONNECTIONS:
MF5AE-2
230 Volts, 60 Hertz, 1 Phase
20 Amp. Circuit

10 Gauge wire should be used for electrical hook-up. All Scotsman Modular Flakers require a solid earth ground wire.

Be certain that the Flaker is on its own circuit and individually fused. The maximum allowable voltage variation should not exceed 10 per cent of the nameplate rating even under starting conditions. Low voltage can cause erratic operation and may be responsible for serious damage to the overload switch and motor windings.

All external wiring should conform to the National, State and local Electrical Code requirements. Usually an electrical permit and the services of a licensed electrician will be required.

ELECTRICAL INSTALLATION
MF5AE-2

Compressor	1 H.P.	Copelaweld: SSE4-0100-CAB-207 2 pole, 3500 RPM
	Voltage	230
	Amp. rating F.L.A.	8.0
	Hertz	60
	Phase	Single
Gear Drive Motor	¼HP	Queen Products 12.2 RPM
	Voltage	208 - 230
	Amp. Rating	2.4
	Hertz	60
	Phase	Single Thermally Protected

WATER SUPPLY: The recommended water supply line is ¼ inch O.D. copper tubing for the MF-5. Connect to cold water supply line with regular plumbing fittings, with a shut-off valve installed in an accessible place between supply line and machine. A water strainer must be installed with the unit and mounted with clean-out plug down. Locate the strainer next to the machine with the arrow in the direction of the flow. Most plumbing codes also call for double check valves in the supply water line, particularly for water-cooled models.

On air-cooled models the water supply line connects to the ¼ inch flare fitting on the machine. On water-cooled models connections are made to a ⅜ inch male pipe nipple inside of the machine compartment. Incoming water goes through the water regulating valve first and then to the water-cooled condenser. Observe arrow on water regulating valve. Water supply must be installed to conform with local code. In some cases a licensed plumber and/or a plumbing permit will be required.

NOTE: If water supply to unit is to be interrupted for any period of time, the unit must be switched off to prevent damage to freezer mechanism.

DRAIN: The recommended drain from the bin is ½ inch OD copper tubing. Must be run to an open trapped and ventd drain. If drain is a long run, allow ¼ inch pitch per foot. Drain must be installed to conform with local code. Run separate line for condenser discharge water on water-cooled models.

INSTALLATION PRACTICES

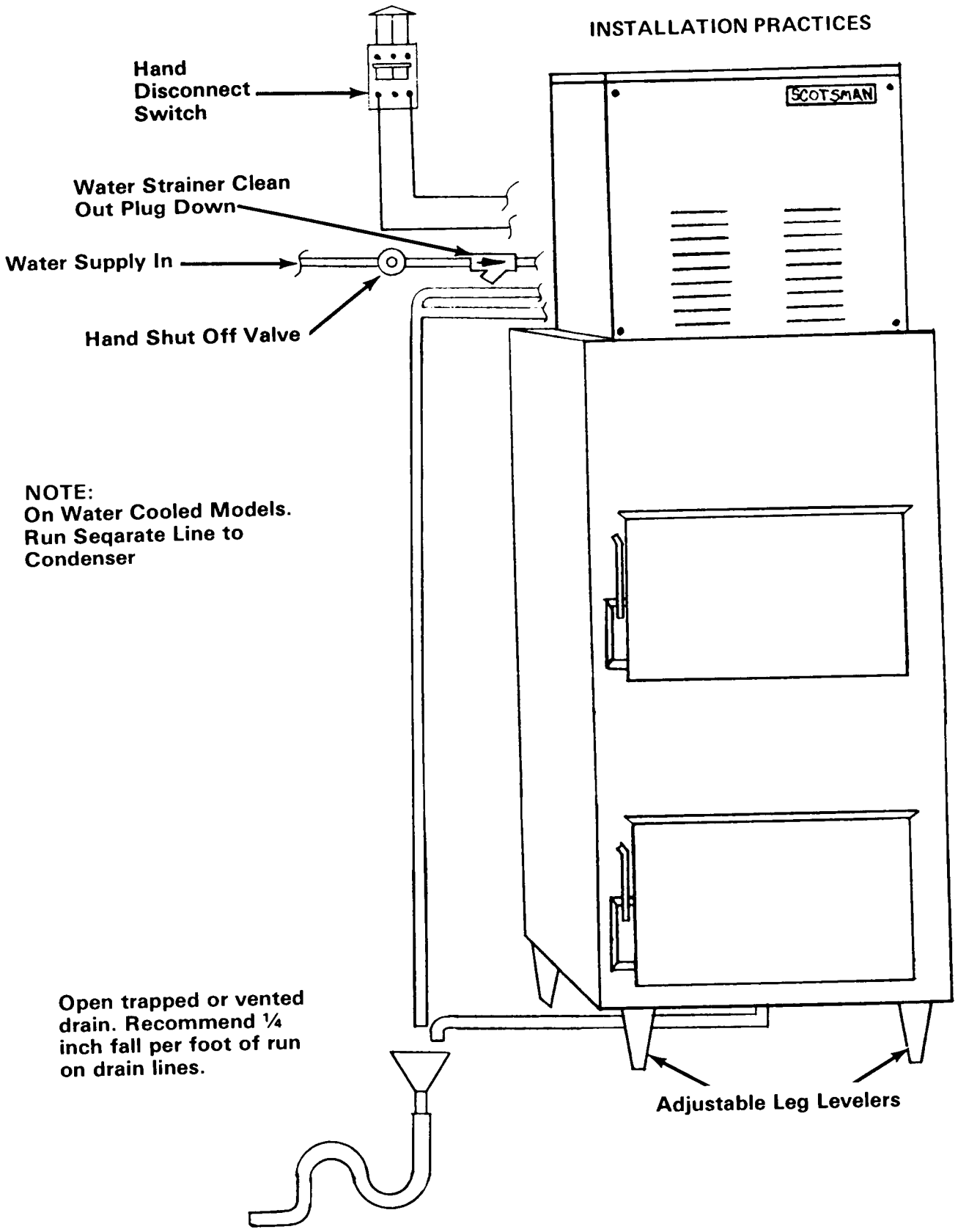

NOTE: Air temperature ranges above or below those listed may cause serious

STARTING THE MACHINE:

When the machine is placed and inspected as per instructions and all plumbing and electrical connections are completed and tested, turn on the water supply. Be sure the float cover is removed to check on the float operation and water level in the water reservoir. Be sure the water reservoir is filled before starting the machine. Water level should be ¼ inch below the reservoir overflow.

When this is completed, turn on the manual switch located behind front panel of the cabinet and the machine is in automatic operation. In two to three minutes ice will start dropping off the worm shaft and out the ice chute. Let the machine operate for at least 30 minutes and check for any excess noise other that the normal compressor noise. Test the ice storage control bulb by holding a handful of ice around the bulb until the machine shuts off. One minute should be normal for the control to function. Within minutes after the ice is removed, the bulb will warm up and the machine will automatically start up. The control is factory set and should not be reset until this test is made. Normal setting of this control should be approximately 35 degrees cut and 45 degrees cut in.

Check pressure setting at the time of start-up. On the water-cooled models set the head pressure at 135 PSI. On the air-cooled models the head pressure will vary between 130 and 145 PSI head pressure. The frost line should extend out of the accumulator if properly charged with refrigerant and suction pressure will range between 12 and 14 PSI with 50° F inlet water.

REFRIGERANT CHARGE:

The below refrigerant charge is approximate. When charging, set at 135 PSI head pressure and charge so that the frost line extends out of the evaporator and into the accumulator after fifteen minutes of operation.

Model	Refrigerant Charge
Air-Cooled	31 oz. R-12
Water Cooled	28 oz. R-12

1. Is the unit level? (IMPORTANT)
2. Have all electrical and piping connections been made?
3. Has the voltage been tested and checked against the nameplate rating?
4. Is the water supply valve open and the electric power on?
5. Is the water reservoir filled and shut off?
6. Have unit and bin been wiped clean?
7. Has owner been given this Operating Instruction Booklet, and has he been instructed on how to operate the machine?
8. Have the installation and registration cards been filled out and mailed to the factory?
9. Check all refrigerant and conduit lines to guard against vibration and possible failure?
10. Installed in a well ventilated room where ambient temperatures do not fall below 50° Fahrenheit.
11. Is unit installed with a minimum 4" air space around sides and back?

WARNING: THIS MACHINE MUST NOT BE ALLOWED TO OPERATE WHEN THE WATER SUPPLY IS SHUT OFF, OR AT BELOW RECOMMENDED WATER PRESSURE. TURN MASTER SWITCH TO"OFF"POSITION WHEN WATER SUPPLY IS OFF,OR WHEN WATER PRESSURE IS BELOW RECOMMENDED OPERATING PRESSURE.

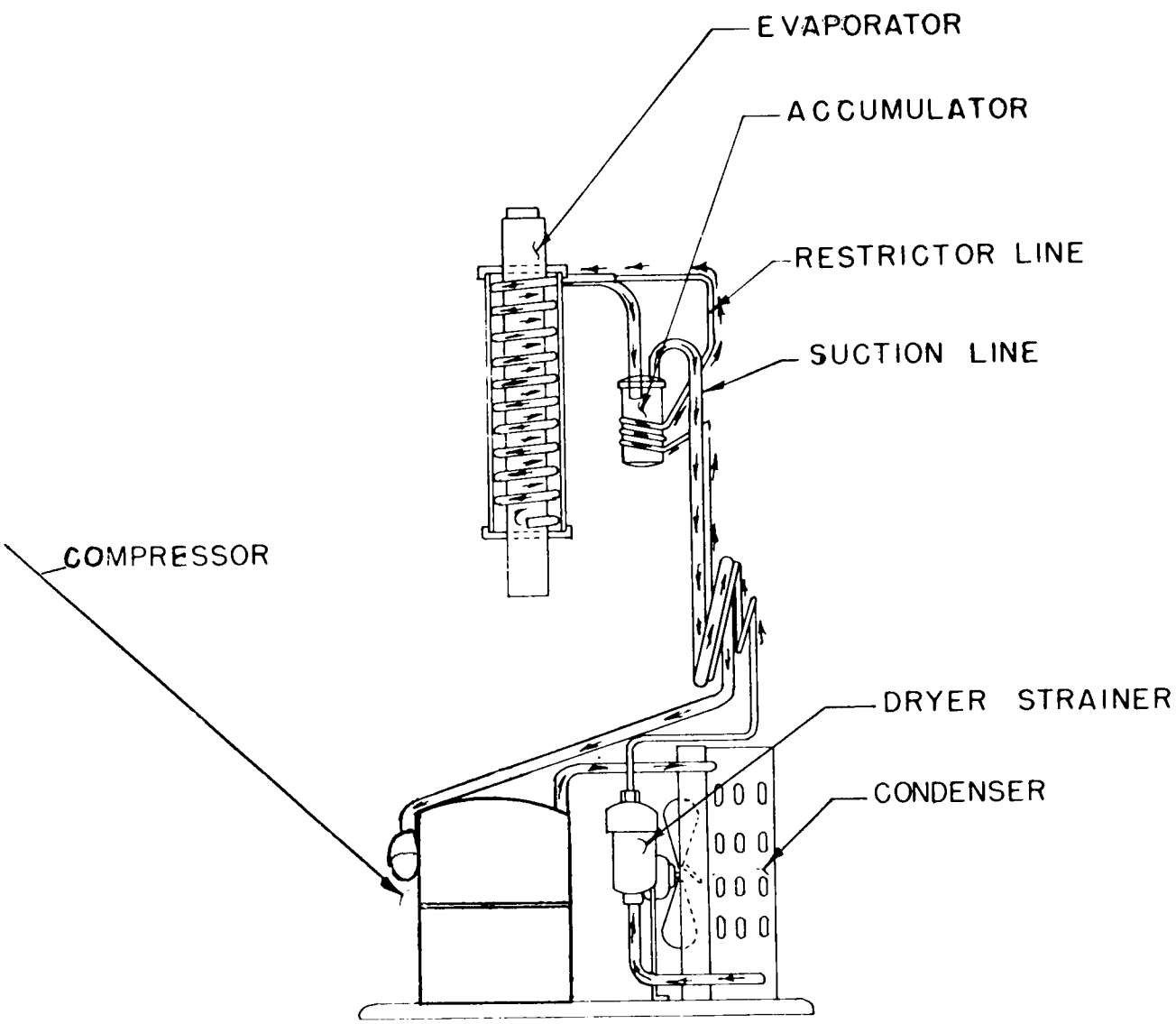

REFRIGERATION CYCLE

WATER SCHEMATIC

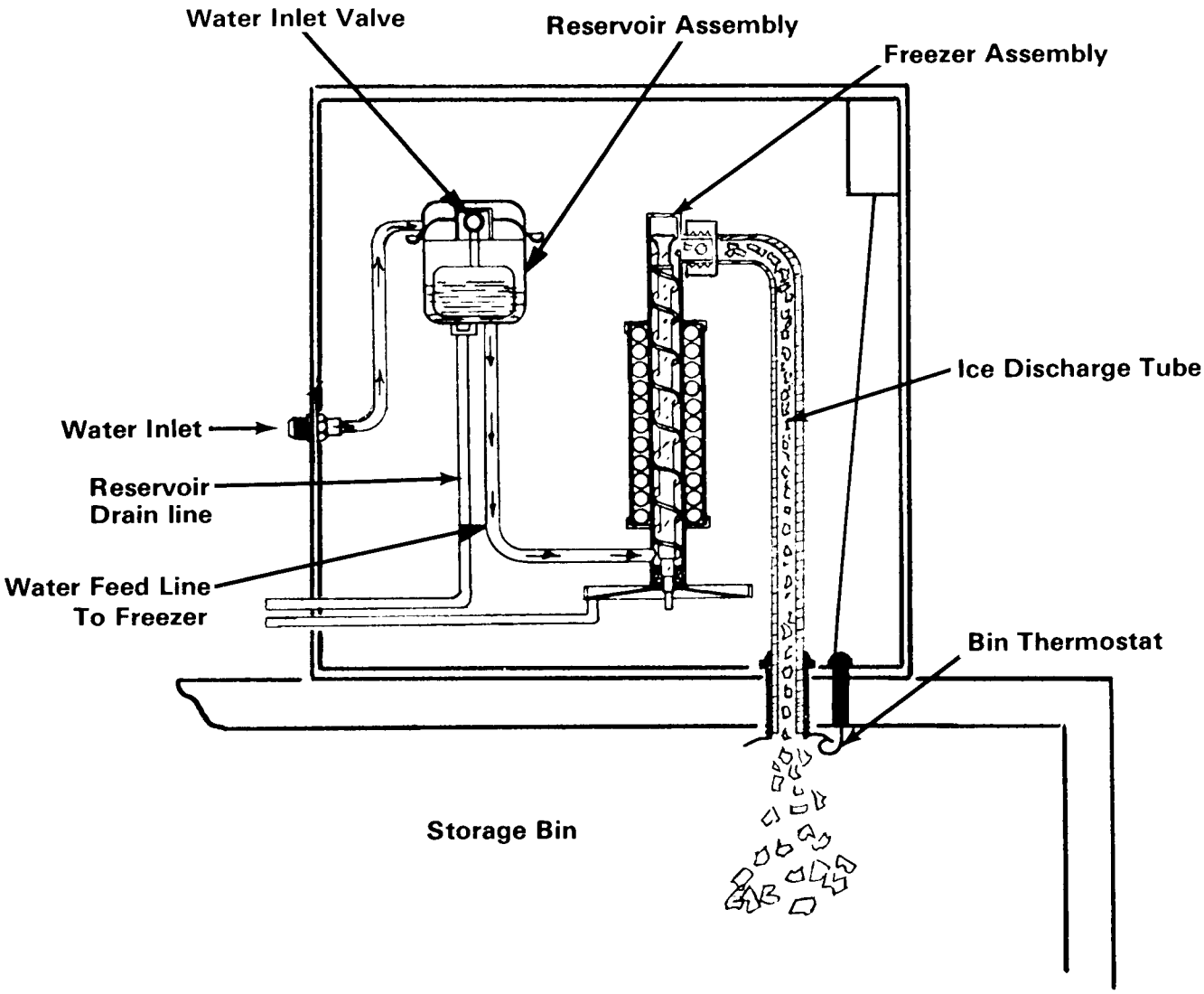

INSTALLATION INSTRUCTIONS

MODULAR FLAKER
ICE DISCHARGE TUBE
MF5 SERIES

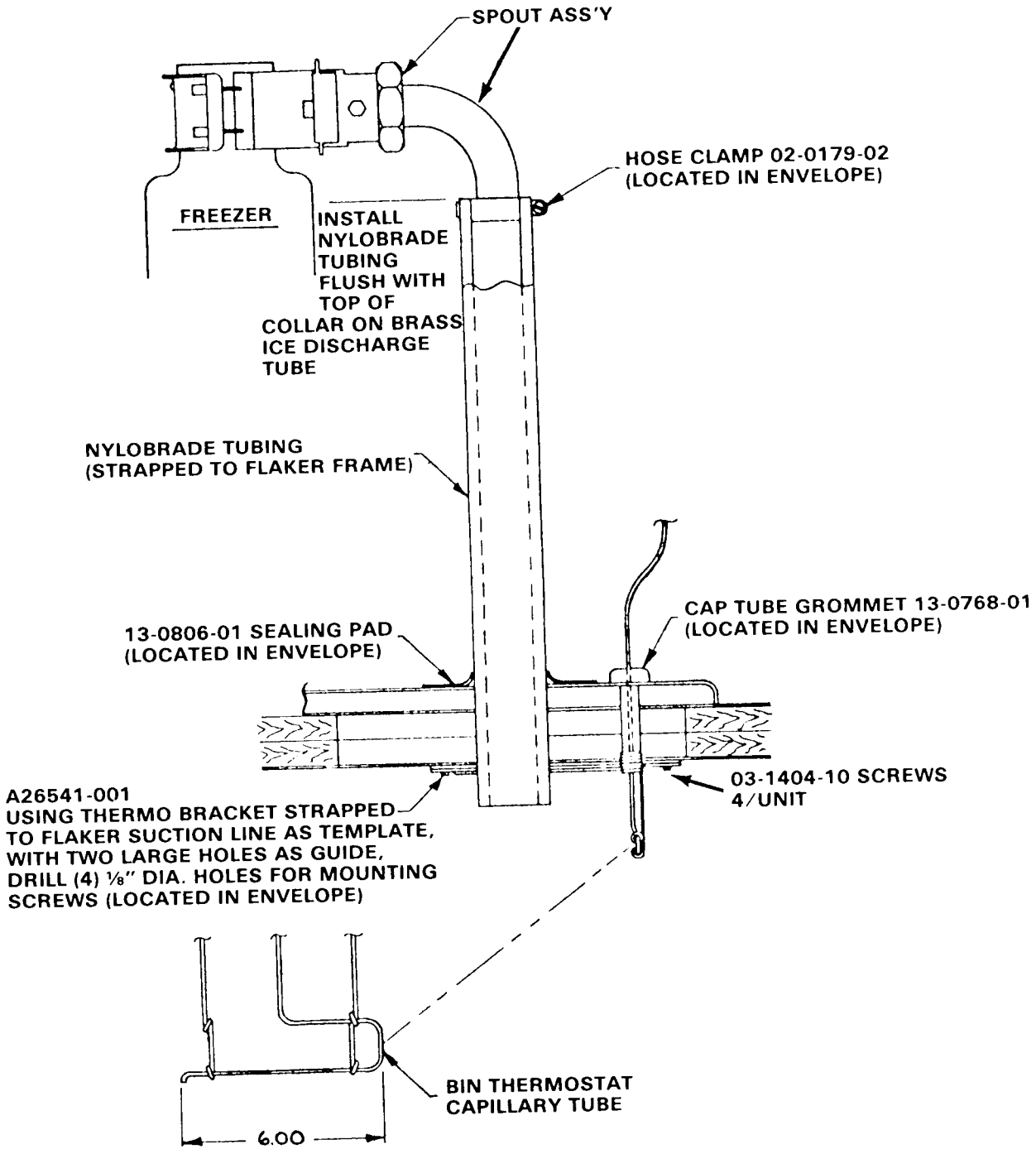

NOTE: See page 33 for Spout Assy. Breakdown (Part No.'s).

WATER COOLED
208-220/60/3

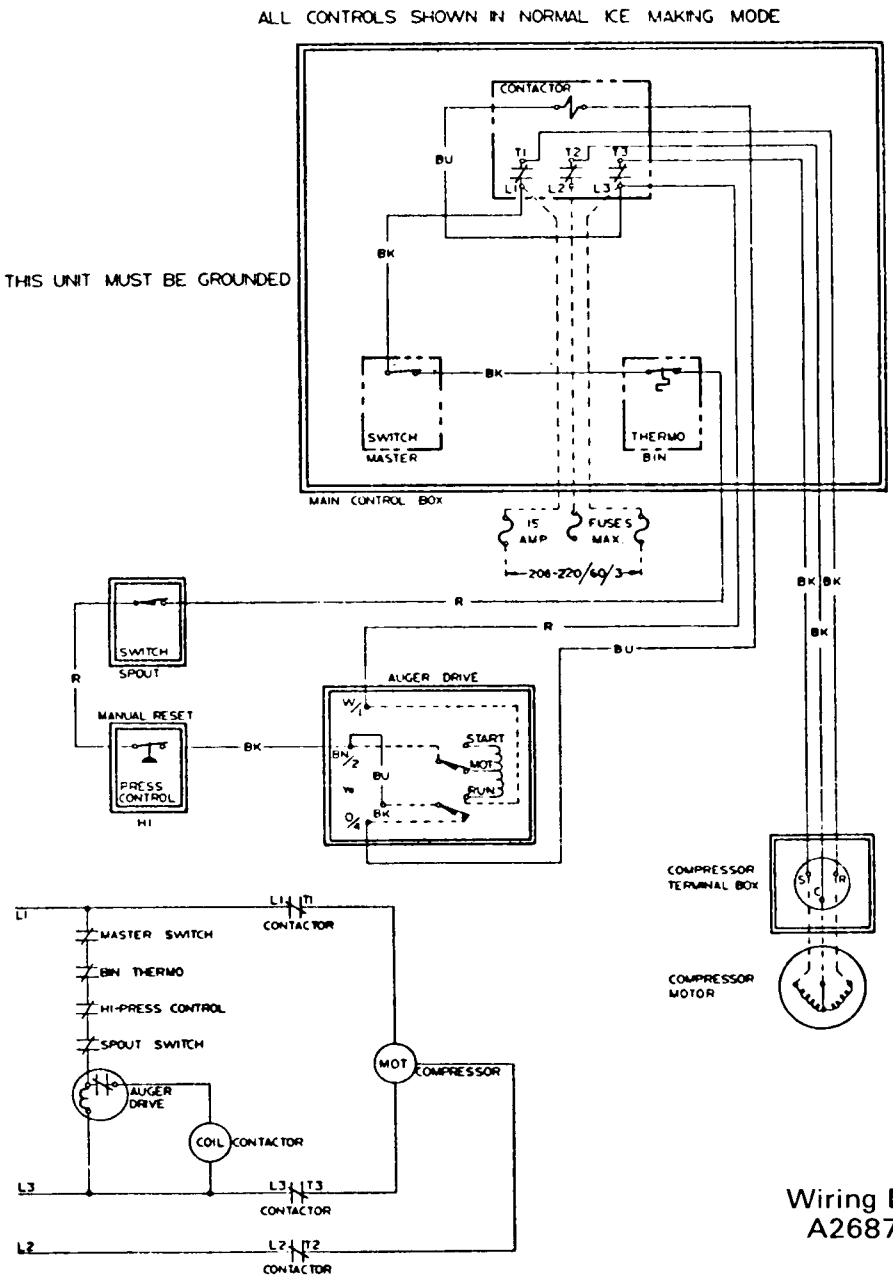

Wiring Diagram
A26874-003

NOTE: This unit must be grounded.

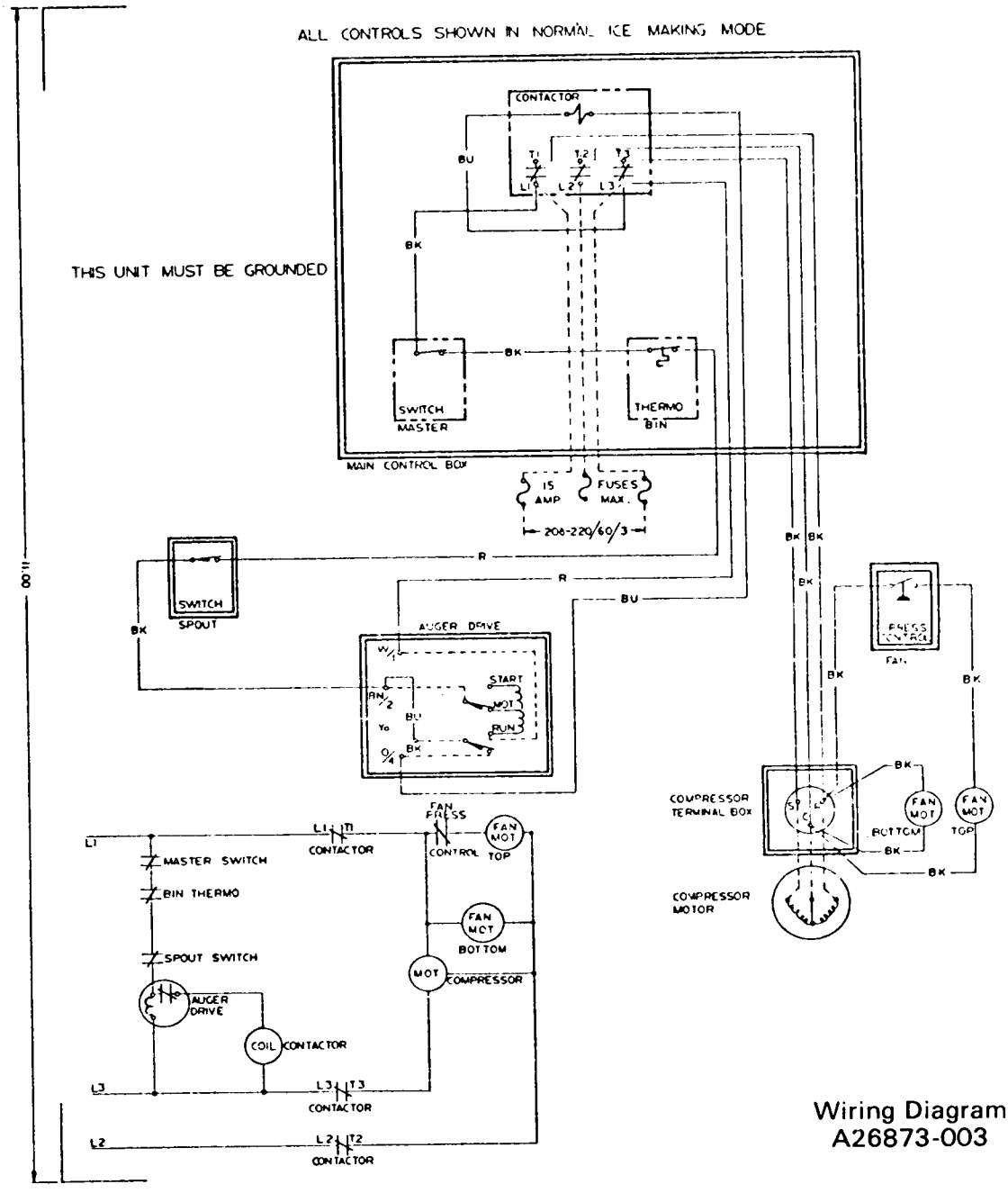

Wiring Diagram
A26873-003

NOTE:
THIS UNIT MUST BE GROUNDED

WATER COOLED
230/60/1

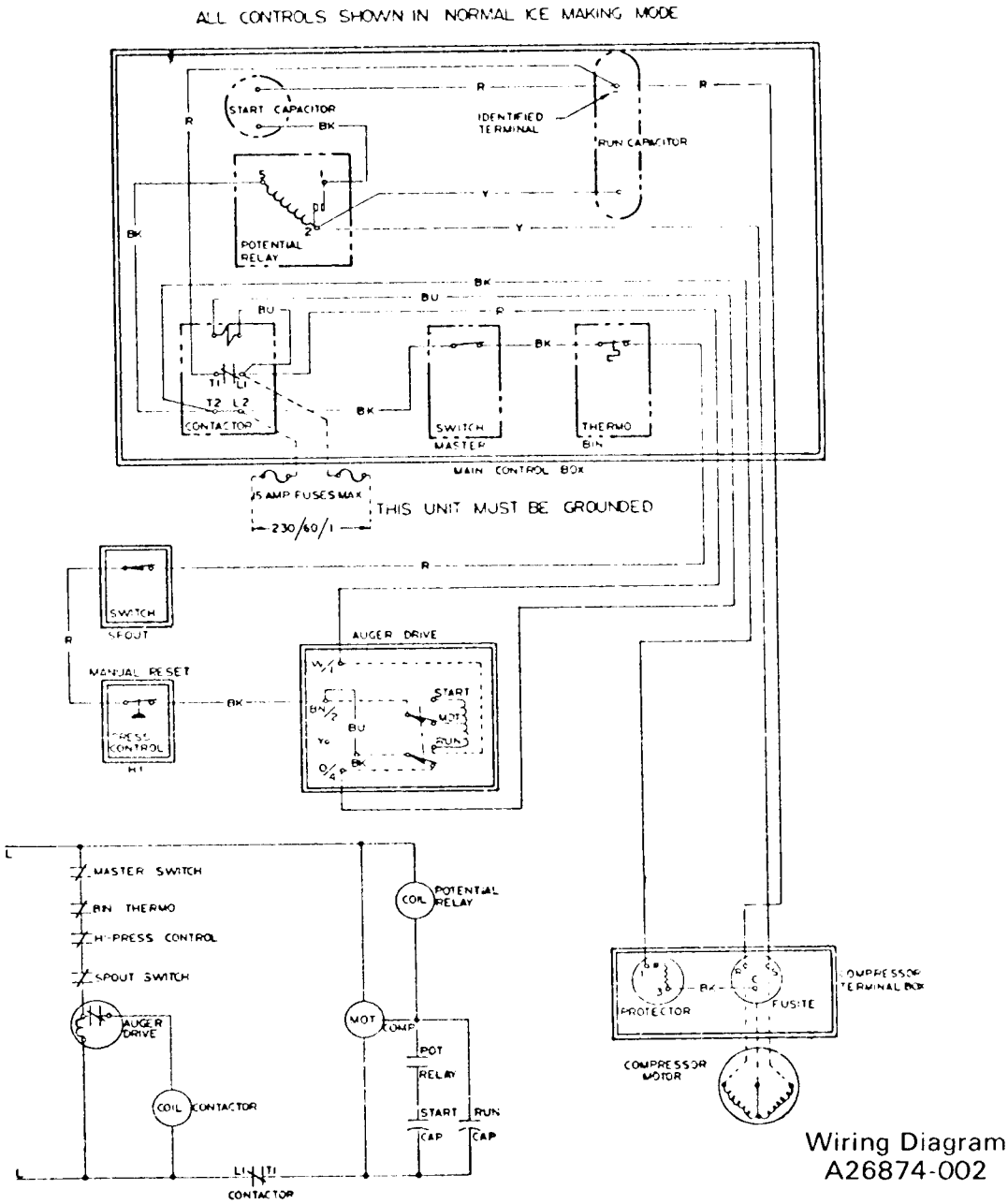

Wiring Diagram
A26874-002

NOTE:
THIS UNIT MUST BE GROUNDED

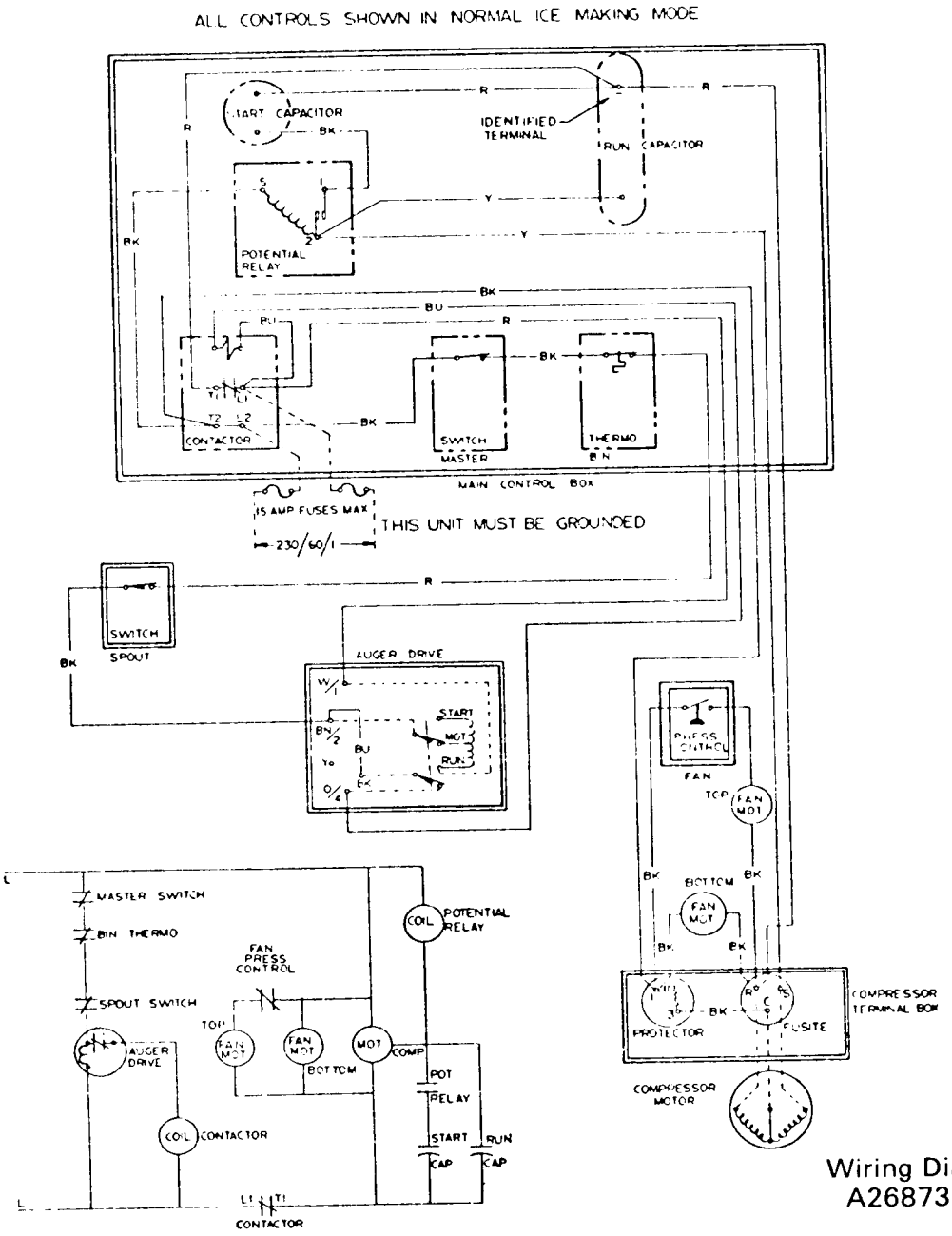

Wiring Diagram
A26873-002

NOTE:
THIS UNIT MUST BE GROUNDED

AIR COOLED
208/60/1

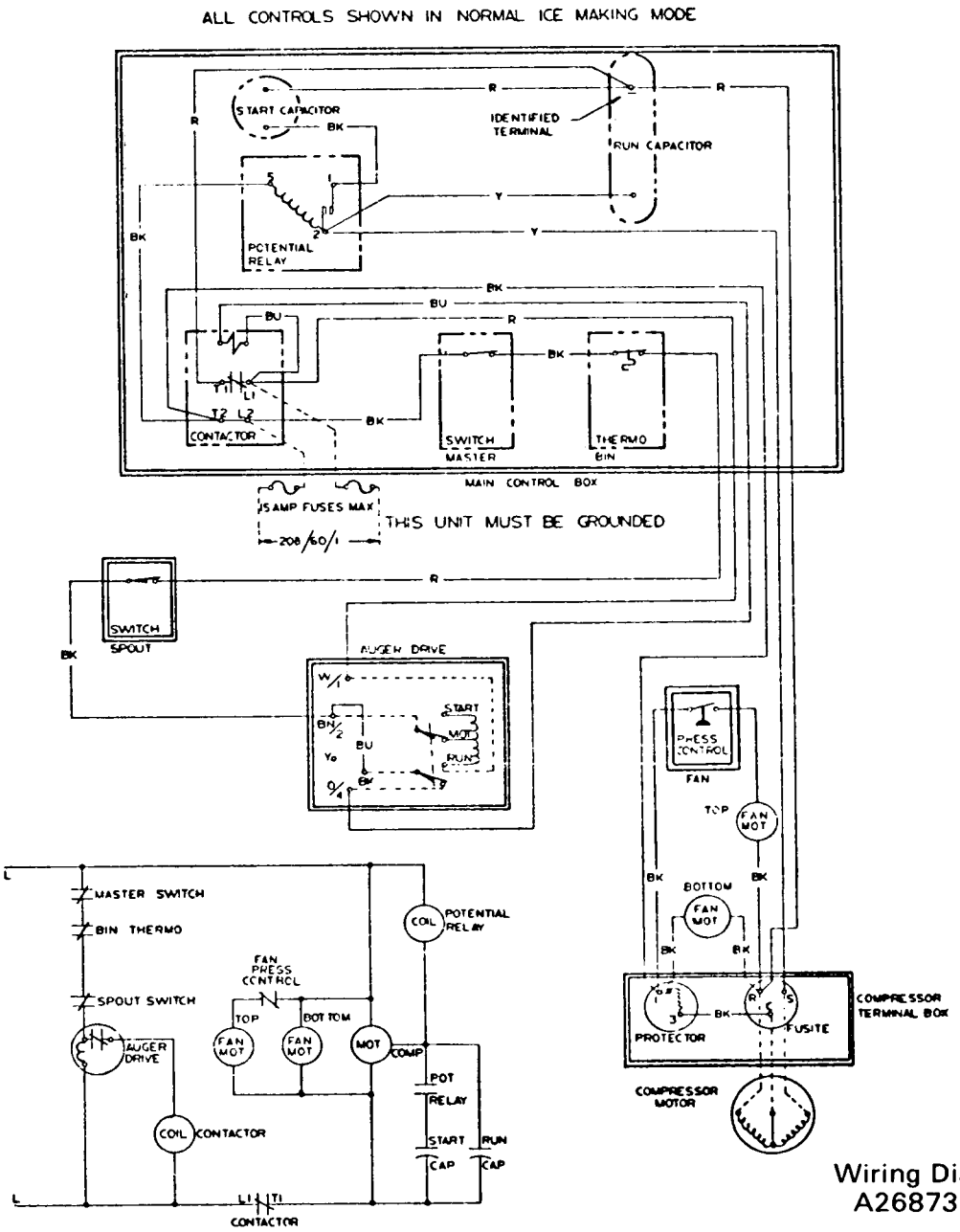

Wiring Diagram
A26873-007

NOTE:
THIS UNIT MUST BE GROUNDED

WATER COOLED
208/60/1

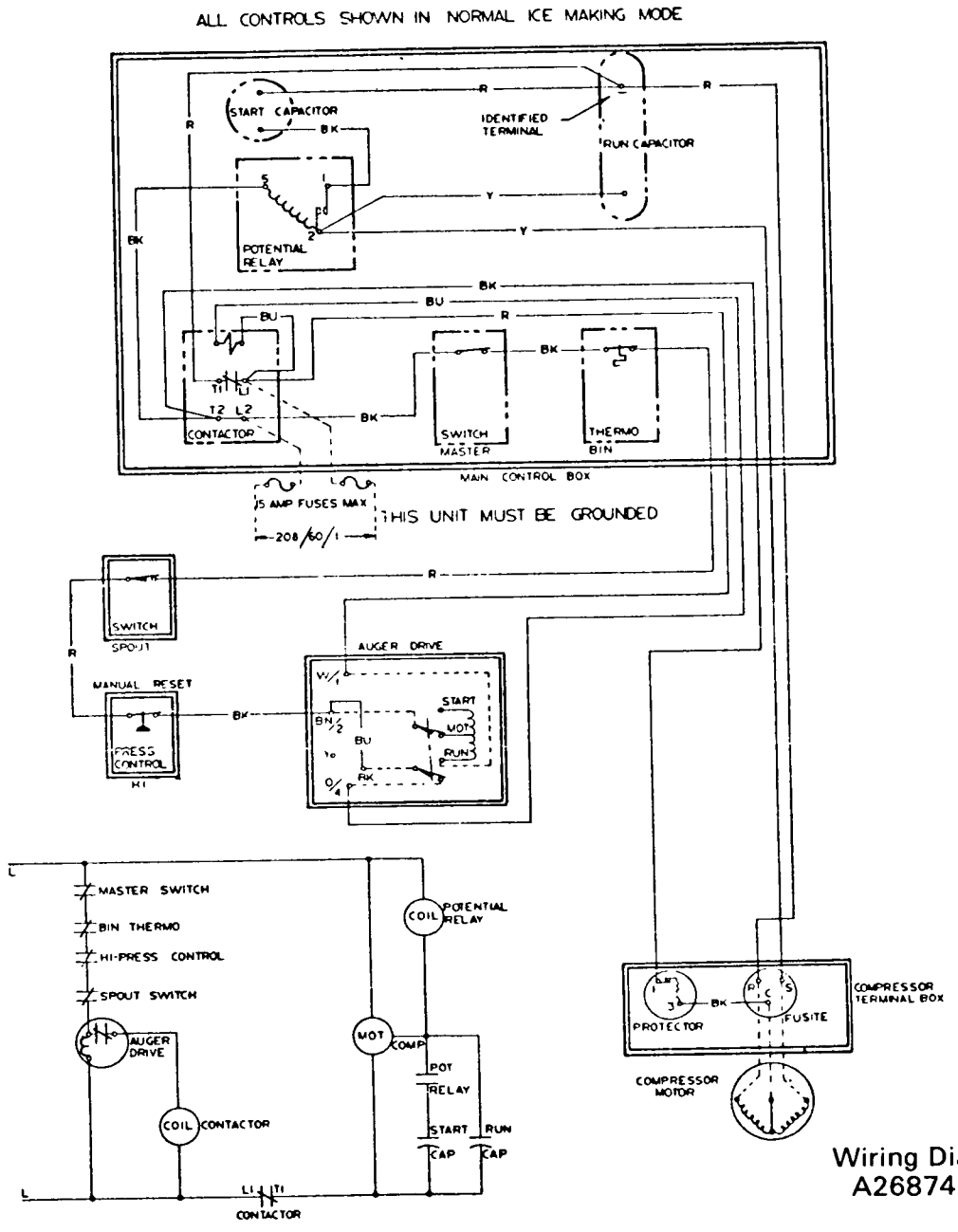

Wiring Diagram
A26874-007

NOTE:
THIS UNIT MUST BE GROUNDED

SERVICE ANALYSIS

SYMPTOM	POSSIBLE CAUSE	CORRECTION
Unit will not run	Blown Fuse	Replace fuse and check for cause of blown fuse.
	Thermostat set too high	Adjust thermostat. 35° cut-out and 45° cut-in.
	Loose electrical connection	Check wiring.
	Switch in OFF position	Turn switch to ON.
	Inoperative master switch	Replace switch
	Spout safety switch tripped	Reset - check actuator and bin thermostat location
Compressor cycles intermittently	Low voltage	Check for overloading.
	Dirty Condenser	Clean.
	Air circulation blocked	Move unit to correct
	Inoperative condenser motor	Replace.
	Non-condensable gases in system	Purge off.
Making wet ice	Surrounding air temperature	Correct or move unit to cooler location.
	Under or over-charge of refrigerant	Recharge with the proper amount.
	High water level in water reservoir	Lower to 1/4 inch below overflow pipe.
	Faulty compressor	Repair or replace.
Low ice production	Loss of refrigerant, under or over-charge of refrigerant.	Check and recharge with proper amount of refrigerant.
	Dirty or plugged condenser	Clean condenser
	Low water level in water reservoir	Adjust to 1/4 inch below overflow pipe.
	Partial restriction in capillary tube or drier	Moisture in system. Overcharge of oil in System. Remove charge and drier. Replace and recharge system.
	Inlet water strainer partially plugged.	Remove screen and clean.
	Corroded or stained worm shaft due to water condition.	Remove worm shaft and clean.
Machine runs but makes no ice	Loss or under-charge of refrigerant	Check for leaks and recharge
	Drive gearmotor or drive coupling stripped.	Check. Repair and/or replace.
	Water not entering freezing chamber	Plugged strainer or supply line. Check and clean. Air lock in gravity feed line. Check and remove air lock.
	Moisture in system	Check and remove charge and drier.
	Water seal leaking	Replace seal
	Water supply to unit off	Restore water supply to icemaker.

SYMPTOM	POSSIBLE CAUSE	CORRECTION
Water Leaks	Defective water seal Gravity feed line leaking "O" ring in spout casting leaking. Storage bin drain & connecting fittings leaking. Water level in reservoir too high	Replace Check hose clamps Remove spout casting and install new "O" ring. Check and repair. Adjust to 1/4 inch below overflow pipe
Excessive noise or chattering	Mineral or scale deposit on auger and inner freezing chamber walls. Low suction Intermittent water supply Water level in reservoir too low. Gearmotor loose on frame Gearmotor end-play or worn bearings.	Remove and manually polish auger, polish inner chamber walls of freezer barrel. For lighter concentrations use Scotsman Ice Machine Cleaner periodically. Add gas to raise suction pressure. Check & clean water strainer. Check gravity feed line for air lock. Remove air lock. Adjust to 1/4 inch below overflow pipe. Tighten. Repair or replace.
Machine continues to run with full storage bin	Storage bin thermostat not properly set.	Reset or replace. 35° cut-out, 45° cut-in Check operation with handful of ice.
Gearmotor noise	Low on oil	Remove case cover to check for proper oil level. Top of gears should be covered. Use Sun Oil Co. Prestige 50 EP.

MAINTENANCE INSTRUCTIONS — FLAKERS

THE FOLLOWING MAINTENANCE SHOULD BE SCHEDULED THREE TIMES PER YEAR ON ALL SCOTSMAN MODULAR FLAKERS. CALL YOUR AUTHORIZED SCOTSMAN SERVICE DEPARTMENT.

1. Check and clean water strainers and float valve. Depress float valve to insure full stream of water.
2. Check water level and machine level, keep water level below overflow, but as high as possible and still not run out of spout opening with machine off. Water droplets come out of spout with ice at all times. Adjust as required.
3. Clean reservoir and interior of freezer using SCOTSMAN Ice Machine Cleaner. If machine has been cleaned regularly and no problems such as dry ice or chatter are noticed, clean as per the following instructions:
   a. Set main switch to OFF.
   b. Remove all ice from storage bin.
   c. Turn off water supply or block float. Drain reservoir by disconnecting tube between reservoir and freezer. After draining, reconnect tubing.
   d. Set main switch to ON and pour cleaning solution into reservoir. Do not fill above overflow tube.
      Use 6 oz. of Scotsman cleaner and 2½ qts. hot water.
   e. Continue to make ice on solution until the solution is used up and reservoir is empty.
   f. Set main switch to OFF Remove overflow tube, wash and rinse reservoir, replace overflow tube, turn water on or remove float block.
   g. Turn MAIN SWITCH to ON. Let unit run for at least (15) minutes to flush out any cleaning fluid. Check ice for acid taste — run until ice tastes sweet.
   h. Turn MAIN SWITCH to OFF. Add hot water to ice bin, using the melt water, thoroughly wash and rinse all surfaces within the storage bin.
   i. Turn MAIN SWITCH to ON. Replace Service Door. Unit is ready for normal operation.

NOTE: Cleaning requirements vary according to local water conditions. Visual inspection of the auger before and after cleaning will indicate best procedure to be followed in local areas.

4. Check high and low side pressures. On air-cooled models head pressures range between 130 and 145 PSI. Suction pressure should be above 12 PSI and will range up to 15 PSI depending upon water and ambient temperatures.
5. Check gear motor operation. Normal running temperatures are in the area of 160° Fahrenheit, which is hot to the touch.
6. Check top bearing of freezing tube. Remove retainer ring around edge of stamped brass cap. If moisture is around bearing, wipe up and remove grease. Add new grease. Use Beacon No. 325. Replace cap and retainer ring.
7. Clean air-cooled condenser. Inform customer to clean frequently. Always shut off machine when cleaning.
8. Oil condenser fan motor when possible.
9. Check for refirgerant leaks and proper frost line. Should frost out of accumulator at least one-half way to compressor, and in some areas back to service valve.
10. Check for water leaks. Tighten drain line connections. Run water down bin drain line to make sure it is open.
11. Check quality of ice. Ice should be wet when formed, but will cure rapidly to normal hardness in bin.
12. Check thermostat and pressure plate cut off in spout. Micro switch cuts off only compressor. Bin thermostat should be set at 10° differential 35° cut out, 45° cut in.

FREEZER GEARMOTOR

The ¼ H.P. gearmotor in Model MF5 is equipped with a set of auxilliary contacts on the motor starter activator assembly. After the motor has started and reached operating speed(off the start windings and onto the run windings) the auxilliary contacts activate the operating contactor coil to start the compressor.

In actual operation any condition that causes the motor to become overloaded will cause the thermal overload protector to open the operating circuit. Loss of power to the motor will also open the operating circuit. In both cases, the compressor is not running and making ice.

TO REPLACE:
1. Remove top, front and side panels.
2. Shut off water supply and electrical power to unit.
3. Remove the electrical leads from the motor to the control box.
4. Remove slip nut attaching ice discharge tube to freezer spout casting.
5. Next remove 3 bolts securing base adapter to gearmotor cover and the 4 bolts holding the gearmotor bracket to the cabinet base.
6. Lift freezer and adapter assembly off gearmotor and pull gearmotor and mounting bracket out of cabinet.

FREEZER ASSEMBLY

TO REPLACE:
1. To remove freezer first remove cabinet top, front and side panels.
2. Shut off water supply and disconnect electrical power to unit.
3. Drain reservoir and freezer of water by removing tygon tubing entering base of freezer.
4. Remove slip nut attacning ice discharge tube to freezer spout casting.
5. Purge off refrigerant and disconnect suction line fron compressor. Disconnect capillary line at drier. Cap off all lines so no moisture can enter system.
6. Remove the 3 bolts securing freezer base adapter to top of gear motor cover.
7. Freezer assembly now can be lifted off gear motor and out of cabinet
8. To re-install reverse procedure. Refer to section "Specifications" for proper refrigerant charge and to page 10 for Head and Back pressure settings.

FREEZER WORM SHART (AUGER)

TO REPLACE:
1. Disconnect electrical supply and shut off water to unit.
2. Remove top and front panel of cabinet
3. Drain reservoir and freezer of water by removing tygon tubing entering base of freezer.
4. Next remove slip nut attaching ice discharge tube to freezer spout casting and insulation covering top of freezer chamber.
5. Remove the 4 bolts attaching the freezer spout casting to the spout bracket and remove spout casting. Also remove bracket by removing the stainless steel screw which secures the bracket to the freezer chamber.
6. By lifting up on the freezer cap pull ring, the complete worm shaft and bearing retainer can be removed from freezer chamber. NOTE: Top half of water seal is attached to the lower end of the worm shaft.

FREEZER ASSEMBLY TOP BEARING

TO REPLACE:

1. Follow steps 1 thru 6, freezer worm shaft removal.
2. To remove bearing and retainer from worm shaft, first remove retaining ring in top of bearing retainer.
3. Remove freezer cap and pull ring from bearing retainer.
4. Unscrew cap screw holding shaft to inner race of bearing and pull worm shaft free from bearing and retainer.
5. When replacing with a new bearing add new grease (Beacon No. 325) to top of bearing.

FREEZER ASSEMBLY BOTTOM BEARING AND WATER SEAL

TO REPLACE

1. To replace, follow steps 1 through 6 under Worm Shaft Removal.
2. Remove 3 bolts holding freezer to mounting adapter.
3. Lift freezer off adapter just high enough to allow bottom bearing and bottom half of water seal to be removed from bottom of freezer tube.
4. Lightly grease bottom half of new water seal and insert face approximately ½" in bottom of freezer tube.
5. Insert bottom bearing in bottom of freezer tube, force approximately ⅛" past bottom tube end. This will allow the positioning ring on adapter to properly position freezer tube when tightening up the three mounting bolts.
6. After securing mounting bolts, put new top half of water seal on worm shaft the same way as the old seal was removed. When reassembling, put a small amount of Vaseline on shaft end. This will allow shaft to slide smoothly through rubber bottom half of water seal without tearing it.
7. Carefully insert worm shaft assembly in freezer tube and into spline coupling on bottom.
8. Replace spout casting, screws, insulation pieces and unit is ready to resume operation.

BIN THERMOSTAT:

Thermostat control body is located in electrical control box. The thermostat sensing tube is threaded into the ice storage bin where it automatically stops the icemaker when ice bin fills to sensing tube level and restarts ice maker when ice is removed. Factory settings are 35° cut out, 45° cut in.

Altitude correction begins at 2,000 fee, cut in and cut out screws should be adjusted equally, not more that ¼ turn at a time.

IMPORTANT — Refer to page 13 for proper location of bin control capillary.

TO REPLACE:

1. Disconnect electrical supply.
2. Remove bin thermostat capillary tube from bin location.
3. Remove front panel and control box cover.
4. Disconect two spade type electrical leads.
5. Loosen two screws in control mounting bracket.
6. Replace with new control and reassemble in reverse of above.
7. CAUTION: Always check new control power element charge before installation to assure receiving an operative control. A handfull of ice on bulb will register on audible 'click' at cut off.

CONTACTOR

The electrical contactor is used to carry the compressor line current. It is wired so that any of the controls in the pilot circuit such as the bin thermostat and high pressure controls, etc. will cause the contactor holding coil to be de-energized when the control contact open, thereby, breaking the circuit to the compressor through the contactor point.

HEAD PRESSURE CONTROL (WATER COOLED MODELS)

The head pressure safety control is factory preset at 250 lb. PSIG. This is a manual reset control with an adjustment screw for raising or lowering the cut out pressure. The control is placed in the system as a safety precaution, to terminate power to the unit should loss of water occur to the water cooled condenser.

HEAD PRESSURE CONTROL (AIR COOLED MODELS)

A reverse acting high pressure control is used and connected to the **top** fan motor. **Note:** The **bottom** fan motor runs continuously. As the head pressure drops below the cut-out setting the top motor cuts out. When the head pressure rises to the cut-in setting, the motor starts again. This feature protects the unit against low ambient conditions. Cut-out and cut-in pressures are set at 125 lb. cut-out and 160 lb. cut-in.

WATER REGULATING VALVE(Water Cooled Models Only)

The Water Regulating Valve is designed to maintain a constant head pressure by regulating the amount of incoming water flow through the water cooled condenser. This valve is operated by high side pressure and may be adjusted by the adjusting screw on top of the valve to raise or lower the operating head pressure.

TO REPLACE:
1. Shut off water supply to machine and disconnect electrical power.
2. Disconnect old valve from water supply line and install new valve. NOTE: Be sure arrow on side of valve points in direction of water flow.
3. Purge off refregerant and disconnect valve capillary line from high side fitting and immediately attach capillary from new valve.
4. Recharge system. Refer to page 10 for proper refrigerant charge and head and back pressure settings.

WATER RESERVOIR

A WATER LEVEL IS MAINTAINED IN THE WATER RESERVOIR BY A FLOAT OPERATED A water level is maintained in the water reservoir by a float operated valve. Water is piped from the water reservoir to the freezing chamber by a gravity feed line maintaining an equal water level.

The water reservoir is equipped with an air gap to prevent back siphoning and meet all health codes.

The water level in the water reservoir is adjusted by bending float arm. The water level should be set ¼ inch below the overflow standpipe.

A water strainer must be installed in the supply line. Use strainer sent with machine.

TO REPLACE:
1. Remove cabinet top and side panel.
2. Turn off water supply and drain reservoir.
3. Remove ¼ inch inlet water line.
4. Remove plastic feed line to freezer.
5. Remove wingnut holding reservoir to bracket.
6. Lift out reservoir.
7. To replace, reverse procedure.

FINAL ASSEMBLY

(Air Cooled)

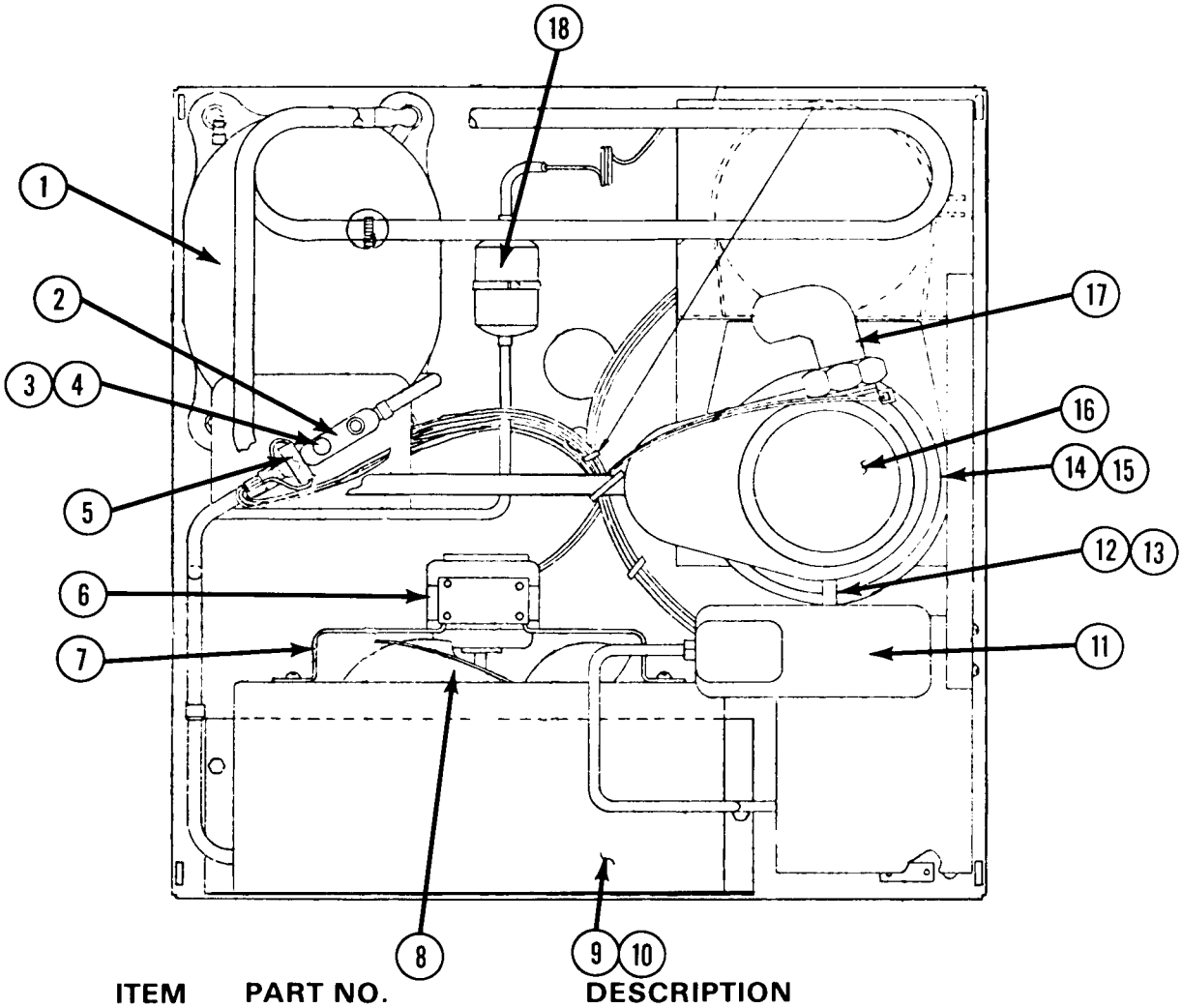

ITEM	PART NO.	DESCRIPTION	
1.	18-2300-02	Compressor 230/60/1	(See Page 30
	18-2300-03	Compressor 208-220/60/3	For Component
	18-2300-07	Compressor 208/60/1	Breakdown)
2.	16-0673-04	Process Header	
3.	16-0563-00	Brass Cup	
4.	16-0560-00	Valve Core	
5.	11-0398-01	Fan Pressure Control	
6.	12-1576-02	Fan Motor 2/Unit	
7.	A26174-001	Fan Motor Bracket (2) Req. Per Motor	
8.	18-0231-00	Fan Blade & Nut	
9.	18-3714-01	Condenser	
10.	A26161-001	Shroud	
11.	02-2217-01	Reservoir Ass'y. See Page 34	
12.	13-0674-09	Tubing	
13.	02-0694-00	Clamp	
14.	A24156-002	Drip Pan Ass'y.	
15.	13-0704-00	Gasket	
16.		Freezer Ass'y. - See Page 28	
17.		Spout Ass'y. - See Page 33	
18.	02-0544-00	Drier	

FINAL ASSEMBLY
(Water Cooled)

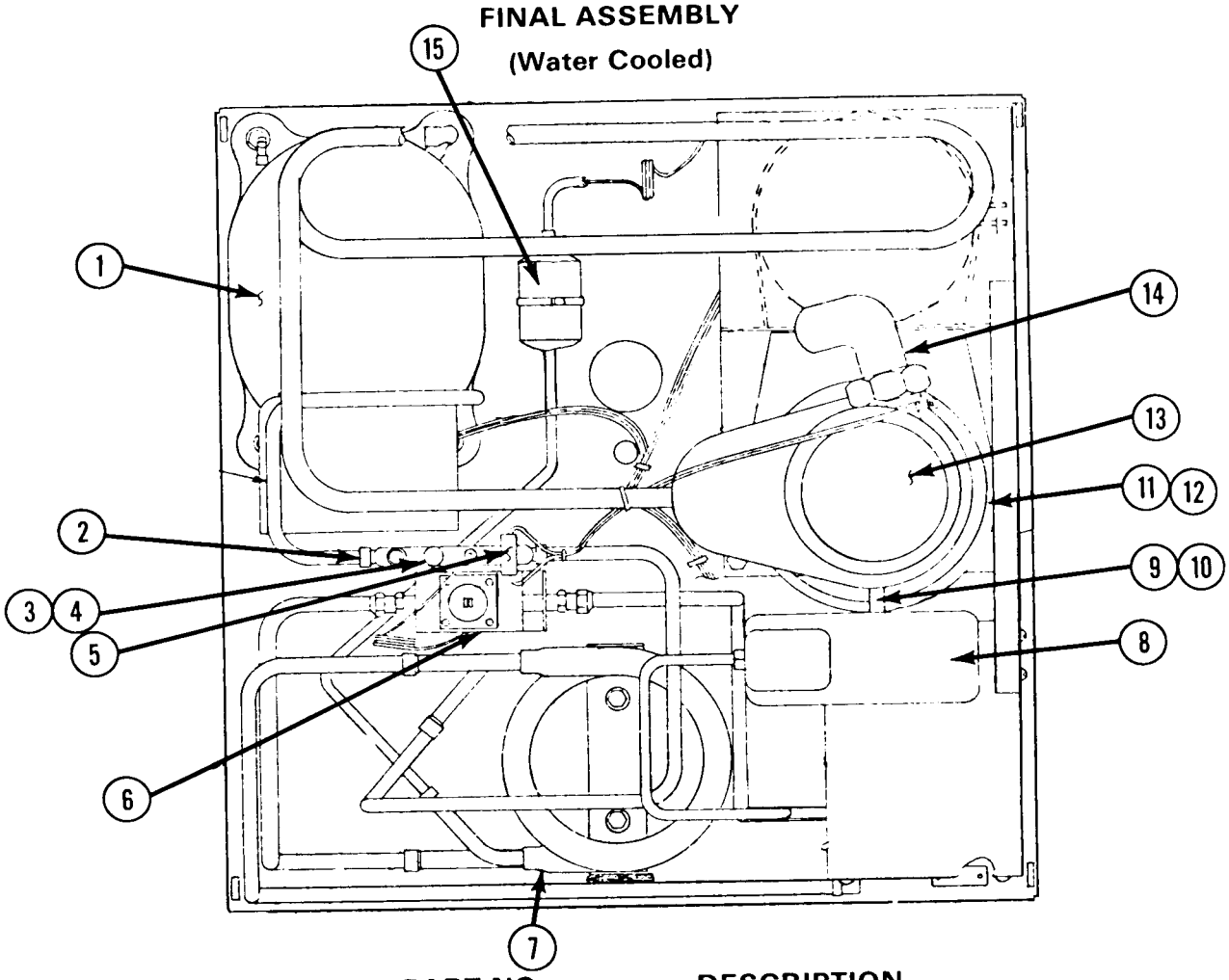

ITEM	PART NO.	DESCRIPTION	
1.	18-3800-02	Compressor 230/60/1	(See Page 30
	18-3800-03	Compressor 208-220/60/3	For Component
	18-3800-07	Compressor 208/60/1	Breakdown)
2.	16-0673-08	Process Header	
3.	16-0563-00	Brass Cap	
4.	16-0560-00	Valve Core	
5.	11-0397-01	Hi-Pressure Switch	
6.	11-0198-02	Water Regulator Valve	
7.	18-3306-02	Condensor (Water)	
8.	02-2217-01	Reservoir Ass'y. - See Page 34	
9.	13-0674-09	Tubing	
10.	02-0694-00	Clamp	
11.	A24156-002	Drip Pan	
12.	13-0704-00	Gasket	
13.		Freezer Ass'y. - See Page 28	
14.		Spout Ass'y. - See Page 33	
15.	02-0544-01	Drier	

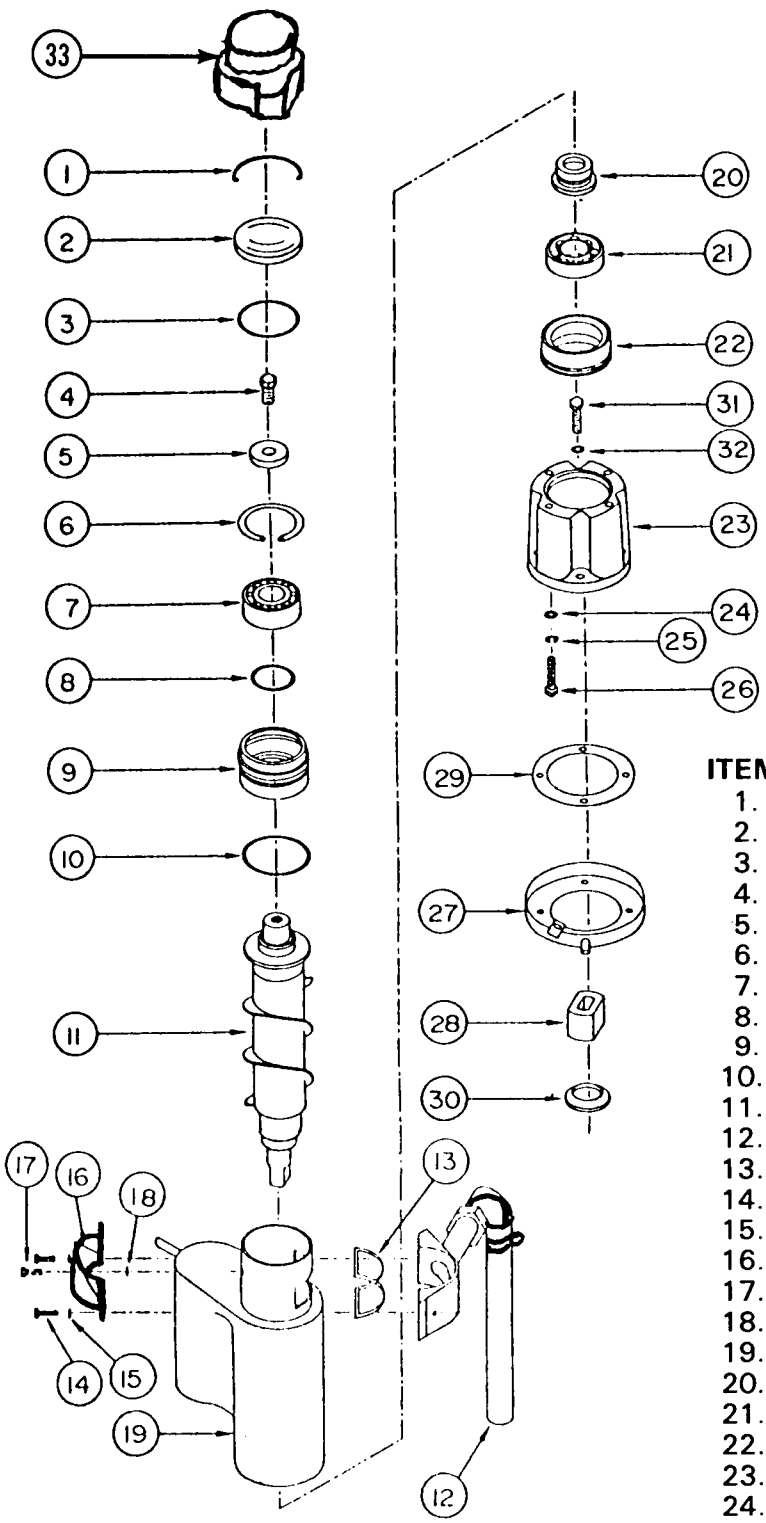

FREEZER ASSEMBLY

ITEM	PART NO.	DESCRIPTION
1.	A08582-000	Cap Hook
2.	A08581-000	Cap
3.	13-0617-20	"O" Ring
4.	03-1405-36	Cap Screw
5.	A06273-000	Washer
6.	03-1558-04	Retaining ring
7.	02-0646-00	Bearing
8.	13-1617-15	"O" Ring
9.	A26708-001	Bearing Retainer W/Bearing
10.	13-0617-40	"O" Ring
11.	02-2047-01	Auger
12.	See Page 24	Ice Spout Assy.
13.	02-1437-00	Gasket
14.	03-1544-02	Screw (4)
15.	03-1417-07	Lock Washer (4)
16.	A24928-001	Spout Plate
17.	03-1506-01	Screw
18.	03-1409-14	Washer
19.	A26869-001	Freezer w/Heat Exch.
20.	A22569-000	Water Seal
21.	02-0619-00	Lower Bearing
22.	A10591-000	Bearing Retainer
23.	02-1629-00	Adapter
24.	03-1405-41	Screw (4)
25.	03-1410-04	Lock Washer (4)
26.	03-1408-03	Washer (4)
27.	A24156-001	Drip Pan
28.	15-0573-01	Coupling
29.	13-0704-00	Cork Gasket
30.	13-0709-02	Rubber Water Shed
31.	03-1420-03	Screw (4)
32.	03-1408-03	Washer (4)
33.	13-0809-01	Rubber Cap

A24317-021
GEAR MOTOR ASSEMBLY
¼ HP 115/60/1
OUTPUT SHAFT TURNS
AT 12 RPM

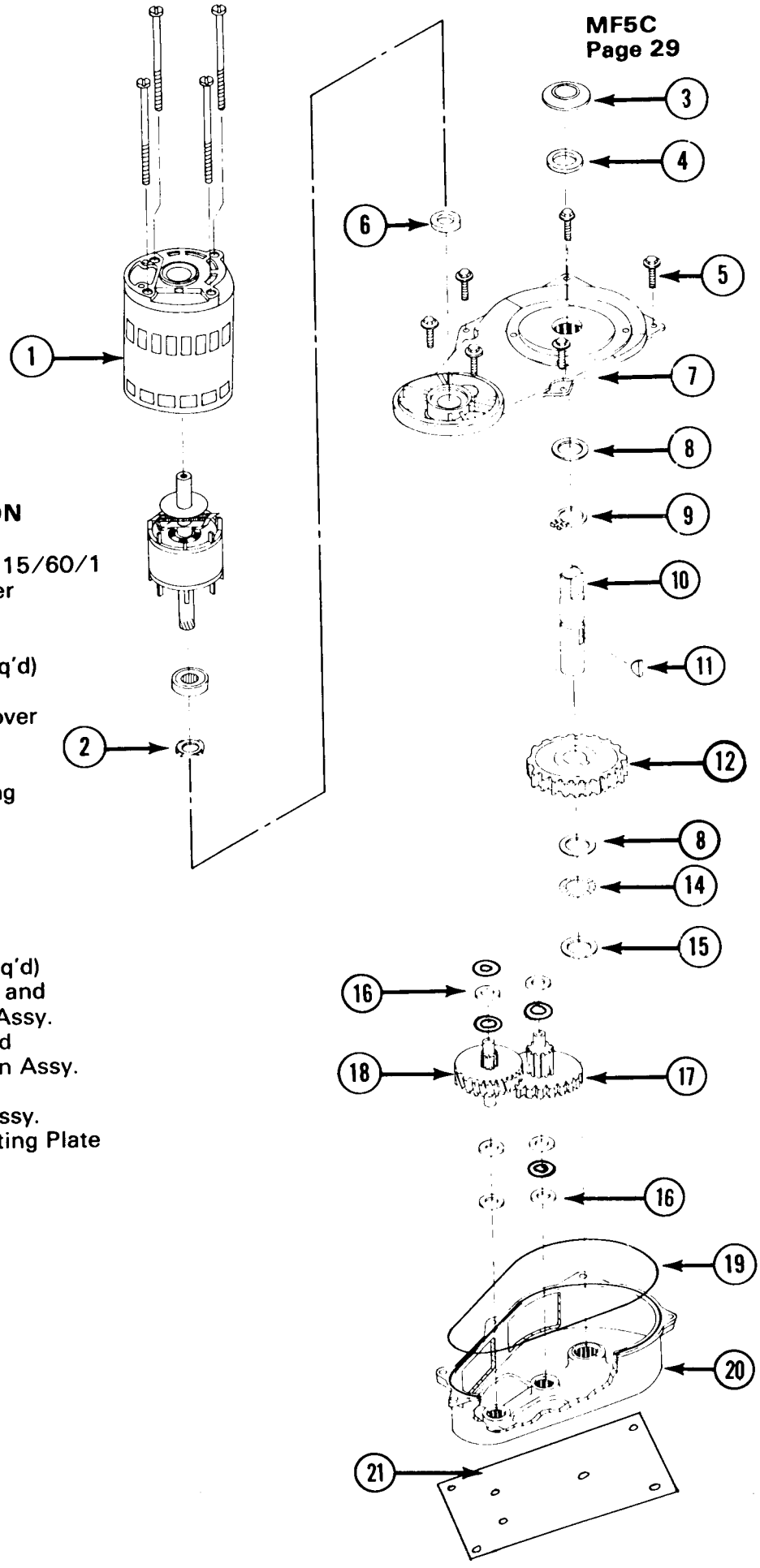

ITEM	PART NO.	DESCRIPTION
1.	A26455-001	Drive Motor 115/60/1
2.	03-1426-00	Spring Washer
3.	13-0709-02	Water Shed
4.	02-1607-00	Oil Seal
5.	03-1251-01	Screws (6 Req'd)
6.	02-1606-00	Oil Seal
7.	A22200-000	Gear Case Cover Assembly
8.	02-1681-00	Thrust Race
9.	03-1363-00	Retaining Ring
10.	02-1652-00	Output Shaft
11.	03-1364-00	Key
12.	02-1653-00	Output Gear
13.		
14.	02-1680-00	Bearing
15.	02-1679-00	Thrust Race
16.	03-1408-24	Washer (9 Req'd)
17.	02-2071-00	Second Gear and Third Pinion Assy.
18.	02-2072-00	First Gear and Second Pinion Assy.
19.	A26103-001	"O" Ring
20.	A22199-000	Gear Case Assy.
21.	A26599-001	Motor Mounting Plate

MOTOR COMPRESSOR

AIR AND WATER COOLED

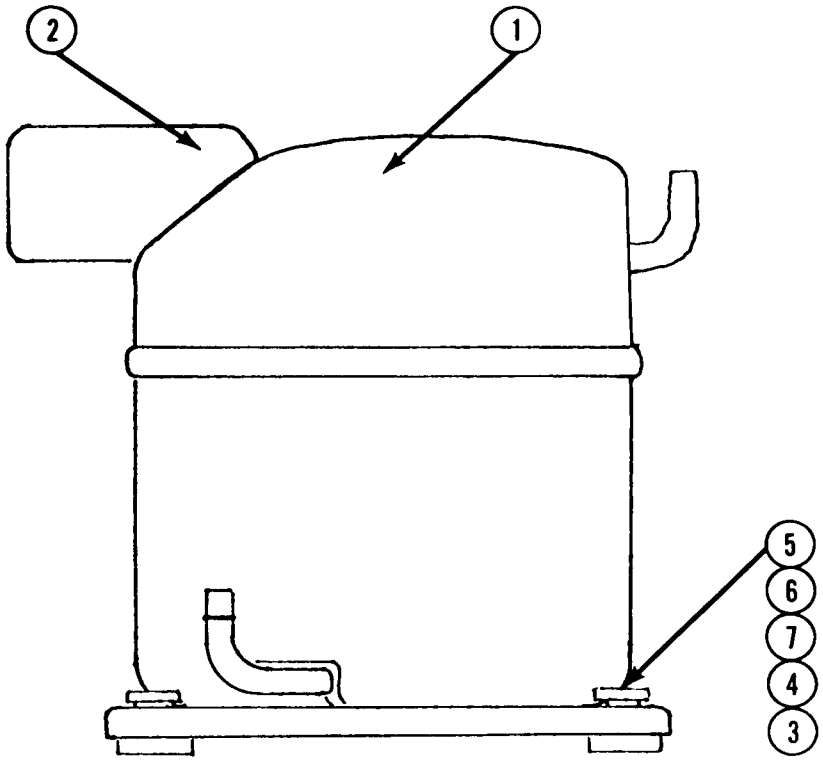

ITEM	PART NO.	DESCRIPTION
1.	18-3800-02	Compressor 230/60/1
	18-3800-03	Compressor 208-220/60/3
	18-3800-07	Compressor 208/60/1
2.	18-2300-25	Overload 230/60/1
	18-2300-32	Overload 208/60/1
	18-2300-31	Overload 208/220/60/3
3.	18-2300-27	Mounting Grommet (4)
4.	18-2300-26	Mounting Sleeve (4)
5.	3-1405-40	Screw (4)
6.	3-1417-12	Washer (4)
7.	3-1408-29	Washer (4)

BELOW LISTED ITEMS NOT SHOWN

18-1900-31	Relay & Capacitor Assy (208/60/1)
18-1901-15	Start Capacitor
18-1902-29	Run Capacitor
18-1903-29	Relay

18-1900-34	Relay & Capacitor Assy (230/60/1)
18-1901-15	Start Capacitor
18-1902-34	Run Capacitor
18-1903-34	Relay

CONTROL BOX ASSEMBLY
208-220/60/3

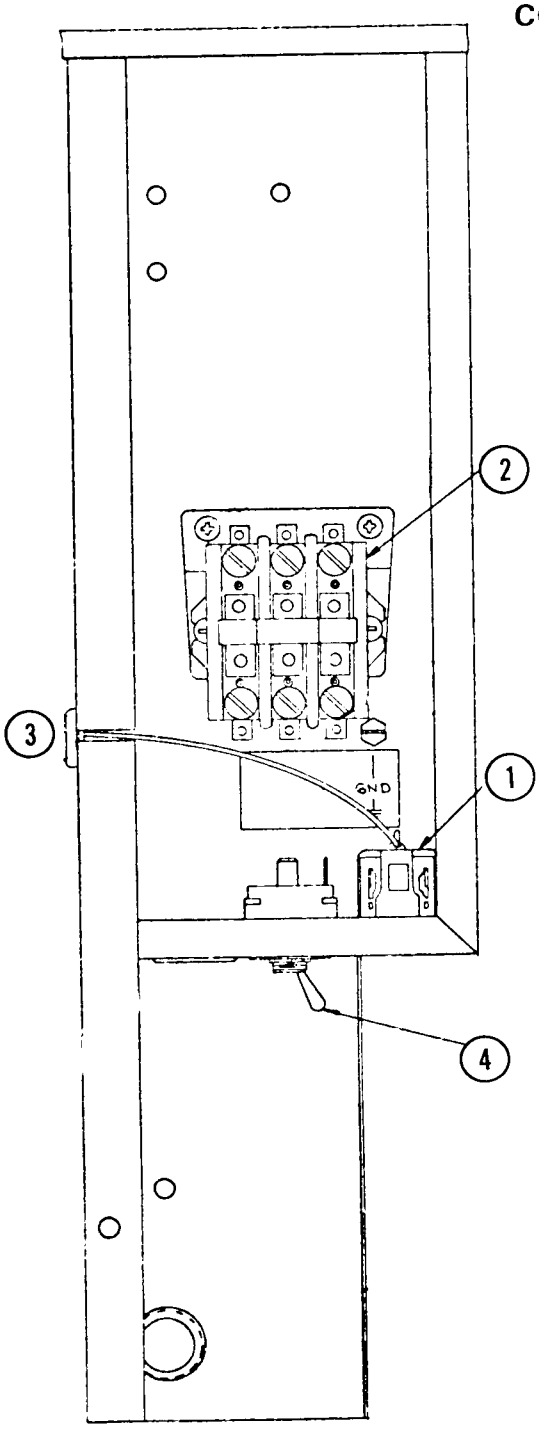

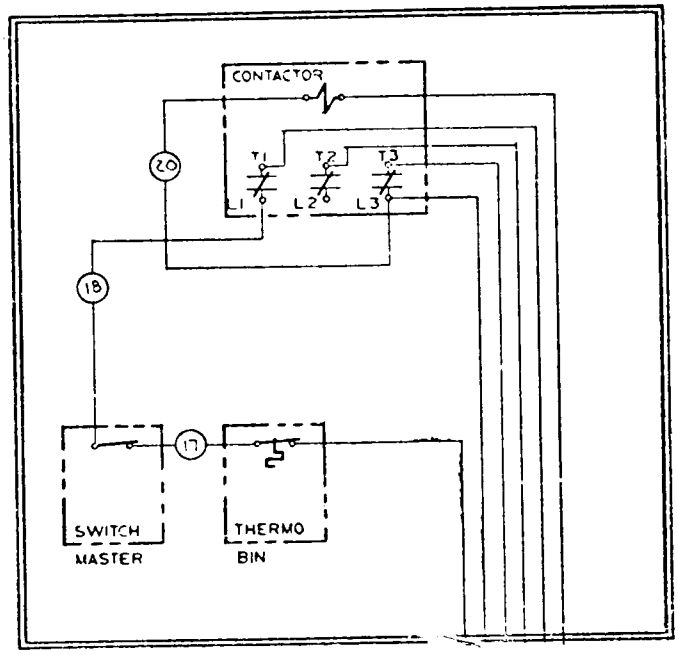

ITEM	PART NO.	DESCRIPTION
1.	11-0354-00	Bin Control
2.	12-0739-02	Contactor
3.	13-0557-00	Grommet (3)
4.	12-0426-01	Switch

CONTROL BOX ASSEMBLY

230/60/1
208/60/1

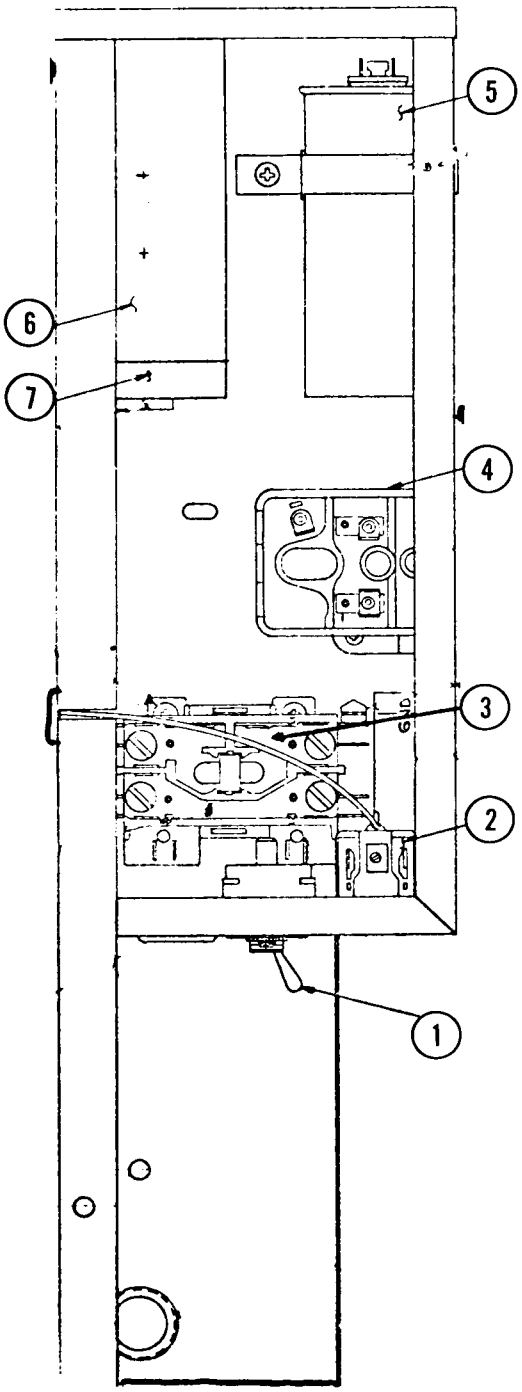

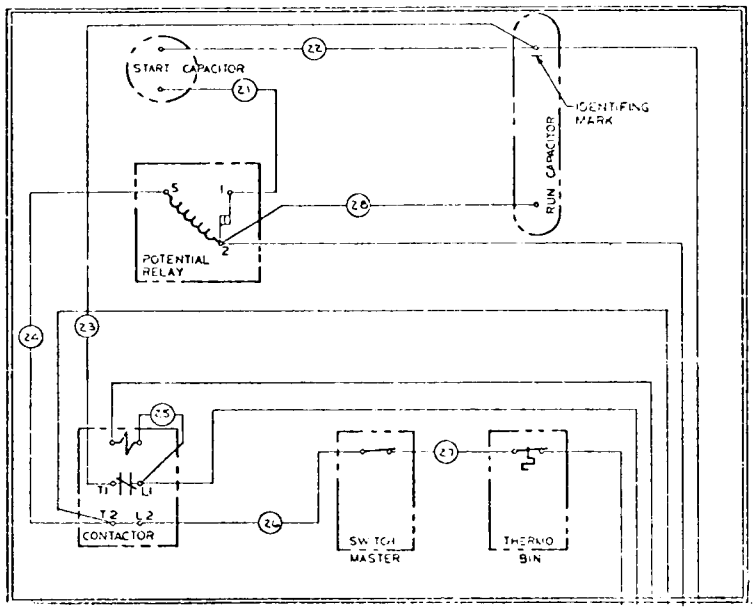

ITEM	PART NO.	DESCRIPTION
1.	12-0426-01	Switch
2.	11-0354-00	Bin Control
3.	12-2048-02	Contactor
4.	18-1903-29	Relay 230/60/1
4.	18-1903-34	Relay 208/60/1
5.	18-1902-29	Run Capacitor 230/60/1
5.	18-1902-34	Run Capacitor 208/60/1
6.	18-1901-15	Start Capacitor
7.	18-2200-38	Capacitor Cap

SPOUT AND SAFETY SWITCH

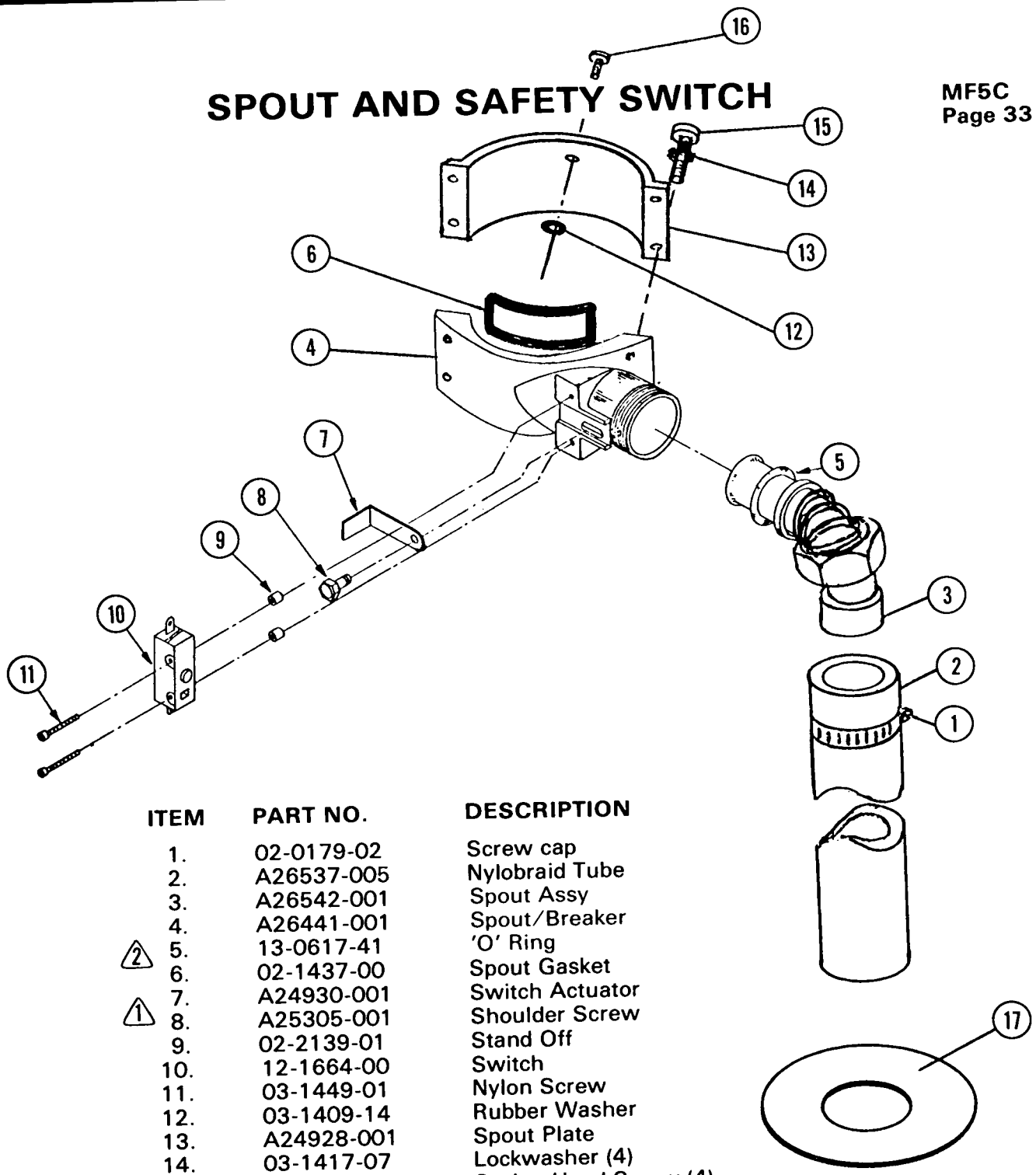

ITEM	PART NO.	DESCRIPTION
1.	02-0179-02	Screw cap
2.	A26537-005	Nylobraid Tube
3.	A26542-001	Spout Assy
4.	A26441-001	Spout/Breaker
⚠2 5.	13-0617-41	'O' Ring
6.	02-1437-00	Spout Gasket
7.	A24930-001	Switch Actuator
⚠1 8.	A25305-001	Shoulder Screw
9.	02-2139-01	Stand Off
10.	12-1664-00	Switch
11.	03-1449-01	Nylon Screw
12.	03-1409-14	Rubber Washer
13.	A24928-001	Spout Plate
14.	03-1417-07	Lockwasher (4)
15.	03-1544-03	Socket Head Screw (4)
16.	031506-01	Screw
17.	13-0806-01	Sealing Pad

NOTE:

⚠1 1. Tighten carefully, small thread & brass

⚠2 2. A light coating of petro-jel req'd on 'O' Ring & Spring

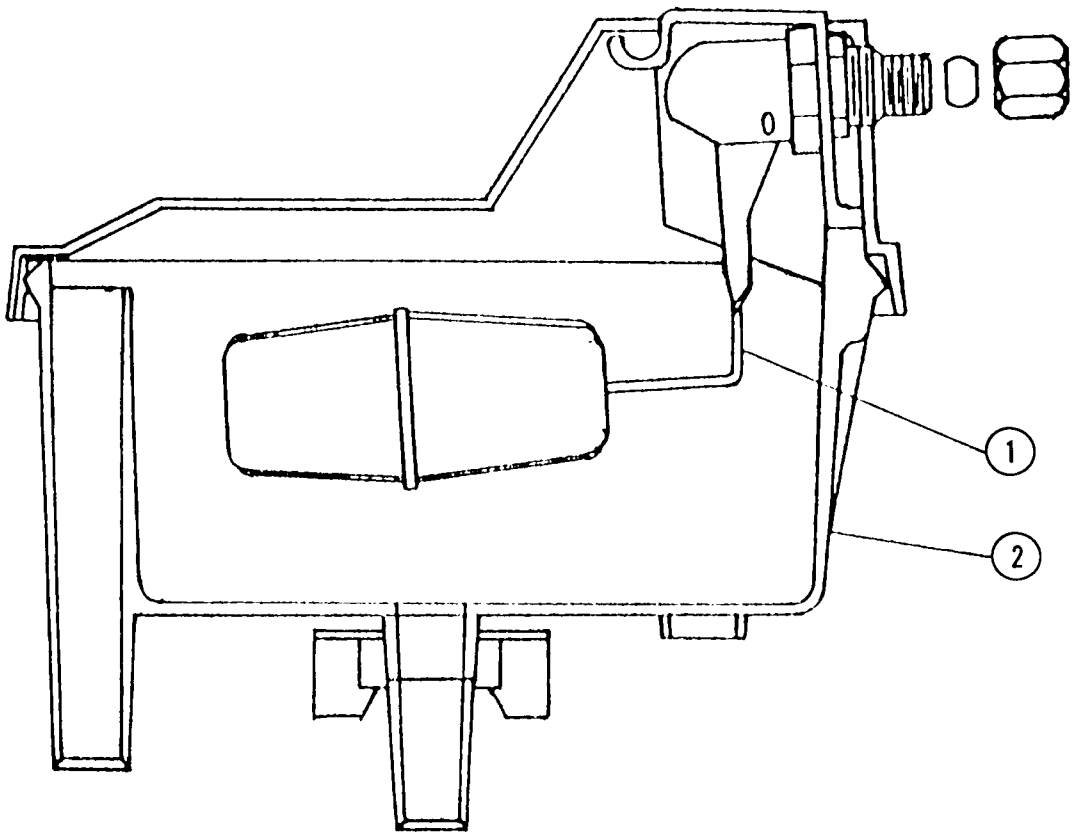

RESERVOIR ASSEMBLY

ITEM	PART NO.	DESCRIPTION
1.	02-2217-02	Valve Assy
2.	02-2217-01	Reservoir Complete

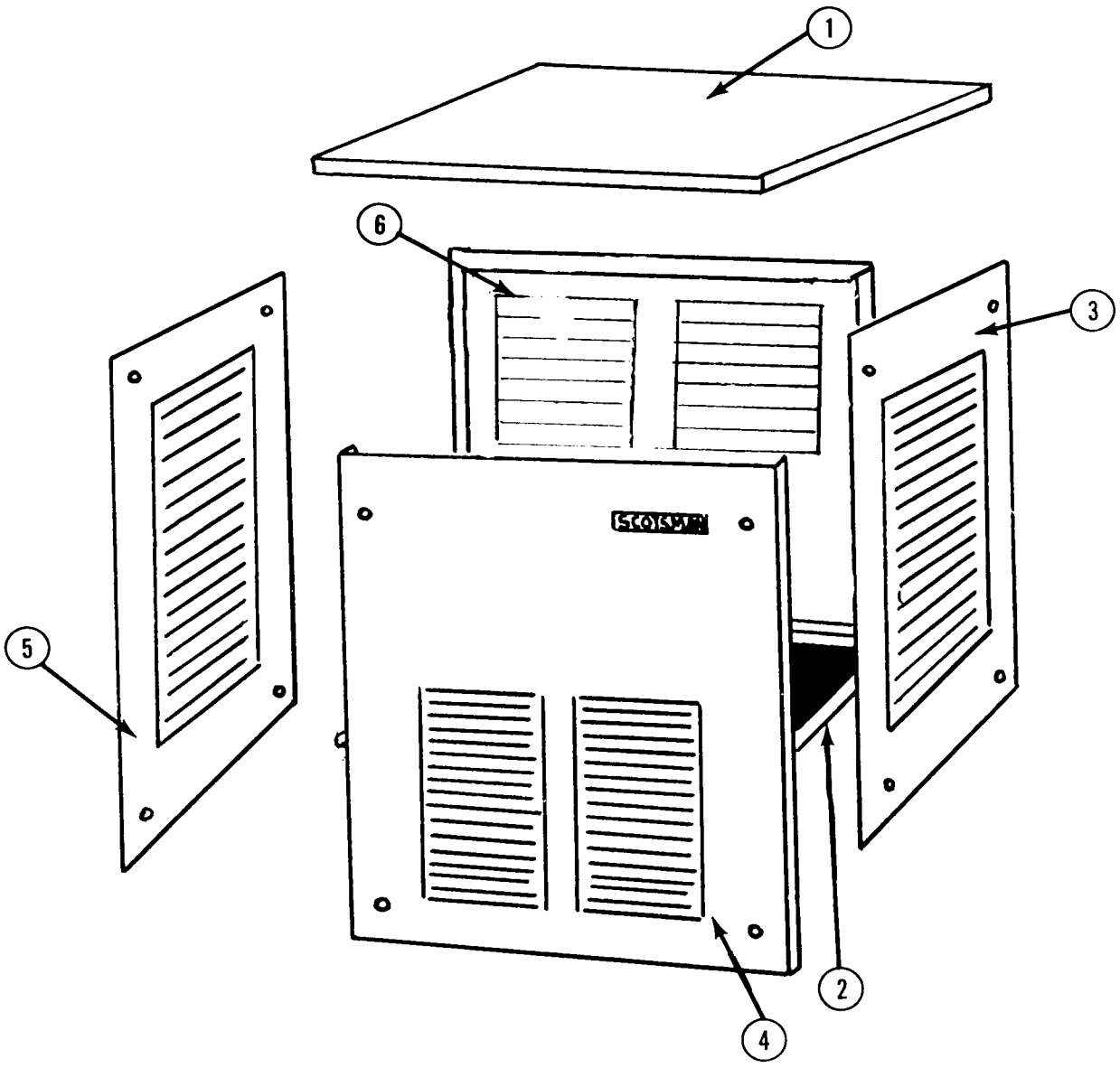

ITEM	DESCRIPTION	ENAMEL	STAINLESS STEEL
1.	Panel Top	A26625-001	A26625-002
2.	Cabinet Base	A26596-001	Same
3.	Panel, Right Side	A26866-001	A26866-002
4.	Panel, Front	A26865-001	A26865-002
5.	Panel, Left Side	A26864-001	A26864-002
6.	Panel, Rear	A26863-001	A26863-002
*	Mounting Screw	03-1404-09	Same
*	Speed Nut	03-1507-01	Same
*	Lockwasher	03-1417-03	Same
*	Aerosol Paint (micromatte)	10-0314-01	—

*Items not Illustrated

TABLE OF CONTENTS

Table of Contents 1
Photograph 2
Specifications and Dimensions 3-4
Description 5
Preparation for Installation 6
Installation Limitations 7
Installation Practices 8-9-10-11
Starting the Machine 12
Operating Features 13-14
Refrigeration Cycle 15
Water Schematic 16
Wiring Diagram-Air Cooled 230/60/1 17
Wiring Diagram-Water Cooled 230/60/1 18
Wiring Diagram-Air Cooled 208-220/60/3 19
Wiring Diagram-Water Cooled 208-220/60/3 20
Wiring Diagram-Air Cooled 208/60/1 21
Wiring Diagram-Water Cooled 208/60/1 22
Control Box-Air Cooled 208-230/60/1 23
Control Box-Water Cooled 208-230/60/1 24
Control Box-Air Cooled 208-220/60/3 25
Control Box-Water Cooled 208-220/60/3 26
Parts Breakdown:
- Chassis Assembly-Air Cooled 27
- Chassis Assembly-Water Cooled 28
- Freezer Assembly 29
- Gear Reducer Assembly 30-31
- Compressor Assembly-Water Cooled 32
- Compressor Assembly-Air Cooled 33
- Reservoir Assembly 34
- Cabinet Assembly 35

Functional Parts - Description
- Bin Thermostat 36
- Contractor 36
- Head Pressure Control (Water Cooled) 36
- Head Pressure Control (Air Cooled) 36
- Low Pressure Control 36
- Water Regulating Valve (Water Cooled Models) 36
- Elapsed Time Indicator 36

Service Analysis 37-38
Acessory Bins 39
Maintenance 40
Cleaning Water System 41
Cleaning Stainless Steel 42-43

THIS PAGE
INTENTIONALLY
LEFT BLANK

SCOTSMAN

MF6 modular flaker

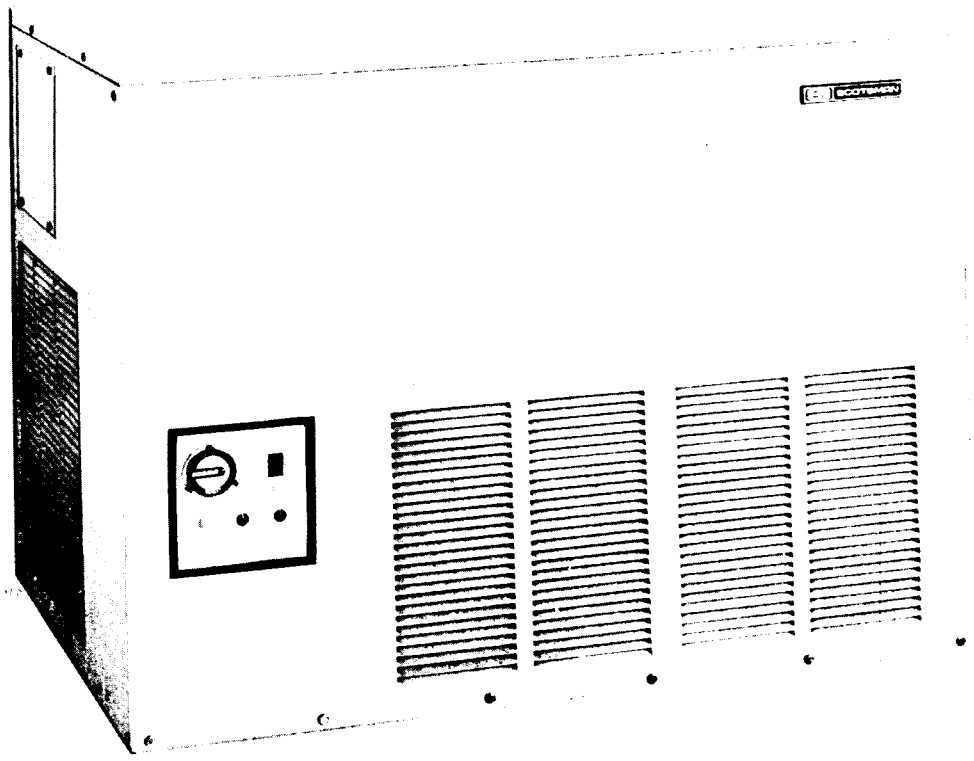

ice making capacity

Daily Ice Capacity is directly related to condenser air inlet temperature, water temperature, and age of machine.

NOTE: To keep your SCOTSMAN MODULAR FLAKER performing at it's maximum capacity, it is necessary to perform periodic maintenance as outlined on page 40 of this manual.

MANUFACTURER:

QUEEN PRODUCTS DIVISION
KING-SEELEY THERMOS CO.
ALBERT LEA, MINNESOTA 56007

MF6 modular flaker

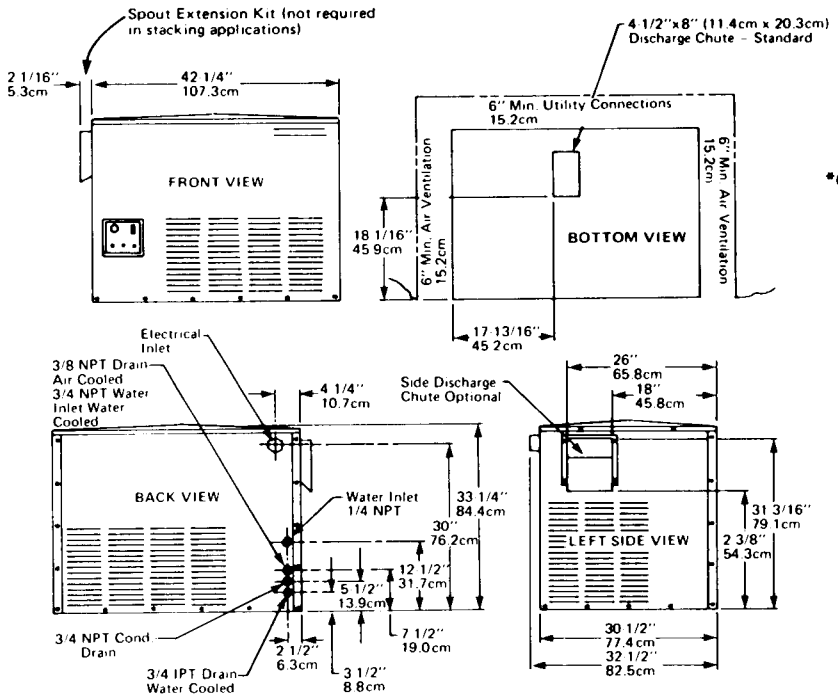

***Capacity:** Refer to Ice Making Capacity chart
Storage Bin: The MF6 will stack onto either the B80 or B90 Scotsman Bin. See your dealer for stacking bin and bin extension capacities.
Height: 33-1/4 (84.5cm) **Width:** 42-1/4 (107.3cm)
Depth: 32-1/2 (82.6cm)
Weight: Air Cooled 628 lbs. (286 kg.)
Water Cooled 557 lbs. (253 kg.)

KSE6 SPOUT EXTENSION KIT Adapts MF6 for ice discharge out of left end of cabinet.

IMPORTANT OPERATING REQUIREMENTS

Electrical Voltage: Machine requires voltage indicated on rating nameplate. Failures caused by improper voltage are not considered factory defects.

Ambient Temperature: Machine is not designed for outdoor installation. Machine will not operate when air temperature is below 50° F. or above 100° F.

Water Pressure & Temperature: Requires 20 lbs. flowing water pressure, without interruption. Machine will not operate when water supply temperature is below 40° F. or above 100° F.

MF6 MACHINE SPECIFICATIONS

Model	Condensing Unit	Compressor Horsepower	Finish *	Shipping Weight lbs.	kg.
MF6AE	Air	2	Enamel	628	286
MF6WE	Water	2	Enamel	557	253

*Stainless steel panel kit SPKMF6 converts unit to stainless steel cabinet. Painted models have Sandalwood enamel micomatte finish

Basic Electricals	Minimum Wire Sizes (W-wire, G-gauge)	Total Amperages
Air Cooled: 230/60/1	2W 12G	15.3
208-220/60/3	3W 12G	14.2
208/60/1	2W 12G	16.1
Water Cooled: 230/60/1	2W 12G	13.9
208-220/60/3	3W 14G	12.5
208/60/1	2W 12G	14.7

We reserve the right to make product improvements at any time. Specifications and design are subject to change without notice.

Scotsman Ice Systems include a full line of modular and self-storing cubers, flakers, drink dispensers, bins and accessories.

SCOTSMAN®
COMMERCIAL ICE SYSTEMS/HOME ICE MAKERS

QUEEN PRODUCTS DIVISION
KING-SEELEY THERMOS CO.
505 FRONT ST., ALBERT LEA, MN 56007

Printed in U.S.A.

SPECIFICATIONS

	MF6WE-2A	MF6AE-3A
Compressor	2 HP	2 HP
Condensor	Water Cooled	Air Cooled
Refrigerant	R-12, 42 oz.	R-12, 65 oz.
Refrigerant Control	Capillary Tube	Capillary Tube
Voltage Characteristics		
Compressor Motor *	230 V - 1 Phase - 60 Cycle	208 V - 3 Phase - 60 Cycle
Worm Drive Motor *	230 V - 1 Phase - 60 Cycle	208 V - 1 Phase - 60 Cycle
Amperage Rating		
Compressor Motor	11.4 amps. 230/60/1	7.4 amps. 208-220/60/3
Worm Drive Motor	2.8 amps.	3.2 amps.
Worm Drive Motor	1/3 HP	1/3 HP
Worm - RPM	4	4
Water Consumption		
to Produce Ice	10 Gallons 1 Hour	10 Gallons 1 Hour
Used by Condensor	Up to 5 Gal. per Minute	
Storage Capacity	Use Remote Bin	Use Remote Bin
Water Pressure Drop *		
Condensor	GPM — Psi-Pressure Drop	
	1.5 — 2.5	None
	3 — 8.5	None
	4.5 — 17.1	None
	6 — 28.0	
3/8" Water Regulating Valve	1.5	
	3 — 2.0	
	4.5 — 4.6	
	6 — 10.0	

* NOTE: Above Pressure Drops for Standard hook-up. Pressure Drop can be reduced by splitting water circuits through condensor and compressor.

* These are listed as standard voltages, other available on request, contact Sales Department for Further Information.

DESCRIPTION

SCOTSMAN Modular Flakers are designed for restaurants, super markets, soda fountains, hospitals, bakeries, fish markets, poultry stores, packing plants, etc. It is the finest Ice Maker on the market today. It will work 24 hours a day for you, or only as needed. It produces the highest quality ice available at any price.

SCOTSMAN Modular Flakers are easily installed requiring only standard water, drain and electrical connections.

ATTRACTIVE COMPACT CABINET. Sandlewood or stainless steel removable panels makes for easy access to mechanical parts.

SEALED REFRIGERATION SYSTEM. Provides quiet, efficient operation of the machine. Compressor motor is internally spring mounted for quiet operation. Compressor motor is covered by a full 5-Year parts only, warranty.

HOW IT WORKS. An exclusive patented ice-making system, wherein water in the constant level float reservoir is fed to the bottom end of the freezing cylinder and turns to ice on the inside of this cylinder. Ice from the refrigerated walls of this cylinder is extruded past the ice breaker at the top of the cylinder through a side opening by means of a stainless steel auger driven by a gearmotor drive.

Model No. MF6 is continuous flow type machine, and is manually started by an OFF and ON switch located on cabinet front. Since the MF6 does not have its own attached bin, it is necessary to use an auxillary bin for ice storage. A bin thermostat is mounted in each continuous flow type machine for the purpose of mounting control bulb from machine to bin.

Where large volume is required, the Scotsman MF6 Modular Flaker fills the need. The stacking system provides volume flaked ice production without requiring additional floor space. With Scotsman bin flexibility, bin extensions can be added for greater storage capacity. The MF6 Modular Flaker is designed also to discharge from the left end thru a spout extension kit feeding into an adjacent bin. Engineered to give maximum protection, a control panel immediately indicates a malfunction. Three lights on the control panel tell you when there is no water coming into the unit, when operating pressure is not normal and when the drive motor is overloaded. A circuit breaker stops all action when there is a motor overload. An elapsed operating time indicator tells the exact number of hours the unit has been operating so periodic checks can be made of the equipment to avoid costly breakdown and repair. Whatever your ice production needs, you can depend on Scotsman, world leader in ice making equipment.

SCOTSMAN MODULAR FLAKERS
PREPARATION FOR INSTALLATION

1. All models MF6 Flakers come equipped as standard with the bottom center discharge chute installed. This permits top mounting on Companion Scotsman Bins - Extenders, as is.

2. As an option, ice can be discharged out thru the left side panel by using a KSE6 spout extension kit. This option necessitates removal of the standard center drop chute and turning freezer ice spout 180%to exit out pre punched hole in left side panel. Extension spout is then added to freezer spout to complete installation. Also reroute bin thermostat capillary into bin for proper shut off.

3. After uncrating modular flaker, remove front, side and top panels and inspect for any concealed damage. Notify carrier of any concealed damage claims.

4. Select unit location prior to hook up of water drain and electrical in accordance with locat and national codes. Minimum room temperatures is 50%Fahrenheit, maximum room temperature 100%Fahrenheit. On air cooled models, select well ventilated location.

5. Install bin for use with modular flaker in its permanent location following instructions included with the storage bin.

6. Level bin with adjustable legs and wipe storage bin liner clean with damp cloth.

7. The flaker unit may now be placed on the bin. Insure that the holes in the base panel line up with the holes in the bin top.

8. Thru cabinet top, locate metal reservoir. Remove water reservoir cover and take out paper packing around float ball.

9. Loosen motor compressor hold down nuts to permit motor compressor to ride free on mounting pads.

10. Open electrical control box cover and check unit nameplate voltage against building source voltage and make sure they correspond. **Caution** - Improper voltage supplied to units will void your parts replacement program.

11. Locate registration card and fill out card completely including model and serial numbers as taken from aluminum plate found behind front service panel. Forward to Scotsman factory for your personal registration certificate.

INSTALLATION LIMITATIONS

ELECTRICAL

1. Scotsman, like most manufacturers, purchases electrical motors that are rated to operate within 10% variance above or below nameplate ratings.

2. Improper voltages applied to Scotsman equipment can cause premature failures and burnouts. Failures of this type are not considered as factory fault or defect.

AMBIENT

WARNING — This machine is not designed for outdoor installations. This machine will not operate when air temperatures are below 50° F. or above 100° F.

This unit was not fabricated nor intended to be installed outdoors.

WATER

3. Scotsman Ice Systems require 20 pounds flowing water pressure to operate satisfactorily. Pressures lower than 20 pounds or interruptions in the water supply can cause serious mechanical damage to this product.

   This machine will not operate when water supply temperatures are below 40° F. or above 100° F.

INSTALLATION

1. **Bins.** Care should be exercised in proper bin selection. Too small a bin will give unsatisfactory performance. A bin should have a minimum of 1/2 of machines capacity per day, when the machine shuts off on thermostat. Make sure users demands are met, by proper bin as well as by proper machine selection. Plan relative location of the machine, so as to enter the bin as close to the top as possible. An upper and a lower access door should be provided in all bins. Bins should also be higher than their width and length dimensions, so that the maximum ice can be stored in the minimum cubic feet of space. A bin designed in this fashion, will be the most convenient to the user. Too large a bin can also cause trouble. Excessive melting of ice will occur if the bin is larger than required. Proper bin selection is important to the success of the ice machine installation.

2. **Stands.** A special stand should be built if the machine is located beside the bin. Care should be exercised in making the stand strong enough to support the weight. In designing the stand, plan for servicing of the machine from front, top and sides. It is also possible to locate the machine on top of the bin. Care should be used in selecting a bin that has been specially reinforced. Standard bins are usually not sufficiently reinforced for this purpose. An unsteady platform will cause excessive vibration. Specially built bins can provide proper support and allow for a servicing platform.

3. **Bin Thermostat.** Locate the thermostat bulb as high as possible in the bin and still allow the machine to cut off before ice builds up in the chute. If this occurs, ice can stick in the chute, keeping the machine off, after there is a need for ice production. The capillary can usually enter through the chute opening. Keep the bulb and the capillary line away from shovels.

4. **Ice Chutes.** If the outlet of the machine is remote from the bin, a chute will be required. Stainless steel is an excellent material for this purpose where its cost is not prohibitive. Angles or ledges of less than 45° should not be used. Ice will cling to the surface and either melt excessively or jam in the chute. The sharper the drop the better. If straight down, do not insulate, unless necessary.

INSTALLATION PRACTICES

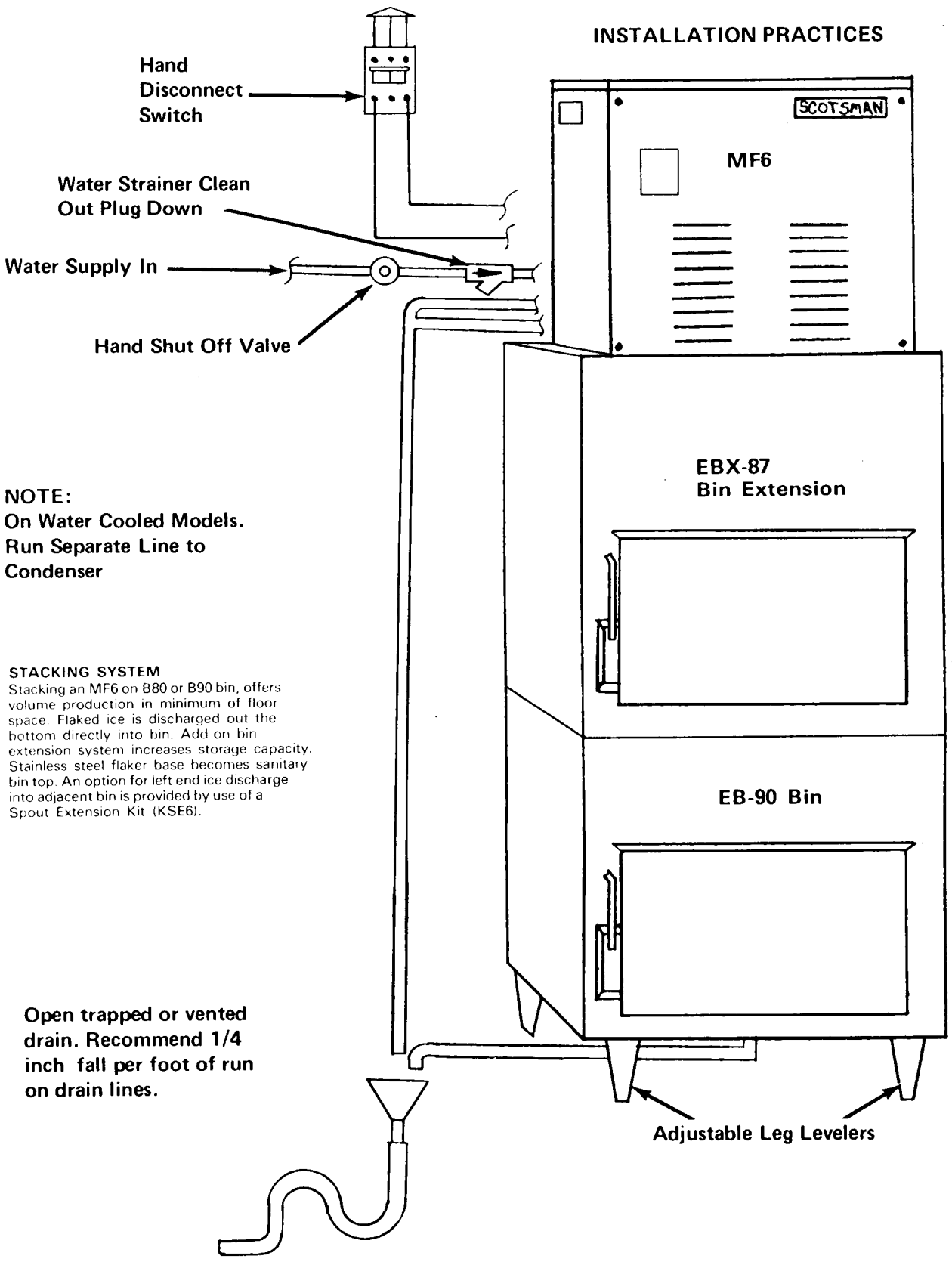

NOTE:
On Water Cooled Models. Run Separate Line to Condenser

STACKING SYSTEM
Stacking an MF6 on B80 or B90 bin, offers volume production in minimum of floor space. Flaked ice is discharged out the bottom directly into bin. Add-on bin extension system increases storage capacity. Stainless steel flaker base becomes sanitary bin top. An option for left end ice discharge into adjacent bin is provided by use of a Spout Extension Kit (KSE6).

Open trapped or vented drain. Recommend 1/4 inch fall per foot of run on drain lines.

INSTALLATION
ELECTRICAL CONNECTIONS:
MF6AE-2A
230 Volts, 60 Cycle, 1 Phase
20 Amp. Circuit

10 Guage wire should be used for electrical hook-up. All Scotsman Modular Flakers require a solid earth ground wire.

Be certain that the Flaker is on its own circuit and individually fused. The maximum allowable voltage variation should not exceed 10 per cent of the nameplate rating even under starting conditions. Low voltage can cause erratic operation and may be responsible for serious damage to the overload switch and motor windings.

All external wiring should conform to the National, State and local Electrical Code requirements. Usually an electrical permit and the services of a licensed electrician will be required.

ELECTRICAL INSTALLATION:

		MF6-2	MF6-3
Compressor	H.P.	2	2
	Voltage	230	208-220
	Amp. Rating	11.4	7.4
	Watts Input	2020	1560
	Cycle	60	60
	Phase	Single	Three
Drive Motor	H.P.	1/3	1/3
	Voltage	230	208
	Amp. Rating	2.8	3.2
	Cycle	60	60
	Phase	Single	Three

ELECTRICAL CONNECTIONS:

MF6-2	MF6-3
230 Volts	208 Volts
60 Cycle, 1 Phase	60 Cycle, 3 Phase
30 Amp. Circuit	20 Amp. Circuit
3-wire	4-wire

INSTALLATION

WATER SUPPLY

Separate water supplies are recommended, on water cooled models.

A. Freezer or ice making supply water should be run through a hand shut off valve before entering unit. Freezer supply water connection is top connection in drain and hook up assembly. Has a 1/4" N.P.T. female pipe casting. This line also has factory installed water strainer internally mounted.

Connect to a good cold water supply with minimum 1/2" O.D. copper line for short run, 5/8" O.D. copper line for long runs. A check valve on this line will be required in some cities depending on local plumbing codes.

B. The condensor water supply line connects to the 3/4" female pipe casting on machine. Use care in connecting water line to the machine. Incoming water goes through the water regulating valve first and then to the water cooled condensor. Observe arrow on water regulating valve. Water supply must be installed to conform with local code. In some cases, a licensed plumber and/or a plumbing permit will be required.

If tower is used several precautions should be observed.

1. Leave water regulating valve in the system.

2. Separate the make-up water for the reservoir from the tower water. Only city water should be used for ice making.

3. Use 3/4" tower water lines or larger, depending on the length of run. Over 30 feet — use 1" OD lines.

4. Notice: A tower can freeze in the wintertime and the Scotsman flaker will be in operation 12 months per year. An indoor tower and pump can be used with outdoor air ducted in and out, if the fan cycles on water temperature to prevent freezing. An indoor sump can be used. An auxiliary tower and city water hook-up will prove satisfactory in some climates. City water in the winter and tower water during the summer. Consult your tower and pump manufacturers for proper sizing. In no event should less than a nominal 3 ton tower, or less than a 3/4 HP high pressure tower pump be used.

DRAIN (when not re-used)

The recommended condensor waste is 3/4" OD copper tubing. Must be run to an open, trapped vented drain. If drain is a long run, allow a 1/4" pitch per foot. Drain must be installed to conform with local code. Condensor drain is a low pressure drain.

STARTING THE MACHINE:

When the machine is placed and inspected as per instructions and all plumbing and electrical connections are completed and tested, turn on the water supply. Be sure the float cover is removed to check on the float operation and water level in the water reservoir. Be sure the water reservoir is filled before starting the machine. Water level should be 1/4 inch below the reservoir overflow.

When this is completed, turn on the manual switch located on front panel of the cabinet and the machine is in automatic operation. In two to three minutes ice will start dropping off the worm shaft and out the ice chute. Let the machine operate for at least 30 minutes and check for any excess noise other than the normal compressor noise. Test the ice storage control bulb by holding a handful of ice around the bulb until the machine shuts off. One minute should be normal for the control to function. Within minutes after the ice is removed, the bulb will warm up and the machine will automatically start up. The control is factory set and should not be reset until this test is made. Normal setting of this control should be approximately 35 degrees cut-out and 45 degrees cut-in.

Check pressure settings at the time of start-up. On the water-cooled models set the head pressure at 135 PSI. On the air-cooled models the head pressure will vary between 130 and 145 PSI head pressure. The frost line should extend out of the accumulator if properly charged with refrigerant and suction pressure will range between 12 and 14 PSI with 50° F inlet water.

Check the hand reset low pressure control setting. This safety device should be set at approximately 5 PSI below normal operating suction pressure and should cut off in case of interruption in water supply, shortage of refrigerant, low ambient or any other cause of abnormally low suction pressure.

REFRIGERANT CHARGE:

The below refrigerant charge is approximate. When charging, set at 135 PSI head pressure and charge so that the frost line extends out of the evaporator and into the accumulator after fifteen minutes of operation.

Model	Refrigerant Charge
Air-Cooled	65 oz. R-12
Water Cooled	42 oz. R-12

FINAL CHECK LIST

1. Is the unit level? (IMPORTANT)
2. Have all electrical and piping connections been made?
3. Has the voltage been tested and checked against the nameplate rating?
4. Is the water supply valve open and the electric power on?
5. Is the water reservoir filled and shut off? All packing removed?
6. Have unit and bin been wiped clean?
7. Has owner been given this Operating Instruction Booklet, and has he been instructed on how to operate the machine?
8. Have the installation and registration cards been filled out and mailed to the factory?
9. Check all refrigerant and conduit lines to guard against vibration and possible failure.
10. Installed in a well ventilated room where ambient temperatures do not fall below 50° Fahrenheit.
11. Is unit installed with a minimum 4" air space around sides and back?

WARNING: THIS MACHINE MUST NOT BE ALLOWED TO OPERATE WHEN THE WATER SUPPLY IS SHUT OFF, OR AT BELOW RECOMMENDED WATER PRESSURE. TURN MASTER SWITCH TO "OFF" POSITION WHEN WATER SUPPLY IS OFF, OR WHEN WATER PRESSURE IS BELOW RECOMMENDED OPERATING PRESSURE.

NO WATER LIGHT WILL BE LIT UNTIL PRESSURE IS RESTORED.

OPERATING FEATURES

CONTROL CONSOLE

With the introduction of the models MF6 Modular Flakers, Scotsman also introduces yet another customer convenience. Located on the front panel is a visual control console that monitors unit performance automatically. Any interruption or significant reduction in water or electrical supplies causes an instant stop to the operation of the modular flaker. At the same time a warning light is activated on the control console telling the user of the ice makers stoppage and also the reason why.

If the stoppage is caused by its refrigerant pressures or overloading in the drive train mechanism a red light glows. Both controls that activate the red lights are manual reset controls, therefore, the cause of the stoppage should be diagnosed and corrected before reoperating the icemaker.

The amber light signals low or interuppted water supply. This light and it's internal control are on an automatic reset device whereby the icemaker will automatically start up and the amber light goes off when water pressure reaches 20 pounds or more.

FAN STAGING – AIR COOLED MODELS

Air cooled models MF6 are equipped with both a left and right fan motor. Both motors are controlled by a high pressure that is connected to the systems high side. The left fan control will not operate until high side pressures reach 155 P.S.I. The right fan control will not operate until pressures reach 170 P.S.I. This way, in colder ambients, only the left fan motor operates. In higher ambients the right side fan will cycle on-off. In extremely high ambients, both fans operate.

ELAPSED TIME INDICATOR

Another unique first by Scotsman is the elapsed time indicator built into this system. Calibrated in hours, the timer operates whenever the ice maker compressor runs. This tells the user exactly how many hours of service this icemaker has performed. It is also a valuable aid in scheduling maintenance on a use basis rather then calender time.

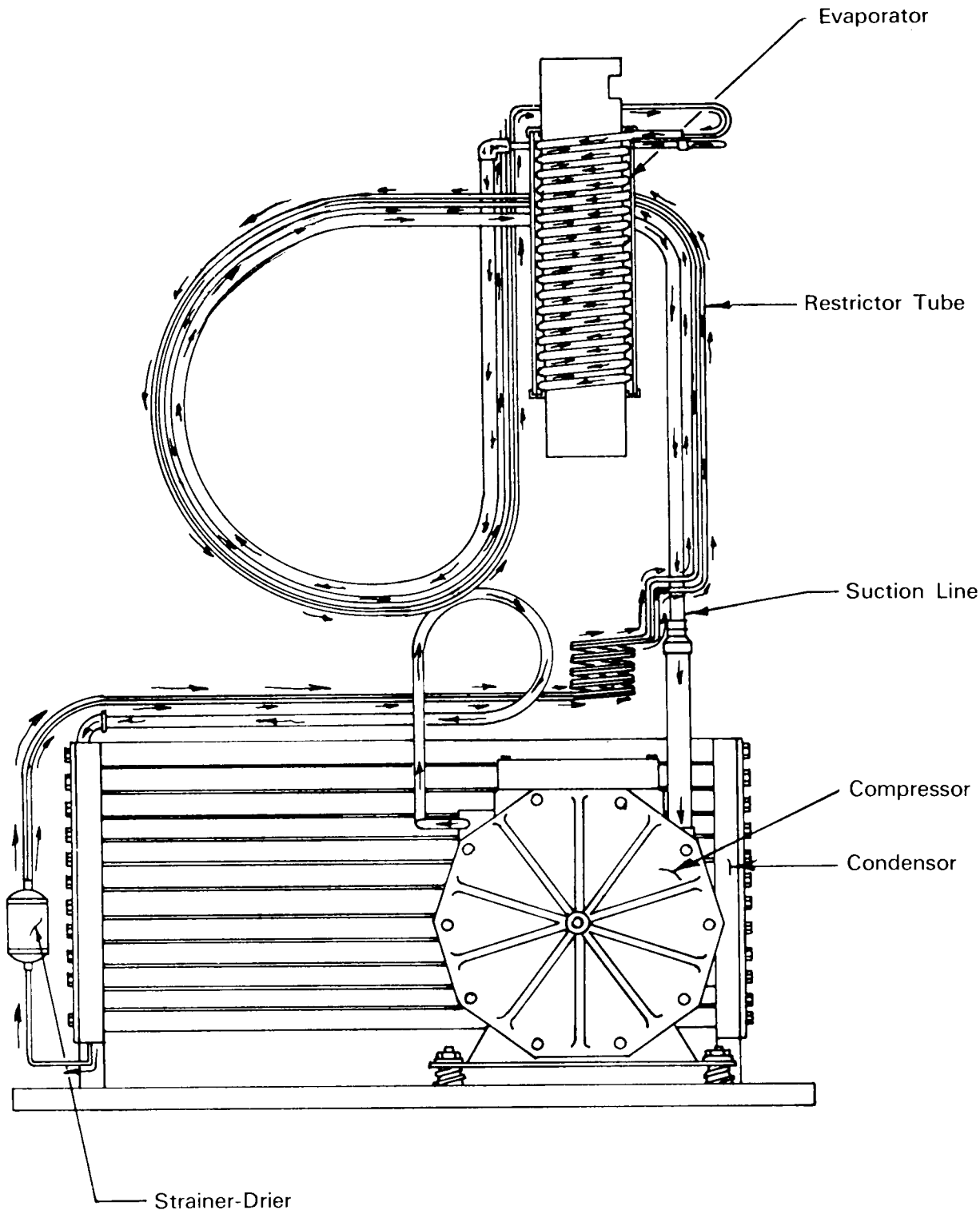

REFRIGERATION CYCLE

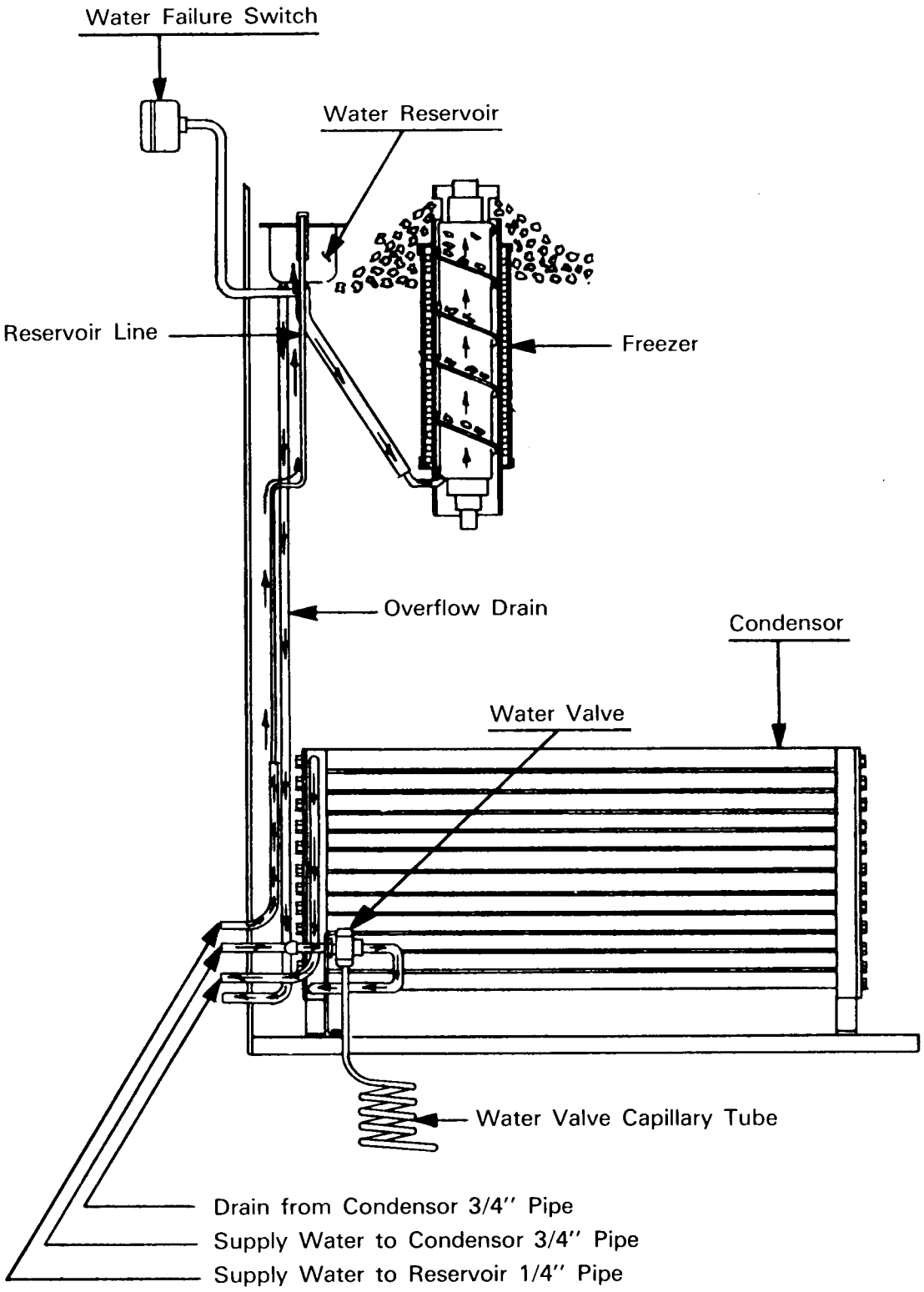
Water Failure Switch
Water Reservoir
Reservoir Line
Freezer
Overflow Drain
Condensor
Water Valve
Water Valve Capillary Tube
Drain from Condensor 3/4" Pipe
Supply Water to Condensor 3/4" Pipe
Supply Water to Reservoir 1/4" Pipe

WATER CYCLE

WIRING DIAGRAM
230/60/1 Air Cooled

A26417-002

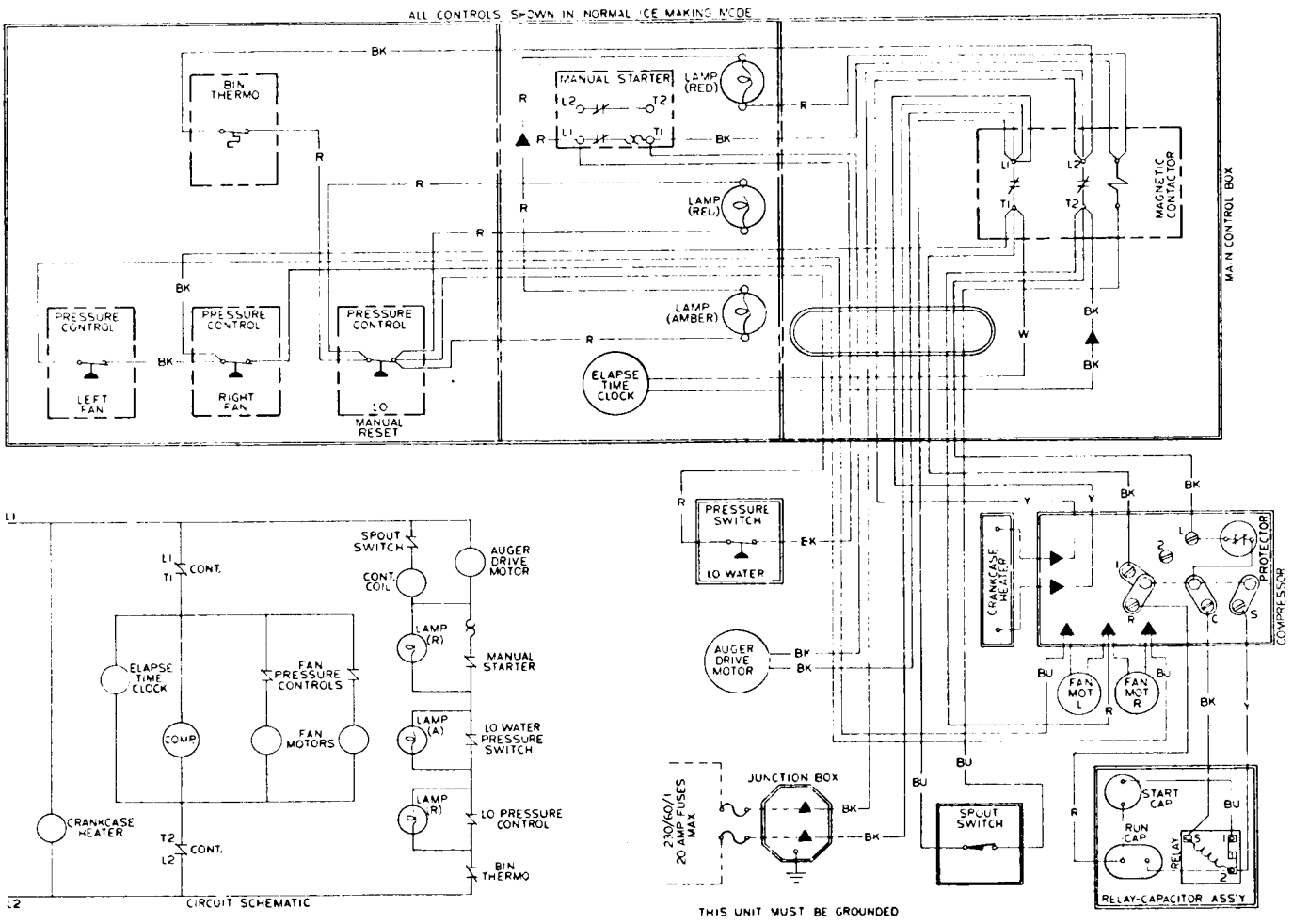

WIRING DIAGRAM
230/60/1 Water Cooled

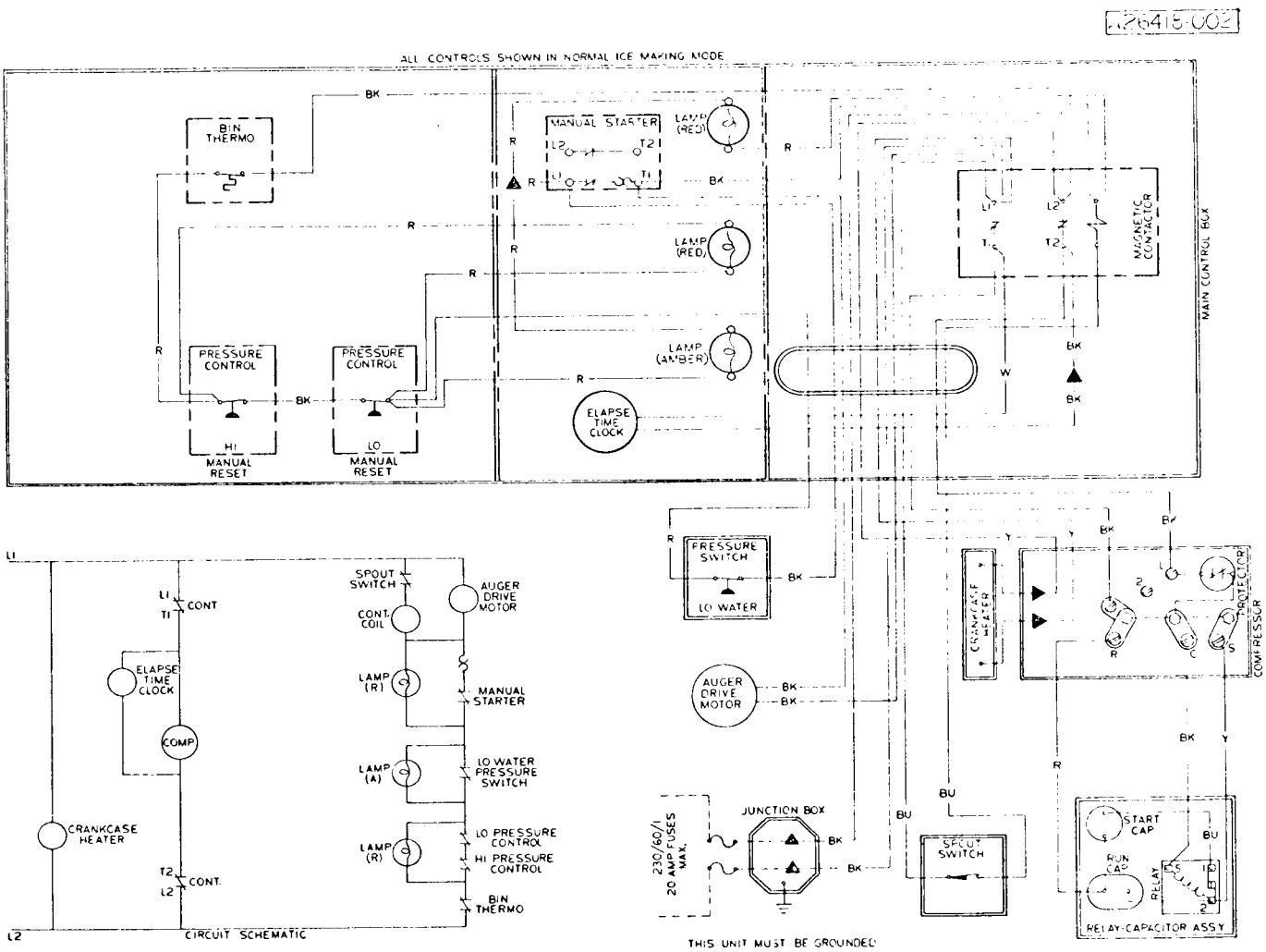

WIRING DIAGRAM
208-220/60/3 Air Cooled

A26417-003

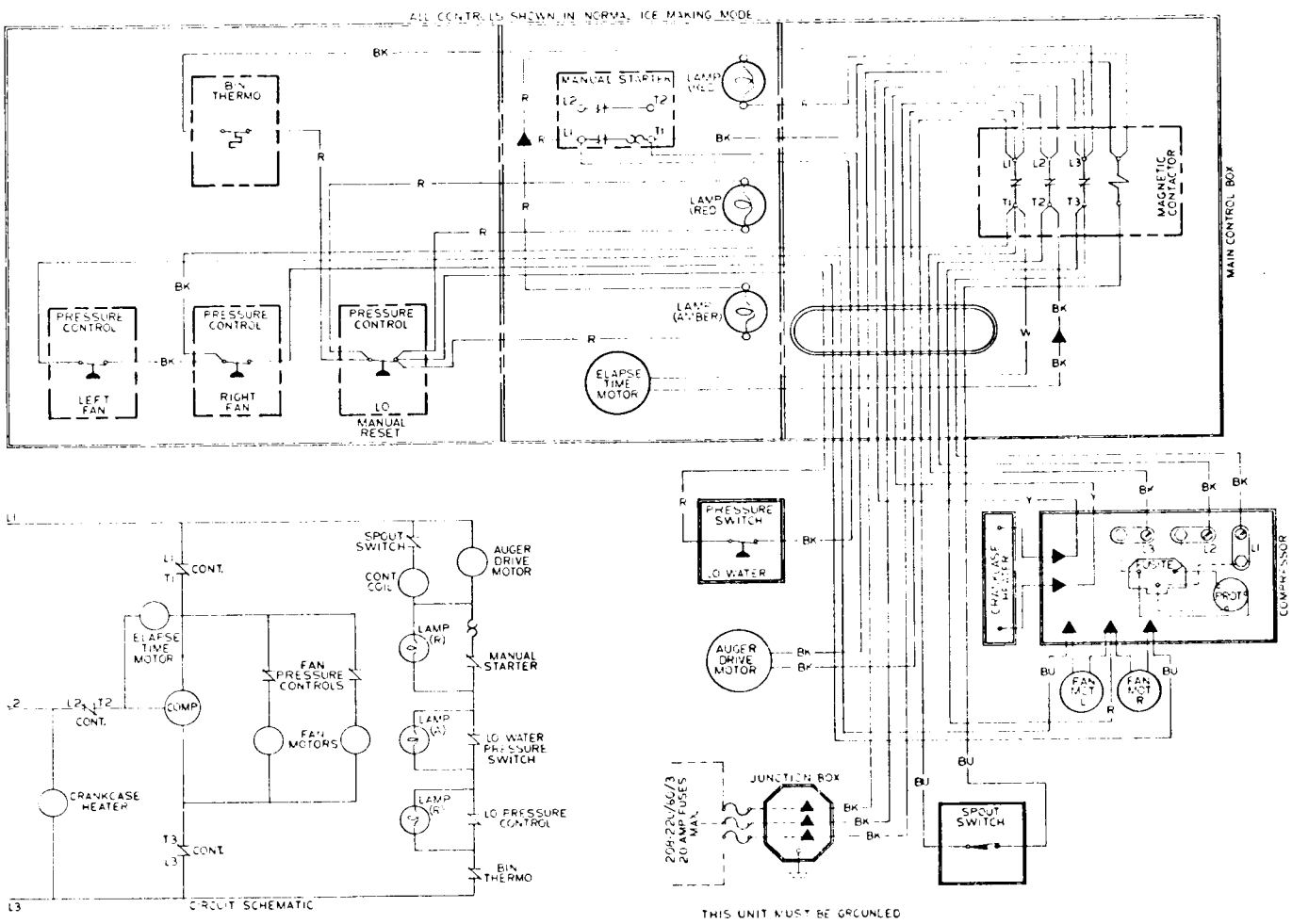

WIRING DIAGRAM
208-220/60/3 Water Cooled

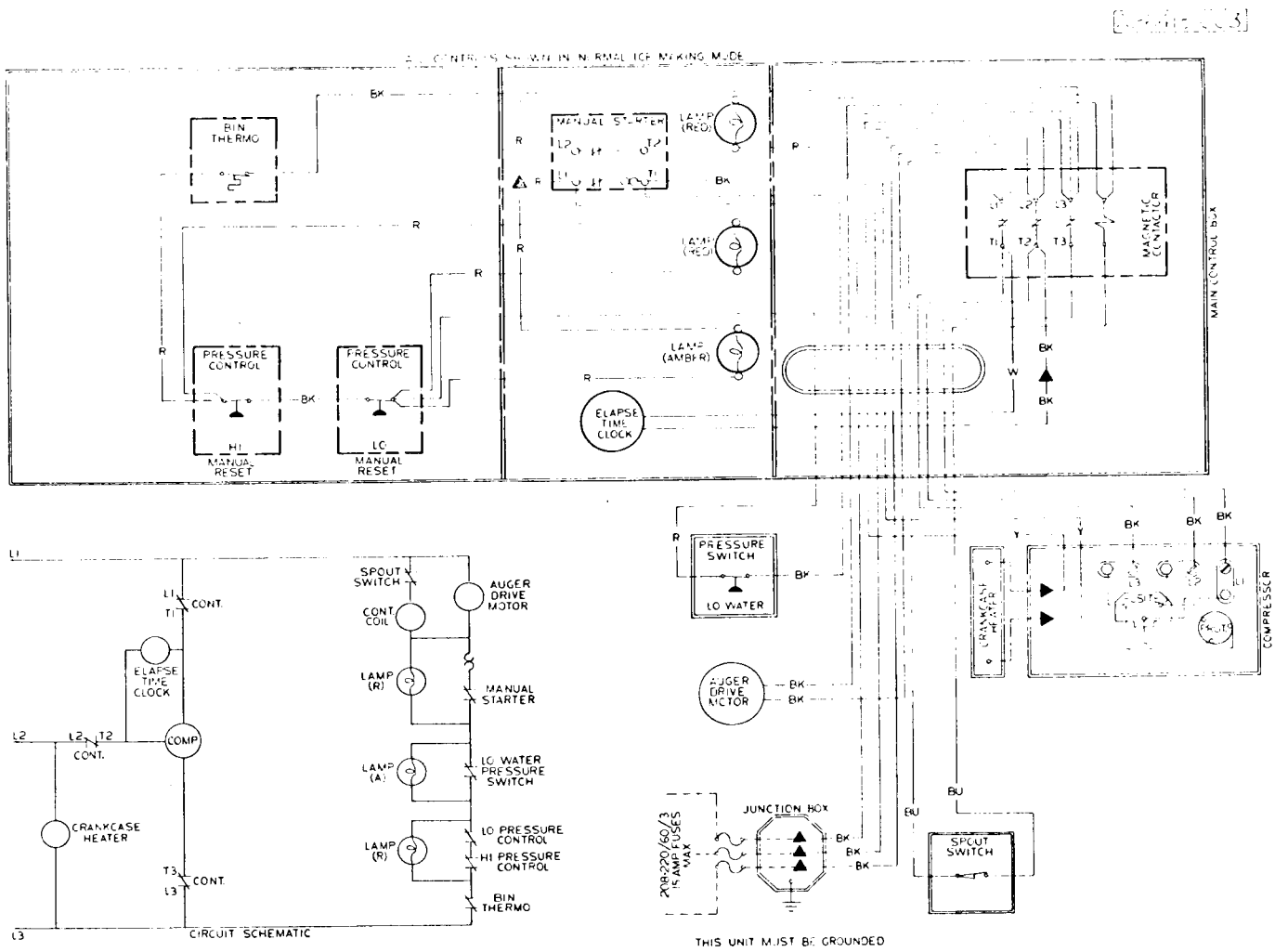

WIRING DIAGRAM
208/60/1 Air Cooled

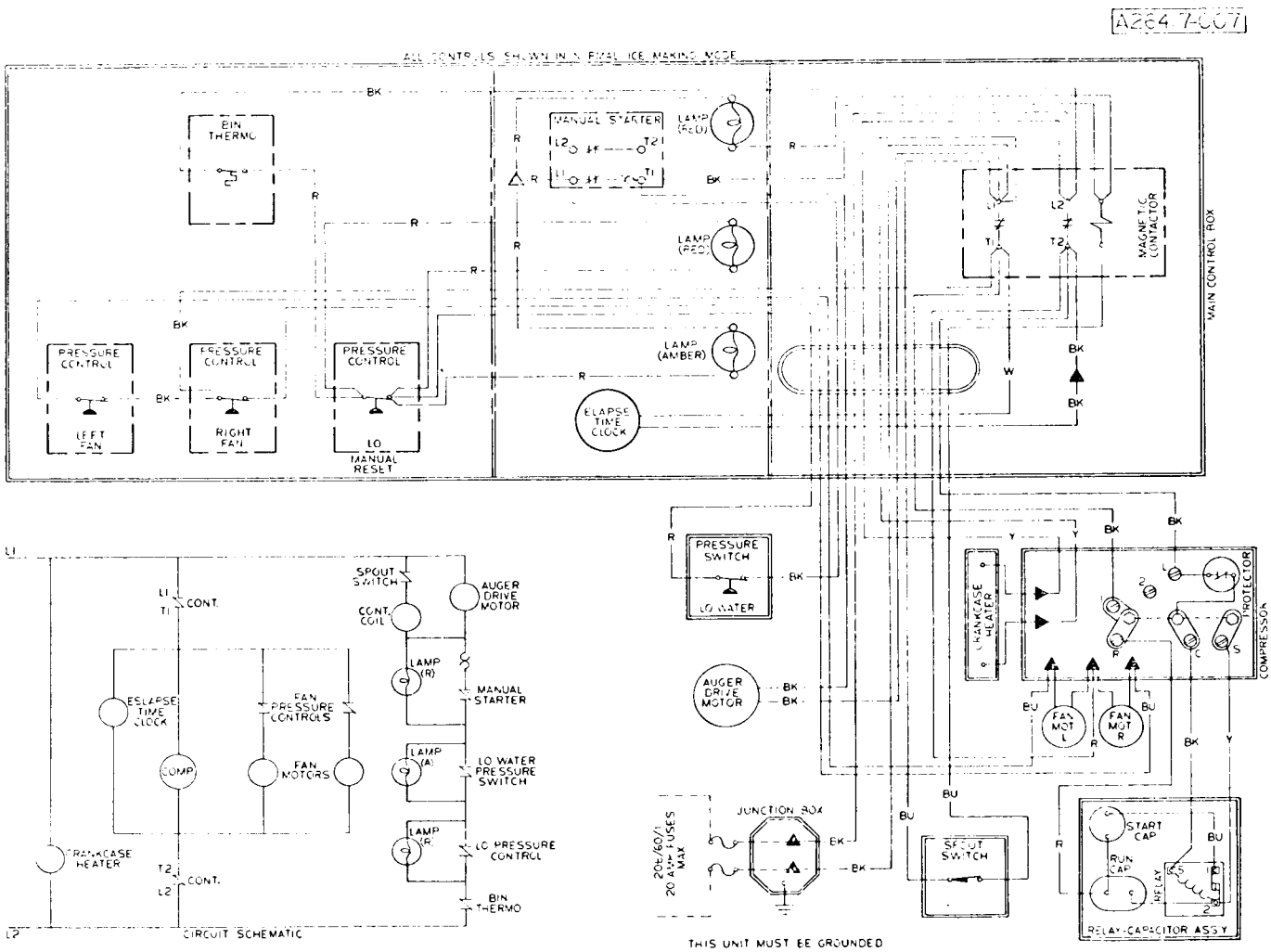

WIRING DIAGRAM
208/60/1 Water Cooled

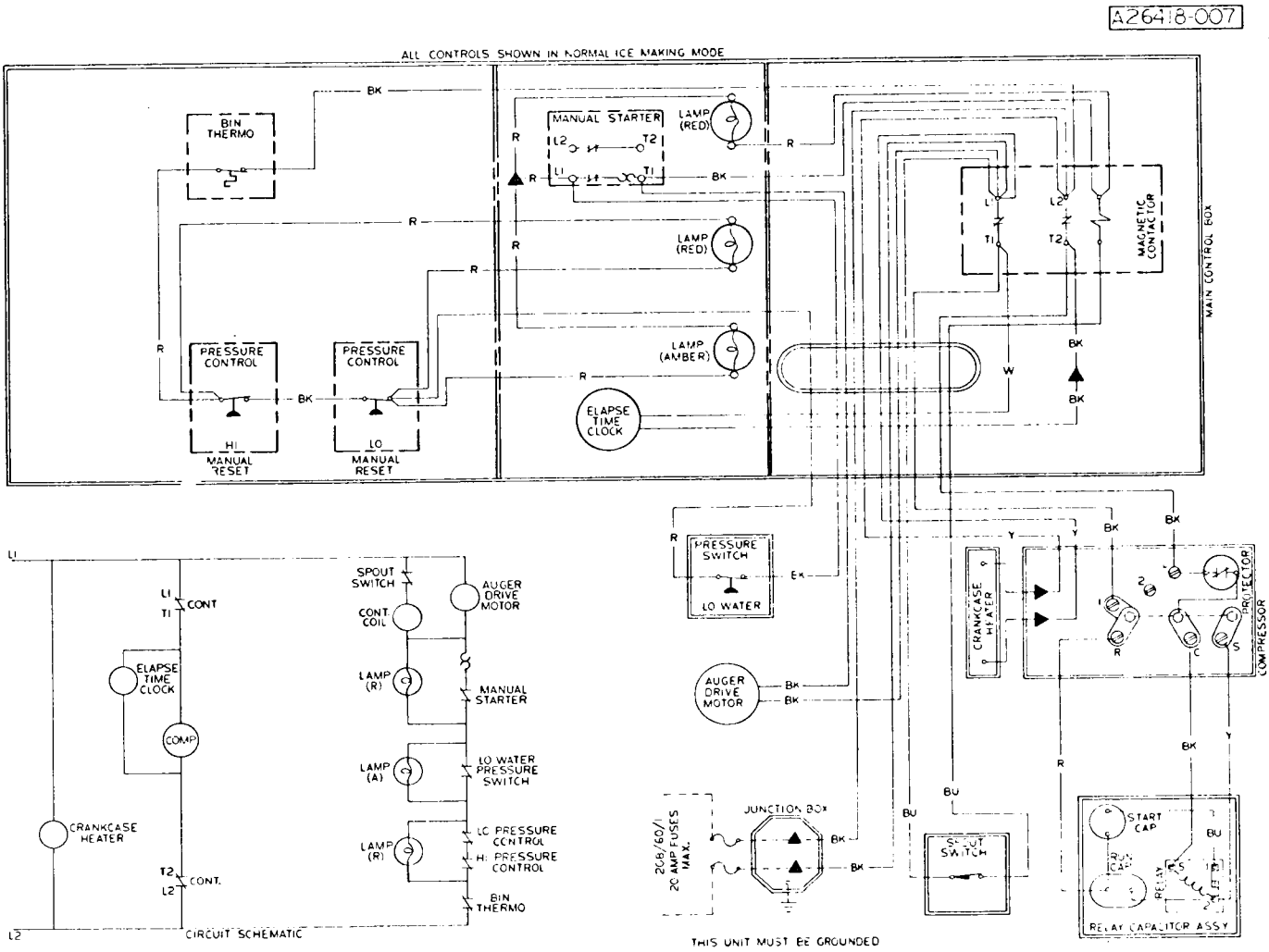

CONTROL BOX — AIR COOLED
208-230/60/1

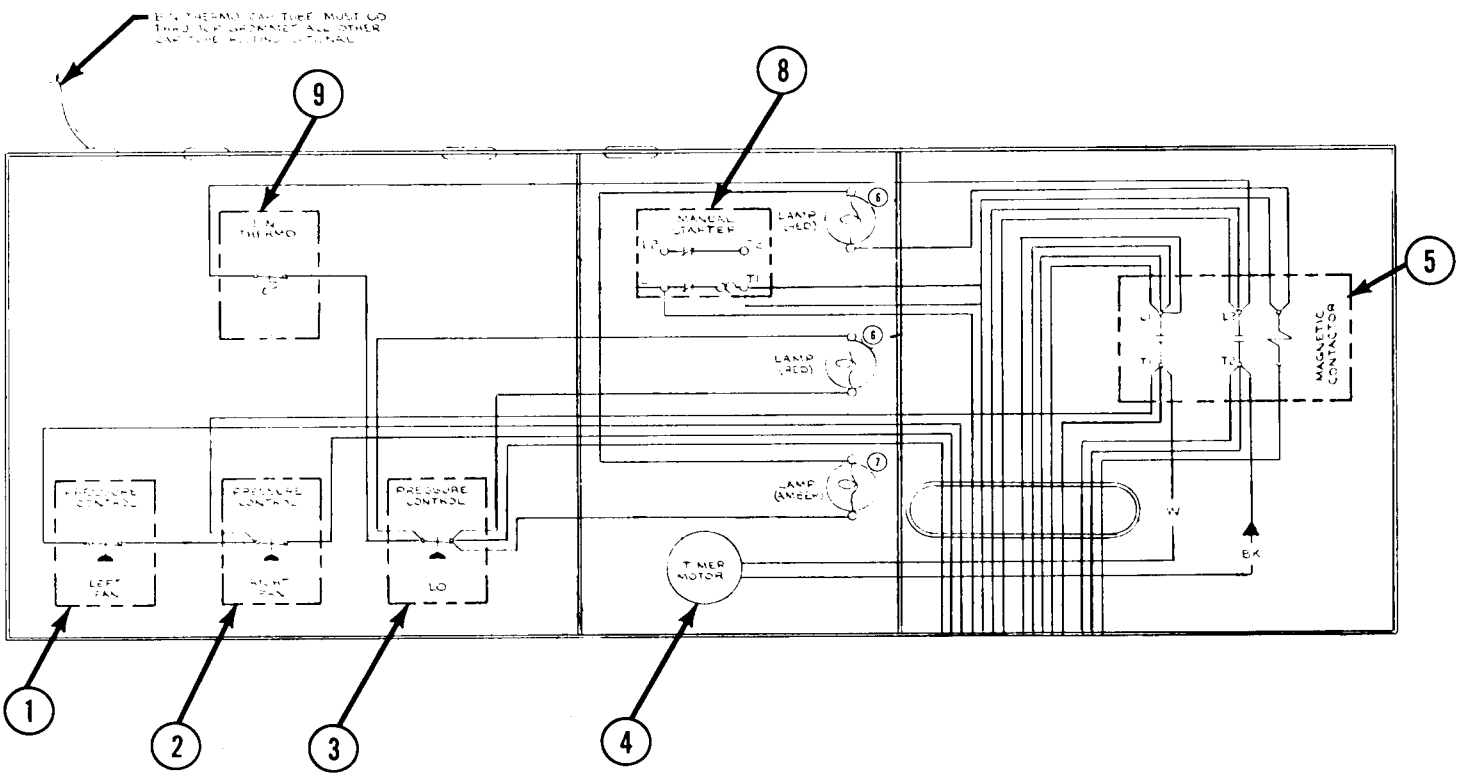

ITEM	PART NO.	DESCRIPTION
1.	11-0342-00	Fan Pressure Control - L
2.	11-0343-00	Fan Pressure Control - R
3.	11-0358-00	Lo Pressure Control
4.	12-2001-01	Elapsed Time Control
5.	12-820-02	Contractor
6.	12-1997-01	Light - Red
7.	12-1997-02	Light - Amber
8.	12-530A-00	Manual Starter/Overload
9.	11-0354-00	Bin Thermostat

CONTROL BOX — WATER COOLED
208-230/60/1

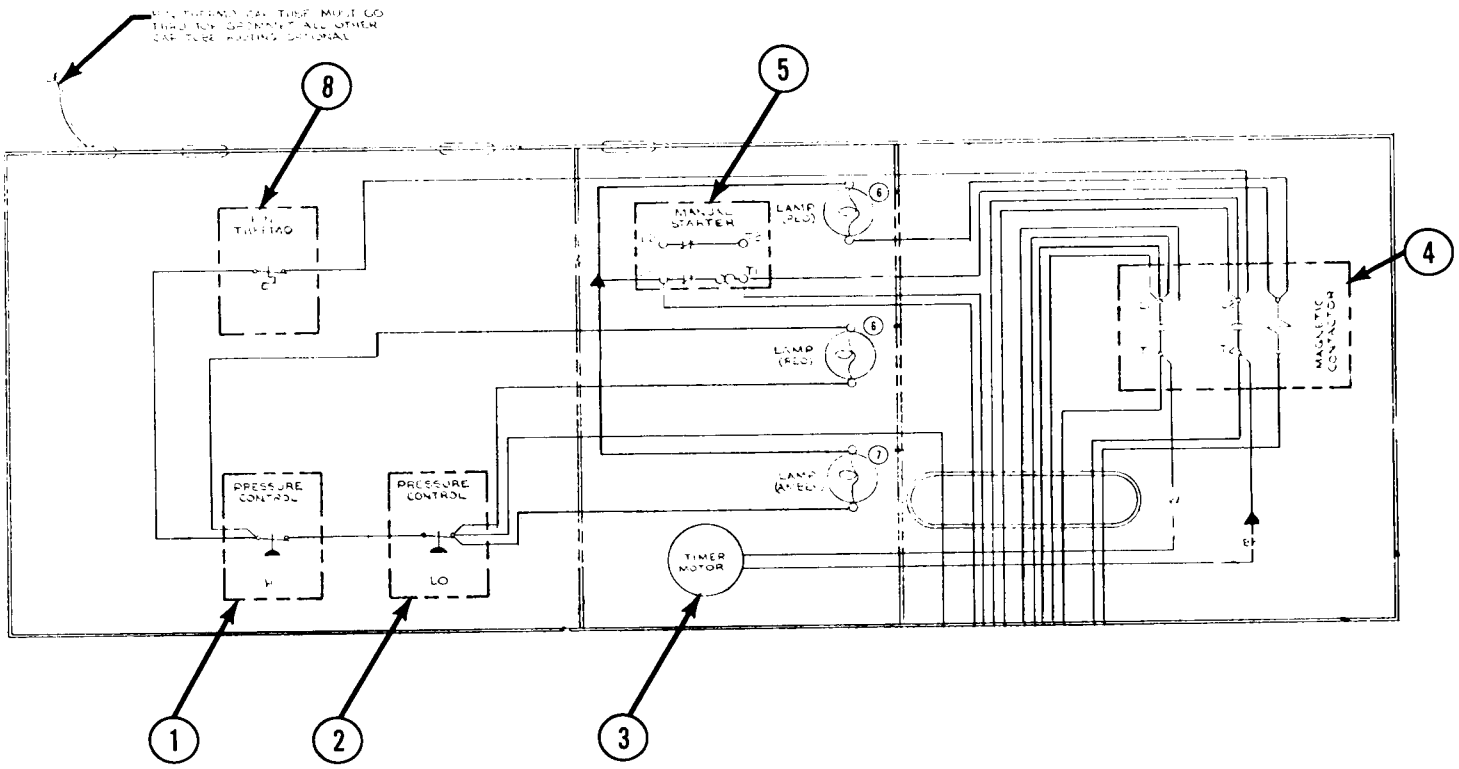

ITEM	PART NO.	DESCRIPTION
1.	11-0388-01	Hi Pressure Control
2.	11-0358-00	Lo Pressure Control
3.	12-2001-01	Elapsed Time Control
4.	12-0820-02	Contractor
5.	12-530A-00	Manual Starter/Overload
6.	12-1997-01	Light - Red
7.	12-1997-02	Light - Amber
8.	11-0354-00	Bin Thermostat

CONTROL BOX — AIR COOLED
208-220/60/3

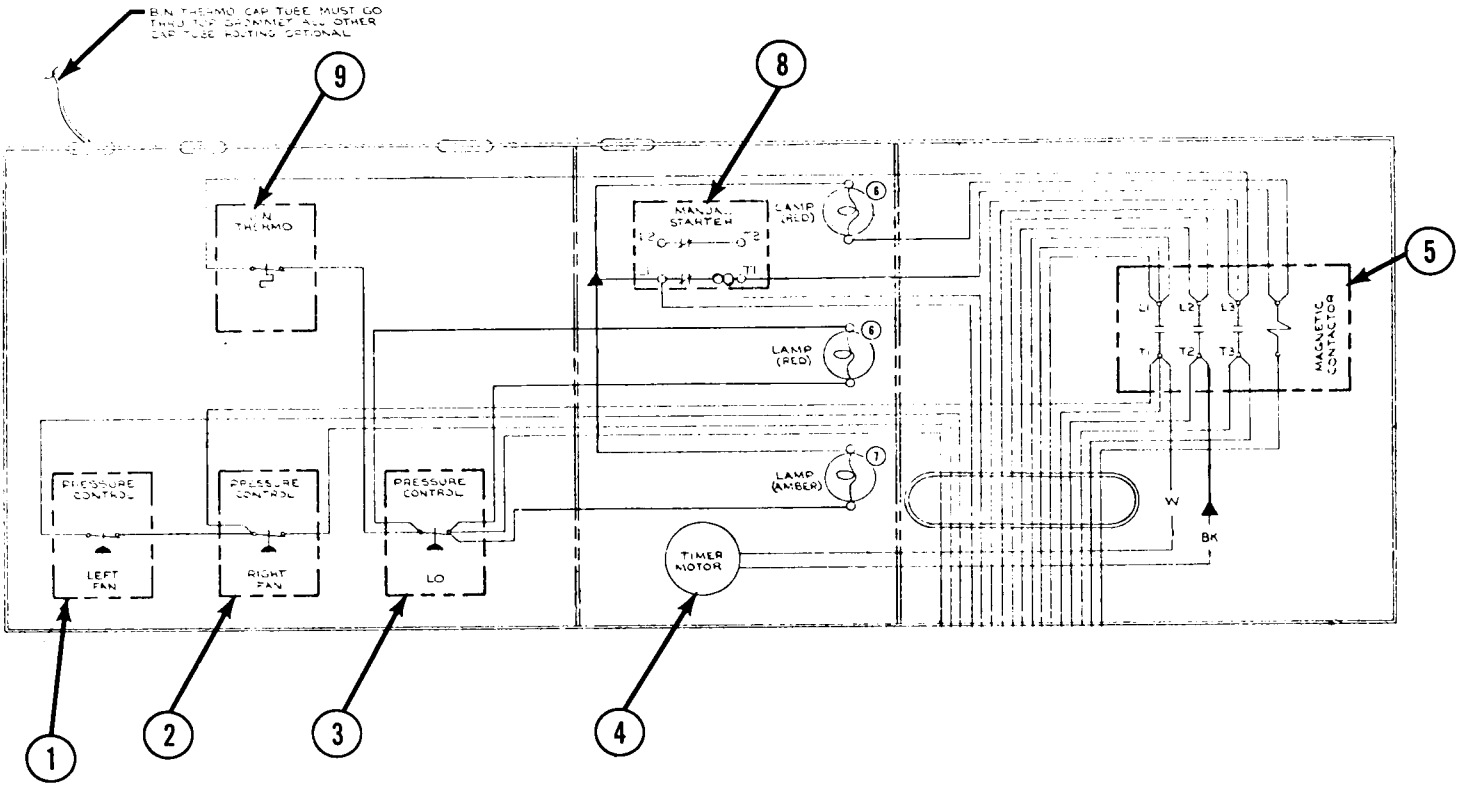

ITEM	PART NO.	DESCRIPTION
1.	11-0342-00	Fan Pressure Control - L
2.	11-0343	Fan Pressure Control - R
3.	11-0358-00	Lo Pressure Control
4.	12-2001-01	Elapsed Time Control
5.	12-739-02	Contractor
6.	12-1997-01	Light - Red
7.	12-1997-02	Light - Amber
8.	12-530A-00	Manual Starter/Overload
9.	11-0354-00	Bin Thermostat

CONTROL BOX — AIR COOLED
208-220/60/3

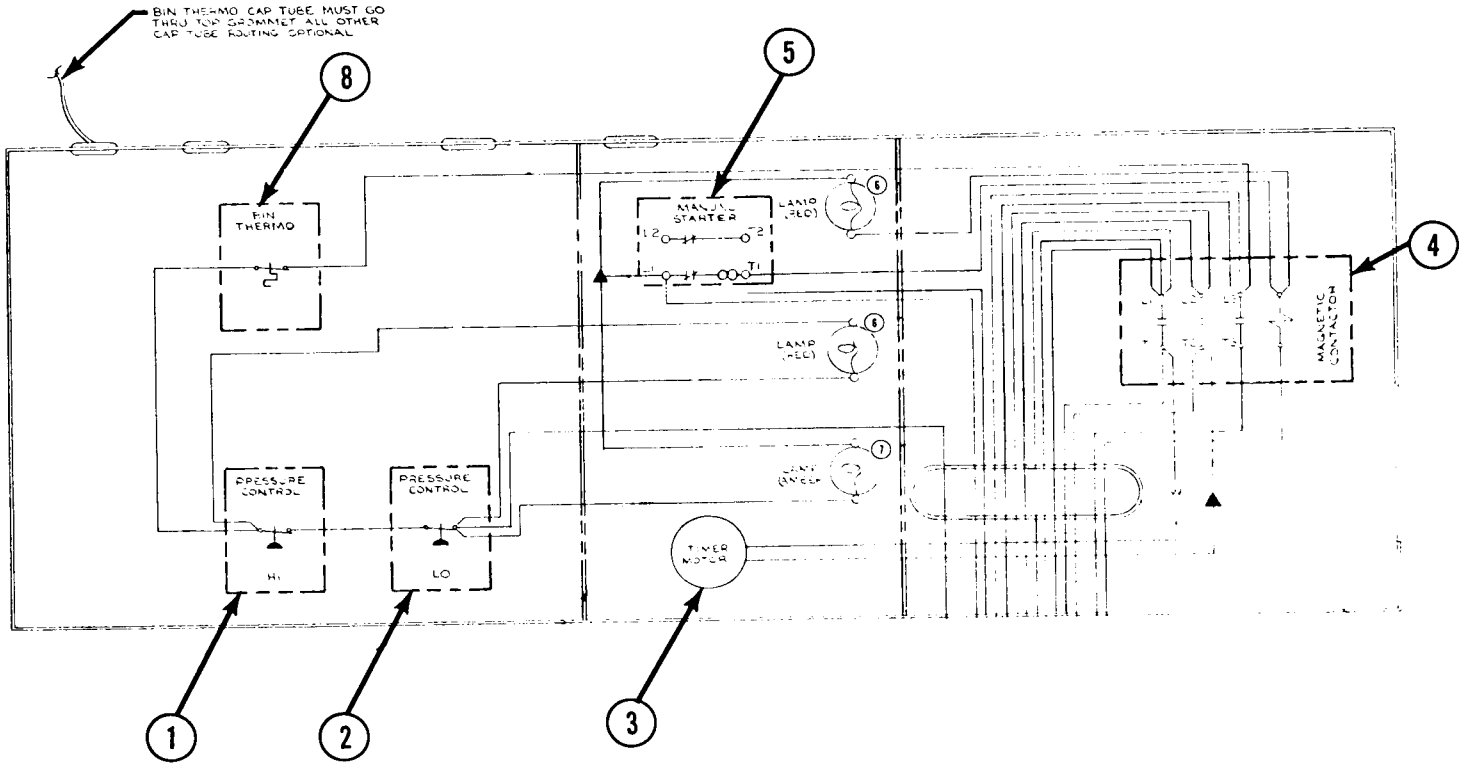

ITEM	PART NO.	DESCRIPTION
1.	11-0388-01	Hi Pressure Control
2.	11-0358-00	Lo Pressure Control
3.	12-2001-01	Elapsed Time Control
4.	12-0739-02	Contractor
5.	12-530A-00	Manual Starter/Overload
6.	12-1997-01	Light - Red
7.	12-1997-02	Light - Amber
8.	11-0354-00	Bin Thermostat
9.		

MF6 TOP VIEW
AIR COOLED

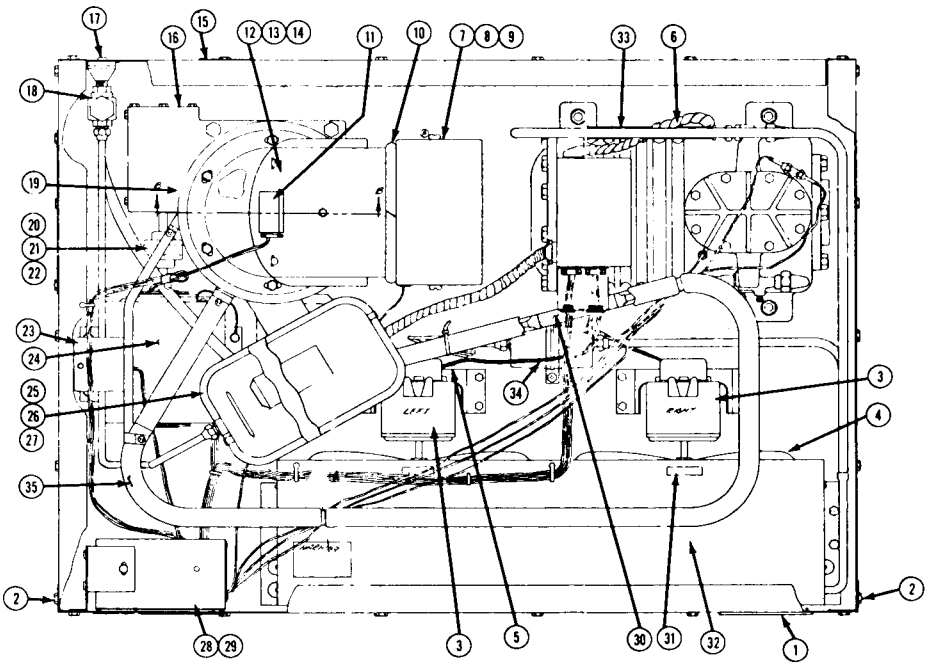

ITEM	PART NO.	DESCRIPTION
1.	15-156-00	Scotsman Emblem
2.	3-1405-01	Screws - Hex Head
3.	18-0788-02	Fan Motor 230/60/1
	18-0788-07	Fan Motor 208/60/1 and 208-220/60/3
4.	18-0787-00	Fan Blade 2/Unit
5.	18-1421-00	Fan Motor Mount 2/Unit
6.	18-0789-02	Crankcase Heater
7.	A-25895-001	ST.ST. Ice Chute
8.	A-25925-001	ST.ST. Ice Chute Cover
9.	3-1276-00	Wing Screws
10.	13-0595-00	Gasket 27"
11.	12-1018-00	Micro Switch
12.	A-25965-001	Spout Only
13.	A-16670-00	Spout Pressure Plate
14.	A-26047-001	Spout Limit Box
15.		Serial Plate
16.	2-768	Gear Reducer
17.		Water In - Drain Connections
18.	16-0162-00	Water Strainer
19.	A-8858-20	Worm Tube Only
20.	A-18341-000	Coupling Rubber Insert
21.	A-18341-000	Coupling Half
22.	2-1951-00	Coupling Key
23.	11-296	Water Failure Control
24.	A-23610-002	Drive Motor 230/60/1
	A-23610-007	Drive Motor 208/60/1 and 208-220/60/3
25.	A-08868-00	Reservoir Body
26.	A-09101-00	Water Valve with Float
27.	A-12870-00	Reservoir Cover
28.	A-25898-001	Control Box Cover - Upper
29.	A-25898-002	Control Box Cover - Lower
30.	16-0365	Vibration Eliminator - Lo Side
31.	18-0399-01	Air Cooled Condenser
32.	A-13860-00	Shroud Condenser
33.	16-0246-00	Vibration Eliminator - Hi Side
34.	2-0822-00	Refrigerant Drier
35.	A-25889-001	Suction Line Assembly

MF6 TOP VIEW
WATER COOLED

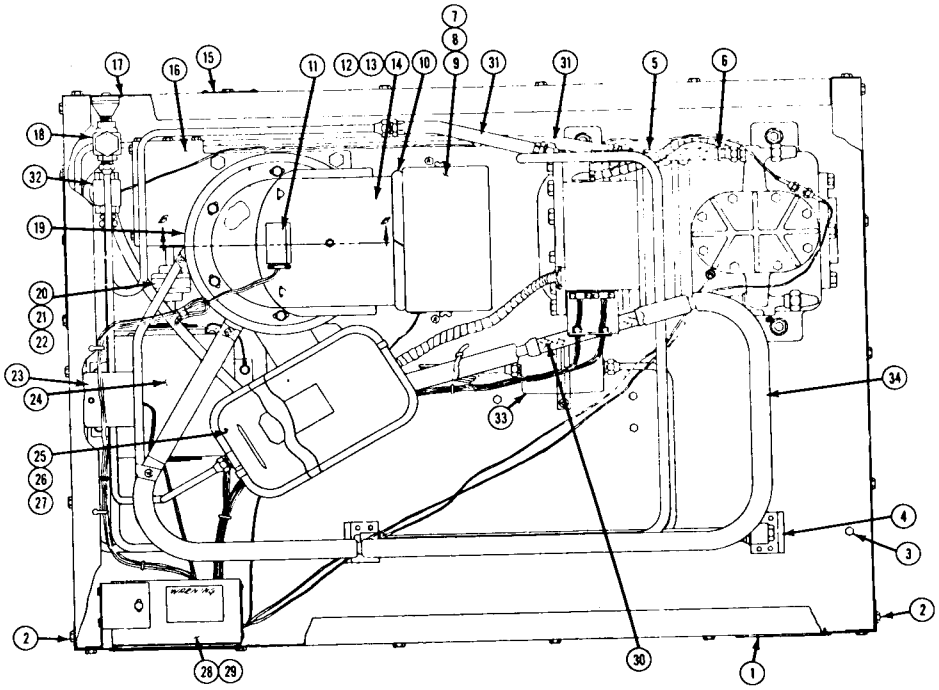

ITEM	PART NO.	DESCRIPTION
1.	15-156-00	Scotsman Emblem
2.	3-1405-01	Screws - Hex Head
3.	3-1405-03	Screw
4.	18-0754	Water Cooled Condenser
5.	16-0246-00	Hi Side Vibration Eliminator
6.	18-0789-02	Crankcase Heater
7.	A-25895-001	ST.ST. Ice Chute
8.	A-25925-001	ST.ST. Ice Chute Cover
9.	3-1276-00	Wing Screws
10.	13-0595-00	Gasket 27"
11.	12-1018-00	Micro Switch
12.	A-25965-001	Spout Only
13.	A-16670-00	Spout Pressure Plate
14.	A-26047-001	Spout Limit Box
15.		Serial Plate
16.	2-768	Gear Reducer
17.		Water In - Drain Connections
18.	16-0162-00	Water Strainer
19.	A-8858-20	Worm Tube Only
20.	A-18341	Coupling Rubber Insert
21.	A-18341	Coupling Half
22.	2-1951-00	Coupling Key
23.	11-296	Water Failure Control
24.	A-23610-002	Drive Motor 230/60/1
	A-23610-007	Drive Motor 208/60/1 and 208-220/60/3
25.	A-08868-00	Reservoir Body
26.	A-09101-00	Water Valve with Float
27.	A-12870-00	Reservoir Cover
28.	A-25898-001	Control Box Cover - Upper
29.	A-25898-002	Control Box Cover - Lower
30.	16-0365	Vibration Eliminator - Lo Side
31.	16-0271-00	Water Hose 2/Unit
32.	11-0198-00	Water Regulating Valve
33.	2-0822-00	Refrigerant Drier
34.	A-25889-001	Suction Line Assembly

MF6 FREEZER ASSEMBLY

NOTE: ICE BREAKER HAS TEN HOLES AROUND CIRCUMFRENCE, SIX OF THESE ARE USED TO SECURE BREAKER TO FREEZER BARREL. THE FOUR REMAINING HOLES ARE THREADED AND ARE USED TO LIFT BREAKER AND WORM SHAFT UP YOU REMOVE THE SIX HOLDING SCREWS, RE-INSERT (4) SCREWS INTO LIFTER OR THREADED HOLES, THESE HAVE NO BOTTOM ON BARREL AND BY EVENLY DRAWING THEM DOWN, ICE BREAKER AND WORM IS LIFTED UP.

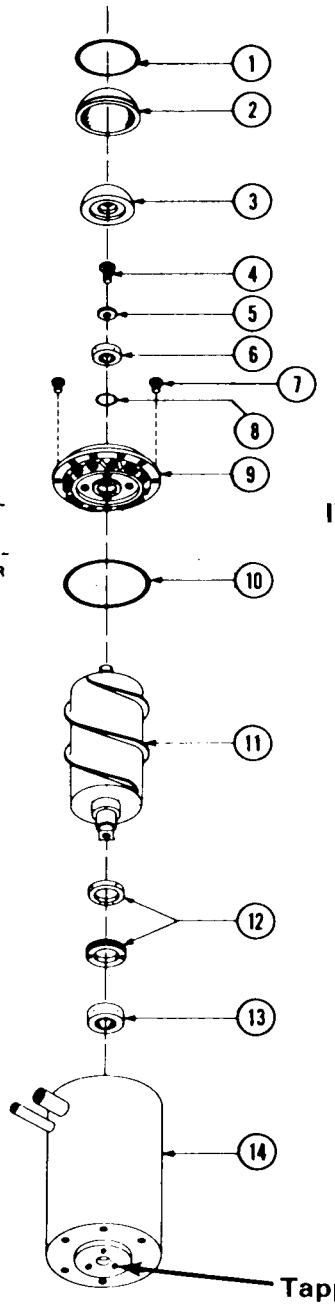

ITEM NO.	PART NO.	DESCRIPTION
1.	13-617-18	'O' Ring
2.	13-231	Rubber Cap
3.	A-9047	Styrofoam Cap
4.	3-1405-36	Screw
5.	A-6273	Washer
6.	2-619	Top Bearing
7.	3-1405-25	Screws (6 required)
8.	13-617-15	'O' Ring
9.	A8818	Ice Breaker
10.	13-617-17	'O' Ring
11.	A-26005-001	Worm Shaft Assembly
12.	2-776	Water Seal
13.	2-775	Lower Bearing
14.	A-8858-20	Freezer Worm Tube
15.	A-25889-001	Suction Line - Not Shown

NOTE:

Lower bearing or water seal should be removed by pulling from the top. If bearing is worn badly and cannot be removed with a bearing puller, it can be pushed out by using three(3) 1/4 x 20 screws three inches long inserted in the tapped holes provided in the lower bearing retainer.

GEAR REDUCER — 2-768

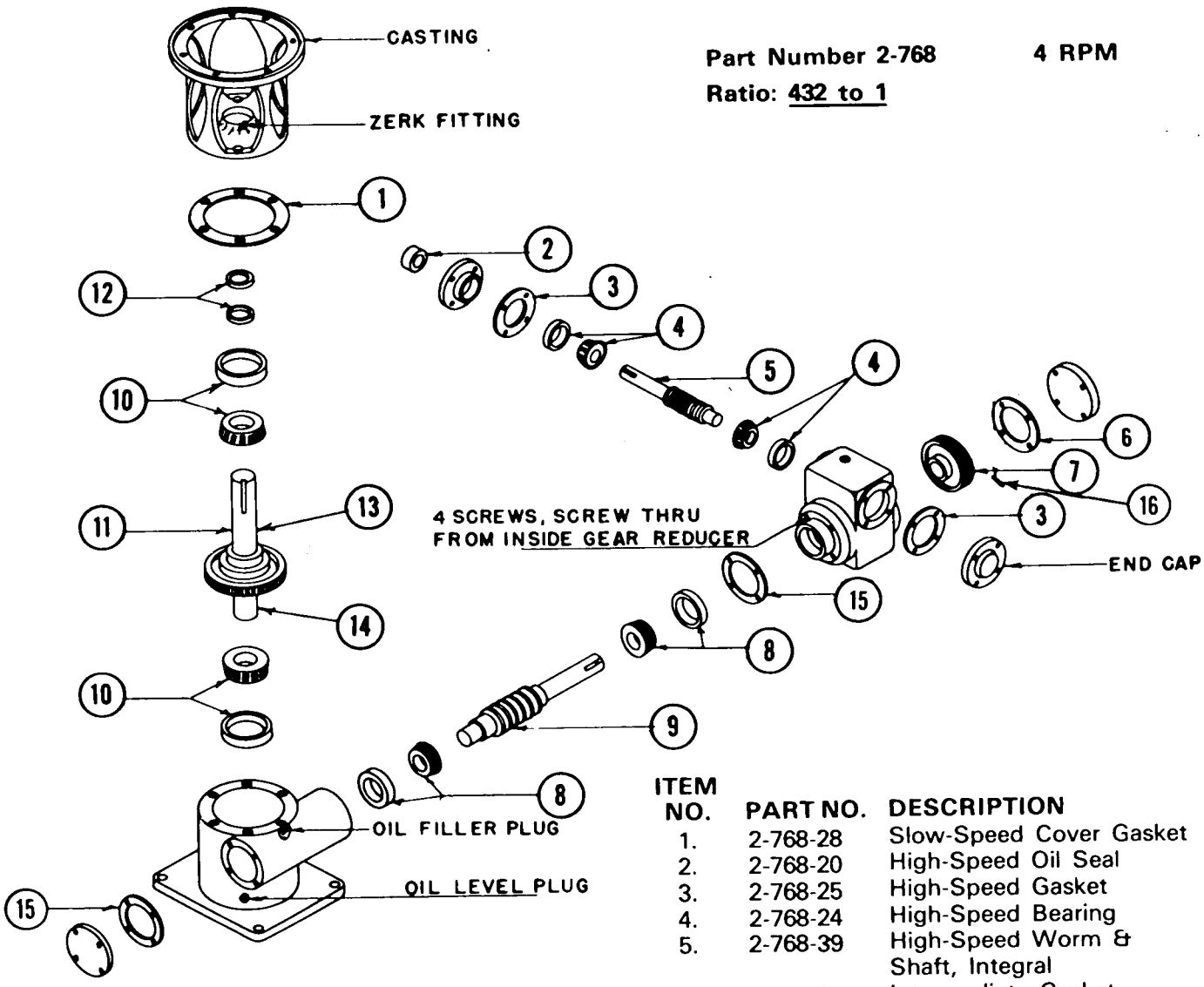

Part Number 2-768 **4 RPM**

Ratio: 432 to 1

ITEM NO.	PART NO.	DESCRIPTION
1.	2-768-28	Slow-Speed Cover Gasket
2.	2-768-20	High-Speed Oil Seal
3.	2-768-25	High-Speed Gasket
4.	2-768-24	High-Speed Bearing
5.	2-768-39	High-Speed Worm & Shaft, Integral
6.	2-768-27	Intermediate Gasket
7.	2-768-40	High-Speed Gear
8.	2-768-23	Intermediate Roller Bearing
9.	2-768-38	Slow-speed Worm & Shaft, Integral
10.	2-768-22	Slow-Speed Bearing
11.	2-768-42	Slow-Speed Gear & Shaft Assembly
12.	2-768-21	Slow-Speed Oil Seal
13.	2-768-29	Slow-Speed Spacer (short)
14.	2-768-30	Slow-Speed Spacer (long)
	2-768	Complete Reducer
15.	2-768-26	Gasket
16.	2-768-37	Key & Pin

In answer to many field requests, we are pleased to release the following chart showing the companies whose products are acceptable substitutes for the 600W oil supplied by Winsmith as factory recommended.

Note the third column which most accurately represents the normal temperature operating range. Also the Alemite or Zerk fitting to bearing is greased with Mobilgrease BRB No. 1, or any good grade ball bearing grease as obtained from local service stations.

600W oils and equivalents are classified as industrial oils and most likely will be found in bulk plants rather than local service stations.

WORM GEAR REDUCERS
CB-CT-CV-CBD-CVD-CBX-CTX-CVX-DBI-TSR

Ambient Temperature%F	-30 to 15	16 to 50	51 to 110	111 to 165
Maximum Operating Temperature ° F	150	185	225	225
Viscosity @ 210° F, SUS	40 to 90	90 to 125	125 to 190	190 to 350
Compounded with	(Optional)	3 to 10% Acidless Tallow or E.P. Base	3 to 10% Acidless Tallow or E.P. Base	3 to 10% Acidless Tallow or E.P. Base
AGMA Lubricant		#7 Compound	#8 Compound	
Cities Service Oil Co.	Pacemaker Oil #5	Optimus Oil #10	Optimus Oil #6	Optimus Oil #12
Fiske Bros. Refining Co.	#3 Lubriplate	#8 Lubriplate	#8 Lubriplate	APG Lubriplate
Gulf Oil Corporation	Multipurpose Gear Lubricant	E.P. Lubricant #115	E.P. Lubricant #145	E.P. Lubricant #250
Shell Oil Company	Vitrea Oil 71	Valvata Oil #J 78	Valvata Oil #J 78	Valvata Oil #J 83
Sinclair Refining Co.	Duro Oil 160	#87 Heavy Duty Oil	#101 Super-Heat Valve Oil	#212 Super-Heat Valve Oil
Standard Oil Co.	Stanogear Compound #1	Stanogear Compound #4	Standard Worm Gear Oil	Calumet SH Cylinder Oil
Sun Oil Company	Sunep 70	Sunep #110	Sunep #150	HV Cyl. Oil
Socony Mobil Oil Co., Inc.	Vactra Oil #1	Mobil Compound DD	Mobile Cylinder Oil #600W	Mobil Cylinder Oil #600W
The Texas Company	Meropa Lub. #1	Meropa Lub. #3	Meropa Lub. #6	Meropa Lub. #6

MF6 WE SERIES

2 HP Water Cooled, Copeland

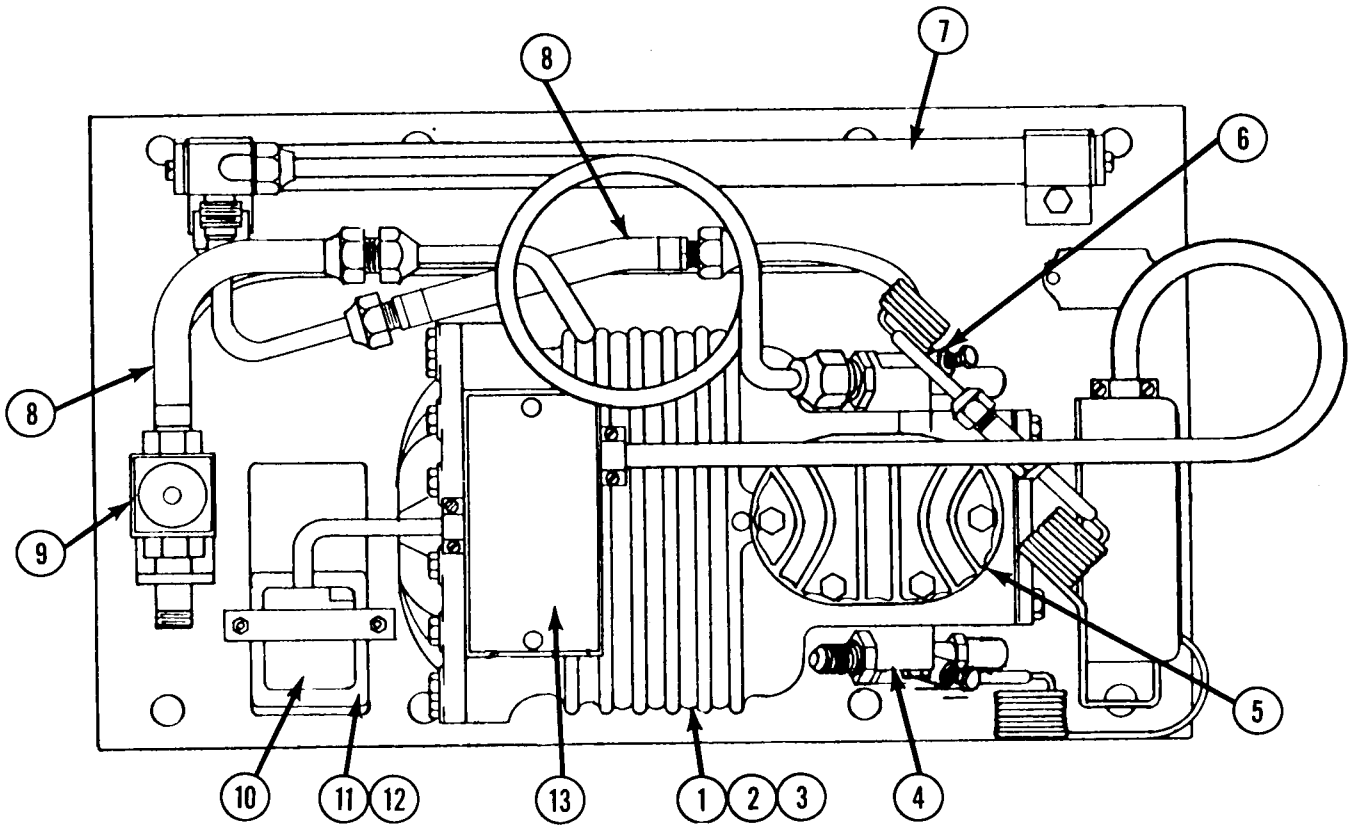

* NOTE: Simulated drawing only for parts identification. Component location differs in actual unit.

ITEM	DESCRIPTION	PART NO.		
		208/60/1	230/60/1	208-220/60/3
1.	Motor Compressor Copeland Model: EWL2-0200-CAH	18-0704-00		
2.	Motor Compressor Copeland Model: EWL2-0200-CAB		18-0702-00	
3.	Motor Compressor Copeland Model: 88-200W			18-0742-00 Same
4.	Suction Service Valve	18-0732-00	Same	Same
5.	Valve Plate Kit	18-0722-00	Same	Same
6.	Discharge Service Valve	18-1909-00	Same	Same
7.	Condenser(2 HP) Heatx C1CB-200	18-0754-00	Same	Same
8.	Water Hose 2/unit	16-0271-00	Same	Same
9.	Water Regulating Valve	11-0198-00	Same	Same
10.	Compressor Relay	18-1903-21	18-1903-21	None
11.	Start Capacitor (320 Volt — 135-155 MFD)	18-1901-23	18-1901-23	None
12.	Run Capacitor (440 Volt — 25 MFD)	18-1902-23	18-1902-23	None
13.	Klixon Overload	18-0734-00	18-0734-00	

MF6 AE SERIES

2 HP Air Cooled, Copeland

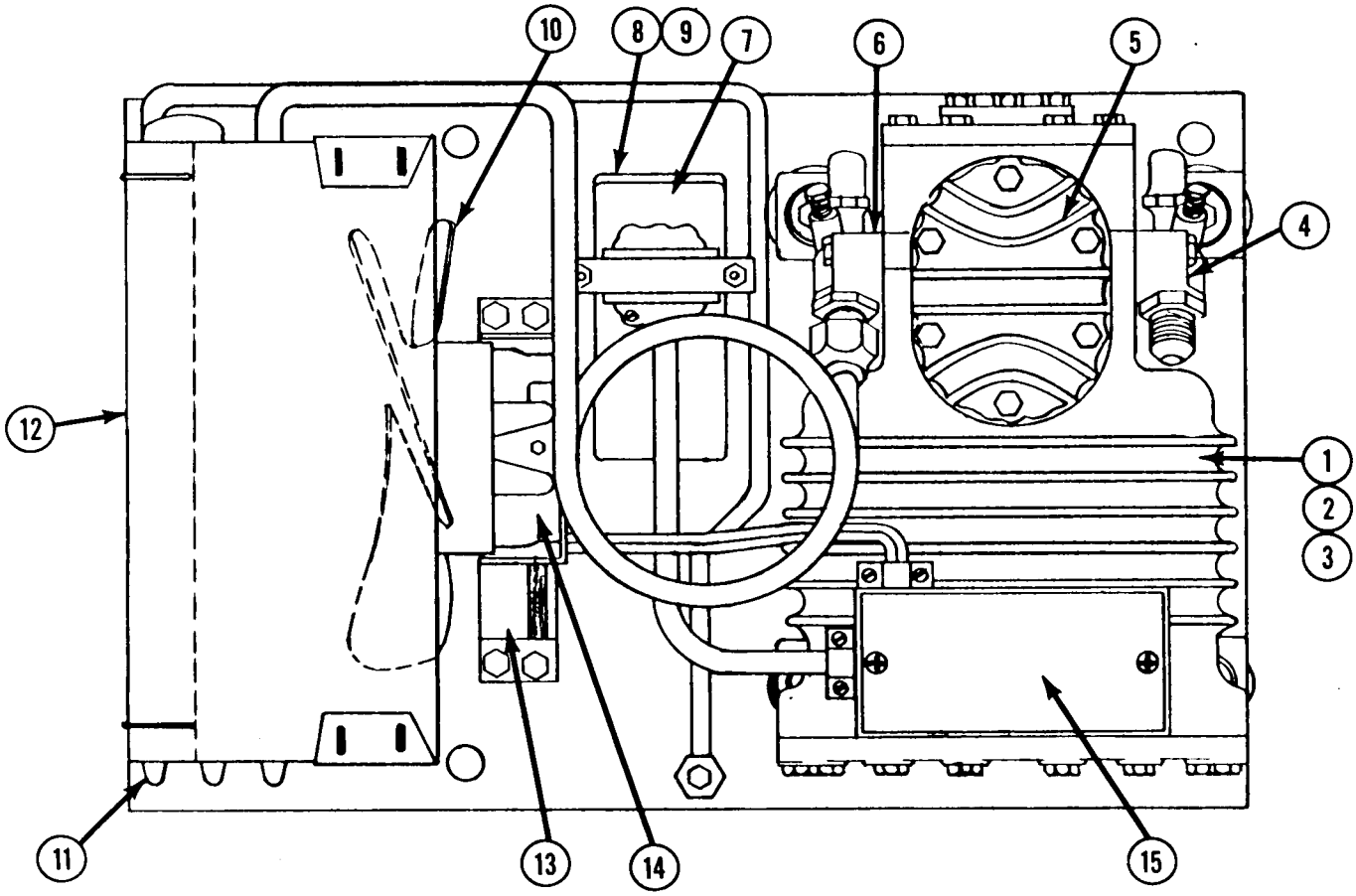

* NOTE: Simulated drawing only for part indentification. Component location differs in actual unit. Condenser has two fan motors, etc.

ITEM	DESCRIPTION	PART NO.		
		208/60/1	230/60/1	208-220/60/3
1.	Motor Compressor Copeland Model: EAL2-0200-CAH	18-0711-00		
2.	Motor Compressor Copeland Model: EAL2-0200-CAB		18-0700-00	
3.	Motor Compressor Copeland Model: 88-200			18-0763-00
4.	Suction Service Valve	18-0732-00	Same	Same
5.	Valve Plate Kit	18-0722-00	Same	Same
6.	Discharge Service Valve	18-1909-00	Same	Same
7.	Compressor Relay	18-1903-21	18-1903-21	None
8.	Start Capacitor (320 Volts — 135-155 MFD)	18-1901-23	18-1901-23	None
9.	Run Capacitor (440 Volts — 25 MFD)	18-1902-23	18-1902-23	None
10.	Fan Blade 2/unit	18-0787-00	Same	Same
11.	Condenser	18-0399-01	Same	Same
12.	Condenser Shroud	A-13860-00	Same	Same
13.	Fan Motor Mount 2/unit	18-1421-00	Same	Same
14.	Fan Motor 2/unit	18-0788-07	18-0788-02	18-0788-07
15.	Klixon Overload	18-0734-00	18-0734-00	

RESERVOIR ASSEMBLY

ITEM	PART NO.	DESCRIPTION
1.	A-12870	Reservoir Cover
2.	S-7044	Nut
3.	A-12869	Bracket
4.	S-6715	Stand Pipe
5.	A-9101	Inlet Valve Assembly
6.	A-8868	Reservoir Complete (Less Cover)
7.	A-8055	Bracket Nut

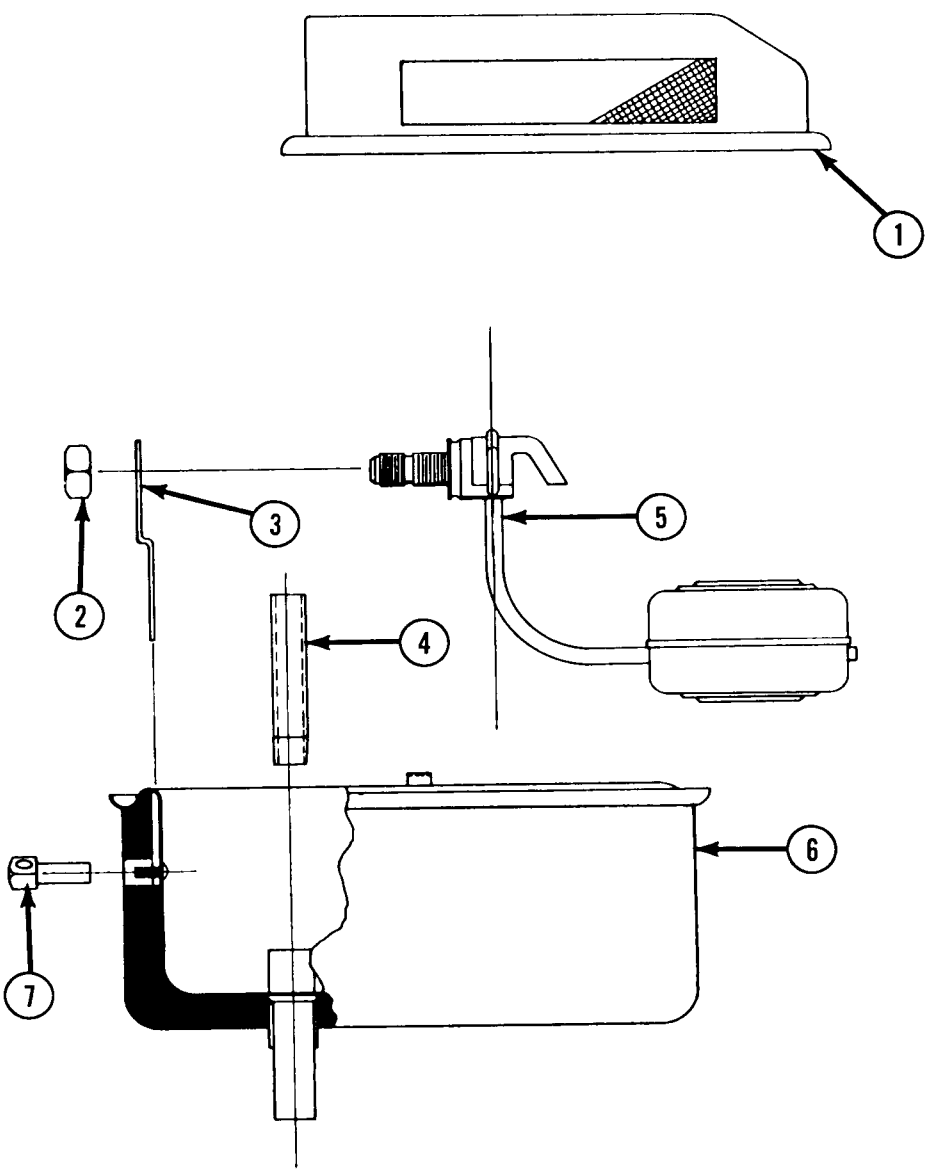

CABINET PARTS

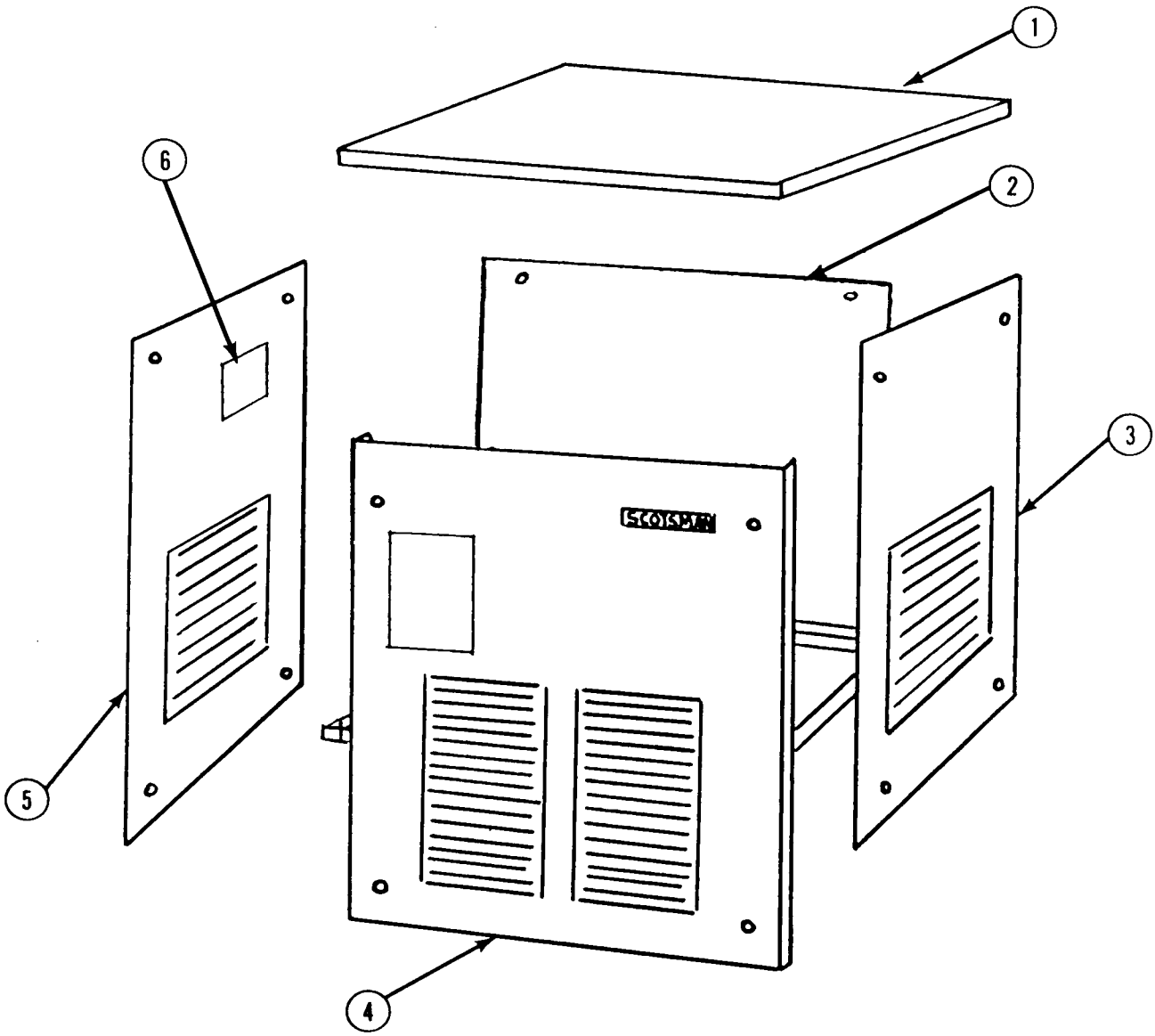

ITEM NO.	DESCRIPTION	ENAMEL	STAINLESS STEEL
1.	Panel Top	A-25883-001	A-25883-002
2.	Panel, Rear	A-25885-001	A-25885-002
3.	Panel, Right Side	A-25881-001	A-25881-002
4.	Panel, Front	A-25882-001	A-25882-002
5.	Panel, Left Side	A-25879-001	A-25879-002
6.	Cover	A-25919-001	A-25919-002

FUNCTIONAL PARTS DESCRIPTION

PART NAME: Water failure switch.
PART NUMBER: 11-0296-00
FUNCTION: An automatic reset S.P.S.T. Control with bellows connection to water supply line. Operates "ON" at 20 pounds or more pressure. Trips OFF at 5 pounds pressure.

PART NAME: Fan cycling control - right
PART NUMBER: 11-0342-00
FUNCTION: Hi pressure control - S.P.S.T. Non adjustable - automatic reset mechanically connected to system Hi side, electrically to right fan motor cycles on at 170# P.S.I., OFF at 154# P.S.I.

PART NAME: Fan cycling control - left
PART NUMBER: 11-0343-00
FUNCTION: Hi pressure control - S.P.S.T. Non adjustable - automatic reset. Mechanically connected to system high side, electrically to left fan motor cycles on at 155# P.S.I., OFF at 139# p.s.i.

PART NAME: Lo pressure control
PART NUMBER: 11-0358-00
FUNCTION: Manual reset - S.P.S.T. Non adjustable pressure switch attached to system lo side. Cuts icemaker OFF when Lo side pressures reach 0# P.S.I.

PART NAME: Elapsed time indicator
PART NUMBER: 12-2001-01
FUNCTION: Timer motor is electrically connected in series with motor compressor. When compressor runs, timer runs. Calibrated in hours. Timer registers to 99,999.

PART NAME: Compressor crankcase heater
PART NUMBER: 18-0789-02
FUNCTION: A 65 watt heater that supplies enough heat to keep liquid refrigerant from settling out in compressor crankcase. Electrically connected across main power line, heater is ON at all times.

PART NAME: Hi pressure control
PART NUMBER: 11-0388-01
FUNCTION: Manual reset, Adjustable S.P.S.T. control that opens at 250# P.S.I. whenever system Hi side pressures reach that setting.

PART NAME: Bin thermostat - 6' capillary
PART NUMBER: 11-0354-00
FUNCTION: Automatic reset S.P.S.T. Has adjustment for cut in, cut out and altitude correction. Automatically cuts icemaker OFF when sensing capillary reaches 35° F. or less, cuts back on when temperature rise exceeds 45° .

SERVICE ANALYSIS

SYMPTOM	POSSIBLE CAUSE	CORRECTION
Unit will not run	Blown fuse	Replace fuse and check for cause of blown fuse
	Thermostat set too high	Adjust thermostat. Set between 35° - 45°
	Loose electrical connection	Check wiring
Red light on	Switch in OFF position	Turn switch to ON
Red light on	Inoperative master switch	Replace switch
Red light on	OFF on the hand reset low pressure control	Push hand reset.
Amber light on	OFF on water failure switch	Check water supply
Compressor cycles intermittently	Low voltage	Check for overloading
	Dirty condensor	Clean
	Air circulation blocked	Move unit to correct
	Non-condensable gases in system	Purge off
Making wet ice	Surrounding air temperature above 100° F	Correct or move unit to cooler location
	Under or over-charge of refrigerant	Recharge with proper amount
	High water level in water reservoir	Lower to 1/4 inch below overflow pipe
	Faulty compressor valve plate	Repair or replace
Low ice production	Loss of refrigerant, under or over-charge of refrigerant	Check and recharge with proper amount of refrigerant
	Dirty or plugged condensor	Clean condensor
	Low water level in water reservoir	Adjust to 1/4 inch below overflow
	Overcharge of oil in system	Check at oil sight glass. Lower to 1/2 sight glass
Red light resets	Partial restriction in capillary tube or drier	Moisture in system. Overcharge of oil in system. Remove charge and drier. Replace and recharge system
Amber light on-off	Inlet water strainer partically plugged	Remove screen and clean
	Corroded or stained worm shaft due to water condition	Remove worm shaft and clean

SERVICE ANALYSIS

SYMPTOM	POSSIBLE CAUSE	CORRECTION
Machine runs but makes no ice	Loss or under-charge of refrigerant	Check for leaks and recharge.
	Drive motor, gear reducer or drive coupling inoperative	Check. Repair or replace.
Amber light on-off	Water not entering freezing chamber	Plugged strainer or supply line. Check and clean. Air lock in gravity feed line. Check and remove air lock.
	Moisture in system	Check and remove charge and drier. Replace and recharge.
	Water Seal leaking	Replace seal.
Red light reset's	Defective manual overload switch	Replace switch
Water leaks	Defective water seal	Replace
	Gravity feed line leaking	Check hose clamps
	Water level in reservoir too high	Adjust to 1/4 inch below overflow pipe.
Excessive noise or chattering	Mineral or scale deposit on auger and inner freezing chamber walls	Remove and manually polish auger, sand inner chamber walls of freezer barrel with approx. 100 grit paper. Use vertical strokes. For lighter concentrations use Scotsman Ice Machine Cleaner periodically.
Red light resets	Low suction pressure	Add gas to raise suction pressure. Raise head pressure control setting.
Amber light on-off	Intermittent water supply	Check and clean water strainer Check gravity feed line for air lock. Remove air lock.
	Water level in reservoir too low	Adjust to 1/4 inch below overflow pipe.
	Misaligned drive coupling	Repair or replace
	Gear reducer low on oil charge	Check oil level and refill to oil level plug.
	Gear reducer loose on frame	Tighten
	Drive motor end-play or worn bearings	Repair or replace
	Motor compressor not floating on springs	Loosen hold-down bolts.
Machine continues to run with full storage bin	Storage bin thermostat not properly set	Reset or replace, 45° in, 35° out.

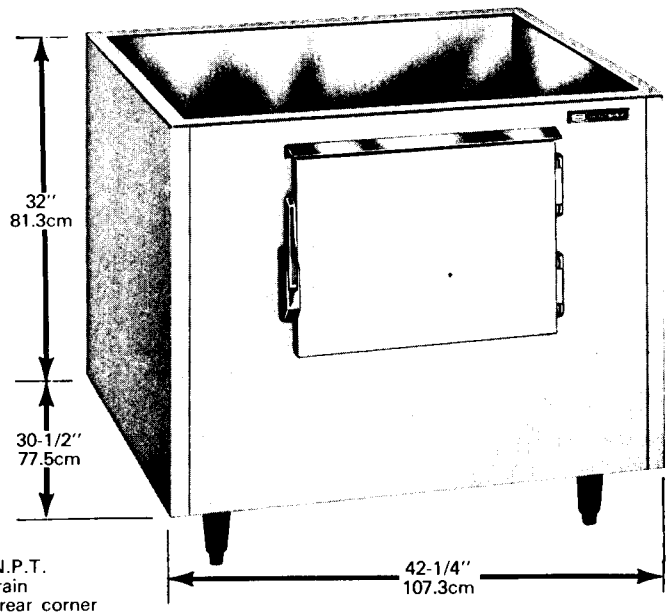

1/2" N.P.T.
Bin Drain
Right rear corner
of cabinet back.

KLP3: Optional keg kit for B80 and B90. Cast aluminum 6" square leg package is recommended when stacked units exceed 96 inches.

EBX85 and EBX87 Extensions fit either the B80 or B90 Bin.

B90 Bin

No-spill access door features heavy duty latch and hinges. Accept the MC25 and MC35 Cubers or MF3, MF4, MF5 and MF6 Flakers. Ice makers can be mounted on top of bin or flake ice can be transported from a remote location. Stainless steel bin liner.

Capacity Rating: Max. bin capacity; 19.3 cu. ft. Holds 590 lbs. cube ice, 15% less for flake ice. Storage based on 90% of total volume x average denisty of ice.
EB90: Sandalwood enamel exterior, black enamel legs.
Shipping Wt: 193 lbs. (87.8 kg.)

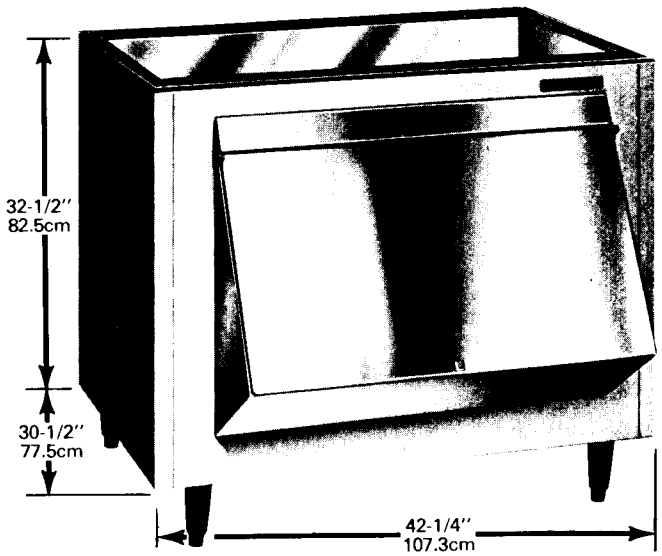

1/2" N.P.T.
Bin Drain
Right rear corner
of cabinet back.

B80 Bin

King size bin provides 590 lbs. of ice storage. Lift-up access door and extension are shipped detached. Designed to accept the MC25 and MC35 Series cubers or MF3, MF4 and MF5 flakers. Ice makers can be mounted on top of bin or flake ice can be transported from a remote location. Stainless steel bin liner.

EB80: Sandalwood enamel exterior, black enamel legs.
SB80: Stainless steel exterior, chrome plated legs.

Shipping Wt: 196 lbs.

MAINTENANCE INSTRUCTIONS

THE FOLLOWING MAINTENANCE SHOULD
BE ACCOMPLISHED TWO TIMES PER YEAR.

1. Check and clean water strainer and reservoir float valve. Depress float valve to insure full stream of water.

2. Check water reservoir level and machine level. Keep water below overflow, but as high as possible and still not run out of spout opening with machine off. Water droplets chould come out of spout with ice at all times. Adjust as required.

3. Clean reservoir and interior of freezer assembly using SCOTSMAN Ice Machine Cleaner. One cleaning per year should be a manual cleaning: Stainless steel auger should be pulled and buffed to a mirror-like finish. Use buffing wheel and jewelers rouge. Inner freezer barrel should be sanded using vertical strokes. Use 100 grit paper.

NOTE: Cleaning requirements vary according to local water conditions. Visual inspection of the auger before and after cleaning will indicate best procedure to be followed in local areas.

4. Check high and low side pressures. On water cooled models, set pressure at 135 psi. Suction pressure should be above 12 psi and will range up to 16 psi depending upon water and ambient temperatures.

5. Set hand reset low pressure control to cut off in event of water supply interruption or low ambient temperature at approximately 0 psi.

6. Change oil in gear reducer. Use Mobiloil 600W or equivalent good grade of gear oil with a viscosity of 125 to 190. For unit with grease fittings use Mobilgrease BRB No. 1 or any good grade ball bearing grease. Particularly important when there is evidence that water has gotten into gear housing. Remove gear reducer to facilitate.

7. Oil drive motor. Use SAE #10 oil.

8. Check top bearing on freezer. Remove rubber 'O' Ring, rubber cap and styrofoam cap. If moisture is around bearing, wipe up and remove grease. Add new grease. Use beacon No. 325 or equivalent.

9. Check and adjust drive motor coupling.

10. Check for refrigerant leaks and proper frost line. Should frost out of accumulator at least one-half way to compressor, and in some areas back to service valve.

11. Check for water leaks. Tighten drain line connections.

12. Check quality of ice. Ice should be wet when formed, but will cure rapidly to normal hardness in the bin.

13. Check thermostat and pressure plate cut off. Mocro switch cuts off only compressor. Bin thermostat would be set at 10° differential and should keep entire machine off at least twenty minutes in high ambients (longer in low) during normal operation.

CLEANING INSTRUCTIONS

1. Set main switch to OFF.
2. Remove all ice from storage bin.
3. Remove ice discharge chute and cover from inside of unit.
4. Mix cleaning solution (4 oz. of Scotsman cleaner and one quart of hot water) in pan and thoroughly clean inside and outside of chute and cover with a nylon brush or sanitary disposable wipe.
5. Reassemble chute and cover back into unit.
6. Turn off water supply or block float in reservoir. Drain reservoir.
7. Set main switch to ON and pour cleaning solution slowly into reservoir. Do not fill above overflow tube.

   Model MF6 - Use 8 oz. of Scotsman cleaner and 2 qts. hot water.
   Model MF7 - Use 16 oz. of Scotsman cleaner and 4 qts. hot water.
8. Continue to make ice on solution until the solution is used up and reservoir is empty.
9. Set main switch to OFF. Wash and rinse reservoir. Turn water on or remove float block.
10. Turn MAIN SWITCH to ON. Let unit run for at least (15) minutes to flush out any cleaning fluid. Check ice for acid taste — run until ice tastes sweet.
11. Turn MAIN SWITCH TO OFF. Add hot water to ice in bin. Using this melt water, thoroughly wash and rinse all surfaces within the storage bin.
12. Turn MAIN SWITCH to ON. Replace cover and service door. Unit is ready for normal operation.

CLEANING OF A STAINLESS STEEL BIN LINER

Because the brown staining or rusting is due to expelled material during ice-making, **every bin liner should be cleaned periodically,** to prevent this staining from causing pitting of the stainless steel. The time between cleanings will depend on the water conditions, type of ice machine, etc. **It may be necessary only every 3 to 6 months.**

1. **General Cleaning** – When the staining is light, it can usually be removed by washing with ordinary cleaning powder, such as Bon-Ami, or Copper-Glo, and water. (Do not use cleaners that contain bleaching agents, as most of these are compounds of chlorine.) After cleaning, rinse thoroughly with clear water.

   It may be necessary to use a stainless steel wool to remove bad stains. DO NOT USE plain steel wool, as the steel particles will get imbedded in the liner and cause more serious rusting.

2. **Cleaning of heavy deposits**—If the liner has not been cleaned for a long time, and heavy deposits and pitting have occurred, a chemical cleaner may be necessary. Several of these are as follows:

   Oakite No. 33, Oakite Products, Inc., 19 Rector St., New York, N.Y. Texo No. 12, and Texo-NY, Texo Corp., 2200 Dana Ave. Cincinnati 7, Ohio. Metalprep No. 10, Nelson Chem. Co., 6564 Benson St., Detroit 7, Mich, Dilac, Diversey Corp., 1820 Roscoe St., Chicago 13, Illinois.

   A solution of one part cleaner and two parts water is used. First, wash the bin liner thoroughly with water and soap as described above. Then simply swab the solution on the area to be cleaned, and allow to stand for about 20 minutes. Rinse with clear water. If this doesn't completely remove the deposit, repeat the procedure.

   Synthetic rubber gloves should be used by the operator, and goggles and aprons are advisable even though the solution is relatively nonhazardous.

   These cleaners may possibly harm paint, wood, or fabrics, They will probably cause a dull grey color on galvanized steel and should not be allowed to remain long in contact with rubber. Therefore, provision should be made to avoid contact with such materials when cleaning stainless.

3. **Protection of Stainless Steel against further staining** – After the stainless steel has been cleaned, installations where the staining is recurring so frequently, the surface should be rejuvenated. This process restores the characterisitc to the surface of the stainless, that best prevents corrosion.

   First, be sure that the liner is clean and is thoroughly rinsed with water. Then use a nitric acid solution of two parts water to one part nitric acid (by volume). Swab this on the liner and allow to stand for about 30 minutes. Rinse the liner with clean water. This will then provide maximum corrosion resistance.

CARE OF STAINLESS STEEL STORAGE BIN LINERS

All commercial grades of stainless steel will corrode or rust when in contact with certain chemicals or salts. **One element that attacks stainless readily, is chlorine,** and most compounds of chlorine, such as hydrocholic acid, and certain salts containing chlorine. The "speed" with which this corrosion takes place depends on the concentration of the chlorine, and the length of time it is left in contact with the stainless steel.

ICE BIN LINER RUSTING

In many ice bin applications, **a rust stain, or brown deposit, will appear at the top of the side and rear walls of the bin liner, and also on any exposed stainless parts inside the bin, which do not normally get covered with ice; such as stainless steel door back pans.** The lower portions of the liner walls usually stay clean if the bin is being used regularly, due to the "washing" action of the ice and meltage water draining down these walls. This brown staining on the liner may appear more rapidly in some installations than other, depending on the way the ice is being made in the ice machine, and the water conditions.

This staining or rusting, can come from basically two sources:

1. **Foreign materials** – For example, **many ice machine casings are made of painted steel. If this steel should be exposed at the joint where the ice machine sits on the bin, it could rust,** and the rust stain could "drip" down the liner walls. Also, particles of plain steel could fall down into the bin and, inturn, start rusting.

2. **Materials expelled during ice making** – Practically all icemakers produce clear ice by "freezing out the impurities" normally found in tap water. Chlorine gas, other gases and solids, are expelled during the making of ice. Being heavier than air, these foreign materials drop down into the bin through the same opening that the ice enters the bin. (This oftentimes explains why this staining is more noticeable on an installation where the opening on the bottom of the ice machine is quite large). **The chlorine gas will combine with water vapor and condense on the liner walls as a mild hydrochloric acid.** Above the normal ice level, this never gets removed by the action of the ice, and will eventually form a brown stain.

MF6B

TABLE OF CONTENTS

GENERAL INFORMATION & INSTALLATION

Introduction 4
Description 4
Sealed Refrigeration System 4
Storage Bins 4
Unpacking and Inspection Control 4
Location and Leveling 5
Electrical Connections 5
Water Supply and Drain Connections 5
Final Check List 6

OPERATING INSTRUCTIONS

Start-Up 8
Icemaker Operation 10
Electrical/Refrigeration 10

ADJUSTMENT, REMOVAL & REPLACEMENT

Bin Thermostat Control 12
Crankcase Heater 37
Compressor Assembly 37
Condenser — Air-Cooled Models 37
Condenser — Water-Cooled Models 37
Water Regulator Assembly 38
Water Reservoir Float 38
Auger, Water Seal, Bearings and Coupling 38
Drier 39
Drivemotor Assembly 39
Fan Motor Assembly — Air-Cooled Models 39
Freezer Assembly 39
Low Water Pressure Control 40
Water Regulator Assembly — Water-Cooled Models 40
Water Reservoir Assembly 40

SERVICE DIAGNOSIS 41

MAINTENANCE AND CLEANING INSTRUCTIONS

General 44
Icemaker 44
Cleaning — Icemaker 45

LIST OF ILLUSTRATIONS

Specifications 2
Component Location 3
Installation Practice 7
Water Schematic 8
Refrigeration Cycle 10
Adjustment of the Temperature Control 12

PARTS LIST & WIRING DIAGRAMS (Printed in Yellow) 13

PARTS LIST:

Cabinet Assembly 14
Major Assembly 16
Air-Cooled Assemblies 18
Water-Cooled Assemblies 19
Spout Assembly 20
Reservoir Assembly 20
Drive Motor Assembly 21
Freezer Assembly 21
Gear Reducer 22
Control Box (Air-Cooled) 23
Control Box (Water-Cooled) 24

WIRING DIAGRAMS:

Air-Cooled Models - 230/60/1 25
Water-Cooled Models - 230/60/1 26
Air-Cooled Models - 208/60/1 & 208-220/60/3 27
Water-Cooled Models - 208/60/1 & 208-220/60/3 28
Air-Cooled Models - 230/60/1 29
Water-Cooled Models - 230/60/1 30

THIS PAGE
INTENTIONALLY
LEFT BLANK

SPECIFICATIONS

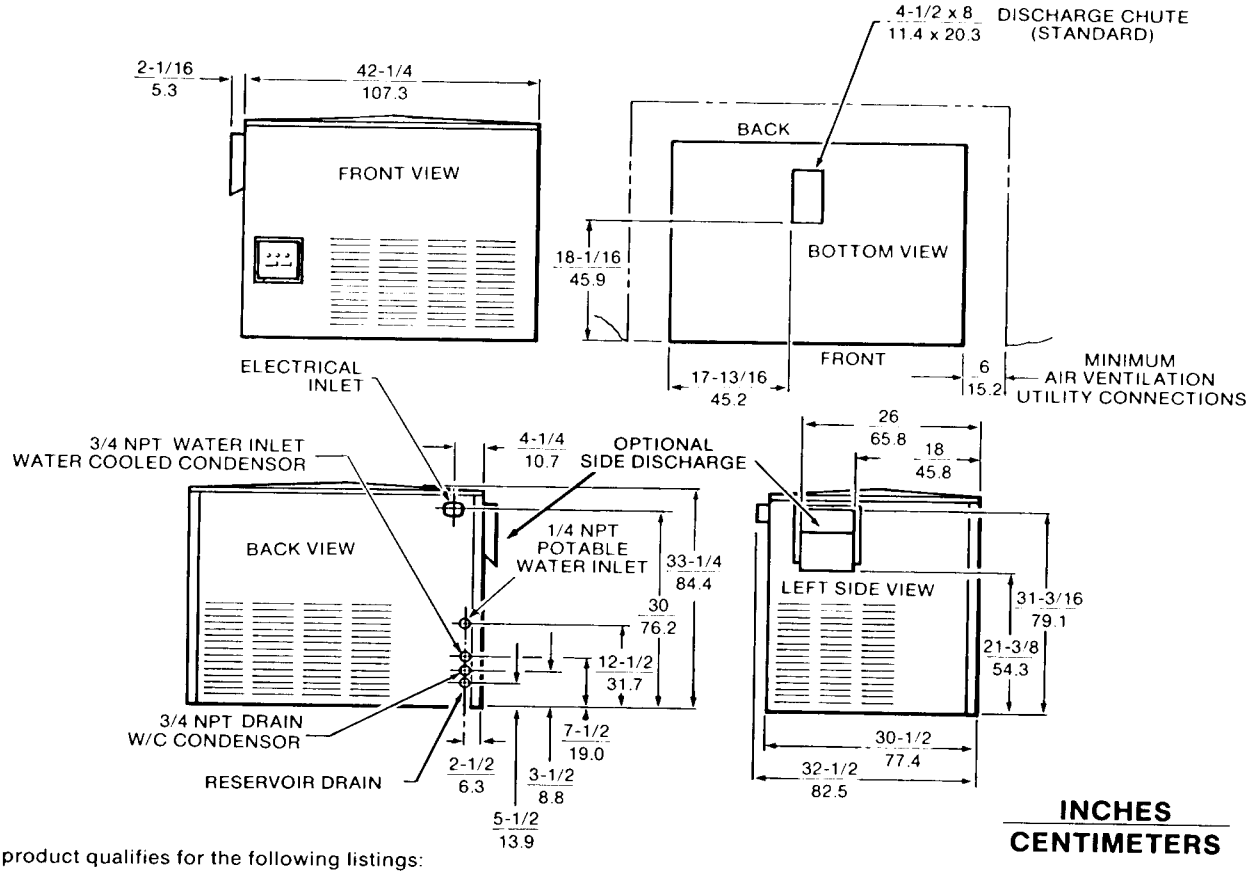

This product qualifies for the following listings:

FLAKERS WITH ICE STORAGE BINS

Model Number	Dimensions (Height - w/o Legs) H" x W" x D"	Cond. Unit	Finish **	Basic Electrical	Comp. H.P.	Heater Watts	Max. Oper. Amps.	No. of Wires	Min. Circuit Ampacity †	Max. Fuse Size	Ship. Wt. lbs./kg.
MF6B VOLUME FLAKER											
MF6AE-2B	33¼ x 42¼ x 32½	Air	EC	230/60/1	2	65	15.2	2	16.0	20	630/286
MF6AE-3B	33¼ x 42¼ x 32½	Air	EC	208-220/60/3	2	65	13.7	3	14.3	20	630/286
MF6AE-7B	33¼ x 42¼ x 32½	Air	EC	208/60/1	2	65	15.4	2	16.3	20	630/286
MF6WE-2B	33¼ x 42¼ x 32½	Water	EC	230/60/1	2	65	13.8	2	14.7	20	608/276
MF6WE-3B	33¼ x 42¼ x 32½	Water	EC	208-220/60/3	2	65	11.9	2	12.6	20	608/276
MF6WE-7B	33¼ x 42¼ x 32½	Water	EC	208/60/1	2	65	14.0	2	15.0	20	608/276

Order **SPKMF6** panel kit for stainless steel finish. MF6 will stack on top of the B80, B90 or B120 bins and extensions for ice storage. **KSE6** - Optional discharge kit. Electrical, water inlets and drains located in lower right of back panel. Ice discharge chutes are located on bottom or left side panel (Back view).

IMPORTANT OPERATING REQUIREMENTS

	MINIMUM	MAXIMUM
Air Temperatures	50° F (10.0° C)	100° F (37.7° C)
Water Temperatures	40° F (4.4° C)	100° F (37.7° C)
Water Pressures	20 lbs. gauge	120 lbs. gauge
Electrical Voltage Variation		
Voltage rating specified on nameplate	-10%	+10%

Extended periods of operation exceeding these limitations constitutes misuse under the terms of Scotsman Manufacturer's Limited Warranty, resulting in a loss of warranty coverage.

We reserve the right to make product improvements at any time. Specifications and design are subject to change without notice.

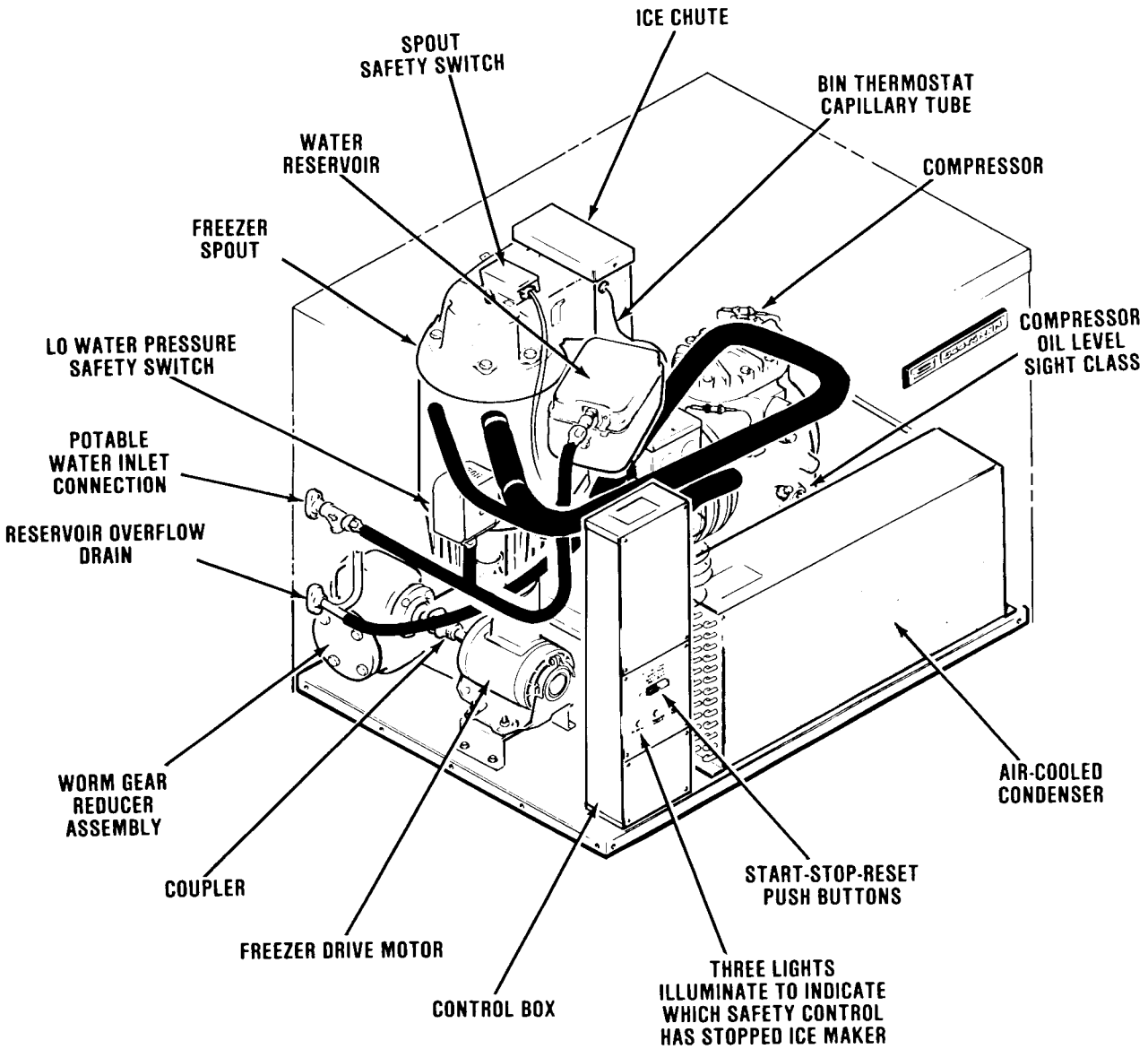

Major Component Location

GENERAL INFORMATION AND INSTALLATION

INTRODUCTION

This manual provides the specifications and the step-by-step procedures for the installation, start-up and operation, and the maintenance and cleaning for the SCOTSMAN Model MF6B Modular Flakers.

The Model MF6B Modular Flakers are quality designed, engineered and constructed, and thoroughly tested ice-making systems, providing the utmost in flexibility to fit the needs of a particular user. Separate sections detail more specifically: General Information & Installation; Start Up Operation; Principles of Operation; Maintenance and Cleaning Instructions.

DESCRIPTION

An attractive compact cabinet of leathergrain embossed steel, with charcoal brown baked enamel high gloss finish. Also, an optional stainless steel panel kit is available. These removable panels allow easy access to electrical and mechanical components for cleaning and maintenance.

Three built-in safety controls protect the machine from damage due to water shortage, abnormal refrigerant operating pressures, or drive motor overload. Three separate lights indicate which safety control has shut the machine off.

SEALED REFRIGERATION SYSTEM

To provide quiet efficient operation of the Icemaker, the Compressor motor is externally spring-mounted. The Compressor motor is covered by a five year parts warranty. The Freezer Assembly is powered by a worm gear reducer and Drivemotor Assembly.

STORAGE BINS

Since the MF6B Modular Flakers are continuous flow type icemakers and do not have their own attached ice storage bins, it is necessary to use an auxiliary bin, such as the bins listed below:

Use Bins: B80, B90, B750.

Accessories: BX83, BX87.

Custom built storage bins:

Bins should have a minimum of one-half of the icemaker's perday icemaking storage capacity and it should also provide adequate support for the icemaker and its contents.

UNPACKING AND INSPECTION CONTROL

1. Call your authorized SCOTSMAN Distributor or Dealer, for proper installation. He's listed under ICEMAKING EQUIPMENT and MACHINERY in the yellow pages of the telephone book.
2. Visually inspect the exterior of the shipping container and skid. Any severe damage should be reported to the delivering carrier; and a concealed damage claim filed, subject to internal inspection, with the carrier representative present.
3. BEFORE removal of any panels or packing, carefully raise cabinet up and remove the shipping bolts and the shipping base or skid.
4. Remove screws and shipping tape and all doors and service panels from the cabinet, inspect for any concealed damage. Notify carrier of any concealed damage claims, as stated in Step 2 above.
5. Remove all internal support packing, tape and wires in machinery compartment.
6. Check that refrigerant lines do not rub or touch lines or other surfaces and that fan blades, if any, move freely.
7. Remove compressor hold down straps to enable compressor to ride free on vibration cushioning mounts.
8. If local water supply conditions require, install a water purification system in icemaker water supply line.
9. Use clean damp cloth or disposable paper wiper to wipe clean the exterior surfaces of the cabinet.
10. See NAMEPLATE and check that the location source voltage corresponds with the voltage specified on the nameplate.

CAUTION

Improper voltage supplied to the Icemaker will void your parts replacement program.

11. Packaged on the cabinet top panel is the Manufacturer's Registration Card. Fill in all spaces including the Model Number and Serial Number. With cabinet panel removed, locate data found on the aluminum plate, on the upper right side of Control Box. Forward the completed, self-addressed registration care to the SCOTSMAN Factory.

LOCATION AND LEVELING

WARNING

This Modular Flaker is NOT designed for outdoor installations, or where air temperatures are below 50-degrees F., or above 100-degrees F., and the water temperature is below 40-degrees F. or above 100-degrees F. Extended periods of operation at temperatures exceeding these limitations will constitute misuse, under the terms of the SCOTSMAN Manufacturer's limited warranty coverage.

NOTE

Prior consideration for location site shall include:

Minimum room temperature 50-degrees F. and Maximum room temperature 100-degrees F.

Water inlet temperatures: Minimum 40-degrees F. and Maximum 100-degrees F.

Well ventilated location for air-cooled model, advising user to frequently clean condenser, located directly behind the front panel.

SERVICE ACCESS: Adequate space for all service connections, through the rear of the Cabinet. A six-inch minimum clearance at rear, left and front lowered panels, for routing cooling air drawn into and exhausted out of the compartment, to maintain proper condensing operation on air-cooled models.

1. All standard MF6B models are equipped with bottom center discharge chute installed. This permits top mounting on modular companion Scotsman ice storage bins, or bin extensions.
2. Position the flaker in the selected permanent location.
3. Level the Cabinet in both the left-to-right and front-to-rear directions.
4. Loosen motor compressor hold down nuts to permit motor compressor to ride free on mounting pads.

ELECTRICAL CONNECTIONS

SEE NAMEPLATE for current requirements to determine wire size to be used for electrical hookup. The Modular Flaker requires a solid earth ground wire. Make sure nameplate voltage and building source voltage correspond. See wiring diagram.

Be certain the Modular Flaker is connected to its own electrical circuit and individually fused. The maximum allowable voltage variation should not exceed ten percent of the nameplate rating, even under starting conditions. Low voltages can cause erratic operation and may be responsible for serious damage to the overload switch and motor windings. Failures of this type are not considered a factory defect.

All external wiring should conform to the National, State and local electrical code requirements. Usually an electrical permit and services of a licensed electrician will be required.

WATER SUPPLY AND DRAIN CONNECTIONS

POTABLE WATER: The recommended potable water supply line should be a minimum 1/2-inch O.D. tubing for short runs and a minimum 5/8-inch O.D. tubing for long runs and connects to a 1/4-inch NPT female pipe casting on the icemaker. Connect to cold water supply line with standard plumbing fittings with a shutoff valve installed in an accessible place between the water supply and the cabinet.

A reservoir strainer is installed within the icemaker cabinet in the water supply line. The strainer protects the icemaker from large particles of rust, scale, etc., which may be loosened in the water supply pipe.

In some cases, a plumbing permit and services of a licensed plumber will be required.

WARNING

To prevent damage to the freezer mechanism, DO NOT operate this unit when the water supply is OFF, or is below 20 PSI, the recommended water pressure. Position the master switch to the OFF position, until proper water supply is resumed.

The Icemaker in this Cabinet will not operate when water supply temperatures are below 40-degrees F. or above 100-degrees F.

CONDENSER WATER (WATER-COOLED ONLY): On water-cooled models a separate connection to the condenser is required. A 3/4-inch female pipe casting is provided to connect the water line to the machine. Observe arrow on water regulating valve. Incoming water goes through the water regulating valve and into the water cooled condenser.

NOTE

If cooling tower is used to cool water cooled models, several precautions should be observed.

1. *Consult your tower and pump manufacturer for proper installation specifications and procedures.*
2. *Only potable city water should be used for icemaking.*
3. *Water regulating valve should not be removed from the icemaker.*
4. *Use 3/4-inch nominal size interconnecting*

tubing or larger depending on the length of run. If over 30 ft. use 1-inch nominal size interconnecting tubing.

WARNING

If icemaker is used year around, cooling tower efficiency directly effects the ice making capacity. A combination of cooling methods may be used; City water cooling in winter months and cooling tower in summer months.

NOTE

In both air-cooled and water-cooled installations, water supply must be installed to conform with local plumbing codes. In some cases, a plumbing permit and services of a licensed plumber will be required.

DRAIN CONNECTIONS: All drains are gravity type and must have 1/4-inch per foot fall on horizontal runs. The recommended water cooled condenser drain is a nominal 3/4-inch O.D. tubing. All drains to be installed to conform with local code. The drain receptacle should be an open, trapped or vented construction.

WARNING

This Modular Flaker will NOT operate when water supply temperature is below 40-degrees F., or above 100-degrees F. Requires 20 PSI flowing water pressure, without interruption.

FINAL CHECK LIST

1. Has the electrical power to icemaker been connected to start the 12-hour period of PRESTART crankcase heating?
2. Is the Cabinet level? (IMPORTANT)
3. Have all electrical and piping connections been made?
4. Has the voltage been tested and checked against the nameplate rating?
5. Is the water supply line shutoff valve installed and electrical wiring properly connected?
6. Is water reservoir filled and shut off? All packing removed?
7. Have the Bin and Cabinet been wiped clean?
8. Loosen motor compressor hold down nuts to permit motor compressor to ride free on mounting pads.
9. Has the owner/user been given the User Manual and instructed on how to operate the Icemaker?
10. Has the Manufacturer's Registration Card been properly filled out? Check for correct Model and Serial numbers from Serial nameplate, then mail the completed card to the SCOTSMAN factory.
11. Check all refrigerant and conduit lines to guard against vibration or rubbing and possible failure.
12. Is there at least six inches clearance behind and around Cabinet for proper air circulation?
13. Is the Cabinet in a room where ambient temperatures are a minimum of 50-degrees F. all year around?
14. Has water supply pressure been checked to insure a minimum of 20 PSI?
15. Has the owner been given the name and telephone number of the authorized SCOTSMAN Service Agency serving him?

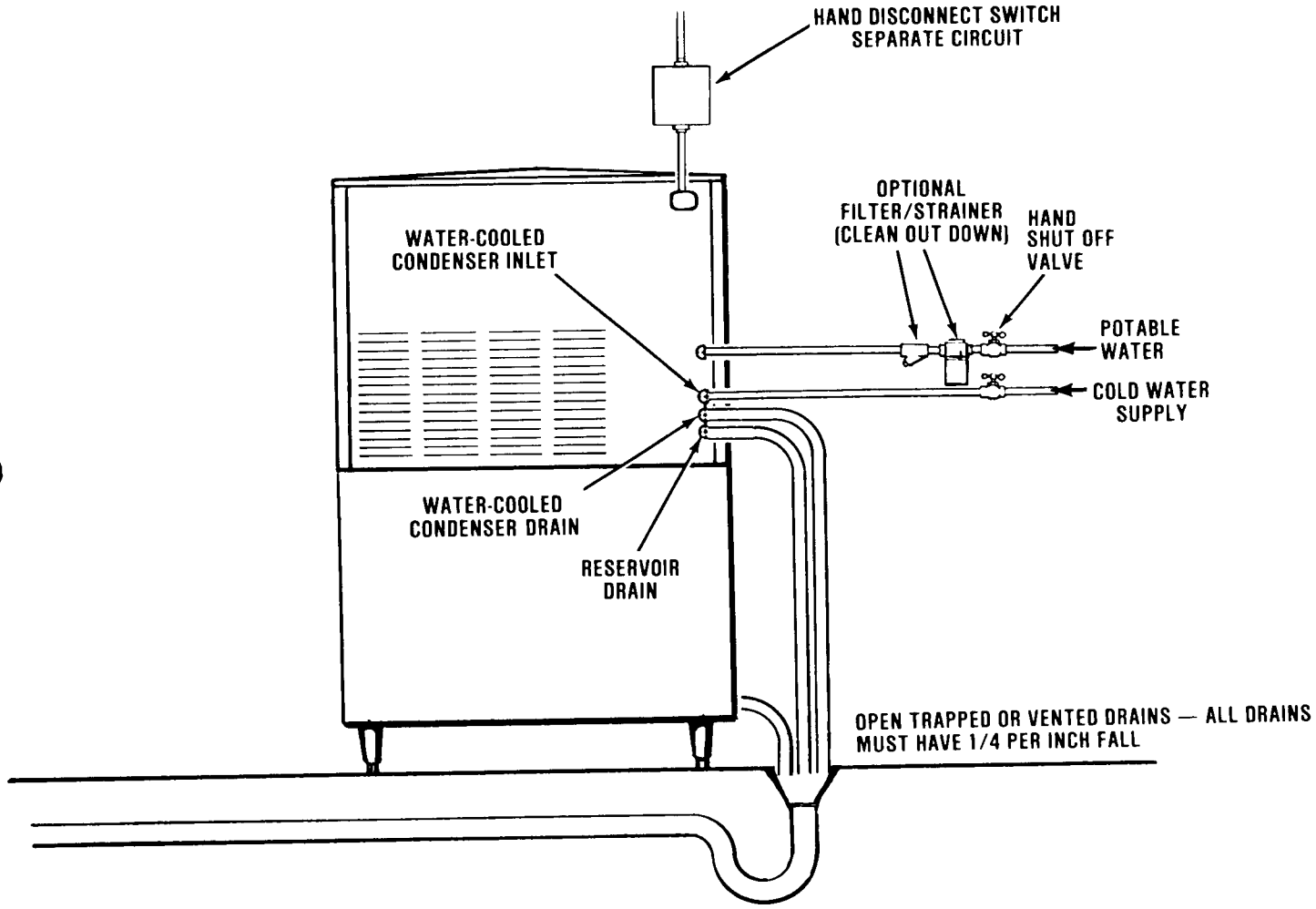
HAND DISCONNECT SWITCH
SEPARATE CIRCUIT
OPTIONAL
FILTER/STRAINER
(CLEAN OUT DOWN)
HAND
SHUT OFF
VALVE
WATER-COOLED
CONDENSER INLET
POTABLE
WATER
COLD WATER
SUPPLY
WATER-COOLED
CONDENSER DRAIN
RESERVOIR
DRAIN
OPEN TRAPPED OR VENTED DRAINS — ALL DRAINS
MUST HAVE 1/4 PER INCH FALL

OPERATING INSTRUCTIONS

START UP

1. Connect electrical power to icemaker 12 hours prior to following Start-Up steps.
2. Remove screws and cabinet top and front panels.
3. OPEN the water supply valve.
4. Observe the water filling operation.
   a. Water flows into Water Reservoir.
   b. Float moves up as water rises.
   c. Water flows through water feed line to bottom of Freezer Assembly.
   d. Check water reservoir level. Keep water level below water overflow, but as high as possible, do not permit water level to become so high that water runs out spout opening with machine OFF. It is normal for some water droplets to be expelled during machine operation along with ice flow.
5. Press the START/RESET push button located on the control panel front to start the automatic and continuous icemaking process.
6. After two or three minutes of operation, observe that flaked ice begins dropping out the Ice Chute and into the Ice Storage Bin.
7. Let the system operate for about 30 minutes or until ice covers the bottom of the Bin. Check for any excess noise beyond normal Compressor noise:
   a. Fan noises, when Air-Cooled: Blades touch other surfaces; blades bent, out-of-balance.
   b. Vibrating type, from touching lines.
   c. Chattering: Lack of water in Freezer.
   d. Observe that compressor rides free and compressor hold-down bolts have been loosened.

WARNING

DO NOT operate this icemaker when the water supply is shut OFF, or is BELOW the recommended 20 PSI water pressure. Press the OFF push button switch on the front of the Control Box to the OFF position immediately.

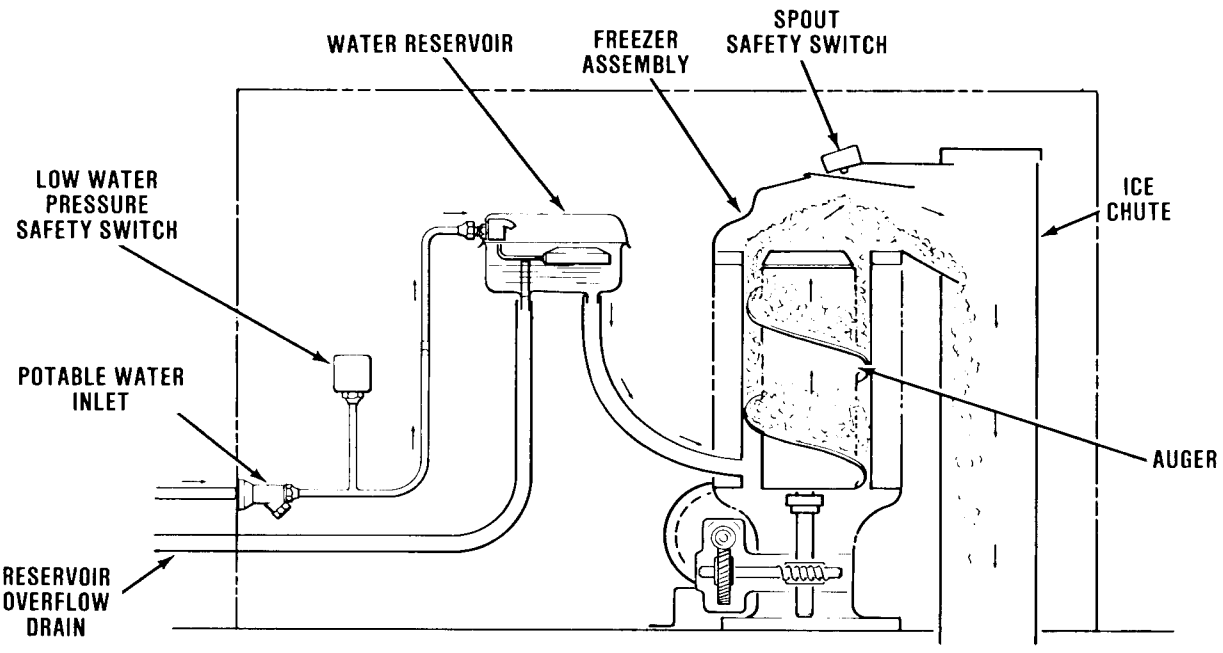

Water Schematic

8. Check pressure settings at the time of start-up. On the Water-Cooled models set the head pressure at 135 PSI. On the Air-Cooled models the head pressure will vary between 130 and 145 PSI. The frost line should extend out of the accumulator if properly charged with refrigerant. The suction pressure will range between 12 and 14 PSI with 50° F. inlet water. Check the hand reset low pressure control setting. This safety device should be set at approximately 5 PSI below normal operating suction pressure and should cut off in case of interruption in water supply, shortage of refrigerant, low ambient or any other cause of abnormally low suction pressure.
9. Hold a handful of ice around the Ice Storage Bin Thermostatic Control Bulb to test shutoff. Less than one minute is about normal for Bulb shutoff function to cause the Compressor to stop.

NOTE

Within minutes after the ice is removed from the sensing bulb, the bulb will warm up and cause the Icemaker to restart. This control is factory set and should not be reset until testing is performed. Normal setting: about 35-degrees F. CUT-OUT and 45-degrees F. CUT-IN, to prevent short cycling.

10. Thoroughly explain to the owner/user the significant specifications of the Icemaker, the start up and operation, going through the procedures in the operating instructions. Answer all questions about the Icemaker, by the owner; and, inform the owner of the name and telephone number of the authorized SCOTSMAN Service Agency serving him.

ICEMAKER

The water supply flows from the building source and enters the rear of the icemaker at the Cabinet fitting, and on through the reservoir strainer to the Water Reservoir.

A stainless steel Auger within the Freezer is rotated by the Drivemotor Assembly through a worm gear reducer.

The rotating auger carries the ice upward to the ice breaker at the top of the cylinder by means of a stainless steel auger and is discharged into the ice chute and falls into the ice storage bin.

Pressing the manual START-RESET push button, on the front of the Control Box, to the ON position starts the automatic and continuous icemaking process. With the Ice Storage Bin has been filled with ice, up to the level of the Thermostatic Control Bulb, the sensing bulb shuts off the icemaking process.

As the ice is removed from the Ice Storage Bin, the Thermostatic Control Bulb warms up, restarting the automatic icemaking process.

Factory settings are 35-degrees F. CUT-OUT and 45-degrees CUT-IN.

ELECTRICAL/REFRIGERATION

Compressor Crankcase Heater — The crankcase heater is an electrical 65 watt heater located on the bottom of the Compressor, electrically connected across main power line. Heater is ON whenever current is supplied to the icemaker, supplying enough heat to keep liquid refrigerant from migrating and settling in Compressor crankcase.

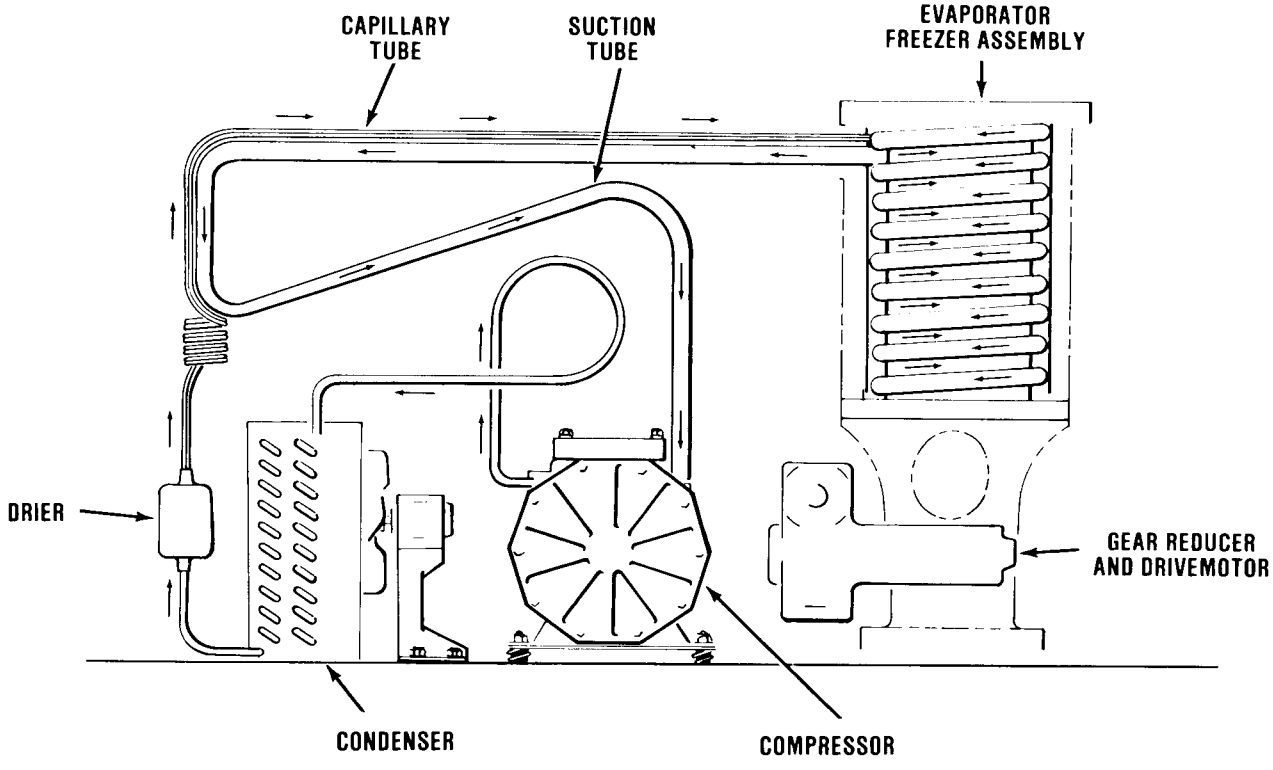

Refrigeration Cycle

The MF6B Modular Flakers are designed to operate on 230 volts, 60 Hertz, 1 phase. Special voltage requirements are available on special order. Therefore, always CHECK NAMEPLATE for circuit voltage to determine correct connecting wire sizes to the Icemaker.

Cold ambient temperatures and interruptions in water supply are conditions that can cause excessively hard ice and overloads within the Freezer Assembly, which is directly transmitted to the worm gear reducer and Drivemotor assembly, and in turn, will cause speed reduction or ultimate freezeup.

A Spout Switch is mounted on the top of the Ice Spout and is actuated by the movement of ice build-up pressing on the actuator plate. The Spout Switch acts as a backup safety switch, should the Thermostatic Control Bulb fail and cause ice to jam up in the Ice Chute. The switch will shut off the compressor only when actuated.

There are three safety controls in the Control Box on the Water-Cooled models and two safety controls on the Control Box for the Air-Cooled Models. The Low Pressure Control, a manual reset, non-adjustable control is used on both air and water-cooled models and is set to electrically open at zero to four PSIG to stop the entire icemaker. The Auger Delay Switch, a single-pole double-throw (SPDT) switch, functions as a control device to allow the Drivemotor gear reducer to rotate the Auger to clear the Freezing Chamber while the compressor circuit is OFF.

Refer to the appropriate Wiring Diagram and trace circuitry and control functions, as described in the following paragraph.

As shown on all SCOTSMAN wiring diagrams, the controls are in the ICEMAKING MODE. Thus, the 1-2 contacts are CLOSED. At START-UP, the 1-2 contacts are OPEN and the 3-2 contacts are CLOSED. As the icemaker begins to operate, the low side pressure starts to decrease from the stabilized or at-rest pressure. As soon as the pressure is reduced to 20 PSIG, the 3-2 contacts OPEN and the 1-2 contacts CLOSE.

This removes the operating controls, such as the Bin Thermostat, fromthe gearmotor circuit. If one of the operating controls OPENS, it will SHUT OFF the compressor circuit. The gearmotor will operate until the low side pressure increases to 32 PSIG. Then, the 1-2 contacts OPEN and SHUT OFF the drivemotor, usually within one to two minutes, depending upon ambient conditions. This brief period of time allows the Auger to remove the ice from the freezing chamber. Consequently, when called on to STARTUP again, there is no ice load to start up against. Again, on STARTUP, the 1-2 contacts are OPEN and the 3-2 contacts are CLOSED.

On all models, a low-water pressure switch functions to discontinue the Icemaking process whenever incoming water pressure is reduced to below five PSIG. The Switch will automatically restart the Icemaking process when the water pressure is increased to 20 PSIG.

On the Water-Cooled models only, a manual reset, high head pressure control is factory set to stop the entire icemaker should the head pressure reach 250 PSIG.

On Water-Cooled models, correct head pressure is 135 PSIG. Adjustments can be made on the Water Regulator Assembly valve. On Air-Cooled models, the head pressure is normal about 130 PSIG, however, it will vary depending upon ambient air temperature.

Air-Cooled models: Two separate Fan assemblies maintain head pressure between limits set on the Controls. Certain low ambient conditions will cause low head pressure, which will open a Control, in turn stopping the Fan motor. This reduction in air flow will cause head pressure to build up and Fan motor to restart.

The right Fan assembly is high pressure controlled, with a SPST non-adjustable, automatic reset. It is mechanically connected to system Hi side. This control cycle is ON at 170 PSIG, OFF at 154 PSIG.

The left Fan assembly is a Lo pressure control, SPST non-adjustable, automatic reset. It is mechanically connected to system Lo side. This control cycle is ON at 155 PSIG, OFF at 139 PSIG.

Suction pressure should be 15 PSIG with proper refrigerant charge and the frost line should extend out from the accumulator about eight inches. Suction pressure will vary about two PSIG plus or minus, depending upon ambient temperatures and incoming water supply temperatures to the Freezer Assembly. When charging the system with refrigerant, on Water-Cooled Models, set the compressor head pressure at 135 PSIG and charge with refrigerant so the frost line extends out of the Compressor at least eight inches after 15 minutes of operation for best capacity and performance.

Always check name plate for proper charges of R-12.

ADJUSTMENT AND REMOVAL AND REPLACEMENT PROCEDURES

The procedures provided in this Section are arranged in alphabetical order to make specific Adjustment and Removal and Replacement information easy to locate.

Read the instructions thoroughly before performing any Adjustment or Removal and Replacement Procedures.

WARNING

The adjusting screws on the Temperature Control device have very sensitive response to adjustment. DO NOT attempt to adjust the screw until after thoroughly reading and understanding the following instructions and illustrations. Over-adjusting or erratic guessing can foul the instrument and cause ultimate delay and part replacement, WHICH COULD HAVE BEEN PREVENTED.

ADJUSTMENT OF THE BIN THERMOSTAT CONTROL

The control for the Bin Thermostat is the Temperature Control, located in the upper part of the Control Box Assembly.

See Figure 4-1 for location and direction of rotation, clockwise (CW) or counterclockwise (CCW), of the adjusting screws on the Temperature Control, in the particular Control Box the adjustment is to be performed.

GENERAL ELECTRIC

ADJUST RANGE SCREW

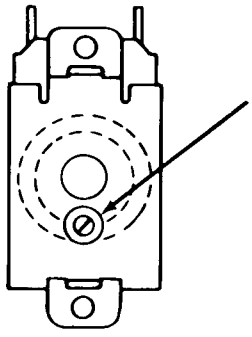

ROTATE CCW

COLDER

ROBERTSHAW

ADJUST RANGE SCREW

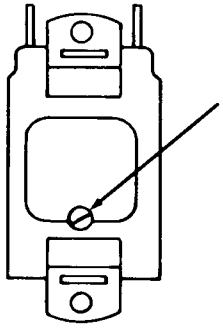

ROTATE CW

COLDER

RANCO

ADJUST RANGE SCREW (BEHIND PANEL, TOP SIDE)

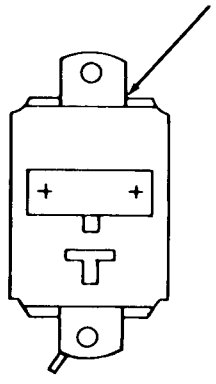

ROTATE CW

COLDER

THE PARTS ILLUSTRATIONS AND PARTS LISTS

GENERAL

This section contains the Parts Illustrations and the Parts List for each of the major assemblies in the Model MF6.

A No. Number designation, when used in the Part Number Column indicates the unit is not available from SCOTSMAN as an assembly. This designation is used only for the convenience and clarity of division in cataloging.

HOW TO ORDER PARTS/ASSEMBLIES

When ordering parts or assemblies, to avoid costly delays and errors in shipment, give the part number, the complete description shown in the list, and the quantities of each part or assembly required. Also, include the Model name, the serial number of the Modular Flaker for which the part is required, and for parts which require color matching the color of the Cabinet.

IMPORTANT

A. All Part Numbers have TEN DIGITS (spaces), required for use in the Computer System. BE SURE to fill in ALL SPACES in the CATALOG NUMBER column, on the Parts Order Form.

B. Enter the QUANTITY of the Parts ordered, in the last digit column under the QUANTITY column heading, the one under the small 55 number, for parts from 1 thru 9. For 10 or more parts use two columns.

To be sure you receive the proper parts in the proper quantities, ALWAYS use the PART NUMBERS and DESCRIPTIONS given in the Parts Manual.

Write an order for the Part. (Use SCOTSMAN Parts Order Form DN103) Be sure to include:

a. Distributor Name
b. (Use for DROP-SHIP order ONLY.)
c. Distributor Purchase Order Number.
d. Carrier.
e. How shipped (Truck, Rail, UPS, etc.)
f. Date ordered
g. Part Catalog Number, (use full TEN digits (spaces) listed in Parts Manual, including dashes between numbers.)
h. Description - as listed in Parts Manual
i. Quantity - number of parts ordered. (Use far right column.)

WIRING DIAGRAMS

This Section is provided as an aid in understanding the electrical circuitry of the MF6 Modular Flaker.

The Wiring Diagrams in this section are:

Wiring Diagram Air-Cooled Model MF6-2B.

Wiring Diagram Water-Cooled Model MF6-2B.

Wiring Diagram Air-Cooled Model MF6-3B.

Wiring Diagram Water-Cooled Model MF6-3B.

Wiring Diagram Air-Cooled Model MF6-7B.

Wiring Diagram Water-Cooled Model MF6-7B.

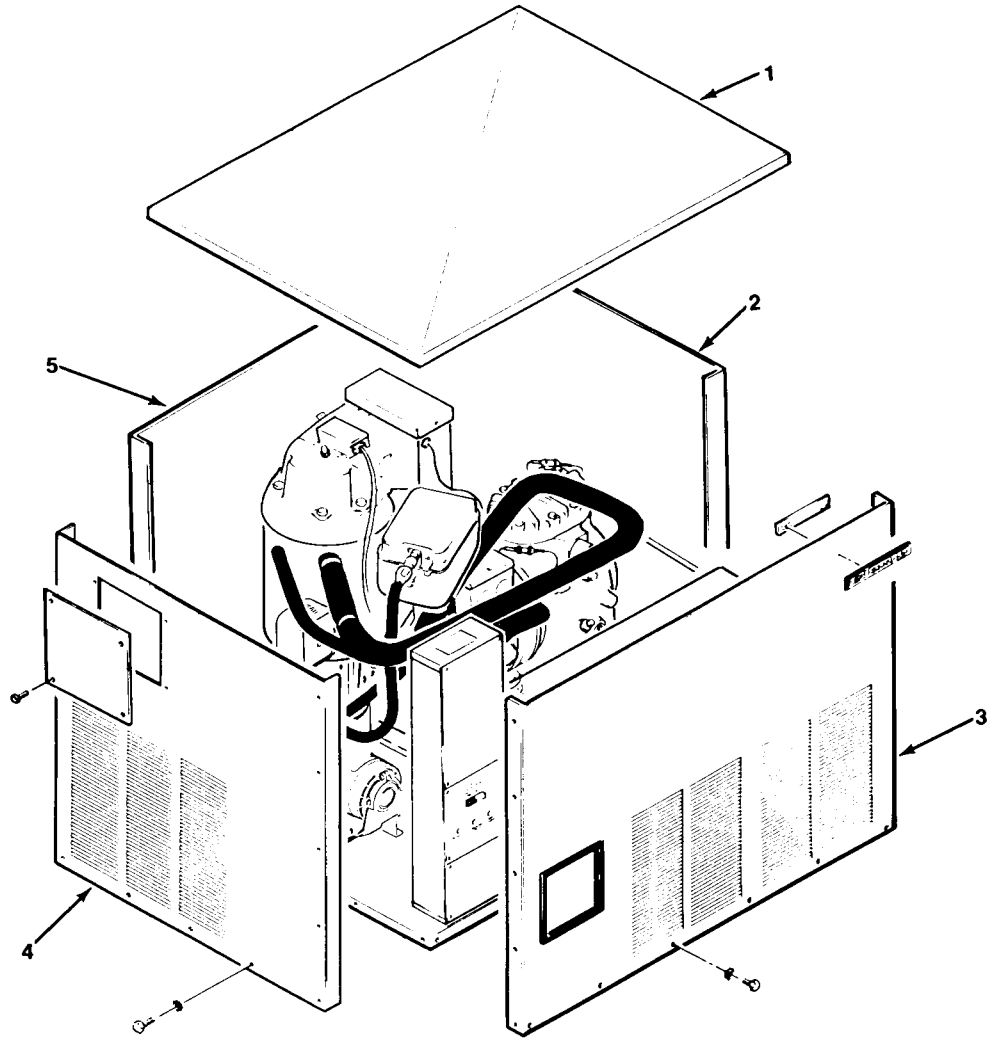

CABINET ASSEMBLY

ITEM NUMBER	PART NUMBER	DESCRIPTION
1	A25883-004	TOP PANEL (ENAMEL)
	A25883-002	TOP PANEL (STAINLESS STEEL)
2	A25881-004	RIGHT SIDE PANEL (ENAMEL)
	A25881-002	RIGHT SIDE PANEL (STAINLESS STEEL)
3	A25882-004	FRONT PANEL (ENAMEL)
	A25882-002	FRONT PANEL (STAINLESS STEEL)
		Attaching Parts Index 3
	15-0156-00	EMBLEM
	03-1562-01	TUBULAR SPEED CLIP
	13-0801-01	TRIM MOLDING
4	A25879-004	LEFT SIDE PANEL (ENAMEL)
	A25879-002	LEFT SIDE PANEL (STAINLESS STEEL)
		Attaching Parts Index 4
	A25919-004	COVER (ENAMEL)
	A25919-002	COVER (STAINLESS STEEL)
5	A25885-004	BACK PANEL (ENAMEL)
	A25885-002	BACK PANEL (STAINLESS STEEL)
		Attaching Parts Index 1, 2, 3, 4, 5
	03-1417-09	LOCKWASHER, EXTERNAL TOOTH 1/4 INCH
	03-0571-00	SCREW, THREAD CUTTING HEX HEAD 1/4-20 x 1/2-INCH

MAJOR ASSEMBLIES

ITEM NUMBER	PART NUMBER	DESCRIPTION
1	13-0595-00	GASKET (25")
2	A25925-001	COVER
3	A25895-001	ICE CHUTE
4	*No Number*	RESERVOIR SUPPORT
		Attaching Parts Index 4
	03-0571-00	SCREW
	03-1417-09	LOCKWASHER
5	*No Number*	DRYER BRACE
		Attaching Parts Index 5
	03-1403-54	SCREW
	A20448-000	SLEEVE
6	02-0822-01	DRYER
7	*No Number*	CONTROL BOX BRACKET
		Attaching Parts Index 7
	03-0571-00	SCREW
	03-1417-09	LOCKWASHER
	03-1483-26	SCREW
8	A08893-000	MOTOR MOUNT
9	12-2226-32	DRIVEMOTOR
		Attaching Parts Index 9
	03-1406-08	NUT
	03-1407-05	WASHER
	A09239-000	SHIM
	03-1410-03	LOCKWASHER
	03-1417-09	LOCKWASHER
	A09239-001	SHIM
10	A18341-001	COUPLING ASSEMBLY
11	03-1405-34	SCREW
12	03-1417-16	LOCKWASHER
13	11-0296-00	WATER PRESSURE CONTROL
		Attaching Parts Index 3
	12-1213-10	BUSHING
14	A09056-000	RESERVOIR STRAINER
15	*No Number*	WATER IN-DRAIN CONNECTIONS
16	A09056-000	RUBBER SHIELD
17	A08895-00	COUPLING ASSEMBLY
		Attaching Parts Index 17
	02-1950-00	KEY
	03-0431-02	SET SCREW

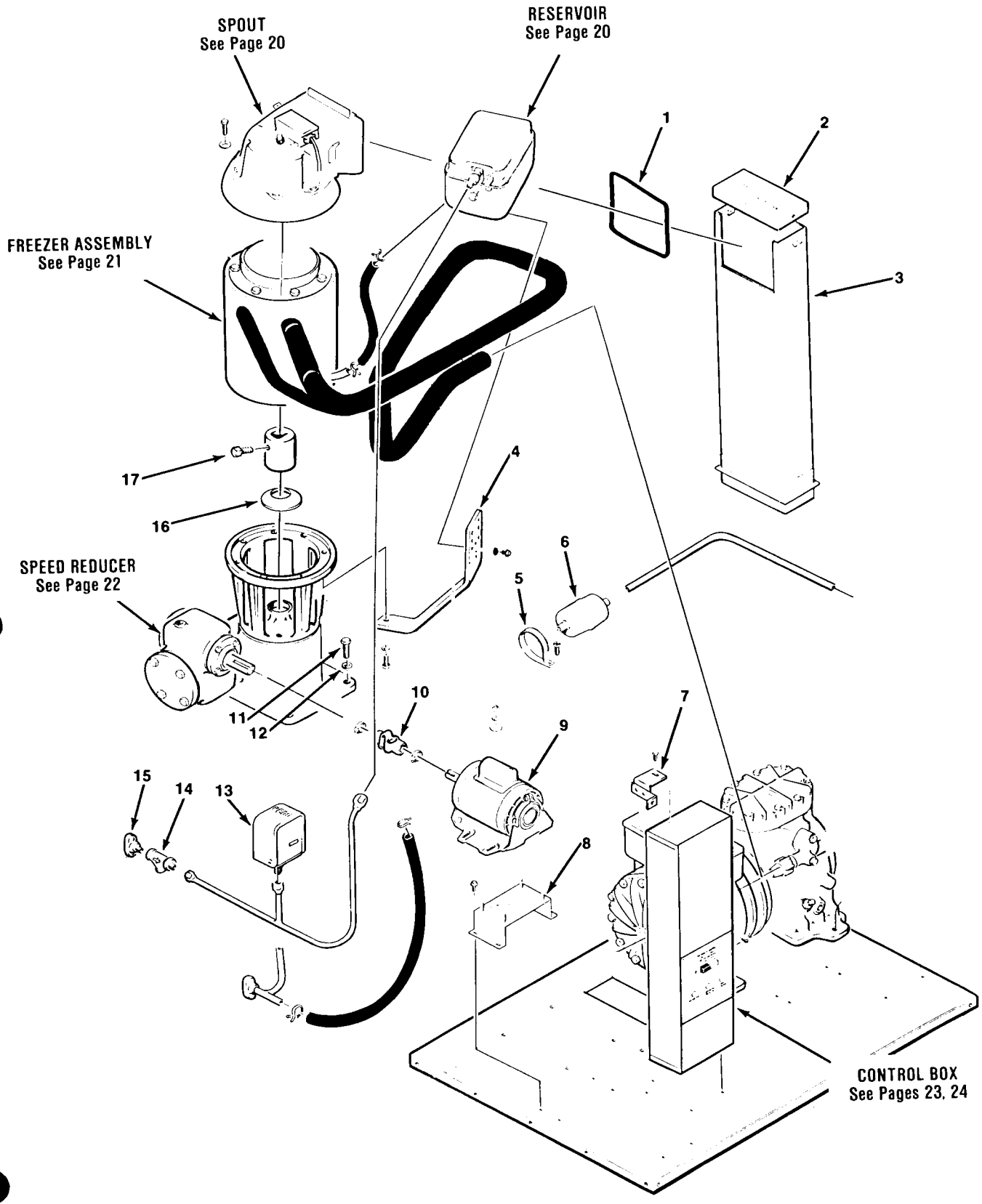

Major Assemblies

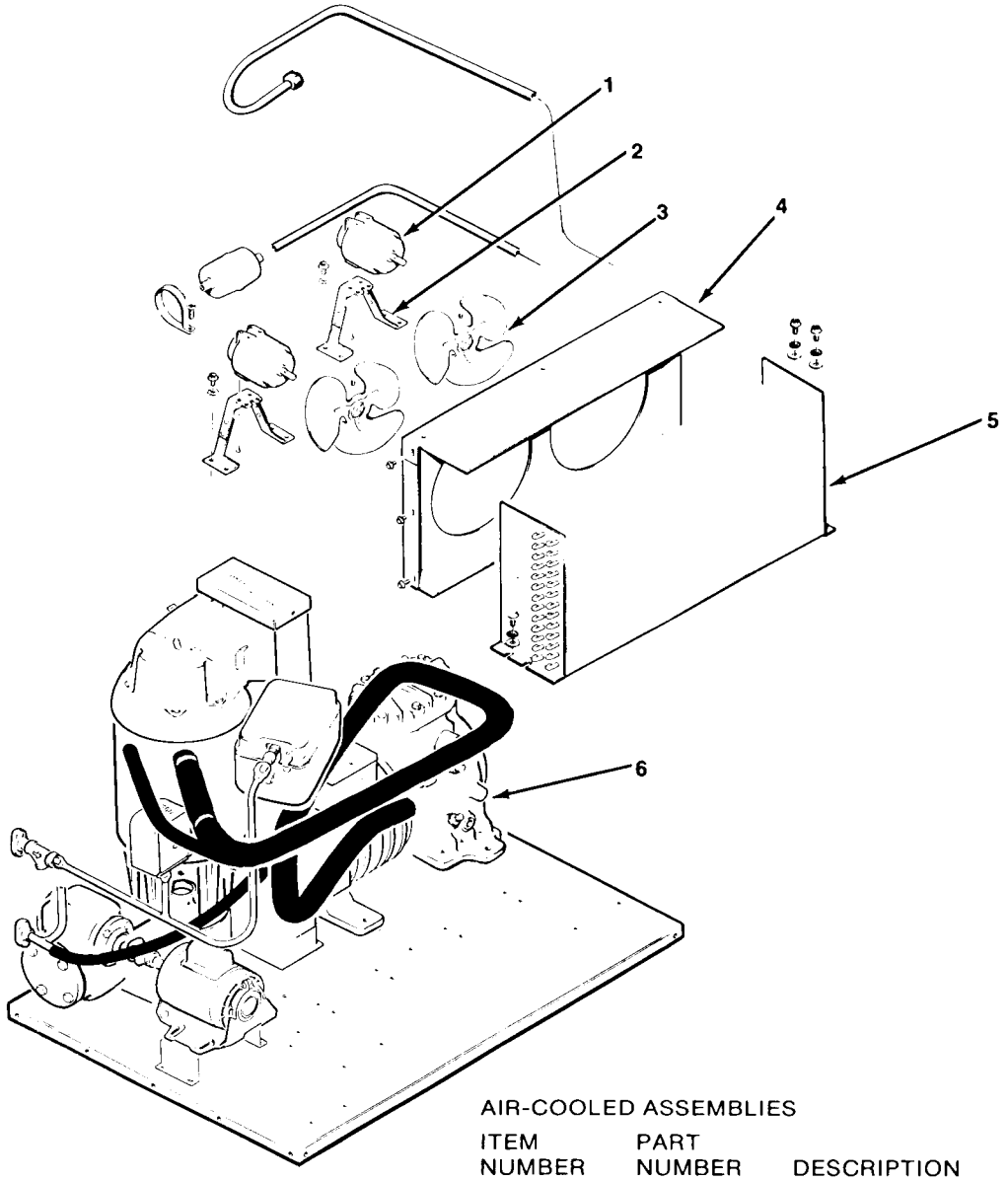

AIR-COOLED ASSEMBLIES

ITEM NUMBER	PART NUMBER	DESCRIPTION
1	18-0788-02	MOTOR, FAN 230/60/1
	18-0788-07	MOTOR, FAN 208/60/1
2	18-1421-00	MOUNT, MOTOR
		Attaching Parts Index 2
	03-0571-00	SCREW
	03-1410-03	LOCKWASHER
3	18-0787-00	BLADE, FAN
4	02-2564-01	SHROUD, CONDENSER
		Attaching Parts Index 4
	03-1404-15	SCREW
5	18-0399-01	CONDENSER
		Attaching Parts Index 5
	03-0571-00	SCREW
	03-1407-06	WASHER
	03-1407-08	WASHER
6	18-0700-00	COMPRESSOR 230/60/1
	18-0711-00	COMPRESSOR 208/60/1
	18-0763-00	COMPRESSOR 208-220/60/3

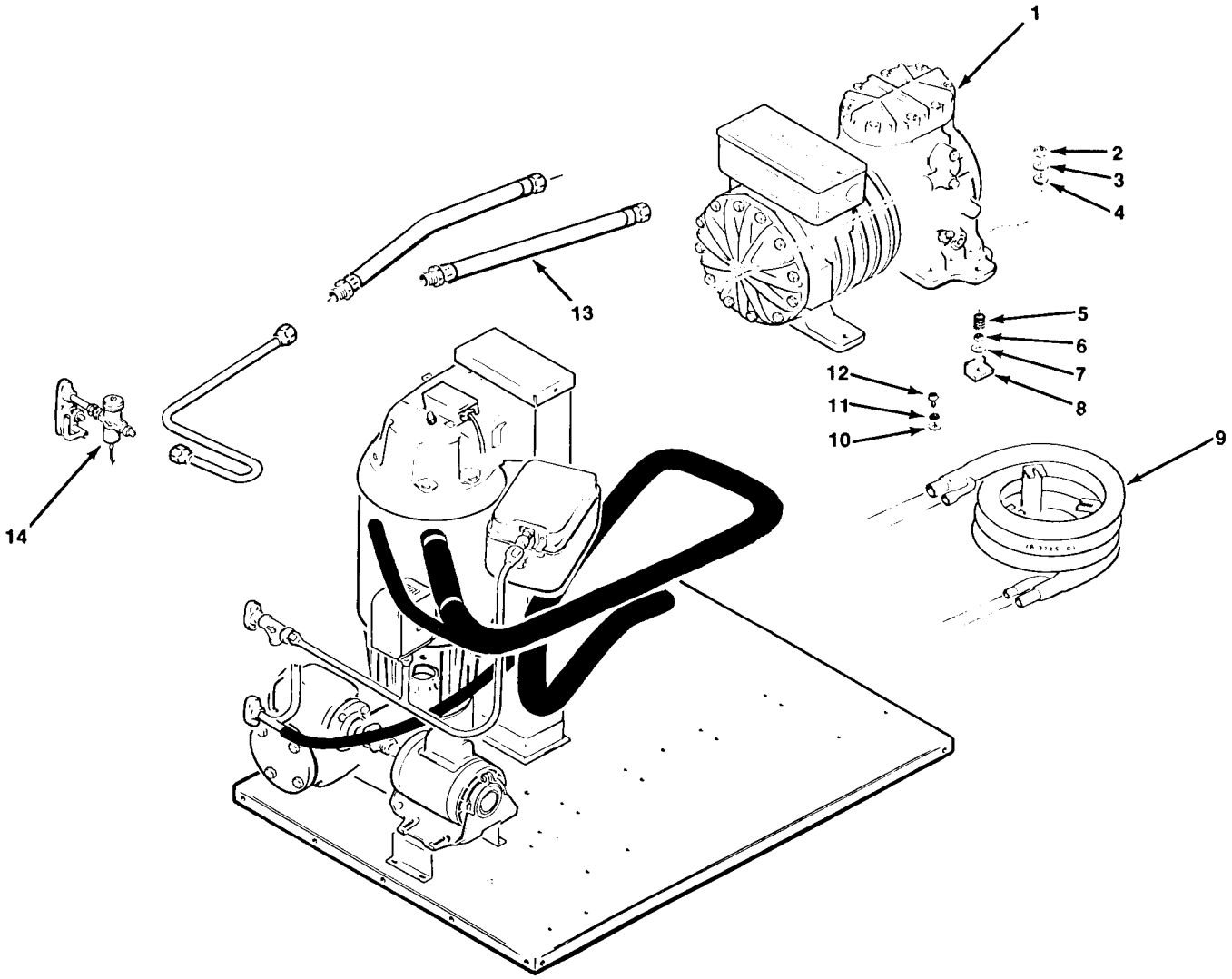

WATER-COOLED ASSEMBLIES

ITEM NUMBER	PART NUMBER	DESCRIPTION
1	18-0702-00	COMPRESSOR, 230/60/1
	18-0704-00	COMPRESSOR, 208/60/1
	18-0718-00	COMPRESSOR, 208-220/60/3
2	18-1400-24	MOUNTING NUT
3	03-1407-10	WASHER
4	*No Number*	RUBBER SPACER
5	*No Number*	GRAY SPRING
6	*No Number*	MOUNTING NUT
7	*No Number*	WASHER
8	*No Number*	MOUNTING PAD
		Attaching Parts Index 8
	No Number	MOUNTING STUD
9	18-3725-01	CONDENSER
10	03-1407-66	(3) WASHER
11	03-1417-09	(3) WASHER
12	03-1405-03	(3) SCREW
13	16-0271-00	(2) WATER HOSE ASSEMBLY
14	11-0198-00	WATER VALVE ASSEMBLY
		Attaching Parts Index 14
	03-1408-47	SCREW

SPOUT ASSEMBLY

ITEM NUMBER	PART NUMBER	DESCRIPTION
1	A14241-000	LIMIT BOX COVER
2	12-1018-00	SWITCH
		Attaching Parts Index 2
	03-0886-00	SPEED NUT
3	*No Number*	INSULATION
4	03-0698-00	(3) SCREW
5	A16849-000	BOX LIMIT
6	A16670-000	PRESSURE PLATE
7	02-1321-00	SPRING
8	A25965-001	SPOUT ASSEMBLY
9	03-1407-07	WASHER
10	03-1420-02	SCREW
11	03-1417-16	LOCKWASHER
12	A16936-000	NUT
13	A20956-000	MALE-FEMALE BOLT (4)

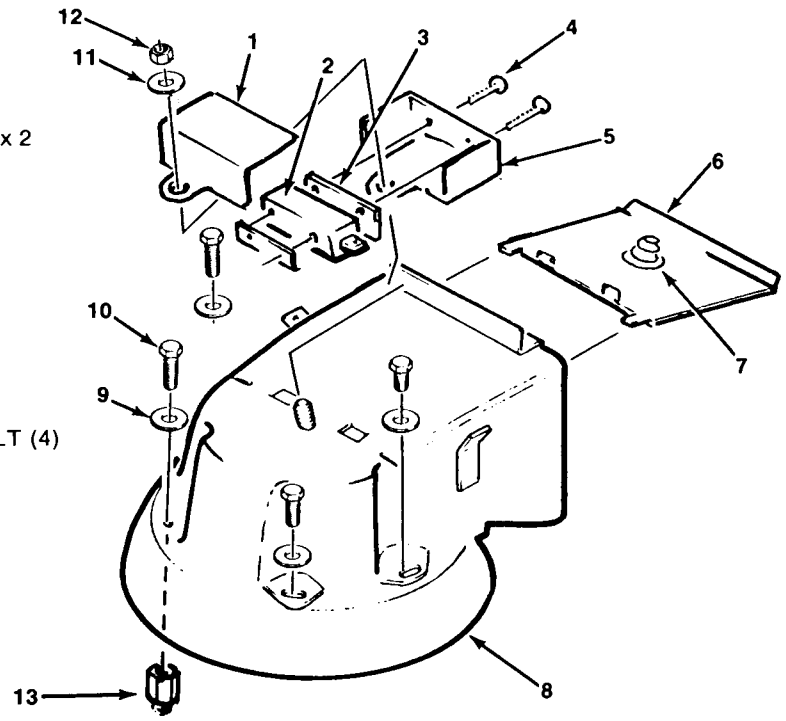

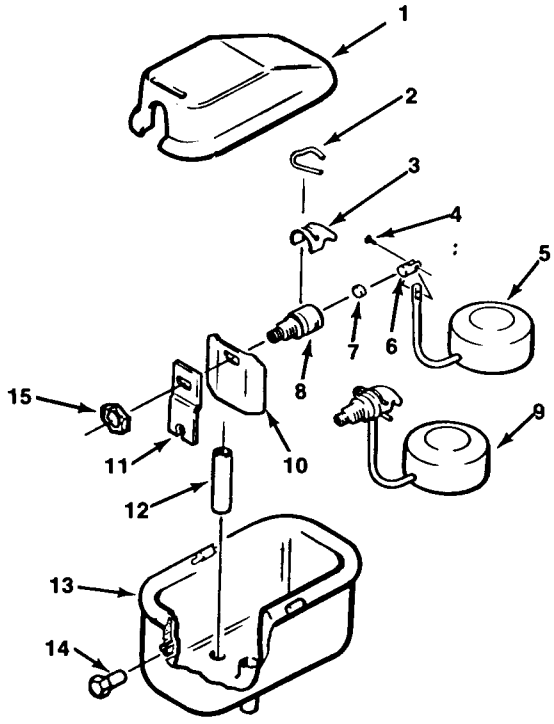

RESERVOIR ASSEMBLY

ITEM NUMBER	PART NUMBER	DESCRIPTION
1	A12870-000	RESERVOIR COVER
2	02-1259-00	VALVE PIN
3	02-1320-00	DEFLECTOR
4	03-1001-00	RIVET
5	*No Number*	FLOAT
6	*No Number*	SEAT HOLDER
7	S06947-000	VALVE SEAT
8	*No Number*	WATER INLET VALVE
9	A09101-020	VALVE COMPLETE INCLUDES ITEMS 3, 7, 2, 4, 6, 8 & 5
10	A18418-000	WATER DEFLECTOR
11	A12869-000	BRACKET
12	S06715-000	STAND PIPE
13	A13413-000	RESERVOIR BODY
14	A08055-000	BRACKET NUT
15	S07044-000	NUT
	A08868-000	RESERVOIR COMPLETE (Less Items 1 and 12)

Not Available Separately
*Use Item 9

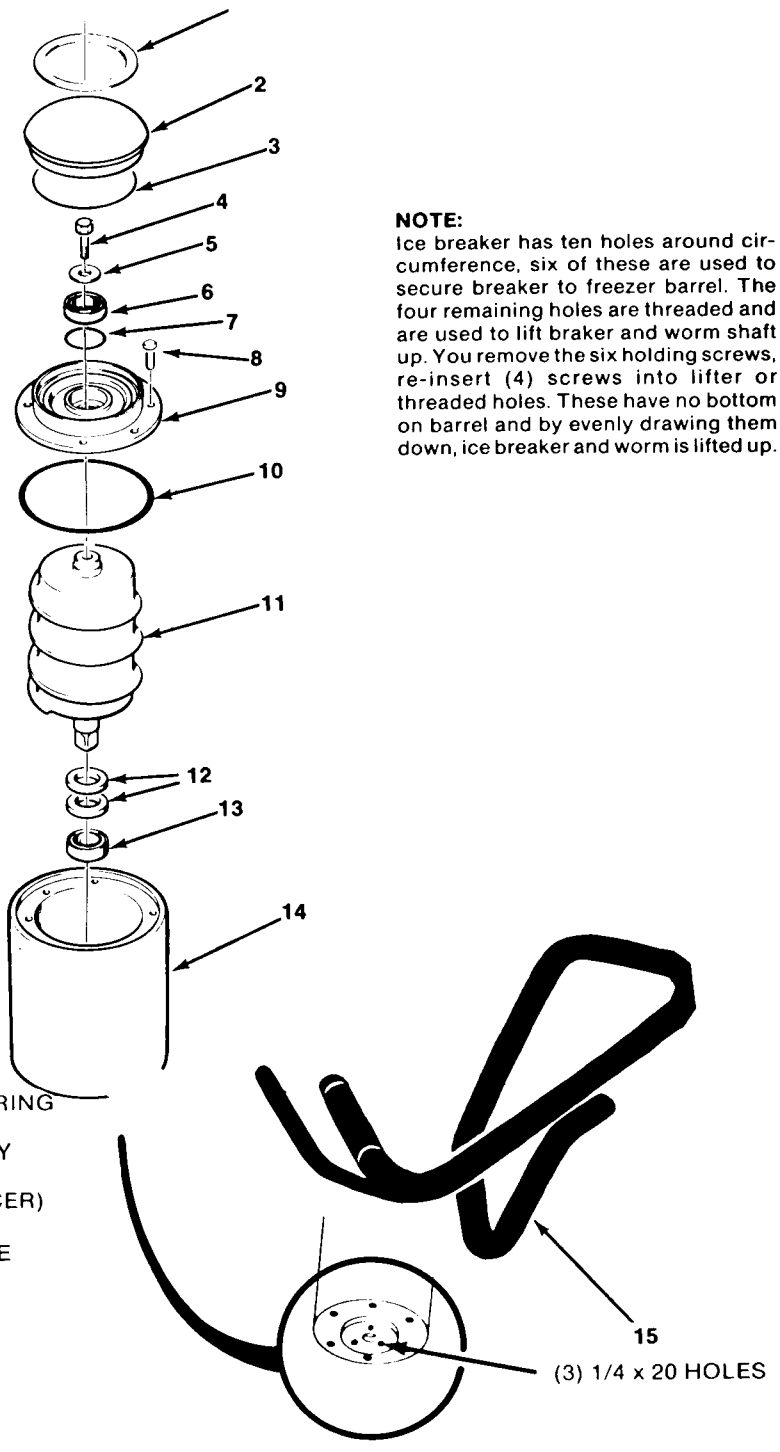

NOTE:
Ice breaker has ten holes around circumference, six of these are used to secure breaker to freezer barrel. The four remaining holes are threaded and are used to lift braker and worm shaft up. You remove the six holding screws, re-insert (4) screws into lifter or threaded holes. These have no bottom on barrel and by evenly drawing them down, ice breaker and worm is lifted up.

FREEZER ASSEMBLY

ITEM NUMBER	PART NUMBER	DESCRIPTION
1	13-0617-18	"O" RING
2	13-0231-00	CAP ICE
3	A09047-000	CAP STYROFOAM
4	03-1450-36	HEX CAP SCREW
5	A06273-000	WASHER
6	02-0619-00	BEARING
7	13-0617-15	"O" RING
8	03-1405-25	HEX CAP SCREWS (6)
9	A11351-000	BREAKER ICE WITH BEARING
10	13-0617-17	"O" RING
11	A26075-001	WORM SHAFT ASSEMBLY
12	02-0776-01	SEAL WATER
13	02-0775-00	BEARING LOWER (SPACER)
14	A08858-020	REPAIR FREEZER
15	A25889-001	SUCTION AND CAP TUBE ASSEMBLY

NOTE:
Lower bearing or water seal should be removed by pulling from the top. If bearing is worn badly and cannot be removed with a bearing puller, it can be pushed out by using three (3) 1/4 x 20 screws three inches long inserted in the tapped holes provided in the lower bearing retainer.

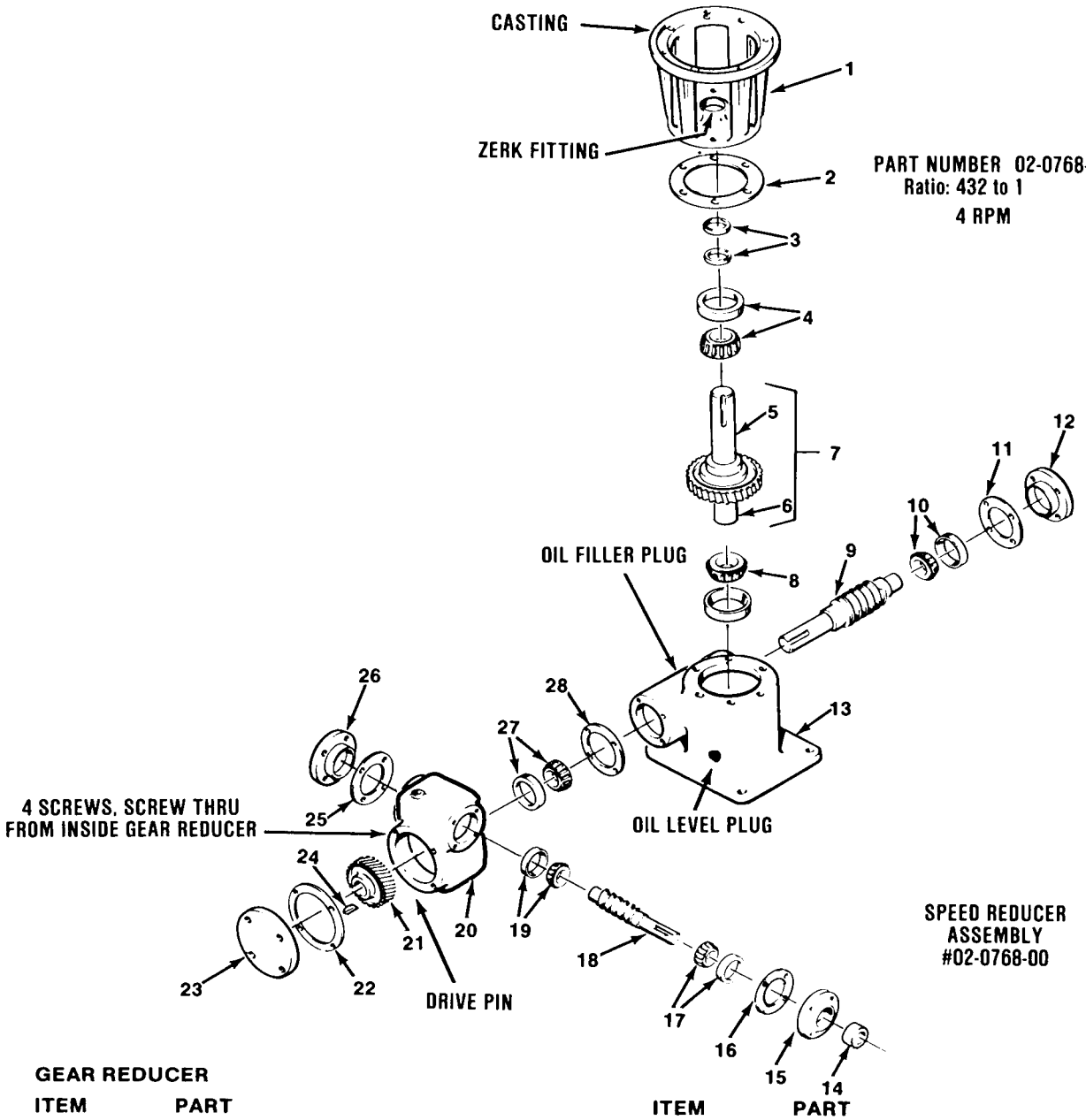

GEAR REDUCER

ITEM NUMBER	PART NUMBER	DESCRIPTION
1	*No Number*	ADAPTOR
2	02-0768-28	COVER GASKET
3	02-0768-21	SLOW SPEED OIL SEAL
4	02-0268-22	SLOW SPEED BEARING
5	02-0768-30	SPACER LONG SLOW SPEED
6	02-0768-29	SPACER SHORT SLOW SPEED
7	02-0768-42	HI SPEED ATTACH HSG COVER
8	02-0768-22	SLOW SPEED BEARING
9	02-0768-38	WORM SHAFT
10	02-0768-23	INTERMEDIATE ROLLER BEARING
11	02-0768-26	HOUSING GASKET
12	*No Number*	END CAP
13	*No Number*	HOUSING
14	02-0768-20	HIGH SPEED OIL SEAL
15	*No Number*	END CAP
16	02-0768-25	HIGH SPEED GASKET
17	02-0768-24	HIGH SPEED ROLLER BEARING
18	02-0768-39	WORM SHAFT
19	02-0768-24	HIGH SPEED ROLLER BEARING
20	*No Number*	HOUSING
21	02-0768-40	GEAR
22	02-0768-27	INTERMEDIATE GASKET
23	*No Number*	END CAP
24	02-0768-37	KEY AND ROLL PIN
25	02-0768-25	HIGH SPEED GASKET
26	*No Number*	END CAP
27	02-0768-23	INTERMEDIATE BEARING
28	02-0768-26	GASKET

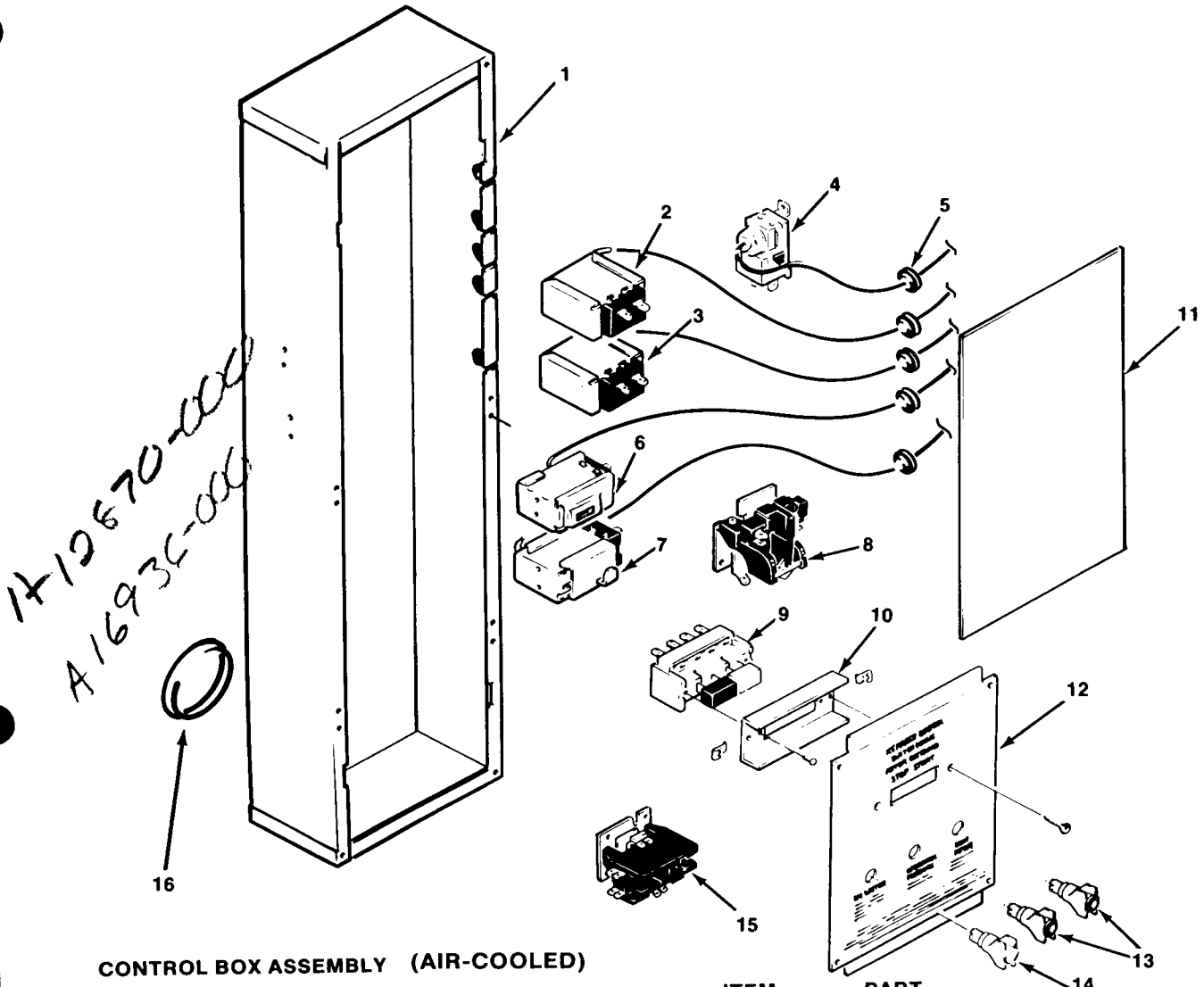

CONTROL BOX ASSEMBLY (AIR-COOLED)

ITEM NUMBER	PART NUMBER	DESCRIPTION
1	*No Number*	CONTROL BOX
2	11-0342-00	HIGH PRESSURE CONTROL (Air-Cooled Only) LEFT SIDE
		Attaching Parts Index 2
	03-1403-02	SCREW 6 x 3/8
3	11-0343-00	HIGH PRESSURE CONTROL (Air-Cooled Only) RIGHT SIDE
		Attaching Parts Index 3
	03-1403-02	SCREW 6 x 3/8
4	11-0354-00	TEMPERATURE CONTROL
		Attaching Parts Index 4
	03-1403-17	SCREW 8 x 3/8
5	13-0557-00	(5) GROMMET
6	11-0402-02	AUGER DELAY
		Attaching Parts Index 6
	03-1403-02	SCREW 6 x 3/8
7	11-0358-00	LOW PRESSURE CONTROL
		Attaching Parts Index 7
	03-1403-02	SCREW 6 x 3/8
8	12-2225-01	RELAY
		Attaching Parts Index 8
	03-1403-26	SCREW 10 x 3/8
9	12-2227-01	SWITCH
		Attaching Parts Index 9
	03-1538-04	SCREW 6 x 3/8
10	*No Number*	SWITCH BRACKET
		Attaching Parts Index 10
	03-1423-01	(2) SPEED NUT
	03-1419-12	(2) SCREW 6 x 7/8
11	*No Number*	COVER
12	*No Number*	CONTROL BRACKET
		Attaching Parts Index 12
	03-1572-01	SCREW 8 x 1/2
13	12-1997-01	LIGHT (RED)
14	12-1997-02	LIGHT (AMBER)
15	12-2037-02	CONTACTOR
	12-0739-02	CONTACTOR (3 PHASE)
		Attaching Parts Index 15
	03-1403-26	SCREW 10 x 3/8
16	12-1213-15	BUSHING

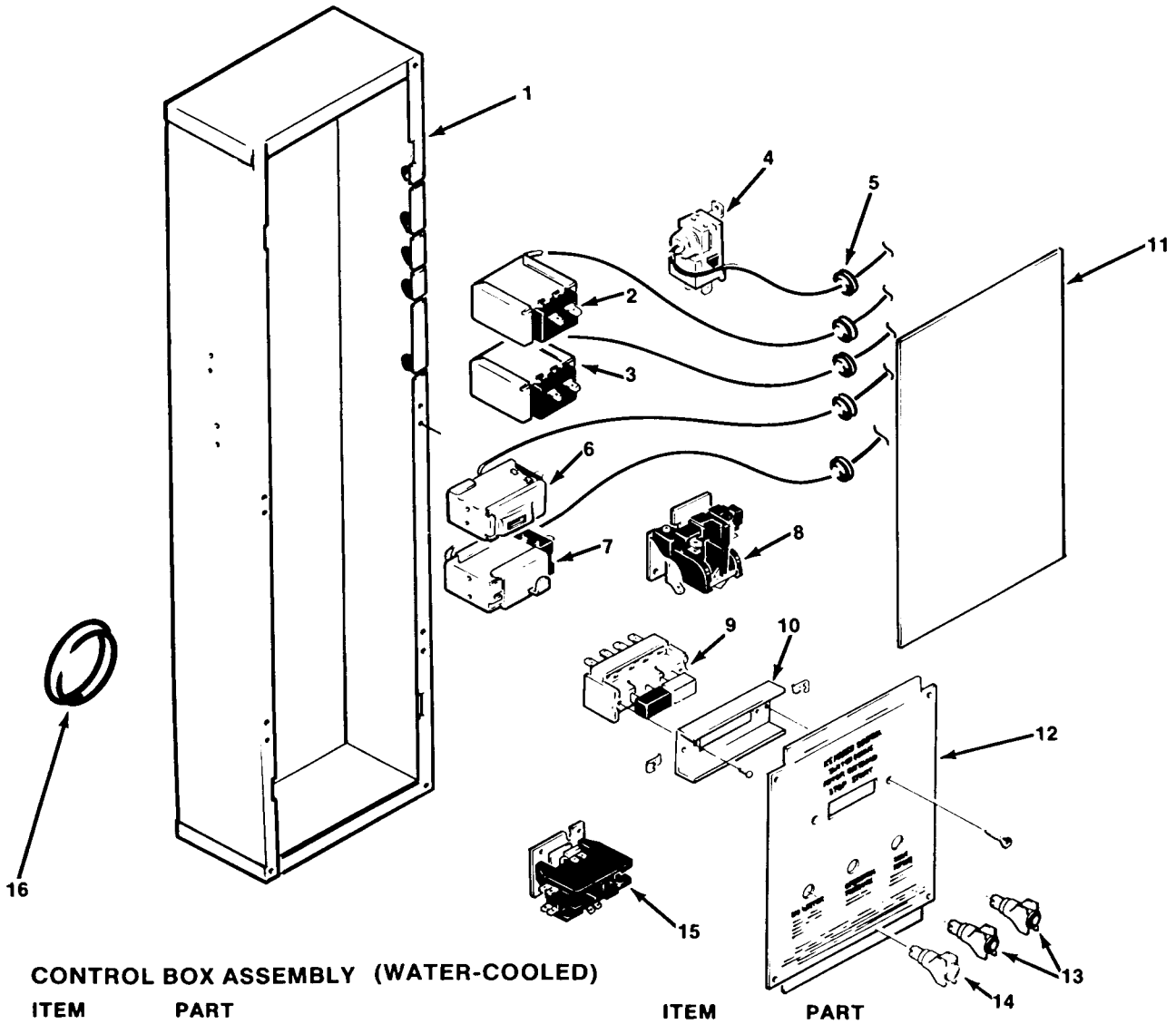

CONTROL BOX ASSEMBLY (WATER-COOLED)

ITEM NUMBER	PART NUMBER	DESCRIPTION
1	*No Number*	CONTROL BOX
2	11-0342-00	HIGH PRESSURE CONTROL (Air-Cooled Only) LEFT SIDE
		Attaching Parts Index 2
	03-1403-02	SCREW 6 x 3/8
3	11-0343-00	HIGH PRESSURE CONTROL (Air-Cooled Only) RIGHT SIDE
		Attaching Parts Index 3
	03-1403-02	SCREW 6 x 3/8
4	11-0354-00	TEMPERATURE CONTROL
		Attaching Parts Index 4
	03-1403-17	SCREW 8 x 3/8
5	13-0557-00	(5) GROMMET
6	11-0402-02	AUGER DELAY
		Attaching Parts Index 6
	03-1403-02	SCREW 6 x 3/8
7	11-0358-00	LOW PRESSURE CONTROL
		Attaching Parts Index 7
	03-1403-02	SCREW 6 x 3/8
8	12-2225-01	RELAY
		Attaching Parts Index 8
	03-1403-26	SCREW 10 x 3/8
9	12-2227-01	SWITCH
		Attaching Parts Index 9
	03-1538-04	SCREW 6 x 3/8
10	*No Number*	SWITCH BRACKET
		Attaching Parts Index 10
	03-1423-01	(2) SPEED NUT
	03-1419-12	(2) SCREW 6 x 7/8
11	*No Number*	COVER
12	*No Number*	CONTROL BRACKET
		Attaching Parts Index 12
	03-1572-01	SCREW 8 x 1/2
13	12-1997-01	LIGHT (RED)
14	12-1997-02	LIGHT (AMBER)
15	12-2037-02	CONTACTOR
	12-0739-02	CONTACTOR (3 PHASE)
		Attaching Parts Index 15
	03-1403-26	SCREW 10 x 3/8
16	12-1213-15	BUSHING

MF6B
WIRING DIAGRAMS

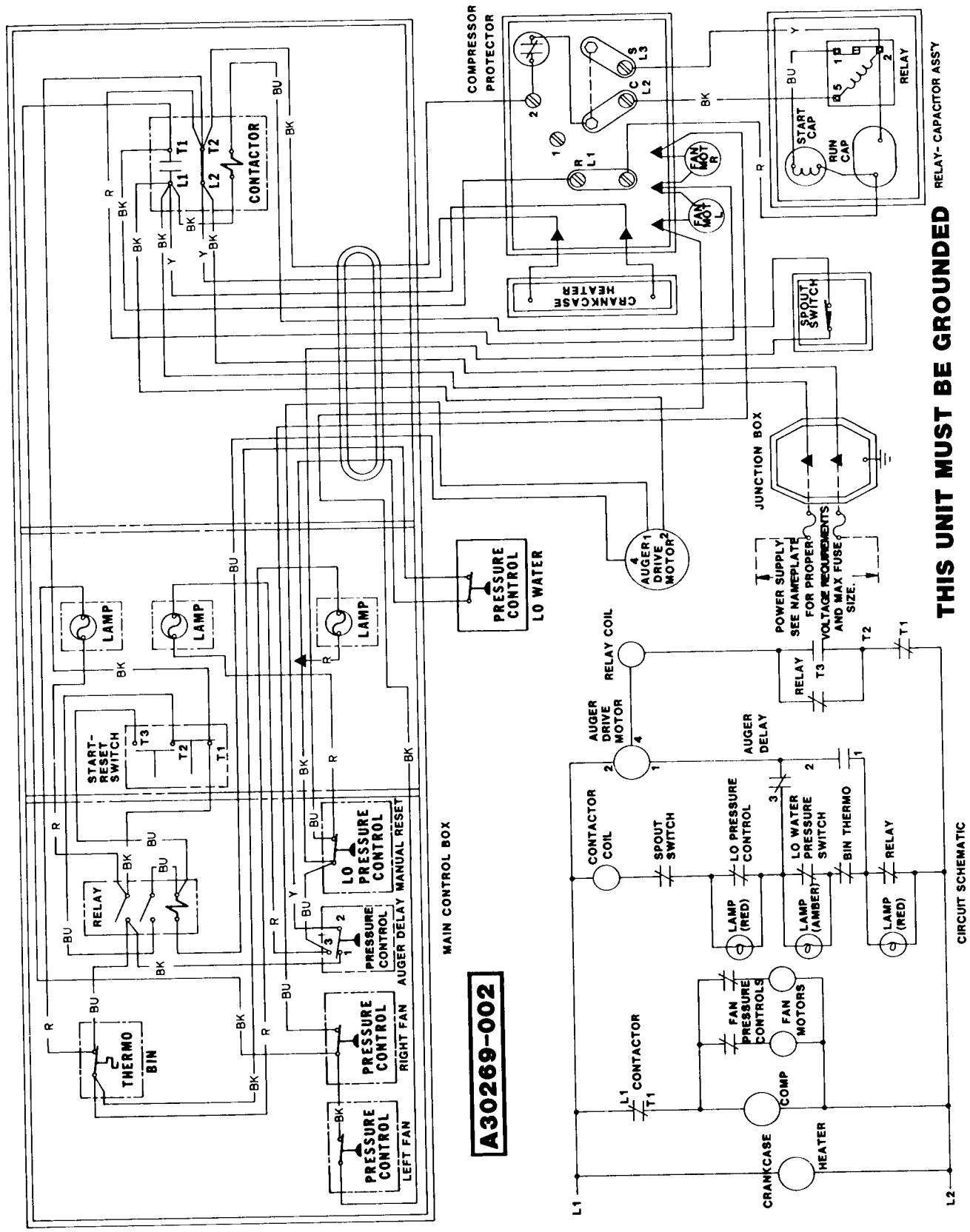

Wiring Diagram Air-Cooled Model MF6B-2B (230/60/1)

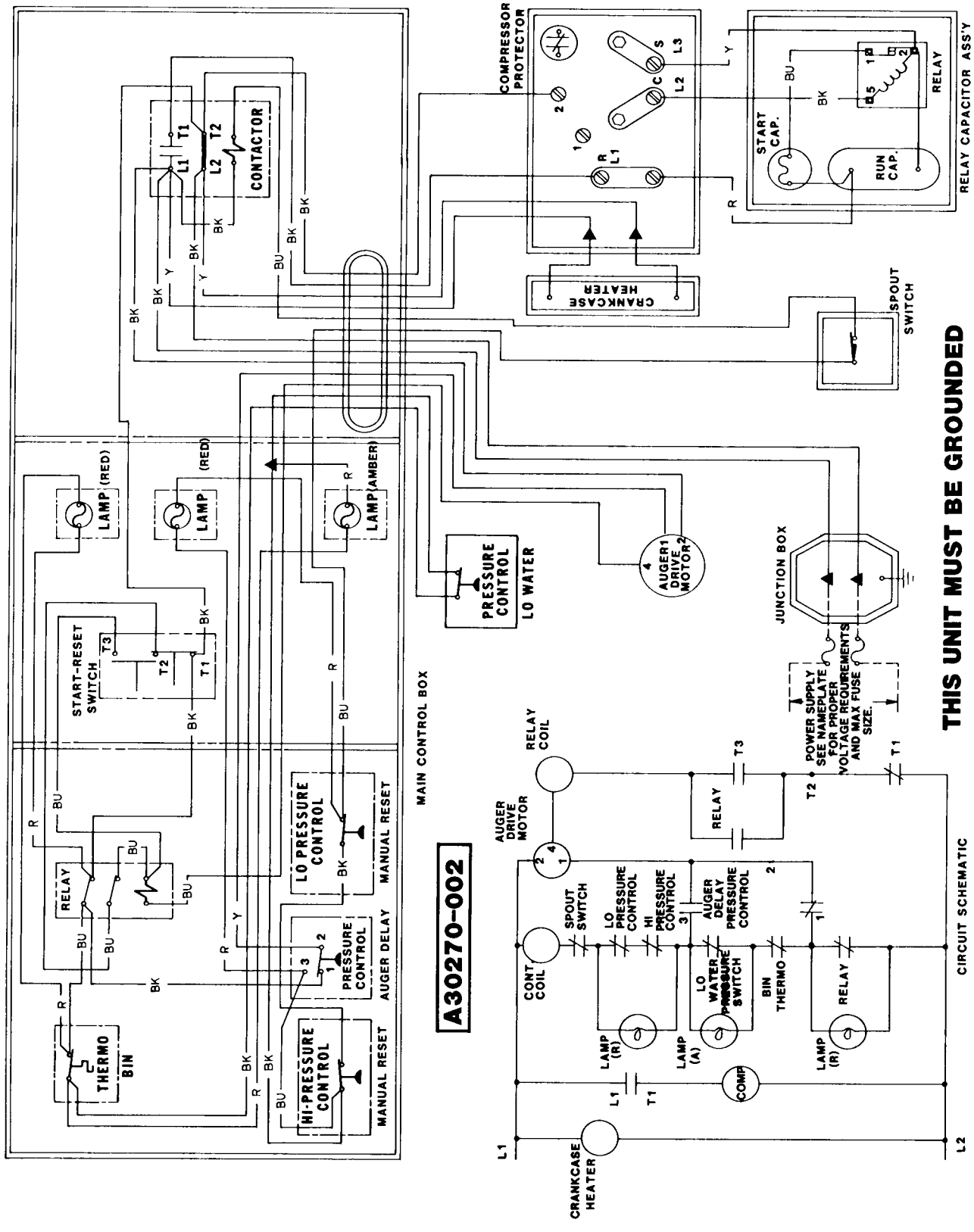

Wiring Diagram Water-Cooled Model MF6B-2B (203/60/1)

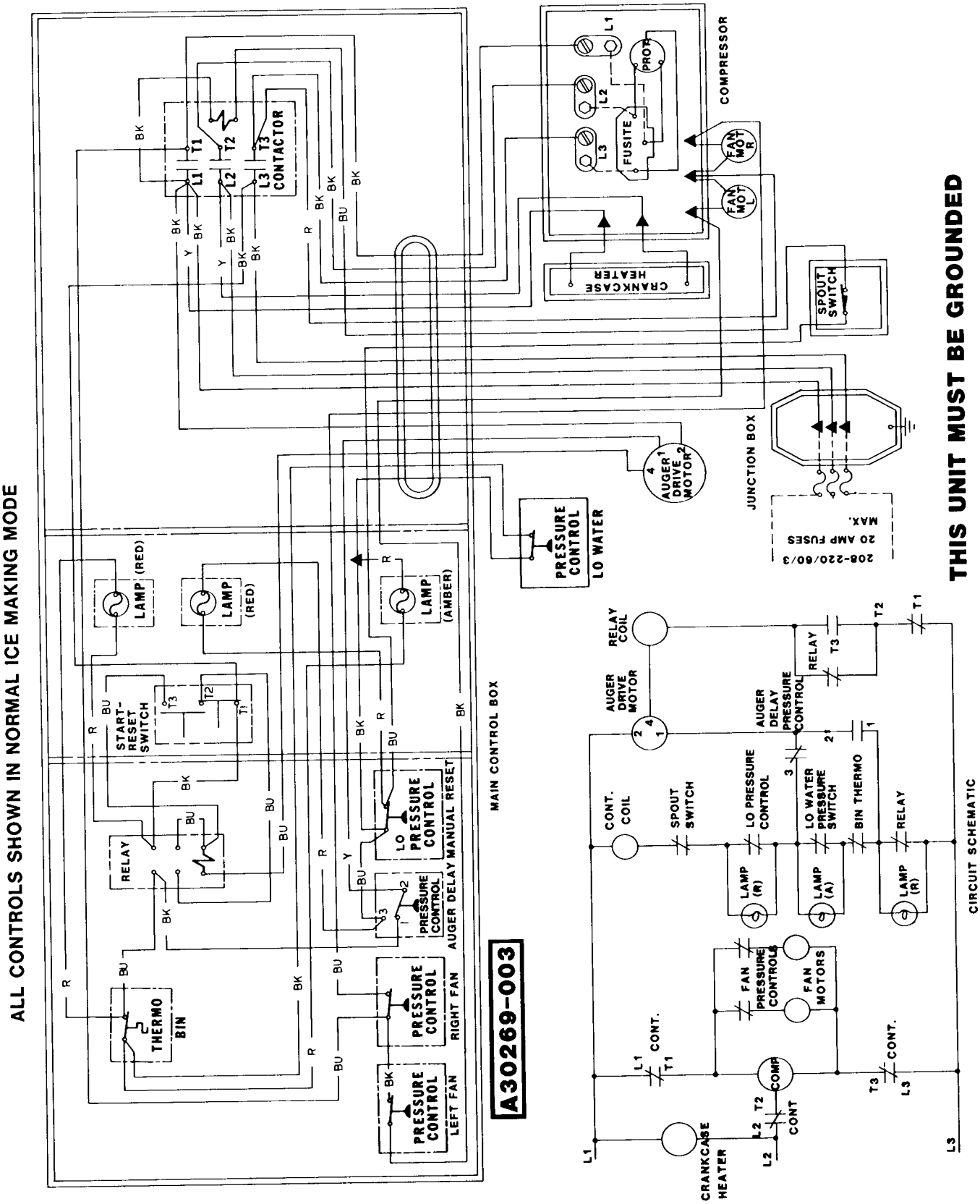

Wiring Diagram Air-Cooled Model MF6B-2B (208/60/1 and 208-220/60/3)

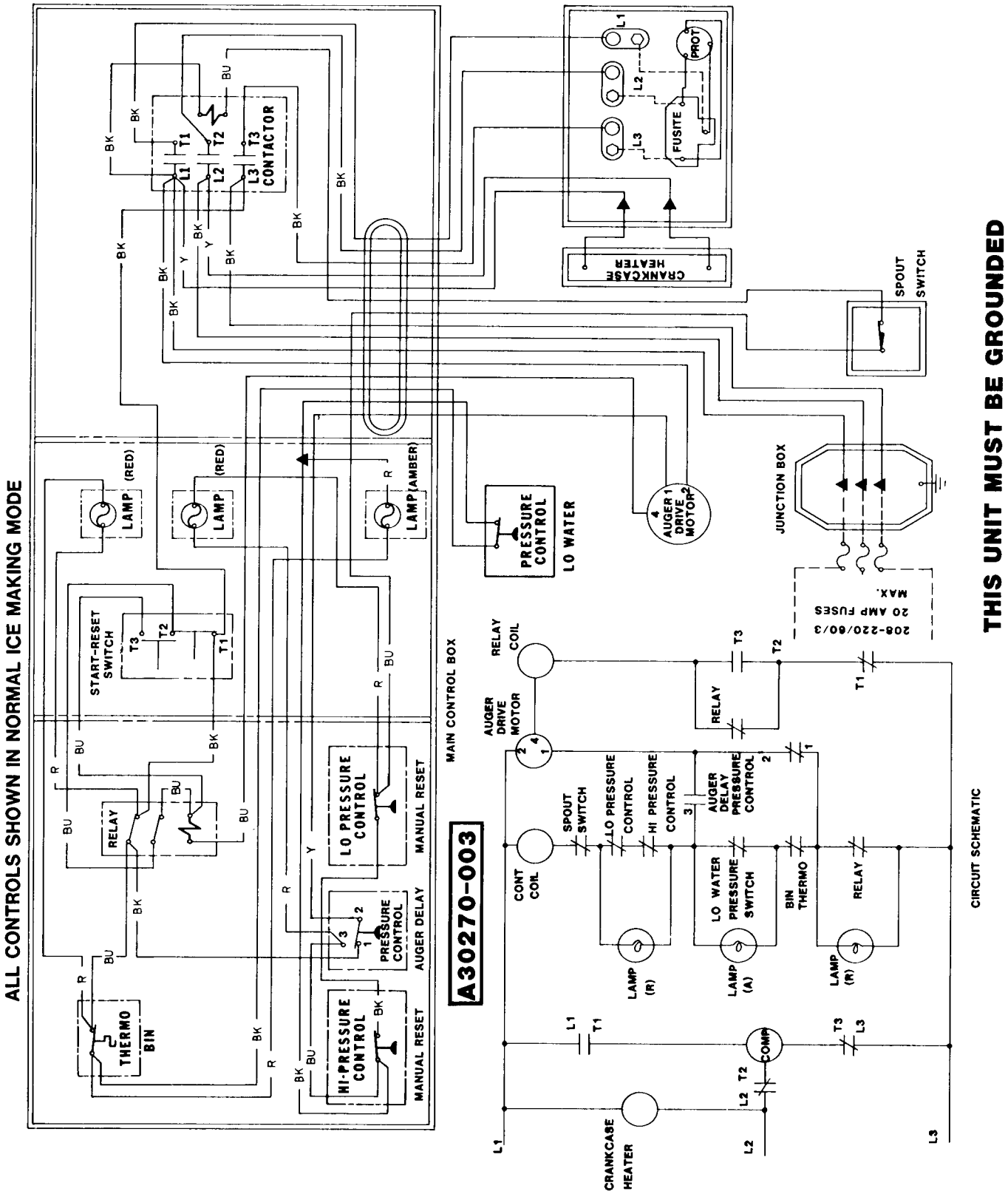

Wiring Diagram Water-Cooled Model MF6B-3B (208/60/1 and 208-220/60/3)

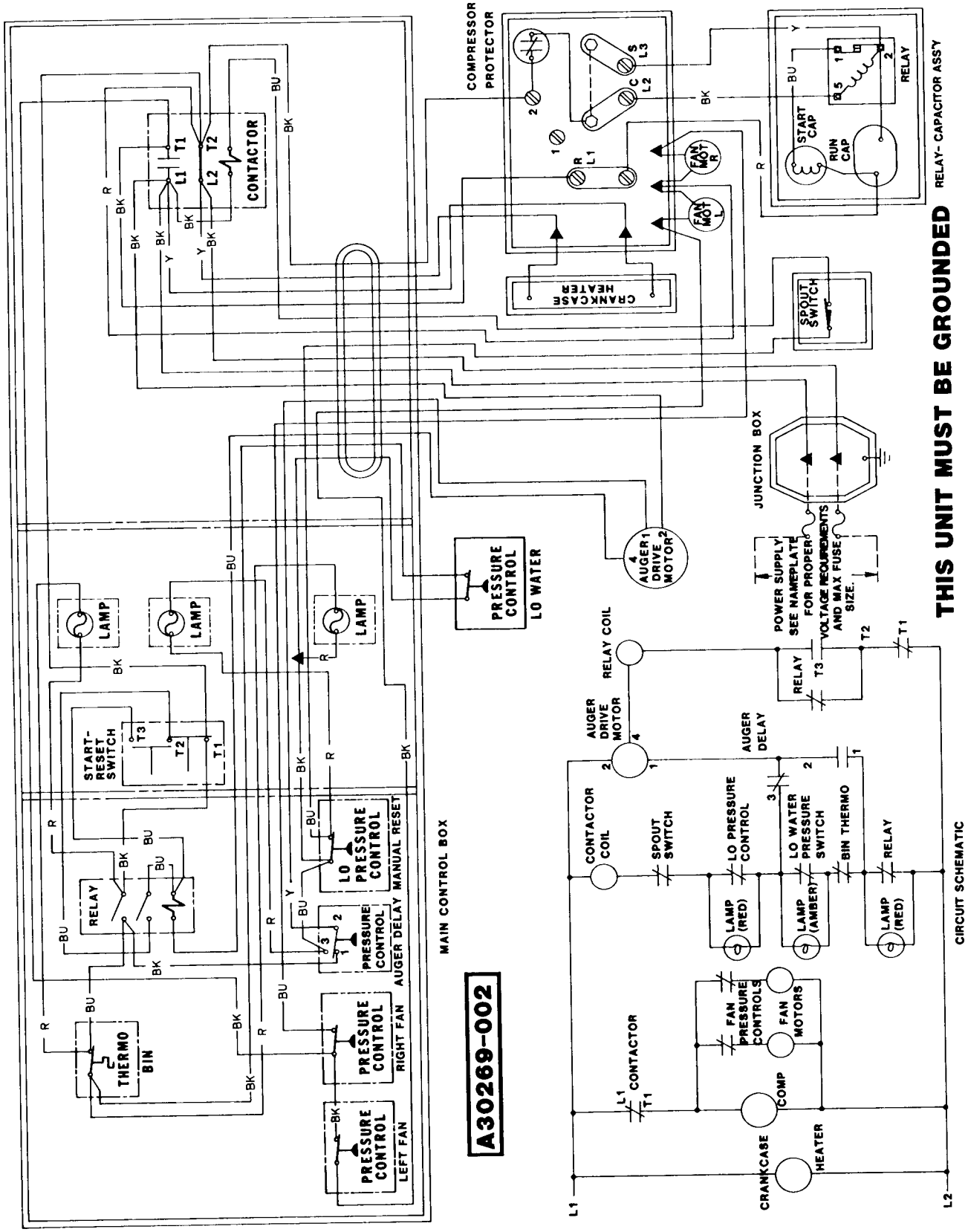

Wiring Diagram Air-Cooled Model MF6B-7B (230/60/1)

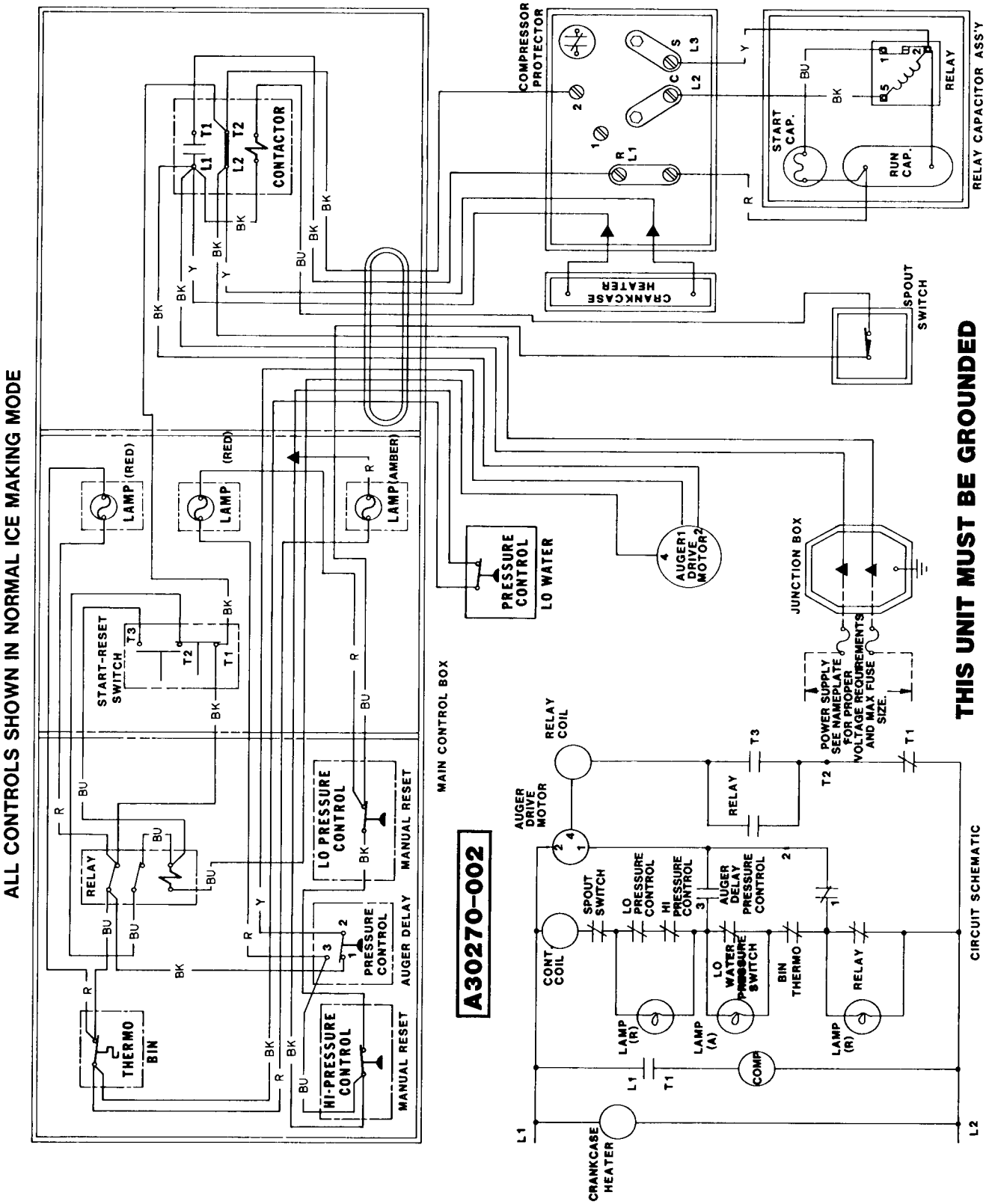

Wiring Diagram Water-Cooled Model MF6B-7B (230/60/1)

REMOVAL AND REPLACEMENT OF THE CRANK CASE HEATER

1. Disconnect electrical power supply to icemaker at the fuse box or the circuit breaker.
2. Remove screws and cabinet panels to gain access to the bottom of the compressor.
3. Remove screws and the cover from the compressor junction box and disconnect electrical leads to crank case heater.
4. Remove screws and 90° connector from compressor junction box.
5. Using an open end wrench, remove two bolts which attach crank case heater to the bottom of the compressor and remove the crank case heater.
6. To replace the crank case heater, reverse the removal process.

REMOVAL AND REPLACEMENT OF THE COMPRESSOR ASSEMBLY

1. Disconnect electrical power supply to icemaker at the fuse box or the circuit breaker.
2. Remove screws and cabinet panels to gain access to the compressor assembly.
3. Remove two screws and the cover from the Compressor junction box.
4. Disconnect the electrical leads at the compressor junction box.
5. Bleed off or blow the refrigerant charge through the Schrader valves.
6. Disconnect the suction line from the compressor.
7. Disconnect the discharge line from the compressor.
8. Disconnect four fittings and capillary tubes from the compressor head.

NOTE

Water-Cooled models require uncoupling of the fittings of the water-cooled compressor drivemotor. Shut OFF the water valve to the water cooled condenser before proceeding with removal procedures.

9. Remove four hex nuts, lockwashers and washers which secure the compressor to the chassis base.
10. Remove the compressor from the chassis.
11. To replace the compressor assembly, reverse the removal procedure.

NOTE

Always install a replacement drier, anytime the sealed refrigeration system is opened. Do not replace the drier until all other repair or replacement has been completed.

12. Thoroughly evacuate the system to remove moisture and non-condensables.
13. Charge the refrigeration system with R12 refrigerant, by weight. SEE NAMEPLATE for specifications.

REMOVAL AND REPLACEMENT OF THE CONDENSER — AIR-COOLED MODELS

1. Disconnect electrical power supply to icemaker at the fuse box or the circuit breaker.
2. Remove screws and the cabinet panels to gain access to the condenser.
3. Bleed off or blow the refrigerant charge through the Schrader valve.
4. Unsolder and disconnect the condenser inlet tube at the condenser.
5. Unsolder and disconnect the condenser outlet tube at the condenser.
6. Remove two screws and lockwashers securing the condenser to the chassis base.
7. Remove the condenser from the chassis and remove fan shroud from condenser.
8. To replace the condenser, reverse the removal procedures.

NOTE

Always install a replacement drier, anytime the sealed refrigeration system is opened. Do not replace the drier until all other repair or replacement has been completed.

9. Thoroughly evacuate the system to remove moisture and non-condensables.
10. Charge the refrigeration system with R12 refrigerant, by weight. SEE NAMEPLATE for specifications.

REMOVAL AND REPLACEMENT OF THE CONDENSER — WATER-COOLED MODELS

1. Disconnect eiectrical power supply to icemaker at the fuse box or the circuit breaker.
2. Remove screws and cabinet panels to gain access to the condenser.
3. Bleed off or blow the refrigerant charge through the Schrader valve.
4. Unsolder the refrigerant inlet and outlet lines from the condenser.
5. Disconnect the water inlet and outlet lines from the condenser.
6. Remove three bolts and lockwashers which secure the condenser to the chassis mounting base.
7. Remove the condenser from the cabinet.
8. To replace the condenser, reverse the removal procedures.

ADJUSTMENT OF THE WATER REGULATOR ASSEMBLY

The correct head pressure on Water-Cooled models is 135 PSIG. Adjustments can be performed on the Water Regulator Assembly to increase or decrease the head pressure.

To Adjust the Water Regulator Assembly:

A. To INCREASE the Head Pressure: Rotate the adjusting Screw, on the Water Regulator Assembly IN or CLOCKWISE.

B. To DECREASE the Head Pressure: Rotate the adjusting Screw, on the Water Regulator Assembly OUT or COUNTERCLOCKWISE.

ADJUSTMENT OF THE WATER RESERVOIR FLOAT

The correct water level in the Water Reservoir should be 3/8-inch below the top of the overflow tube. When the water level is above or below this level, adjustment can be performed by carefully bending the arm attached to the float.

ADJUSTMENT OF THE WATER LEVEL IN THE FREEZER ASSEMBLY

The correct water level in the freezer assembly should be just below the bottom of the ice breaker assembly.

1. To RAISE the water level: Remove the three screws which attach the water reservoir assembly to the mounting bracket and RAISE the water reservoir assembly the desired amount; then replace and tighten the screws.
2. To LOWER the water level: Remove the three screws which attach the water reservoir assembly to the mounting bracket and LOWER the water reservoir assembly the desired amount; then replace and tighten the screws.

WARNING

Be sure the electrical power supply and the water supply are OFF, before starting any of the following REMOVAL AND REPLACEMENT procedures, as a precaution to prevent possible personal injury or damage to equipment.

REMOVAL AND REPLACEMENT OF THE AUGER, WATER SEAL AND BEARINGS

1. Disconnect the electrical power to the icemaker at the circuit breaker or fuse box.
2. Shut OFF inlet water valve to the icemaker.
3. Remove screws and cabinet panels to gain access to the freezer assembly.
4. Remove four bolts and spout assembly to gain access to the icebreaker assembly.
5. Remove protector ring, o-ring, rubber cap and styrofoam cap from ice breaker assembly.
6. Remove six hex head screws around perimeter of ice breaker and thread four bolts into four unused holes around ice breaker and tighten evenly to pull icebreaker, auger and lower water seal from the freezer assembly. If lower bearing cannot be removed using a bearing puller, three 1/4 x 20 x 3-inch long screws may be threaded into the holes provided in the bottom of the freezer assemlby to push the bearing up and out of the freezer assembly.
7. To replace lower bearing in the freezer assembly, use a press to push the lower bearing into position.
8. Inspect the o-rings fro cuts, tears and general worn condition to determine replacement.
9. Inspect the bearing pressed into the top of the ice breaker. If it is to be replaced, use a press to push the upper bearing into position in the ice breaker.

NOTE

Anytime the auger is removed for replacement, or for the inspection and replacement of the bearings, use extra care in handling the water seal parts so no dirt or foreign matter are deposited on the surfaces of the seal.

If there is any doubt about the effectiveness of the water seal or o-rings, REPLACE THEM. A dirty, worn or faulty water seal or o-ring will cause a leak and ultimately require a second, time consuming removal and replacement procedure to be performed, that COULD HAVE BEEN PREVENTED.

10. To replace the auger, water seal, bearings, and ice breaker assembly, reverse the removal procedure.

NOTE

Always install a replacement drier, anytime the sealed refrigeration system is opened. Do not replace the drier until all other repair or replacement has been completed.

9. Thoroughly evacuate the system to remove moisture and non-condensables.
10. Charge the refrigeration system with R12 refrigerant, by weight. SEE NAMEPLATE for specifications.

REMOVAL AND REPLACEMENT OF THE DRIER

NOTE

Always install a replacement drier, anytime the sealed refrigeration system is opened. Do not replace the drier until all other repair or replacement has been completed.

1. Disconnect electrical power supply to icemaker at the fuse box or the circuit breaker.
2. Remove screws and the cabinet panels to gain access to the drier.
3. Remove screw and drier brace attaching the drier to the chassis base.
4. Bleed off or blow the refrigerant charge through the Schrader valve.
5. Unsolder refrigeration lines at each end of drier, remove the drier and separate the drier from the drier brace.

CAUTION

1. If the factory seal is broken on the replacement drier, exposing it to the atmosphere more than a few minutes, the drier will absorb moisture from the atmosphere and lose substantial ability for moisture removal.

2. Be sure the replacement drier is installed with the arrow positioned in the direction of the refrigerant flow.

6. Remove the factory seals from the replacement drier and install the drier in the refrigerant lines with the arrow positioned in the direction of the refrigerant flow.
7. Install the drier brace on the drier.
8. Solder the drier into the lines, two places.
9. Purge the system and check for leaks.
10. Thoroughly evacuate the system to remove moisture and non-condensables.
11. Charge refrigeration system with R12 refrigerant, by weight. SEE NAMEPLATE for specifications.

REMOVAL AND REPLACEMENT OF THE DRIVEMOTOR ASSEMBLY

1. Disconnect electrical power supply to icemaker at the fuse box or the circuit breaker.
2. Remove screws and cabinet panels to gain access to drivemotor.
3. Loosen screw clamp from coupler on drivemotor end.
4. Remove bolts, lockwashers and washers which attach the drivemotor to the mounting bracket.
5. Disconnect electrical leads to drivemotor.
6. Lift the drivemotor from the chassis base and remove from the cabinet.
7. To replace the drivemotor assembly, reverse the removal procedure.

REMOVAL AND REPLACEMENT OF THE FAN MOTOR ASSEMBLY — AIR-COOLED MODELS

NOTE

Before beginning this procedure, observe the fan blade position on the shaft of the fan motor and mark the fan blade so it will be correctly positioned during reassembly. Direction of air flow should be toward the fan motor.

1. Disconnect electrical power supply to icemaker at the fuse box or the circuit breaker.
2. To remove the defective fan motor assembly, remove screws and the cabinet panels to gain access to the fan motor.
3. Disconnect the electrical lead from the defective fan motor.
4. Remove four screws securing the fan motor bracket to the chassis.
5. Remove the set screw from the fan blade. Remove the fan blade from the motor shaft.
6. Remove four screws securing the fan mounting bracket to the fan motor and separate the motor from the brackets.
7. To replace the fan motor assembly, reverse the removal procedure.

REMOVAL AND REPLACEMENT OF FREEZER ASSEMBLY

1. Disconnect electrical power supply to icemaker at the fuse box or the circuit breaker.
2. Close water inlet valve to icemaker.
3. Remove screws and cabinet panels to gain access to the freezer assembly.
4. Remove thumb screws on ice chute and remove ice chute cover.
5. Remove bolts and washers and the ice spout assembly.
6. Remove corbin clamp and water feed tube to the freezer assembly.

7. Remove bolts attaching the bottom of the freezer assembly to worm gear reducer.
8. Bleed off or blow the refrigerant charge through Schrader valve.
9. Pull back insulation and unsolder suction line and capillary tube from the freezer assembly. Use water soaked rags to protect flammable parts.
10. Lift freezer assembly and remove from the worm gear reducer.
11. To replace freezer assembly, reverse the removal procedures.

NOTE

Always install a replacement drier anytime the sealed refrigeration system is opened. DO NOT replace drier until all other repair or replacement has been completed. Thoroughly evacuate the system to remove moisture and non-condensables.

12. Recharge refrigeration system with R12 refrigerant. SEE NAMEPLATE as per specifications.

REMOVAL AND REPLACEMENT OF THE LOW WATER PRESSURE CONTROL

1. Disconnect electrical power supply to icemaker at the fuse box or the circuit breaker.
2. To remove the lo water pressure control, remove screws and the cabinet panels to gain access to the lo water pressure control.
3. Disconnect the electrical leads of the lo water pressure control.
4. Unscrew the flare nut fitting and disconnect the lo water pressure control from the inlet water tubing.

NOTE

Inspect the o-ring and retain for the replacement. Replace o-ring that is cut, torn or indicates excessive wear.

5. To replace the Lo Water Pressure Control, reverse the removal procedure.

REMOVAL AND REPLACEMENT OF THE WATER REGULATOR ASSEMBLY — WATER-COOLED MODELS

1. Disconnect electrical power supply to icemaker at the fuse box or the circuit breaker.
2. Close water inlet valve to the icemaker.
3. Remove screws and the cabinet panels to gain access to the water regulator assembly.
4. Bleed off or blow the refrigerant charge through the Schrader valve.
5. Unsolder the capillary tube from the water regulator assembly.
6. Disconnect the water inlet and outlet line of the water regulator.
7. Disconnect the electrical lead to the water regulator assembly.
8. To replace the water regulator assembly, reverse the removal procedures.

NOTE

Always install a replacement drier, anytime the sealed refrigeration system is opened. Do not replace the drier until all other repair or replacement has been completed.

REMOVAL AND REPLACEMENT OF THE WATER RESERVOIR ASSEMBLY

1. Disconnect electrical power supply to icemaker at the fuse box or the circuit breaker.
2. Close inlet water valve to the icemaker.
3. Remove screws and cabinet panels to gain access to the reservoir assembly.

NOTE

To prevent draining water on parts, components, electrical lines, etc., be prepared with container or rags to catch water left in lines.

4. Disconnect the water inlet tube from the water reservoir assembly.
5. Remove overflow stand pipe from reservoir to drain water from reservoir.
6. Remove two corbin clamps and two tubes from the bottom of the water reservoir assembly.
7. Remove three screws at the base of the water reservoir.
8. Lift and remove the water reservoir assembly from the mounting bracket.
9. To replace the water reservoir assembly, reverse the removal procedures.

SERVICE DIAGNOSIS

The Service Diagnosis Section is for use in aiding the serviceman in diagnosing a particular problem for pin-pointing the area in which the problem lies, thus an ever available reference for proper corrective action.

The following charts list corrective action for the causes of known symptoms of certain problems that can occur in the Icemaking-Refrigeration System.

SYMPTOM	POSSIBLE CAUSE	CORRECTION
Water Leaks	Defective water seal.	Replace Seal.
	Gravity feed line leaking.	Check hose clamps.
	Water level in reservoir too high.	Adjust water level to 3/8 inch below reservoir overflow, then raise reservoir until water flows out freezer spout, then lower reservoir 3/4-inch.
	Storage bin drain and connecting fittings.	Check and repair as necessary.
Excessive noise or chattering.	Mineral or scale deposit on auger and inner freezing chamber walls.	For severe deposit, remove and manually polish auger, sand inner chamber walls of freezer barrel. For lighter concentration, use Scotsman Ice Machine Cleaner periodically.
	Misaligned drive coupling.	Repair or replace.
	Gear reducer low on oil charge.	Check oil level and refill to oil level plug.
	Intermittent water supply.	Check and clean water strainer. Check gravity feed line for air lock. Remove air lock.
	Water level in reservoir too low.	See CORRECTION for Water Leaks above.
	Gear reducer loose on frame.	Tighten gear reducer.
	Motor compressor not floating on springs.	Repair or replace rubber mounts.
	Drivemotor loose on mount, end-play or worn bearing.	Tighten, repair or replace as necessary.
Making wet ice. (Ice melts too quickly, is not cold enough to properly cure in the Bin.)	Extreme high ambience.	Correct or move cabinet to cooler location.
	Under or over-charge of refrigerant.	Recharge with proper amount. Should frost out of accumlator at least 8-inches. See nameplate for correct charge.
	High water level in water reservoir.	See CORRECTION for Water Leaks above. See CORRECTION for Water Leaks above.

SYMPTOM	POSSIBLE CAUSE	CORRECTION
Making wet ice (Cont'd)	Back Pressure too high	Overcharge of refrigerant. Faulty compressor or high head pressure. Lower pressure as indicated.
	Faulty compressor or valve plate	Repair or replace compressor or valve plate.
Low ice production	Loss of refrigerant. Under or over-charge of refrigerant.	Check and recharge. See NAMEPLATE for correct charge.
	Drivemotor weak.	Replace Drivemotor.
	Dirty or plugged condenser.	Clean condenser.
	Low water level in water reservoir.	See CORRECTION for Water leaks above.
	Overcharge of oil in system.	Check at oil sight glass. Lower to 1/2 sight glass.
	Partial restriction in capillary tube or drier.	Moisture in system. Overcharge of oil in system. Remove charge by blowing back through cap tube. Replace drier and recharge.
	Inlet water strainer partially plugged.	Remove screen and clean.
	Corroded or stained auger due to water condition.	Remove auger and clean, or use Scotsman Ice Machine Cleaner. See Maintenance Section.
Gearmotor noise.	Low on oil.	Remove case cover to check for proper oil level. Top of gears should be covered. Use: Sun Oil Company Prestige 50-EP.
Icemaker will not operate.	Power interruption will stop ice maker.	Press Master Reset Push Button to re-start.
	Blown fuse in line.	Replace fuse and check for cause of blown fuse.
	Bin thermostat set too high.	Adjust thermostat. Set at 35-degrees cut-out, 45-degrees cut-in or replace.
	Loose electrical connection.	Check wiring.
	Switch in OFF position.	Set switch to ON position.
	Inoperative master switch or red reset.	Replace switch or thermal overload.
	Off on manual-reset pressure control.	Reset.
Icemaker continues to operate with full storage bin.	Bin thermostat not properly set or is defective.	Re-set or replace bin thermostat. Re-set to 35-degrees cut-out, 45-degrees cut-in.

SYMPTOM	POSSIBLE CAUSE	CORRECTION
Compressor cycles intermittently.	Low voltage.	Check for overloading.
	Dirty condenser.	Clean condenser.
	Air circulation blocked.	Remove cause or move unit.
	Inoperative condenser fan motor.	Replace motor.
	Non-condensable gases in system.	Check for gas leaks, evacuate and recharge.
	Bin thermostat differential too small causing short cycling.	Widen differential 35-degrees cut-out, 45-degrees cut in.
Icemaker operates but makes no ice.	Low water pressure.	Restore.
	Water not entering freezing chamber.	Plugged strainer or supply line. Check and clean. Air lock in gravity feed line. Check and remove air lock.
	Moisture in system.	Check, evacuate, replace drier. Recharge, See NAMEPLATE for correct charge.
	Water seal leaking.	Replace seal.
	Defective manual overload switch.	Replace switch.
	Drivemotor or drive coupling stripped.	Repair or replace drivemotor or drive coupling.

MAINTENANCE AND CLEANING INSTRUCTIONS

GENERAL

The periods and procedures for maintenance and cleaning are given as guides and are not to be construed as absolute or invariable. Cleaning especially will vary, depending upon local water conditions and the ice volume produced, each Icemaker must be maintained individually in accordance with its own particular location requirements.

ICEMAKER

THE FOLLOWING MAINTENANCE SHOULD BE SCHEDULED AT LEAST TWO TIMES PER YEAR ON THIS ICEMAKER. CALL YOUR AUTHORIZED SCOTSMAN SERVICE AGENCY.

1. Check and clean water line Strainers.
2. Remove cover from Water Reservoir and depress the float to ensure that a full stream of water enters the Reservoir.
3. Check that the Icemaker cabinet is level, in side-to-side and front-to-rear directions.
4. Check that the water level in the Water Reservoir is below the overflow, but high enough that it does not run out of the spout opening.

NOTE

It is normal for some water to emerge from the Ice Spout with flaked ice during normal ice production.

5. Clean the Water Reservoir and interior of the Freezer Assembly, using a solution of SCOTSMAN Ice Machine Cleaner. Refer to procedure V-III, Cleaning - Icemaker.

   One cleaning per year should be a manual cleaning; Stainless steel auger should be removed and buffed to a mirror-like finish, use buffing wheel and jewelers rouge. Inner freezer barrel should be sanded using vertical strokes with 100 grit wet or dry paper.

NOTE

Cleaning requirements vary according to local water conditions and individual user operation. Visual inspection of the Auger before and after cleaning will indicate frequency and procedure to be followed in local areas.

6. When doubtful about refrigerant charge, install refrigerant gauges on Schrader valves and perform steps 6 and 7.

   Check gauge for Compressor head pressure: AIR-COOLED MODELS: Varies between 130 to 145 PSIG. WATER-COOLED MODELS: Set at 135 PSIG. Adjust screw on top of Water Regulator Valve to raise or lower head pressure.

7. Check gauge for Suction line pressure:

   Varies between 12 to 16 PSIG, depending upon inlet water temperature and ambient air temperature.

8. Set hand reset low pressure control to cut off in event of water supply interruption, or low ambient temperature at approximately 0 PSI to 4 PSI.
9. With compressor operating and oil settled, check crankcase oil level. The proper oil level is between 1/4 and 3/4 up on sight glass. Add refrigerant oil if required.
10. Remove gear reducer drain plug to change oil. Use Mobil Oil #600W or equivalent grade of gear oil with a viscosity of 125 to 190. For models with grease fittings use Mobil grease BRB No. 1 or any good grade ball bearing grease. Particularly important when there is evidence that water may have entered gear housing.
11. Oil drive motor. Use SAE No. 10 oil.
12. Check top bearing on freezer. Remove rubber O-Ring, rubber cap, and styrofoam cap. If moisture is around bearing, wipe clean nad use Beacon No. 325 or equivalent. Check and adjust drive motor coupling.

NOTE

BEFORE next step, press the manual OFF push button switch on the front of the Control Box, to the OFF position to stop the Fan Motors and Icemaker.

13. Clean the Air-Cooled Condenser, using vacuum cleaner, whisk broom, or brush. Instruct customer to clean frequently and to be sure Icemaker and Fan Motor are OFF.
14. Check that Fan Blades move freely and are not touching any surfaces or bent or out of balance.
15. Check for refrigerant leaks and for proper frost line, which should frost out of accumulator at least half way to the compressor and in some areas, back to service valve.
16. Check for water leaks. Tighten drain line connections. Pour water down Bin drain to be sure that drain line is open and clear.
17. Check the quality of ice. Ice flakes should be wet when formed, but will cure rapidly to normal hardness in the Bin.
18. Check the Bin Thermostatic Ice Control Bulb.

NOTE

The Bin Thermostat is factor set at 10-degrees F. differential and should keep the entire Icemaker

system shut off at least 20 minutes in high ambient temperatures, longer in low ambient temperatures during normal operation. Settings are 35-degrees F. CUT-OUT and 45-degrees F. CUT-IN.

19. Check the Spout Switch.

NOTE

If Bin Thermostat Bulb were to fail and cause ice to jam up in the Ice Spout, the Spout Switch is manually reset and functions as a safety switch to automatically stop the icemaking process.

CLEANING - Icemaker

1. Remove screws and the Front Panel.
2. Push the OFF push button switch on the front of the control box, to the OFF position.
3. Remove all ice from the Ice Storage Bin.
4. CLOSE the water supply shutoff valve; or block the float in the Water Reservoir.
5. Disconnect the tube between the Water Reservoir and the bottom of the Freezer Assembly. Drain water from the Reservoir and tube. Reconnect the tube.

WARNING

SCOTSMAN Ice Machine Cleaner contains Phosphoric and Hydroxyacetic acids. These compounds are corrosive and may cause burns if swallowed, DO NOT induce vomiting. Give large amounts of water or milk. Call Physician immediately. In case of external contact, flush with water. KEEP OUT OF THE REACH OF CHILDREN.

6. Prepare cleaning solution: Mix eight ounces of SCOTSMAN Ice Machine Cleaner with two quarts of hot water.
7. Remove the Cover to the Water Reservoir.
8. Slowly pour the cleaning solution into the Water Reservoir.
9. Push the START-RESET push button switch on the front of the Control Box, to the ON position.
10. Continue to slowly pour the cleaning solution into the Water Reservoir, maintain level just below the Reservoir overflow.
11. Continue icemaking, using the cleaning solution, until all the solution is used up and the Water Reservoir is almost empty. DO NOT allow the icemaker to operate with empty Reservoir.
12. Push the OFF push button switch on the front of the Control Box to the OFF position.
13. Wash and rinse the Water Reservoir and wipe dry.
14. OPEN the water supply shutoff valve, or remove the block from the float in the Water Reservoir.
15. Remove ice discharge chute and cover from inside ice maker.
16. Thoroughly clean inside and outside of chute and cover with nylon brush or disposable wipe.
17. To replace chute and cover, reverse removal procedure.
18. Push the START-RESET push button switch on the front of the Control Box to the ON position.
19. Continue icemaking for at least 15 minutes to flush out any cleaning solution. Check ice for acid taste — continue icemaking until ice tastes sweet.
20. Push the OFF push button switch on the front of the Control Box to the OFF position.

CAUTION

DO NOT use ice produced from the cleaning solution. Be sure non remains in the bin.

21. Remove all ice from the Ice Storage Bin.
22. Add hot water to the Ice Storage Bin and thoroughly wash and rinse all surfaces within the Bin.
23. Clean and sanitize the Ice Storage Bin each week.
24. Replace cover and cabinet panel. Push the START—RESET push button switch on the front of the Control Box to the ON position to resume automatic icemaking process.

MF6C

TABLE OF CONTENTS

GENERAL INFORMATION & INSTALLATION

Introduction 4
Description 4
Sealed Refrigeration System 4
Storage Bins 4
Location and Leveling 4
Ice Chute Installation 4
Electrical Connections 5
Water Supply and Drain Connections 5
Water-Cooled Models 5
Final Check List 5

OPERATING INSTRUCTIONS

Start-Up 0
Icemaker Operation 9
Electrical Operation 9

ADJUSTMENT, REMOVAL AND REPLACEMENT

Bin Thermostat Control 10
Water Regulator Assembly 11
Water Reservoir Float 11
Auger, Water Seal, Bearings and Coupling 11
Compressor Assembly 12
Condenser—Air-Cooled Models 37
Condenser—Water-Cooled Models 37
Liquid Line Drier 37
Drivemotor Assembly 38
Fan Motor Assembly—Air-Cooled Models 38
Freezer Assembly 38
Water Regulator Valve Assembly—Water-Cooled Models 39
Water Reservoir Assembly 39

SERVICE DIAGNOSIS 40

MAINTENANCE AND CLEANING INSTRUCTIONS

General 43
Icemaker 43
Cleaning — Icemaker 44

LIST OF ILLUSTRATIONS

Specifications 2
Component Location 3
Ice Chute Installation 5
Installation, Water Supply, Drain Connection 6
Operation 7
Refrigeration Cycle 8
Adjustment of the Temperature Control 10

PARTS LIST & WIRING DIAGRAMS (Printed in Yellow) 15
PARTS LIST:
Cabinet Assembly 14
Major Assembly 16
Air-Cooled Assemblies 18
Water-Cooled Assemblies 19
Ice Chute Assembly 20
Drive Motor Assembly 21
Freezer Assembly 22
Control Box 24

FIRST PRODUCTION ONLY SERIAL NUMBERS 714944-09F THRU 714967-09F

Freezer Assembly 26
Spout Assembly 28

WIRING DIAGRAMS:
Air-Cooled Models - 208/60/1 and 230/60/1 **WITH CONTACTOR ISOLATION RELAY** 29
Water-Cooled Models - 208/60/1 and 230/60/1 **WITH CONTACTOR ISOLATION RELAY** 30
Air-Cooled Models - 208-230/60/3 **WITH CONTACTOR ISOLATION RELAY** 31
Water-Cooled Models - 208-230/60/3 **WITH CONTACTOR ISOLATION RELAY** 32
Air-Cooled Models - 208/60/1 and 230/60/1 33
Water-Cooled Models - 208/60/1 and 230/60/1 34
Air-Cooled Models - 208-230/60/3 35
Water-Cooled Models - 208-230/60/3 36

Removal of the Freezer Assembly 38
Cleaning Water System 45

THIS PAGE
INTENTIONALLY
LEFT BLANK

MF6C MODULAR FLAKER

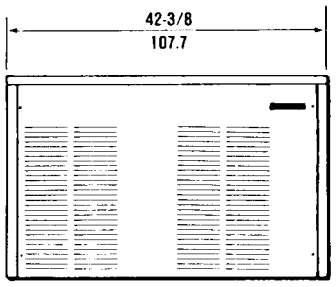

FRONT VIEW

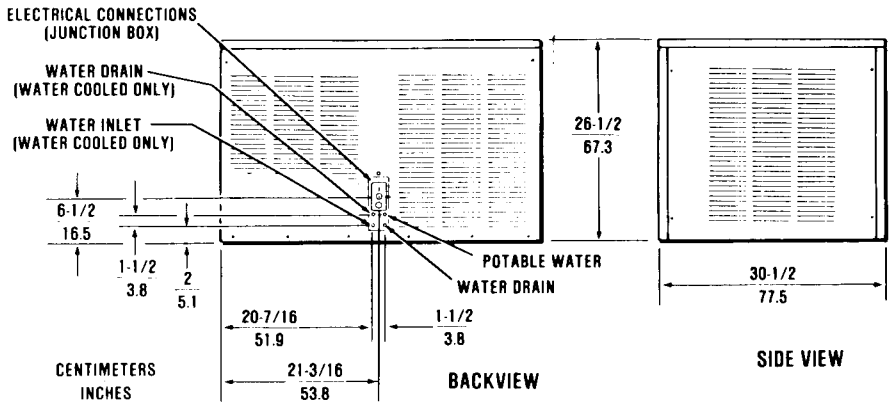

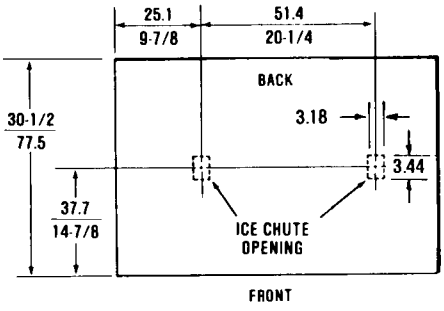

TOP VIEW

INSTALLATION NOTE: Allow 6" minimum additional space at sides, front and back for ventilation and utility connections.

This product qualifies for the following listings:

SPECIFICATIONS

Model Number	Dimensions H" x W" x D"	Bin Cap.	Ice Prod. Cap. 24 Hrs. *	Cond. Unit	Finish **	Basic Electrical	Comp. H.P.	No. of Wires	Min. Circuit Ampacity †	Max. Fuse Size	Ship. Wt. lbs./kg.
MF6AE-2C	33¼ x 42¼ x 32½	—	2115 lbs.	Air	EC	230/60/1	2	2	19.7	20	630/286
MF6AE-3C	33¼ x 42¼ x 32½	—	2115 lbs.	Air	EC	208-220/60/3	2	3	12.3	15	630/286
MF6AE-7C	33¼ x 42¼ x 32½	—	2115 lbs.	Air	EC	208/60/1	2	2	19.0	20	630/286
MF6WE-2C	33¼ x 42¼ x 32½	—	2400 lbs.	Water	EC	230/60/1	2	2	17.0	20	608/276
MF6WE-3C	33¼ x 42¼ x 32½	—	2400 lbs.	Water	EC	208-220/60/3	2	3	11.5	15	608/276
MF6WE-7C	33¼ x 42¼ x 32½	—	2400 lbs.	Water	EC	208/60/1	2	2	17.7	20	608/276

Order **SPKMF6** panel kit for stainles steel finish. MF6 will stack on top of the B80, B90 or B120 bins and extensions for ice storage. **KSE6** - Optional discharge kit.
Electrical, water inlets and drains located in lower right of back panel. Ice discharge chutes are located on bottom or left side panel (Back view).
** EC Charcoal Brown, Leathergrain embossed steel with high gloss backen enamel finish.
† Use this value to determine minimum wire size as per National Electric Code Standards.

IMPORTANT OPERATING REQUIREMENTS

	MINIMUM	MAXIMUM
Air Temperatures	50°F (10.0°C)	100°F (37.7°C)
Water Temperatures	40°F (4.4°C)	100°F (37.7°C)
Water Pressures	20 lbs. gauge	120 lbs. gauge
Electrical Voltage Variation		
Voltage rating specified on nameplate .....-10%		+10%

Extended periods of operation exceeding these limitations constitutes misuse under the terms of Scotsman Manufacturer's Limited Warranty, resulting in a loss of warranty coverage.

We reserve the right to make product improvements at any time. Specifications and design are subject to change without notice.

INTRODUCTION

This manual provides the specifications and the step-by-step procedures for the installation, start-up, operation, maintenance and cleaning of the SCOTSMAN Model MF6C Modular Flaker.

The Model MF6C Modular Flaker is a quality designed, engineered, constructed, and are thoroughly tested icemaking system, providing the utmost in flexibility to fit the needs of a particular user.

DESCRIPTION

The SCOTSMAN Modular MF6C continuous flow icemaker consists of two completely independent flake icemaking systems contained within an attractive compact cabinet made of texture metal with a charcoal brown baked enamel finish. Two independent icemaking systems doubles the dependability.

SEALED REFRIGERATION SYSTEMS

To provide quiet, efficient operation of the icemaker, the compressor motors are internally spring-mounted. The compressor motor is covered by a five-year parts warranty.

STORAGE BINS

Since the MF6C modular flakers do not have their own self-contained storage bins, it is necessary to have an auxiliary bin such as the SCOTSMAN bins B90. As storage demands increase, the modular system may be enlarged with SCOTSMAN bin accessories BX83, BX87.

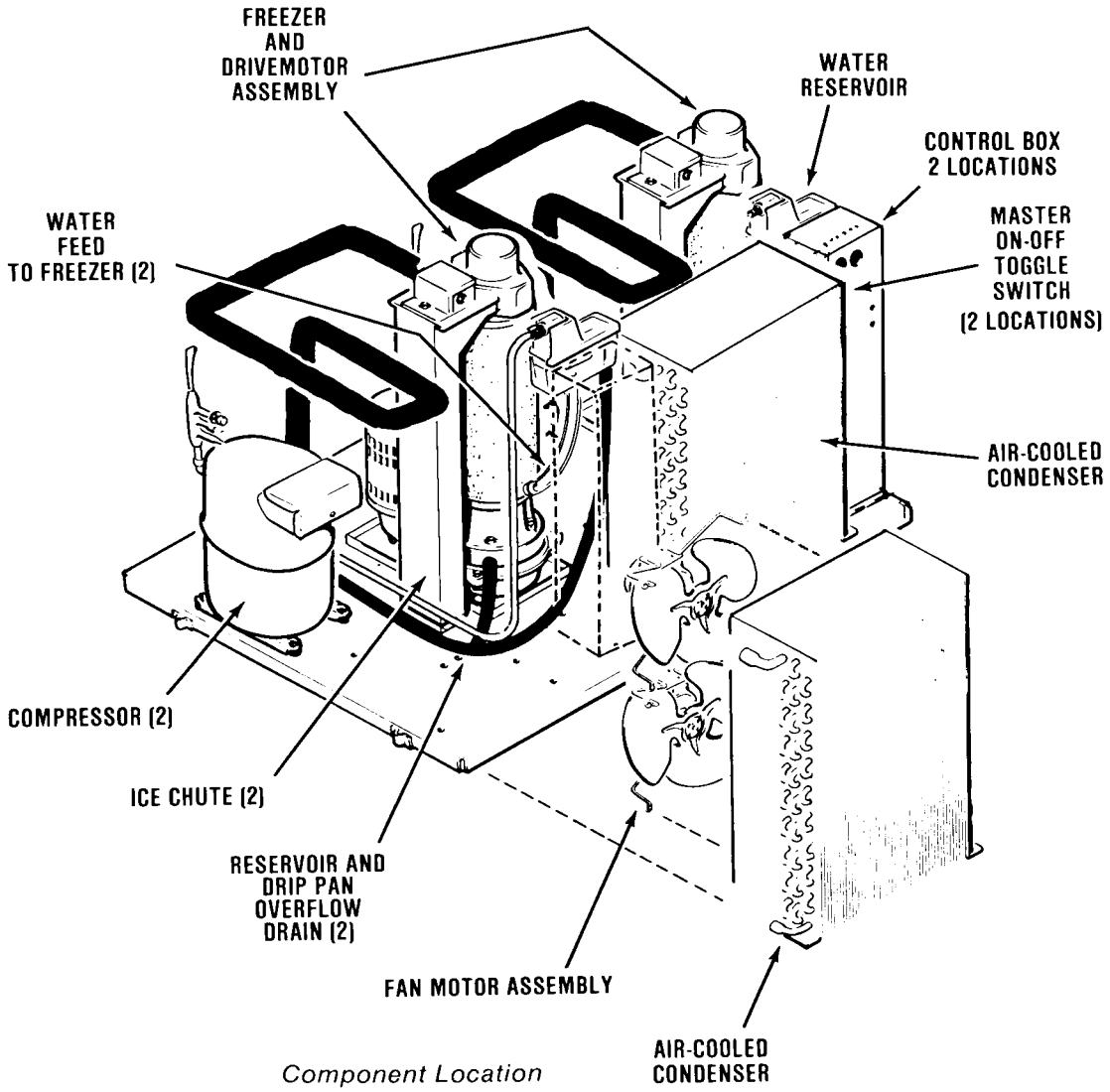

Component Location

GENERAL INFORMATION AND INSTALLATION

LOCATION AND LEVELING

WARNING

This Icemaker is NOT designed for outdoor installations where air temperatures are below 50-degrees F., or above 100-degrees F., and water temperature is below 40-degrees F. or above 100-degrees F. Extended periods of operation at temperatures exceeding these limitations will constitute misuse, under the terms of the SCOTSMAN Manufacturer's limited warranty, resulting in LOSS of warranty coverage.

Prior consideration for location site shall include:

Minimum room temperature 50-degrees F. and maximum room temperature 100-degrees F.

Water inlet temperatures: Minimum 40-degrees F. and Maximum 100-degrees F.

Well ventilated location for air-cooled model, advising user to frequently clean air-cooled condenser, located directly behind the front service panel.

SERVICE ACCESS: Adequate space for all service connections, located at the rear of the cabinet. A six-inch minimum clearance at the rear and both side panels, for routing cooling air drawn into and exhausted out of the compartment to maintain proper condensing operation on air-cooled models.

1. Position the selected bin combination in the permanent location and attach the modular icemaker to the bin.
2. Level the combination in both the left-to-right and front-to-rear directions. The leveling legs can be adjusted with an open end wrench.

ICE CHUTE INSTALLATION

Insert ice chutes into holes provided in the icemaker base and attach each chute to the ice discharge spouts with wing nuts provided. Use caution when positioning the ice chutes to prevent kinking damage to the bin thermostat capillary tubing.

WARNING

Eletrical power must be disconnected before any assembly.

The Model MF6C is designed to be installed on top of an ice storage bin and two ice transport tubes extend through the cabinet base and into the ice storage bin. The ice chutes must be installed before operation.

1. Remove screws and cabinet top panel.
2. Slide each ice chute down and over each spout opening. When properly assembled, the ice chutes extend into the bin.
3. Fasten each ice chute to each spout using two wing nuts on each ice chute.

CAUTION

Thermostat capillary tube must not be bent or kinded. Careless handling will cause damage.

4. Check the bin thermostat capillary tube routing to be sure it does not contact other parts.

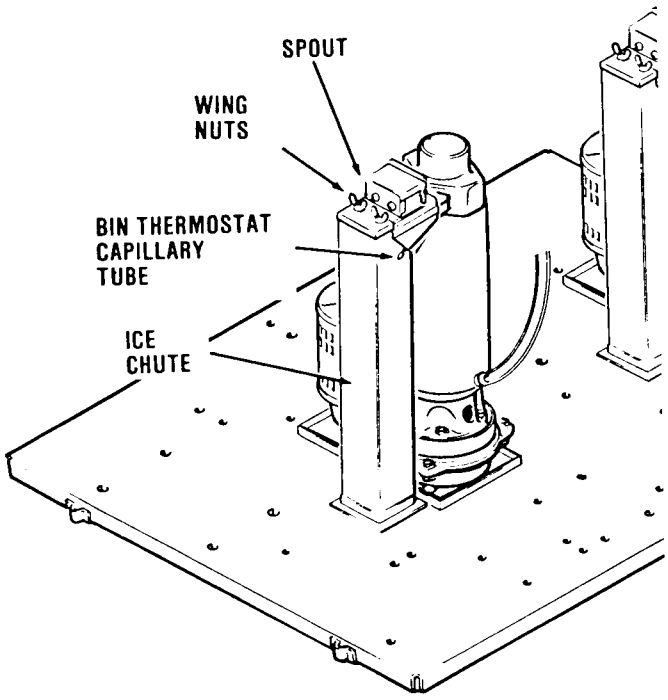

ELECTRICAL CONNECTIONS

SEE NAMEPLATE for current requirements to determine wire size to be used for electrical hookup. The MF6C Icemaker requires a solid earth ground wire. See wiring diagram.

Be certain the icemaker is connected to its own electrical circuit and individually fused. The maximum allowable voltage variation should not exceed ten percent of the nameplate rating, even under starting conditions. Low voltages can cause erratic operation and may be responsible for serious damage to the compressor and motor windings.

All external wiring should conform to the national, state and local electrical permit and services of a licensed electrician will be required.

Make electrical connections at the junction box located at the back of the icemaker.

WATER SUPPLY AND DRAIN CONNECTIONS

AIR-COOLED MODELS: The recommended potable water supply line is a 3/8 inch O.D. copper tubing with a minimum pressure of 20 PSIG. A 3/8-inch flare fitting is provided at the water inlet at the cabinet back panel. Connect the cold water supply line with standard plumbing fittings, with a shut off valve installed in an accessible place between the water supply and the cabinet.

It is recommended that an optional water strainer or water purification system be installed between the shut off valve and the icemaker connection.

Connect a 7/16-inch I.D. tube to the overflow drains.

In some cases, a plumbing permit and services of a licensed plumber will be required.

CAUTION

This icemaker is equipped with a low water pressure safety device which in the event of low water pressure will automatically stop the icemaker to prevent damage. The icemaker will automatically restart with increased water pressure.

The icemakers in this cabinet will not operate properly when water supply temperatures are below 40-degrees F. or above 100-degrees F.

WATER-COOLED MODELS: A separate connection for the condenser is required. A 3/8-inch O.D. copper tubing is provided for a separate water inlet line to and a separate drain line to be connected.

Connect a 7/16-inch I.D. tube to the overflow drain.

Recommended bin drain should be vented and run separately.

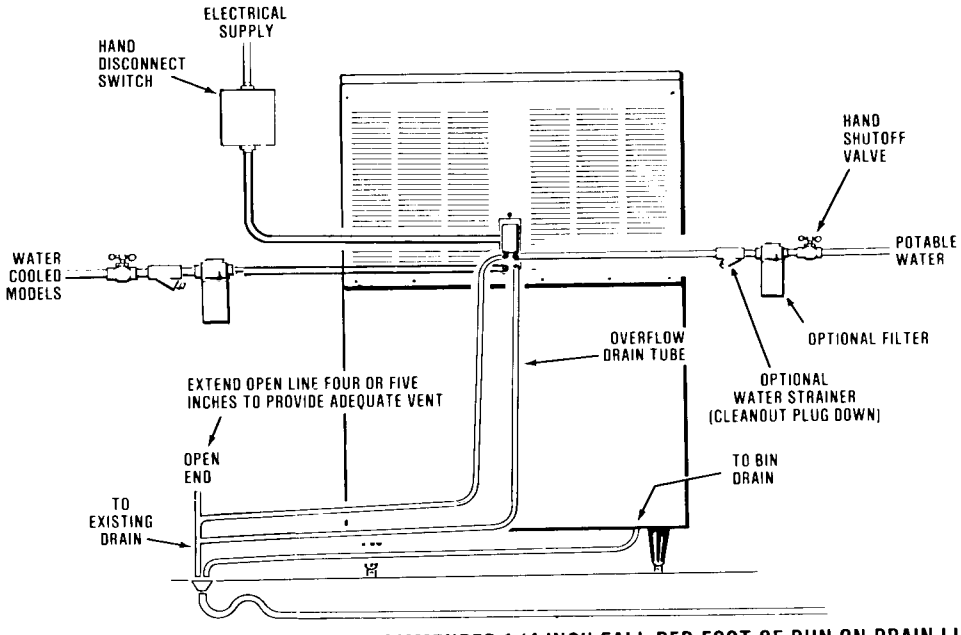

OPEN, TRAPPED OR VENTED DRAIN. RECOMMENDED 1/4-INCH FALL PER FOOT OF RUN ON DRAIN LINES.

Installation, Water Supply and Drain Connection

FINAL CHECK LIST

1. Is the cabinet level? (IMPORTANT)
2. Have all electrical and piping connections been made?
3. Has the voltage been tested and checked against the nameplate rating?
4. Is the water supply line shutoff valve installed and electrical wiring properly connected?
5. Have the bin and cabinet been wiped clean?
6. Have the compressor hold-down nuts been checked to be sure both the compressors are snug on the mounting pads?
7. Has the owner/user been given the User Manual and instructed on how to operate the icemaker?
8. Has the Manufacturer's Registration Card been properly filled out? Check for correct model and serial numbers from Serial nameplate, then mail the completed card to the SCOTSMAN factory.
9. Check all refrigerant lines and conduit lines, to guard against vibration or rubbing and possible failure.
10. Is there at least six inches clearance behind, and at both sides of the cabinet for proper air circulation?
11. Is the cabinet in a room where ambient tempertures are within the minimum and maximum temperatures specified?
12. Has water supply pressure been checked to insure a minimum of 20 PSIG operating pressure?
13. Has the owner been given the name and telephone number of the authorized SCOTSMAN Service Agency serving him?

OPERATING INSTRUCTIONS

OPERATING INSTRUCTIONS

START UP

1. Remove screws and the top and front panel.
2. OPEN the water supply line shutoff valve.
3. Observe the water filling operation, see Water Schematic illustration.
   a. Water flows into both water reservoirs.
   b. Water flows through water feed line to bottom of freezer assemblies.
   c. Floats move up as water rises.
   d. Floats stop water flow, when water level reaches the molded horizontal line, on the body of the water reservoir.
4. Check all internal water connections for leaks.
5. Move both Master ON-OFF toggle switches to the ON positions to start the automatic icemaking operation.
6. Observe that ice begins dropping from each ice chute into the ice storage bin.
7. Let the two systems operate until ice covers the bottom of the bin. Check for any excess noises beyond normal compressor noise:
   a. Fan noises, when air-cooled: blades touch other surfaces; blades bent, out-of-balance.
   b. Vibrating type, from touching lines.
   c. Chattering: Lack of water in freezer.
   d. Compressor loose at one or more holdown bolts.

WARNING

DO NOT operate this icemaker when the water supply is OFF, or is BELOW the recommended 20 PSIG water pressure. Move the Master ON-OFF toggle to OFF, immediately.

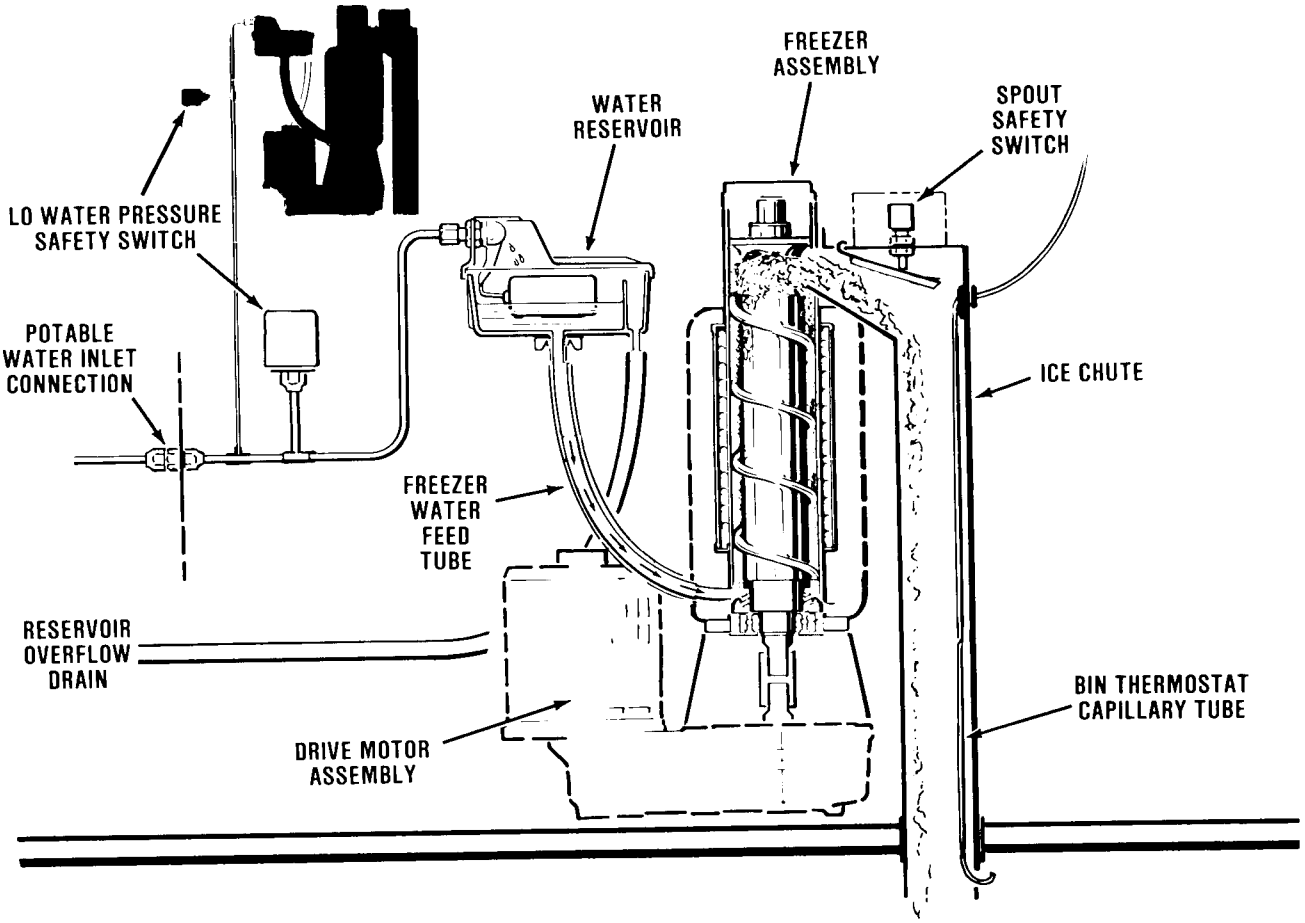

8. Place ice on each ice storage bin thermostat control bulb, to test shut-off of each individual system. Less than one minute is normal for shut off function to cause the compressor of each individual system to stop.

   Within minutes after the ice is removed from the sensing bulb, the bulb will warm up and cause the icemaker to restart. This control is factory set and should not be reset until testing is performed. Normal setting is 35-degrees F. CUT-OUT and 45-degrees F. CUT-IN, to prevent short cycling.

9. Thoroughly explain to the owner/user the significant specifications of the icemaker, the start up and operation, going through the procedures for the operating instructions. Answer all questions about the icemaker, by the owner; and, inform the owner of the name and telephone number of the authorized SCOTSMAN Distributor or Service Agency serving him.

ICEMAKER OPERATION

The water supply flows from the building source through the optional inline water strainer, enters at the inlet fitting and on to the water reservoirs. The water reservoirs function to maintain a constant water level inside the freezer assemblies. Water from the water reservoirs enters at the bottom of each freezer assembly and is changed into ice by low temperatures inside the freezer.

Moving the Master ON-OFF switches to the ON positions starts the automatic and continuous icemaking process. A stainless steel auger within the freezer is powered by the drivemotor assemblies, a direct-drive gearmotor, and the rotating augers carry the ice upward to the end of the augers, see Water Schematic illustration, and pushed out through the ice chutes and into the ice storage bin. When the ice storage bin has been filled with ice, up to the level of the bin thermostat control capillary bulbs, the icemaking processes shut OFF.

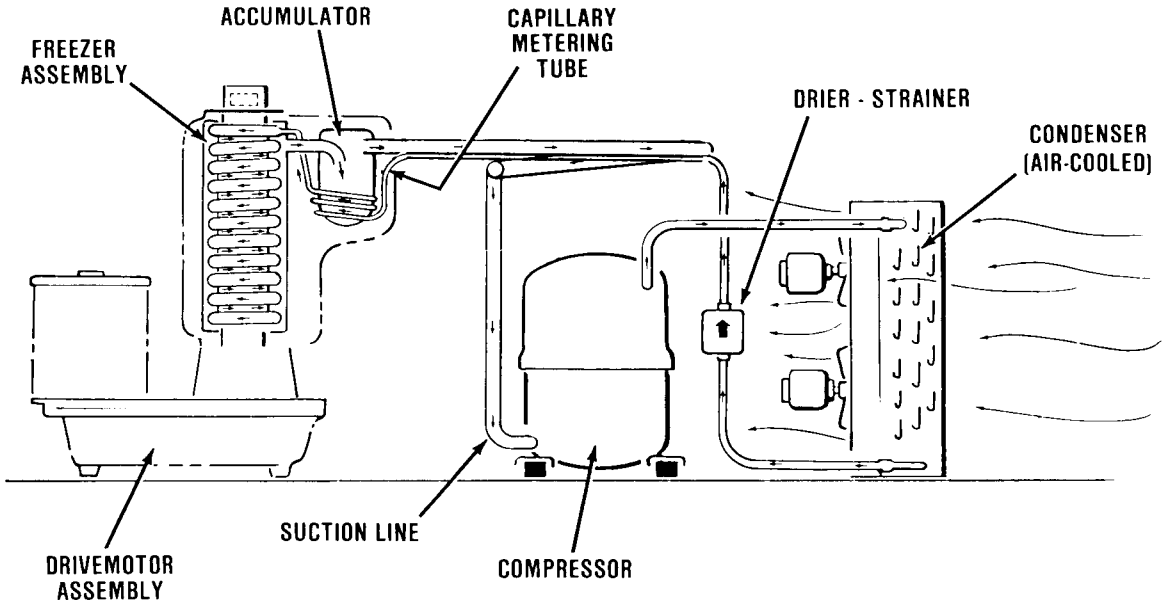

Refrigeration Cycle

When ice is removed from the ice storage bin, the bulb warms up, restarting the automatic icemaking process.

Factory settings of the Bin Thermostats are 35-degrees F. CUT-OUT and 45-degrees F. CUT-IN.

Altitude adjustment should ONLY be performed on icemakers installed at 2000-feet level locations and ABOVE, and adjust only in increments of one-fourth turn of screw at at time.

ELECTRICAL OPERATION

The Model MF6C icemakers are designed to operate on standard electrical supply 230 volts, 60 Hertz, single phase. Other voltage requirements are available on special order. Therefore, always CHECK NAMEPLATE for electrical information BEFORE proceeding with wiring connection to the icemaker.

Cold ambient temperatures and interruptions in water supply are conditions that can cause excessively hard ice and overloads within the freezer assembly, which is directly transmitted to the drivemotor; and in turn, will cause speed reduction or ultimate freezeup.

When the drivemotor is slowed to a pre-determined RPM, a sensing switch mounted on top of the motor is designed to open the electrical circuit to the compressor. The compressor stops operating, no more ice is produced, and the drivemotor continues to operate rotating the auger to clear the overload and gradually build up to full speed.

At a pre-determined higher RPM drivemotor speed, the speed sensing switch closes the electrical circuit to the compressor, causing the normal icemaking process to resume.

Each ice chute has a safety switch that acts as a backup, should the bin thermostat control fail, and cause ice to jam up, in the chute. This safety switch will shut off the icemaker when actuated; and is an immediate and complete shutdown of the icemaker. When ice blockage is removed the icemaker will automatically restart.

There are three safety controls in the control box on the water-cooled models and two safety controls in the control box for the air-cooled models. The low pressure control, an automatic reset, non-adjustable control, is used on both models and is set to electrically open at zero to four PSIG to stop the entire icemaker. The auger delay switch, a single-pole double-throw (SPDT) switch, functions as a control device to allow the drivemotor to rotate the auger to clear the freezing chamber while the compressor circuit is OFF.

Refer to the appropriate wiring diagram and trace circuitry and control functions, as described in the following paragraph.

As shown on all SCOTSMAN wiring diagrams, the controls are in the ICEMAKING MODE. Thus, the 1-2 contacts are CLOSED. At STARTUP, the 1-2 contacts are OPEN and the 3-2 contacts are CLOSED. As the icemaker begins to operate, the low side pressure starts to decrease from the stabilized or at-rest pressure. As soon as the pressure is reduced to 20 PSIG, the 3-2 contacts OPEN and the 1-2 contacts CLOSE. This removes the operating controls, such as the bin thermostat, from the drivemotor circuit. If one of the operating controls OPENS, it will SHUT OFF the compressor circuit. The drivemotor will operate until the low side pressure increases to 32 PSIG. Then, the 1-2 contacts OPEN and SHUTS OFF the drivemotor, usually within one to two minutes, depending upon ambient conditions. This brief period of time allows the auger to transport all the ice out of the freezing chamber. Consequently, when called on to START-UP again, there is no ice load to start up against. Again, on STARTUP, the 1-2 contacts are OPEN and the 3-2 contacts are CLOSED.

On all models, a low-water pressure switch functions to discontinue the icemaking process whenever inlet water pressure is reduced to below 20 PSIG. The switch will automatically restart the icemaking process when the water pressure is increased to 20 PSIG.

On the water-cooled models only, a manual reset, high head pressure control is factory set to stop the entire icemaker should the head pressure reach 250 PSIG.

On water-cooled models, correct head pressure is 135 PSIG. Adjustments can be made on the water regulator assembly valve. On air-cooled models, the head pressure is normal about 130 PSIG, however it will vary depending upon ambient air temperature.

Suction pressure should be 14 PSIG with proper refrigerant charge. Suction pressure will vary about two PSIG plus or minus, depending upon ambient temperatures and inlet water supply temperatures to the freezer assembly.

When charging the system with refrigerant, always CHECK NAMEPLATE for specific refrigeration charge for individual icemaker.

ADJUSTMENT AND REMOVAL AND REPLACEMENT

Read the instructions thoroughly before performing any adjustment or removal and replacement procedures.

ADJUSTMENT OF THE BIN THERMOSTAT CONTROL

The control for the bin thermostat is the temperature control, located in the center of the control box.

See *Adjustment of the Temperature Control* for location and direction of rotation, clockwise (CW) or counterclockwise (CCW), of the adjusting screws on the temperature control.

To adjust the bin thermostat control:

1. Hold a handful of ice against the capillary bulb in the ice storage bin.
2. Slowly rotate the adjusting screw in the appropriate direction until the icemaker shuts OFF.
3. Remove ice from the capillary bulb; then, place warm hand on the capillary bulb to restart the icemaker.
4. Place handful of ice against the capillary bulb and observe that the icemaker should shut OFF within ten seconds, usually less.

WARNING

The adjusting screws on the temperature control device have very sensitive response to adjustment. DO NOT attempt to adjust the screw until after thoroughly reading and understanding the instructions and illustrations. Over-adjusting or erratic guessing, can foul the instrument and cause ultimate delay and part replacement, WHICH COULD HAVE BEEN PREVENTED.

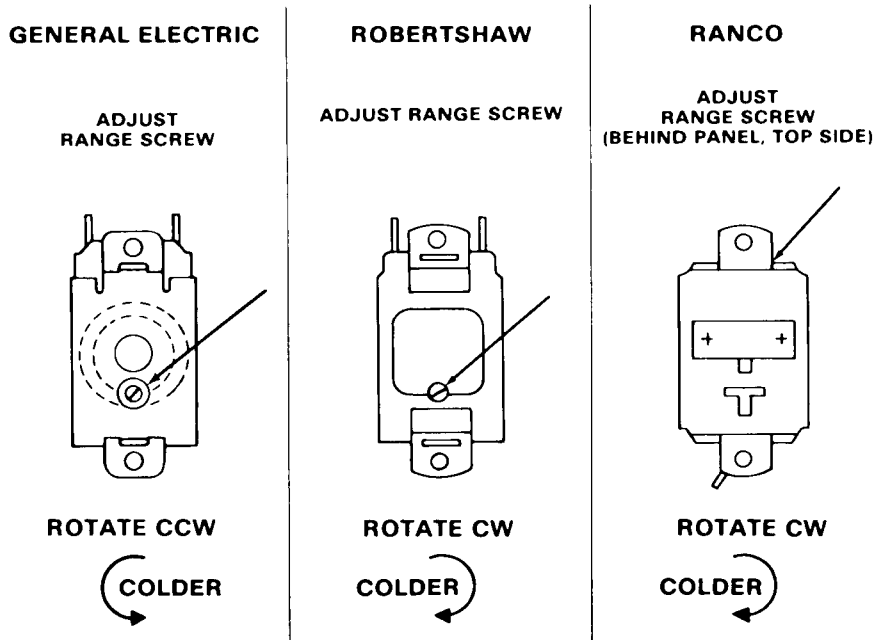

Adjustment of the Temperature Control

ADJUSTMENT OF THE WATER REGULATOR ASSEMBLY

The correct head pressure on water-cooled models is 135 PSIG. Adjustments can be performed on the water regulator assembly to increase or decrease the head pressure.

To adjust the water regulator assembly:

1. To INCREASE the head pressures: Rotate the adjusting screw, on the water regulator assembly COUNTERCLOCKWISE.
2. To DECREASE the head pressure: Rotate the adjusting screw, on the water regulator assembly CLOCKWISE.

ADJUSTMENT OF THE WATER RESERVOIR FLOAT

The correct water level in the water reservoir should be at the level of the raised molded line, on the side of the body of the water reservoir. When the water line level is above or below the raised molded line, adjustment can be performed to raise or lower the water level by bending the metal arm of the float, inside the water reservoir.

To adjust the water reservoir float:

1. To RAISE the water level: Hold one end of the metal arm of the float and slightly bend the float up.
2. To LOWER the water level: Hold one end of the metal arm of the float and slightly bend the float DOWN.
3. To perform MAJOR adjustment: When repair or replacement has been performed and the water level line between the water reservoir and the freezer assembly has been substantially altered:
   a. Loosen the three screws and lockwashers which attach the reservoir bracket and water reservoir to the freezer mount.
   b. Move the reservoir bracket UP or DOWN to properly position the water reservoir at the correct water line level within the freezer. The proper water level within the freezer is just below the top of the auger.
   c. When proper water level within the freezer is adjusted, re-tighten screws attaching the water reservoir bracket to the freezer mount.

REMOVAL AND REPLACEMENT OF THE AUGER, WATER SEAL, BEARINGS AND COUPLING

To remove the auger, water seal, bearings, and coupling:

WARNING

Be sure the electrical power supply and the water supply are OFF, before starting any of the following REMOVAL AND REPLACEMENT procedures, as a precaution to prevent possible personal injury or damage to equipment.

1. Remove screws and the top panel.
2. Remove the freezer cap from the top of the freezer assembly.
3. Remove two wing nuts and separte the ice chute assembly fromt he spout on the freezer assembly.
4. Remove four screws and washers and separate the spout assembly from the spout plate on the freezer assembly.

   Inspect the spout gasket and retain for the replacement procedure. Replace a torn, cut or worn, defective gasket.
5. Grasp the wire cap hook at the top of the freezer assembly and pull out the auger and attached cap, bearing/retainer, bearing and O-rings, at the top of the auger; and, the top half of the water seal at the bottom of the auger.

NOTE

When the auger cannot be pulled out, proceed to steps 12 and 13, to gain access to the bottom of the auger. Then, with a rawhide mallet or placing a piece of wood on the bottom end of the auger, tap the bottom of the auger to break it loose and pull the auger out, as in the step 4 above.

6. Remove the cap hook from the bearing/retainer.
7. Remove the retaining ring and the cap.
8. Remove the cap screw and washer and remove the bearing/retainer from the auger.
9. Clean away the old grease from the top of the auger, the bearing/retainer, cap, cap screw and washer and the O-ring and retaining ring.
10. Inspect the O-ring at the top of the bearing/retainer and the O-ring at the bottom outside of the bearing/retainer, for cuts, tears and general worn condition to determine replacement.

11. Inspect the bearing pressed into the top of the bearing/retainer and, if it is to be replaced, remove the retaining ring and press the bearing out of the bearing/retainer.
12. Slide the upper half of the water seal off of the bottom of the auger.

NOTE

Any time the auger is removed for replacement, or for the inspection and replacement of the bearings or coupling, use extra care in handling the water seal parts, so no dirt or foreign matter are deposited on the surfaces of the seal.

If there is any doubt about the effectiveness of the water seal or O-ring, REPLACE THEM. A dirty, worn or faulty water seal or O-ring will cause a leak and ultimately require a second, time consuming removal and replacement procedure to be performed, that COULD HAVE BEEN PREVENTED.

13. Remove four screws and lockwashers which attach the freezer assembly to the adaptor on the drivemotor assembly.
14. Raise the freezer assembly off of the adaptor, to gain access to the bearing and retainer; then, temporarily secure the freezer assembly up out of the way to allow room to work. Be careful not to damage the gasket.
15. Using a suitable length and size wooden dowel or stick inserted through the top of the open freezer assembly, tap the lower half of the water seal and the lower bearing in the retainer, out the bottom of the freezer assembly.
16. Reach through the adaptor and remove the coupling on the drivemotor for inspection.
17. Check the coupling for cracks, chipping and excessive wear.

To replace the auger, water seal, bearings, and coupling, reverse the removal procedure.

NOTE

When installing the retainer assembled with bearing, in the bottom of the freezer assembly, some retainers will insert as a slip fit, and some will have to be forced into place because of very tight fit. Carefully tap a piece of wood positioned across the bottom of the retainer, to evenly seat the retainer in the chamber of the freezer.

After assembling the parts on the upper end of the auger and BEFORE installing the cap and cap hook, apply an ample coating of Shell Alvania 3 Grease, P/N 19-0309-01, to the upper part of the bearing/retainer to cover the retaining ring and the cap screw and washer. Then, install the cap and cap hook in place.

REMOVAL AND REPLACEMENT OF THE COMPRESSOR ASSEMBLY

To remove compressor:

1. Remove two screws and the cover from the compressor junction box.
2. Disconnect the electrical leads at the compressor junction box, that originate in the control box.
3. Bleed off or blow the refrigerant charge through the Schrader valve.
4. Unsolder the suction line from the compressor.
5. Unsolder the discharge line from the compressor.
6. Unsolder the process header tube from the compressor and retain for installation on the replacement compressor.
7. Remove four bolts, lockwashers and washers which secure the compressor to the chassis mounting base.
8. Remove the compressor from the chassis.
9. To replace the compressor assembly, reverse the removal procedures.

NOTE

Always install a replacement drier, anytime the sealed refrigeration system is opened. Do not replace the drier until all other repair or replacement has been completed.

NOTE

Thoroughly evacuate the system to remove moisture and non-condensables.

10. When recharging the system with refrigerant, always check nameplate for the specified refrigerant charge.

(Continued on page 37)

THE PARTS ILLUSTRATIONS AND PARTS LISTS

GENERAL

This section contains the Parts Illustrations and the Parts List for each of the major assemblies in the Model MF6C Icemaker.

A *No Number* designation, when used in the Part Number Column indicates the unit is not available from SCOTSMAN as an assembly. This designation is used only for the convenience and clarity of division in cataloging.

HOW TO ORDER PARTS OR ASSEMBLIES

When ordering parts or assemblies, to avoid costly delays and errors in shipment, give the part number, the complete description shown in the list, and the quantities of each part or assembly required. Also include the Model name, the serial number of the icemaker for which the part is required, and for parts which require color matching, the color of the Cabinet.

IMPORTANT

A. All Part Numbers have TEN DIGITS (spaces), required for use in the Computer System. BE SURE to fill in ALL SPACES in the CATALOG NUMBER column, on the Parts Order form.

B. Enter the QUANTITY of the Parts ordered, in the last digit column under the QUANTITY column heading, the one under the small 55 number, for parts from 1 thru 9. For 10 or more parts use two columns.

To be sure you receive the proper parts in the proper quantities, ALWAYS use the PART NUMBERS and DESCRIPTIONS given in the Parts Manuals.

Write an order for the Part. (Use SCOTSMAN Parts Order Form (DN103). Be sure to include:

- ☐ Distributor Name.
- ☐ (Use for DROP-SHIP order ONLY.)
- ☐ Distributor Purchase Order Number.
- ☐ Carrier.
- ☐ How shipped (Truck, Rail, UPS, etc.)
- ☐ Date ordered.
- ☐ Part Catalog Number. (Use full TEN digits (spaces) listed in Parts Manual, including dashes between numbers.)
- ☐ Description - as listed in Parts Manual.
- ☐ Quantity - number of parts ordered. (Use far right column.)

WIRING DIAGRAMS

This section is provided as an aid in understanding the electrical circuitry.

WARNING

When conducting a continuity check of the electrical system:

1. **Disconnect the main power source.**
2. **DO NOT use an incandescent lamp or jumper wire, conduct all tests with a volt-ohm meter.**

The wiring diagrams in this Section are:

AIR-COOLED MODELS 208/60/1 and 230/60/1
(with Contactor Isolation Relay)
WATER-COOLED MODELS 208/60/1 and 230/60/1
(with Contactor Isolation Relay)
AIR-COOLED MODELS 208-230/60/3
(with Contactor Isolation Relay)
WATER-COOLED MODELS 208-230/60/3
(with Contactor Isolation Relay)

AIR-COOLED MODELS 208/60/1 and 230/60/1
(without Contactor Isolation Relay)
WATER-COOLED MODELS 208/60/1 and 230/60/1
(without Contactor Isolation Relay)
AIR-COOLED MODELS 208-230/60/3
(without Contactor Isolation Relay)
WATER-COOLED MODELS 208-230/60/3
(without Contactor Isolation Relay)

CABINET ASSEMBLY

ITEM NUMBER	PART NUMBER	DESCRIPTION
1	A30668-001	Side Panel
2	03-1417-03	Washer
3	03-1404-19	Screw
4	03-1404-19	Screw
5	03-1417-03	Washer
6	A30674-001	Corner Post
7	A30667-001	Panel Front
8	A30668-001	Side Panel
9	A30672-001	Panel Top
10	03-1417-03	Washer
11	03-1404-10	Screw
12	*No Number*	Base Assembly
13	A30669-001	Panel Rear
14	03-0571-00	Screw
15	03-1417-09	Washer

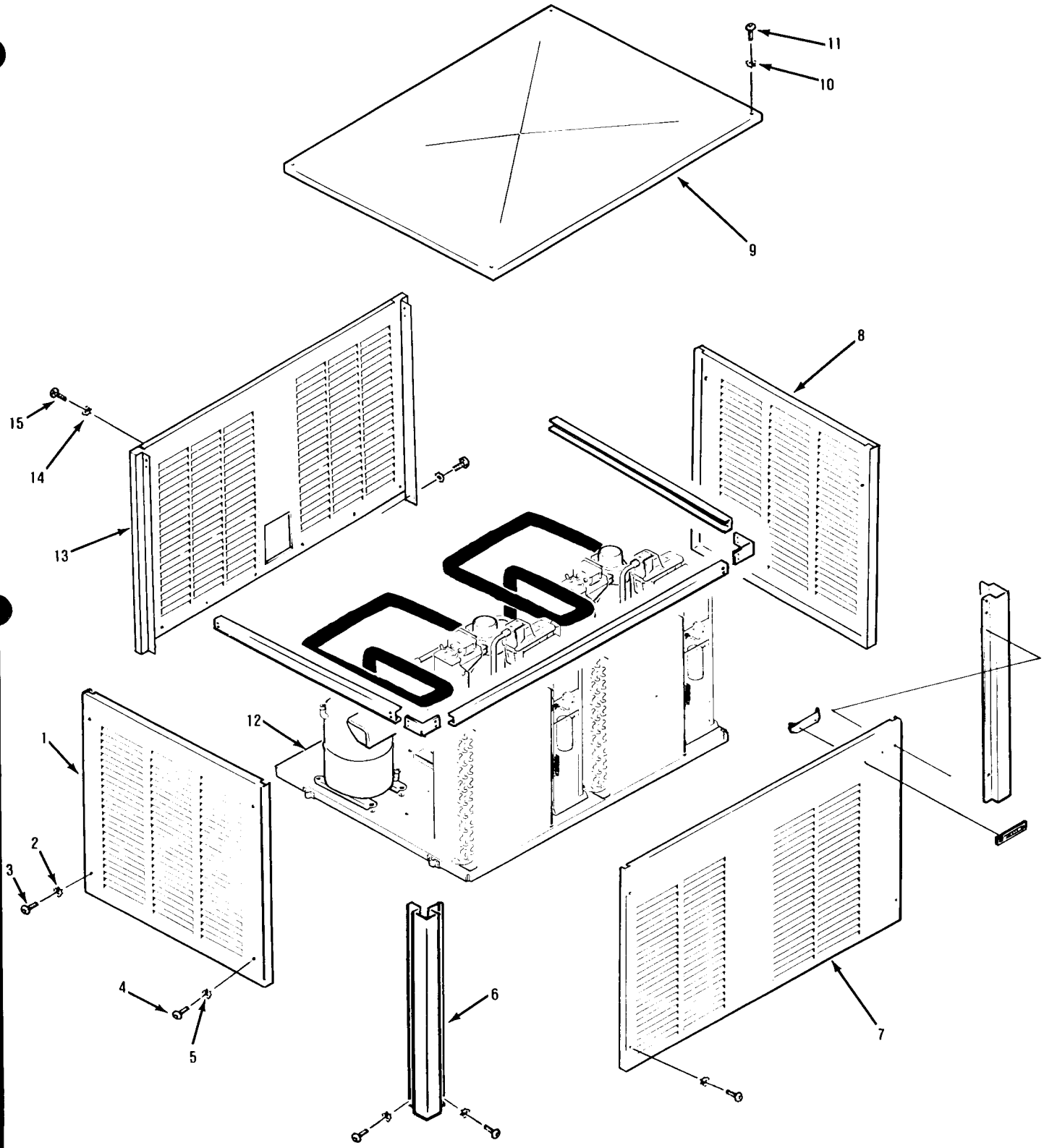

Cabinet Assembly

MAJOR ASSEMBLIES

ITEM NUMBER	PART NUMBER	DESCRIPTION
1	02-2217-01	Reservoir
2	13-0809-01	Freezer Cap
3	03-1420-03	Screw
4	03-1408-03	Washer
5	15-0573-01	Coupling
6	A21290-000	Drip Pan
7	13-0704-00	Gasket
8	A28207-001	Motor Plate
9	03-1408-35	Washer
10	03-1420-01	Screw
11	02-0544-01	Drier
12	18-3800-02	Compressor Assem. - 230/60/1
	18-3800-03	Compressor Assem. - 208-220/60/3
	18-3800-07	Compressor Assem. - 208/60/1
13	18-2300-25	Overload - 230/60/1
	18-2300-32	Overload - 208/60/1
		NOTE: 208-220/60/3 Internally protected. No Service Replacement Part.
14	18-2300-27	Grommet
15	18-2300-26	Sleeve
16	03-2408-29	Washer
17	03-1417-12	Lockwasher
18	03-1405-40	Screw
19	11-0296-00	Low Pressure Control (Water)
20	A30705-001	Pressure Control Bracket
21	03-1417-09	Lockwasher
22	03-0571-00	Screw

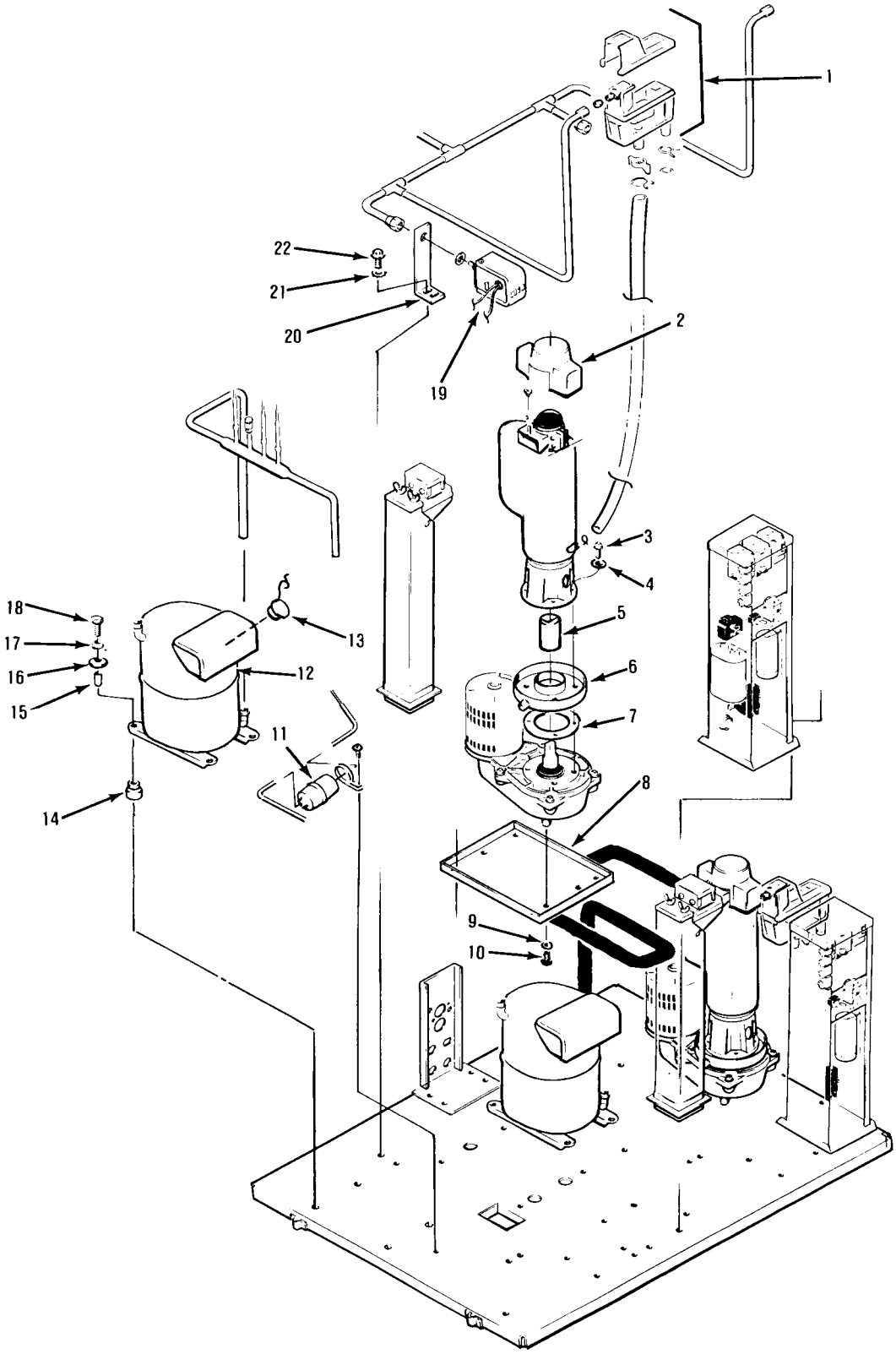
1
2
3
4
5
6
7
8
9
10
11
12
13
14
15
16
17
18
19
20
21
22

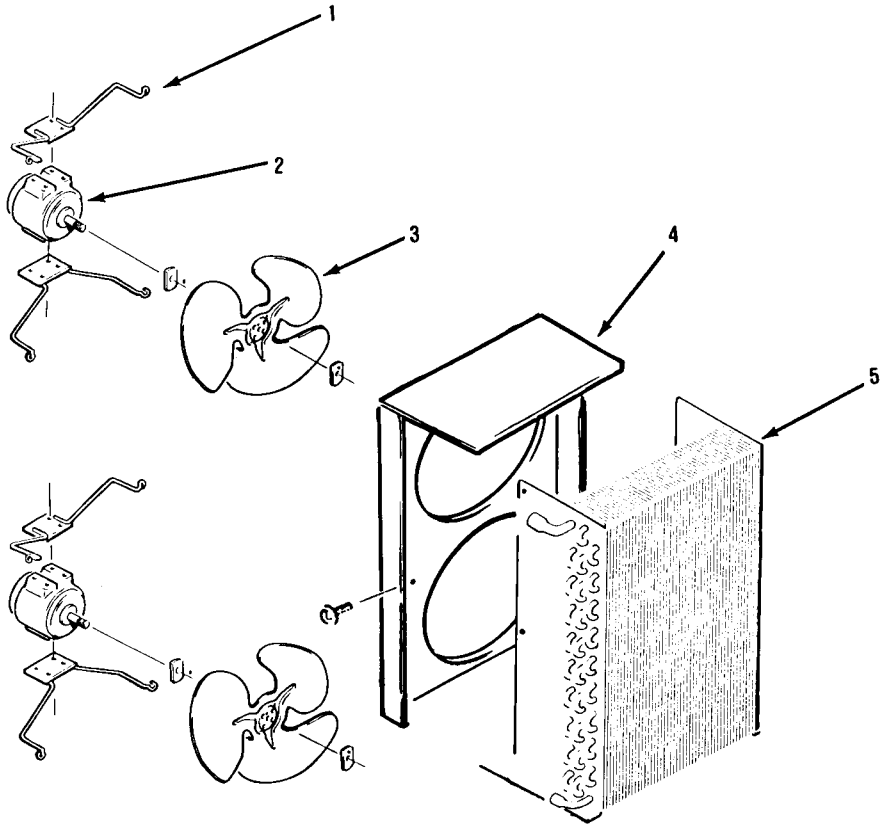

AIR-COOLED ASSEMBLIES

ITEM NUMBER	PART NUMBER	DESCRIPTION
1	02-2373-01	Fan Mounting Bracket
2	12-1575-02	Fan Motor
3	18-0231-00	Fan Blade and Nut
4	A26161-001	Shroud
5	18-3714-01	Condenser

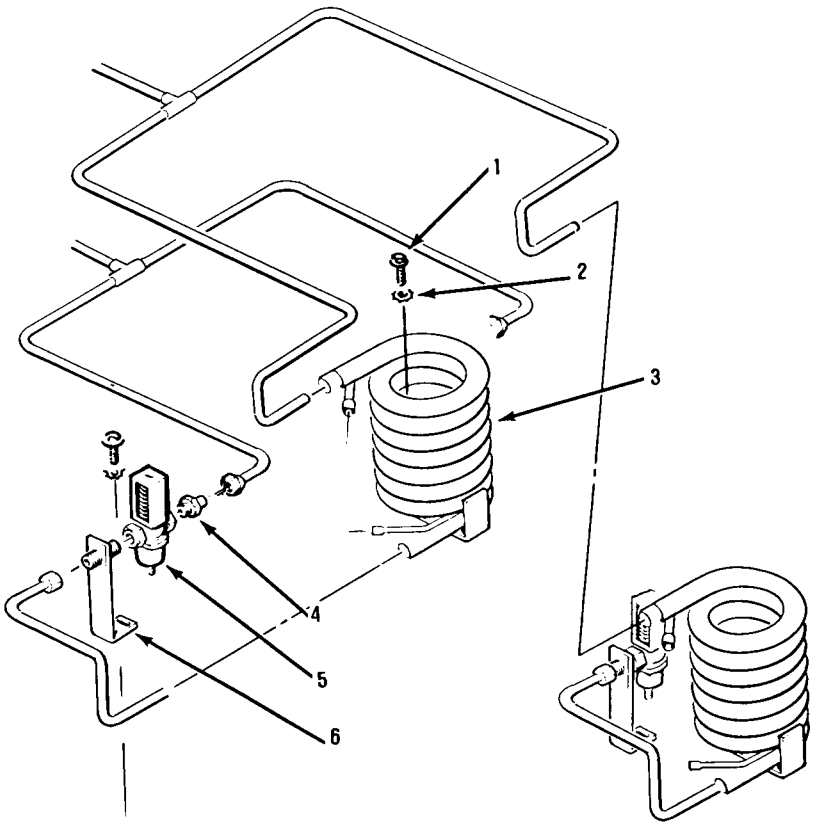

WATER-COOLED ASSEMBLIES

ITEM NUMBER	PART NUMBER	DESCRIPTION
1	03-0571-00	Screw
2	03-1417-09	Lockwasher
3	18-3306-02	Condenser
4	16-0355-00	Coupling
5	11-0198-02	Water Regulator
6	A15924-000	Pipe Nipple Assembly

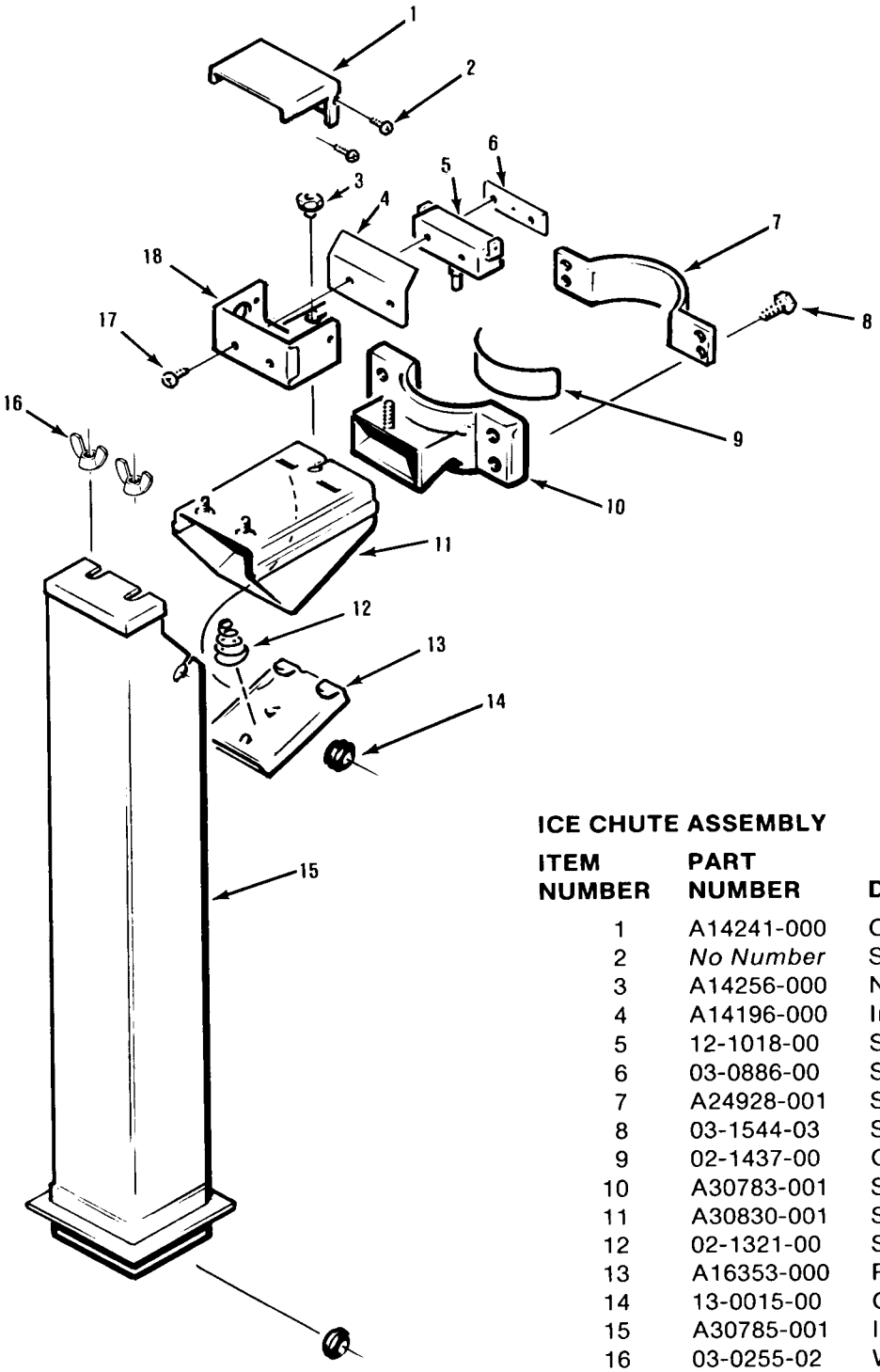

ICE CHUTE ASSEMBLY

ITEM NUMBER	PART NUMBER	DESCRIPTION
1	A14241-000	Cover
2	*No Number*	Screw
3	A14256-000	Nut
4	A14196-000	Insulation
5	12-1018-00	Switch
6	03-0886-00	Speed Nut
7	A24928-001	Spout Plate
8	03-1544-03	Screw
9	02-1437-00	Gasket
10	A30783-001	Spout
11	A30830-001	Spout Fabricated Assembly
12	02-1321-00	Spring
13	A16353-000	Pressure Plate Assembly
14	13-0015-00	Grommet
15	A30785-001	Ice Chute Fab. Assembly
16	03-0255-02	Wing Nut
17	03-1403-08	Screw
18	A14976-000	Box Limit

Ice Chute Assembly

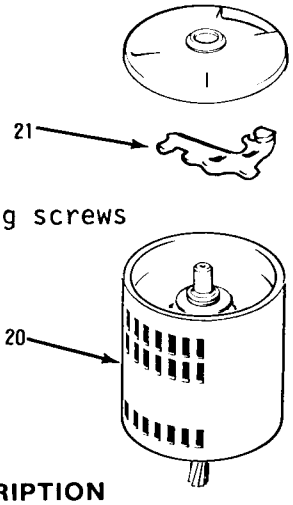

*NOTE: Torque cover mounting screws 250-300 inch pounds.

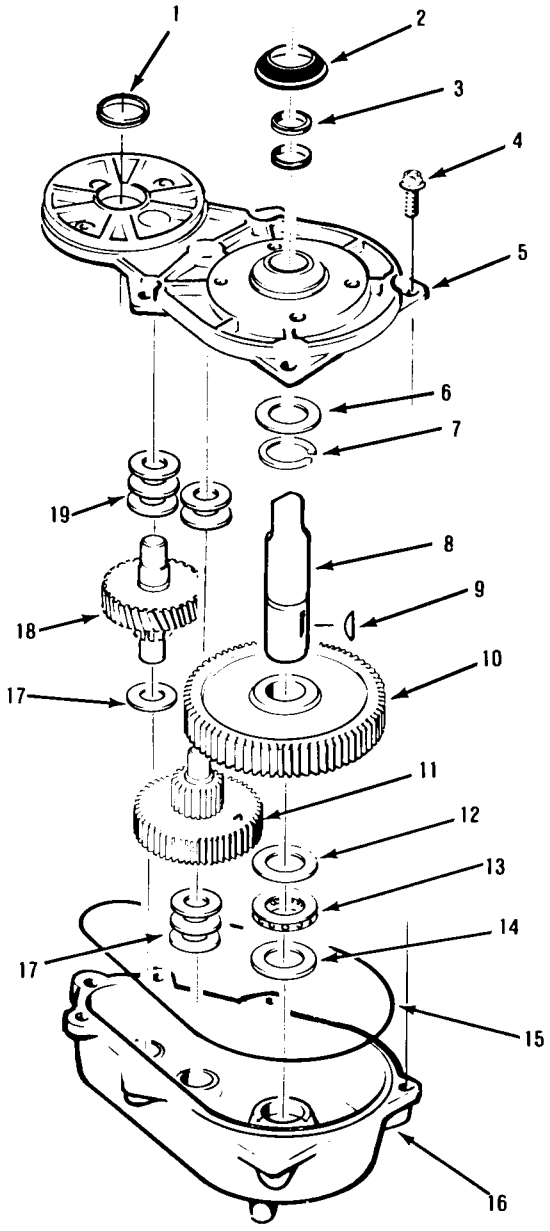

DRIVE MOTOR ASSEMBLY

ITEM NUMBER	PART NUMBER	DESCRIPTION
1	02-1606-00	Oil Seal
2	13-0709-02	Water Shed
3	02-1607-01	Oil Seal
4	03-1251-01	Screw
5	A31230-001	Gear Case Cover Assembly *
6	02-1681-00	Thrust Race
7	03-1363-00	Retaining Ring
8	02-1652-00	Shaft, Output
9	03-1364-00	Key
10	02-1653-00	Gear, Output
11	02-2071-00	Third Pinion Assembly, Second Gear and
12	02-1681-00	Thrust Race
13	02-1680-00	Bearing
14	02-1679-00	Thrust Race
15	A26103-001	"O" Ring
16	A31230-001	Gear Case Assembly Bottom *
17	03-1408-24	Washer
18	02-2072-00	Second Pinion Assembly, First Gear and
19	03-1408-24	Washer
20.	A32425-002	Drive Motor
21.	12-1741-22	Start Switch, Emerson
	12-1741-28	Start Switch, Ge
	12-2314-21	Cent. Switch, Ge (p.s.c.)
23.	A32402-022	Gearmotor Assembly, Complete
24.	A25835-001	Gearcase Oil

***NOTE:** Gearcase cover and bottom are sold as a set only. Order Part Number A31230-001

Drive Motor Assembly

Note: See Page 26 and 27 First Production Only.
Serial Numbers 714944-09F thru 914967-09F.

FREEZER ASSEMBLY

ITEM NUMBER	PART NUMBER	DESCRIPTION
1	A08582-000	Breaker Hook
2	A08581-000	Freezer Cap
3	13-0617-20	"O" Ring
4	03-1405-36	Screw
5	A06273-000	Washer
6	03-1558-04	Retainer Ring
7	02-0646-00	Bearing
8	A26708-001	Bearing Retainer (Includes Items 6-10)
9	13-0617-40	"O" Ring
10	13-0617-15	"O" Ring
11	02-2048-01	Auger
12	02-0929-01	Water Seal
13	02-0619-00	Bearing
14	A10591-000	Bearing Retainer
15	02-1629-00	Adapter
16	03-1410-04	Washer
17	03-1408-03	Washer
18	03-1420-03	Screw
19	A30779-020	Freezer
20	A24928-001	Spout Plate
21	03-1409-20	Washer
22	03-1506-03	Screw

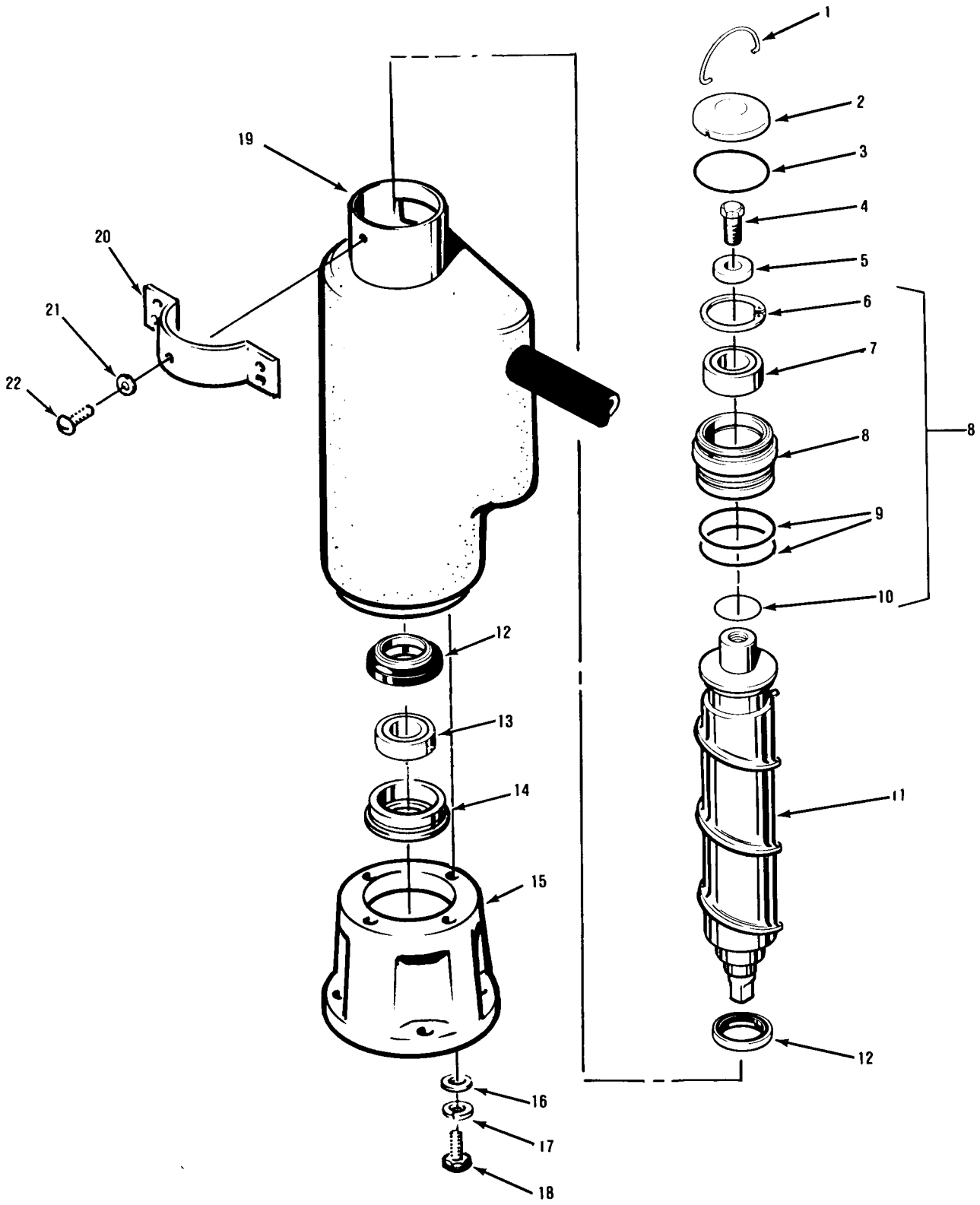

Freezer Assembly

CONTROL BOX

ITEM NUMBER	PART NUMBER	DESCRIPTION
1	18-2200-39	Start Capacitor Bracket
2	18-3724-01	Capacitor Cap
3	18-1901-15	Start Capacitor — 230-208/60/1
4	A28065-001	Control Box
5	03-1403-04	Screw
6	18-1903-29	Relay — 230/60/1
	18-1903-34	Relay — 208/60/1
7	11-0412-01	Bin Thermostat
8	03-1403-02	Screw
9	11-0402-01	Auger Relay Control
10	11-0403-01	Fan Pressure Control (A-C)
	11-0388-02	Hi Pressure Control (W-C)
11	11-0420-01	Low Pressure Control
12	13-0557-00	Grommet
13	12-0426-01	Master Switch
14	03-1403-17	Screw
15	18-1902-29	Run Capacitor — 230/60/1
	18-1902-34	Run Capacitor — 208/60/1
16	*No Number*	Capacitor Bracket
17	03-1403-23	Screw
18	12-1213-12	Snap Bushing
19	03-1403-17	Screw
20	12-2048-02	Contactor 230-208/60/1
	12-0739-02	Contactor 208-230/60/3
21	12-2090-05	Relay, Contactor Isolation, 208-230

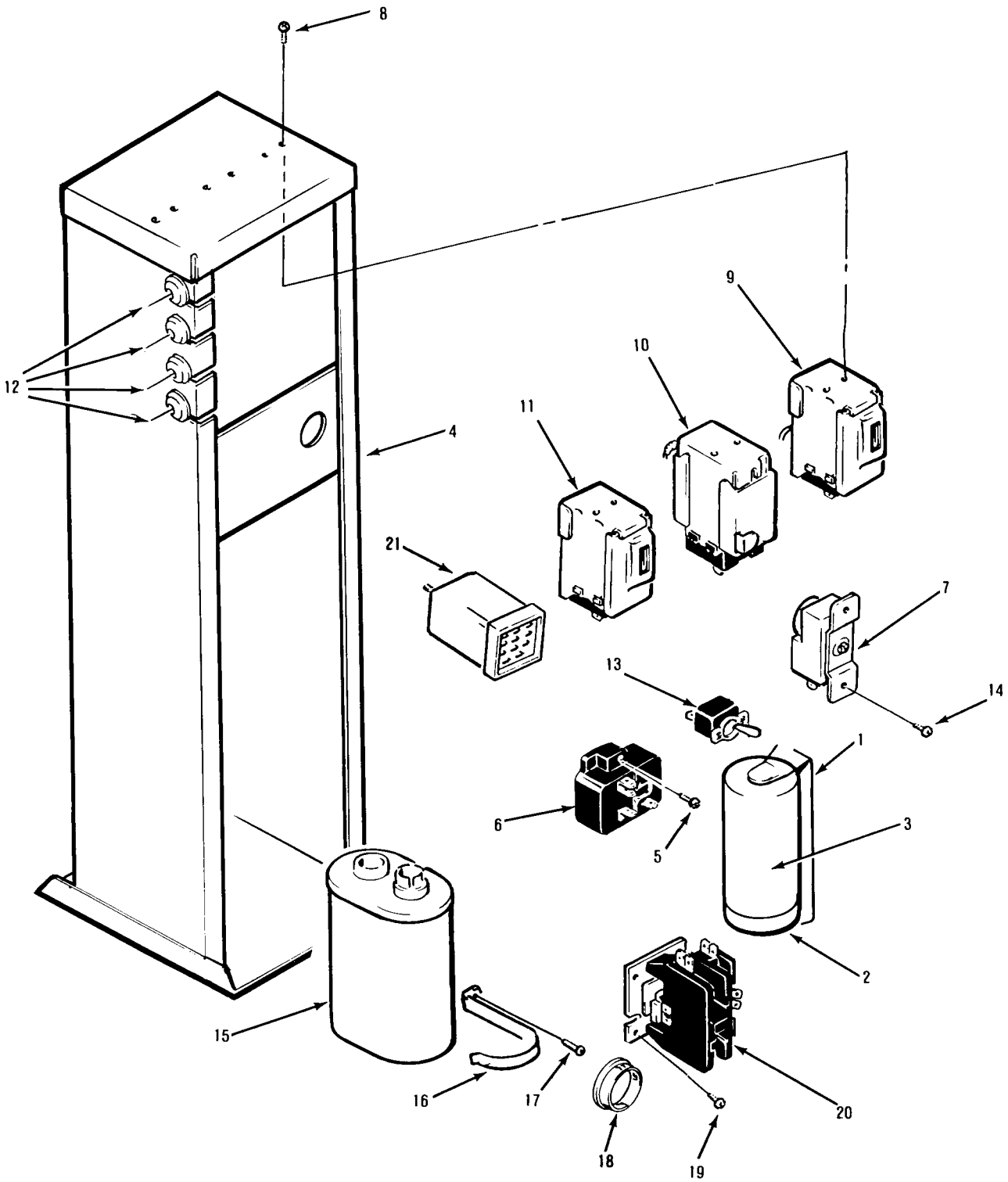

Control Box Assembly

FREEZER ASSEMBLY

FIRST PRODUCTION ONLY
SERIAL NUMBERS 714944-09F THRU 714967-09F

ITEM NUMBER	PART NUMBER	DESCRIPTION
1	03-1405-41	Screw
2	03-1408-03	Washer
3	03-1410-04	Washer
4	02-1629-00	Adapter
5	A10591-000	Bearing Retainer
6	02-0619-00	Bearing
7	A29361-020	Freezer
8	*No Number*	Spout
9	03-1409-20	Washer
10	03-1506-05	Screw
11	03-1409-20	Washer
12	03-1506-03	Screw
13	A24928-001	Spout Plate
14	02-0929-01	Water Seal
15	02-2048-01	Auger
16	13-0617-15	"O" Ring
17	13-0617-40	"O" Ring
18	A26708-001	Bearing Retainer and Bearing
19	02-0646-00	Bearing
20	03-1558-04	Retainer Ring
21	13-0617-20	"O" Ring
22	A06273-000	Washer
23	03-1405-36	Screw
24	A08581-000	Freezer Cap
25	A08582-000	Breaker Hook

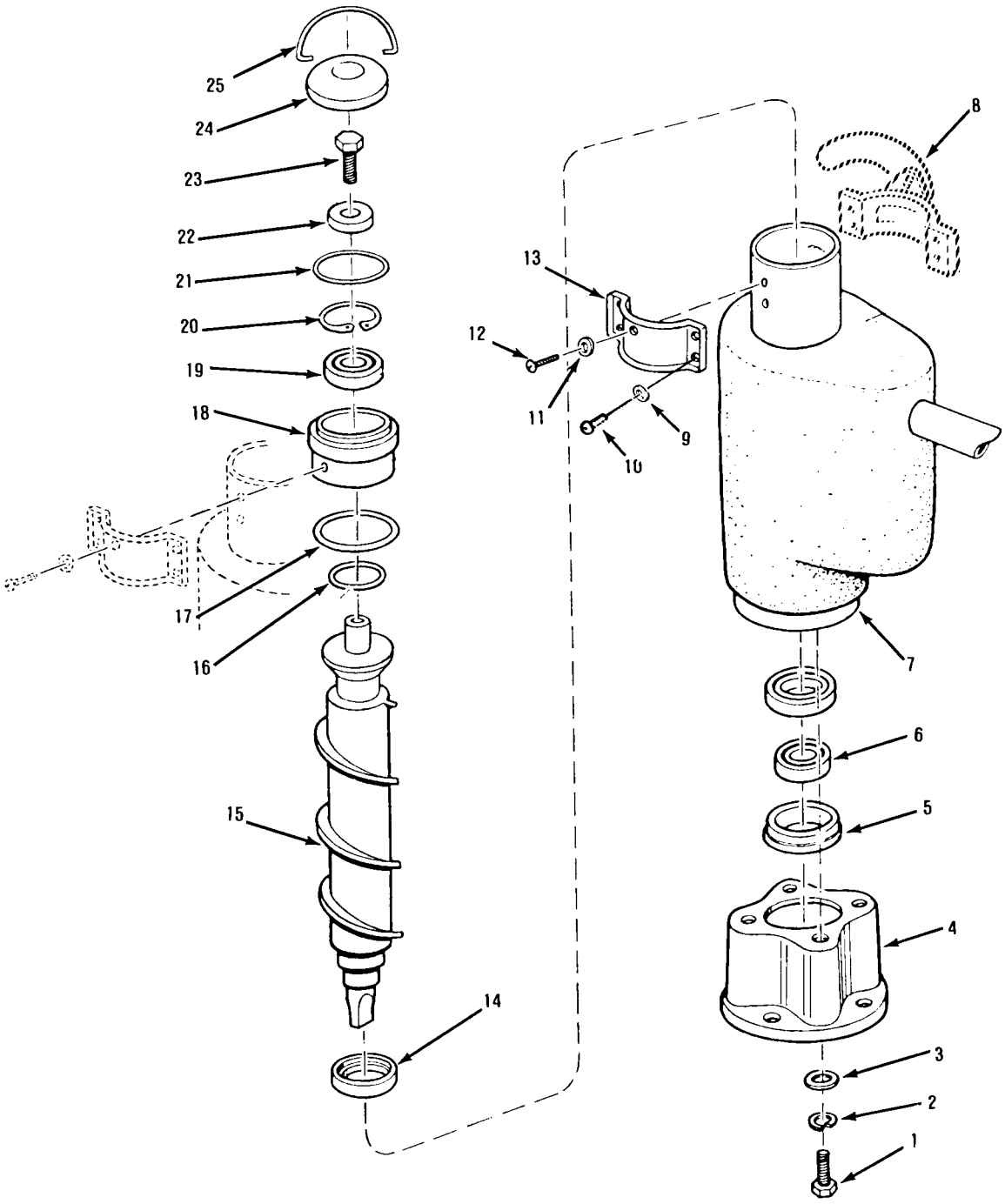

Evaporator Assembly

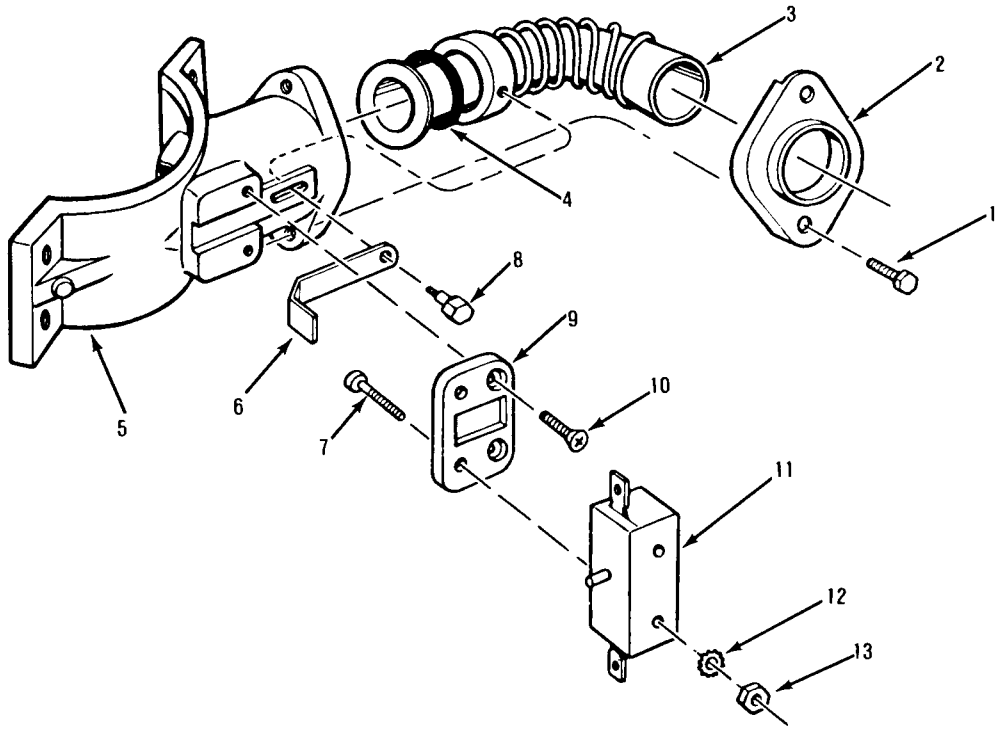

SPOUT ASSEMBLY

First Production ONLY
Serial Numbers 714944-09F thru 714967-09F

ITEM NUMBER	PART NUMBER	DESCRIPTION
1	03-1405-02	Screw 1/4-20 x 3/8 Hex Head Cap
2	A29041-001	Retainer Plate
3	02-2490-01	Tube, Ice Discharge
4	13-0617-43	"O" Ring
5	A29050-001	Spout
6	A29429-001	Actuator, Switch
7	03-1418-38	Screw No. 6-32 x 1 Flat Head Machine Phil Recess
8	A25305-001	Screw, Shoulder
9	02-2377-01	Barrier, Thermal
10	03-1418-01	Screw No. 6-32 x 3/8 Flat Head Machine - Phil Recess
11	12-1644-00	Switch
12	03-1417-01	Lockwasher No. 6 External Tooth Phosphor Bronze
13	03-1406-01	Nut No. 6-32 Hex Machine Screw
14	A29430-020	Complete Assembly

Spout Assembly

MF6C
WIRING DIAGRAMS
(WITH CONTACTOR ISOLATION RELAY)

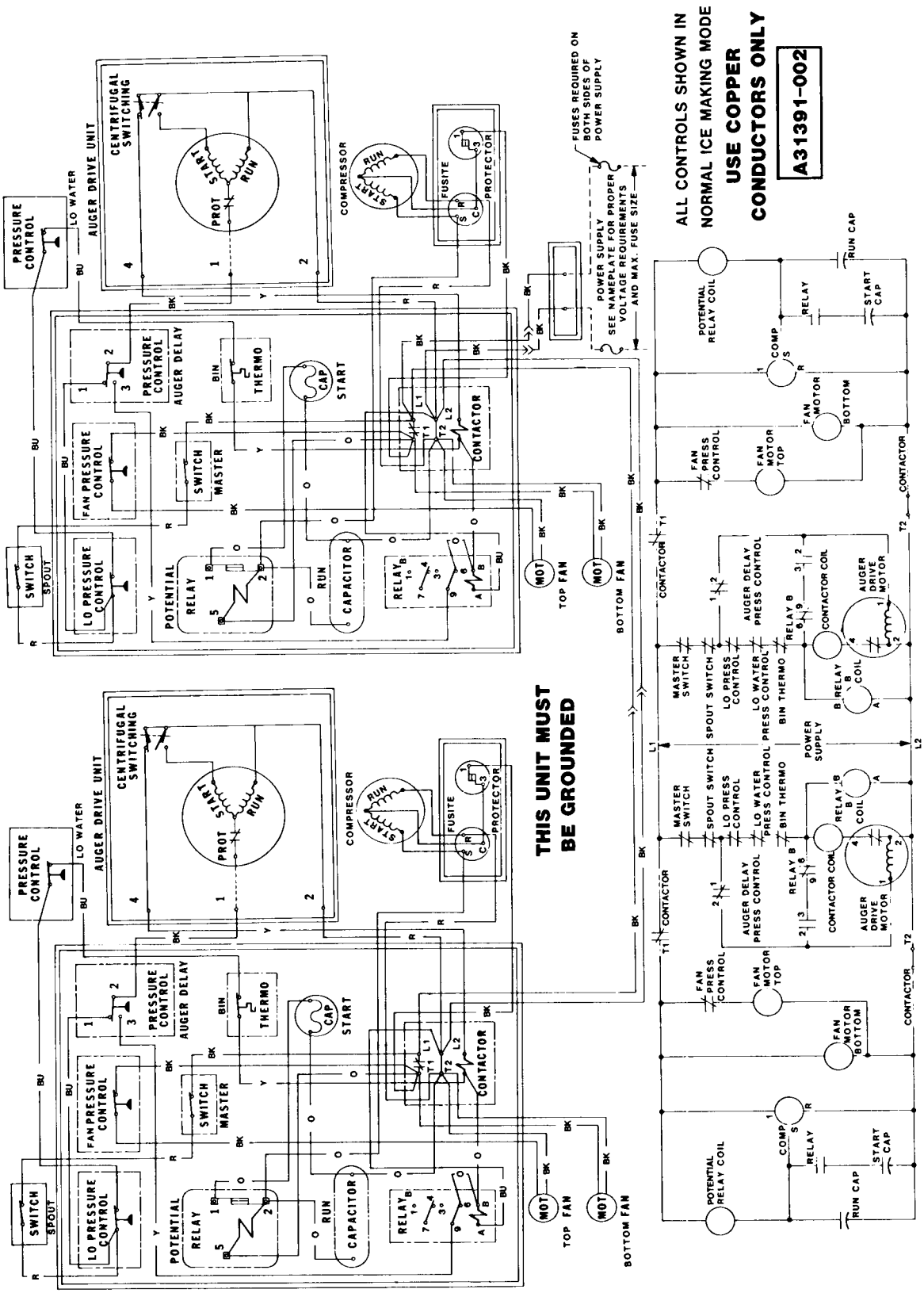

Air-Cooled Models 208/60/1 and 230/60/1

MF6C
WIRING DIAGRAMS
(WITH CONTACTOR ISOLATION RELAY)

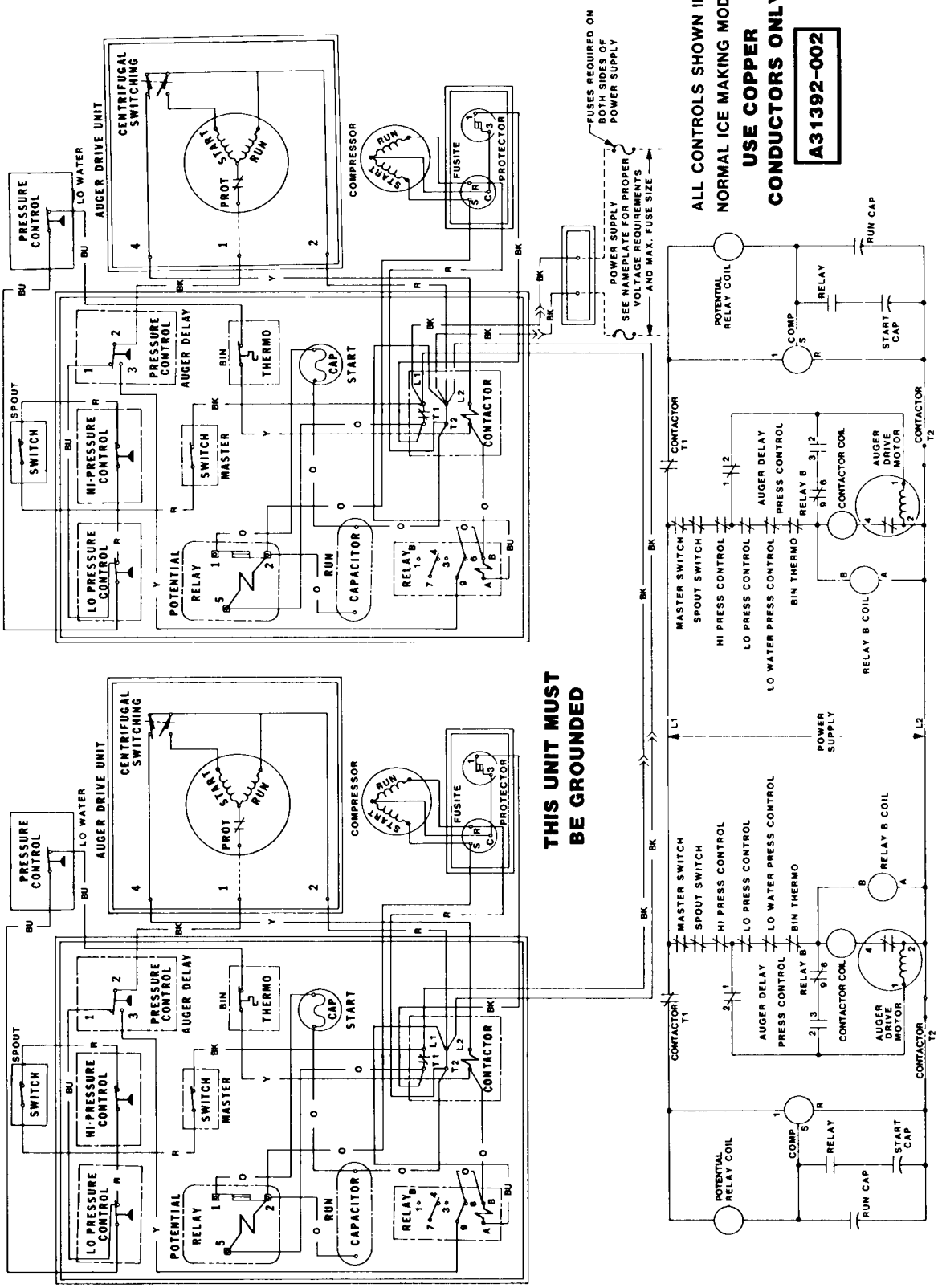

Water-Cooled Models 208/60/1 and 230/60/1

MF6C
WIRING DIAGRAMS
(WITH CONTACTOR ISOLATION RELAY)

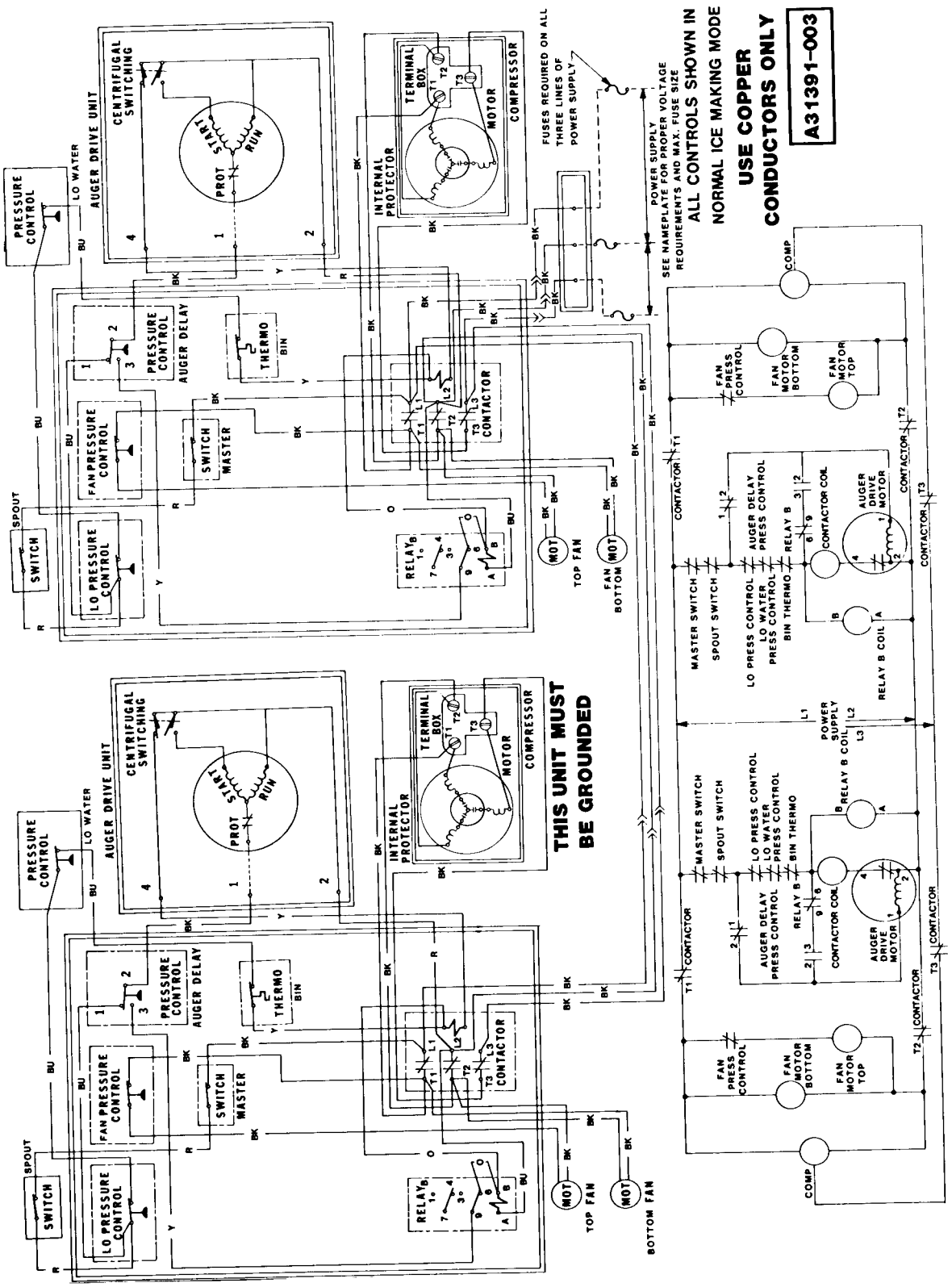

Air-Cooled Models 208-230/60/3

MF6C
WIRING DIAGRAMS
(WITH CONTACTOR ISOLATION RELAY)

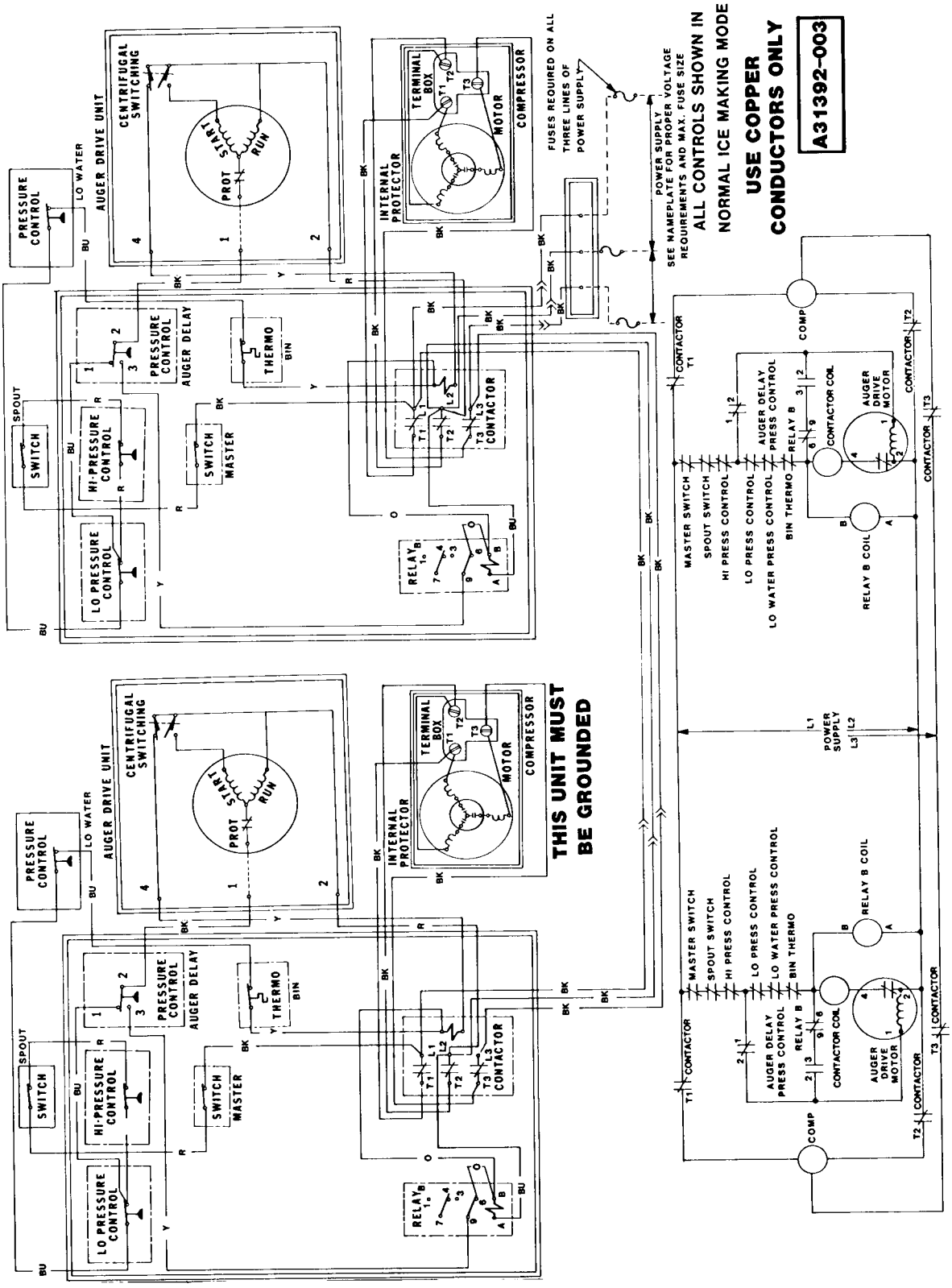

Water-Cooled Models 208-230/60/3

MF6C
WIRING DIAGRAMS

(WITHOUT CONTACTOR ISOLATION RELAY)

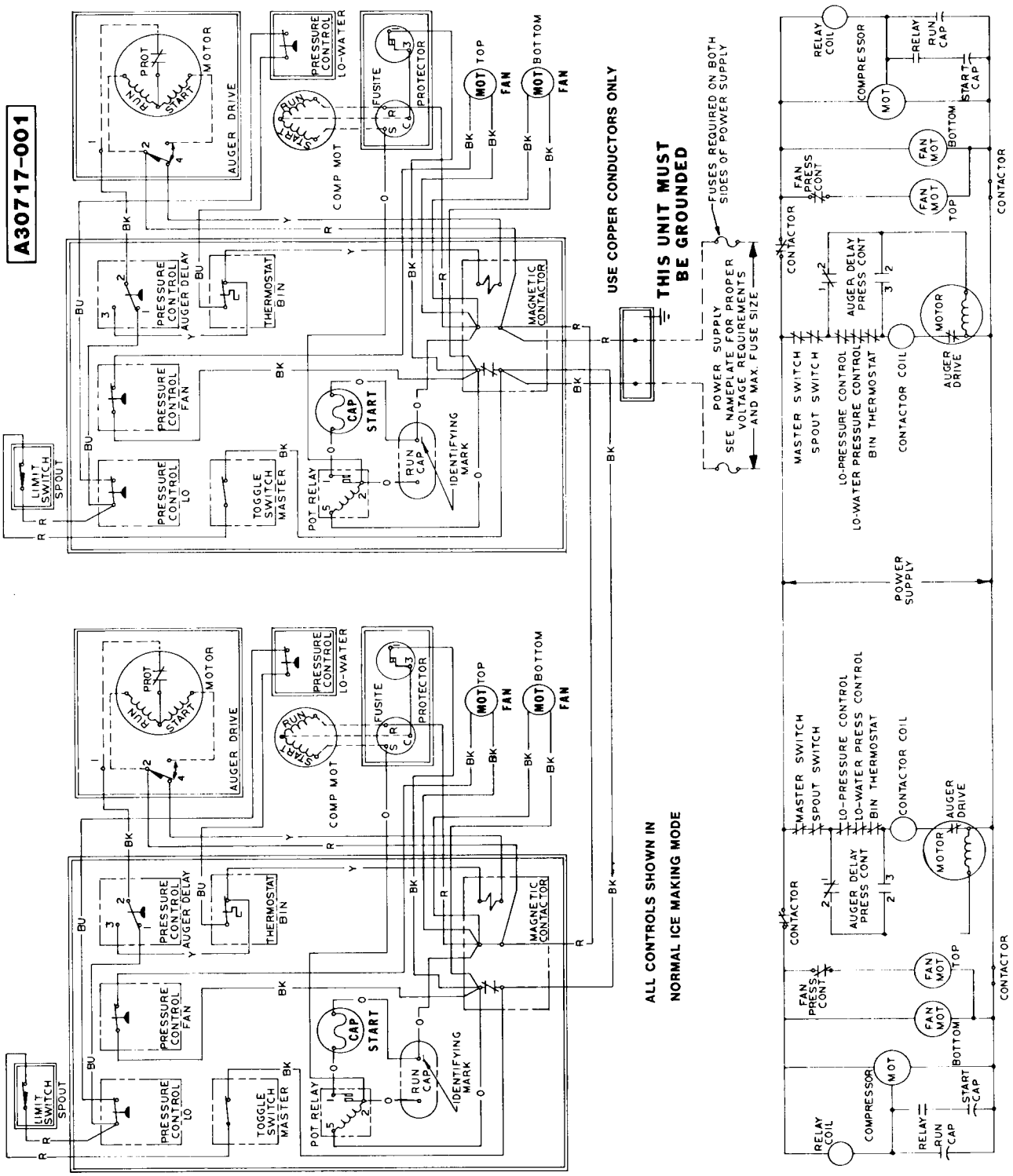

Air-Cooled Models 230/60/1 and 208-60/1

MF6C
WIRING DIAGRAMS
(WITHOUT CONTACTOR ISOLATION RELAY)

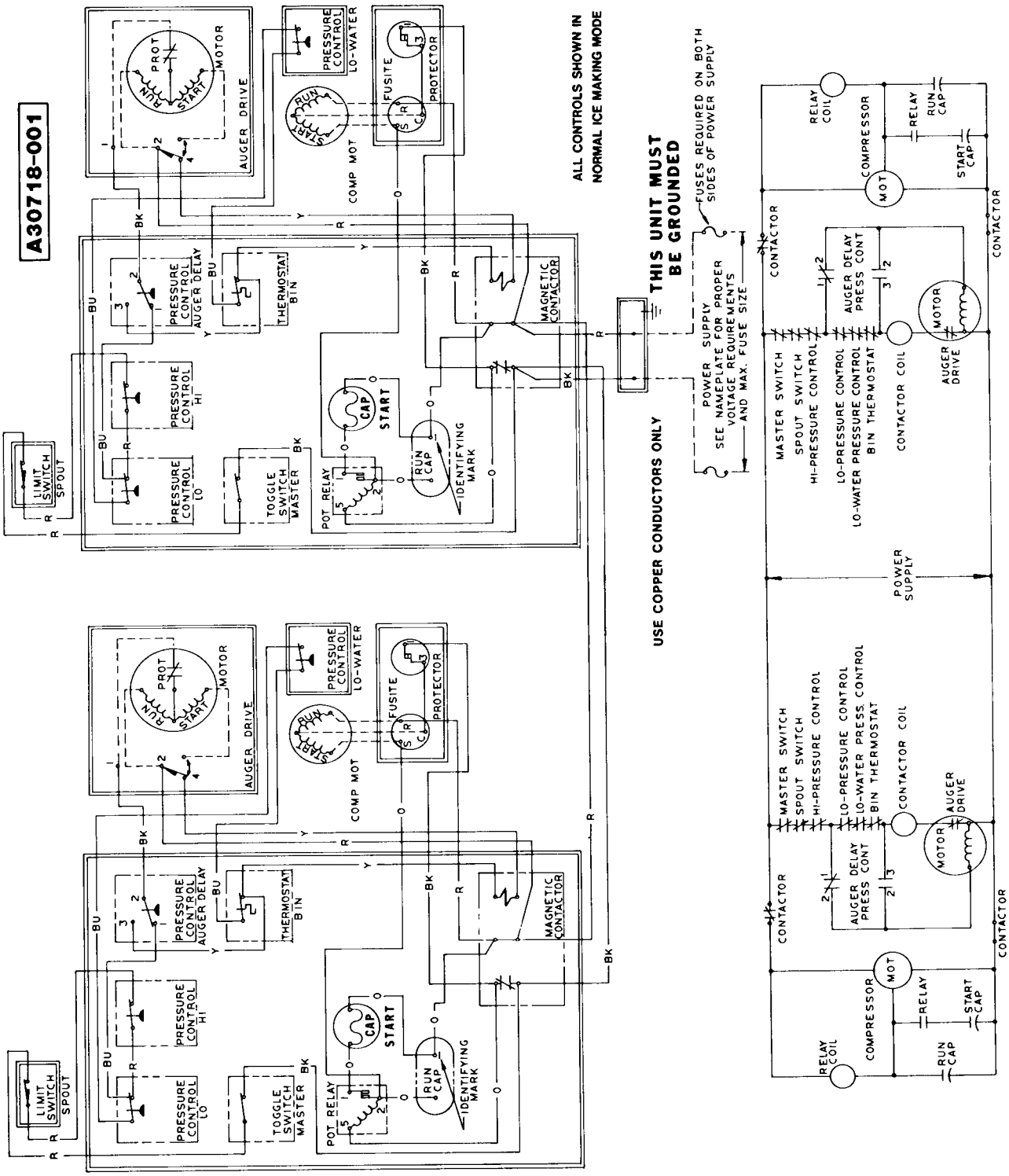

Water-Cooled Models 230/60/1 and 208/60/1

MF6C
WIRING DIAGRAMS

(WITHOUT CONTACTOR ISOLATION RELAY)

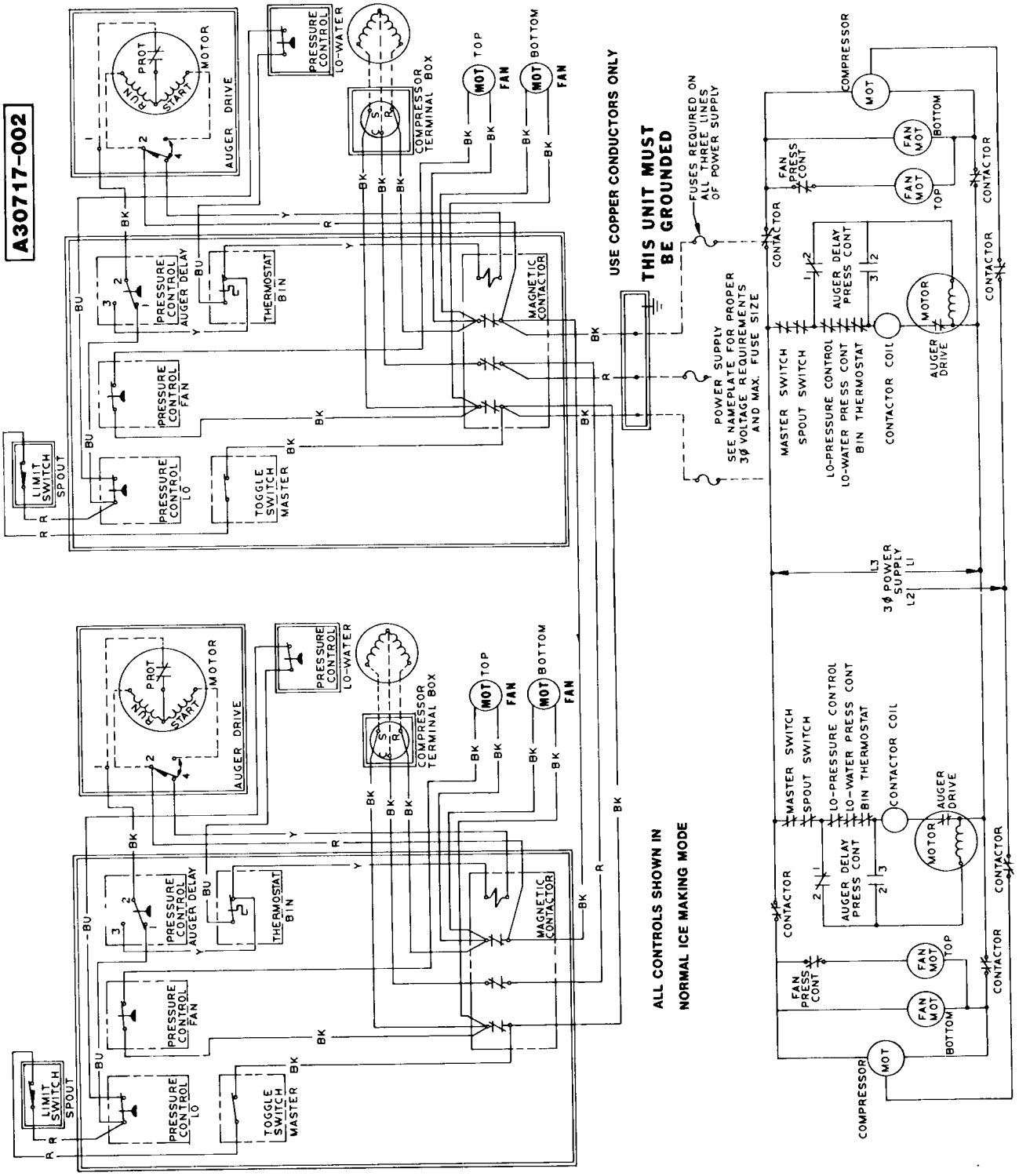

Air-Cooled Models 208-230/60/3

MF6C
WIRING DIAGRAMS

(WITHOUT CONTACTOR ISOLATION RELAY)

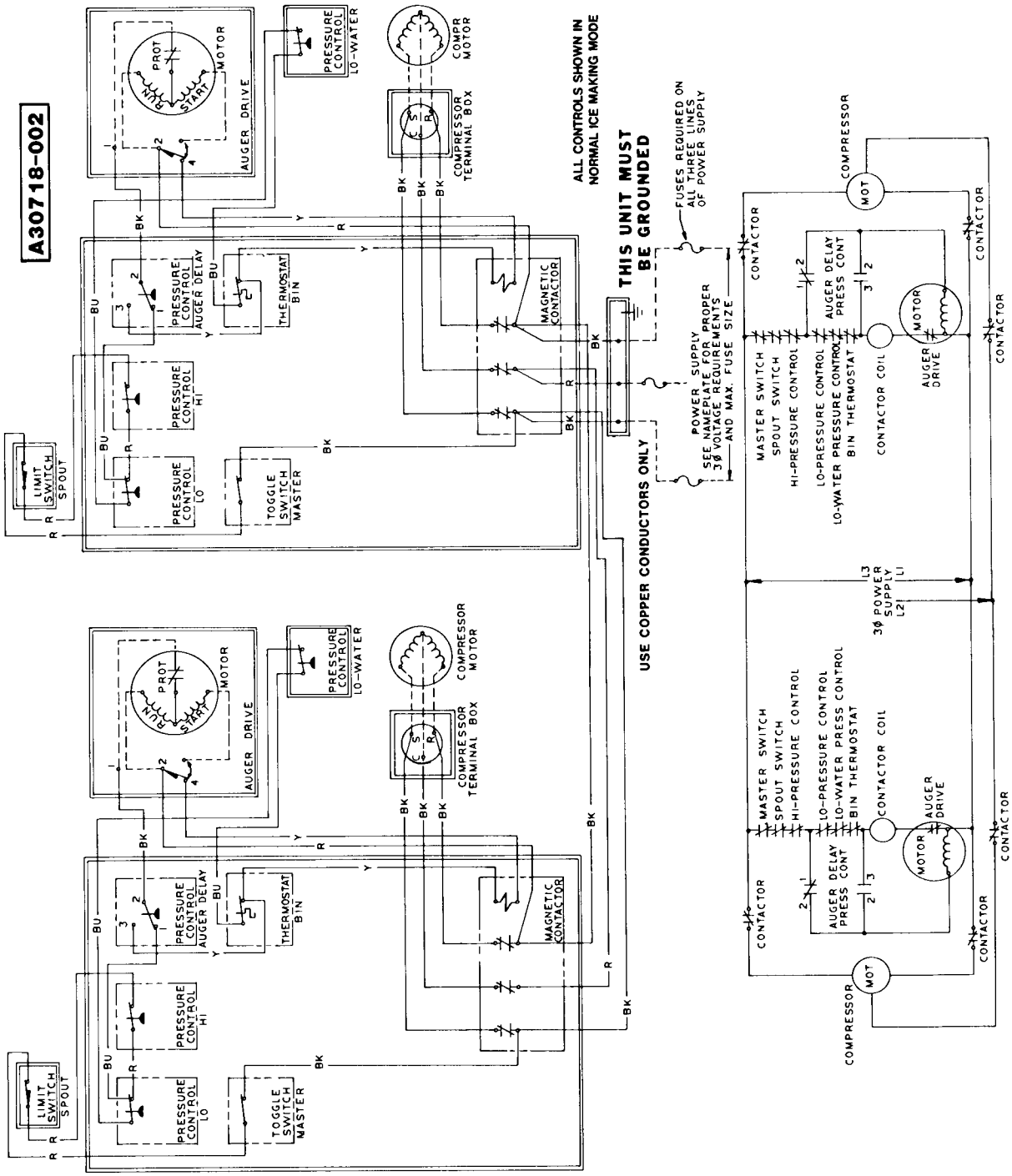

(Continued from page 12)

REMOVAL AND REPLACEMENT OF THE CONDENSER — AIR-COOLED MODELS

To remove the air-cooled condenser:

1. Remove screws and remove cabinet panels.
2. Bleed off or blow the refrigerant charge through the Schrader valve.
3. Remove one screw and disconnect the drier brace and drier.
4. Unsolder and disconnect the condenser inlet tube at the condenser.
5. Unsolder and disconnect the condenser outlet tube at the condenser.
6. Remove six screws, lockwashers and washers securing the condenser to the chassis base.
7. Remove the condenser from the chassis base.
8. To replace the condenser, reverse the removal procedure.

NOTE

Always install a replacement drier, anytime the sealed refrigeration system is opened. Do not replace the drier until all other repair or replacement has been completed.

NOTE

Thoroughly evacuate the system to remove moisture and non-condensables.

9. Recharge the system with refrigerant always check nameplate for the specified refrigerant charge.

REMOVAL AND REPLACEMENT OF THE CONDENSER — WATER-COOLED MODELS

To remove the water-cooled condenser:

1. Shut off water supply valve connected to the water cooled connection.
2. Remove the screws and cabinet panels.
3. Disconnect the water inlet and outlet lines from the condenser.
4. Bleed or blow the refrigerant charge through the Schrader valve.
5. Unsolder the refrigerant inlet and outlet lines from the condenser.
6. Remove two bolts, lockwashers and washers which secure the condenser to the chassis mounting base.
7. Remove the condenser from the cabinet.
8. To replace the condenser, reverse the removal procedure.

NOTE

Always install a replacement drier, anytime the sealed refrigeration system is opened. Do not replace the drier until all other repair or replacement has been completed.

NOTE

Thoroughly evacuate the system to remove moisture and non-condensables.

8. When recharging the system with refrigerant always check nameplate for the specified refrigerant charge.

REMOVAL AND REPLACEMENT OF THE LIQUID LINE DRIER

To remove the drier:

1. Remove screw and drier brace attaching the drier.
2. Bleed off or blow the refrigerant charge through the Schrader valve.
3. Unsolder refrigerant lines at top and bottom of drier, remove the drier and separate the drier from the drier brace.

To replace the drier:

1. Remove the factory seals from the replacement drier and install the drier in the refrigerant lines with the arrow positioned in the direction of the refrigerant flow.

CAUTION

If the factory seal is broken on the replacement drier, exposing it to the atmosphere for more than a few minutes, the drier will absorb moisture from atmosphere and lose substantial ability for moisture removal.

Be sure the replacement drier is installed with the arrow positioned in the direction of the refrigerant flow.

2. Install the drier brace on the drier.
3. Solder the drier into the lines, two places.
4. Purge the system and check for leaks.
5. Thoroughly evacuate the system to remove moisture and non-condensables.
6. Charge the system with refrigerant by weight. SEE NAMEPLATE for specifications.

REMOVAL AND REPLACEMENT OF THE DRIVEMOTOR ASSEMBLY

To remove the drivemotor assembly:

1. Perform all steps in Removal and Replacement of the Freezer Assembly procedures to gain access for removal of the drivemotor assembly.
2. Remove the drivemotor terminal cover and disconnect the three electrical wire leads.
3. Remove four bolts, lockwashers and washers which attach the drivemotor to the freezer mount at the rear of the chassis. Lift the freezer assembly up and off of the adaptor and drivemotor assembly.
4. Lift the drivemotor from the freezer mount.

To replace the drivemotor assembly, reverse the removal procedure.

REMOVAL AND REPLACEMENT OF THE FAN MOTOR ASSEMBLY — AIR-COOLED MODELS

NOTE

Before beginning this procedure, observe the fan blade position on the shaft of the fan motor and mark the fan blade so it will be correctly positioned during reassembly. Direction of air flow should be toward the fan motor.

To remove the fan motor assembly:

1. Disconnect the electrical supply to the icemaker at the circuit breaker or fuse box.

WARNING

Be sure the electrical power supply to the icemaker is OFF before proceeding with removal procedures.

2. Remove screws and the cabinet top panel.
3. Disconnect the electrical lead from the fan motor at the compressor control box.
4. Remove two screws securing the motor bracket to the chassis base and remove the fan motor and motor bracket from the chassis.
5. Remove the nut from the end of the fan motor shaft and remove the fan blade.
6. Remove four screws securing the fan motor to the motor bracket and separate the motor from the bracket.

To replace the fan motor assembly, reverse the removal procedure.

REMOVAL AND REPLACEMENT OF THE FREEZER ASSEMBLY

NOTE

1. *The cabinet may have to be removed from its permanent location, especially if located in a corner, in order to have access to the left side and rear of the chassis.*
2. *Shut OFF electrical power and close the inlet water valve to the icemaker. Disconnect the inlet water line at the rear of the cabinet BEFORE moving the icemaker from the permanent location.*

To remove the freezer assembly:

1. Remove screws and the cabinete panels.
2. Disconnect the electrical leads from the spout switch.
3. Remove four screws and washers and separate the spout assembly from the spout plate on the freezer assembly.

   Inspect the spout gasket and retain for the replacement procedure. Replace a torn, cut or worn, defective gasket.

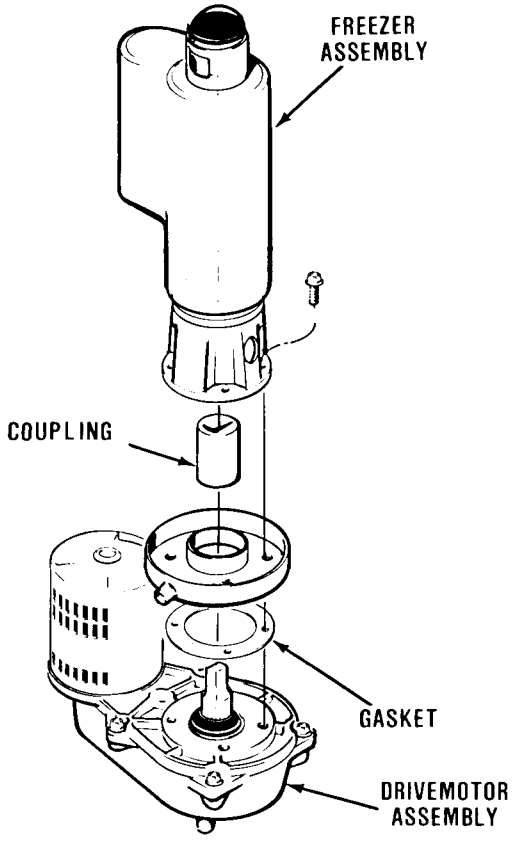

Removal of the Freezer Assembly

4. Remove corbin clamp and Tygon tube from the freezer assembly that connects to the water reservoir assembly.
5. Bleed off or blow the refrigerant charge through the Schrader valve.
6. Unsolder the suction line from the compressor.
7. Unsolder the automatic expansion valve from the freezer assembly.
8. Remove four screws, lockwashers and washers which attach the bottom of the freezer assembly to the adaptor on the drivemotor assembly.
9. Lift the freezer assembly up and off of the adaptor and drivemotor assembly.

To replace the freezer assembly, reverse the removal procedure.

NOTE

Always install a replacement drier, anytime the sealed refrigeration system is opened. Do not replace the drier until all other repair or replacement has been completed.

REMOVAL AND REPLACEMENT OF THE WATER REGULATOR VALVE ASSEMBLY — WATER-COOLED MODELS

1. Remove screws and cabinet panels.
2. Shut off water supply to the water-cooled connection.
3. Bleed off or blow the refrigerant charge through the Schrader valve.
4. Unsolder capillary tube from the discharge line process header.
5. Disconnect the water inlet and outlet lines from the water regulator valve.
6. Remove the two screws from the valve bracket to the machine base and remove the water regulator valve.
7. To replace the water regulator assembly, reverse the removal procedure.

NOTE

Always install a replacement drier, anytime the sealed refrigeration system is opened. Do not replace the drier until all other repair or replacement has been completed.

NOTE

Thoroughly evacuate the system to remove moisture and non-condensables.

REMOVAL AND REPLACEMENT OF THE WATER RESERVOIR ASSEMBLY

To remove the water reservoir assembly:

WARNING

Be sure the electrical power supply to the icemaker is OFF before proceeding with removal procedures.

1. Shut off water supply to the icemaker at the water supply valve.
2. Remove screws and cabinet panels.

NOTE

Be prepared with container to catch water left in lines disconnected in next steps, to prevent draining water on parts, components, electrical lines, etc.

3. Disconnect the water inlet tube from the water reservoir assembly.
4. Remove two Corbin clamps and two tubes from the bottom of the water reservoir assembly.
5. Unscrew and remove the wing nut from the bottom of the water reservoir assembly.
6. Lift and remove the water reservoir assembly from the mounting bracket.

To replace the water reservoir assembly, reverse the removal procedure.

NOTE

Check that the installed replacement water reservoir assembly float moves freely. Bend metal arm of float to adjust, as necessary. The correct water level in the water reservoir is the point of the raised molded line, on the side of the body of the water reservoir.

SERVICE DIAGNOSIS

INTRODUCTION

The Service Diagnosis is for use in aiding the serviceman in diagnosing a particular problem for pin-pointing the area in which the problem lies, thus an ever available reference for proper corrective action.

The following chart lists corrective actions for the causes of known symptoms of certain problems that can occur.

SYMPTOM	POSSIBLE CAUSE	CORRECTION
Water leaks.	Defective water seal.	Replace seal.
	Gravity feed line leaking.	Check hose clamps.
	Water level in reservoir too high.	Adjust water level to molded line on the float assembly.
	Storage bin drain and connecting fittings.	Check and repair.
Excessive noise or chattering.	Mineral or scale deposit on auger and inner freezing chamber walls.	For severe deposit, remove and manually polish auger, sand inner chamber walls of freezer barrel.
		For lighter concentration, use Scotsman Ice Machine Cleaner periodically.
	Intermittent water supply.	Check and clean water strainer.
		Check gravity feed line for air lock.
		Check to be sure float orifice is not restricted.
		Check incoming water supply.
		Remove air lock.
	Water level in reservoir too low.	See CORRECTION for Water Leaks above.
	Gear reducer loose on frame.	Tighten gear reducer.
	Motor compressor not solid rubber mounts.	Repair or replace rubber mounts.
	Gearmotor end-play or bearing.	Repair or replace bearing.
Making wet ice. (Ice melts too quickly, is not cold enough to properly cure in the bin.)	Surrounding air temperature, too high.	Correct or move cabinet, provide adequate ventilation.
	Under or over-charge of refrigerant.	Recharge with nameplate rating.

(Continued)

SERVICE DIAGNOSIS (Continued)

SYMPTOM	POSSIBLE CAUSE	CORRECTION
Making wet ice (Cont'd)	Back pressure too high.	Overcharge of refrigerant, faulty compressor or high head pressure. Lower pressure as indicated.
	Faulty compressor.	Repair or replace compressor.
Low ice production.	Loss of refrigerant. Under or over-charge of refrigerant.	Check and recharge. See NAMEPLATE for charge correction.
	Dirty or plugged condenser.	Clean condenser.
	Low water level in water reservoir.	See CORRECTION for water leaks above.
	Partial restriction in capillary tube or drier.	Moisture in system. Overcharge of oil in system. Remove charge by blowing back through cap tube.
		Evacuate. Replace drier and recharge.
	Inlet water strainer partially plugged.	Remove screen and clean.
	Corroded or stained auger due to water condition.	Remove auger and clean, or use Scotsman Ice Machine Cleaner. See Maintenance Section.
Gearmotor noise.	Low on oil.	Remove case cover to check for proper oil level. Top of gears should be covered. Use: Sun Oil Company Prestige 50-EP.
Icemaker will not operate.	Blown fuse in line.	Replace fuse and check for cause of blown fuse.
	Bin thermostat set too high.	Adjust thermostat. Set at 35-degrees cut-out, 45-degrees cut-in.
	Loose electrical connection.	Check wiring.
	Switch in OFF position.	Set switch to ON position.
	Inoperative master switch.	Replace switch or thermal overload.
	Off on manual-reset pressure control. (W/C Only)	Reset.
	Low supply water pressure.	Restore water pressure.
	Low on refrigerant off-on low pressure control.	Find leak, replace drier, evacuate and recharge.

SYMPTOM	POSSIBLE CAUSE	CORRECTION
Icemaker continues to operate with full storage bin.	Bin thermostat not properly set or is defective.	Re-set or replace bin thermostat. Re-set to 35-degrees cut-out, 45-degrees cut-in.
Compressor cycles intermittently.	Low voltage.	Check for overloading.
	Dirty condenser.	Clean condenser.
	Air circulation blocked.	Remove cause or move unit.
	Inoperative condenser fan motor.	Replace motor.
	Non-condensable gases in system.	Check for gas leaks, evacuate and recharge.
	Bin thermostat differential too small causing short cycling.	Widen differential 35-degrees cut-out, 45-degrees cut-in.
Bin thermostat installed improperly.		Set or reinstall bin thermostat.
	Low on refrigerant causing low pressure control to cycle.	Check for leaks.
Icemaker operates but makes no ice.	Loss or undercharge of refrigerant.	Check for leaks and recharge. See NAMEPLATE for correct charge.
	Water not entering chamber.	Plugged strainer or supply line. Check and clean. Air lock in gravity feed line. Check and remove air lock.
	Moisture in system.	Check, evacuate, replace drier.
		Recharge. See NAMEPLATE for correct charge.
	Water seal leaking.	Replace seal.
	Drivemotor or drive coupling stripped.	Repair or replace drivemotor or drive coupling.
	Compressor over load faulty.	Replace over load.

MAINTENANCE & CLEANING INSTRUCTIONS

GENERAL

The periods and procedures for maintenance and cleaning are given as guides and are not to be construed as absolute or invariable. Cleaning especially will vary, depending upon local water conditions and the ice volume produced and, each icemaker must be maintained individually, in accordance with its own particular location requirements.

ICEMAKER

THE FOLLOWING MAINTENANCE SHOULD BE SCHEDULED AT LEAST TWO TIMES PER YEAR ON THIS ICEMAKER. CALL YOUR AUTHORIZED SCOTSMAN SERVICE AGENCY.

1. Check and clean optional water line strainers or water purification system.
2. Remove screws and top and front panel.
3. Remove cover from each water reservoir and depress the float to ensure that a full stream of water enters each reservoir.
4. Check that the icemaker cabinet is level, in side-to-side and front-to-rear directions.
5. Check that the water level in each water reservoir is below of the overflow and is level with the molded horizontal line on the reservoir body.
6. Clean each water reservoir and interior of the freezer assembly, using a solution of SCOTSMAN Ice Machine Cleaner. Refer to CLEANING-Icemaker.

NOTE

Cleaning requirements vary according to local water conditions and individual user operation. Visual inspection of the auger before and after cleaning will indicate frequency and procedure to be followed in local areas.

7. When doubtful about refrigerant charge, install refrigerant gauges on Schrader valves and check gauge for compressor head pressure of each separate system. See Nameplate for refrigerant charge specifications.
8. Check gauge for suction line pressure: Varies between 12 to 16 PSIG, depending upon inlet water temperature and ambient air temperatures.
9. Check each drivemotor operation:

   Normal operating temperatures are about 160-degrees F., which is hot to touch.
10. Check operation of the centrifugal sensing switch for each drive motor:

    MF6C: 1/4 HP Motor.

    Switch will OPEN between 850-950 RPM and the compressor STOPS, with the drivemotor operating. Switch will CLOSE between 1100-1250 RPM and the compressor will RESTART, with drivemotor building back up to normal operating speed.

WARNING

Disconnect electrical power supply before removal procedure.

NOTE

Before the next step, move each Master ON-OFF switch to OFF, to stop the fan motors and icemakers.

11. Inspect the lip seal and the top bearing seated in the ice breaker, wipe clean of old grease and apply a coating of Taylor Freezer food grade grease, SCOTSMAN P/N 19-0569-01 or equivalent. Replace all parts removed in steps 10 thru 14.
12. Clean the air-cooled condensers, using a vacuum cleaner, whisk broom or brush. The icemaking performance and capacity is affected by the clean condition of the air-cooled condenser. Instruct customer to clean frequently and to be sure icemaker and fan motor are OFF.
13. Check that fan blades move freely, are not touching any surfaces and are not bent or out of balance.
14. Check for refrigerant leaks.
15. Check for water leaks. Pour water down bin drain to be sure that drain line is open and clear.
16. Check the quality of ice. Ice should be wet when formed, but will cure rapidly to normal hardness in the bin.
17. Check the bin thermostat control bulb, hold ice on the control bulb of each system to test icemaker shut-off.

NOTE

The bin thermostat is factory set at 10-degrees F. differential and should keep the entire icemaker system shut off at least 10 minutes in high ambient temperatures, longer in low ambient temperature during normal operation. Settings are 35-degrees F. CUT-OUT and 45-degrees F. CUT-IN.

CLEANING

1. Remove screws and the top and front panel.
2. Move both master ON-OFF toggle switches to OFF position.
3. Remove all ice from the ice storage bin.
4. Remove each reservoir cover and block the float in each water reservoir.
5. Disconnect the tube between each water reservoir and the bottom of each freezer assembly and drain water from each reservoir and tube. Reconnect each tube.

WARNING

SCOTSMAN Ice Machine Cleaner contains Phosphoric and Hydroxyacetic acids. These compounds are corrosive and may cause burns. If swallowed, DO NOT induce vomiting. Give large amounts of water or milk. Call Physician immediately. In case of external contact flush with water. KEEP OUT OF THE REACH OF CHILDREN.

6. Prepare cleaning solution: Mix twelve ounces of SCOTSMAN Ice Machine Cleaner with three quarts of hot water.
7. Slowly pour the cleaning solution into each water reservoir.
8. Move each master ON-OFF switch to ON position and make ice with the cleaning solution.
9. Continue to slowly pour the cleaning solution into each water reservoir, maintaining the level just below each reservoir overflow.
10. Continue icemaking, using the cleaning solution, until all the solution is used up and the water reservoir is almost empty. DO NOT allow the icemaker to operate with empty reservoir.
11. Move each master ON-OFF switch to OFF.
12. Wash and rinse the water reservoirs.
13. Remove the block from the float in the water reservoir. Move the master ON-OFF switches to ON positions.
14. Continue icemaking for at least 15 minutes, to flush out any cleaning solution. Check ice for acid taste - continue icemaking until ice tastes sweet.
15. Move each of the master ON-OFF switches to OFF positions.

CAUTION

DO NOT use ice produced from the cleaning solution. Be sure none remains in the bin.

16. Remove all ice from the ice storage bin.
17. Add hot water to the ice storage bin and thoroughly wash and rinse all surfaces within the bin.
18. Clean and sanitize the ice storage bin each week.

MF6RH INTRODUCTION

TO THE OWNER OR USER: The service manual you are reading is intended to provide you, and the maintenance or service technician, with the information needed to install, start up, clean, maintain and service this ice system.

The MF6RH (remote high side) is the freezer portion of a commercial ice machine. It is designed to be connected to the condensing section of a refrigeration system, specifically a supermarket R-502 system. It constists of special tube wrapped evaporators, liquid line valves, valves to isolate each of the two seperate ice making sections for service, thermostatic expansion valves, and an EPR valve

MF6RH TABLE OF CONTENTS

PAGE

INTRODUCTION 1

INSTALLATION

- Specifications 2
- Location 3
- Bin 4
- Electrical 5
- Plumbing 6
- Check List 7

START UP 8

COMPONENT LOCATION

- Refrigeration 9
- Control Box 10

OPERATION

- Refrigeraton 11
- Water 12

MAINTENANCE AND CLEANING 13

SERVICE DIAGNOSIS 15

REMOVAL AND REPLACEMENT

- Evaporator, Auger, Bearings, Water Seal 16
- Gear Motor 19

Parts Lists and Wiring Diagram are in the center of this Manual, printed on yellow paper.

THIS PAGE
INTENTIONALLY
LEFT BLANK

MF6RH FOR THE INSTALLER

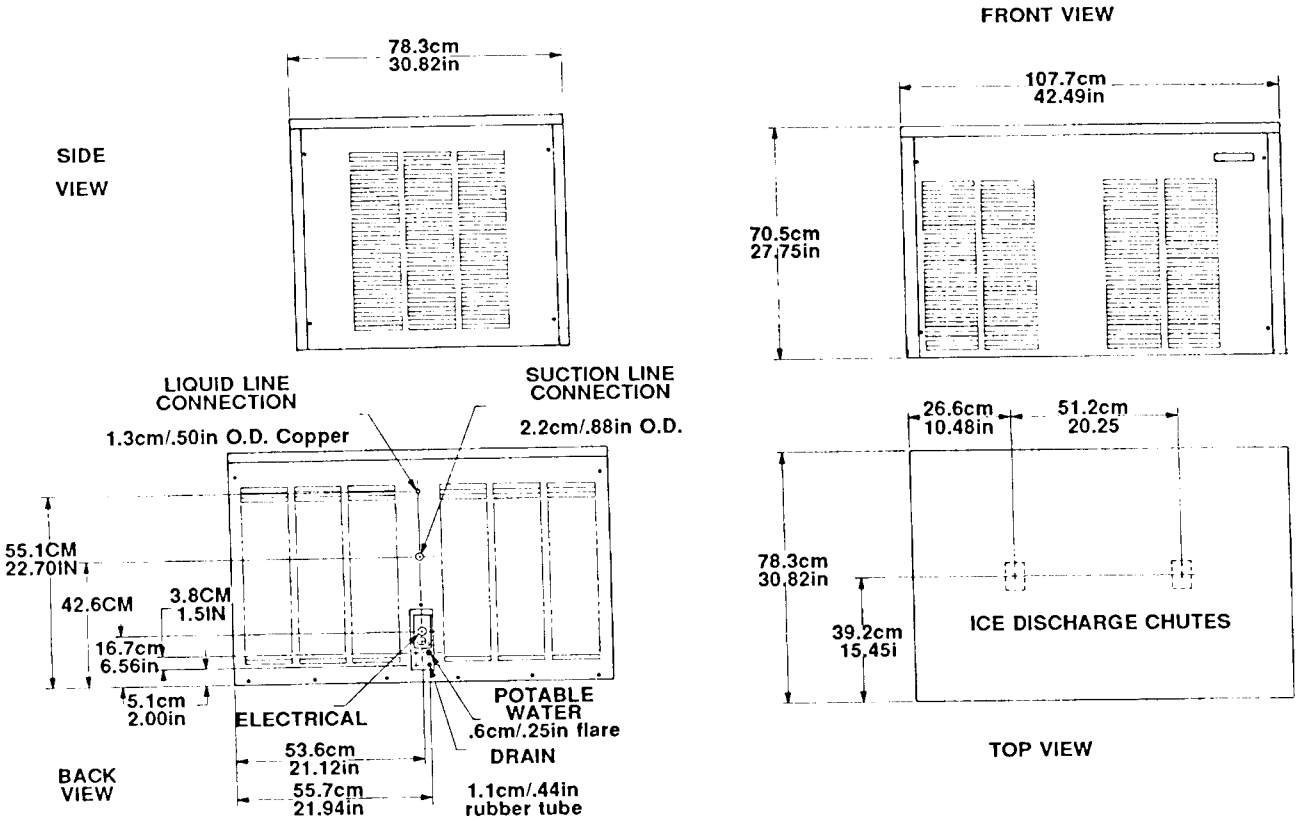

Scotsman reserves the right to make design changes and/or improvements at any time. Specifications and design are subject to change without notice.

Scotsman ice systems are designed and manufactured with the highest regard for safety and performance. They meet or exceed the standards of UL, NSF, and CSA.

Scotsman assumes no liability or resposibility of any kind for products manufactured by Scotsman that have been altered in any way, including the use of any part and/or other components not specifically approved by Scotsman.

Installation Limitations: The MF6RH is designed for indoor installations only. The machine must also be in a controlled environment where the air temperature does not fall below 50° F.

or go above 100° F.

The water temperature must be between 40 and 100 degrees F.

The electrical power supply must not drop below -5% of the lowest nameplate voltage or go above 10% of the highest nameplate voltage.

The MF6RH is designed to fit the Scotsman storage bin B-90 and the B-87 extension. Leg kit KLP4 is recommended when using both the B-90 and the BX-87.

SPECIFICATIONS:

Minimum Circuit Ampacity is used to determine wire size and type per national electric code.

MODEL NUMBER	DIMENSIONS H" X W" X D"	ICECAPACITY 24 HOUR MAX.	ICE TYPE	BASIC ELECTRICAL	NO. OF WIRES	MIN. CIRC. AMPACITY	MAX. FUSE SIZE
MF6RH-32A	27.75 X 42.38 X 30.8	2350 lbs	FLAKE	208-230 /60/1	2	2.47	15

MF6RH FOR THE INSTALLER

Select the location:

The unit can only be installed indoors within the limitations described on page 2.

The ice machine will have to be connected to the buildings R-502 refrigeration system, check to be sure that the system has enough extra capacity to handle a minimum of an additional 16,000 BTU's per hour @110^0 F. liquid line temperature. (Assume a 10^0 F. evaporator temperature.)

The unit will also require electrical power, potable water, and a drain.

Locate the Nameplate:

The nameplate is located on the back panel of the machine, and contains the electrical charactoristics particular to the unit being installed.

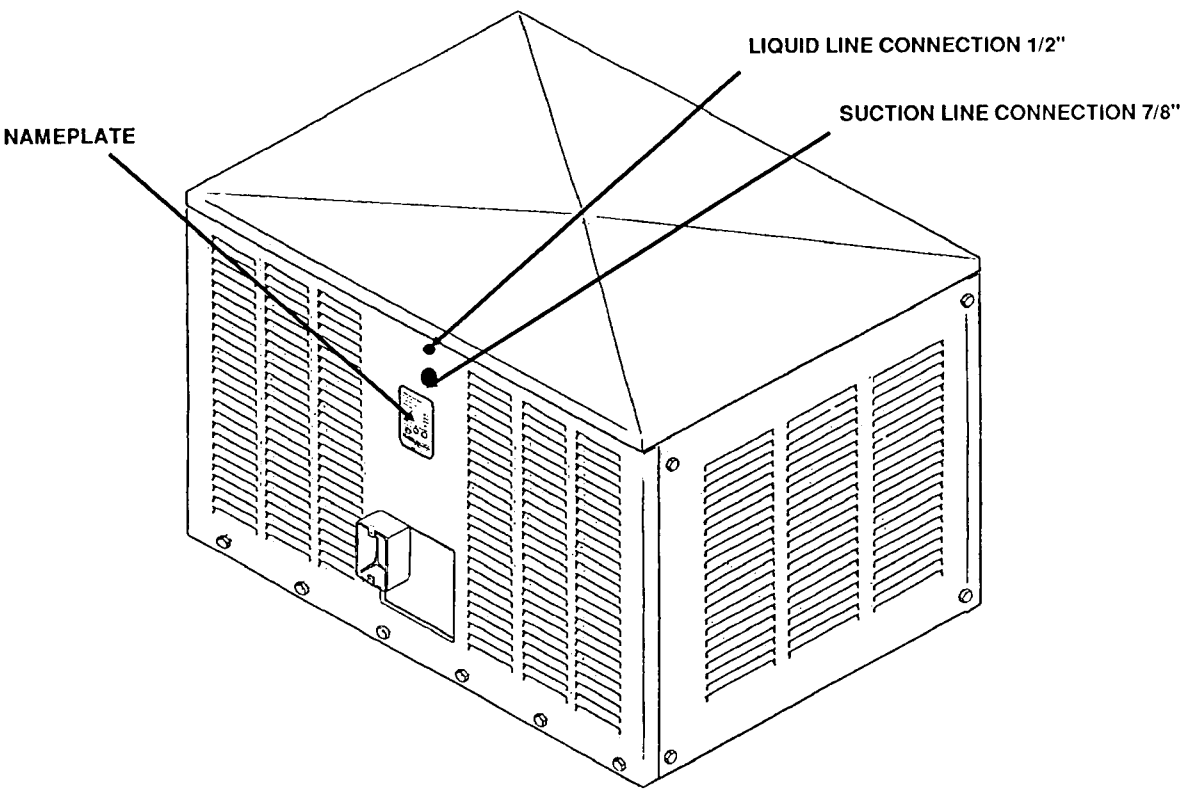

Refrigeration Installation:

The skills of a refrigeration technician are required to connect the ice machine to the buildings refrigeration system.

////////////////////////**CAUTION**////////////////////////////

CONNECT TO A R-502 SYSTEM ONLY

//

LOCAL CODES MUST BE OBSERVED

A P-trap should be installed where there will be more than 10' of vertical rise in the suction line.

MF6RH FOR THE INSTALLER

Storage Bin:

Scotsman's B-90 bin will be the presumed bin of choice. If using bin extension BX-87, install the heavy duty leg kit KLP4 and place the bin into position.

Remove the paper tape form the bin edge gasket, and install the bin extension onto the B-90.

Remove the paper tape from the bin extesion top edge, and using a mechanical lift, install the MF6RH onto the top of the storage bin assembly.

Fasten the ice machine to the bin using(4) 5/16-18 2.5" cap screws. (field supplied) See the illustration.

Level the assembly by:

a) turning in or out the adjustable feet in the standard legs, or b) use shims under the heavy duty leg kit.

Ice Maker:

Install the cube chutes into position, securing them to the spout with the fasteners provided.

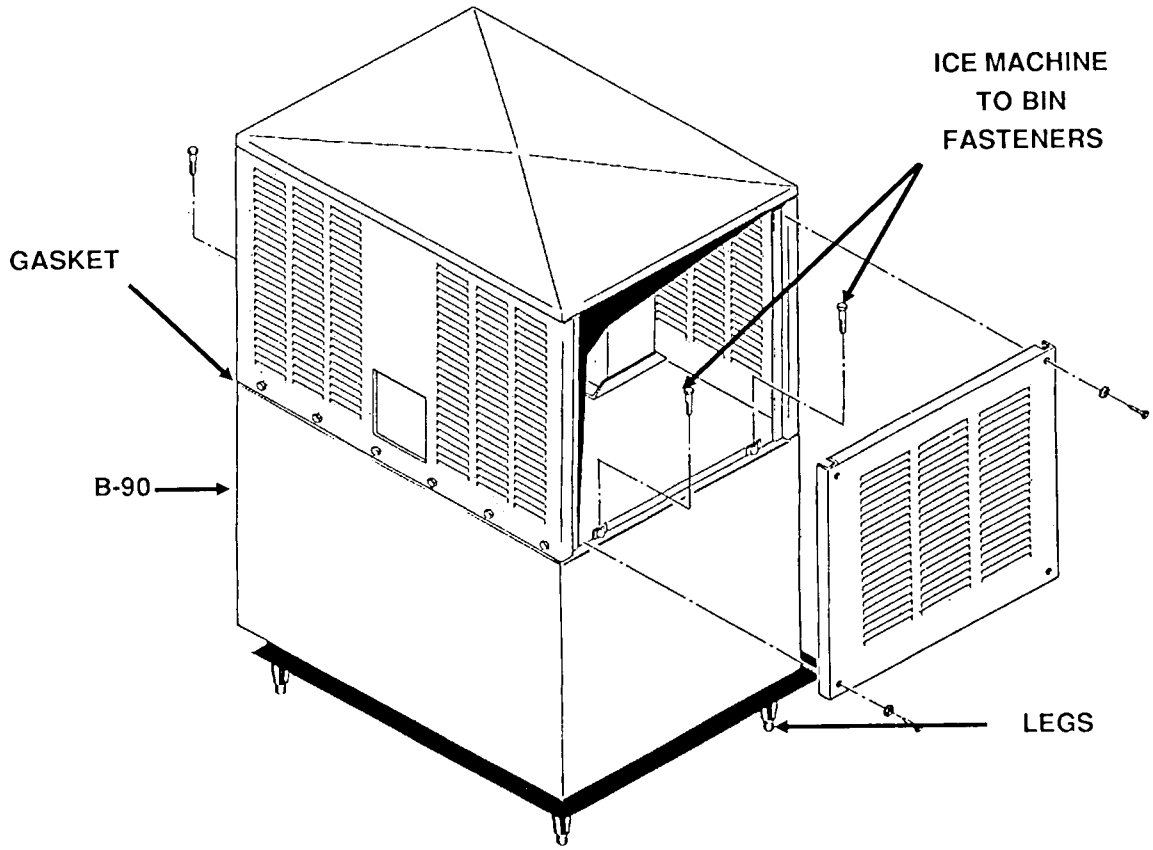

MF6RH FOR THE ELECTRICIAN

CONFORM TO ALL APPLICABLE CODES

Electrical Connections:

Locate the Nameplate for the current requirements, and then determine the wire size and type per the National Electric Code. The machine requires a solid chasiss to earth ground wire. Refer to the wiring diagram.The ice machine should be connected to its own electrical circuit, and be individually fused.

Voltage, when the unit is under full load, must remain within the limitations listed on page 2. **LOW VOLTAGE CAN CAUSE EQUIPMENT MALFUNCTION AND/OR DAMAGE.**

All external wiring should confrom to the national, state, and local electrical code. Usually the services of a licensed electrician will be required.

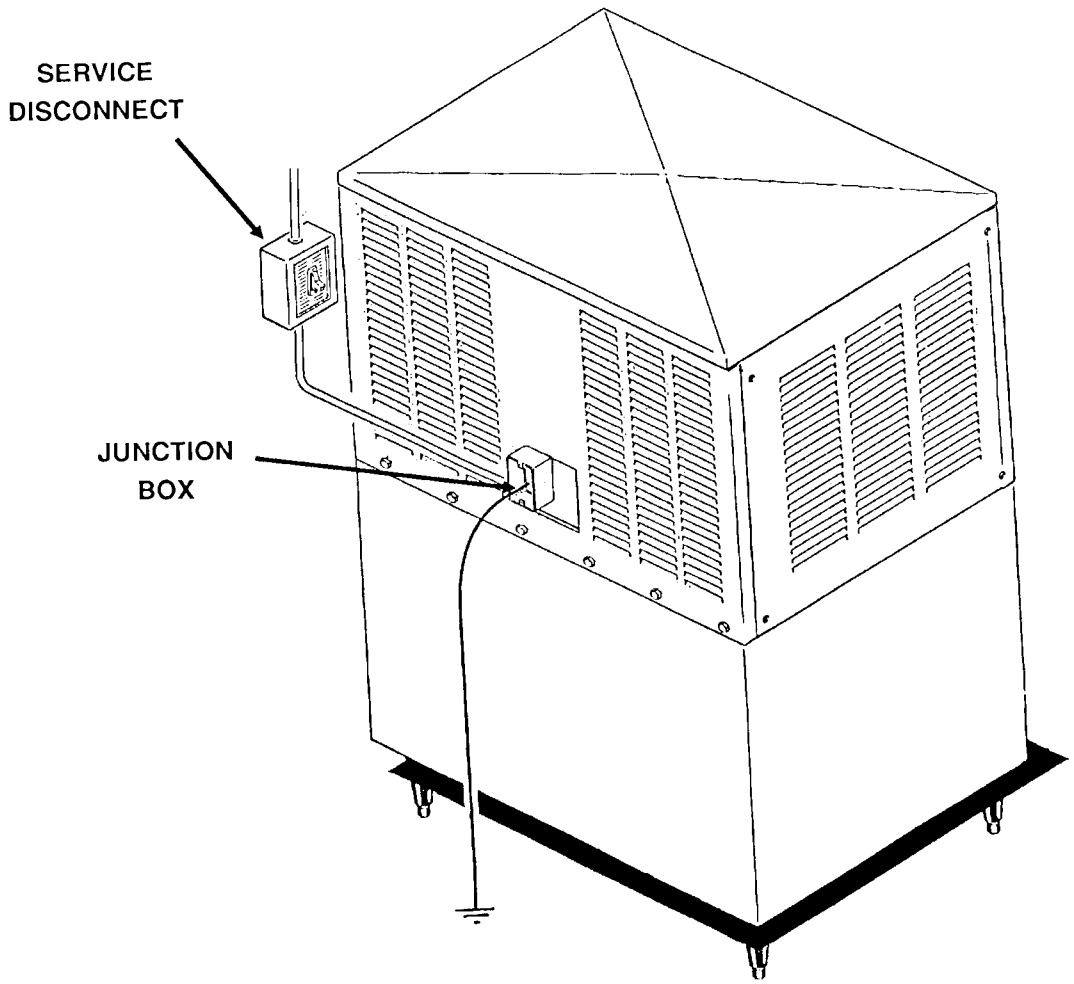

MF6RH FOR THE PLUMBER

CONFORM TO ALL APPLICABLE CODES

Water Supply:

The recomended water supply line is 3/8" OD copper tubing, with a minimum operating pressure of 20 PSIG, and a maximum of 120 PSIG. Connect to cold water using the male flare connection at the back of the machine. Install a shut off valve in an accesable space between the ice maker and the water supply.

Drain System:

All drains are of the gravity type, and must have a minimum of 1/4" fall per foot of horizontal run. The drains must be installed to conform to local plumbing codes. The use of a vent at the machine and at the bin will allow the system to drain properly.

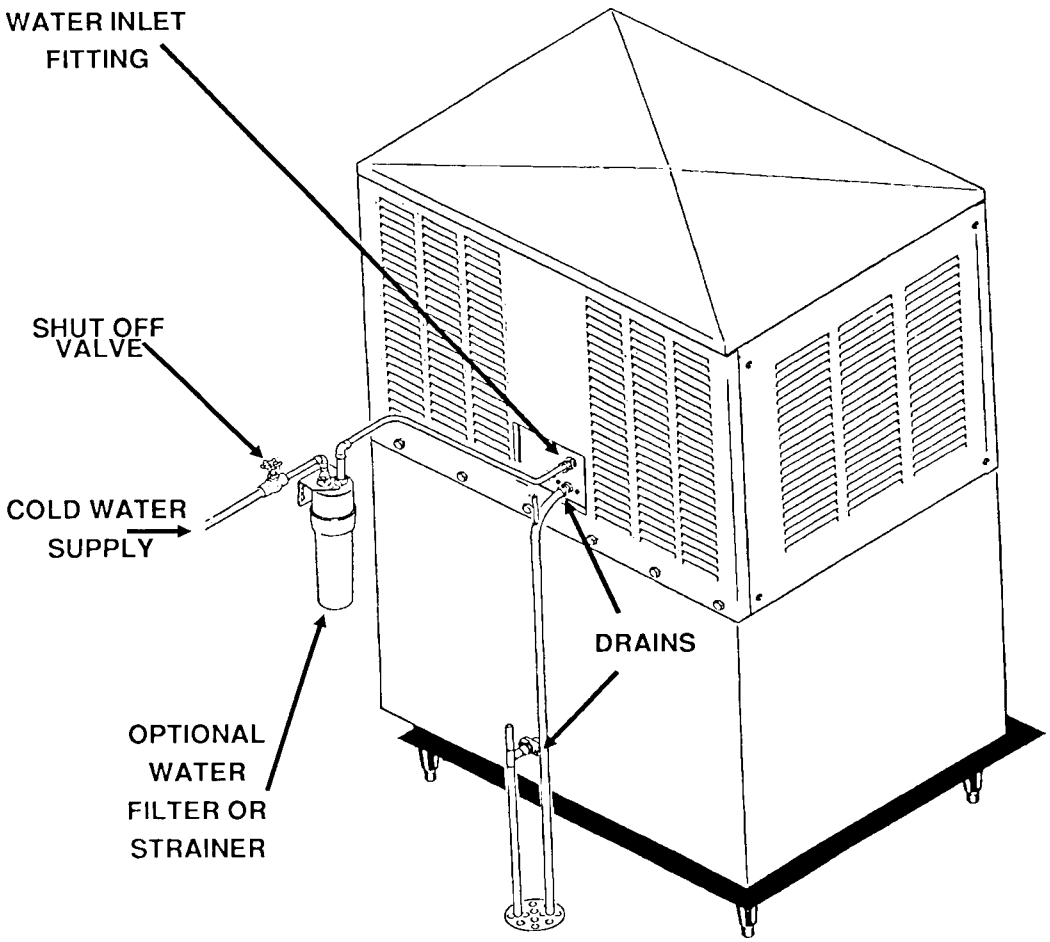

MF6RH FOR THE INSTALLER

Final Check List

1. Is the unit installed where the air and water temperatures are within, and will remain within the limitations for the unit?

2. Is there 6" clearance at the rear of the machine for utility connections?

3. Has the water supply line been checked for pressures between 20 and 120?

4. Has the unit been leveled?

5. Has the shipping material been removed from inside the cabinet?

6. Have the cube chutes been installed?

7. Have the electrical connections been made?

8. Have the drains been installed and checked for leaks?

9. Has the refrigeration supply been installed and checked for leaks?

10. Has the bin and cabinet been wiped clean or sanitized?

11. Has the warranty registration card been properly filled out and mailed to the Scotsman Factory?

12. Has the owner been given the service manual and been instructed on how to maintain the icemaker?

13. Has the owner been given the name and telephone number of the local Scotsman service agency?

MF6RH START UP

1. Remove the top panel, and the front panel.

2. Open the water valve, and observe that the two float reservoirs fill up with water and shut off.

3. Switch on the electrical power.

4. Open the hand valves (in the liquid lines).

5. Open the ball valves (in the suction lines).

6. Switch on one master switch, and observe:

- the liquid line valve opens
- the gearmotor runs
- within a short time, that side of the machine begins to make ice.
- water flows from the water reservoir, and the float opens and more water enters the reservoir.

7. Switch on the other master switch, observe that:

- the liquid line valve opens
- the gearmotor runs
- after a short time, ice is produced
- water flows from the water reservoir, and the float opens and more water enters the reservoir.

8. With both sides operating, the sight glass should remain full, and the lowside pressure will be about 36-38 PSIG. Gearmotor amp draw should not exceed the nameplate rating.

9. Check the system very carefully for any refrigerant leaks, repair as needed.

MF6RH REFRIGERATION COMPONENTS

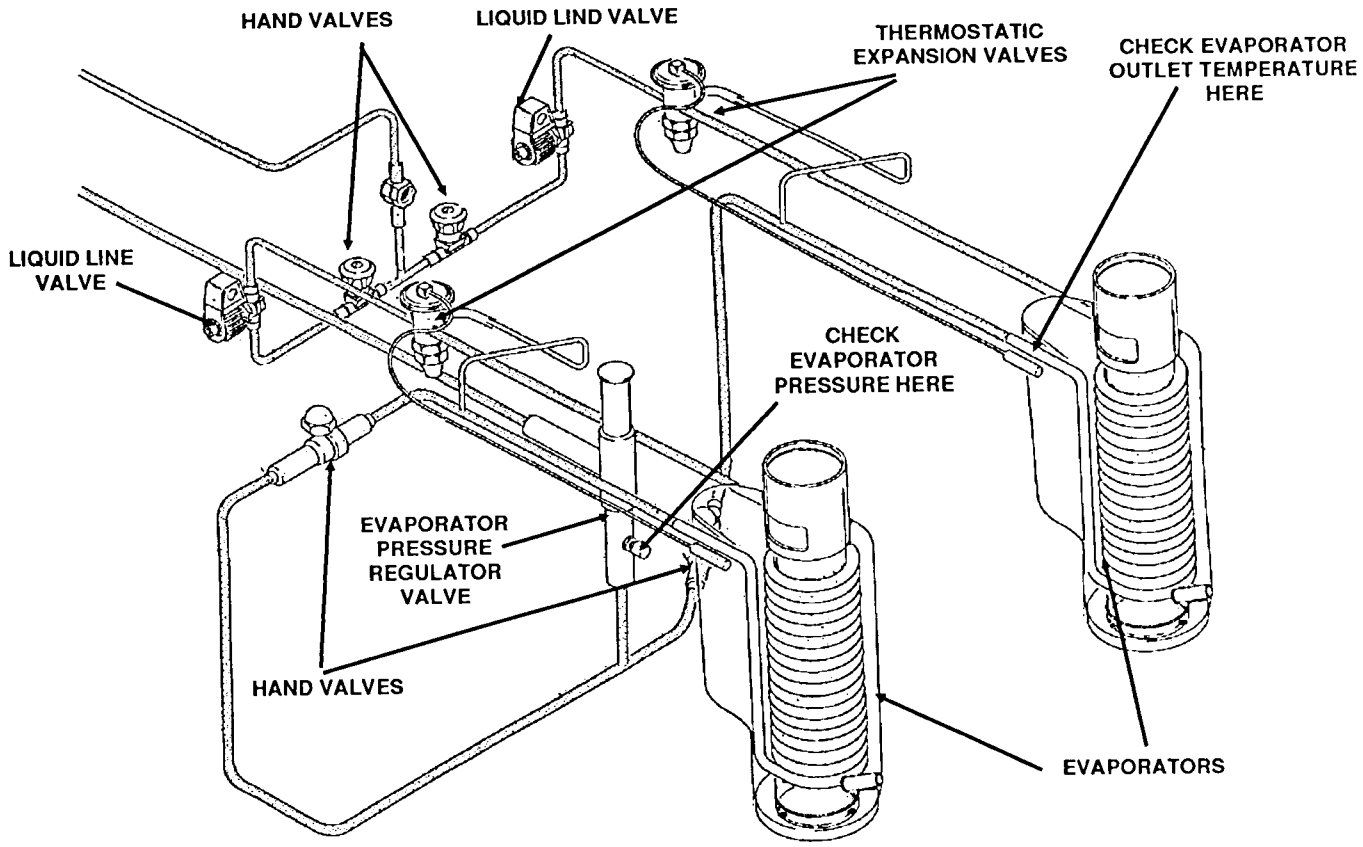

Liquid Line Valve(s):

These valves operate to turn the ice making process on and off. When the bin thermostat closes, calling for ice, that liquid line valve opens, allowing the refrigerant to flow.

Evaporator Pressure Regulator Valve:EPR

This valve maintains a constant pressure on its inlet side, (evaporators) regardless of the pressure on the outlet side (suction line). Set at 36-38 PSIG (with both systems producing ice). EPR is ***factory set***, adjust only if needed. After adjusting, check TXV superheat.

Thermostatic Expansion Valve(s):TXV

The metering device of each system, the valve(s) sense the temperature of the suction line and vary the amount of liquid refrigerant that passes through the valve into the evaporator, thus maintaining a constant level of refrigeration. TXV's are factory set: ***Do not adjust unnessesarily.***

DO NOT ADJUST TXV UNTIL THE EPR HAS BEEN SET

The superheat setting is 4-8^{0}F. Measure the temperature of the evaporator outlet at the TXV bulb, and check the low side pressure at the EPR, then convert the pressure to temperature, (use pressure temperature chart) and subtract from the outlet temperature. Use an electronic thermometer.

Evaporator(s):

Where the water is frozen into flaked ice. As the water cools, it begins to turn into ice, and the slowly turning auger lifts the ice, as it is being made, and forces it up and out of the "breaker" or spout where the extra water is compressed out of the ice. The ice then drops through the chute, into the storage bin.

MF6RH CONTROL BOX COMPONENTS

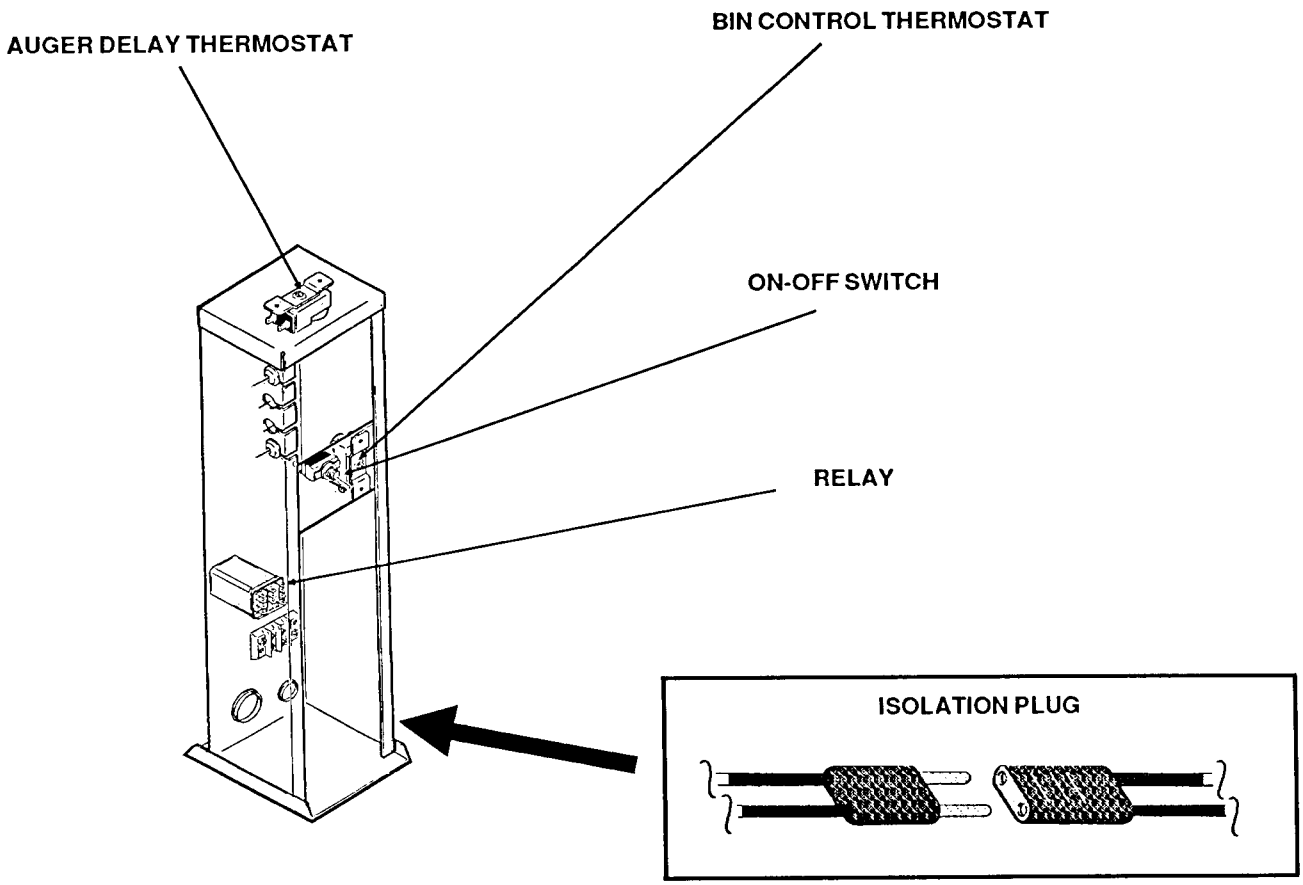

AUGER DELAY THERMOSTAT:

This control senses the temperature of the suction line. It keeps the auger drive motor on after the bin thermostat has opened shutting off the liquid line solenoid and the refrigeration. This clears the evaporator of ice. When the suction line is warm enough, the control opens, shutting off the auger drive motor.

BIN CONTROL THERMOSTAT:

The cap tube of this control is in the ice discharge chute. When ice is in constant contact with the cap tube (bin full) the control opens, shutting off the liquid line solenoid.

ON-OFF SWITCH:

Manual control for each side of the machine. Not a service disconnect.

RELAY:

Conducts power from the bin thermostat to the liquid line valve.

ISOLATION PLUG:

Each system can be electrically isolated from the power supply independently by unplugging this connection. Located near the base of each control box.

MF6RH OPERATION

REFRIGERATION SCHEMATIC

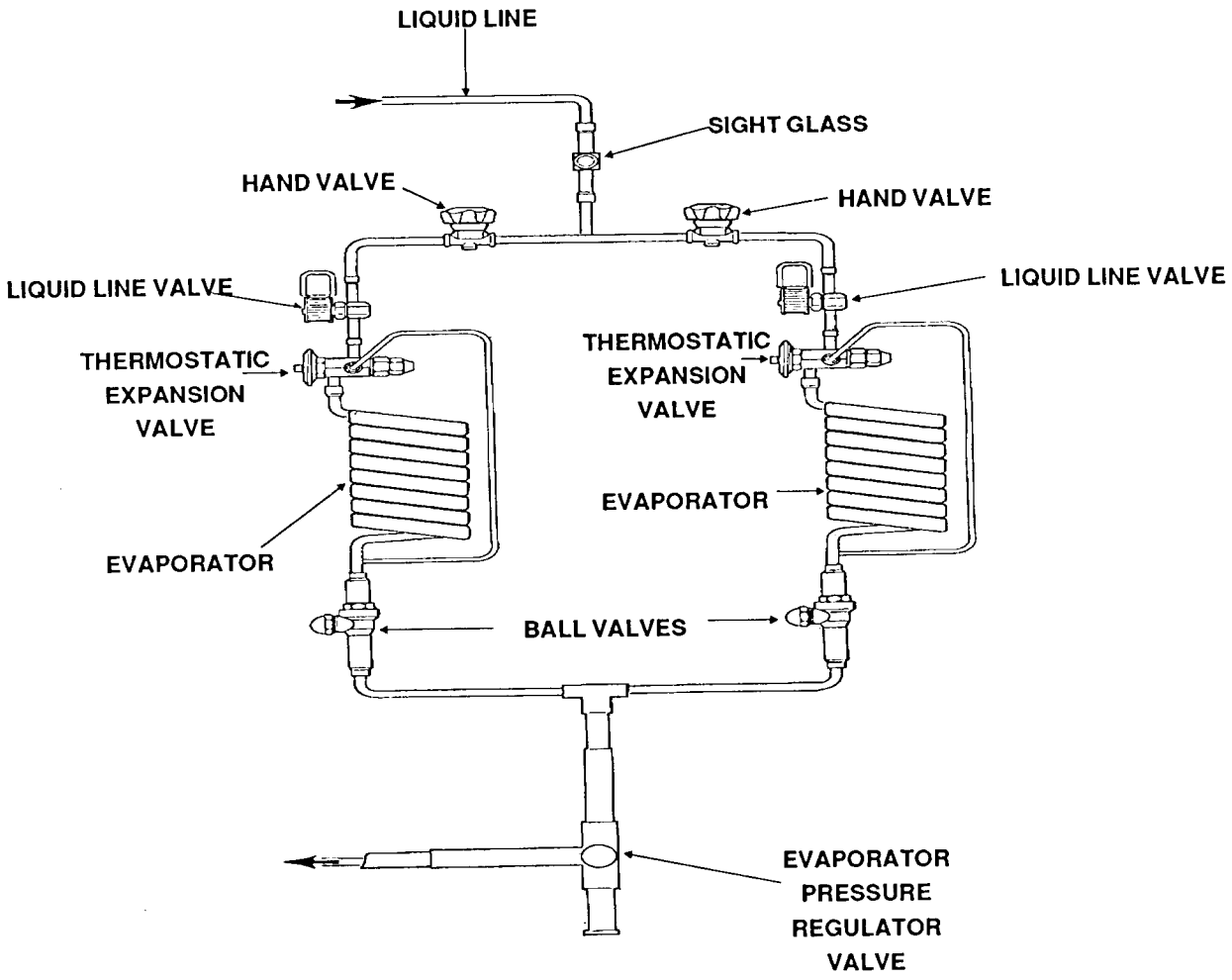

Refrigeration:

The remote high side supplys high pressure liquid R-502 to the liquid line connection on the ice machine. After the **sight glass,** there are two seperate liquid lines, each leading to a **liquid line valve.** When the individual bin thermosat calls for ice (closes) the liquid line valve opens, allowing the liquid refrigerant to enter the expansion valve. The **thermostatic expansion valve** meters the liquid refrigerant into the **evaporator,** where it boils off (evaporates) and absorbs heat. It then moves through the **ball valve** and into the **evaporator pressure regulator valve.** The EPR valve keeps the evaporator pressure above a predetermined point, even though the suction line pressure of the remote high side system may vary. The refrigerant, now a low pressure gas, moves into the suction line of the remote high side system.

MF6RH OPERATION

Water:

There is a common water supply, split into two lines; one for each evaporator.

The water reservoir and float maintain a constant water level in the evaporator.

If the reservoir should overflow, the water will go down the overflow drain.

If the evaporator should leak water, the drip pan drain will collect it, and route it to the drain.

WATER SCHEMATIC

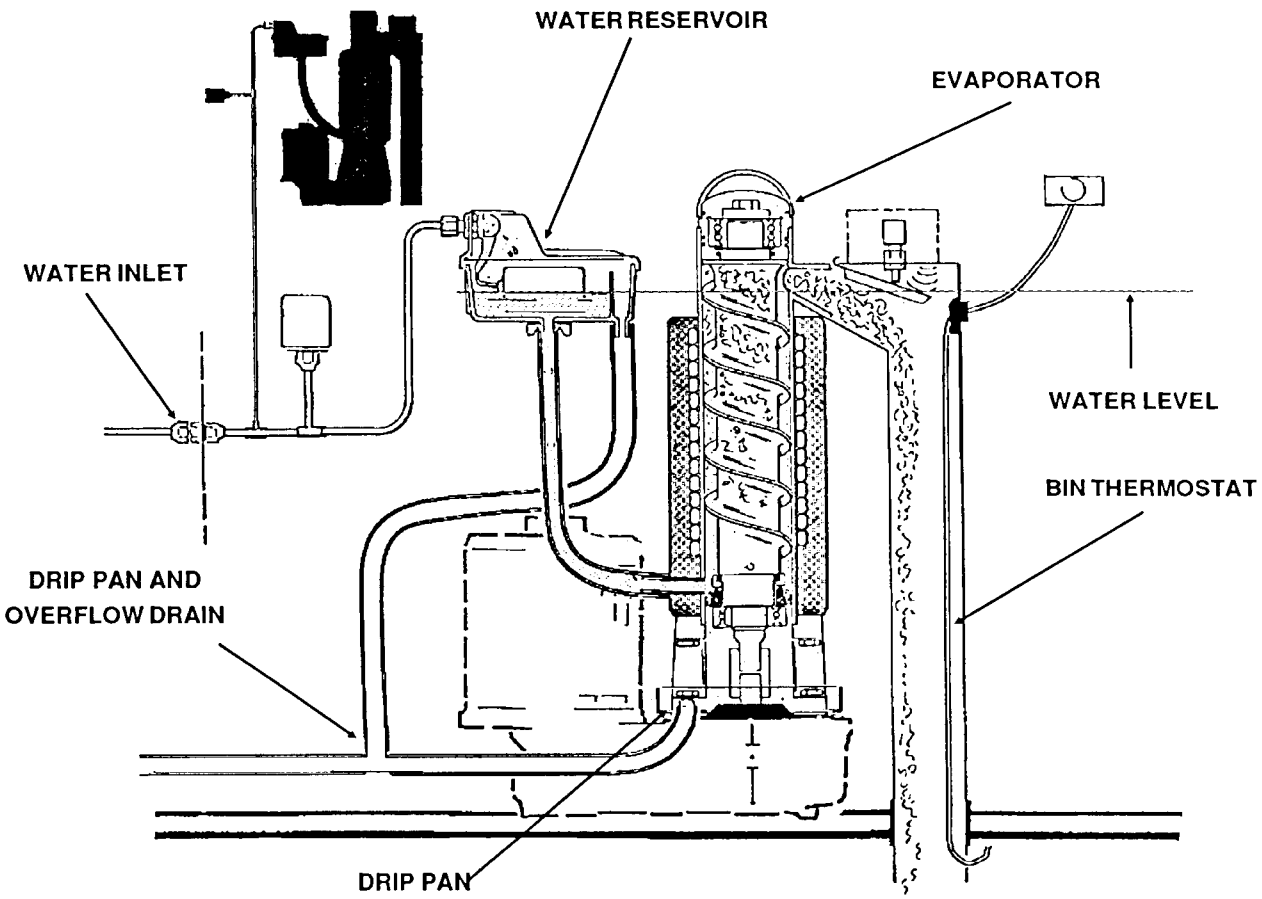

MF6RH MAINTENANCE AND CLEANING

A Scotsman Ice System represents a sizeable investment of time and money in any company's business. In order to receive the best return for that investment, it MUST receive periodic maintenance.

It is the **USERS RESPONSIBILITY** to see that the unit is properly maintained. It is always preferable; and less costly in the long run, to avoid possible down time by keeping it clean, adjusting it as needed, and by replacing worn parts before they can cause failure. The following is a list of recommended maintenance that will help keep your machine running with a minimum of problems.

Maintenance and Cleaning should be scheduled at a **MINIMUM** of twice per year.

ICE MAKER:

The following maintenance should be scheduled at least two times per year. Call your local Scotsman Service Agency.

1. Check and clean or service any optional water treatment devices, if any are installed.
2. Remove front and top panels.
3. Clean the evaporator/auger system using a mixture of Scotsman Ice Machine Cleaner and hot water. This procedure is best done when the bin is empty, because it will produce acidized ice.

a) Mix 12 ounces of Scotsman Ice Machine Cleaner with 3 quarts of hot water. (This is enough for both sides)

WARNING

SCOTSMAN Ice Machine Cleaner contains Phosphoric and Hydroxyacetic acids. These compounds are corrosive and may cause burns. If swallowed, DO NOT induce vomiting. Give large amounts of water or milk. Call physician immediately. In case of external contact, flush with water. KEEP OUT OF THE REACH OF CHILDREN.

b) Block the float arm up to close off the water supply.

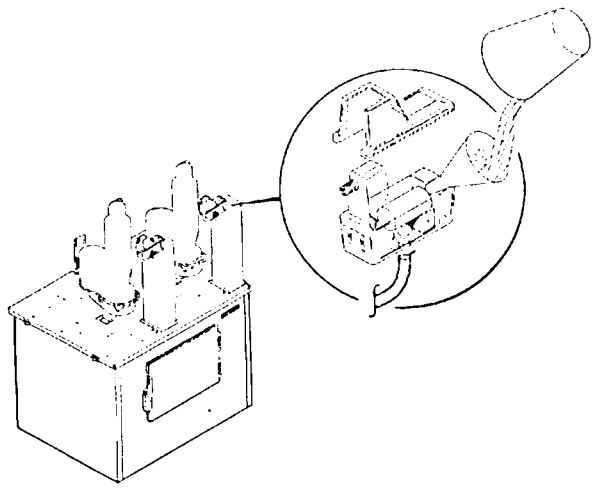

(one reservoir at a time)

c) As the machine is making ice, slowly pour the cleaner solution into the reservoir, maintaining the normal water level in the reservoir.

d) After the solution is half gone, release the float arm and block the float arm in the other reservoir.

e) Pour the remaining solution into the reservoir as in step c.

MF6RH MAINTENANCE AND CLEANING

f) The ice produced will be acidic, and dirty-**do not use it**-instead melt that ice with several buckets of hot water. This also cleans out the bin drain.

4. Check and tighten all bolts and screws.

5. Oil the drive motor once per year.

6. Check the top bearing.

a) Remove rubber cap.

b) Remove brass cover, inspect for water, rust, or obvious wear. If in doubt remove auger and check both top and bottom bearing. Replace the water seal if it leaks or if the auger was removed.

7. Check the electrical controls.]

8. Check for water leaks, reapir as needed.

9. Clean the ice storage bin with soap and water ONCE PER WEEK.

Sanitize the bin every 90 days with an approved sanitizer following the directions for that sanitizer.

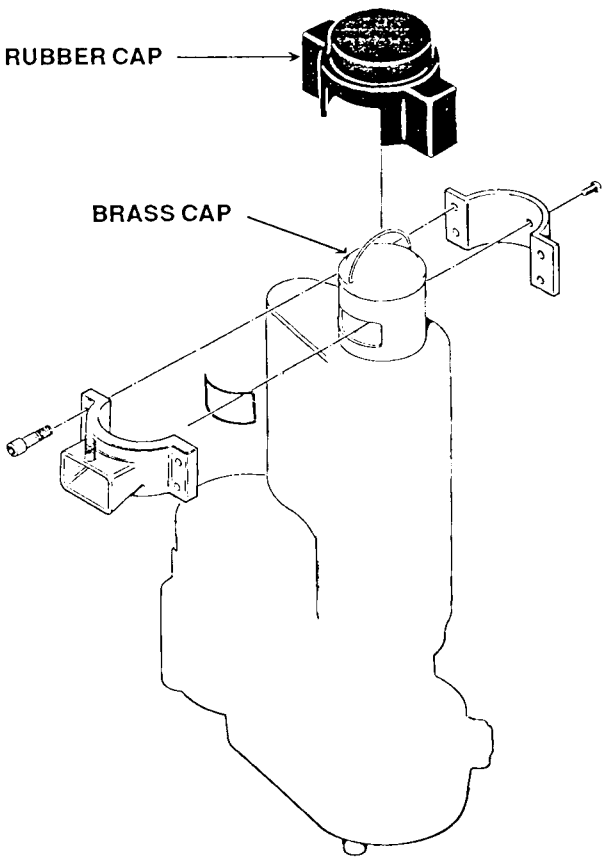

MF6RH SERVICE DIAGNOSIS

This service diagnosis section is for use in aiding the service agent in diagnosing a particular problem. The following chart lists corrections for the causes of known symtoms.

PROBLEM	CAUSE	CORRECTION
Water leak	Water seal leaks,	Replace seal
	Water reservoir cracked	Replace reservoir
	Tubing leaks	Check clamps, replace tubing
	Drain fittings leak	Replace/check drain lines and connections.
Excessive noise	Dirty evaporator	Clean with Scotsman cleaner, or if very dirty remove auger, sand evporator wall and polish auger.
	Lack of water	Check float, and filter if used.
	Wear in gearmotor	Replace parts in gearmotor as required.
	Worn evaporator bearings	Replace bearings
Low ice production	Dirty evaporator	Clean with Scotsman Cleaner.
	Both systems not on:	
	Bin control open	Replace bin control
	Liquid line valve not opening	Check or replace valve.
	TXV not metering	Check or replace valve.
	Both systems on, no ice from one:	
	Auger not turning	Check gearmotor and coupling
	TXV not metering	Check or replace valve.
	Liquid line valve closed	Check/replace valve
Unit does not run (both sides)	Check power supply	Restore power
	Check water supply	Restore water
Unit does not run (one side)	Check bin thermostat	Replace
	Check chute switch	Replace
Chute switch shuts unit off	Check bin thremostat	Replace

MF6RH REMOVAL AND REPLACEMENT

EVAPORATOR COMPONENTS

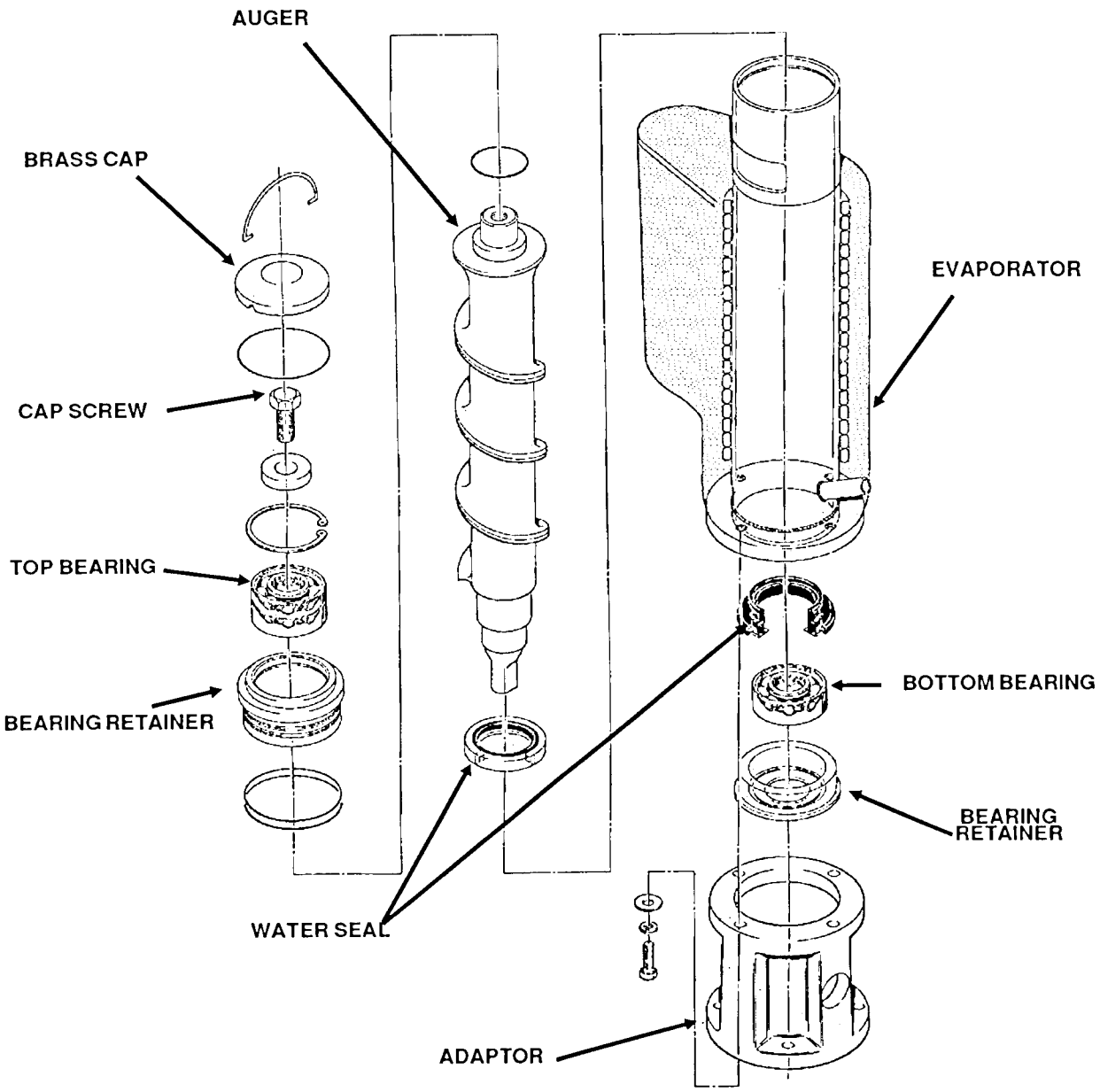

MF6RH REMOVAL AND REPLACEMENT

////////////////////////////////WARNING////////////////////////////////

Be sure that the electical power supply is OFF before proceeding with removal procedures.

//

////////////////////CAUTION////////////////////

SHUT OFF water supply to icemaker

//

Auger, Water Seal, and Bearings:

1. Remove screws and the top panel.
2. Remove rubber cover from evaporator.
3 Remove two wing nuts, and seperate the ice chute from the spout.
4. Remove 4 cap screws and seperate the spout assembly from the spout plate.
5. Remove phillips-head screw from the spout plate.

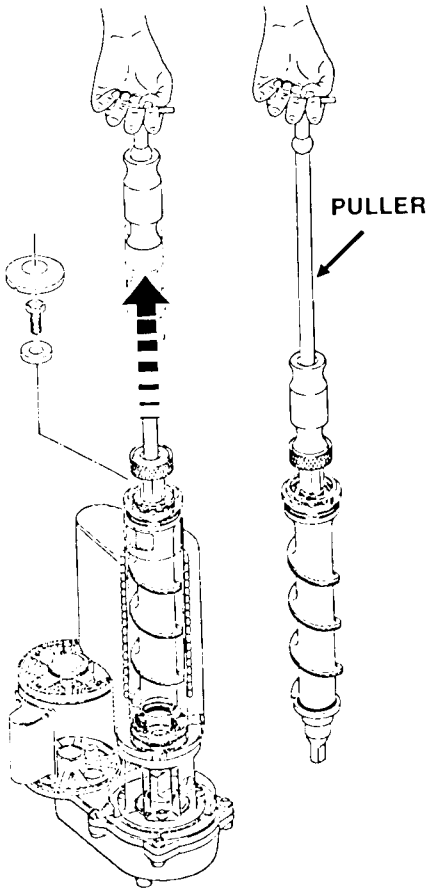

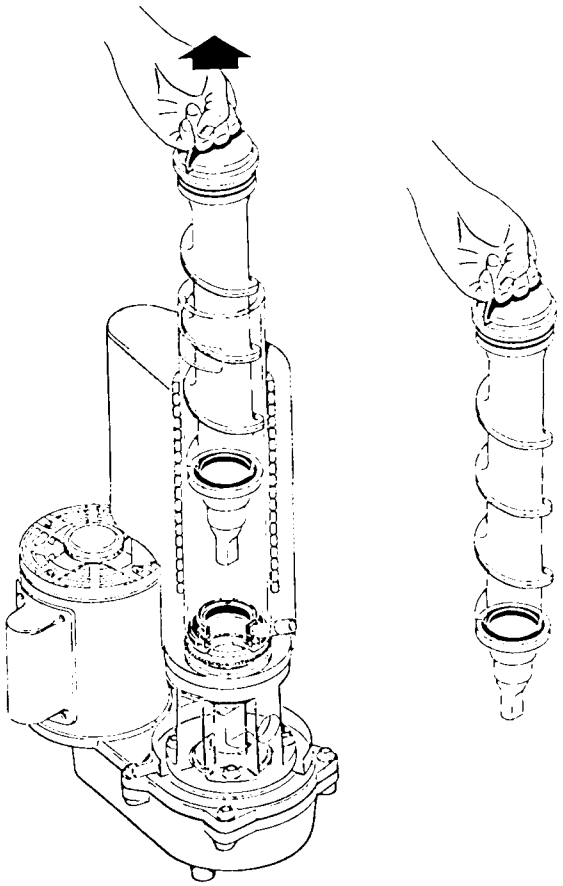

6. Grasp the wire handle at the top of the freezer assembly and pull out the auger with the attached top bearing retainer.

NOTE: The bearing retainer fits very tightly inside the evaporator, so it may have to be worked back and forth to loosen it. If the auger seems stuck, you can either use a slide-hammer type puller as illustrated, or proceed to step 10 to get to the bottom of the auger, and then with a dead-blow hammer or a plastic mallet, tap the bottom of the auger to break it loose.

MF6RH REMOVAL AND REPLACEMENT

7. Remove the brass cap from the auger.

8. Remove the cap screw from the top of the auger, then remove the bearing retainer from the auger.

9. Check the bearing for rough spots, or excessive play.

To replace the bearing:

a) remove snap ring from the bearing retainer.

b) drive or press out the bearing

NOTE: Any time the auger is removed the water seal should be replaced. Any time a bearing is replaced, the other bearing should also be replaced.

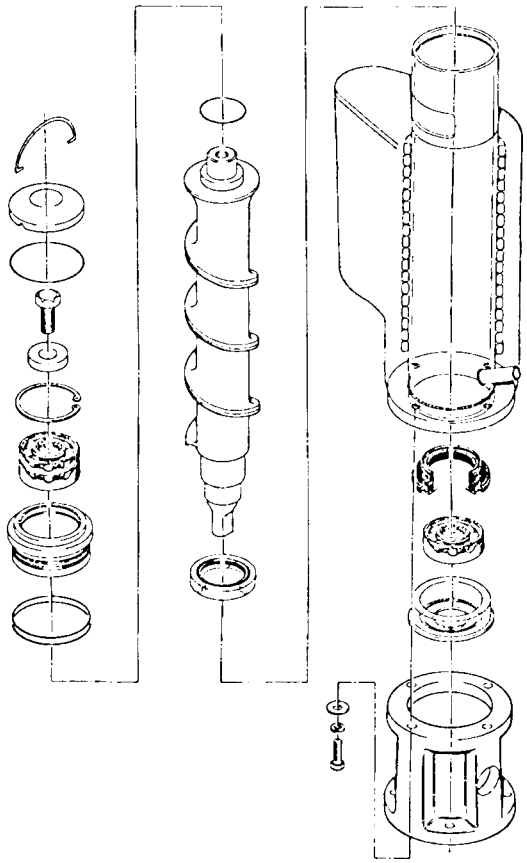

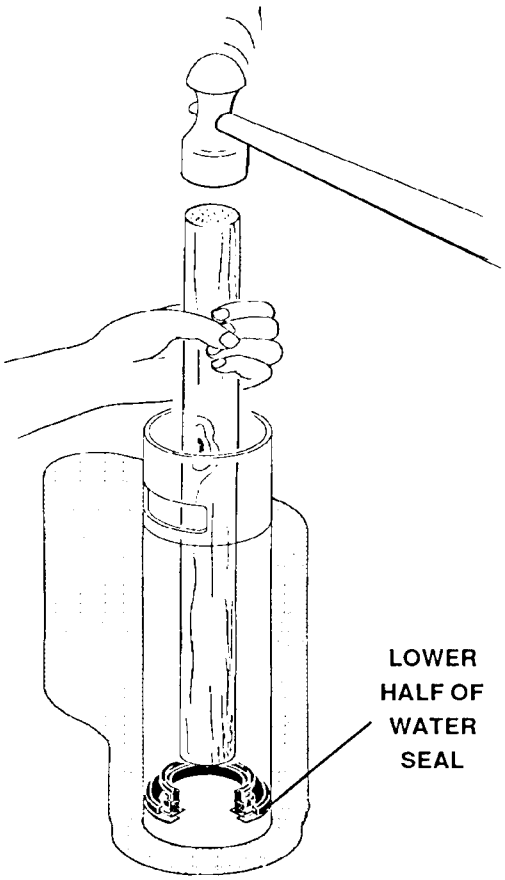

11. Lift up the freezer, and remove the four cap screws holding the adaptor stand to the freezer.

10. To replace the bottom bearing and water seal, remove the four cap screws holding the adaptor stand to the gear reducer.

12. With a dowel or rod, tap out the water seal, and the bottom bearing. See the illustration.

NOTE: If the water seal has been leaking for a long time, water may have gotten into the gear motor case. It would be wise to open up and inspect the gearmotor.

MF6RH REMOVAL AND REPLACEMENT

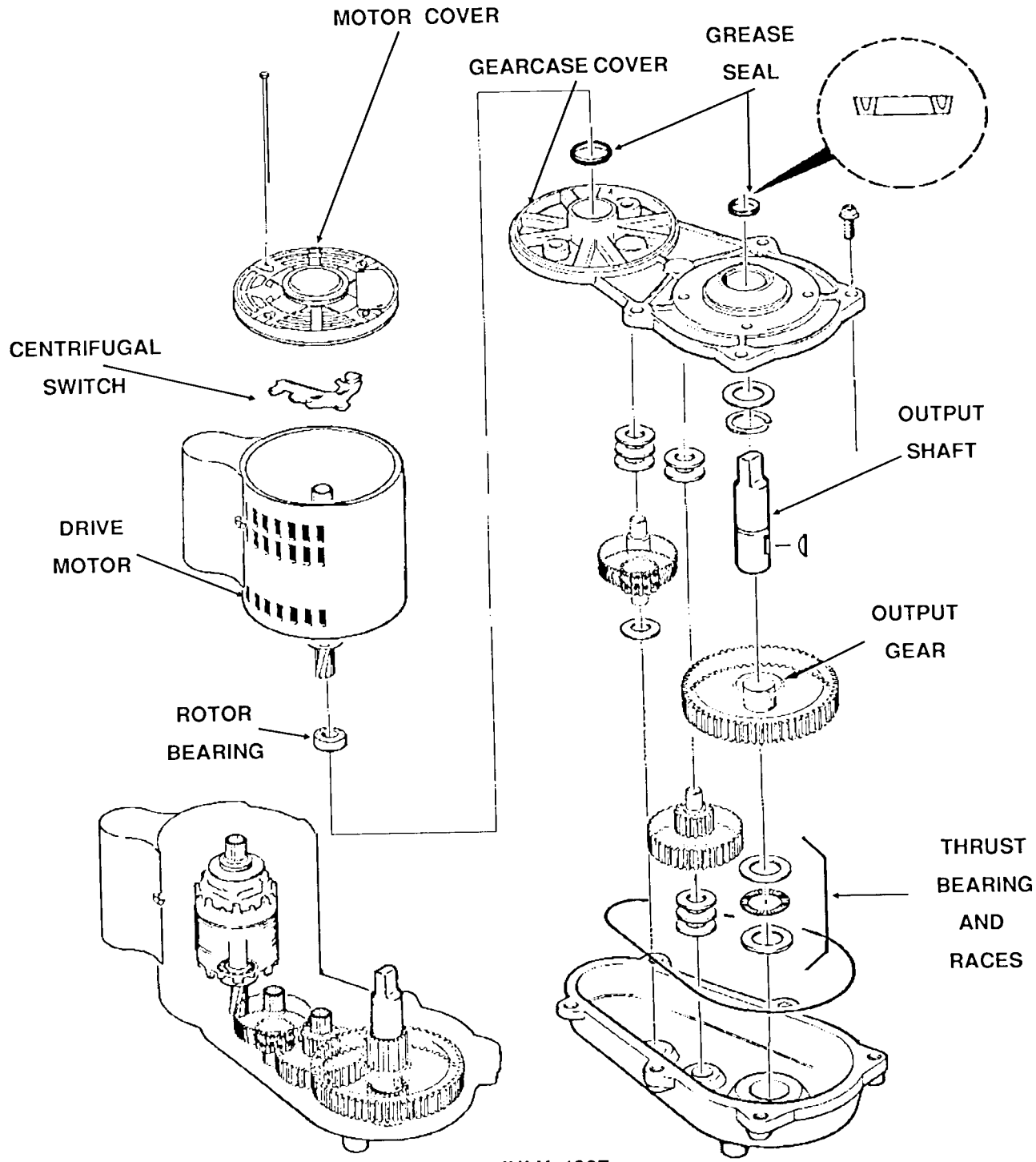

MF6RH REMOVAL AND REPLACEMENT

GEARMOTOR:

////////////////////////WARNING////////////////////////

Disconnnect electrical power before proceding with these repair steps.

//

To remove just the auger drivemotor:

1. Disconnect electrical power leads from the motor.

2. Unscrew four cap screws securing motor to gearcase.

3. Lift off motor winding from the gear case.

4. Use a pry bar, or insert a bolt into the shaft and pull the rotor out of the gear case.

5. Examine grease seal in gearcase. Replace if worn. Add grease to seal and bearing housing before reassembly.

To replace, reverse the removal procedures.

NOTE: Motors must be exchaged complete. DO NOT MIX ROTORS, HOUSINGS OR WINDINGS.

GEARMOTOR ASSEMBLY:

Removal:

1. Remove 4 cap screws holding freezer to gearcase, and lift freezer out of the way.

2. Disconnect the electrical leads from the drivemotor.

3. Remove bolts holding gearmotor plate to the machine base.

4. Lift the gearmotor from the machine base.

To replace the gearmotor assembly, reverse the removal procedure.

Repair of the Gearmotor Assembly:

1. After removing the gear motor assembly from the ice machine, remove the 6 cap screws holding the two gearcase halfs together.

2. Pry the two cases apart, inspect the internal parts, look for:

Condition and quality of the lubricant

(the proper oil level is near the top of the output (largest) gear.

Gear and gear shaft condition

Woodruff key between output gear and shaft

Grease seals

Vent hole open

All bearings good

Be sure to count and retain the spacer washers as they come out of the gearbox

Replace the parts as required, using the part numbers found in the parts list in this manual. Replace the gears into a clean bottom gearcasse, replacing the spacer washers in the same quantity as they were upon disassembly. If no count was kept, refer to the parts illustration.

Note: Some bearing grease should be placed in all bearings before assembly to insure proper lubrication upon start up.

To reassemble:

1. Set top gearcase on gears and spacers and oil.

2. Replace gearcase cover. Drive in alignment pin before tightening screws and torque the screws to 250 inch pounds.

3. Bench test the gearmotor assembly.

Test for noise, amp draw (must not be in excess of nameplate amps) and oil leaks.

Return gearbox to the unit. Be certain all mountin surfaces are clean and reassemble gearbox to chassis and freezer assembly.

MF6RH SERVICE PARTS LIST AND WIRING DIAGRAM

This section contains the Parts Illustrations and Parts Lists for the MF6RH.

A *no number* designation, when used in the part number column, indicates the unit is not available from SCOTSMAN as an assembly. This designation is used only for clarity of division in making the list.

When ordering parts of assemblies, to avoid costly delays and errors, give the part number, the description, and quantity of each part or assembly required.

The wiring diagram for the ice machine has also been included in this section.

Table Of Contents

Panels ..... Page 3

Water System ..... Page 4

Refrigeration ..... Page 5

Freezer ..... Page 6

Ice Chute ..... Page 7

Control Box ..... Page 8

Gear Motor ..... Page 9

Wiring Diagram ..... Page 10

MF6RH SERVICE PARTS

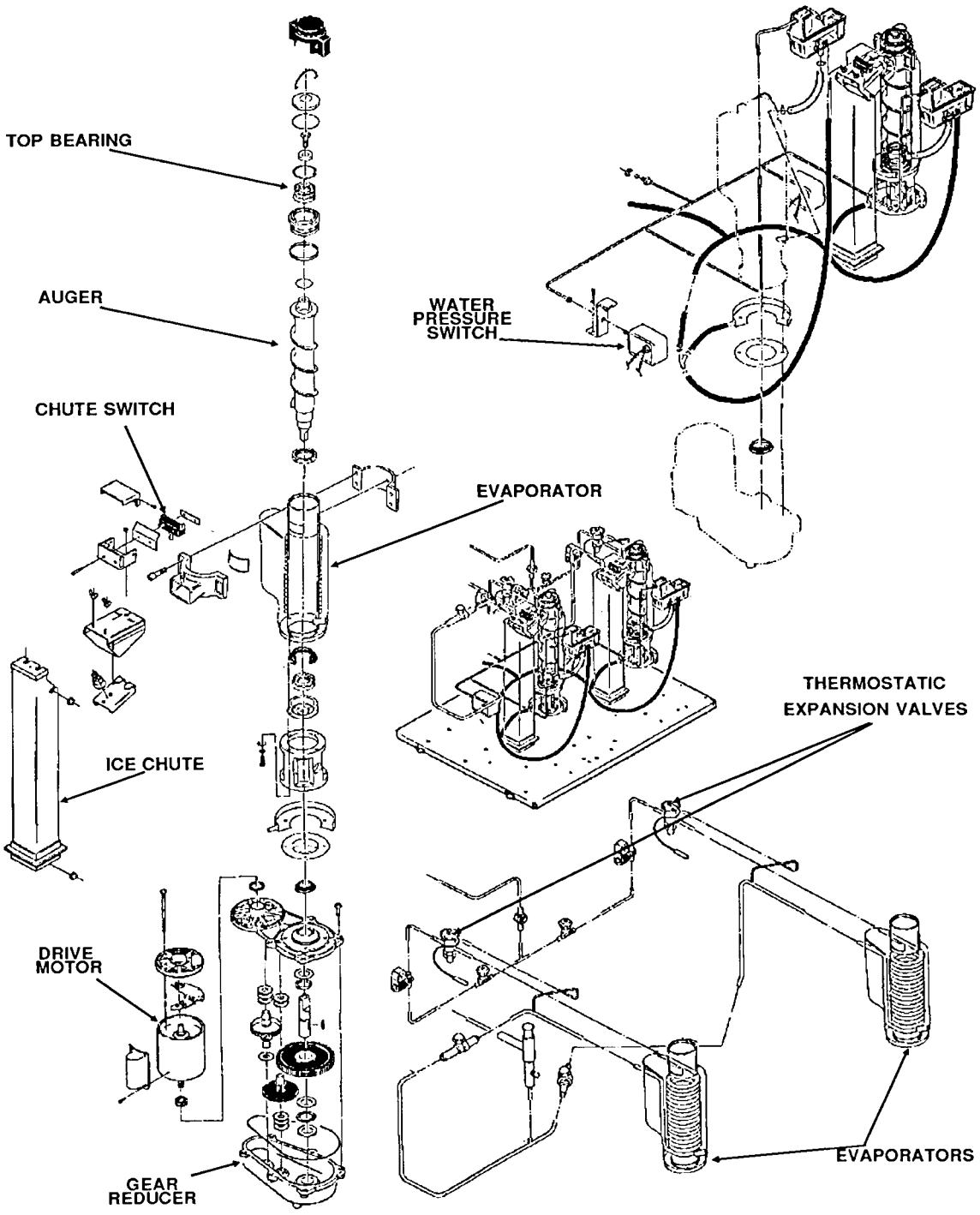

MF6RH SERVICE PARTS

PANELS

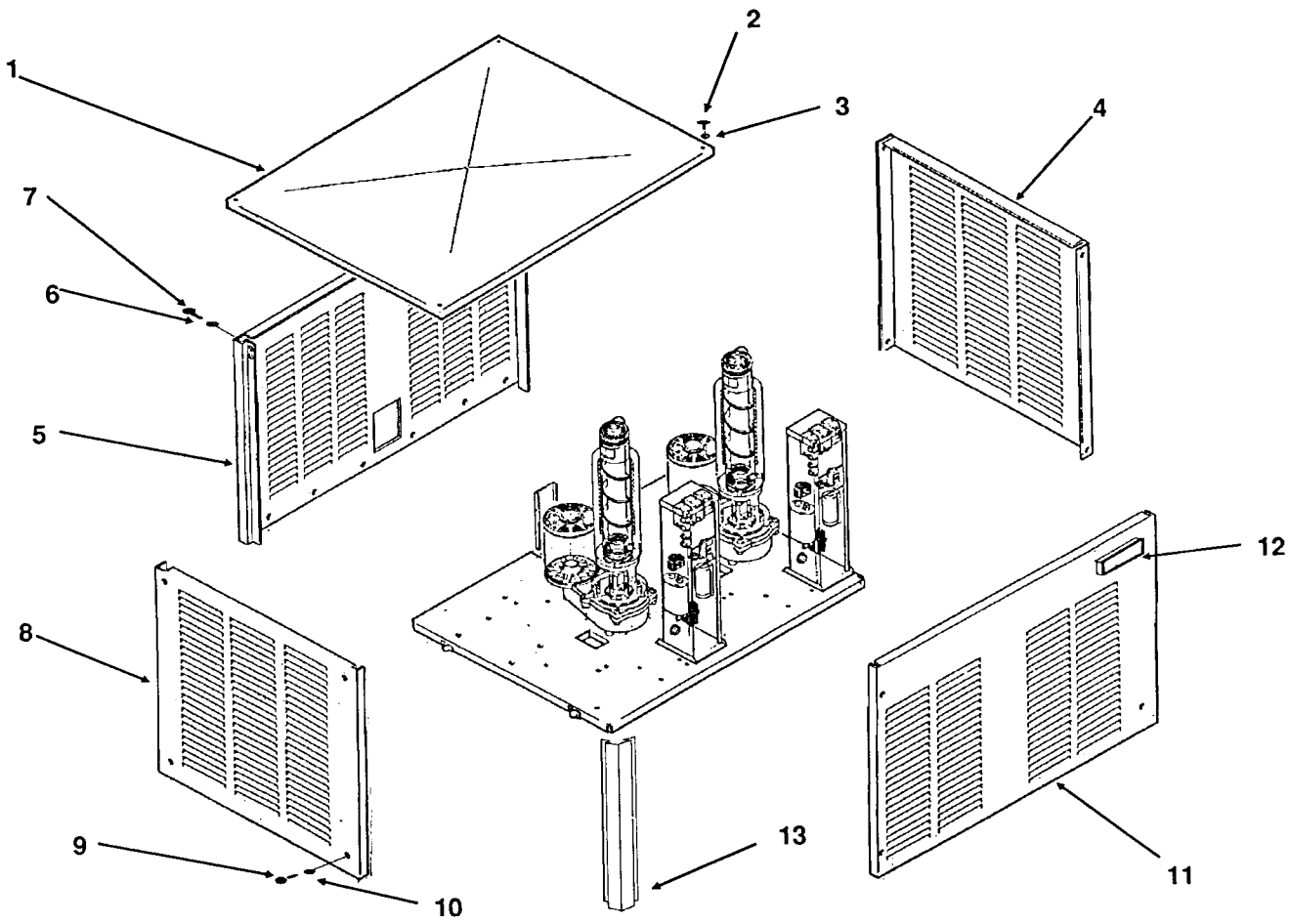

Item Number	Part Number	Description
1	A30672-001	Top Panel
2	03-1404-10	Panel Screw
3	03-1417-03	Washer
4	A30688-001	Right Side Panel
5	A30669-001	Back Panel
6	03-1417-09	Washer
7	03-0571-00	Panel Screw

Item Number	Part Number	Description
8	A30668-001	Left Side Panel
9	03-1417-03	Washer
10	03-01404-19	Panel Screw
11	A30667-001	Front Panel
12	15-0711-01	Emblem
13	A30674-001	Corner Post

MF6RH SERVICE PARTS

WATER SYSTEM

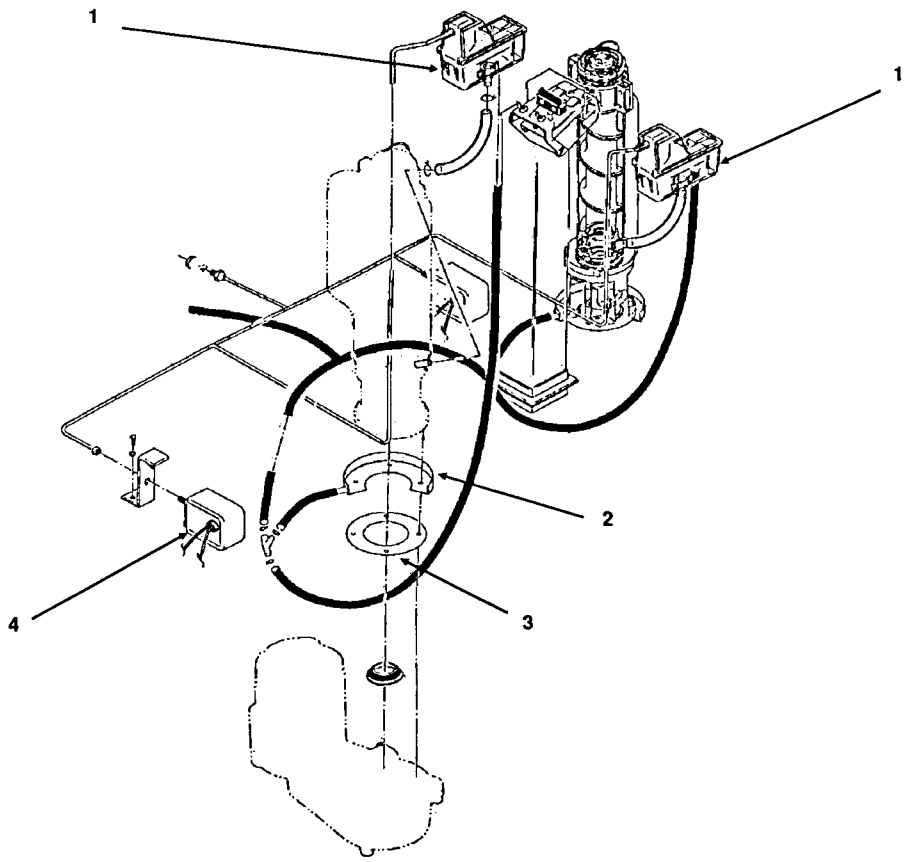

Item Number	Part Number	Description
1	02-2217-01	Reservoir
2	A21290-000	Drip Pan
3	13-0704-00	Gasket
4	11-0296-00	Water Pressure Switch

MF6RH SERVICE PARTS

REFRIGERATION

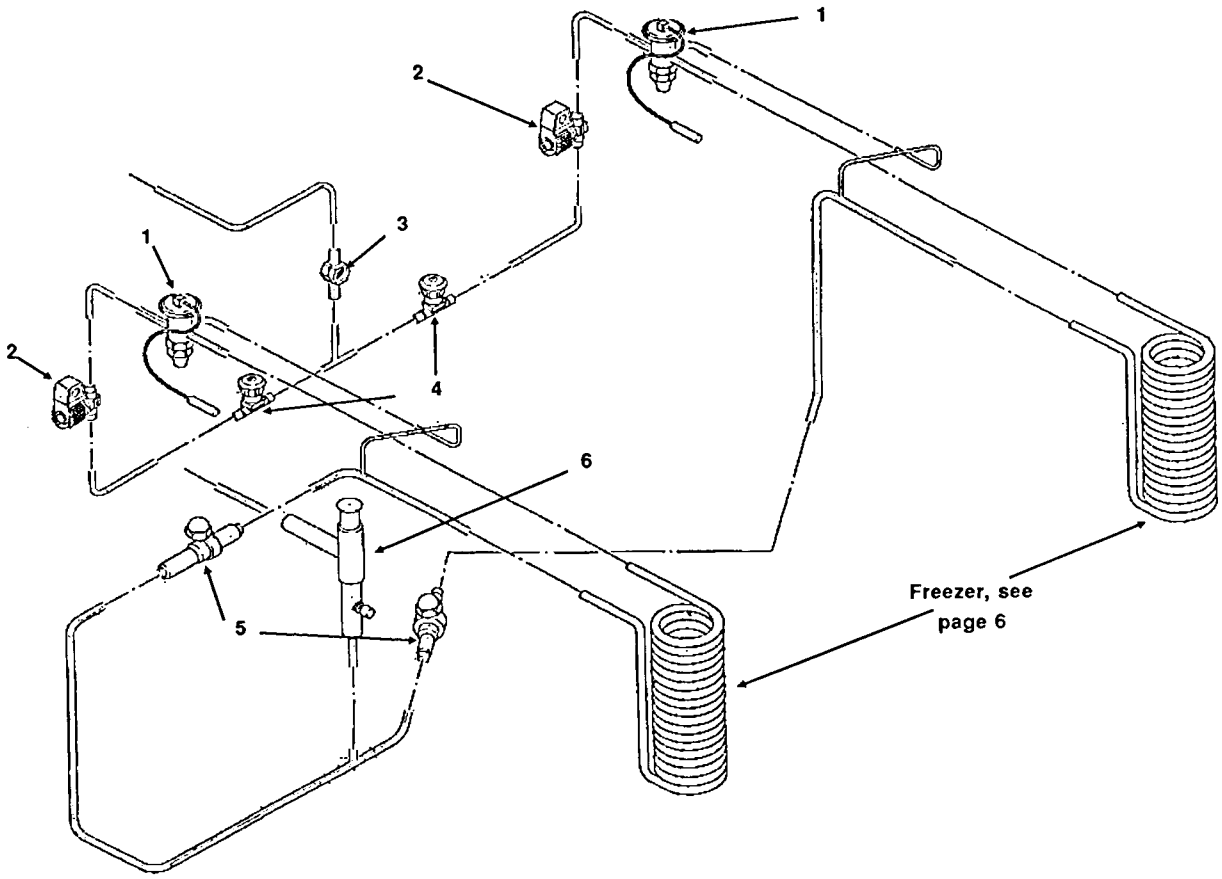

Item Number	Part Number	Description
1	A32860-001	Valve, TXV
2	A32857-001	Valve, Liquid Line
3	16-0762-02	Sight Glass
4	A32858-001	Valve, Shut Off
5	A32855-001	Ball Valve
6	A32859-001	Valve, EPR

MF6RH SERVICE PARTS

FREEZER

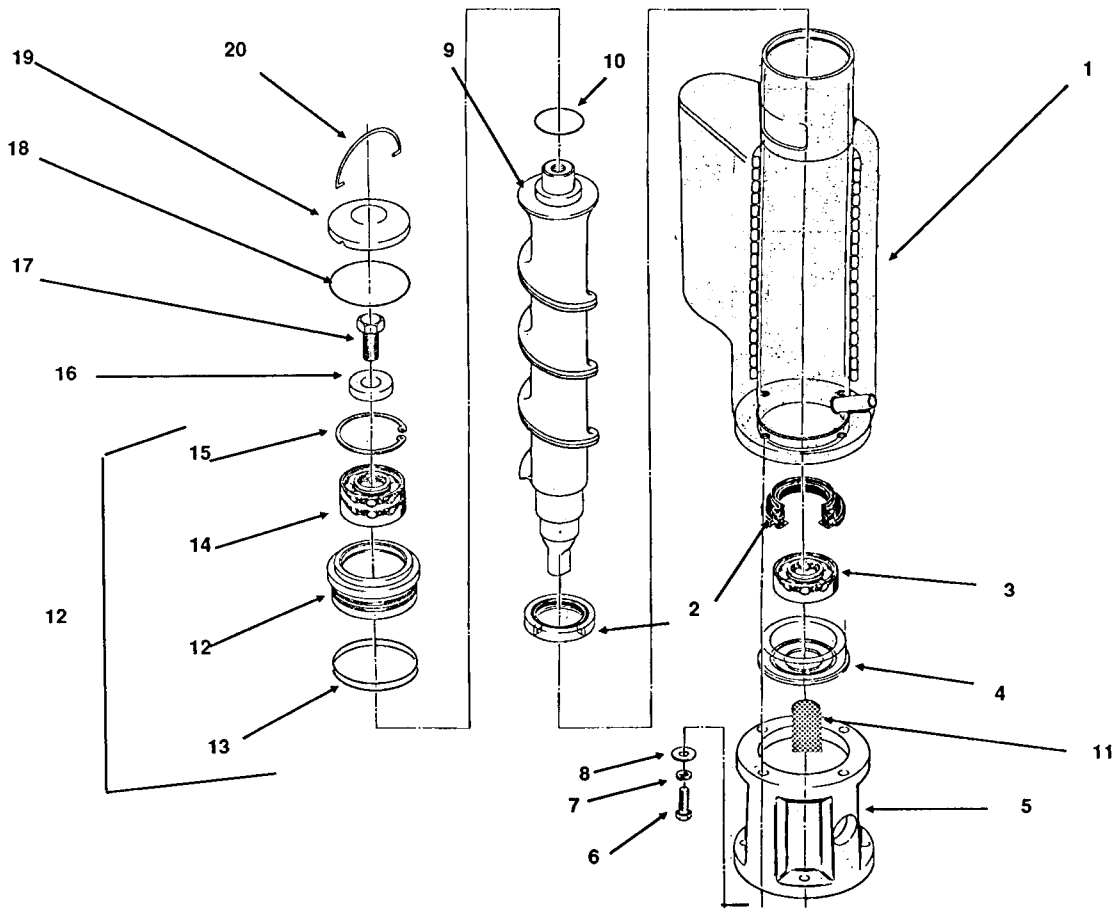

Item Number	Part Number	Description
1	A32424-020	Evaporator
2	02-0929-01	Water Seal
3	02-0619-00	Bottom Bearing
4	A10591-000	Bearing Retainer
5	02-1629-00	Adapter
6	03-1420-03	Screw
7	03-1408-04	Washer
8	03-1410-04	Washer
9	A29467-001	Auger
10	03-0617-15	O-ring
11	15-0573-01	Coupling
12	A26708-001	Bearing Retainer Includes Items 12-14
13	03-0617-40	O-ring
14	02-0646-00	Top Bearing
15	03-1558-04	Snap Ring
16	A06273-000	Washer
17	03-1405-36	Screw
18	13-0617-20	O-ring
19	A08581-000	Cap
20	A08582-000	Hook

MF6RH SERVICE PARTS

ICE CHUTE

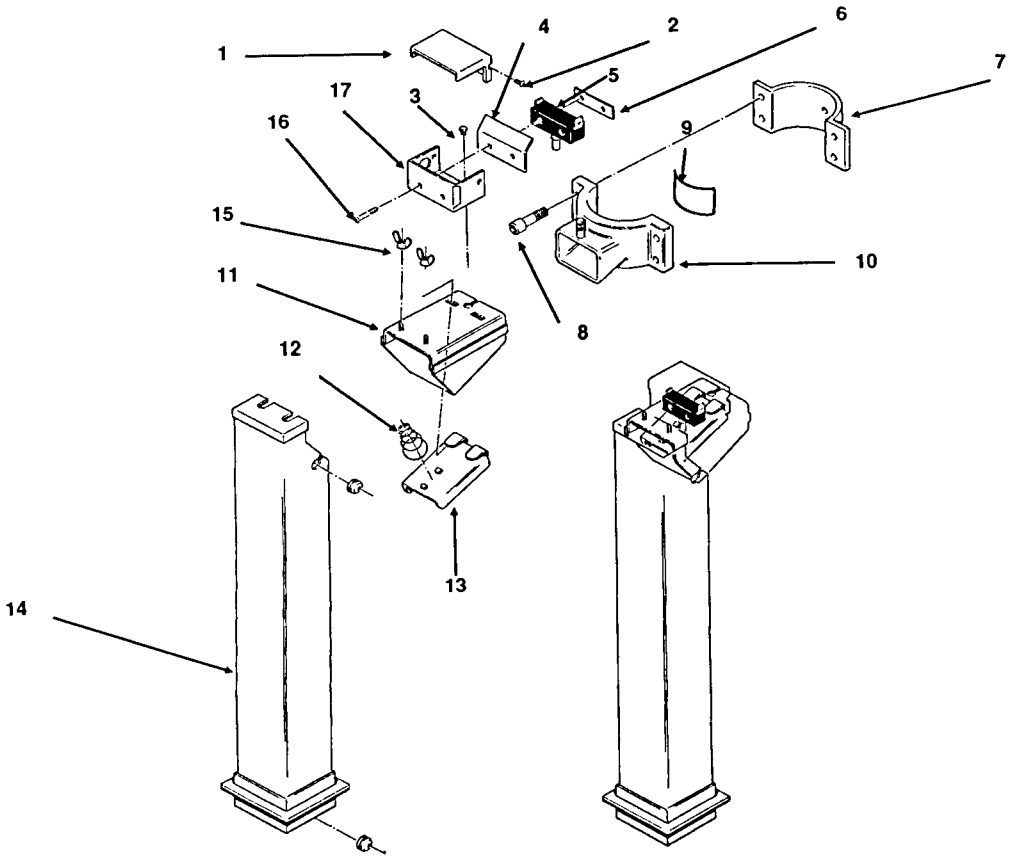

Item Number	Part Number	Description
1	A14241-000	Cover
2	No Number	Screw
3	A14256-000	Nut
4	No Number	Insulation
5	12-1018-01	Switch
6	03-1544-03	Speed Nut
7	A24928-001	Spout Plate
8	03-1544-03	Screw
9	02-1437-00	Gasket
10	A30783-001	Spout Casting
11	A30830-001	Spout
12	02-1312-00	Spring
13	A16353-000	Pressure Plate & Spring
14	A30785-001	Ice Chute
15	03-1587-02	Wing Nut
16	03-1403-08	Screw
17	A14976-000	Limit Box

MF6RH SERVICE PARTS
CONTROL BOX

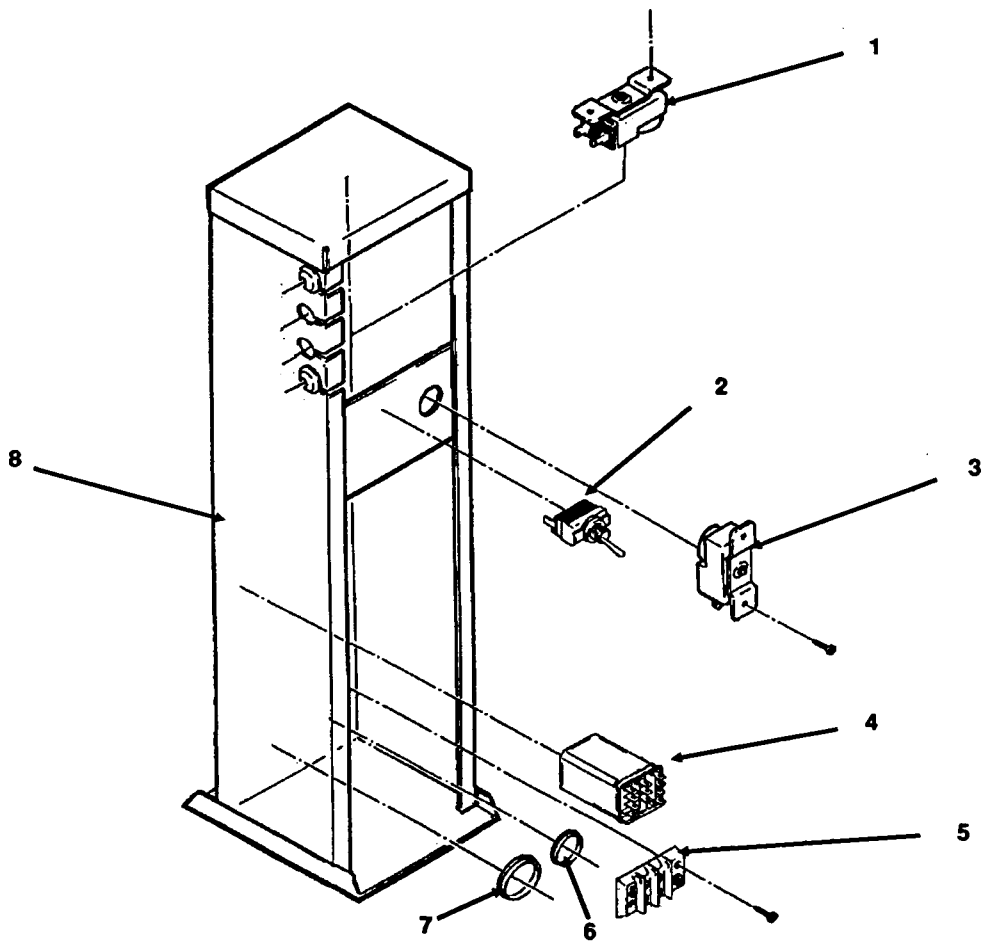

ITEM NUMBER	PART NUMBER	DESCRIPTION
1	11-0412-03	Thermostat
2	12-0426-01	Switch
3	11-0354-00	Bin Thermostat
4	12-2090-05	Relay
5	12-0813-04	Terminal Board
6	12-1213-10	Snap Bushing
7	12-1213-12	Snap Bushing
8	no number	Control Box

MF6RH SERVICE PARTS

GEAR MOTOR

*NOTE: Torque cover mounting screws 250-300 inch pounds.

*NOTE: Gear case cover and bottom are sold as a set.

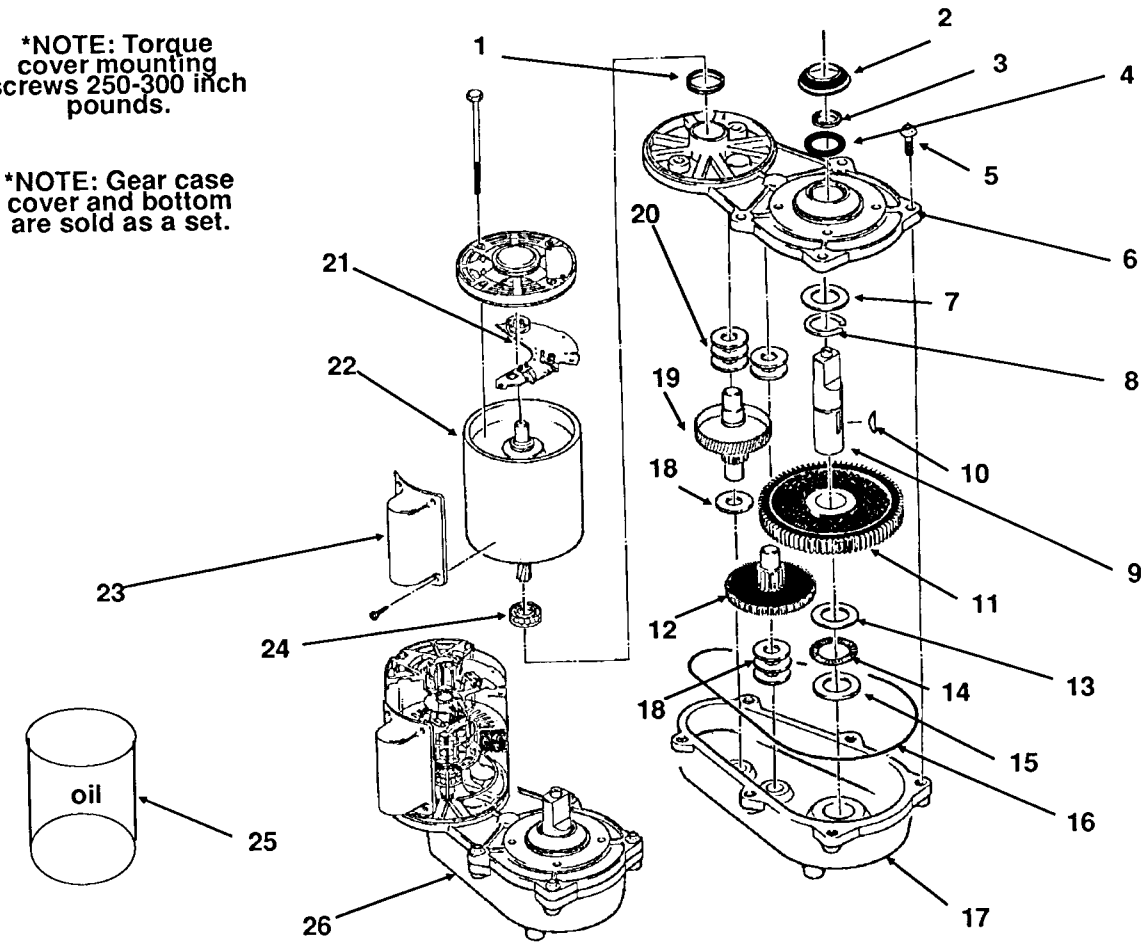

Item Number	Part Number	Description
1	02-1606-00	Oil Seal
2	13-0709-02	Water Shed
3	02-2853-01	Upper Oil Seal
4	02-1607-01	Lower Oil Seal
5	03-1251-01	Screw
6	A31230-001	Gearcase Cover*
7	02-1681-00	Thrust Race
8	03-1363-00	Retaining Ring
9	02-1652-00	Output Shaft
10	03-1364-00	Key
11	02-1653-00	Output Gear
12	02-2071-01	2nd Gear , 3rd Pinion
13	02-1681-00	Thrust Race

Item Number	Part Number	Description
14	A32368-020	Bearing
15	02-1679-00	Thrust Race
16	A26103-001	O-ring
17	A31230-001	Gearcase Bottom*
18	03-1408-24	Washer
19	02-2072-00	1st Gear,2nd Pinion
20	03-1408-24	Washer
21	12-2314-21	Centrifugal Switch
22	A32425-022	Drive Motor, 220v.
23	12-2314-23	Capacitor
24	12-1741-29	Bearing
25	A25835-001	Oil
26	A32402-022	Complete Gear Reducer

MF6RH WIRING DIAGRAM

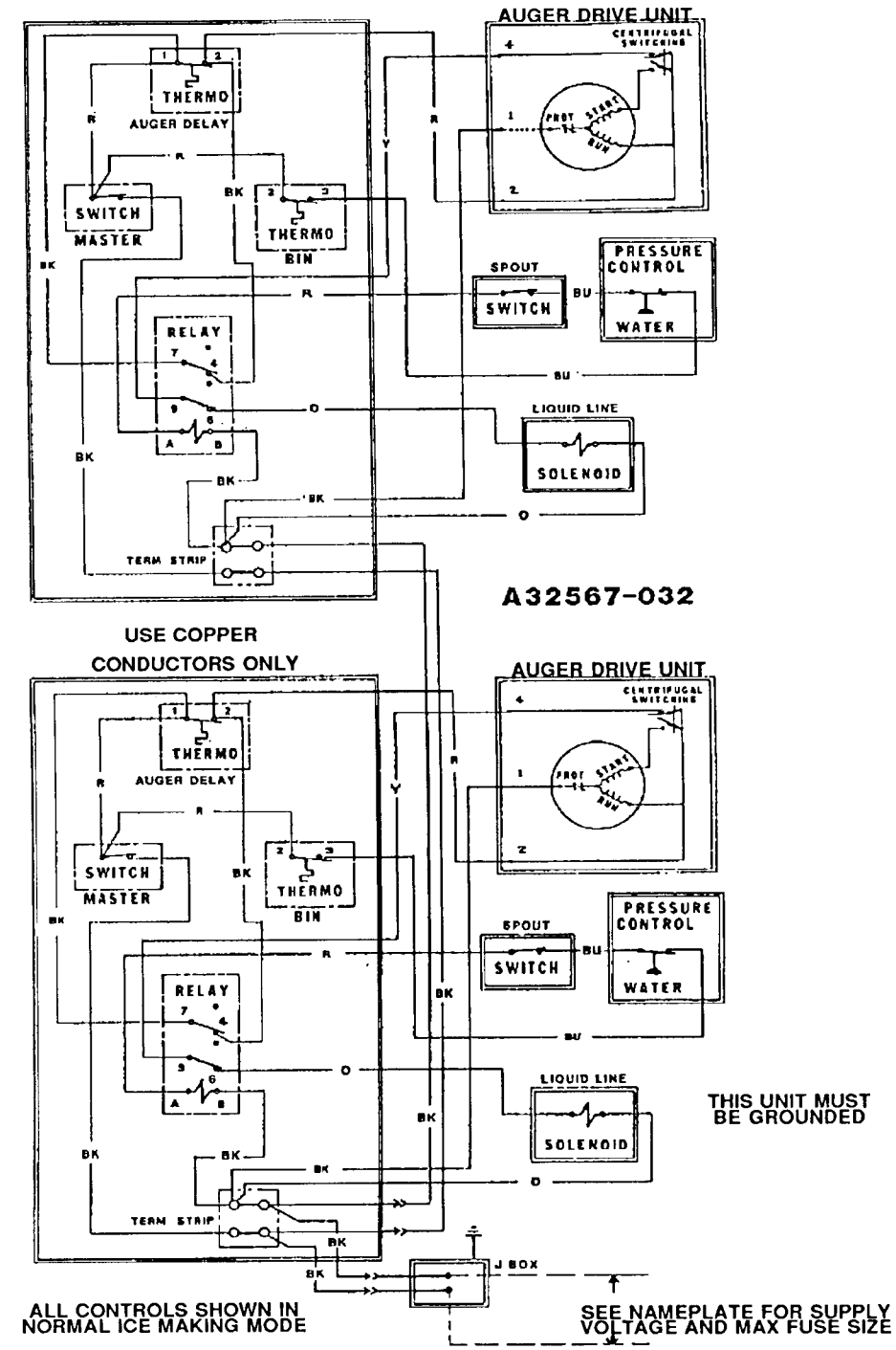

MF700

TABLE OF CONTENTS

General Information and Installation

Introduction 4
Unpacking and Inspection 4
Location and Leveling 5
Electrical Connections 5
Bin Thermo Bracket Installation 6

Operation

Start-up 8

Principles of Operation

How it Works 10
Icemaker 10
Electrical/Refrigeration 11

Adjustment Procedures

Bin Thermostat Control 12
Leg Levelers 13
Water Regulator 13
Water Reservoir/Float 13

Removal and Replacement

Auger, Water Seal, Bearings, and Coupling 13
Compressor 14
Condenser 15
Drivemotor 16
Fan motor 16
Freezer 16
Spout 17
Water Pressure Control 17
Water Regulator 17

Maintenance and Cleaning 21

Service Diagnosis 22

Parts lists and wiring diagrams are in the center of this manual, printed on yellow paper.

THIS PAGE
INTENTIONALLY
LEFT BLANK

SPECIFICATIONS

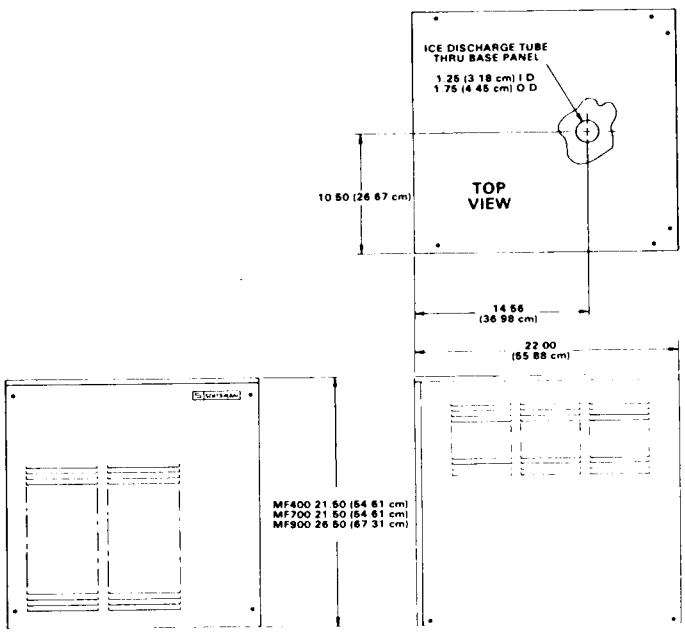

FRONT VIEW

SIDE VIEW

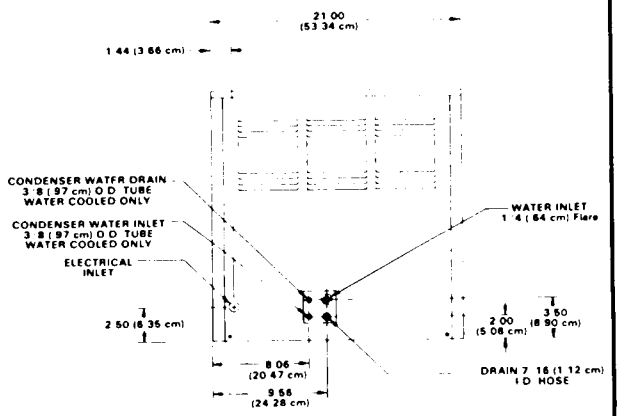

BACK VIEW

SPECIFICATIONS (Con't)

MODEL NUMBER		MOTORS	VOLTS	HP/WATT	F L A	L R A
		COMP				
SERIAL NUMBER		DRIVE				
		FAN				
REFRIGERANT 12	HEATER					
07	WATTS	OTHER				
TEST PRESSURE 140 LO - 235 HI						
A C SUPPLY VOLTAGE				WIRES	CYCLES	PHASE
MAXIMUM FUSE SIZE	AMPS	MINIMUM CIRCUIT AMPACITY				

EASY ACCESS SERVICE PANELS

OPTIONAL PANELS KIT

SPKMF700A Stainless steel panel for use with the MF700.

SEE NAMEPLATE for electrical and refrigeration specifications. Locate the NAMEPLATE on the lower, left part of the Rear Panel. Shown at left.

Remove Front Panel to locate the Model/Serial Number plate, shown below, on the front center of the chassis base.

MODEL NUMBER	
SERIAL NUMBER	

We reserve the right to make product improvements at any time. Specifications and design are subject to change without notice.

This icemaker has been engineered to our own rigid safety and performance standards. The National Sanitation Foundation (NSF) seal, signifies that it is listed with the NSF and that it complies with the materials and construction standards of the NSF. In addition, the Underwriters Laboratories, Inc., (UL) Listing Mark and the Canadian Standards Association (CSA) Monogram, both signify that its construction and design have been inspected and tested by them. NSF, UL and CSA inspectors also periodically examine production icemakers at the factory, to assure continued compliance.

To retain the safety and performance built into this icemaker, it is important that installation and maintenance be conducted in the manner outlined in this manual.

GENERAL INFORMATION & INSTALLATION

INTRODUCTION

This manual provides the specifications and the step-by-step procedures for the installation, start-up and operation, and the maintenance and cleaning for the SCOTSMAN Model MF700 Modular Flakers.

The Model MF700 Modular Flakers are quality designed, engineered and constructed, and thoroughly tested ice-making systems, providing the utmost in flexibility to fit the needs of a particular user. Separate sections detail more specifically: General Information & Installation; Start Up Operation; Principles of Operation; Adjustment and Removal and Replacement Procedures; Maintenance and Cleaning Instructions; Service Diagnosis; Wiring Diagrams; and, the Illustrated Assemblies and Parts Lists.

DESCRIPTION

An attractive compact cabinet of leathergrain embossed steel, with charcoal brown baked enamel high glossy finish. Also, an optional stainless steel panel kit is available. These removable panels allow easy access to electrical and mechanical components for cleaning and maintenance.

SEALED REFRIGERATION SYSTEM

To provide quiet efficient operation of the Icemaker, the Compressor motor is internally spring-mounted. The Compressor motor is covered by a five year parts warranty. The Freezer Assembly is powered by a direct-drive, gear motor, Drivemotor Assembly.

STORAGE BINS

Since the MF700 Modular Flakers are continuous flow type icemakers and do not have their own attached ice storage bins, it is necessary to use an auxiliary bin, such as the bins listed below:

Use Bins: B60, B90

Recommended for B-60, BX25 Extension and KBT1 top.

UNPACKING AND INSPECTION

1. Call your authorized SCOTSMAN Distributor or Dealer, for proper installation. He's listed under ICE MAKING EQUIPMENT and MACHINERY in the yellow pages of the telephone book.
2. Visually inspect the exterior of the shipping container and skid and any severe damage noted, should be reported to the delivering carrier; and, a concealed damage claim filed subject to internal inspection, with carrier representative present.
3. BEFORE removal of any panels or packing, carefully lay the cabinet on its back and remove the shipping bolts and the shipping base or skid.
4. When ordered, install the optional leg levelers in the cabinet base sockets; then, raise the cabinet to the upright position.
5. Remove screws and shipping tape, and all doors and service panels from the cabinet, and inspect for any concealed damage. Notify carrier of any concealed damage claims, as stated in step 2 above.
6. Remove all internal support packing, tape and wires in machinery compartment.
7. Check that refrigerant lines do not rub or touch lines or other surfaces, and that fan blades, if any, move freely.
8. Check that the Compressor is snug on all mounting pads.
9. Use clean damp cloth or disposable paper wiper to wipe clean the exterior surfaces of the cabinet.
10. See NAMEPLATE on the rear service panel, near the left rear corner of the cabinet and check that the location source voltage corresponds with the voltage specified on the nameplate.

CAUTION

Improper voltage supplied to the Icemaker will void your parts replacement program.

12. Remove the Manufacturer's Registration Card from the front of the User's Manual and fill in all spaces including: Model Number and Serial Number taken from the aluminum plate located at the front center of the Chassis base, with Front Panel removed. Forward the completed, self addressed, registration card to the SCOTSMAN Factory.

LOCATION AND LEVELING

CAUTION

This Modular Flaker is NOT designed for outdoor installations where air temperatures are below 50-degrees F., or above 100-degrees F., and the water temperature is below 40-degrees F. or above 100-degrees F. Extended periods of operation at temperatures exceeding these limitations will constitute misuse, under the terms of the SCOTSMAN Manufacturer's limited warranty coverage.

1. Position the Flaker in the selected permanent location.

NOTE

Prior consideration for location site shall include:

1. *Minimum room temperature 50-degrees F. and maximum room temperature 100-degrees F.*
2. *Water inlet temperatures: Minimum 40-degrees F. and Maximum 100-degrees F.*
3. *Well ventilated location for Air-Cooled model, advising user to frequently clean Condenser, located directly behind front service panel.*
4. *SERVICE ACCESS: Adequate space for all service connections, through the rear of the Cabinet. A six-inch minimum clearance at rear, left and front louvered panels, for routing cooling air drawn into and exhausted out of the compartment, to maintain proper condensing operation on Air-Cooled models.*

2. Level the Cabinet in both the left-to-right and front-to-rear directions. The optional leveling legs can be adjusted with an open-end switch.

ELECTRICAL CONNECTIONS

SEE NAMEPLATE for current requirements to determine wire size to be used for electrical hookup. The Modular Flaker requires a solid earth ground wire. See wiring diagram.

Be certain the Modular Flaker is connected to its own electrical circuit and individually fused. The maximum allowable voltage variation should not exceed ten percent of the nameplate rating, even under starting conditions. Low voltages can cause erratic operation and may be responsible for serious damage to the overload switch and motor windings.

All external wiring should conform to the National, State and local electrical code requirements. Usually an electrical permit and services of a licensed electrician will be required.

WATER SUPPLY AND DRAIN CONNECTIONS

A. AIR-COOLED MODELS: The recommended water supply line is a 1/4-inch O.D. copper tubing. Connect to cold water supply line with standard plumbing fittings, with a shutoff valve installed in an accessible place between the water supply and the Cabinet.

In some cases, a plumbing permit and services of a licensed plumber will be required.

CAUTION

To prevent damage to the freezer mechanism, DO NOT operate this unit when the water supply is OFF, or is below 20 PSI, the recommended water pressure. Position the master switch to the OFF position, until proper water supply is resumed.

The Icemaker in this Cabinet will not operate when water supply temperatures are below 40-degrees F. or above 100-degrees F.

B. WATER-COOLED MODELS: On Water-Cooled models a separate connection, to the Condenser is required. A 3/8-inch O.D. copper tubing is provided for a separate water inlet line to be connected and a separate drain line to be connected.

NOTE

The CAUTION, in the test above for the Air-Cooled models equally applies for the Water-Cooled models. In both type installations, water supply must be installed to conform with local plumbing codes. In some cases, a plumbing permit and services of a licensed plumber will be required.

C. DRAIN CONNECTIONS: All drains are gravity type and must be 1/4-inch per foot on horizontal runs. The drains to be installed to conform with local code. The drain receptacle should be an open, trapped or vented construction.

Recommended Bin drain is 5/8-inch O.D. copper tubing, should be vented and run separately. Connect a drain line to 7/16-inch I.D. tube from the freezer drip pan and a separate drain line to 3/8-inch O.D. drain tube from the Water-Cooled Condenser, on Water-Cooled models.

CAUTION

This Modular Flaker will NOT operate when water supply temperature is below 40-degrees F., or above 100-degrees F. Requires 20 PSI flowing water pressure, without interruption.

BIN THERMO BRACKET INSTALLATION

When shipped from the factory, each Modular Flaker has a Nylobraid ice transport tube which must be attached to the end of the Ice Spout, with a hose clamp. The free end of the tube has a Bin Thermo Bracket installed and secured to it with tape. The Bin Thermostat capillary tube is also installed and secured through slots and snug around tabs on the Bin Thermo Bracket, ready for final installation into an ice storage bin.

Most SCOTSMAN upright or vertical Bins have pre-punched holes. Punch out hole that aligns with the hole in the Flaker cabinet base and install the Flaker on top of the bin. Next, insert the assembled Bin Thermo Bracket through the two-inch hole in the cabinet base into the Bin. Attach the flange of the Bin Thermo Bracket to the cabinet base, two places, with two No. 8 Sheet Metal Screws; then, slide the Sealing Pad, on the tube, down flush with the cabinet base around the tube.

FINAL CHECK LIST

1. Is the Cabinet level? (IMPORTANT)
2. Have all electrical and piping connections been made?
3. Has the voltage been tested and checked against the nameplate rating?
4. Is the water supply line shutoff valve installed and electrical wiring properly connected?
5. Have the Bin and Cabinet been wiped clean?
6. Have the Compressor hold down nuts been checked, to be sure the Compressor is snug on the mounting pads?
7. Has the owner/user been given the User Manual and instructed on how to operate the Icemaker.
8. Has the Manufacturer's Registration Card been properly filled out? Check for correct Model and Serial numbers from Serial nameplate, then mail the completed card to the SCOTSMAN factory.
9. Check all refrigerant lines and conduit lines, to guard against vibration or rubbing and possible failure.
10. Is there at least six inches clearance behind and around Cabinet for proper air circulation?
11. Is the Cabinet in a room where ambient temperatures are a minimum of 50-degrees F. all year around?
12. Has water supply pressure been checked to insure a minimum of 20 PSI?
13. Has the owner been given name and telephone number of the authorized SCOTSMAN Service Agency serving him?

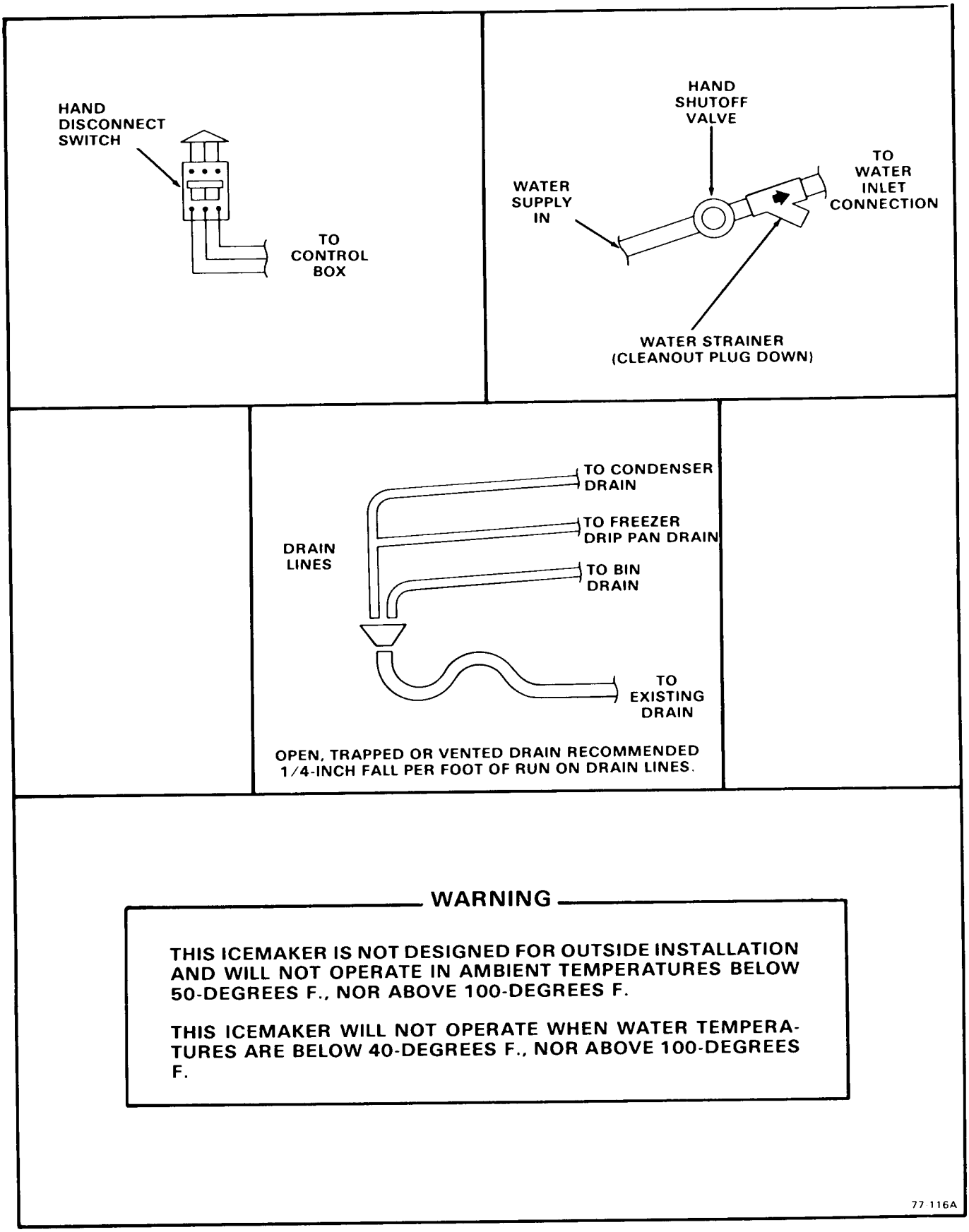

Figure 1-1. Installation Practice.

OPERATING INSTRUCTIONS

START UP

1. Remove screws and the Front Panel.
2. OPEN the water supply line shutoff valve.
3. Observe the water filling operation, see Figure 2 - 1:
   a. Water flows into Water Reservoir.
   b. Float moves up as water rises.
   c. Water flows through water feed line to bottom of Freezer Assembly.
   d. Float stops water flow, when water level reaches 3/8-inches below the molded horizontal line, on the body of the Water Reservoir.
4. Move the manual ON-OFF toggle switch, on the front of the Control Box to the ON position, to start the automatic icemaker operation.
5. After two or three minutes of operation, observe that flaked ice begins dropping off the Auger and out the Ice Spout, through the Nylobraid tubing and into the Ice Storage Bin.
6. Let the system operate for about 30 minutes or until ice covers the bottom of the Bin. Check for any excess noises beyond normal Compressor noise:
   a. Fan noises, when Air-Cooled: Blades touch other surfaces; blades bent, out-of-balance.
   b. Vibrating type, from touching lines.
   c. Chattering: Lack of water in Freezer.
   d. Compressor loose at one or more holddown bolts.

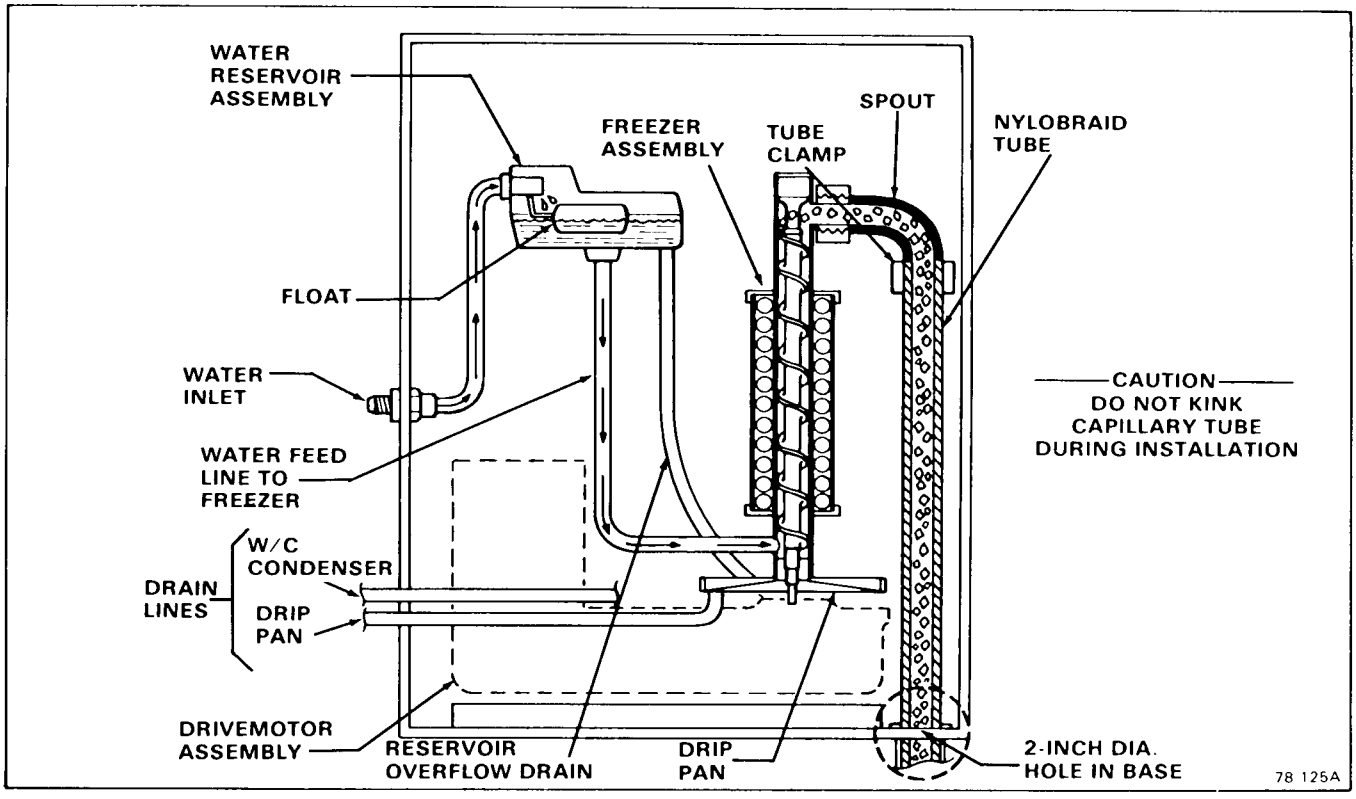

Figure 2 - 1. Water Schematic.

CAUTION

DO NOT operate this Icemaker when the water supply is shut OFF, or is BELOW the recommended 20 PSI water pressure. Move the manual ON-OFF toggle switch on the front of the Control Box to the OFF position immediately.

7. Hold a handful of ice around the Ice storage Bin Thermostatic Control Bulb to test shutoff. Less than one minute is about normal for Bulb shutoff function to cause the Compressor to stop.

NOTE

Within minutes after the ice is removed from the sensing bulb, the bulb will warm up and cause the Icemaker to restart. This control is factory set and should not be reset until testing is performed. Normal setting: about 35-degrees F. CUT-OUT and 45-degrees F. CUT-IN, to prevent short cycling.

8. Thoroughly explain to the owner/user the significant specifications of the Icemaker, the start up and operation, going through the procedures in the operating instructions. Answer all questions about the Icemaker, by the owner; and, inform the owner of the name and telephone number of the authorized SCOTSMAN Service Agency serving him.

PRINCIPLES OF OPERATION
How It Works

ICEMAKER.

The water supply flows from the building source through the inline water strainer, enters at the Cabinet fitting and on to the Water Reservoir. The Water Reservoir functions to maintain a constant water level inside the Freezer Assembly. Water from the Water Reservoir enters at the bottom of the Freezer Assembly and is changed into ice by low temperatures inside the Freezer.

A stainless steel Auger within the Freezer is powered by the Drivemotor Assembly, a direct-drive gearmotor, and the rotating Auger carries the ice upward to the flared end of the Auger, see Figure 3-1, where excess water is pressed out of the ice, as it is extruded or flaked out through the Ice Spout, through the Nylobraid tubing and into the Ice Storage Bin.

Moving the manual ON-OFF toggle switch, on the front of the Control Box, to the ON position starts the automatic and continuous icemaking process. When the Ice Storage Bin has been filled with ice, up to the level of the Thermostatic Control Bulb, the sensing bulb shuts off the icemaking process.

As the ice is removed from the Ice Storage Bin, the Thermostatic Control Bulb warms up, restarting the automatic icemaking process.

Factory settings are 35-degrees F. CUT-OUT and 45-degrees CUT-IN.

Altitude correction begins at 2000 feet, CUT-IN and CUT-OUT screws should be adjusted equally, not more than one-fourth turn at a time.

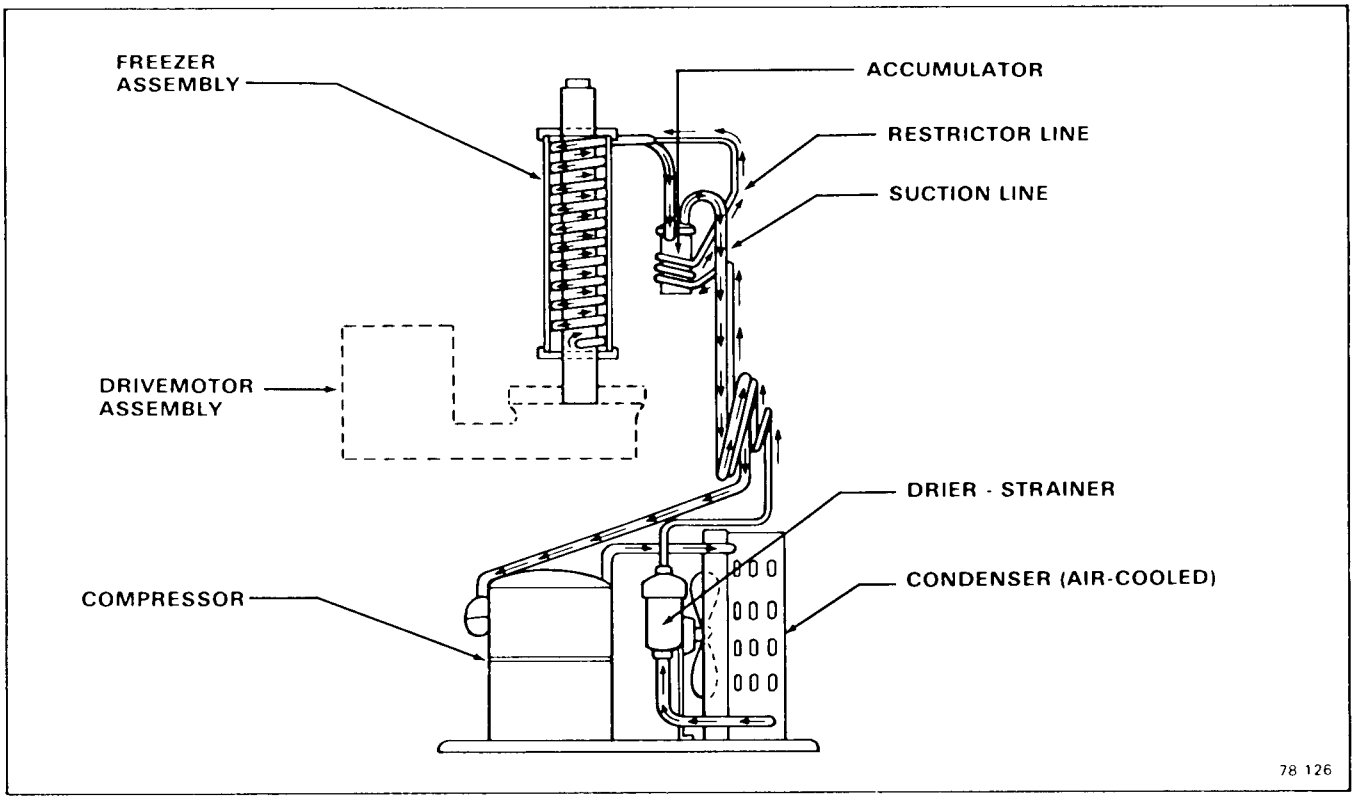

Figure 3 - 1, Refrigeration Cycle.

ELECTRICAL/REFRIGERATION

This ice flaker is designed to operate on 115 volts, 60 hertz, single phase. Special voltages may be produced, so always check the nameplate for voltage and ampacity.

Cold air temperatures around the cabinet, and interruptions in the water supply are conditions that can cause excessively hard ice and **overloads** within the evaporator, which in turn causes the auger drive motor to overload.

When the auger drive motor slows down to a certain speed, a switch within the motor opens the electrical circuit to the compressor contactor, stopping the refrigeration of the evaporator. As the drive motor continues to turn, and the evaporator warms up, the load on the drive motor will decrease. Eventually the auger drive motor will reach the speed at which the internal switch will close, and compressor will be restarted.

A **spout switch** is mounted on the side of the spout, and is actuated by the movement of the spout elbow. If ice jams in the spout elbow, the pressure of ice from the evaporator will push the elbow assembly (against a spring) pulling a switch actuator with it. If it moves far enough, the switch actuator will push open a microswitch, stopping the ice maker. This switch must be manually reset. The spout switch acts a backup to the bin thermostat, and if it trips, the thermostat or it's location would be suspect.

There are two safety control in the air cooled model's control box. One is the **low pressure** control. This control is an automatic reset control connected to the low side of the refrigeration system. It is set to open at 0-4 psig. It re-closes at 17-20 psig. The other control is the **auger delay** control. Its function is to temporarily maintain drive motor operation after the bin control has switched off the compressor.

Water cooled models also have a **high pressure** control that opens at 250 psig (as when the water supply to the condenser is cut off).

Check the wiring diagram to trace the circuits involved.

As shown on all Scotsman wiring diagrams, the controls are in the icemaking mode. Checking the auger delay:

The 1-2 contacts are closed. At start up they would be open.

The 3-2 contacts are open. At start up they would be closed.

The contacts switch position as the low side pressure drops past 20 psig. This removes the operating controls, such as the bin thermostat, from the gear motor circuit. If one of the operating controls opens, it will shut off the compressor, but the drive motor will keep running through contacts 1-2 of the auger delay control. When the low side refrigeration pressure gets high enough (over 32 psig) the auger delay will reset, and contacts 1-2 will open, removing power from the gear motor. The machine is again ready to restart. Note that there is a contactor isolation relay (relay B) in the circuit. It is there to prevent momentary arcing of the compressor contactor as the auger delay switches the gearmotor off.

On all models, there is a **low water pressure** control switch. It's function is to stop the machine should water pressure to the ice maker fall below 10 psig. It will not allow the machine to restart until the water pressure is above 20 psig.

On water cooled models, the head pressure is maintained by a **water regulating valve**, and should be around 135 psig. Air cooled models' head pressure will vary depending upon air temperature around the cabinet, but is usually about 130 psig.

Suction pressure should be 13 psig and the frost line should extend out from the accumulator. Suction pressure will vary about 2 psig plus or minus, depending upon air and water temperatures.

Always charge the machine to the nameplate charge.

ADJUSTMENT AND REMOVAL AND REPLACEMENT PROCEDURES

The procedures provided in this Section are arranged in alphabetical order, to make specific Adjustment and Removal and Replacement information easy to locate.

Read the instructions thoroughly before performing any Adjustment or Removal and Replacement Procedures.

CAUTION

The adjusting screws on the Temperature Control device have very sensitive response to adjustment. DO NOT attempt to adjust the screw until after thoroughly reading and understanding the following instructions and illustrations. Over-adjusting or erratic guessing, can foul the instrument and cause ultimate delay and part replacement, WHICH COULD HAVE BEEN PREVENTED.

ADJUSTMENT OF THE BIN THERMOSTAT CONTROL

The control for the Bin Thermostat is the Temperature Control, located in the upper part of the Control Box Assembly.

ADJUSTMENT IS FOR UNITS INSTALLED 2,000 FEET OR MORE ABOVE SEA LEVEL

Read the instructions thoroughly before performing any adjustment or removal and replacement procedures.

ADJUSTMENT OF THE BIN THERMOSTAT CONTROL

(Installations 2,000 feet above sea level only)

ALTITUDE CORRECTION (ROBERTSHAW ONLY)

ALTITUDE	TURNS C.W.
2,000	40°
4,000	78°
6,000	115°
8,000	148°
10,000	180°

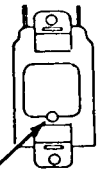

TURN RANGE SCREW

See Figure 4-1 for location and direction of rotation, clockwise (CW) or counterclockwise (CCW), of the adjusting screws on the Temperature Control, in the particular Control Box the adjustment is to be performed.

ADJUSTMENT OF THE LEG LEVELERS

When the MF700 Flaker or Bin is ordered with the optional Leg Levelers, the Cabinet must be leveled in the front-to-rear and side-to-side directions. This adjustment should be performed during initial installation of the Cabinet and anytime the Cabinet is moved from the original location to another site.

A. Using an open-end wrench, and a carpenter's bubble level, rotate the threaded Leveler in each Leg to RAISE or LOWER the Cabinet until the Cabinet is level in the front-to-rear direction.

B. Repeat step A, for leveling in the side-to-side direction.

C. Recheck both the front-to-rear and the side-to-side leveling and repeat adjustments, as necessary.

ADJUSTMENT OF THE WATER REGULATOR ASSEMBLY

The correct head pressure on Water-Cooled models is 135 PSIG. Adjustments can be performed on the Water Regulator Assembly to increase or decrease the head pressure.

To Adjust the Water Regulator Assembly:

A. To INCREASE the Head Pressure: Rotate the adjusting Screw, on the Water Regulator Assembly IN or CLOCKWISE.

B. To DECREASE the Head Pressure: Rotate the adjusting Screw, on the Water Regulator Assembly OUT or COUNTERCLOCKWISE.

ADJUSTMENT OF THE WATER RESERVOIR FLOAT

The correct water level in the Water Reservoir should be 3/8-inch below the raised molded line, on the side of the body of the Water Reservoir. When the water line level is above or below the raised molded line, adjustment can be performed to raise or lower the water level by raising or lowering the Water Reservoir in the slots on the Mounting Brackets, which in turn will adjust the action of the float.

A. To RAISE the Water Level: Loosen the two Screws which attach the Water Reservoir Assembly to the Mounting Bracket and RAISE the Water Reservoir Assembly, in the slots, the desired amount; then, tighten the Screws.

B. To LOWER the Water Level: Loosen the two Screws which attach the Water Reservoir Assembly to the Mounting Bracket and LOWER the Water Reservoir Assembly, in the slots, the desired amount; then, tighten the Screws.

WARNING

Be sure the electrical power supply and the water supply are OFF, before starting any of the following REMOVAL AND REPLACEMENT procedures, as a precaution to prevent possible personal injury or damage to equipment.

REMOVAL AND REPLACEMENT OF THE AUGER, WATER SEAL, BEARINGS AND COUPLING

A. To Remove the Auger, Water Seal, Bearings, and Coupling:

1. Remove screws and the Front Panel and the Left Side Panel.
2. Remove the Freezer Cap from the top of the Freezer Assembly.
3. Perform the steps in procedure IV-XIII to remove the Spout Assembly.
4. Grasp the wire Cap Hook at the top of the Freezer Assembly and pull out the Auger and attached Cap, Bearing/Retainer, Bearing and O-Rings, at the top of the Auger; and, the top half of the Water Seal at the bottom of the Auger.

NOTE

When the Auger cannot be pulled out, proceed to steps 12 and 13, to gain access to the bottom of the Auger. Then, with a rawhide mallet or placing a piece of wood on the bottom end of the Auger, tap the bottom of the Auger to break it loose and pull the Auger out, as in the step 4 above.

5. Remove the Cap Hook from the Bearing/Retainer.
6. Remove the Retaining Ring and the Cap.
7. Remove the Cap Screw and Washer and remove the Bearing/Retainer from the Auger.
8. Clean away the old grease from the top of the Auger, the Bearing/Retainer, Cap, Cap Screw and Washer, and the O-Ring and Retaining Ring.

9. Inspect the O-Ring at the top of the Bearing/Retainer and the O-Ring at the bottom outside of the Bearing/Retainer, for cuts, tears and general worn condition to determine replacement.
10. Inspect the Bearing pressed into the top of the Bearing/Retainer and, if it is to be replaced, remove the Retaining Ring and press the Bearing out of the Bearing/Retainer.
11. Slide the upper half of the Water Seal off of the bottom of the Auger.

NOTE

1. *Any time the Auger is removed for replacement, or, for the inspection and replacement of the Bearings or Coupling, use extra care in handling the Water Seal parts, so no dirt or foreign matter are deposited on the surfaces of the Seal.*
2. *If there is any doubt about the effectiveness of the Water Seal or O-Ring, REPLACE THEM. A dirty, worn or faulty Water Seal or O-Ring will cause a leak and ultimately require a second, time consuming removal and replacement procedure to be performed, that COULD HAVE BEEN PREVENTED.*

12. Remove four screws and lockwashers which attach the Freezer Assembly to the Adaptor on the Drivemotor Assembly.
13. Raise the Freezer Assembly off of the Adaptor, to gain access to the Bearing and Retainer; then, temporarily secure the Freezer Assembly out of the way to allow room to work. Be careful not to damage the gasket.
14. Using a suitable length and size wooden dowel or stick inserted through the top of the open Freezer Assembly, tap the lower half of the Water Seal and the lower Bearing in the Retainer, out the bottom of the Freezer Assembly.
15. Inspect the lower half of the Water Seal. If reusable, use care to protect it from dirt, etc. prior to replacement procedure.
16. Inspect the lower Bearing in the Retainer; and, if the Bearing is to be replaced, press the Bearing out of the Retainer.
17. Reach through the Adaptor and remove the Coupling on the Drivemotor for inspection.
18. Check the Coupling for cracks, chipping and excessive wear.

B. To replace the Auger, Water Seal, Bearings, and Coupling, reverse the removal procedure.

NOTE

1. *When installing the Retainer assembled with Bearing, in the bottom of the Freezer Assembly, some Retainers will insert as a slip fit, and some will have to be forced into place because of very tight fit. Carefully tap a piece of wood positioned across the bottom of the Retainer, to evenly seat the Retainer in the chamber of the Freezer.*
2. *After assembling the parts on the upper end of the Auger and BEFORE installing the Cap and Cap Hook, apply an ample coating of Shell Alvania 3 Grease, P/N 19-0309-01, to the upper part of the Bearing/Retainer to cover the Retaining Ring and the Cap Screw and Washer. Then, install the Cap and Cap Hook in place.*

REMOVAL AND REPLACEMENT OF THE COMPRESSOR ASSEMBLY

NOTE

Always install a replacement Drier, any time the sealed refrigeration system is opened. Do not replace the Drier until all other repair or replacement has been completed.

A. To Remove the Compressor Assembly:

1. Remove screws and the Left Side Panel.
2. Remove two screws and the Cover from the Compressor Junction Box.
3. Disconnect the electrical leads at the Compressor Junction Box, that originate in the Control Box.
4. Bleed off or blow the refrigerant charge through the Schrader valves.
5. Unsolder the suction line from the Compressor.
6. Unsolder the discharge line from the Compressor.
7. Unsolder the process header tube from the Compressor and retain for installation on the Replacement Compressor.
8. Remove four bolts, lockwashers and washers which secure the Compressor to the Chassis mounting base.
9. Slide the Compressor and remove through the left side opening of the Cabinet.

NOTE

Thoroughly evacuate the system to remove moisture and non-condensables.

B. To replace the Compressor Assembly, reverse the removal procedure.

REMOVAL AND REPLACEMENT OF THE CONDENSER — AIR-COOLED MODELS

NOTE

Always install a replacement Drier, any time the sealed refrigeration system is opened. Do not replace the Drier until all other repair or replacement has been completed.

A. To Remove the Condenser:

1. Remove screws and the Front Panel and the Left Side Panel.
2. Bleed off or blow the refrigerant charge through the Schrader valve.
3. Unsolder and disconnect the Condenser inlet tube at the Condenser.
4. Unsolder and disconnect the Condenser outlet tube at the Condenser.
5. Remove three screws, lockwashers and washers securing the Condenser to the Chassis Base.
6. Remove the Condenser out through the front opening of the cabinet.

NOTE

Thoroughly evacuate the system to remove moisture and non-condensables.

B. To replace the Condenser, reverse the removal procedure.

REMOVAL AND REPLACEMENT OF THE CONDENSER — WATER-COOLED MODELS

NOTE

Always install a replacement Drier, any time the sealed refrigeration system is opened. Do not replace the Drier until all other repair or replacement has been completed.

A. To Remove the Condenser:

1. Remove screws and the Front Panel and the Left Side Panel.
2. Bleed off or blow the refrigerant charge through the Schrader valve.
3. Unsolder the refrigerant inlet and outlet lines from the Condenser.
4. Disconnect the water inlet and outlet lines from the Condenser.
5. Remove two bolts, lockwashers and washers which secure the Condenser to the Chassis mounting base.
6. Remove the Condenser from the Cabinet.

NOTE

Thoroughly evacuate the system to remove moisture and non-condensables.

B. To replace the Condenser, reverse the removal procedure.

REMOVAL AND REPLACEMENT OF THE DRIER

NOTE

Always install a replacement Drier, any time the sealed refrigeration system is opened. Do not replace the Drier until all other repair or replacement has been completed.

A. To Remove the Drier:

1. Remove screws and the Front Panel and the Left Side Panel.
2. Remove screw and Drier Brace attaching the Drier to the Chassis base.
3. Bleed off or blow the refrigerant charge through the Schrader valve.
4. Unsolder refrigeration lines at each end of Drier, remove the Drier and separate the Drier from the Drier Brace.

B. To replace the Drier:

CAUTION

1. If the factory seal is broken on the replacement Drier, exposing it to the atmosphere more than a few minutes, the Drier will absorb moisture from the atmosphere and lose substantial ability for moisture removal.

2. Be sure the replacement Drier is installed with the arrow positioned in the direction of the refrigerant flow.

1. Remove the factory seals from the replacement Drier and install the Drier in the refrigerant lines with the arrow positioned in the direction of the refrigerant flow.
2. Install the Drier Brace on the Drier.
3. Solder the Drier into the lines, two places.
4. Purge the system and check for leaks.
5. Thoroughly evacuate the system to remove moisture and non-condensables.
6. Charge the system with refrigerant, by weight. SEE NAMEPLATE.

7. Replace the Front Panel and the Left Side Panel and attach both with screws removed earlier.

REMOVAL AND REPLACEMENT OF THE DRIVEMOTOR ASSEMBLY

A. To Remove the Drivemotor Assembly:

1. Perform all steps in procedure IV-XII to gain access for removal of the Drivemotor Assembly.
2. Remove bolts, lockwashers and washers which attach the Drivemotor to the Chassis base.
3. Lift the Drivemotor from the Chassis base and out of the Cabinet.

B. To replace the Drivemotor Assembly, reverse the removal procedure.

REMOVAL AND REPLACEMENT OF THE FAN MOTOR ASSEMBLY — AIR-COOLED MODELS

NOTE

Before beginning this procedure, observe the Fan Blade position on the shaft of the Fan Motor and mark the Fan Blade so it will be correctly positioned during reassembly. Direction of air flow should be toward the Fan Motor.

A. To Remove the Fan Motor Assembly:

1. Remove screws and the Front Door and the Left Side Panel.
2. Disconnect the electrical lead from the Fan Motor.
3. Remove four screws securing the two Fan Mounting Brackets to the Condenser Shroud and remove the Fan Motor and Brackets out through the left side opening of the Chassis.
4. Remove the nut from the end of the Fan Motor shaft and remove the Fan Blade.
5. Remove four screws securing each Fan Mounting Bracket, upper and lower, to the Fan Motor and separate the Motor from the Brackets.

B. To replace the Fan Motor Assembly, reverse the removal procedure.

REMOVAL AND REPLACEMENT OF THE FREEZER ASSEMBLY

NOTE

1. *The Cabinet may have to be removed from its permanent location, especially if located in a corner, in order to have access to the left side and rear of the Chassis.*
2. *In addition to shutting OFF electrical power and inlet water to the icemaker, be sure to disconnect the inlet water line at the rear of the Cabinet BEFORE moving the icemaker from the permanent location.*
3. *Always install a replacement Drier, anytime the sealed refrigeration system is opened. Do not replace the Drier until all other repair or replacement has been completed.*

A. To Remove the Freezer Assembly, see Figure 4-2:

1. Remove screws and left side, front and rear panels.
2. Refer to procedure IV-XIII and remove the Spout Assembly.
3. Remove Corbin clamp and Tygon tube from the Freezer Assembly that connects to the Water Reservoir Assembly.
4. Bleed off or blow the refrigerant charge through the Schrader valve.
5. Unsolder the suction line from the Compressor.
6. Unsolder the capillary line at the Drier.
7. Remove four screws, lockwashers and washers which attach the bottom of the Freezer Assembly to the Adaptor on the Drivemotor Assembly.

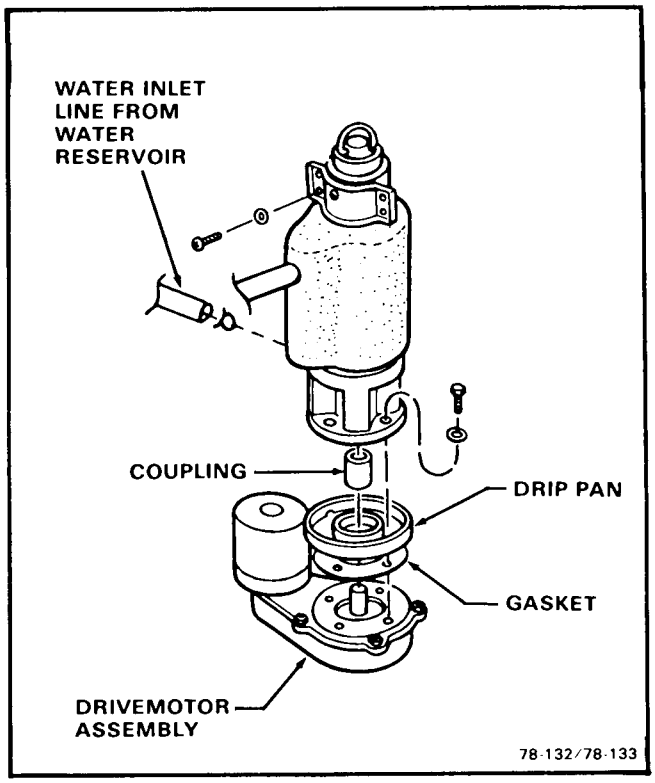

Figure 4-2. Removal of the Freezer Assembly.

8. Lift the Freezer Assembly up and off of the Adaptor and Drivemotor Assembly.

NOTE

Thoroughly evacuate the system to remove moisture and non-condensables.

B. To replace the Freezer Assembly, reverse the removal procedure.

REMOVAL AND REPLACEMENT OF THE SPOUT ASSEMBLY

A. To Remove the Spout Assembly, see Figure 4-3:

1. Remove screws and the Front Panel and Left Side Panel.
2. Remove the Hose Clamp and disconnect the Nylobraid tube from the end of the spout.
3. Remove the Freezer Cap from the top of the Freezer Assembly.
4. Disconnect the electrical leads from the Spout Switch.
5. Remove four screws and washers and separate the Spout Assembly from the Spout Plate on the Freezer Assembly.

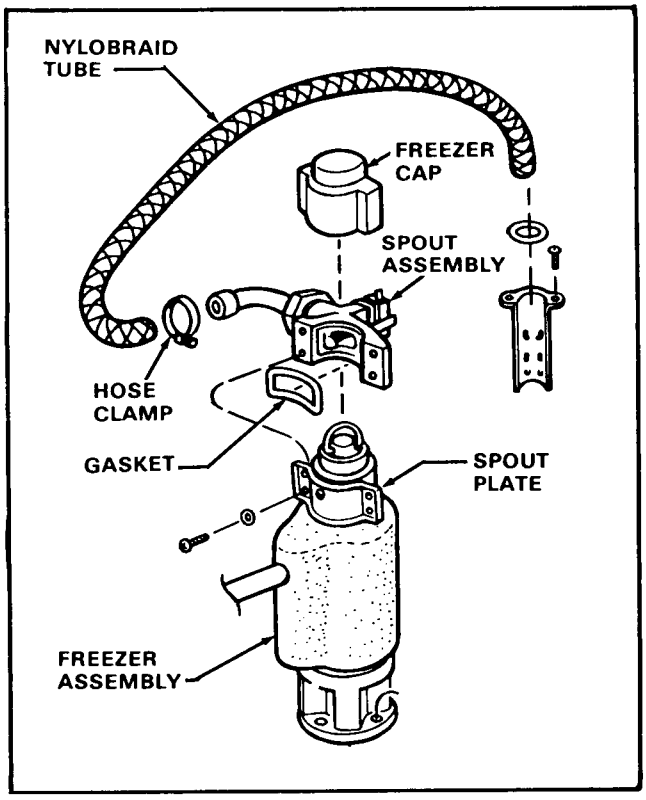

Figure 4-3. Removal of the Spout Assembly.

NOTE

At this time, inspect the spout Gasket and retain for the replacement procedure. Replace a torn, cut or worn, defective gasket.

B. To replace the Spout Assembly, reverse the removal procedure.

REMOVAL AND REPLACEMENT OF THE WATER PRESSURE CONTROL

A. To Remove the Water Pressure Control:

1. Remove screws and the Front Panel and the Left Side Panel.
2. Remove screws and the Control Box Cover.
3. Disconnect the two blue electrical leads of the Water Pressure Control, from the terminals on the Auger Delay Control and the Bin Thermostat device in the Control Box Assembly.
4. Unscrew the flare nut fitting and disconnect the Water Pressure Control from the Utility Bracket and the Tee on the inlet water tubing.

NOTE

At this time, inspect the O-Ring and retain for the replacement procedure. Replace O-Ring that is cut, torn or indicates excessive wear.

B. To replace the Water Pressure Control, reverse the removal procedure.

REMOVAL AND REPLACEMENT OF THE WATER REGULATOR ASSEMBLY — WATER—COOLED MODELS

A. To Remove the Water Regulator Assembly:

NOTE

Always install a replacement Drier, any time the sealed refrigeration system is opened. Do not replace the Drier until all other repair or replacement has been completed.

1. Remove screws and the Front Panel.
2. Bleed off or blow the refrigerant charge through the Schrader valve.
3. Unsolder the Capillary line from the Water Regulator Assembly, where connected at the process header.
4. Disconnect the water inlet line at the rear of the Water Regulator.
5. Disconnect the Condenser water inlet tube at the front of the Water Regulator.

6. Remove two screws, lockwashers and washers which attach the Water Regulator Assembly bracket to the Chassis base and remove the Water Regulator Assembly and bracket.

NOTE

Thoroughly evacuate the system to remove moisture and non-condensables.

B. To replace the Water Regulator Assembly reverse the removal procedure.

REMOVAL AND REPLACEMENT OF THE WATER RESERVOIR ASSEMBLY

A. To Remove the Water Reservoir Assembly, see Figure 4-4:

1. Remove screws and the Front Panel and the Left Side Panel.

NOTE

Be prepared with container or rags, to catch water left in lines, when lines are disconnected in next steps, to prevent draining water on parts, components, electrical lines, etc.

2. Disconnect the water inlet tube from the Water Reservoir Assembly.
3. Remove two Corbin clamps and two tubes from the bottom of the Water Reservoir Assembly.
4. Unscrew and remove the wing nut from the bottom of the Water Reservoir Assembly.
5. Lift and remove the Water Reservoir Assembly from the mounting bracket.

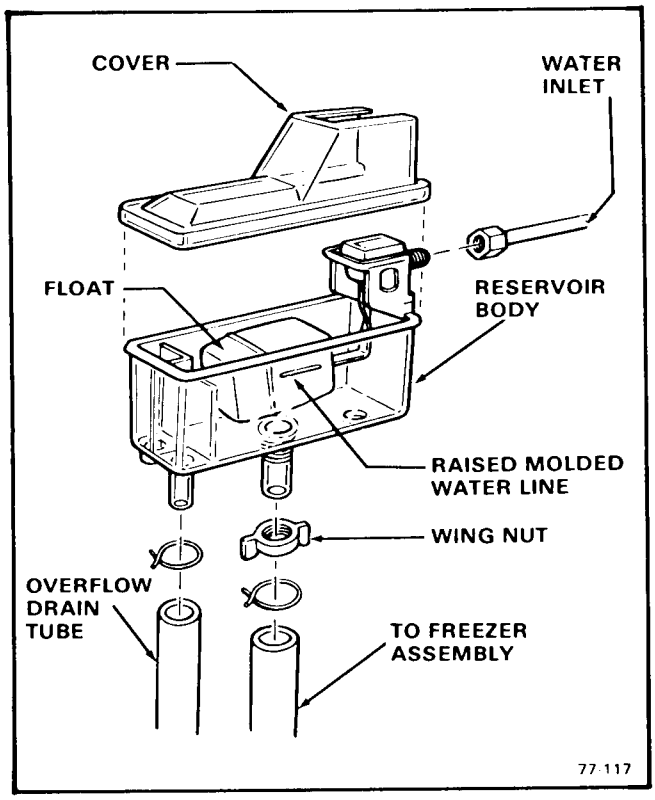

Figure 4-4. Removal of the Water Reservoir Assembly.

B. To replace the Water Reservoir Assembly, reverse the removal procedure.

NOTE

Check that the installed replacement Water Reservoir Assembly float moves freely. The correct water level in the Water Reservoir is 3/8-inch below the raised molded line, on the side of the body of the Water Reservoir.

BIN THERMO BRACKET INSTALLATION INSTRUCTIONS

1. Align two-inch diameter hole in flaker with proper hole in bin top.
2. Wrap the capillary tube on the bracket as shown in the drawing.
3. Insert bin thermo bracket and cap tube assembly through two inch hole in base and on into bin.
4. Attach the flange of the bin thermo bracket to the flaker base with two No. 8 screws. Make certain bracket is at 90° to inside top of bin.
5. Slide the rubber washer on the tube down on top of the cabinet base.
6. Connect ice transport tube to ice spout elbow with hose clamp.

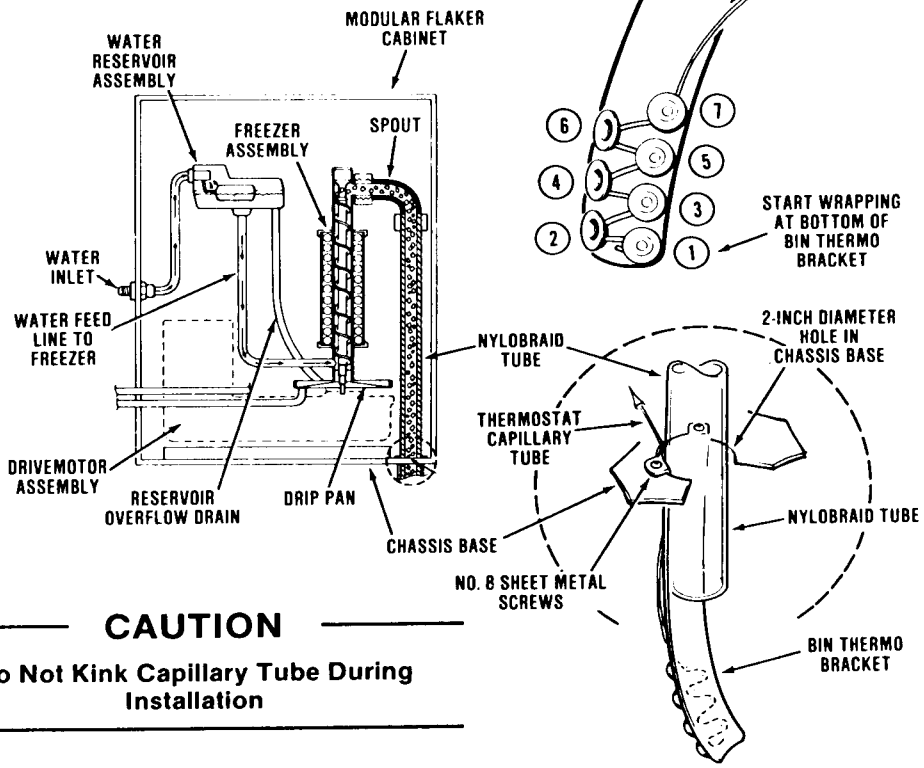

CAUTION

Do Not Kink Capillary Tube During Installation

MAINTENANCE & CLEANING INSTRUCTIONS

GENERAL

The periods and procedures for maintenance and cleaning are given as guides and are not to be construed as absolute or invariable. Cleaning especially will vary, depending upon local water conditions and the ice volume produced and, each Icemaker must be maintained individually, in accordance with its own particular location requirements.

ICEMAKER

THE FOLLOWING MAINTENANCE SHOULD BE SCHEDULED AT LEAST TWO TIMES PER YEAR ON THIS ICEMAKER. CALL YOUR AUTHORIZED SCOTSMAN SERVICE AGENCY.

1. Check and clean water line Strainers.
2. Remove cover from Water Reservoir and depress the float to ensure that a full stream of water enters the Reservoir.
3. Check that the Icemaker cabinet is level, in side-to-side and front-to-rear directions.
4. Check that the water level in the Water Reservoir is below the overflow, but high enough that it does not run out of the spout opening.

NOTE

It is not abnormal for some water to emerge from the Ice Spout with flaked ice during normal ice production.

5. Clean the Water Reservoir and interior of the Freezer Assembly, using a solution of SCOTSMAN Ice Machine Cleaner. Refer to procedure V-III, CLEANING-Icemaker.

NOTE

Cleaning requirements vary according to local water conditions and individual user operation. Visual inspection of the Auger before and after cleaning will indicate frequency and procedure to be followed in local areas.

6. When doubtful about refrigerant charge, install refrigerant gauges on Schrader valves and perform steps 6 and 7. Check gauge for Compressor head pressure:

   AIR-COOLED MODELS: Varies between 130 to 145 PSIG.

   WATER-COOLED MODELS: Set at 135 PSIG. Adjust screw on top of Water Regulator Valve to raise or lower head pressure.

7. Check gauge for Suction line pressure:

   Varies between 12 to 16 PSIG, depending upon inlet water temperature and ambient air temperature.

8. Check Drivemotor operation:

   Normal operating temperatures are about 160-degrees F., which is hot to touch.

9. Check operation of the centrifugal sensing switch:

   MF700: 1/4 HP Motor.

   Switch will OPEN between 850-950 RPM and the Compressor STOPS, with the Drivemotor operating. Switch will CLOSE between 1100-1250 RPM and the Compressor will RESTART, with Drivemotor building back up to normal operating speed.

10. Remove the Insulation Strap and Clip, the Right and Left Spout Insulation pieces, the Retaining Ring and the Hook and Cap from the top of the Freezer Assembly.
11. Inspect the Top Bearing. If moisture is around Bearing, wipe clean of all grease and apply a coating of Shell Alvania 3 Grease, Scotsman P/N 19-0309-01, 1-lb. Can. Replace parts removed in step 10.

NOTE

BEFORE next step, move the manual ON-OFF toggle switch, on the front of the Control Box, to the OFF position to stop the Fan Motor and Icemaker.

12. Clean the Air-Cooled Condenser, using vacuum cleaner, whisk broom or brush. Instruct customer to clean frequently and to be sure Icemaker and Fan Motor are OFF.
13. Check that Fan Blades move freely, are not touching any surfaces and are not bent or out of balance.
14. Check for refrigerant leaks and for proper frost line, which should frost out of accumulator at least half way to the compressor and in some areas, back to service valve.

15. Check for water leaks. Tighten drain line connections. Pour water down Bin drain to be sure that drain line is open and clear.
16. Check the quality of ice. Ice flakes should be wet when formed, but will cure rapidly to normal hardness in the Bin.
17. Check the Bin Thermostatic Ice Control Bulb.

NOTE

The Bin Thermostat is factory set at 10-degrees F. differential and should keep the entire Icemaker system shut off at least 10 minutes in high ambient temperatures, longer in low ambient temperatures during normal operation. Settings are 35-degrees F. CUT-OUT and 45-degrees F. CUT-IN.

18. Check the Spout Switch.

NOTE

The Spout Switch is manually reset and functions as a safety switch, to automatically stop the icemaking process if the Bin Thermostat Bulb were to fail and cause ice to jam up in the Ice Tube.

CLEANING - Icemaker

1. Remove screws and the Front Panel.
2. Move the manual ON-OFF toggle switch, on the front of the control Box, to the OFF position.
3. Remove all ice from the Ice Storage Bin.
4. CLOSE the water supply shutoff valve; or block the float in the Water Reservoir.
5. Disconnect the tube between the Water Reservoir and the bottom of the Freezer Assembly and drain water from the Reservoir and tube. Reconnect the tube.

WARNING

SCOTSMAN Ice Machine Cleaner contains Phosphoric and Hydroxyacetic acids. These compounds are corrosive and may cause burns if swallowed, DO NOT induce vomiting. Give large amounts of water or milk. Call Physician immediately. In case of external contact flush with water. KEEP OUT OF THE REACH OF CHILDREN.

6. Prepare cleaning solution: Mix eight ounces of SCOTSMAN Ice Machine Cleaner with two quarts of hot water.
7. Remove the Cover to the Water Reservoir.
8. Slowly pour the cleaning solution into the Water Reservoir.
9. Move the manual ON-OFF toggle switch, on the front of the Control Box, to the ON position.
10. Continue to slowly pour the cleaning solution into the Water Reservoir, maintain level just below the Reservoir overflow.
11. Continue icemaking, using the cleaning solution, until all the solution is used up and the Water Reservoir is almost empty. DO NOT allow the icemaker to operate with empty Reservoir.
12. Move the manual ON-OFF toggle switch, on the front of the Control Box to the OFF position.
13. Wash and rinse the Water Reservoir.
14. OPEN the water supply shutoff valve; or remove the block from the float in the Water Reservoir.
15. Move the manual ON-OFF toggle switch, on the front of the Control Box, to the ON position.
16. Continue icemaking for at least 15 minutes, to flush out any cleaning solution. Check ice for acid taste - continue icemaking until ice tastes sweet.
17. Move the manual ON-OFF toggle switch, on the front of the Control Box, to the OFF position.

CAUTION

DO NOT use ice produced from the cleaning solution. Be sure none remains in the bin.

18. Remove all ice from the Ice Storage Bin.
19. Add hot water to the Ice Storage Bin and thoroughly wash and rinse all surfaces within the Bin.
20. Clean and sanitize the Ice Storage Bin each week.

SERVICE DIAGNOSIS

The Service Diagnosis Section is for use in aiding the serviceman in diagnosing a particular problem for pin-pointing the area in which the problem lies, thus an ever available reference for proper corrective action.

The following charts lists corrective actions for the causes of known symptoms of certain problems that can occur in the Icemaking - Refrigeration System.

ICEMAKING - REFRIGERATION SYSTEM

SYMPTOM	POSSIBLE CAUSE	CORRECTION
Water Leaks.	Defective water seal.	Replace Seal.
	Gravity feed line leaking.	Check hose clamps.
	Water level in reservoir too high.	Adjust water level to 3/8-inch below reservoir overflow, then raise reservoir until water flows out freezer spout, then lower reservoir 3/4-inch.
	Storage bin drain and connecting fittings.	Check and repair.
Excessive noise or chattering.	Mineral or scale deposit on auger and inner freezing chamber walls.	For severe deposit, remove and manually polish auger, sand inner chamber walls of freezer barrel.
		For lighter concentration, use Scotsman Ice Machine Cleaner periodically.
	Intermittent water supply.	Check and clean water strainer.
		Check gravity feed line for air lock.
		Remove air lock.
	Water level in reservoir too low.	See CORRECTION for Water Leaks above.
	Gear Reducer loose on frame.	Tighten Gear Reducer.
	Motor compressor not solid on rubber mounts.	Repair or replace rubber mounts.
	Gearmotor end-play or worn bearing.	Repair or replace bearing.
Making wet ice. (Ice melts too quickly, is not cold enough to properly cure in the Bin.)	Surrounding air temperature too high.	Correct or move cabinet.
	Under or over-charge of refrigerant.	Recharge with proper amount. Should frost out of accumulator at least 8-inches. See nameplate for correct charge. See CORRECTION for Water Leaks above.

ICEMAKING - REFRIGERATION SYSTEM (Cont'd)

SYMPTOM	POSSIBLE CAUSE	CORRECTION
Making wet ice (cont'd)	Back pressure too high.	Overcharge of refrigerant. Faulty compressor or high head pressure. Lower pressure as indicated.
	Faulty compressor or valve plate.	Repair or replace compressor or valve plate.
Low ice production.	Loss of refrigerant. Under or over-charge of refrigerant.	Check and recharge. See NAMEPLATE for correct charge.
	Drivemotor weak.	Replace Drivemotor.
	Dirty or plugged condenser.	Clean condenser.
	Low water level in water reservoir.	See CORRECTION for Water leaks above.
	Partial restriction in capillary tube or drier.	Moisture in system. Overcharge of oil in system. Remove charge by blowing back through cap tube. Replace drier and recharge.
	Inlet water strainer partially plugged.	Remove screen and clean.
	Corroded or stained auger due to water condition.	Remove auger and clean, or use Scotsman Ice Machine Cleaner. See Maintenance Section.
Gearmotor noise.	Low on oil.	Remove case cover to check for proper oil level. Top of gears should be covered. Use: Sun Oil Company Prestige 50-EP
Icemaker will not operate.	Blown fuse in line.	Replace fuse and check for cause of blown fuse.
	Bin thermostat set too high.	Adjust thermostat. Set at 35-degrees cut-out, 45-degrees cut-in.
	Loose electrical connection.	Check wiring.
	Switch in OFF position.	Set switch to ON position.
	Inoperative master switch.	Replace switch or thermal overload.
	Off on manual-reset pressure control.	Reset.
Icemaker continues to operate with full storage bin.	Bin thermostat not properly set or is defective.	Re-set or replace bin thermostat Re-set to 35-degrees cut-out, 45-degrees cut-in.
Compressor cycles intermittently.	Low voltage.	Check for overloading.
	Dirty condenser.	Clean condenser.
	Air circulation blocked.	Remove cause or move unit.
	Inoperative condenser fan motor.	Replace motor.

ICEMAKING - REFRIGERATION SYSTEM (Cont'd)

SYMPTOM	POSSIBLE CAUSE	CORRECTION
Compressor Cycles intermittently (cont'd)	Non-condensable gases in system.	Check for gas leaks, evacuate and recharge.
	Bin thermostat differential too small causing short cycling.	Widen differential 35-degrees cut-out, 45-degrees cut in.
	Cycling on ice spout microswitch.	Set or replace Bin thermostat.
Icemaker operates but makes no ice.	Loss or undercharge of refrigerant.	Check for leaks and recharge. See NAMEPLATE for correct charge.
	Water not entering freezing chamber.	Plugged strainer or supply line. Check and clean. Air lock in gravity feed line. Check and remove air lock.
	Moisture in system	Check, evacuate, replace drier.
		Recharge. See NAMEPLATE for correct charge.
	Water seal leaking.	Replace seal.
	Water turned off while unit was operating.	Freezer inlet water line froze shut. Unit must be turned off and defrosted.
	Drivemotor or drive coupling stripped.	Repair or replace drivemotor or drive coupling.

MF900

TABLE OF CONTENTS

GENERAL INFORMATION & INSTALLATION
- Introduction 4
- Unpacking and Inspection 4
- Location and Leveling 5
- Electrical Connections 5
- Water Supply and Drain Connections 5
- Bin Thermo Bracket Installation 6

OPERATION
- Start-Up 8

PRINCIPLES OF OPERATION
- How It Works 10
- Icemaker 10
- Electrical/Refrigeration 11

ADJUSTMENT PROCEDURES
- Bin Thermostat Control 12
- Leg Levelers 13
- Water Regulator Assembly 13
- Water Reservoir Float 13

REMOVAL AND REPLACEMENT PROCEDURES
- Auger, Water Seal Bearing and Coupling ... 13
- Compressor Assembly 14
- Condenser (Air-Cooled) 15
- Condenser (Water-Cooled) 15
- Drier 15
- Drivemotor Assembly 16
- Fan Motor Assembly (Air-Cooled) 16
- Freezer Assembly 16
- Spout Assembly 17
- Water Pressure Control 17
- Water Regulator Assembly (Water-Cooled) 17

MAINTENANCE AND CLEANING
- General 20
- Icemaker 20
- Cleaning Icemaker 21

SERVICE DIAGNOSIS
- Icemaking — Refrigeration Systems 22

LIST OF ILLUSTRATIONS

- Specifications 2
- Installation Practice 7
- Water Schematic 8
- Refrigeration Cycle 10
- Adjustment of Temperature Control 12
- Removal of the Freezer Assembly 16
- Removal of the Spout Assembly 17
- Removal of the Water Reservoir Assembly 18

PARTS LIST AND WIRING DIAGRAMS
(Printed in Yellow)

PARTS LIST
- MF900 Cabinet 2
- Major Assemblies (Air-Cooled) 3
- Major Assemblies (Water-Cooled) 6
- Compressor Assembly 9
- Spout Assembly 10
- Evaporator Assembly 11
- Drive Motor Assembly 13
- Control Box Assembly 14

WIRING DIAGRAMS
- MF900A-2A & MF900A-7A 16
- MF900W-2A & MF900W-7A 17
- MF900A-3A 18
- MF900W-3A 19
- MF900AE-2 or MF900AE-7 20
- MF900WE-2 or MF900WE-7 21
- MF900AE-3A 22
- MF900WE-3A 23

THIS PAGE
INTENTIONALLY
LEFT BLANK

SPECIFICATIONS
MODEL MF-900

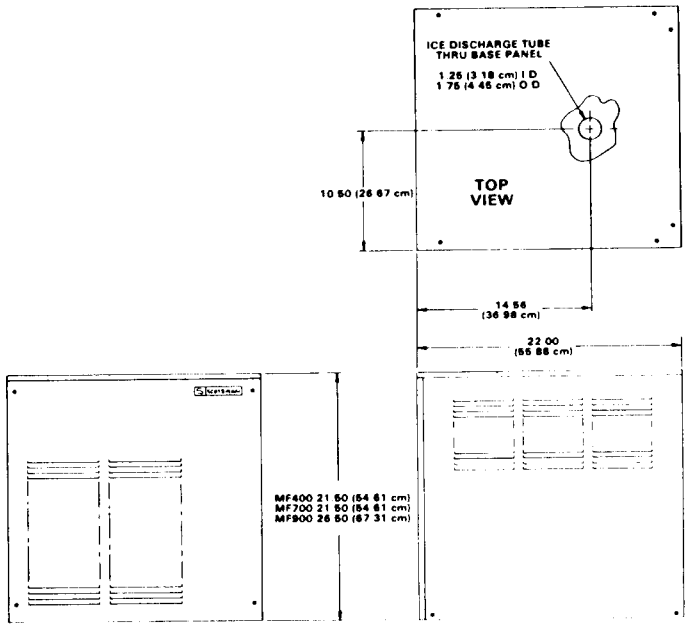

FRONT VIEW

SIDE VIEW

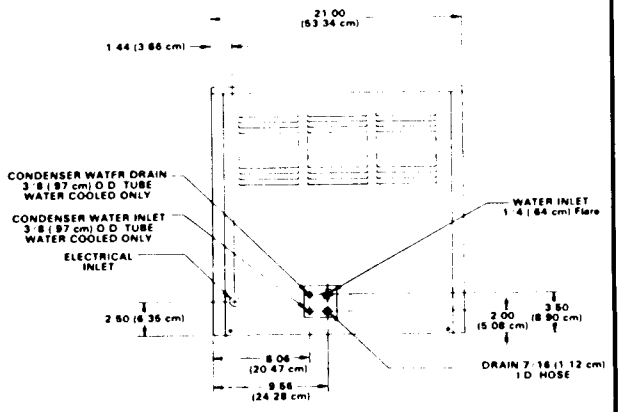

BACK VIEW

MODEL MF-900

	Model	Electrical	Est. Ship. Wt.
Air-Cooled:	MF900A-2A	230/60/1	227 lbs.
Water Cooled:	MF900W-2A	230/60/1	222 lbs.
Air-Cooled:	MF900A-3A	208/220/60/3	227 lbs.
Water-Cooled:	MF900W-3A	208/220/60/3	222 lbs.
Air-Cooled:	MF-900A-7A	208/60/1	227 lbs.
Water-Cooled:	MF900W-7A	208/60/1	222 lbs.

SPECIFICATIONS (Con't)

MODEL NUMBER		MOTORS	VOLTS	HP/WATT	F.L.A.	L.R.A.
		COMP.				
SERIAL NUMBER		DRIVE				
		FAN				
REFRIGERANT 12	HEATER					
07	WATTS	OTHER				
TEST PRESSURE 140 LO - 235 HI						
A.C. SUPPLY VOLTAGE			WIRES	CYCLES	PHASE	
MAXIMUM FUSE SIZE	AMPS	MINIMUM CIRCUIT AMPACITY				

EASY ACCESS SERVICE PANELS

OPTIONAL PANELS KIT

SPKMF-900 - Stainless Steel Panels for use with the MF-900.

SEE NAMEPLATE for electrical and refrigeration specifications. Locate the NAMEPLATE on the lower, left part of the Rear Panel. Shown at left.

Remove Front Panel to locate the Model/Serial Number plate, shown below, on the front center of the chassis base.

MODEL NUMBER	
SERIAL NUMBER	

We reserve the right to make product improvements at any time. Specifications and design are subject to change without notice.

This icemaker has been engineered to our own rigid safety and performance standards. The National Sanitation Foundation (NSF) seal, signifies that it is listed with the NSF and that it complies with the materials and construction standards of the NSF. In addition, the Underwriters Laboratories, Inc., (UL) Listing Mark and the Canadian Standards Association (CSA) Monogram, both signify that its construction and design have been inspected and tested by them. NSF, UL and CSA inspectors also periodically examine production icemakers at the factory, to assure continued compliance.

To retain the safety and performance built into this icemaker, it is important that installation and maintenance be conducted in the manner outlined in this manual.

GENERAL INFORMATION & INSTALLATION

INTRODUCTION

This manual provides the specifications and the step-by-step procedures for the installation, start-up and operation, and the maintenance and cleaning for the SCOTSMAN Model MF-900 Modular Flakers.

The Model MF-900 Modular Flakers are quality designed, engineered and constructed, and thoroughly tested ice-making systems, providing the utmost in flexibility to fit the needs of a particular user. Separate sections detail more specifically: General Information & Installation; Start Up Operation; Principles of Operation; Adjustment and Removal and Replacement Procedures; Maintenance and Cleaning Instructions; Service Diagnosis; Wiring Diagrams; and, the Illustrated Assemblies and Parts Lists.

DESCRIPTION

An attractive compact cabinet of leathergrain embossed steel, with charcoal brown baked enamel high glossy finish. Also, an optional stainless steel panel kit is available. These removable panels allow easy access to electrical and mechanical components for cleaning and maintenance.

SEALED REFRIGERATION SYSTEM

To provide quiet efficient operation of the Icemaker, the Compressor motor is internally spring-mounted. The Compressor motor is covered by a five year parts warranty. The Freezer Assembly is powered by a direct-drive, gear motor, Drivemotor Assembly.

STORAGE BINS

Since the MF-900 Modular Flakers are continuous flow type icemakers and do not have their own attached ice storage bins, it is necessary to use an auxiliary bin, such as the bins listed below:

Use Bins: B60, B90

Recommended for B-60, BX25 Extension and KBT1 top.

UNPACKING AND INSPECTION

1. Call your authorized SCOTSMAN Distributor or Dealer, for proper installation. He's listed under ICE MAKING EQUIPMENT and MACHINERY in the yellow pages of the telephone book.
2. Visually inspect the exterior of the shipping container and skid and any severe damage noted, should be reported to the delivering carrier; and, a concealed damage claim filed subject to internal inspection, with carrier representative present.
3. BEFORE removal of any panels or packing, carefully lay the cabinet on its back and remove the shipping bolts and the shipping base or skid.
4. When ordered, install the optional leg levelers in the cabinet base sockets; then, raise the cabinet to the upright position.
5. Remove screws and shipping tape, and all doors and service panels from the cabinet, and inspect for any concealed damage. Notify carrier of any concealed damage claims, as stated in step 2 above.
6. Remove all internal support packing, tape and wires in machinery compartment.
7. Check that refrigerant lines do not rub or touch lines or other surfaces, and that fan blades, if any, move freely.
8. Check that the Compressor is snug on all mounting pads.
9. Use clean damp cloth or disposable paper wiper to wipe clean the exterior surfaces of the cabinet.
10. See NAMEPLATE on the rear service panel, near the left rear corner of the cabinet and check that the location source voltage corresponds with the voltage specified on the nameplate.

CAUTION

Improper voltage supplied to the Icemaker will void your parts replacement program.

12. Remove the Manufacturer's Registration Card from the front of the User's Manual and fill in all spaces including: Model Number and Serial Number taken from the aluminum plate located at the front center of the Chassis base, with Front Panel removed. Forward the completed, self addressed, registration card to the SCOTSMAN Factory.

LOCATION AND LEVELING

CAUTION

This Modular Flaker is NOT designed for outdoor installations where air temperatures are below 50-degrees F., or above 100-degrees F., and the water temperature is below 40-degrees F. or above 100-degrees F. Extended periods of operation at temperatures exceeding these limitations will constitute misuse, under the terms of the SCOTSMAN Manufacturer's limited warranty coverage.

1. Position the Flaker in the selected permanent location.

NOTE

Prior consideration for location site shall include:

1. *Minimum room temperature 50-degrees F. and maximum room temperature 100-degrees F.*
2. *Water inlet temperatures: Minimum 40-degrees F. and Maximum 100-degrees F.*
3. *Well ventilated location for Air-Cooled model, advising user to frequently clean Condenser, located directly behind front service panel.*
4. *SERVICE ACCESS: Adequate space for all service connections, through the rear of the Cabinet. A six-inch minimum clearance at rear, left and front louvered panels, for routing cooling air drawn into and exhausted out of the compartment, to maintain proper condensing operation on Air-Cooled models.*

2. Level the Cabinet in both the left-to-right and front-to-rear directions. The optional leveling legs can be adjusted with an open-end switch.

ELECTRICAL CONNECTIONS

SEE NAMEPLATE for current requirements to determine wire size to be used for electrical hookup. The Modular Flaker requires a solid earth ground wire. See wiring diagram.

Be certain the Modular Flaker is connected to its own electrical circuit and individually fused. The maximum allowable voltage variation should not exceed ten percent of the nameplate rating, even under starting conditions. Low voltages can cause erratic operation and may be responsible for serious damage to the overload switch and motor windings.

All external wiring should conform to the National, State and local electrical code requirements. Usually an electrical permit and services of a licensed electrician will be required.

WATER SUPPLY AND DRAIN CONNECTIONS

A. AIR-COOLED MODELS: The recommended water supply line is a 1/4-inch O.D. copper tubing. Connect to cold water supply line with standard plumbing fittings, with a shutoff valve installed in an accessible place between the water supply and the Cabinet.

In some cases, a plumbing permit and services of a licensed plumber will be required.

CAUTION

To prevent damage to the freezer mechanism, DO NOT operate this unit when the water supply is OFF, or is below 20 PSI, the recommended water pressure. Position the master switch to the OFF position, until proper water supply is resumed.

The Icemaker in this Cabinet will not operate when water supply temperatures are below 40-degrees F. or above 100-degrees F.

B. WATER-COOLED MODELS: On Water-Cooled models a separate connection, to the Condenser is required. A 3/8-inch O.D. copper tubing is provided for a separate water inlet line to be connected and a separate drain line to be connected.

NOTE

The CAUTION, in the test above for the Air-Cooled models equally applies for the Water-Cooled models. In both type installations, water supply must be installed to conform with local plumbing codes. In some cases, a plumbing permit and services of a licensed plumber will be required.

C. DRAIN CONNECTIONS: All drains are gravity type and must be 1/4-inch per foot on horizontal runs. The drains to be installed to conform with local code. The drain receptacle should be an open, trapped or vented construction.

Recommended Bin drain is 5/8-inch O.D. copper tubing, should be vented and run separately. Connect a drain line to 7/16-inch I.D. tube from the freezer drip pan and a separate drain line to 3/8-inch O.D. drain tube from the Water-Cooled Condenser, on Water-Cooled models.

CAUTION

This Modular Flaker will NOT operate when water supply temperature is below 40-degrees F., or above 100-degrees F. Requires 20 PSI flowing water pressure, without interruption.

BIN THERMO BRACKET INSTALLATION

When shipped from the factory, each Modular Flaker has a Nylobraid ice transport tube which must be attached to the end of the Ice Spout, with a hose clamp. The free end of the tube has a Bin Thermo Bracket installed and secured to it with tape. The Bin Thermostat capillary tube is also installed and secured through slots and snug around tabs on the Bin Thermo Bracket, ready for final installation into an ice storage bin.

Most SCOTSMAN upright or vertical Bins have pre-punched holes. Punch out hole that aligns with the hole in the Flaker cabinet base and install the Flaker on top of the bin. Next, insert the assembled Bin Thermo Bracket through the two-inch hole in the cabinet base into the Bin. Attach the flange of the Bin Thermo Bracket to the cabinet base, two places, with two No. 8 Sheet Metal Screws; then, slide the Sealing Pad, on the tube, down flush with the cabinet base around the tube.

FINAL CHECK LIST

1. Is the Cabinet level? (IMPORTANT)
2. Have all electrical and piping connections been made?
3. Has the voltage been tested and checked against the nameplate rating?
4. Is the water supply line shutoff valve installed and electrical wiring properly connected?
5. Have the Bin and Cabinet been wiped clean?
6. Have the Compressor hold down nuts been checked, to be sure the Compressor is snug on the mounting pads?
7. Has the owner/user been given the User Manual and instructed on how to operate the Icemaker.
8. Has the Manufacturer's Registration Card been properly filled out? Check for correct Model and Serial numbers from Serial nameplate, then mail the completed card to the SCOTSMAN factory.
9. Check all refrigerant lines and conduit lines, to guard against vibration or rubbing and possible failure.
10. Is there at least six inches clearance behind and around Cabinet for proper air circulation?
11. Is the Cabinet in a room where ambient temperatures are a minimum of 50-degrees F. all year around?
12. Has water supply pressure been checked to insure a minimum of 20 PSI?
13. Has the owner been given name and telephone number of the authorized SCOTSMAN Service Agency serving him?

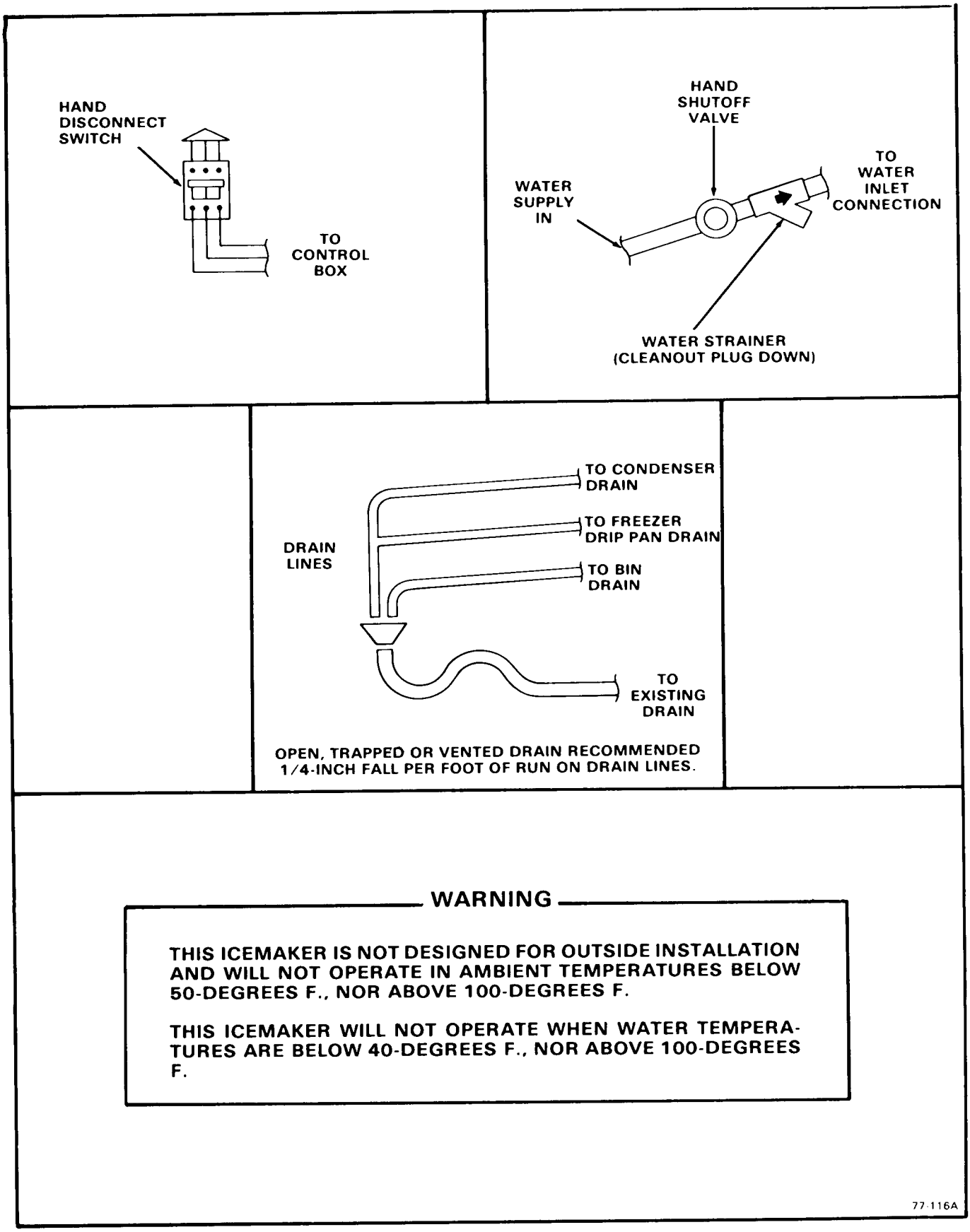

Figure 1-1. Installation Practice.

OPERATING INSTRUCTIONS

START UP

1. Remove screws and the Front Panel.
2. OPEN the water supply line shutoff valve.
3. Observe the water filling operation, see Figure 2 - 1:
   a. Water flows into Water Reservoir.
   b. Float moves up as water rises.
   c. Water flows through water feed line to bottom of Freezer Assembly.
   d. Float stops water flow, when water level reaches 3/8-inches below the molded horizontal line, on the body of the Water Reservoir.
4. Move the manual ON-OFF toggle switch, on the front of the Control Box to the ON position, to start the automatic icemaker operation.
5. After two or three minutes of operation, observe that flaked ice begins dropping off the Auger and out the Ice Spout, through the Nylobraid tubing and into the Ice Storage Bin.
6. Let the system operate for about 30 minutes or until ice covers the bottom of the Bin. Check for any excess noises beyond normal Compressor noise:
   a. Fan noises, when Air-Cooled: Blades touch other surfaces; blades bent, out-of-balance.
   b. Vibrating type, from touching lines.
   c. Chattering: Lack of water in Freezer.
   d. Compressor loose at one or more holddown bolts.

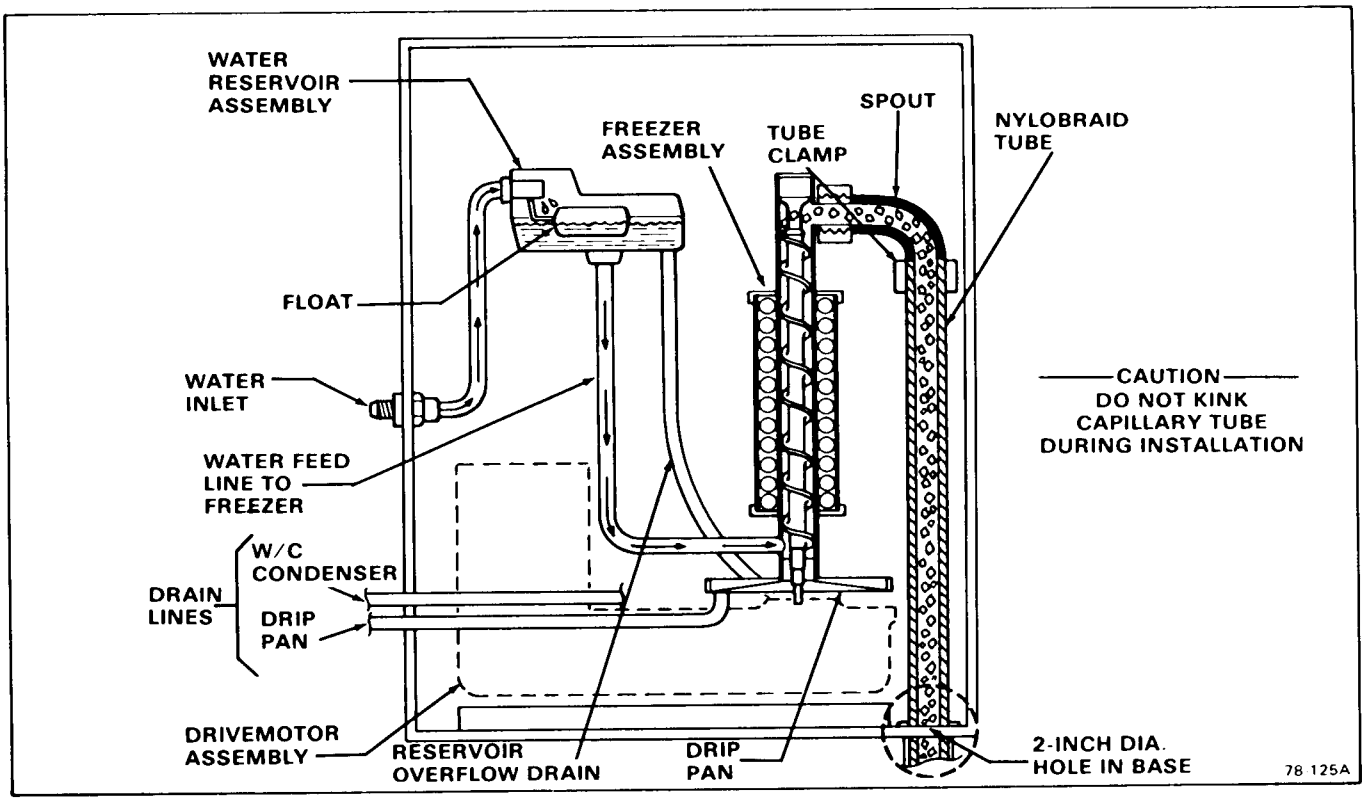

Figure 2 - 1. Water Schematic.

CAUTION

DO NOT operate this Icemaker when the water supply is shut OFF, or is BELOW the recommended 20 PSI water pressure. Move the manual ON-OFF toggle switch on the front of the Control Box to the OFF position immediately.

7. Hold a handful of ice around the Ice storage Bin Thermostatic Control Bulb to test shutoff. Less than one minute is about normal for Bulb shutoff function to cause the Compressor to stop.

NOTE

Within minutes after the ice is removed from the sensing bulb, the bulb will warm up and cause the Icemaker to restart. This control is factory set and should not be reset until testing is performed. Normal setting: about 35-degrees F. CUT-OUT and 45-degrees F. CUT-IN, to prevent short cycling.

8. Thoroughly explain to the owner/user the significant specifications of the Icemaker, the start up and operation, going through the procedures in the operating instructions. Answer all questions about the Icemaker, by the owner; and, inform the owner of the name and telephone number of the authorized SCOTSMAN Service Agency serving him.

PRINCIPLES OF OPERATION
How It Works

ICEMAKER.

The water supply flows from the building source through the inline water strainer, enters at the Cabinet fitting and on to the Water Reservoir. The Water Reservoir functions to maintain a constant water level inside the Freezer Assembly. Water from the Water Reservoir enters at the bottom of the Freezer Assembly and is changed into ice by low temperatures inside the Freezer.

A stainless steel Auger within the Freezer is powered by the Drivemotor Assembly, a direct-drive gearmotor, and the rotating Auger carries the ice upward to the flared end of the Auger, see Figure 3-1, where excess water is pressed out of the ice, as it is extruded or flaked out through the Ice Spout, through the Nylobraid tubing and into the Ice Storage Bin.

Moving the manual ON-OFF toggle switch, on the front of the Control Box, to the ON position starts the automatic and continuous icemaking process. When the Ice Storage Bin has been filled with ice, up to the level of the Thermostatic Control Bulb, the sensing bulb shuts off the icemaking process.

As the ice is removed from the Ice Storage Bin, the Thermostatic Control Bulb warms up, restarting the automatic icemaking process.

Factory settings are 35-degrees F. CUT-OUT and 45-degrees CUT-IN.

Altitude correction begins at 2000 feet, CUT-IN and CUT-OUT screws should be adjusted equally, not more than one-fourth turn at a time.

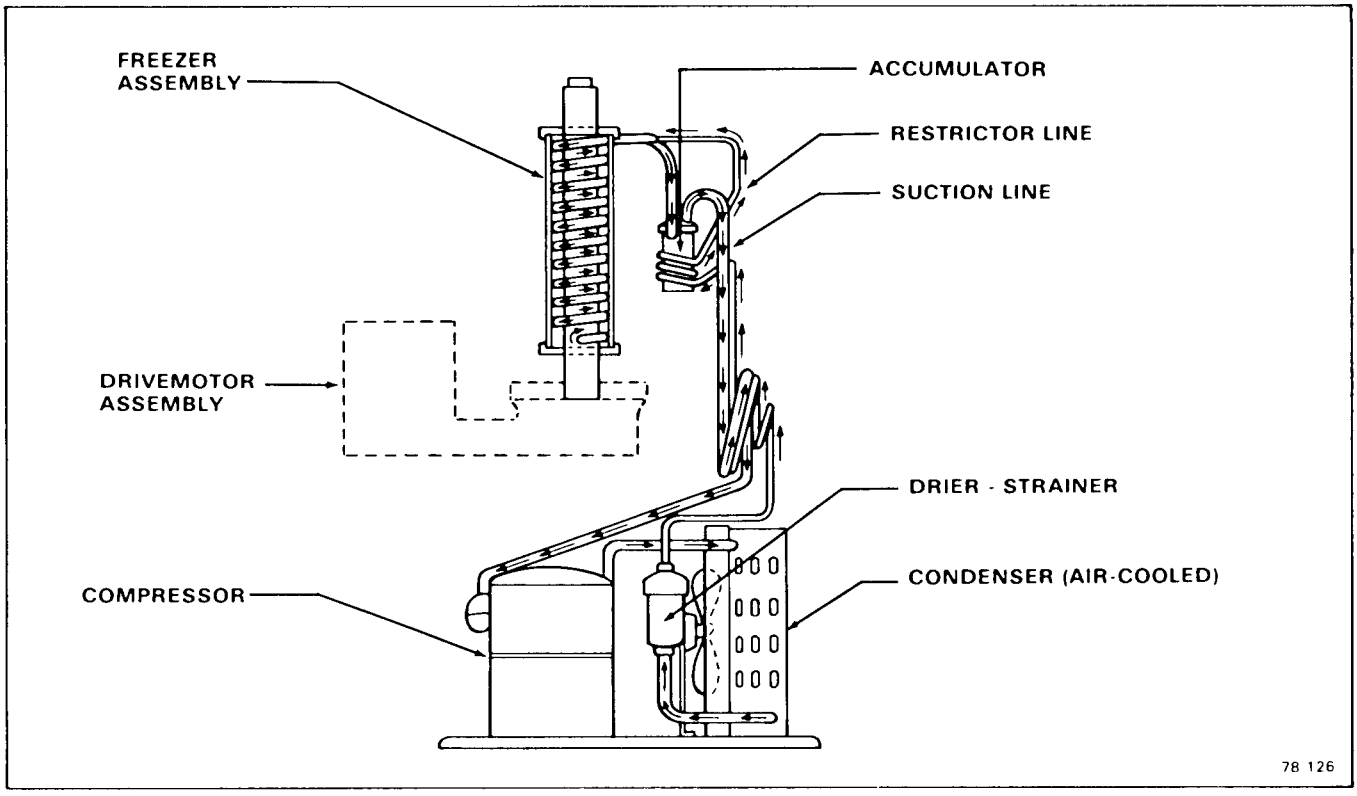

Figure 3 - 1, Refrigeration Cycle.

ELECTRICAL/REFRIGERATION

The MF-900 Modular Flakers are designed to operate on 230 volts, 60 Hertz, single phase. Special voltage requirements are available on special order. Therefore, always CHECK NAMEPLATE for electrical information BEFORE proceeding with electrical wiring connections to the Icemaker.

Cold ambient temperatures and interruptions in water supply are conditions that can cause excessively hard ice and overloads within the Freezer Assembly, which is directly transmitted to the Drivemotor; and in turn, will cause speed reduction or ultimate freezeup.

When the Drivemotor is slowed to a predetermined RPM, a sensing switch mounted on top of the motor is designed to open the electrical circuit to the Compressor. The Compressor stops operating, no more ice is produced, and the Drivemotor continues to operate rotating the Auger to clear the overload and gradually build up to full speed.

At a pre-determined higher RPM Drivemotor speed, the speed sensing switch closes the electrical circuit to the Compressor, causing the normal icemaking process to resume. Refer to specific details in paragraph V-II-9, on centrifugal sensing switch operation.

A Spout Switch is mounted on the side of the Ice Spout and is actuated by the movement of the spring retained spout tube against the switch actuator. The Spout Switch acts as a backup safety switch, should the Thermostatic Control Bulb fail and cause ice to jam up in the Ice Spout. The switch will shut off the icemaker only when actuated. It is an immediate and complete shut down of the entire icemaker. The Spout Switch can be manually tested, by plugging the end of the Nylobraid Tube. The switch is also manually reset.

There are three safety controls in the Control Box on the Water-Cooled models and two safety controls in the Control Box for the Air-Cooled Models. On the MF-900 Air-Cooled Models only, a Fan Pressure Control is added to the Control Box. The Low Pressure Control, an auto reset, non-adjustable control is used on both models and, is set to electrically open at zero to four PSIG to stop the entire icemaker. The Auger Delay Switch, a single-pole double-throw (SPDT) switch, functions as a control device to allow the gearmotor to rotate the Auger to clear the Freezing Chamber while the compressor circuit is OFF.

Refer to the appropriate Wiring Diagram and trace circuitry and control functions, as described in the following paragraph.

As shown on all SCOTSMAN wiring diagrams, the controls are in the ICEMAKING MODE. Thus, the 1-2 contacts are CLOSED. At STARTUP, the 1-2 contacts are OPEN and the 3-2 contacts are CLOSED. As the icemaker begins to operate, the low side pressure starts to decrease from the stabilized or at-rest pressure. As soon as the pressure is reduced to 20 PSIG, the 3-2 contacts OPEN and the 1-2 contacts CLOSE.

This removes the operating controls, such as the Bin Thermostat, from the gearmotor circuit. If one of the operating controls OPENS, it will SHUT OFF the compressor circuit. The gearmotor will operate until the low side pressure increases to 32 PSIG. Then, the 1-2 contacts OPEN and SHUTS OFF the gearmotor, usually within one to two minutes, depending upon ambient conditions. This brief period of time allows the Auger to transport all the ice out of the freezing chamber. Consequently, when called on to STARTUP again, there is no ice load to start up against. Again, on STARTUP, the 1-2 contacts are OPEN and the 3-2 contacts are CLOSED.

On all models, a low-water pressure switch functions to discontinue the Icemaking process whenever incoming water pressure is reduced to below five PSIG. The Switch will automatically restart the Icemaking process when the water pressure is increased to 20 PSIG.

On the Water-Cooled models only, a manual reset, high head pressure control is factory set to stop the entire icemaker should the head pressure reach 250 PSIG.

On Water-Cooled models, correct head pressure is 135 PSIG. Adjustments can be made on the Water Regulator Assembly valve. On Air-Cooled models, the head pressure is normal about 130 PSIG, however, it will vary depending upon ambient air temperature.

On the Air-Cooled model only, a Fan Pressure Control maintains the head pressure between limits set on the Control. Certain low ambient conditions will cause low head pressure; which, will open the Fan Pressure control, in turn, stopping the upper Fan. This reduction in air will allow the head pressure to build up and Fan to restart.

Suction pressure should be 13 PSIG with proper refrigerant charge and the frost line should extend out from the accumulator about eight inches. Suction pressure will vary about two PSIG plus or minus, depending upon ambient temperatures and incoming water supply temperatures to the Freezer Assembly.

When charging the system with refrigerant, on Water-Cooled Models, set the compressor head pressure at 135 PSIG, and charge with refrigerant so the frost line extends out of the Compressor at least eight inches, after 15 minutes of operation, for best capacity and performance.

MODEL	MF-900 Refrig. Chg.
Air-Cooled	31 oz. R-12 (Approx.)
Water-Cooled	28 oz. R-12 (Approx.)

ADJUSTMENT AND REMOVAL AND REPLACEMENT PROCEDURES

The procedures provided in this Section are arranged in alphabetical order, to make specific Adjustment and Removal and Replacement information easy to locate.

Read the instructions thoroughly before performing any Adjustment or Removal and Replacement Procedures.

ADJUSTMENT OF THE BIN THERMOSTAT CONTROL

The control for the Bin Thermostat is the Temperature Control, located in the upper part of the Control Box Assembly.

CAUTION

The adjusting screws on the Temperature Control device have very sensitive response to adjustment. DO NOT attempt to adjust the screw until after thoroughly reading and understanding the following instructions and illustrations. Over-adjusting or erratic guessing, can foul the instrument and cause ultimate delay and part replacement, WHICH COULD HAVE BEEN PREVENTED.

ADJUSTMENT IS FOR UNITS INSTALLED 2,000 FEET OR MORE ABOVE SEA LEVEL

Read the instructions thoroughly before performing any adjustment or removal and replacement procedures.

ADJUSTMENT OF THE BIN THERMOSTAT CONTROL

(Installations 2,000 feet above sea level only)

ALTITUDE CORRECTION (ROBERTSHAW ONLY)

ALTITUDE	TURNS C.W.
2,000	40°
4,000	78°
6,000	115°
8,000	148°
10,000	180°

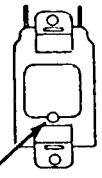

TURN RANGE SCREW

See Figure 4-1 for location and direction of rotation, clockwise (CW) or counterclockwise (CCW), of the adjusting screws on the Temperature Control, in the particular Control Box the adjustment is to be performed.

ADJUSTMENT OF THE LEG LEVELERS

When the MF-900 Flaker or Bin is ordered with the optional Leg Levelers, the Cabinet must be leveled in the front-to-rear and side-to-side directions. This adjustment should be performed during initial installation of the Cabinet and anytime the Cabinet is moved from the original location to another site.

A. Using an open-end wrench, and a carpenter's bubble level, rotate the threaded Leveler in each Leg to RAISE or LOWER the Cabinet until the Cabinet is level in the front-to-rear direction.

B. Repeat step A, for leveling in the side-to-side direction.

C. Recheck both the front-to-rear and the side-to-side leveling and repeat adjustments, as necessary.

ADJUSTMENT OF THE WATER REGULATOR ASSEMBLY

The correct head pressure on Water-Cooled models is 135 PSIG. Adjustments can be performed on the Water Regulator Assembly to increase or decrease the head pressure.

To Adjust the Water Regulator Assembly:

A. To INCREASE the Head Pressure: Rotate the adjusting Screw, on the Water Regulator Assembly IN or CLOCKWISE.

B. To DECREASE the Head Pressure: Rotate the adjusting Screw, on the Water Regulator Assembly OUT or COUNTERCLOCKWISE.

ADJUSTMENT OF THE WATER RESERVOIR FLOAT

The correct water level in the Water Reservoir should be 3/8-inch below the raised molded line, on the side of the body of the Water Reservoir. When the water line level is above or below the raised molded line, adjustment can be performed to raise or lower the water level by raising or lowering the Water Reservoir in the slots on the Mounting Brackets, which in turn will adjust the action of the float.

A. To RAISE the Water Level: Loosen the two Screws which attach the Water Reservoir Assembly to the Mounting Bracket and RAISE the Water Reservoir Assembly, in the slots, the desired amount; then, tighten the Screws.

B. To LOWER the Water Level: Loosen the two Screws which attach the Water Reservoir Assembly to the Mounting Bracket and LOWER the Water Reservoir Assembly, in the slots, the desired amount; then, tighten the Screws.

WARNING

Be sure the electrical power supply and the water supply are OFF, before starting any of the following REMOVAL AND REPLACEMENT procedures, as a precaution to prevent possible personal injury or damage to equipment.

REMOVAL AND REPLACEMENT OF THE AUGER, WATER SEAL, BEARINGS AND COUPLING

A. To Remove the Auger, Water Seal, Bearings, and Coupling:

1. Remove screws and the Front Panel and the Left Side Panel.
2. Remove the Freezer Cap from the top of the Freezer Assembly.
3. Perform the steps in procedure IV-XIII to remove the Spout Assembly.
4. Grasp the wire Cap Hook at the top of the Freezer Assembly and pull out the Auger and attached Cap, Bearing/Retainer, Bearing and O-Rings, at the top of the Auger; and, the top half of the Water Seal at the bottom of the Auger.

NOTE

When the Auger cannot be pulled out, proceed to steps 12 and 13, to gain access to the bottom of the Auger. Then, with a rawhide mallet or placing a piece of wood on the bottom end of the Auger, tap the bottom of the Auger to break it loose and pull the Auger out, as in the step 4 above.

5. Remove the Cap Hook from the Bearing/Retainer.
6. Remove the Retaining Ring and the Cap.
7. Remove the Cap Screw and Washer and remove the Bearing/Retainer from the Auger.
8. Clean away the old grease from the top of the Auger, the Bearing/Retainer, Cap, Cap Screw and Washer, and the O-Ring and Retaining Ring.

9. Inspect the O-Ring at the top of the Bearing/Retainer and the O-Ring at the bottom outside of the Bearing/Retainer, for cuts, tears and general worn condition to determine replacement.
10. Inspect the Bearing pressed into the top of the Bearing/Retainer and, if it is to be replaced, remove the Retaining Ring and press the Bearing out of the Bearing/Retainer.
11. Slide the upper half of the Water Seal off of the bottom of the Auger.

NOTE

1. *Any time the Auger is removed for replacement, or, for the inspection and replacement of the Bearings or Coupling, use extra care in handling the Water Seal parts, so no dirt or foreign matter are deposited on the surfaces of the Seal.*
2. *If there is any doubt about the effectiveness of the Water Seal or O-Ring, REPLACE THEM. A dirty, worn or faulty Water Seal or O-Ring will cause a leak and ultimately require a second, time consuming removal and replacement procedure to be performed, that COULD HAVE BEEN PREVENTED.*

12. Remove four screws and lockwashers which attach the Freezer Assembly to the Adaptor on the Drivemotor Assembly.
13. Raise the Freezer Assembly off of the Adaptor, to gain access to the Bearing and Retainer; then, temporarily secure the Freezer Assembly out of the way to allow room to work. Be careful not to damage the gasket.
14. Using a suitable length and size wooden dowel or stick inserted through the top of the open Freezer Assembly, tap the lower half of the Water Seal and the lower Bearing in the Retainer, out the bottom of the Freezer Assembly.
15. Inspect the lower half of the Water Seal. If reusable, use care to protect it from dirt, etc. prior to replacement procedure.
16. Inspect the lower Bearing in the Retainer; and, if the Bearing is to be replaced, press the Bearing out of the Retainer.
17. Reach through the Adaptor and remove the Coupling on the Drivemotor for inspection.
18. Check the Coupling for cracks, chipping and excessive wear.

B. To replace the Auger, Water Seal, Bearings, and Coupling, reverse the removal procedure.

NOTE

1. *When installing the Retainer assembled with Bearing, in the bottom of the Freezer Assembly, some Retainers will insert as a slip fit, and some will have to be forced into place because of very tight fit. Carefully tap a piece of wood positioned across the bottom of the Retainer, to evenly seat the Retainer in the chamber of the Freezer.*
2. *After assembling the parts on the upper end of the Auger and BEFORE installing the Cap and Cap Hook, apply an ample coating of Shell Alvania 3 Grease, P/N 19-0309-01, to the upper part of the Bearing/Retainer to cover the Retaining Ring and the Cap Screw and Washer. Then, install the Cap and Cap Hook in place.*

REMOVAL AND REPLACEMENT OF THE COMPRESSOR ASSEMBLY

NOTE

Always install a replacement Drier, any time the sealed refrigeration system is opened. Do not replace the Drier until all other repair or replacement has been completed.

A. To Remove the Compressor Assembly:
1. Remove screws and the Left Side Panel.
2. Remove two screws and the Cover from the Compressor Junction Box.
3. Disconnect the electrical leads at the Compressor Junction Box, that originate in the Control Box.
4. Bleed off or blow the refrigerant charge through the Schrader valves.
5. Unsolder the suction line from the Compressor.
6. Unsolder the discharge line from the Compressor.
7. Unsolder the process header tube from the Compressor and retain for installation on the Replacement Compressor.
8. Remove four bolts, lockwashers and washers which secure the Compressor to the Chassis mounting base.
9. Slide the Compressor and remove through the left side opening of the Cabinet.

NOTE

Thoroughly evacuate the system to remove moisture and non-condensables.

B. To replace the Compressor Assembly, reverse the removal procedure.

REMOVAL AND REPLACEMENT OF THE CONDENSER — AIR-COOLED MODELS

NOTE

Always install a replacement Drier, any time the sealed refrigeration system is opened. Do not replace the Drier until all other repair or replacement has been completed.

A. To Remove the Condenser:

1. Remove screws and the Front Panel and the Left Side Panel.
2. Bleed off or blow the refrigerant charge through the Schrader valve.
3. Unsolder and disconnect the Condenser inlet tube at the Condenser.
4. Unsolder and disconnect the Condenser outlet tube at the Condenser.
5. Remove three screws, lockwashers and washers securing the Condenser to the Chassis Base.
6. Remove the Condenser out through the front opening of the cabinet.

NOTE

Thoroughly evacuate the system to remove moisture and non-condensables.

B. To replace the Condenser, reverse the removal procedure.

REMOVAL AND REPLACEMENT OF THE CONDENSER — WATER-COOLED MODELS

NOTE

Always install a replacement Drier, any time the sealed refrigeration system is opened. Do not replace the Drier until all other repair or replacement has been completed.

A. To Remove the Condenser:

1. Remove screws and the Front Panel and the Left Side Panel.
2. Bleed off or blow the refrigerant charge through the Schrader valve.
3. Unsolder the refrigerant inlet and outlet lines from the Condenser.
4. Disconnect the water inlet and outlet lines from the Condenser.
5. Remove two bolts, lockwashers and washers which secure the Condenser to the Chassis mounting base.
6. Remove the Condenser from the Cabinet.

NOTE

Thoroughly evacuate the system to remove moisture and non-condensables.

B. To replace the Condenser, reverse the removal procedure.

REMOVAL AND REPLACEMENT OF THE DRIER

NOTE

Always install a replacement Drier, any time the sealed refrigeration system is opened. Do not replace the Drier until all other repair or replacement has been completed.

A. To Remove the Drier:

1. Remove screws and the Front Panel and the Left Side Panel.
2. Remove screw and Drier Brace attaching the Drier to the Chassis base.
3. Bleed off or blow the refrigerant charge through the Schrader valve.
4. Unsolder refrigeration lines at each end of Drier, remove the Drier and separate the Drier from the Drier Brace.

B. To replace the Drier:

CAUTION

1. If the factory seal is broken on the replacement Drier, exposing it to the atmosphere more than a few minutes, the Drier will absorb moisture from the atmosphere and lose substantial ability for moisture removal.

2. Be sure the replacement Drier is installed with the arrow positioned in the direction of the refrigerant flow.

1. Remove the factory seals from the replacement Drier and install the Drier in the refrigerant lines with the arrow positioned in the direction of the refrigerant flow.
2. Install the Drier Brace on the Drier.
3. Solder the Drier into the lines, two places.
4. Purge the system and check for leaks.
5. Thoroughly evacuate the system to remove moisture and non-condensables.
6. Charge the system with refrigerant, by weight. SEE NAMEPLATE.

7. Replace the Front Panel and the Left Side Panel and attach both with screws removed earlier.

REMOVAL AND REPLACEMENT OF THE DRIVEMOTOR ASSEMBLY

A. To Remove the Drivemotor Assembly:
   1. Perform all steps in procedure IV-XII to gain access for removal of the Drivemotor Assembly.
   2. Remove bolts, lockwashers and washers which attach the Drivemotor to the Chassis base.
   3. Lift the Drivemotor from the Chassis base and out of the Cabinet.

B. To replace the Drivemotor Assembly, reverse the removal procedure.

REMOVAL AND REPLACEMENT OF THE FAN MOTOR ASSEMBLY — AIR-COOLED MODELS

NOTE

Before beginning this procedure, observe the Fan Blade position on the shaft of the Fan Motor and mark the Fan Blade so it will be correctly positioned during reassembly. Direction of air flow should be toward the Fan Motor.

A. To Remove the Fan Motor Assembly:
   1. Remove screws and the Front Door and the Left Side Panel.
   2. Disconnect the electrical lead from the Fan Motor.
   3. Remove four screws securing the two Fan Mounting Brackets to the Condenser Shroud and remove the Fan Motor and Brackets out through the left side opening of the Chassis.
   4. Remove the nut from the end of the Fan Motor shaft and remove the Fan Blade.
   5. Remove four screws securing each Fan Mounting Bracket, upper and lower, to the Fan Motor and separate the Motor from the Brackets.

B. To replace the Fan Motor Assembly, reverse the removal procedure.

REMOVAL AND REPLACEMENT OF THE FREEZER ASSEMBLY

NOTE

1. *The Cabinet may have to be removed from its permanent location, especially if located in a corner, in order to have access to the left side and rear of the Chassis.*
2. *In addition to shutting OFF electrical power and inlet water to the icemaker, be sure to disconnect the inlet water line at the rear of the Cabinet BEFORE moving the icemaker from the permanent location.*
3. *Always install a replacement Drier, anytime the sealed refrigeration system is opened. Do not replace the Drier until all other repair or replacement has been completed.*

A. To Remove the Freezer Assembly, see Figure 4-2:
   1. Remove screws and left side, front and rear panels.
   2. Refer to procedure IV-XIII and remove the Spout Assembly.
   3. Remove Corbin clamp and Tygon tube from the Freezer Assembly that connects to the Water Reservoir Assembly.
   4. Bleed off or blow the refrigerant charge through the Schrader valve.
   5. Unsolder the suction line from the Compressor.
   6. Unsolder the capillary line at the Drier.
   7. Remove four screws, lockwashers and washers which attach the bottom of the Freezer Assembly to the Adaptor on the Drivemotor Assembly.

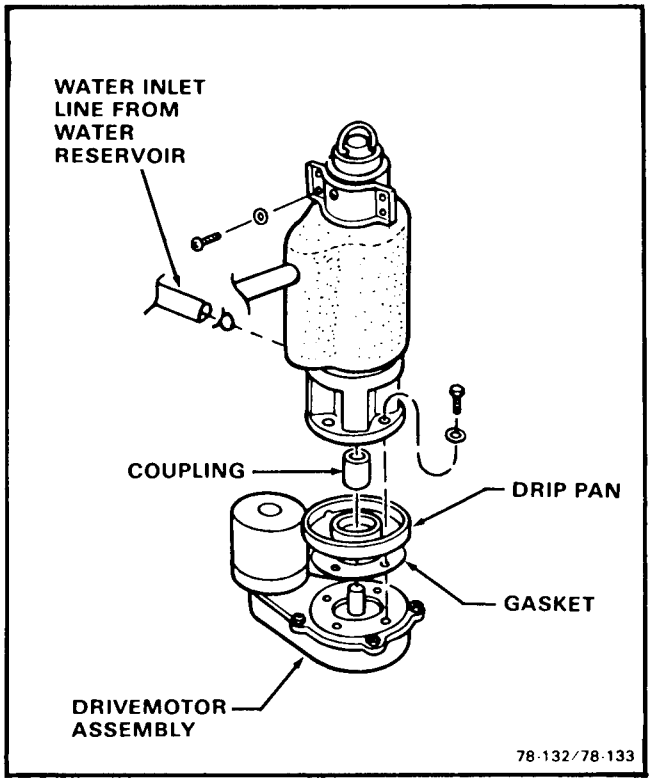

Figure 4-2. Removal of the Freezer Assembly.

8. Lift the Freezer Assembly up and off of the Adaptor and Drivemotor Assembly.

NOTE

Thoroughly evacuate the system to remove moisture and non-condensables.

B. To replace the Freezer Assembly, reverse the removal procedure.

REMOVAL AND REPLACEMENT OF THE SPOUT ASSEMBLY

A. To Remove the Spout Assembly, see Figure 4-3:

1. Remove screws and the Front Panel and Left Side Panel.
2. Remove the Hose Clamp and disconnect the Nylobraid tube from the end of the spout.
3. Remove the Freezer Cap from the top of the Freezer Assembly.
4. Disconnect the electrical leads from the Spout Switch.
5. Remove four screws and washers and separate the Spout Assembly from the Spout Plate on the Freezer Assembly.

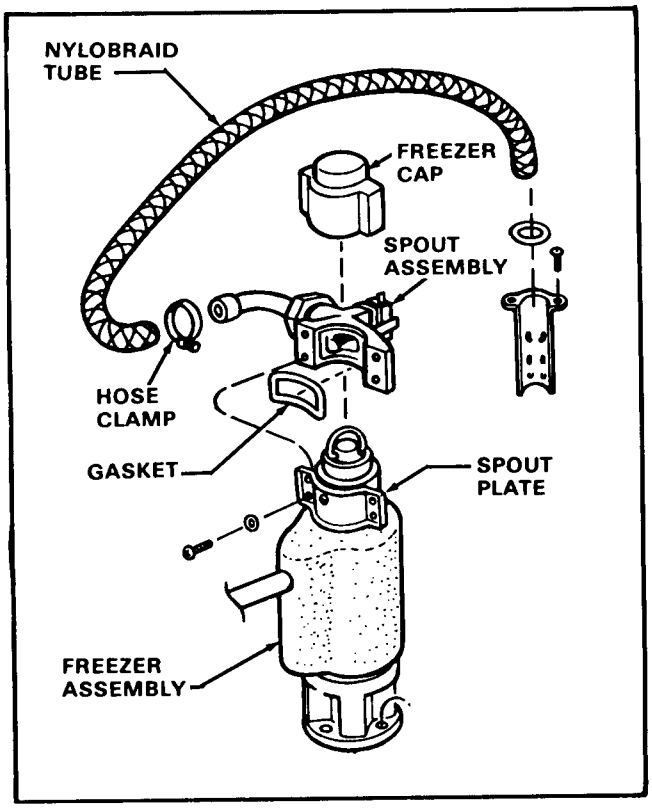

Figure 4-3. Removal of the Spout Assembly.

NOTE

At this time, inspect the spout Gasket and retain for the replacement procedure. Replace a torn, cut or worn, defective gasket.

B. To replace the Spout Assembly, reverse the removal procedure.

REMOVAL AND REPLACEMENT OF THE WATER PRESSURE CONTROL

A. To Remove the Water Pressure Control:

1. Remove screws and the Front Panel and the Left Side Panel.
2. Remove screws and the Control Box Cover.
3. Disconnect the two blue electrical leads of the Water Pressure Control, from the terminals on the Auger Delay Control and the Bin Thermostat device in the Control Box Assembly.
4. Unscrew the flare nut fitting and disconnect the Water Pressure Control from the Utility Bracket and the Tee on the inlet water tubing.

NOTE

At this time, inspect the O-Ring and retain for the replacement procedure. Replace O-Ring that is cut, torn or indicates excessive wear.

B. To replace the Water Pressure Control, reverse the removal procedure.

REMOVAL AND REPLACEMENT OF THE WATER REGULATOR ASSEMBLY — WATER—COOLED MODELS

A. To Remove the Water Regulator Assembly:

NOTE

Always install a replacement Drier, any time the sealed refrigeration system is opened. Do not replace the Drier until all other repair or replacement has been completed.

1. Remove screws and the Front Panel.
2. Bleed off or blow the refrigerant charge through the Schrader valve.
3. Unsolder the Capillary line from the Water Regulator Assembly, where connected at the process header.
4. Disconnect the water inlet line at the rear of the Water Regulator.
5. Disconnect the Condenser water inlet tube at the front of the Water Regulator.

6. Remove two screws, lockwashers and washers which attach the Water Regulator Assembly bracket to the Chassis base and remove the Water Regulator Assembly and bracket.

NOTE

Thoroughly evacuate the system to remove moisture and non-condensables.

B. To replace the Water Regulator Assembly reverse the removal procedure.

REMOVAL AND REPLACEMENT OF THE WATER RESERVOIR ASSEMBLY

A. To Remove the Water Reservoir Assembly, see Figure 4-4:

1. Remove screws and the Front Panel and the Left Side Panel.

NOTE

Be prepared with container or rags, to catch water left in lines, when lines are disconnected in next steps, to prevent draining water on parts, components, electrical lines, etc.

2. Disconnect the water inlet tube from the Water Reservoir Assembly.
3. Remove two Corbin clamps and two tubes from the bottom of the Water Reservoir Assembly.
4. Unscrew and remove the wing nut from the bottom of the Water Reservoir Assembly.
5. Lift and remove the Water Reservoir Assembly from the mounting bracket.

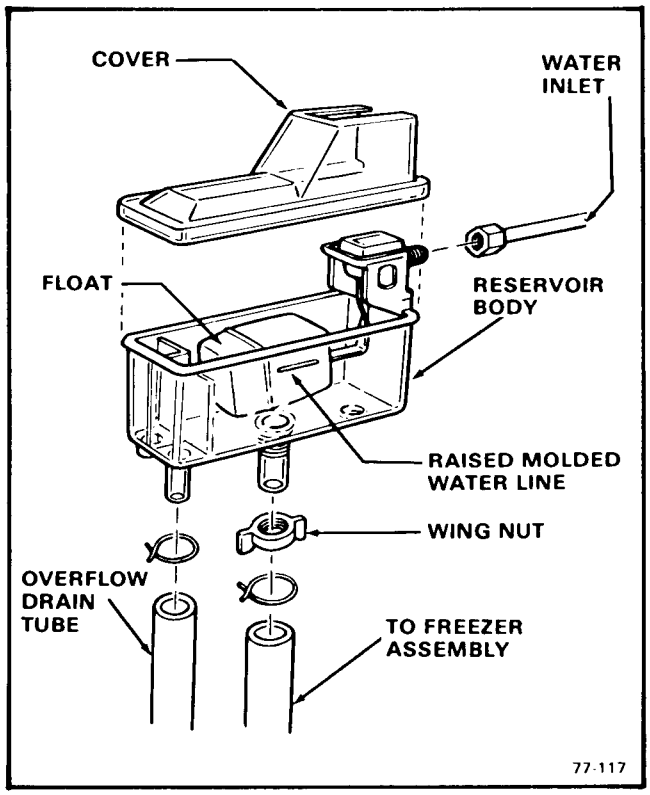

Figure 4-4. Removal of the Water Reservoir Assembly.

B. To replace the Water Reservoir Assembly, reverse the removal procedure.

NOTE

Check that the installed replacement Water Reservoir Assembly float moves freely. The correct water level in the Water Reservoir is 3/8-inch below the raised molded line, on the side of the body of the Water Reservoir.

BIN THERMO BRACKET INSTALLATION INSTRUCTIONS

1. Align two-inch diameter hole in flaker with proper hole in bin top.
2. Wrap the capillary tube on the bracket as shown in the drawing.
3. Insert bin thermo bracket and cap tube assembly through two inch hole in base and on into bin.
4. Attach the flange of the bin thermo bracket to the flaker base with two No. 8 screws. Make certain bracket is at 90° to inside top of bin.
5. Slide the rubber washer on the tube down on top of the cabinet base.
6. Connect ice transport tube to ice spout elbow with hose clamp.

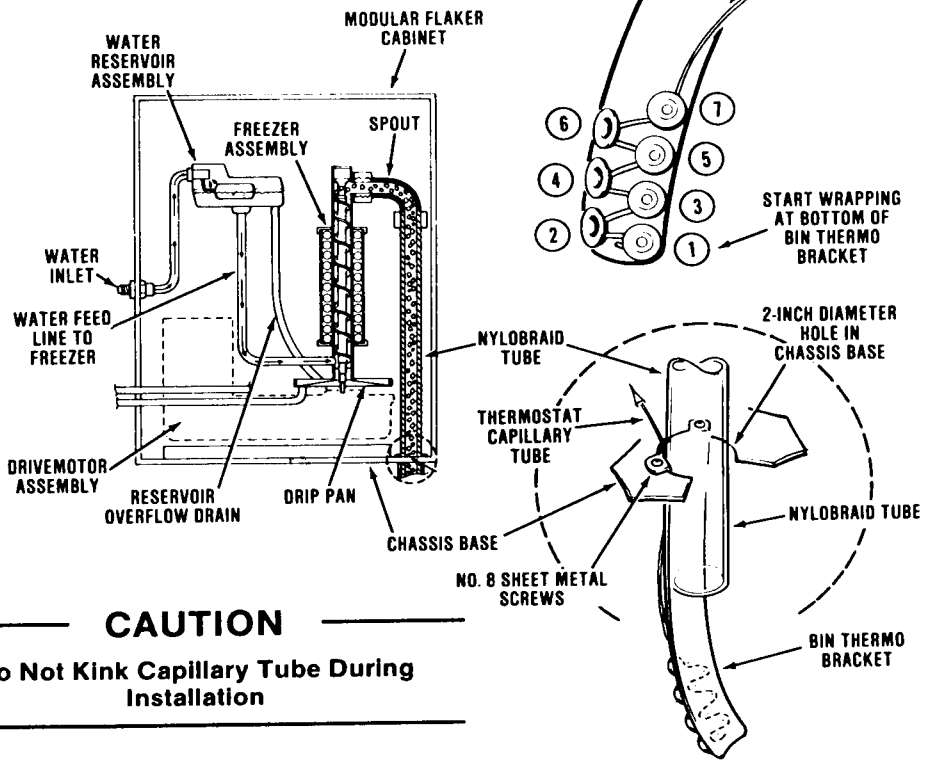

CAUTION

Do Not Kink Capillary Tube During Installation

MAINTENANCE & CLEANING INSTRUCTIONS

GENERAL

The periods and procedures for maintenance and cleaning are given as guides and are not to be construed as absolute or invariable. Cleaning especially will vary, depending upon local water conditions and the ice volume produced and, each Icemaker must be maintained individually, in accordance with its own particular location requirements.

ICEMAKER

THE FOLLOWING MAINTENANCE SHOULD BE SCHEDULED AT LEAST TWO TIMES PER YEAR ON THIS ICEMAKER. CALL YOUR AUTHORIZED SCOTSMAN SERVICE AGENCY.

1. Check and clean water line Strainers.
2. Remove cover from Water Reservoir and depress the float to ensure that a full stream of water enters the Reservoir.
3. Check that the Icemaker cabinet is level, in side-to-side and front-to-rear directions.
4. Check that the water level in the Water Reservoir is below the overflow, but high enough that it does not run out of the spout opening.

NOTE

It is not abnormal for some water to emerge from the Ice Spout with flaked ice during normal ice production.

5. Clean the Water Reservoir and interior of the Freezer Assembly, using a solution of SCOTSMAN Ice Machine Cleaner. Refer to procedure V-III, CLEANING-Icemaker.

NOTE

Cleaning requirements vary according to local water conditions and individual user operation. Visual inspection of the Auger before and after cleaning will indicate frequency and procedure to be followed in local areas.

6. When doubtful about refrigerant charge, install refrigerant gauges on Schrader valves and perform steps 6 and 7. Check gauge for Compressor head pressure:

   AIR-COOLED MODELS: Varies between 130 to 145 PSIG.

   WATER-COOLED MODELS: Set at 135 PSIG. Adjust screw on top of Water Regulator Valve to raise or lower head pressure.

7. Check gauge for Suction line pressure:

   Varies between 12 to 16 PSIG, depending upon inlet water temperature and ambient air temperature.

8. Check Drivemotor operation:

   Normal operating temperatures are about 160-degrees F., which is hot to touch.

9. Check operation of the centrifugal sensing switch:

   MF-900: 1/4 HP Motor.

   Switch will OPEN between 850-950 RPM and the Compressor STOPS, with the Drivemotor operating. Switch will CLOSE between 1100-1250 RPM and the Compressor will RESTART, with Drivemotor building back up to normal operating speed.

10. Remove the Insulation Strap and Clip, the Right and Left Spout Insulation pieces, the Retaining Ring and the Hook and Cap from the top of the Freezer Assembly.
11. Inspect the Top Bearing. If moisture is around Bearing, wipe clean of all grease and apply a coating of Shell Alvania 3 Grease, Scotsman P/N 19-0309-01, 1-lb. Can. Replace parts removed in step 10.

NOTE

BEFORE next step, move the manual ON-OFF toggle switch, on the front of the Control Box, to the OFF position to stop the Fan Motor and Icemaker.

12. Clean the Air-Cooled Condenser, using vacuum cleaner, whisk broom or brush. Instruct customer to clean frequently and to be sure Icemaker and Fan Motor are OFF.
13. Check that Fan Blades move freely, are not touching any surfaces and are not bent or out of balance.
14. Check for refrigerant leaks and for proper frost line, which should frost out of accumulator at least half way to the compressor and in some areas, back to service valve.

15. Check for water leaks. Tighten drain line connections. Pour water down Bin drain to be sure that drain line is open and clear.
16. Check the quality of ice. Ice flakes should be wet when formed, but will cure rapidly to normal hardness in the Bin.
17. Check the Bin Thermostatic Ice Control Bulb.

NOTE

The Bin Thermostat is factory set at 10-degrees F. differential and should keep the entire Icemaker system shut off at least 10 minutes in high ambient temperatures, longer in low ambient temperatures during normal operation. Settings are 35-degrees F. CUT-OUT and 45-degrees F. CUT-IN.

18. Check the Spout Switch.

NOTE

The Spout Switch is manually reset and functions as a safety switch, to automatically stop the icemaking process if the Bin Thermostat Bulb were to fail and cause ice to jam up in the Ice Tube.

CLEANING - Icemaker

1. Remove screws and the Front Panel.
2. Move the manual ON-OFF toggle switch, on the front of the control Box, to the OFF position.
3. Remove all ice from the Ice Storage Bin.
4. CLOSE the water supply shutoff valve; or block the float in the Water Reservoir.
5. Disconnect the tube between the Water Reservoir and the bottom of the Freezer Assembly and drain water from the Reservoir and tube. Reconnect the tube.

WARNING

SCOTSMAN Ice Machine Cleaner contains Phosphoric and Hydroxyacetic acids. These compounds are corrosive and may cause burns if swallowed, DO NOT induce vomiting. Give large amounts of water or milk. Call Physician immediately. In case of external contact flush with water. KEEP OUT OF THE REACH OF CHILDREN.

6. Prepare cleaning solution: Mix eight ounces of SCOTSMAN Ice Machine Cleaner with two quarts of hot water.
7. Remove the Cover to the Water Reservoir.
8. Slowly pour the cleaning solution into the Water Reservoir.
9. Move the manual ON-OFF toggle switch, on the front of the Control Box, to the ON position.
10. Continue to slowly pour the cleaning solution into the Water Reservoir, maintain level just below the Reservoir overflow.
11. Continue icemaking, using the cleaning solution, until all the solution is used up and the Water Reservoir is almost empty. DO NOT allow the icemaker to operate with empty Reservoir.
12. Move the manual ON-OFF toggle switch, on the front of the Control Box to the OFF position.
13. Wash and rinse the Water Reservoir.
14. OPEN the water supply shutoff valve; or remove the block from the float in the Water Reservoir.
15. Move the manual ON-OFF toggle switch, on the front of the Control Box, to the ON position.
16. Continue icemaking for at least 15 minutes, to flush out any cleaning solution. Check ice for acid taste - continue icemaking until ice tastes sweet.
17. Move the manual ON-OFF toggle switch, on the front of the Control Box, to the OFF position.

CAUTION

DO NOT use ice produced from the cleaning solution. Be sure none remains in the bin.

18. Remove all ice from the Ice Storage Bin.
19. Add hot water to the Ice Storage Bin and thoroughly wash and rinse all surfaces within the Bin.
20. Clean and sanitize the Ice Storage Bin each week.

SERVICE DIAGNOSIS

The Service Diagnosis Section is for use in aiding the serviceman in diagnosing a particular problem for pin-pointing the area in which the problem lies, thus an ever available reference for proper corrective action.

The following charts lists corrective actions for the causes of known symptoms of certain problems that can occur in the Icemaking - Refrigeration System.

ICEMAKING - REFRIGERATION SYSTEM

SYMPTOM	POSSIBLE CAUSE	CORRECTION
Water Leaks.	Defective water seal.	Replace Seal.
	Gravity feed line leaking.	Check hose clamps.
	Water level in reservoir too high.	Adjust water level to 3/8-inch below reservoir overflow, then raise reservoir until water flows out freezer spout, then lower reservoir 3/4-inch.
	Storage bin drain and connecting fittings.	Check and repair.
Excessive noise or chattering.	Mineral or scale deposit on auger and inner freezing chamber walls.	For severe deposit, remove and manually polish auger, sand inner chamber walls of freezer barrel.
		For lighter concentration, use Scotsman Ice Machine Cleaner periodically.
	Intermittent water supply.	Check and clean water strainer.
		Check gravity feed line for air lock.
		Remove air lock.
	Water level in reservoir too low.	See CORRECTION for Water Leaks above.
	Gear Reducer loose on frame.	Tighten Gear Reducer.
	Motor compressor not solid on rubber mounts.	Repair or replace rubber mounts.
	Gearmotor end-play or worn bearing.	Repair or replace bearing.
Making wet ice. (Ice melts too quickly, is not cold enough to properly cure in the Bin.)	Surrounding air temperature too high.	Correct or move cabinet.
	Under or over-charge of refrigerant.	Recharge with proper amount. Should frost out of accumulator at least 8-inches. See nameplate for correct charge. See CORRECTION for Water Leaks above.

ICEMAKING - REFRIGERATION SYSTEM (Cont'd)

SYMPTOM	POSSIBLE CAUSE	CORRECTION
Making wet ice (cont'd)	Back pressure too high.	Overcharge of refrigerant. Faulty compressor or high head pressure. Lower pressure as indicated.
	Faulty compressor or valve plate.	Repair or replace compressor or valve plate.
Low ice production.	Loss of refrigerant. Under or over-charge of refrigerant.	Check and recharge. See NAMEPLATE for correct charge.
	Drivemotor weak.	Replace Drivemotor.
	Dirty or plugged condenser.	Clean condenser.
	Low water level in water reservoir.	See CORRECTION for Water leaks above.
	Partial restriction in capillary tube or drier.	Moisture in system. Overcharge of oil in system. Remove charge by blowing back through cap tube. Replace drier and recharge.
	Inlet water strainer partially plugged.	Remove screen and clean.
	Corroded or stained auger due to water condition.	Remove auger and clean, or use Scotsman Ice Machine Cleaner. See Maintenance Section.
Gearmotor noise.	Low on oil.	Remove case cover to check for proper oil level. Top of gears should be covered. Use: Sun Oil Company Prestige 50-EP
Icemaker will not operate.	Blown fuse in line.	Replace fuse and check for cause of blown fuse.
	Bin thermostat set too high.	Adjust thermostat. Set at 35-degrees cut-out, 45-degrees cut-in.
	Loose electrical connection.	Check wiring.
	Switch in OFF position.	Set switch to ON position.
	Inoperative master switch.	Replace switch or thermal overload.
	Off on manual-reset pressure control.	Reset.
Icemaker continues to operate with full storage bin.	Bin thermostat not properly set or is defective.	Re-set or replace bin thermostat Re-set to 35-degrees cut-out, 45-degrees cut-in.
Compressor cycles intermittently.	Low voltage.	Check for overloading.
	Dirty condenser.	Clean condenser.
	Air circulation blocked.	Remove cause or move unit.
	Inoperative condenser fan motor.	Replace motor.

ICEMAKING - REFRIGERATION SYSTEM (Cont'd)

SYMPTOM	POSSIBLE CAUSE	CORRECTION
Compressor Cycles intermittently (cont'd)	Non-condensable gases in system.	Check for gas leaks, evacuate and recharge.
	Bin thermostat differential too small causing short cycling.	Widen differential 35-degrees cut-out, 45-degrees cut in.
	Cycling on ice spout microswitch.	Set or replace Bin thermostat.
Icemaker operates but makes no ice.	Loss or undercharge of refrigerant.	Check for leaks and recharge. See NAMEPLATE for correct charge.
	Water not entering freezing chamber.	Plugged strainer or supply line. Check and clean. Air lock in gravity feed line. Check and remove air lock.
	Moisture in system	Check, evacuate, replace drier.
		Recharge. See NAMEPLATE for correct charge.
	Water seal leaking.	Replace seal.
	Water turned off while unit was operating.	Freezer inlet water line froze shut. Unit must be turned off and defrosted.
	Drivemotor or drive coupling stripped.	Repair or replace drivemotor or drive coupling.

TABLE OF CONTENTS

Table of Contents i
List of Illustrations iii
Specifications MF900R iv
Specifications Remote Condenser v

SECTION I- GENERAL INFORMATION & INSTALLATION 1-1
I. Introduction 1-1
II. Unpacking and Inspection 1-1
III. Location and Leveling 1-2
IV. Remote Condenser and Pre-Charged Refrigerant Lines—Installation 1-2
V. Electrical Connections 1-3
VI. Water Supply and Drain Connections 1-6
VII. Bin Thermo Bracket Installation 1-6
VIII. Final Check List 1-6

SECTION II.- START UP OPERATION 2-1
I. Start Up 2-1

SECTION III.- PRINCIPLES OF OPERATION - How It Works 3-1
I. Icemaker 3-1
II. Electrical/Refrigeration 3-1
III. Compressor Crankcase Heater and Automatic Expansion Valve 3-2

SECTION VI.- ADJUSTMENT AND REMOVAL AND REPLACEMENT PROCEDURES 4-1
I. Adjustment of the Bin Thermostat Control 4-1
II. Adjustment of the Leg Levelers 4-1
III. Adjustment of the Water Reservoir Float 4-1
IV. Removal & Replacement of the Auger, Water Seal, Bearings and Coupling 4-2
V. Removal & Replacement of the Automatic Expansion Valve 4-3
VI. Removal & Replacement of the Bin Thermostat Control 4-3
VII. Removal & Replacement of the Compressor Assembly 4-4
VIII. Removal & Replacement of the Drier 4-4
IX. Removal & Replacement of the Drivemotor Assembly 4-4
X. Removal & Replacement of the Freezer Assembly 4-5
XI. Removal & Replacement of the Spout Assembly 4-5
XII. Removal & Replacement of the Water Pressure Control 4-5

TABLE OF CONTENTS (Cont'd)

XIII. Removal & Replacement of the Water Reservoir Assembly 4-6
XIV. Removal & Replacement of Remote Condenser Fan Motor Assembly, Thermostat Control, Head Pressure Control Valve 4-6

SECTION V.- MAINTENANCE & CLEANING INSTRUCTIONS 5-1
I. General 5-1
II. Icemaker 5-1
III. Remote Condenser 5-1
IV. Cleaning - Icemaker 5-2

SECTION VI. SERVICE DIAGNOSIS 6-1
I. Icemaking - Refrigeration System 6-1

SECTION VII. WIRING DIAGRAMS 7-1
Wiring Diagram MF900R-2A & MF900-7A (Includes Remote Condenser) 7-2
Wiring Diagram MF900R-3A (Includes Remote Condenser) 7-3

SECTION VIII.- THE PARTS ILLUSTRATIONS AND PARTS LISTS 8-1
I. General 8-1
II. How to Use the Illustrations and Parts Lists 8-1
III. How to Order Parts or Assemblies 8-1

LIST OF ILLUSTRATIONS

	Specifications — Model MF900R	iv
	Specifications — Model RC151-32A and RC302-32A	v
Figure 1-1.	Pre-Charged Refrigerant Line Hook-up	1-4
Figure 1-2.	Pre-Charged Refrigerant Line Routing	1-5
Figure 1-3.	Installation Practice	1-8
Figure 2-1.	Water Schematic	2-1
Figure 3-1.	Refrigeration Cycle Schematic	3-2
Figure 4-1.	Adjustment of the Temperature Control	4-1
Figure 4-2.	Removal of the Freezer Assembly	4-5
Figure 4-3.	Removal of the Spout Assembly	4-6
Figure 4-4.	Removal of the Water Reservoir Assembly	4-6
Figure 7-1.	Wiring Diagram MF900R-2A & MF900R-7A	7-2
Figure 7-2.	Wiring Diagram MF900R-3A	7-3
Figure 8-A.	Modular Flaker MF900R with Remote Condenser	8-2
Figure 8-1.	MF900R Cabinet, Remote Condenser and Pre-Charged Lines	8-3
Figure 8-2.	Major Assemblies	8-5
Figure 8-3.	Compressor Assembly	8-9
Figure 8-4.	Spout Assembly	8-10
Figure 8-5.	Freezer Assembly	8-12
Figure 8-6.	Drivemotor Assembly	8-15
Figure 8-7.	Control Box Assembly	8-18
Figure 8-8.	Remote Condenser RC151, RC302	8-20
Figure 8-00.	How to Use the Illustrated Parts List	8-22

This icemaker has been engineered to our own rigid safety and performance standards. The National Sanitation Foundation (NSF) seal, signifies that it is listed with the NSF and that it complies with the materials and construction standards of the NSF. In addition, the Underwriters Laboratories, Inc., (UL) Listing Mark and the Canadian Standards Association (CSA) Monogram, both signify that its construction and design have been inspected and tested by them. NSF, UL and CSA inspectors also periodically examine production icemakers at the factory, to assure continued compliance.

To retain the safety and performance built into this icemaker, it is important that installation and maintenance be conducted in the manner outlined in this manual.

SPECIFICATIONS
MODEL MF900R

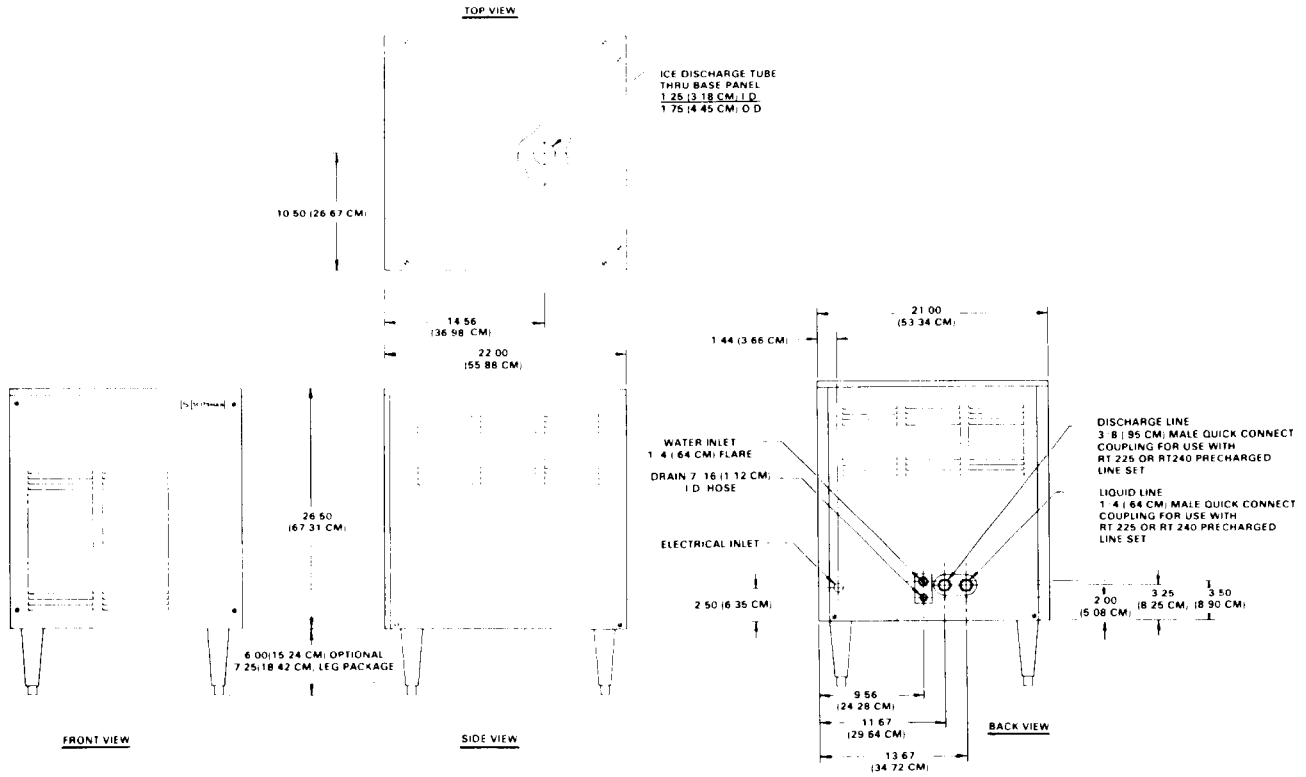

MODEL	ELECTRICAL	Est. Ship Wt.
MF900R - 2A	230/60/1	217 lbs.
MF900R - 3A	208/230/60/3	217 lbs.
MF900R - 7A	208/60/1	217 lbs.

MODEL NUMBER	MOTORS	VOLTS	HP/WATT	F.L.A.	L.R.A.
	COMP				
SERIAL NUMBER	DRIVE				
REFRIGERANT 12 HEATER	FAN				
OZ. WATTS	OTHER				
TEST PRESSURE 140 LO - 235 HI					
A.C. SUPPLY VOLTAGE			WIRES	CYCLES	PHASE
MAXIMUM FUSE SIZE AMPS	MINIMUM CIRCUIT AMPACITY				
GLEN PRODUCTS DIVISION					

MODEL NUMBER	
SERIAL NUMBER	

OPTIONAL LEG KIT

KLP2E - 6-inch metal legs, Black Enamel

KLP2S - 6-inch metal legs, Nickel Plated

EASY ACCESS SERVICE PANELS

OPTIONAL PANELS KIT

SPKMF-900 - Stainless Steel Panels for use with the MF900.

SEE NAMEPLATE for electrical and refrigeration specifications. Locate the NAMEPLATE on the lower, left part of the Rear Panel. Shown at left.

Remove Front Panel to locate the Model/Serial Number plate, shown at left on the front center of the chassis base.

SPECIFICATIONS (Con't)
MODEL RC151-32A AND RC302-32A

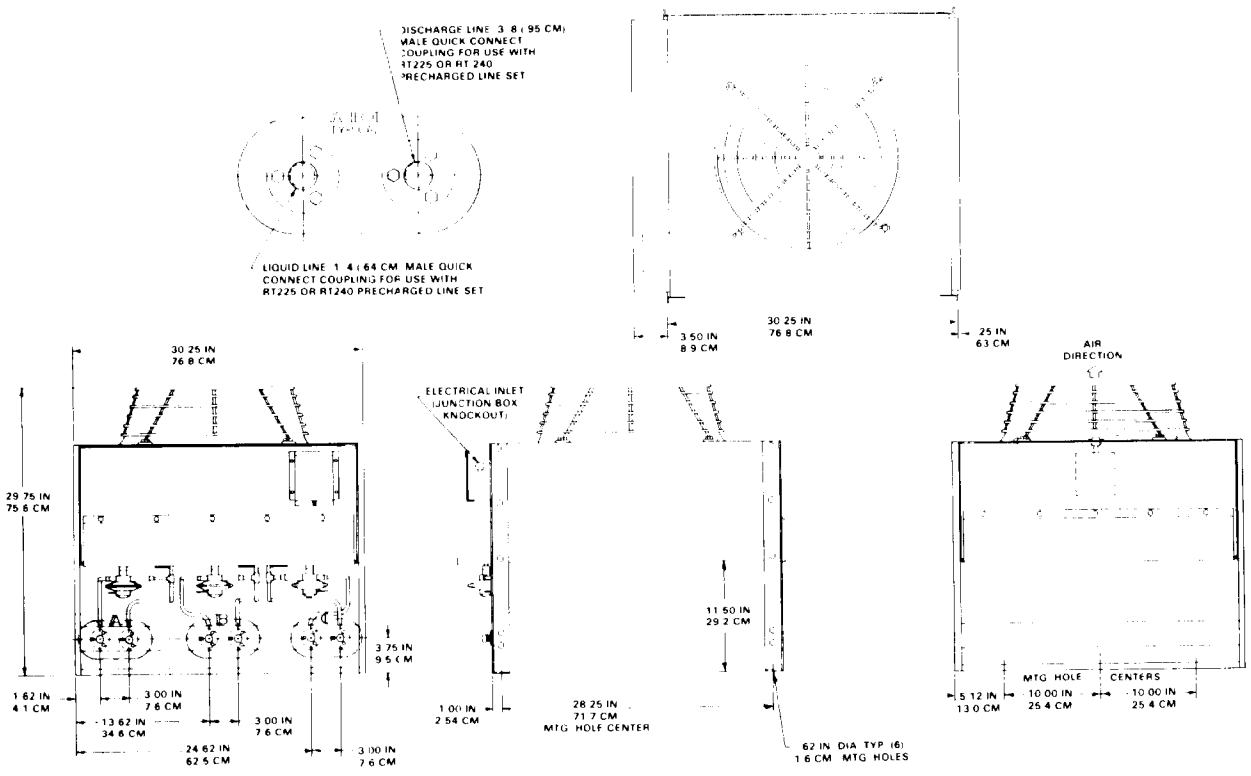

FRONT VIEW **SIDE VIEW** **REAR VIEW**

MODEL	ELECTRICAL	EST. SHIP WT.
RC 151 - 32A	208/230/60/1	140 lbs.
RC 302 - 32A	208/230/60/1	155 lbs.

SEE DATA PLATE for MODEL NUMBER. SERIAL NUMBER, ELECTRICAL and REFRIGERATION Specifications. Locate DATA PLATE on the upper front panel at the center of the shroud.

SCOTSMAN
AIR COOLED CONDENSER
QUEENS PRODUCTS DIV.
KING SEELEY THERMOS CO.
ALBERT LEA, MINNESOTA 56007

MODEL NUMBER	RCXXX-32A
SERIAL NUMBER	XXXXXX-XX
VOLTS	XXX-XXX
CYCLE	XX
PHASE	X
NUMBER OF MOTORS	X
MOTOR HORSEPOWER	XX
NUMBER REFRIGERANT CIRCUITS	X
R-12 CIRCUIT	XX oz
TOTAL AMPS	XX amps
MINIMUM CIRCUIT AMPACITY	XX amps
MAXIMUM FUSE SIZE	XX amps
WORKING PRESSURE	XXX psig

SUITABLE FOR OUTDOOR USE

PRE-CHARGED REFRIGERANT LINE KITS

KIT NUMBER	SIZE	EST. SHIP. WT.
RT225	25-Foot	7 lbs.
RT240	40-Foot	10 lbs.

We reserve the right to make product improvements at anytime. Specifications are subject to change without notice.

SECTION I
GENERAL INFORMATION & INSTALLATION

I. INTRODUCTION

This manual provides the specifications and the step-by-step procedures for the installation, start-up and operation, and the maintenance and cleaning for the SCOTSMAN Model MF900R Modular Flakers with remote condenser.

The Model MF-900R Modular Flakers are quality designed, engineered and constructed, and thoroughly tested ice-making systems, providing the utmost in flexibility to fit the needs of a particular user. Separate sections detail more specifically: General Information & Installation; Start Up Operation; Principles of Operation; Adjustment and Removal and Replacement Procedures; Maintenance and Cleaning Instructions; Service Diagnosis; Wiring Diagrams; and, the Illustrated Assemblies and Parts Lists.

DESCRIPTION

An attractive compact cabinet of leathergrain embossed steel, with charcoal brown baked enamel high glossy finish. Also, an optional stainless steel panel kit is available. These removable panels allow easy access to electrical and mechanical components for cleaning and maintenance.

SEALED REFRIGERATION SYSTEM

To provide quiet efficient operation of the Icemaker, the Compressor motor is internally spring-mounted. The Compressor motor is covered by a five year parts warranty. The Freezer Assembly is powered by a direct-drive, gear motor, Drivemotor Assembly.

REMOTE CONDENSER AND PRE-CHARGED REFRIGERANT LINES

The Model MF900R Modular Flaker can be installed with any one of two Remote Condensers and with either of two lengths of pre-charged refrigerant lines and sealed couplings.

Available are the single-pass Condenser and the two-pass Condenser. The single-pass Condenser can accommodate a single MF900R Flaker and one set of two pre-charged refrigerant lines. The two-pass Condenser can accommodate two separate MF900R Flakers at two different locations.

In any of the above installations or combination installations, the sets of two pre-charged refrigerant lines to be used, are the 25-foot line kits or the 40-foot line kits. These pre-charged refrigerant line kits are a one-time, initial charge type of hardware; that is, once the sealed couplings are connected, the internal seal is severed and the lines cannot be disconnected without losing the refrigerant charge. However, they ARE REUSABLE in the refrigerant system, when they are removed and reconnected, and the complete refrigeration system is recharged with refrigerant.

STORAGE BINS

Since the MF900R Modular Flakers are continuous flow type icemaker and do not have their own attached ice storage bins, it is necessary to use an auxiliary bin, such as the bins listed below:

Use Bins: B40, B60, B80, B90, B120, B500, B750.

Accessories: BX83, BX85, BX87, BX15, BX25, BX113, BNX128, KBT1, KBT4, KBT5.

II. UNPACKING AND INSPECTION

1. Call your authorized SCOTSMAN Distributor or Dealer, for proper installation. He's listed under ICE MAKING EQUIPMENT and MACHINERY in the yellow pages of the telephone book.
2. Visually inspect the exterior of the shipping containers and skid and any severe damage noted, should be reported to the delivering carrier; and, a concealed damage claim filed subject to internal inspection, with carrier representative present.
3. BEFORE removal of any panels or packing, carefully lay the cabinet on its back and remove the shipping bolts and the shipping base or skid.
4. When ordered, install the optional leg levelers in the cabinet base sockets; then, raise the cabinet to the upright position.
5. Remove screws and shipping tape, and all doors and service panels from the cabinet, and inspect for any concealed damage. Notify carrier of any concealed damage claims, as stated in step 2 above.
6. Remove all internal support packing, tape and wires in machinery compartment.
7. Check that refrigerant lines do not rub or touch lines or other surfaces, and that fan blades, if any, move freely.
8. Check that the Compressor is snug on all mounting pads.
9. Remove optional Water Strainer from shipping envelope, for installation in water supply line.

10. Use clean damp cloth or disposable paper wiper to wipe clean the exterior surfaces of the cabinet.
11. See NAMEPLATE on the rear service panel, near the left rear corner of the cabinet and check that the location source voltage corresponds with the voltage specified on the nameplate.

CAUTION

Improper voltage supplied to the Icemaker will void your parts replacement program.

12. Remove the Manufacturer's Registration Card from the front of the User's Manual and fill in all spaces including: Model Number and Serial Number taken from the aluminum plate located at the front center of the Chassis base, with Front Panel removed. Forward the completed, self addressed, registration card to the SCOTSMAN Factory.

III. LOCATION AND LEVELING—ICEMAKER

WARNING

This Modular Flaker is NOT designed for outdoor installations, or where air temperatures are below 50-degrees F., or above 100-degrees F., and the water temperature is below 40-degrees F. or above 100-degrees F. Extended periods of operation at temperatures exceeding these limitations will constitute misuse, under the terms of the SCOTSMAN Manufacturer's limited warranty coverage.

1. Position the Flaker in the selected permanent location.

NOTE

Prior consideration for location site shall include:

1. *Minimum room temperature 50-degrees F. and maximum room temperature 100-degrees F.*
2. *Water inlet temperatures: Minimum 40-degrees F. and Maximum 100-degrees F.*
3. *SERVICE ACCESS: Adequate space for all service connections, through the rear of the Cabinet. A six-inch minimum clearance at rear.*

2. Level the Cabinet in both the left-to-right and front-to-rear directions. The optional leveling legs can be adjusted with an open-end wrench.

IV. REMOTE CONDENSER AND PRE-CHARGED REFRIGERANT LINES — INSTALLATION

A. Location Considerations:

1. Limited to a 40-foot length or a 25-foot length of pre-charged refrigerant line from the rear of the icemaker to the Remote Condenser.
2. Maximum vertical rise of 12 feet between the icemaker and the Remote Condenser coupling conection levels.
3. Available separate electrical power source to the Remote Condenser, for the Fan Motor.
4. Best available location, protected from the extremes of dirt, dust, rain, sun and winds.
5. Must meet local building code installation requirements.

B. Unpacking and Inspection:

1. Visually inspect the exterior of the shipping container and any severe damage noted, should be reported to delivering carrier; and a concealed damage claim filed subject to internal inspection, with carrier representative present.
2. Uncrate the Remote Condenser and the Pre-Charged Refrigerant Line Kits and inspect for any concealed damage. Notify carrier of any concealed damage claims, as stated in Step 1, above.
3. Check that the pre-charged refrigerant lines are intact, not kinked, and that there is no sealed puncture or loss of refrigerant.

C. Remote Condenser — Roof Attachment:

1. Install and attach the Remote Condenser to the roof of the building, using the methods and practices of building standards that conforms to and meets the local building code requirements, in your area.
2. Install an electrical power line to the Fan Motor of the Remote Condenser. This electrical power line shall be separate from the icemaker electrical power line and have a separate junction box and switch. Install properly grounded conduit, wherever the electrical power line to the Fan Motor is exposed to outside weather.
3. Remove Junction Box Cover, from the Remote Condenser, and set Ambient Sensing Thermostat at 30-degrees F.

D. Pre-Charged Refrigerant Lines:

1. Each set of pre-charged refrigerant lines in the 25-foot length, or 40-foot length kits, consists of a 1/4-inch diameter, self-sealing LIQUID line and a 3/8-inch diameter, self-sealing DISCHARGE line. One coupling on each line is fitted with a charging port, which provides the service man with access for service gauges at the REMOTE condenser location, when necessary.

NOTE

The openings in the building ceiling or wall, listed in the next step, are minimum sizes recommended, through which the pre-charged refrigerant lines may pass; and, are to be considered, only if they conform to and meet the local building code requirements, in your area.

2. Minimum recommended sizes for openings required in a ceiling or wall, for the pre-charged refrigerant lines to pass, are as follows:
   a. Single-pass Condenser: 1-3/4-inch diameter.
   b. Two-pass Condenser: 2-inch diameter.
3. When possible, route the maximum length of the pre-charged refrigerant lines INSIDE the building, with the MINIMUM length on the roof, to prevent vandalism and to minimize the CONDENSER EFFECT that exposed lines can produce in cold weather. INSULATE lines that will be exposed to outside temperatures that will be below freezing, for extended periods of time.

CAUTION

1. Each coupling on the sets of pre-charged refrigerant lines, the refrigerant fittings on the Remote Condenser, and the rear of the icemaker Chassis are SELF-SEALING and should be tightened 1/4-turn more than snug tight.

ALWAYS USE TWO WRENCHES WHEN TIGHTENING THESE FITTINGS, ONE AS BACKUP WRENCH TO PREVENT TWISTING OF TUBING AND POSSIBLE KINKING OR LINE RUPTURE.

2. BE SURE to connect the ends of the pre-charged refrigerant lines, that have the charging port fittings, TO THE REMOTE CONDENSER FITTINGS. This gives the serviceman access for service gauges at the REMOTE CONDENSER location, when necessary.

4. Connect the 1/4-inch diameter refrigerant line coupling, with the CHARGING PORT fitting, to the Remote Condenser refrigerant fitting labeled: LIQUID LINE. See Figure 1-1. Use two proper size wrenches, on the coupling body hex and on the union nut, and tighten until the coupling bodies BOTTOM, or a definite RESISTANCE is felt; THEN, TIGHTEN AN ADDITIONAL 1/4-TURN.
5. Connect the 3/8-inch diameter refrigerant line coupling, with the CHARGING PORT fitting, to the Remote Condenser refrigerant fitting labeled: DISCHARGE LINE. Tighten as detailed in step 4.
6. Connect the 1/4-inch diameter refrigerant line coupling, to the refrigerant fitting on the lower rear of the icemaker Chassis labeled: LIQUID LINE. Tighten as detailed in step 4.
7. Connect the 3/8-inch diameter refrigerant line coupling, to the refrigerant fitting on the lower rear of the icemaker Chassis labeled: DISCHARGE LINE. Tighten as detailed in step 4.

E. Excess Length of Pre-Charged Refrigerant Lines: At installations where the icemaker Chassis-to-Remote Condenser refrigerant line path is substantially LESS than the 25-foot length or 40-foot length of pre-charged refrigerant line Kit to be installed, route and dress the excess refrigerant line as follows. See Figure 1-2.

1. Follow straight line routing, when possible.
2. Retain excess pre-charged refrigerant line INSIDE the building.
3. SPIRAL the excess footage of the pre-charged refrigerant line(s), in the best selected INSIDE location, and in a manner that PREVENTS refrigerant TRAPPING. See Figure 1-2 for recommended methods of spiralling the excess refrigerant lines.

CAUTION

DO NOT kink or crimp the refrigerant lines. DO NOT bend the excess refrigerant lines in a vertical Loop(s), which allow trapping of refrigerant in LOW sections, during OFF time. Bend and shape the excess refrigerant lines in VERTICAL spirals, not HORIZONTAL spirals. See Figure 1-2.

V. ELECTRICAL CONNECTIONS

SEE NAMEPLATE for current requirements to determine wire size to be used for electrical hookup. The Modular Flaker requires a solid earth ground wire. See wiring diagram.

Be certain the Modular Flaker is connected to its own electrical circuit and individually fused. The maximum allowable voltage variation should not exceed ten percent of the nameplate rating, even under starting conditions. Low voltages can cause erratic operation and may be responsible for serious damage to the overload switch and motor windings.

All external wiring should conform to the National, State and local electrical code requirements. Usually an electrical permit and services of a licensed electrician will be required. Install a separate power line, junction box and grounded conduit for areas the power line is exposed to the outside weather, for the Remote Condenser fan.

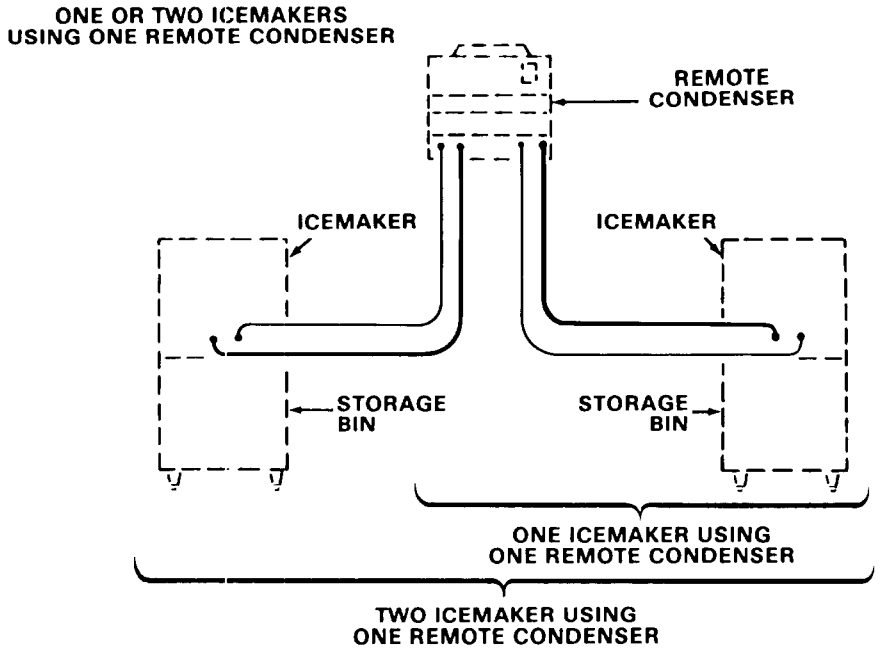

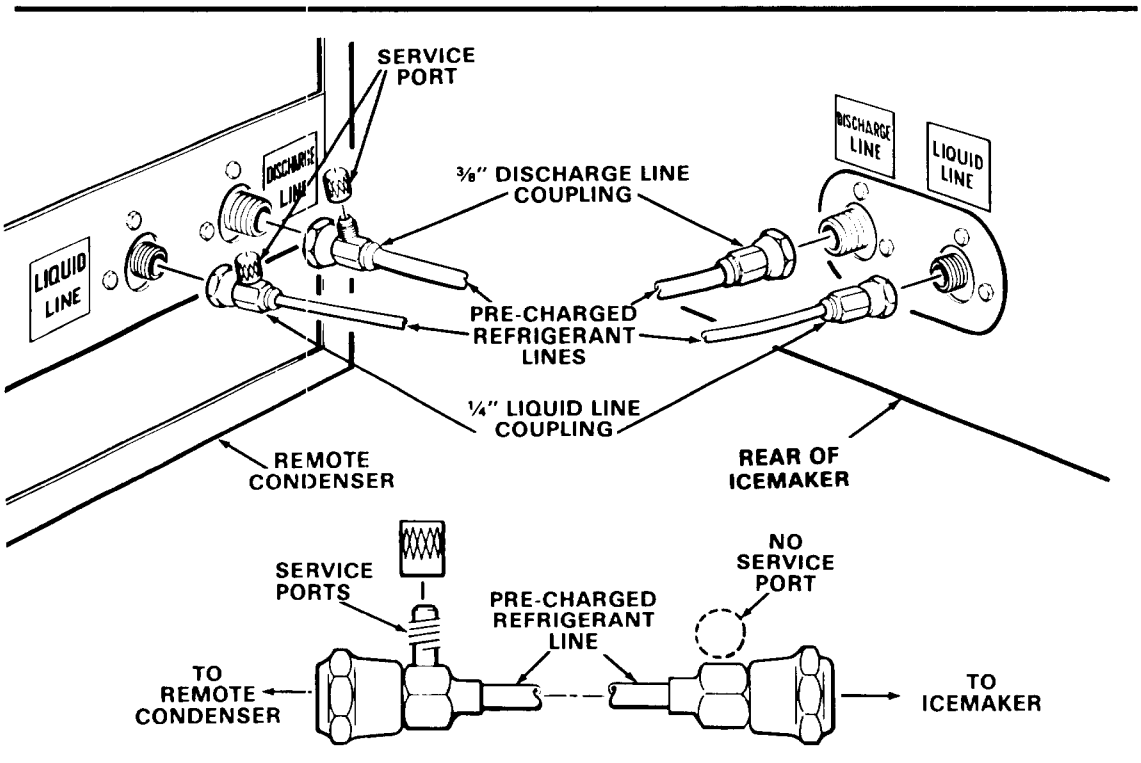

80-262

Figure 1-1. Pre-Charged Refrigerant Line Hook-Up.

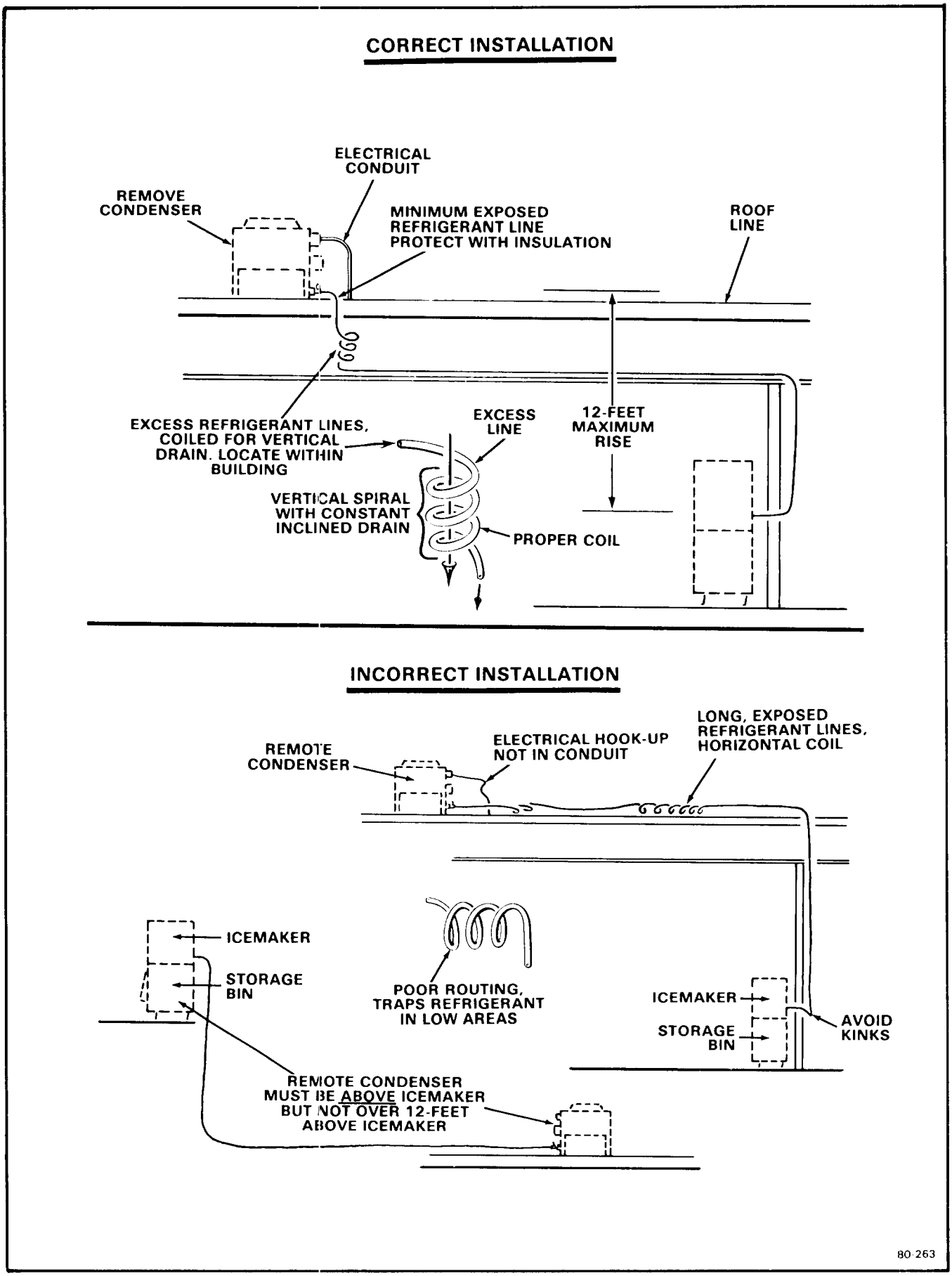

Figure 1-2. Pre-Charged Refrigerant Line Routing.

WARNING

BE SURE the icemaker is properly grounded and connected to the proper voltage at the location power source, to begin the 12-hour PRE-START heating of the Compressor Crankcase. This precautionary step heats the oil in the Compressor Crankcase and separates refrigerant from oil, which prevents probable damage to the Compressor, at START-UP.

VI. WATER SUPPLY AND DRAIN CONNECTIONS

A. The recommended water supply line is a 1/4-inch O.D. copper tubing. Connect to cold water supply line with standard plumbing fittings, with a shutoff valve installed in an accessible place between the water supply and the Cabinet.

A wire mesh strainer is available and must be installed with the cleanout plug down. Locate the strainer in the water supply line, next to the Cabinet with the arrow on the strainer, in the direction of the water flow. The strainer protects against large particles of rust, scale, etc., which may be loosened in the water supply pipe at the time of installation.

In some cases, a plumbing permit and services of a licensed plumber will be required.

WARNING

To prevent damage to the freezer mechanism, DO NOT operate this unit when the water supply is OFF, or is below 20 PSI, the recommended water pressure. Position the master switch to the OFF position, until proper water supply is resumed.

The Icemaker in this Cabinet will not operate when water supply temperatures are below 40-degrees F. or above 100-degrees F.

B. DRAIN CONNECTIONS: All drains are gravity type and must be 1/4-inch per foot on horizontal runs. The drains to be installed to conform with local code. The drain receptacle should be an open, trapped or vented construction.

Recommended Bin drain is 5/8-inch O.D. copper tubing, should be vented and run separately. Connect a drain line to 7/16-inch I.D. tube from the reservoir.

WARNING

This Modular Flaker will NOT operate when water supply temperature is below 40-degrees F., or above 100-degrees F. Requires 20 PSI flowing water pressure, without interruption.

VII. BIN THERMO BRACKET INSTALLATION

When shipped from the factory, each Modular Flaker has a Nylobraid ice transport tube which must be attached to the end of the Ice Spout, with a hose clamp. The free end of the tube has a Bin Thermo Bracket installed and secured to it with tape. The Bin Thermostat capillary tube is also installed and secured through slots and snug around tabs on the Bin Thermo Bracket, ready for final installation into an ice storage bin.

Most SCOTSMAN upright or vertical Bins have pre-punched holes. Punch out hole that aligns with the hole in the Flaker cabinet base and install the flaker on top of the bin. Next, insert the assembled Bin Thermo Bracket through the two-inch hole in the cabinet base into the Bin. Attach the flange of the Bin Thermo Bracket to the cabinet base, two places, with two No. 8 Sheet Metal Screws; then, slide the Sealing Pad, on the tube, down flush with the cabinet base around the tube.

Refer to Bin Thermo Bracket Installation Instructions, part number 17-1486-01, taped to the top of the icemaker.

VIII. FINAL CHECK LIST

1. Is the Cabinet/Bin level?
2. Is the Flaker in a room where ambient temperatures are a minimum of 50-degrees F. all year around?
3. Is there at least six inches clearance behind the Cabinet, for all connections?
4. All shipping tape removed from doors, panels, styrofoam blocks, etc?
5. Have all piping connections been made?
6. Has the electrical power supply wiring been properly connected, and the voltage tested and checked against the nameplate rating? Has proper Chassis-to-earth ground been installed?
7. Is the water supply shutoff valve installed and opened; and, has the inlet water supply pressure been checked to ensure a minimum of 20 PSIG?
8. Have the Compressor holddown bolts been checked, to be sure the Compressor is snug on the mounting pads?
9. Check all refrigerant lines and conduit lines to guard against vibration and possible failure.
10. Check that the Bin Thermostat Control bulb and Bracket have been properly installed.
11. Has the Flaker and Bin been wiped clean with clean damp cloths?

12. Has the Remote Condenser and associated set of pre-charged refrigerant lines been properly installed and connections made and checked?

13. Check to be sure the Ambient Sensing Thermostat, on the Remote Condenser, is set at 20-degrees F.

14. Has a separate electrical power line been routed to the Condenser Fan Motor and Chassis-to-earth ground installed and checked?

15. Has the electrical power to the icemaker been connected to start the 12-hour period of PRE-START Crankcase heating?

16. Has the owner been given the User Manual and instructed on how to operate the icemaker and the importance of periodic maintenance?

17. Has the owner been given the name and telephone number of the Authorized SCOTSMAN Distributor or Service Agency serving him?

18. Has the Manufacturer's Registration Card been properly filled out? Check for correct Model and Serial numbers from nameplate, then mail the completed card to the SCOTSMAN factory.

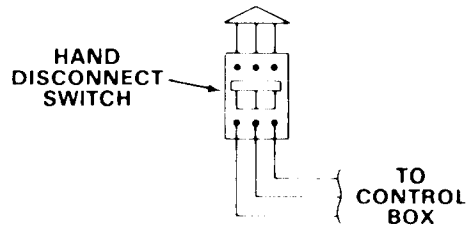

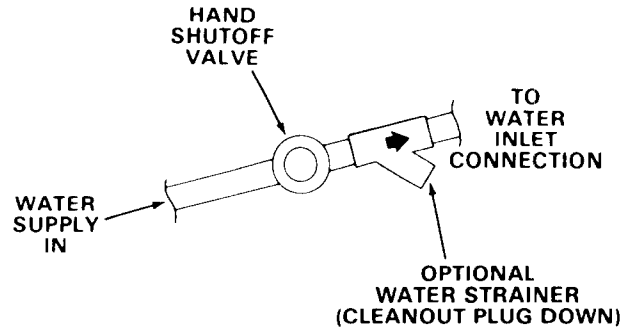

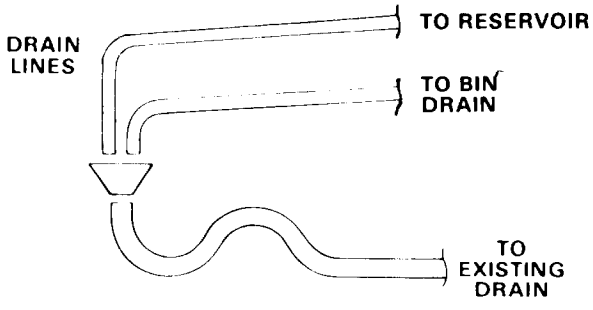

OPEN TRAPPED OR VENTED DRAIN. RECOMMENDED 1/4-INCH FALL PER FOOT OF RUN ON DRAIN LINES.

WARNING

THIS ICEMAKER IS NOT DESIGNED FOR OUTSIDE INSTALLATION AND WILL NOT OPERATE IN AMBIENT TEMPERATURES BELOW 50-DEGREES F., NOR ABOVE 100-DEGREES F.

THIS ICEMAKER WILL NOT OPERATE WHEN WATER TEMPERATURES ARE BELOW 40-DEGREES F., NOR ABOVE 100-DEGREES F.

77 116C

Figure 1-3. Installation Practice.

SECTION II
OPERATING INSTRUCTIONS

WARNING

Check to BE SURE the 12-hour pre-heating of the Compresser Crankcase has been completed. Be sure the icemaker is properly grounded and connected to proper voltage at the location power source.

I. START UP

1. Move the junction box switch for the Remote Condenser Fan to the ON position.
2. Remove screws and the Front Panel of the icemaker.
3. OPEN the water supply line shutoff valve.
4. Observe the water filling operation, see Figure 2-1:
   a. Water flows into Water Reservoir.
   b. Float moves up as water rises.
   c. Water flows through water feed line to bottom of Freezer Assembly.
   d. Float stops water flow, when water level reaches 3/8-inches below the molded horizontal line, on the body of the Water Reservoir.
5. Move the manual ON-OFF toggle switch, on the front of the Control Box to the ON position, to start the automatic icemaker operation.
6. After two or three minutes of operation, observe that flaked ice begins dropping off the Auger and out the Ice Spout, through the Nylobraid tubing and into the Ice Storage Bin.
7. Let the system operate for about 30 minutes or until ice covers the bottom of the Bin. Check for any excess noises beyond normal Compressor noise:
   a. Vibrating type, from touching lines.
   b. Chattering: Lack of water in Freezer.
   c. Compressor loose at one or more holddown bolts.

WARNING

DO NOT operate this Icemaker when the water supply is shut OFF, or is BELOW the recommended 20 PSI water pressure. Move the manual ON-OFF toggle switch on the front of the Control Box to the OFF position immediately.

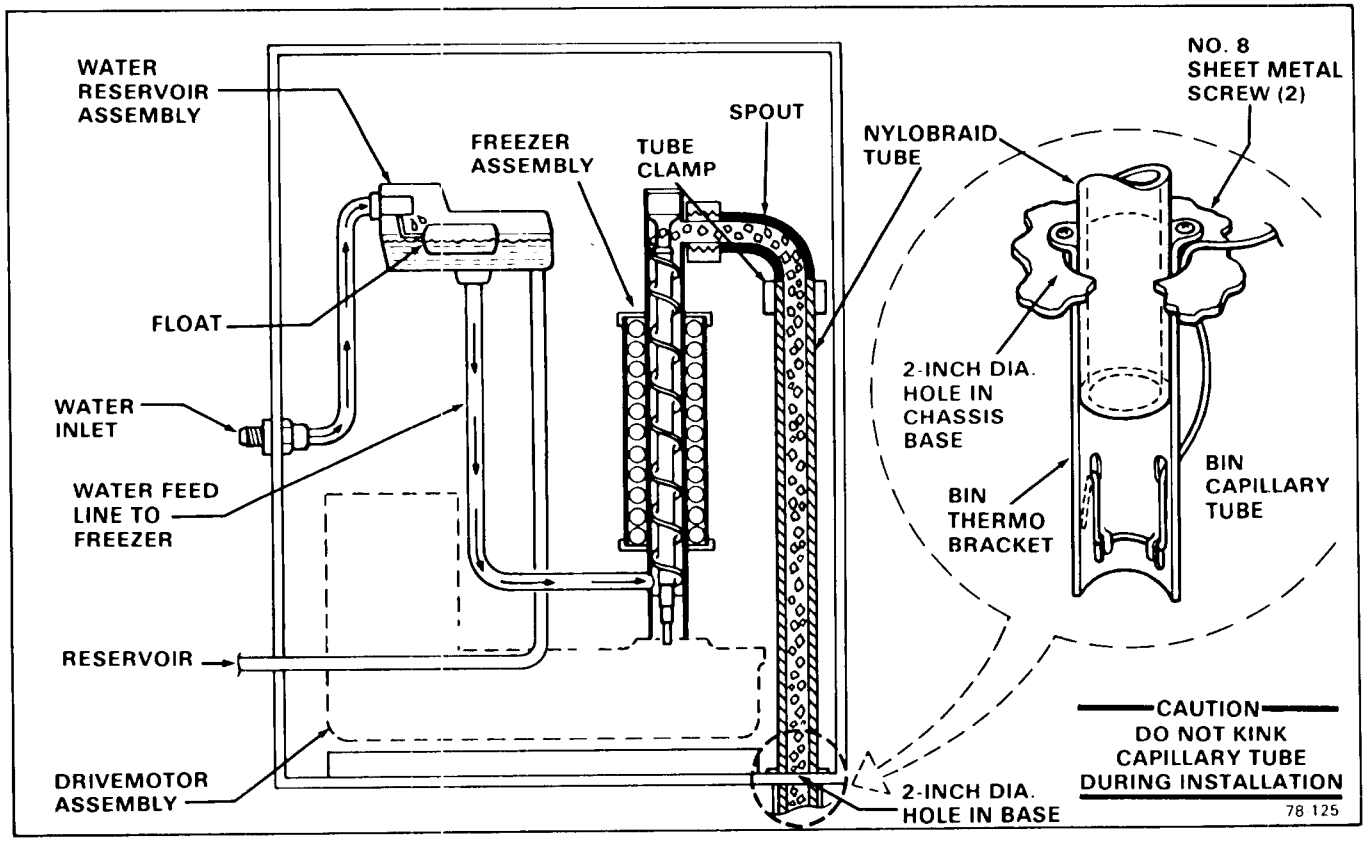

Figure 2 - 1. Water Schematic.

8. Hold a handful of ice around the Ice Storage Bin Thermostatic Control Bulb to test shut-off. Less than one minute is about normal for Bulb shutoff function to cause the Compressor to stop.

NOTE

Within minutes after the ice is removed from the sensing bulb, the bulb will warm up and cause the Icemaker to restart. This control is factory set and should not be reset until testing is performed. Normal setting: about 35-degrees F. CUT-OUT and 45-degress F. CUT-IN, to prevent short cycling.

9. Thoroughly explain to the owner/user the significant specifications of the Icemaker, the start up and operation, going through the procedures in the operating instructions. Answer all questions about the Icemaker, by the owner; and, inform the owner of the name and telephone number of the authorized SCOTSMAN Service Agency serving him.

SECTION III
PRINCIPLES OF OPERATION
How It Works

I. ICEMAKER.

The water supply flows from the building source through the inline water strainer, enters at the Cabinet fitting and on to the Water Reservoir. The Water Reservoir functions to maintain a constant water level inside the Freezer Assembly. Water from the Water Reservoir enters at the bottom of the Freezer Assembly and is changed into ice by low temperatures inside the Freezer.

A stainless steel Auger within the Freezer is powered by the Drivemotor Assembly, a direct-drive gearmotor, and the rotating Auger carries the ice upward to the flared end of the Auger, see Figure 3-1, where excess water is pressed out of the ice, as it is extruded or flaked out through the Ice Spout, through the Nylobraid tubing and into the Storage Bin.

Moving the manual ON-OFF toggle switch, on the front of the Control Box, to the ON position starts the automatic and continuous icemaking process. When the Ice Storage Bin has been filled with ice, up to the level of the Thermostatic Control Bulb, the sensing bulb shuts off the icemaking process.

As the ice is removed from the Ice Storage Bin, the Thermostatic Control Bulb warms up, restarting the automatic icemaking process.

Factory settings are 35-degrees F. CUT-OUT and 45-degrees CUT-IN.

Altitude correction begins at 2000 feet, CUT-IN and CUT-OUT screws should be adjusted equally, not more than one-fourth turn at a time.

II. ELECTRICAL/REFRIGERATION

Always CHECK NAMEPLATE for electrical information BEFORE proceeding with electrical wiring connections to the Icemaker.

Cold ambient temperatures and interruptions in water supply are conditions that can cause excessively hard ice and overloads within the Freezer Assembly, which is directly transmitted to the Drivemotor; and in turn, will cause speed reduction or ultimate freezeup.

When the Drivemotor is slowed to a pre-determined RPM, a sensing switch mounted on top of the motor is designed to open the electrical circuit to the Compressor. The Compressor stops operating, no more ice is produced, and the Drivemotor continues to operate rotating the Auger to clear the overload and gradually build up to full speed.

At a pre-determined higher RPM Drivemotor speed, the speed sensing switch closes the electrical circuit to the Compressor, causing the normal icemaking process to resume. Refer to specific details in paragraph V-II-9, on centrifugal sensing switch opration.

A Spout Switch is mounted on the side of the Ice Spout and is actuated by the movement of the spring retained spout tube against the switch actuator. The Spout Switch acts as a backup safety switch, should the Thermostatic Control Bulb fail and cause ice to jam up in the Ice Spout. The switch will shut off the icemaker only when actuated. It is an immediate and complete shut down of the entire icemaker. The Spout Switch can be manually tested, by plugging the end of the Nylobraid Tube. The switch is also manually reset.

There are two safety controls in the Control Box. The Low Pressure Control, a manual reset, non-adjustable control is used and, is set to electrically open at zero to four PSIG to stop the entire icemaker. The Auger Delay Switch, a single-pole double-throw (SPDT) switch, functions as a control device to allow the gearmotor to rotate the Auger to clear the Freezing Chamber while the compressor circuit is OFF.

Refer to the appropriate Wiring Diagram and trace circuitry and control functions, as described in the following paragraph.

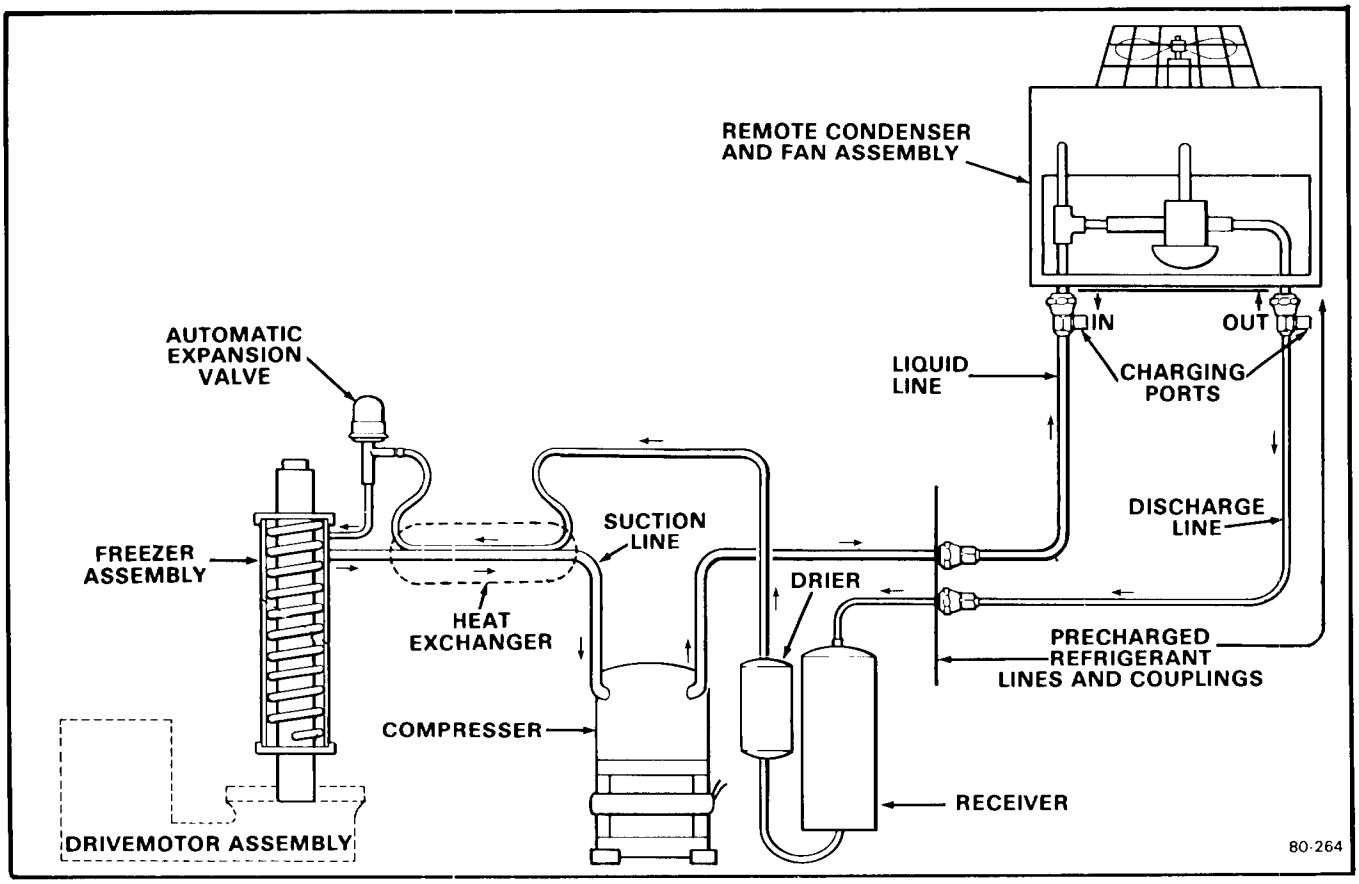

Figure 3-1. Refrigeration Cycle Schematic

As shown on all SCOTSMAN wiring diagrams, the controls are in the ICEMAKING MODE. Thus, the 1-2 contacts are CLOSED. At STARTUP, the 1-2 contacts are OPEN and the 3-2 contacts are CLOSED. As the icemaker begins to operate, the low side pressure starts to decrease from the stabilized or at-rest pressure. As soon as the pressure is reduced to 20 PSIG, the 3-2 contacts OPEN and the 1-2 contacts CLOSE.

This removes the operating controls, such as the Bin Thermostat, from the gearmotor circuit. If one of the operating controls OPENS, it will SHUT OFF the compressor circuit. The gearmotor will operate until the low side pressure increases to 32 PSIG. Then, the 1-2 contacts OPEN and SHUTS OFF the gearmotor, usually within one to two minutes, depending upon ambient conditions. This brief period of time allows the Auger to transport all the ice out of the freezing chamber. Consequently, when called on to STARTUP again, there is no ice load to start up against. Again, on STARTUP, the 1-2 contacts are OPEN and the 3-2 contacts are CLOSED.

A low-water pressure switch functions to discontinue the Icemaking process whenever incoming water pressure is reduced to below five PSIG. The Switch will automatically restart the Icemaking process when the water pressure is increased to 20 PSIG.

Suction pressure should be 15 PSIG with proper refrigerant charge and the frost line should extend out from the accumulator about eight inches. Suction pressure will vary about two PSIG plus or minus, depending upon ambient temperatures and incoming water supply temperatures to the Freezer Assembly.

PRECHARGED LINE SET	CONDENSER PACKAGE	TOTAL R-12 REFRIGERANT CHARGE
RT240	RC151	160 oz.
RT225	RC151	160 oz.
RT240	RC302	160 oz.
RT225	RC302	160 oz.

III. COMPRESSOR CRANKCASE HEATER AND AUTOMATIC EXPANSION VALVE

A. COMPRESSOR CRANKCASE HEATER

The Compressor Crankcase Heater is an electrical wire band heater located around the lower outside shell of the compressor, below the level of the crankcase oil in the compressor. The heat generated by the Crankcase Heater, heats oil in the crankcase, which keeps the refrigerant separated from the oil; and, during the OFF cycle, prevents the refrigerant from migrating back into the compressor from other areas of the refrigeration system; which can cause severe damage to the compressor, at STARTUP.

B. AUTOMATIC EXPANSION VALVE

Basically, the Automatic Expansion Valve serves to meter refrigerant to the freezer at the rate equivalent to the Compressor pumping capacity. The valve opens and stays open at a point where refrigerant flow and pumping capacity meet. This accounts for low side pressure and freezer temperatures remaining fairly constant during the operating phase of the refrigeration cycle.

WARNING

BE SURE the Compressor Crankcase Heater is ON, 12-HOURS BEFORE STARTUP, to properly heat crankcase oil, and separate the refrigerant from the oil and PREVENT POSSIBLE DAMAGE to the Compressor, at startup.

SECTION IV
ADJUSTMENT AND REMOVAL AND REPLACEMENT PROCEDURES

The procedures provided in this Section are arranged in alphabetical order, to make specific Adjustment and Removal and Replacement information easy to locate.

Read the instructions thoroughly before performing any Adjustment or Removal and Replacement Procedures.

I. ADJUSTMENT OF THE BIN THERMOSTAT CONTROL

The control for the Bin Thermostat is the Temperature Control, located in the upper part of the Control Box Assembly.

WARNING

The adjusting screws on the Temperature Control device have very sensitive response to adjustment. DO NOT attempt to adjust the screw until after thoroughly reading and understanding the following instructions and illustrations. Over-adjusting or erratic guessing, can foul the instrument and cause ultimate delay and part replacement, WHICH COULD HAVE BEEN PREVENTED.

See Figure 4-1 for location and direction of rotation, clockwise (CW) or counterclockwise (CCW), of the adjusting screws on the Temperature Control, in the particular Control Box the adjustment is to be performed.

II. ADJUSTMENT OF THE LEG LEVELERS

When the MF900R Flaker or Bin is ordered with the optional Leg Levelers, the Cabinet must be leveled in the front-to-rear and side-to-side directions. This adjustment should be performed during initial installation of the Cabinet and anytime the Cabinet is moved from the original location to another site.

A. Using an open-end wrench, and a carpenter's bubble level, rotate the threaded Leveler in each Leg to RAISE or LOWER the Cabinet until the Cabinet is level in the front-to-rear direction.

B. Repeat step A, for leveling in the side-to-side direction.

C. Recheck both the front-to-rear and the side-to-side leveling and repeat adjustments, as necessary.

III. ADJUSTMENT OF THE WATER RESERVOIR FLOAT

The correct water level in the Water Reservoir should be 3/8-inch below the raised molded line, on the side of the body of the Water Reservoir. When the water line level is above or below the raised molded line, adjustment can be performed to raise or lower the water level by raising or lowering the Water Reservoir in the slots on the Mounting Brackets, which in turn will adjust the action of the float.

A. To RAISE the Water Level: Loosen the two Screws which attach the Water Reservoir Assembly to the Mounting Bracket and RAISE the Water Reservoir Assembly, in the slots, the desired amount; then, tighten the Screws.

B. To LOWER the Water Level: Loosen the two Screws which attach the Water Reservoir Assembly to the Mounting Bracket and LOWER the Water Reservoir Assembly, in the slots, the desired amount; then, tighten the Screws.

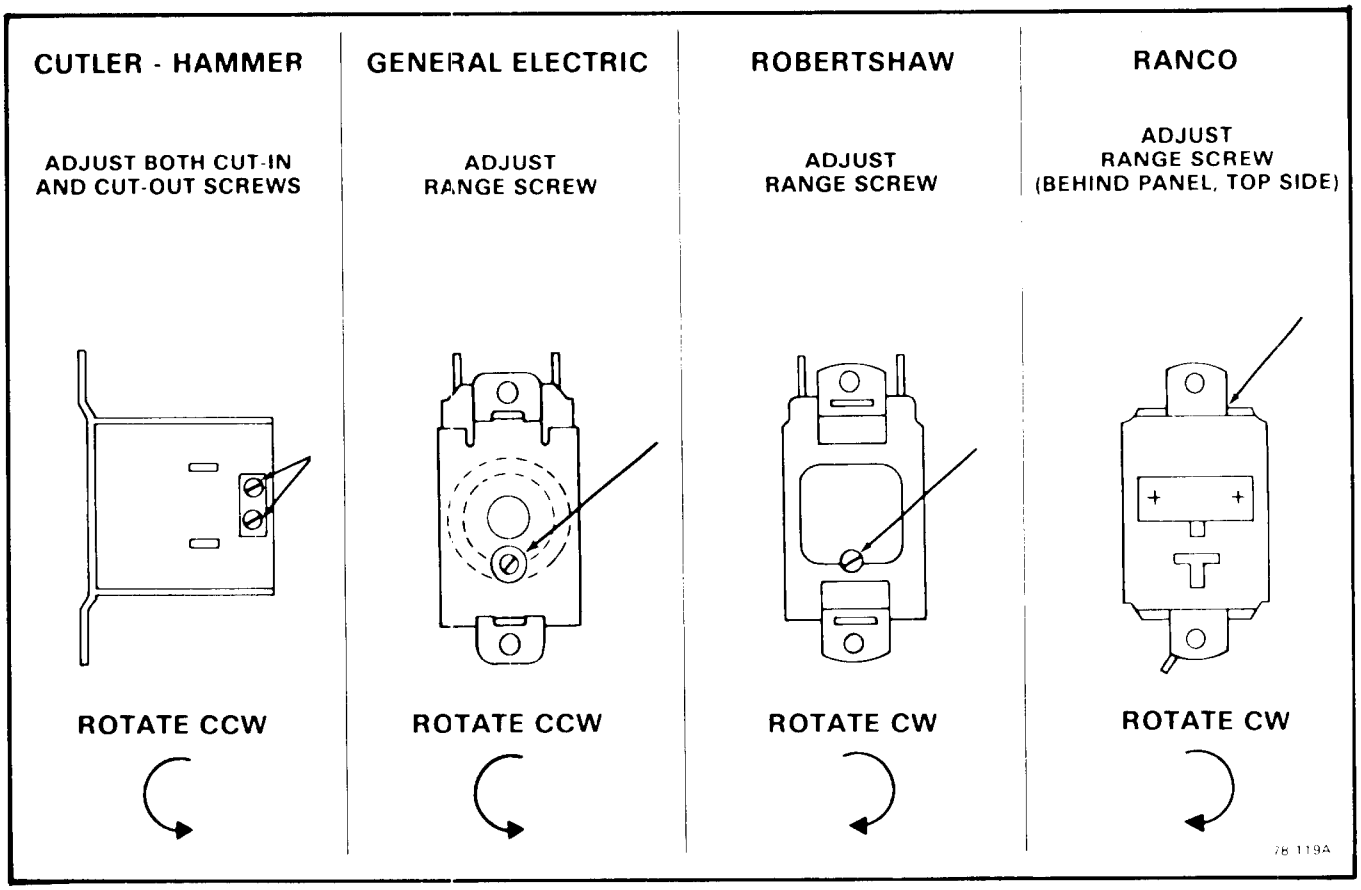

Figure 4-1. Adjustment of the Temperature Control.

WARNING

Be sure the electrical power supply and the water supply are OFF, before starting any of the following REMOVAL AND REPLACEMENT procedures, as a precaution to prevent possible personal injury or damage to equipment.

IV. REMOVAL AND REPLACEMENT OF THE AUGER, WATER SEAL, BEARINGS AND COUPLING

A. To remove the Auger, Water Seal, Bearings, and Coupling:

1. Remove screws and the Front Panel and the Left Side Panel.
2. Remove the Freezer Cap from the top of the Freezer Assembly.
3. Perform the steps in procedure IV-XI to remove the Spout Assembly.
4. Grasp the wire Cap Hook at the top of the Freezer Assembly and pull out the Auger and attached Cap, Bearing/Retainer, Bearing and O-Rings, at the top of the Auger; and, the top half of the Water Seal at the bottom of the Auger.

NOTE

When the Auger cannot be pulled out, proceed to steps 12 and 13, to gain access to the bottom of the Auger. Then, with a rawhide mallet or placing a piece of wood on the bottom end of the Auger, tap the bottom of the Auger to break it loose and pull the Auger out, as in the step 4 above.

5. Remove the Cap Hook from the Bearing/Retainer.
6. Remove the Retaining Ring and the Cap.
7. Remove the Cap Screw and Washer and remove the Bearing/Retainer from the Auger.
8. Clean away the old grease from the top of the Auger, the Bearing/Retainer, Cap, Cap Screw and Washer, and the O-Ring and Retaining Ring.
9. Inspect the O-Ring at the top of the Bearing/Retainer and the O-Ring at the bottom outside of the Bearing/Retainer, for cuts, tears and general worn condition to determine replacement.
10. Inspect the Bearing pressed into the top of the Bearing/Retainer and, if it is to be replaced, remove the Retaining Ring and press the Bearing out of the Bearing/Retainer.

11. Slide the upper half of the Water Seal off of the bottom of the Auger.

NOTE

1. *Any time the Auger is removed for replacement, or for the inspection and replacement of the Bearings or Coupling, use extra care in handling the Water Seal parts, so no dirt or foreign matter are deposited on the surfaces of the Seal.*
2. *If there is any doubt about the effectiveness of the Water Seal or O-Ring, REPLACE THEM. A dirty, worn or faulty Water Seal or O-Ring will cause a leak and ultimately require a second, time consuming removal and replacement procedure to be performed, that COULD HAVE BEEN PREVENTED.*

12. Remove four screws and lockwashers which attach the Freezer Assembly to the Adaptor on the Drivemotor Assembly.
13. Raise the Freezer Assembly off of the Adaptor, to gain access to the Bearing and Retainer; then, temporarily secure the Freezer Assembly out of the way to allow room to work. Be careful not to damage the gasket.
14. Using a suitable length and size wooden dowel or stick inserted through the top of the open Freezer Assembly, tap the lower half of the Water Seal and the lower Bearing in the Retainer, out the bottom of the Freezer Assembly.
15. Inspect the lower half of the Water Seal. If reusable, use care to protect it from dirt, etc. prior to replacement procedure.
16. Inspect the lower Bearing in the Retainer; and, if the Bearing is to be replaced, press the Bearing out of the Retainer.
17. Reach through the Adaptor and remove the Coupling on the Drivemotor for inspection.
18. Check the Coupling for cracks, chipping and excessive wear.

B. To replace the Auger, Water Seal, Bearings, and Coupling, reverse the removal procedure.

NOTE

1. *When installing the Retainer assembled with Bearing, in the bottom of the Freezer Assembly, some Retainers will insert as a slip fit, and some will have to be forced into place because of very tight fit. Carefully tap a piece of wood positioned across the bottom of the Retainer, to evenly seat the Retainer in the chamber of the Freezer.*
2. *After assembling the parts on the upper end of the Auger and BEFORE installing the Cap and Cap Hook, apply an ample coating of Shell Alvania 3 Grease, P/N 19-0309-01, to the upper part of the Bearing/Retainer to cover the Retaining Ring and the Cap Screw and Washer. Then, install the Cap and Cap Hook in place.*

V. REMOVAL AND REPLACEMENT OF THE AUTOMATIC EXPANSION VALVE

CAUTION

Always install a replacement Drier, anytime the sealed refrigeration system is opened. Do not replace the Drier until all other repair or replacement have been completed. BE SURE the Compressor Crankcase Heater is ON, 12-HOURS BEFORE START UP.

A. To remove the Automatic Expansion Valve:

1. Remove screws and the Front Panel.
2. Bleed off or blow the refrigerant charge through the Schrader Valve.
3. Unwrap insulation around the Automatic Expansion Valve.

CAUTION

Wrap the Automatic Expansion Valve with WET CLOTHS, to protect the sensitive parts during soldering and installation. DO NOT direct flame toward the valve.

4. With the Automatic Expansion Valve covered with WET CLOTHS, unsolder the 1/4-inch O.D. line from the side of the valve.
5. Unsolder the 3/8-inch O.D. line from the bottom of the valve and remove the Valve.

B. To replace the Automatic Expansion Valve, reverse the removal procedures and follow special precautions given for steps in installing and soldering Valve tubing.

VI. REMOVAL AND REPLACEMENT OF THE BIN THERMOSTAT CONTROL

A. To remove the Bin Thermostat Control:

1. Remove screws and the Front Panel to gain access to the Bin Thermostat Control.
2. Trace capillary tube, from the Bin Thermostat Control, down to the Cube Deflector.
3. Carefully remove the capillary tube from the bulb holder holes on the side of the Cube Deflector.
4. Carefully withdraw the capillary tube from the Bin, up through the Chassis Base.
5. Remove electrical leads from the Bin Thermostat Control.
6. Remove screws and the Bin Thermostat Control.

B. To replace the Bin Thermostat Control, reverse the removal procedures.

VII. REMOVAL AND REPLACEMENT OF THE COMPRESSOR ASSEMBLY

CAUTION

Always install a replacement Drier, anytime the sealed refrigeration system is opened. Do not replace the Drier until all other repair or replacement has been completed. BE SURE the Compressor Crankcase Heater is ON, 12-HOURS BEFORE STARTUP.

A. To remove the Compressor Assembly:

1. Remove screws and the Top, Front and Left Side Panels.
2. Bleed off or blow the refrigerant charge through the Schrader valve.
3. Remove the cover from the terminal box on the Compressor; then, remove screws and electrical leads from the Compressor.
4. Disconnect the Compressr Crankcase Heater electrical leads from the Control Box.
5. Unsolder the refrigerant suction line and the discharge line from the Compressor.
6. Remove four bolts and washers which secure the Compressor to the Chassis mounting base.
7. Slide and remove the Compressor from the left side of the Cabinet.
8. Unsolder the process header from the Compressor and retain for installation on the replacement Compressor.

NOTE

Prior to next step, note the exact location of the Compresoor Crankcase Heater on the Compressor, so installation will be the same on the replacement Compressor.

9. Loosen and remove the Compressor Crankcase Heater from Compressor. Retain for replacement Compressor.

B. To replace the Compressor Assembly, reverse the removal procedure.

VIII. REMOVAL AND REPLACEMENT OF THE DRIER

NOTE

Always install a replacement Drier, any time the sealed refrigeration system is opened. Do not replace the Drier until all other repair or replacement has been completed.

A. To remove the Drier:

1. Remove screws and the Front Panel and the Left Side Panel.
2. Remove screw and Drier Brace attaching the Drier to the Chassis base.
3. Bleed off or blow the refrigerant charge through the Schrader valve.
4. Unsolder refrigeration lines at each end of Drier, remove the Drier and separate the Drier from the Drier Brace.

B. To replace the Drier:

CAUTION

1. If the factory seal is broken on the replacement Drier, exposing it to the atmosphere more than a few minutes, the Drier will absorb moisture from the atmosphere and lose substantial ability for moisture removal.

2. Be sure the replacement Drier is installed with the arrow positioned in the direction of the refrigerant flow.

1. Remove the factory seals from the replacement Drier and install the Drier in the refrigerant lines with the arrow positioned in the direction of the refrigerant flow.
2. Install the Drier Brace on the Drier.
3. Solder the Drier into the lines, two places.
4. Purge the system and check for leaks.
5. Thoroughly evacuate the system to remove moisture and non-condensables.
6. Charge the system with refrigerant, by weight. SEE NAMEPLATE.
7. Replace the Front Panel and the Left Side Panel and attach both with screws removed earlier.

IX. REMOVAL AND REPLACEMENT OF THE DRIVEMOTOR ASSEMBLY

A. To remove the Drivemotor Assembly:

1. Perform all steps in procedure IV-X to gain access for removal of the Drivemotor Assembly.
2. Remove bolts, lockwashers and washers which attach the Drivemotor to the Chassis base.
3. Lift the Drivemotor from the Chassis base and out of the Cabinet.

B. To replace the Drivemotor Assembly, reverse the removal procedure.

X. REMOVAL AND REPLACEMENT OF THE FREEZER ASSEMBLY

NOTE

1. *The Cabinet may have to be removed from its permanent location, especially if located in a corner, in order to have access to the left side and rear of the Chassis.*
2. *In addition to shutting OFF electrical power and inlet water to the icemaker, be sure to disconnect the inlet water line at the rear of the Cabinet BEFORE moving the icemaker from the permanent location.*
3. *Always install a replacement Drier, anytime the sealed refrigeration system is opened. Do not replace the Drier until all other repair or replacement has been completed.*

A. To remove the Freezer Assembly, see Figure 4-2:

1. Remove screws and left side, front and rear panels.
2. Refer to procedures IV-XI and remove the Spout Assembly.
3. Remove Corbin clamp and Tygon tube from the Freezer Assembly that connects to the Water Reservoir Assembly.
4. Bleed off or blow the refrigerant charge through the Schrader valve.
5. Unsolder the suction line from the Compressor.

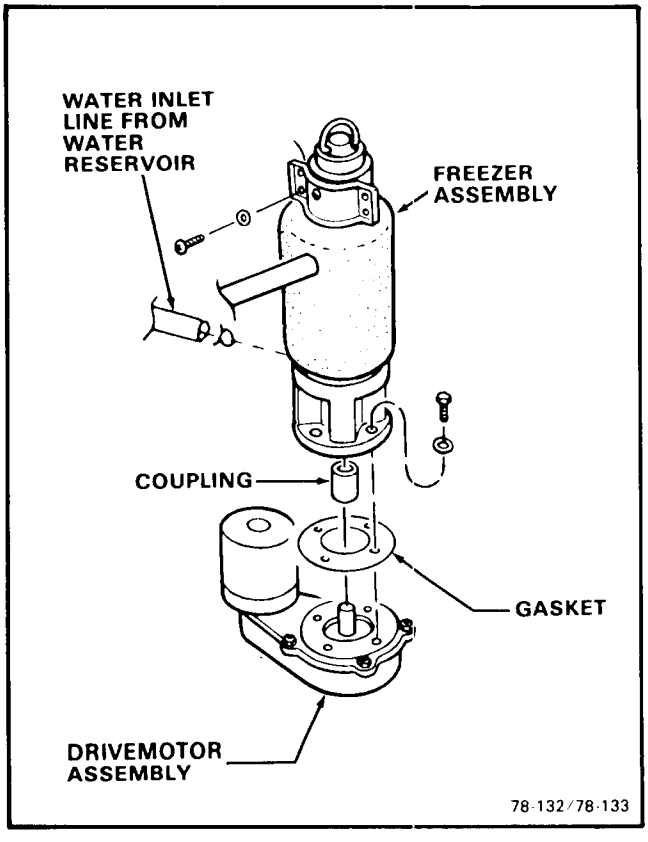

Figure 4-2. Removal of the Freezer Assembly.

CAUTION

Wrap the Automatic Expansion Valve with WET CLOTHS, to protect the sensitive parts during soldering and installations. DO NOT direct flame towards the valve.

6. Unsolder the Automatic Expansion Valve from the Freezer Assembly.
7. Remove four screws, lockwashers and washers which attach the bottom of the Freezer Assembly to the Adaptor on the Drivemotor Assembly.
8. Lift the Freezer Assembly up and off of the Adaptor and Drivemotor Assembly.

NOTE

Thoroughly evacuate the system to remove moisture and non-condensables.

B. To replace the Freezer Assembly, reverse the removal procedure.

XI. REMOVAL AND REPLACEMENT OF THE SPOUT ASSEMBLY

A. To remove the Spout Assembly, see Figure 4-3:

1. Remove screws and the Front Panel and Left Side Panel.
2. Remove the Hose Clamp and disconnect the Nylobraid tube from the end of the spout.
3. Remove the Freezer Cap from the top of the Freezer Assembly.
4. Disconnect the electrical leads from the Spout Switch.
5. Remove four screws and washers and separate the Spout Assembly from the Spout Plate on the Freezer Assembly.

NOTE

At this time, inspect the spout Gasket and retain for the replacement procedure. Replace a torn, cut or worn, defective gasket.

B. To replace the Spout Assembly, reverse the removal procedure.

XII. REMOVAL AND REPLACEMENT OF THE WATER PRESSURE CONTROL

A. To remove the Water Pressure Control:

1. Remove screws and the Front Panel and the Left Side Panel.
2. Remove screws and the Control Box Cover.
3. Disconnect the two blue electrical leads of the Water Pressure Control, from the terminals on the Auger Delay Control and the Bin Thermostat device in the Control Box Assembly.

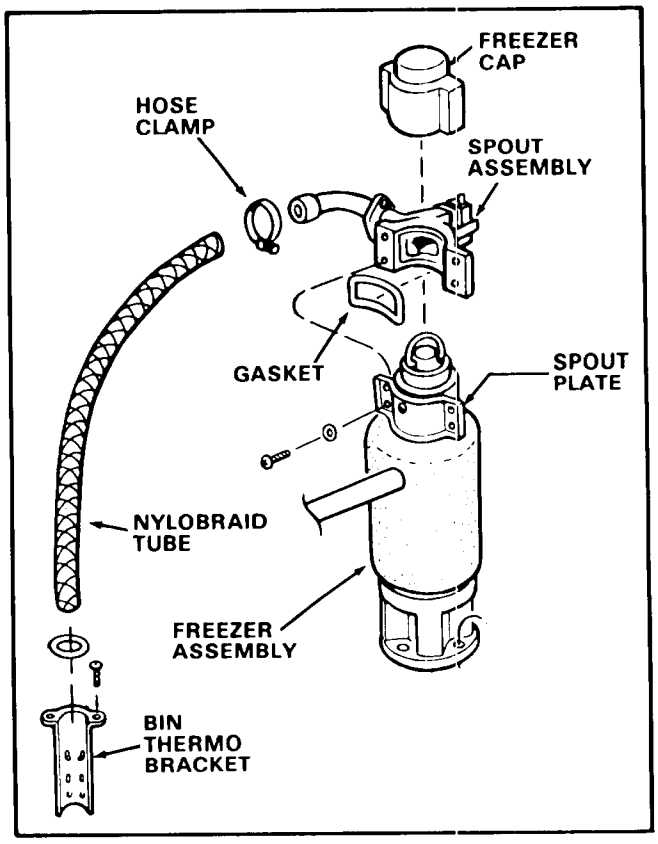

Figure 4-3. Removal of the Spout Assembly.

4. Unscrew the flare nut fitting and disconnect the Water Pressure Control from the Utility Bracket and the Tee on the inlet water tubing.

NOTE

At this time, inspect the O-Ring and retain for the replacement procedure. Replace O-Ring that is cut, torn or indicates excessive wear.

B. To replace the Water Pressure Control, reverse the removal procedure.

XIII. REMOVAL AND REPLACEMENT OF THE WATER RESERVOIR ASSEMBLY

A. To Remove the Water Reservoir Assembly, see Figure 4-4:

1. Remove screws and the Front Panel and the Left Side Panel.

NOTE

Be prepared with container or rags, to catch water left in lines, when lines are disconnected in next steps, to prevent draining water on parts, components, electrical lines, etc.

2. Disconnect the water inlet tube from the Water Reservoir Assembly.
3. Remove two Corbin clamps and two tubes from the bottom of the Water Reservoir Assembly.
4. Unscrew and remove the wing nut from the bottom of the Water Reservoir Assembly.
5. Lift and remove the Water Reservoir Assembly from the mounting bracket.

B. To replace the Water Reservoir Assembly, reverse the removal procedure.

NOTE

Check that the installed replacement Water Reservoir Assembly float moves freely. The correct water level in the Water Reservoir is 3/8-inch below the raised molded line, on the side of the body of the Water Reservoir.

XIV. REMOVAL AND REPLACEMENT OF REMOTE CONDENSER FAN MOTOR ASSEMBLY, THERMOSTAT CONTROL, HEAD PRESSURE CONTROL VALVE.

CAUTION

Always install a replacement Drier, anytime the sealed refrigeration system is opened. Do not replace the Drier until all other repair or replacement has been completed. BE SURE the Compressor Crankcase Heater is ON, 12-HOURS BEFORE STARTUP.

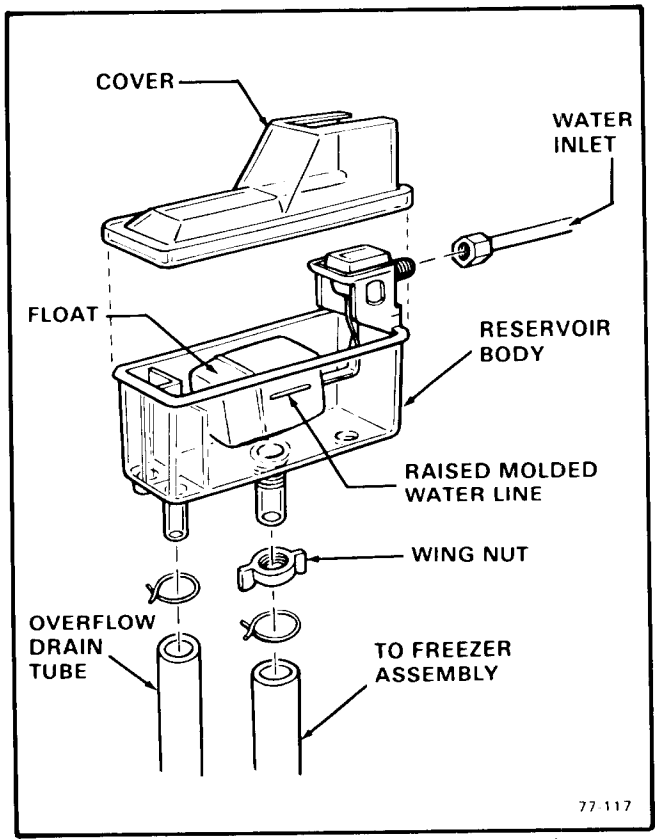

Figure 4-4. Removal of the Water Reservoir Assembly.

A. To remove:

WARNING

Be sure the electrical power supply to the Remote Condenser Fan Motor is OFF and the electrical power supply to the icemaker is OFF.

1. Loosen screws securing the wire guard around the Fan Blade on top of the Remote Condenser; then, rotate the wire guard hooks away from the screws and remove the wire guard.

CAUTION

BEFORE removing the Fan Blade in the next step, observe and mark the exact location of the height of the Fan Blade, on the shaft of the Fan Motor. This is a critical point, to be sure the replacement Fan Blade is installed in the same position, for proper balance and maximum efficiency of air flow. USE CARE in handling the Fan Blade to prevent bending blades or otherwise disturbing the sensitive balance.

2. Loosen two setscrews, note and mark location of Fan Blade on shaft of Fan Motor and remove the Fan Blade.
3. Remove Cover to Junction Box and disconnect the electrical wire leads from the Fan Motor in the Junction Box. Pull wire leads out rear of Box.
4. Remove four nuts, lockwashers, flatwashers and mounting bolts and the Fan Motor from the mounting bracket inside the Condenser shroud.

NOTE

BEFORE removing the Thermostat Control, capillary line and bulb, in the next step, observe routing and exact positioning of the bulb for identical positioning during replacement procedures.

5. Remove the screw, clamp and the Thermostat Control capillary bulb from the underside of the Remote Condenser. Remove plastic tie from tubing.
6. Carefully work the rubber grommet out of the hole in the Junction Box.
7. Disconnect the electrical wire leads from the Thermostat Control in the Junction Box.
8. Remove screws and the Thermostat Control from the Junction Box, carefully pulling the capillary line and bulb up through the hole in the Junction Box. Remove and retain rubber grommet from capillary line.
9. Bleed off or blow the refrigerant charge in the particular set of pre-charged refrigerant lines connected to the specific Head Pressure Control Valve to be replaced on the Remote Condenser.

CAUTION

Wrap the Head Pressure Control Valve with WET CLOTHS, to protect the sensitive parts during unsoldering; and also during later soldering for installation. DO NOT direct flame toward the Valve body. Use extra care to DIRECT FLAME AWAY from the Valve body.

10. With the Head Pressure Control Valve protected with WET CLOTHS, unsolder tubing connected to the Valve, three places, and remove the valve.

B. To replace these parts, reverse the removal procedures and follow special precautions given for installing and soldering tubing connections to Valve.

SECTION V
MAINTENANCE & CLEANING INSTRUCTIONS

I. GENERAL

The periods and procedures for maintenance and cleaning are given as guides and are not to be construed as absolute or invariable. Cleaning especially will vary, depending upon local water conditions and the ice volume produced and, each Icemaker must be maintained individually, in accordance with its own particular location requirements.

II. ICEMAKER

THE FOLLOWING MAINTENANCE SHOULD BE SCHEDULED AT LEAST TWO TIMES PER YEAR ON THIS ICEMAKER. CALL YOUR AUTHORIZED SCOTSMAN SERVICE AGENCY.

1. Check and clean optional water line Strainers.
2. Remove cover from Water Reservoir and depress the float to ensure that a full stream of water enters the Reservoir.
3. Check that the Icemaker cabinet is level, in side-to-side and front-to-rear directions.
4. Check that the water level in the Water Reservoir is below the overflow, but high enough that it does not run out of the spout opening.

NOTE

It is not abnormal for some water to emerge from the Ice Spout with flaked ice during normal ice production.

5. Clean the Water Reservoir and interior of the Freezer Assembly, using a solution of SCOTSMAN Ice Machine Cleaner. Refer to procedure V-IV, CLEANING-Icemaker.

NOTE

Cleaning requirements vary according to local water conditions and individual user operation. Visual inspection of the Auger before and after cleaning will indicate frequency and procedure to be followed in local areas.

6. When doubtful about refrigerant charge, install refrigerant gauges on Schrader valves and perform step 7.
7. Check gauge for Suction line pressure:

   Varies between 12 to 16 PSIG, depending upon inlet water temperature and ambient air temperature.

8. Check Drivemotor operation:

   Normal operating temperatures are about 160-degrees F., which is hot to touch.

9. Check operation of the centrifugal sensing switch:

   MF900R: 1/4 HP Motor.

   Switch will OPEN between 850-950 RPM and the Compressor STOPS, with the Drivemotor operating. Switch will CLOSE between 1100-1250 RPM and the Compressor will RESTART, with Drivemotor building back up to normal operting speed.

10. Remove rubber insulating cap, the Retaining Ring and the Hook and Cap from the top of the Freezer Assembly.
11. Inspect the Top Bearing. If moisture is around Bearing, wipe clean of all grease and apply a coating of Shell Alvania 3 Grease, Scotsman P/N 19-0309-01, 1-lb. Can. Replace parts removed in step 10.
12. Check for water leaks. Tighten drain line connections. Pour water down Bin drain to be sure that drain line is open and clear.
13. Check the quality of ice. Ice flakes should be wet when formed, but will cure rapidly to normal hardness in the Bin.
14. Check the Bin Thermostatic Ice Control Bulb.

NOTE

The Bin Thermostat is factory set at 10-degrees F. differential and should keep the entire Icemaker system shut off at least 10 minutes in high ambient temperatures, longer in low ambient temperatures during normal operation. Settings are 35-degrees F. CUT-OUT and 45-degrees F. CUT IN.

15. Check the Spout Switch.

NOTE

The Spout Switch is manually reset and functions as a safety switch, to automatically stop the icemaking process if the Bin Thermostat Bulb were to fail and cause ice to jam up in the Ice Tube.

III. REMOTE CONDENSER

Frequent cleaning and inspection of the Remote Condenser should be performed to maintain maximum efficiency of icemaker. A dirty Condenser or blocked air flow will greatly decrease icemaking efficiency.

1. With electrical power OFF, on both the icemaker and the Fan Motor of the Remote Condenser, clean the Condenser, using a vacuum cleaner, whisk broom or brush. DO NOT USE A WIRE BRUSH. Instruct customer to clean frequently.

2. Check that Fan Blades move freely, are not touching any surfaces, are not bent or out of balance; and, the wire guard is properly installed and securely attached.
3. Check that the roof area immediately surrounding Remote Condenser is free and clear of any debris that may collect, such as leaves, paper, trash, etc.

IV. CLEANING - Icemaker

1. Remove screws and the Front Panel.
2. Move the manual ON-OFF toggle switch, on the front of the Control Box, to the OFF position.
3. Remove all ice from the Ice Storage Bin.
4. CLOSE the water supply shutoff valve; or block the float in the Water Reservoir.
5. Disconnect the tube between the Water Reservoir and the bottom of the Freezer Assembly and drain water from the Reservoir and tube. Reconnect the tube.

WARNING

SCOTSMAN Ice Machine Cleaner contains Phosphoric and Hydroxyacetic acids. These compounds are corrosive and may cause burns if swallowed, DO NOT induce vomiting. Give large amounts of water or milk. Call Physician immediately. In case of external contact flush with water. KEEP OUT OF THE REACH OF CHILDREN.

6. Prepare cleaning solution: Mix eight ounces of SCOTSMAN Ice Machine Cleaner with two quarts of hot water.
7. Remove the Cover to the Water Reservoir.
8. Slowly pour the cleaning solution into the Water Reservoir.
9. Move the manual ON-OFF toggle switch, on the front of the Control Box, to the ON position.
10. Continue to slowly pour the cleaning solution into the Water Reservoir, maintain level just below the Reservoir overflow.
11. Continue icemaking, using the cleaning solution, until all the solution is used up and the Water Reservoir is almost empty. DO NOT allow the icemaker to operate with empty Reservoir.
12. Move the manual ON-OFF toggle switch, on the front of the Control Box to the OFF position.
13. Wash and rinse the Water Reservoir.
14. OPEN the water supply shutoff valve; or remove the block from the float in the Water Reservoir.
15. Move the manual ON-OFF toggle switch, on the front of the Control Box, to the ON position.
16. Continue icemaking for at least 15 minutes, to flush out any cleaning solution. Check ice for acid taste - continue icemaking until ice tastes sweet.
17. Move the manual ON-OFF toggle switch, on the front of the Control Box, to the OFF position.

CAUTION

DO NOT use ice produced from the cleaning solution. Be sure none remains in the bin.

18. Remove all ice from the Ice Storage Bin.
19. Add hot water to the Ice Storage Bin and thoroughly wash and rinse all surfaces within the Bin.
20. Clean and sanitize the Ice Storage Bin each week.

SECTION VI
SERVICE DIAGNOSIS

The Service Diagnosis Section is for use in aiding the serviceman in diagnosing a particular problem for pin-pointing the area in which the problem lies, thus an ever available reference for proper corrective action.

The following charts lists corrective actions for the causes of known symptoms of certain problems that can occur in the Icemaking - Refrigeration System.

I. ICEMAKING - REFRIGERATION SYSTEM

SYMPTOM	POSSIBLE CAUSE	CORRECTION
Water Leaks.	Defective water seal.	Replace Seal.
	Gravity feed line leaking.	Check hose clamps.
	Water level in reservoir too high.	Adjust water level to 3/8-inch below reservoir overflow, then raise reservoir until water flows out freezer spout, then lower reservoir 3/8-inch.
	Storage bin drain and connecting fittings.	Check and repair.
Excessive noise or chattering.	Mineral or scale deposit on auger and inner freezing chamber walls.	For severe deposit, remove and manually polish auger, sand inner chamber walls of freezer barrel.
		For lighter concentration, use Scotsman Ice Machine Cleaner periodically.
	Intermittent water supply.	Check and clean water strainer.
		Check gravity feed line for air lock.
		Remove air lock.
	Water level in reservoir too low.	See CORRECTION for Water Leaks above.
	Gear Reducer loose on frame.	Tighten Gear Reducer.
	Motor compressor not solid on rubber mounts.	Repair or replace rubber mounts.
	Gearmotor end-play or worn bearing.	Repair or replace bearing.
Making wet ice. (Ice melts too quickly, is not cold enough to properly cure in the Bin.)	Surrounding air temperature too high.	Correct or move cabinet.
	Under or over-charge of refrigerant.	Recharge with proper amount. Should frost out of accumulator at least 8-inches. See nameplate for correct charge. See CORRECTION for Water Leaks above.

ICEMAKING - REFRIGERATION SYSTEM (Cont'd)

SYMPTOM	POSSIBLE CAUSE	CORRECTION
Making wet ice (cont'd)	Back pressure too high.	Overcharge of refrigerant. Faulty compressor or high head pressure. Lower pressure as indicated.
	Faulty compressor or valve plate.	Repair or replace compressor or valve plate.
Low ice production.	Loss of refrigerant. Under or over-charge of refrigerant.	Check and recharge. See NAMEPLATE for correct charge.
	Drivemotor weak.	Replace Drivemotor.
	Dirty or plugged condenser.	Clean condenser.
	Low water level in water reservoir.	See CORRECTION for Water leaks above.
	Partial restriction in capillary tube or drier.	Moisture in system. Overcharge of oil in system. Remove charge by blowing back through cap tube. Replace drier and recharge.
	Defective automatic expansion valve.	Replace valve.
	Optional inlet water strainer partially plugged.	Remove screen and clean.
	Corroded or stained auger due to water condition.	Remove auger and clean, or use SCOTSMAN Ice Machine Cleaner. See Maintenance Section.
Gearmotor noise.	Low on oil.	Remove case cover to check for proper oil level. Top of gears should be covered. Use: Sun Oil Company Prestige 50-EP.
Icemaker will not operate.	Blown fuse in line.	Replace fuse and check for cause of blown fuse.
	Bin thermostat set too high.	Adjust thermostat. Set at 35-degrees cut-out, 45-degrees cut-in.
	Loose electrical connection.	Check wiring.
	Switch in OFF position.	Set switch to ON position.
	Inoperative master switch.	Replace switch or thermal overload.
	Off on manual-reset pressure control.	Reset.
Icemaker continues to operate with full storage bin.	Bin thermostat not properly set or is defective.	Re-set or replace bin thermostat Re-set to 35-degrees cut-out, 45-degrees cut-in.

ICEMAKING - REFRIGERATION SYSTEM (Cont'd)

SYMPTOM	POSSIBLE CAUSE	CORRECTION
Compressor cycles intermittently.	Low voltage.	Check for overloading.
	Dirty condenser.	Clean condenser.
	Air circulation blocked.	Remove cause or move unit.
	Inoperative condenser fan motor.	Replace motor.
	Non-condensable gases in system.	Check for gas leaks, evacuate and recharge.
	Bin thermostat differential too small causing short cycling.	Widen differential 35-degrees cut-out, 45-degrees cut in.
	Cycling on ice spout microswitch.	Set or replace Bin thermostat.
Icemaker operates but makes no ice.	Loss or undercharge of refrigerant.	Check for leaks and recharge. See NAMEPLATE for correct charge.
	Water not entering freezing chamber.	Plugged strainer or supply line. Check and clean. Air lock in gravity feed line. Check and remove air lock.
	Moisture in system.	Check, evacuate, replace drier.
		Recharge. See NAMEPLATE for correct charge.
	Water seal leaking.	Replace seal.
	Water turned off while unit was operating.	Freezer inlet water line froze shut. Unit must be turned off and defrosted.
	Drivemotor or drive coupling stripped.	Repair or replace drivemotor or drive coupling.

SECTION VII
WIRING DIAGRAMS

This Section is provided as an aid in understanding the electrical circuitry of the Modular Flaker.

The Wiring Diagrams in this Section are:

Figure 7-1. Wiring Diagram MF900R - 2A & MF900R - 7A.

Figure 7-2. Wiring Diagram, MF900R - 3A.

WARNING

When conducting a continuity check of the Modular Flaker:

1. **Disconnect the main power source.**
2. **DO NOT use an incandescent lamp or jumper wire, conduct all tests with a volt-ohm-meter.**

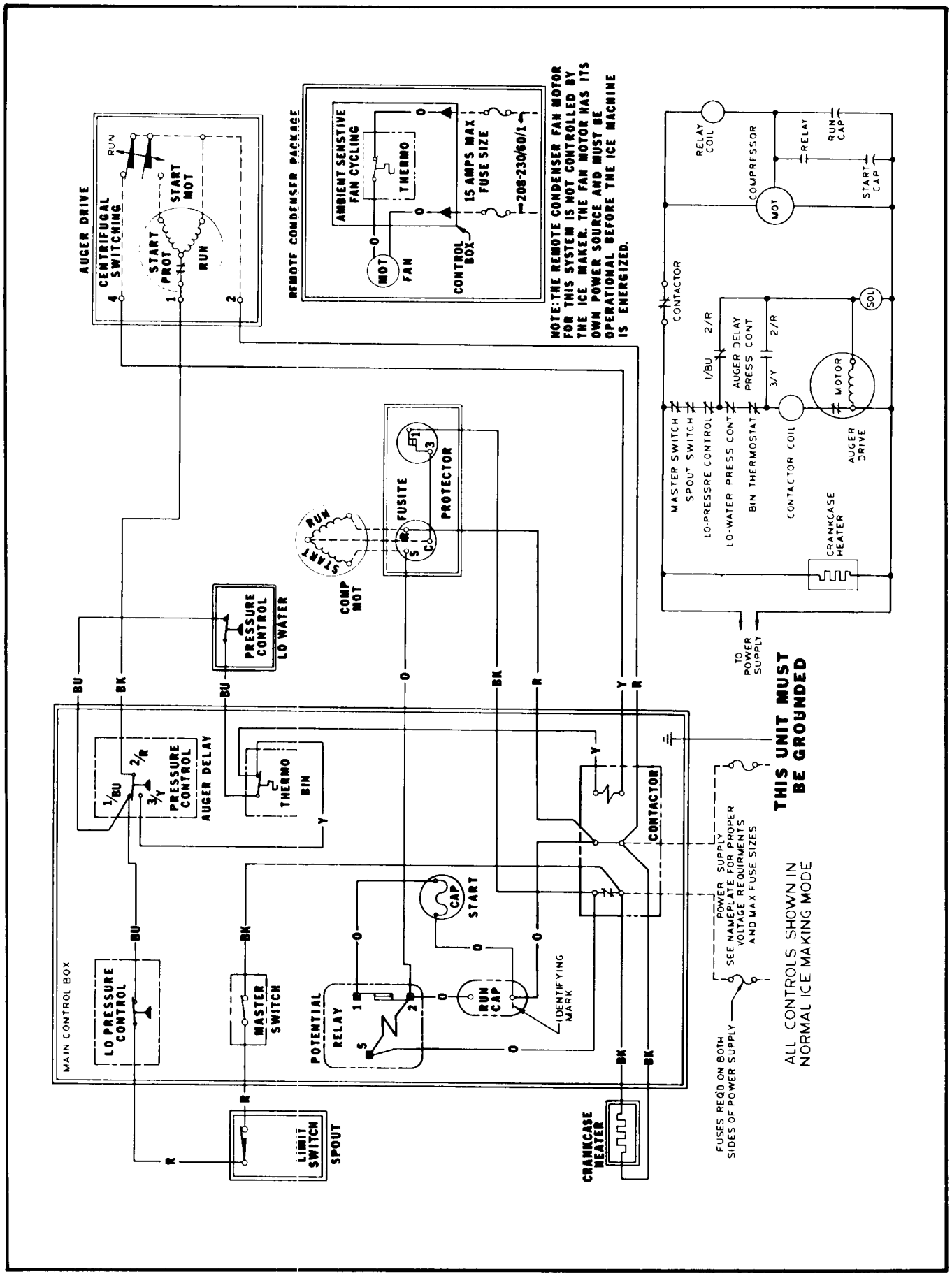

Figure 7-1. Wiring Diagram MF900R-2A & MF900R-7A.

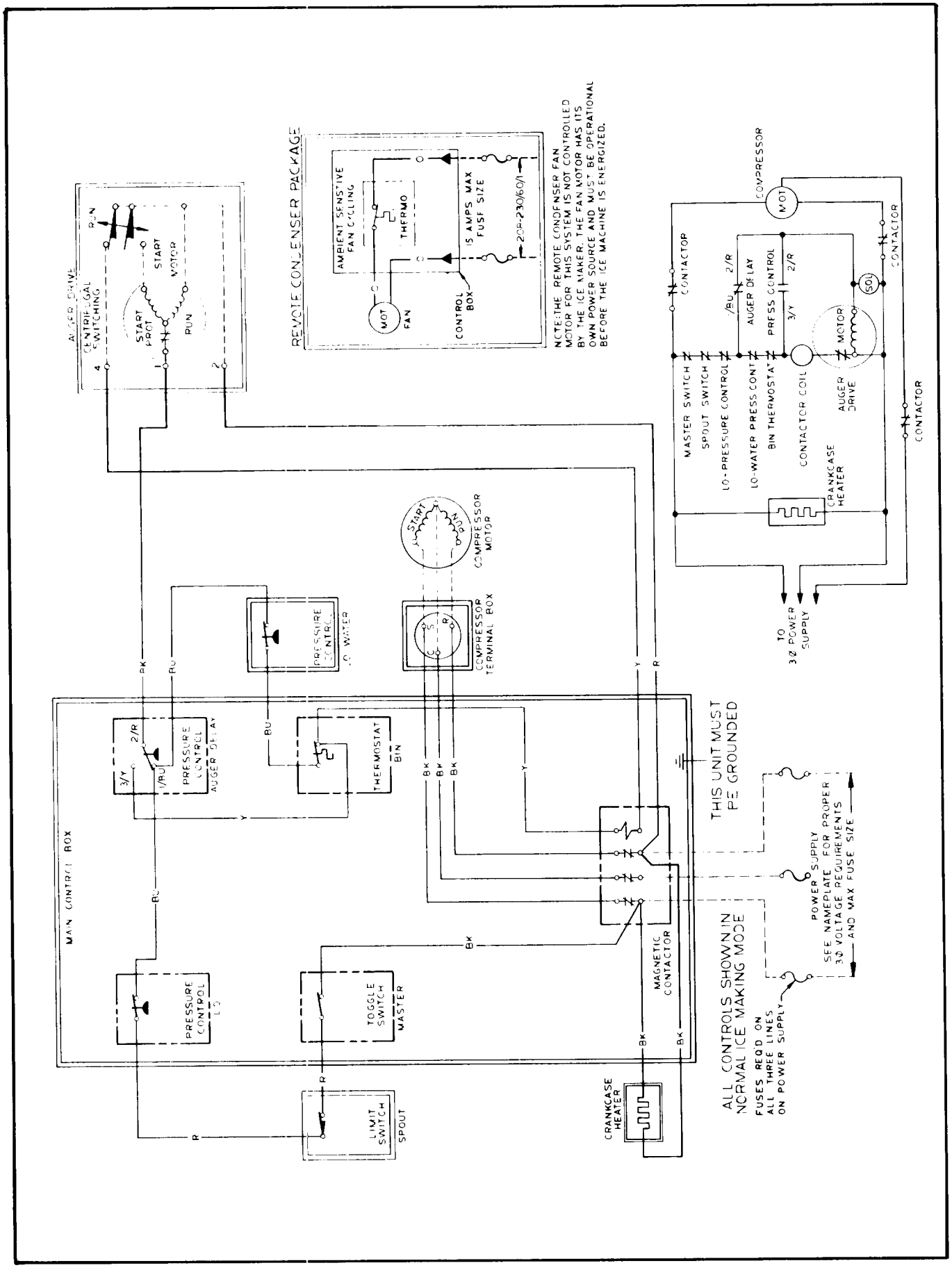

Figure 7-2. Wiring Diagram, MF900R-3A.

SECTION VIII
THE PARTS ILLUSTRATIONS AND PARTS LIST

I. GENERAL

This section contains the Parts Illustrations and the Parts List for each of the major assemblies in the MF-900R Modular Flaker with Remote Condenser.

Each Parts Illustration shows an assembly as an exploded view, with an Index Number for each part or sub-assembly, given in disassembly order. These Index Numbers key with the Parts List for the assembly and are found in the Parts List Column headed Index Number. The Description Column gives the identifying nomenclature for the item indexed. The Part Number Column gives the number of item. The Number Required Column gives the number of items required per assembly, but not necessarily the total number of parts required per Flaker.

All assemblies are cross-referenced both from the major assembly listing where they first appear in the Parts Listing to their break-down listing, and from the break-down listing, back to the major assembly (next higher assembly) listing.

A *No Number* designation, when used in the Part Number Column indicates the unit is not available from SCOTSMAN as an assembly. This designation is used only for the convenience and clarity of division in cataloging.

When an Index Number is followed by a letter (e.g. la, lb.), the letter indicates the part listed is part of the assembly indexed by the basic Index Number. The number required of the part indexed by the number and letter combination is for only one of the assemblies indexed by the basic Index Number and not necessarily the total number or parts used in the Flaker. Where the notation *Ref* occurs in the Number Required Column the number of the assemblies or parts required for use in the Flaker will be found under previous Index Number or in the next higher assembly Parts Listing. The next higher listing Figure/Index number is shown in the Description Column immediately following the items description.

II. HOW TO USE THE ILLUSTRATIONS AND PARTS LIST

To find the part number of a required part or assembly, turn to the List of Illustrations and find the page number of the Parts Illustration of the major or sub-assembly containing the part. Turn to the indicated page and locate the part and its Index Number on the specific illustration. Find the Index Number on the required part in the Parts List to determine the complete description of the part.

III. HOW TO ORDER PARTS OR ASSEMBLIES

When ordering parts or assemblies, to avoid costly delays and errors in shipment, give the part number, the complete description shown in the list, and the quantities of each part or assembly required. Also include the Model name, the serial number of the Flaker for which the part is required, and for parts which require color matching, the color of the Cabinet. See Figure 8-00, at the end of this section for detailed ordering instructions.

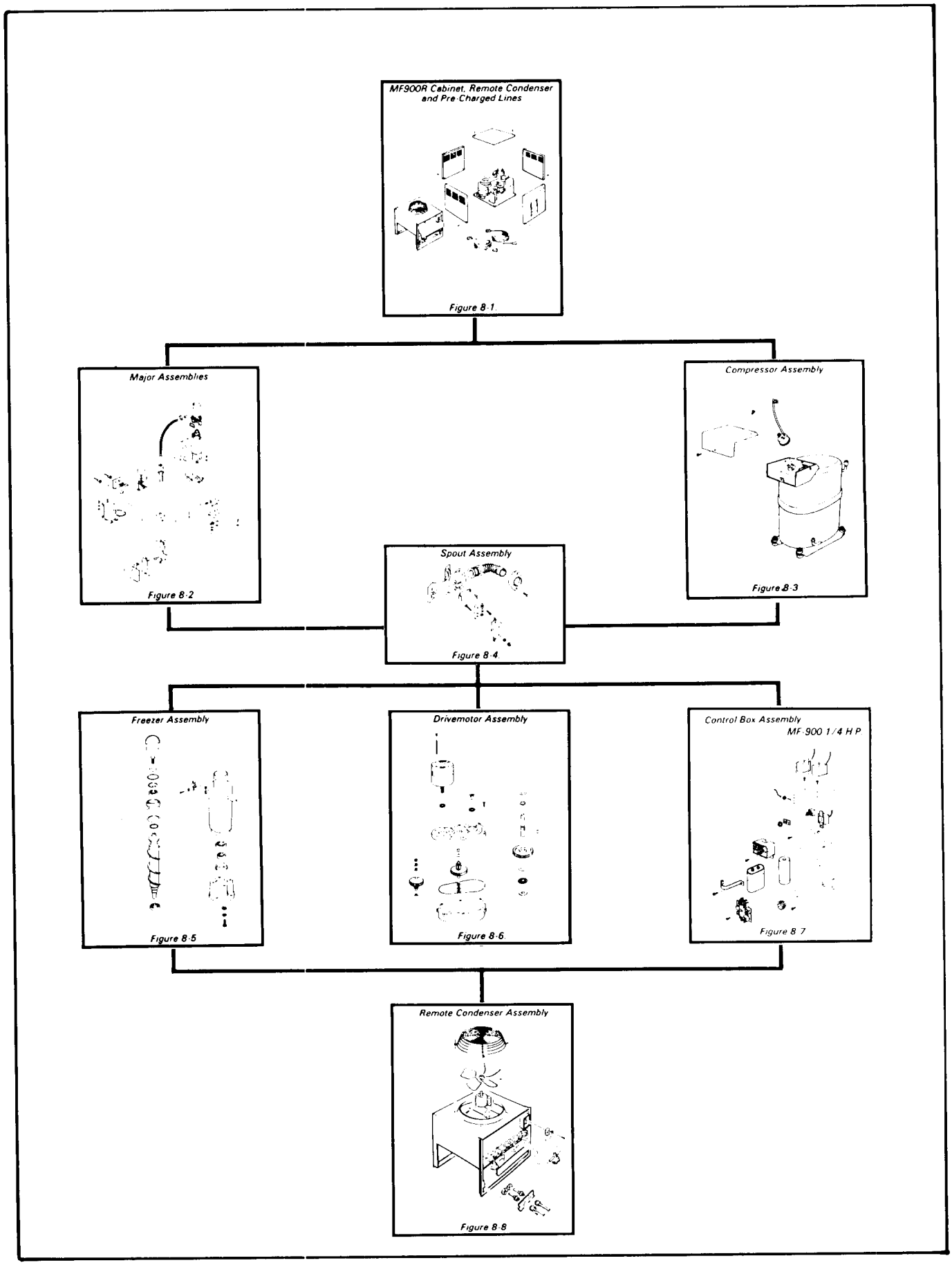

Figure 8-A. Modular Flaker MF900R Flow Chart.

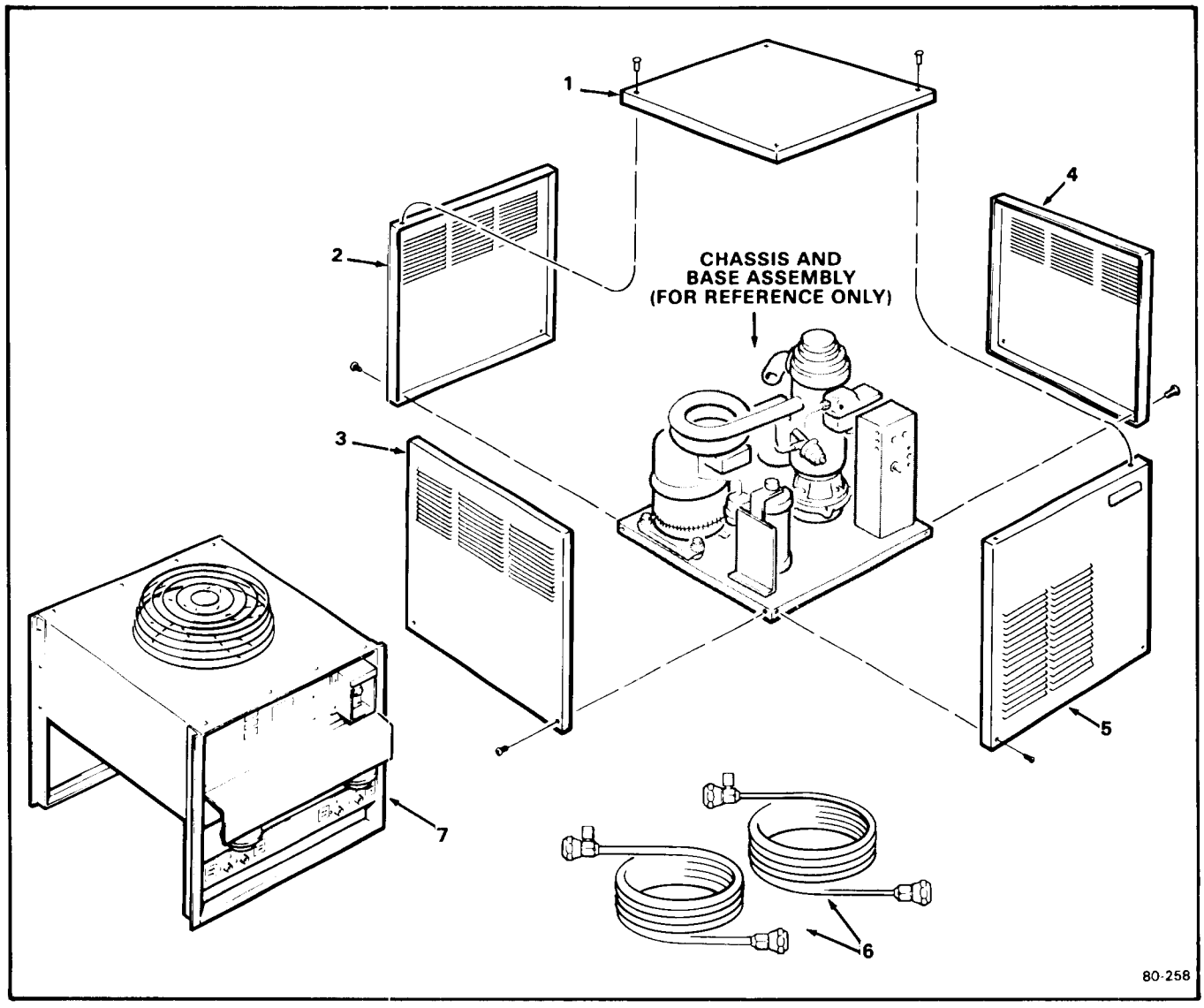

Figure 8-1. MF-900R Cabinet, Remote Condenser and Pre-Charged Lines

INDEX NO.	DESCRIPTION	PART NUMBER	REQ'D NUMBER
	MF-900R Cabinet	No Number	1
	* * *		
1	Panel, Top (C.R.S. Painted)	A26625-003	1
	Panel, Top (Stainless Steel)	A26625-002	1
	attaching parts, Index 1		
	Lockwasher, No. 8 Counter Sunk External Tooth—Carbon Steel Zinc Plated	03-1417-15	6
	Screw, No. 8 x 1-1/4 S/T Flat Hd	03-1419-09	6
	Nut, Speed - No. 8 J-Type	03-1423-06	6
	* * *		

Figure 8-1. MF900R Cabinet, Remote Condenser and Pre-Charged Lines (Cont'd)

INDEX NO.	DESCRIPTION	PART NUMBER	REQ'D NUMBER
2	Panel, Rear (C.R.S. Painted)	A29779-001	1
	Panel, Rear (Stainless Steel)	A29779-002	1
	attaching parts, Index 2		
	Screw, No. 8 x 1/2 T/F Tap	03-1404-09	2
	Lockwasher, No. 8 Counter Sunk External Tooth - Carbon Steel	03-1417-03	2
	* * *		
3	Panel, Left Side (C.R.S. Painted)	A26864-003	1
	Panel, Left Side (Stainless Steel)	A26864-002	1
	attaching parts		
	Lockwasher, No. 8 External Tooth - Carbon Steel Zinc Plated	03-1417-03	2
	Screw, No. 8 x 1/2 T/F Tap	03-1404-09	2
	Nut, Speed - No. 8	03-1507-00	2
	* * *		
4	Panel, Right Side (C.R.S. Painted)	A26866-003	1
	Panel, Right Side (Stainless Steel)	A26866-002	1
	attaching parts		
	Lockwasher, No. 8 External Tooth - Carbon Steel Zinc Plated	03-1417-03	2
	Screw, No. 8 x 1/2 T/F Tap	03-1404-09	2
	Nut, Speed - No. 8	03-1507-00	2
	* * *		
5	Panel, Front (C.R.S. Painted)	A26865-003	1
	Panel, Front (Stainless Steel)	A26865-002	1
	attaching parts		
	Lockwasher, No. 8 Counter Sunk External Tooth - Carbon Steel Zinc Plated	03-1417-15	4
	Screw, No. 8 x 1-1/4 S/T Flat Hd	03-1419-09	4
	Nut, speed - No. 8 J-Type	03-1423-06	4
	* * *		
6	Tubing, Pre-Charged Remote Tubing Kit (25-Foot)	RT-225	1
	Tubing, Pre-Charged Remote Tubing Kit (40-Foot)	RT-240	1
	* * *		
7	Condenser, Remote (Single Pass)	RC151-32A	1
	Condenser, Remote (Two Pass)	RC302-32A	1
	* * *		

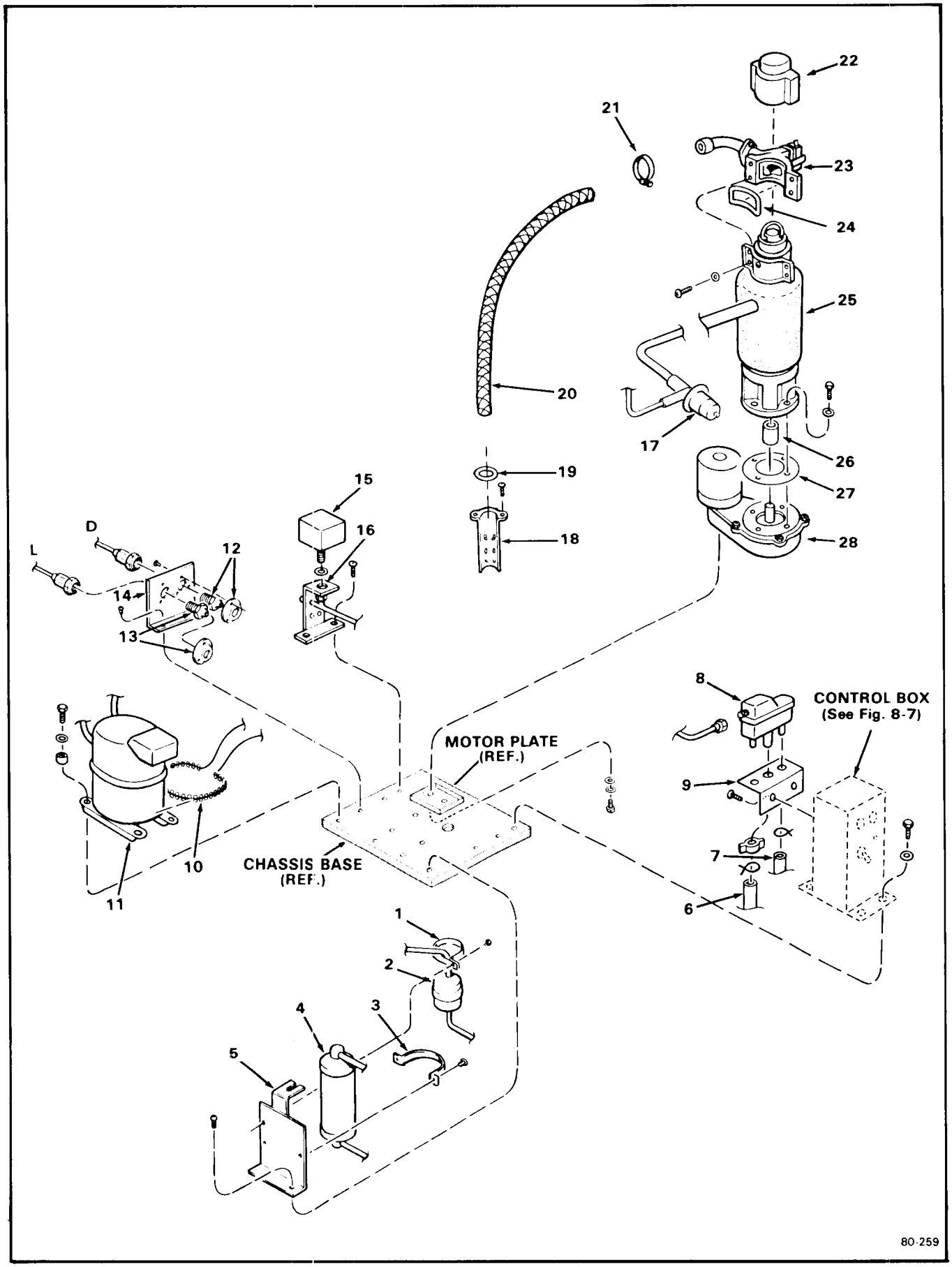

Figure 8-2. Major Assemblies.

Figure 8-2. Major Assemblies

INDEX NO.	DESCRIPTION	PART NUMBER	REQ'D NUMBER
	Major Assemblies	No Number	Ref.
	* * *		
1	Brace, Drier	A09388-001	1
	* * *		
2	Drier	02-0544-01	1
	attaching parts, Index 2 to 1		
	Screw, No. 10-16 x 3/4 S/T	03-1360-01	1
	* * *		
3	Strap, Receiver Assembly Mounting	No Number	1
	attaching parts, Index 3 and 4		
	Screw No.	03-1403-28	2
	* * *		
4	Receiver Assembly	A29773-001	1
	* * *		
5	Bracket, Receiver	No Number	1
	attaching parts, Index 5		
	Screw, No. 6 x 1/4 T/F Tap	03-1404-03	2
	* * *		
6	Tube (Reservoir Overflow to Drain)	13-0079-03	1
	* * *		
7	Tube (Reservoir to Freezer Inlet)	13-0674-09	1
	attaching parts, Index 7 to 8		
	Clamp (Index 6)	02-0534-00	1
	Clamp (Index 7)	02-0694-00	2
	* * *		
8	Reservoir	02-2217-01	1
	Valve Assembly, Float (Not Shown)	02-2217-02	1
	attaching parts, Index 8		
	Wing Nut (p/o Reservoir)	No Number	1
	* * *		
9	Bracket, Mounting	A20959-000	1
	attaching parts, Index 8		
	Screw, No. 8-18 x 1/2 Phil Pan Hd	03-1572-02	2
	* * *		

Figure 8-2. Major Assemblies (Cont'd)

INDEX NO.	DESCRIPTION	PART NUMBER	REQ'D NUMBER
10	Heater, Crankcase	12-1868-02	1
	* * *		
11	Compressor (See Figure 8-3)	No Number	1
	attaching parts, Index 11		
	Grommet	18-2300-27	4
	Sleeve, Mounting	18-2300-26	4
	Lockwasher, No. 1/16 External Tooth	03-1417-12	4
	Washer, Special	03-1408-29	4
	Screw, No. 5/16-18 x 1-3/4 Hex Cap	03-1405-40	4
	* * *		
12	Coupling Assembly, Discharge	No Number	1
	attaching parts, Index 12		
	Screw, No. 10 x 3/8 T/F Tap	03-1404-15	3
	* * *		
13	Coupling Assembly, Liquid	No Number	1
	attaching parts, Index 13		
	Screw, No. 10 x 3/8 T/F Tap	03-1404-15	3
	* * *		
14	Support, Coupling	No Number	1
	attaching parts, Index 14		
	Screw, No. 1/4 x 20 T/F Hex Head	03-0571-00	2
	* * *		
15	Control Pressure — Water	11-0296-00	1
	* * *		
16	Bracket, Utility	A27993-001	1
	Washer, Rubber	03-1409-21	1
	attaching parts, Index 15 to 16		
	Nut, Pal	03-1394-00	1
	Screw, No. 10-16 x 3/4 S/T	03-1360-01	2
	* * *		
17	Valve, Automatic Expansion	11-0416-01	1
	* * *		
18	Bracket, Bin Thermo	A27901-001	1
	attaching part, Index 18		
	Screw, No. 8 Sheet Metal	No Number	2
	* * *		

Figure 8-2. Major Assemblies (Cont'd)

INDEX NO.	DESCRIPTION	PART NUMBER	REQ'D NUMBER
19	Pad, Sealing	13-0806-01	1
	* * *		
20	Tube, Ice	A26537-005	1
	attaching parts, Index 20		
21	Clamp, Hose	02-0179-02	1
	* * *		
22	Cap, Freezer	13-0809-01	1
	* * *		
23	Spout Assembly	No Number	1
	(See Figure 8-4)		
	* * *		
24	Gasket, Spout	02-1437-00	1
	attaching parts, Index 23 and 24		
	Lockwasher, No. 1/4 Internal Tooth — Phosphor Bronze	03-1417-07	4
	Screw, No. 1/4-20 x1 Soc - Hd Cap (SS)	03-1544-03	4
	* * *		
25	Freezer Assembly	No Number	1
	(See Figure 8-5)		
	attaching parts, Index 25		
	Washer, Special	03-1408-35	3
	Lockwasher, No. 5/16 Helical Spring - Carbon Steel Zinc Plated	03-1410-04	3
	Screw, No. 1/4-20 x 1 Soc-Hd Cap (SS)	03-1420-01	3
	* * *		
26	Coupling	15-0573-01	1
	* * *		
27	Gasket	13-0704-00	1
	* * *		
28	Drivemotor Assembly	A2431-022	1
	(See Figure 8-6)		
	* * *	A24317-022	

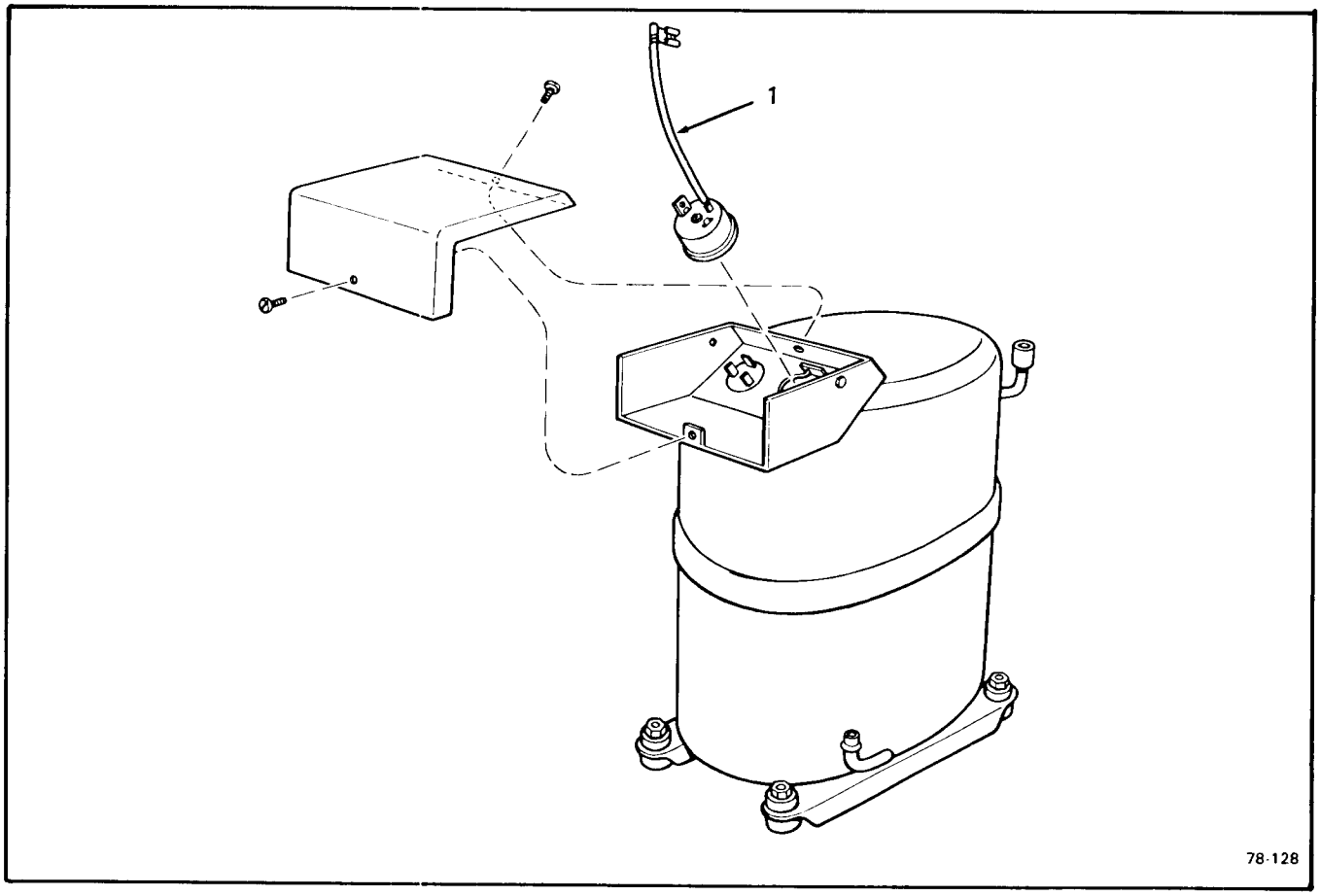

Figure 8-3. Compressor Assembly.

INDEX NO.	DESCRIPTION	PART NUMBER	REQ'D NUMBER
	Compressor Assembly — 230/60/1	18-3800-02	Ref.
	Compressor Assembly — 208-220/60/3	18-3800-03	Ref.
	Compressor Assembly — 208/60/1	18-3800-07	Ref.
	(See Figure 8-2/11 for next higher Assembly)		
	* * *		
1	Overload — (230/60/1)	18-2300-25	1
	Overload — (208/60/1)	18-2300-32	1
	* * *		
	(NOTE: 208-220/60/3 internally protected. No service replacement part.)		

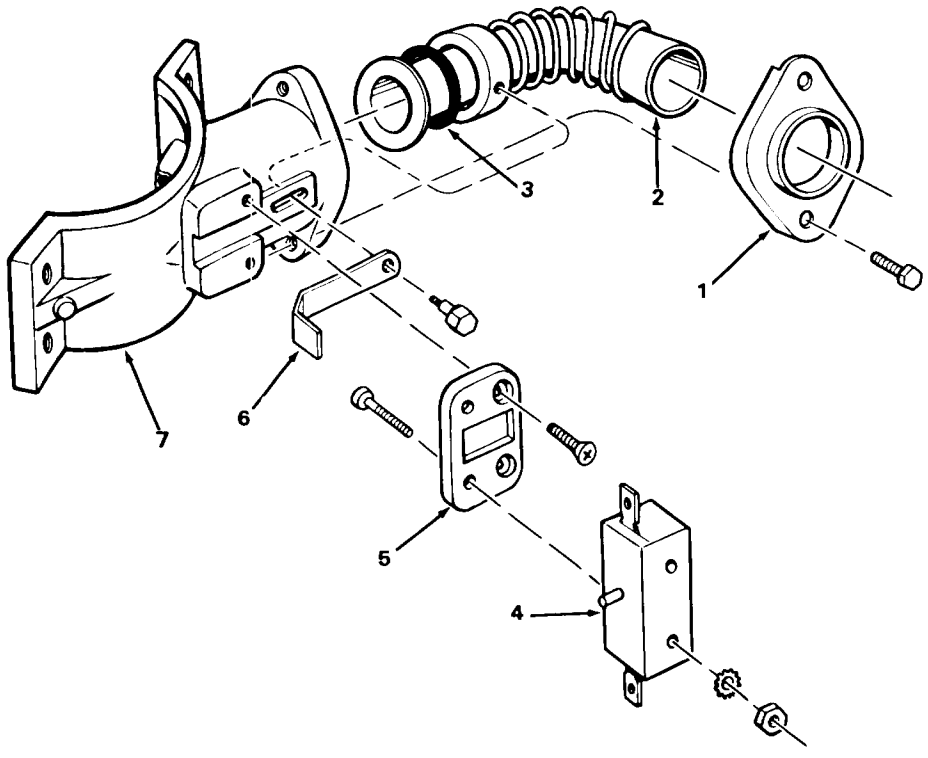

Figure 8-4. Spout Assembly

INDEX NO.	DESCRIPTION	PART NUMBER	REQ'D NUMBER
	Spout Assembly (See Figure 8-2/23 for next higher Assembly)	A29430-020	Ref.
	* * *		
1	Plate, Retainer	A29041-001	1
	attaching parts, Index 1 to 7		
	Screw No. 1/4 - 20 x 3/8 Hex Head Cap	03-1405-02	2
	* * *		
2	Tube, Ice Discharge	02-2490-01	1
	* * *		
3	O-Ring	13-0617-43	1
	* * *		
4	Switch	12-1644-00	
	attaching parts, Index 4 to 5		
	Screw, No. 6 - 32 x 1 Flat Hd. Mach - Phil Recess	03-1418-38	2
	Lockwasher, No. 6 External Tooth - Phosphor Bronze	03-1417-01	2
	Nut, No. 6 - 32 Hex Mach. Screw	03-1406-01	2
	* * *		

Figure 8-4. Spout Assembly

INDEX NO.	DESCRIPTION	PART NUMBER	REQ'D NUMBER
5	Barrier, Thermal	02-2377-01	1
	attaching parts, Index 5 to 4		
	Screw, No. 6 - 32 x 3/8 Flat Hd. Mach. - Phil Recess	03-1418-01	2
	* * *		
6	Actuator, Switch	A29429-001	
	attaching parts, Index 6 to 7		
	Screw, Shoulder	A25305-001	1
	* * *		
7	Spout	A29050-001	1
	* * *		

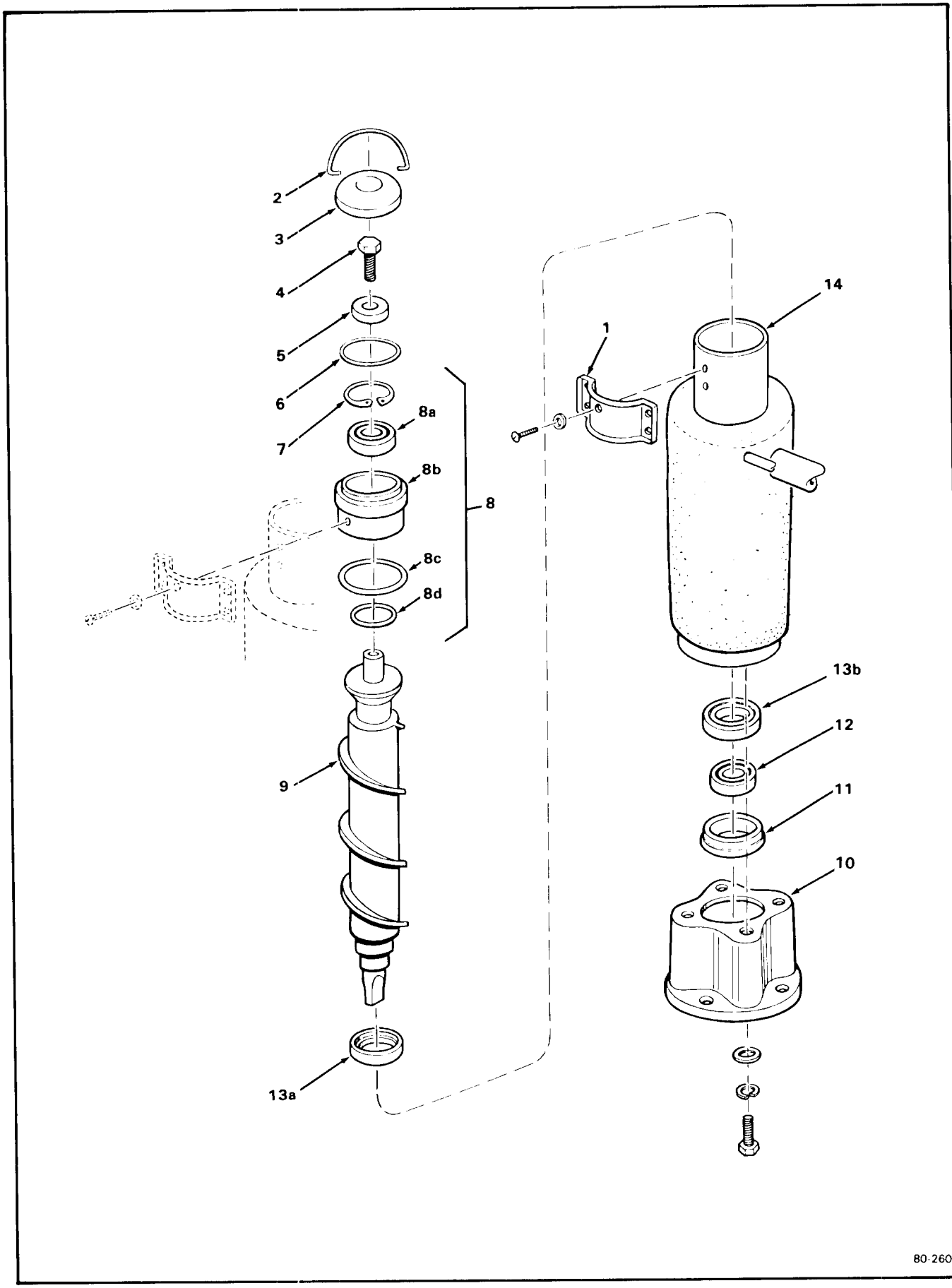

Freezer 8-5. Freezer Assembly.

Figure 8-5. Freezer Assembly.

INDEX NO.	DESCRIPTION	PART NUMBER	REQ'D NUMBER
	Freezer Assembly (See Figure/Index 8-2/25 for next higher Assembly) * * *	No Number	Ref.
1	Plate, Spout	A24928-001	1
	attaching parts, Index 1		
	Washer, Non-Metallic .250 I.D.	03-1409-20	1
	Screw, No. 1/4-20 x 3/8 Phil Recessed Hd Sealing	03-1506-03	1
	* * *		
2	Hook	A08582-000	1
	* * *		
3	Cap	A08581-000	1
	* * *		
4	Screw, No. 1/2-20 x 1 Hex Cap	03-1405-36	1
	* * *		
5	Washer, Brass 17/32 I.D. x 1-5/8 O.D. x 5/16	A06273-000	1
	* * *		
6	O-Ring (Fits into outside groove, Index 8)	13-0617-20	1
	* * *		
7	Ring, Internal Retaining	03-1558-04	1
	* * *		
8	Retainer, Top Bearing — w/Bearing	A26708-001	1
8a	Bearing (Top)	02-0646-00	1
8b	Retainer (Order P/N A26708-001)	No Number	1
8c	O-Ring - (Internal)	13-0617-15	1
8d	O-Ring - (External)	13-0617-40	1
	* * *		
9	Auger	02-2048-01	1
	* * *		
10	Adaptor	02-1629-00	1
	attaching parts, Index 10, 11, 12, 13 to 14		
	Washer, Special	03-1408-03	4
	Lockwasher, No. 5/16 Helical Spring	03-1410-04	4
	Screw, No. 5/16-18 x 1-1/4 Hex Cap	03-1405-41	4
	* * *		

Figure 8-5. Freezer Assembly (Cont'd)

INDEX NO.	DESCRIPTION	PART NUMBER	REQ'D NUMBER
	Gasket (Not Shown)	13-0704-00	1
	* * *		
11	Retainer, Bearing	A10591-000	1
	* * *		
12	Bearing	02-0619-00	1
	* * *		
13	Seal, Water	A22569-000	1
13a	Seal, Upper (Fits on Index 9)	No Number	Ref.
13b	Seal, Lower (Fits on top of Index 12)	No Number	Ref.
	* * *		
14	Freezer - (Repair Assembly)	A29767-020	1
	* * *		

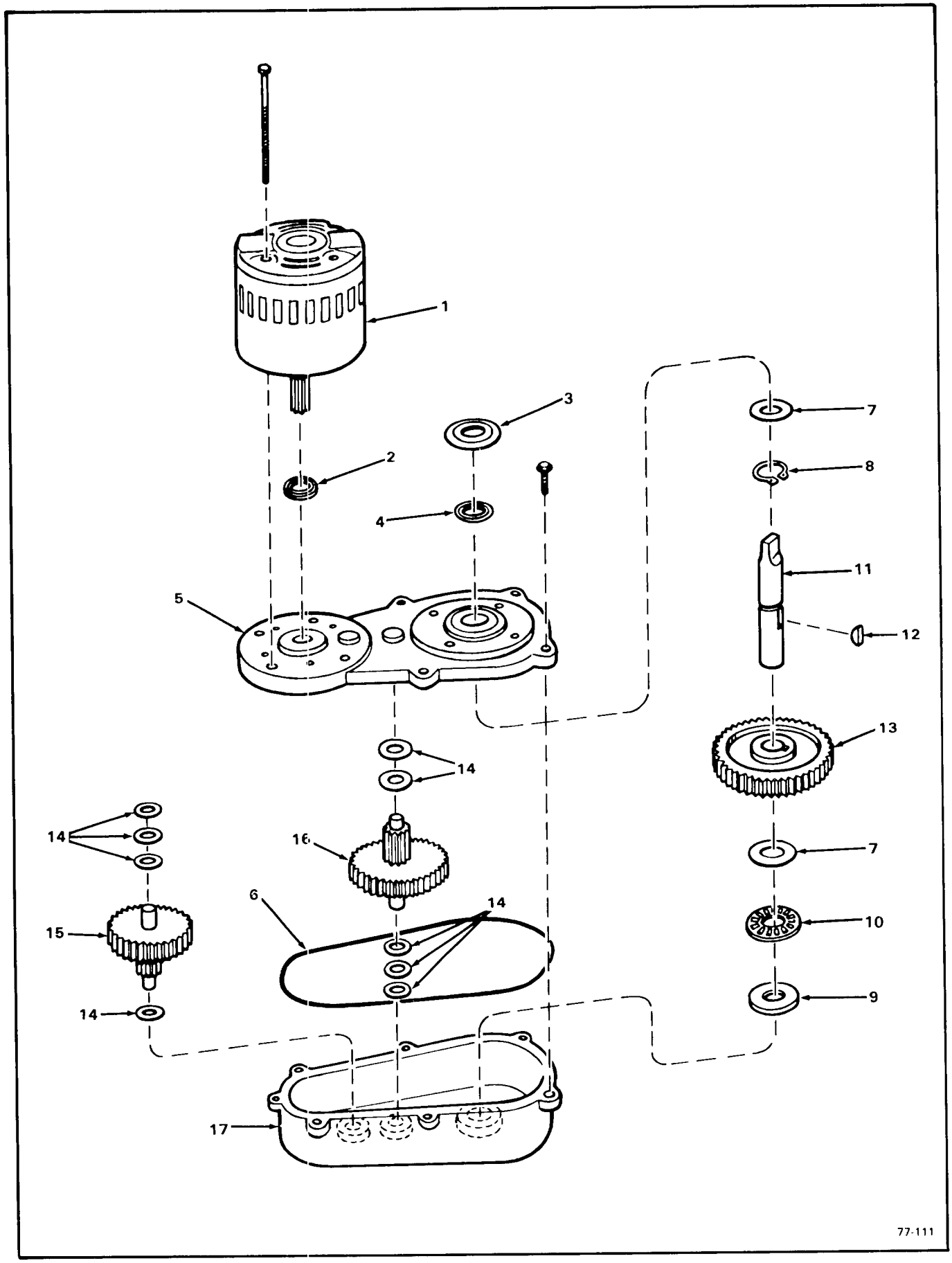

Figure 8-6. Drivemotor Assembly.

Figure 8-6. Drivemotor Assembly

INDEX NO.	DESCRIPTION	PART NUMBER	REQ'D NUMBER
	Drivemotor Assembly (1/4 H.P.) (12.2 R.P.M.) (See Figure/Index 8-2/28 for next higher Assembly) * * *	A24317-022	Ref.
1	Motor, Drive attaching part, Index 1 to 5 Screw, Motor (p/o Index 1) * * *	A26455-002 No Number	1 4
2	Seal, Oil * * *	02-1606-00	1
3	Shed, Water * * *	13-0709-02	1
4	Seal, Oil * * *	02-1607-00	1
5	Cover Assembly, Gear Case attaching parts, Index 5 to 17 Screw, No. 5/16 x 1 Flange * * *	A22200-000 03-1251-01	1 6
6	O-Ring * * *	A26103-001	1
7	Race, Thrust * * *	02-1681-00	2
8	Ring, Retaining * * *	03-1363-00	1
9	Race, Thrust * * *	02-1679-00	1
10	Bearing * * *	02-1680-00	1
11	Shaft, Output attaching part, Index 11 to 13 * * *	02-1652-00	1
12	Key (No. 91 Woodruff, Nickel Steel) * * *	03-1364-00	1
13	Gear, Output * * *	02-1653-00	1

Figure 8-6. Drivemotor Assembly (Cont'd)

INDEX NO.	DESCRIPTION	PART NUMBER	REQ'D NUMBER
14	Washer, Special (.515 I.D. x 875 O.D. x .028 Steel) * * *	03-1408-24	9
15	Second Pinion Assembly, First Gear * * *	02-2072-00	1
16	Third Pinion Assembly, Second Gear * * *	02-2071-00	1
17	Case Assembly, Gear * * *	A22199-000	1

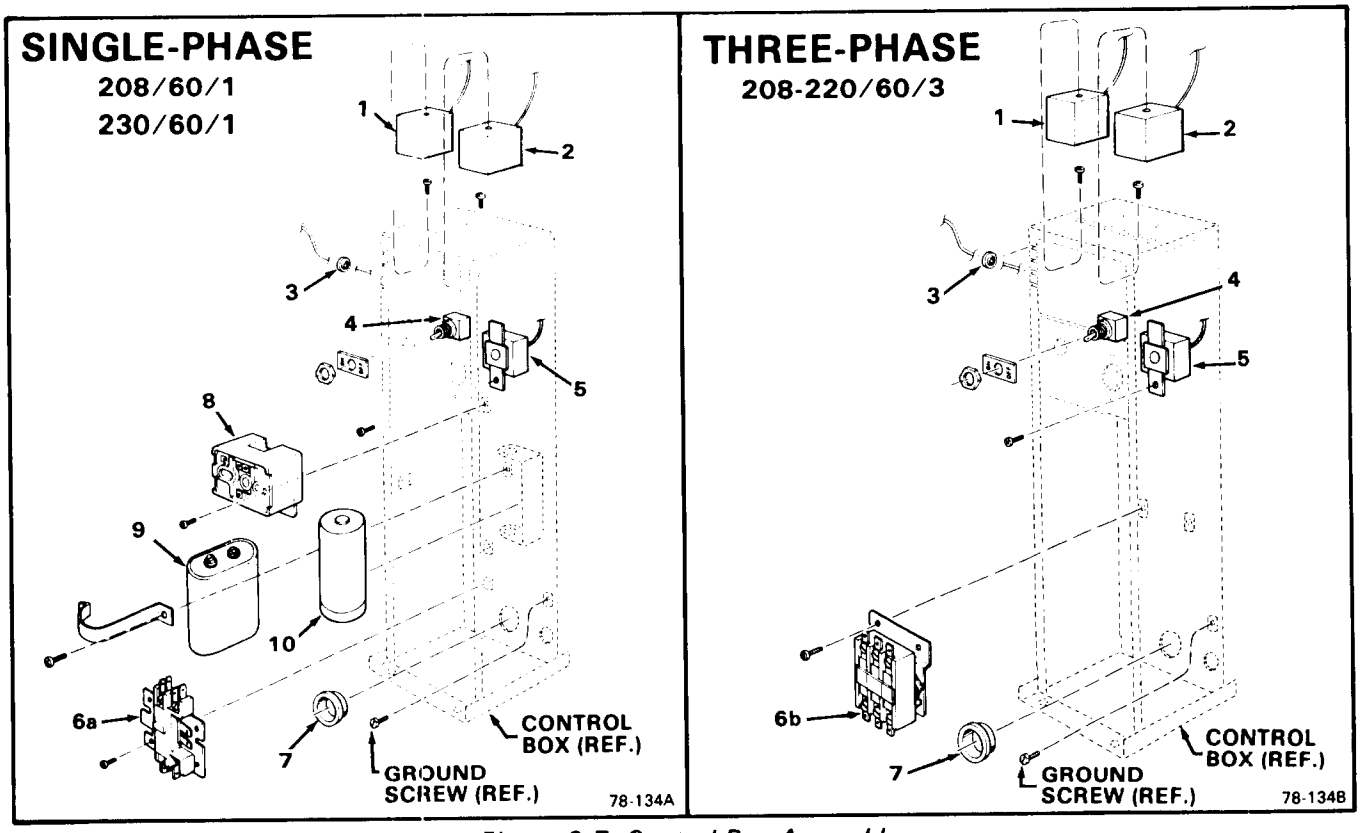

Figure 8-7. Control Box Assembly.

INDEX NO.	DESCRIPTION	PART NUMBER	PHASE 1 208 60	PHASE 1 230 60	PHASE 3 208 230 60
	Control Box Assembly (See Figure 8-2 for next higher Assembly) * * *	No Number			
1	Control, Low Pressure	11-0358-01	1	1	1
	attaching parts, Index 1				
	Screw, No. 6-32 x 1/4 Pan Hd * * *	03-1403-02	2	2	2
2	Control, Auger Delay	11-0402-01	1	1	1
	attaching parts, Index 2				
	Screw, No. 6-32 x 1/4 Pan Hd * * *	03-1403-02	2	2	2
3	Grommet * * *	13-0557-00	3	3	3
4	Switch, Toggle * * *	12-0426-01	1	1	1

Figure 8-8. Control Box Assembly (Cont'd)

INDEX NO.	DESCRIPTION	PART NUMBER	PHASE 1 208 60	PHASE 1 230 60	PHASE 3 208 230 60
5	Control, Temperature	11-0354-00	1	1	1
	attaching part, Index 5				
	Screw No. 8-32 x 3/8 Phil Recess Pan Hd	03-1403-17	2	2	2
	* * *				
6a	Contactor	12-2048-02	1	1	—
6b	Contactor	12-0739-02			1
	attaching parts, Index 7				
	Screw, No. 8-32 x 3/4 Phil Recess Pan Hd (6a)	03-1403-17	4	4	—
	Screw, No. 10-24 x 3/8 Phil Recess Pan Hd (6b)	03-1403-26	—	—	2
	* * *				
7	Bushing, Snap	12-1213-12	1	1	1
	* * *				
8	Relay	18-1903-29	—	1	—
	Relay	18-1903-34	1	—	—
	attaching parts, Index 8				
	Screw, No. 6-32 x 3/8 Phil Recess Pan Hd	03-1403-04	1	1	—
	* * *				
9	Capacitor, Run	18-1902-29	—	1	—
	Capacitor, Run	18-1902-34	1	—	—
	attaching parts, Index 9				
	Bracket, Capacitor	No Number	1	1	—
	Screw, No. 8-32 x 1-1/4 Phil Recess Pan Hd	No Number	1	1	—
	* * *				
10	Capacitor, Start	18-1901-15	1	1	—
	* * *				

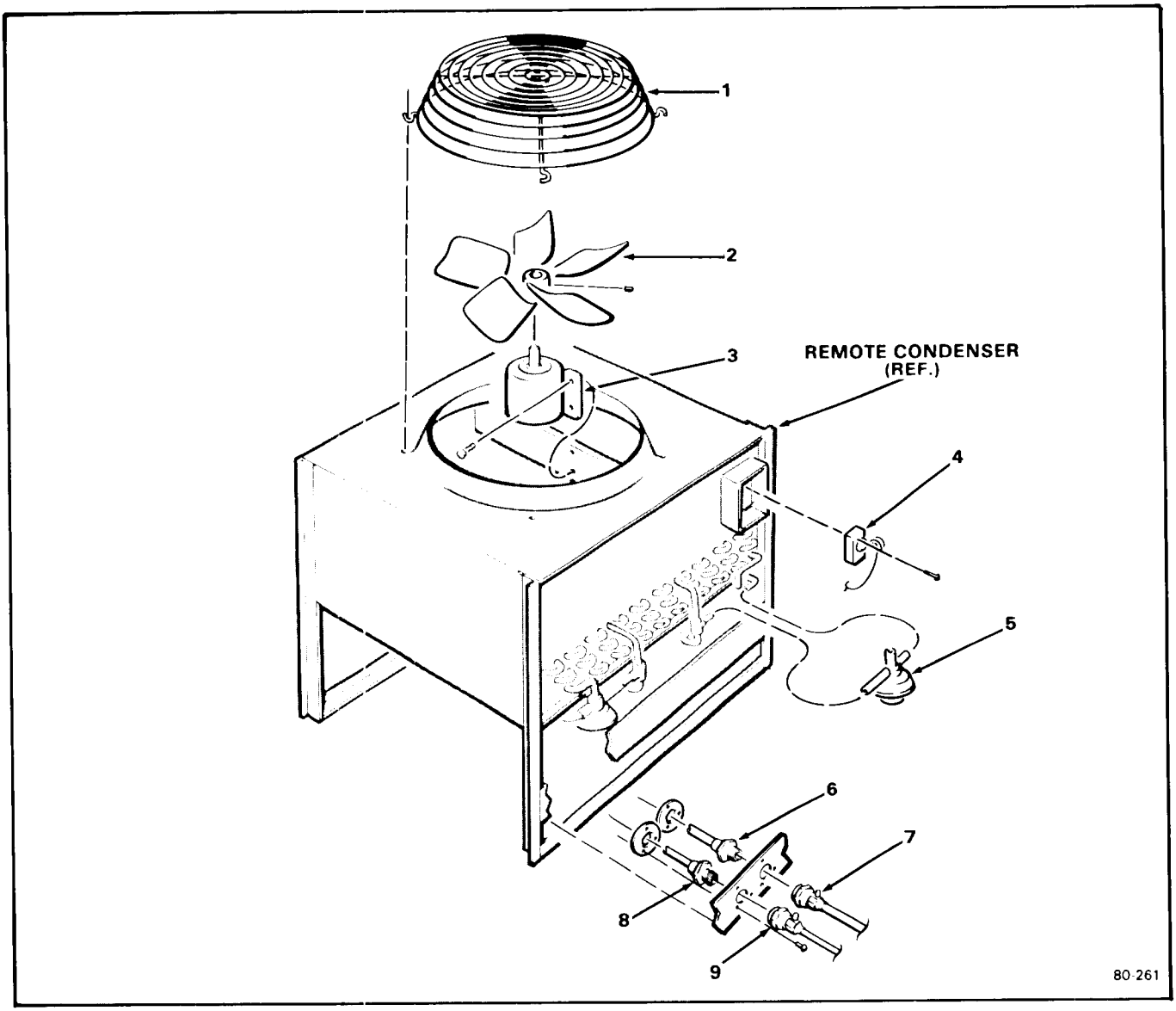

Figure 8-8. Remote Condenser RC151, RC302.

INDEX NO.	DESCRIPTION	PART NUMBER	REQ'D NUMBER
	Remote Condenser (See Figure/Index 8-1/7 for next higher Assembly)	No Number	Ref.
	* * *		
1	Guard, Fan	02-2618-01	1
	* * *		
2	Blade, Fan	18-3733-01	1
	* * *		
3	Motor, Fan	18-3734-01	1
	* * *		
4	Thermostat, Control	11-0417-01	1
	* * *		

Figure 8-8. Remote Condenser RC151, RC302 (Cont'd)

INDEX NO.	DESCRIPTION	PART NUMBER	REQ'D NUMBER
5	Valve, Head Pressure Control, Single Pass (RC151)	11-0414-01	1
	Valve, Head Pressure Control, Two Pass (RC302)	11-0414-01	2
	* * *		
6	Connector, 1/4-inch tubing, male	No Number	1
	* * *		
7	Connector, 1/4-inch tubing, female	No Number	1
	* * *		
8	Connector, 3/8-inch tubing, male	No Number	1
	* * *		
9	Connector, 3/8-inch tubing, female	No Number	1
	* * *		

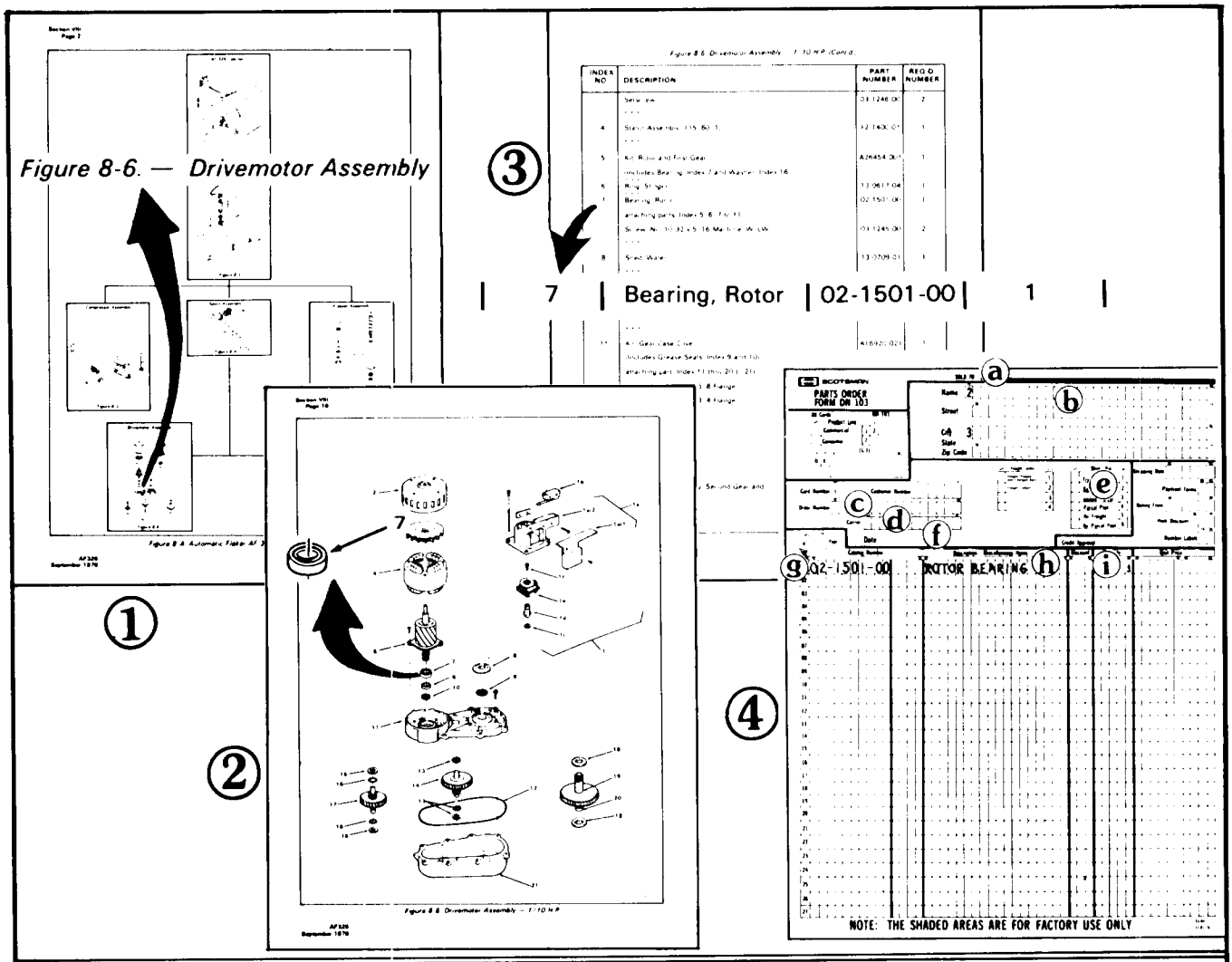

HOW TO USE A SCOTSMAN PARTS MANUAL WHEN ORDERING PARTS FOR ICE SYSTEMS PRODUCTS

IMPORTANT A. All Part Numbers have TEN DIGITS (spaces), required for use in the Computer System. BE SURE to fill in **ALL SPACES** in the CATALOG NUMBER column, on the Parts Order form as shown above.

B. Enter the QUANTITY of the Parts ordered, in the last digit column under the QUANTITY column heading, the one under the small 55 number, for parts from 1 thru 9. For 10 or more parts use two columns.

To be sure you receive the proper parts in the proper quantities, ALWAYS use the PART NUMBERS and DESCRIPTIONS given in the Parts Manuals.

The figures above illustrate the way a Parts Manual would be used, if the Part being ordered were the ROTOR BEARING that is used in the DRIVEMOTOR ASSEMBLY of an AF325 Automatic Flaker, for example.

PROCEDURE:

1. At the beginning of Section VIII, THE PARTS ILLUSTRATIONS AND PARTS LISTS, in each Parts and Service Manual, is Figure 8-A; which, is a flow chart prepared from exploded views in Section VIII. Use the flow chart to quickly determine which Figure contains the Assembly, Component or Part.

FIGURE 1: Since the Part required in the above example is in the DRIVEMOTOR ASSEMBLY, shown as FIGURE 8-6.

2. Open the Manual to page showing FIGURE 8-6.

3. Locate the PART and its INDEX NUMBER on the exploded view illustration.

FIGURE 2: The INDEX NUMBER for the PART is 7.

4. Check the numerical sequence in the associated Parts List following the illustration.

5. LOCATE the INDEX NUMBER 7, in the INDEX NO. column, the first column on the left side of the Parts List page.

FIGURE 3: INDEX NO. 7 is listed as a BEARING, ROTOR in the DESCRIPTION column. The Part Number for the Rotor Bearing is 02-1501-00 as listed in the PART NUMBER column on the right side of the Parts List page. And, one Rotor Bearing is listed in the REQ'D NUMBER column, or that ONLY one of those parts is required for one Drivemotor Assembly.

6. Write an order for the Part. (Use SCOTSMAN Parts Order Form DN103)

FIGURE 4: a. Distributor Name.
b. (Use for DROP-SHIP order ONLY).
c. Distributor Purchase Order Number.
d. Carrier
e. How shipped (Truck, Rail, UPS, etc.)
f. Date ordered
g. Part Catalog Number
(use full TEN digits (spaces) listed in Parts Manual, including dashes between numbers.
h. Description - as listed in Parts Manual.
i. Quantity - number of parts ordered.
(use far right column)

Figure 8-00. How To Use The Illustrated Parts List.

MF900RC

TABLE OF CONTENTS

GENERAL INFORMATION & INSTALLATION
Introduction 2
Location and Leveling 3
Remote Condenser and Pre-Charged Lines — Installation 4
Coupling Instructions, Pre-Charged Tubing Kit 6
Electrical Connections 7
Water Supply and Drain Connections 7
Final Check List 8

OPERATING INSTRUCTIONS
Pre-Start and Start-Up 11
Icemaker Operation 12
Electrical Refrigeration 13

COMPONENT DESCRIPTION 15

ADJUSTMENT PROCEDURES
Bin Thermostat Control 18

REMOVAL AND REPLACEMENT PROCEDURES
Auger, Water Seal, Bearings and Coupling 19
Compressor Assembly 20
Automatic Expansion Valve 21
Water Reservoir Float 21
Head Pressure Regulator Valve 22
Liquid Line Drier 22
Drivemotor Assembly 22
Freezer Assembly 23
Water Reservoir Assembly 24

SERVICE DIAGNOSIS 25

MAINTENANCE AND CLEANING
General 28
Icemaker 28
Remote Condenser 30
Cleaning — Icemaker 30

LIST OF ILLUSTRATIONS

Specifications 1
MF900RC — Introduction 2
Installation — Bin Thermostat Bracket 3
Pre-Charged Refrigerant Line Routing 4
Pre-Charged Refrigerant Line Connection 6
Installation, Electrical, Water Supply and Drain Connection 7
Final Checklist 9
Water Schematic 11
Refrigeration Schematic 12
Component Description 15

PARTS LIST & WIRING DIAGRAMS (Printed in Yellow) 1
PARTS LIST:
- Cabinet Assembly 3
- Refrigeration System 5
- Water System 7
- Drivemotor Assembly 8
- Freezer Assembly 9
- Spout Assembly 10
- Remote Condenser 11
- Control Box 13

WIRING DIAGRAMS:
- MF900RE-2C 230/60/1 14
- MF900RE-3C 208-220-60/3 15
- MF900RE-7C 208/60/1 16

Adjustment of the Temperature Control 18
Freezer Assembly 19
Removal of Water Reservoir Float 21
Removal of the Freezer Assembly 23
Cleaning Water Systems, Remote Condenser, Icemaker 29

MF900RC MODULAR FLAKER AND REMOTE CONDENSER

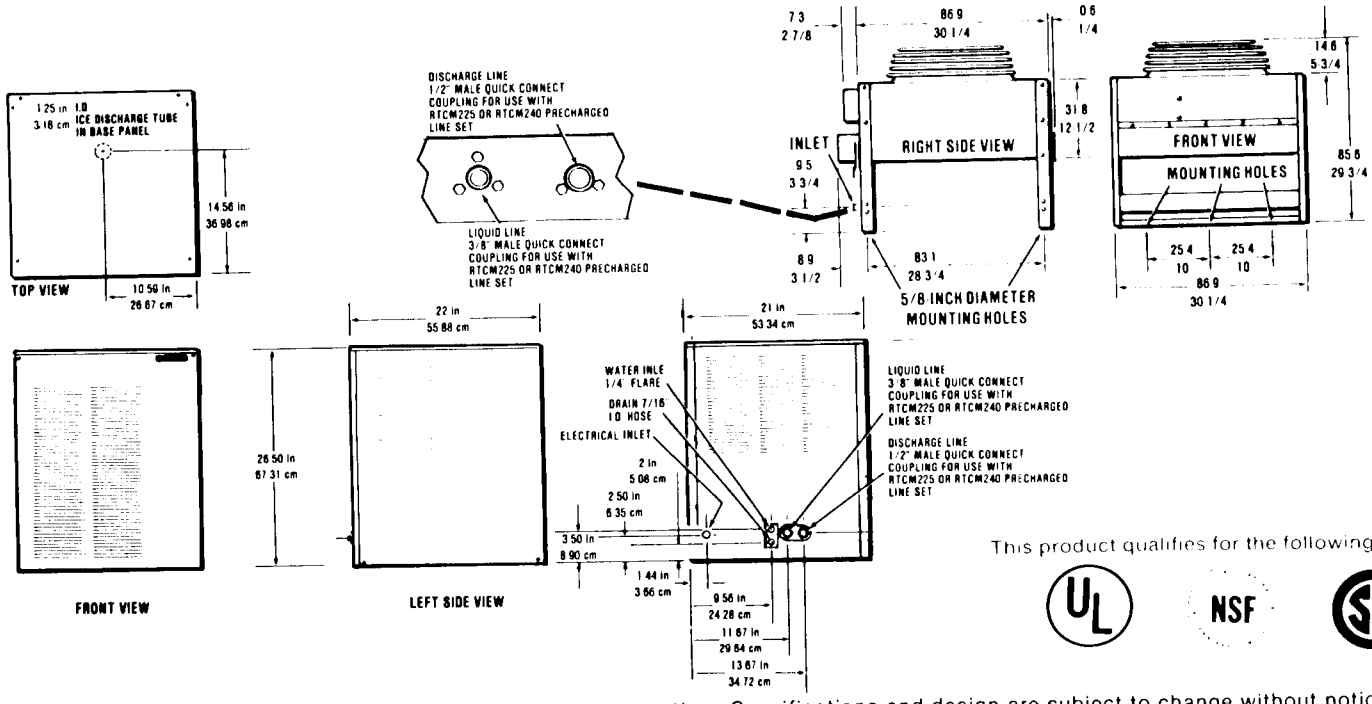

This product qualifies for the following listings:

We reserve the right to make product improvements at any time. Specifications and design are subject to change without notice.

SPECIFICATIONS

Model Number	Dimensions (Height - w/o Legs) H" x W" x D"	Cond. Unit	Finish **	Basic Electrical	Comp. H.P.	No. of Wires	Min. Circuit Ampacity †	Max. Fuse Size	Ship. Wt. lbs./kg.
MF900RE-2C	26", x 21 x 22	R-Air	EC	230/60/1	1	2	8.3	15	208/94
MF900RE-3C	26", x 21 x 22	R-Air	EC	208-220/60/3	1	3	6.6	15	208/94
MF900RE-7C	26", x 21 x 22	R-Air	EC	208/60/1	1	2	9.5	15	208/94

MF900RC is used only with the RC151-32B and RC302-32B remote condensers. Consult your Scotsman dealer for installation.
Modular flakers above will stack on top of B60 bin with BX25 bin extensions and KBT1 bin top and the B90 bin with BX87 and BX83 bin extensions and KBT4 bin top.
Electrical and water inlets and drains located in lower center of back panel.

** EC - Enamel Charcoal, ES - Enamel Sandalwood, SS - Stainless Steel

REMOTE CONDENSERS FOR USE WITH MF900R ICE MACHINES

Model Number	Dimensions (Height - w/o Legs) H" x W" x D"	For Use With	Cond. Unit	Finish **	Basic Electrical	No. of Wires	Min. Circuit Ampacity †	Max. Fuse Size	Ship. Wt. lbs./kg.
RC151-32B	29¼ x 30¼ x 33¼	(1) MF900R	R-Air	Galvanized	208-230/60/1	2	20	15	115/52
RC302-32B	29¼ x 30¼ x 33¼	(1) MF900R or (2) MF900R Flakers	R-Air	Galvanized	208-230/60/1	2	20	15	135/61

IMPORTANT OPERATING REQUIREMENTS

	MINIMUM	MAXIMUM
*Air Temperatures	50° F (10.0° C)	100° F (38° C)
Water Temperatures	40° F (4.4° C)	100° F (38° C)
Water Pressures	20 lbs. gauge	120 lbs. gauge
Single Voltage Units	-10%	+10%
Dual Voltage Units	- 5%	+ 5%

(Voltage rating specified on nameplate)

Extended periods of operation exceeding these limitation constitutes misuse under the terms of Scotsman Manufacturer's Limited Warranty, resulting in a loss of warranty coverage.

* This does not include the Remote Condenser. Remote Condensers are designed to operate in outdoor installations in a temperature range of -20° to 120° F.

OPTIONAL PANELS KIT

SPKMF900A - Stainless Steel Panels for use with the MF900RC.

PRE-CHARGED REFRIGERANT TUBE KITS

RTCM225 25 foot pre-charged with R12 Freon tubing with connectors

RTCM240 40 foot pre-charged with R12 Freon tubing with connectors

GENERAL INFORMATION AND INSTALLATION

INTRODUCTION

These instructions provide the specifications and the step-by-step procedures for the installation, start up and operation for the Scotsman Model MF900RC Modular Flaker with Remote Condenser.

The Model MF900RC Modular Flaker is quality designed, engineered and constructed, and is a thoroughly tested icemaking system, providing the utmost in flexibility to fit the needs of a particular user.

The Model MF900RC modular flaker can be installed with either of two remote condensers and with either of two lengths of pre-charged refrigerant lines.

Single circuit and two circuit condensers are available. The single circuit condenser can accommodate a single MF900RC flaker. The two circuit condenser can accommodate two separate MF900RC flakers.

In any of the above installations the sets of pre-charged refrigerant lines to be used are the RTCM225 25-foot line kit or the RTCM240 40-foot line kit. These pre-charged refrigerant line kits are a one-time, initial charge type of hardware; once the sealed couplings are connected, the internal seal is severed and the lines cannot be disconnected without losing the refrigerant charge.

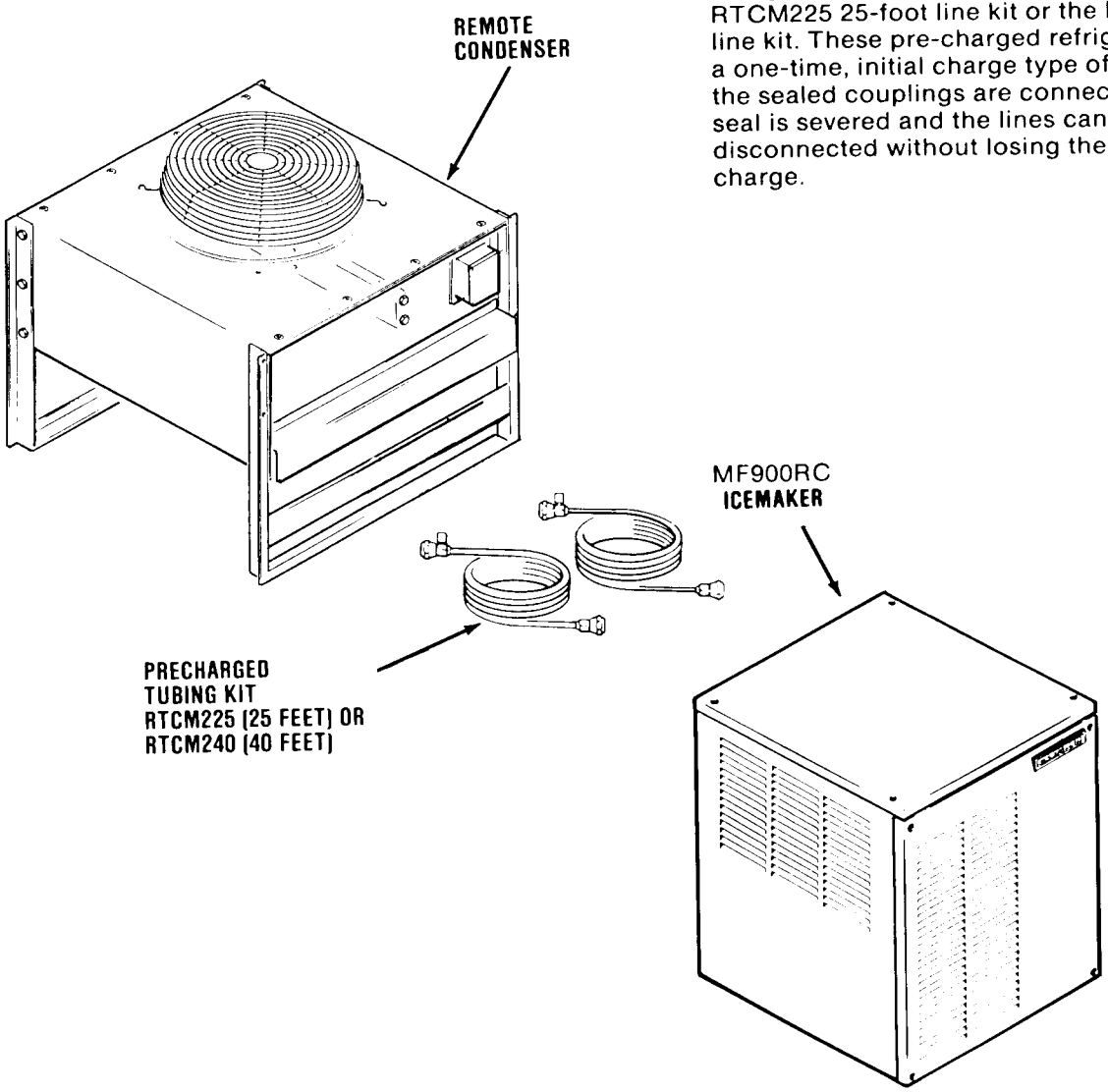

LOCATION AND LEVELING — ICEMAKER

WARNING

This Modular Flaker is NOT designed for outdoor installations, or where air temperature is below 50-degrees F., or above 100-degrees F., and the water temperature is below 40-degrees F. or above 100-degrees F. Operation at temperatues exceeding these limitations will constitute misuse, under the terms of the SCOTSMAN Manufacturer's limited warranty coverage. This does not include the Remote Condenser. Remote Condensers are designed to operate in outdoor installations in a temperature range of -20° to 120° F.

NOTE

Prior consideration for location site shall include:

Minimum room temperatures 50-degrees F. and maximum room temperature 100-degrees F.

Water inlet temperatures: Minimum 40-degrees F. and Maximum 100-degrees F.

SERVICE ACCESS: Adequate space for all service connections, through the rear of the Cabinet. A six-inch minimum clearance at rear.

1. Position the Flaker in the selected permanent location.
2. Level the Cabinet in both the left-to-right and front-to-rear directions.
3. When shipped from the factory, each modular flaker has a nylobrade ice transport tube which must be attached to the end of the ice spout elbow with a hose clamp.
Most Scotsman bin tops have pre-punched holes to accept the bin thermostat bracket and cap tube assembly. Punch out the required hole that aligns with the hole in the flaker base and follow the following step by step instructions.

The opposite end of the ice transport tube has a bin thermostat bracket installed including the bin thermostat capillary tube.

1. Align two inch diameter hole in flaker base with proper hole in bin top.
2. Insert bin thermostat bracket and capillary tube assembly through two inch hole in base and on into bin.
3. Attach the flange of the bin thermostat bracket to the machine base with two #8 screws which are provided. Make certain bracket is at 90° to inside top of bin. SEE DRAWING.
4. Slide the rubber washer on the tube down to top of the cabinet base.
5. Connect ice transport tube to ice spout elbow with hose clamp.

CAUTION

Do not kink capillary tube during installation!

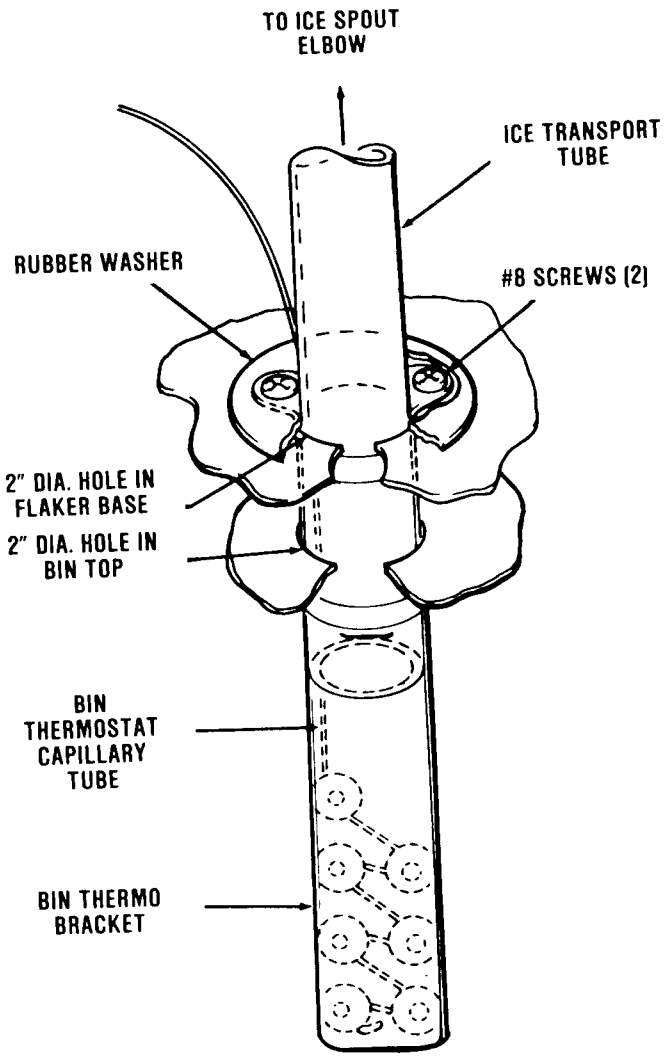

REMOTE CONDENSER INSTALLATION

Location Considerations:

Limited to a 40-foot length or a 25-foot length of pre-charged refrigerant line from the rear of the icemaker Chassis to the Remote Condenser.

Best available location, protected from the extremes of dirt, dust, and sun.

Must meet local building code installation requirements. Usually the services of a certified electrician are required.

Remote Condenser - Roof Attachment.

1. Install and attach the remote condenser to the roof of the building, using the methods and practices of building standards that conforms to and meets the local building code requirements in your area.
2. **Refer to Wiring Diagram and connect the remote condenser fan motor electrically to a separate power source. All external wiring should conform to the national, state and local electrical code requirements. Usually an electrical permit and services of a licensed electrician will be required.**

CAUTION

Do not connect pre-charged tubing until all routing and forming of tubing is complete. See Page 6 for connecting instructions.

WARNING

The RC302-32B Remote Condenser has two individual refrigeration circuits. Each set of pre-charged tubing must be installed separately to prevent intermixing from icemaker to icemaker.

1. Each set of pre-charged refrigerant lines in the 25-foot length, or 40-foot length kits, consists of a 3/8-inch diameter, self-sealing LIQUID line and a 1/2-inch diameter, self-sealing DISCHARGE line. One coupling on each line is fitted with a charging port, which provides the service man with access for service gauges at the REMOTE CONDENSER location, when necessary.

NOTE

The openings in the building ceiling or wall, listed in the next step, are minimum sizes recommended, through which the pre-charged refrigerant lines may pass; and, are to be considered only if they conform to and meet the local building code requirements in your area.

2. Minimum recommended sizes for openings required in a ceiling or wall, for the pre-charged refrigerant lines to pass, are as follows:
   a. Single-pass Condenser: 1-3/4-inch diameter.
   b. Two-pass Condenser: 2-inch diameter.

CAUTION

DO NOT KINK OR CRIMP REFRIGERANT LINES.

3. Route both refrigerant lines through the roof opening.

   Follow straight line routing, when possible.

   Retain excess pre-charged refrigerant line INSIDE the building.

4. SPIRAL the excess footage of the pre-charged refrigerant lines, in the best selected INSIDE location. See *Pre-Charged Refrigerant Line Routing* illustration for recommended methods of spiralling the excess refrigerant lines .

CAUTION

DO NOT kink or crimp the refrigerant lines. DO NOT bend the excess refrigerant lines in a vertical LOOP(s), which allow trapping of refrigerant in LOW sections, during OFF time. Bend and shape the excess refrigerant lines in VERTICAL spirals, not HORIZONTAL spirals. See Pre-Charged Refrigerant Line Hook-Up.

5. Insulate the pre-charged tubing lines individually.

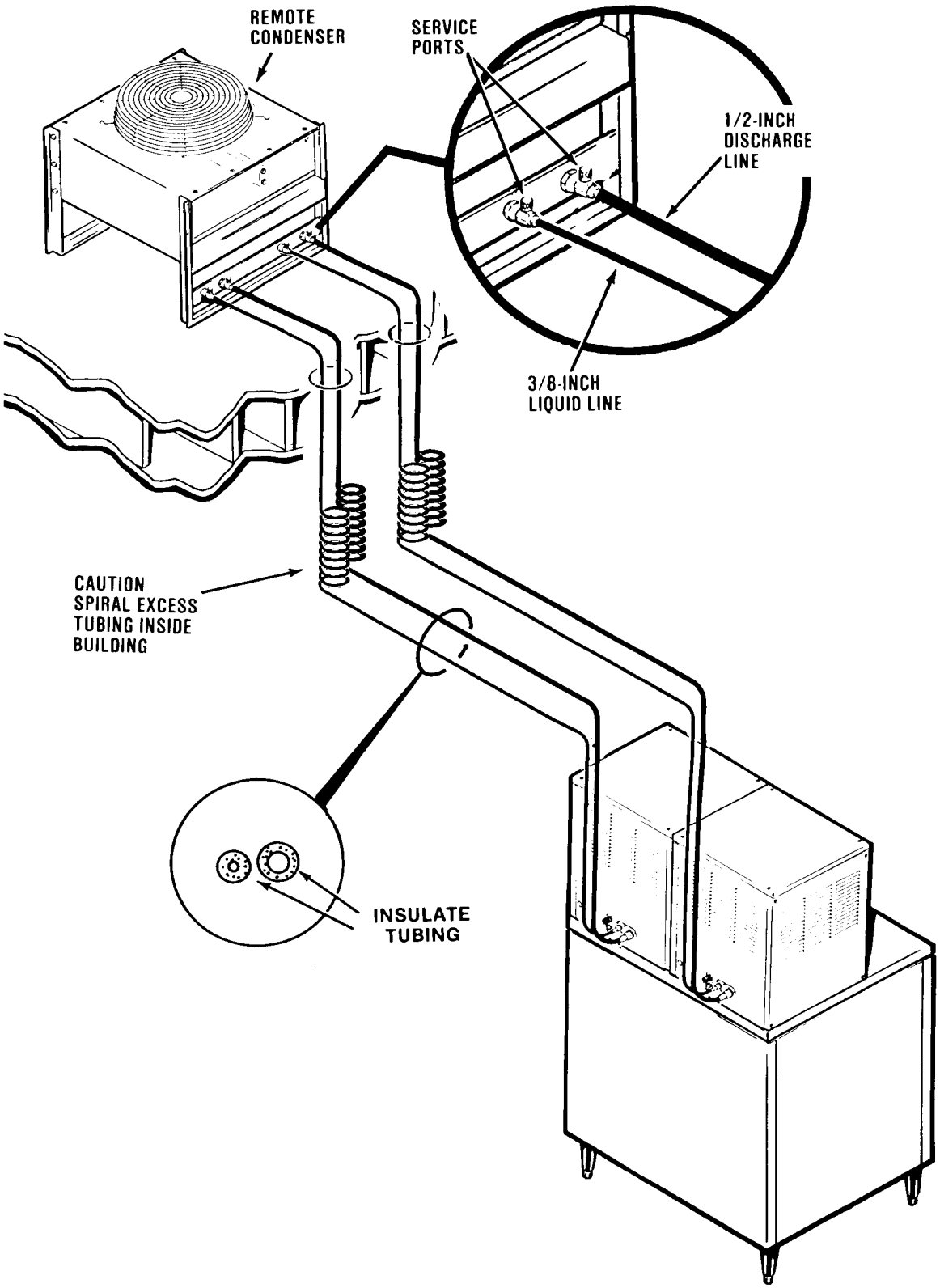

Pre-Charged Refrigerant Line Routing

COUPLING INSTRUCTIONS, PRE-CHARGED TUBING KIT

CAUTION

The couplings on the sets of pre-charged refrigerant lines, the refrigerant fittings on the Remote Condenser, and the rear of the icemaker Chassis are SELF-SEALING and should be connected as follows:

1. **Remove protector caps and plugs and if necessary, carefully wipe coupling seats and threaded surfaces with a clean cloth to prevent the inclusing of dirt or any foreign material in the system.**
2. **LUBRICATE male half diaphragm and synthetic rubber seal with refrigerant oil. Thread coupling halves together by hand to insure proper mating of threads. Use proper size wrenches (on coupling body hex and on union nut) and tighten until coupling bodies "bottom" or a definite resistance is felt.**
3. **Using a marker or ink pen, mark a line lengthwise from the coupling union nut to the bulkhead. Then tighten an additional 1/4 turn; the misalignment of the line will show the amount the coupling has been tightened. This final 1/4 turn is necessary to insure the formation of leakproof joint.**

ALWAYS USE TWO WRENCHES WHEN TIGHTENING THESE FITTINGS, ONE AS BACKUP WRENCH TO PREVENT TWISTING OF TUBING AND POSSIBLE KINKING OR LINE RUPTURE.

BE SURE to connect the ends of the precharged refrigerant lines, that have the charging port fittings, TO THE REMOTE CONDENSER FITTINGS. This gives the serviceman access for service gauges at the REMOTE CONDENSER location, when necessary.

4. Connect the 3/8-inch diameter refrigerant line coupling, with the SERVICE PORT fitting, to the remote condenser refrigerant fitting labeled: LIQUID LINE as detailed in Coupling Instructions.
5. Connect the 1/2-inch diameter refrigerant line coupling, with the SERVICE PORT fitting, to the Remote Condenser refrigerant fitting labeled: DISCHARGE LINE. Tighten as detailed in Coupling Instructions.

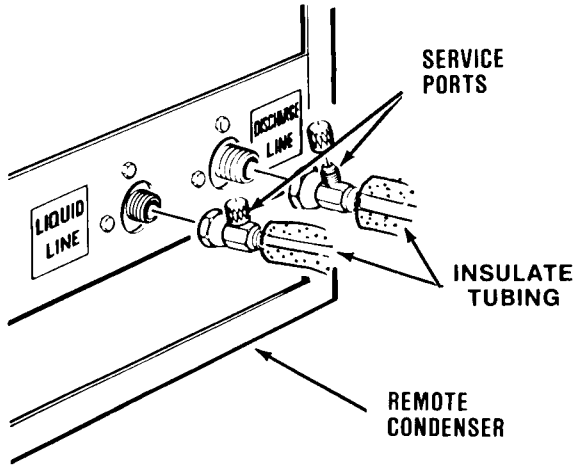

6. Connect the 3/8-inch diameter refrigerant line coupling, to the refrigerant fitting on the rear of the icemaker chassis labeled: LIQUID LINE. Tighten as detailed in Coupling Instructions.
7. Connect the 1/2-inch diameter refrigerant line coupling, to the refrigerant fitting on the rear of the icemaker Chassis labeled: DISCHARGE LINE. Tighten as detailed in step 4.

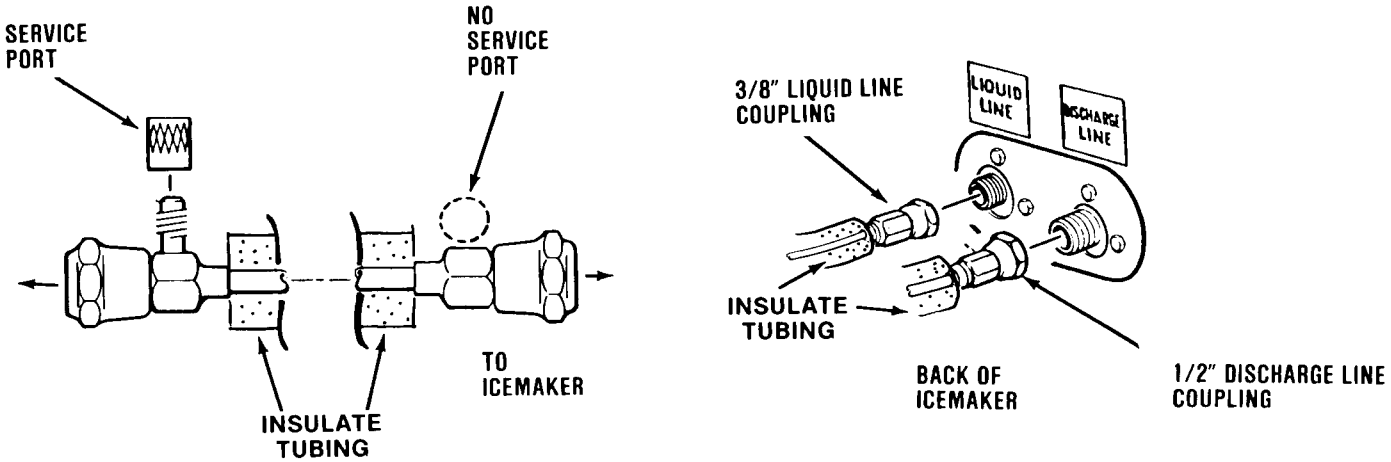

Pre-Charged Refrigerant Line Connection

ELECTRICAL CONNECTIONS

SEE MF900RC NAMEPLATE for current requirements to determine wire size to be used for electrical hookup. The flaker requires a solid chassis-to-earth ground wire. See Wiring Diagram.

Be certain the flaker is connected to its own electrical circuit and individually fused. Voltage variation should not exceed ± 5% for dual voltage units, ± 10% for single voltage units, of the nameplate rating, even under starting condtions. Low voltages can cause erratic operation and may be responsible for serious damage to the icemaker.

All external wiring should conform to the national, state and local electrical code requirements. Usually an electrical permit and services of a licensed electrician will be required.

Be certain the remote condenser is connected to its own electrical circuit and individually fused. Voltage variation should not exceed ± ten percent of the nameplate rating, even under starting conditions.

All external wiring should conform to the national, state and local electrical code requirements. Usually an electrical permit and services of a licensed electrician will be required.

CAUTION

BE SURE the icemaker is properly grounded and connected to the proper voltage at the location power source, to begin the 12-hour PRE-START heating of the Compressor Crankcase. This precautionary step heats the oil in the Compressor Crankcase, separates refrigerant from oil, which prevents possible damage to the Compressor, at START-UP.

WATER SUPPLY AND DRAIN CONNECTIONS

The recommended water supply line is a 1/4-inch O.D. copper tubing with a minimum operating pressure of 20 PSIG and a maximum of 120 PSIG. Connect to cold water supply line with standard plumbing fittings, with a shutoff valve installed in an accessible place between the water supply and the flaker. In some cases a plumbing permit and services of a licensed plumber will be required.

DRAIN CONNECTIONS: All drains are gravity type and must have a minimum of 1/4-inch fall per foot on horizontal runs. The drains must be installed to conform with the local plumbing code. Install separate drain line for discharge water from the water-cooled condenser. Install a vertical open vent on drain line to ensure good venting. The drain receptacle should be an open, trapped or vented construction.

Recommended bin drain is 5/8-inch O.D. copper tubing and should be vented and run separately.

WARNING

DO NOT place the Master Switch in the "ON" position until a minimum of 12 hours after turning the power on to the unit.

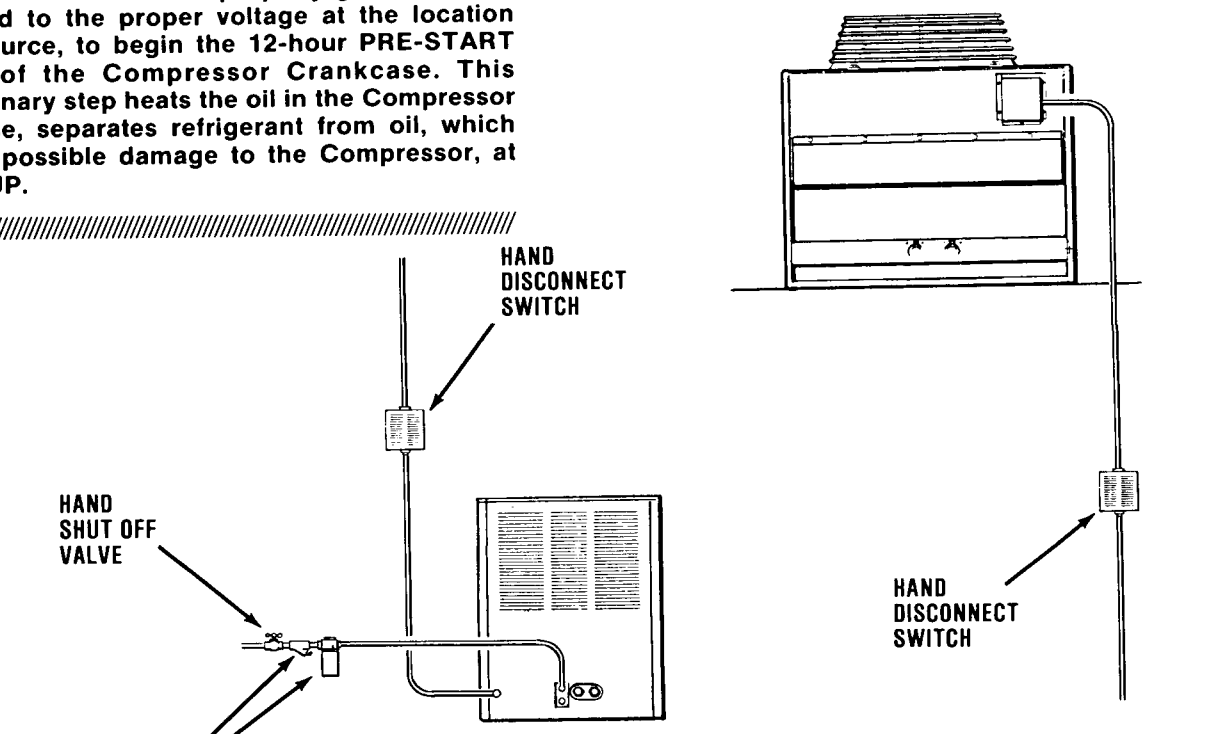

Installation, Water Supply and Drain Connection

FINAL CHECK LIST

1. Is the cabinet/bin level?
2. Is the icemaker in a location where ambient temperatures are a minimum of 50-degrees F. all year around and do not exceed a maximum of 100° F? Remote Condensers are designed to operate in outdoor installations in a temperature range of -20° to 120° F.
3. Is there at least a six-inch clearance behind and around the cabinet for all connections and for proper air circulation?
4. Have all electrical and piping connections been made?
5. Has the electrical power supply wiring been properly connected, and the voltage tested and checked against the nameplate rating? Has proper chassis-to-earth ground been installed?
6. Is the water supply line shutoff valve installed and opened and has the inlet water supply pressure been checked to ensure a minimum of 20 PSIG and a maximum of 120 PSIG?
7. Remove shipping block from under the compressor.
8. Have the compressor holddown bolts been checked to be sure the compressor is snug on the mounting pads?
9. Check all refrigerant lines and conduit lines to guard against vibration and possible failure.
10. Has the bin thermostat bracket been properly installed?
11. Has the icemaker and the bin been wiped clean with clean damp cloths?
12. Has the remote condenser and pre-charged refrigerant lines been properly installed and connections made and checked?
13. **Has the electrical power to the icemaker been turned on to start the 12-hour period of PRE-START crankcase heating?**
14. Has the owner/user been given the User Manual and instructed on how to operate the icemaker and the importance of periodic maintenance?
15. Has the owner/user been given the name and telephone number of the Authorized Scotsman Distributor or Service Agency serving him?
16. Has the Manufacturer's Registration Card been properly filled out? Check for correct Model and Serial Numbers from nameplate, then mail the completed card to the SCOTSMAN factory.
17. **Refer to Pre-Start Instructions on page 11.**

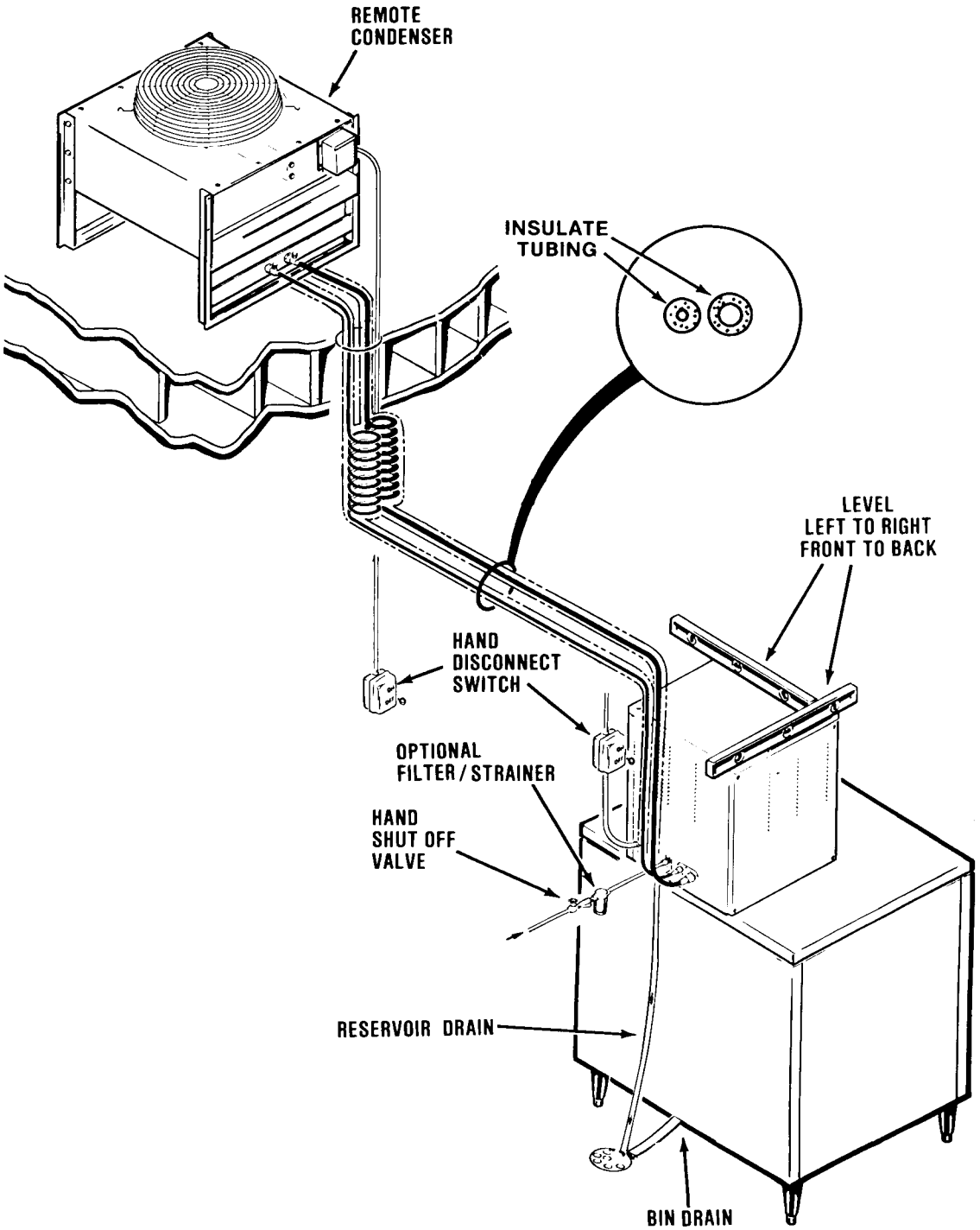
REMOTE
CONDENSER
INSULATE
TUBING
LEVEL
LEFT TO RIGHT
FRONT TO BACK
HAND
DISCONNECT
SWITCH
OPTIONAL
FILTER / STRAINER
HAND
SHUT OFF
VALVE
RESERVOIR DRAIN
BIN DRAIN

OPERATING INSTRUCTIONS

WARNING

BE SURE the icemaker is properly grounded and connected to the proper voltage at the location power source, to begin the 12-hour PRE-START heating of the Compressor Crankcase.

PRE-START

1. Verify that the MASTER SWITCH is in the OFF position.
2. Operate the switch at the building source to supply electrical power to the icemaker a minimum of 12 hours BEFORE start up.

START UP

WARNING

Check to BE SURE the 12-hour pre-heating of the Compressor Crankcase has been completed. Be sure the icemaker is properly grounded and connected to proper voltage at the location power source.

1. Move the junction box switch for the Remote Condenser Fan to the ON position. Check the Fan Motor operation.
2. Remove screws and the top and front panel from the icemaker.
3. OPEN the water supply line shutoff valve.
4. Observe the water filling operation, see Water Schematic illustration.
   a. Water flows into the water reservoir.
   b. Water flows through water feed line to the bottom of the freezer assembly.
   c. The float moves up as the water rises.
   d. The float stops water flow, when water level reaches the molded horizontal line, on the body of the water reservoir.
5. Check all internal water connections for leaks.
6. OPEN King Valve located on the receiver.

IMPORTANT

Remove the stem cap from the receiver outlet (King) valve and fully open the valve. Replace the cap. Check for leaks at the Stem Cap.

7. Move the Master ON-OFF toggle switch to the ON position to start the automatic icemaking operation.
8. Observe that ice begins dropping from the ice chute into the ice storage bin.
9. Let the system operate until ice covers the bottom of the bin. Check for any excess noises beyond normal compressor noise:

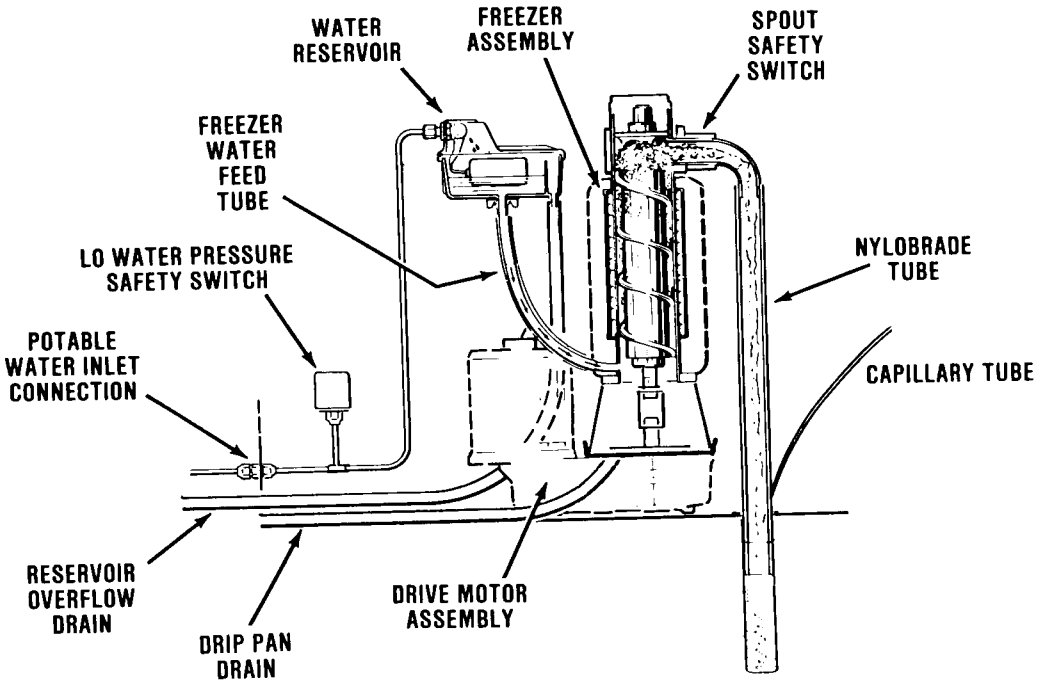

Water Schematic

a. Fan noises, blades touch other surfaces; blades bent, out-of-balance.

b. Vibrating type, from touching lines.

c. Chattering: Lack of water in freezer.

d. Compressor loose at one or more hold down bolts.

CAUTION

This icemaker is equipped with a low water pressure safety device, which in the event of interruptions of water pressure, the icemaker will automatically stop to prevent damage. The icemaker will automatically restart when the water pressure is restored.

10. Place ice on the bin thermostat bracket, to test shut-off. Less than one minute is normal for shut off function to cause the compressor to stop.

    Within minutes after the ice is removed from the sensing bulb, the bulb will warm up and cause the icemaker to restart. This control is factory set and should not be reset until testing is performed. Normal setting is 35-degrees F. CUT-OUT and 45-degrees F. CUT-IN, to prevent short cycling.
11. Continue icemaking for 30 minutes, checking the operation of the icemaker. Remove all ice produced during this period. Clean and sanitize the storage bin. The unit is now ready for automatic operation.
12. Thoroughly explain to the owner/user the significant specifications of the icemaker, the start up and operation, going through the procedures for the operating instructions. Answer all questions about the icemaker, by the owner; and, inform the owner of the name and telephone number of the authorized SCOTSMAN Distributor or Service Agency serving him.

ICEMAKER OPERATION

The water supply flows from the building source through the optional inline water strainer, enters at the inlet fitting and on to the water reservoir.

Moving the Master ON-OFF switch to the ON position starts the automatic and continuous icemaking process. A stainless steel auger within the freezer is powered by the drivemotor assembly, a direct-drive gearmotor, and the rotating auger carries the ice upward to the end of the auger, see Water Schematic illustration, and pushes out through the ice spout and into the ice storage bin. When the ice storage bin has been filled with ice, up to the level of the bin thermostat control capillary bulb, the icemaking process shuts OFF.

When ice is removed from the ice storage bin, the bulb warms up, restarting the automatic icemaking process.

Factory settings are 35-degrees F. CUT-OUT and 45-degrees F. CUT-IN.

Altitude adjustment should ONLY be performed on icemakers installed at 2000-feet level locations and ABOVE, and adjust only in increments of one-fourth turn of screw at at time.

ELECTRICAL / REFRIGERATION

The Model MF900RC icemakers are designed to operate on standard electrical supply 230 volts, 60 Hertz, single phase. Other voltage requirements are available on special order. Therefore, always CHECK NAMEPLATE for electrical information BEFORE proceeding with wiring connection to the icemaker.

Refer to the appropriate wiring diagram and trace circuitry and control functions, as described in the following paragraph.

As shown on all SCOTSMAN wiring diagrams, the controls are in the ICEMAKING MODE. Thus, the Auger Delay Pressure Control 1-2 contacts are CLOSED. At STARTUP, the 1-2 contacts are OPEN and the 3-2 contacts are CLOSED. As the icemaker begins to operate, the low side pressure starts to decrease from the stabilized or at-rest pressure. As soon as the pressure is reduced to 20 PSIG, the 3-2 contacts OPEN and the 1-2 contacts CLOSE. This removes the operating controls, such as the bin thermostat, from the drivemotor circuit. If one of the operating controls OPENS, it will SHUT OFF the compressor circuit. The drivemotor will operate until the low side pressure increases to 32 PSIG. Then, the 1-2 contacts OPEN and SHUTS OFF the drivemotor, usually within one to two minutes, depending upon ambient conditions. This brief period of time

allows the auger to transport all the ice out of the freezing chamber. Consequently, when called on to START-UP again, there is no ice load to start up against. Again, on STARTUP, the 1-2 contacts are OPEN and the 3-2 contacts are CLOSED.

The head pressure is normally about 120 PSIG and it is maintained by a head pressure control inside the icemaker cabinet. This control bypasses the remote condenser refrigeration circuit until there is enough pressure and then it meters the discharge of gas into the condenser. The fan runs all the time.

Suction pressure should be 13 PSIG with proper refrigerant charge. Suction pressure will vary about two PSIG plus or minus, depending upon ambient temperatures and inlet water supply temperatures to the freezer assembly.

When charging the system with refrigerant, always CHECK NAMEPLATE for specific refrigeration charge for individual icemaker.

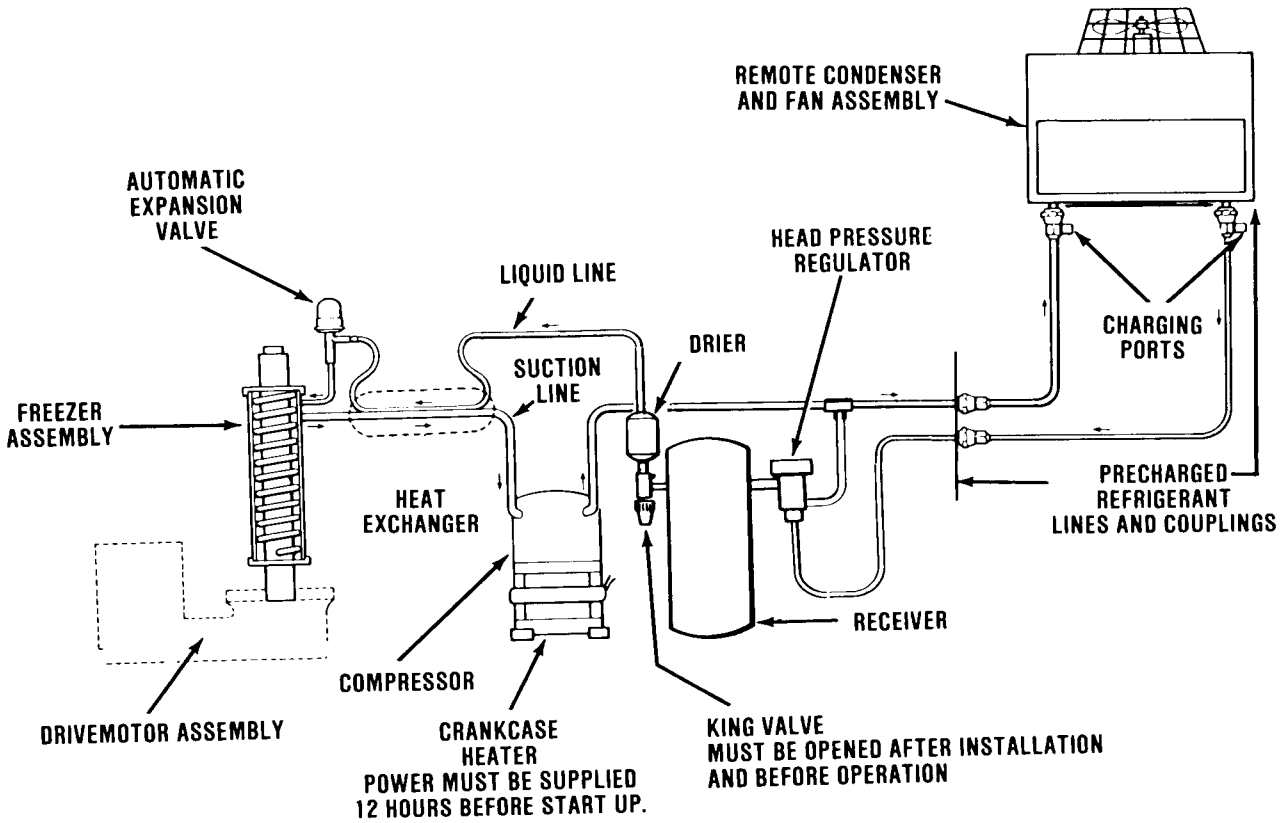

Refrigeration Schematic

COMPONENT DESCRIPTION

BIN THERMOSTAT CONTROL

The bin thermostat control is located in the center of the control box. The sensing capillary tube of the control is routed from the control box to the bin thermostat control bracket at the end of the ice discharge tube hanging in the ice storage bin. The bin thermostat control functions to automatically shut OFF the icemaker, when the ice storage bin is filled and ice contacts the capillary tube. It also signals the RESTART of the icemaker, when the capillary tube starts to warm up, after ice has been removed from the bin. This control is factory set and should not be reset until testing is performed. Normal setting is 35 degrees F. CUT-OUT and 45 degrees F. CUT-IN., to prevent short cycling.

Bin thermostat control adjustment should ONLY be performed in installations higher than 2,000 feet above sea level. Adjust only in increments of one eighth turn of a screw at a time.

COMPRESSOR CONTACTOR

The compressor contactor functions to carry the compressor line current. The contactor is wired so any control in the pilot circuit, such as the bin thermostat, low pressure and high pressure controls, etc., will cause the contactor holding coil to be de-energized, when the control contact OPENS, thereby breaking the circuit to the compressor through the contactor points.

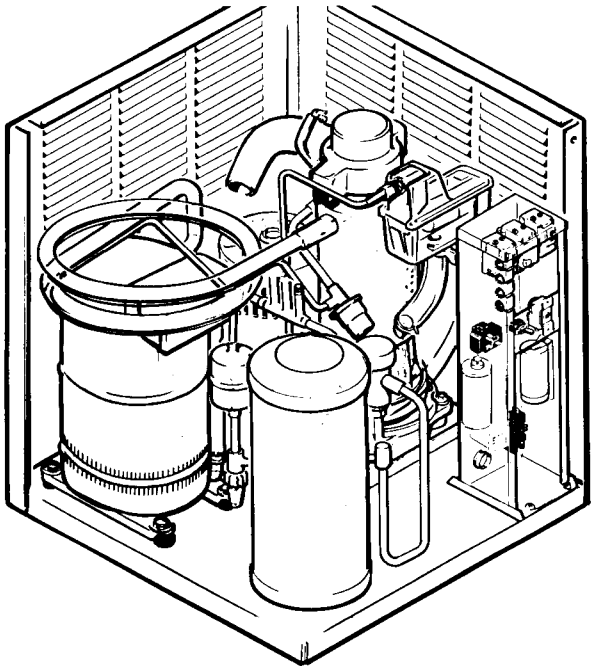

WATER PRESSURE SAFETY SWITCH

A low water pressure safety switch is installed in the potable water inlet line on all Scotsman Flakers to prevent damage to the gearmotor and evaporator components due to low water pressure or interruption of the water supply to the unit. This safety device with an automatic reset is set to shut the refrigeration system off if the water pressure falls below 10 psig and restart the unit automatically when the pressure rises to 20 psig.

AUGER DELAY SWITCH

The function of the Auger Delay Switch is to allow the gearmotor to operate for a sufficient length of time to clear all the ice from the evaporator after the unit shuts off on the full bin control.

This insures that when the unit restarts, the gearmotor starts under a no load condition, preventing excessive loading on the gearmotor and evaporator bearings.

REFRIGERANT LOW PRESSURE CONTROL

The purpose of this safety control is to protect the unit from damage due to a loss of the refrigerant charge. It also provides additional protection from the unit in case low ambient or water temperatures exist. This is an automatic reset control connected to the refrigeration system low side. It is set to stop the unit completely when the low-side pressure drops to less than 3 psig.

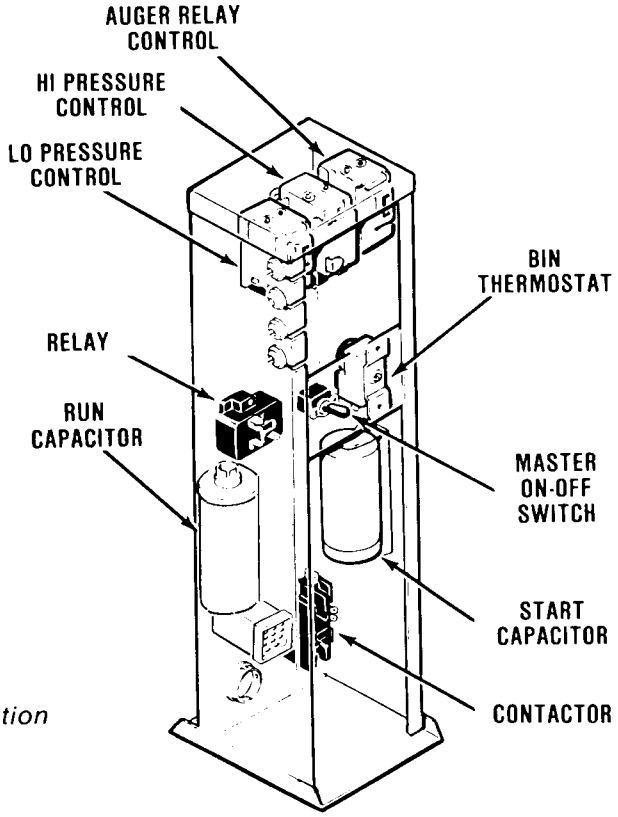

Component Description

WATER RESERVOIR

The water reservoir functions to maintain a constant water level inside the freezer assembly. Water from the water reservoir enters at the bottom of the freezer assembly and is changed into ice by low temperatures inside the freezer.

DRIVEMOTOR

The drivemotor assembly rotates the auger through a series of reduction gears from the electric motor to the freezer assembly.

Cold ambient temperatures and interruptions in water supply are conditions that can cause excessively hard ice and overloads within the freezer assembly, which is directly transmitted to the drivemotor; and in turn, will cause speed reduction or ultimate freezeup.

When the drivemotor is slowed to a predetermined RPM, a sensing switch in the motor is designed to open the electrical circuit to the compressor. The compressor stops operating, no more ice is produced, and the drivemotor continues to operate rotating the auger to clear the overload and gradually build up to full speed.

At a pre-determined higher RPM drivemotor speed, the speed sensing switch closes the electrical circuit to the compressor, causing the normal icemaking process to resume.

SPOUT SWITCH

A spout switch is mounted on the side of the ice spout and is actuated by the movement of the spring retained spout tube against the switch actuator. The spout switch acts as a backup safety switch, should the bin thermostat fail and cause ice to jam up in the ice spout. The switch will shut off the icemaker only when actuated. It is an immediate and complete shut down of the entire icemaker. The spout switch can be manually tested, by plugging the end of the Nylobraid tube. The switch is also manually reset.

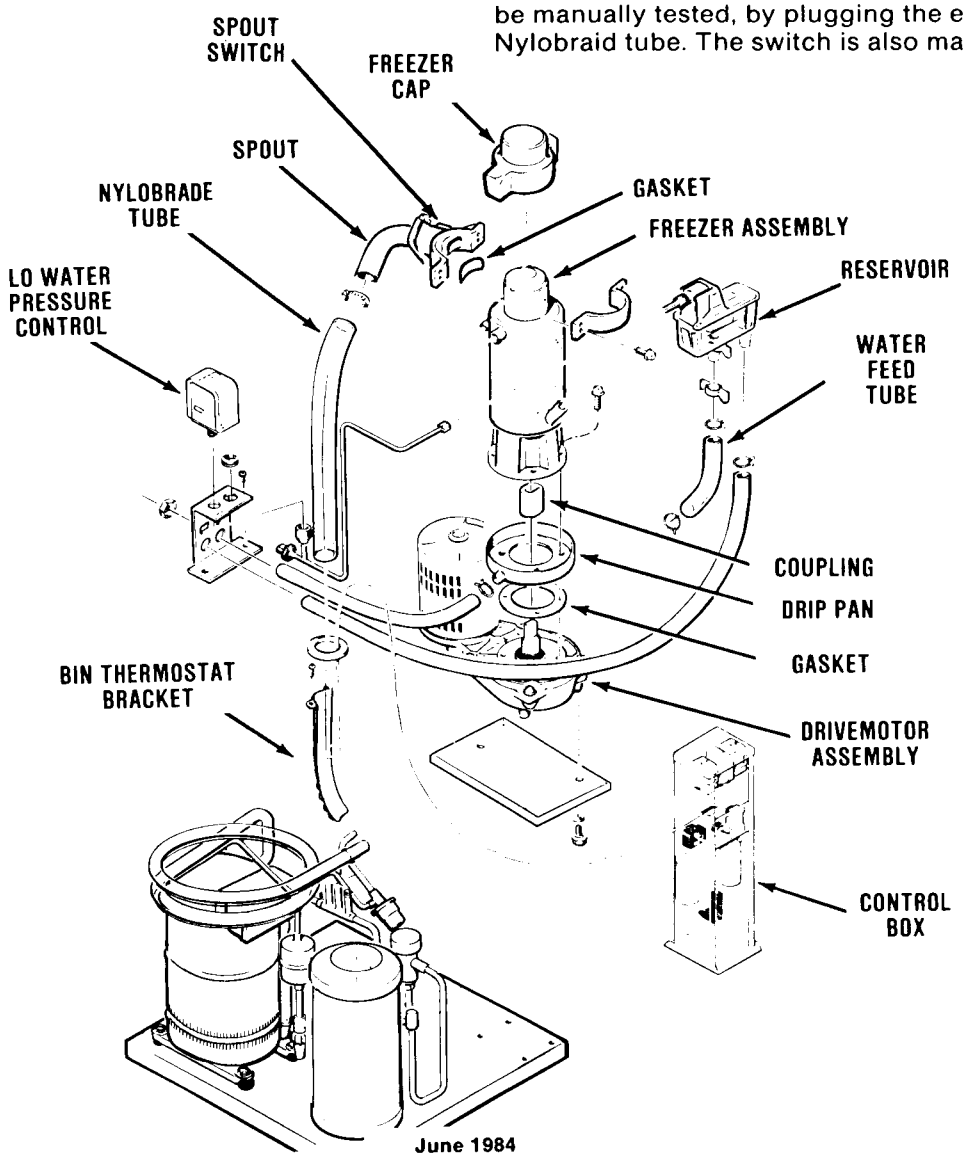

COMPONENT DESCRIPTION

KING VALVE

The king valve prevents refrigerant from escaping from the receiver during shipment and before use. The king valve must be opened after connection of the precharged tubing kit and before operation of the icemaker.

BIN THERMOSTAT BRACKET

The bin thermostat bracket is the bin full ice contact point of the bin thermostat capillary tube.

FREEZER ASSEMBLY

The freezer assembly is a vertical cylinder wrapped on the outside with the evaporator coils. Inside the freezer assembly is a stainless steel auger. As ice forms on the interior wall, it is pushed up and out by a rotating auger.

COMPRESSOR CRANKCASE HEATER

The compressor crankcase heater is an electrical wire band heater located around the lower outside shell of the compressor, below the level of the crankcase oil in the compressor. The heat generated by the crankcase heater, heats oil in the crankcase, which keeps the refrigerant separated from the oil; and, during the OFF cycle, prevents the refrigerant from migrating back into the compressor from other areas of the refrigeration system; which can cause severe damage to the compressor, at STARTUP.

HIGH PRESSURE RECEIVER

Provides storage volume for refrigerant during cross ambient operation. The high pressure receiver is sized large enough to hold the entire refrigerant charge. During cold operation there is enough liquid in the receiver to maintain a liquid seal to the liquid line.

AUTOMATIC EXPANSION VALVE (AXV)

The automatic expansion valve regulates the flow of refrigerant to the evaporator, and reduces pressure of liquid refrigerant from condensing pressure to evaporating pressure.

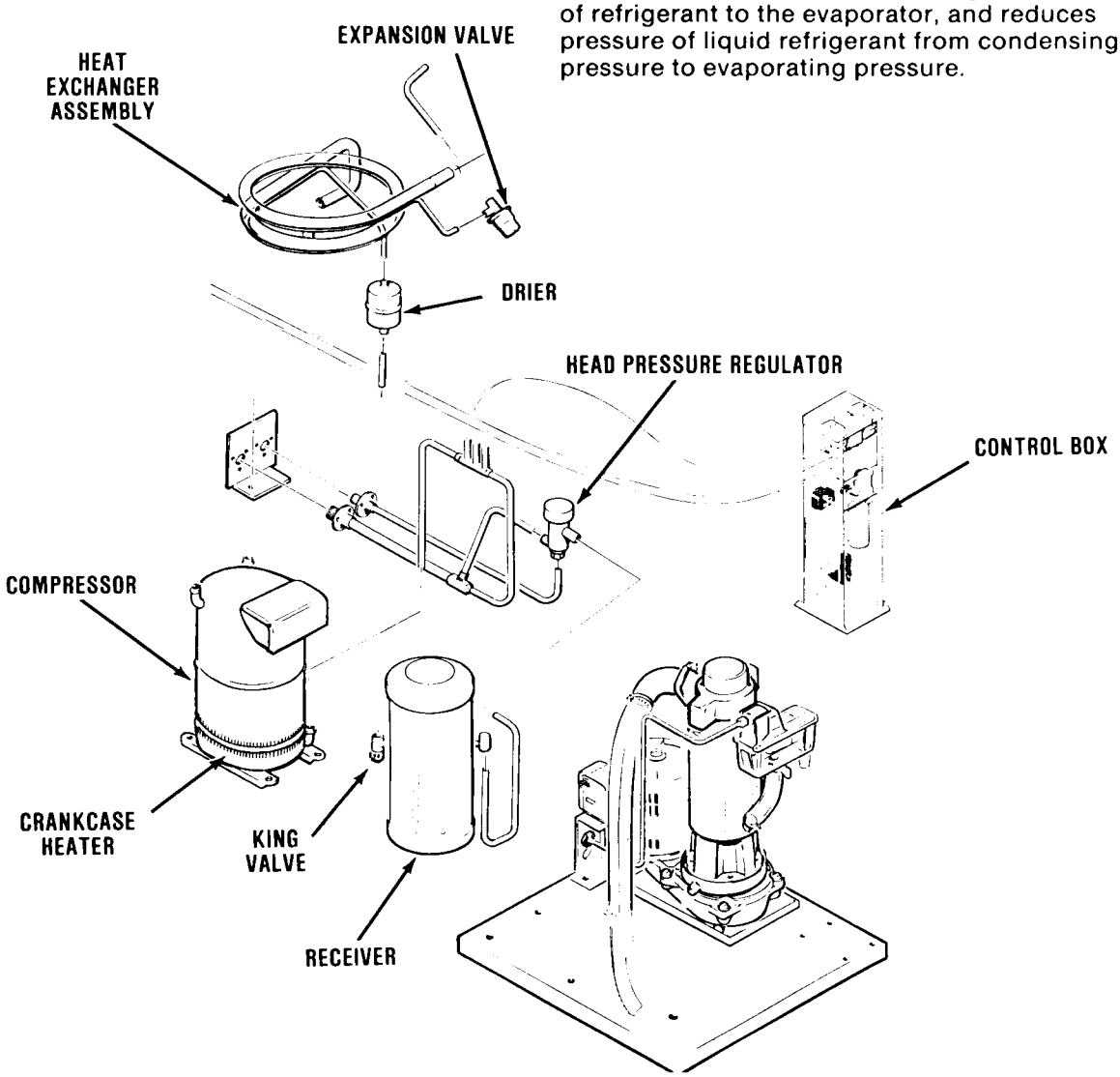

ADJUSTMENT PROCEDURES

Read the instructions thoroughly before performing any adjustment or removal and replacement procedures.

ADJUSTMENT OF THE BIN THERMOSTAT CONTROL

The control for the bin thermostat is the temperature control, located in the center of the control box.

See *Adjustment of the Temperature Control* for location and direction of rotation, clockwise (CW) or counterclockwise (CCW), of the adjusting screws on the temperature control.

To adjust the bin thermostat control:

1. Hold a handful of ice against the capillary bulb in the ice storage bin.
2. Slowly rotate the adjusting screw in the appropriate direction until the icemaker shuts OFF.
3. Remove ice from the capillary bulb; then, place warm hand on the capillary bulb to restart the icemaker.
4. Place handful of ice against the capillary bulb and observe that the icemaker should shut OFF within ten seconds, usually less.

WARNING

The adjusting screws on the temperature control device have very sensitive response to adjustment. DO NOT attempt to adjust the screw until after thoroughly reading and understanding the instructions and illustrations. Over-adjusting or erratic guessing, can foul the instrument and cause ultimate delay and part replacement, WHICH COULD HAVE BEEN PREVENTED.

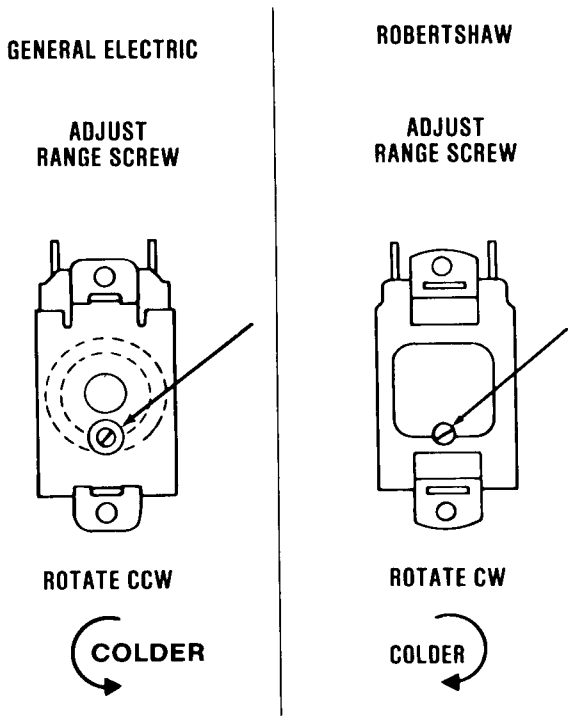

Adjustment of the Temperature Control

REMOVAL AND REPLACEMENT PROCEDURES

REMOVAL AND REPLACEMENT OF THE AUGER, WATER SEAL, BEARINGS AND COUPLING

To remove the auger, water seal, bearings, and coupling:

WARNING

Be sure the electrical power supply and the water supply are OFF, before starting any of the following REMOVAL AND REPLACEMENT procedures, as a precaution to prevent possible personal injury or damage to equipment.

1. Remove screws and the top panel.
2. Remove the freezer cap from the top of the freezer assembly.
3. Remove four screws and washers and separate the spout assembly from the spout plate on the freezer assembly.
4. Inspect the spout gasket and retain for the replacement procedure. Replace a torn, cut or worn, defective gasket.
5. Grasp the wire cap hook at the top of the freezer assembly and pull out the auger and attached cap, bearing/retainer, bearing and O-rings, at the top of the auger; and, the top half of the water seal at the bottom of the auger.

NOTE

When the auger cannot be pulled out, proceed to steps 12 and 13, to gain access to the bottom of the auger. Then, with a rawhide mallet or placing a piece of wood on the bottom end of the auger, tap the bottom of the auger to break it loose and pull the auger out, as in the step 4 above.

6. Remove the cap hook from the bearing/retainer.
7. Remove the retaining ring and the cap.
8. Remove the cap screw and washer and remove the bearing/retainer from the auger.
9. Clean away the old grease from the top of the auger, the bearing/retainer, cap, cap screw and washer and the O-ring and retaining ring.
10. Inspect the O-ring at the top of the bearing/retainer and the O-rings at the bottom outside of the bearing/retainer and the O-ring bottom inside bearing retainer, for cuts, tears and general worn condition to determine replacement.

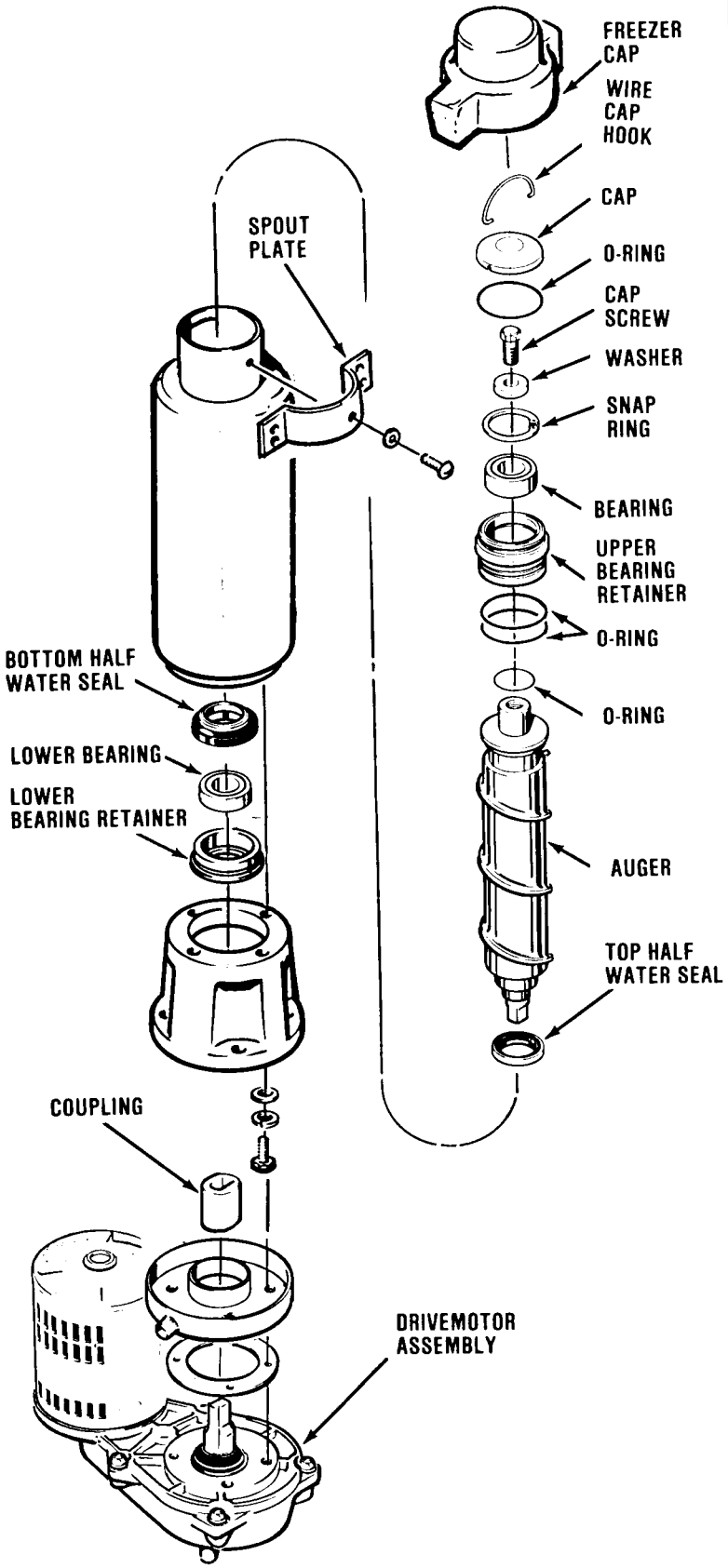

11. Inspect the bearing pressed into the top of the bearing/retainer and, if it is to be replaced, remove the retaining ring and press the bearing out of the bearing/retainer.
12. Slide the upper half of the water seal off of the bottom of the auger.

NOTE

Any time the auger is removed from the freezing chamber, replace the water seal. Use extra care in handling the water seal parts, so no dirt or foreign matter contaminate the surfaces of the seal.

13. Remove four screws and lockwashers which attach the freezer assembly to the the drivemotor assembly.
14. Raise the freezer assembly off of the adaptor, to gain access to the bearing and retainer; then, temporarily secure the freezer assembly up out of the way to allow room to work. Be careful not to damage the gasket.
15. Using a suitable length and size wooden dowel or stick inserted through the top of the open freezer assembly, tap the lower half of the water seal and the lower bearing in the retainer, out the bottom of the freezer assembly.
16. Reach through the adaptor and remove the coupling on the drivemotor for inspection.
17. Check the coupling for cracks, chipping and excessive wear.

To replace the auger, water seal, bearings, and coupling, reverse the removal procedure.

NOTE

When installing the retainer assembled with bearing, in the bottom of the freezer assembly, some retainers will insert as a slip fit, and some will have to be forced into place because of a tight fit. Carefully tap a piece of wood positioned across the bottom of the retainer, to evenly seat the retainer in the chamber of the freezer.

After assembling the parts on the upper end of the auger and BEFORE installing the cap and cap hook, apply an ample coating of Shell Alvania 3 Grease, P/N 19-0309-01, to the upper part of the bearing/retainer to cover the retaining ring and the cap screw and washer. Then, install the cap and cap hook in place.

REMOVAL AND REPLACEMENT OF THE COMPRESSOR ASSEMBLY

To remove compressor:

1. Remove two screws and the cover from the compressor junction box.
2. Disconnect the electrical leads at the compressor junction box, that originate in the control box.
3. Bleed off the refrigerant charge through the Schrader valve.
4. Unsolder the suction line from the compressor.
5. Unsolder the discharge line from the compressor.
6. Unsolder the process header tube from the compressor and retain for installation on the replacement compressor.
7. Remove four bolts, lockwashers and washers which secure the compressor to the chassis mounting base.
8. Remove the compressor from the chassis.
9. To replace the compressor assembly, reverse the removal procedures.

NOTE

Always install a replacement drier, anytime the sealed refrigeration system is opened. Do not replace the drier until all other repair or replacement has been completed.

NOTE

Thoroughly evacuate the system to remove moisture and non-condensables.

10. When recharging the system with refrigerant, always check nameplate for the specified refrigerant charge.

REMOVAL AND REPLACEMENT OF THE AUTOMATIC EXPANSION VALVE

CAUTION

Always install a replacement Drier, anytime the sealed refrigeration system is opened. Do not replace the Drier until all other repair or replacement have been completed. BE SURE the Compressor Crankcase Heater is ON, 12-HOURS BEFORE START UP.

To remove the Automatic Expansion Valve:

1. Remove screws and the Front Panel.
2. Bleed off the refrigerant charge through the Schrader Valve.
3. Unwrap insulation around the Automatic Expansion Valve.

CAUTION

Wrap the Automatic Expansion Valve with WET CLOTHS, to protect the sensitive parts during soldering and installation. DO NOT direct flame toward the valve.

4. With the Automatic Expansion Valve covered with WET CLOTHS, unsolder the 1/4-inch O.D. line from the side of the valve.
5. Unsolder the 3/8-inch O.D. line from the bottom of the valve and remove the Valve.

To replace the Automatic Expansion Valve, reverse the removal procedures and follow special precautions given for steps in installing and soldering Valve tubing. Evacuate and recharge per nameplate rating.

ADJUSTMENT OF THE WATER RESERVOIR FLOAT

The correct water level in the water reservoir should be at the level of the raised molded line, on the side of the body of the water reservoir. When the water line level is above or below the raised molded line, adjustment can be performed to raise or lower the water level by bending the metal arm of the float, inside the water reservoir.

To adjust the water reservoir float:

1. Loosen the screws and lockwashers which attach the reservoir bracket and water reservoir to the control box.
2. Move the reservoir bracket UP or DOWN to properly position the water reservoir at the correct water line level within the freezer. The proper water level within the freezer is just below the top of the freezer insulation.
3. When proper water level within the freezer is adjusted, re-tighten screws attaching the water reservoir bracket to the control box.

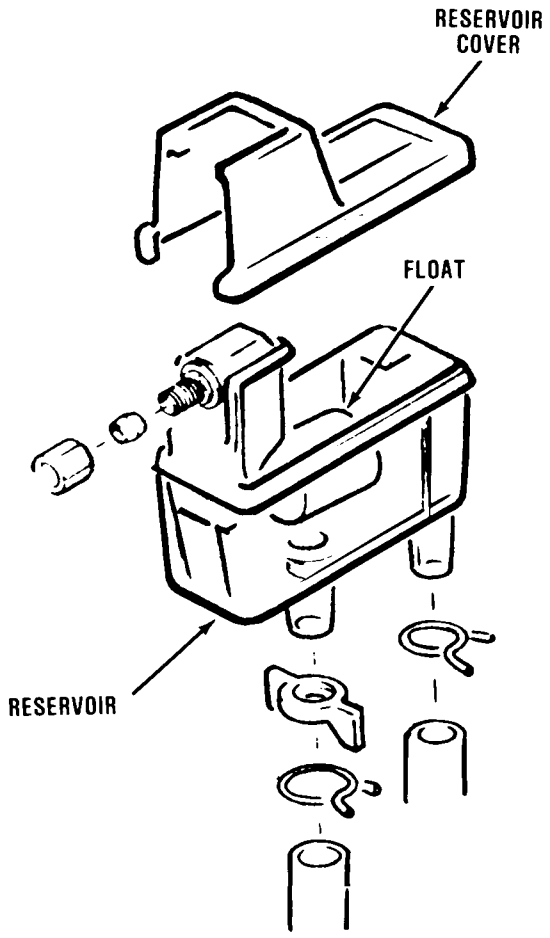

REMOVAL AND REPLACEMENT OF THE HEAD PRESSURE REGULATOR VALVE

CAUTION

Always install a replacement Drier, anytime the sealed refrigerant system is opened. Do not replace the Drier until all other repair or replacement have been completed. BE SURE the Compressor Crankcase Heater is ON, 12-HOURS BEFORE START UP.

To remove the Head Pressure Regulator Valve:

1. Remove screws and the Front Panel.
2. Bleed off the refrigerant charge through the Schrader Valve.
3. Unwrap insulation around the Head Pressure Regulator Valve.

CAUTION

Wrap the Head Pressure Regulator Valve with WET CLOTHS, to protect the sensitive parts during soldering and installation. DO NOT direct flame toward the valve.

4. With the Head Pressure Regulator Valve covered with WET CLOTHS, unsolder the 1/4-inch O.D. line from the side of the valve.
5. Unsolder the 3/8-inch O.D. line from the bottom of the valve and remove the Valve.

To replace the Head Pressure Regulator Valve, reverse the removal procedures and follow special precautions given for steps in installing and soldering Valve tubing.

REMOVAL AND REPLACEMENT OF THE LIQUID LINE DRIER

To remove the drier:

1. Remove screw and drier brace attaching the drier.
2. Bleed off the refrigerant charge through the Schrader valve.
3. Unsolder refrigerant lines at top and bottom of drier, remove the drier and separate the drier from the drier brace.

To replace the drier:

1. Remove the factory seals from the replacement drier and install the drier in the refrigerant lines with the arrow positioned in the direction of the refrigerant flow.

CAUTION

If the factory seal is broken on the replacement drier, exposing it to the atmosphere for more than a few minutes, the drier will absorb moisture from atmosphere and lose substantial ability for moisture removal.

Be sure the replacement drier is installed with the arrow positioned in the direction of the refrigerant flow.

2. Install the drier brace on the drier.
3. Solder the drier into the lines, two places.
4. Purge the system and check for leaks.
5. Thoroughly evacuate the system to remove moisture and non-condensables.
6. Charge the system with refrigerant by weight. SEE NAMEPLATE for specifications.

REMOVAL AND REPLACEMENT OF THE DRIVEMOTOR ASSEMBLY

1. Remove top, front, and right side panels.
2. Disconnect electrical power at the source.
3. Remove electrical leads from drivemotor.
4. Remove the four bolts that attach the freezer adaptor to the drivemotor case. Lift the freezer assembly up and off the drivemotor assembly.
5. Remove the bolts that attach the drivemotor mounting plate to the icemaker base, then lift the drivemotor and mounting plate out of the machine.
6. Remove the mounting plate from the drivemotor assembly, service the drivemotor and reverse the removal procedure to replace it.

REMOVAL AND REPLACEMENT OF THE FREEZER ASSEMBLY

NOTE

1. *The cabinet may have to be removed from its permanent location, especially if located in a corner, in order to have access to the left side and rear of the chassis.*
2. *Shut OFF electrical power and close the inlet water valve to the icemaker. Disconnect the inlet water line at the rear of the cabinet BEFORE moving the icemaker from the permanent location.*

To remove the freezer assembly:

1. Remove screws and left side, front and rear panels.
2. Disconnect the electrical leads from the spout switch.
3. Remove four screws and washers and separate the spout assembly from the spout plate on the freezer assembly.

   Inspect the spout gasket and retain for the replacement procedure. Replace a torn, cut or worn, defective gasket.
4. Remove corbin clamp and Tygon tube from the freezer assembly that connects to the water reservoir assembly.
5. Bleed off the refrigerant charge through the Schrader valve.
6. Unsolder the suction line from the compressor.
7. Unsolder the automatic expansion valve from the freezer assembly.
8. Unsolder the Liquid line at the drier.
9. Remove four screws, lockwashers and washers which attach the bottom of the freezer assembly to the adaptor on the drivemotor assembly.
10. Lift the freezer assembly up and off of the adaptor and drivemotor assembly.

To replace the freezer assembly, reverse the removal procedure. Evacuate and recharge per nameplate rating.

NOTE

Always install a replacement drier, anytime the sealed refrigeration system is opened. Do not replace the drier until all other repair or replacement has been completed.

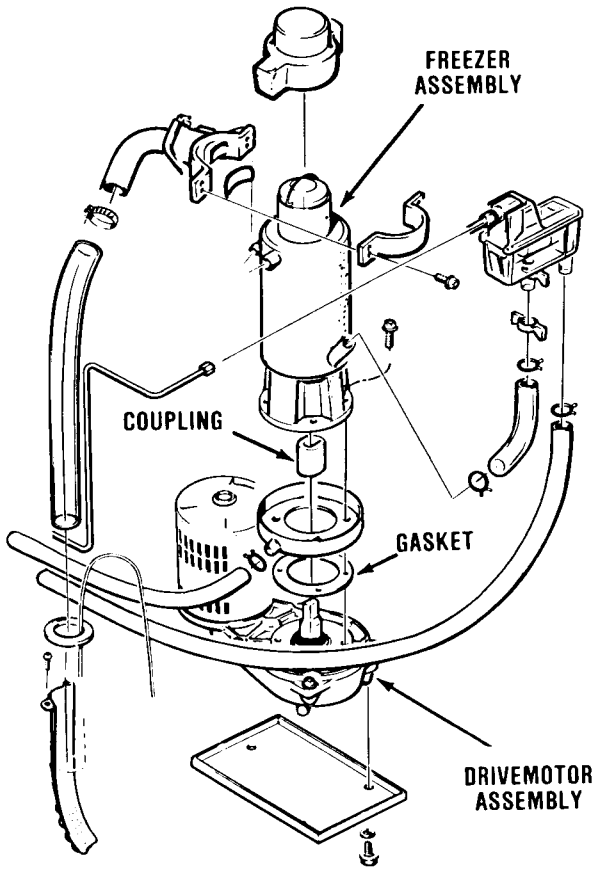

Removal of the Freezer Assembly

REMOVAL AND REPLACEMENT OF THE WATER RESERVOIR ASSEMBLY

To remove the water reservoir assembly:

WARNING

Be sure the electrical power supply to the icemaker is OFF before proceeding with removal procedures.

1. Shut off water supply to the icemaker at the water supply valve.
2. Remove screws and cabinet panels.

NOTE

Be prepared with container to catch water left in lines disconnected in next steps, to prevent draining water on parts, components, electrical lines, etc.

3. Disconnect the water inlet tube from the water reservoir assembly.
4. Remove two Corbin clamps and two tubes from the bottom of the water reservoir assembly.
5. Unscrew and remove the wing nut from the bottom of the water reservoir assembly.
6. Lift and remove the water reservoir assembly from the mounting bracket.

To replace the water reservoir assembly, reverse the removal procedure.

NOTE

Check that the installed replacement water reservoir assembly float moves freely. Bend metal arm of float to adjust, as necessary. The correct water level in the water reservoir is the point of the raised molded line, on the side of the body of the water reservoir.

SERVICE DIAGNOSIS

INTRODUCTION

The Service Diagnosis is for use in aiding the serviceman in diagnosing a particular problem for pin-pointing the area in which the problem lies, thus an ever available reference for proper corrective action.

The following chart lists corrective actions for the causes of known symptoms of certain problems that can occur.

SYMPTOM	POSSIBLE CAUSE	CORRECTION
Water leaks.	Defective water seal.	Replace seal.
	Gravity feed line leaking.	Check hose clamps.
	Water level in reservoir too high.	Adjust water level to molded line on the float assembly.
	Storage bin drain and connecting fittings.	Check and repair.
Excessive noise or chattering.	Mineral or scale deposit on auger and inner freezing chamber walls.	For severe deposit, remove and manually polish auger, sand inner chamber walls of freezer barrel.
		For lighter concentration, use Scotsman Ice Machine Cleaner periodically.
	Intermittent water supply.	Check and clean water strainer.
		Check gravity feed line for air lock.
		Check to be sure float orifice is not restricted.
		Check incoming water supply.
		Remove air lock.
	Water level in reservoir too low.	See CORRECTION for Water Leaks above.
	Gear reducer loose on frame.	Tighten gear reducer.
	Motor compressor not solid rubber mounts.	Repair or replace rubber mounts.
	Gearmotor end-play or bearing.	Repair or replace bearing.
Making wet ice. (Ice melts too quickly, is not cold enough to properly cure in the bin.)	Surrounding air temperature, too high.	Correct or move cabinet, provide adequate ventilation.
	Under or over-charge of refrigerant.	Recharge with proper amount.

(Continued)

SERVICE DIAGNOSIS (Continued)

SYMPTOM	POSSIBLE CAUSE	CORRECTION
Making wet ice (Continued)	Back pressure too high.	Overcharge of refrigerant, faulty compressor or high head pressure. Lower pressure as indicated. AXV not working properly.
	Faulty compressor or valve plate.	Replace compressor
	AXV not metering refrigerant properly.	Adjust or replace AXV.
Low ice production.	Loss of refrigerant. Under or over-charge of refrigerant.	Check and recharge. See NAMEPLATE for charge correction.
	Dirty or plugged condenser.	Clean condenser.
	Low water level in water reservoir.	See CORRECTION for water leaks above.
	Partial restriction in expansion valve or drier.	Moisture in system. Overcharge of oil in system. Remove charge by blowing back through cap tube.
		Evacuate. Replace drier and recharge.
	Inlet water strainer partially plugged.	Remove screen and clean.
	Corroded or stained auger due to water condition.	Remove auger and clean, or use Scotsman Ice Machine Cleaner. See Maintenance Section.
Gearmotor noise.	Low on oil.	Remove case cover to check for proper oil level. Top of gears should be covered. Use: Sun Oil Company Prestige 50-EP.
	Rotor Bearing worn	Replace Rotor Bearing.
Icemaker will not operate.	Blown fuse in line.	Replace fuse and check for cause of blown fuse.
	Bin thermostat set too high or faulty.	Adjust thermostat. Set at 35-degrees cut-out, 45-degrees cut-in. Replace.
	Loose electrical connection.	Check wiring.
	Switch in OFF position.	Set switch to ON position.
	Inoperative master switch.	Replace switch or thermal overload.
	Off on manual-reset high pressure control.	Reset — Check condenser.
	Low supply water pressure.	Restore water pressure.
	Low on refrigerant off-on low pressure control.	Find leak, replace drier, evacuate and recharge.
	Manual reset spout switch open.	Reset spout switch.

SERVICE DIAGNOSIS (Continued)

SYMPTOM	POSSIBLE CAUSE	CORRECTION
Icemaker continues to operate with full storage bin.	Bin thermostat not properly set or is defective.	Re-set or replace bin thermostat. Re-set to 35-degrees cut-out, 45-degrees cut-in.
Compressor cycles intermittently.	Low voltage.	Check for overloading.
	Dirty condenser.	Clean condenser.
	Air circulation blocked.	Remove cause or move unit.
	Inoperative condenser fan motor.	Replace motor.
	Non-condensable gases in system.	Check for gas leaks, evacuate and recharge.
	Bin thermostat differential too small causing short cycling.	Widen differential 35-degrees cut-out, 45-degrees cut-in.
	Cycling on elbow switch.	Set or replace bin thermostat.
	Low on refrigerant causing low pressure control to cycle.	Check for leaks.
	Low water pressure causing control to cycle.	Restore water pressure.
Icemaker operates but makes no ice.	Loss or undercharge of refrigerant.	Check for leaks and recharge. See NAMEPLATE for correct charge.
	Water not entering chamber.	Plugged strainer or supply line. Check and clean. Air lock in gravity feed line. Check and remove air lock.
	Moisture in system.	Check, evacuate, replace drier.
		Recharge. See NAMEPLATE for correct charge.
	Water seal leaking.	Replace seal.
	Drivemotor or drive coupling stripped.	Repair or replace drivemotor or drive coupling.
	Compressor over load faulty.	Replace over load.

MAINTENANCE AND CLEANING

GENERAL

The periods and procedures for maintenance and cleaning are given as guides and are not to be construed as absolute or invariable. Cleaning especially will vary, depending upon local water conditions and the ice volume produced and, the icemaker must be maintained, in accordance with its particular location requirements.

ICEMAKER

THE FOLLOWING MAINTENANCE SHOULD BE SCHEDULED AT LEAST TWO TIMES PER YEAR ON THIS ICEMAKER. CALL YOUR AUTHORIZED SCOTSMAN SERVICE AGENCY.

1. Check and clean optional water line strainer or water purification system.
2. Remove screws and top and front panel.
3. Remove cover from the water reservoir and depress the float to ensure that a full stream of water enters the reservoir.
4. Check that the icemaker cabinet is level, in side-to-side and front-to-rear directions.
5. Check that the water level in the water reservoir is below of the overflow and is level with the molded horizontal line on the reservoir body.
6. Clean the water reservoir and interior of the freezer assembly, using a solution of SCOTSMAN Ice Machine Cleaner. Refer to CLEANING-Icemaker.

NOTE

Cleaning requirements vary according to local water conditions and individual user operation. Visual inspection of the auger before and after cleaning will indicate frequency and procedure to be followed in local areas.

When doubtful about refrigerant charge, install refrigerant gauges on Schrader valves and check gauge for compressor head pressure of the system. See Nameplate for refrigerant charge specifications.

Check gauge for suction line pressure: Varies between 11 to 15 PSIG, depending upon inlet water temperature and ambient air temperatures.

Check the drivemotor operation:

Normal operating temperatures are about 160-degrees F., which is hot to touch.

Check operation of the centrifugal sensing switch for the drive motor:

WARNING

Disconnect electrical power supply before removal procedure.

NOTE

Before the next step, move the Master ON-OFF switch to OFF, to stop the icemaker.

7. Remove rubber insulating cap, the Retaining Ring and the Hook and Cap from the top of the Freezer Assembly.
8. Inspect the O-rings and the top bearing in the upper bearing retainer, wipe clean of old grease and apply a coating of Taylor Freezer food grade grease, SCOTSMAN P/N 19-0569-01 or equivalent. Replace all parts removed.
9. Check for refrigerant leaks.
10. Check for water leaks. Pour water down bin drain to be sure that drain line is open and clear.
11. Check the quality of ice. Ice should be wet when formed, but will cure rapidly to normal hardness in the bin.
12. Check the bin thermostat control bulb, hold ice on the control bulb of the system to test icemaker shut-off.

NOTE

The bin thermostat is factory set at 10-degrees F. differential and should keep the entire icemaker system shut off at least 10 minutes in high ambient temperatures, longer in low ambient temperature during normal operation. Settings are 35-degrees F. CUT-OUT and 45-degrees F. CUT-IN.

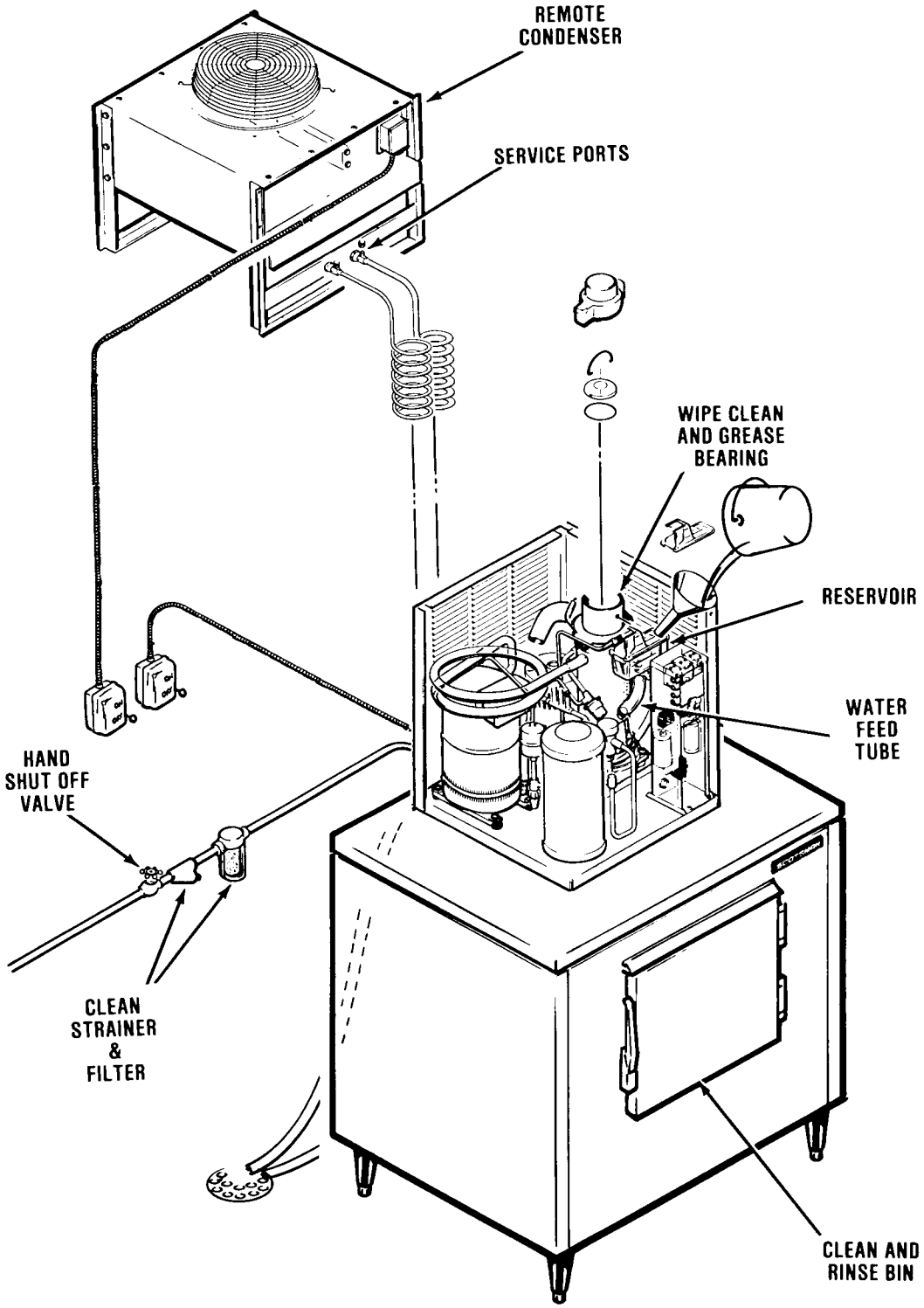
REMOTE CONDENSER
SERVICE PORTS
WIPE CLEAN AND GREASE BEARING
RESERVOIR
WATER FEED TUBE
HAND SHUT OFF VALVE
CLEAN STRAINER & FILTER
CLEAN AND RINSE BIN

REMOTE CONDENSER

Frequent cleaning and inspection of the Condenser should be performed to maintain maximum efficiency of Icemaker. A dirty Condenser or blocked air flow will greatly decrease icemaking efficiency.

1. With building source electrical power OFF to the icemaker and remote condenser, clean the remote condenser fins, using a vacuum cleaner, whisk broom or brush. DO NOT USE A WIRE BRUSH. Instruct customer to clean frequently.
2. Check that Fan Blade moves freely, is not touching any surfaces, is not bent or out of balance; and, the wire guard is properly installed and securely attached.
3. Check that the roof area immediately surrounding the Remote Condenser is free and clear of any debris that may collect, such as leaves, paper, trash, etc.

ICEMAKER CLEANING

1. Remove screws and the top and front panel.
2. Move the master ON-OFF toggle switch to the OFF position.
3. Remove all ice from the ice storage bin.
4. Remove the reservoir cover and block the float in the water reservoir.
5. Disconnect the tube between the water reservoir and the bottom of the freezer assembly and drain water from the reservoir, freezer and tube. Reconnect the tube.

WARNING

SCOTSMAN Ice Machine Cleaner contains Phosphoric and Hydroxyacetic acids. These compounds are corrosive and may cause burns. If swallowed, DO NOT induce vomiting. Give large amounts of water or milk. Call Physician immediately. In case of external contact flush with water. KEEP OUT OF THE REACH OF CHILDREN.

6. Prepare cleaning solution: Mix eight ounces of SCOTSMAN Ice Machine Cleaner with two quarts of hot water.
7. Slowly pour the cleaning solution into the water reservoir.
8. Move the master ON-OFF switch to ON position and make ice with the cleaning solution.
9. Continue to slowly pour the cleaning solution into the water reservoir, maintaining the level just below the reservoir overflow.
10. Continue icemaking, using the cleaning solution, until all the solution is used up and the water reservoir is almost empty. DO NOT allow the icemaker to operate with empty reservoir.
11. Move the master ON-OFF switch to OFF.
12. Wash and rinse the water reservoir.
13. Remove the block from the float in the water reservoir. Move the master ON-OFF switch to ON position.
14. Continue icemaking for at least 15 minutes, to flush out any cleaning solution. Check ice for acid taste - continue icemaking until ice tastes sweet.
15. Move the master ON-OFF switch to the OFF position.

CAUTION

DO NOT use ice produced from the cleaning solution. Be sure none remains in the bin.

16. Remove all ice from the ice storage bin.
17. Add hot water to the ice storage bin and thoroughly wash and rinse all surfaces within the bin.
18. Clean and sanitize the ice storage bin each week.

TABLE OF CONTENTS

Table of Contents 1
List of Illustrations 1
Specifications 2

GENERAL INFORMATION & INSTALLATION
Introduction 3
Location and Leveling 4
Install Transport Tube Assembly 5
Electrical Connections 6
Water Supply and Drain Connections 6
Final Check List 7

OPERATING INSTRUCTIONS
Start-Up 8
Icemaker 10
Electrical/Refrigeration 10

ADJUSTMENT AND REMOVAL AND REPLACEMENT
Adjustment of the Bin Thermostat Control 12

(Printed in Yellow)
THE PARTS ILLUSTRATIONS AND PARTS LISTS
General 13
How to Order Parts or Assemblies 13

WIRING DIAGRAMS 13

Adjustment of the Water Regulator Assembly
— Water-Cooled Models 29
Adjustment of the Water Reservoir Float 29
Removal & Replacement of the:
Auger, Water Seal, Bearings and Ice Breaker 29
Compressor Assembly 30
Condenser — Air-Cooled Models 30
Condenser — Water-Cooled Models 31
Drier 31
Drivemotor Assembly 31
Elbow & Switch Assembly 32
Fan Motor Assembly
— Air-Cooled Models 32
Freezer Assembly 32
Water Regulator Assembly
— Water-Cooled Models 33
Water Reservoir Assembly 33
Safety Pressure Controls 34

SERVICE DIAGNOSIS
Icemaking — Refrigeration System 35

MAINTENANCE & CLEANING INSTRUCTIONS
General 38
Icemaker 38
CLEANING — Icemaker 39

LIST OF ILLUSTRATIONS

Specifications — Model MH750 2
Component Location 3
Installation Examples 4
Installation Ice Transport Tube and Bin Thermostat Bracket 5
Installation Practice 7
Water Schematic 9
Refrigeration Cycle 9
Adjustment of the Temperature Control 12

(Printed in Yellow)
How to Use the Illustrated Parts List 13
Model MH750 Cabinet 15
Major Assemblies 17
Air-Cooled Assemblies 18
Water-Cooled Assemblies 19
Elbow & Switch Assembly 20
Freezer Assembly 20
Compressor Assembly 21
Drivemotor Assembly
— MH750 1/4 H.P. 22
Control Box Assembly
— MH750 Air-Cooled 23
Control Box Assembly
— MH750 Water-Cooled 24
Wiring Diagram — Air-Cooled 25
Wiring Diagram — Water-Cooled 26

Removal of the Freezer Assembly 33
Removal of the Water Reservoir Assembly 33

THIS PAGE
INTENTIONALLY
LEFT BLANK

MH750 ICE NUGGET MODULAR CUBER

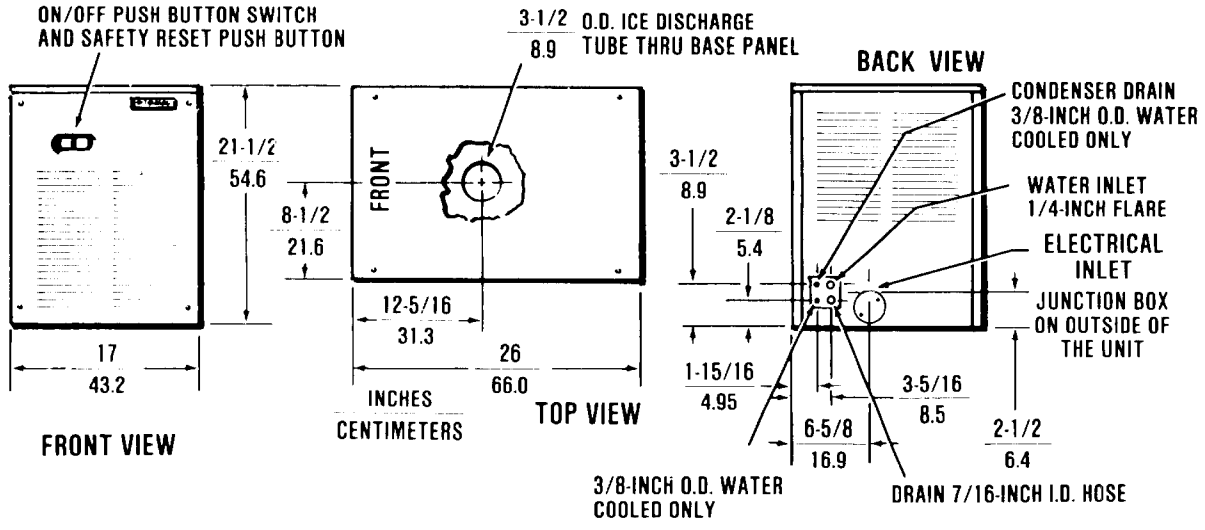

INSTALLATION NOTE: Allow 6" minimum additional space at sides, front and back for ventilation and utility connections.

This product qualifies for the following listings:

SPECIFICATIONS

Model Number	(Height - w/o Legs) Dimensions H" x W" x D"	Cube	Cond. Unit	Finish **	Basic Electrical	Comp. H.P.	Run. Amps.	Max. Oper. Amps.	No. of Wires	Min. Circuit Ampacity †	Max. Fuse Size	Shpg. Wt. lbs./kg.
MH750AE-1A	21½ x 17 x 26	Nuggets	Air	EC	115/60/1	¾	15.7	15.7	2	19.0	20	195/88
MH750WE-1A	21½ x 17 x 26	Nuggets	Water	EC	115/60/1	¾	15.7	15.7	2	17.0	20	187/85

**EC Charcoal Brown high-gloss, baked enamel finish on leathergrain embossed steel.
†Use this value to determine minimum wire size as per National Electric Code Standards.

IMPORTANT OPERATING REQUIREMENTS

	MINIMUM	MAXIMUM
Air Temperatures	50°F (10.0°C)	100°F (37.7°C)
Water Temperatures	40°F (4.4°C)	100°F (37.7°C)
Water Pressures	20 lbs. gauge	120 lbs. gauge
Electrical Voltage Variation		
Voltage rating specified on nameplate .....-10%		+10%

Extended periods of operation exceeding these limitations constitutes misuse under the terms of Scotsman Manufacturer's Limited Warranty, resulting in a loss of warranty coverage.

OPTIONAL STAINLESS STEEL PANEL KITS

SPKMH750A contains top, front and 2 side panels. Not factory installed.

STORAGE BINS:

The MH750 is ideally dimensioned to fit on the B90 Bin with KBT4H top which has 3 knockouts to conveniently accept one MH750 centered or two MH750s side-by-side.

GENERAL INFORMATION AND INSTALLATION

INTRODUCTION

This manual provides the specifications and the step-by-step procedures for the installation, start-up, operation, maintenance and cleaning of the SCOTSMAN Model MH750 Modular Nugget Icemaker.

The Model MH750 Icemaker is a quality designed, engineered and constructed, and thoroughly tested icemaking system, providing the utmost in flexibility to fit the needs of a particular user.

DESCRIPTION

An attractive compact cabinet of textured metal with a charcoal brown enamel finish. The MH750 icemaking system produces ice nuggets. The hard "Ice Nuggets" are small cylinder shaped pieces with the slow melting advantages of cubes and economy of flakes.

SEALED REFRIGERATION SYSTEM

To provide quiet, efficient operation of the icemaker, the compressor motor is internally spring-mounted. The compressor motor is covered by a five-year parts warranty.

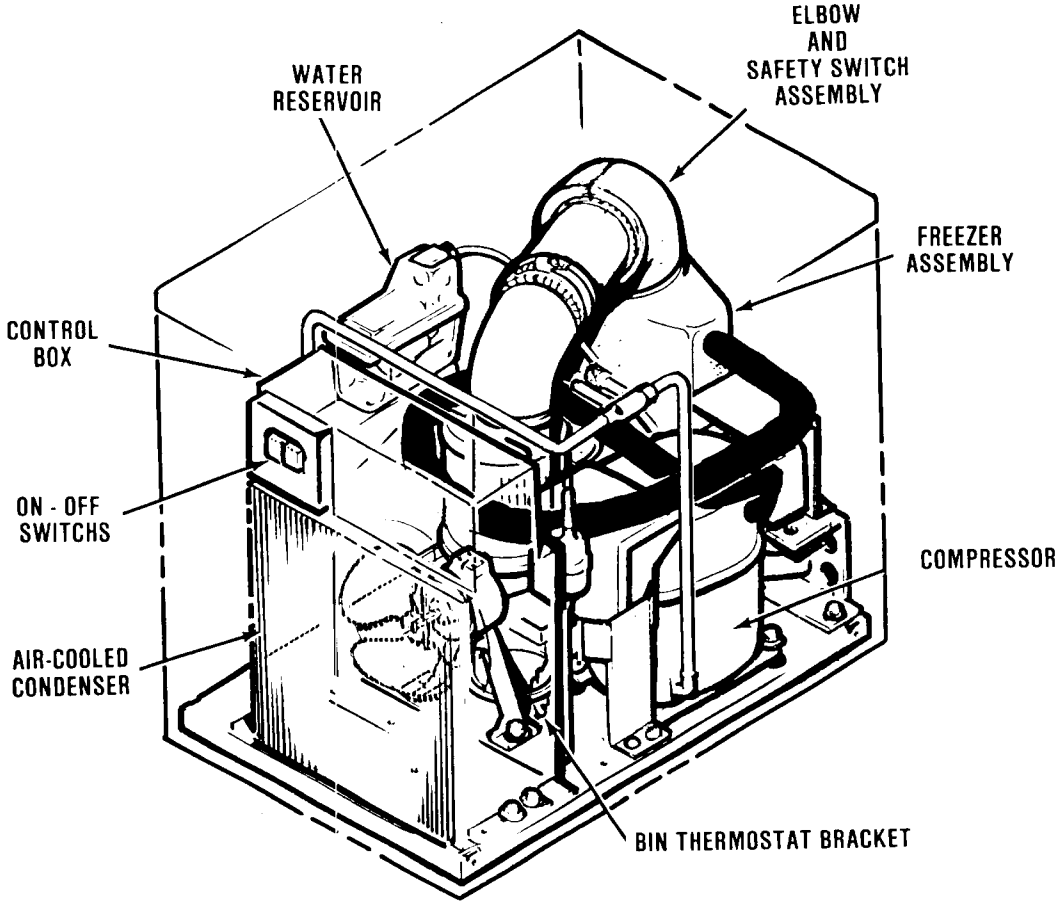

Component Location

LOCATION AND LEVELING

WARNING

This Icemaker is NOT designed for outdoor installations where air temperatures are below 50-degrees F., or above 100-degrees F., and water temperature is below 40-degrees F., or above 100-degrees F. Extended periods of operation at temperatures exceeding these limitations will constitute misuse, under the terms of the SCOTSMAN manufacturer's limited warranty, resulting in LOSS of warranty coverage.

1. Position the Cabinet in the selected permanent location.

NOTE

Prior consideration for location site shall include:

Minimum room temperature 50-degrees F.
Maximum room temperature 100-degrees F.

Water inlet temperatures:
Minimum ..... 40-degrees F.
Maximum ..... 100-degrees F.

Well ventilated location for air-cooled model, advising user to frequently clean air-cooled condenser, located directly behind the front panel.

CONVENIENCE: Placed for practical, efficient use in a back bar or front bar location; or as an individual counter unit, providing hard, nugget ice.

SERVICE ACCESS: Adequate space for all service connections, located at the back of the cabinet. A six-inch minimum clearance at rear and side panels, for routing cooling air drawn into and exhausted out of the compartment to maintain proper condensing operation on air-cooled models.

2. Level the selected bin in both the left-to-right and front-to-rear directions. The leveling legs can be adjusted with an open end wrench.

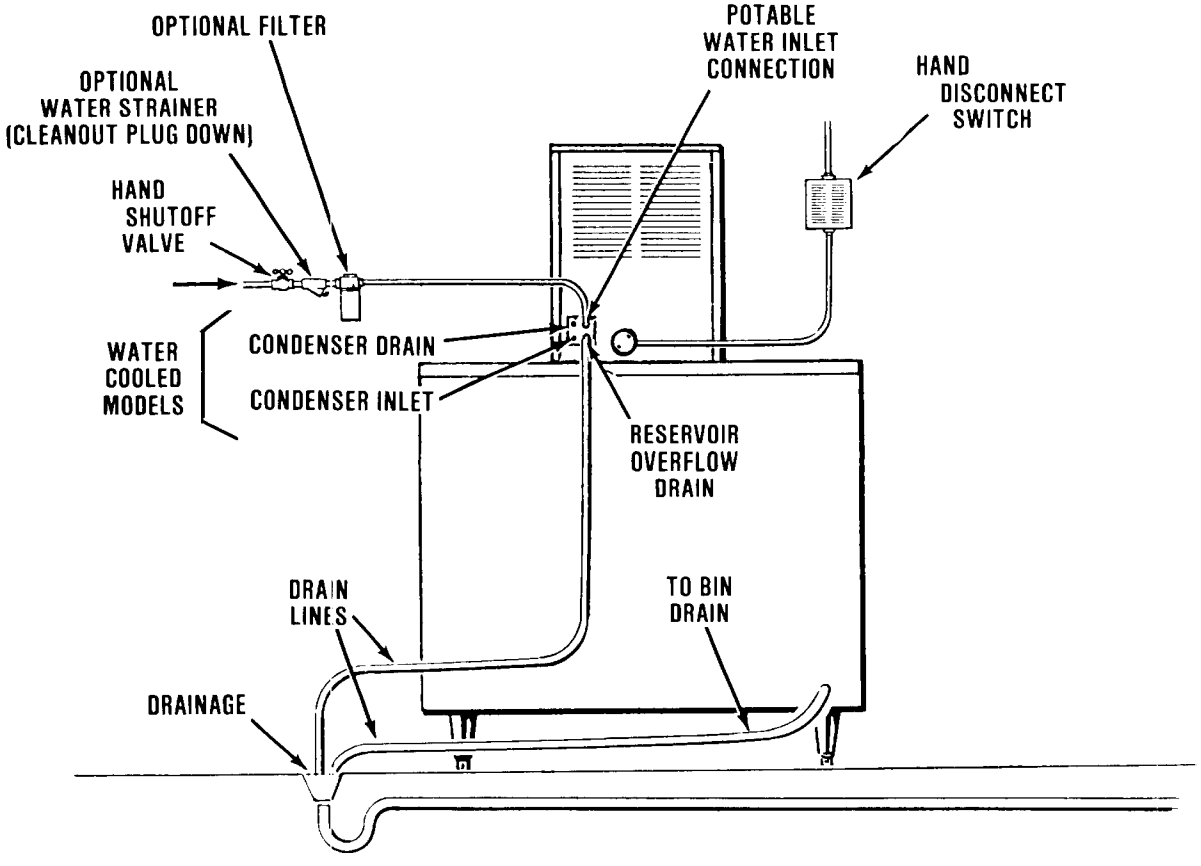

OPEN, TRAPPED OR VENTED DRAINS MUST MAINTAIN 1/4-INCH PER FOOT FALL

INSTALL TRANSPORT TUBE ASSEMBLY

The Model MH750 is designed to be installed on top of an ice storage bin and the ice transport tube and bin thermostat bracket extend through the cabinet base and into the ice storage bin.

The ice transport tube, bin thermostat bracket must be assembled and installed before operation.

1. Remove screws and cabinet top panel.
2. Carefully unpack from within cabinet and wipe clean the ice transport tubes.

CAUTION

Thermostat capillary tube must not be kinked. Careless handling will cause damage.

3. Carefully uncoil the bin thermostat capillary tube to gain enough length.
4. Attach the bin thermostat bracket to the long tube using the two screws provided. Insert the bin thermostat bracket end through the center hole. Attach the vertical tube to the horizontal tube with the screw clamp and "U" channel provided.
5. Check the bin thermostat capillary tube routing to be sure it does not contact other parts.

When properly installed, the ring surrounding the vertical tube at the bin thermostat bracket closes the gap around the icemaker base and the bin thermostat bracket and tube extends into the bin.

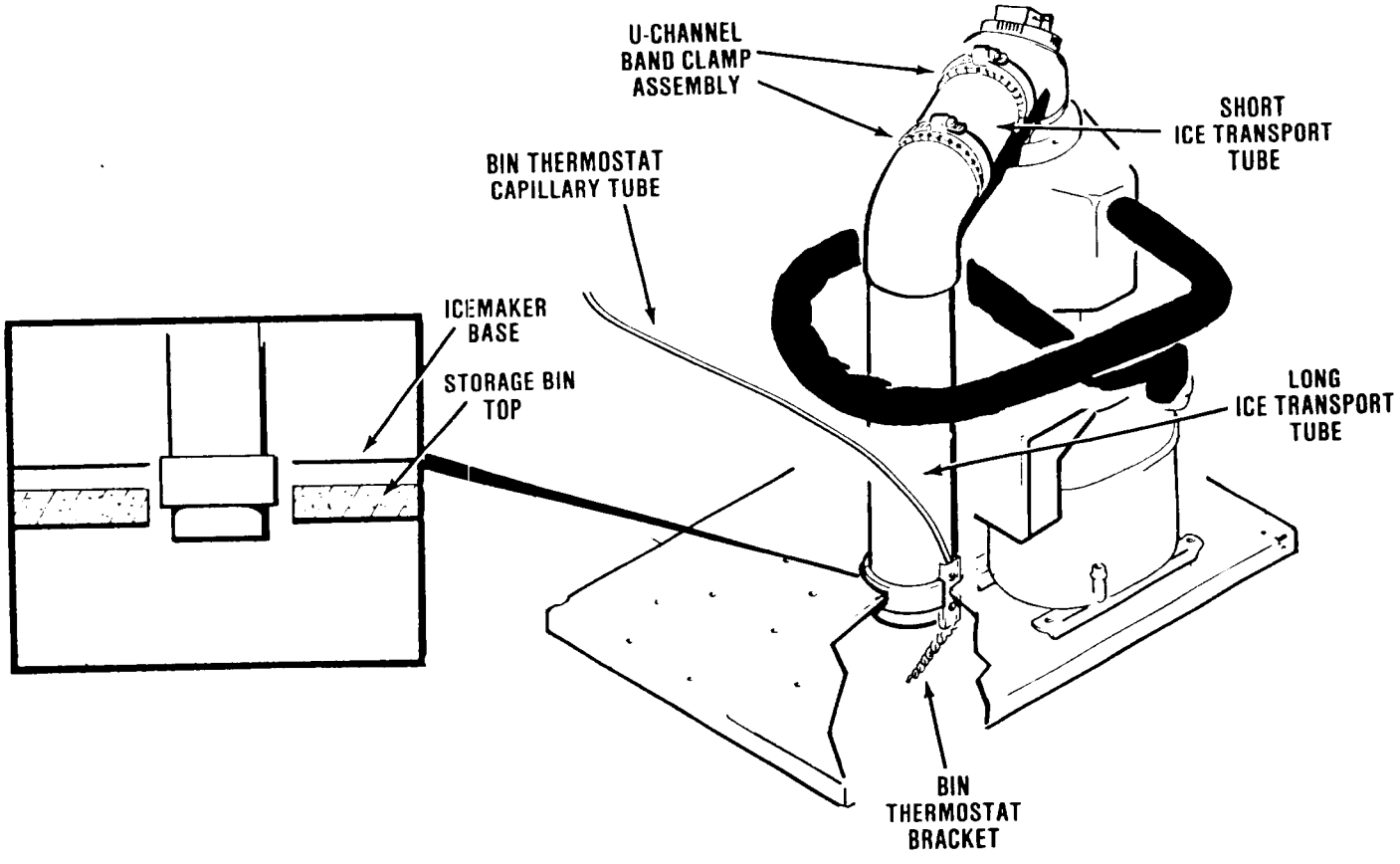

Installation Ice Transport Tube and Bin Thermostat Bracket

ELECTRICAL CONNECTIONS

SEE NAMEPLATE for current requirements to detrmine wire size to be used for electrical hookup. **The MH750 Icemaker requires a solid earth ground wire.** See wiring diagram.

Be certain the Icemaker is connected to its own electrical circuit and individually fused. The maximum allowable voltage variation should not exceed ten percent of the nameplate rating, even under starting conditions. Low voltages can cause erratic operation and may be responsible for serious damage to the over load switch and motor windings.

All external wiring should conform to the national, state and local electrical codes. A permit and services of a licensed electrican will be required.

WATER SUPPLY AND DRAIN CONNECTIONS

////////////////////// **CAUTION** //////////////////////

This icemaker is equipped with a low water pressure safety device, which in the event of interruptions or low water pressure, the icemaker will automatically stop to prevent damage. It will restart automatically after water pressure is restored.

//

NOTE

Water supply must be installed to conform with the local plumbing codes. In some cases a plumbing permit and services of a licensed plumber will be required.

POTABLE WATER: The recommended water supply line is a 1/4-inch O.D. copper tubing with a minimum pressure of 20 PSIG. A 1/4-inch flare fitting is provided at the water inlet. Connect to cold water supply line with standard plumbing fittings, with a shut off valve installed in an accessible place between the water supply and the cabinet.

The icemaker in this cabinet will not operate properly when water supply temperatures are below 40-degrees F. or above 100-degrees F.

CONDENSER WATER (WATER-COOLED MODELS ONLY): On water-cooled models a separate connection to the condenser is required. A 3/8-inch O.D. copper tubing is provided for a separate water inlet line to be connected and a separate drain line to be connected.

FINAL CHECK LIST

1. Is the cabinet level? (IMPORTANT)
2. Has packaging been removed?
3. Have all electrical and piping connections been made?
4. Has the voltage been tested and checked against the nameplate rating?
5. Is the water supply line shutoff valve installed and electrical wiring properly connected?
6. Have the bin and cabinet been wiped clean?
7. Have the compressor hold-down nuts been checked to be sure the compressor is snug on the mounting pads?
8. Has the owner/user been given the User Manual and instructed on how to operate the Icemaker.
9. Has the Manufacturer's Registration Card been properly filled out? Check for correct model and serial numbers from Serial nameplate, then mail the completed card to the SCOTSMAN factory.
10. Check all refrigerant lines and conduit lines, to guard against vibration or rubbing and possible failure.
11. Is there at least six inches clearance behind, in front of and at the sides of the cabinet for proper air circulation?
12. Is the cabinet in a room where ambient temperatures are a minimum of 50-degrees F. all year around?
13. Has water supply pressure been checked to insure a minimum of 20 PSIG?
14. Has the owner been given the name and telephone number of the authorized SCOTSMAN Service Agency serving him?

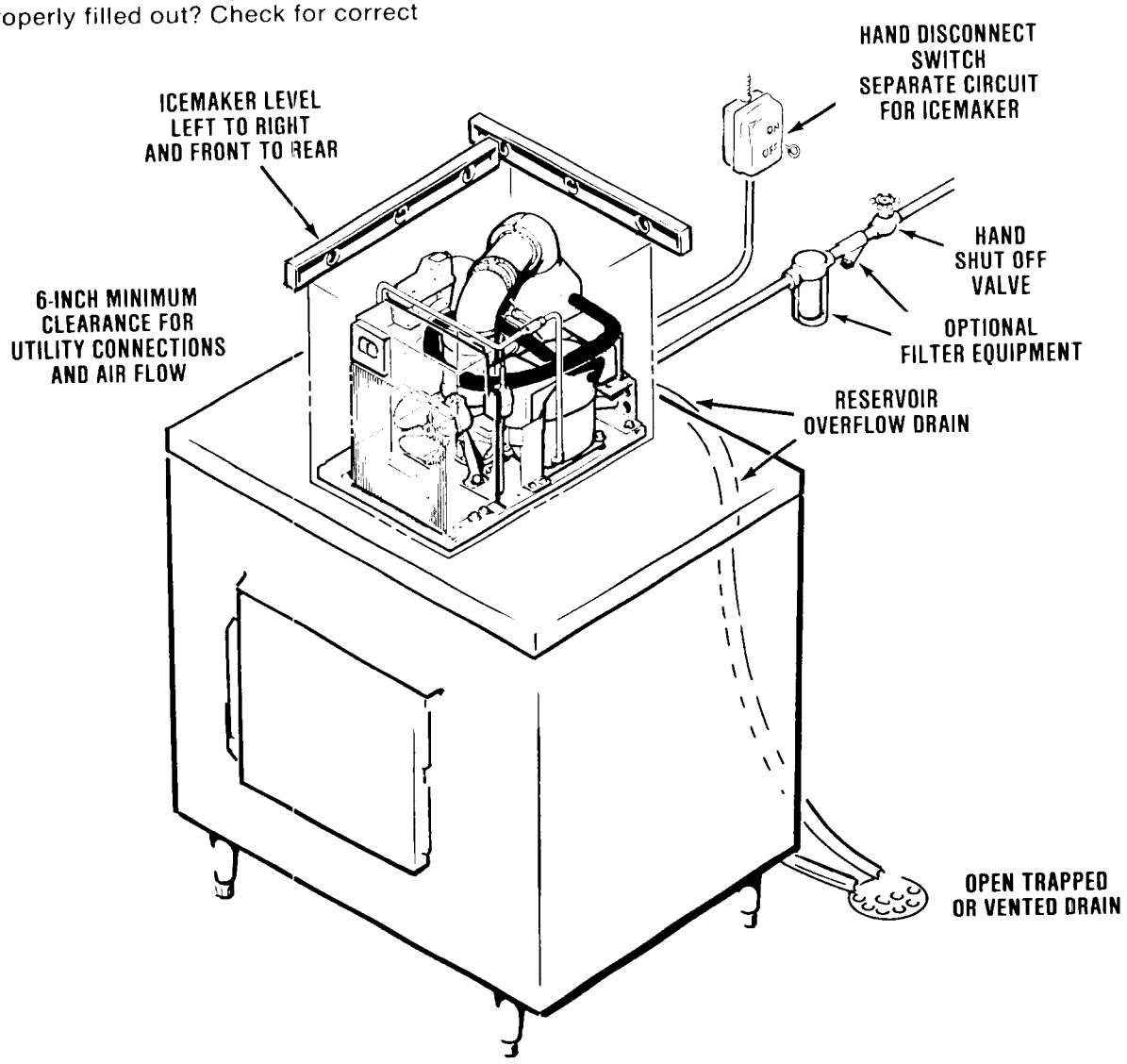

Installation Practice

OPERATING INSTRUCTIONS

START UP

1. Remove screws and the top, side and front panels.
2. OPEN the water supply line shutoff valve.
3. Observe the water filling operation, see water schematic.
   a. Water flows into water reservoir.
   b. Water flows through water feed line to bottom of freezer assembly.
   c. Float moves up as water rises.
   d. Float stops water flow, when water level reaches the molded horizontal line, on the body of the water reservoir.
4. Check all internal water connections for leaks.
5. Press the Master ON-OFF pushbutton and the START-RESET to ON position to start the automatic icemaker operation.

CAUTION

BE ALERT that momentary LOSS OF POWER, such as a brief power outage, will cause the RED light of the START-RESET pushbutton to turn ON. It must be PRESSED, to reset and restart the Icemaker.

WARNING

Repeated need to PRESS the START-RESET push-button, requires checking for:

1. **Faulty bin thermostat control.**
2. **Need to clear jammed ice tube.**
3. **Loose wiring connections.**

6. Observe that ice begins dropping into the ice storage bin.
7. Let the system operate until ice covers the bottom of the bin. Check for any excess noises beyond normal compressor noise:
   a. Fan noises, when air-cooled: blades touch other surfaces; blades bent, out-of-balance, or loose on shaft.
   b. Vibrating type, from touching lines.
   c. Chattering: Lack of water in freezer.
   d. Compressor loose at one or more holddown bolts.

CAUTION

This icemaker is equipped with a low water pressure safety device, which in the event of interruptions or low water pressure, the icemaker will automatically stop to prevent damage. It will restart automatically after the water pressure is restored.

8. Place ice on the bin thermostat control bulb, to test shut-off.

Within minutes after the ice is removed from the sensing bulb, the bulb will warm up and cause the icemaker to restart. This control is factory set and should not be reset until testing is performed. Normal setting is 35-degrees F. CUT-OUT and 45-degrees F. CUT-IN, to prevent short cycling.

9. Thoroughly explain to the owner/user the significant specifications of the icemaker, the start up and operation, going through the procedures for the operating instructions. Answer all questions about the icemaker, by the owner; and, inform the owner of the name and telephone number of the authorized SCOTSMAN Distributor or Service Agency serving him.

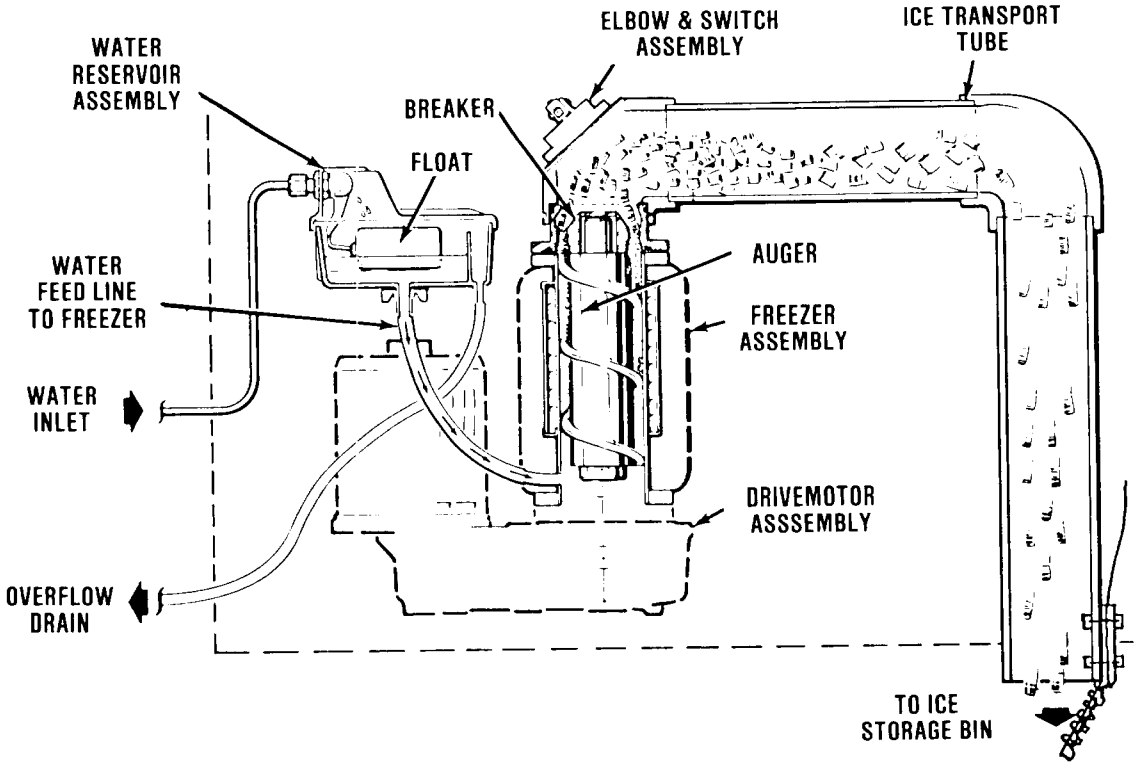

Water Schematic

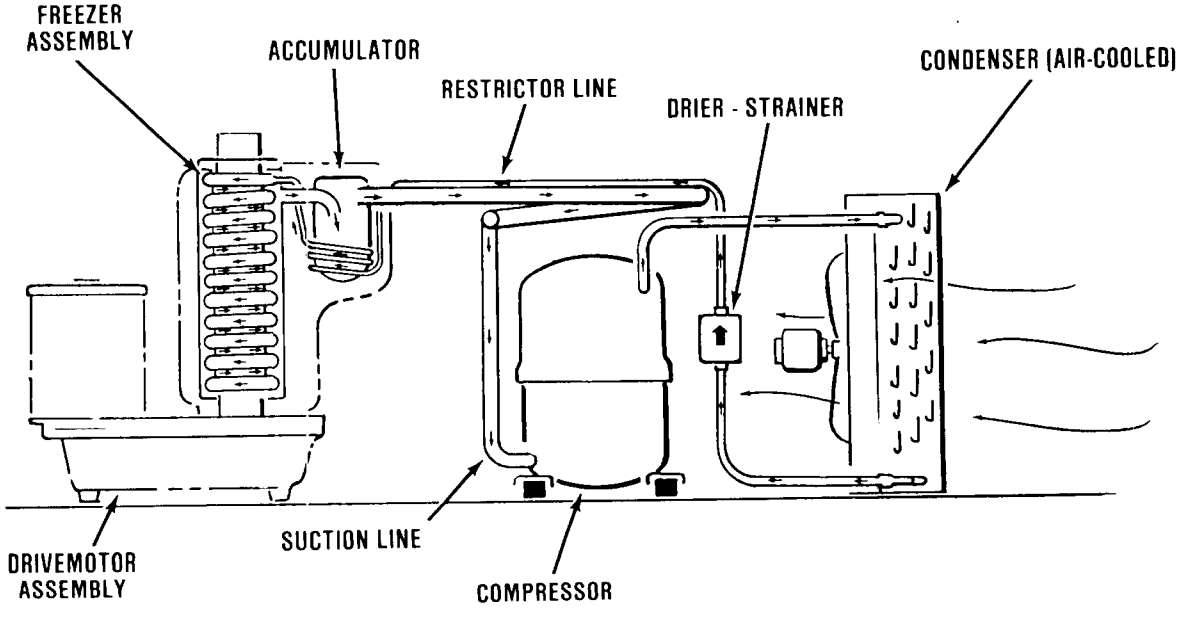

Refrigeration Cycle

ICEMAKER

The potable water supply flows from the building source through the inlet fitting and into the water reservoir. The water reservoir functions to maintain a constant water level inside the freezer assembly. Water from the water reservoir enters at the bottom of the freezer assembly and is changed into ice by low temperatures inside the freezer.

A stainless steel auger within the freezer is powered by a direct-drive gearmotor. The rotating auger carries the ice upward to the end of the auger (See Water Schematic) where excess water is pressed out of the ice as it is extruded and broken into random length chunks. The ice is pushed out through the ice transport tube and into the ice storage bin.

When the ice storage bin fills with ice, to the level of the bin thermostat control capillary bulb, the icemaking process shuts OFF.

As ice is removed from the ice storage bin, the bulb warms up, restarting the automatic icemaking process.

Factory settings for the bin thermostat are 35-degrees F. CUT-OUT and 45-degrees F. CUT-IN.

ELECTRICAL/REFRIGERATION

The Model MH750 icemakers are designed to operate on standard electrical supply 115 volts, 60 Hertz, single phase. Other voltage requirements are available on special order. Therefore, always CHECK NAMEPLATE for electrical information BEFORE proceeding with electrical wiring connection to the icemaker.

Cold ambient temperatures and interruptions in water supply are conditions that can cause excessively hard ice and overloads within the freezer assembly, which is directly transmitted to the drivemotor; and in turn, will cause speed reduction or ultimate freezeup.

When the drivemotor is slowed to a pre-determined RPM, a sensing switch mounted on top of the motor opens the electrical circuit to the compressor. The compressor stops operating, no more ice is produced, and the drivemotor continues to operate, rotating the auger to clear the overload and gradually build up to full speed.

At a pre-determined higher drivemotor RPM, the speed sensing switch closes the electrical circuit to the compressor, causing the normal icemaking process to resume.

The elbow & switch assembly is mounted on top of the freezer assembly and movement against the rubber diaphragm inside the elbow, actuates the switch. The switch acts as a backup safety switch, should the bin thermostat control fail and cause ice to jam up in the ice transport tube. When actuated, this safety switch will cause an immediate and complete shutdown of the icemaker. A momentary loss of electrical power to the icemaker will also cause an immediate and complete shutdown of the icemaker. To restart the icemaker, push the START-RESET button.

There are three safety controls in the control box on the water-cooled models and two safety controls in the control box for the air-cooled models. The low pressure control, an automatic reset, nonadjustable control, is used on both models and is set to open at zero to four PSIG to stop the compressor. The auger delay switch, a single-pole double-throw (SPDT) switch, functions as a control device to allow the drivemotor to rotate the auger to clear the freezing chamber while the compressor circuit is OFF.

Refer to the appropriate wiring diagram and trace circuitry and control functions, as described in the following paragraph.

As shown on all SCOTSMAN wiring diagrams, the controls are in the ICE MAKING MODE. Thus, the 1-2 contacts are CLOSED. At STARTUP, the 1-2 contacts are OPEN and the 3-2 contacts are CLOSED. As the icemaker begins to operate, the low side pressure starts to decrease from the stabilized or at-rest pressure. As soon as the pressure is reduced to 20 PSIG, the 3-2 contacts OPEN and the 1-2 contacts CLOSE.

This removes the operating controls, such as the bin thermostat, from the drivemotor circuit. If one of the operating controls OPENS, it will SHUT OFF the compressor circuit. The drivemotor will operate until the low side pressure increases to 32 PSIG. Then, the 1-2 contacts OPEN and SHUTS OFF the drivemotor, usually within one to two minutes, depending upon ambient conditions. This brief period of time allows the auger to transport all the ice out of the freezing chamber. Consequently, when called on to STARTUP again, there is no ice load to start up against. Again, on STARTUP, the 1-2 contacts are OPEN and the 3-2 contacts are CLOSED.

On the water-cooled models only, a manual reset, high head pressure control is factory set to stop the entire icemaker should the head pressure reach 250 PSIG.

On water-cooled models, correct head pressure is 135 PSIG. On air-cooled models, the head pressure is normal about 130 PSIG, however it will vary depending upon ambient air temperature.

Suction pressure should be 10 PSIG with proper refrigerant charge. Suction pressure will vary about two PSIG plus or minus, depending upon ambient temperatures and inlet water supply temperatures to the freezer assembly.

When charging the system with refrigerant, always CHECK NAMEPLATE for specific refrigeration charge for individual icemaker.

ADJUSTMENT AND REMOVAL AND REPLACEMENT

WARNING

Be sure the electrical power supply to the Icemaker is OFF before proceeding with removal procedures.

The procedures provided in this section are arranged in alphabetical order, to make specific adjustment and removal and replacement information easy to locate.

Read the instructions thoroughly before performing any adjustment or removal and replacement procedures.

ADJUSTMENT OF THE BIN THERMOSTAT CONTROL

The control for the bin thermostat is the temperature control, located on the upper part of the retainer wall.

See Adjustment of Temperature Control illustration for location and direction of rotation, clockwise (CW) or counterclockwise (CCW), of the adjusting screws on the temperature control.

To adjust the bin thermostat control:

1. Hold a handful of ice against the capillary bulb in the ice storage bin.
2. Slowly rotate in the appropriate direction, the adjusting screw on the temperature control device until the icemaker shuts OFF.
3. Remove ice from the capillary bulb; then, place warm hand on the capillary bulb to restart the icemaker.
4. Place handful of ice against the capillary bulb and observe that the icemaker should shut OFF.

CAUTION

The adjusting screws on the temperature control device have very sensitive response to adjustment. DO NOT attempt to adjust the screw until after thoroughly reading and understanding the instructions and illustrations. Over-adjusting or erratic guessing, can foul the instrument and cause ultimate delay and part replacement, WHICH COULD HAVE BEEN PREVENTED.

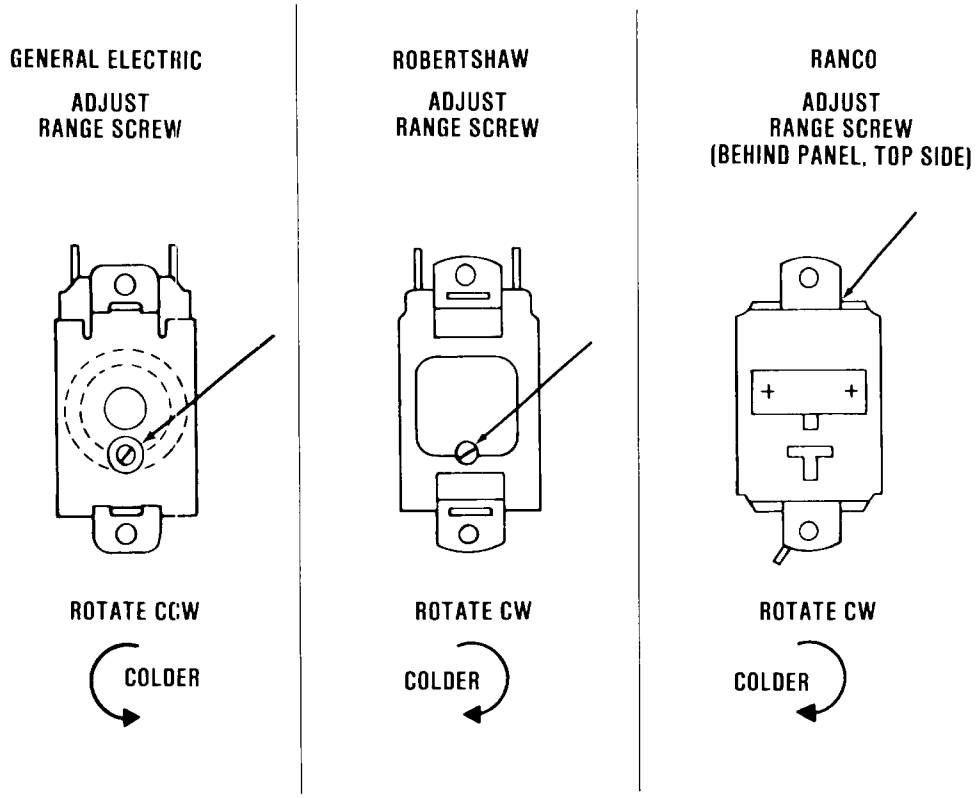

Adjustment of the Temperature Control

THE PARTS ILLUSTRATIONS AND PARTS LISTS

GENERAL

This section contains the Parts Illustrations and the Parts List for each of the major assemblies of the Model MH750 Icemaker.

A *No Number* designation, when used in the Part Number Column indicates the unit is not available from SCOTSMAN as an assembly. This designation is used only for the convenience and clarity of division in cataloging.

HOW TO ORDER PARTS OR ASSEMBLIES

When ordering parts or assemblies, to avoid costly delays and errors in shipment, give the part number, the complete description shown in the list, and the quantities of each part or assembly required. Also include the Model name, the serial number of the Icemaker for which the part is required, and for parts which require color matching, the color of the Cabinet.

IMPORTANT

All Part Numbers have TEN DIGITS (spaces), required for use in the Computer System. BE SURE to fill in ALL SPACES in the CATALOG NUMBER column, on the Parts Order form.

Enter the QUANTITY of the Parts ordered, in the last digit column under the QUANITY column heading, the one under the small 55 number, for parts from 1 thru 9. For 10 or more parts use two columns.

To be sure you receive the proper parts in the proper quantities, ALWAYS use the PART NUMBERS and DESCRIPTIONS given in the Parts Manuals.

Write an order for the Part. (Use SCOTSMAN Parts Order Form DN103). Be sure to include:

- ☐ Distributor Name.
- ☐ (Use for DROP-SHIP order ONLY.)
- ☐ Distributor Purchase Order Number.
- ☐ Carrier.
- ☐ How shipped (Truck, Rail, UPS, etc.)
- ☐ Date ordered.
- ☐ Part Catalog Number. (Use full TEN digits (spaces) listed in Parts Manual, including dashes between numbers.)
- ☐ Description — as listed in Parts Manual.
- ☐ Quantity — number of parts ordered. (Use far right column.)

MH750

WIRING DIAGRAMS

This Section is provided as an aid in understanding the electrical circuitry of the Ice Making System.

The Wiring Diagrams in the Section are:

Air-Cooled Models 100-120/60/1, 200-240/60/1
Water-Cooled Models 100-120/60/1, 200-240/60/1

WARNING

When conducting a continuity check of the Ice Making System:

1. **Disconnect the main power source.**
2. **DO NOT use an incandescent lamp or jumper wire, conduct all tests with a volt-ohm-meter.**

17-1659-20

Item Number	Part Number	Description
1	A30007-002	PANEL TOP - (C.R.S. PAINTED)
	A30007-001	PANEL TOP (STAINLESS STEEL)
	ATTACHING PARTS, INDEX 1	
	03-1417-15	LOCKWASHER, NO. 8 COUNTERSUNK EXTERNAL TOOTH
	03-1419-09	SCREW, NO. 8 x 1-1/4 FLAT HD S/T
	03-1423-06	SPEEDNUT - (J-TYPE)
2	A30010-002	PANEL, REAR - (C.R.S. PAINTED)
	A30010-001	PANEL, REAR - (STAINLESS STEEL)
	ATTACHING PARTS, INDEX 2	
	03-1417-03	LOCKWASHER, NO. 8 EXTERNAL TOOTH
	03-1404-09	SCREW, NO. 8 x 1/2 T/F TAP
3	A30009-002	PANEL, RIGHT SIDE - (C.R.S. PAINTED)
	A30009-001	PANEL, RIGHT SIDE - (STAINLESS STEEL)
	ATTACHING PARTS, INDEX 4	
	03-1417-03	LOCKWASHER, NO. 8 EXTERNAL TOOTH
	03-1404-09	SCREW, NO. 8 x 1/2 T/F TAP
	03-1507-00	SPEEDNUT
4	A30006-002	PANEL, FRONT - (C.R.S. PAINTED)
	A30006-001	PANEL, FRONT - (STAINLESS STEEL)
	ATTACHING PARTS, INDEX 5	
	03-1417-15	LOCKWASHER, NO. 8 COUNTERSUNK EXTERNAL TOOTH
	03-1419-09	SCREW, NO. 8 x 1-1/4 FLAT HD S/T
	03-1423-06	SPEEDNUT - (J-TYPE)
	15-0718-01	SCOTSMAN EMBLEM
	03-0271-00	SPEED CLIPS
5	A30008-002	PANEL, LEFT SIDE - (C.R.S. PAINTED)
	A30008-001	PANEL, LEFT SIDE - (STAINLESS STEEL)
	ATTACHING PARTS, INDEX 3	
	03-1417-03	LOCKWASHER, NO. 8 EXTERNAL TOOTH
	03-1404-09	SCREW, NO. 8 x 1/2 T/F TAP
	03-1507-00	SPEEDNUT
6	*No Number*	SHIELD, WIRE
	ATTACHING PARTS, INDEX 6	
	03-1404-09	SCREW, NO. 8 x 1/2 T/F TAP

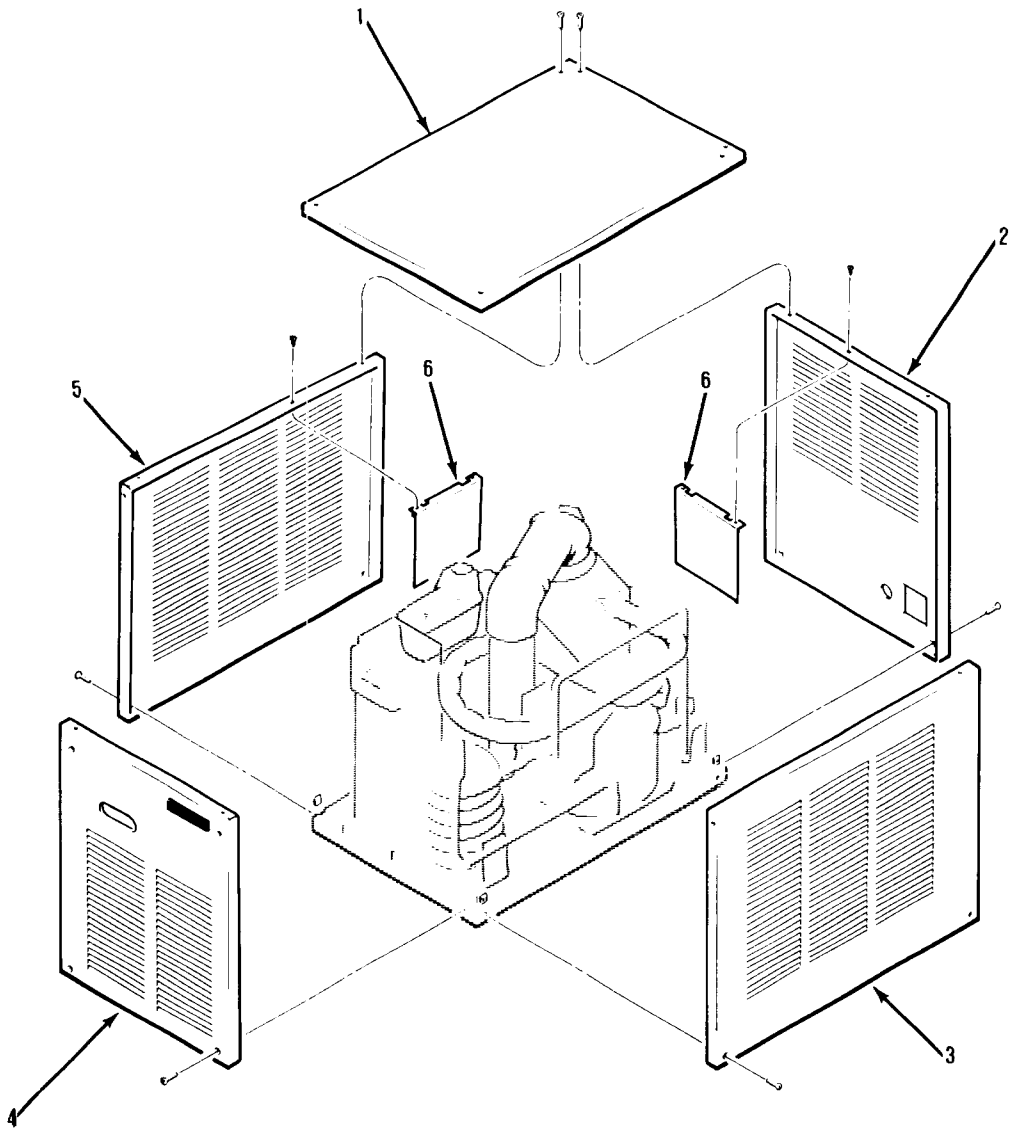

Model MH750 Cabinet

Item Number	Part Number	Description
1	*No Number*	ELBOW & SWITCH HOUSING
2	02-2604-01	BRACKET SPOUT RETAINER
	ATTACHING PARTS, INDEX 2	
	03-1544-04	SCREW 10-24 x 3/8 STAINLESS SOC HD CAP
3	13-0617-45	"O" RING
4	*No Number*	FREEZER ASSEMBLY
	ATTACHING PARTS, INDEX 4	
	03-1408-03	WASHER 5/16 PLAIN (STAINLESS)
	03-1420-03	SCREW 5/16-18 x 1-1/4 HEX CAP
5	13-0704-00	GASKET
6	A29463-001	ADAPTER, FREEZER
7	02-2577-01	ADAPTER (LARGE)
8	*No Number*	DRIVEMOTOR ASSEMBLY
	ATTACHING PARTS, INDEX 8	
	03-1417-12	LOCKWASHER 5/16 EXTERNAL TOOTH
	03-1405-38	SCREW 5/16 - 18 x 3/4 HEX CAP
9	11-0296-00	CONTROL LOW PRESSURE (WATER)
	ATTACHING PARTS, INDEX 9	
	03-1409-21	RUBBER WASHER
10	*No Number*	BAFFLE WATER CONT
	ATTACHING PARTS, INDEX 10	
	03-1404-09	SCREW #8 x 1/2
11	A27993-001	BRACKET, UTILITY
	ATTACHING PARTS, INDEX 11	
	03-1360-01	SCREW 10-16 x 3/4
12	*No Number*	COMPRESSOR
	ATTACHING PARTS, INDEX 12	
	03-1405-20	SCREW 5/16-18 x 1-1/2 HEX CAP
	03-1417-12	LOCKWASHER 5/16 EXTERNAL TOOTH
	03-1408-29	WASHER 5/16 SPECIAL
	18-2200-27	SLEEVE
	18-2200-28	GROMMET
13	*No Number*	BAFFLE COMP CAP
	ATTACHING PARTS, INDEX 13	
	03-1404-09	(2) SCREW 8 x 1/2
14	A28207-001	PLATE, MOTOR
	ATTACHING PARTS, INDEX 14	
	03-1417-09	LOCKWASHER 1/4 EXTERNAL TOOTH
	03-0571-00	SCREW 1/4-20 x 1/2 T/C HEX HEAD
15	A30148-001	THERMO BRACKET
	ATTACHING PARTS, INDEX 15	
		SCREW
16	A30195-001	TUBE
17	*No Number*	TUBE (RESERVOIR OVERFLOW DRAIN)
18	*No Number*	TUBE (RESERVOIR TO FREEZER INLET)
	ATTACHING PARTS, INDEXS 16, 17	
	02-0534-00	(1) CLAMP (INDEX 16)
	02-0694-00	(2) CLAMP (INDEX 17)
19	A09388-001	BRACE DRIER
20	02-0544-01	DRIER
	ATTACHING PARTS, INDEXS 18, 19	
	03-1403-35	SCREW 10-24 x 1-1/8 RESERVOIR PAN HD
	03-1406-06	NUT 10-24 HEX
21	A30002-001	BRACKET MOUNTING
	ATTACHING PARTS, INDEX 20	
	03-1572-02	SCREW 8-18 x 1/2 PAN HD
22	02-2217-01	RESERVOIR
	02-2217-02	VALVE ASSEMBLY FLOAT (NOT SHOWN)
	ATTACHING PARTS, INDEX 21	
	No Number	WING NUT (PART OF RESERVOIR)
23	A30088-001	TUBE
24	A30089-001	(2) U-CHANNEL
25	02-0179-03	(2) CLAMP, BAND

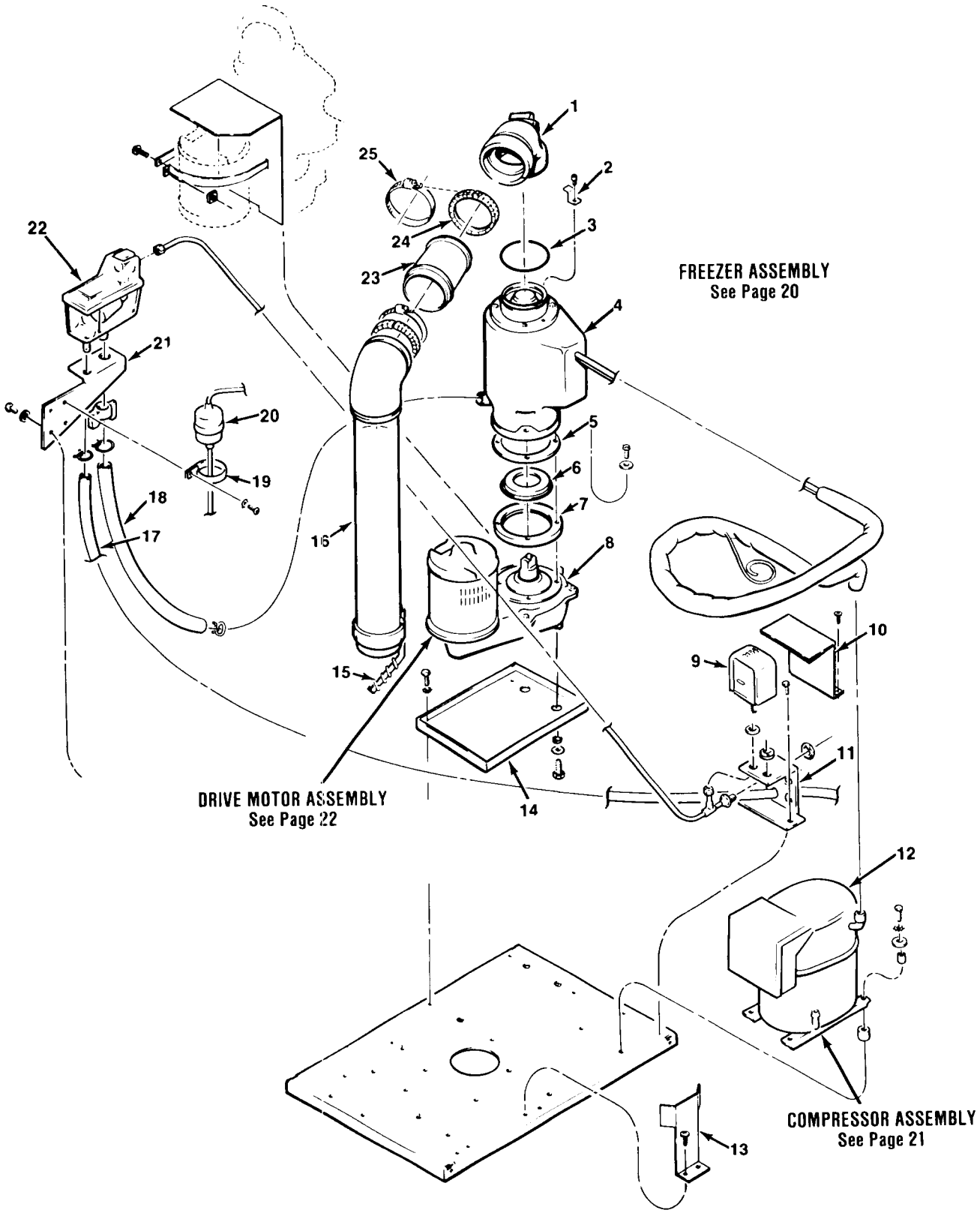

Major Assemblies

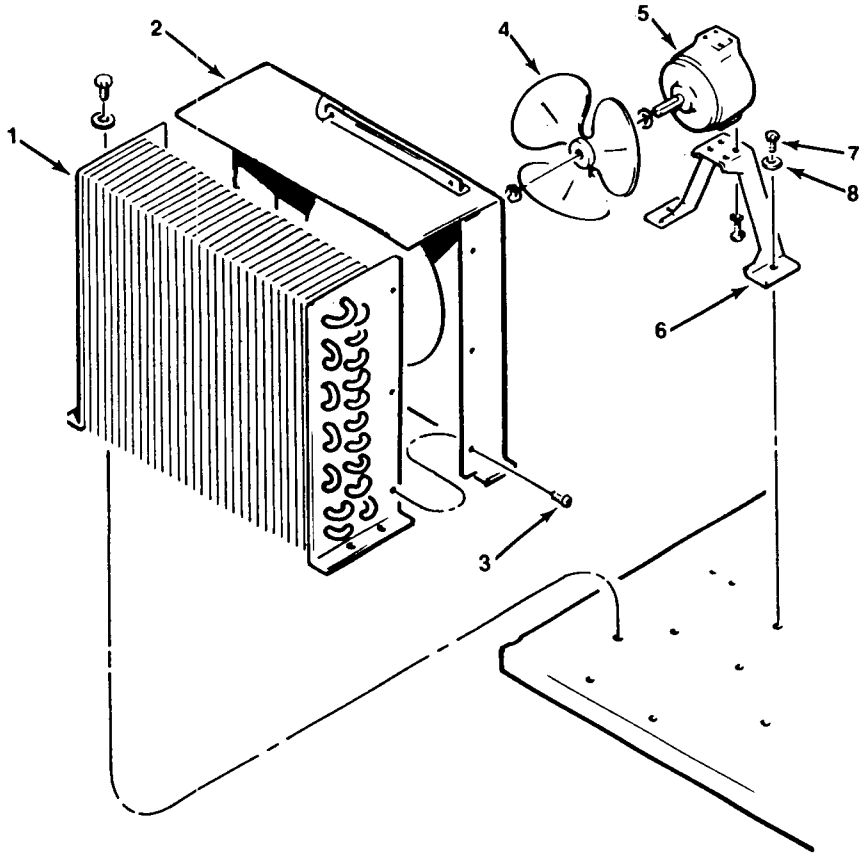

Item Number	Part Number	Description
1	18-0396-01	CONDENSER
2	A30003-001	SHROUD
3	03-1404-03	#6 x 1/4 (6)
4	18-0625-00	FAN BLADE AND NUT
5	18-0559-01	FAN MOTOR 115/60/1
	18-0559-00	FAN MOTOR 208-230/60/1
6	A25548-001	FAN MOUNTING BRACKET
7	03-0571-00	SCREW, THREAD CUTTING HEX HEAD 1/4-20 x 1/2-INCH (4)
8	03-1417-09	LOCKWASHER, INTERNAL TOOTH 1/4-INCH

Air-Cooled Assemblies

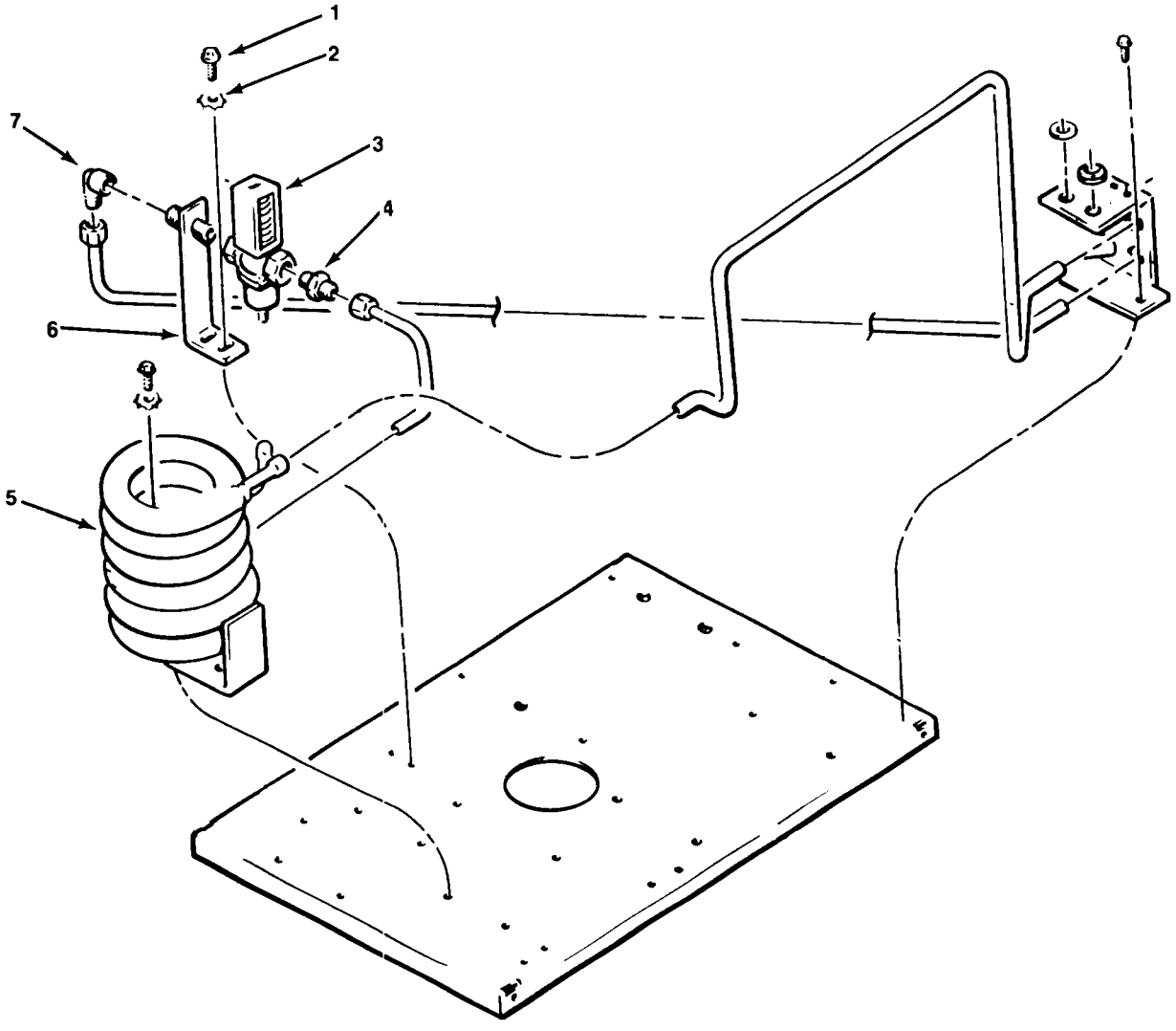

Item Number	Part Number	Description
1	03-0571-00	SCREW, 1/4-20 x 1/2 T/C HEX CAP
2	03-1417-09	LOCKWASHER, 1/4 INTERNAL TOOTH
3	11-0198-02	WATER REGULATOR
4	*No Number*	COUPLING
5	18-3305-02	CONDENSER ASSEMBLY
	ATTACHING PARTS, INDEX 5	
	03-0571-00	SCREW 1/4-20 x 1/2
	03-1417-09	LOCKWASHER 1/4
6	A15924-000	PIPE NIPPLE ASSEMBLY
7	*No Number*	ELBOW

Water-Cooled Assemblies

Item Number	Part Number	Description
1	12-2202-01	SWITCH
2	03-1403-08	SCREW, NO. 6-32 x 7/8
3	03-0886-00	SPEEDNUT
4	02-2764-01	ELBOW ASSEMBLY
5	02-2604-01	BRACKET, SPOUT RETAINING
6	03-1544-04	SCREW, NO. 10-24 x 3/8 STAINLESS SOC HD CAP
7	02-2637-01	RETAINING RING
8	02-2778-02	INSULATION LEFT SIDE
9	02-2778-01	INSULATION RIGHT SIDE

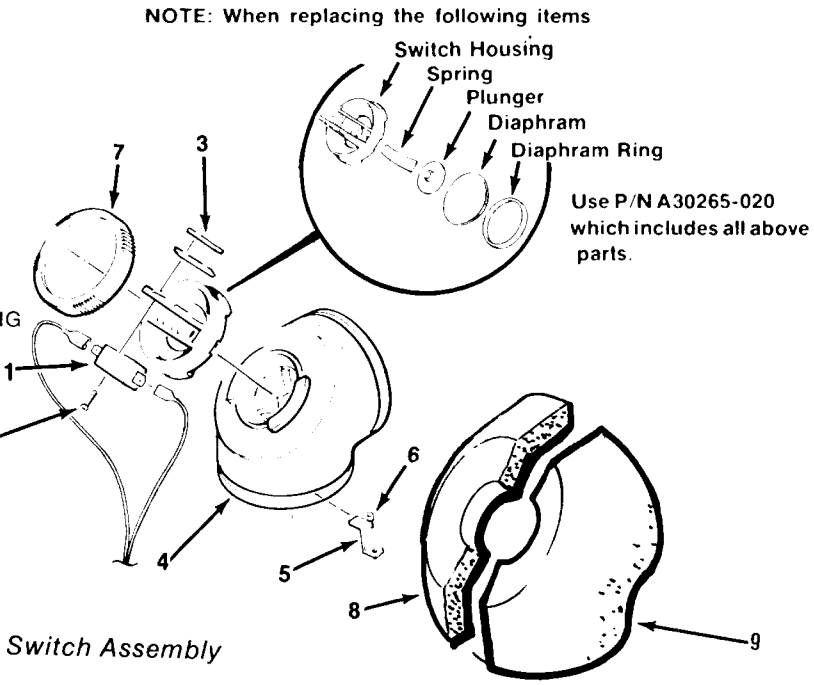

Elbow & Switch Assembly

Item Number	Part Number	Description
1	A29432-020	ICE BREAKER ASSEMBLY
	ATTACHING PARTS, INDEX 1	
1a	03-1405-42	SCREW 5/16 - 18 x 7/8 HEX CAP
1b	03-1417-13	LOCKWASHER 5/16 HELICAL SPRING
1c	*No Number*	ICE BREAKER
1d	02-1683-00	BEARING
1e	02-1607-01	SEAL, OIL
2	13-0617-46	O-RING
3	A29824-001	AUGER
4	02-0929-01	SEAL, WATER
5	A29990-020	FREEZER ASSEMBLY

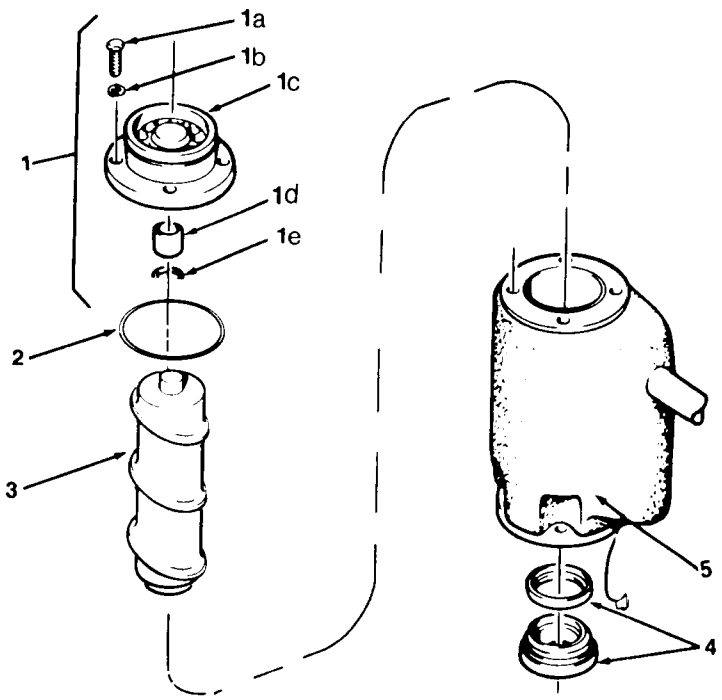

Freezer Assembly

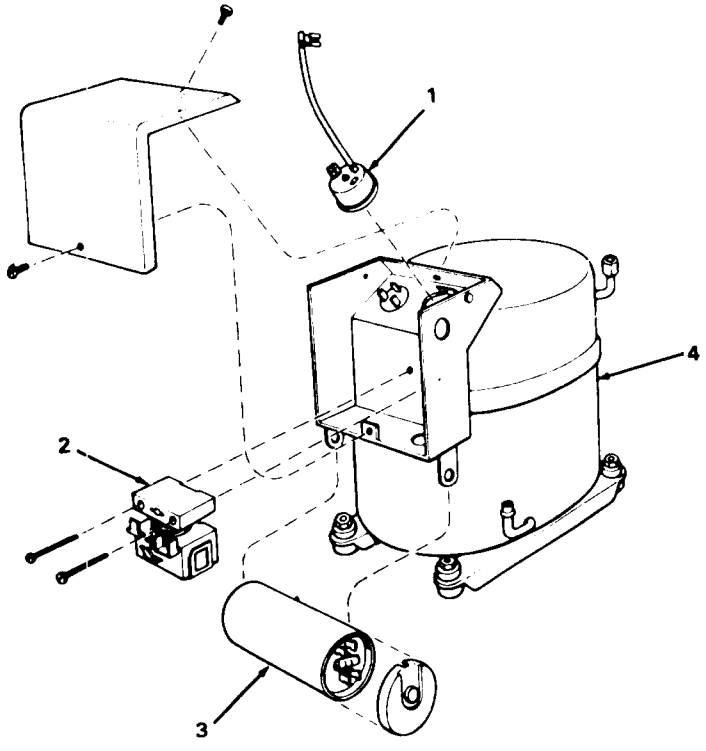

Item Number	Part Number	Description
1	18-2400-25	OVERLOAD (115/60/1)
	18-2400-26	OVERLOAD (208-230/60/1)
2	18-2410-00	RELAY (115/60/1)
	18-2200-34	RELAY (208-230/60/1)
3	18-2420-00	CAPACITOR (115/60/1) WITH CAP
	18-2421-00	CAPACITOR (208-230/60/1) WITH CAP
4	18-3900-01	COMPRESSOR ASSEMBLY (115/60/1)
	18-3900-02	COMPRESSOR ASSEMBLY (208-230/60/1)

Compressor Assembly

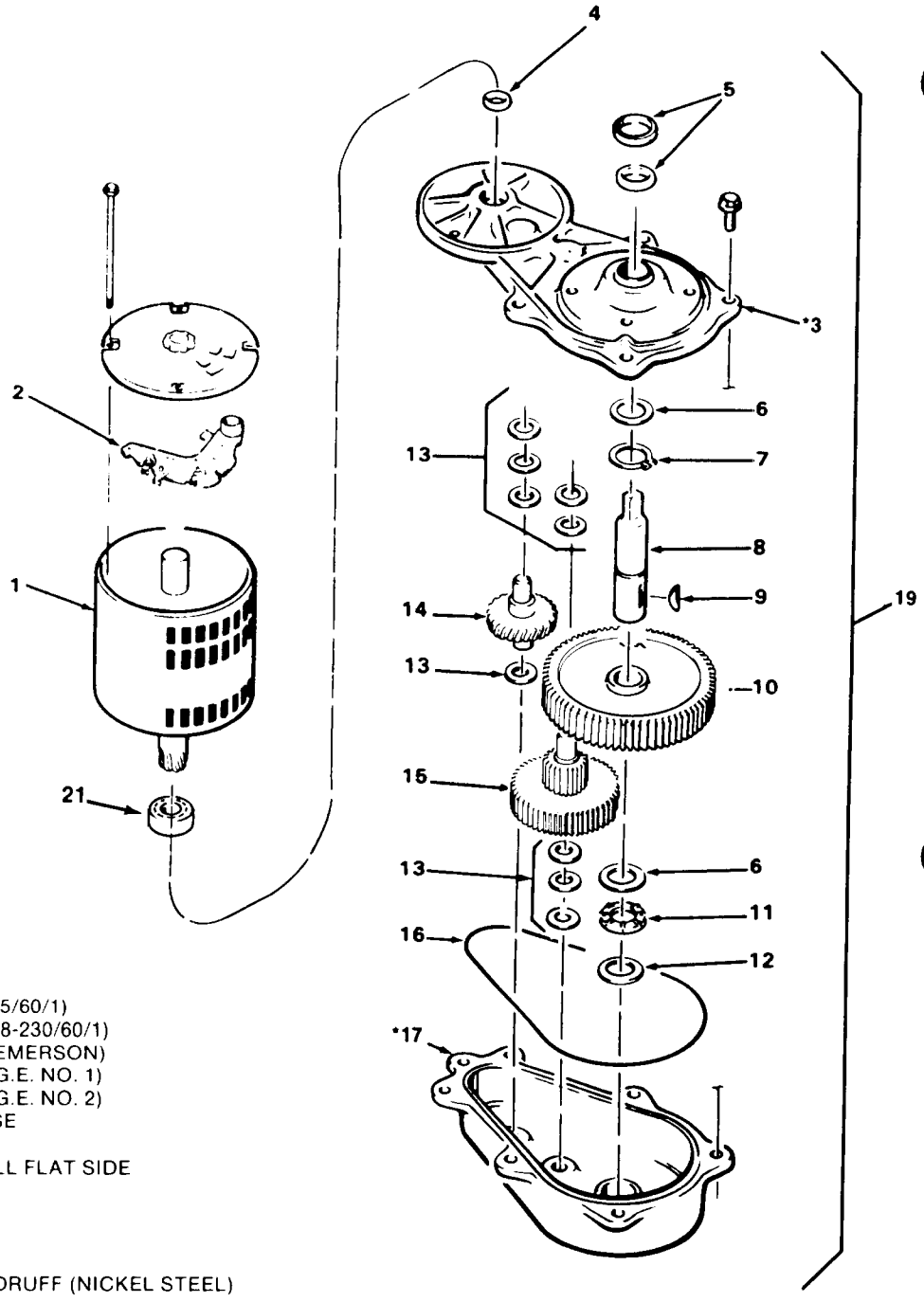

DRIVEMOTOR ASSEMBLY

Item Number	Part Number	Description
1	A26455-001	DRIVE MOTOR (115/60/1)
	A26455-002	DRIVE MOTOR (208-230/60/1)
2	12-1741-22	SWITCH, START (EMERSON)
	12-1741-28	SWITCH, START (G.E. NO. 1)
	12-1741-32	SWITCH, START (G.E. NO. 2)
3*	A30391-001	COVER, GEARCASE
4	02-1606-00	SEAL, OIL
5	02-1607-00	SEAL, OIL (INSTALL FLAT SIDE TO FLAT SIDE)
6	02-1679-00	RACE, THRUST
7	03-1363-00	RING, RETAINING
8	02-2541-01	SHAFT, OUTPUT
9	03-1630-01	KEY, NO. 91 WOODRUFF (NICKEL STEEL)
10	02-2745-01	GEAR, OUTPUT
11	02-1680-00	BEARING
12	02-1679-00	RACE, THRUST
13	03-1408-24	WASHER
14	02-1603-00	SECOND PINION ASSEMBLY, FIRST GEAR AND
15	02-1604-00	THIRD PINION ASSEMBLY, SECOND GEAR AND
16	A26103-001	O-RING (8.92 INCH DIA.)
17*	A30391-001	CASE ASSEMBLY
18	03-1251-01	SCREW, NO. 5/16-18-1 FLANGE
19	A29410-021	COMPLETE GEARCASE REDUCER ASSEMBLY 115/60/1
	A29410-022	COMPLETE GEARCASE REDUCER ASSEMLBY 230/60/1
20	A25835-001	GEARCASE OIL (1 PINT CAN) Not Shown
21	12-1741-29	ROTOR BEARING

***NOTE:** Gearcase cover and bottom are sold as a set only. Order part number A30391-001.

Drivemotor Assembly — MH750 1/4 H.P.

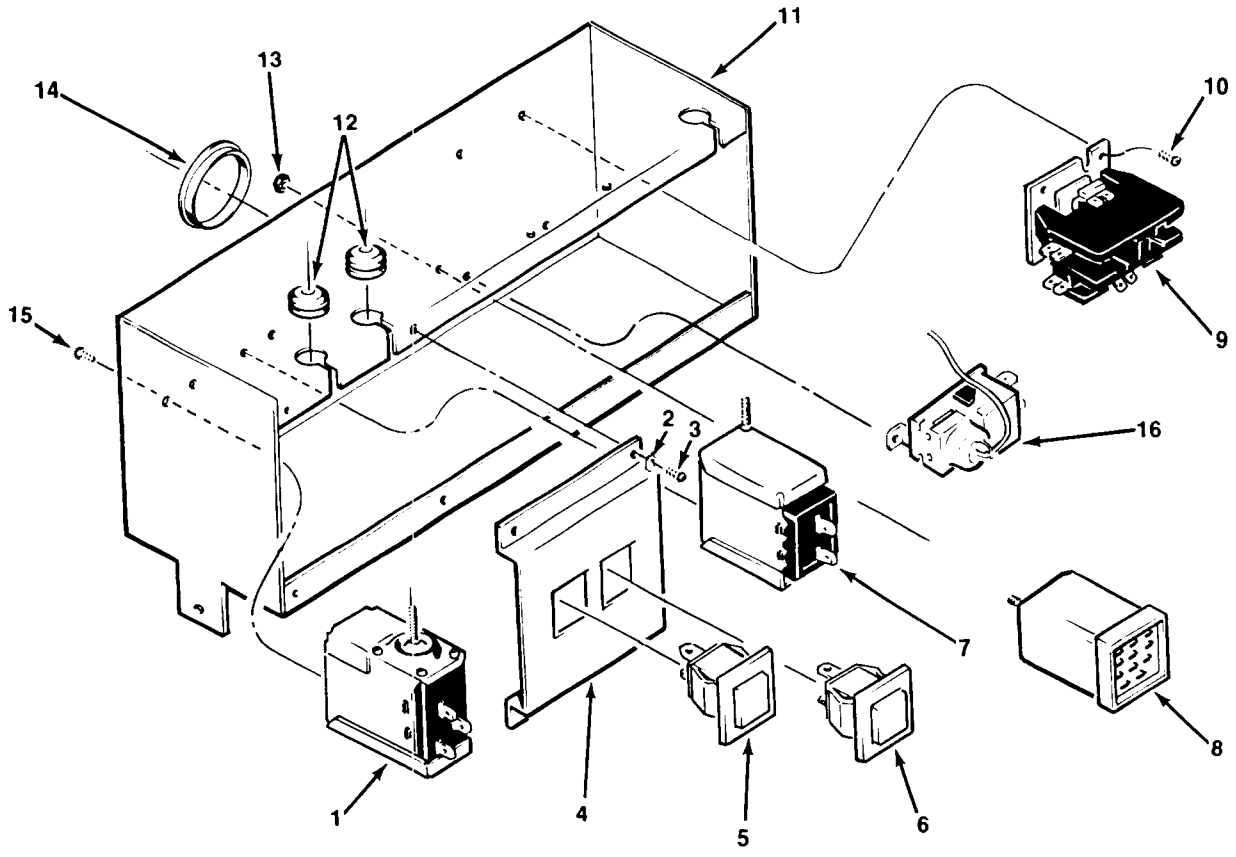

Item Number	Part Number	Description
1	11-0402-01	AUGER DELAY
2	03-1417-03	LOCK WASHER
3	03-1531-01	SCREW NO. 8 x 3/8
4	A30543-001	SWITCH HOUSING
5	12-2199-02	SWITCH, START-RESET 208-230/60/1
	12-2199-01	SWITCH, START-RESET 115/60/1
6	12-2200-02	SWITCH, ON-OFF 208-230/60/1
	12-2200-01	SWITCH, ON-OFF 115/60/1
7	11-0420-01	CONTROL, LO PRESSURE
8	12-2090-04	RELAY 208-230/60/1
	12-2090-01	RELAY 115/60/1
9	12-2037-02	CONTACTOR 208-230/60/1
	12-2037-01	CONTACTOR 115/60/1
10	03-1403-17	SCREW NO. 8 x 3/8
11	*No Number*	CONTROL BOX
12	13-0557-00	GROMMET
13	03-1406-01	NUT
14	12-1213-12	SNAP BUSHING
15	03-1403-02	SCREW 6 x 1/4
16	11-0354-00	BIN THERMOSTAT

Control Box Assembly — MH750 Air-Cooled

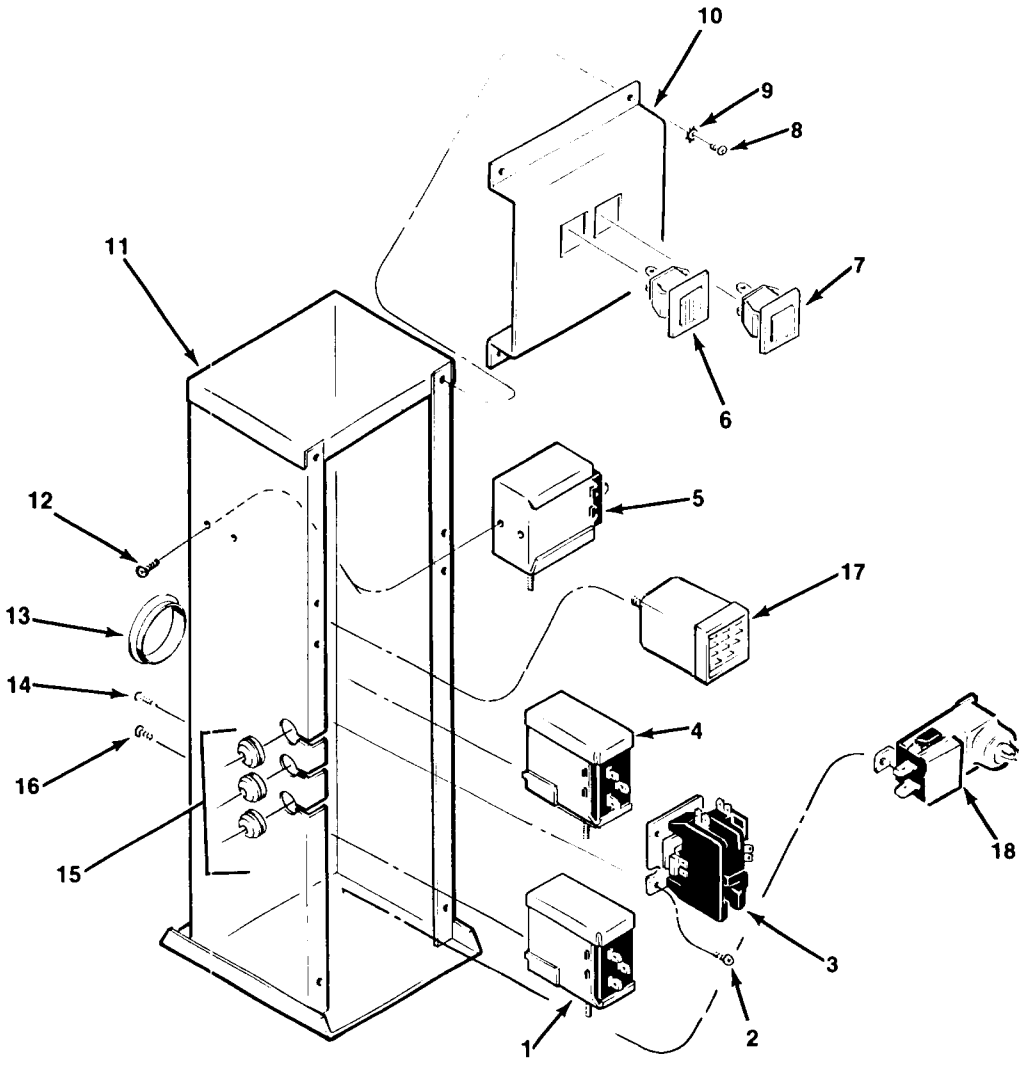

Item Number	Part Number	Description
1	11-0420-01	CONTROL LO PRESSURE
2	03-1403-17	SCREW NO. 8 x 3/8
3	12-2037-01	CONTACTOR 115/60/1
	12-2037-02	CONTACTOR 208-230/60/1
4	11-0402-01	AUGER DELAY
5	11-0388-02	CONTROL HI PRESSURE
6	12-2199-01	SWITCH, START-RESET 115/60/1
	12-2199-02	SWITCH, START-RESET 208-230/60/1
7	12-2200-01	SWITCH, ON-OFF 115/60/1
	12-2200-02	SWITCH, ON-OFF 208-230/60/1
8	03-1531-01	SCREW
9	03-1417-03	LOCK WASHER
10	A30543-001	SWITCH HOUSING
11	*No Number*	CONTROL BOX
12	03-1403-02	SCREW
13	12-1213-10	SNAP BUSHING
14	03-1403-02	SCREW
15	13-0557-00	GROMMET
16	03-1403-02	SCREW
17	12-2090-01	RELAY 115/60/1
	12-2090-04	RELAY 208-230/60/1
	ATTACHING PARTS	
	03-1417-01	LOCK WASHER
	03-1406-01	NUT 6-32
18	11-0354-00	BIN THERMOSTAT

Control Box Assembly — MH750 Water-Cooled

MH750
WIRING DIAGRAMS

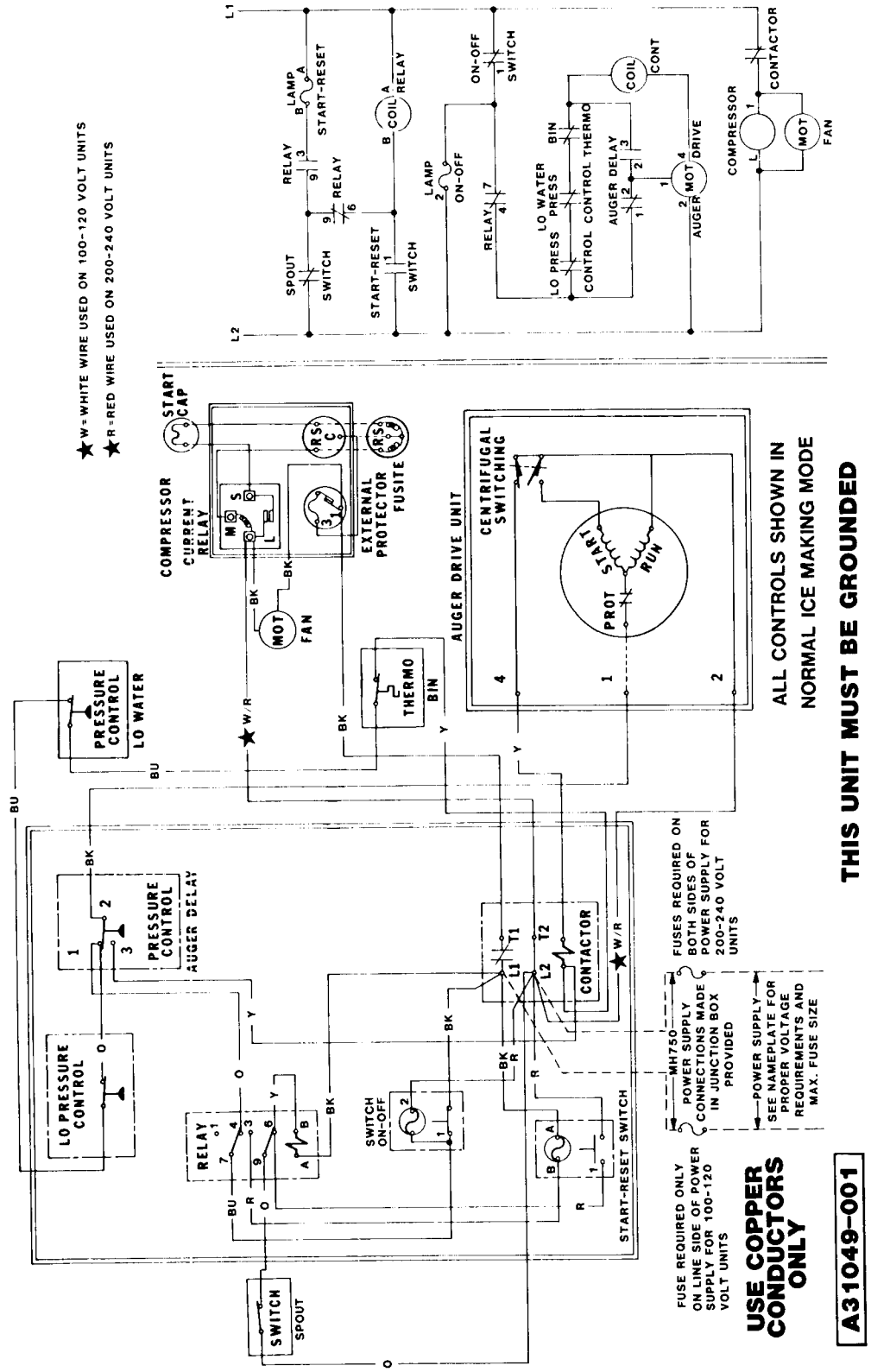

Wiring Diagram — Air-Cooled 115/60/1 *and* 230/60/1

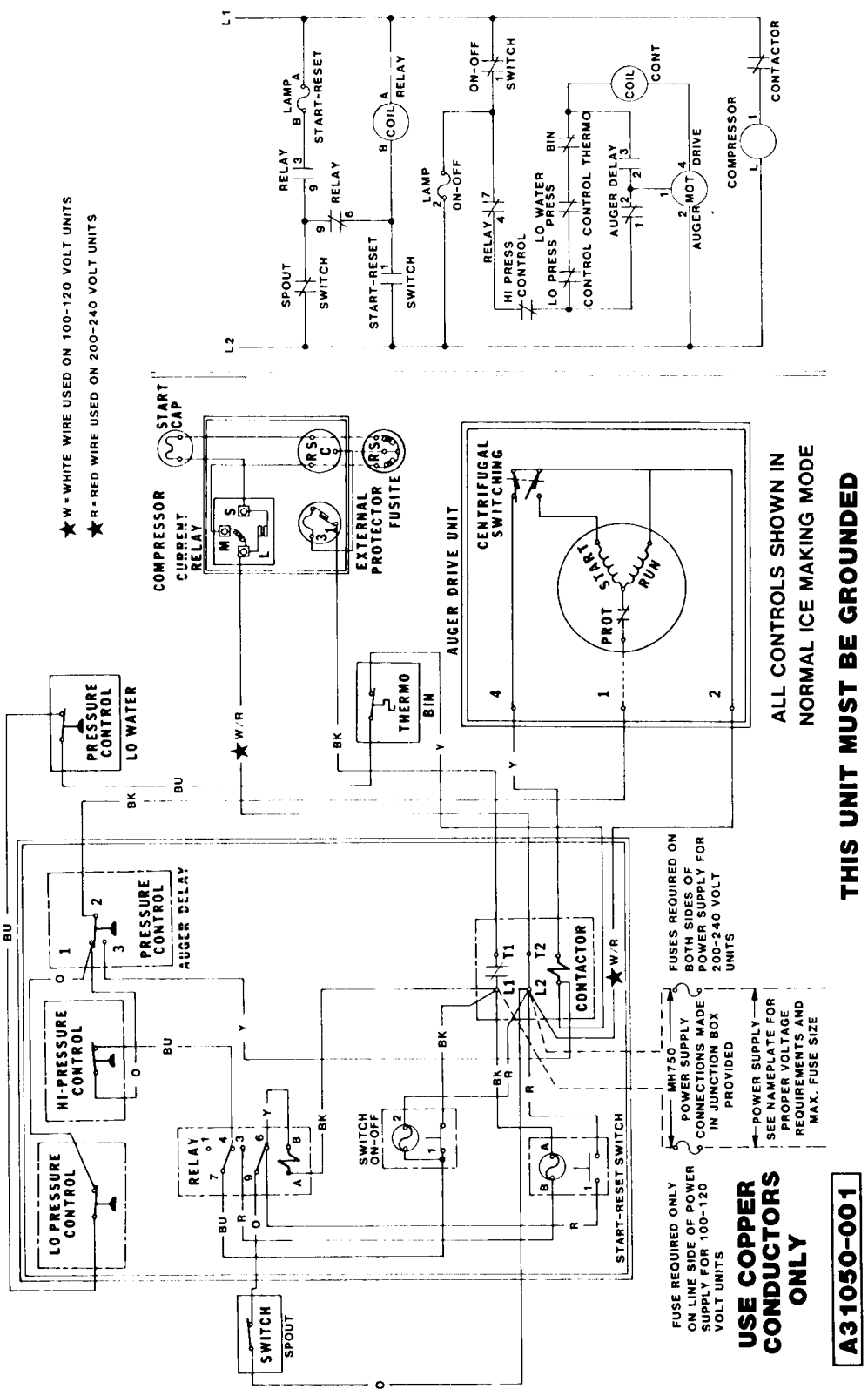

Wiring Diagram — Water-Cooled 115/60/1 *and* 230/60/1

ADJUSTMENT OF THE WATER REGULATOR ASSEMBLY — WATER-COOLED MODELS

To adjust the water regulator assembly:

1. To INCREASE the head pressures: Rotate the adjusting screw, on the water regulator assembly COUNTERCLOCKWISE.
2. To DECREASE the head pressure: Rotate the adjusting screw, on the water regulator assembly CLOCKWISE.

ADJUSTMENT OF THE WATER RESERVOIR FLOAT

The correct water level in the water reservoir should be at the level of the raised molded line, on the side of the body of the water reservoir. When the water level is above or below the raised molded line, adjustment can be performed to raise or lower the water level by bending the metal arm of the float, inside the water reservoir.

To adjust the water reservoir float:

1. To RAISE the water level:
   Hold one end of the metal arm of the float and slightly bend the float up.
2. To LOWER the water level:
   Hold one end of the metal arm of the float and slightly bend the float DOWN.
3. To perform MAJOR adjustment:
   When repair or replacement has been performed and the water level line between the water reservoir and the freezer assembly has been substantially altered:
   a. Loosen the three screws and lockwashers which attach the reservoir bracket and water reservoir to the freezer mount.
   b. Move the reservoir bracket UP or DOWN to properly position the water reservoir at the correct water line level within the freezer. The proper water level within the freezer is 1/2" to 3/4" below the top of the auger.
   c. When proper water level within the freezer is adjusted, re-tighten screws attaching the water reservoir bracket to the freezer mount.

REMOVAL AND REPLACEMENT OF THE AUGER, WATER SEAL, BEARINGS AND ICE BREAKER

WARNING

Be sue the electrical power supply to the icemaker is OFF before proceeding with removal procedures.

Auger, water seal, bearing and ice breaker are located in the freezer assembly.

1. Close the water inlet valve to the icemaker and drain the float chamber and freezer.
2. Remove screw and remove switch support from side panel. Remove elbow insulation.
3. Remove three Allen head screws and spout retaining brackets from the elbow and switch assembly. Lift and rotate elbow and switch assembly and remove elbow from ice breaker.
4. Remove bolts and washers and remove ice breaker from the freezer assembly.
5. Remove O-ring seals. Inspect for cuts or wear. Replace if worn.
6. Clean away the old grease from the top of the auger, and from the oil lip seal, and bearing in the ice breaker.
7. Inspect the bearing pressed into the ice breaker assembly and if it is to be replaced, remove the oil lip seal and remove the bearing.

NOTE

Replace seal if auger is removed. Anytime the auger is removed for inspection of water seal, use extra care in handling the water seal parts, so dirt or foreign matter are not deposited on the surfaces of the seal.

If there is any doubt about the effectiveness of the O-ring, REPLACE IT. A dirty, worn or faulty O-ring will cause a leak and ultimately require a second, time consuming removal and replacement procedure to be performed, that COULD HAVE BEEN PREVENTED.

8. Thread suitable length bolt, having No. 5/16-18 UNC-2B threads, into thread hole in the top of the auger.

NOTE

At the serviceman's discretion, the auger can be removed using a slide-hammer and adaptor combination device; or, a simple metal bar, or wood plank, with a hole drilled through the middle, larger than the bolt diameter, placed across the top of the opening to the freezing chamber. With a large flat washer, the bolt is inserted through the washer and hole in the bar or plank, and as the bolt is tightened, in the threads of the auger, it will slowly pull the auger loose and out of the chamber.

9. Remove the auger from the freezing chamber and slide the upper half of the water seal off of the bottom of the auger.
10. Remove four hex cap screws and washers which attach the freezer assembly, gasket and adaptors to the drivemotor assembly.
11. Raise the freezer assembly and temporarily secure the freezer assembly out of the way, to gain access and allow room to work. Be careful not to damage the gasket.
12. Using a suitable length and size wooden dowel or stick inserted through the top of the open freezer assembly, tap the lower half of the water seal out the bottom of the freezer assembly.
13. Always replace the water seal if the auger has been removed from the freezing chamber.

To replace the Auger, reverse the removal procedures.

REMOVAL AND REPLACEMENT OF THE COMPRESSOR ASSEMBLY

WARNING

Be sure the electrical power supply to the icemaker is OFF before proceeding with removal procedures.

To remove compressor:

1. Remove two screws and the cover from the compressor junction box.
2. Disconnect the electrical leads at the compressor junction box, that originate in the control box and fan motor.
3. Bleed off or blow the refrigerant charge through the Schrader valve.
4. Unsolder the suction line from the compressor.
5. Unsolder the discharge line from the compressor.
6. Unsolder the process header tube from the compressor and retain for installation on the replacement compressor.
7. Remove four bolts, lockwashers and washers which secure the compressor to the chassis mounting base.
8. Remove the compressor from the chassis.
9. To replace the compressor assembly, reverse the removal procedures.

NOTE

Always install a replacement drier, anytime the sealed refrigeration system is opened. Do not replace the drier until all other repair or replacement has been completed.

NOTE

Thoroughly evacuate the system to remove moisture and non-condensables.

10. When recharging the system with refrigerant, always check the nameplate for the specified refrigerant charge.

REMOVAL AND REPLACEMENT OF THE CONDENSER — AIR-COOLED MODELS

To remove the condenser:

1. Bleed off or blow the refrigerant charge through the Schrader valve.
2. Remove one screw and disconnect the drier brace and drier from the condenser shroud.
3. Unsolder and disconnect the condenser inlet tube at the condenser.
4. Unsolder and disconnect the condenser outlet tube at the condenser.
5. Remove three screws, lockwashers and washers securing the condenser to the chassis base.
6. Remove four screws that attach the control box to the condenser.
7. Remove the condenser from the chassis base.
8. To replace the condenser, reverse the removal procedure.

NOTE

Always install a replacement drier, anytime the sealed refrigeration system is opened. Do not replace the drier until all other repair or replacement has been completed.

NOTE

Thoroughly evacuate the system to remove moisture and non-condensables.

9. When recharging the system with refrigerant always check nameplate for the specified refrigerant charge.

REMOVAL AND REPLACEMENT OF THE CONDENSER — WATER-COOLED MODELS

To remove the water-cooled condenser:

1. Remove two screws and cabinet left front panel.
2. Bleed or blow the refrigerant charge through the Schrader valve.
3. Close the water inlet valve to the icemaker.
4. Unsolder the refrigerant inlet and outlet lines from the condenser.
5. Disconnect the water inlet and outlet lines from the condenser.
6. Remove two bolts, lockwashers and washers which secure the condenser to the chassis mounting base.
7. Remove the condenser from the cabinet.
8. To replace the condenser, reverse the removal procedure.

NOTE

Always install a replacement drier, anytime the sealed refrigeration system is opened. Do not replace the drier until all other repair or replacement has been completed.

NOTE

Thoroughly evacuate the system tc remove moisture and non-condensables.

9. When recharging the system with refrigerant always check nameplate for the specified refrigerant charge.

REMOVAL AND REPLACEMENT OF THE LIQUID LINE DRIER

To remove the drier:

1. Remove screw and drier brace attaching the drier to the condenser shroud on air-cooled models; and, the chassis base on water-cooled models.
2. Bleed off or blow the refrigerant charge through the Schrader valve.
3. Unsolder refrigerant lines at top and bottom of drier, remove the drier and separate the drier from the drier brace.

To replace the drier:

1. Remove the factory seals from the replacement drier and install the drier in the refrigerant lines with the arrow positioned in the direction of the refrigerant flow.

CAUTION

If the factory seal is broken on the replacement drier, exposing it to the atmosphere more than a few minutes, the drier will absorb moisture from atmosphere and lose substantial ability for moisture removal.

Be sure the replacement drier is installed with the arrow positioned in the direction of the refrigerant flow.

2. Install the drier brace on the drier.
3. Solder the drier into the lines, two places.
4. Purge the system and check for leaks.
5. Thoroughly evacuate the system to remove moisture and non-condensables.
6. Charge the system with refrigerant by weight. SEE NAMEPLATE for specifications.

REMOVAL AND REPLACEMENT OF THE DRIVEMOTOR ASSEMBLY

WARNING

Be sure the electrical power supply to the icemaker is OFF before proceeding with removal procedures.

To remove the drivemotor assembly:

1. Remove the four screws and lockwashers from botom of freezer assembly which fasten the freezer to the drivemotor assembly. Carefully lift the freezer off the gearmotor.
2. Remove the drivemotor cover and disconnect the three electrical wire leads.
3. Remove four screws that attach the gearmotor mounting plate to the ice machine base.
4. Remove three bolts, lockwashers and washers that attach the gearmotor to the mounting plate and remove the mounting plate.
5. Inspect the gearmotor and adapter housing(s) for signs of seal leakage. Replace the freezer water seal if leakage is evident.

6. Clean the adapter housing(s).

To replace the gearmotor assembly, reverse the removal procedure.

REMOVAL AND REPLACEMENT OF THE ELBOW AND SWITCH ASSEMBLY

WARNING

Be sure the electrical power supply to the icemaker is OFF before proceeding with removal procedures.

To remove the elbow and switch assembly:

1. Disconnect the electrical supply to the icemaker at the circuit breaker or fuse box.
2. Close the inlet water valve to the icemaker.
3. Remove the front panel and the top panels. Remove the elbow and transport tube insulation.
4. Loosen the screw on the screw clamp and U-channel securing the ice transport tube to the elbow and safety switch and separate the ice transport tube from the elbow.
5. Remove screw and remove switch support from the side panel.
6. Remove three Allen head screws and spout retaining brackets from the freezer assembly and elbow and switch assembly.
7. Lift the elbow and switch assembly UP to clear the top of the freezer assembly.
8. Remove screws and the switch from the switch actuator housing.
9. Rotate the retainer ring 90-degrees to unlock the retainer ring and the switch actuator housing from the elbow assembly and separate the parts from the elbow.
10. Inspect the rubber diaphragm for cuts, tearing or excessive wear.

To replace the elbow and switch assembly, reverse the removal procedure.

REMOVAL AND REPLACEMENT OF THE FAN MOTOR ASSEMBLY — AIR-COOLED MODELS

WARNING

Be sure the electrical power supply to the icemaker is OFF before proceeding with removal procedures.

NOTE

Before beginning this procedure, observe the fan blade position on the shaft of the fan motor and mark the fan blade so it will be correctly positioned during reassembly. Direction of air flow should be toward the fan motor.

To remove the fan motor assembly:

1. Disconnect the electrical supply to the icemaker at the circuit breaker or fuse box.
2. Remove four screws and the front panel.
3. Remove screws and the top panel.
4. Disconnect the electrical lead from the fan motor at the compressor control box.
5. Remove two screws securing the motor bracket to the chassis base and remove the fan motor and motor bracket from the chassis.
6. Remove the nut from the end of the fan motor shaft and remove the fan blade.
7. Remove four screws securing the fan motor to the motor bracket and separate the motor from the bracket.

To replace the fan motor assembly, reverse the removal procedure.

REMOVAL AND REPLACEMENT OF THE FREEZER ASSEMBLY

WARNING

Be sure the electrical power supply to the icemaker is OFF before proceeding with removal procedures.

To remove the freezer assembly:

1. Disconnect the electrical supply to the icemaker at the circuit breaker or fuse box.
2. Close the inlet water valve to the icemaker.
3. Remove Tygon tube from the freezer assembly that connects to the water reservoir assembly.
4. Bleed off or blow the refrigerant charge through the Schrader valve.
5. Follow steps on removal and replacement of the auger, water seal, bearings and ice breaker.
6. Unsolder the suction line from the compressor.
7. Unsolder the capillary line at the drier.
8. Remove four screws, lockwashers and washers which attach the bottom of the freezer assembly to the drivemotor assembly.

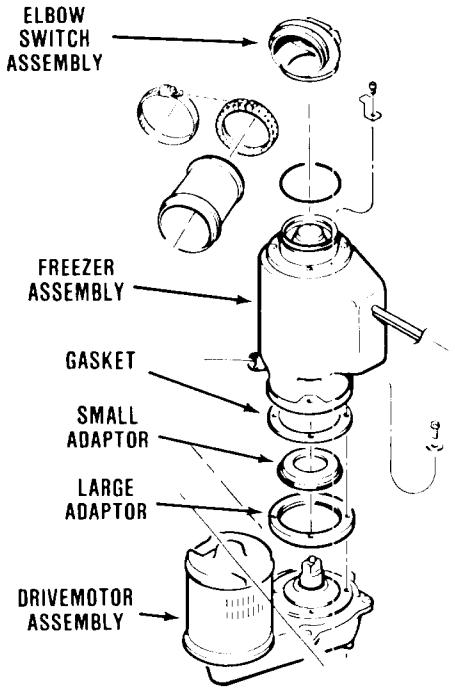

Removal of the Freezer Assembly

9. Lift the freezer assembly up and off of the drivemotor assembly.

To replace the freezer assembly, reverse the removal procedure.

NOTE

Always install a replacement drier, anytime the sealed refrigeration system is opened. Do not replace the drier until all other repair or replacement has been completed.

NOTE

Thoroughly evacuate the system to remove moisture and non-condensables.

10. Refer to name plate specifications and recharge refrigeration system by weight.

REMOVAL AND REPLACEMENT OF THE WATER REGULATOR VALVE ASSEMBLY — WATER-COOLED MODELS

To remove the water regulator assembly refer to slide out chassis procedure and complete all steps.

1. Close the inlet water valve to the icemaker.
2. Bleed off or blow the refrigerant charge through the Schrader valve.
3. Unsolder the water regulator valve capillary tube from the discharge line process header.
4. Disconnect the water inlet and outlet lines from the water regulator valve.
5. Remove the two screws from the valve bracket to the machine base and remove the water regulator valve.
6. To replace the water regulator assembly, reverse the removal procedure.

NOTE

Always install a replacement drier, anytime the sealed refrigeration system is opened. Do not replace the drier until all other repair or replacement has been completed.

NOTE

Thoroughly evacuate the system to remove moisture and non-condensables.

7. Refer to name plate specifications and recharge refrigeration system by weight.

REMOVAL AND REPLACEMENT OF THE WATER RESERVOIR ASSEMBLY

To remove the water reservoir:

WARNING

Be sure the electrical power supply to the icemaker is OFF before proceeding with removal procedures.

NOTE

Be prepared with container to catch water left in lines disconnected in next steps to prevent draining water on parts, components, electrical lines, etc.

1. Close the inlet water valve to the icemaker.
2. Disconnect the water inlet tube from the water reservoir assembly.
3. Remove two tubes from the bottom of the water reservoir assembly.
4. Unscrew and remove the wing nut from the bottom of the water reservoir assembly.
5. Lift and remove the water reservoir assembly from the mounting bracket.

To replace the water reservoir assembly, reverse the removal procedure.

NOTE

Check that the installed replacement water reservoir assembly float moves freely. Bend metal arm of float to adjust, as necessary. The correct water level in the water reservoir is the point of the raised molded line, on the side of the body of the water reservoir.

REMOVAL AND REPLACEMENT OF THE LOW WATER PRESSURE SAFETY CONTROL ASSEMBLY

WARNING

Be sure the electrical power supply to the icemaker is OFF before proceeding with removal procedures.

1. Disconnect the electrical supply to the icemaker at the circuit breaker or fuse box.
2. Close the inlet water valve to the icemaker.
3. Remove screws and the right side panel.
4. Remove two screws and remove shield.
5. Disconnect electrical lead wires.
6. Using a back-up wrench, unscrew the low water pressure control from the unit.

To replace the low water pressure safety control, reverse the removal procedure.

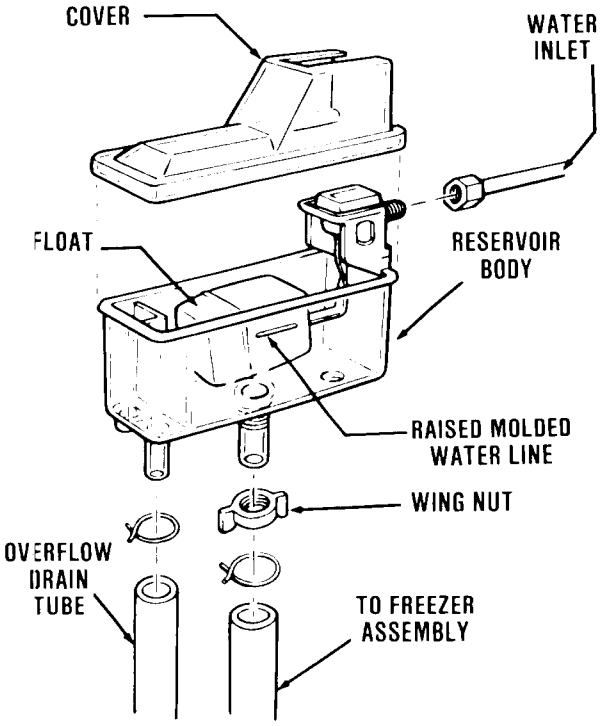

Removal of the Water Reservoir Assembly

SERVICE DIAGNOSIS

The Service Diagnosis is for use in aiding the serviceman in diagnosing a particular problem for pin-pointing the area in which the problem lies, thus an ever available reference for proper corrective action.

The following charts list corrective actions for the causes of known symptoms of certain problems that can occur.

INTRODUCTION

SYMPTOM	POSSIBLE CAUSE	CORRECTION
Water Leaks.	Defective water seal.	Replace seal.
	Gravity feed line leaking.	Check hose clamps.
	Water level in reservoir too high.	Adjust water level to molded line on the float assembly.
	Storage bin drain and connecting fittings.	Check and repair.
Excessive noise or chattering.	Mineral or scale deposit on auger and inner freezing chamber walls.	For severe deposit, remove and manually polish auger, sand inner chamber walls of freezer barrel.
		For lighter concentration, use Scotsman Ice Machine Cleaner periodically.
	Intermittent water supply.	Check and clean water strainer.
		Check gravity feed line for air lock.
		Check to be sure float orifice is not restricted.
		Check incoming water supply.
		Remove air lock.
	Water level in reservoir too low.	See CORRECTION for Water Leaks above.
	Gear reducer loose on frame.	Tighten gear reducer.
	Motor compressor not solid on rubber mounts.	Repair or replace rubber mounts.
	Gearmotor end-play or worn bearing.	Repair or replace bearing.
Making wet ice. (ice melts too quickly, is not cold enough to properly cure in the bin.)	Surrounding air temperature too high.	Correct or move cabinet.
	Under or over-charge of refrigerant.	Recharge with proper amount.

SYMPTOM	POSSIBLE CAUSE	CORRECTION
Making wet ice (Cont'd)	Back pressure too high.	Overcharge of refrigerant, faulty compressor or high head pressure. Lower pressure as indicated.
	Faulty compressor.	Replace compressor.
Low ice production.	Loss of refrigerant. Under or over-charge of refrigerant.	Check and recharge. See NAME-PLATE for charge correction.
	Dirty or plugged condenser.	Clean condenser.
	Low water level in water reservoir.	See CORRECTION for water leaks above.
	Partial restriction in capillary tube or drier.	Moisture in system. Overcharge of oil in system. Remove charge by blowing back through cap tube.
		Replace drier, evacuate and recharge.
	Inlet water strainer partially plugged.	Remove screen and clean.
	Corroded or stained auger due to water condition.	Remove auger and clean, or use Scotsman Ice Machine Cleaner. See Maintenance Section.
Gearmotor noise.	Low on lubricant.	Remove case cover to check for proper lubricant level. Top of gears should be covered. Use: Sun Oil Company Prestige 50-EP
Icemaker will not operate.	Blown fuse in line.	Replace fuse and check for cause of blown fuse.
	Bin thermostat set too high.	Adjust thermostat. Set at 35-degrees cut-out, 45-degrees cut-in.
	Loose electrical connection.	Check wiring.
	Switch in OFF position.	Set switch to ON position.
	Inoperative master switch.	Replace switch or thermal overload.
	Off on hi-pressure manual-reset control. (Water-cooled only)	Reset.
	Low supply water pressure.	Restore water pressure.

SYMPTOM	POSSIBLE CAUSE	CORRECTION
Icemaker continues to operate with full storage bin.	Bin thermostat not properly set or is defective.	Re-set or replace bin thermostat. Re-set to 35-degrees cut-out, 45-degrees cut-in.
Compresor cycles intermittently.	Low voltage.	Check for overloading.
	Dirty condenser.	Clean condenser.
	Air circulation blocked.	Remove cause or move unit.
	Inoperative condenser fan motor.	Replace motor.
	Non-condensable gases in system.	Check for gas leaks, evacuate and recharge.
	Bin thermostat differential too small causing short cycling.	Widen differential 35-degrees cut-out, 45-degrees cut-in.
	Cycling on elbow switch.	Set or replace bin thermostat.
	Low on refrigerant causing low pressure control to cycle.	Check for leaks.
Icemaker operates but makes no ice.	Loss or undercharge of refrigerant.	Check for leaks and recharge. See NAMEPLATE for correct charge.
	Water not entering freezing chamber.	Plugged strainer or supply line. Check and clean. Air lock in gravity feed line. Check and remove air lock.
	Moisture in system.	Check, evacuate, replace drier. Recharge. See NAMEPLATE for correct charge.
	Water seal leaking.	Replace seal.
	Drivemotor or drive coupling stripped.	Repair or replace drivemotor or drive coupling.
Red Start-Reset Light is on.	Bin Control failed.	Replace Bin Control
	Improperly installed Bin Control Bracket.	Install per directions on page 5.
	Power failure.	Inquire about power interruption.

MAINTENANCE & CLEANING INSTRUCTIONS

GENERAL

The periods and procedures for maintenance and cleaning are given as guides and are not to be construed as absolute or invariable. Cleaning especially will vary, depending upon local water conditions and the ice volume produced and, each icemaker must be maintained individually, in accordance with its own particular location requirements.

ICEMAKER

THE FOLLOWING MAINTENANCE SHOULD BE SCHEDULED AT LEAST TWO TIMES PER YEAR ON THIS ICEMAKER. CALL YOUR AUTHORIZED SCOTSMAN SERVICE AGENCY.

1. Check and clean water line strainers.
2. Check that the water level in the water reservoir is at the water level on the side of the float.
3. Remove cover from water reservoir and depress the float to ensure that a full stream of water enters the reservoir.
4. Check that the icemaker is level, in side-to-side and front-to-rear directions.
5. Clean the water reservoir and interior of the freezer assembly, using a solution of SCOTSMAN Ice Machine Cleaner. Refer to CLEANING — Icemaker.

NOTE

Cleaning requirements vary according to local water conditions and individual user operation. Visual inspection of the auger before and after cleaning will indicate frequency and procedure to be followed in local areas.

6. When doubtful about refrigerant charge, install refrigerant gauges on Schrader valves and check gauge for compressor head pressure:

   AIR-COOLED MODELS: Varies between 130 and 145 PSIG.

   WATER-COOLED MODELS: Set at 135 PSIG. Adjust screw on top of water regulator valve to raise or lower head pressure.

7. Check gauge for suction line pressure:

   Varies between 8 to 12 PSIG, depending upon inlet water temperature and ambient air temperature.

8. Check drivemotor operation:

   Normal operating temperatures are about 160-degrees F., which is hot to touch.

9. Check operation of the centrifugal sensing switch:

   Switch will OPEN between 850-950 RPM and the compressor STOPS, with the drivemotor operating. Switch will CLOSE between 1100-1250 RPM and the compressor will RESTART, with drivemotor building back up to normal operating speed.

WARNING

Disconnect electrical power supply before removal procedures.

10. Remove three Allen head screws and spout retaining brackets from the freezer assembly end of the elbow and switch assembly.
11. Lift the elbow and switch assembly and set aside to gain access to the top of the Freezer Assembly.
12. Remove four capscrews, lockwashers and the ice breaker assembly from the top of the freezer assembly for inspection.
13. Retain the O-Ring for replacement during reassembly. Inspect the O-ring for cuts, tears or excessive wear, causes for replacement.
14. Inspect the lip seal and the top bearing seated in the ice breaker, wipe clean of old grease and apply a coating of Taylor Freezer food grade grease, SCOTSMAN P/N 19-0569-01 or equivalent. Replace all parts removed in steps 10 thru 14.
15. Clean the air-cooled condenser, using vacuum cleaner, whisk broom or brush. Instruct customer to clean frequently and to be sure icemaker and fan motor are OFF.
16. Check that fan blades move freely, are not touching any surfaces and are not bent or out of balance.
17. Check for refrigerant leaks.
18. Check for water leaks. Pour water down bin drain to be sure that drain line is open and clear.
19. Check the quality of ice. Ice should be wet when formed, but will cure rapidly to normal hardness in the bin.
20. Check the bin thermostat control bulb.

NOTE

The bin thermostat is factory set at 10-degrees F. differential and should keep the entire icemaker shut off at least 20 minutes in high ambient temperatures, longer in low ambient temperature during normal operation. Settings are 35-degrees F. CUT-OUT and 45-degrees F. CUT-IN.

21. Check the elbow and switch assembly.

NOTE

The elbow and switch assembly is manually reset and functions as a safety switch, to automatically stop the icemaking process if the bin thermostat control were to fail and cause ice to jam up in the ice transport tube.

CLEANING — Icemaker

1. PRESS the master ON-OFF pushbutton to OFF.
2. Remove screws, top and the front panel.
3. Remove all ice from the ice storage bin.
4. Remove the reservoir cover and block the float in the water reservoir up to stop water flow.
5. Disconnect the tube between the water reservoir and the bottom of the freezer assembly and drain water from the reservoir and tube. Reconnect the tube.

WARNING

SCOTSMAN Ice Machine Cleaner contains Phosphoric and Hydroxyacetic acids. These compounds are corrosive and may cause burns. If swallowed, DO NOT induce vomiting. Give large amounts of water or milk. Call Physician immediately. In case of external contact flush with water. KEEP OUT OF THE REACH OF CHILDREN.

6. Prepare cleaning solution: Mix six ounces of SCOTSMAN Ice Machine Cleaner with one and one-half quarts of hot water.
7. Slowly pour the cleaning solution into the water reservoir.
8. PRESS the master ON-OFF pushbutton to ON.
9. Continue to slowly pour the cleaning solution into the water reservoir, maintain level just below the reservoir overflow.
10. Continue icemaking, using the cleaning solution, until all the solution is used up and the water reservoir is almost empty. DO NOT allow the icemaker to operate with empty reservoir.
11. PRESS the master ON-OFF pushbutton to OFF.
12. Wash and rinse the water reservoir.
13. Remove the block from the float in the water reservoir.
14. PRESS the master ON-OFF pushbutton to ON.
15. Continue icemaking for at least 15 minutes, to flush out any cleaning solution. Check ice for acid taste - continue icemaking until ice tastes sweet.
16. PRESS the master ON-OFF pushbutton to OFF.

CAUTION

DO NOT use ice produced from the cleaning solution. Be sure none remains in the bin.

17. Remove all ice from the ice storage bin.
18. Add warm water to the ice storage bin and thoroughly wash and rinse all surfaces within the bin.
19. Clean and sanitize the ice storage bin each week.

MH750R

TABLE OF CONTENTS

GENERAL INFORMATION & INSTALLATION
- Introduction 3
- For the Installer 5
- Location and Leveling 6
- Ice Transport Tube Installation 7
- Remote Condenser and Pre-Charged Lines 8
- Coupling Instructions 10
- For the Electrician 11
- For the Plumber 12
- Final Checklist 13

OPERATING INSTRUCTIONS
- Start-Up 14
- Icemaker 15
- Electrical Refrigeration 16

COMPONENT DESCRIPTION 17

ELECTRICAL SEQUENCES 21

MAINTENANCE & CLEANING INSTRUCTIONS
- Icemaker 25
- Cleaning - Icemaker 26
- Remote Condenser 28

SERVICE DIAGNOSIS 29

ADJUSTMENT PROCEDURES
- Bin Thermostat Control 33
- Automatic Expansion Valve 33
- Water Reservoir Float 34

REMOVAL AND REPLACEMENT PROCEDURES
- Water Reservoir Assembly 34
- Auger, Water Seal, O-Ring, Ice Breaker Assembly 35
- Freezer Assembly 37
- Gear Drivemotor 38
- Gearmotor Assembly 38
- Automatic Expansion Valve 40
- Compressor Assembly 40
- Head Pressure Regulator Valve 42
- Liquid Line Drier 42
- Charging Procedures 43

LIST OF ILLUSTRATIONS

- Specifications 4
- Location and Leveling 6
- Transport Tube Assembly 7
- Pre-Charged Lines - Installation 9
- Coupling - Pre-Charged Tubing 10
- Electrical Connections 11
- Water and Drain Connections 12
- Final Checklist 13
- Water Schematic 15
- Refrigeration Schematic 16
- Component Description 18
- Maintenance and Cleaning 27
- Adjustment Procedures 33
- Removal and Replacement 34

PARTS LIST AND WIRING DIAGRAMS
- (Printed in yellow) 1

PARTS LIST:
- Component Location 2
- Cabinet Assembly 3
- Refrigeration System 4
- Water System 5
- Freezer Assembly 6
- Elbow and Switch Assembly 7
- Drivemotor Assembly 8
- Compressor Assembly 9
- Remote Condenser 10
- Control Box 11

WIRING DIAGRAM:
- MH750RE-1A (115/60/1) Remote Air-Cooled 12

THIS PAGE
INTENTIONALLY
LEFT BLANK

MH750R GENERAL INFORMATION AND INSTALLATION

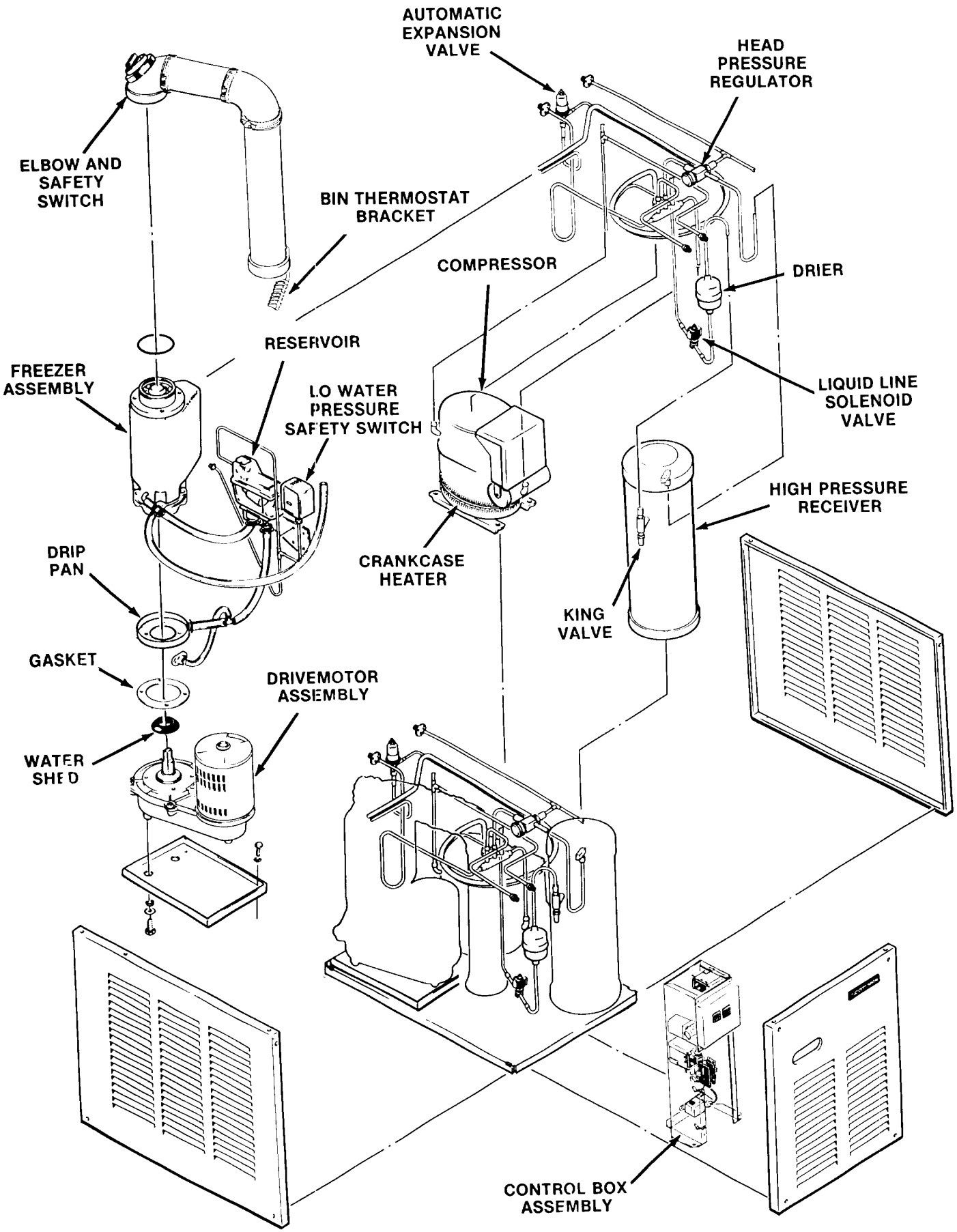

MH750R GENERAL INFORMATION AND INSTALLATION

INTRODUCTION

These instructions provide the specifications and the step-by-step procedures for the installation, start up and operation for the Scotsman Model MH750R modular nugget icemakers with remote condenser.

The Modular MH750R is a quality designed, engineered, constructed and thoroughly tested icemaking system, providing the utmost in flexibility to fit the needs of a particular user.

The model MH750R can be installed with either of two remote condensers and with either of two lengths of pre-charged refrigerant lines.

Single circuit and two circuit condensers are available. The single circuit condenser can accommodate a single icemaker. The two circuit condenser can accommodate two seperate icemakers.

In any of the above installations the sets of pre-charged refrigerant lines to be used are the RTCM225 25-foot line kit or the RTCM240 40-foot line kit. These pre-charged refrigerant line kits are a one-time, initial charge type of hardware; once the seal is severed the lines cannot be disconnected without losing the refrigerant charge.

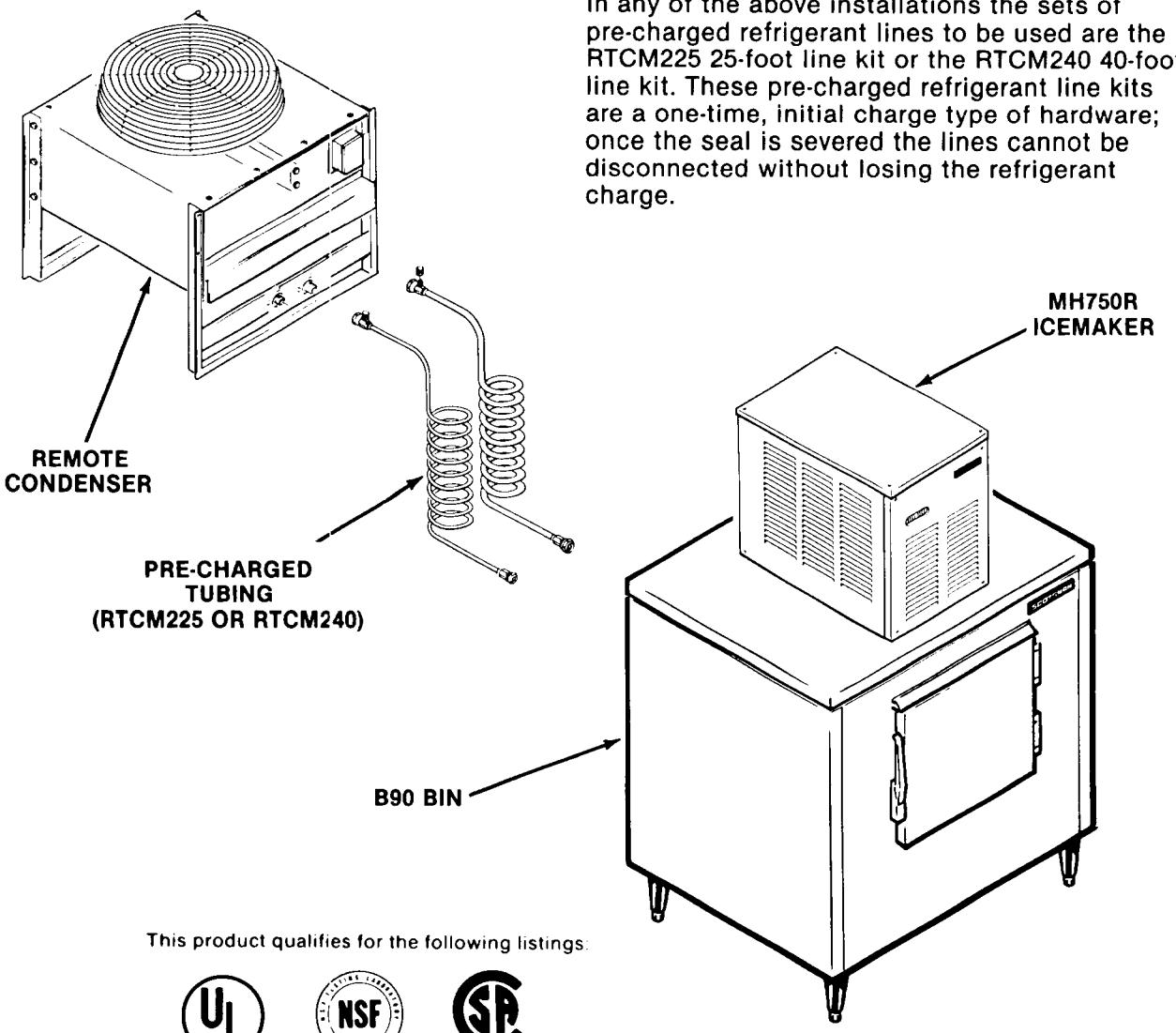

This product qualifies for the following listings:

This icemaker has been engineered to our rigid safety and performance standards. The National Sanitation Foundation (NSF) seal, signifies that it is listed with the NSF and that it complies with the materials and construction standards of the NSF. In addition, the Underwriters Laboratories, Inc., (UL) Listing Mark signifies that its construction and design have been inspected and tested by them. NSF, UL inspectors also periodically examine production icemakers at the factory to assure continued compliance.

To retain the safety and performance built into this icemaker, it is important that installation and maintenance be conducted in the manner outlined in this manual.

MH750R SYSTEM SPECIFICATIONS

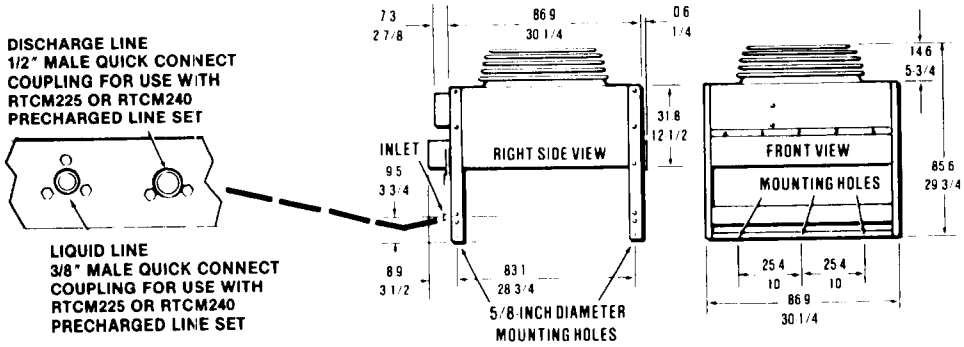

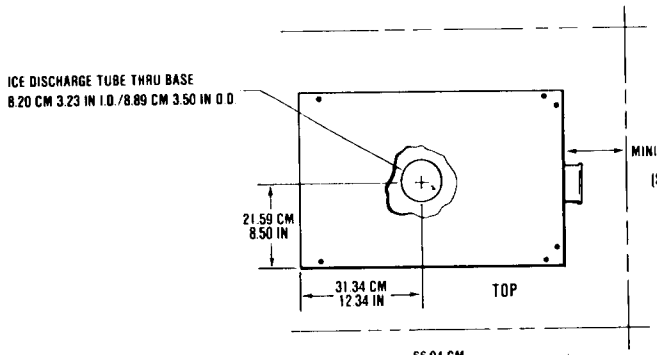

(Except for side by side installation on B90 bin.)

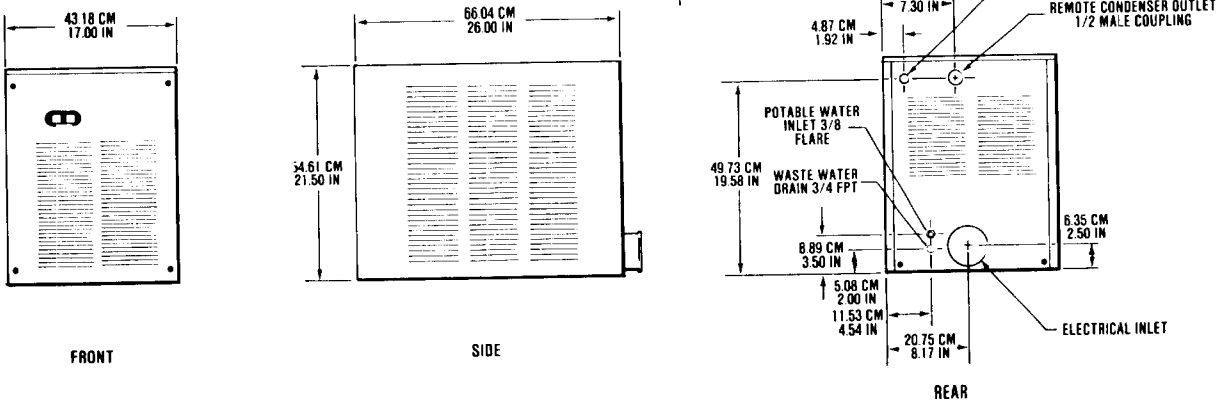

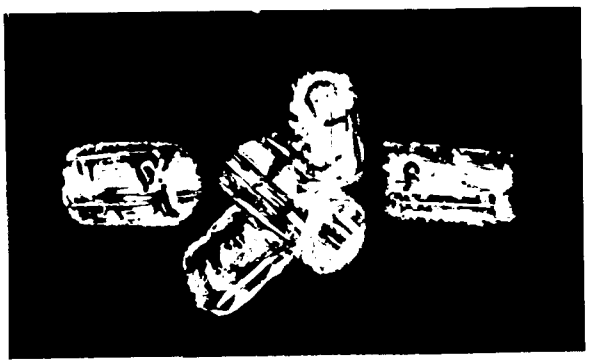

ICE NUGGETS

MH750R FOR THE INSTALLER

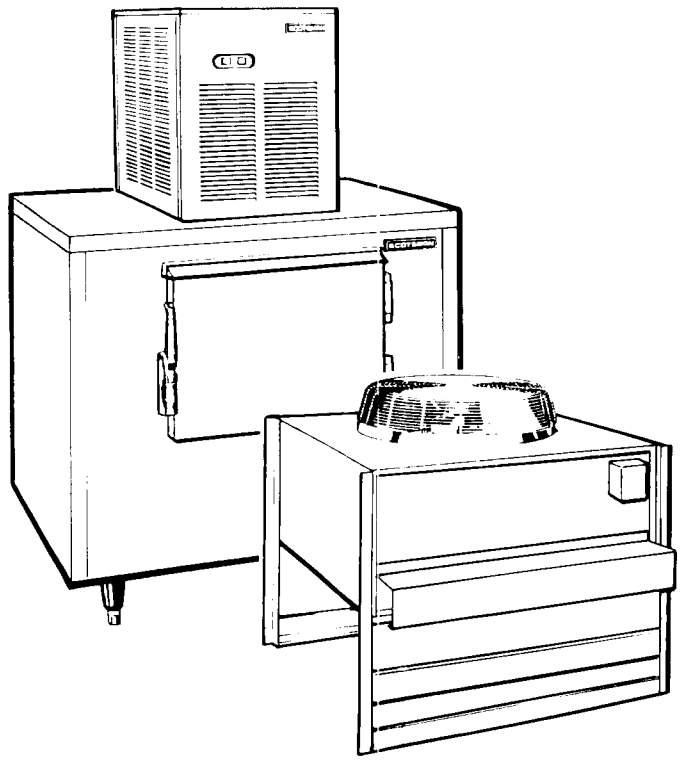

EQUIPMENT LIST/MH750R ICE SYSTEM

All of the following components must be available before assembly.

Icemaker - MH750RE-1A

Remote Condenser - RC151-32B or RC302-32B

STORAGE BIN - With related bin tops, refer to listing below

We reserve the right to make product improvements at any time. Specifications and design are subject to change without notice.

SPECIFICATIONS

Model Number	(Height - w/o Legs) Dimensions H" x W" x D"	Cube	Cond. Type	Finish **	Basic Electrical	Comp. H.P.	No. of Wires	Min. Circuit Ampacity †	★ Max. Fuse Size	Ship. Wt. lbs./kg.
MH750RE-1A	21½ x 17 x 26	Nuggets	Remote	EC	115/60/1	3/4	2	16.0	25	195/88

**EC Charcoal Brown high-gloss, baked enamel finish on leathergrain embossed steel.

†Use this value to determine minimum wire size as per National Electric Code Standards

★ Or HACR type circuit breakers.

SPECIFICATIONS

Model Number	Dimensions H" x W" x D"	Cond. Unit	Basic Electrical	Comp. H.P.	Min. No. of Wires	Circuit Ampacity †	Max. Fuse Size	Ship. Wt. lbs./kg.
RC151-32B	29¾ x 32 x 39¾	R-Air	208-230/60/1	—	2	2.0	15	115/52
RC302-32B	29¾ x 32 x 39¾	R-Air	208-230/60/1	—	2	2.0	15	135/61

Produces up to 510 lbs. of ice at 90°F condenser air, 90°F indoor air and 70°F water. Ice capacity will vary depending upon air and water temperatures.

IMPORTANT OPERATING REQUIREMENTS

	MINIMUM	MAXIMUM
* Air Temperatures	50°F (10.0°C)	100°F (38°C)
Water Temperatures	40°F (4.4°C)	100°F (38°C)
Water Pressures	20 lbs. gauge	120 lbs. gauge
Electrical Voltage Variations Voltage rating specified on nameplate	-10%	+ 10%

* This does not include the remote condenser. Remote condensers are designed to operate in outdoor installations in a temperature range of -20° to 120° F.

Extended periods of operation at temperatures exceeding these limitations constitutes misuse under the terms of Scotsman Manufacturer's Limited Warranty, resulting in a loss of warranty coverage.

OPTIONAL STAINLESS STEEL PANEL KITS

SPKMH750A replaces top, front and 2 side panels. Not factory installed.

STORAGE BINS:

The MH750R is dimensioned to fit on the following bins:

BH500, HTB500 for use with KBT10 Top.

B60 and BX25 for use with KBT9 Top.

B90 and BX83 for use with KBT4H Top.

BH750 and BH1000 fits with KBT8 2 machines side by side.

PRE-CHARGED REFRIGERANT TUBE KITS

RTCM225 25 foot pre-charged with R12 Refrigerant tubing with connectors.
RTCM240 40 foot pre-charged with R12 Refrigerant tubing with connectors.

MH750R FOR THE INSTALLER

LOCATION AND LEVELING — ICEMAKER

////////////////////// CAUTION //////////////////////

This icemaker is NOT designed for outdoor installations or where air temperature is below 50-degrees F. or above 100-degrees F., and the water temperature is below 40-degrees F. or above 100-degrees F. Operation at temperatures exceeding these limitations will constitute misuse under the terms of the SCOTSMAN Manufacturer's limited warranty coverage.

This does not include the Remote Condenser. Remote condensers are designed to operate in outdoor installations in a temperature range of -20° to 120° F.

//

NOTE

Prior consideration for location site shall include:

Minimum room temperatures 50-degrees F.
Maximum room temperature 100-degrees F.

Water inlet temperatures:
Minimum 40-degrees F.
Maximum 100-degrees F.

SERVICE ACCESS: Adequate space for all service connections through the back of the Cabinet. A six-inch minimum clearance at back.

1. Position the bin in the selected permanent location.
2. Level the selected bin and top in both the left-to-right and front-to-back directions.
3. Install bin top. Remove knockout of location to be used.
4. Carefully lift the MH750R onto bin top, over knockout.

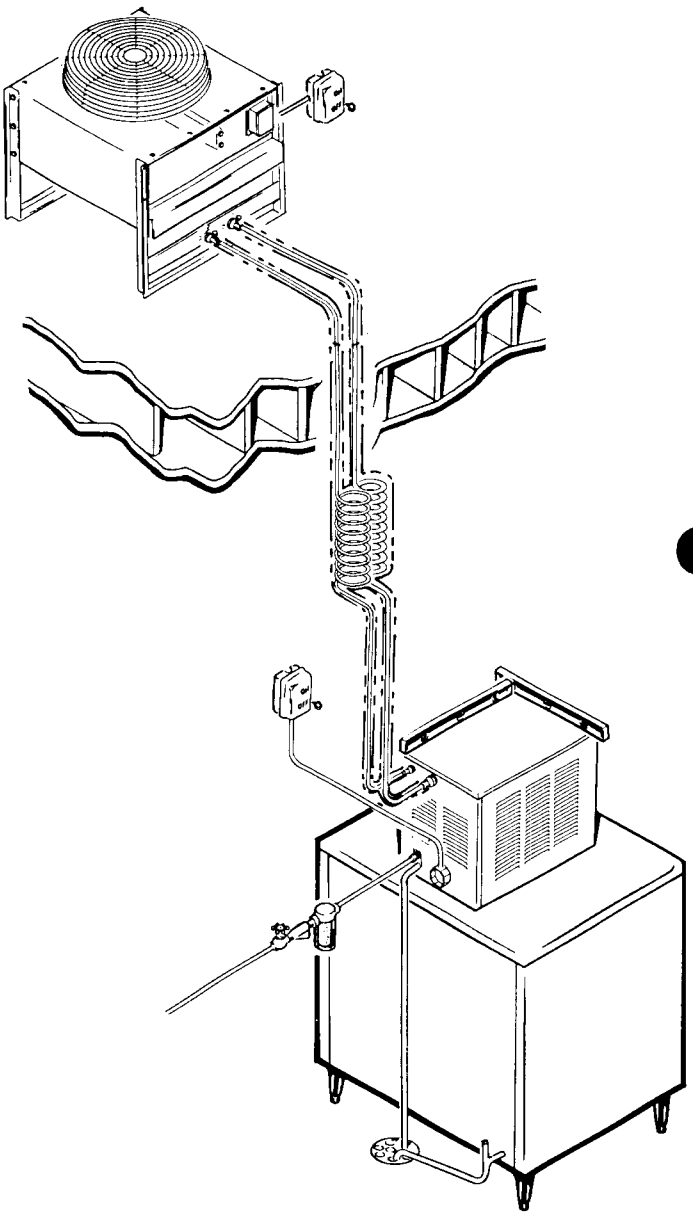

MH750R FOR THE INSTALLER

INSTALL TRANSPORT TUBE ASSEMBLY

The model MH750R is designed to be installed on top of an ice storage bin and the ice transport tube and bin thermostat bracket extend through the cabinet base and into the ice storage bin.

The ice transport tube, bin thermostat bracket must be assembled and installed before operation.

1. Remove cabinet top, front and both side panels.
2. Remove packing material and remove ice transport tube parts.
3. Carefully uncoil bin thermostat capillary tube and bin thermostat bracket to gain enough length for assembly.
4. Attach the bin thermostat bracket to the long tube using the two screws provided. Insert the bin thermostat bracket end through the center hole in base. Install the o-rings onto the grooves in the horizontal ice transport tube and, attach the vertical tube to the horizontal tube with the screw clamp and "U" channels provided.
5. Insert bin thermostat bracket and ice tube into center hole in base of icemaker and rotate the tube until arrows line up.

CAUTION

Lining up arrows between elbow and vertical tube is vital for proper operation of bin thermostat. Water dripping down directly on the bin thermostat bracket can cause the icemaker to shut off before the bin is full of ice.

6. Route bin thermostat capillary tube in a clean path from the bin thermostat control to the bin thermostat bracket. DO NOT KINK or touch other components in the cabinet.

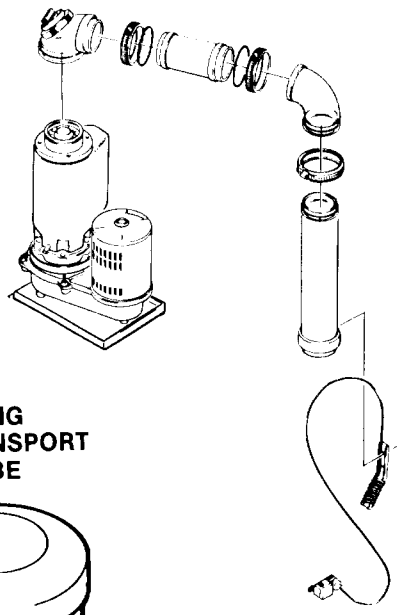

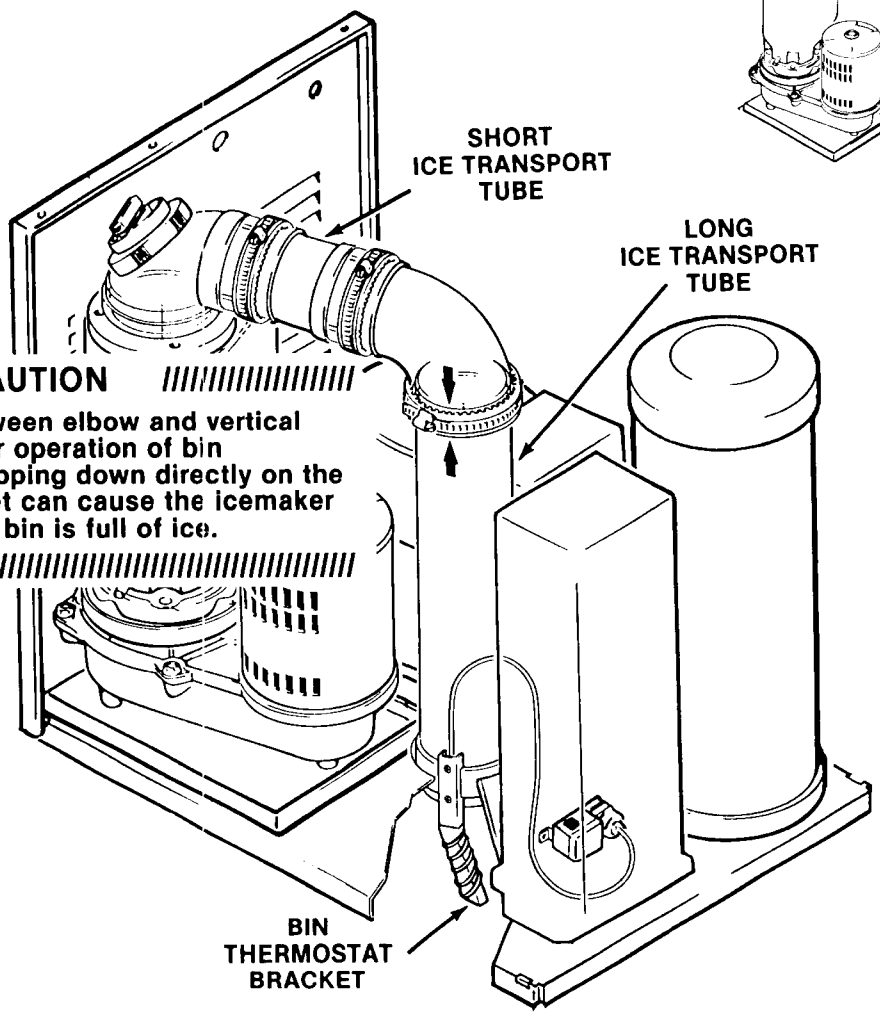

CAUTION

Lining up arrows between elbow and vertical tube is vital for proper operation of bin thermostat. Water dripping down directly on the bin thermostat bracket can cause the icemaker to shut off before the bin is full of ice.

REMOTE CONDENSER AND PRE-CHARGED LINES — INSTALLATION

Location Considerations:

Remote Condenser - Must be above icemaker. Limited to a 40-foot length or a 25-foot lingth of pre-charged refrigerant lines from the rear of the icemaker chassis to the remote condenser.

Best available location protected from the extremes of dirt, dust, and sun. The condenser location is very important for optimum performance as reflected roof heat or stagnant air will adversely affect ice production.

Must meet local building code installation requirements.

Remote Condenser - Roof Attachment:

1. Install and attach the remote condenser to the roof of the building using the methods and practices of building standards that conforms to and meets the local building code requirements in your area.

Pre-Charged Refrigerant Lines:

1. Each set of pre-charged refrigerant lines consist of a 3/8-inch diameter self-sealing LIQUID line and a 1/2-inch diameter self-sealing DISCHARGE line. One coupling on each line is fitted with a charging port, which provides the service man with access for service gauges at the REMOTE CONDENSER location when necessary.

NOTE

The openings in the building ceiling or wall listed in the next step are minimuim sizes recommended through which the pre-charged refrigerant lines may pass, and are to be considered only if they conform to and meet the local building code requirements in your area.

2. Minimum recommended size for opening required in a ceiling or wall for the precharged refrigerant lines to pass is 1-3/4 diameter.

PRE-CHARGED TUBING KIT ROUTING:

CAUTION

Do not connect pre-charged tubing until all routing and forming of tubing is complete. See Page 10 for connecting instructions.

Excess Length of Pre-Charged Refrigerant Lines:

At installations where the icemaker chassis-to-remote condenser refrigerant line path is substantially LESS than the 25-foot length or 40-foot length of pre-charged refrigerant line kit to be installed, route and dress the excess refrigerant line as follows:

1. Follow straight line routing when possible.
2. Retain excess pre-charged refrigerant line INSIDE the building.
3. SPIRAL the excess footage of the pre-charged refrigerant line(s) in the best selected INSIDE location and in a manner that PREVENTS refrigerant TRAPPING. See *Pre-Charged Refrigerant Line Routing* illustration for recommended methods of spiralling the excess refrigerant lines.

CAUTION

DO NOT kink or crimp the refrigerant lines. DO NOT bend the excess refrigerant lines in a vertical LOOP(s), which allow trapping of refrigerant in LOW sections during OFF time. Bend and shape the excess refrigerant lines in VERTICAL spirals, not HORIZONTAL spirals. See Pre-Charged Refrigerant Line Hook-Up.

4. Insulate the pre-charged tubing lines individually if not insulated from the factory.

MH750R FOR THE INSTALLER

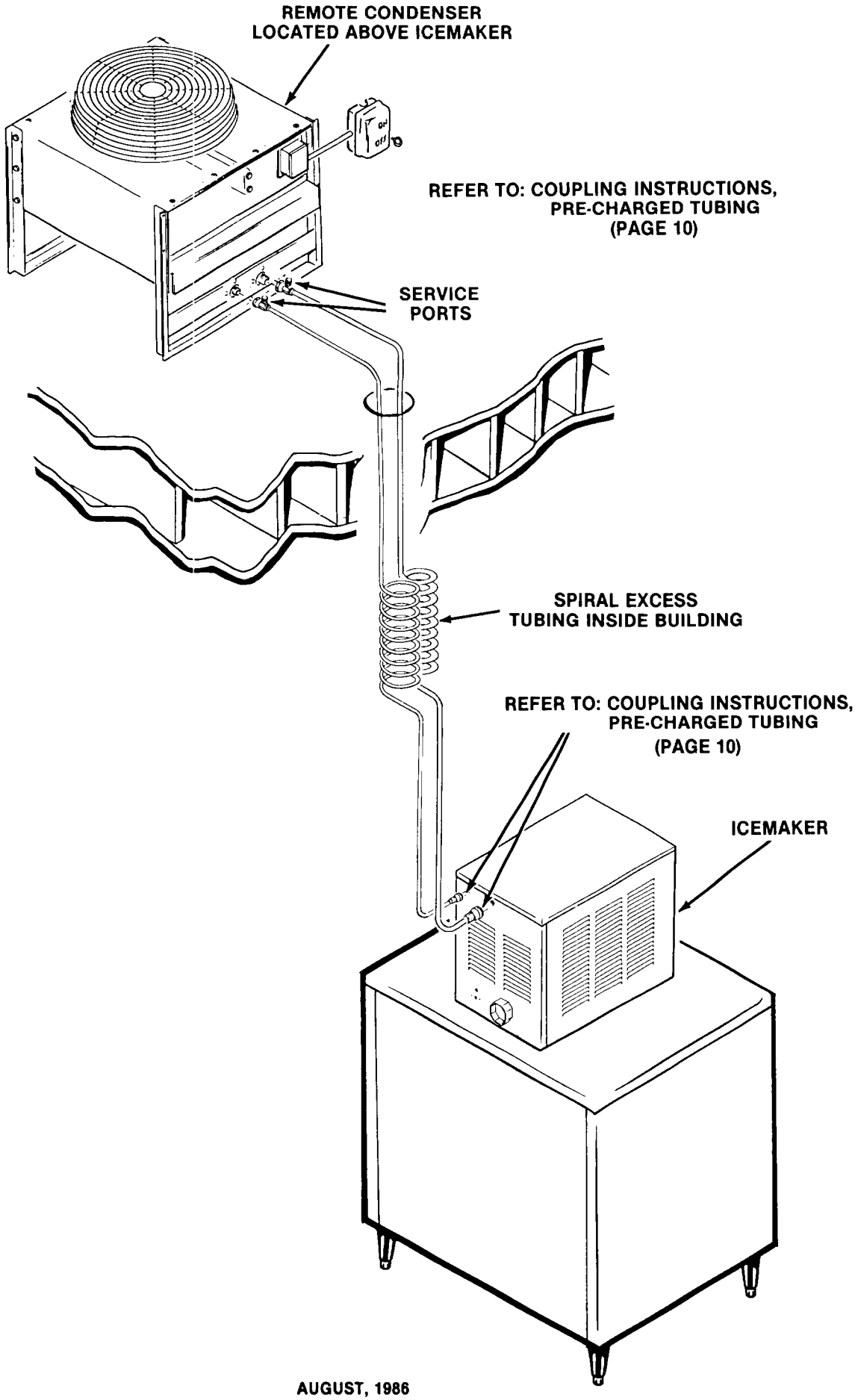

MH750R FOR THE INSTALLER

COUPLING INSTRUCTIONS, PRE-CHARGED TUBING

////////////////////// **CAUTION** //////////////////////

The couplings on the sets of pre-charged refrigerant lines, the refrigerant fittings on the remote condenser and the rear of the icemaker chassis are SELF-SEALING and should be connected as follows:

//

1. Remove protector caps and plugs and carefully wipe coupling seats and threaded surfaces with a clean cloth to prevent the inclusion of dirt or any foreign material in the system.
2. LUBRICATE male half diaphragm and synthetic rubber seal with refrigerant oil. Thread coupling halves together by hand to insure proper mating of threads. Use proper size wrenches (on coupling body hex and on union nut) and tighten until coupling bodies "bottom" or a definite resistance is felt.
3. Using a marker or ink pen, mark a line lengthwise from the coupling union nut to the bulkhead. Then thigten an additional 1/4 turn. The misalignment of the line will show the amount the coupling has been tightened. This final 1/4 turn is necessary to insure the formation of leakproof joint.

ALWAYS USE TWO WRENCHES WHEN TIGHTENING THESE FITTINGS. ONE AS BACKUP WRENCH TO PREVENT TWISTING OF TUBING AND POSSIBLE KINKING OR LINE RUPTURE.

BE SURE to connect the ends of the precharged refirgerant lines that have the charging port fittings, TO THE REMOTE CONDENSER FITTINGS. This gives the serviceman access for service gauges at the REMOTE CONDENSER location when necessary.

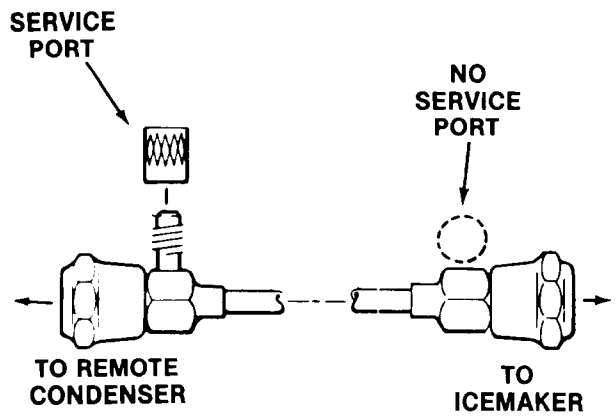

4. Connect the 3/8-inch diameter refrigerant line coupling with the SERVICE PORT fitting, to the remote condenser refrigerant fitting labeled, LIQUID LINE, as detailed in Coupling Instructions.
5. Connect the 1/2-inch diameter refrigerant line coupling with the CHARGING PORT fitting to the Remote Condenser refrigerant fitting labeled, DISCHARGE LINE. Tighten as detailed in Coupling Instructions.

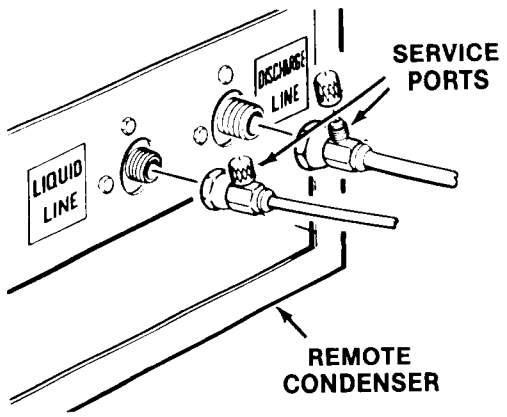

6. Connect the 3/8-inch diameter refrigerant line coupling to the refrigerant fitting on the upper right rear of the icemaker chassis labeled, LIQUID LINE. Tighten as detailed in Coupling Instructions.
7. Connect the 1/2-inch diameter refrigerant line coupling to the refrigerant fitting on the upper, right rear of the icemaker chassis labeled, DISCHARGE LINE. Tighten as detailed in Coupling Instructions.

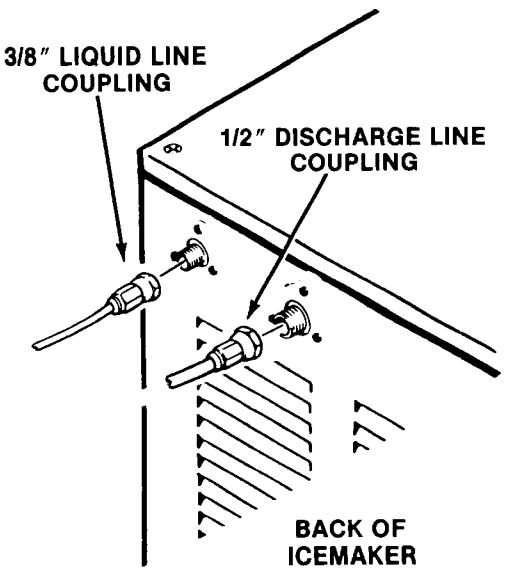

Coupling — Pre-Charged Tubing

MH750R FOR THE ELECTRICIAN

ELECTRICAL CONNECTIONS

The icemaker and the remote condenser must be connected to separate circuits. When the system is operating, the icemaker cycles as required by the bin thermostat and the remote condenser operates continuously.

////////////////////// WARNING //////////////////////

This icemaker requires a SOLID EARTH GROUND that meets the national, state and local electrical code requirements. To prevent possible SEVERE ELECTRICAL SHOCK INJURY to individuals or extensive damage to equipment, install the approved SOLID EARTH GROUND wire to this icemaker. SEE wiring diagram.

//

SEE NAMEPLATE of current requirements to determine wire size to be used for electrical hookup.

ICEMAKER

Be certain the icemaker is connected to its own electrical circuit and individually fused. The maximum allowable voltage variation should not exceed ten percent of the nameplate rating, even under starting conditions. Low voltages can cause erratic operation and may be responsible for serious damage to the overload, switch and motor windings.

REMOTE CONDENSER

The remote condenser must be wired in accordance with local and national electrical codes with a minimum of 18 Awg wire with a ground bonding wire connected to the ground screws provided in both the condenser and machine field wiring boxes. All outdoor wiring must be in rainproof conduit.

All external wiring should conform to the national, state and local electrical code requirements. Usually an electrical permit and services of a licensed electrician will be required.

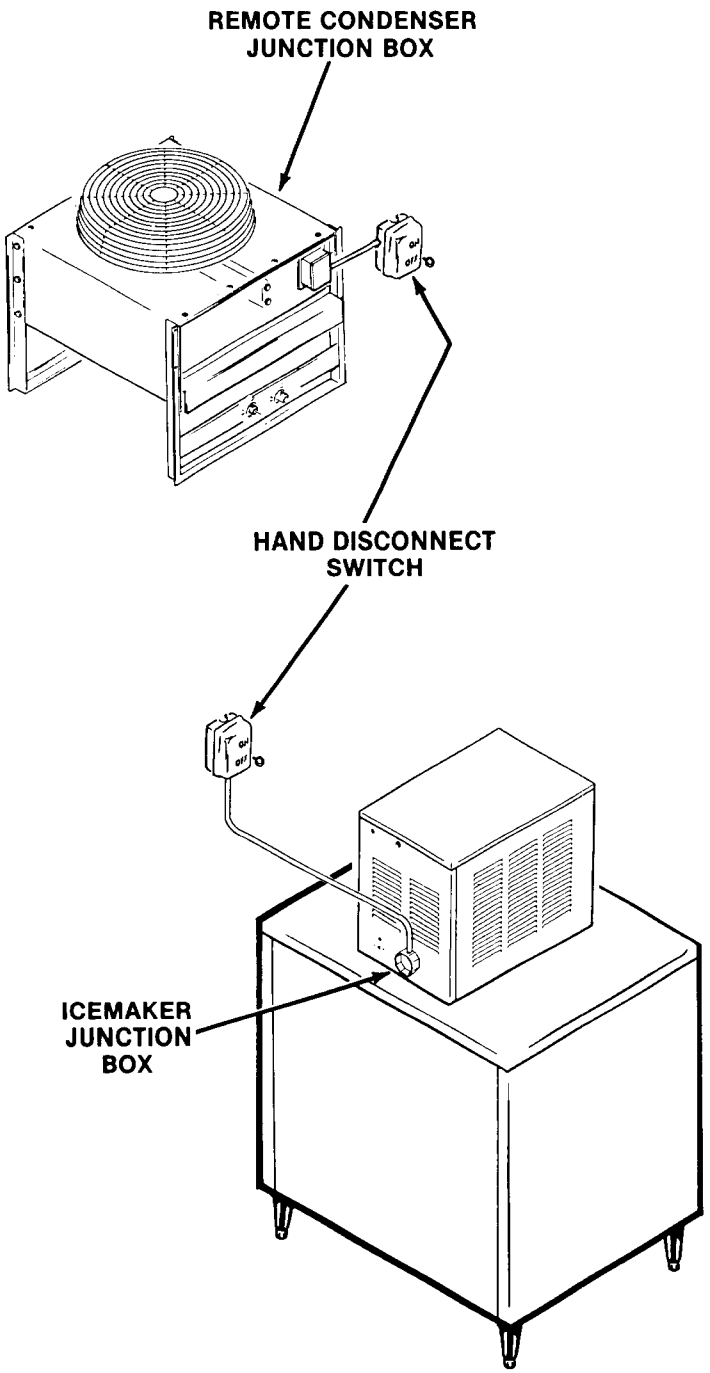

MH750R FOR THE PLUMBER

WATER SUPPLY AND DRAIN CONNECTIONS

The recommended water supply line is a 3/8-inch O.D. copper tubing with a minimum operating pressure of 20 PSIG and a maximum of 120 PSIG. Connect to cold water supply line with standard plumbing fittings with a shutoff valve installed in an accessible place between the water supply and the icemaker. In some cases a plumbing permit and services of a licensed plumber will be required.

DRAIN CONNECTIONS: All drains are gravity type and must have a minimum of 1/4-inch fall per foot on horizontal runs. The drains are to be installed to conform with the local plumbing code. Install a vertical open vent on drain line to ensure good venting. The drain receptacle must be either trapped or vented.

Recommended bin drain is 5/8-inch O.D. copper tubing and should be vented and run separately.

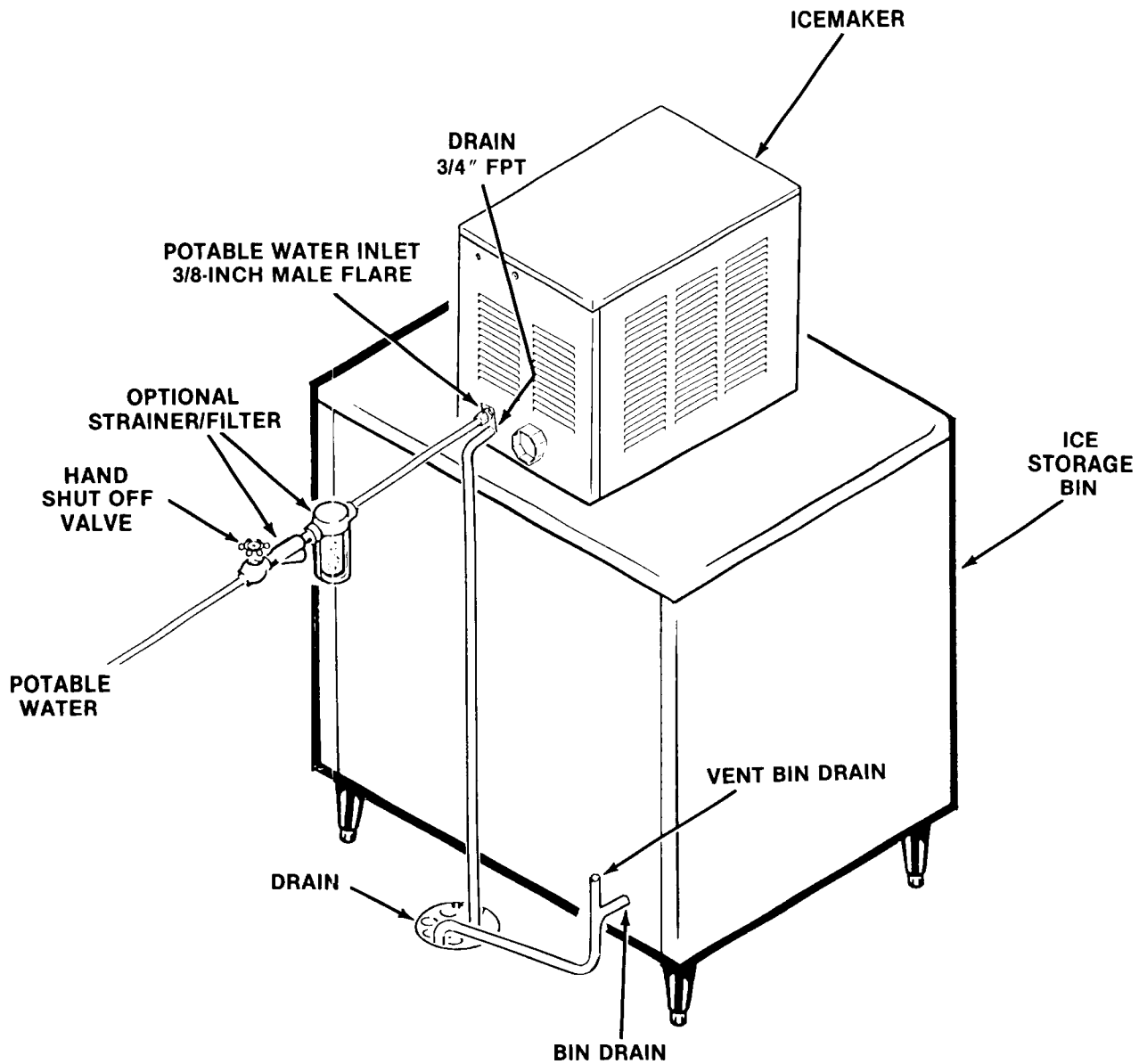

MH750R GENERAL INFORMATION AND INSTALLATION

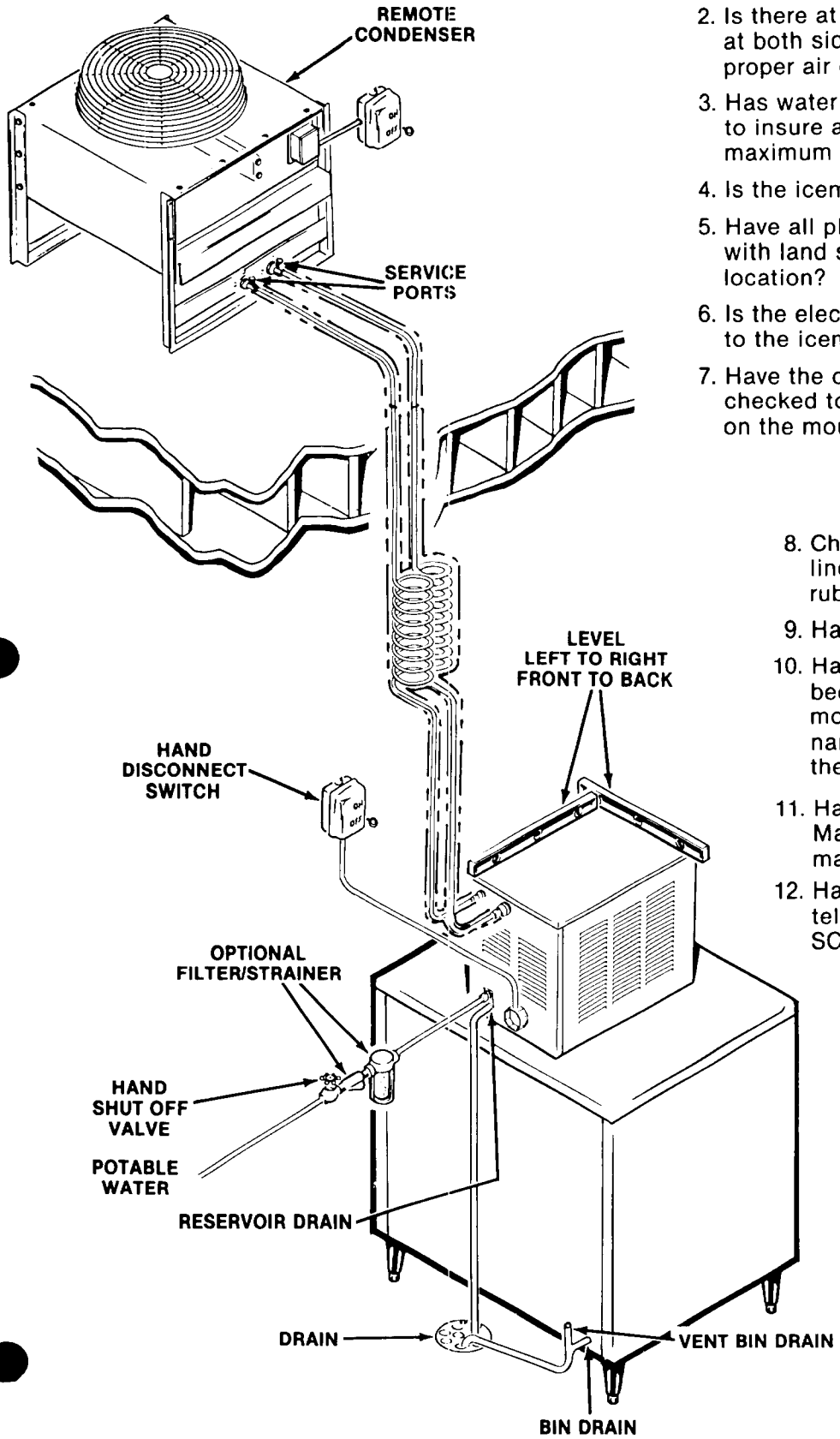

FINAL CHECK LIST

1. Is the cabinet in a room where ambient temperatures are within the minimum and maximum temperatures specified?
2. Is there at least six inches clearance at both sides and back of the cabinet for proper air circulation?
3. Has water supply pressure been checked to insure a minimum of 20 PSIG and a maximum of 120 PSIG operating pressure?
4. Is the icemaker and the remote unit level?
5. Have all plumbing connections been made with land shut-off valve in an accessible location?
6. Is the electrical wiring properly connected to the icemaker and the remote unit?
7. Have the compressor hold-down nuts been checked to be sure the compressor is snug on the mounting pads?
8. Check all refrigerant lines and conduit lines, to guard against vibration or rubbing and possible failure.
9. Have the bin and cabinet been wiped clean?
10. Has the Manufacturer's Registration Card been properly filled out? Check for correct model and serial numbers from Serial nameplate, then mail the completed card to the SCOTSMAN factory.
11. Has the owner/user been given the Service Manual and instructed how to operate and maintain the icemaker?
12. Has the owner been given the name and telephone number of the authorized SCOTSMAN Service Agency serving him?

MH750R OPERATING INSTRUCTIONS

PRE-START

1. Verify that the MASTER SWITCH is in the OFF position.
2. Operate the switch at the building source to supply electrical power to the icemaker a minimum of 12 hours BEFORE start up.

START-UP

DO NOT start icemaker until the 12-hour pre-start Heating of the compressor has been completed. The dome of the compressor must be warm before start up.

---

1. Remove screws and the top, side and front panels.

   Remove the stem cap from the receiver outlet (King) valve and fully open the valve. Replace the cap. Check for leaks at the Stem Cap.
2. OPEN the water supply line shutoff valve.
3. Observe the water filling operation, see water schematic.
   a. Water flows into water reservoir.
   b. Water flows through water feed line to bottom of freezer assembly.
   c. Float moves up as water rises.
   d. Float stops water flow, when water level reaches the molded horizontal line, on the body of the water reservoir.
4. Check all internal water connections for leaks.
5. Operate the switch at the building source to supply electrical power to the remote condenser. See the motor operate.
6. Press the Master ON-OFF pushbutton to on and momentarily contact the START-RESET pushbutton to start the automatic icemaker operation.

CAUTION

BE ALERT that momentary LOSS OF POWER, such as a brief power outage, will cause the RED light of the START-RESET pushbutton to turn ON. It must be PRESSED, to reset and restart the icemaker.

Repeated need to PRESS the START-RESET pushbutton, requires checking for:

1. **Faulty bin thermostat control.**
2. **Need to clear jammed ice tube.**
3. **Loose wiring connections.**

7. Observe that ice begins dropping into the ice storage bin.
8. Let the system operate until ice covers the bottom of the bin. Check for any excess noises beyond normal compressor noise at the remote condenser:
   a. Fan noises, when blades touch other surfaces; blades bent, out-of-balance, or loose on shaft.
   b. Vibrating type, from touching lines.
   c. Chattering: Lack of water in freezer.
   d. Compressor loose at one or more holddown bolts.

CAUTION

This icemaker is equipped with a low water pressure safety device, which in the event of interruptions or low water pressure, the icemaker will automatically stop to prevent damage. It will restart automatically after the water pressure is restored.

9. Place ice on the bin thermostat control bulb, to test shut-off.

Within minutes after the ice is removed from the sensing bulb, the bulb will warm up and cause the icemaker to restart. This control is factory set and should not be reset until testing is performed. Normal setting is 35-degrees F. CUT-OUT and 45-degrees F. CUT-IN, to prevent short cycling.

10. Thoroughly explain to the owner/user the significant specifications of the icemaker, the start up and operation, going through the procedures for the operating instructions. Answer all questions about the icemaker, by the owner; and, inform the owner of the name and telephone number of the authorized SCOTSMAN Distributor or Service Agency serving him.

MH750R OPERATING INSTRUCTIONS

ICEMAKER

The potable water supply flows from the building source through the inlet fitting and into the water reservoir. The water reservoir functions to maintain a constant water level inside the freezer assembly. Water from the water reservoir enters at the bottom of the freezer assembly and is changed into ice by low temperatures inside the freezer.

A stainless steel auger within the freezer is powered by a direct-drive gearmotor. The rotating auger carries the ice upward to the end of the auger (See Water Schematic) where excess water is pressed out of the ice as it is extruded and broken into equal length chunks. The ice is pushed out through the ice transport tube and into the ice storage bin.

When the ice storage bin fills with ice to the level of the bin thermostat control capillary bulb, the icemaking process shuts OFF.

As ice is removed from the ice storage bin, the bulb warms up restarting the automatic icemaking process.

Factory settings for the bin thermostat are 35-degrees F. CUT-OUT and 45-degrees F. CUT-IN.

Altitude adjustment should ONLY be performed on icemakers installed at 2000-feet level locations and ABOVE, and adjust only in increments of one-fourth turn of screw at a time.

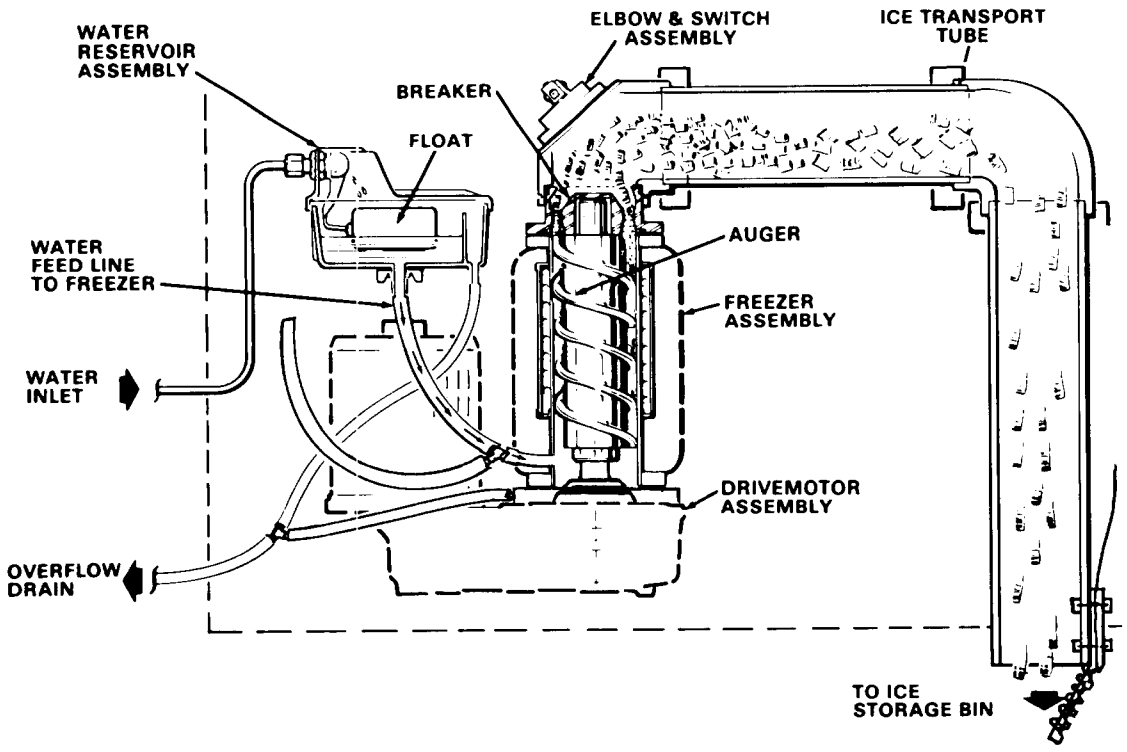

Water Schematic

MH750R OPERATING INSTRUCTIONS

ELECTRICAL/REFRIGERATION

The Model MH750R icemaker is designed to operate on standard electrical supply 115 volts, 60 Hertz, single phase. Other voltage requirements are available on special order. Therefore, always CHECK NAMEPLATE for electrical information BEFORE preceeding with wiring connection to the icemaker.

Refer to the appropriate wiring diagram and trace circuitry and control functions.

The head pressure is normally about 120 PSIG and it is maintained by a head pressure control inside the icemaker cabinet. This control bypasses the remote condenser refrigeration circuit until there is enough pressure and then it meters the discharge of gas into the condenser. The fan runs all the time.

Suction pressure should be 12 PSIG.

When charging the system with refrigerant, always CHECK NAMEPLATE for specific refrigeration charge for individual icemaker.

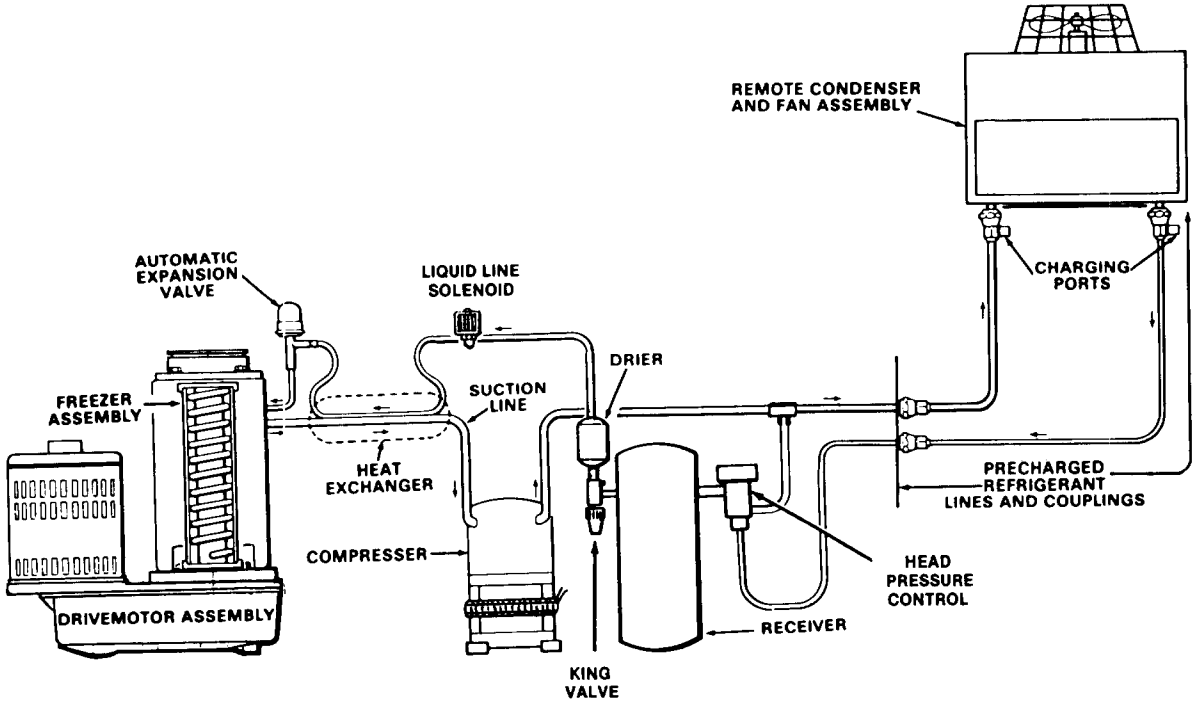

MH750R COMPONENT DESCRIPTION

ELBOW SAFETY SWITCH

The elbow safety switch is an ON-OFF switch that shuts off the compressor when an ice jam presses against the rubber diaphragm depressing the switch and opening the circuit. Melting action relieves pressure closing the circuit, lighting the start-reset pushbutton. The start-reset switch must then be pressed to start the automatic icemaking process.

ICE BREAKER ASSEMBLY

The ice breaker assembly, bolted to the top of the freezer, contains the bearing and seal for the top of the auger. Flaked ice created by the freezer is carried by the auger to the ice breaker assembly and the flaked ice is pushed by the auger through the tapered holes in the ice breaker. Flaked ice is compressed by auger pressure as it is pushed through the ice breaker assembly and the shafts of compressed ice and are broken into random lengths of ice nuggets by the taper on the top of the ice breaker.

RESERVOIR DRAIN

The reservoir drain is for use to drain the water reservoir when cleaning or maintenance of the icemaking system.

DRIVEMOTOR

The drivemotor assembly rotates the auger through a series of reduction gears from the electric motor to the freezer assembly. Cold ambient temperatures and interruptions in water supply are conditions that can cause excessively hard ice and overloads within thefreezer assembly which is directly transmitted to the drivemotor; and in turn, will cause speed reduction or ultimate freezup.

When the drivemotor is slowed to a pre-determined RPM, a sensing switch in the motor is designed to open the electrical circuit to the compressor. The compressor stops operating, no more ice is produced and the drivemotor continues to operate rotating the auger to clear the overload and gradually build up to full speed.

At a pre-determined higher RPM drivemotor speed, the speed sensing switch closes the electrical circuit to the compressor causing the normal icemaking process to resume.

LIQUID LINE SOLENOID VALVE

The liquid line solenoid valve provides positive shutoff of refrigerant flow for off cycle evaporator pump down.

WATER RESERVOIR

The water reservoir functions to maintain a constant water level inside the freezer assembly. Water from the water reservoir enters at the bottom of the freezer assembly and is changed into ice by low temperatures inside the freezer.

WATER PRESSURE SAFETY SWITCH

A low water pressure safety switch is installed in the potable water inlet line on all Scotsman Flakers to prevent damage to the gearmotor and evaporator components due to low water pressure or interruption of the water supply to the unit. This safety device with an automatic reset is set to shut the refrigeration system off if the water pressure falls below 10 psig and restart the unit automatically when the pressure rises to 20 psig.

BIN THERMOSTAT BRACKET

The bin thermostat bracket is the bin full ice contact point of the bin thermostat capillary tube.

BIN THERMOSTAT CONTROL

The bin thermostat control is located in the center of the control box. The sensing capillary tube of the control is routed from the control box to the bin thermostat control bracket at the end of the ice discharge tube hanging in the ice storage bin. The bin thermostat control functions to automatically shut OFF the icemaker when the ice storage bin is filled and the ice contacts the capillary tube. It also signals the RESTART of the icemaker when the capillary tube starts to warm up after ice has been removed from the bin. The control is factory set and should not be reset until testing is performed. Normal setting is 35 degrees F. CUT-OUT and 45 degrees F. CUT-IN to prevent short cycling.

Bin thermostat control adjustment should ONLY be performed if premature shut off occurs or ice backs up into the ice discharge tube. Adjust only in increments of one eighth turn of a screw at a time - normally only required in installations over 2,000 feet above sea level.

HEAD PRESSURE CONTROL

Maintains compressor head pressure from dropping below 120 PSIG during cross ambient operation, by-passing the remote condenser, by diverting a portion of hot gas directly into the receiver.

MH750R COMPONENT DESCRIPTION

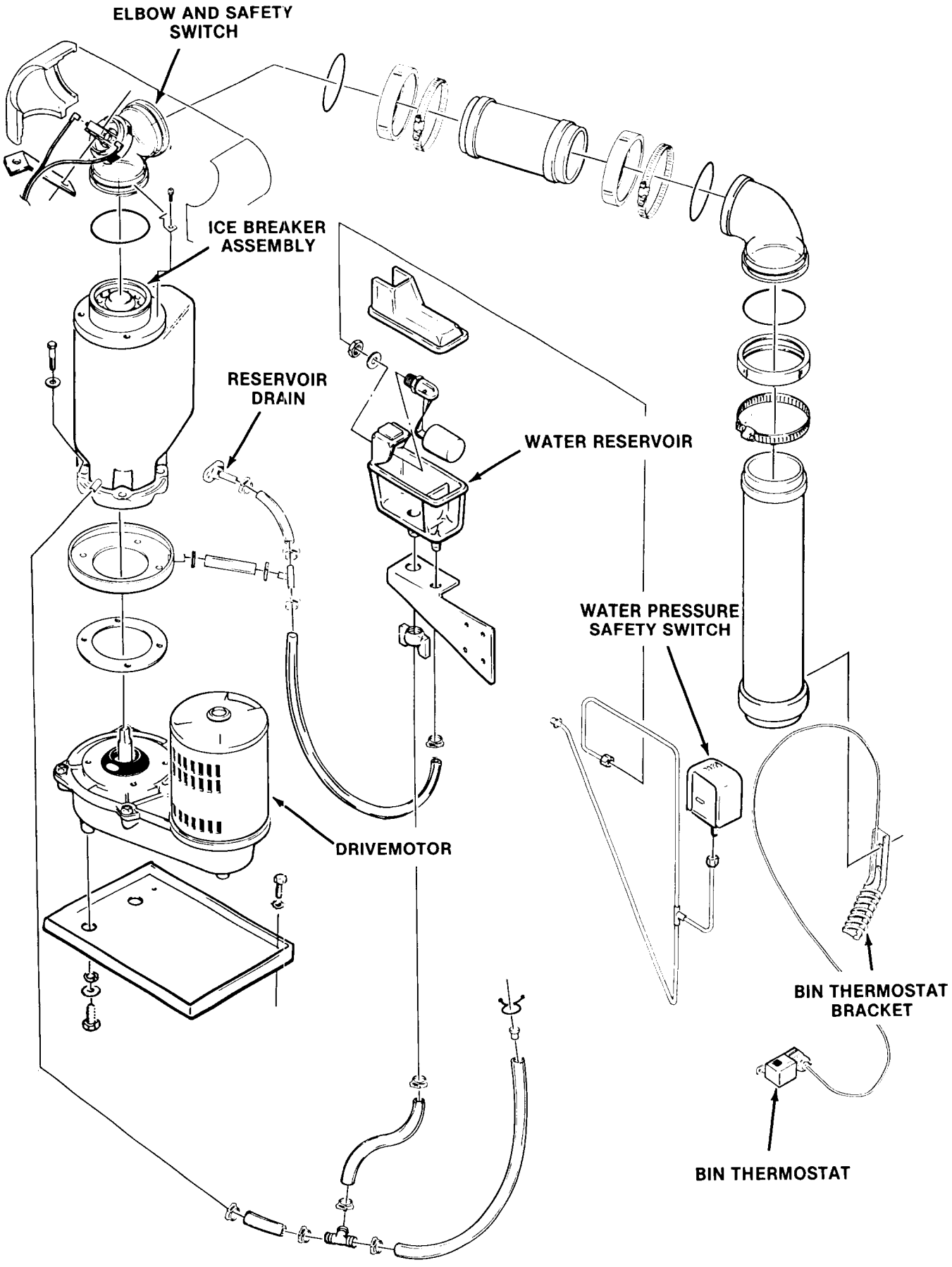

MH750R COMPONENT DESCRIPTION

ON-OFF AND START/RESET SWITCH

When pushed, completes the electrical circuit through the icemaker electrical components. The START RESET PUSHBUTTON must be pressed to restart the icemaking process whenever any of the safety control have functioned to stop the icemaker or an interruption in the electrical supply has occurred.

ELBOW SAFETY SWITCH RELAY

The elbow safety switch relay circuit through the elbow safety switch until the elbow safety switch opens and switches the current through the lamp of the start reset pushbutton, which must be pushed and reset to restart the automatic icemaking process.

COMPRESSOR CONTACTOR

The compressor contactor functions to carry the compressor line current. The contactor is wired so any control in the pilot circuit, such as the bin thermostat, low pressure and high pressure controls, etc., will cause the contactor holding coil to be de-energized when the control contact OPENS, thereby breaking the circuit to the compressor through the contactor points.

REFRIGERANT LOW PRESSURE CONTROL

The main function of this control is to run the compressor. It turns the compressor ON after the liquid line solenoid opens and OFF when it closes.

Another purpose of this safety control is to protect the unit from damage due to a loss of the refrigerant charge. It also provides additional protection from the unit in case low ambient or water temperatures exist. This is an automatic reset control connected to the refrigeration system low side. It is set to stop the unit completely when the low-side pressure drops to less than 4 PSIG. This is an AUTOMATIC RESET control.

REFRIGERANT HIGH PRESSURE CONTROL

The purpose of this safety control is to protect the unit from damage due to high refrigerant pressure. It also provides additional protection for the unit in high ambient temperatures. This is a manual reset control connected to the refrigeration system high-side. It is set to stop the unit completely when the high-side pressure reaches the preset limit (250 PSIG).

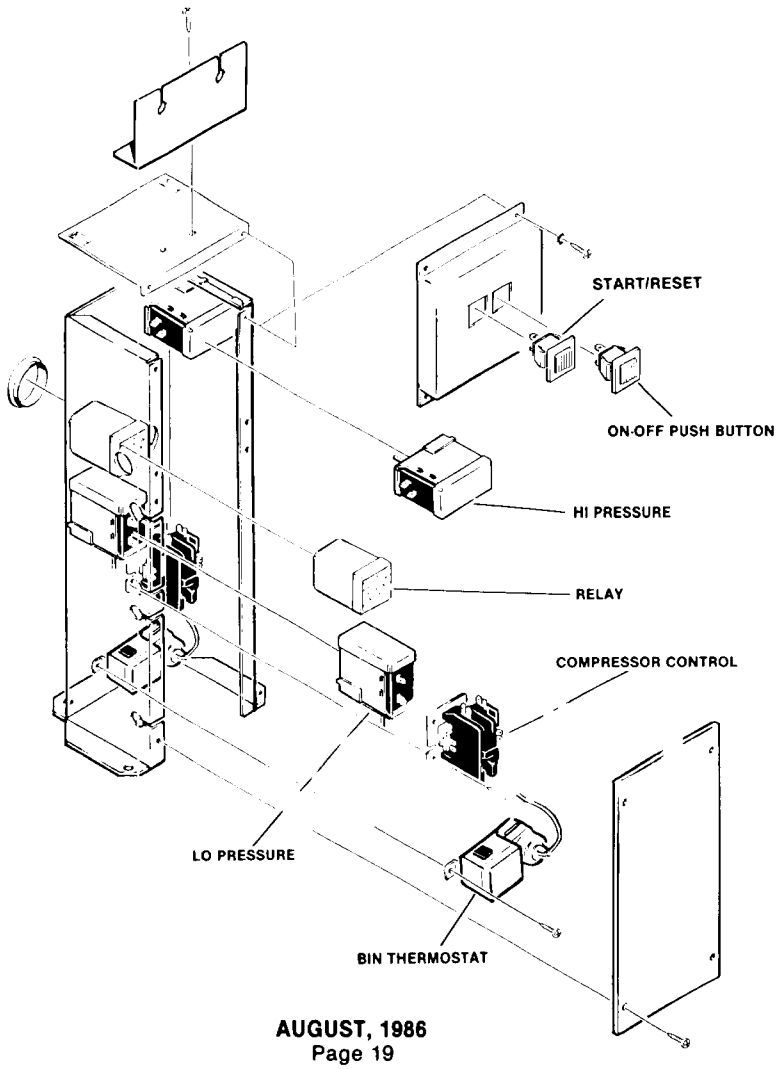

MH750R COMPONENT DESCRIPTION

AUTOMATIC EXPANSION VALVE (AXV)

The automatic expansion valve regulates the flow of refrigerant to the evaporator and reduces pressure of liquid refrigerant from condensing pressure to evaporating pressure. Set at 12 PSIG.

FREEZER ASSEMBLY

The freezer assembly is a vertical cylinder wrapped on the outside with the evaporator coils. Inside the freezer assembly is a stainless steel auger. As ice forms inside the freezer, it is pushed up and out by a rotating auger.

COMPRESSOR CRANKCASE HEATER

The compressor crankcase heater is an electrical wire band heater located around the lower outside shell of the compressor, below the level of the crankcase oil in the compressor. The heat generated by the crankcase heater heats oil in the crankcase which keeps the refrigerant separated from the oil; and during the OFF cycle, prevents the refrigerant from migrating back into the compressor from other areas of the refrigeration system which can cause severe damage to the compressor at STARTUP.

KING VALVE

The king valve prevents refrigerant from escaping from the receiver during shipment and before use. The king valve must be opened after connection of the precharged tubing kit and before operation of the icemaker.

HIGH PRESSURE RECEIVER

Provides storage volume for refrigerant during cross ambient operation. The high pressure receiver is sized large enough to hold the entire refrigerant charge. During cold operation there is enough liquid in the receiver to maintain a liquid seal to the liquid line.

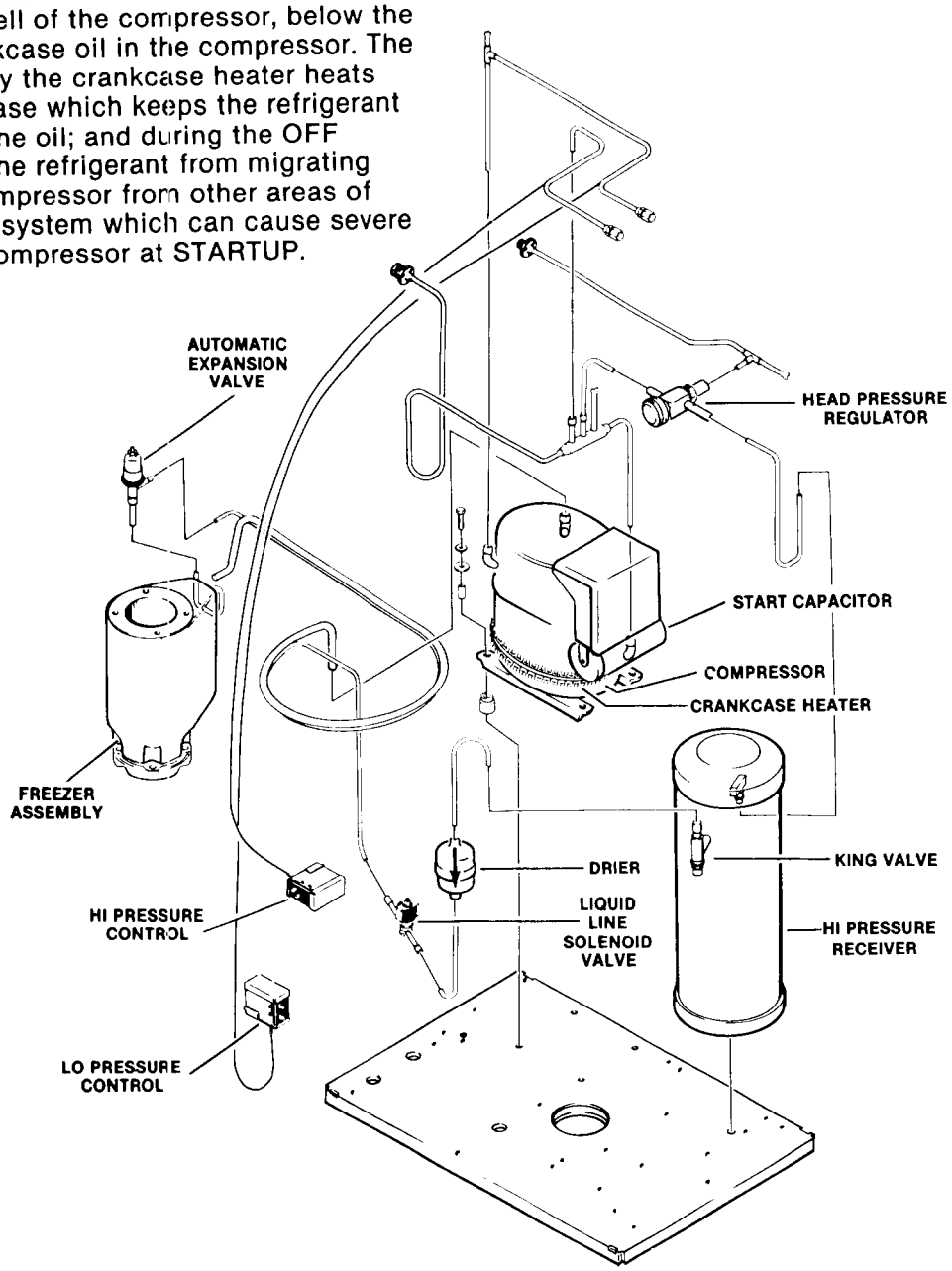

MH750R OPERATION - ELECTRICAL SEQUENCE

A. STANDBY

SWITCHES	ON (CLOSED)	OFF (OPEN)
Bin Thermostat		X
Contactor		X
Drivemotor Switch		X
High Pressure Control	X	
Low Pressure Control		X
ON-OFF Switch	X	
Relay Contacts 9-6	X	
Relay Contacts 4-7	X	
Relay Contacts 9-3		X
Spout Switch	X	
Start-Reset Switch		X
Water Pressure Switch	X	

LOADS	ON	OFF
Compressor		X
Contactor Coil		X
Crankcase Heater	X	
Drivemotor		X
Fan Motor	X	
Lamp, ON-OFF Switch	X	
Lamp, Start Reset Switch		X
Liquid Line Solenoid		X
Relay Coil	X	

At standby, the fan is running, and the crankcase heater is heating.

MH750R OPERATION - ELECTRICAL SEQUENCE

B. RUN

SWITCHES	ON (CLOSED)	OFF (OPEN)
Bin Thermostat	X	
Contactor	X	
Drivemotor Switch	X	
High Pressure Control	X	
Low Pressure Control	X	
ON-OFF Switch	X	
Relay Contacts 9-6	X	
Relay Contacts 4-7	X	
Relay Contacts 9-3		X
Spout Switch	X	
Start-Reset Switch		X
Water Pressure Switch	X	

LOADS	ON	OFF
Compressor	X	
Contactor Coil	X	
Crankcase Heater	X	
Drivemotor	X	
Fan Motor	X	
Lamp, ON-OFF Switch	X	
Lamp, Start Reset Switch		X
Liquid Line Solenoid	X	
Relay Coil	X	

The bin control has closed and energized the liquid line solenoid, causing the low side pressure to rise over 20 PSIG, switching ON the low pressure control, which energizes the compressor contactor and auger drivemotor.

MH750R OPERATION - ELECTRICAL SEQUENCE

C. PUMP DOWN

SWITCHES	ON (CLOSED)	OFF (OPEN)
Bin Thermostat		X
Contactor	X	
Drivemotor Switch	X	
High Pressure Control	X	
Low Pressure Control	X	
ON-OFF Switch	X	
Relay Contacts 9-6	X	
Relay Contacts 4-7	X	
Relay Contacts 9-3		X
Spout Switch	X	
Start-Reset Switch		X
Water Pressure Switch	X	

LOADS	ON	OFF
Compressor	X	
Contactor Coil	X	
Crankcase Heater	X	
Drivemotor	X	
Fan Motor	X	
Lamp, ON-OFF Switch	X	
Lamp, Start Reset Switch		X
Liquid Line Solenoid		X
Relay Coil	X	

When the bin thermostat opens, the liquid line solenoid closes, causing the refrigerant to be pumped into the receiver. When the low side pressure reaches 4 PSIG, the low pressure control opens and the unit is in standby.

MH750R OPERATION - ELECTRICAL SEQUENCE

D. TRIPPED ON SPOUT SWITCH

SWITCHES	ON (CLOSED)	OFF (OPEN)
Bin Thermostat	X	
Contactor		X
Drivemotor Switch		X
High Pressure Control	X	
Low Pressure Control	X	
ON-OFF Switch	X	
Relay Contacts 9-6		X
Relay Contacts 4-7		X
Relay Contacts 9-3	X	
Spout Switch		X
Start-Reset Switch		X
Water Pressure Switch	X	

LOADS	ON	OFF
Compressor		X
Contactor Coil		X
Crankcase Heater	X	
Drivemotor		X
Fan Motor	X	
Lamp, ON-OFF Switch	X	
Lamp, Start Reset Switch		X
Liquid Line Solenoid		X
Relay Coil		X

In this example the spout switch has opened due to the bin thermostat failing closed, overfilling the bin with ice. Until the ice melts, the start-reset light will not be on. Pushing the start-reset switch will restart the unit.

MH750R MAINTENANCE & CLEANING INSTRUCTIONS

A Scotsman Ice System represents a sizable investment of time and money in any company's business. In order to receive the best return for that investment, it MUST receive periodic maintenance.

It is the USERS RESPONSIBILITY to see that the unit is properly maintained. It is always preferable; and less costly in the long run, to avoid possible down time by keeping it clean, adjusting it as needed and by replacing worn parts before they can cause failure. The following is a list of recommended maintenance that will help keep your machine running with a minimum of problems.

Maintenance and cleaning should be scheduled at a MINIMUM of twice per year.

GENERAL

The periods and procedures for maintenance and cleaning are given as guides and are not to be construed as absolute or invariable. Cleaning especially will vary, depending upon local water conditions and the ice volume produced and each icemaker must be maintained individually in accordance with its own particular location requirements.

ICEMAKER

THE FOLLOWING MAINTENANCE SHOULD BE SCHEDULED AT LEAST TWO TIMES PER YEAR ON THIS ICEMAKER. CALL YOUR AUTHORIZED SCOTSMAN SERVICE AGENCY.

1. Check and clean water line strainers.
2. Check that the water level in the water reservoir is at the water level on the side of the float.
3. Remove cover from water reservoir and depress the float to ensure that a full stream of water enters the reservoir.
4. Check that the icemaker is level in side-to-side and front-to-back directions.
5. Clean the water reservoir and interior of the freezer assembly using a solution of SCOTSMAN Ice Machine Cleaner. Refer to CLEANING — Icemaker.

NOTE

Cleaning requirements vary according to local water conditions and individual user operation. Visual inspection of the auger before and after cleaning will indicate frequency and procedure to be followed in local areas.

6. When doubtful about refrigerant charge, install refrigerant gauges on service valves and check gauge for compressor head pressure: 120 to 160 PSIG.
7. Check gauge for suction line pressure: Suction pressure is approximately 12 PSIG. CAUTION: The only positive way to determine the exact refrigerant charge is to purge the system of refrigerant, evacuate, and weigh in the nameplate charge.
8. Check drivemotor operation:

   Normal operating temperatures are about 160-degrees F., which is hot to touch.
9. Oil drivemotor once per year.

WARNING

Disconnect electrical power supply before removal procedures.

10. Check the elbow safety switch by removing the insulation halves, twisting the locking ring 90° and pulling out the switch assembly. The switch action can then be tested.

NOTE

The elbow safety switch is an ON-OFF switch that shuts off the compressor when an ice jam presses against the rubber diaphragm depressing the switch and opening the circuit. Melting action relieves pressure closing the circuit, lighting the start-reset pushbutton. The start-reset switch must then be pressed to start the automatic icemaking process.

11. Check for refrigerant leaks.
12. Check for water leaks. Pour water down bin drain to be sure that drain line is open and clear.
13. Check the bin thermostat control.

NOTE

The bin thermostat is factory set at 10-degrees F. differential and should keep the entire icemaker shut off at least 20 minutes in high ambient temperatures, longer in low ambient temperature during normal operation. Settings are 35-degrees F. CUT-OUT and 45-degrees F. CUT-IN.

MH750R MAINTENANCE & CLEANING INSTRUCTIONS

NOTE

If the breaker being serviced is equipped with a STEEL NEEDLE bearing, the breaker assembly should be REPLACED. Contact your local Scotsman Distributor for further information. Breakers with a NON-METALLIC bearing should be cleaned and the seal replaced ONCE PER YEAR. If the type of breaker bearing is not known, the breaker should be inspected. Most MH750R's have non-metallic bearings in the breaker.

1. Remove elbow insulation and remove three Allen head screws and spout retaining brackets from the freezer assembly end of the elbow and switch assembly.
2. Remove three Allen head screws and spout retaining brackets from the freezer assembly end of the elbow and switch assembly.

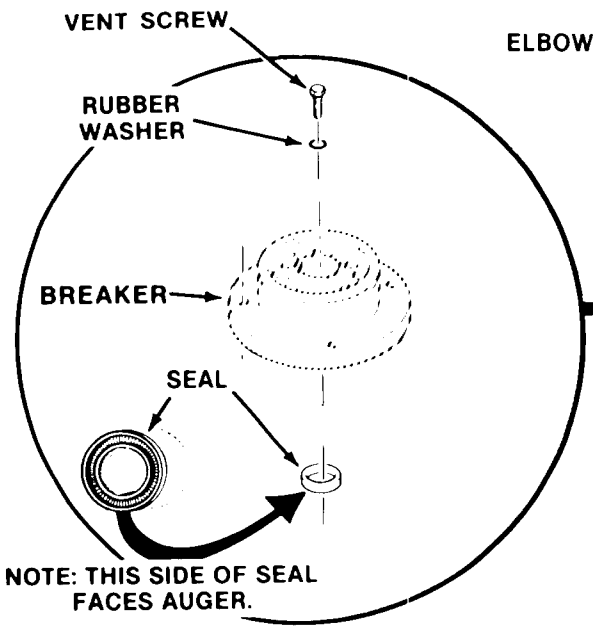

NOTE

In order to accomplish removal of the elbow and switch assembly in the next step, it may be necessary to further remove panels and disassemble the ice transport tube.

3. Lift the elbow and switch assembly and set aside to gain access to the top of the freezer assembly.
4. Remove four capscrews, lockwashers and the ice breaker assembly from the top of the freezer assembly for inspection.
5. Retain the O-ring for replacement during reassembly. Inspect the O-ring for cuts, tears or excessive wear, causes for replacement.
6. Replace the lip seal and inspect the top bearing seated in the ice breaker, wipe clean of mineral build up. Remove auger. Check seal and check auger for stains.

CAUTION

DO NOT force the auger and breaker together without having the vent hole open because pushing the breaker on with no air relief will cause the internal air pressure to force the grease seal away from the breaker.

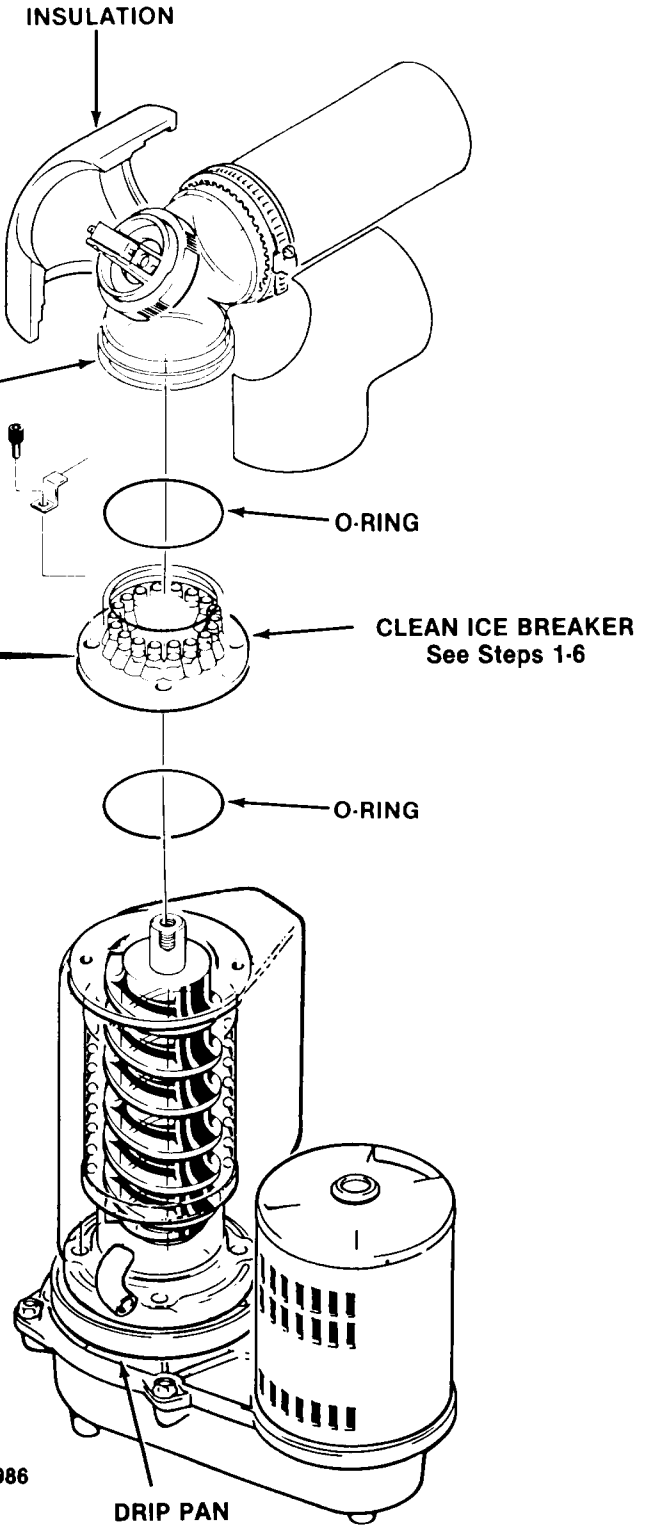

MH750R MAINTENANCE & CLEANING INSTRUCTIONS

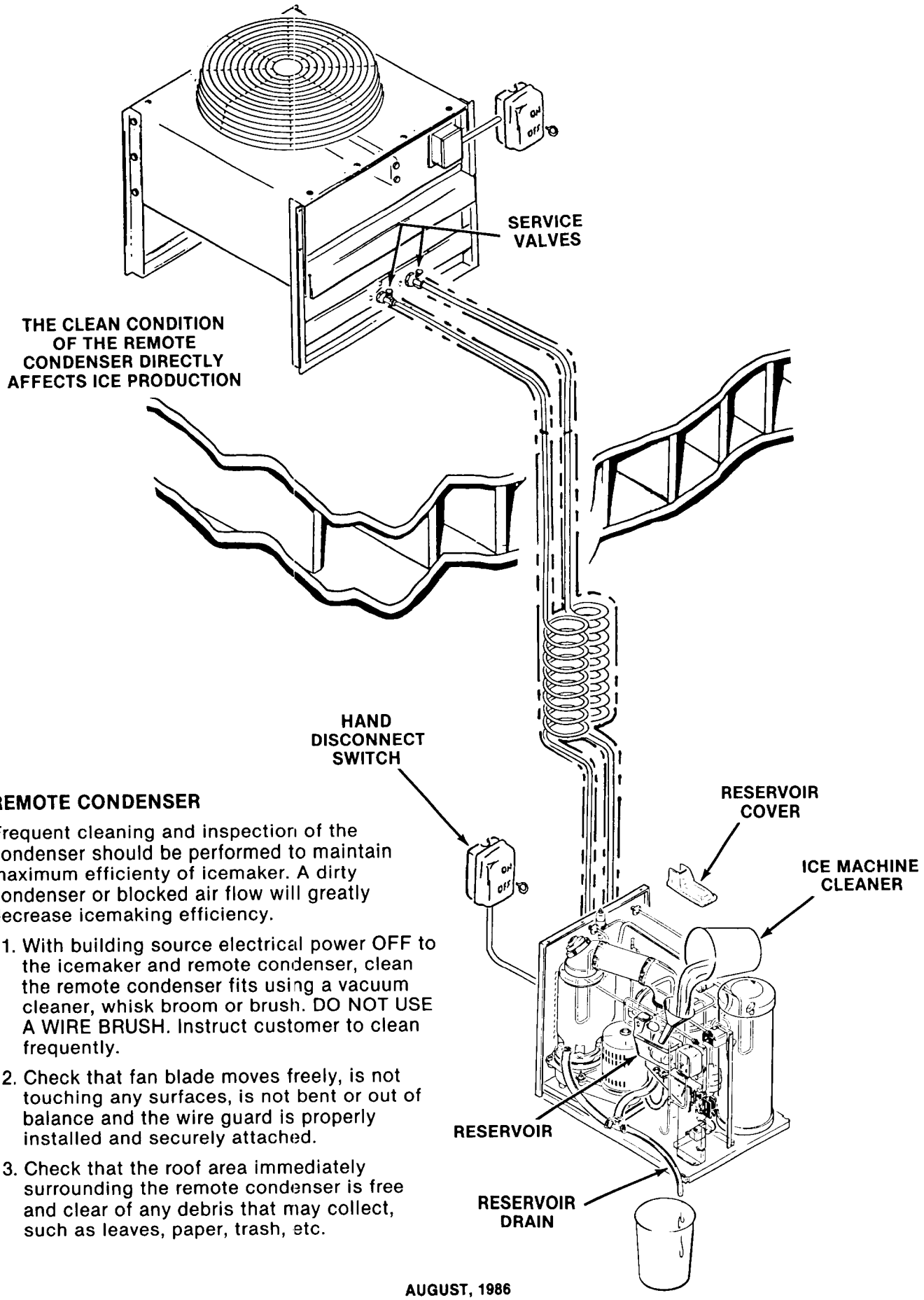

REMOTE CONDENSER

Frequent cleaning and inspection of the condenser should be performed to maintain maximum efficienty of icemaker. A dirty condenser or blocked air flow will greatly decrease icemaking efficiency.

1. With building source electrical power OFF to the icemaker and remote condenser, clean the remote condenser fits using a vacuum cleaner, whisk broom or brush. DO NOT USE A WIRE BRUSH. Instruct customer to clean frequently.
2. Check that fan blade moves freely, is not touching any surfaces, is not bent or out of balance and the wire guard is properly installed and securely attached.
3. Check that the roof area immediately surrounding the remote condenser is free and clear of any debris that may collect, such as leaves, paper, trash, etc.

MH750R MAINTENANCE & CLEANING INSTRUCTIONS

CLEANING — Icemaker

1. PRESS the master ON-OFF pushbutton to OFF.
2. Remove screws, top and front panel.
3. Remove all ice from the ice storage bin.
4. Remove the reservoir cover and block the float in the water reservoir up to stop water flow.
5. Drain the reservoir using the drain provided between the water reservoir and the bottom of the freezer assembly and drain water from the reservoir and tube. Replace the drain tube.

WARNING

SCOTSMAN Ice Machine Cleaner contains Phosphoric and Hydroxyacetic acids. These compounds are corrosive and may cause burns. If swallowed, DO NOT induce vomiting. Give large amounts of water or milk. Call Physician immediately. In case of external contact flush with water. KEEP OUT OF THE REACH OF CHILDREN.

6. Prepare cleaning solution: Mix six ounces of SCOTSMAN Ice Machine Cleaner with one and one-half quarts of hot water.
7. Slowly pour the cleaning solution into the water reservoir.
8. PRESS the master ON-OFF pushbutton to ON.
9. Continue to slowly pour the cleaning solution into the water reservoir. Maintain level just below the reservoir overflow.
10. Continue icemaking using the cleaning solution, until all the solution is used up and the water reservoir is almost empty. DO NOT allow the icemaker to operate with empty reservoir.
11. PRESS the master ON-OFF pushbutton to OFF.
12. Wash and rinse the water reservoir.
13. Remove the block from the float in the water reservoir.
14. PRESS the master ON-OFF pushbutton to ON.
15. Continue icemaking for at least 15 minutes to flush out any cleaning solution. Check ice for acid taste. Continue icemaking until ice tastes sweet.
16. PRESS the master ON-OFF pushbutton to OFF.

CAUTION

DO NOT use ice produced from the cleaning solution. Be sure none remains in the bin.

17. Remove all ice from the ice storage bin.
18. Add warm water to the ice storage bin and thoroughly wash and rinse all surfaces within the bin.
19. Clean and sanitize the ice storage bin each week.

MH750R SERVICE DIAGNOSIS

INTRODUCTION

The Service Diagnosis is for use in aiding the serviceman in diagnosing a particular problem for pin-pointing the area in which the problem lies, thus an ever available reference for proper corrective action.

The following chart lists corrective actions for the causes of known symptoms of certain problems that can occur.

SYMPTOM	POSSIBLE CAUSE	CORRECTION
Water Leaks.	Defective water seal.	Replace seal.
	Gravity feed line leaking.	Check hose clamp.
	Water level in reservoir too high.	Adjust water level to molded line on the float assembly.
	Storage bin drain and connecting fittings.	Check and repair.
Excessive noise or chattering.	Mineral or scale deposit on auger and inner freezing chamber walls.	For severe deposit, remove and manually polish auger, sand inner chamber walls of freezer barrel.
		For lighter concentration, use Scotsman Ice Machine Cleaner periodically.
	Evaporator water inlet frozen shut.	Thaw and check for water interruption.
	Intermittent water supply.	Check and clean water strainer.
		Check gravity feed line for air lock.
		Check to be sure float orifice is not restricted.
		Check incoming water supply.
		Remove air lock.
	Water level in reservoir too low.	See CORRECTION for water leaks above.
	Gear reducer loose on frame.	Tighten gear reducer.
	Motor compressor not solid on rubber mounts.	Repair or replace rubber mounts.
	Gearmotor thrust bearing worn.	Check/replace bearing.
	Top bearing worn.	Check/replace breaker.
Drivemotor makes high pitched noise.	Rotor bearing dry or worn.	Replace motor or bearing.
	Dry grease seal under rotor bearing.	Grease seal.

MH750R SERVICE DIAGNOSIS

SYMPTOM	POSSIBLE CAUSE	CORRECTION
Making wet ice	Back pressure too high.	Overcharge of refrigerant, faulty compressor or high head pressure. Lower pressure as indicated.
	Faulty compressor.	Replace compressor.
	Expansion valve set wrong.	Adjust to 12 PSIG.
Low ice production.	Loss of refrigerant. Under or over-charge of refrigerant.	Check and recharge. See NAMEPLATE for charge correction.
	Dirty or plugged condenser.	Clean condenser.
	Low water level in water reservoir.	See CORRECTION for water leaks above.
	Partial restriction in expansion valve or drier.	Moisture in system. Overcharge of oil in system. Remove charge by blowing back through cap tube.
		Replace drier evacuate and recharge.
	Inlet water strainer partially plugged.	Remove screen and clean.
	Corroded or stained auger due to water condition.	Remove auger and clean, or use Scotsman Ice Machine Cleaner. See Maintenance Section.
Gearmotor noise.	Low on oil.	Remove case cover to check for proper oil level and condition.
Icemaker will not operate.	Blown fuse in line.	Replace fuse and check for cause of blown fuse.
	Bin thermostat set too high or fautly.	Adjust thermostat. Set at 35-degrees cut-out, 45-degrees cut-in. Replace.
	Loose electrical connection.	Check wiring.
	Switch in OFF position.	Set switch to ON position.
	Inoperative master switch.	Replace switch or thermal overload.
	Off on manual-reset high pressure control.	Reset — Check condenser.
	Low supply water pressure.	Restore water pressure.
	Low on refrigerant off-on low pressure control.	Find leak, replace drier, evacuate and recharge.
	Spout switch open.	Reset start switch.

MH750R SERVICE DIAGNOSIS

SYMPTOM	POSSIBLE CAUSE	CORRECTION
Icemaker continues to operate with full storage bin.	Bin thermostat not properly set or is defective.	Re-set or replace bin thermostat. Re-set to 35-degrees cut-out, 45-degrees cut-in.
Compressor cycles intermittently.	Low voltage.	Check for overloading.
	Dirty condenser.	Clean condenser.
	Air circulation blocked.	Remove cause or move unit.
	Inoperative condenser fan motor.	Replace motor.
	Non-condensable gases in system.	Check for gas leaks, evacuate and recharge.
	Bin thermostat differential too small causing short cycling.	Widen differential 35-degrees cut-out, 45-degrees cut-in.
	Cycling on elbow switch.	Set or replace bin thermostat.
	Low on refrigerant causing low pressure control to cycle.	Check for leaks.
	Low water pressure causing control to cycle.	Restore water pressure.
Icemaker operates but makes no ice.	Loss or undercharge of refrigerant.	Check for leaks and recharge. See NAMEPLATE for correct charge.
	Water not entering chamber.	Plugged strainer or supply line. Check and clean. Air lock in gravity feed line. Check and remove air lock.
	Moisture in system.	Check, evacuate, replace drier. Recharge. See NAMEPLATE for correct charge.
	Water seal leaking.	Replace seal.
	Drivemotor stripped.	Repair or replace drivemotor.
	Compressor over load faulty.	Replace over load.

MH750R ADJUSTMENT PROCEDURES

Read the instructions thoroughly before performing any adjustment or removal and replacement procedures.

ADJUSTMENT OF THE BIN THERMOSTAT CONTROL

The control for the bin thermostat is the temperature control, located in the center of the control box.

Above 2,000 feet only.

To adjust the bin thermostat control:

1. Hold a handful of ice against the capillary bulb in the ice storage bin.
2. Slowly rotate the adjusting screw in the appropriate direction until the icemaker shuts OFF.
3. Remove ice from the capillary bulb. Then, place warm hand on the capillary bulb to restart the icemaker.
4. Place handful of ice against the capillary bulb and observe that the icemaker should shut OFF within ten seconds, usually less.

CAUTION

The adjusting screws on the temperature control device have very sensitive response to adjustment. DO NOT attempt to adjust the screw until after thoroughly reading and understanding the instructions and illustrations. Over-adjusting or erratic guessing can foul the instrument and cause ultimate delay and part replacement, WHICH COULD HAVE BEEN PREVENTED.

ADJUSTMENT OF THE AUTOMATIC EXPANSION VALVE

To adjust the automatic expansion valve:

1. Attach service gauges to the refrigeration system service ports.
2. Loosen locknut and rotate adjustment screw in or out to achieve an approximate 12 PSIG low side pressure.

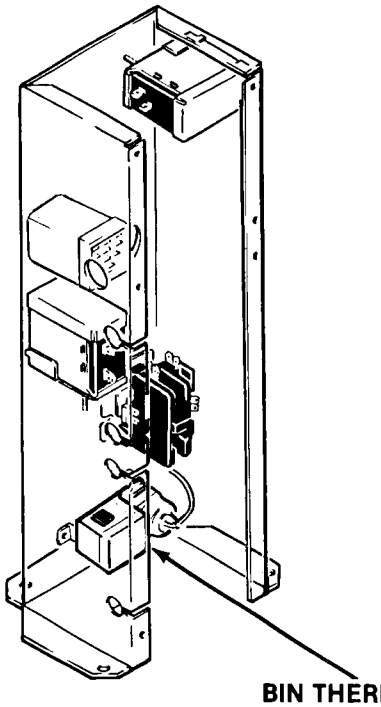

BIN THERMOSTAT

MH750R REMOVAL AND REPLACEMENT PROCEDURES

ADJUSTMENT OF THE WATER RESERVOIR FLOAT

The correct water level in the water reservoir should be at the level of the raised molded line on the side of the body of the water reservoir. When the water line level is above or below the raised molded line, adjustment can be performed to raise or lower the water level by bending the metal arm of the float inside the water reservoir.

NOTE

Check that the installed replacement water reservoir assembly float moves freely. Bend metal arm on float to adjust, as necessary. The correct water level in the water reservoir is the point of the raised molded line on the side of the body of the water reservoir.

REMOVAL AND REPLACEMENT OF THE WATER RESERVOIR ASSEMBLY

To remove the water reservoir assembly:

WARNING

Be sure the electrical power supply to the icemaker is OFF before proceeding with removal procedures.

1. Shut off water supply to the icemaker at the water supply valve.
2. Remove screws and remove cabinet panels.

NOTE

Be prepared with container to catch water left in lines disconnected in next steps to prevent draining water on parts, components, electrical lines, etc.

3. Disconnect the water inlet tube from the water reservoir assembly.
4. Remove two Corbin clamps and two tubes from the bottom of the water reservoir assembly.
5. Unscrew and remove the wing nut from the bottom of the water reservoir assembly.
6. Lift and remove the water reservoir assembly from the mounting bracket.

To replace the water reservoir assembly, reverse the removal procedure.

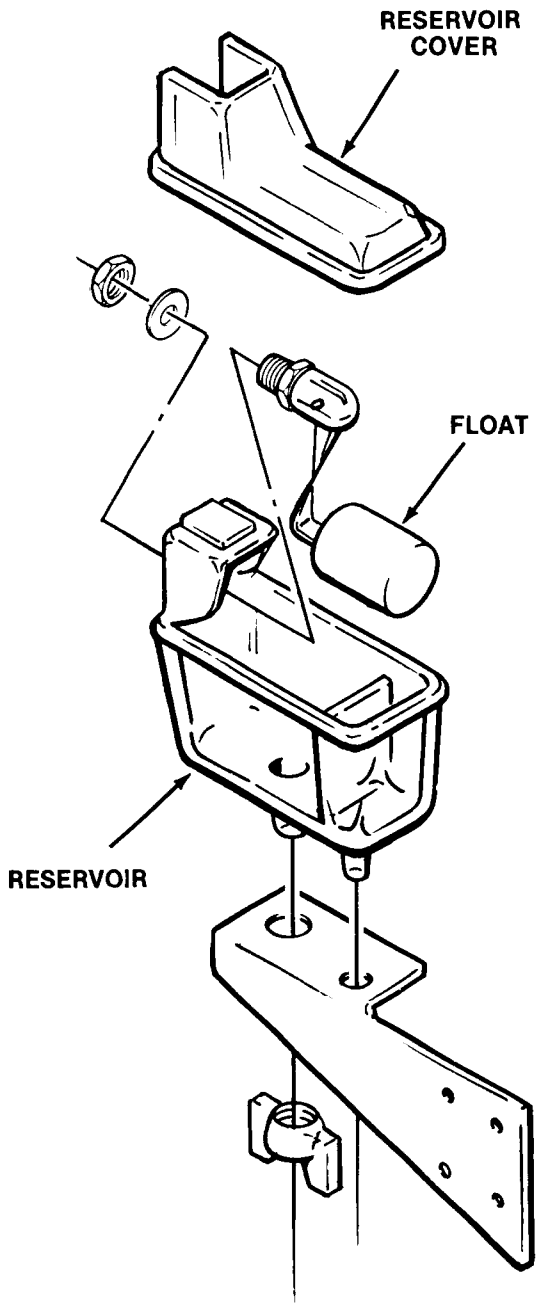

MH750R REMOVAL AND REPLACEMENT PROCEDURES

WARNING

Be sure the electrical power supply and the water supply are OFF, BEFORE starting any of the following REMOVAL AND REPLACEMENT procedures as a precaution to prevent possible personal injury or damage to equipment.

REMOVAL AND REPLACEMENT OF THE WATER SEAL, INCLUDES REMOVAL AND REPLACEMENT OF THE AUGER, O-RING, AND ICE BREAKER.

To service ice breaker and O-ring only, omit steps 4, 9, 12, 13, 14, 15, 16, 17, 18, 19.

To remove the auger, water seal, o-ring and ice breaker assembly:

1. Shut off water supply to the icemaker at the building source.
2. Disconnect or shut-off electrical power to the icemaker at the building source.
3. Remove screws and remove top, front and left panels.
4. Remove screws securing back panel to base, disconnect drain connection, disconnect water line, remove nut holding water inlet fitting to back panel, pull panel back and up slightly, disconnect internal drain hose from fitting, carefully pull panel at bottom edge away from the base, bending the attached refrigerant links. CAUTION - DO NOT KINK REFRIGERANT LINES. Move the panel just enough to gain access to the freezer/gearmotor retaining bolts.
5. Separate insulation halves and remove from the elbow safety switch.
6. Remove three socket head screws and spout retaining brackets from the end of the spout assembly at the top of the freezer assembly.
7. Lift the elbow safety switch and spout UP, off of the freezer assembly.
8. Retain the o-ring for replacement during reassembly. Inspect for cuts, tears or excessive wear, causes for replacement.
9. Unclip freezer drain hose, drain the freezer. Remove hose clamp and water inlet line from freezer inlet.
10. Remove four capscrews, lockwashers and the ice breaker assembly from the top of the freezer assembly.
11. Retain the o-ring for replacement during reassembly. Inspect for cuts, tears or excessive wear, causes for replacement.
12. Remove the auger. If necessary a bolt can be threaded into the top end of the auger from the freezer and a hand tool used to pull on the bolt to remove the auger.
13. Pull back permagum around freezer base mounting bolts and remove four screws and flatwashers. Separate the freezer assembly, gasket and adapters, from the drivemotor assembly.
14. Remove snap ring from inside bottom of evaporator assembly. Using a suitable length and size of wooden dowel or punch inserted through the top of the open freezer assembly, tap the stationary portion of the water seal out the bottom of the freezer assembly.
15. Replace the water seal any time it has been removed.

CAUTION

The lower two-part water seal is a precise seal and fitting. Any damage or wear will cause a failure. It is recommended that the lower two-part water seal be replaced any time there is a question of condition.

16. Replace the new stationary portion of the two-part water seal in the bottom of the freezer assembly and press in far enough to install the snap ring. **IMPORTANT:** pull water seal back down against snap ring all the way around the freezer.
17. Mount the freezer, drip pan and gasket to the gearmotor case. Check to be sure the gearmotor is in good condition and the water shed is in place around the output shaft.
18. Apply Scotsman part number 19-0529-01 RTV silicone rubber to the auger shoulder before pushing on the water seal. Place just enough silicone on to the auger, so that when the water seal is placed on the auger, the gap between the auger shoulder and water seal is completely filled with silicone.

MH750R REMOVAL AND REPLACEMENT PROCEDURES

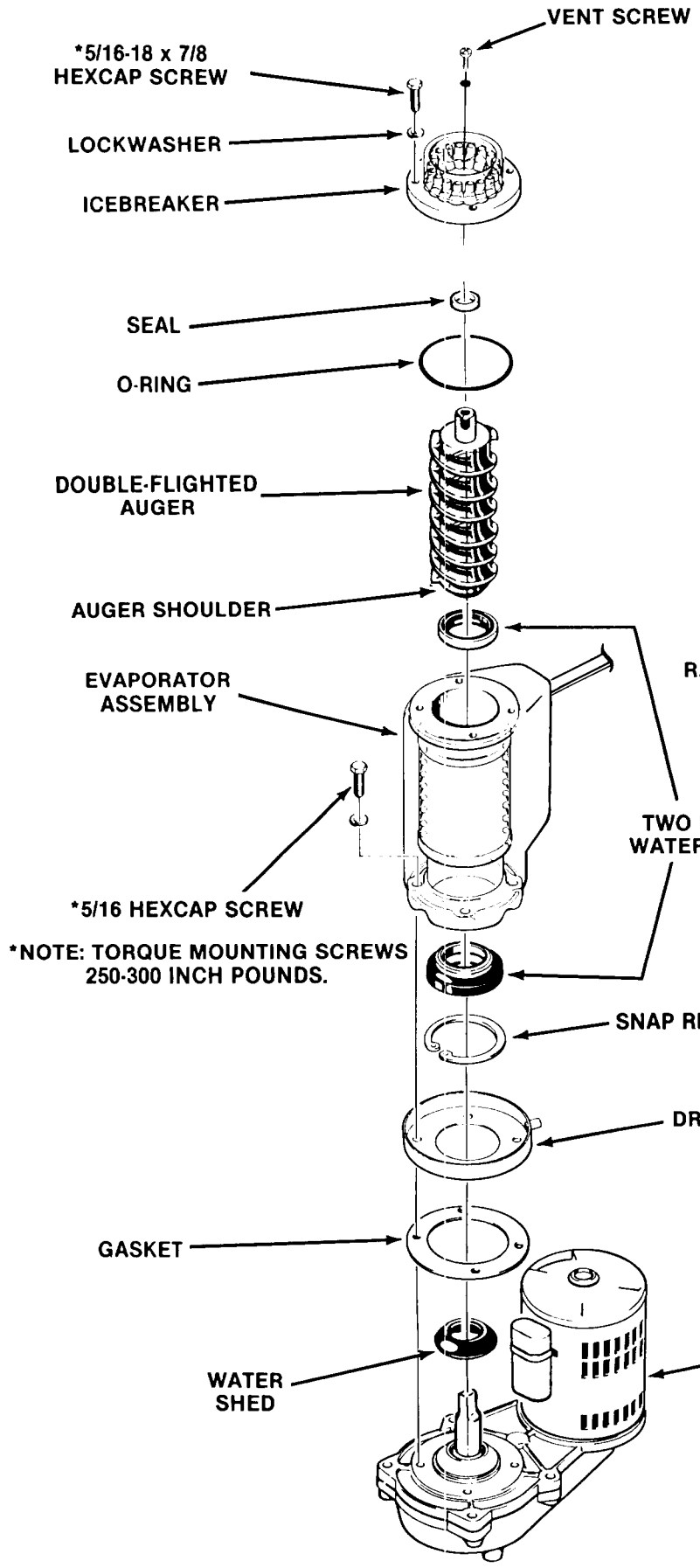

The silicone must be allowed to "set-up" or dry on the surface before any water can be added to the freezer.

////////////////////// **WARNING** //////////////////////

If any silicone gets onto the mating surfaces of the water seal, the seal is ruined, and cannot be used.

//

19. Install auger. Water test unit.

20. Replace ice breaker, be sure o-ring is in place, and vent screw has been removed. After the ice breaker is securely on the freezer, the vent screw should be replaced. Add RTV Silicone Rubber or Loctite to the vent screw threads before installing the screw.

* Torque bolts to 250-300 inch pounds.

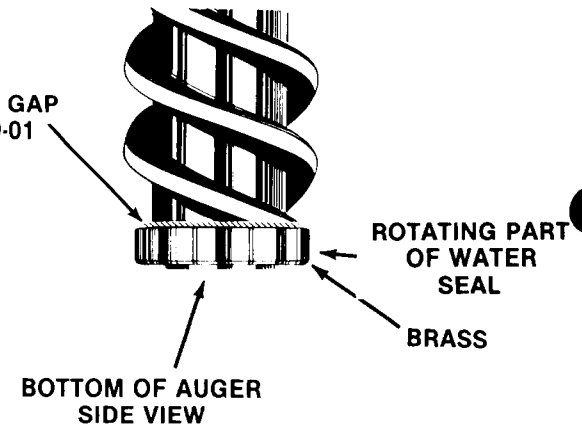

MH750R REMOVAL AND REPLACEMENT PROCEDURES

REMOVAL AND REPLACEMENT OF THE FREEZER ASSEMBLY

NOTE

The cabinet may have to be removed from its permanent location, especially if located in a corner, in order to have access to the left side and rear of the chassis.

To service on site, without removing pre-charged lines, see steps 3, 4, page 35.

////////////////////// **WARNING** //////////////////////

Shut OFF electrical power and close the inlet water valve to the icemaker. Disconnect the inlet water line at the rear of the cabinet BEFORE moving the icemaker from the permanent location.

//

To remove the freezer assembly:

1. Remove screws and remove top, side and front panels.
2. Disconnect the electrical leads from the spout switch.
3. Remove ice discharge tube from spout elbow.
4. Remove four screws and washers and separate the breaker assembly from the freezer assembly.

   Inspect the o-ring and retain for the replacement procedure. Replace a torn, cut or worn, defective o-ring.
5. Remove corbin clamp and Tygon tube from the freezer assembly that connects to the water reservoir assembly.
6. Bleed off the refrigerant charge through the Schrader valve.
7. Unsolder the refrigerant tubing at the joints located approximately two inches beyond the outside of the freezer.
8. Unsolder the automatic expansion valve from the freezer assembly. Unsolder the liquid line at the drier.
9. Pull back permagum to gain access and remove four screws, lockwashers and washers which attach the bottom of the freezer assembly to the drivemotor assembly.
10. Lift the freezer assembly up and off of the adaptor and drivemotor assembly.

To replace the freezer assembly, reverse the removal procedure. (See page 35 - steps 16, 17, 18, 19, 20.)

Evacuate and recharge to nameplate.

NOTE

Always install a replacement drier, anytime the sealed refrigeration system is opened. Do not replace the drier until all other repair or replacement has been completed.

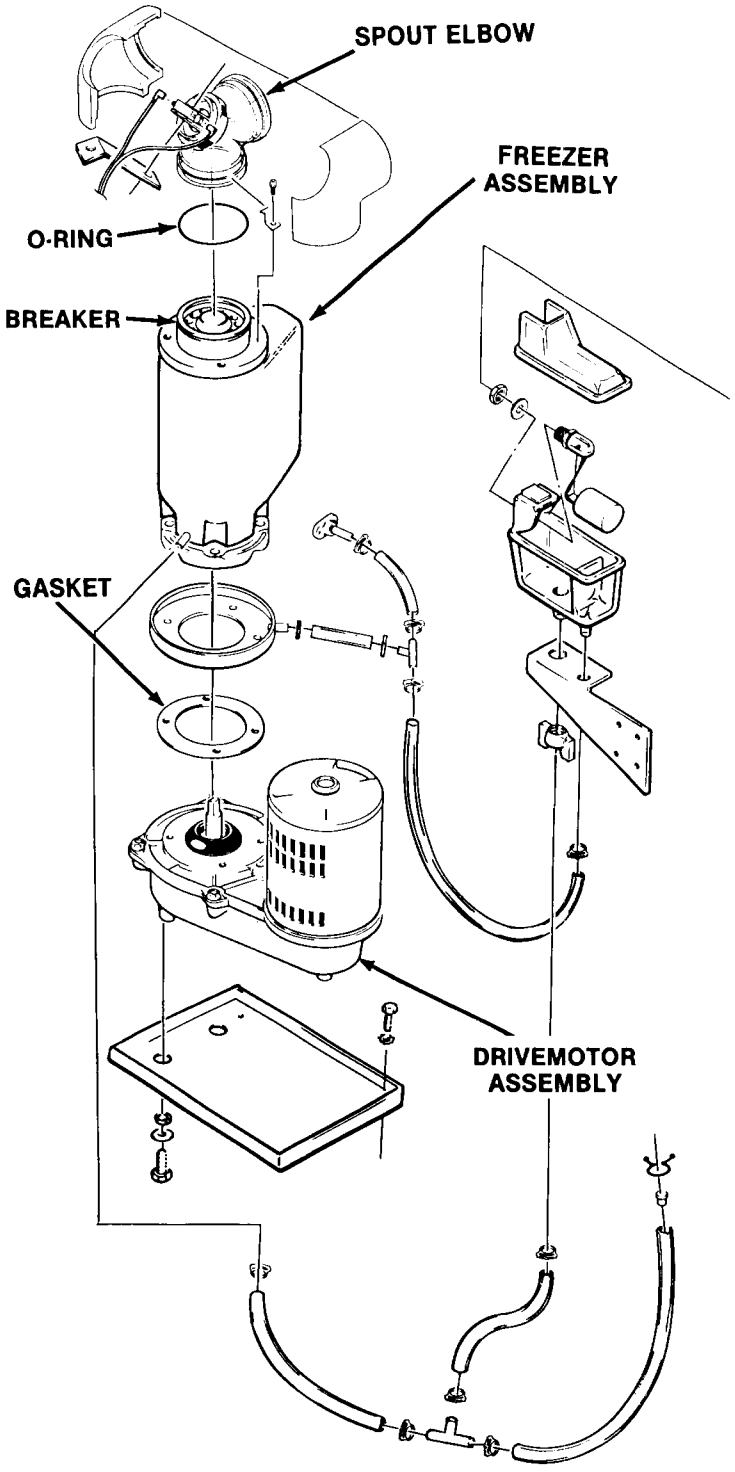

MH750R REMOVAL AND REPLACEMENT PROCEDURES

REMOVAL AND REPLACEMENT OF THE GEAR DRIVEMOTOR

WARNING

Be sure the electrical power supply to the icemaker is OFF before proceeding with removal procedures.

To remove the auger drivemotor.

1. Refer to Removal and Replacement, page 35 to gain access to the gearmotor assembly, unbolt gearmotor from icemaker base, slide gearmotor away from icemaker to expose motor.
2. Disconnect electrical power leads from the motor.
3. Unscrew four capscrews securing motor to gearcase.
4. Lift off motor winding the gear reducer.
5. Use a pry bar to remove rotor and rotor bearing from the gearcase.
6. Examine grease seal in gearcase. Replace if worn. Add grease to seal and bearing housing before re-assembly.

To replace, reverse the removal procedures.

NOTE

Motors must be exchanged complete. DO NOT mix rotors, housings or windings.

REMOVAL AND REPLACEMENT OF THE GEAR MOTOR ASSEMBLY

WARNING

Be sure the electrical power supply to the icemaker is OFF before proceeding with removal procedures.

To remove the gear motor assembly:

1. Refer to Removal and Replacement, page 35, to gain access to the gearmotor assembly and perform steps 1-11.
2. Thread suitable length bolt, having No. 5/16-18 UNC-2B threads, into thread hold in the top of the auger. Grasp bolt head with hand tool and pull auger out.
3. Unbolt freezer from gear motor assembly, lift up and off gear motor.
4. Remove the drivemotor cover and disconnect the three electrical wire leads.
5. Remove bolts holding gear motor plate to the machine base.
6. Lift the gear motor from the machine base.

To replace the gear motor assembly, reverse the removal procedure.

* Torque bolts to 250-300 inch pounds.

REPAIR OF THE GEAR MOTOR ASSEMBLY

1. Remove (6) cap screws to prepare to open the gearcase.
2. Pry the two cases apart, Inspect the internal parts, look for:
   - Condition and quality of lubricant. (The proper oil level is flush with the top of the output (biggest) gear.)
   - Gear and gear shaft condition Woodruff key between output gear and shaft
   - Grease seals, back to back
   - Vent hole open
   - Thrust bearing intact.

   Be sure to count and retain the spacer washers as they come out of the gearbox.

   Replace the parts as required, using the part numbers found in the parts list section of this manual. Replace the gears into a CLEAN bottom gearcase, replacing the spacer washers in the same quantity as they were upon disassembly. If no count was kept, refer to the parts illustration.

   Output gear, when installed, must be assembled with the flush, machined side DOWN and the protruding bossed center UP.

NOTE: Some bearing grease should be placed in all bearings before assembly to insure proper lubrication upon start-up.

(Uses 1 pint of gear oil)

To reassemble:

1. Set top gearcase on gears and spacers and oil. Be sure O-ring is in place.
2. Replace gearcase cover. Drive in alignment pins before tightening cap screws and torque at 250-300 inch pounds.
3. Bench test the gearmotor assembly.

   Test for noise, amp draw (must not be in excess of icemaker nameplate for gearmotor) and oil leaks.

   Return gearbox to the unit. Be certain all mounting surfaces are clean and reassemble gearbox to chassis and freezer assembly.

   If the freezer water seal begins to leak, removal of the auger is required in order to replace the top bearing and water seal. AT THE SAME TIME, it would be recommended to remove the gearmotor assembly, open it up and inspect it.

MH750R REMOVAL AND REPLACEMENT PROCEDURES

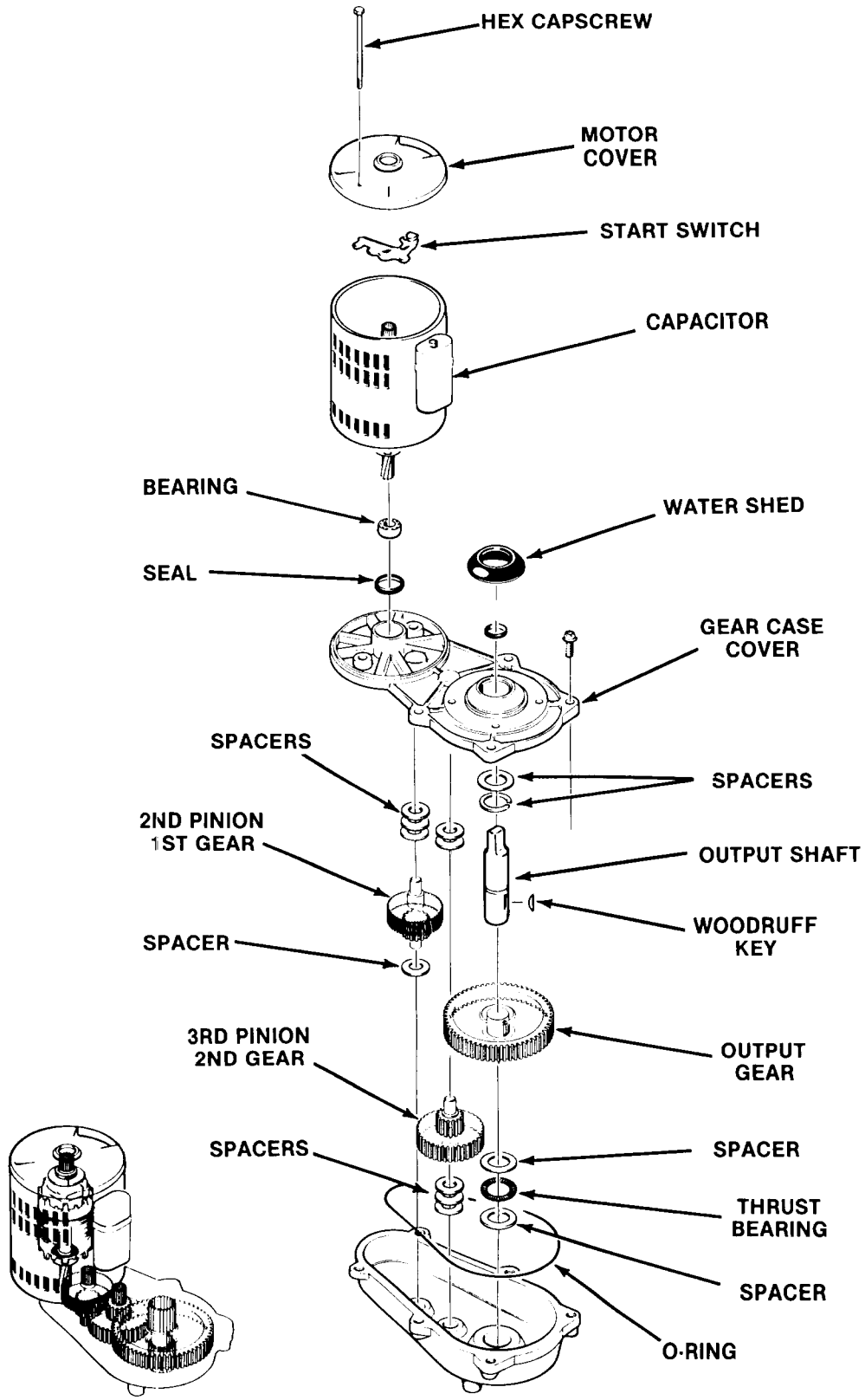

MH750R REMOVAL AND REPLACEMENT PROCEDURES

WARNING

Be sure the electrical power supply and the water supply are OFF, BEFORE starting any of the following REMOVAL AND REPLACEMENT procedures as a precaution to prevent possible personal injury or damage to equipment.

REMOVAL AND REPLACEMENT OF THE AUTOMATIC EXPANSION VALVE

To remove the automatic expansion valve:

1. Remove screws and the top panel.
2. Bleed off the refrigerant charge through the service valve.
3. Unwrap insulation around the automatic expansion valve.

CAUTION

Wrap the automatic expansion valve with WET CLOTHS to protect the sensitive parts during soldering and installation. DO NOT direct flame toward valve.

4. With the automatic expansion valve covered with WET CLOTHS, unsolder the 1/4-inch O.D. line from the side of the valve.
5. Unsolder the 3/8-inch O.D. line from the bottom of the valve and remove the valve.

To replace the automatic expansion valve, reverse the removal procedures and follow special precautions given for steps in installing and soldering valve tubing.

Evacuate and recharge.

REMOVAL AND REPLACEMENT OF THE COMPRESSOR ASSEMBLY

To remove compressor:

1. Remove two screws and the cover from the compressor junction box.
2. Disconnect the electrical leads at the compressor junction box that originate in the control box.
3. Bleed off the refrigerant charge through the Schrader valve.
4. Unsolder the suction line from the compressor.
5. Unsolder the discharge line from the compressor.
6. Unsolder the process header tube from the compressor and retain for installation on the replacement compressor.
7. Remove four bolts, lockwashers and washers which secure the compressor to the chassis mounting base.
8. Remove the compressor from the chassis.

To replace the compressor assembly, reverse the removal procedures.

10. When recharging the system with refrigerant, always check nameplate for the specified refrigerant charge.

NOTE

Always install a replacement drier, anytime the sealed refrigeration system is opened. Do not replace the drier until all other repair or replacement have been completed. BE SURE the compressor crankcase heater is ON, 12-HOURS BEFORE START UP.

Thoroughly evacuate the system to remove moisture and non-condensables.

MH750R REMOVAL AND REPLACEMENT PROCEDURES

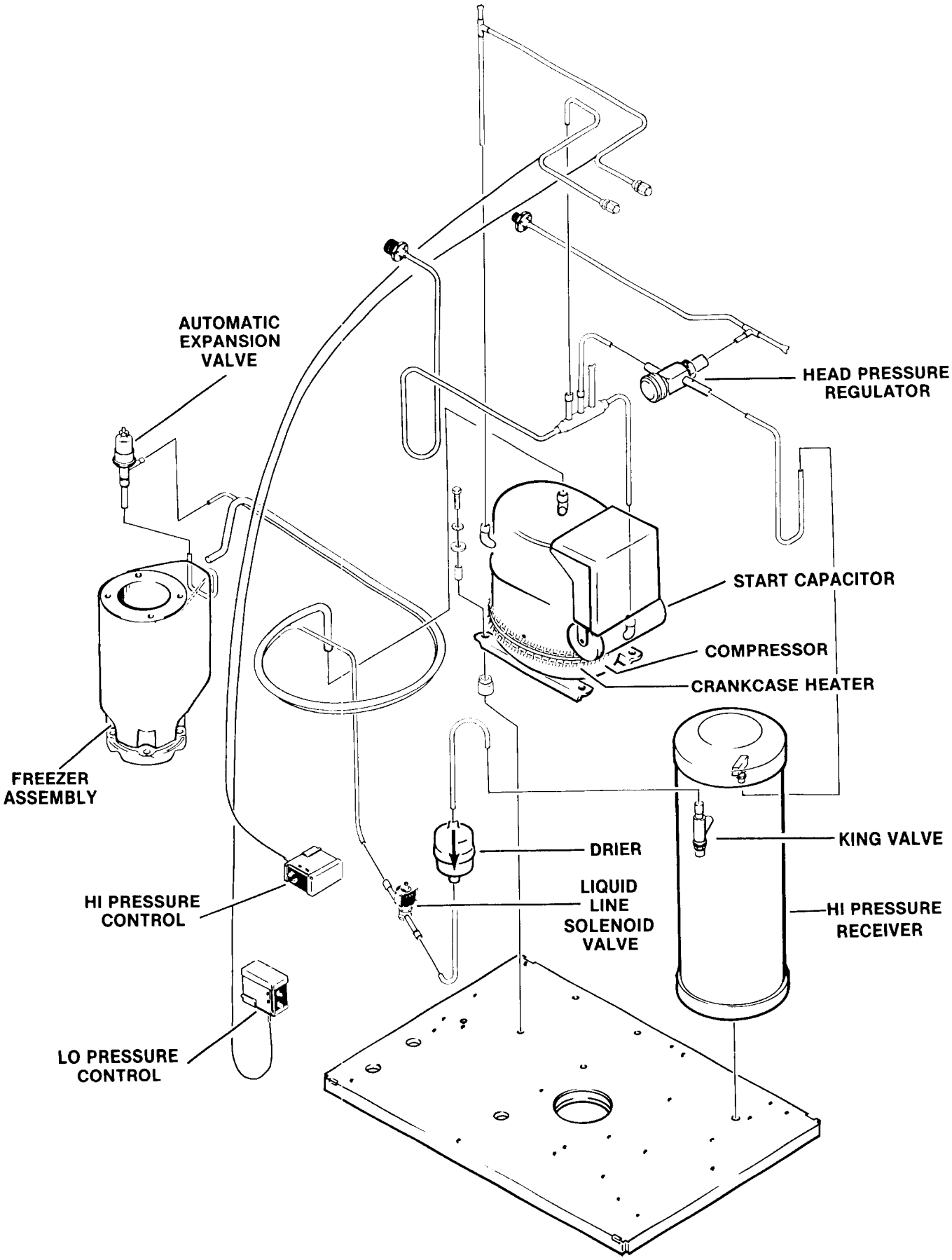

REMOVAL AND REPLACEMENT OF THE HEAD PRESSURE REGULATOR VALVE

NOTE

Always install a replacement Drier, anytime the sealed refrigerant system is opened. Do not replace the Drier until all other repair or replacement have been completed. BE SURE the Compressor Crankcase Heater is ON, 12-HOURS BEFORE START UP.

To remove the head pressure regulator valve:

1. Remove screws and the top panel.
2. Bleed off the refrigerant charge through the Schrader Valve.
3. Unwrap insulation around the head pressure regulator valve.

CAUTION

Wrap the head pressure regulator valve with WET CLOTHS, to protect the sensitive parts during soldering and installation. DO NOT direct flame toward the valve.

4. With the head pressure regulator valve covered with WET CLOTHS, unsolder the 1/4-inch O.D. line from the side of the valve.
5. Unsolder the 3/8-inch O.D. line from the bottom of the valve and remove the valve.

To replace the head pressure regulator valve, reverse the removal procedures and follow special precautions given for steps in installing and soldering valve tubing.

REMOVAL AND REPLACEMENT OF THE LIQUID LINE DRIER

To remove the drier:

1. Remove screw and drier brace attaching the drier.
2. Bleed off the refrigerant charge through the Schrader valve.
3. Unsolder refrigerant lines at top and bottom of drier, remove the drier and separate the drier from the drier brace.

To replace the drier:

1. Remove the factory seals from the replacement drier and install the drier in the refrigerant lines with the arrow positioned in the direction of the refrigerant flow.

CAUTION

If the factory seal is broken on the replacement drier, exposing it to the atmosphere for more than a few minutes, the drier will absorb moisture from atmosphere and lose substantial ability for moisture removal.

Be sure the replacement drier is installed with the arrow positioned in the direction of the refrigerant flow.

2. Install the drier brace on the drier.
3. Solder the drier into the lines, two places.
4. Purge the system and check for leaks.
5. Thoroughly evacuate the system to remove moisture and non-condensables.
6. Charge the system with refrigerant by weight. SEE NAMEPLATE for specifications.

CHARGING PROCEDURES

Particular care must be taken when recharging this remote system. No liquid refrigerant may be placed in the system at the compressor. DO NOT use the Schrader valves at the front of the machine for weighing in the charge. All liquid R-12 must be weighed into the receiver through the "front seated" king valve.

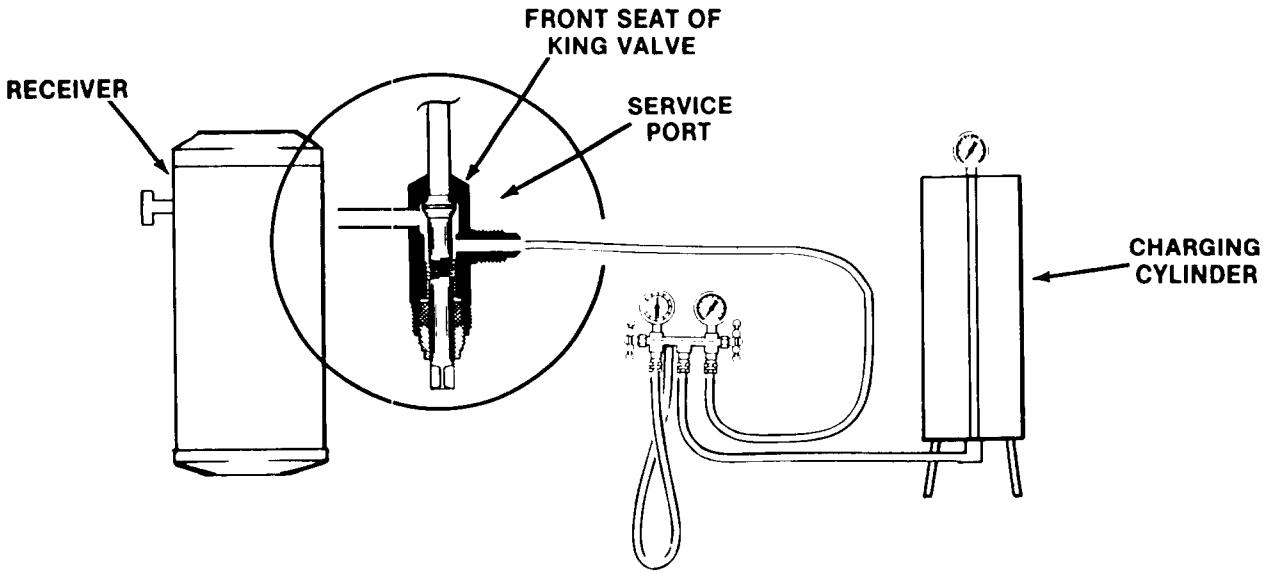

MH750R THE PARTS ILLUSTRATIONS AND PARTS LISTS

GENERAL

This section contains the Parts Illustrations and the Parts List for each of the major assemblies inthe MH750R.

A *No Number* designation, when used in the Part Number Column indicates the unit is not available from SCOTSMAN as an assembly. This designation is used only for the convenience and clarity of division in cataloging.

HOW TO ORDER PARTS OR ASSEMBLIES

When ordering parts or assemblies, to avoid costly delays and errors in shipment, give the part number, the complete description shown in the list, and the quantities of each part or assembly required. Also include the model name, the serial number of the icemaker for which the part is required and for parts which require color matching, the color of the cabinet.

All part numbers have TEN DIGITS (spaces), required for use in the Computer System. BE SURE to fill in ALL SPACES in the CATALOG NUMBER column, on the parts order form.

WIRING DIAGRAMS

This section is provided as an aid in understanding the electrical circuitry of the MH750R.

////////////////////// **WARNING** //////////////////////

When conducting a continuity check of the modular cuber:

1. **Disconnect the main power source.**
2. **DO NOT use an incandescent lamp or jumper wire, conduct all tests with a volt-ohm-meter.**

//

The wiring diagrams in this Section are:

MH750RE-1A (115/60/1) Remote - Air-Cooled

MH750R THE PARTS ILLUSTRATIONS AND PARTS LISTS

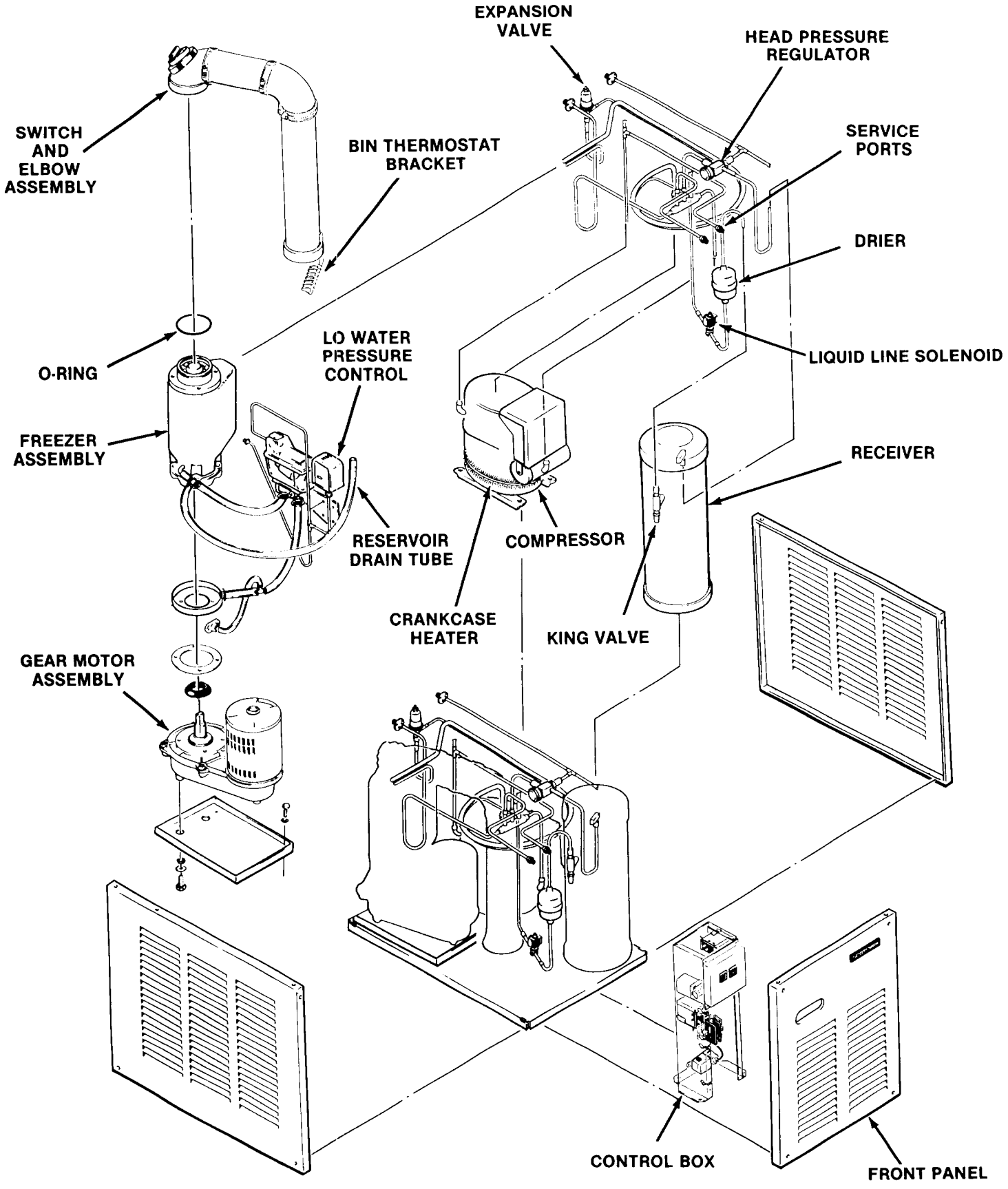

MH750R THE PARTS ILLUSTRATIONS AND PARTS LISTS

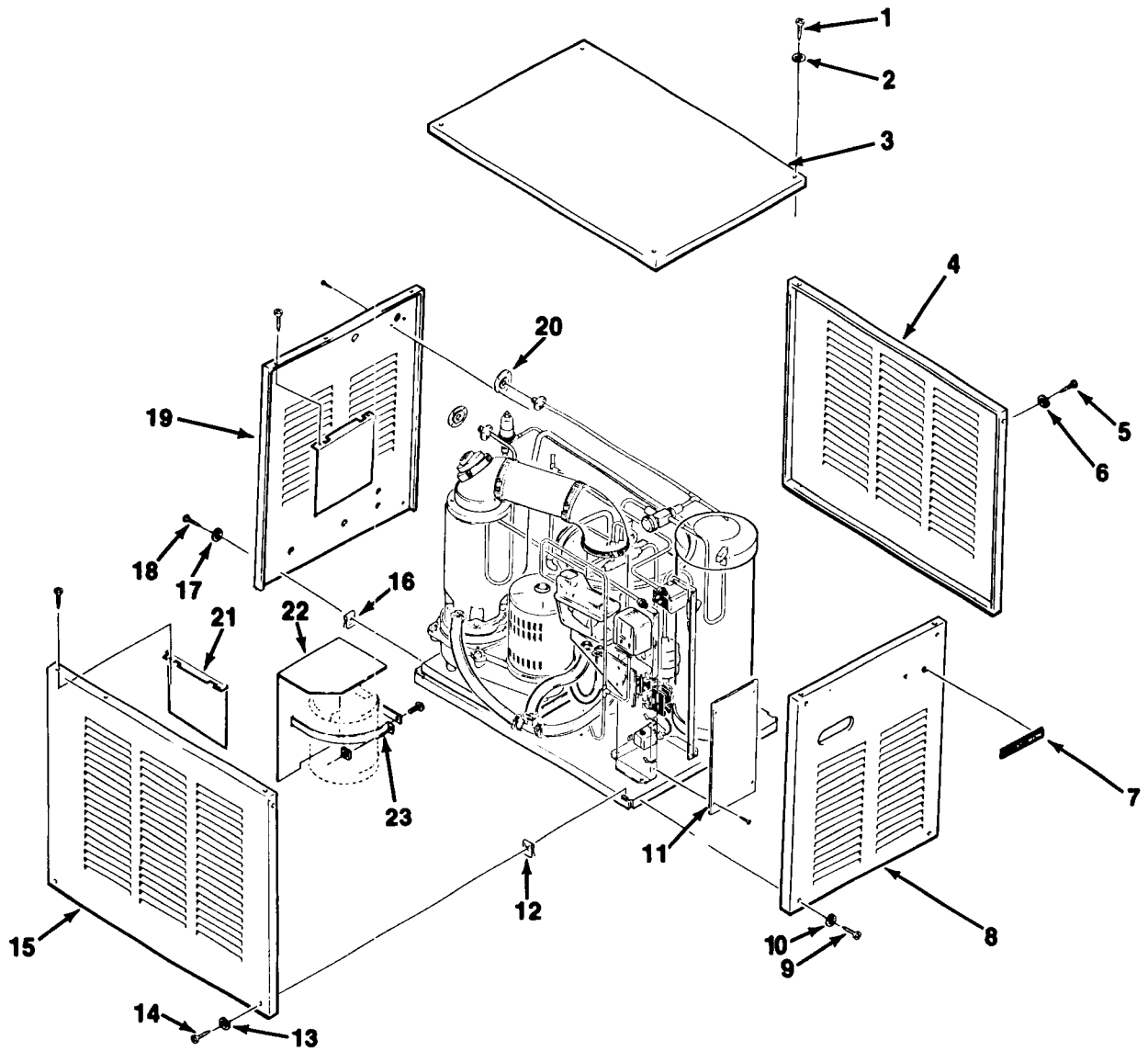

CABINET ASSEMBLY

ITEM NUMBER	PART NUMBER	DESCRIPTION
1	03-1419-09	Screw, No. 8 x 1-1/4
2	03-1417-15	Lockwasher, No. 8
3	A30007-001	Panel Top, S.S.
	A30007-002	Panel Top, Enamel
4	A30009-001	Panel Right Side, S.S.
	A30009-002	Panel Right Side, Enamel
5	03-1404-09	Screw, No. 8 x 1/2
6	03-1417-03	Lockwasher, No. 8
7	15-0718-01	Scotsman Emblem
8	A30006-001	Panel Front, S.S.
	A30006-002	Panel Front, Enamel
9	03-1419-09	Screw, No. 8 x 1-1/4
10	03-1417-15	Lockwasher No. 8
11	A30542-001	Control Box Cover
12	03-1507-00	Speednut
13	03-1417-15	Lockwasher No. 8
14	03-1404-09	Screw, No. 8 x 1/2
15	A30008-001	Panel Left Side, S.S.
	A30008-002	Panel Left Side, Enamel
16	03-1507-00	Speednut
17	03-1417-03	Lockwasher, No. 8
18	03-1404-09	Screw, No. 8 x 1/2
19	A31951-002	Panel Rear, S.S.
	A31951-001	Panel Rear, Enamel
20	*No Number*	Retainer
21	*No Number*	Wire Shield
22	A30125-001	Motor Shield
23	A32423-001	Strap

MH750R THE PARTS ILLUSTRATIONS AND PARTS LISTS

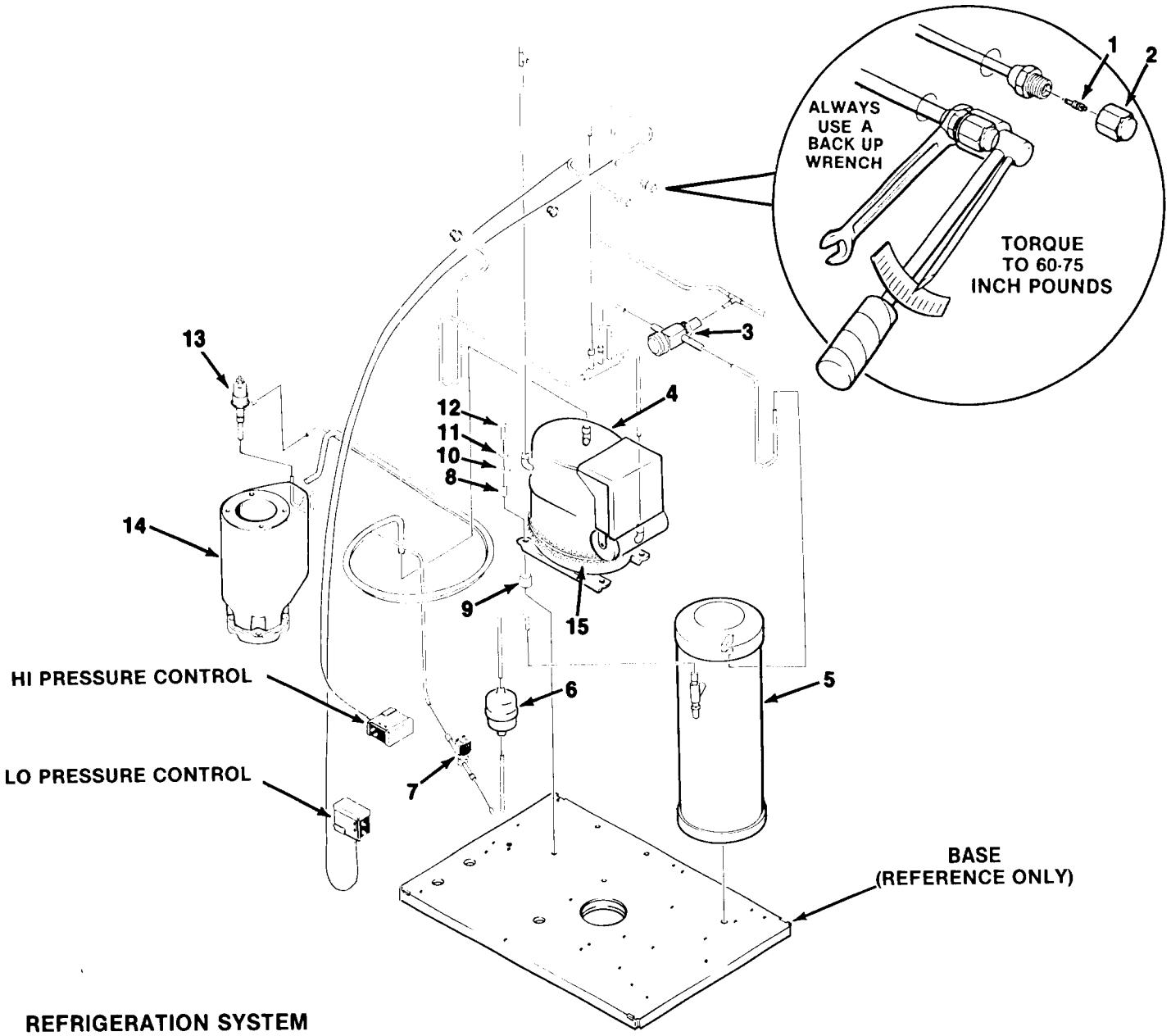

REFRIGERATION SYSTEM

ITEM NUMBER	PART NUMBER	DESCRIPTION
1	16-0560-00	Valve Core
2	16-0563-00	Cap
3	11-0422-01	Head Pressure Regulator (Low Ambient)
4	18-3900-01	Compressor 115/60/1
	18-3900-02	Compressor 208-230/60/1
5	16-0761-01	Receiver
6	02-0544-01	Drier
7	12-2257-02	Liquidline Solenoid (115/60/1)
	12-2257-01	Liquidline Solenoid (208-230/60/1)
8	18-2200-27	Sleeve
9	18-2200-28	Grommet
10	03-1408-29	Washer
11	03-1417-12	Lockwasher, 5/16
12	03-1405-40	Screw, 5/16-18 x 1-3/4
13	11-0438-01	Expansion Valve
14	A31953-020	Freezer Assembly
15	12-1868-01	Crankcase Heater 115 Volt
	12-1868-02	Crankcase Heater 230 Volt

MH750R THE PARTS ILLUSTRATIONS AND PARTS LISTS

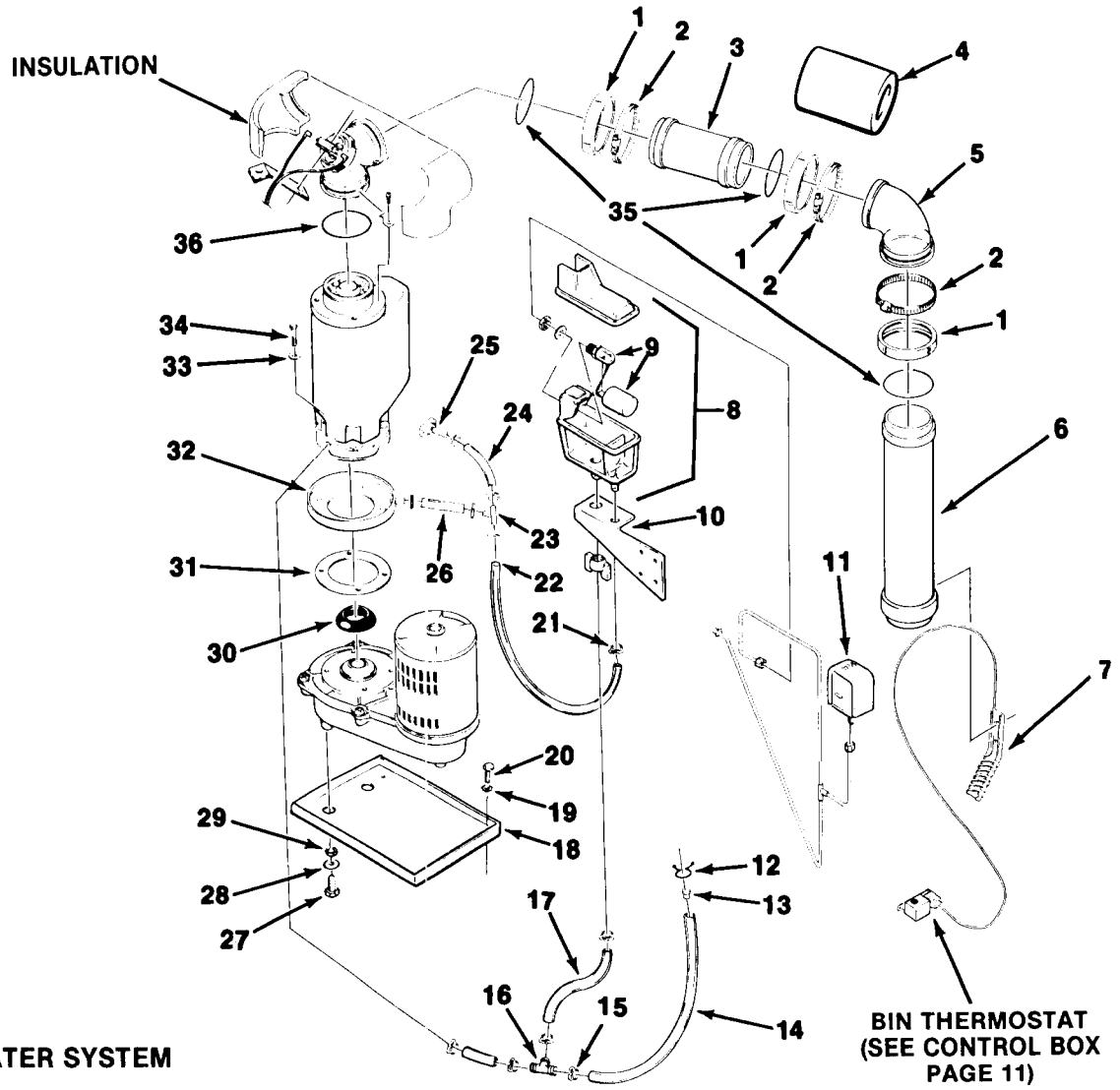

WATER SYSTEM

ITEM NUMBER	PART NUMBER	DESCRIPTION
1	A30089-001	U Channel (3)
2	02-0179-03	Band Clamp (3)
3	A30088-01	Ice Tube Assembly
4	*No Number*	Tube Covering
5	02-2764-02	Elbow
6	A31935-001	Ice Tube Assembly
7	A30148-001	Thermo Bracket
8	02-2217-01	Reservoir Assembly
9	02-2217-02	Valve and Float Reservoir
10	A30002-001	Mounting Bracket Reservoir
11	11-0296-00	Low Water Pressure Control
12	A31627-001	Clamp
13	13-0859-01	Plug
14	13-0674-09	Hose 20″
15	02-0694-00	Clamp
16	16-0670-02	Tee
17	13-0674-09	Hose 6.5″
18	A28207-001	Motor Plate
19	03-1417-09	Lockwasher, 1/4
20	03-0571-00	Screw, 1/4-20 x 1/2
21	02-0694-00	Clamp
22	13-0079-03	Hose 22″
23	16-0670-02	Tee
24	13-0079-03	Drain Tube 6.0″
25	A31757-003	Drain
26	13-0079-03	Drain Tube 3.0″
27	03-1420-01	Screw, 5/16-18 x 7/8
28	03-1410-04	Lockwasher, 5/16
29	03-1408-35	Washer
30	A31340-001	Water Shed
31	13-0704-00	Gasket
32	A32050-001	Drip Pan
33	03-1408-03	Washer
34	03-1420-03	Screw, Hex Cap 1-1/4 - 18 x 5/16 inch
35	13-0617-49	O-Ring (2)
36	13-0617-45	O-Ring

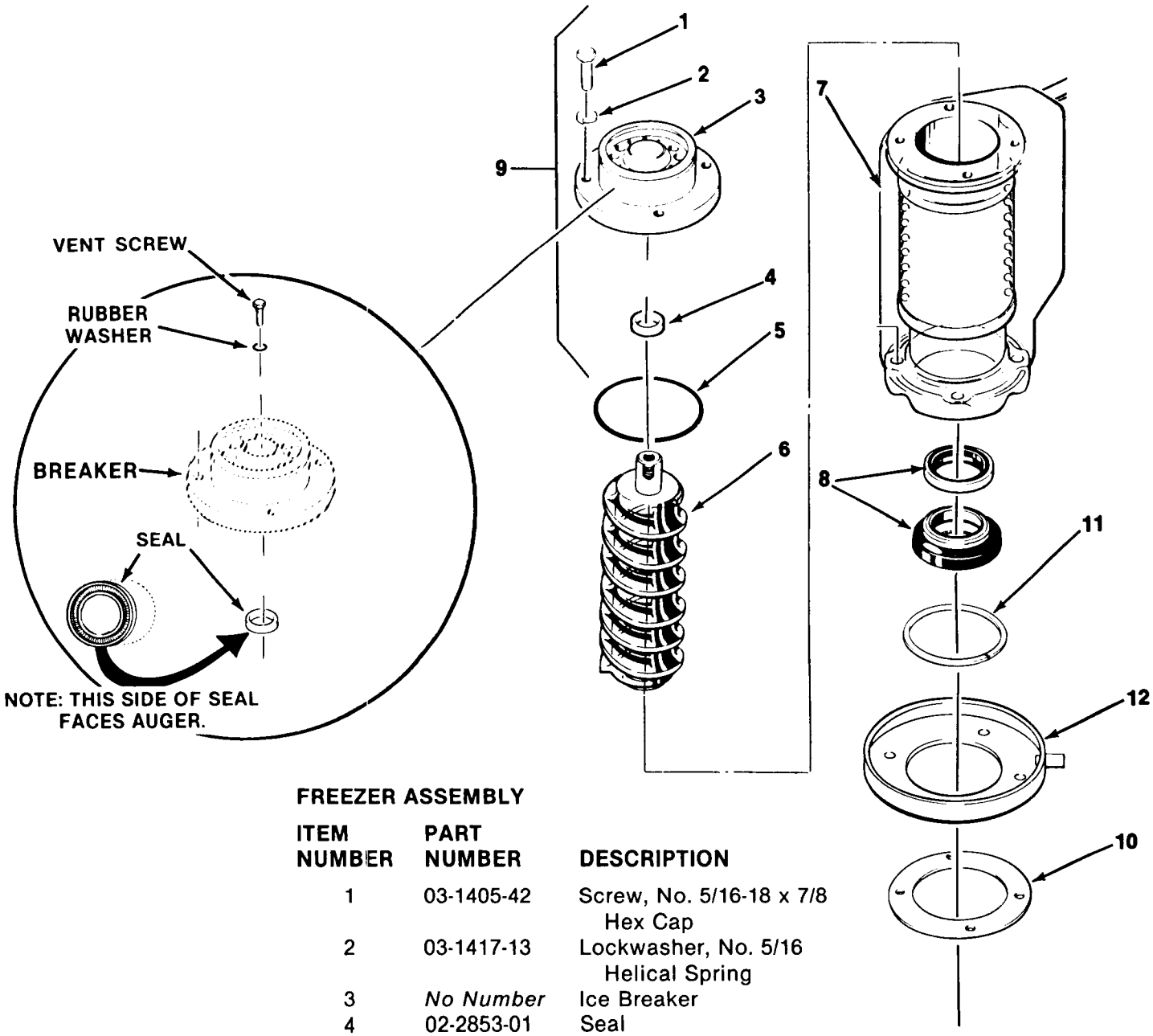

FREEZER ASSEMBLY

ITEM NUMBER	PART NUMBER	DESCRIPTION
1	03-1405-42	Screw, No. 5/16-18 x 7/8 Hex Cap
2	03-1417-13	Lockwasher, No. 5/16 Helical Spring
3	*No Number*	Ice Breaker
4	02-2853-01	Seal
5	13-0617-46	O-Ring
6	A31839-001	Auger
7	A31953-020	Freezer Assembly
8	02-0929-01	Seal, Water
9	A32571-020	Ice Breaker Assembly (Includes Item 4)
10	13-0704-00	Gasket
11	03-1558-05	Retaining Ring
12	A32050-001	Drip Pan

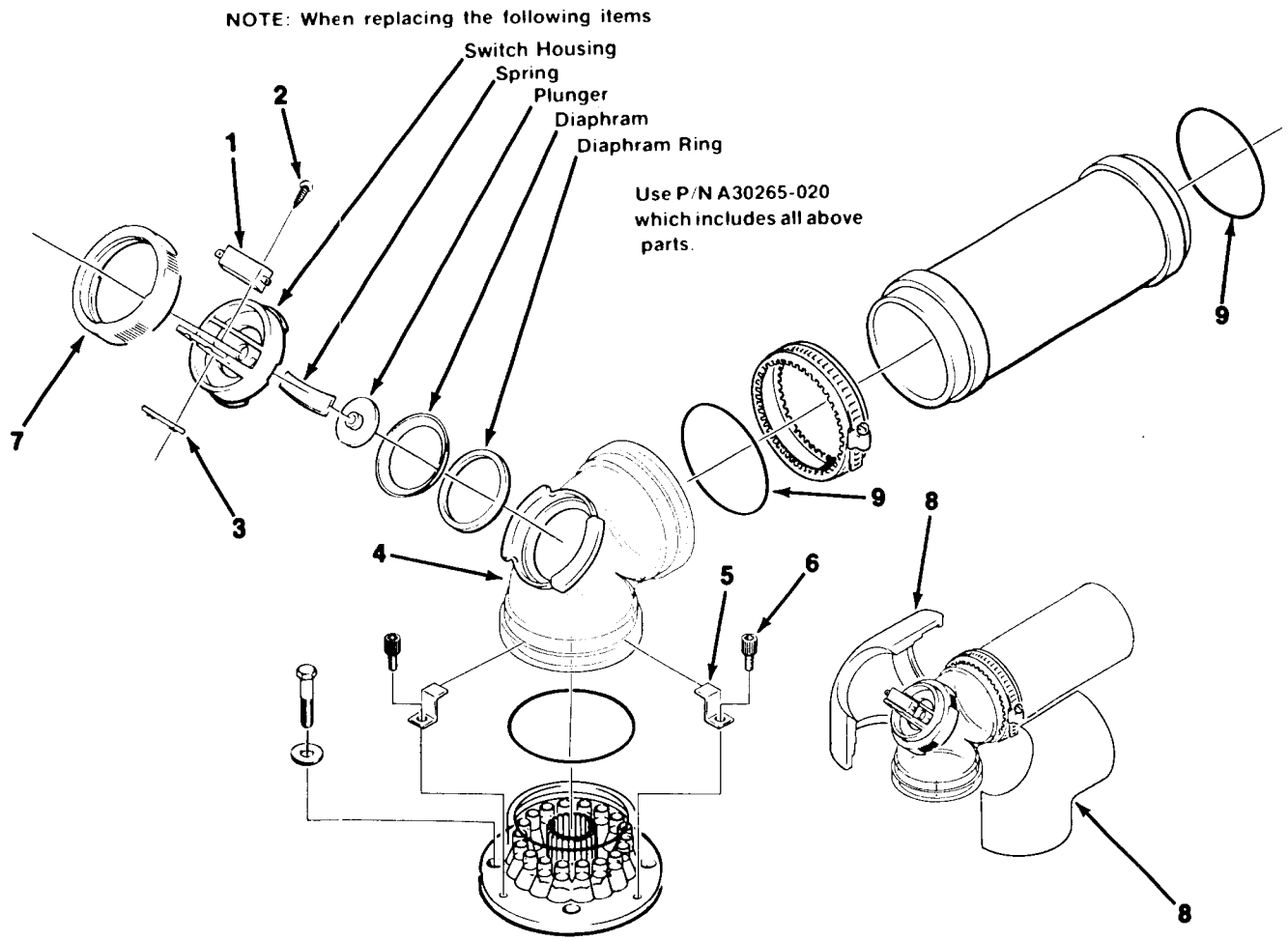

ELBOW AND SWITCH ASSEMBLY

ITEM NUMBER	PART NUMBER	DESCRIPTION
1	12-2202-01	Switch
2	03-1403-08	Screw, No. 6-32 x 7/8
3	03-0886-00	Speednut
4	02-2764-01	Elbow Assembly
5	02-2604-01	Bracket, Spout Retaining
6	03-1544-04	Screw, No. 10-24 x 3/8 Stainless Soc HD Cap
7	02-2637-01	Retaining Ring
8	A31390-001	Insulation - Includes left and right sides
9	13-0617-49	O-ring

DRIVE MOTOR ASSEMBLY

ITEM NUMBER	PART NUMBER	DESCRIPTION
1	02-1606-00	Oil Seal
2	13-0709-02	Water Shed C Model Only
3	02-2853-01	Oil Seal - Faces Up
4	03-1251-01	Screw*
5	A31230-001	Gear Case Cover Assembly*
6	02-1681-00	Thrust Race
7	03-1363-00	Retaining Ring
8	02-2541-01	Shaft, Output
9	03-1630-01	Key
10	02-2745-01	Gear, Output
11	02-1604-00	Third Pinion Assembly, Second Gear
12	02-1679-00	Thrust Race
13	A32368-020	Bearing (Includes Items 12, 13, & 14)
14	02-1679-00	Thrust Race
15	A26103-001	"O" Ring
16	A31230-001	Gear Case Assembly Bottom*
17	03-1408-24	Washer
18	02-1603-00	Second Pinion Assembly, First Gear
19	03-1408-24	Washer
20	12-1741-29	Bearing Shaft GE
	12-1741-20	Bearing Shaft Emerson
	12-2314-20	GE P.S.C.
21	A32425-001	Drive Motor
22	12-1741-28	Switch, Start (General Electric) #1
	12-1741-32	Start Switch (General Electric) #2
	12-2314-21	Centrifugal Switch P.S.C.
	12-1741-22	Switch, Start (Emerson)
23	A25835-001	Gearcase Oil (1) Pint
24	A32404-021	Gearmotor Assembly Complete
25	12-2314-22	Capacitor (For G.E. PSC Only)

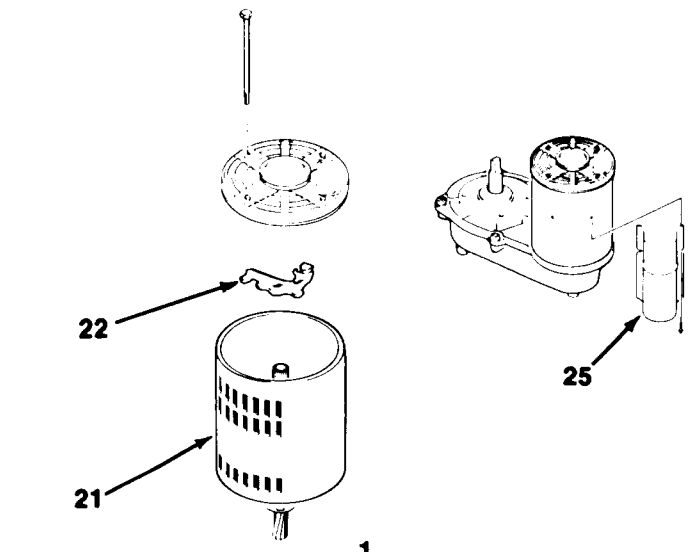

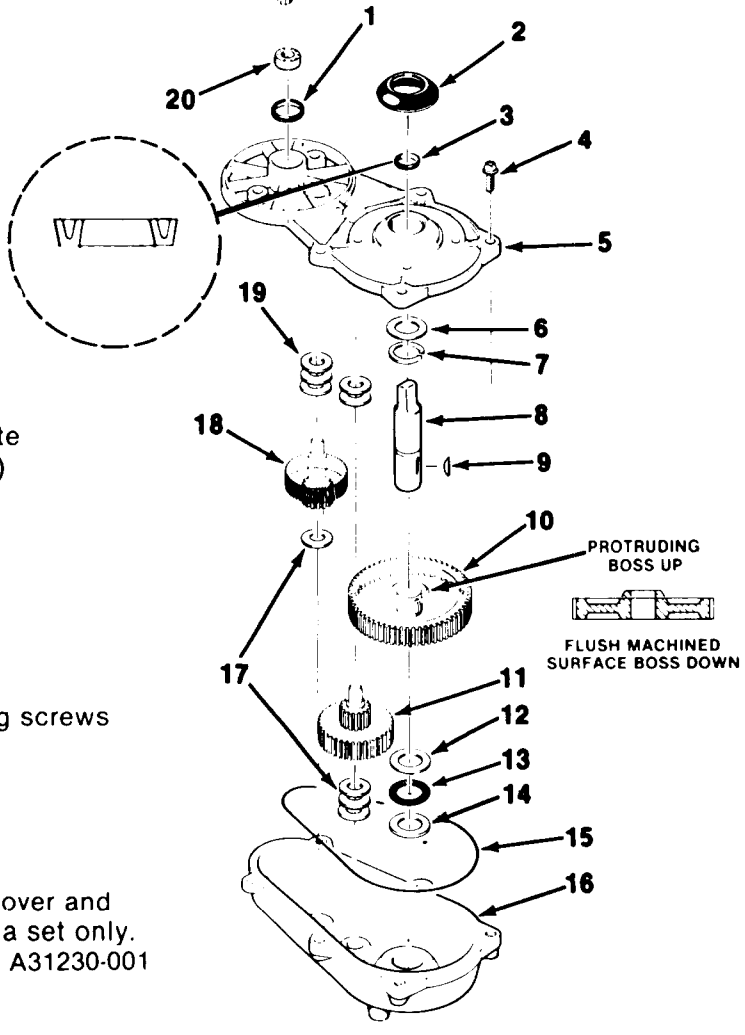

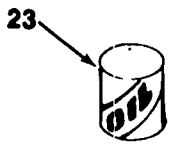

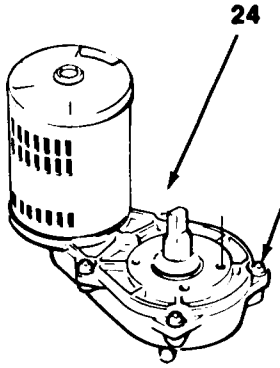

*NOTE:Torque cover mounting screws 250-300 inch pounds.

*NOTE: Gearcase cover and bottom are sold as a set only. Order Part Number A31230-001

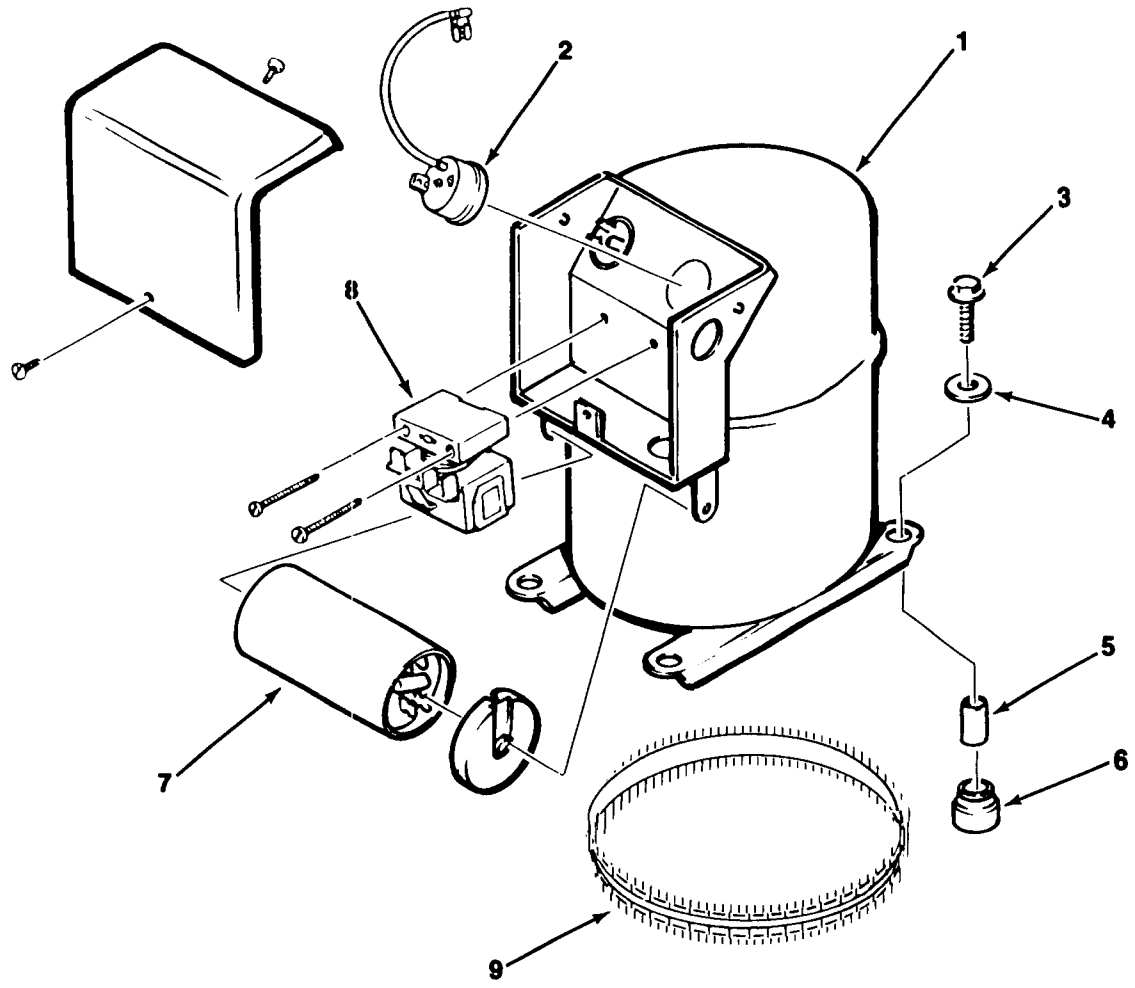

COMPRESSOR ASSEMBLY

ITEM NUMBER	PART NUMBER	DESCRIPTION
1	18-3900-01	Compressor (115/60/1)
	18-3900-02	Compressor (208-230/60/1)
2	18-2400-25	Overload (115/60/1)
	18-2400-26	Overload (208-230/60/1)
3	03-1406-01	Hex Nut
4	03-1407-07	Plain Washer
5	18-2200-27	Mounting Sleeve
6	18-2200-28	Mounting Grommet
7	18-1901-42	Capacitor (115/60/1)
	18-1901-43	Capacitor (208-230/60/1)
8	18-2410-00	Relay (115/60/1)
	18-2200-34	Relay (208-230/60/1)
9	12-1868-01	Crankcase Heater (115/60/1)
	12-1868-02	Crankcase Heater (208-230/60/)

MH750R THE PARTS ILLUSTRATIONS AND PARTS LISTS

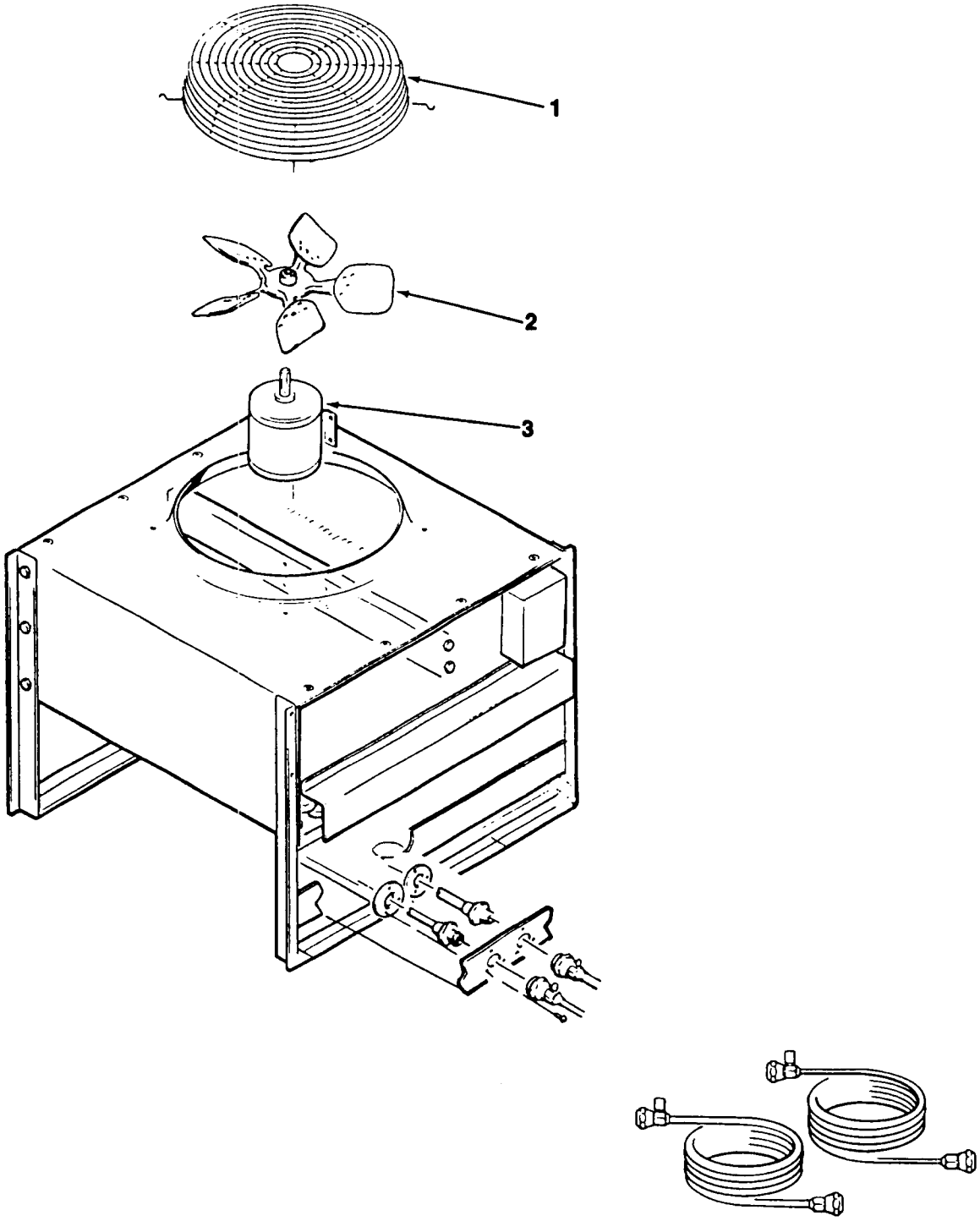

REMOTE CONDENSER RC151-32B
RC302-32B

ITEM NUMBER	PART NUMBER	DESCRIPTION
1	02-2618-01	Guard, Fan
2	18-3733-01	Blade, Fan
3	18-5301-01	Motor, Fan (208-230/60/1)

PRE-CHARGED TUBING KIT

ITEM NUMBER	PART NUMBER	DESCRIPTION
1	RTCM225	25' Long
2	RTCM240	40' Long

MH750R THE PARTS ILLUSTRATIONS AND PARTS LISTS

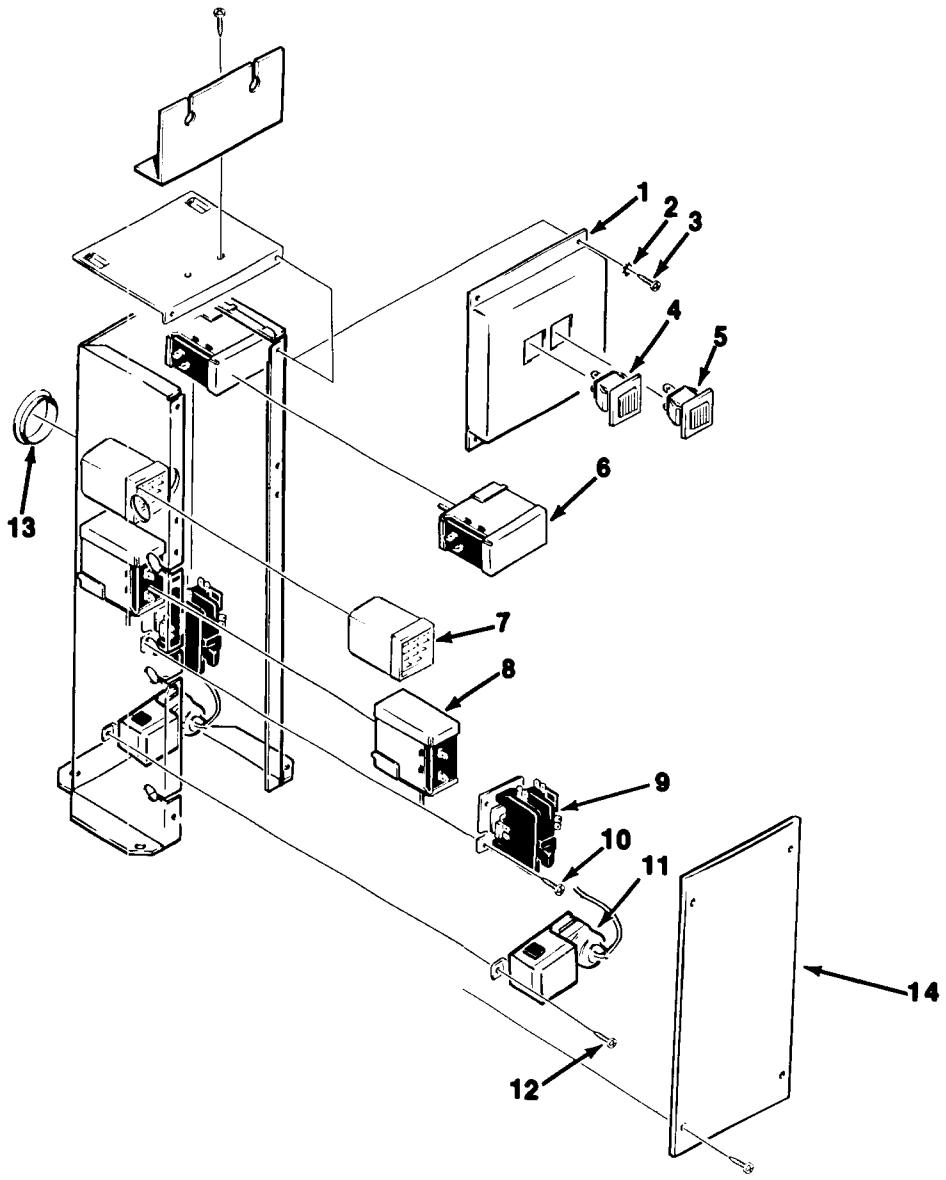

CONTROL BOX ASSEMBLY

ITEM NUMBER	PART NUMBER	DESCRIPTION
1	A30543-001	Switch Housing
2	03-1417-03	Lockwasher
3	03-1531-01	Screw, #8 x 3/8
4	12-2199-01	Switch, Start-Reset (115/60/1)
	12-2199-02	Switch, Start-Reset (208-230/60/1)
5	12-2200-01	Switch, On-Off (115/60/1)
	12-2200-02	Switch, On-Off (208-230/60/1)
6	11-0388-02	Pressure Control - Hi
7	12-2090-01	Relay (115/60/1) (1)
	12-2090-05	Relay (208-230/60/1)
8	11-0420-01	Pressure Control - Lo
9	12-2048-01	Contactor (115/60/1)
	12-2048-02	Contactor (208-230/60/1)
10	03-1403-17	Screw, #8 x 3/8
11	11-0354-00	Bin Thermostat
12	03-1403-17	Screw #8 x 3/8
13	12-1213-12	Snap Bushing
14	A30542-001	Control Box Cover

MH750R WIRING DIAGRAM

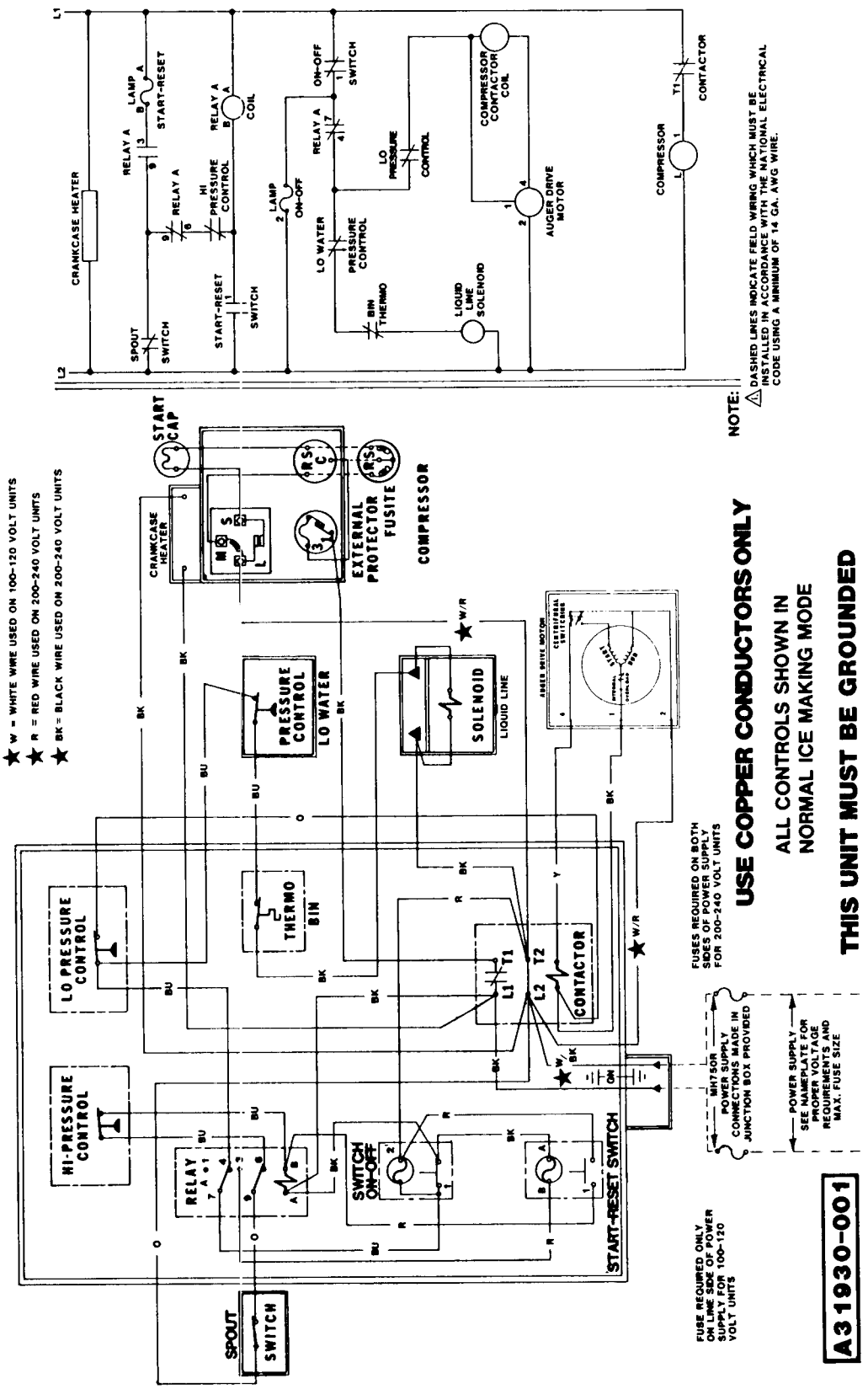

Wiring Diagram MH750RE-1A (115/60/1) Remote - Air-Cooled

TABLE OF CONTENTS

Table of Contents			1
Specifications and Dimensions			2-3
Photagraphs and Ice Making Chart			4
Installation:			
Location			5
Uncrating			5
Preparation for Installation			5-6
Setting Up Machine			6
Placing Machine Section in Position			6
Lifting Instruction Diagram			7
Plumbing & Electrical Illustration			8
Plumbing			9
Water treatment Water supply			9
Placing of Bin Thermostat Bulb			10
Electrical			10
Start Up			11
Final Check List			12
Wiring Diagram	230/60/1	Air Cooled	13
Wiring Diagram	230/60/1	Water Cooled	14
Wiring Diagram	208/220/60/3	Air Cooled	15
Wiring Diagram	208/220/60/3	Water Cooled	16
Wiring Diagram	208/60/1	Air Cooled	17
Wiring Diagram	208/60/1	Water Cooled	18
Harvest Cycle			19-20
Freezing Cycle			21-22
Service Analysis			23-26
Component Parts:			
Complete Unit Front View			27
Complete Unit Left Side View			28
Complete Unit Top View W.C.			29
Complete Unit Top View A.C.			30
Hot Water Tank Assembly			31
Control Box			32
3-Way Water Valve			33
Drive Linkage			34
Sump Pump			35-36
Spray Tube Assy.			37
Case Parts			38
Service:			
Removing & Replacing Components			39-40
Functional Parts & Maintenence			41-43
Maintenance and Cleaning Instructions			44
B-700 Bin			45

THIS PAGE
INTENTIONALLY
LEFT BLANK

SPECIFICATIONS

	MM1010HB	MM1010WHB
Compressor	3 hp twin cylinder Semi Hermetic	3 hp twin cylinder Semi Hermetic
Condenser	Cleanable Air Cooled	Cleanable Water Cooled
Refrigerant	R12	R12
Refrigerant Charge	110 ounces	105 ounces
Refrigerant Control	Eight Capillary Tubes	Eight Capillary Tubes
Power Consumption	21.7 Amp., 3 Wire 230 V., 60 Cycle Single Phase	15.8 Amp., 3 Wire 230 V., 60 Cycle Single Phase
Water Consumption to Produce Ice	30.9 Gallons per hour	30.9 Gallons per Hour
Water used by Condenser		1 to 3 1/2 Gallons per minute. Varies with water temperature.
Ice Capacity	See Chart. Page 4	See Chart. Page 4
Companion Bin	B-700	B-700
Cube Size	Scotsman Mini cube	Scotsman Mini cube
Cubes Per Harvest	832	832

NOTE :

All Scotsman Super Cubers require neutral wire for secondary 115 volt components circuit. 3 phase cubers require 4 wire service with neutral. Special voltages upon request.

SPECIFICATIONS

SUPER CUBER MM-1010 SERIES	MODEL MM1010HB	MODEL MM1010WHB	MODEL MM1010HB-SS	MODEL MM1010WHB-SS
CONDENSER, Air Cooled	X		X	
CONDENSER, Water Cooled		X		X
CONDENSER DRAIN ¾" NPT		X		X
FINISH, Hammerloid Grey	X	X		
FINISH, Stainless Steel	-		X	X
SHIPPING WEIGHT, MACHINE SECTION	930	930	940	940

DAILY CAPACITY (See chart)
STORAGE UNIT 700 lbs.
COMPRESSOR 3 H.P.
ELECTRICAL 115-230 V, 60 CY, 1 PH, 3 WIRE
(Neutral Wire Required)
WATER INLET 3/8" NPT
CONDENSER DRAIN 3/4" NPT

DRAIN ON B-700H BIN 1/2" NPT
SUMP DRAIN 3/4" NPT
STORAGE BIN, Stainless Steel Liner
HEIGHT - (With legs and B-700H Bin) 91" to 91-3/4"
HEIGHT - (Without legs with B-700H Bin) 83"
WIDTH - 46-5/8"
OVERALL DEPTH, Air Cooled, Including Bin 50-1/2"

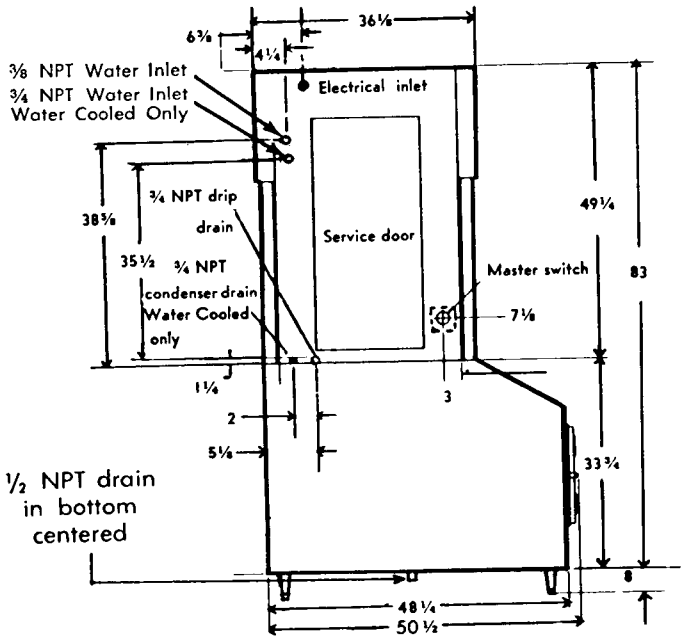

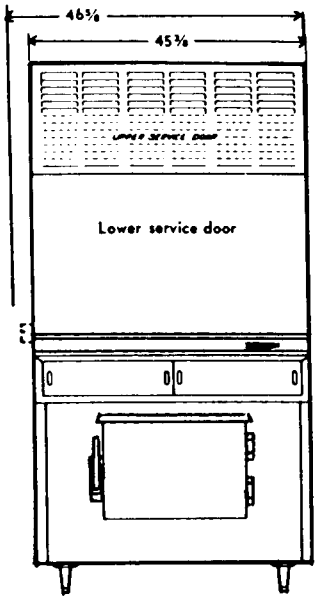

Specifications subject to change without notice.

SCOTSMAN

SUPER CUBER
MM-1010 HB
SERIES

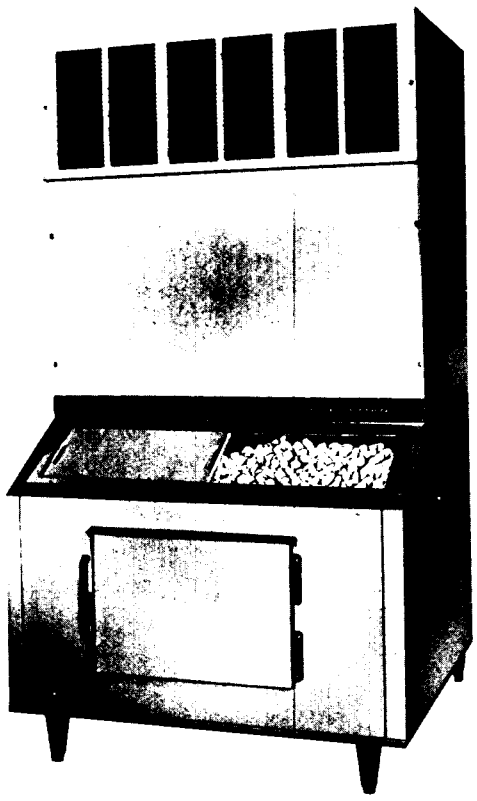

ice making capacity

WATER COOLED MODELS

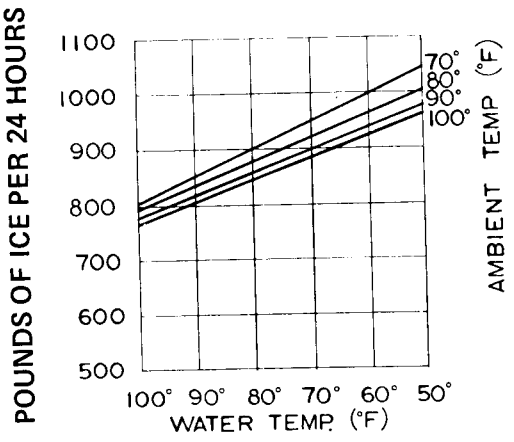

AIR COOLED MODELS

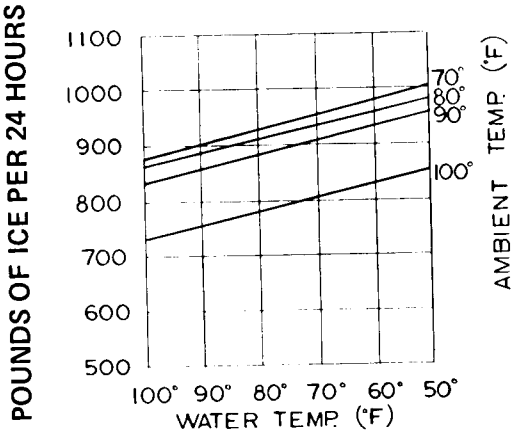

INSTALLATION

LOCATION OF THE ICE CUBE MACHINE

1. Select a location as convenient as possible for the user.
2. Accessible to the necessary electrical and plumbing connections.
3. If possible, have a minimum space of 12 inches above top and from left end panel for service.
4. A minimum of 24 inches for the convenience of the user in front of the machine.
5. Room temperature--minimum of 50 degrees, maximum of 100 degrees.

ALL INSTALLATIONS--Locate, if possible, so left end panel is accessible. Locate unit so proper circulation can be attained around the unit and behind it at least four inch. Provide plumbing and electrical connections so the unit can be moved out where the entire top can be removed and the unit can still be operated.

KITCHEN INSTALLATIONS--As a rule, the kitchen is not the most practical place to install an air-cooled condensing unit, as grease is almost always present and makes cleaning of the condensing unit difficult. Do not locate near range or steam table or other heating devices that may be used in the kitchen.

STOREROOM INSTALLATIONS--Be sure storeroom is of adequate size and properly ventilated. A small, poorly ventilated room will greatly impair the efficiency of the unit. The storeroom must be kept above 50 degrees in the winter months.

BASEMENT INSTALLATION--Locate machine in the coolest place. Locate the machine in a dry place. Keep away from furnace and boiler room. Keep away from service chutes and runways, also coal or other dust of any kind. If the machine is set over a floor drain, block the machine up enough to eliminate any possible damage to the machine.

LOCATE THE MACHINE SO IT CAN BE SERVICED WHEN NECESSARY. ALLOW AT LEAST FOUR INCHES OF SPACE AROUND THE MACHINE FOR CIRCULATING AIR.

UNCRATING

1. If possible, do not uncrate until equipment is in permanent location.
2. Storage bin and machine compartments are shipped in separate crates.
3. Remove hold-down bolts from skids.
4. Remove crate in usual manner for wood crating.

PREPARATION FOR INSTALLATION

1. Inspect complete unit cabinetry for shipping damage. Notify carrier of concealed damage claims.
2. Remove all service doors and panels.
3. Remove leg package from bin and install 4 legs in bin base sockets.
4. Loosen motor compressor hold down nuts until motor compressor rides freely on mounting springs.

PREPARATION FOR INSTALLATION

5. Remove all masking tape and packing members from curtains and inner cube making compartments. Re-align components such as sump pump or cube racks that may have shifted in transit.

6. Remove water strainer from compressor section for installation on unit or in water supply line feeding unit.

7. Open electrical control box and prepare for hook up. Use knock outs, cord connectors, etc. Then check unit nameplate voltage against building source voltage to make sure they correspond. Caution - Improper voltage applied to units will void your warranty protection.

8. Select unit location prior to hook up of water, drain and electric in accordance with local and national codes, minimum room temperatures 50° Fahrenheit. On air cooled models select well ventilated location.

9. Remove warranty card and service manual from storage bin and wipe bin clean with damp cloth.

10. Fill out warranty card completely including model and serial numbers as taken from aluminum plate found on the lower left side, above the drain connection. Forward this card to Scotsman factory using self-mailing card.

SETTING UP MACHINE

1. Be sure floor strength is capable of 2,000 pounds in an area of 46 inches by 50 inches.

   If ceiling height permits, use 8 inch base legs for the storage bin which will make a more convenient height for the user and allow more fall from the storage bin drain.

3. Storage bin must be absolutely level. (This is important).

PLACING MACHINE SECTION IN POSITION ON ICE STORAGE COMPARTMENT

1. Remove top and bottom doors on front and back of unit.
2. Extreme caution must be used to prevent damage to equipment or injury to the personnel.
3. Weld nuts for attaching carrying handles have been incorporated in each unit. Two in each corner of the front and back, these are 3/8" and spaced 4" x 43 5/8".
4. For carrying handles use 2 x 8's at least 6 feet. This allows 2 feet on each end for hand holds. See page 7
5. On the B-700 bin, care should be taken to avoid damaging rubber gasket around opening.

— LIFTING — INSTRUCTIONS

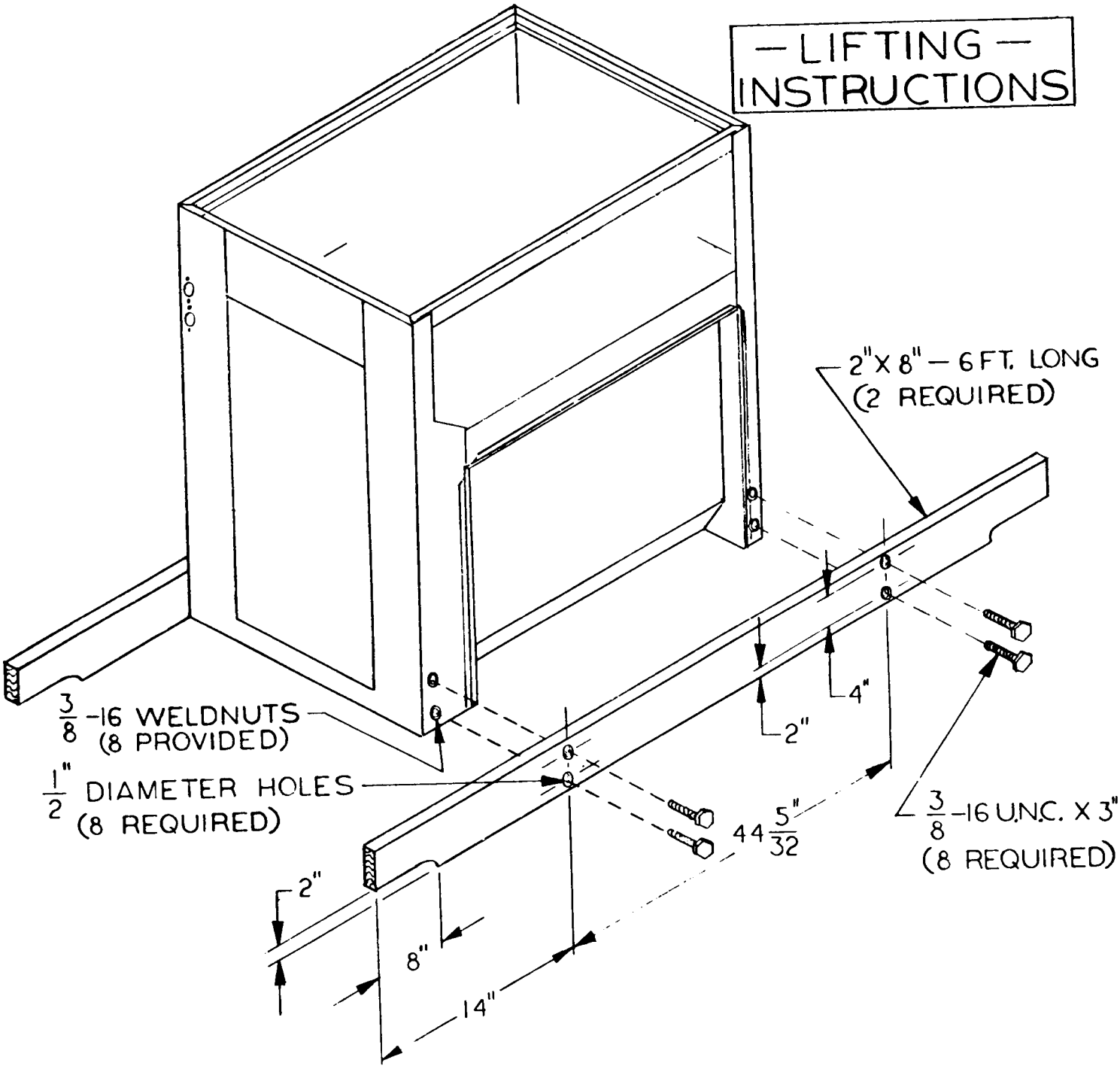

REMOVE DOORS. BOLT THE 2"X 8"S TO THE MACHINE BY MEANS OF EIGHT $\frac{3}{8}$ -16 U.N.C. CAP SCREWS INTO THE WELDNUTS PROVIDED IN THE FRAME.

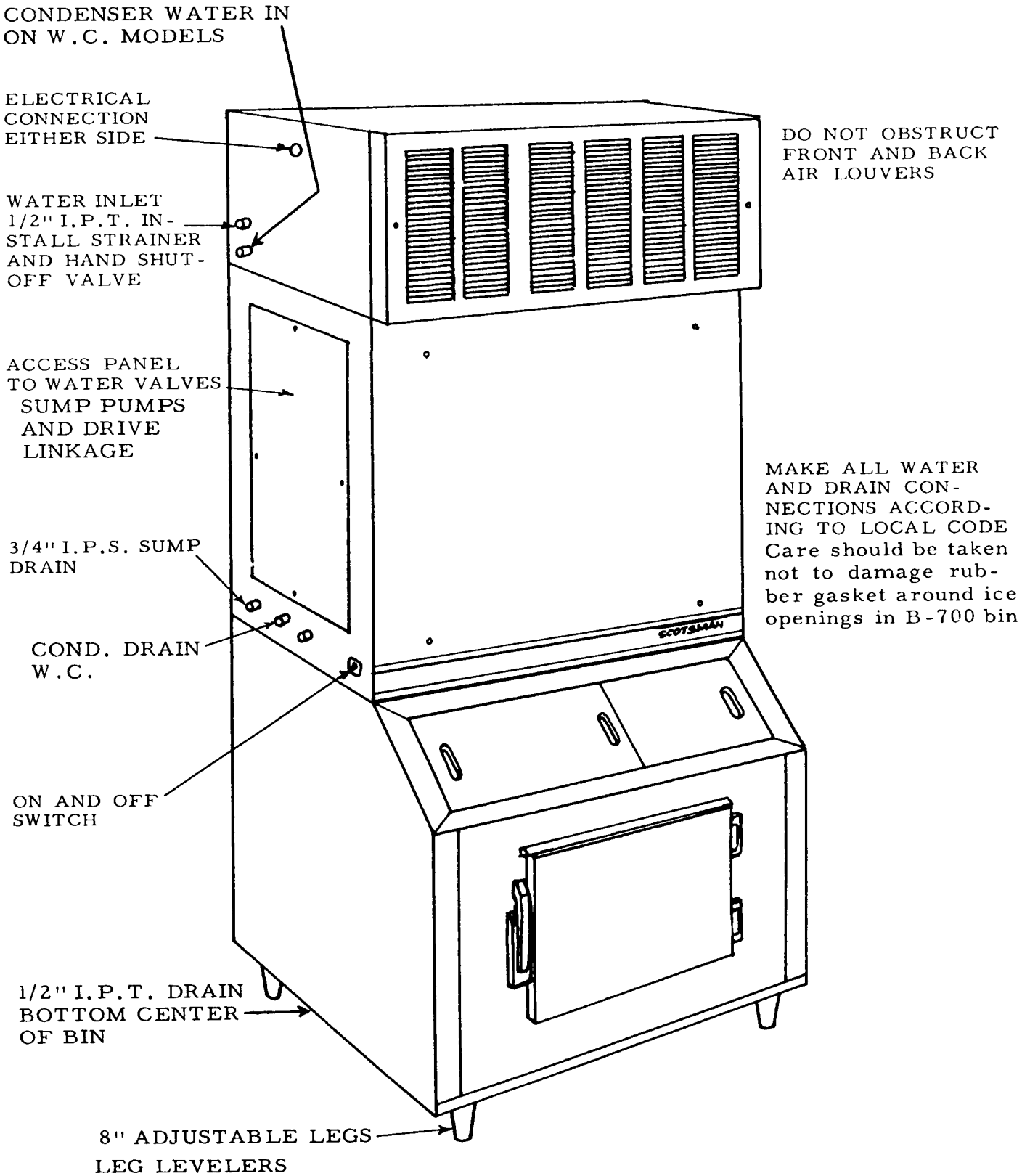

MM1010 INSTALLATION ON B-700 BIN

PLUMBING

1. Refer to Installation Diagram. (Page 8)
2. Water inlet should be 1/2" pipe or larger.
3. Strainer should be installed on outside of machine as close as possible to unit.
4. A shut-off valve either of globe or gate type should be installed next to strainer for the convenience of the service man.
5. (MM1010 is equipped with three separate drains so as to comply with all plumbing codes.)
6. Drain marked sump on Page 8 should be kept 3/4" in size with adequate fall which assures complete emptying of the sump tank at the end of the freezing cycle; and also with enough velocity to remove any sediment or solids which may have accumulated from the preceding batch of ice cubes.
7. Storage drain on Page 8 should be connected to open drain.
8. The drain from the condensor on W.C. units has a slight pressure Note: If outlet of connected drain is visible, it is helpful to the service man in checking condensor water valve.

WATER SUPPLY AND DRAIN CONNECTIONS

Page 8 shows recommended water piping connections and drain facilities for Model MM1010.

WATER SUPPLY - Miminum Pressure Required is 20 pounds.

The cuber water supply line is 1/2" I.P.T. for all units. Connect to a cold water supply line with regular plumbing fittings with a shut-off valve installed in an accessible place between supply line and machine. The water strainer supplied with the unit should be mounted with clean-out plug down. Locate the strainer next to the machine and the arrow in the direction of the flow.

Use care in connecting up water line to the machine. Water supply must be installed to conform with local code.

DRAIN

The recommended drain 1/2" I.P.T. tubing. Sweat to drain connections. Must be run to open or trapped drain. If drain is a long run, allow a 1/4" pitch per foot. Drain must be installed to conform with local code. Run separate 1/2" bin drain.

WATER TREATMENT

1. In areas where vast amounts of solids and impurities are present in the water supply, it may be necessary to use some type of filtering equipment on the water that is used in the actual manufacture of the ice and not for the condenser.
2. If above condition is true, it is suggested to disconnect water regulator from present location in machine compartment and connect it to a 3/8" OD copper line which may be run to the filtering equipment. (Note If water softening equipment is available in building, connect 3/8 inch line in soft water ahead of heater.)

3. For water treatment over and above normal local impurities, consult Service Dept., Scotsman Queen Products, Albert Lea, Minnesota.

PLACING OF BIN THERMOSTAT BULB IN STORAGE AREA

1. When mounting MM1010 on B-700 2 holes for fastening thermo bulb are located on the back wall of the bin.
2. Control has 12 foot cap tube. This should be brought down right front of freezing chamber, under cuber close to right side.
3. Bulb cover, gasket, and 2 buttons are packed with cuber.
4. When mounting unit on custom-built Bin bulb should be mounted close to the bottom, back, right-hand corner of the cuber.
5. Bulb should always be mounted so as to not be damaged by scoops or shovels.

ELECTRICAL

1. IMPORTANT: An ice machine must be connected by competent electrician.
2. Refer to wiring diagram. (Page 13-18)
3. MM1010-4 (115-230/60/1) requires 230 volt 3 wire, single phase system.
4. MM1010-9 ($115-\frac{208}{220}/60/3$) requires 208-220 volt 4 wire, 3 phase system.
5. Compressor operates on higher voltages and component parts on 115 volts only. (Caution: In area where a wild phase is present in the system, it must be kept out of the low voltage circuit.
6. Electrician should be instructed to install proper disconnect switch with a solid neutral.

ELECTRICAL CONNECTION AND CHARACTERISTICS

Standard Voltage 3 Wire 230/60/1

All external wiring should conform with National Underwriters' and local code requirements. Check the voltage on the line before connecting the machine.

Be Certain that the Super cubers are on their own circuit and individually fused. The maximum allowable voltage variation should not exceed 10% of the nameplate rating even under starting conditions. Low voltage can cause erratic operation, and may be responsible for serious damage to the overload switches and motor windings. Do not install 230 volt units on 208 volt supply. If necessary, use boost-buck transformer to correct voltage.

208/220/60/3 3 phase 4 wire with neutral

Wire according to diagram on machine. All wiring to be done according to local, state and National codes.

MANUAL SWITCH

A manual switch is provided on left side of the unit for the convenience of the user when it is desired to shut the unit down for a period of time. When any electrical component parts are being removed or serviced, it is recommended that the line switch be put in the "Off" position.
Manual switch is also located in control box for shutting off compressor while cleaning unit.

HIGH PRESSURE CONTROL W.C. MODELS

A high pressure control is provided to shut down the complete unit in case of extremely high head pressures or interrupted water supply. Some models are equipped with a lock-out type, and the unit will remain off until the control is reset manually. (To reset, press down small plunger on top of control.)The high pressure control should be set at 185 pounds.

START UP

1. Make sure all service valves on the condensing unit are backseated and turned as far as possible to the left. Replace the valve caps after checking the valves.
2. Make sure that the flow of air is not impeded in any way over condenser on air-cooled models. Keep condenser clean, (Check and clean the condenser monthly.)
3. Turn on cube water supply at hand shut-off valve. Make sure water pressure fills to proper level, but does not exceed 50# p.s.i. pressure. If necessary, install water pressure regulator to reduce pressure to approximately 50 pounds.
4. Check electrical circuit. Run in a separate line with fused disconnect switch box.
5. Remove cover from control box, check for loose or frayed wire, then turn compressor switch to "on" position. Also on-off switch left side of unit.
6. Turn disc on time clock to the right just far enough for water solenoid valve to energize. Allow clock to take it through harvest cycle. This will be approximately 2-1/4 minutes. Dial pointer should be set on Number 4. After the compressor starts, turn the dial completely around and send it through another harvest cycle.
   Do this several times. This will completely flush out machine of any dust that may have accumulated in shipment..
7. After the machine has been properly flushed, allow it to go into a freezing cycle--check for possible water leaks, check sump pump operation--should be running freely. Also note if jet tube travel is correct, and that none of the jets are plugged. Jet spray of water should hit the middle of the cup.
8. Time clock dial does not rotate at the end of the harvest cycle; it is started later by the cube size control located in the control box.
9. Freezing time will be approximately 18 minutes in a 70 degree ambient. (Longer if above, and shorter if below.)
10. Watch first cube harvest and check to make sure that plastic curtain has not been damaged in shipment.
11. Check texture of cubes made: Partially cloudy cubes throughout suggest unit running short of water near end of freezing, or possibly an extremely bad water condition, which would indicate use of filtering or purifying equipment. Contact SCOTSMAN -Queen Products, Ice Machine Service Department, Albert Lea, Minnesota, for further details.
12. With unit on harvest cycle, take a handful of cubes made and hold on storage bin thermostat cover. Should cut unit off in one to two minutes--remove ice; unit should cut back on automatically. Thermostat is factory set at 35° out, 39° in.
13. Install gauges and check head and back pressures; on air-cooled models head pressure after ten minutes of freezing cycle at 70° ambient will be approximately 150 pounds p.s.i. back pressure gradually pulls down to approximately 4 pounds p.s.i. just before harvest cycle. Higher ambients will cause higher head pressure.
14. Remove gauges, replace control box cover and all service panels.
15. Operating room temperatures are minimum 50° Farenheit and maximum 100° Farenheit.

FINAL CHECK LIST

1. Is the unit level? (IMPORTANT)
2. Have all electrical and piping connections been made ?
3. Has the voltage been tested and checked against the nameplate rating?
4. Have the compressor hold-down bolts been loosened so the compressor rides freely on its mounting springs.
5. Is the water supply valve open and the electric power on?
6. Is the water pressure at least 20 lbs. but not over 50 lbs. P.S.I.?
7. Is the unit clean?
8. Has the owner been given the operating manual, and has he been instructed on how to operate the machine?
9. Have the installation and warranty cards been filled out? This is the owner's protection as well as the sellers.
10. Check all the refrigerant and conduit lines to guard against vibration and possible failure.
11. Is there 12" clearance behind and around unit for proper air circulation?
12. Is unit in a room where ambient temperatures are minimum $50^{\circ}F$. even in winter months?

WIRING DIAGRAM

MM1010HB-4
Air Cooled
230/60/1

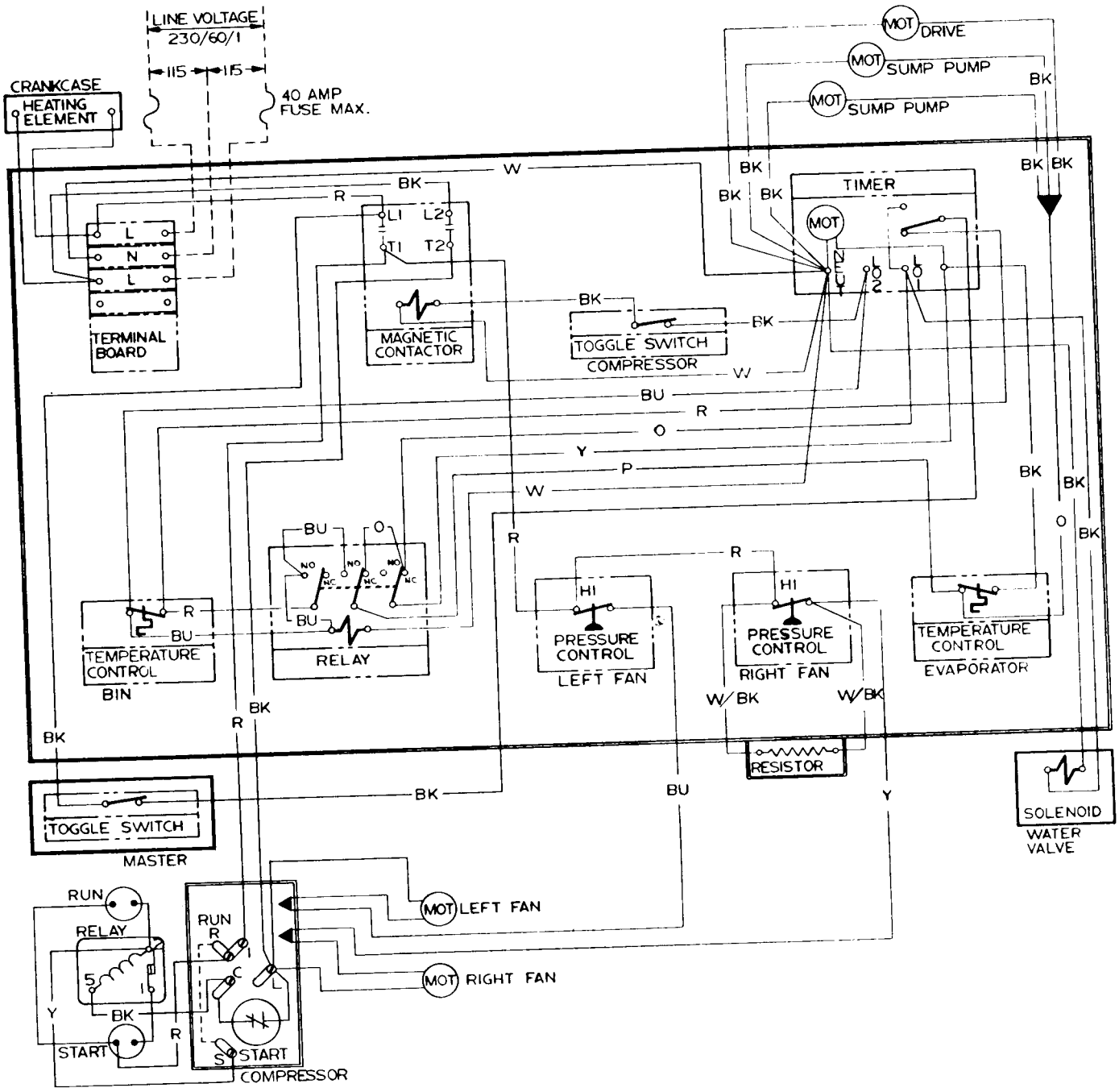

WIRING DIAGRAM

MM1010WHB-4
Water Cooled
230/60/1

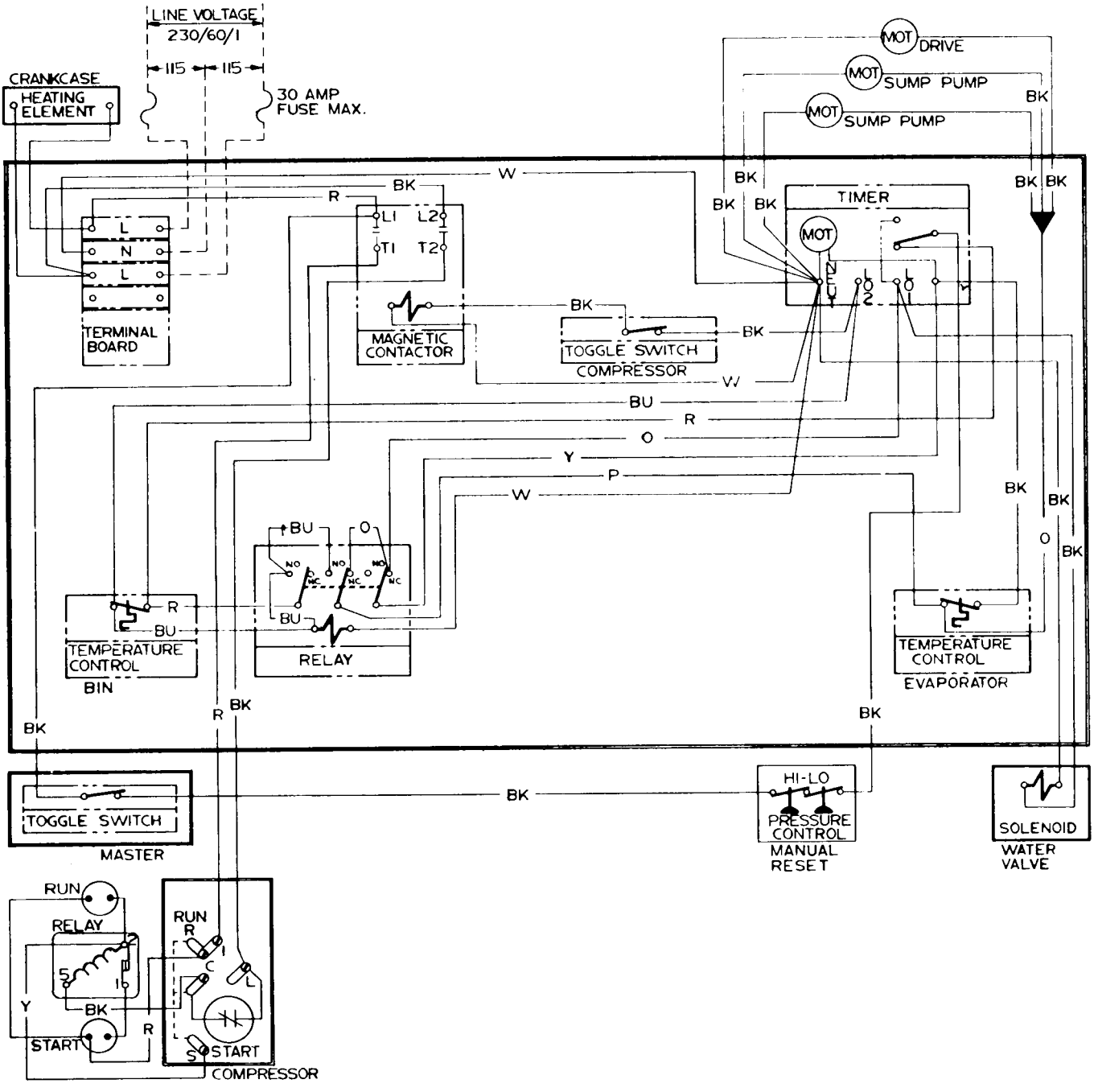

WIRING DIAGRAM

MM1010HB-9
Air Cooled
208-220/60/3

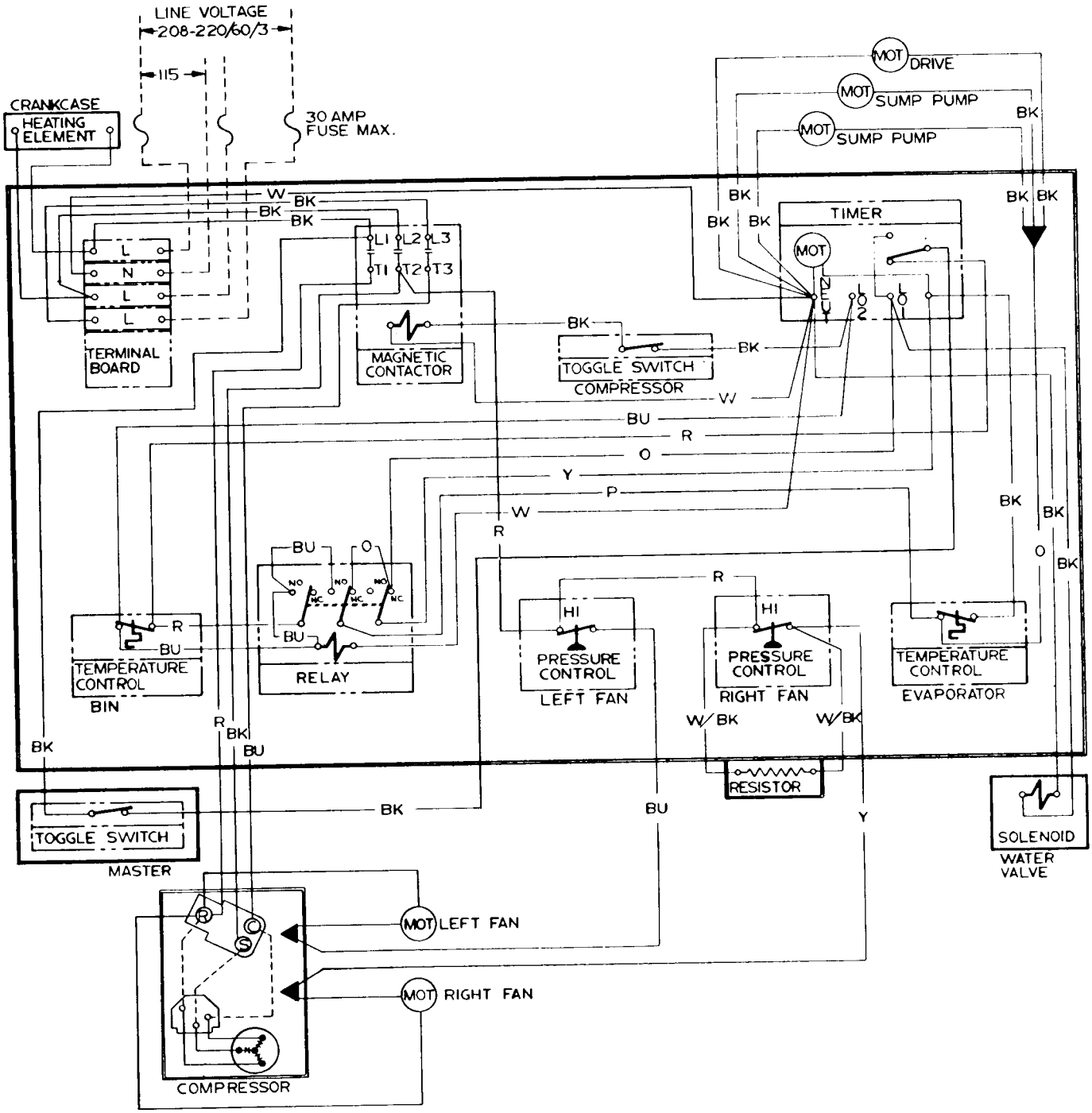

WIRING DIAGRAM

MM1010WHB-9
Water Cooled
208-220/60/3

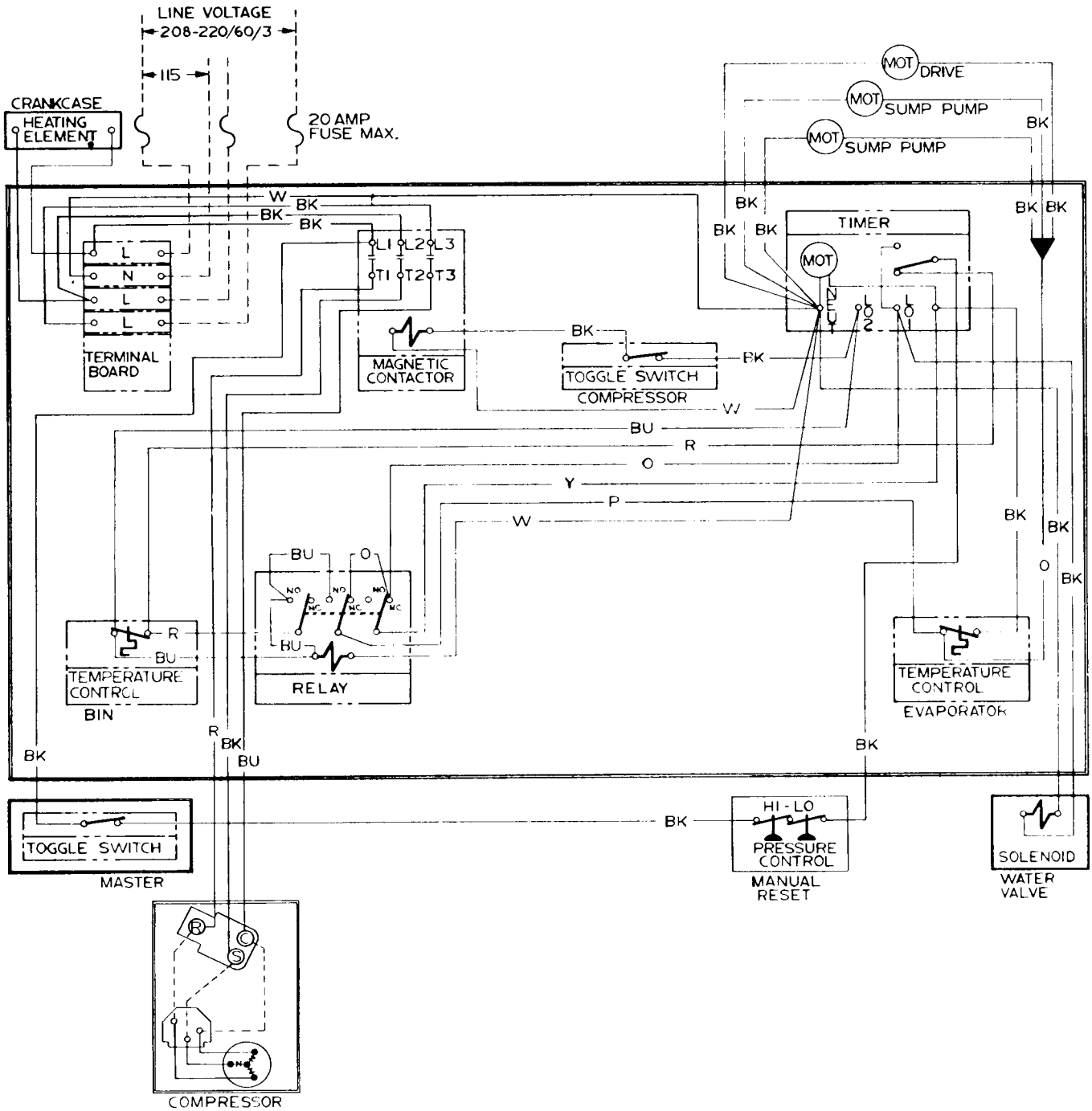

WIRING DIAGRAM

MM1010HB-10
Air Cooled
208/60/1

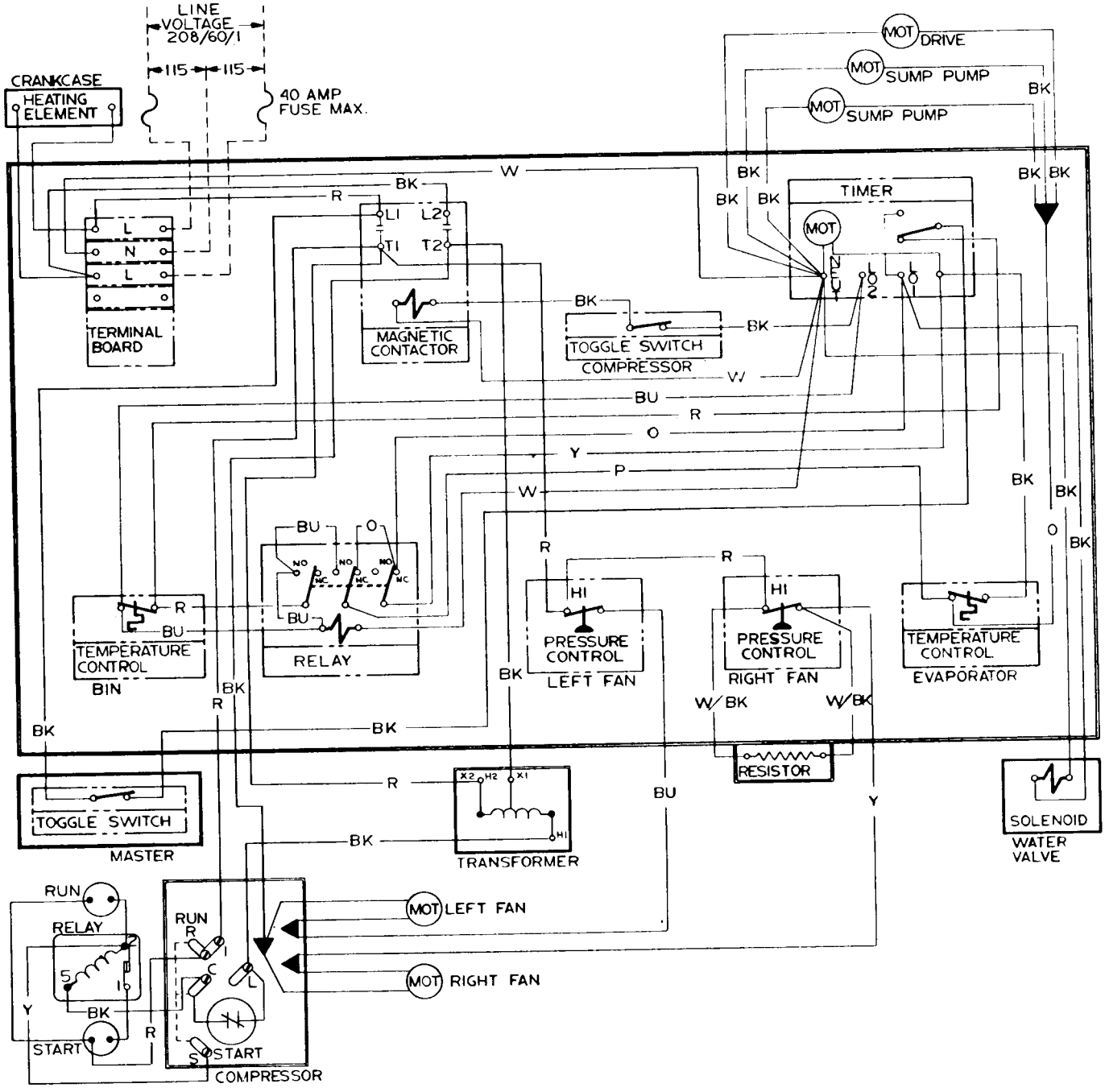

WIRING DIAGRAM

MM1010WHB-10
Water Cooled
208/60/3

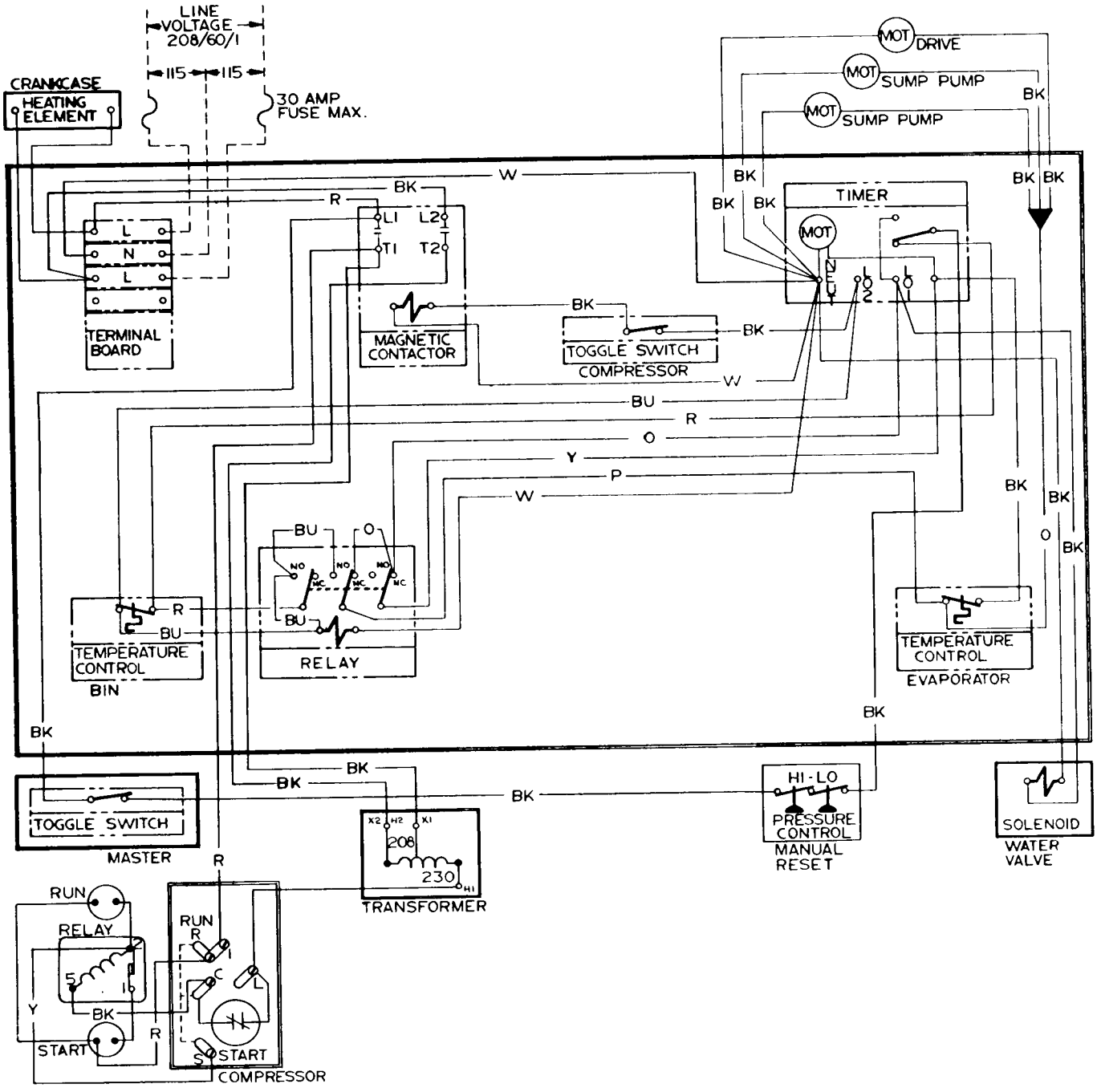

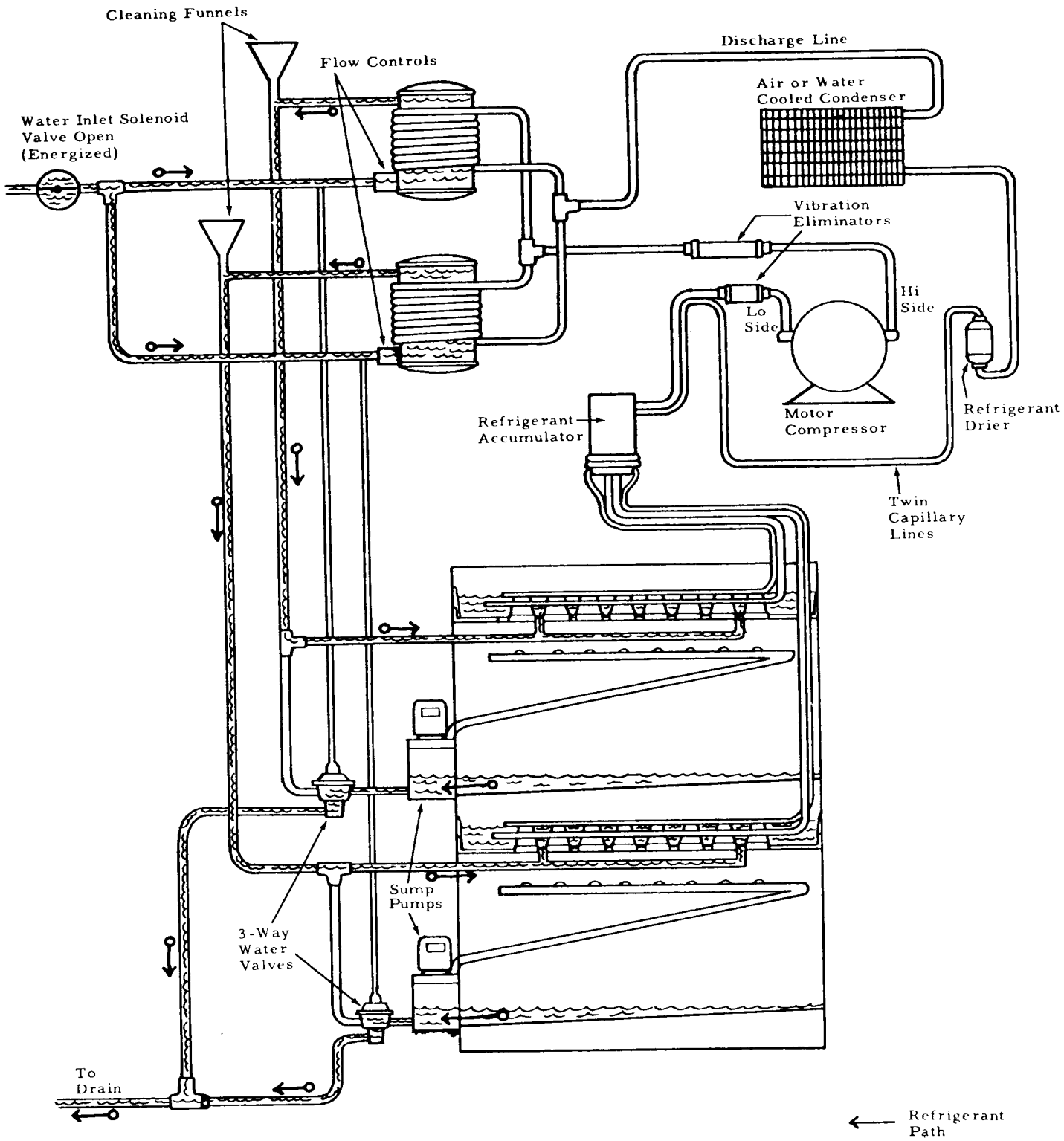

WATER-REFRIGERANT SCHEMATIC
MM-1010
HARVEST CYCLE

HARVEST CYCLE

With master switch (on left side of unit) and compressor switch (in main control box) in the on position turn timer manually to the harvest position. This energizes water inlet solenoid valve allowing water to flow thru flow controls into heat exchanger tanks. This inlet water pressure forces water out of tanks and also actuates 3-way water valves which in turn allows water to flow into upper cavity of freezing chambers and surplus water from preceeding batch of ice cubes to go down the drain. The platen cavity is completely filled up to the overflow point, and continues to overflow while in the defrost cycle; the amount of this water running over the overflow pipe is controlled by the flow control device and the length of harvest time setting on the time clock; overflow water goes down the drain also. Meanwhile, cubes being released from the cups drop by gravity into cube chute, through curtained opening into storage bin. At completion of harvest cycle, micro-switch on the timer now drops points holding defrost components in cycle and switches to freezing cycle set of contacts. Clock motor now stops and will not start until cube size control closes once more. As the new freezing cycle starts, note that our inlet solenoid closes. Since water enters heat exchanger tank on bottom and flows out through top, this insures full tank for the next cycle. The chilled water from the upper cavity flows by gravity through the water valve to the sump tank and reservoir. This water is used to produce the next batch of cubes.

Models MM1010 cubers have ice cube discharge chutes tapered to both front and back of unit. During a harvest, 1/2 of the cubes fall into bin through back or rear discharge chute, 1/2 through front discharge chute.

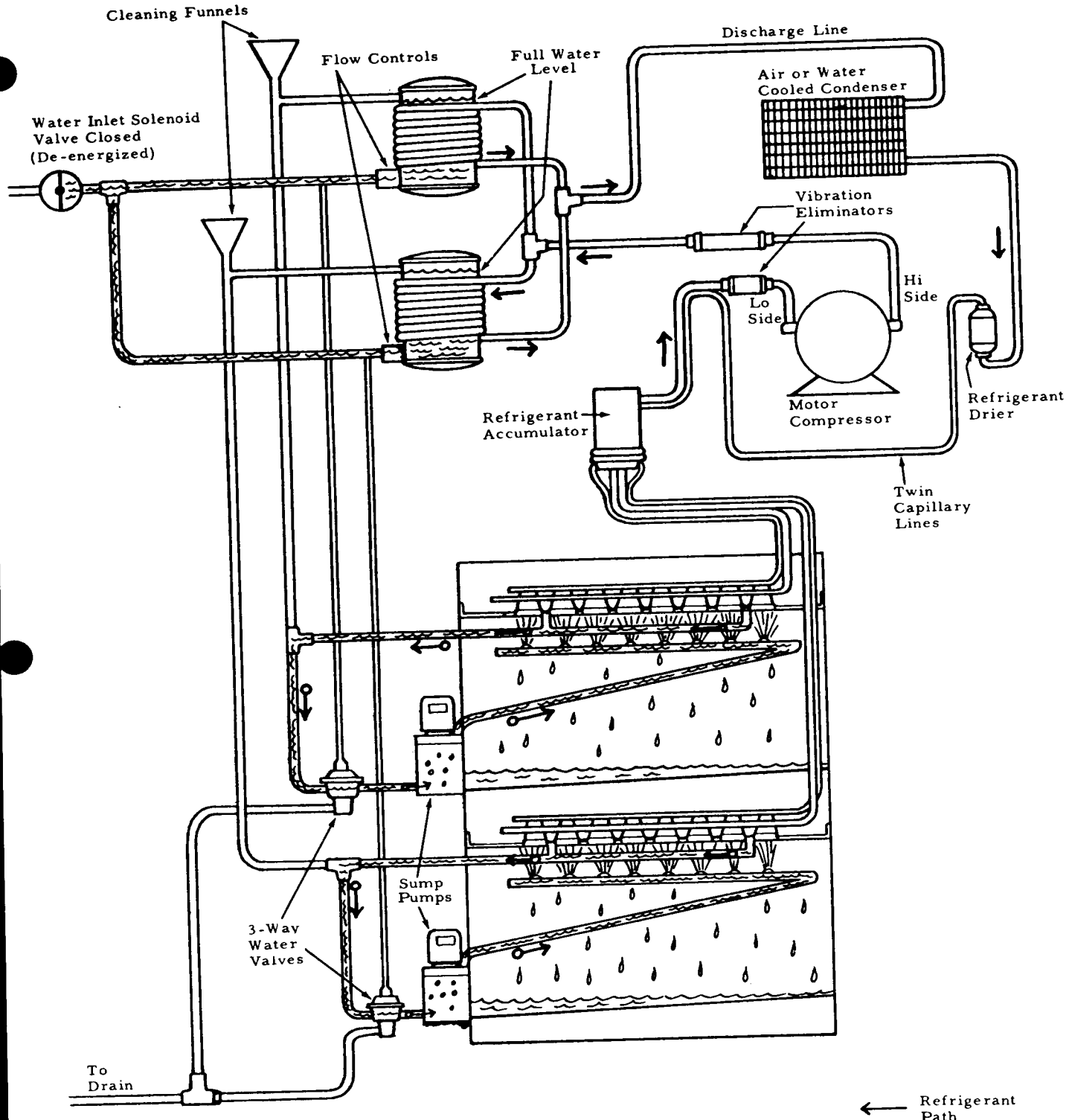

WATER-REFRIGERANT SCHEMATIC
Models MM1010
FREEZING CYCLE

FREEZING CYCLE

As the freezing cycle starts, electrically the components operating are the compressor and fan motors, recirculating water pumps and the sprayer tube drive motor.

The refrigerant circuit which equalized at about 50 pounds gauge during the "off" or harvest cycle, thru the capillary refrigerant control, now rises rapidly to 135 - 150 pounds head pressure. The suction or low side pressure starting at 50 pounds pulls down fairly quickly to about 25 pounds at which point the ice cubes are starting to form a thin shell in cube cups. Continuing from 25 pounds slowly on down towards the finished cube pressure of approximately 4 pounds takes an average of 15-20 minutes.

During this portion of the freezing cycle the electrical brain is the reverse acting, cube size thermostat. This thermostat electrically is holding the freezing cycle components "live". When the ice cubes are about 3/4 formed, the decreasing suction pressure and temperature, activated the temperature sensing bulb of the reverse acting, cube size control, closing its contacts. This does not interrupt the freezing cycle, the closing of the cube size thermostat contacts electrically transfers the finishing of the freezing cycle to the finishing clock motor or timer as it is sometimes called. One full revolution of the timers dial is 8 minutes however of the total 8 minutes only, 2-1/4 minutes are used for the defrost or harvest cycle.

This means then that after the cube size contacts close they activate the timer motor. This control takes over and continues freezing cycle for another 5 minutes with timer dial now turning. When the 5 minutes are completed, an offset in the timer dial allows a micro switch with activating arm riding on that cam to drop into the slot electrically stopping the freezing cycle and starting the 2-1/4 minutes harvest cycle - The clock motor continues thru harvest cycles. A notch on the timer dial now lifts micro switch arm up on dial, electrically stopping harvest cycle and starts back into a new freezing cycle.

NOTE:
Defrost water is used to make the next batch of ice, therefore on initial start up the unit must be in a defrost cycle. This can be done manually operating the timer.

SERVICE ANALYSIS

Symptom		Possible Cause	Suggested Correction
1.	Unit will not run	Power off	Check main switch, fuses and wiring.
		Manual switch in off position	Check
		High pressure control locked out.	Reset. (Water cooled models)
		Ambient temperature of room too low.	Must be above 50°.
		Bin controls set too high.	Set approximately 35° cut out, 39° cut in.
2.	Compressor cycles intermittently.	Low voltage	Check with volt meter.
		Air in system causing high head.	Purge system.
		Shortage of refrigerant	Check frost line and operating pressure.
3.	Cubes small. (short cycle)	Cube size control not properly set.	Set control to colder
		Moisture in system	Purge charge, evacuate, change dryer, & re-charge
		Short of water because too low setting on water supply.	Increase pressure, new lines or larger lines.
		Lower drain valve in sump tank leaking.	Flush or remove and clean.
		Sump tank stand pipe not properly seated.	Check and re-seat
4.	Cubes small. (long cycle)	Shortage of refrigerant	Check frost line and charge as required. Check for system leaks.

SERVICE ANALYSIS

Symptom		Possible Cause	Suggested Correction
5.	Cubes too large. (slow defrost)	Very small shortage of refrigerant.	Check frost line, charge as required
		Cube size control set too low.	Reset to warmer setting.
6.	Cubes cloudy	Drain valve and sump tank leaking, losing water.	Check during freeze cycle Jet tubes plugged, clean all jets
		Curtains damaged or binding	Repair or replace
		Restriction in incoming water	Check at strainer and flow controls
		Screen plugged on bottom of sump pumps.	Remove and clean
7.	Irregular cubes. (some clear, some cloudy)	Clogged jets in jet tubes	Remove and clean.
		Cube slides interfering with jets	Adjust
8.	Improper harvest	Time clock not set properly	Reset on #4. (2.25 minutes)
		Incoming water restricted.	Check water lines, etc.
		Solenoid valve leaking. (Hot water tank)	Check during freeze cycle
		Head pressure too low	Adjust regulator on water cooled units
			Check fan cycling on air cooled units.

SERVICE ANALYSIS

Symptom	Possible Cause	Suggested Correction
8. Improper harvest (Cont'd.)	Machine not level. (Allow water to stand in upper cavities and freeze .)	Level machine.
9. High head pressure	Over-charge of refrigerant.	Purge
	Air in system	Purge
	Defective water regulating valve.	Replace
	Burned out or stuck fan motor(s) air cooled	Replace or oil as needed
	Water valve improperly adjusted.	Readjust to desired head. Water cooled models 135# p.s.i.
	Incoming water restricted.	Check screens, lines, etc.
10. High suction	Dirty or plugged condenser. Air cooled.	Blow condenser clean
	Inefficient compressor	Check with gauges and replace valve plate if necessary.
	Overcharge of refrigerant	Check frost line and high back pressures purge off excess.
11. Low suction pressure.	Restricted dryer.	Check back pressure and replace drier if necessary
	Moisture in system.	Blow charge, replace drier evacuate system and recharge per nameplate specs.

SERVICE ANALYSIS

Symptom	Possible Cause	Suggested Correction
11. Low suction pressure. (Cont'd.)	Extreme shortage of refrigerant.	Add refrigerant. Check and correct system leaks.
	Ambient temperatures too low. Air cooled	Increase ambient to minimum 50° F.
12. Unit noisy.	Hold-down bolts on compressor not loosened.	Turn up until unit is free.
	Refrigerant lines vibbrating.	Straighten
	Compressor short of oil.	Check oil level. Proper level 1 1/2 inches below crankcase port, or 1/2 of sight glass bullseye on compressor.
	High head pressures.	Check with gauges. Purge if necessary.
	Shroud touching fan blades on air cooled models.	Reposition shroud

MM1010
FRONT VIEW

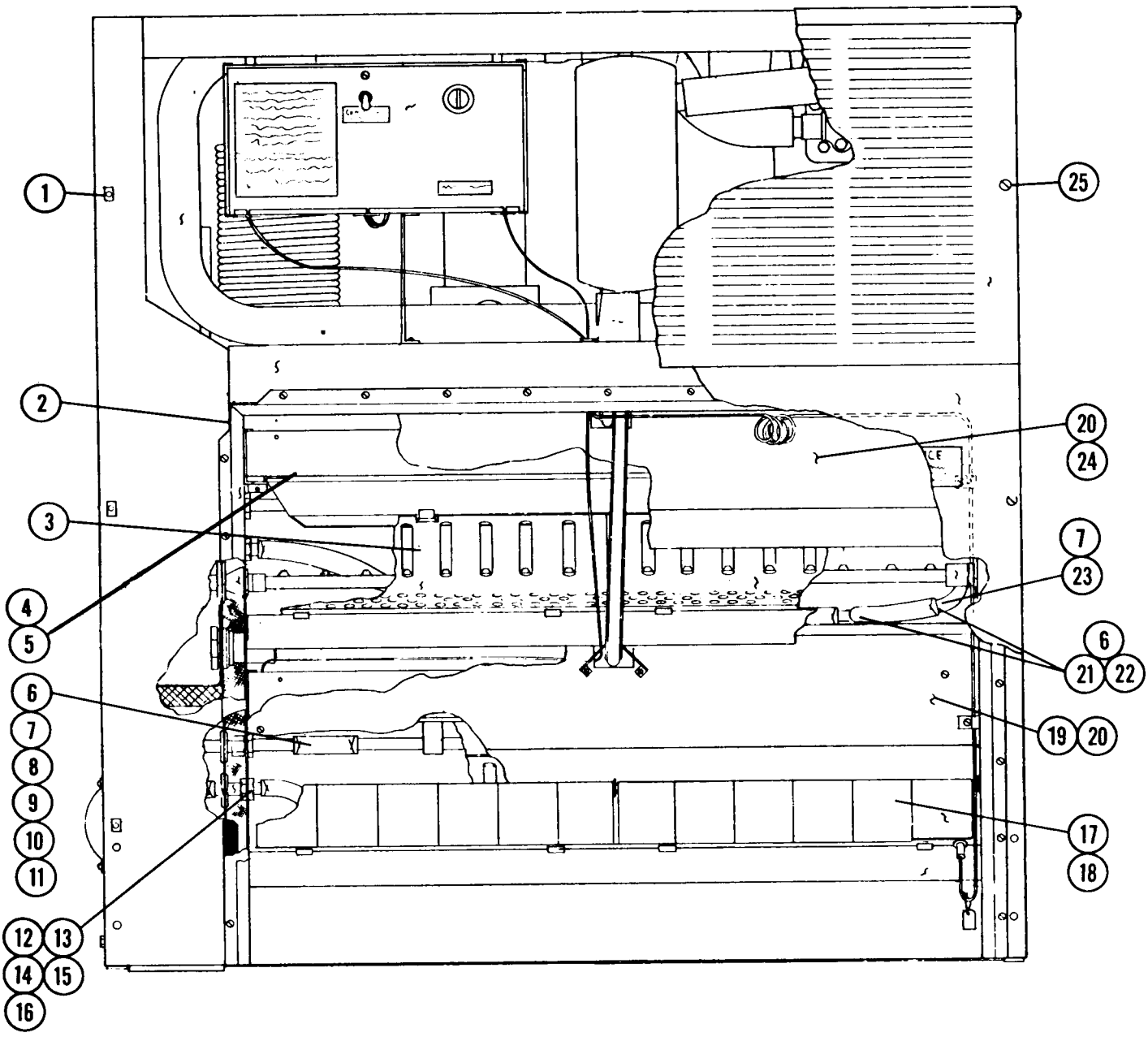

ITEM NO.	PART NO.	NAME
1.	3-1029	Nut (2 reqd.)
2.	A-18165	Door Gasket (2 reqd.)
3.	2-1986	Chutes (8 reqd.)
4.	A-23038-1	Upper Freezer & Cup Assy.
	A-23038-2	Lower Freezer & Cup Assy.
5.	13-573	Rubber Cupholder only (8 reqd.)
6.	13-674-7	Tygon 3/4" I.D. Per Foot
7.	2-1358	Hose Clamps 3/4"
8.	A-18004	Inlet Water Assy
9.	2-1357	"O" Ring
10.	13-327	Grommet
11.	A-13796	Inlet, Inner Assy
12.	A-23292	Inlet Spray Bar
13.	A18172	Nut, Inlet Tube
14.	A18173	"O" Ring Nut
15.	13-617-5	"O" Ring
16.	13-169	Grommet

ITEM NO.	PART NO.	NAME
17.	A-22678	Curtain Assy (4 reqd.)
18.	3-727	Thumb Screw (curtain)
19.	A-22995	Face Plate, Lower Front
20.	3-633	S.S. Screws
21.	2-536-1	Hose Clamps
22.	16-482	Tee
23.	5-171	Tygon Tube 5/8"per ft.
24.	A-22997	Face Plate, Upper Front
25.	3-1307	Screws (12 reqd.)
		IN PACKAGE
	A-19555	Bulb Cover
	13-590	Gasket
	A-16108	Bulb Holder Buttons
26.	A23975-001	Faceplate, Upper Rear (Not Shown)
27.	A23977-001	Faceplate, Lower Rear (Not Shown)

MM1010

Left Side View

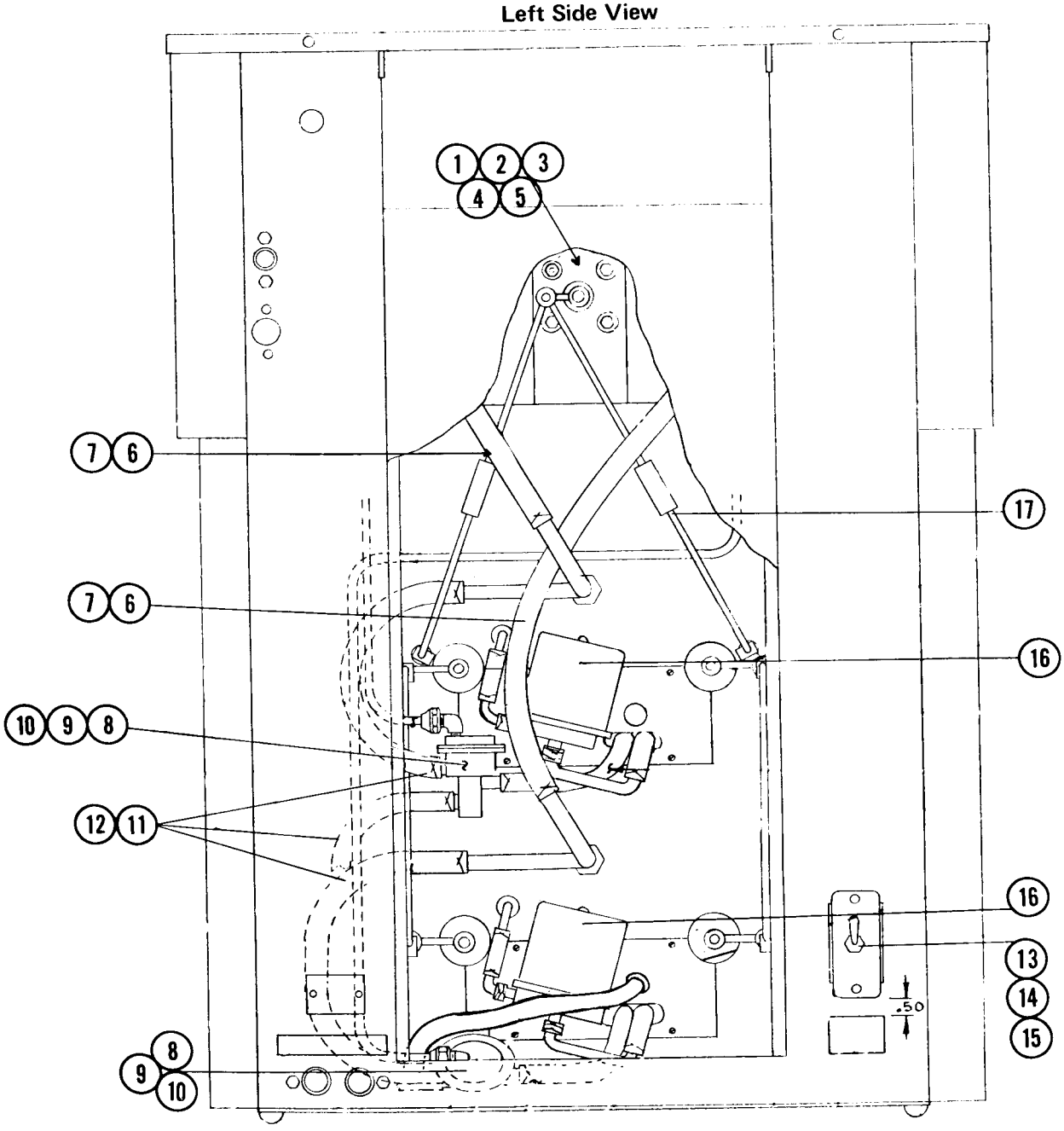

ITEM No.	PART No.	NAME
1.	12-1277-1	Drive Motor
2.	13-100	Grommet (4 reqd)
3.	3-1403-22	Screw (4 reqd)
4.	3-1414-1	Nut (4 reqd)
5.	03-1408-22	Washer (8 reqd)
6.	13-674-7	Hose 3/4 I.D. per ft.
7.	2-1530	Hose Clamps
8.	A-17954	3 way Water Valve
9.	3-1403-28	Screws (4 reqd)
10.	3-1417-5	Washers (4 reqd)
11.	13-674-6	Hose 5/8 I.D. per ft.
12.	2-1338-1	Hose Clamp
13.	12-426	Switch
14.	A-16865	Switch Plate
15.	3-1403-17	Screw
16.	12-1798-1	Sump Pump
17.	A-17569	Drive Linkage Complete

MM1010, WATER COOLED

Top View

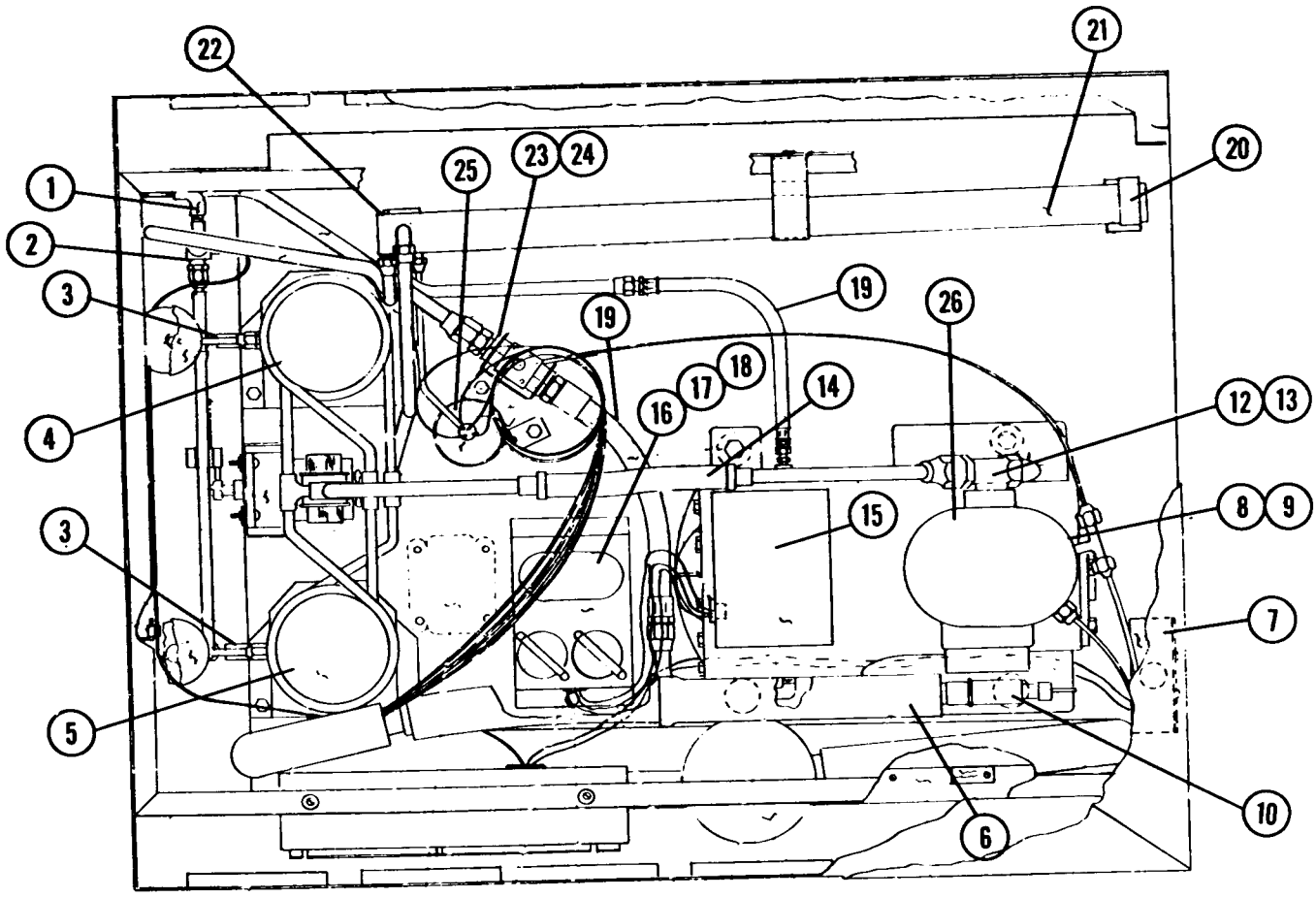

ITEM NO.	PART NO.	NAME
1.	16-475	Street Elbow
2.	12-621G1	Solenoid Valve
3.	A-21237-2	Flow Control
4.	A-23087	Rear Water Tank
5.	A-23086	Front Water Tank
6.	16-326	Flexible Line
7.	11-286	Hi-Lo Press Control
8.	18-1418-2	Compressor 115/230/60/1
	18-1418-3	Compressor 115/208-220/60/3
	18-1418-2	Compressor 115/208/60/1
9.	18-1415	Valve Plate Kit
10.	18-1410	Suction Serv. Valve
11.	18-736	Suction Serv. Gasket
12.	18-1411	Discharge Serv. Valve
13.	18-242	Serv. Valve Gasket
14.	16-247	Vibration Eliminator
15.	18-1405	Overload 115/230/60/1
	18-1406	Overload 115/208-220/60/3
	18-1405	Overload 115/208/60/1
16.	18-1901-27	Starting Capacitor
17.	18-1902-27	Running Cap.
18.	18-1903-26	Relay
19.	16-483	Water Hose Assembly
20.	A-1422-2	Condensor Gasket (Plain)
21.	18-1422	Condensor
22.	18-1422-3	Condensor Gasket (Manifold)
23.	11-198-1	Water Regulator
24.	A-18500	Regulator Bracket
25.	2-822	Dryer
26.	18-1929-1	Crankcase Heater

MM1010, AIR COOLED

Top View

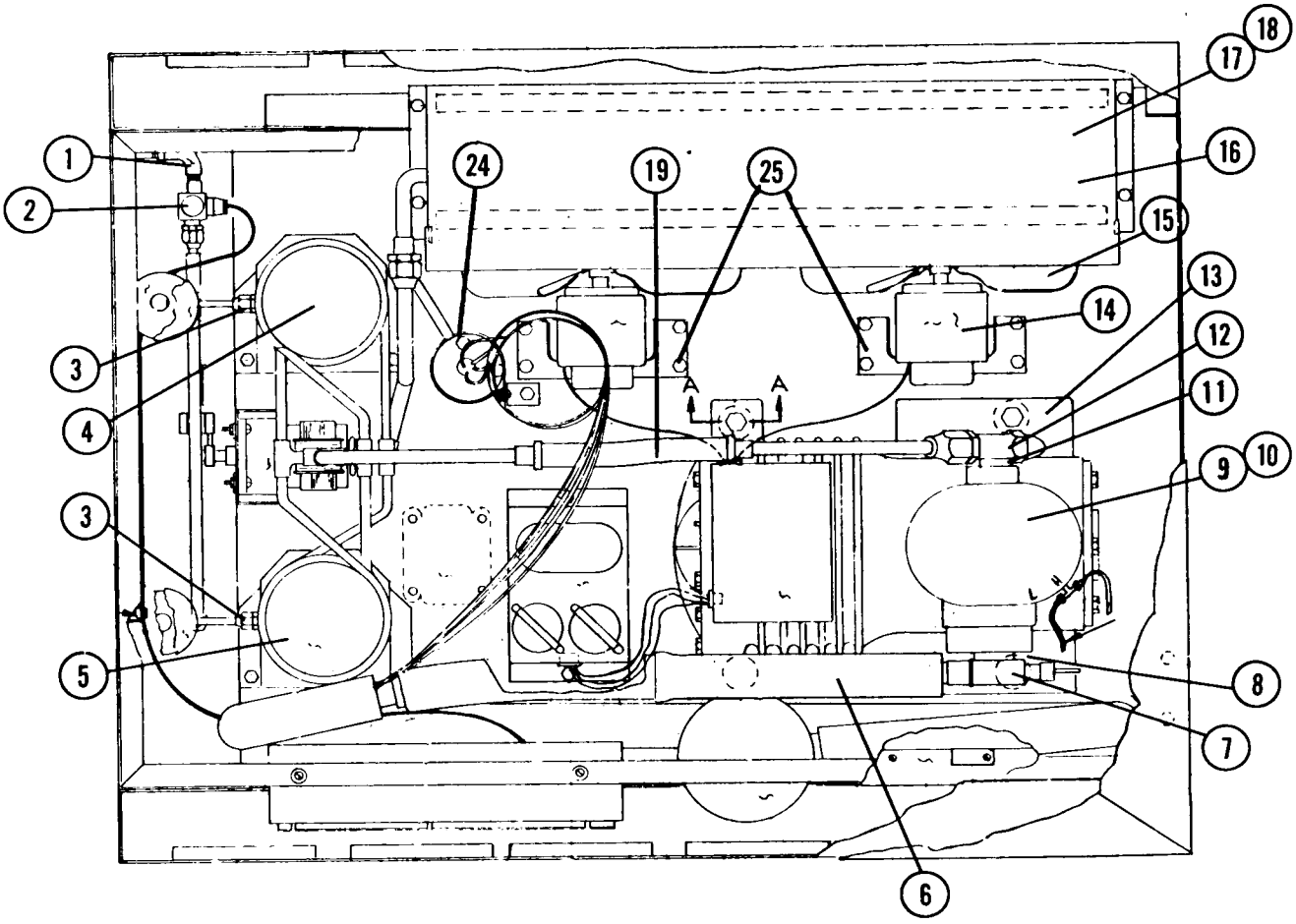

ITEM NO.	PART NO.	NAME
1.	16-475	Street Elbow
2.	12-521G1	Solenoid Valve
3.	A-21237-2	Flow Control
4.	A-23087	Rear Water Tank
5.	A-23086	Front Water Tank
6.	16-326	Flexible Line
7.	18-1410	Suction Serv. Valve
8.	18-736	Suction Serv. Valve Gasket
9.	18-1400-2	Compressor 115/230/60/1
	18-1400-3	Compressor 115/208-220/60/3
	18-1400-2	Compressor 115/208/60/1
10.	18-1415	Valve Plate Kit
11.	18-1411	Discharge Serv. Valve
12.	18-242	Discharge Valve Gasket
13.	18-1929-1	Crank Case Heater *
14.	18-788-2	Fan Motor 115/230/60/1
	18-788-7	Fan Motor 115/208-220/60/3
	18-788-7	Fan Motor 115/208/60/1

ITEM NO.	PART NO.	NAME
15.	18-787	Fan Blade
16.	18-753	Condensor
17.	A-14062	Shroud Assy.
18.	2-784	Shroud Fasteners
19.	16-247	Vibration Connection
20.	18-1405	Overload 115/230/60/1
	18-1406	Overload 115/208-220/60/3
	18-1405	Overload 115/208/60/1
21.	18-1901-27	Starting Capacitor
22.	18-1902-27	Running Capacitor
23.	18-1903-26	Relay
24.	2-822	Dryer
25.	18-1421	Fan Motor Bracket

* Not Shown

HOT WATER TANK ASSEMBLY

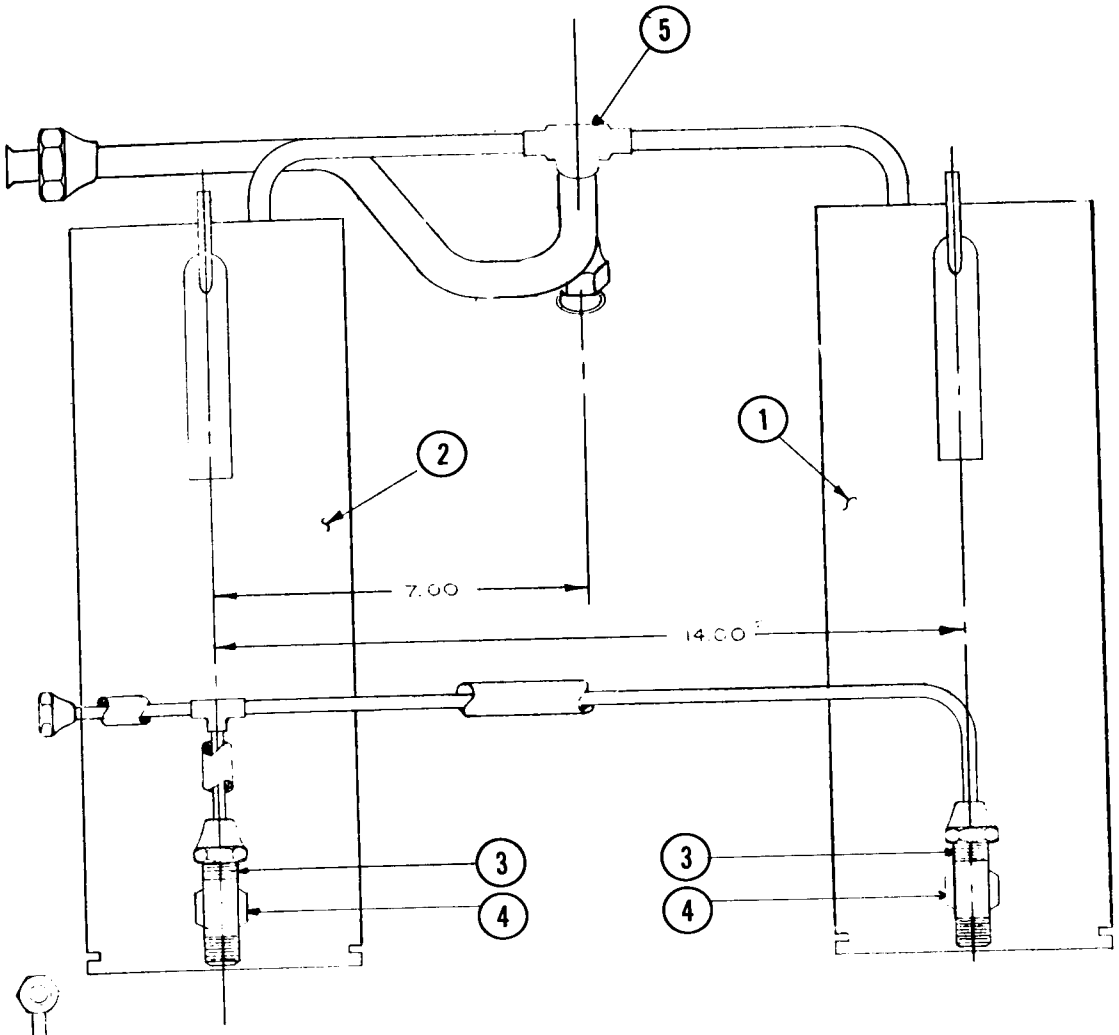

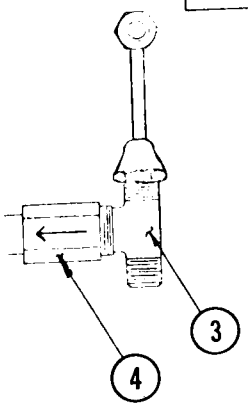

Item No.	Part No.	NAME
1	A-23086	Front Tank
2	A-23087	Rear Tank
3	16-583	Tee
4	A-21237-2	Flow Control
5	16-599	Tee
6	16-247	Vibration Eliminator*

* Not Shown

CONTROL BOX ASSEMBLY

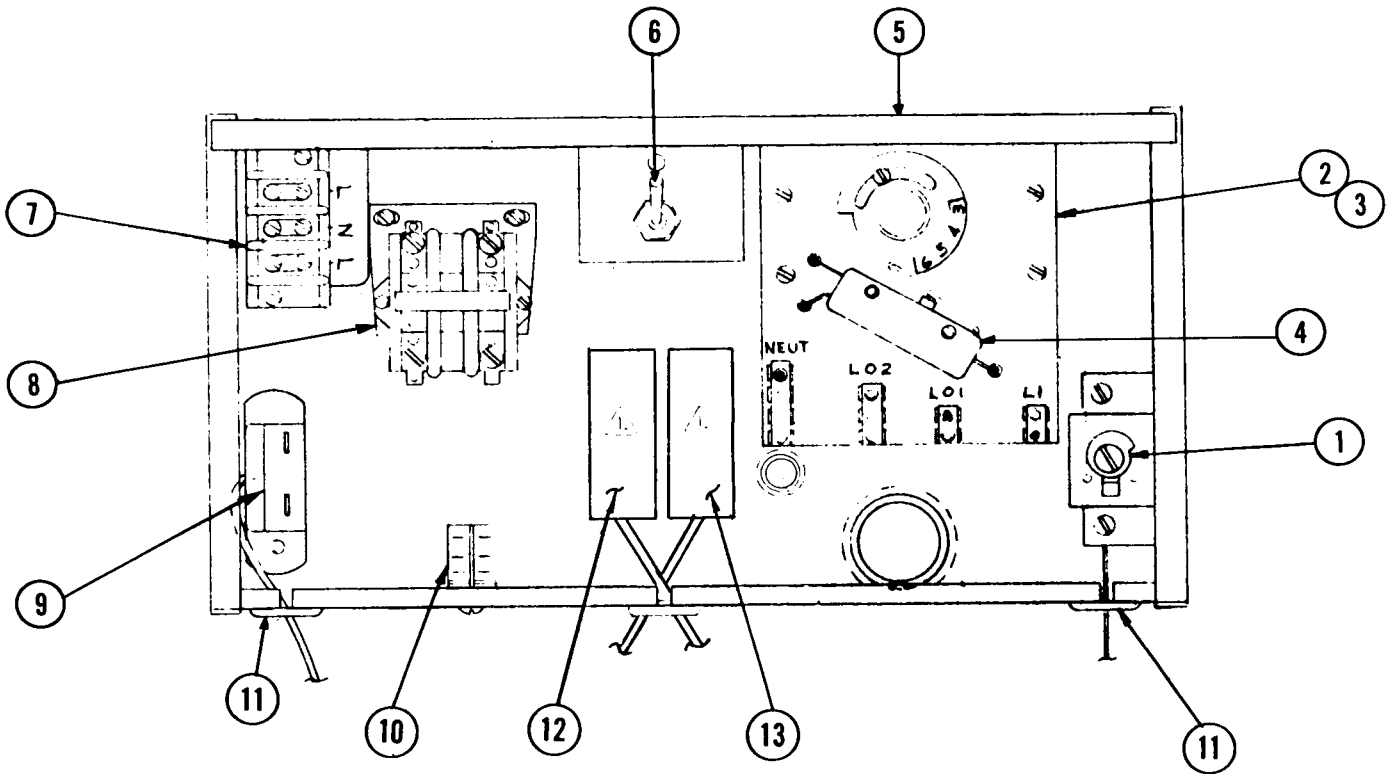

ITEM NO.	PART NO.	PART NAME
1.	11-345	Cube Size Control
2.	A-23121-1	Timer Assembly Complete
3.	3-1404-1	Screws
4.	12-1721-50	Micro Switch
5.	12-481	Resistor *
6.	12-426-1	Switch
7.	12-813	Terminal Block
8.	12-820-1	Contactor 230 V 60 Cy 1 ph
9.	11-353-1	Bin Thermostat
10.	12-1598	Relay.
11.	13-124	Grommet
12.	11-342	Left Fan Control
13.	11-343	Right Fan Control

* Not Shown — Air Cooled Models Only.

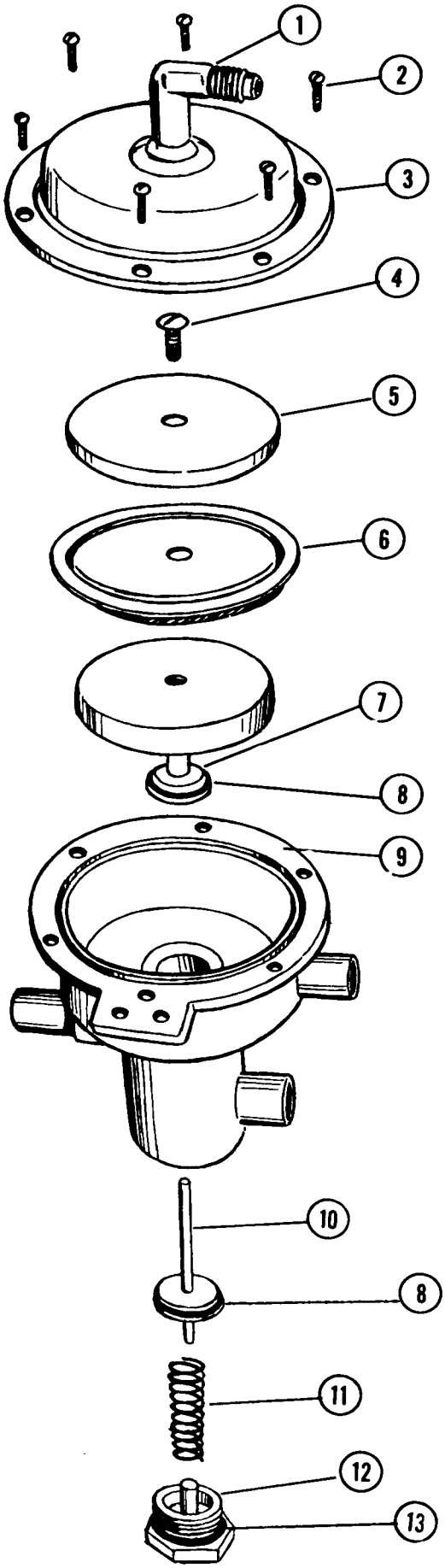

3-WAY WATER VALVE

MM1010

ITEM NO.	PART NO.	NAME
1	16-190	Elbow
2	3-1277	Screws
3	A-18192	Valve Cover
4	3-736	Screw
5	A-18312	Diaphram Cover
6	13-606	Rolling Diaphram
7	A-17941	Plunger Assy.
8	13-617-1	"O" Ring
9	A-17947	Valve Body
10	A-17942	Plunger
11	2-1545	Spring
12	A-17937	Valve Cap Bottom
13	13-617-2	"O" Ring
	A-17954	Valve Complete

MM 1010 LINKAGE ASSEMBLY, H MODELS

A-17569

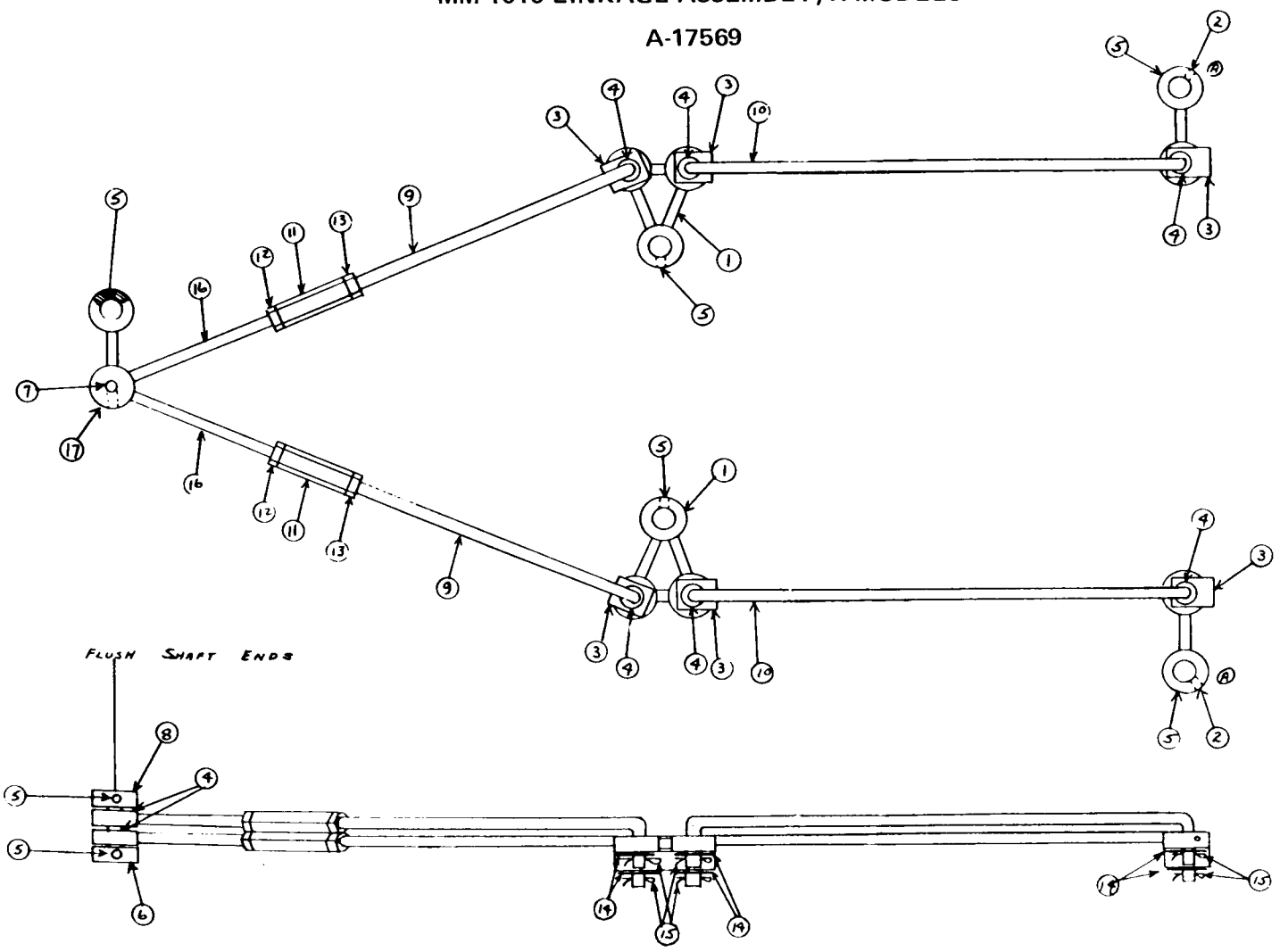

ITEM NO.	PART NO.	NAME
1	A-17233	Double Driven Arm
2	A-17232	Driven Arm
3	S-7558	Bearing Clip
4	A-7033	Bearing
5	3-431	Set Screw
6	A-13847	Motor Drive Arm
7	A-13849	Shaft
8	A-13848	Arm End
9	S-7938	Right Linkage
10	A-17568	Lower Linkage
11	S-7936	Linkage Coupling
12	S-7937	Left Linkage Nut
13	3-357	Nut
14	3-75	Washer
15	3-396-1	Cotter Pin
16	A-13850	Linkage Upper Assy.
17	A-18948	Motor Drive Arm
	A-17569	Complete Linkage

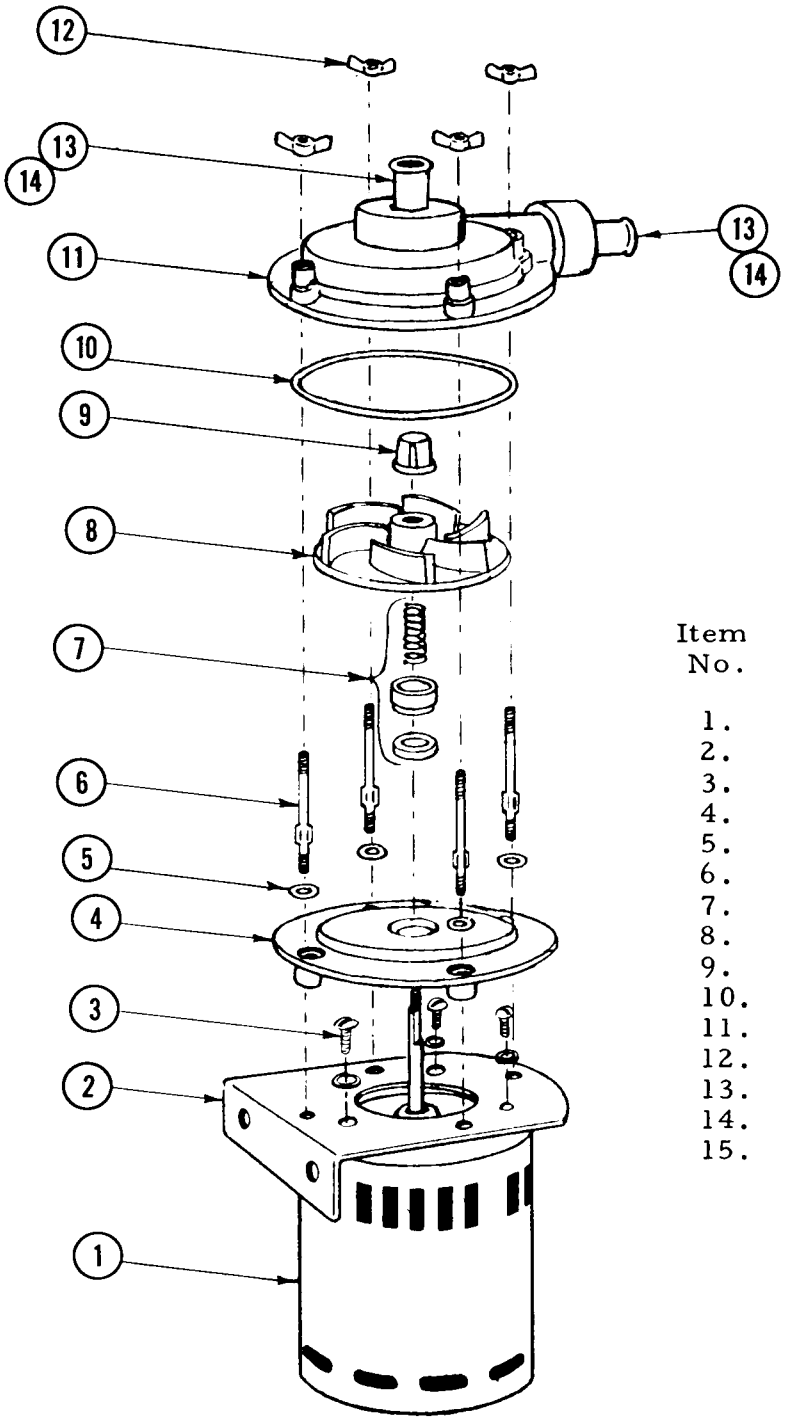

WATER PUMP
MM1010

Item No.	Part No.	NAME
1.	12-1798-51	Motor Only
2.	12-1532-52	Mounting Bracket
3.	12-1532-53	Screws
4.	12-1532-54	Pump Base
5.	12-1532-55	Washer
6.	12-1532-56	Screws
7.	12-1532-57	Seal Assembly
8.	12-1798-58	Impeller
9.	12-1532-59	Impeller Cap
10.	12-1532-60	"O" Ring
11.	12-1532-61	Pump Housing
12.	12-1532-62	Wing Nuts
13.	12-1532-63	Gaskets
14.	12-1532-65	Inlet & Outlet Fittings
15.	12-1798-67	Capacitor - 4 MF*
	12-1798-1	Pump Complete

*Not Shown

PUMP ASSEMBLY

A23289-000

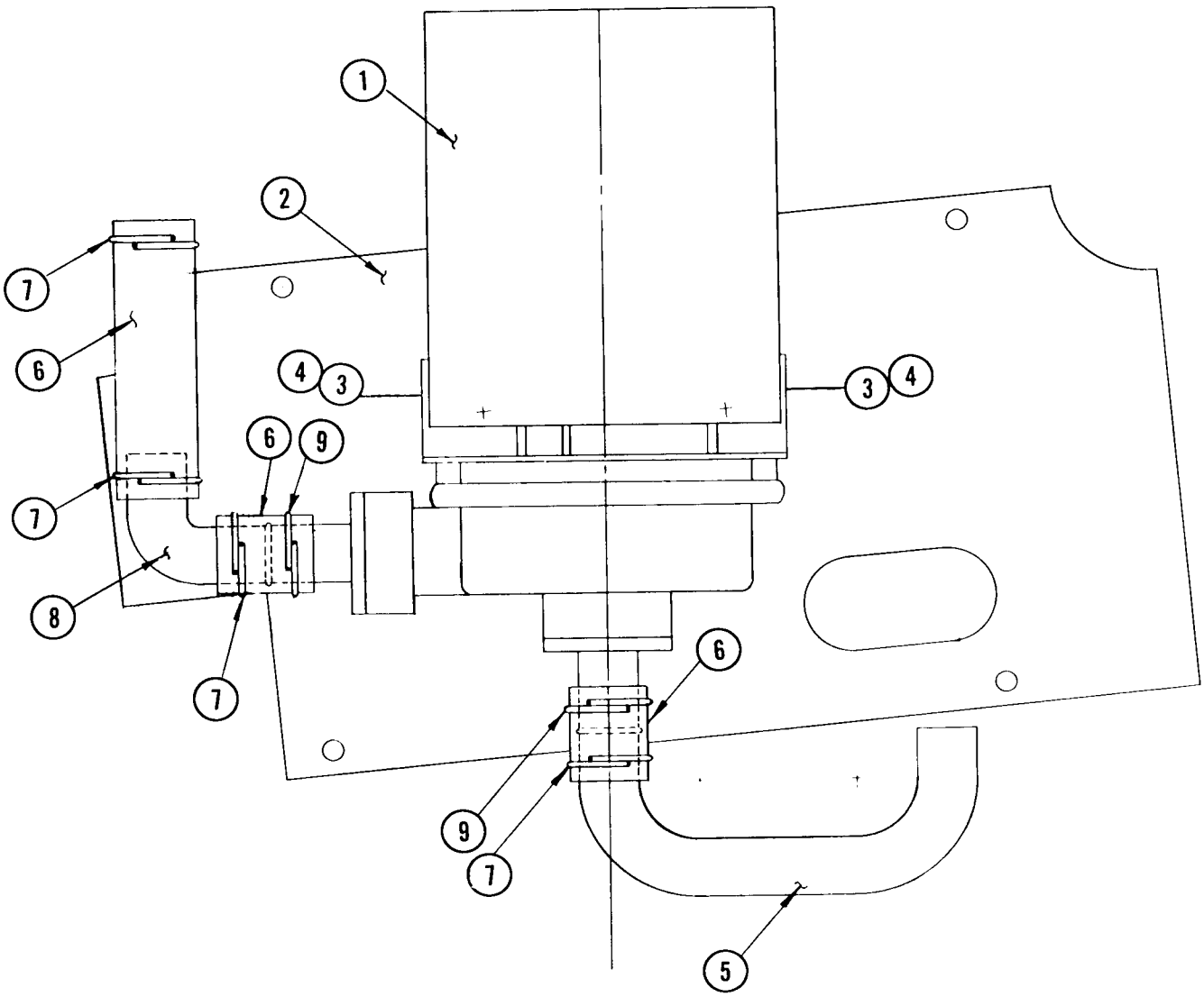

Item No.	Part No.	NAME
1	12-1798-1	Sump Pump
2	A-23260	Mounting Plate
3	3-1405-3	Screw *
4	3-1407-05	Washer *
5	A23971-001	Water Inlet Fab Assy.
6	A203109	Tube
7	2-1338-1	Hose Clamp
8	16-641-3	90° Elbow
9	2-536-1	Hose Clamp

MM1010 SPRAY TUBE AND SPRAY TUBE DRIVE ASSEMBLY

H Models
4 per Unit

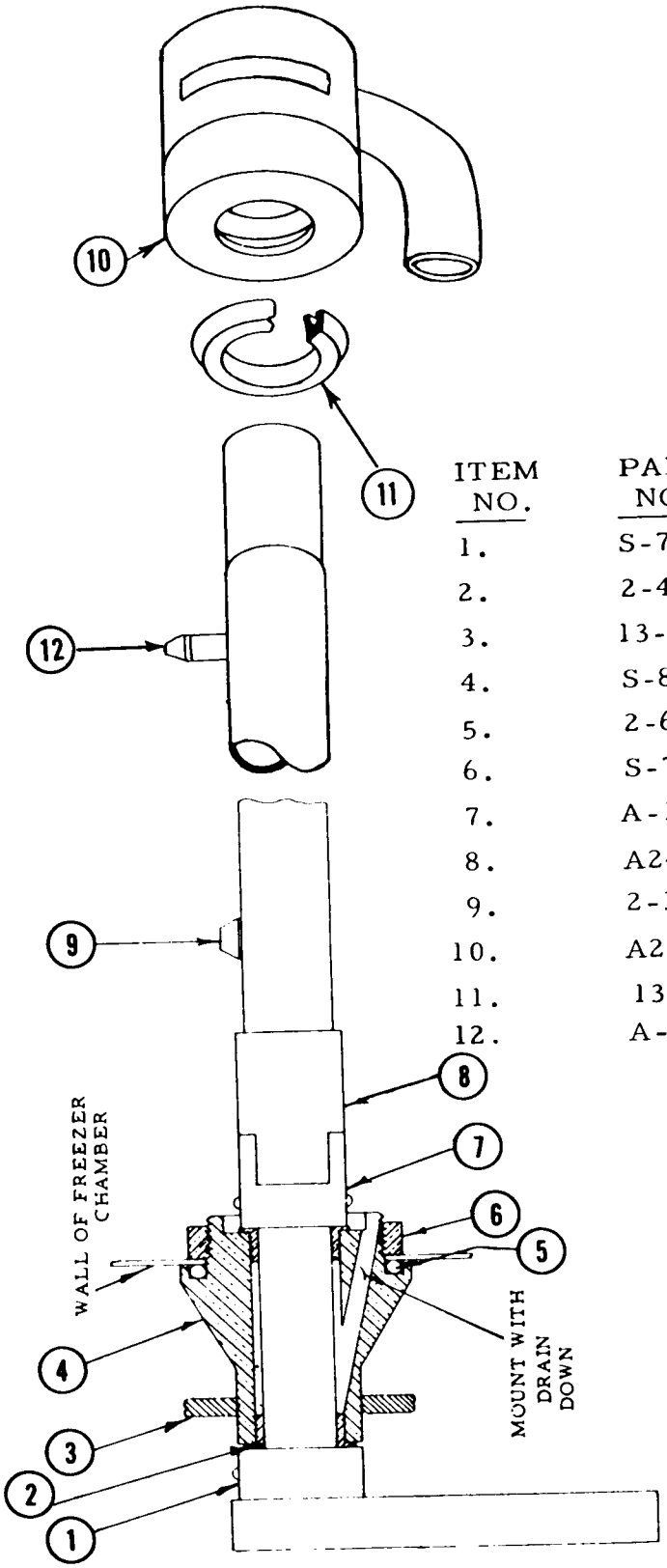

ITEM NO.	PART NO.	NAME
1.	S-7130	Collar
2.	2-438	Flange Bearing
3.	13-169	Grommet
4.	S-8887	Drive Bearing Support
5.	2-610	"O" Ring
6.	S-7635	Nut
7.	A-13837	Driving Journal Assy.
8.	A24048-001	Sprayer Tube Assembly
9.	2-1803-01	Jet 22 per Spray Bar
10.	A24010-001	End Bearing Assy.
11.	13-168	"U" Cup
12.	A-20852-002	Jets - 4 per Spray Bar

MM1010 CASE PARTS

Air and Water Cooled

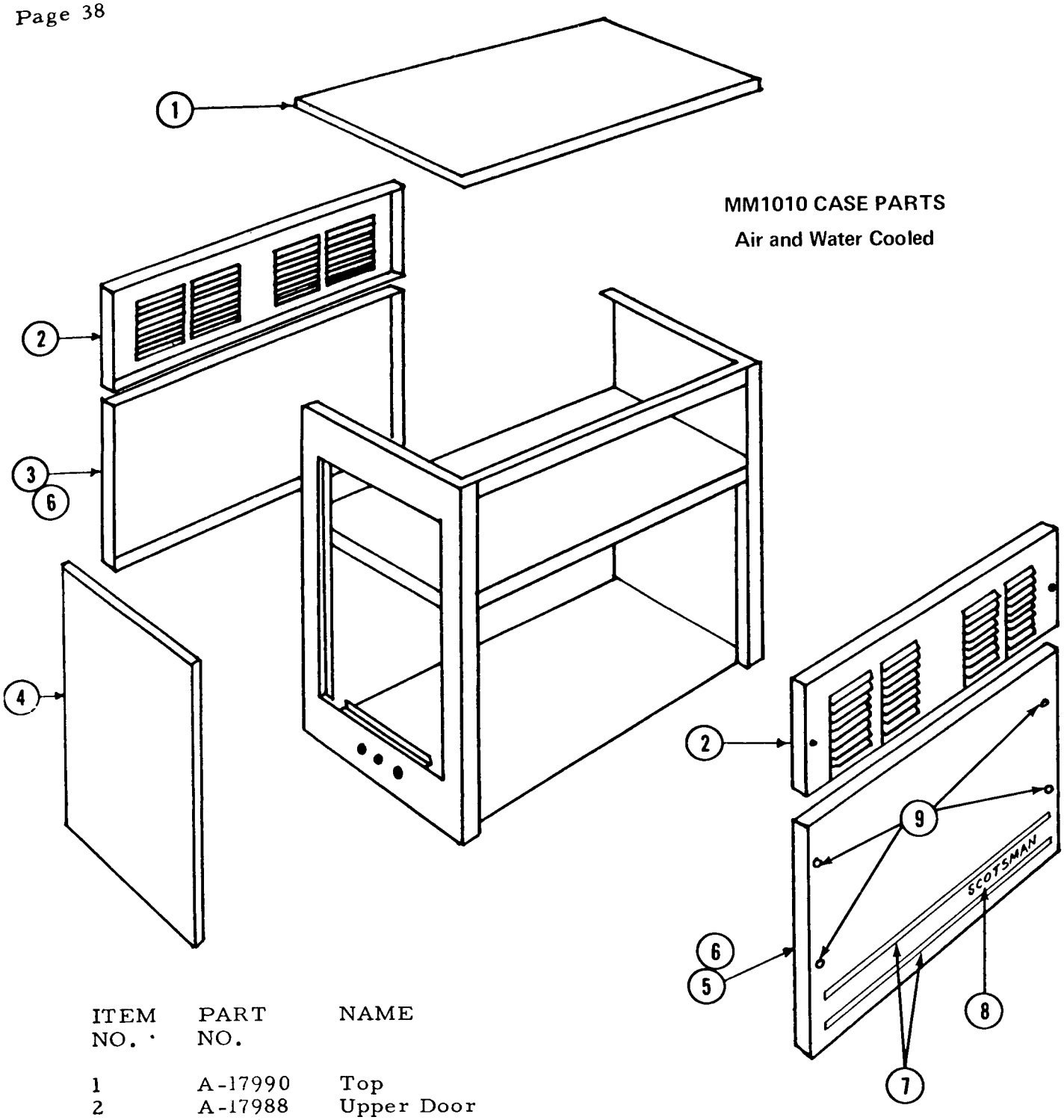

ITEM NO.	PART NO.	NAME
1	A-17990	Top
2	A-17988	Upper Door
3	A-17684	Rear Lower Door
4	A-17710	Left Door
5	A-17663	Front Lower Door
6	2-1548	Plastic Door Liner
7	A-5720-10	Moulding Trim
8	15-474-1	Emblem Decal
9	3-1307	Screws (26 Reqd)

SERVICE-COMPLETE UNIT

ALL STEPS LISTED BELOW SHOULD ONLY BE STARTED WHEN WATER AND ELECTRICAL SUPPLY ARE OFF TO PREVENT ACCIDENTS.

TO REMOVE SUMP PUMP

1. Remove left access panel. (4 screws)
2. Remove hoses from pump inlet and outlet fittings.
3. Remove four (4) screws holding pump mounting panel.
4. Remove mounting panel from pump mounting bracket.
5. Disconnect pump wire from control box.
6. Replace pump in reverse of above.
   Note: Always try new pump in shop before putting on the job.

TO REMOVE DRIVE MOTOR

1. Remove left side panel.
2. Loosen set screw on drive journal arm to motor.
3. Take 4 nuts loose on mounting bracket to motor, including the four rubber grommets.
4. Pull electrical cord from control box receptacle.
5. Install new motor in reverse of above.
6. Check and adjust spray bar travel as required.

TO REMOVE SPRAY TUBE ASSEMBLY

1. Remove lower front door.
2. Remove plastic curtain and cube chutes.
3. Lift right end of spray bar out of holder. This loosens spray bar, also the tygon tubing connection and elbow.
4. Pull tygon tubing and stationary elbow off this end of spray tube. (Has rubber O-Ring sealer).
5. Replace in reverse order.

TO REMOVE WATER INLET SOLENOID/FLOW CONTROL

1. Remove cabinet top.
2. Pull electrical leads from spade terminals on top of solenoid.
3. Loosen the 3/8" S.A.E. flare nut on outlet side of valve.
4. Unscrew entire valve body assembly from its pipe fitting on inlet side.
5. Replace in reverse of above.

TO REPLACE MOTOR COMPRESSOR VALVE PLATE

1. Install compound gauge in suction service valve port and close suction service valve by turning valve stem all the way in (Front seated).
2. Operate motor compressor until gauge reading reaches zero. Turn off unit.
3. Front seat discharge service valve.
4. Loosen all head bolts and tap lightly with rubber-faced or plastic hammer to break loose.
5. Remove head, defective valve plate and any gasket material that may have stuck to head or compressor body.
6. Install new valve plate with all new gaskets as provided, tightening each head bolt a little at a time until all are snug.
7. Remove port gauge plug from discharge valve and crack open suction side letting gas purge off trapped air from head. Install hi side gauge in this port, back up both service valve stems and check around valve plate for refrigerant leaks.

8. Start unit, noting head and back pressures. If normal, let run until compressor gets warm. Tighten all head bolts once more, and again check for leaks.

TO REPLACE THE COMPRESSOR

1. Front seat both suction service valve and discharge service valve on the compressor.
2. Disconnect the wiring from the compressor.
3. Remove the bolts holding the service valve to the motor compressor body.
4. Remove the compressor hold-down nuts and lift the compressor out of the unit.
5. Reverse steps 1 through 4 in replacing the compressor.
6. Check the compressor for oil before connecting the oil lines. Should be 2 inches down from the top of the oil plug hole, or 1/2 of sight glass.
7. Remove the gauge port plug from the discharge service valve. Crack the suction service valve slightly, allowing some gas to escape out the gauge port of the discharge valve. When you have thoroughly purged the compressor, replace the plug and open all valves. It may be necessary to charge the unit because some of the gas was lost when the defective compressor was removed. Check and charge if necessary.

TO REPLACE SILENT 3-WAY WATER VALVES

1. Remove left side access panel.
2. Remove 2 screws from mounting bracket.
3. Remove top 1/4" flare fitting.
4. Remove 3 hose clamps.
5. Replace in reverse.

SUPPLEMENT TO MM1010HB

SERVICE MANUAL

NOTE: A stand pipe consisting of a short length of Tygon tubing has been added to the upper and lower sump areas to maintain a minimum water level in each sump. This tube is inserted into the sump drain and extends up from the floor of the sump reservoir. The distance from the floor to the top of the tube should be maintained at approximately 3/4 to 1 inch to prevent water from running over the sides of the sump into the bin and to insure that the sump pumps do not run out of water.

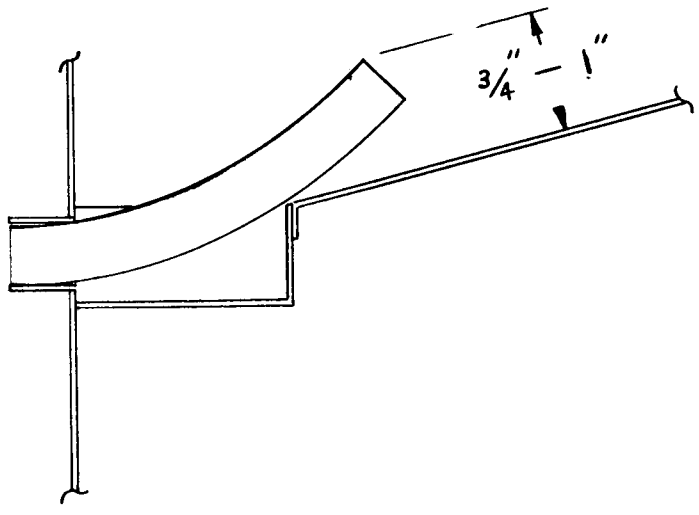

FUNCTIONAL PARTS AND MAINTENANCE

PART NAME: Relay — Ameco or Potter Brumfield — 3 P.D.T.

NUMBER: 12-1598

FUNCTION: Relay is used as a by-pass on the bin thermostat when it tries to cut unit off on a full bin of cubes during a freezing cycle. This insures full cubes every time a harvest occurs and prevents short cycling on bin thermostat.

SETTING: Factory set.

REPAIRABLE: No. Replace when inoperative.

MAINTENANCE: Check electrical connections and blow points free of lint or dirt.

PART NAME: Bin Thermostat — Cutler Hammer

NUMBER: 11-353-1

FUNCTION: To automatically cut machine off when ice level in storage bin reaches thermobulb. Automatically starts machine when ice level in bin falls below bulb location.

SETTING: These controls have adjustable differential. Setting on range dial should be 35° out, 39° in.

REPAIRABLE: No. Replace when inoperative. If out of warranty it can be sent in through your local refrigeration supply dealers and replaced for a small percentage of original cost.

MAINTENANCE: Check capillary for cracks or worn spots due to vibration.

Hold a small handful of ice on thermostat bulb to check operation of control. Tighten electrical connections.

PART NAME: Inlet Water Solenoid

NUMBER: 12-621G1

FUNCTION: During freezing cycle this valve is closed, keeps water from entering heat exchanger tank and also from leaking out of tank.

During harvest or defrost cycle this valve opens and allows inlet water to pass to flow control orfice and thence to push warm water out of heat exchanger tank into back of cups molds, performing the defrost.

SETTING: Factory set.

REPAIRABLE: Yes

MAINTENANCE: Flush control each six months.

FUNCTIONAL PARTS AND MAINTENANCE

PART NAME: Drive Motor Merkle Korff

NUMBER: 12-1277-1

FUNCTION: This motor is used to drive the linkage mechanism which in turn drives the oscillating jet spray tubes. This provides a constant spray movement to all the inverted cube molds and by so doing also aerates the water producing clear, solid Scotsman cubes.

SETTING: No settings on motor.

REAPIRABLE: Yes--to some extent. Not recommended although front bearings and windings could possibly be replaced by electric motor shop. Normally replace out of warranty motors.

MAINTENANCE: Oil every six months or less as use indicates. Use SAE 20 oil. There are two oil cups on the motor and a gear case slotted screw which has to be removed to add or change oil in gear case proper. Drive linkage should be inspected to insure free movement with no binding or drag on drive motor.

PART NAME: Time-Finishing Clock Manufactured by Queen Products Div.

NUMBER A-23121-1

FUNCTION: Heart of cyclematic control system is the reverse acting cube size control, No. 11-345, and the time clock it actuates. All electrical components are connected to the time clock terminal board and are shunted by means of a double pole single throw micro-switch to either the freezing cycle or harvest cycle. Micro-switch is in turn actuated by a brass cam that is directly connected to the electric timer clock motor. Timer has 8 minute cycle, 6.75 min. on freezing cycle after being cut on by lo temperature control and 2.25 min. on defrost cycle.

The cam assembly on the timer consists of two brass discs which can be adjusted to lengthen or shorten the defrost cycle.

SETTING: Normal setting for defrost is on No. 4 which is 2.25 minutes.

REPAIRABLE: Yes. Micro-switch, part No. 12-1721-50 is replaceable.

MAINTENANCE Check all electrical connections, blow contact points free of dust, dirt, etc.

FUNCTIONAL PARTS AND MAINTENANCE

PART NAME: Reverse Acting Cube Size Control

NUMBER: 11-345

FUNCTION: Reverse acting temperature control, closes on temperature decrease, opens on temperature rise. Control determines length of freezing cycle and by the same token, the cube size. A lower setting on control will produce larger cubes, a higher setting, smaller cubes. This control actuates time clock motor, Part No. A-23121-1, which then takes over balance of freezing cycle and also defrost period.

SETTING: Turn dial clockwise to lower setting.

REPAIRABLE: No. Replace when inoperative.

MAINTENANCE: Check electrical connections. Blow points free of dust, dirt, lint, etc.

PART NAME: Sump Pump

NUMBER: 2 per unit 12-1798-1

FUNCTION Recirculating pump used to pump supply water in reservoir to jet tubes during freezing cycle.

SETTING: Factory set.

REPAIRABLE: Motor only available part no. 12-1798-51

MAINTENANCE: Flush out reservoir and sump pump intake with Scotsman ice machine cleaner.

PART NAME: Left Fan Control Penn

NUMBER: 11-342 Air cooled models only

FUNCTION: To control one Condenser Fan Motor between pressures of 170 lbs. and 154 lbs.

SETTING: Factory Set

REPAIRABLE: No. Replace if defective.

PART NAME: Right Fan Control Penn

NUMBER: 11-343 Air Cooled Models Only

FUNCTION: To Control one Condenser Fan Motor between pressures of 155 and 139 lbs.

SETTING: Factory Set

REPAIRABLE: No. Replace if defective

PART NAME: 3 way valve

NUMBER: A-17954

FUNCTION: To route water for freezing and harvest cycles. Incoming water pressure during harvest flexes rubber diaphram against valve stem assy which opens and closes necessary ports. Stem is spring loaded for return to position during freezing cycle.

SETTING: None

REPAIRABLE: Yes, diaphram, "O" ring and spring replacable.

MAINTENANCE: Flush during maintenance cleaning.

MAINTENANCE INSTRUCTION FOR SCOTSMAN SUPER CUBERS

THE FOLLOWING MAINTENANCE MUST BE ACCOMPLISHED TWO (2) TIMES PER YEAR ON ALL SCOTSMAN CUBERS. CALL YOUR AUTHORIZED SCOTSMAN SERVICE DEPARTMENT.

1. Clean air-cooled condenser. This is to be done frequently with the machine shut off.
2. Clean evaporator, sump tank and screen, using Scotsman Ice Machine Cleaner or equivalent.
3. Remove jet tube and manually clean jets by unscrewing jets.
4. Check curtain assembly.
5. Tighten all electrical connections.
6. Tighten all bolts.
7. Check water supply. Clean and flush flow control. Clean water strainer.
8. Oil jet tubes drive motor three (3) places. Use SAE 20 oil-2 oil cups, 1 crank case screw covered opening.
9. Oil condenser fan motor. Punch sealed cap or remove screws where possible,
10. Check for refrigeration leaks with halide torch.
11. Check for water leaks. Tighten drain line connections.
12. Check size and condition of cubes. Adjust as required. See Service Analysis Section.
13. Check bin thermostat setting. Factory set as 35°out, 39° in.

CLEANING INSTRUCTIONS FOR SCOTSMAN ICE MACHINES

MODELS MM1010HB

1. Remove front access doors.
2. Locate control box with time clock knob protruding thru cover.
3. Put unit through a harvest cycle manually. This may be done by turning the time clock knob clockwise until you hear the micro-switch actuator arm click into the cam slot.
4. Locate plastic curtain segments on front of machine and immediately after actuator arm has clicked into the cam slot lift curtain segments and pour 24 oz. of Scotsman Ice Machine Cleaner'' into both top and bottom reservoirs.
5. Let unit finish cube harvest cycle and start into freezing cycle. This This will be approximately 5 minutes after Step No. 3. At this time turn off the compressor switch.
6. Let unit operate normally for 10-15 minutes into the freezing cycle. No ice will be made because the motor compressor is not in operation.
7. At the end of this time put the unit through 2 or 3 harvest cycles manually to allow fresh make up water to clean out remaining solution. Each time waiting approximately 5 minutes after the actuator arm has clicked into the cam slot until the next harvest cycle is done manually.
8. Turn the compressor switch back on.
9. Check each new batch of cubes until they are clear and until acid taste has been removed from cubes.
10. Put hot water in storage bin to melt the cube and thereby clean the drains with the same solution that has just cleaned the unit.
11. Use a damp cloth to wipe off curtains and inside of storage bin.
12. Replace all access doors.
13. Unit is now ready for continued automatic operation.

B-700 STORAGE BIN FOR MM1010 CUBER

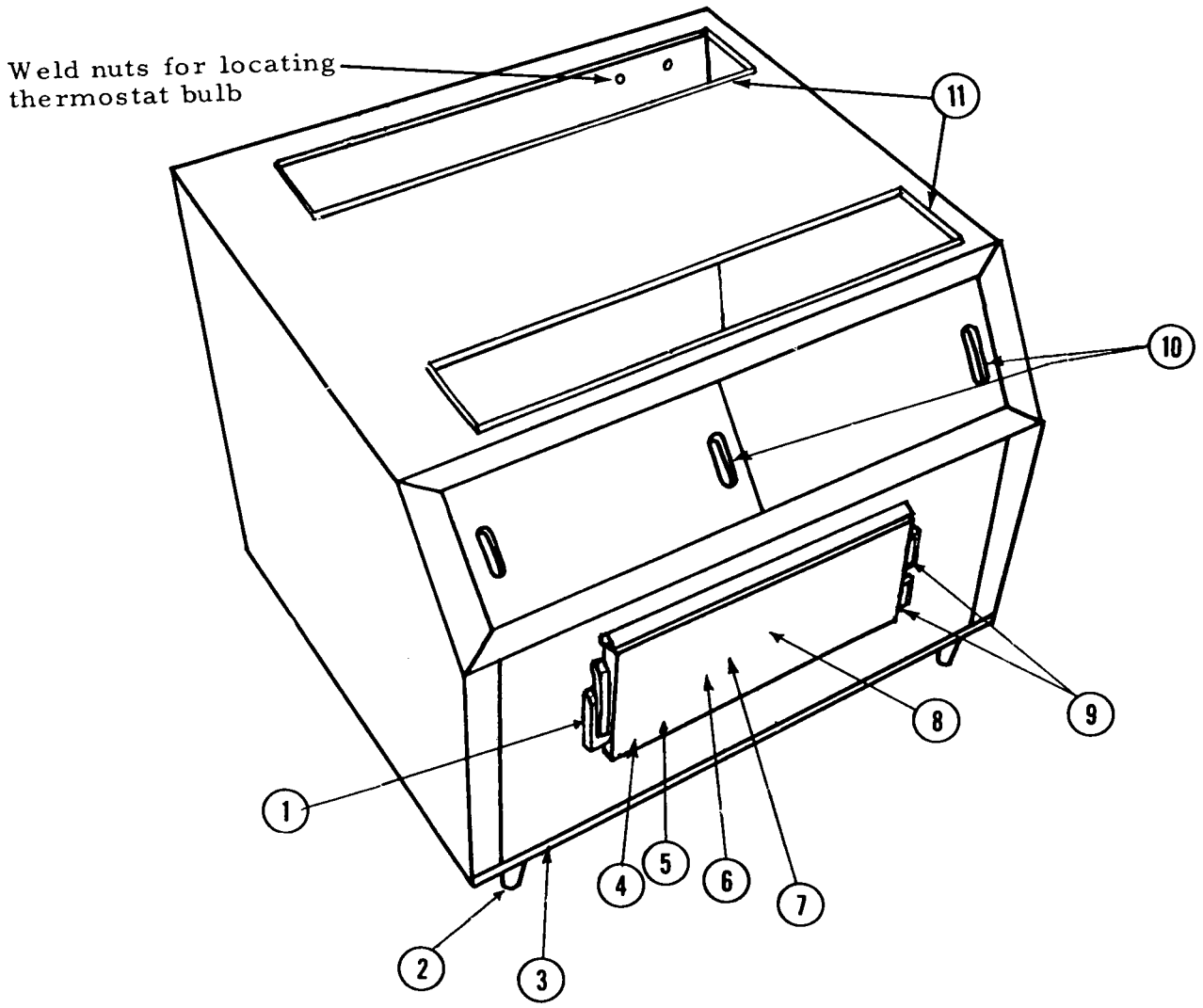

ITEM NO.	PART NO.	NAME
1	2-1568	Latch & Strike
2	A-17110	Leg (4 Reqd)
3	A-96814	Moulding
4	A-15114	Baffle *
5	A-17342	Spill Door*
6	2-1000	Door Liner*
7	13-264	Door Gasket*
8	A-18300-5	Door Assy. Complete with Hardware--grey
9	A-18300-2	Door Assy. Stainless Steel
9	2-1569	Hinges
10	2-1529	Sliding Door Plastic 2/unit
	A-18770	Sliding Door Stainless Steel
11	2-1544	Gasket

TABLE OF CONTENTS

MM-110

FOREWORD 1

TABLE OF CONTENTS 2

SPECIFICATIONS

- Mechanical Specifications 3
- Photo and Ice making Capacity 4-5

INSTALLATION

- Installation-How Cuber Works 6
- Installation Instructions
  - Uncrating of Machine 7
  - Pre-Installation Cleaning 7
  - Location of Machine 7
  - Drain Connections 8
  - Water Supply 8
- Electrical Connections and Characteristics 8
- Installation and Start Up 9-10-11

SERVICE

- Operation Cycle 12
- Water-Refrigerant Schematic 13
- Wiring Diagram, Water Cooled 14
- Wiring Diagram, Air Cooled 15
- Cabinet Front View Cutaway 16
- Cabinet Left Side View Cutaway 17
- Sump Pump 18
- Cabinet Parts Layout H Models 19
- Control Box MM-110 20
- 3-Way Water Valve 21
- Condensing Unit, Water Cooled 22
- Condensing Unit, Air Cooled 23
- Cabinet View-Prior to H Models 24
- Left Side View-Prior to H Models 25
- Case Parts-Prior to H Models 26
- Functional Parts and Maintenance 27-30
- Service Complete Unit 31-32
- Service Analysis 33-34
- Maintenance Instructions 35
- Parts List 36

THIS PAGE
INTENTIONALLY
LEFT BLANK

THIS PAGE
INTENTIONALLY
LEFT BLANK

SPECIFICATIONS

	MODEL MM-110H	MODEL MM-110WH
Compressor	115/60/1 1/3 HP	115/60/1 1/3 HP
Condenser	Air Cooled	Water Cooled
Refrigerant	Refrigerant 12	Refrigerant 12
Refrigerant Charge	21 ounces	21 ounces
Power Consumption	11 Amperes	11 Amperes
Average Watt Input	115/60/1 - 730	115/60/1 - 730
Water Consumption to Produce Ice	5 Quarts per Hour	5 Quarts per Hour
Water Used by the Condensing Unit		20 Gallons per Hour Average - Varies with Water Temperature.
DIMENSIONS		
Height-with 6" Legs	45 1/2"	45 1/2"
Height - Less 6" Legs	39 1/2"	39 1/2 "
Width	34 1/8"	34 1/8"
Depth	24 1/2"	24 1/2"
WEIGHTS		
Uncrated	300 lbs.	300 lbs.
Crated	350 lbs.	350 lbs.

SCOTSMAN®

SUPER CUBER
MM-110
SERIES

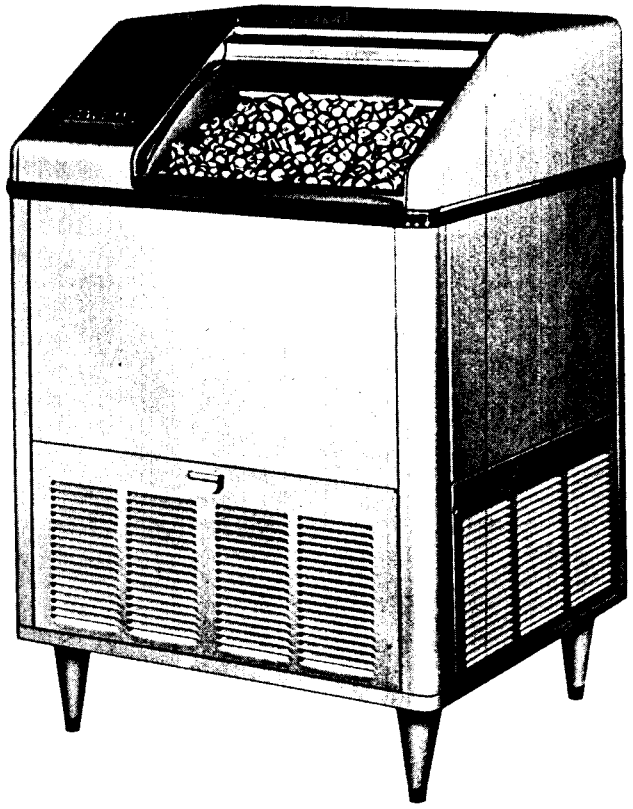

ice making capacity

Air Cooled Models

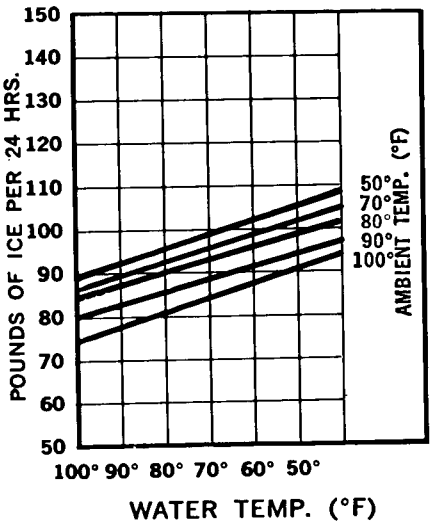

Water Cooled Models

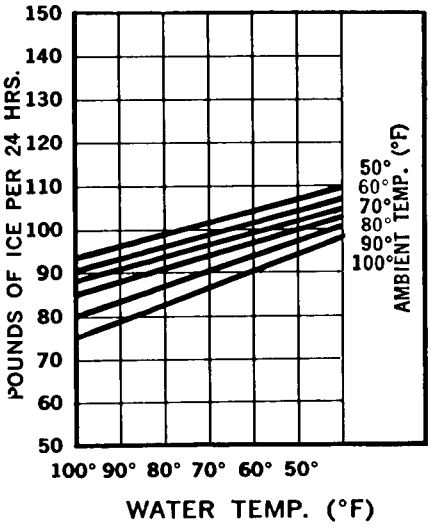

PECIFICATIONS

SUPER CUBER MM-110 SERIES	MODEL MM-110H	MODEL MM-110WH	MODEL MM-110H-SS	MODEL MM-110WH-SS
Daily capacity up to 100 lbs.	X	X	X	X
Self-contained 50 lb. capacity storage bin	X	X	X	X
Air-cooled condenser	X		X	
Water cooled condenser		X		X
Heavy duty 1/3 HP. Compressor	X	X	X	X
Standard 115 V, 60 cy, 1 ph, AC	X	X	X	X
3/8" water inlet SAE Flare	X	X	X	X
5/8" OD storage bin drain	X	X	X	X
5/8" condensate drain		X		X
Hammerloid grey exterior	X	X		
Stainless steel exterior			X	X
Stainless steel lined storage bin	X	X	X	X
45 1/2" height (with legs)	X	X	X	X
39 1/2" height (without legs)	X	X	X	X
34 1/8" width	X	X	X	X
24 1/2" depth	X	X	X	X
Approximate shipping weight	350	350	350	350

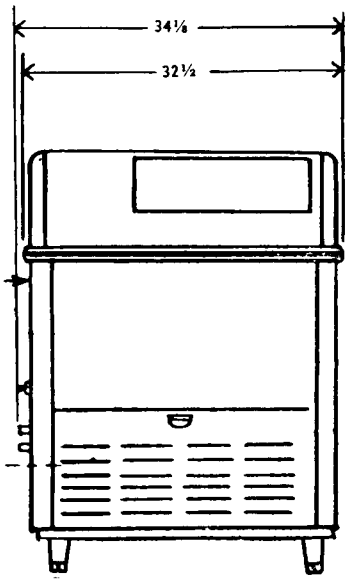

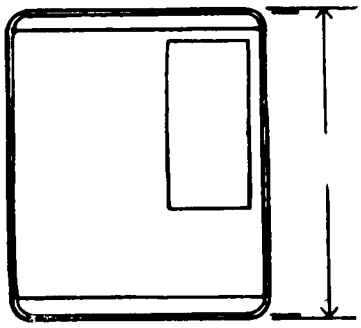

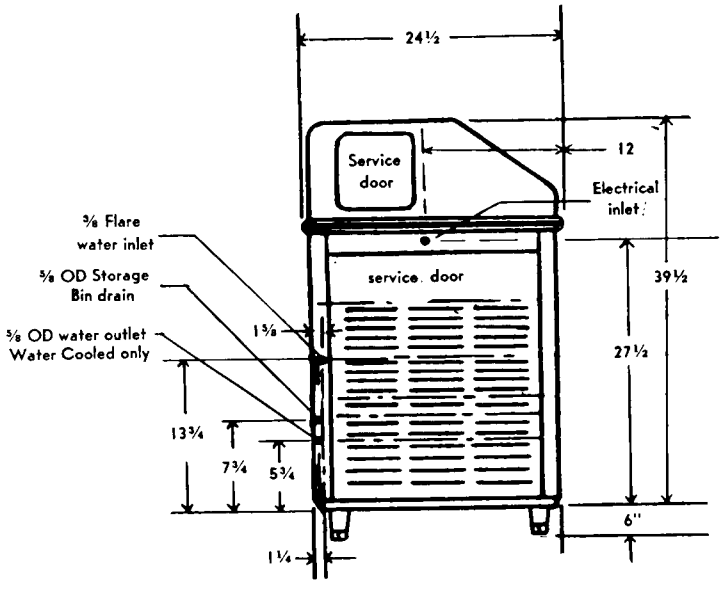

HOW IT WORKS

The new MM-110 Super Cuber incorporates the following features:

1. Discharge gas heats defrost water.
2. Water is controlled by three-way water valve.
3. 104 cubes per harvest.
4. Temperature sensing cube size control.
5. Pressure control cycles condensor fan to maintain head pressure in low ambients on air-cooled models.

The MM-110 Super Cuber resembles the SC-100 Super Cuber and incorporates many of the best features of the entire line.

The defrost water heating system is similar to the SC-300 using discharge gas to heat water and flow control to regulate flow.

The three-way water valve is the same as on SC-100 and SC-200 except for slight modification. In order to assure more rapid delivery of the defrost water from the hot gas heated tank to the platen, the solenoid flow control valve regulates flow at .75 G.P.M.

The cube chute is made of sheet stainless steel. The spray bar motor speed is 39 R.P.M. as compared to 19 R.P.M. on the SC-100.

INSTALLATION

UNCRATING OF MACHINE

1. The complete machine comes in one crate. After the crate is removed, inspect for concealed damage. Remove the bottom skid by removing all bolts. Then cut all wires holding support packing from refrigerant line. Then loosen shipping bolts on the compressor. Be sure the compressor is floating free on spring mounts. Then check all refrigerant lines for rubbing or touching other surfaces. Also check for possible transportation damage.

2. Remove all service doors and panels.

3. Remove leg packages in compartment base and install 4 legs in unit base sockets. Level unit with adjustable legs.

4. Loosen motor compressor hold down nuts until motor compressor rides freely on mounting springs.

5. Remove water strainer from storage package for installation in water supply line feeding unit.

6. Open electrical control box and prepare for hook up, use knock outs, cord connectors etc. Then check unit name plate voltage against building source voltage and make sure they correspond. Caution--Improper voltage supplied to units will void your warranty protection.

7. Make sure all service valves on the condensing unit are open and turned as far as possible to the left. Replace the valve caps after checking the valves. All Models are shipped with valves back seated.

8. Make sure that the flow of air is not impeded in any way over condenser on air-cooled models. Keep condenser clean. (Check and clean the condenser monthly.)

9. Operating room temperatures are minimum 50° F. and maximum 100° F.

10. Have the installation and warranty cards been filled out and sent to factory to insure warranty protection?

LOCATION OF THE ICE CUBE MACHINE

UNDER BAR INSTALLATIONS--Locate, if possible, so left end panel is accessible. Locate unit so proper circulation can be attained around the unit and behind it at least four inches. Provide plumbing and electrical connections so the unit can be moved out where the entire top hood can be removed and the unit can still be operated.

KITCHEN INSTALLATIONS--As a rule, the kitchen is not the most practical place to install an air-cooled condensing unit, as grease is almost always present and makes cleaning of the condensing unit difficult. Do not locate near range or steam table or other heating devices that may be used in the kitchen.

STOREROOM INSTALLATIONS--Be sure storeroom is of adequate size and properly ventilated. A small, poorly ventilated room will greatly impair the efficiency of the unit. The storeroom must be kept above 50 degrees in the winter months.

INSTALLATION

BASEMENT INSTALLATIONS--Locate machine in the coolest place. Locate the machine in a dry place. Keep away from furnace and boiler room. Keep away from service chutes and runways, also coal or other dust of any kind. If the machine is set over a floor drain, block the machine up enough to eliminate any possible damage to the machine.

LOCATE THE MACHINE SO IT CAN BE SERVICED WHEN NECESSARY. ALLOW AT LEAST FOUR INCHES OF SPACE AROUND THE MACHINE FOR CIRCULATING AIR.

IMPORTANT: ADJUST LEVELER LEGS. MACHINE MUST BE LEVEL.

WATER SUPPLY AND DRAIN CONNECTIONS.

Page 5 shows recommended water piping connections and drain facilities for Model MM-110H and MM110 WH.

WATER SUPPLY

The recommended water supply line is 1/4" OD copper tubing for air-cooled units. Connect to a cold water supply line with regular plumbing fittings with a shut-off valve installed in an accessible place between supply line and machine. The water strainer supplied with the unit should be mounted with clean-out plug down. Locate the strainer next to the machine and the arrow in the direction of the flow.

The water supply line connects to the 1/4" male flare connection on cabinet left side. Use care in connecting up water line to the machine. Water supply must be installed to conform with local code.

Water connection for the MM-110 WH water-cooled units should be at least 3/8" OD copper tubing to the water-cooled condenser. One connection is made inside of cabinet for both make-up water and condenser water.

DRAIN

The recommended drain is 5/8"OD copper tubing. Sweat to drain connection (See page 5) . Must be running to open or trapped drain. If drain is a long run, allow a 1/4" pitch per foot. Drain must be be installed to conform with local code.

ELECTRICAL CONNECTIONS AND CHARACTERISTICS

MM-110	110-115 V, 60 Cycle	Single Phase, 11 Amps.

All external wiring should conform with National Underwriters' and local code requirements. Check the voltage on the line before connecting the machine. Model MM-110 requires 110-115 volts, 60 cycle, single phase.

The MM-110 should be wired to a 15 Amp. circuit. Be certain that the Super Cubers are on their own circuit and individually fused. The maximum allowable voltage variation should not exceed 10 per cent of the nameplate rating even under starting conditions. Low voltage can cause erratic operation, and may be responsible for serious damage to the overload switches and motor windings.

INSTALLATION PRACTICE

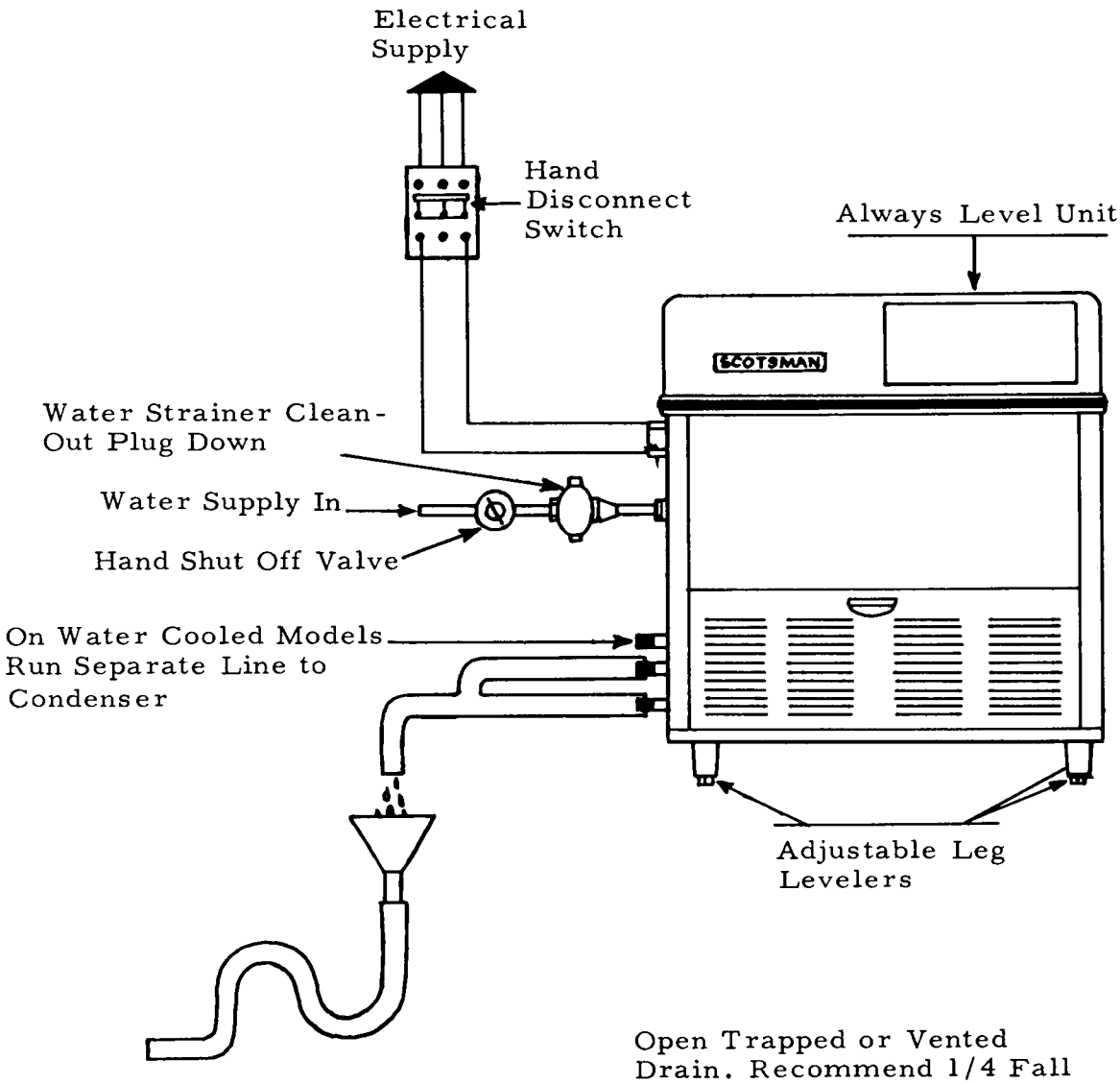

INSTALLATION

START UP

1. On all water cooled models, turn on water supply to water-cooled condenser and check for leaks in connections made.

2. Turn on cube supply at hand shut-off valve. Make sure hot water tank fills to overflow, if it does not, adjust timer lever to 2 1/2 minute setting. NOTE: Unit has built-in water flow control set to reduce flow rate to approximately .75 gallons per minute.

3. Check electrical circuit. 15 Amps. Do not connect with other appliances into one ordinary wall outlet: 115 volts required.
4. Inspect components in electrical control box, check for loose or frayed wire, then turn both manual switches to "on" position. NOTE: All "H" model cubers have two manual on-off switches. One is for motor compressor only during cleaning operation, one is master switch for complete unit.

5. Turn disc on time clock to the right just far enough for water solenoid valve to energize. Allow clock to take it through harvest cycle. This will be approximately two minutes. Dial pointer should be set on Number 2. After the compressor starts, turn the dial completely around and send it through another harvest cycle. Do this several times. This will completely flush out machine of any dust that may have accumulated in shipment.

6. After machine has been properly flushed, allow it to go into a freezing cycle - check for possible water leaks, check sump pump operation - should be running freely. Also note if jet tube travel is correct, and that none of the jets are plugged. Jet spray of water should hit the middle of the cups.

7. Time clock dial does not rotate at the end of the harvest cycle; it is started later by the cube size control located in the control box.

8. Freezing time will be approximately 18 minutes in a 70 degree ambient. (Longer if above, and shorter if below.) Average complete cycle time is 20 minutes.

9. Watch first cube harvest and check to make sure that plastic curtain has not not been damaged in shipment.

10. Check size of cubes made: If too small, after a second cycle, adjust cube size control to lower or colder setting - until desired cube size is reached.

11. Check texture of cubes made: Partially cloudy cubes throughout suggest unit running short of water near end of freezing, or possibly an extremely bad water condition, which would indicate use of filtering or purifying equipment. Contact SCOTSMAN - Queen Products, Div., Ice Machine Service Department, Albert Lea, Minnesota, for futher details.

12. With unit on harvest cycle, take a handful of cubes made and hold on storage bin thermostat cover. Should cut unit off in one or two minutes - remove ice: unit should cut back on automatically. Thermostat is factory set at 35 degrees out, 39 degrees in.

13. Install gauges and check head and back pressure: air-cooled models, head pressure after twenty minutes of freezing cycle at 70° ambient will be approximately 125 pounds PSI. The back pressure starts out at approximately 50 pounds PSI and gradually pulls down to approximately 4 pounds PSI just before harvest cycle. Higher ambients and dirty condenser will cause higher pressures. Water-cooled models have water regulating valves factory set at 125 pounds PSI: check reading and adjust if necessary. Back pressure will operate the same as on air-cooled models.

14. Remove gauges, replace control box cover and all service panels.

15. Instruct owner on how to operate and clean machine.

SERVICE

CYCLE OF OPERATION - At the start of the freezing cycle, the sump tank contains enough water to make a complete batch of ice cubes, plus approximately an extra pint. When time clock closes load circuit, it starts the compressor, sump pump and spray bar motor. At the same time, it opens the circuit to clock motor. (CLOCK MOTOR DOES NOT RUN FIRST PART OF FREEZING CYCLE -- THIS IS APPROXIMATELY 15 MINUTES.)

This timer has a double cam, double contacts micro-switch arrangement for carrying and directing current. After a predetermined amount of ice is frozen, the cube size control closes, actuating the time clock motor circuit which continues the freezing cycle approximately 10 more minutes. (AFTER CLOCK MOTOR STARTS, FREEZING TIME WILL BE 12 MINUTES LESS DEFROST TIME SETTING.)

At the end of the 10-minute period, time clock operated cam opens compressor, sump pump drive motor, and solenoid operated water valves. At this time, the solenoid flow control forces heated water in hot water tank to flow through three-way water valve, and into the upper cavity of the freezing chamber, and, at the same time the three-way water valve allows the surplus water from the preceding batch of ice cubes to go down the drain.

The hot water from the water tank flows into the rubber platen holding the cups and by conduction on back of cups causes cubes to defrost. The platen cavity is completely filled up to the overflow point, and continues to overflow while in the defrost cycle; the amount of this water running over the overflow pipe is predetermined by the flow control orifice in the flow control and the length of harvest time setting on the time clock; overflow water goes down the drain also.

Meanwhile, cubes being released from the cups drop by gravity unto cube chute, thence through curtained opening into storage bin. Clock motor now stops and will not start until cube size control closes once more. As freezing cycle starts the solenoid-operated water valves are de-energized, thus isolating water in the heat exchanger tank for next defrost period. The chilled water from the upper cavity flows by gravity through the water valve to the sump tank and reservoir. This water is used to produce the next batch of cubes.

WATER - - REFRIGERANT SCHEMATIC

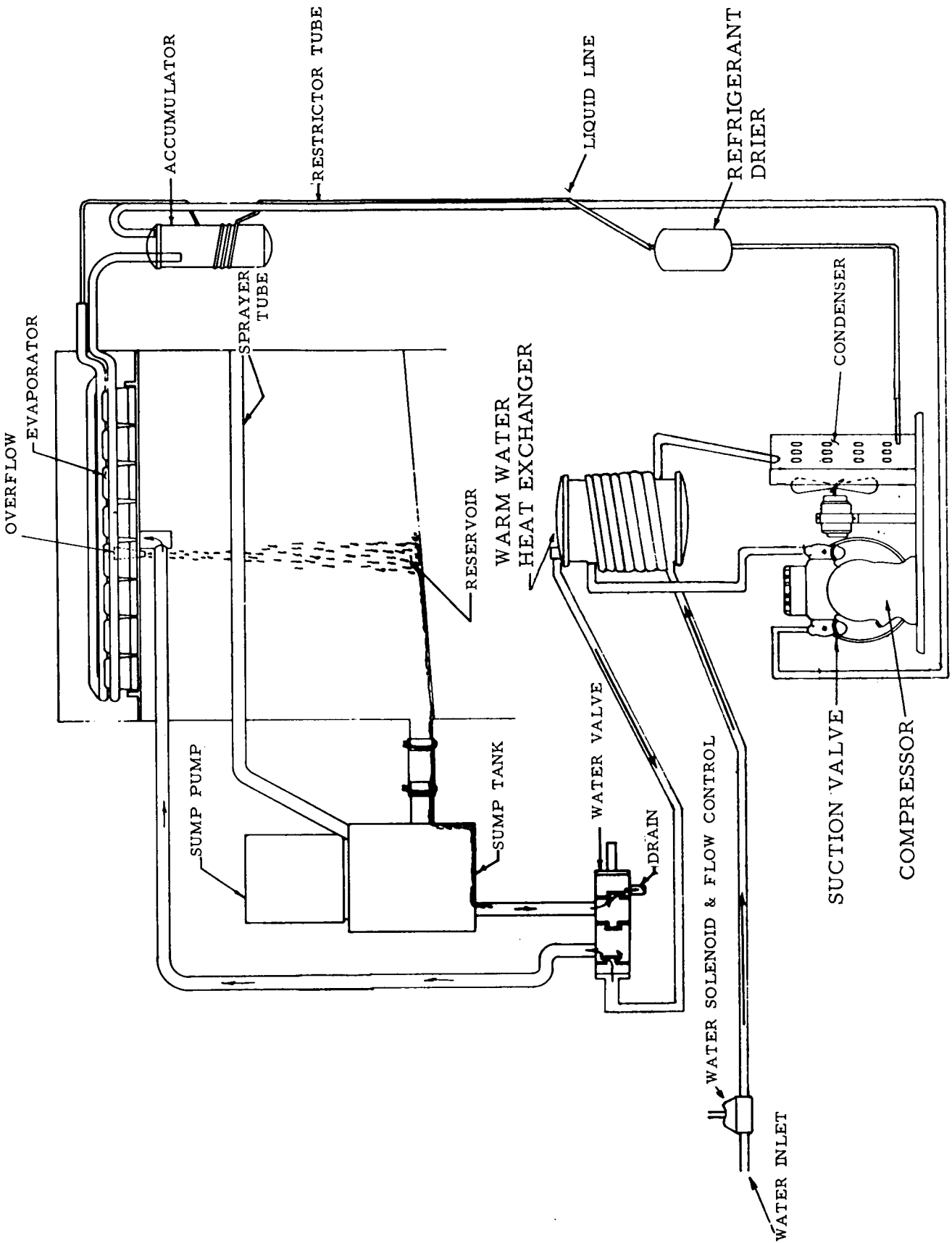

WIRING DIAGRAM
WATER - COOLED

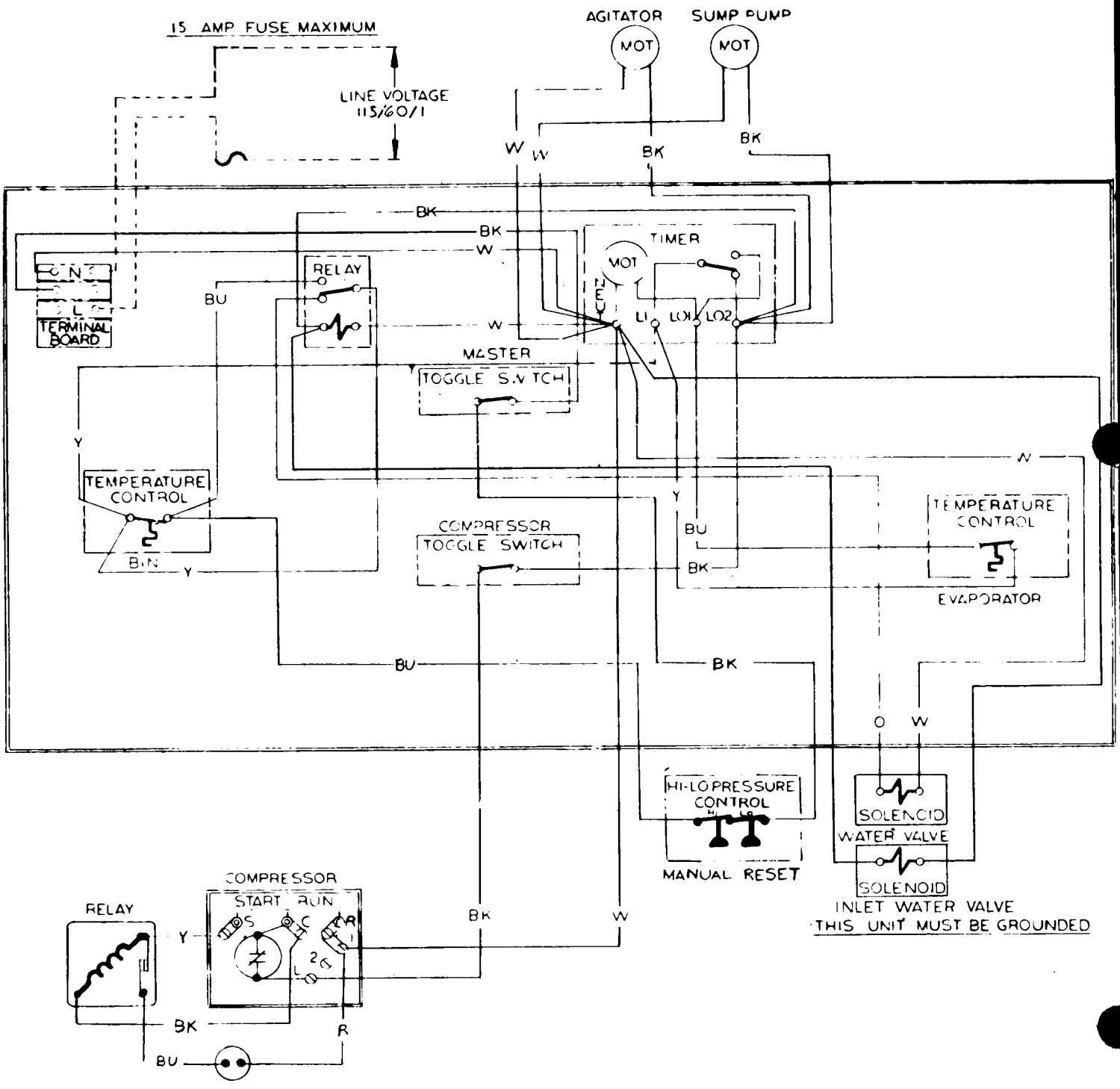

WIRING DIAGRAM
AIR - COOLED

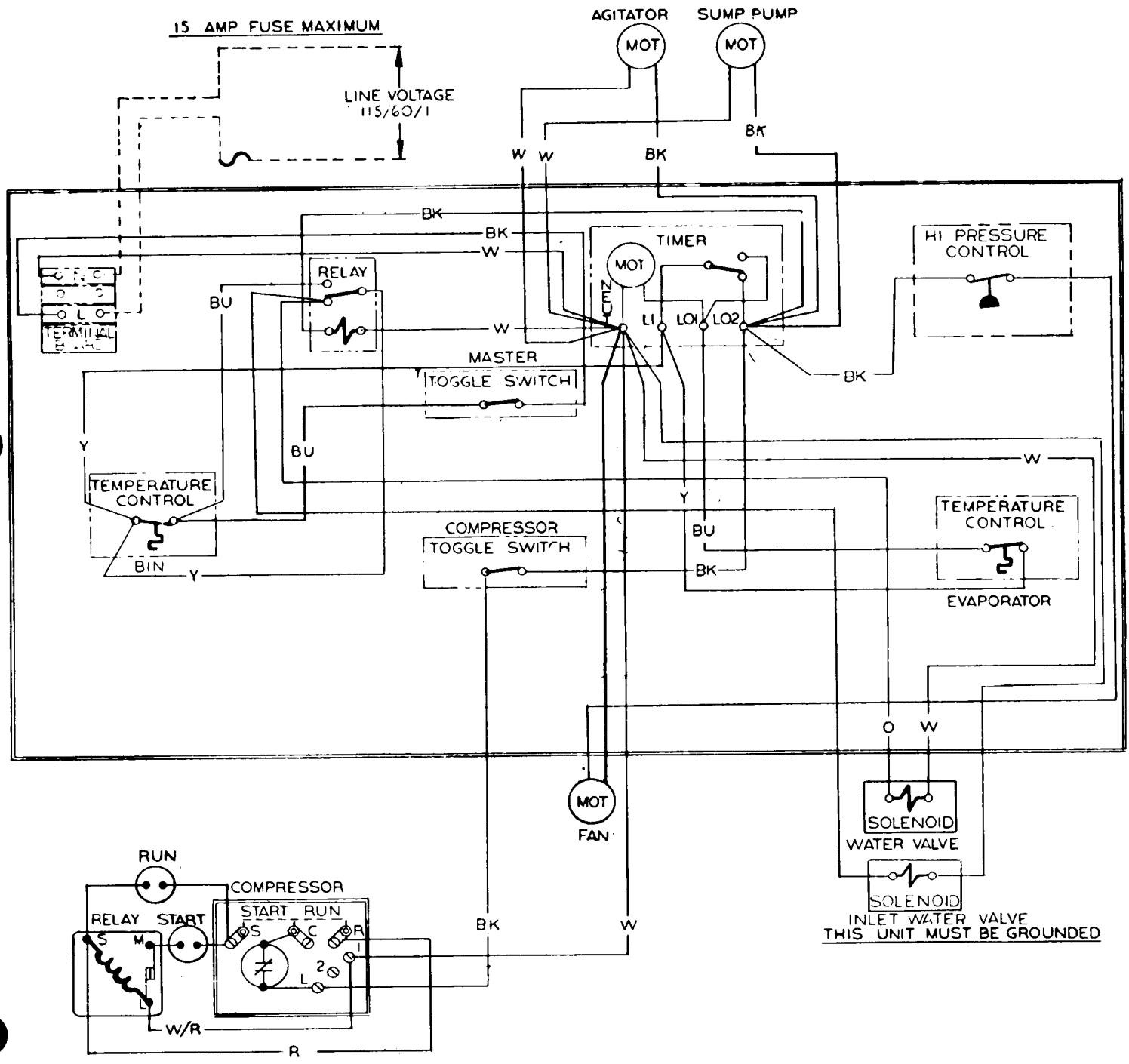

MM-110H COMPLETE UNIT

Front

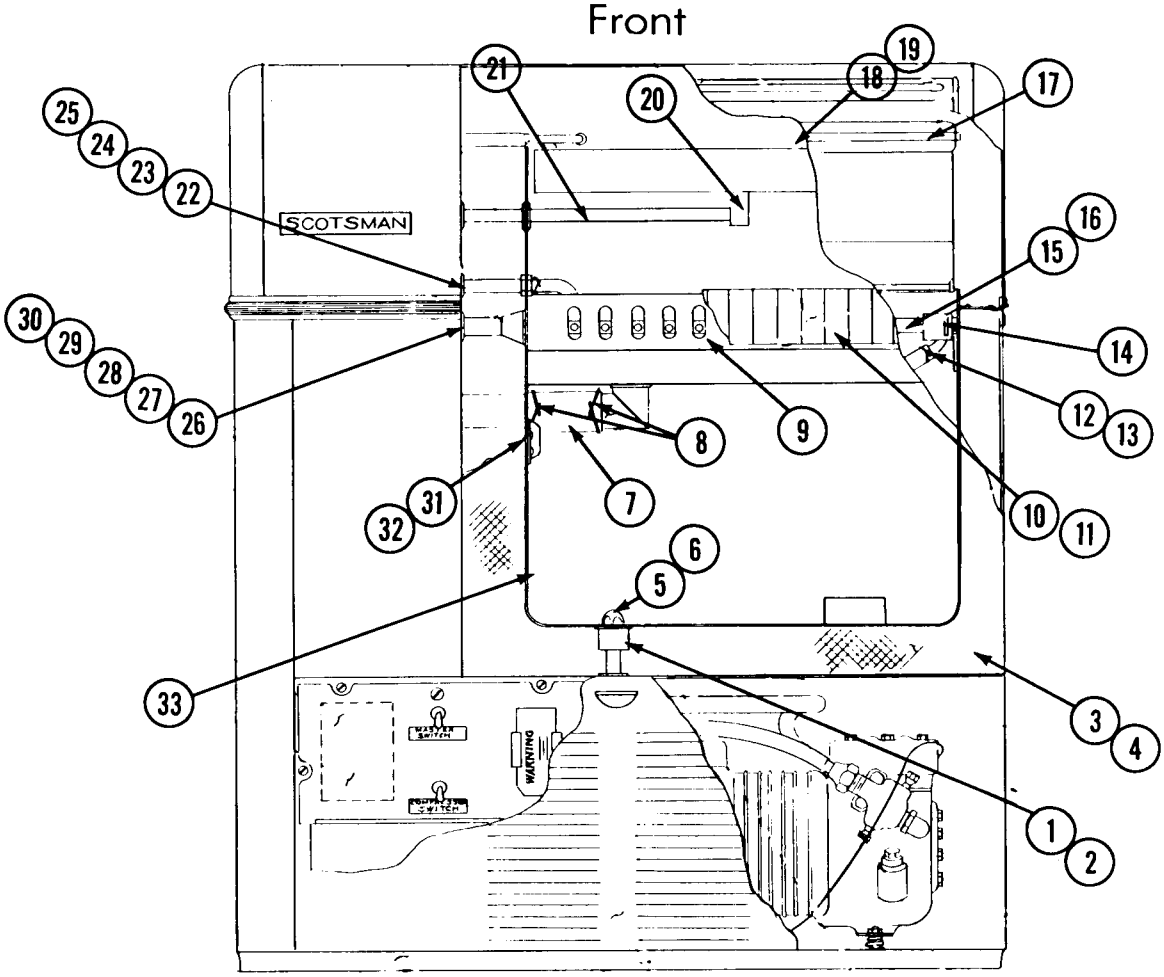

ITEM NO.	PART NO.	NAME
1.	A-18102	Drain Ass'y
2.	2-530	"O" Ring
3.	A-15721-1	Insulation Bottom
4.	A-16246	Insulation Layout
5.	A-18090	Drain Fitting (Male)
6.	A-6448	Drain Strainer
7.	5-170-2	Tygon Hose
8.	2-537-1	Clamps (2 reqd.)
9.	A-16412	Cube Chute
10.	A-16439	Curtain Assy
11.	3-727	Thumb Screw (2)
12.	2-536-1	Clamp
13.	5-179	Tygon Tube
14.	A-16963	End Bearing Ass'y
15.	A-16432	Sprayer Tube
16.	S-6907	Jets
17.	2-1489	Plastic Insul. Cover
18.	A-16415-2	Freezer & Acc. Assy.
19.	13-573	Rubber Cupholder
20.	S-7434	Adapter
21.	A-16437	Inlet Tube
22.	A-16970	Inlet Tube
23.	2-541	"O" Ring
24.	S-9965	"O" Ring Nut
25.	13-125	Grommet
26.	S-8887	Drive Bearing Support
27.	S-7639	Drive Journal Ass'y
28.	S-7635	Nut
29.	3-606	Fiber Washer
30.	13-169	Grommet
31.	A-15759	Bulb Cover
32.	13-590	Bulb Gasket
33.	A-16133	Storage and Reservoir Assy
34.	13-168	U-Cup for A-16963

MM-110H COMPLETE UNIT
Left Side

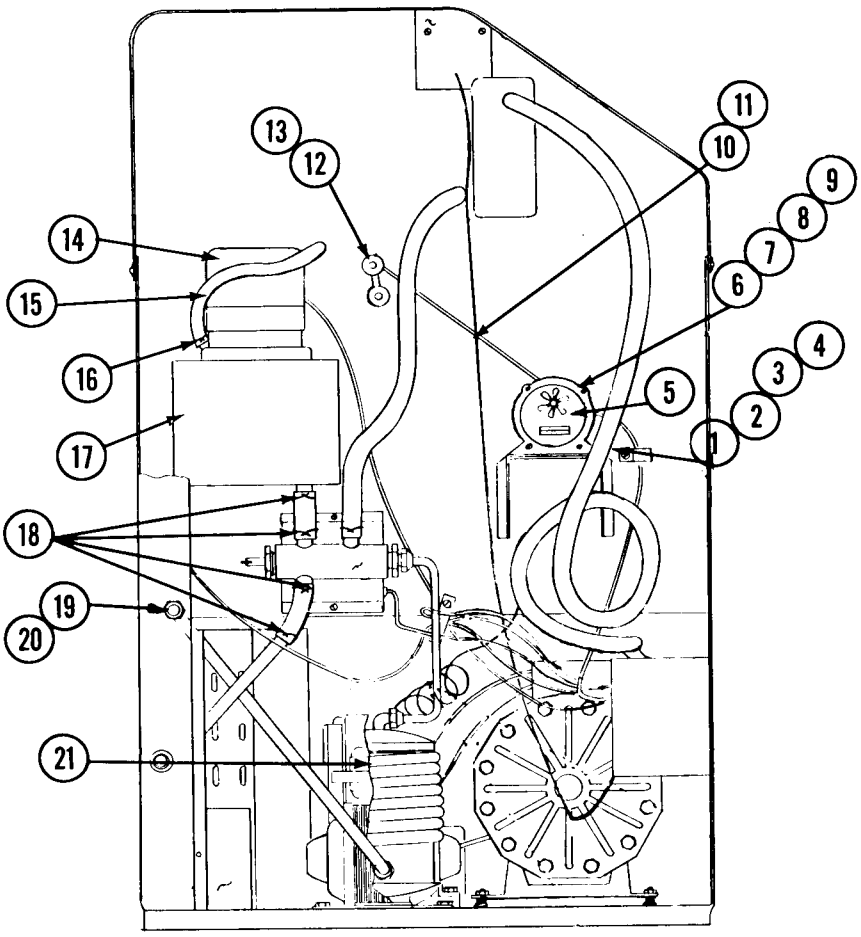

ITEM NO.	PART NO.	NAME
1.	3-08	Screw
2.	3-88	Lockwasher
3.	3-298	Washer
4.	3-61	Nut
5.	12-1346-1	Drive Motor
6.	S-7128	Driven Arm
7.	A-7033	Bearing
8.	S-7558	Bearing Clip
9.	3-341	Set Screw
10.	S-7132	Linkage Rod
11.	A-6726	Linkage Complete
12.	A-6462	Driver Arm
13.	S-7130	Collar
14.	12-418-1	Sump Pump
15.	5-179	Tygon Tube
16.	2-536-1	Hose Clamp
17.	A-8515	Sump tank
18.	2-536	Hose Clamps
19.	12-621E-1	Solenoid
20.	12-621-31	Flow Control only
21.	A-17140	Cond. Tank Assy

MM-110H SUMP PUMP

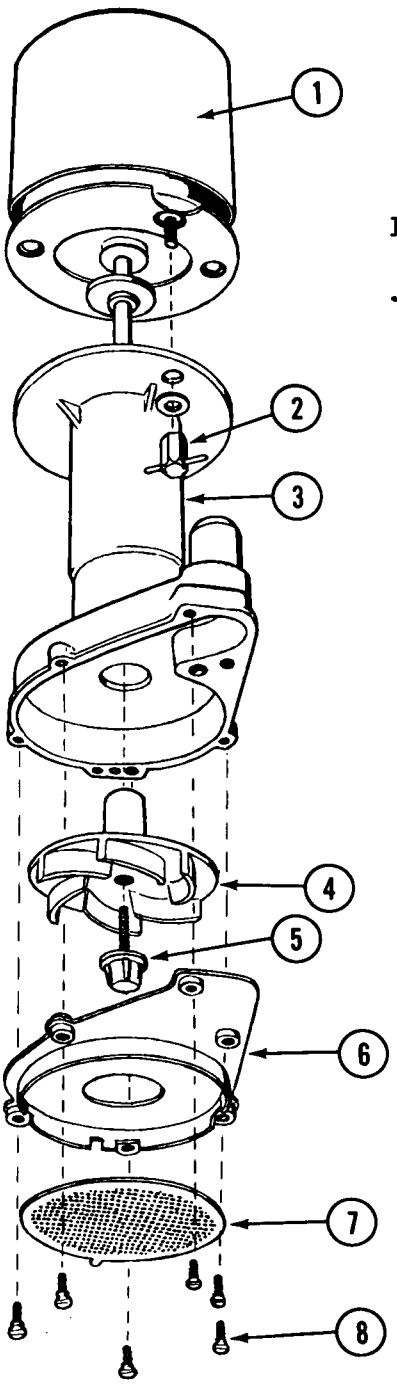

ITEM NO.	PART NO.	NAME
1.	12-1351-22	Motor Only
2.	12-1351-32	Wing Hex Nuts
3.	12-418-30	Pump Body
4.	12-1351-21	Impellar and Spring
5.	12-1351-31	Impellar Screw and Gasket
6.	12-1351-27	Bottom Inlet Plate
7.	12-1351-26	Inlet Screen
8.	12-1351-29	Wing Screws
	12-418-1	Complete Pump

MM-110H CASE AND HOOD ASSY

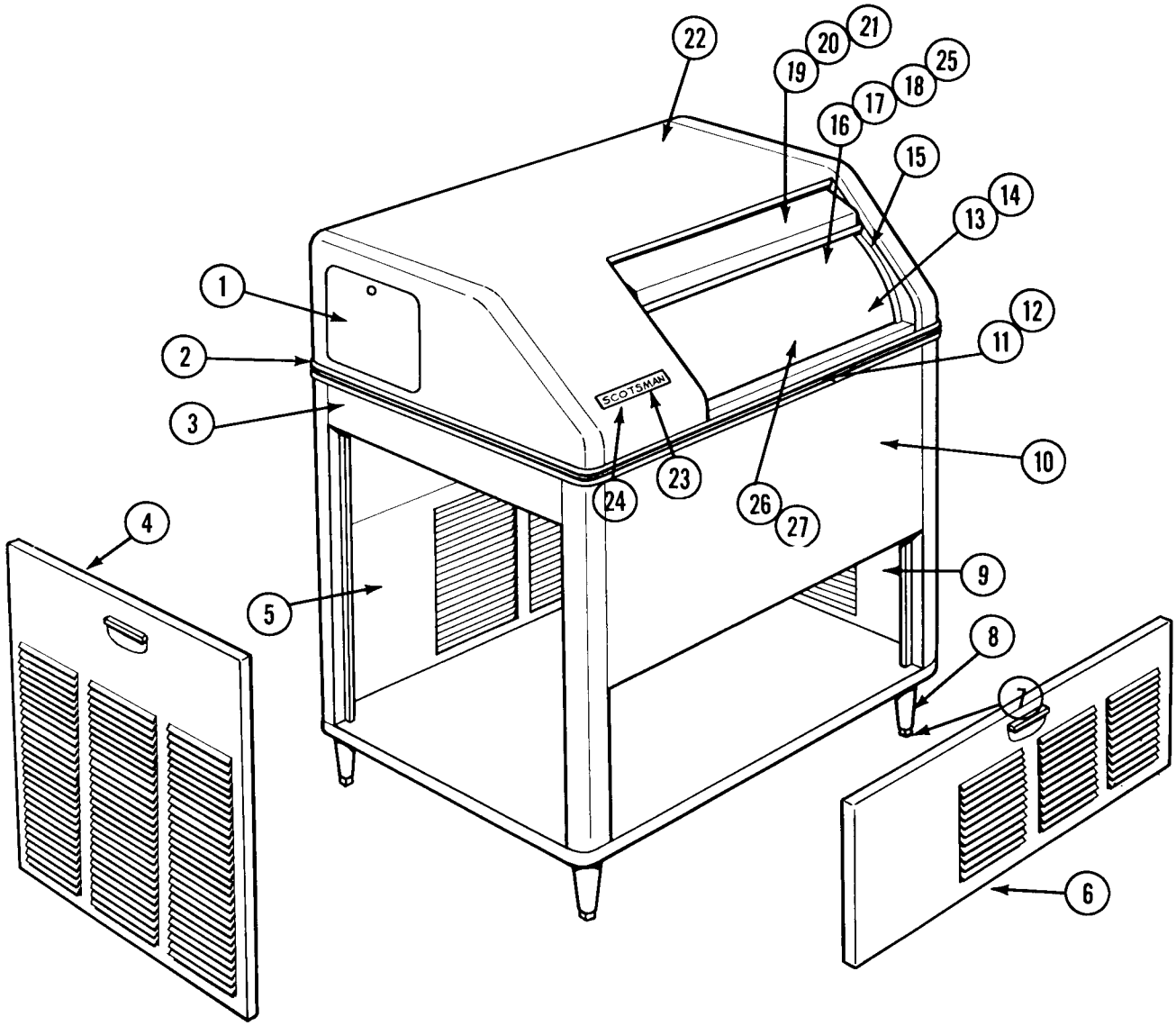

ITEM NO.	PART NO.	NAME
1.	A-6530	Top Side Door
2.	A-6509	Rear Trim Strip
3.	A-17191	Case Panel Left
4.	S-9405	Door, Left
5.	A-16563	Door, Back
6.	A-15789	Door Front
7.	8-522	Leg Levelers
8.	A-15803	Leg
9.	A-16561	Door, Right
10.	A-18131	Case Assy
11.	A-6510	Front Trim Strip
12.	15-324	Plastic trim(per ft.)
13.	A-16133	Storage Bin Assy
14.	A-16246	Insulation Layout
15.	A-16208	Track Assy
16.	A-18102	Storage Drain Assy.
17.	A-18090	Drain Fitting(Male)
18.	A-6448	Drain Strainer
19.	A-15559	Sliding Door
20.	3-640	Door Glides
21.	A-16209	Door Catch
22.	A-18158	Case Hood
23.	15-156	Emblem
24.	3-271	Speed Nut
25.	2-530	"O" Ring Drain
26.	A-15759	Bulb Cover
27.	13-590	Bulb Gasket

MM-110H CONTROL BOX ASSY

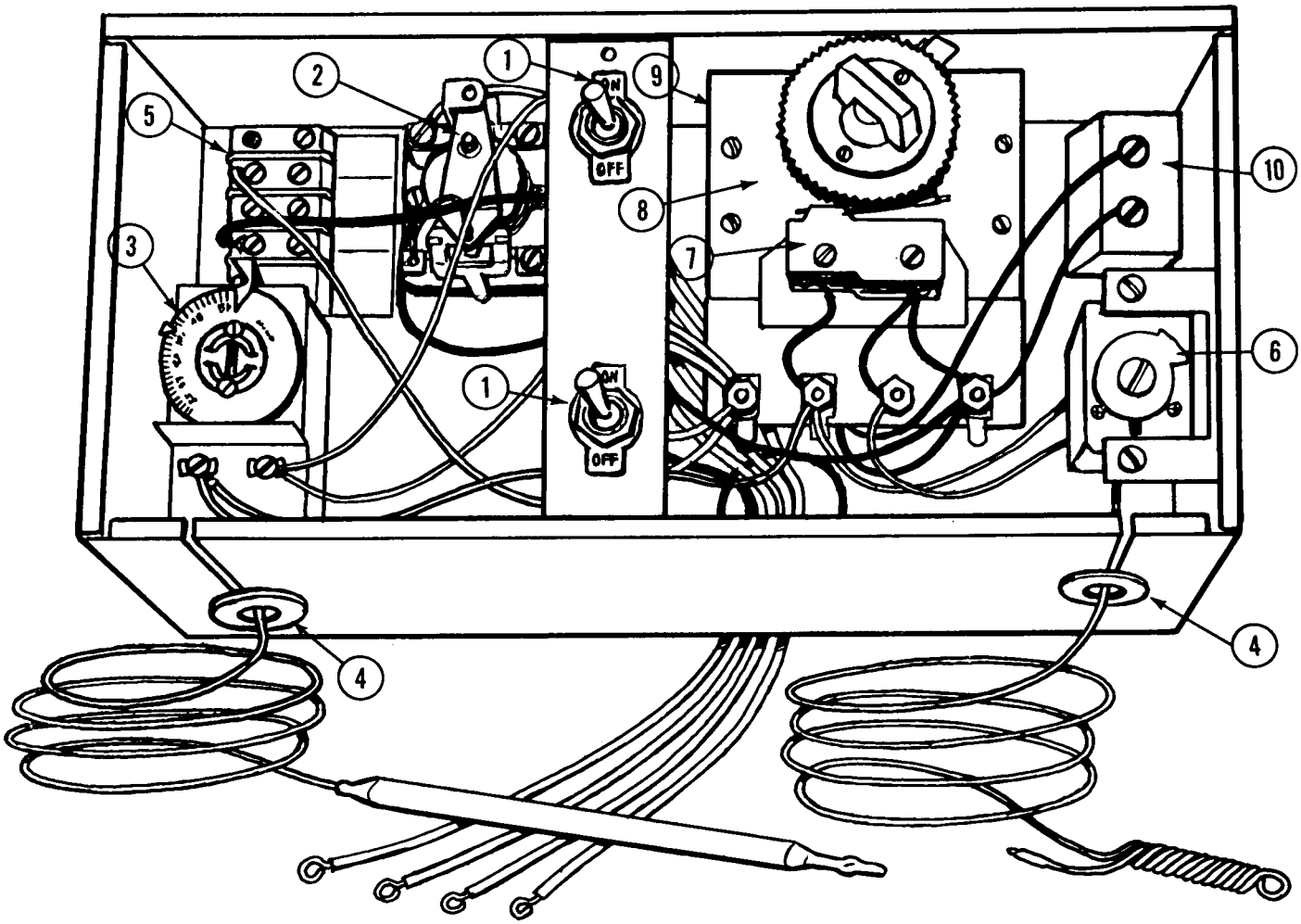

ITEM NO.	PART NO.	NAME
1.	12-426	Switches
2.	12-419	Relay
3.	11-99-1	Bin Control
4.	13-124	Grommet
5.	12-813	Terminal Block
6.	11-351	Cube Size Control
7.	12-645-20	Micro Switch only
8.	12-645-1	Complete Timer
9.	12-367	Timer Motor only
10.	11-352	High Pressure Fan Control

MM-110 H and F MODELS
3Way Water Valve

ITEM NO.	PART NO.	NAME
1.	A-17173	Value Inlet Cap
2.	13-148	Ruber Valve Seat (3 per unit)
3.	A-8139-20	All Items covered by No. 3 Are included in repair Kit)
4.	3-165	Machine Screw
5.	12-2481-1	Solenoid
6.	S-8995	Solenoid Pin
7.	2-420	Spring
8.	S-6928	Arm Support Ass'y
9.	3-396-1	Cotter Keys (2 required)
10.	S-7973	Pins (2 required)
11.	S-6932	Valve Arm
12.	S-8151	Valve Body
13.	3-88	Washer (4 required)
14.	3-61	Nut (4 required)
16.	2-557	Valve Stem Guide
17.	2-419	Compression Spring
18.	S-6924	Valve Seat Washer
19.	2-418	Spring
20.	2-424	Packing
21.	S-6931	Packing Washer
22.	3-570	Fiber Washer
	A-17174	Complete Valve

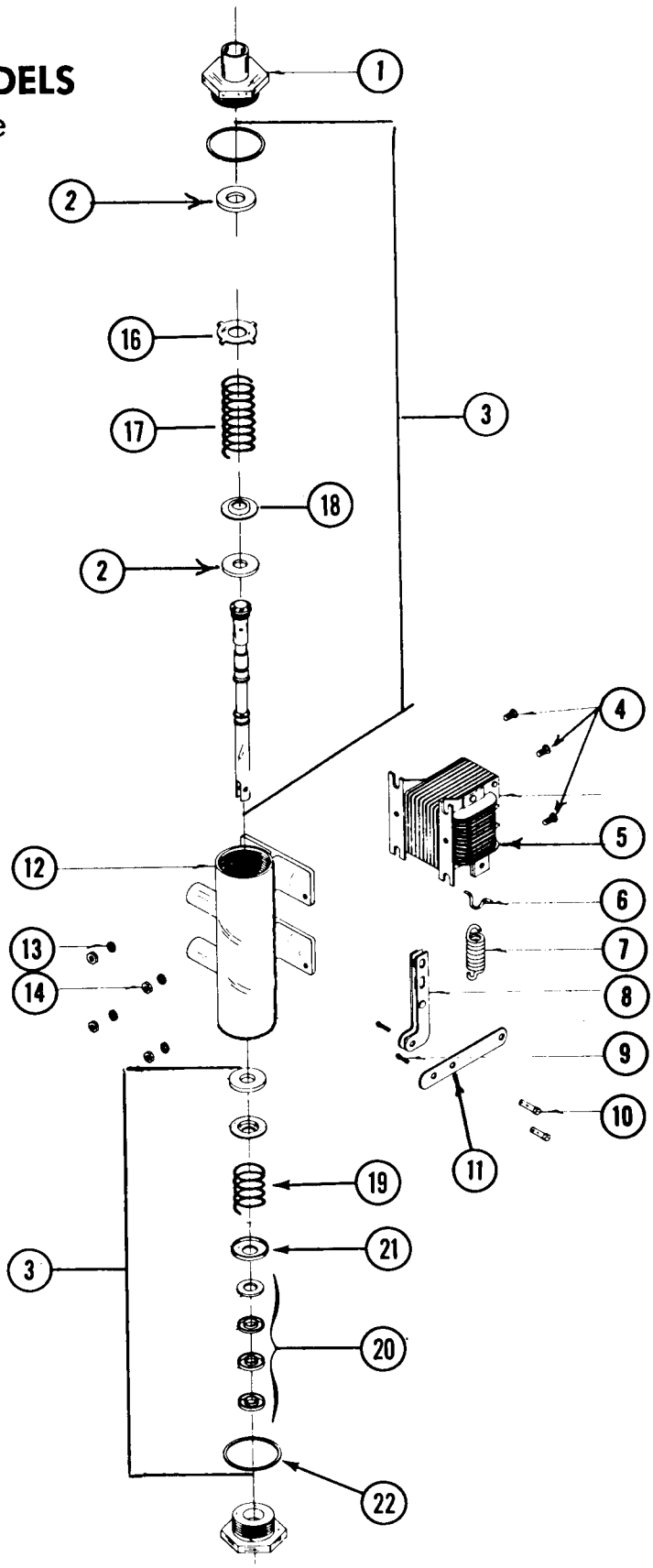

NOTE:

Complete A-8139-20 kit will be substituted on order for stem only.

CONDENSING UNIT

⅓ HP Water Cooled, Copeland thru "H" models

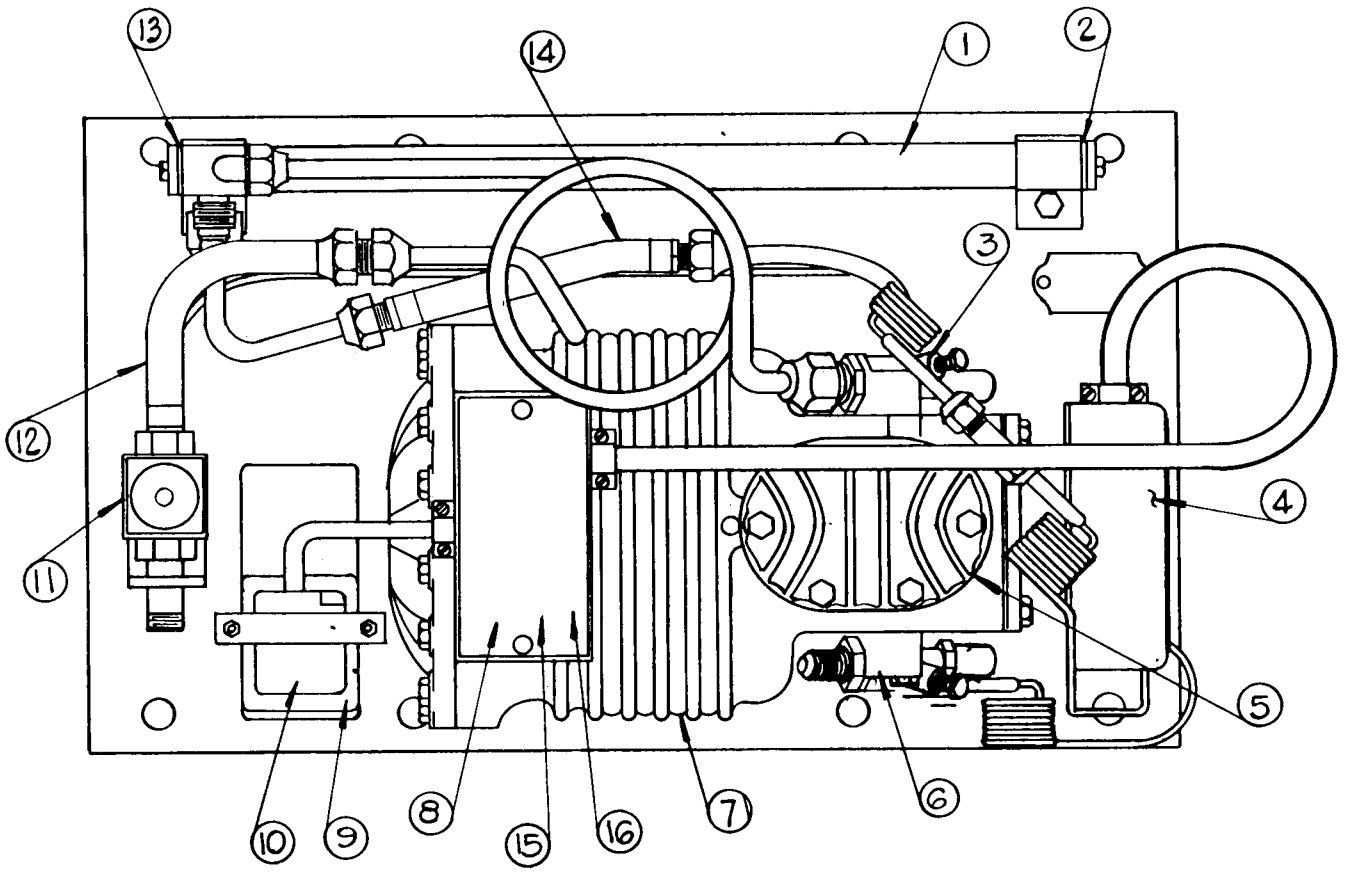

ITEM NO.	PART NO.	NAME
1.	18-259	Condenser
2.	18-262	Plain Gasket
3.	18-237	Discharge Service Valve
4.	11-286	High-Pressure Control
5.	18-222	Valve Plate & Gasket Kit Assembly(*)
6.	18-237	Suction Service Valve
7.	18-257	Motor Compressor 115/60/1 WC
8.	18-240	Klixon (overload)(*)
9.	18-1901-4	Starting Capacitor
10.	18-1903-4	Relay

(*) Not Shown

ITEM NO.	PART NO.	NAME
11.	11-198	Water Valve
12.	18-260	Compressor to Valve Water Hose
13.	18-263	Manifold Gasket
14.	18-261	Compressor to Condenser water hose
15.	18-270	Terminal Board (*)
16.	18-241	Terminal Ass'y

NOTE: Old Style

18-228	Starting Cap
18-227	Relay

NOTE:

Not available as a complete mounted Ass'y.

CONDENSING UNIT

⅓ HP Air Cooled, Copeland
Used thru "H" models

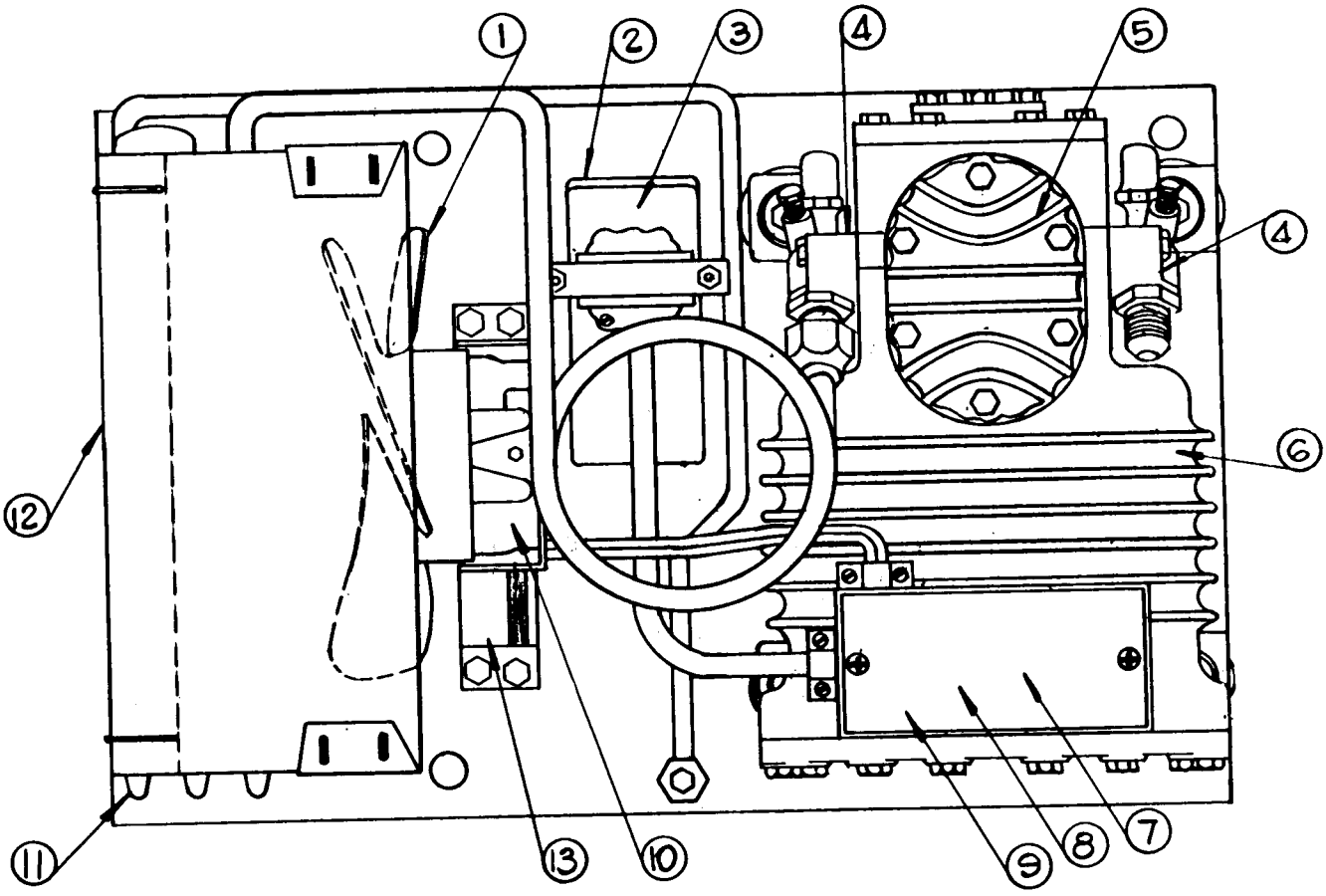

ITEM NO.	PART NO.	NAME
1.	18-231	Fan Blade
2.	18-1901-4	Starting Capacitor
3.	18-1903-4	Relay
4.	18-237	Suction & Discharge
5.	18-222	Valve Plate & Gasket Kit
6.	18-221	Motor Compressor 115/60/1 AC
7.	18-240	Overload Klixon
8.	18-241	Terminal Ass'y (*)
9.	18-270	Terminal Board (*)
10.	18-150-1	Fan Motor
11.	18-234	Condenser
12.	A-12109	Shroud
13.	18-422	Fan Motor Bracket
NOTE:	18-228	Start Cap
Old Style	18-227	Relay

NOTE:
Not available as a complete mounted ass'y.

MM-110 up to "H" models

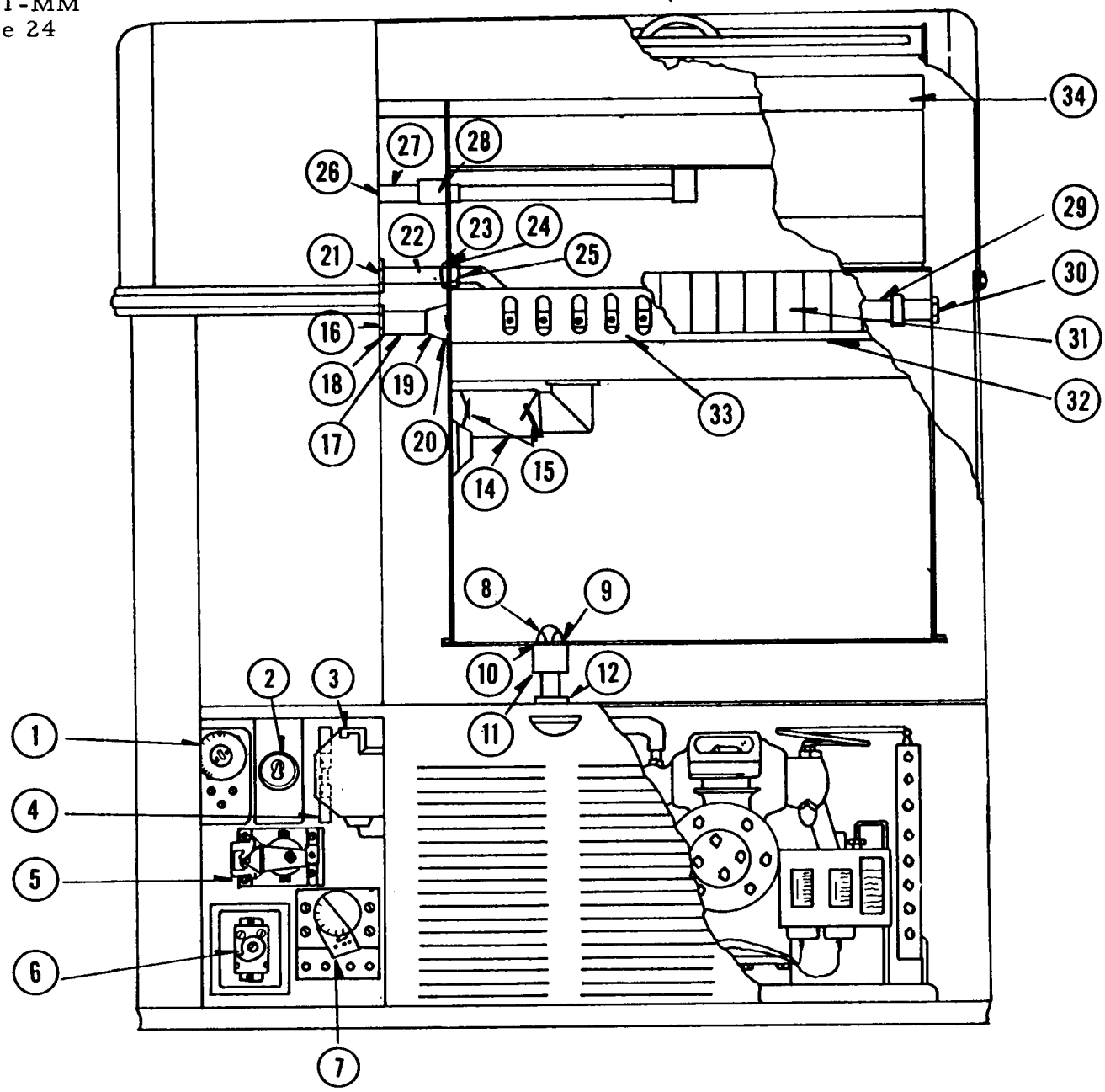

ITEM NO.	PART NO.	NAME
1.	11-99-1	Bin Control
2.	12-426	Switch
3.	11-352	Hi-Press Control
4.	12-257	Triple Receptacle
5.	12-419	Relay
6.	11-351	Cube Size Control
7.	12-645-1	Timer
8.	A-6448	Drain Strainer
9.	A-18090	Drain Fitting(Male)
10.	2-530	"O" Ring
11.	A-18102	Drain Fitting
12.	13-125	Grommet
14.	5-170-2	Hose Tygon
15.	2-537	Clamps
16.	S-7639	Driving Journal Assy
17.	S-8887	Drive Bearing Support

ITEM NO.	PART NO.	NAME
18.	13-169	Grommet
19.	3-606	Fiber Washer
20.	S-7635	Nut
21.	13-125.	Grommet
22.	A-16970	Inlet Pipe Assy
23.	A-16970	Nut
24.	2-541	"O" Ring
25.	S-9965	Nut for "O" Ring
26.	13-125	Grommet
27.	A-16437	Inlet Pipe Assy
28.	13-3	Grommet
29.	A-16432	Sprayer Tube
30.	A-16963	End Bearing Assy
31.	A-16439	**Curtain Assembly** Wing Screw (curtain)
32.	3-727	Cube Chute Assy
33.	A-16412	**Insulation Panel**
34.	2-1489	

MM-110
up to "H" Models

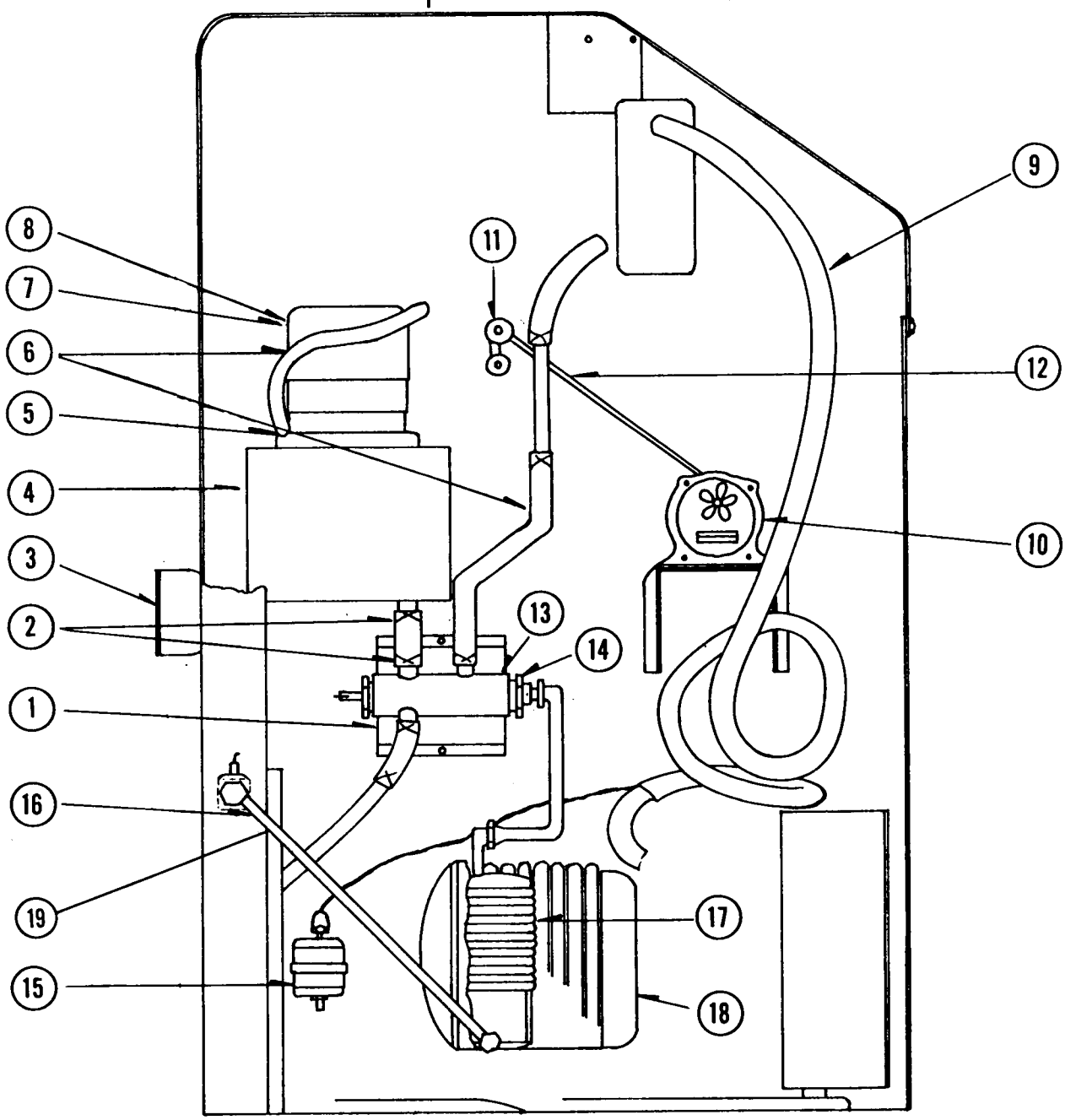

ITEM NO.	PART NO.	NAME
1.	A-17174	Valve (less Solenoid & Mounting
2.	2-536	Hose Clamps
3.	S-8417	Outlet Box
4.	A-8515	Sump Tank with Cover
5.	3-552	Wing Nuts
6.	5-179	Tygon Tubing
7.	12-418-1	Sump Pump
8.	12-418-22	Sump Pump Motor only
9.	A-16415	Freezer & Suction line Assy.

ITEM NO.	PART NO.	NAME
10.	12-1346-1	Drive Motor
11.	A-6726	Linkage Assy Complete
12.	S-7132	Linkage Rod
13.	12-248-1	Solenoid
14.	A-8139-20	Valve Repair Kit
15.	2-350	Drier
16.	12-621E-1	Solenoid
17.	A-17141	Condensor Tank Assy
18.	18-221	Motor Compr.
19.	12-621-31	Flow Control only

MM-110 CASE AND HOOD ASSY

up to "H" Models

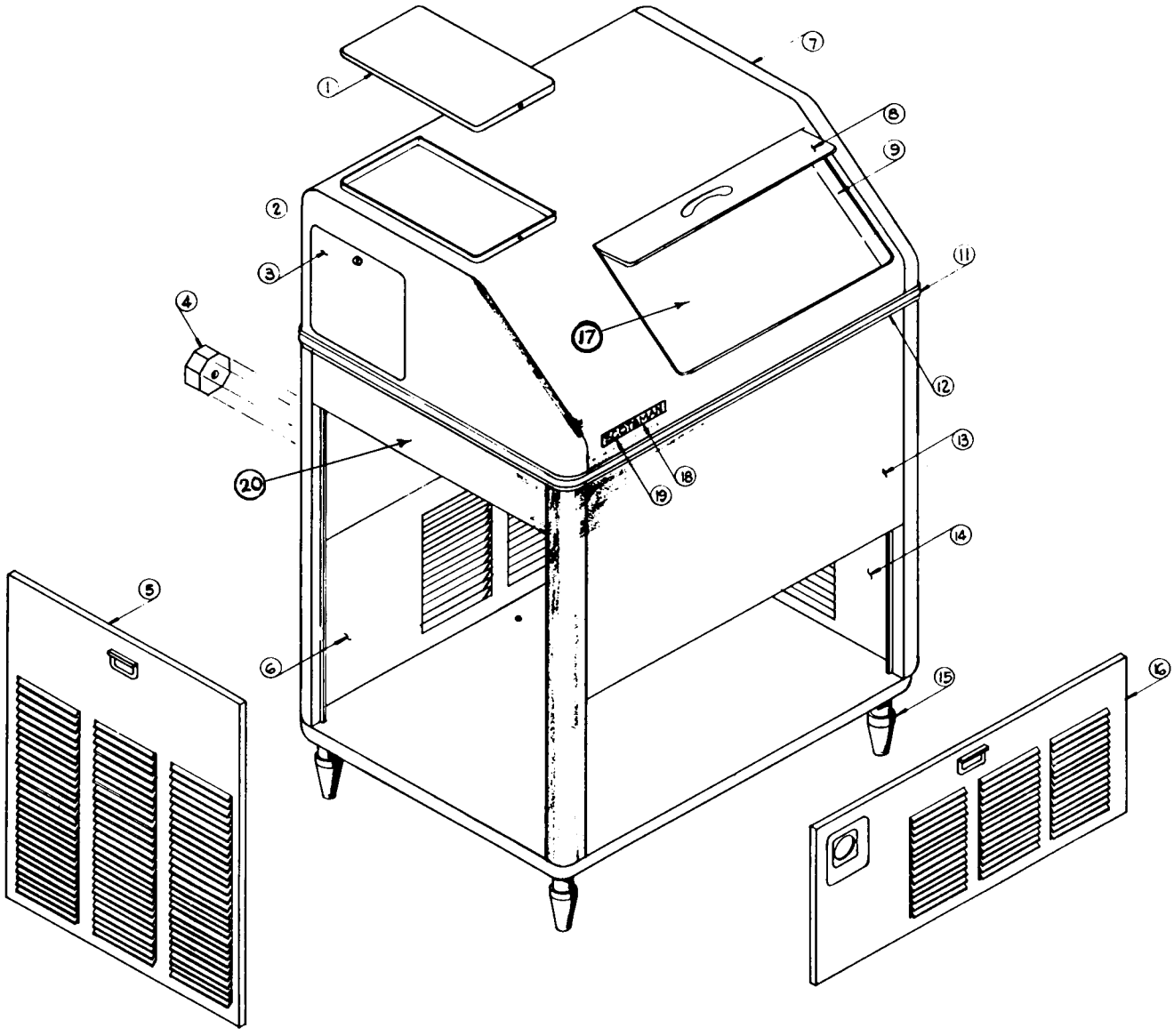

ITEM NO.	PART NO.	NAME
1.	A-7714	Top Hood Panel
2.	A-6509	Moulding Strip Rear*
3.	A-6530	Top Side Door Ass 'y
4.	S-8417	Junction Box and Cover
5.	S-9405	Left Side Door Assembly
6.	A-6514	Back Door Ass'y
7.	A-17170	Hood Ass'y
8.	S-6237	Sliding Door
9.	S-7710	Door Slide Ass'y Moulding Strip
11.	A-6510	Front
12.	15-324	Plastic Insert
13.	A-16421	Case Assembly
14.	S-7165	Right Side Door Assembly
15.	A-12405-1	Leg(4)
16.	A-9716	Front Door Ass'y
17.	A-16423	Storage & Reservoir Assembly
18.	15-156	Emblem
19.	3-271	Speed Nut

(*) Not Shown

PART NAME: Three-way water valve.

NUMBER: A-17174

SETTING: None. Factory set.

REPAIRABLE: Yes. Order A-8139-20 valve repair kit.

MAINTENANCE: Valve and entire unit should be cleaned with ice machine cleaner every six months. In many localities heavy scale accumulation will lodge in valve and hold rubber seats open. This will either let warm water seep into sump freezer supply and cause long freezing cycle or else it will let sump freezer supply seep down drain and cause shortage of cube supply water. This results in short cycles, partial cubes and cloudy cubes. Manually flushing valve will also help in many cases.

PART NAME: Agitator Drive Motor Merkle Korff

NUMBER: 12-1346-1

FUNCTION: This motor is used to drive the linkage mechanism which in turn drives the oscillating jet spray tubes. This provides a constant spray movement to all the inverted cube molds and by so doing also aerates the water producing clear, solid Scotsman cubes.

SETTING: No settings on motor, motor mount is slotted allowing adjust to correct jet spray arm travel.

REPAIRABLE: Yes- to some extent. Not recommended although front bearings and windings could possibly be replaced by electric motor shop. Normally replace motors.

MAINTENANCE: Oil every six months or less as use indicates. Use SAE 20 oil. There are two wick oil cups on the motor and a gear case slotted screw which has to be removed to add or change oil in gear case proper. Drive linkage should be in spected to insure free movement with no bindings or drag on drive motor.

PART NAME: Timer

NUMBER: 12-645-1

FUNCTION: Heart of the cyclematic control system is the cube size control Part No. 11-351 and the time clock it actuates. All electrical components are connected to the time clock terminal board and are shunted by means of a double contact point arrangement to either the freezing cycle or harvest cycle. Contact points are in turn actuated by two cams that are directly connected to the electric timer clock motor. Timer has 12-minute cycle, ten minutes on freezing cycle after being cut on by cube size control and two minutes on defrost cycle. Time clock face has numerals to 7 on half the face. Each numeral represents a minute period. Face also has a lever beneath it which can be moved to lengthen or shorten defrost period.

SETTING: Normal settings for defrost is on No. 2 which is two minutes.

FUNCTIONAL PARTS AND MAINTENANCE

REPAIRABLE: Yes. Micro-switch only, Part No. 12-645-20, are replaceable as well as timer clock motor only, Part No. 12-367.

MAINTENANCE: Check all electrical connections, blow contact points free of dust, dirt, etc.

PART NAME: Cube size control.

NUMBER: 11-351

FUNCTION: Evaporator temperature sensing control closes on temperature decrease, opens on temperature rise. Control determines length of freezing cycle and by the same token, the cube size. A lower setting on control will produce larger cubes, a higher setting, smaller cubes. This control actuates time clock motor, Part No. 12-645-1 which takes over balance of freezing cycle and also defrost period.

SETTING: Factory set -- turn right for increased cube size. Turn left for decreased cube size.

REPAIRABLE: No. Replace when inoperative.

MAINTENANCE: Check electrical connections.

PART NAME: Solenoid Soreng

NUMBER: 12-248-1

FUNCTION: Solenoid is mounted directly on water valve body. Since present continuous duty solenoid does not have a built-in stop, care should be taken to see that the plunger cannot leave the coil when installed on earlier model machines. Adequate stops are present in the housing of the solenoid but may require bending or adjusting. An electrically operated solenoid which is used to open and close the water valve through mechanical linkage. Solenoid is a continuous duty type.

SETTING: Solenoid itself requires no adjustment, however, linkage should be adjusted so that solenoid can make positive contact when energized and core will leave field when de-energized.

REPAIRABLE: No. Replace when inoperative.

MAINTENANCE: Solenoid proper requires no maintenance, but care should be exercised to insure proper voltage to coil to avert burn-outs. Mechanical linkage can be oiled and adjusted to prevent drag on solenoid. Many solenoid burn-outs are caused indirectly such as a sticking time clock which will keep solenoid energized for long periods of time.

PART NAME: Sump Pump Graymills-Hartell

NUMBER: 12-418-1

FUNCTION: Recirculating pump used to pump supply water in sump tank to jet tubes during freezing cycle.

FUNCTIONAL PARTS AND MAINTENANCE

SETTING: Factory set.

REPAIRABLE: Yes. Oilite sleeve type bearings may be replaced, motors rewound, impeller blades replaced. Gray-mills pumps have oilers. Hartell ball bearings pumps do not.

MAINTENANCE: Motors require oiling every three months on the sleeve bearings. Use SAE 20 oil in the oiling cups provided. Many pumps returned to the factory as defective are merely in need of oil and are re-operated by oiling the sleeve bearings.

Cleaning a stuck motor with carbon tetrachloride or equivalent will re-activate the majority of the motors returned for this reason. Sleeve bearings may be flushed clean, and re-oiled with SAE 20 oil and perform as new.

PART NAME: High pressure control.

NUMBER: 11-352

FUNCTION: Controls head pressure at low ambients. Will cut out fan motor upon drop in head pressure.

SETTING: Factory set.

REPAIRABLE: No. Replace.

MAINTENANCE: Check electrical connections for loose wires.

Refrigerant	R-12
Refrigerant Charge	21 ounces R-12
Refrigerant Control	Capillary Tube
Cubes per harvest	104

FUNCTIONAL PARTS AND MAINTENANCE

PART NAME:	Relay	Potter & Brumfield	Type PR5AX
NUMBER:	12-419		
FUNCTION:	Relay is used as a by-pass on the bin thermostat when it tries to cut unit off on a full bin of cubes during a freezing cycle. This insures full cubes every time a harvest occurs and prevents short cycling on bin thermostat.		
SETTING:	Factory set.		
REPAIRABLE:	No. Replace when inoperative.		
MAINTENANCE:	Check electrical connections and blow points free of lint or dirt.		
PART NAME:	Temperature Control Storage Bin	White Rodgers	
NUMBER:	11-99-1		
FUNCTION:	To automatically cut machine off when ice level in storage bin reaches thermobulb. Automatically starts machine when ice level in bin falls below bulb location.		
SETTING:	These controls have adjustable differential. Setting on range dial should be 35° out, 39° in.		
REPAIRABLE:	No. Replace when inoperative. If out of warranty it can be sent in through your local refrigeration supply dealers and repaired or replaced for a small percentage of original cost.		
MAINTENANCE:	Remove cover, check points for corresion or arcing every six months. Blow control free of bugs, dirt, etc. Check capillary for cracks or worn spots due to vibration. Hold a small handful of ice on thermostat bulb to check operation of control. Tighten electrical connections.		
PART NAME:	Inlet Water Solenoid/Flow Control		
NUMBER:	12-621E-1		
FUNCTION:	During freezing cycle this valve is closed, keeps water from entering heat exchanger tank and also from leaking out of tank. During harvest or defrost cycle this valve opens and allows inlet water to pass to flow control orfice and thence to push warm water out of heat exchanger tank through 3-way water valve into back of cups molds, performing the defrost.		
SETTING:	Factory set.		
REPAIRABLE:	Yes		
MAINTENANCE:	Flush control each six months.		

ALL STEPS LISTED BELOW SHOULD ONLY BE STARTED WHEN WATER AND SUPPLY ARE OFF TO PREVENT ACCIDENTS.

To remove cabinet top or Hood.

1. Remove two back end screws in rear moulding strip
2. Pull out black insert tape concealing screws.
3. Remove balance of screws in moulding strips.
4. Lift hood straight up.

To remove Sump Pump.

1. Remove hood left end panel.
2. Remove hose clamp on pump discharge line.
3. Loosen two brass wing nuts holding pump in position.
4. Pull out plug-in type cord which leads to control box.
5. Lift pump straight up and out through left side opening.

To remove Agitator Motor.

1. Disconnect plug-in at the control box.
2. Loosen the Allen set screw on driver crank arm and remove the drive arm.
3. Remove the four hold-down screws and remove the motor.

To remove the jet tube assembly.

1. Remove the plastic curtain assembly.
2. Remove the cube rack.
3. Lift the right end of the jet tube straight up and slide the other end out of the driving slot.

To replace cube size thermostat.

1. Lift out sliding storage bin door.
2. Lift up and out on plastic cover over cube section at top of bin area.
3. Remove plastic strip lying over left cup section. This will expose copper tube well soldered to top of refrigerant coil.
4. Pig tail end of cube size thermostat is held in well by a light friction fit. Push pigtail out of well.
5. Tie a strong "Fish Cord" on end of pigtail to help in replacing new thermostat.
6. Remove hood top left service door, both bottom front and left side service doors.
7. Remove electrical control box cover.
8. Remove two screws holding (Ranco) control body from mounting bracket - Pull free from control box.
9. With new control in hand, pull 3 electric leads off old control and connect to new control on same terminals.
10. Pull control capillary and body towards outside left cabinet. At the same time guide pigtail end in bin through storage bin wall retainer opening.
11. After pigtail end clears retainer opening, control is free.
12. Tie "Fish Cord" from old control on new and pull pigtail through opening in reverse procedure.
13. Reassemble balance of steps reverse order.

SERVICE - COMPLETE UNIT

To remove solenoid-operated three way water valve.

1. Remove left side service panel.
2. Drain all water from unit, disconnect power and water.
3. Remove three clamps holding tygon tubing to valve.
4. Loosen flare connection at right end of valve.
5. Remove two hex head cap screws holding water valve housing to cabinet and drop straight down. Lead-in wire to solenoid has plug-in terminal.

To replace storage bin door

1. Lift door up and slide back approximately six inches.
2. Lift up on underside of door and pull straight out and toward you.
3. Replace door in reverse procedure.

To replace motor compressor valve plate

1. Install compound gauge in suction service valve port and close suction service valve by turning valve stem all the way in (Front Seated.)
2. Operate motor compressor until gauge reading reaches zero. Turn off unit.
3. Front seat discharge service valve.
4. Loosen all head bolts and tap head lightly with rubber-faced or plastic hammer to break loose.
5. Remove head, defective valve plate and any gasket material that may have stuck to head or compressor body.
6. Install new valve plate with all new gaskets as provided, tightening each head bolt a little at a time until all are snug.
7. Remove port gauge plug from discharge valve and crack open suction side letting gas purge off trapped air from head. Install hi-side gauge in this port, back up both service valve stems and check around valve plate for refrigerant leaks.
8. Start unit, noting head and back pressures. If normal, let run until compressor gets warm. Tighten all head bolts once more, and again check for leaks.

To replace the compressor

1. Front seat both suction service valve and discharge service valve on the compressor.
2. Disconnect the wiring from the compressor.
3. Remove the bolts holding the service valve to the motor compressor body.
4. Remove the compressor hold-down nuts and lift the compressor out of the unit.
5. Reverse steps 1 through 4 in replacing the compressor.
6. Check the compressor for oil before connecting the oil lines. Should be 2 inches down from the top of the oil plug hole.
7. Remove the gauge port plug from the discharge service valve. Crack the suction service valve slightly, allowing some gas to escape out the gauge port of the discharge valve. When you have thoroughly purged the compressor, replace the plug and open all valves. It may be necessary to charge the unit because some of the gas was lost when the defective compressor was removed. Check and charge is necessary.

SERVICE ANALYSIS

SYMPTON	POSSIBLE CAUSE	SUGGESTED CORRECTION
Shortage of water	Water spraying out through curtains	Replace broken curtains if any broken. Adjust travel of jet tube if spraying too far forward.
	Three-Way water valve leaking	Check the valve for foreign matter. Check valve seats and replace if necessary.
	Water entering hot water tank too slowly	Check pressure at source-20# required. Dirt in solenoid and flow control- blow out.
		Partial restrictions in water strainer. Clean Strainer.
Irregular size cubes and some cloudy	Some jets plugged	Clean jets.
	Shortage of water	See Shortage of Water
	Cube Chute in path of spray	Reposition cube chute.
	Unit not level	Water overflowing air vent holes on low side burning cubes. Level as required.
Cubes too large	Cube size control set low	Raise setting on cube size control.
Decreased ice capacity	Inefficient compressor	Replace .
	Leaky water valve	Replace or repair.
	High head pressure	Dirty condenser. Clean. Bad fan motor. Replace. Non-condensable gas in the system: purge the system. Too hot a location with poor circulation:
		relocate the unit, or provide for ventilation by cutting openings; Overcharge of refrigerant. Correct the charge.
	Partially restricted cap tube	Purge & replace charge and drier
Hole washed inside cube	Water over the top of the cube cups during harvest	Level unit.

SERVICE ANALYSIS

SYMPTOM	POSSIBLE CAUSE	SUGGESTED CORRECTION
Unit will not run.	Blown fuse	Replace fuse & check for cause of blown fuse.
	Bin thermostat set too high	Adjust thermostat. Set between 35° out to 39 degrees in.
	Switch in Off position	Turn switch to On position.
	Inoperative master switch	Replace switch
	Timer contacts open	Replace timer contacts.
Compresser cycles intermittently	Low voltage	Check circuit for overloading. Check voltage at the supply to the building. If low, contact the power company.
	Dirty condenser	Clean with vacuum cleaner, air or stiff brush. (Do NOT use wire brush.)
	Air circulation blocked	Allow sufficient air space all around unit.
	Inoperative condenser fan motor	Check to see if defective. If defective, replace.
	Non-condensable gases in system	Purge the system.
Cubes too small	Cube size control set too high	Lower the setting. Turn towards colder.
	Partially restricted capillary	Blow charge, add new gas & drier.
	Moisture in system	Replace the dryer.
	Shortage of water	See remedies for shortage of water.
	Shortage of refrigerant	Check for leaks and recharge.
Cloudy cubes	Shortage of water	See remedies for shortage of water.
	Dirty water supply	Use water softener or water filter.
	Restricted drain on pump	Clean pump strainer.
	Accumulated impurities	Use SCOTSMAN Ice Machine Cleaner.
Poor harvests	Too short defrost time	Check and adjust harvest cycle. Timer should be set between 2 or 2 1/2.
	Restriction in incoming water	Check water feed line strainer and flow reducing valve. To give greater water flow increasing defrost time.
	Insufficient quantity of hot water	Cold ambient - must be 50° minimum faulty fan control on aircooled models.
	Solenoid valve not opening the water valve	Solenoid binding or burned out. Replace.
	Air vent holes in upper cube cups plugged	Clean out holes.

THE FOLLOWING MAINTENANCE SHOULD BE COMPLETED TWO (2) TIMES PER YEAR ON ALL SCOTSMAN SUPER CUBERS.

1. Clean air-cooled condenser. This is to be done frequently with the machine shut off.
2. Clean hot water tank and evaporator, sump tank and screen, using Scotsman Ice Machine Cleaner or equivalent.
3. Remove jet tube and manually clean jets by unscrewing jets.
4. Check curtain assembly.
5. Tighten all electrical connections.
6. Tighten all bolts.
7. Check water supply. Minimum pressure of 20# is required. Clean Water strainer.
8. Oil jet tubes drive motor three (3) places. Use SAE 20 oil - 2 oil cups, 1 crank case screw covered opening.
9. Oil sump pump motor. Necessary to remove pump on some models. Use SAE 20 oil. Two 90° oilers are capped with rubber protectors.

CLEANING INSTRUCTIONS FOR SCOTSMAN ICE MACHINES MODELS MM110H

1. Remove front access door.
2. Locate control box with time clock knob protruding thru cover.
3. Put unit through a harvest cycle manually. This may be done by turning time clock knob clockwise until a loud snap is heard.
4. Let unit finish harvest cycle and start into freezing cycle. This will be approzimately 5 minutes after the loud snap in Step # 3 is heard. At this time turn the compressor switch off, off, the lower of the two switches in the control box.
5. Locate the sump reservoir which is in the storage bin area and directly behind the ice discharge chute. This discharge chute is covered by a series of white plastic curtains which are free to swing out into the storage bin. Pour 4 ounces (half bottle) of "Scotsman Ice Cleaner" into platen.
6. Locate insulation panel which is directly above platen. Lift insulation panel, pour the remaining 4 ounces of "Scotsman Ice Machine Cleaner" in platen.
7. Let unit operate normally for 10 - 15 minutes into the freezing cycle. No ice will be made because the motor compressor is not in operation
8. At the end of this time put the unit through 2 or 3 harvest cycles manually to allow fresh make up water to clean out remaining solution. Each time waiting approximately 5 minutes after the loud snap until the next harvest cycle is done manually.
9. Turn the compressor switch back on.
10. Check each new batch of cubes until they are clear and until acid taste has been removed from cubes.
11. Put hot water in storage bin to melt the cubes and thereby clean the drains with the same solution that has just cleaned the unit.
12. Use a damp cloth to wipe off curtains and inside of storage bin.
13. Replace all access doors .
14. Unit is now ready for continued automatic operation.

PARTS LIST - MM-110

1. CABINET PARTS

Case Hood Assembly	A-18158
Sliding Door Glides	3-640
Hood Side Door	A-6530
Door Slide Track	A-16208
Sliding Door	A-15559
Door Catch	A-16209
Emblem	15-156
Moulding Strip - Rear	A-6509
Moulding Strip - Front	A-6510
Cabinet Front Service Door	A-15789
Cabinet Right Side Service Door	A-16561
Cabinet Rear Service Door	A-16563
Cabinet Left Side Service Door	S-9405

2. CONTROL BOX - ELECTRICAL COMPONENTS

Timer Assembly	12-645-1
Timer Micro-Switch	12-645-20
Head Pressure Control	11-352
Cube Size Control	11-351
On-Off Switch	12-426
Bin Thermostat	11-99-1
Complete Cube Relay	12-419

3. CONDENSING UNITS AND REFIRGERANT CIRCUIT

	AIR-COOLED	WATER-COOLED
Freezer and HX Ass'y Complete	A-16415-2	Same
Suction HX and Accumulator Line	A-6123	Same
Drier	2-350	Same
Motor Compressor 115/60/1	18-221	18-257
Valve Plate and Gasket Kit	18-222	Same
Cylinder Head	18-225	Same
Relay	18-227	18-1903-4
Starting Capacitor	18-228	18-1901-4
Fan Motor	18-150-1	
Fan Blade	18-231	
Condenser	18-234	18-259
Shroud for Condenser	A-12109	
Klixon Overload (for units not inherent protected)	18-240	Same
Replaceable Terminal Assembly	18-241	Same
Terminal Board	18-270	Same
Compressor to water valve hose		18-260
Compressor to condenser hose		18-261
Plain Gasket for 18-259		18-262
Manifold Gasket for 18-259		18-263
Manual re-set dual pressure control		11-286
Water Regulating Valve		11-198

4. HOT WATER TANK

Hot Water Tank Complete	A-17140

5. WATER VALVE

3 - Way Water Valve less Solenoid	A-17174
Solenoid	12-248-1
Replacement Rubber Valve Seats	13-148
Water Valve Repair Kit	A-8139-20
Solenoid Pull Spring 1 1/2 inches	2-420
Solenoid Pull Key	S-8995

6. WATER CIRCUIT

Inlet Water Strainer	16-162
Inlet Water Solenoid	12-621E-1
Sump Pump Assembly	12-418-1
Sump Pump Motor only	12-1351-2
Sump Tank Assembly, insulated	A-8515
Flow Control only	12-621-31
Sprayer Tube Assembly	A-16432
Sprayer Tube Jet only	S-6907
End Bearing, water inlet to sprayer tube A-16963	A-16963
U-cup for A-16963 End Bearing	13-168

7. DRIVE MOTOR AND LINKAGE

Drive Motor	12-1346-1
Drive Linkage assembly	A-6726
Driver Arm Assembly	A-6462
Linkage Rod	S-7132
Drive Arm Assembly	S-7128
Drive Bearing Support	S-8887
Driving Journal	S-7639

8. STORAGE BIN AND COMPONENTS

"O" Ring	2-530
Drain Fitting (Male)	A-18090
Drain, Strainer	A-6448
Valve Drain Tube (Female)	A-18102
Bin Thermostat Bulb Cover	A-15759
Bin thermostat Bulb Gasket	13-590
Cube Chute	A-16412
Curtain Assembly	A-16439
Curtain Thumb Screws	3-727

MISCELLANEOUS

Ice Scoop	2-540
Plastic Trim Insert - Per Foot	15-324

TABLE OF CONTENTS

Foreward	1
Table of Contents	2
Photograph and Ice Making Capacity	3
Specifications and Dimensions	4-5
Selecting Location:	
Location	6
Uncrating	6
Preparation for Installation	6-7
Installation	7-8
Water Supply and Drain	8
Electrical Connection and Characteristics	8
Wiring Diagrams	
Air Cooled	9
Water Cooled	10
Diagram Plumbing Connections	11
Final Check List	12
Start-up	13-14
Cycle of Operation:	
Harvest Cycle	15-16
Freezing Cycle	17-18
Service Analysis Charts	19-20
Exploded Views - Component Parts:	
Sump Pump	21
Water Valve Assembly	22
Control Box	23
Complete Unit (End View)	24
Complete Unit (Front View)	25
Case Parts	26
Condensing Unit (Air Cooled)	27
Condensing Unit (Water Cooled)	28
Service Information	
Drive Linkage	29
Spray Bar Ass'Y.	30
Functional Parts and Maintenance	31
Service Complete Unit	32
Maintenance Instructions	33
Parts List	34-35

THIS PAGE
INTENTIONALLY
LEFT BLANK

THIS PAGE
INTENTIONALLY
LEFT BLANK

SCOTSMAN

SUPER CUBER
MM-110
SERIES

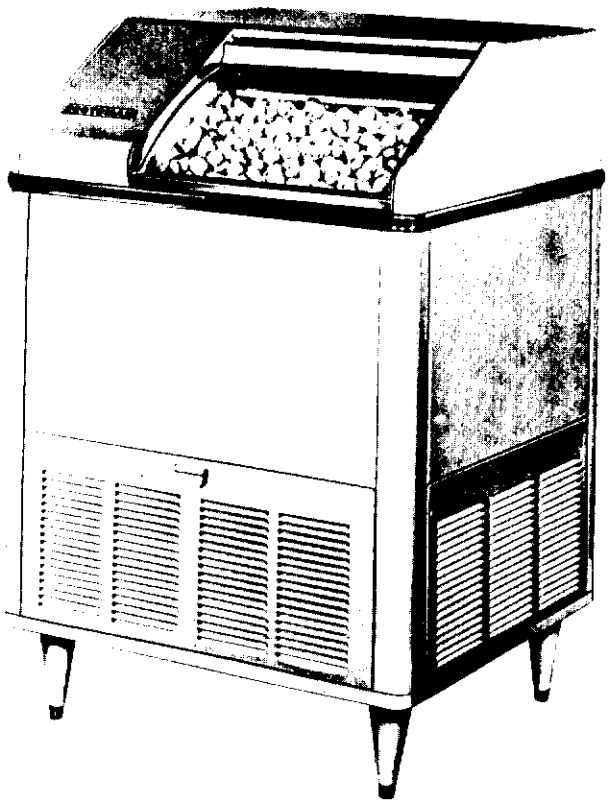

ice making capacity

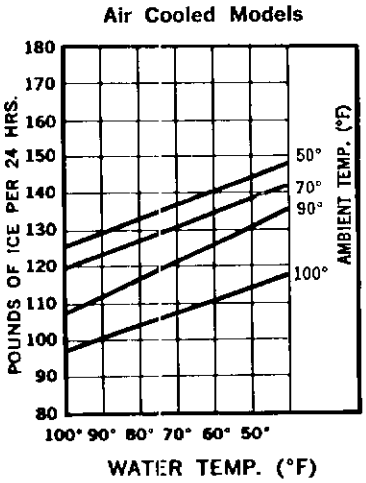

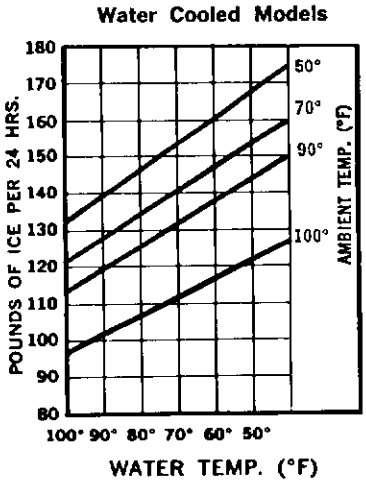

SPECIFICATIONS

SUPER CUBER MM110 **SERIES**	MM110J	MM110WJ	MM110JSS	MM110WJSS
CONDENSER, Air Cooled	X		X	
CONDENSER, Water Cooled		X		X
WATER DRAIN, Condenser - 5/8" O.D.		X		X
FINISH, Hammerloid Grey	X	X		
FINISH, Stainless Steel			X	X
SHIPPING WEIGHT	319	325	326	330

DAILY CAPACITY up to 100 lbs.
STORAGE BIN CAPACITY (Self-Contained) 50 lbs.
COMPRESSOR 1/2 H.P.
ELECTRICAL 115 V, 60 CY, 1 PH
WATER INLET, 3/8" SAE Flare
WATER DRAIN, Bin - 5/8" O.D.

STORAGE BIN, Stainless Steel
HEIGHT (with legs) - 45 1/4" to 46"
HEIGHT (without legs) - 39 1/4"
WIDTH - 34 1/8"
DEPTH - 24 1/2"

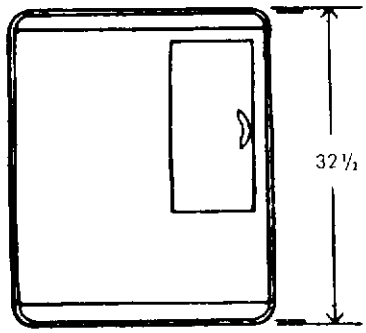

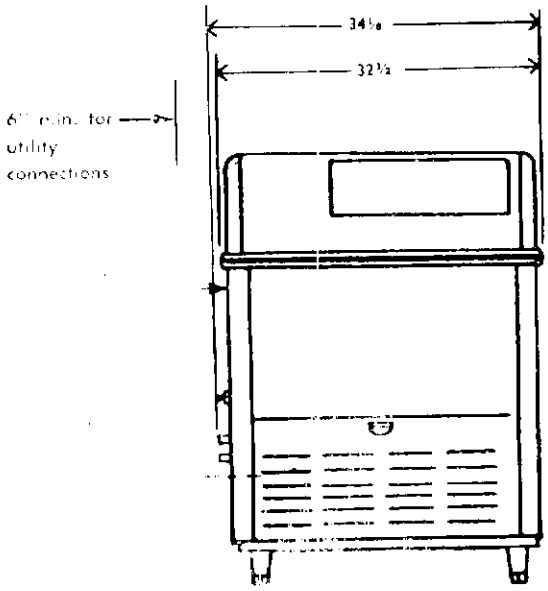

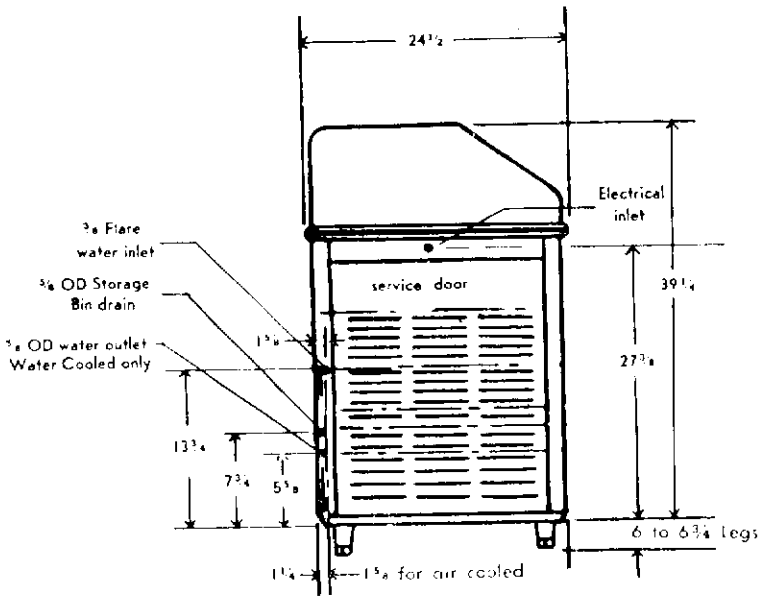

SPECIFICATIONS

	MM110J-1	MM110WJ-1
Compressor - Copeland	RSF-0050-1AA	Same
Volts & Hertz	115 v-60	115 v-60
Amperes	11.2	11.2
Fan - Wattage	7.0	None
Sump Pump Amperes	2	2
Spray Bar Motor - Wattage	35	35
Defrost - Warm Water Heated By	Hot Gas	Hot Gas
Total Power Consumption - Amperes	13	13
Refrigerant Type	Refrige-rant 12	Refrige-rant 12
Refrigerant Charge	28 ounces	28 ounces
Cubes Per Harvest	104 Mini-cubes	104 Mini-cubes
Water Consumption to Produce Ice	5 Quarts per hour	5 Quarts per hour
Water Used by the Condensing Unit		45 Gallons per hour. Average-Varies with Water Temperature

DIMENSIONS

Height with 6' Legs	46"	46"
Height-Less 6" Legs	39 1/4"	39 1/4"
Width	34 1/8"	34 1/8"
Depth	24 1/2"	24 1/2"

Weight	Shipping	Net
MM110S	316	265
MM110WJ	322	271
MM110JSS	322	271
MM110WJSS	326	275

INSTALLATION

UNCRATING OF MACHINE

1. The complete machine comes in one crate. After the crate is removed, inspect for concealed damage. Remove the bottom skid by removing all bolts. Then cut all wires holding support packing from refrigerant line. Be sure the compressor is snug on rubber mounts. Then check all refrigerant lines for rubbing or touching other surfaces. Also check for possible transportation damage.

2. Remove all service doors and panels.

3. Remove leg package in compartment base and install 4 legs in unit base sockets. Level unit with adjustable legs.

4. Remove protective shipping tape from bin door, freezer curtain.

5. Remove water strainer from storage package for installation in water supply line feeding unit.

6. Open electrical control box and prepare for hook up, use knock outs, cord connectors, etc. Then check unit name plate voltage against building source voltage and make sure they correspond. Caution - improper voltage supplied to units will void your warranty protection.

7. Make sure suction service valve on the condensing unit is fully back seated. Replace the valve cap after checking. All models are shipped with valve back seated. Not necessary on units equipped with Schrader Valves.

8. Make sure that the flow of air is not impeded in any way over condenser on air-cooled models. Keep condenser clean. (Check and clean the condenser monthly.)

9. Operating room temperatures are minimum 50° F. and maximum 100° F.

10. Have the installation and warranty cards been filled out sent to the factory to insure warranty protection?

LOCATION OF THE ICE CUBE MACHINE

UNDER BAR INSTALLATIONS - Locate, if possible, so left end panel is accessible. Locate unit so proper circulation can be attained around the unit and behind it at least four inches. Provide plumbing and electrical connections so the unit can be moved out where the entire top hood can be removed and the unit can still be operated.

KITCHEN INSTALLATION - As a rule, the kitchen is not the most practical place to install an air-cooled condensing unit, as grease is almost always present and makes cleaning of the condensing unit difficult. Do not locate near range or steam table or other heating devices that may be used in the kitchen.

STOREROOM INSTALLATIONS - Be sure storeroom is of adequate size and properly ventilated. A small, poorly ventilated room will greatly impair the efficiency of the unit. The storeroom must be kept above 50 degrees in the winter months.

BASEMENT INSTALLATIONS - Locate machine in the coolest place. Locate the machine in a dry place. Keep away from furnace and boiler room. Keep away from service chutes and runways, also coal or other dust of any kind. If the machine is set over a floor drain, block the machine up enough to eliminate any possible damage to the machine.

LOCATE THE MACHINE SO IT CAN BE SERVICED WHEN NECESAARY. ALLOW AT LEAST FOUR INCHES OF SPACE AROUND THE MACHINE FOR CIRCULATING AIR.

IMPORTANT: ADJUST LEVELER LEGS. MACHINE MUST BE LEVEL.

INSTALLATION

WATER SUPPLY AND DRAIN CONNECTIONS

WATER SUPPLY

The recommended water supply line is 3/8" OD copper tubing. Connect to a cold water supply line with regular plumbing fittings with a shut-off valve installed in an accessible place between supply line and machine. The water strainer supplied with the unit should be mounted with clean-out plug down. Locate the strainer next to the machine and the arrow in the direction of the flow, as per Page 11. A3/8" male flare connection on left corner post provides easy access.

The water supply should be installed to conform with local code.

DRAIN

The recommended drain; is 5/8" OD copper tubing. Sweat to drain connection (See Page 11). Must be run to open or trapped drain. If drain is a long run, allow a 1/4" pitch per foot. Drain must be installed to conform with local code.

ELECTRICAL CONNECTIONS AND CHARACTERISTICS

MM110	110-115 V, 60 Cycle	Single Phase, 13 Amps.

All external wiring should conform with National and local code requirements. Check the voltage on the line before connecting the machine. Model MM110 requires 110-115 volts, 60 cycle, single phase.

The MM110 should be wired to a 20 Amp. circuit. Be certain that the Super Cubers are on their own circuit and individually fused. The maximum allowable voltage variation should not exceed 10% of the nameplate rating even under starting conditions. Low voltage can cause erratic operation, and may be responsible for serious damage to the overload switches and motor windings.

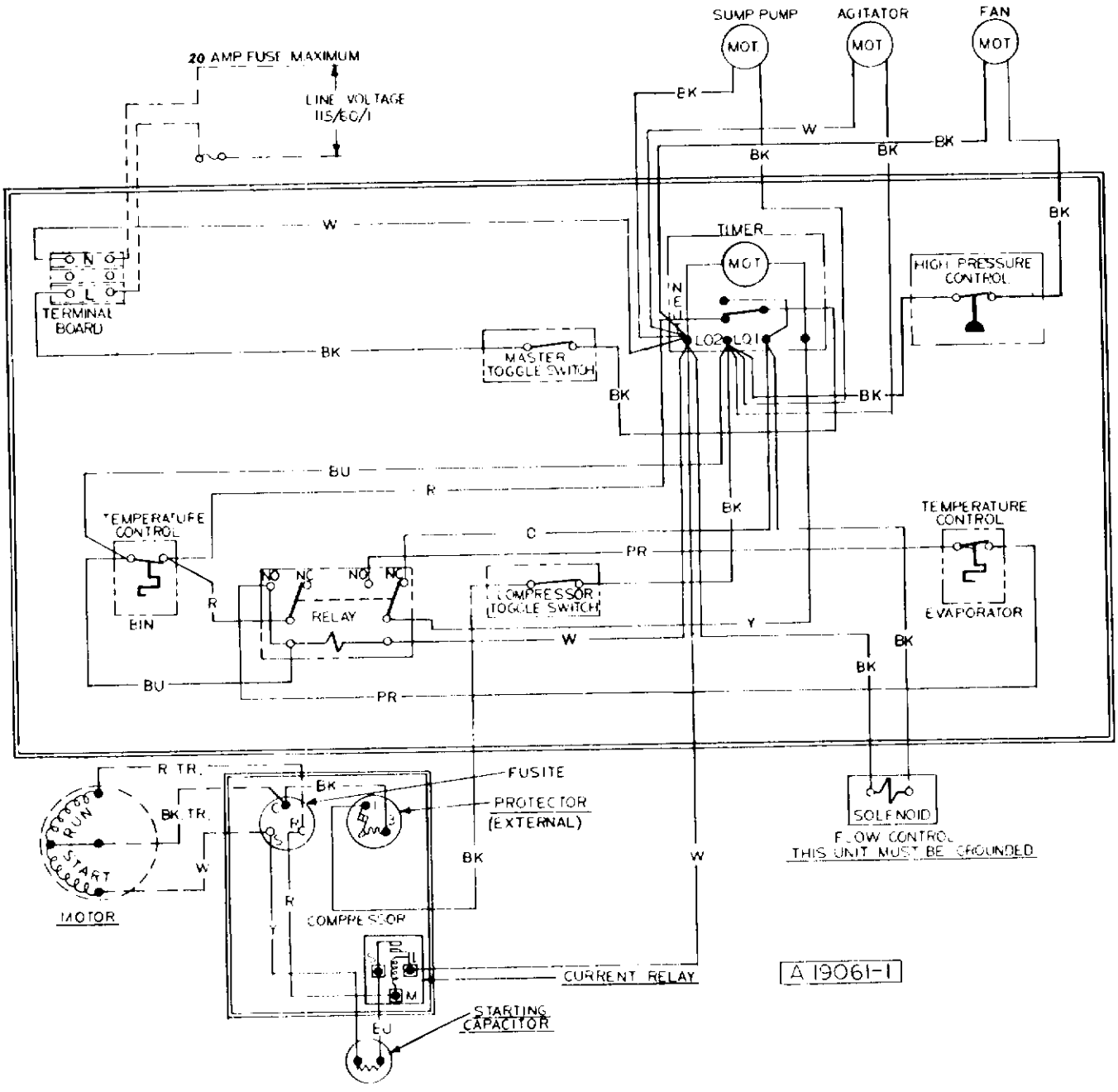

Title: Wiring Diagram
MM110J-1
115-60-1
Air Cooled

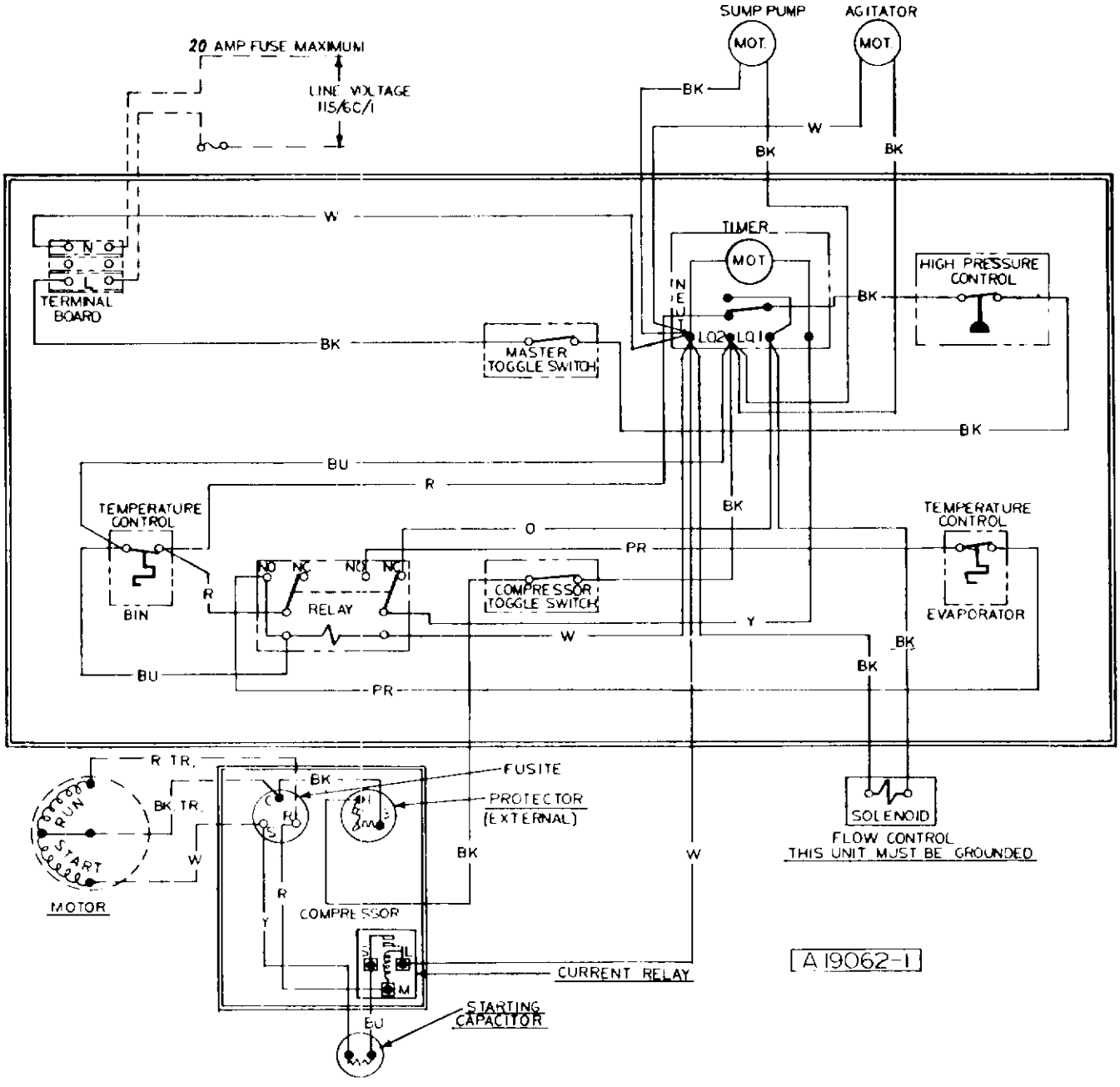

Title: Wiring Diagram
MM110WJ-1
115-60-1
Water Cooled

INSTALLATION PRACTICE

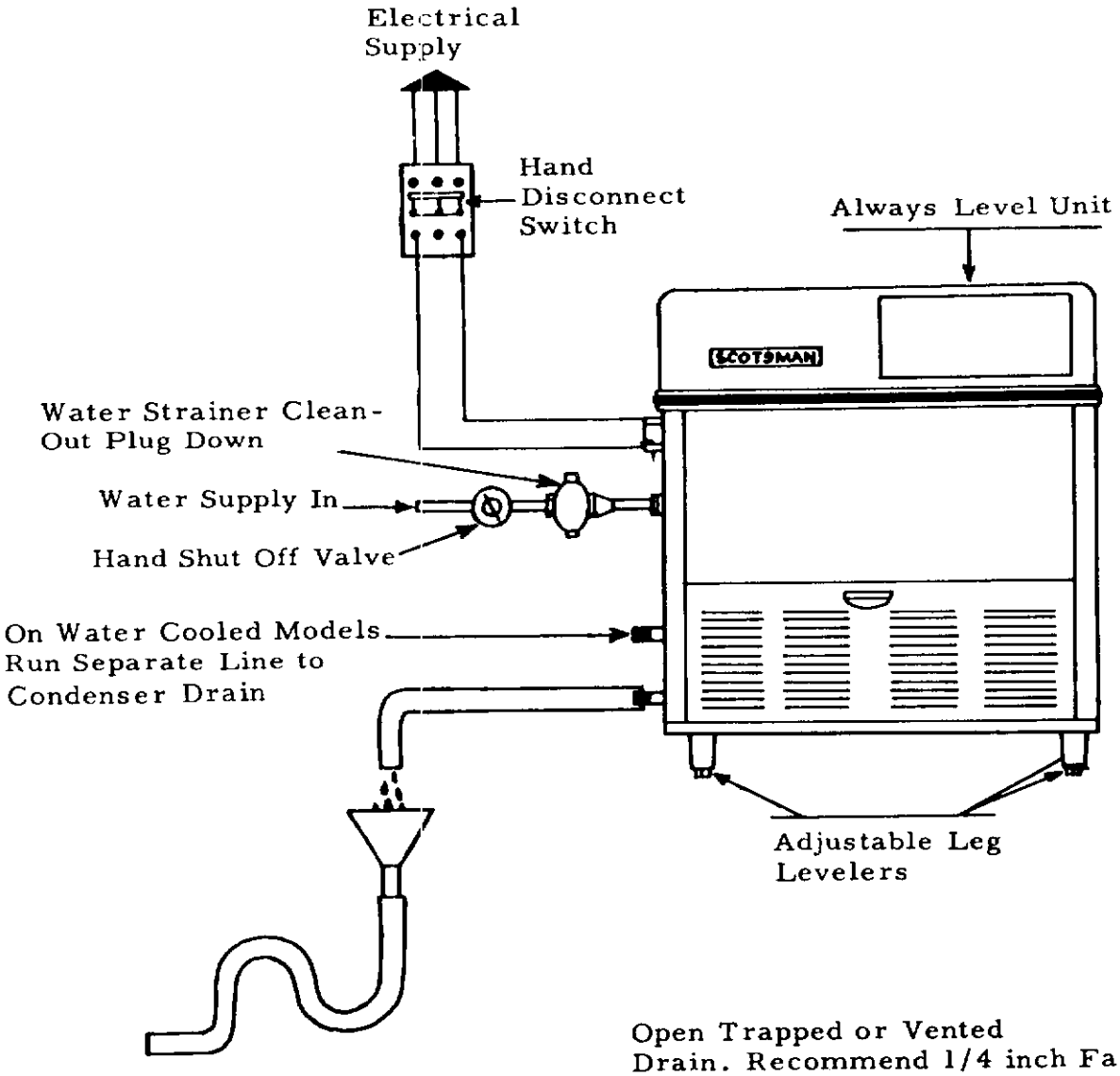

Open Trapped or Vented
Drain. Recommend 1/4 inch Fall
per foot of run on drain lines.

FINAL CHECK LIST

1. Is the unit level? (IMPORTANT)
2. Have all electrical and piping connections been made?
3. Has the voltage been tested and checked against the nameplate rating?
4. Have the compressor hold-down bolts been checked to insure the compressor is snug to its mounting pads?
5. Is the water supply valve open and the electric power properly hooked up?
6. All masking tape removed from doors, panels and inner freezer curtain?
7. Is the unit clean? Has storage bin been wiped clean with cold water cloth?
8. Has the owner been given the operating manual, and has he been instructed on how to operate the machine?
9. Have the installation and warranty cards been filled out? Check for correct model and serial numbers from serial plate on unit then promptly mail card to factory.
10. Check all refrigerant and conduit lines to guard against vibrations and possible failure.
11. Is there 4" clearance behind and around unit for proper air circulation?
12. Is unit in a room where ambient temperatures are minimum 50° F. even in winter months?
13. Has water supply pressure been checked to insure at least a minimum pressure of 20 pounds?

INSTALLATION - START UP

1. Remove lower front, and left side service doors to facilitate start up and check out.

2. Make sure water supply is turned on, then check timer finishing clock in main control box making sure the micro switch arm is resting down in offset slot in the cam (harvest position). If adjustment is necessary, turn timer knob clockwise into harvest position.

3. Inspect components in electrical control box, check for loose or frayed wire, then turn both manual switches to "on" position. All cubers have two manual on-off switches. One is for motor compressor only during cleaning operation, one is master switch for complete unit.

4. When both switches are thrown "on", water inlet solenoid will be energized allowing water to enter cuber, thru warm water tank, 3 way water valve and up into front side of freezer cup section. This will "fill" icemaker for the freezing cycle- Check operation of spray bar drive motor thru left side service door.

5. Allow clock to carry unit through harvest cycle. This will be Approximately three minutes. Dial pointer should be set on Number 2 1/2. After the compressor starts, turn the dial completely around and send it through another harvest cycle. Do this several times. This will completely flush out machine of any dust that may have accumulated in shipment.

6. After machine has been properly flushed, allow it to go into a freezing cycle-check for possible water leaks, check sump pump operation - should be running freely. Also note if jet tube operation is correct, and that none of the jets are plugged.

7. Time clock dial does not rotate at the end of the harvest cycle; it is started later by the cube size thermostat control located in the control box.

8. Freezing time will be approximately 18 minutes in a 70 degree ambient. (Longer if above, and shorter if below.) Average complete cycle time is 20 minutes.

9. Watch first cube harvest and check to make sure that plastic curtain sections have not been damaged in shipment. Also that curtains do not swing back into freezer and catch on cube racks.

10. Check size of cubes made: If too small, after a second cycle, adjust cube size control to lower or colder setting - until desired cube size is reached.

INSTALLATION

11. Check texture of cubes made: Partially cloudy cubes throughout suggest unit running short of water near end of freezing, or possibly an extremely bad water condition, which would indicate use of filtering or purifying equipment. Contact SCOTSMAN - Queen Products, Div., Ice Machine Service Department, Albert Lea, Minnesota, for futher details.

12. With unit on harvest cycle, take a handful of cubes made and hold on storage bin thermostat cover. Should cut unit off at end of harvest cycle. Remove ice, unit should cut back on automatically in 3 or 4 minutes. Thermostat is factory set at 35 degrees out, 39 degrees in.

13. Install gauges and check head and back pressure: air-cooled models, head pressure after twenty minutes of freezing cycle at 70° ambient will be approximately 125 pounds PSI. The back pressure starts out at approximately 50 pounds PSI and gradually pulls down to approximately 4 pounds PSI just before harvest cycle. Higher ambients and dirty condenser will cause higher pressures. Water-cooled models have water regulating valves factory set at 135 pounds PSI: check reading and adjust if necessary. Back pressure will operate the same as on air-cooled models.

14. Remove gauges, replace control box cover and all service panels.

15. Instruct owner on how to operate and clean machine.

HARVEST CYCLE

At the end of the freezing cycle the time clock operated switch opens compressor, sump pump and fan motor circuit, and closes circuit to time clock motor and solenoid operated inlet water valve. Inlet water pressure at bottom of hot water tank now forces heated water out the top of tank through warm water tubing and into front side of evaporator cup section. At the same time the surplus water from the preceding batch of ice cubes goes through three way water valve and off to drain. Water from the hot water tank flows into the rubber platen holding the evaporator cups and by conduction on back of cups causes the formed ice cubes to defrost or drop out. The platen-evaporator cavity is normally filled to the overflow level in 2 or 2 1/2 minutes. The amount of water running over the overflow pipe is controlled by the size of the flow control orifice and the length of the harvest time setting on the time clock past the overflow point. Overflow water goes down the drain also.

Meanwhile, cubes released drop by gravity to the inclined cube chute and thru the curtained opening into ice storage bin. At the completion of harvest cycle, the micro-switch on the timer now drops points holding defrost components in cycle and switches to freezing cycle set of contacts. Timer completes harvest cycle when microswitch arm lifts out of rear cam slot. Timer clock motor now stops and will not start again until cube size thermostat control closes once more. Electrically harvest cycle components cease, freezing cycle components start up. Chilled defrost water from the upper cavity now flows by gravity back through the three way water valve into freezer sump or reservior pan. Here water is picked up by the water pump and continually recirculated through sprayer tube to produce the next batch of cubes.

HARVEST CYCLE MM110-J

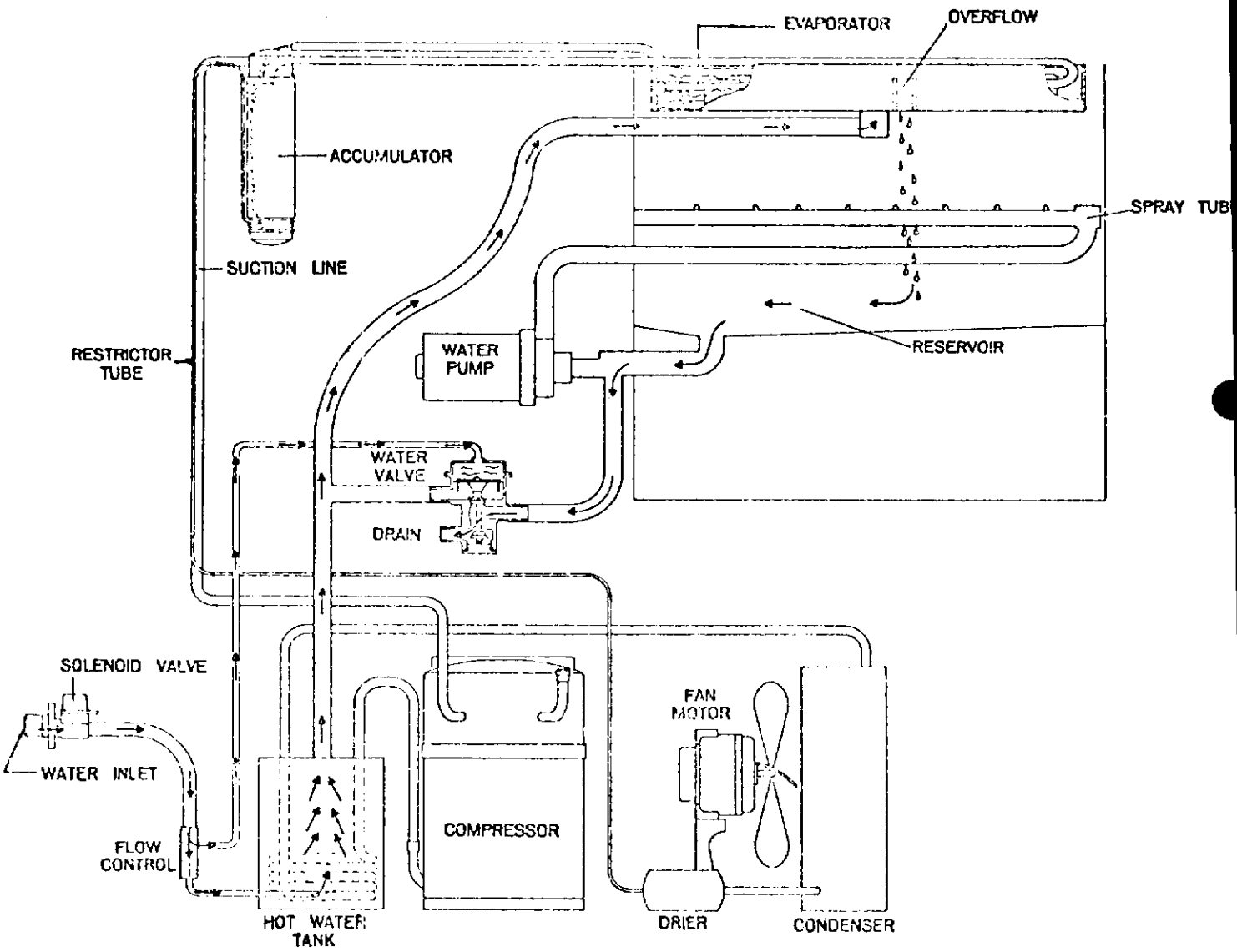

FREEZING CYCLE

As the freezing cycle starts, electrically the components operating are the compressor and fan motor, recirculating water pump and the sprayer tube drive motor.

The refrigerant curcuit which equalized at about 50 pounds gauge during the "off" or harvest cycle, thru the capillary refrigerant control, now rises rapidly to 125 - 135 pounds head pressure. The suction or low side pressure starting at 50 pounds pulls down fairly quickly to about 25 pounds at which point the ice cubes are starting to form a thin shell in cube cups. Continuing from 25 pounds slowly on down towards the finished cube pressure of approximately 5 pounds takes an average of 15-20 minutes.

During this portion of the freezing cycle the electrical brain is the reverse acting, cube size thermostat. This thermostat electrically is holding the freezing cycle components "live". When the ice cubes are about 3/4 formed, the decreasing suction pressure and temperature, activated the temperature sensing bulb of the reverse acting, cube size control, closing its contacts. This does not interrupt the freezing cycle, the closing of the cube size thermostat contacts electrically transfers the finishing of the freezing cycle to the finishing clock motor or timer as it is sometimes called. One full revolution of the timers dial is 15 minutes however of the total 15 minutes only, 3 minutes are used for the defrost or harvest cycle.

This means then that after the cube size contacts close they activate the timer motor. This control takes over and continues freezing cycle for another 12 minutes with timer dial now turning. When the 12 minutes are completed, an offset in the timer dial allows a micro switch with activating arm riding on that cam to drop into the slot electrically stopping the freezing cycle and starting the 3 minutes harvest cycle - The clock motor continues thru harvest cycles. A notch on the timer dial now lifts micro switch arm up on dial, electrically stopping harvest cycle and starts back into a new freezing cycle.

FREEZING CYCLE MM110-J

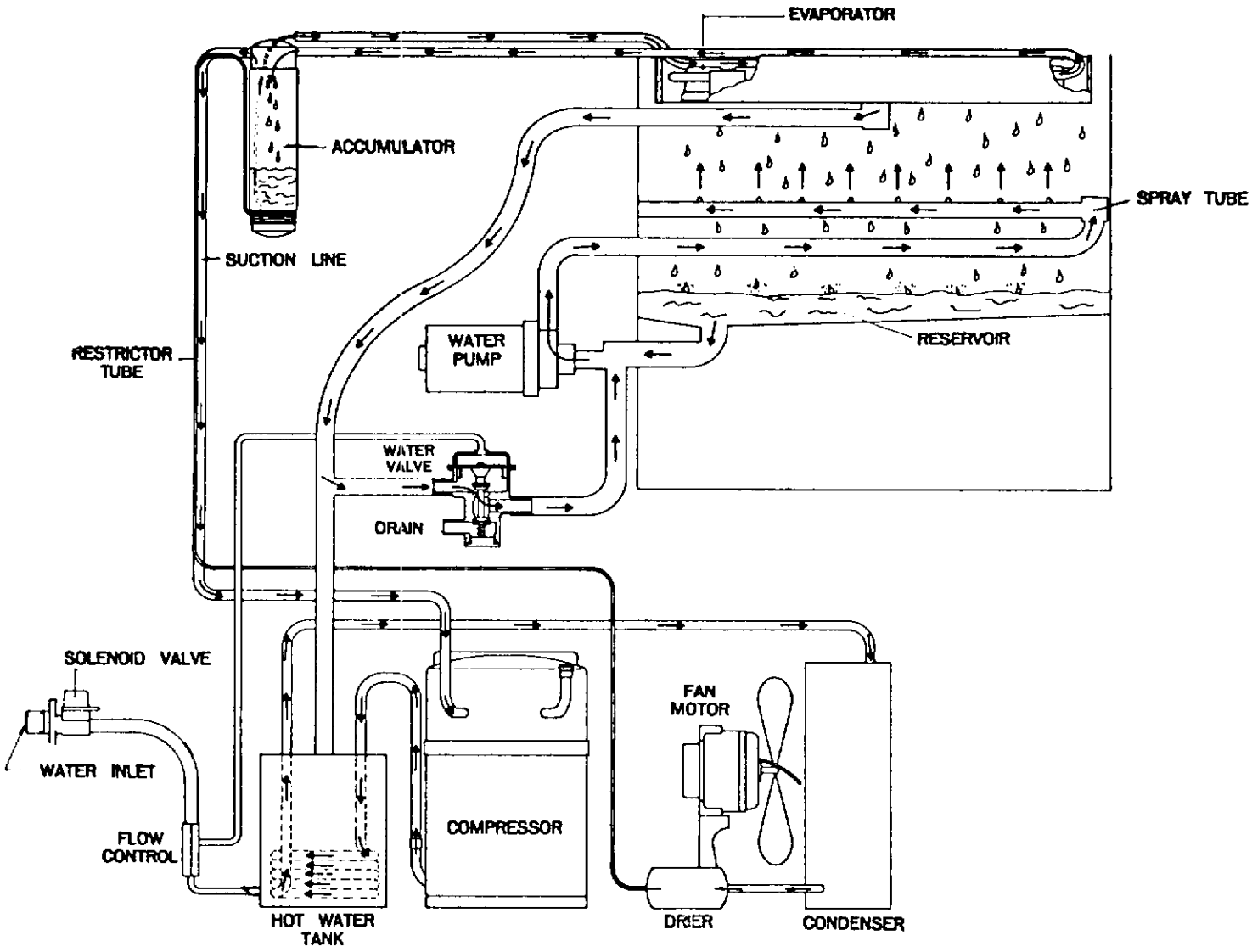

SERVICE ANALYSIS

SYMPTOM	POSSIBLE CAUSE	SUGGESTED CORRECTION
Unit will not run.	Blown fuse	Replace fuse & check for cause of blown fuse.
	Bin thermostat set too high	Adjust thermostat. Set between 35° out to 39 degrees in.
	Switch in Off position	Turn switch to On position.
	Inoperative master switch	Replace switch
	Timer contacts open	Replace timer micro-switch.
Compresser cycles intermittently	Low voltage	Check circuit for overloading. Check voltage at the supply to the building. If low, contact the power company.
	Dirty condenser	Clean with vacuum cleaner, air or stiff brush. (Do NOT use wire brush.)
	Air circulation blocked	Allow sufficient air space all around unit.
	Inoperative condenser fan motor	Check to see if defective. If defective, replace.
	Non-condensable gases in system	Purge the system.
Cubes too small	Cube size control set too high	Lower the setting. Turn towards colder.
	Partially restricted capillary tube.	Blow charge, add new gas & drier. After exacuating system with suction pump.
	Moisture in system	Same as above.
	Shortage of water	See remedies for shortage of water.
	Shortage of refrigerant	Check for leaks and recharge.
Cloudy cubes	Shortage of water	See remedies for shortage of water.
	Dirty water supply	Use water softener or water filter.
	Restricted drain on pump	Clean pump strainer.
	Accumulated impurities	Use SCOTSMAN Ice Machine Cleaner.
Poor harvests	Too short defrost time	Check and adjust harvest cycle. Timer should be set at 2 1/2.
	Restriction in incoming water	Check water feed line strainer and flow reducing valve. To give greater water flow increasing defrost time.
	Insufficient quantity of hot water	Cold ambient - must be 50° minimum faulty fan control on aircooled models.
	Solenoid valve not opening the water valve	Solenoid binding or burned out. Replace.
	Air vent holes in upper cube cups plugged	Clean out holes.

SERVICE ANALYSIS

SYMPTOM	POSSIBLE CAUSE	SUGGESTED CORRECTION
Shortage of water	Water spraying out through curtains	Replace broken curtains if any broken.
	Three-Way water valve leaking	Check the valve for foreign matter. Check valve seats and replace if necessary.
	Water entering hot water tank too slowly	Check pressure at source-20# required. Dirt in solenoid and flow control- blow out.
		Partial restrictions in water strainer. Clean Strainer.
Irregular size cubes and some cloudy	Some jets plugged	Clean jets.
	Shortage of water	See Shortage of Water
	Unit not level	Water overflowing air vent holes on low side burning cubes. Level as required.
Cubes too large	Cube size control turned too cold	Turn setting on cube size control dial towards warmer
Decreased ice capacity	Inefficient compressor	Replace.
	Leaky water valve	Replace or repair.
	High head pressure	Dirty condenser. Clean. Bad fan motor. Replace.
	Non-condensable gas in the system:	purge the system.
	Poor Air circulation or excessively hot location	relocate the unit, or provide for ventilation by cutting openings;
	Overcharge of refrigerant	Correct the charge. Purge off slowly.
	Partially restricted cap tube	Purge & replace charge and drier
Hole washed inside cube	Water over the top of the cube cups during harvest	Level unit.

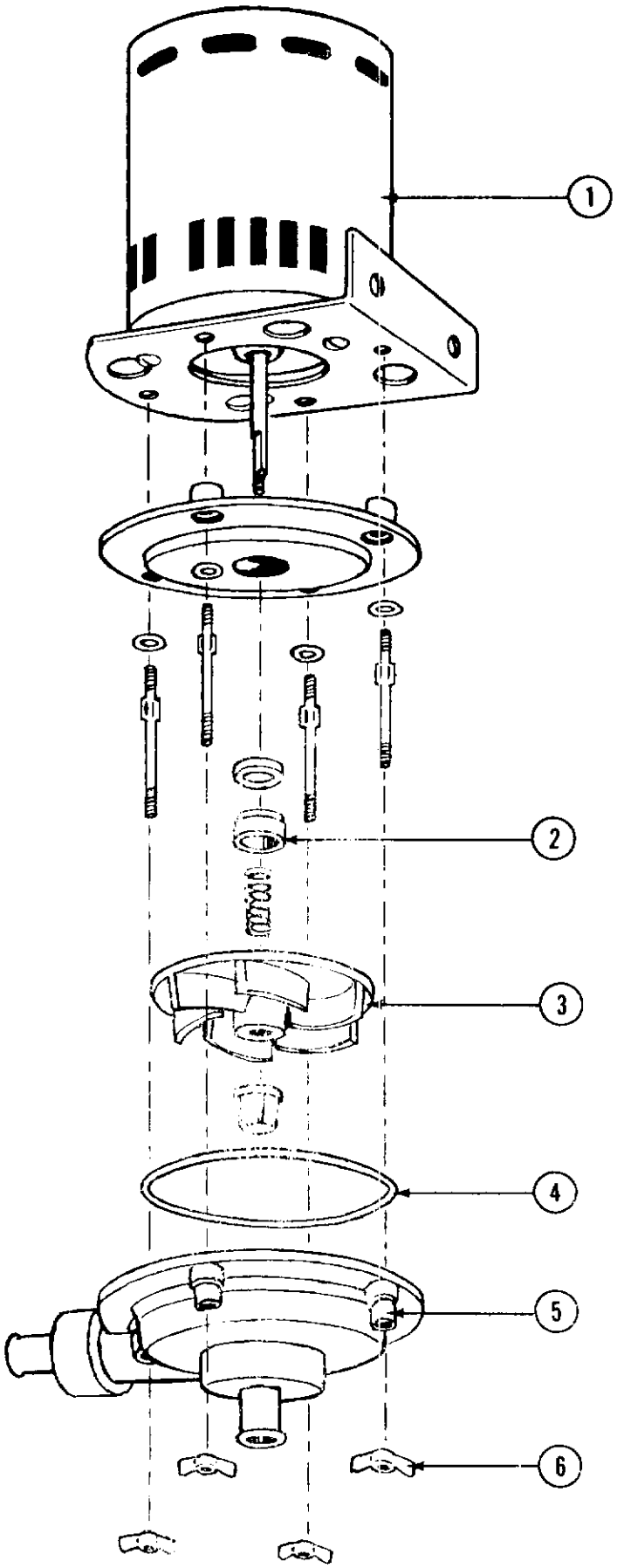

SUMP PUMP ASSEMBLY
PART NO. 12-1532-1B

ITEM NO.	PART NO.	NAME
1.	12-1532-51	Motor only
2.	12-1532-57	Water Seal
3.	12-1532-58	Impeller
4.	12-1532-60	O-Ring
5.	12-1532-61	Outlet Housing
6.	12-1532-62	Wing Nuts

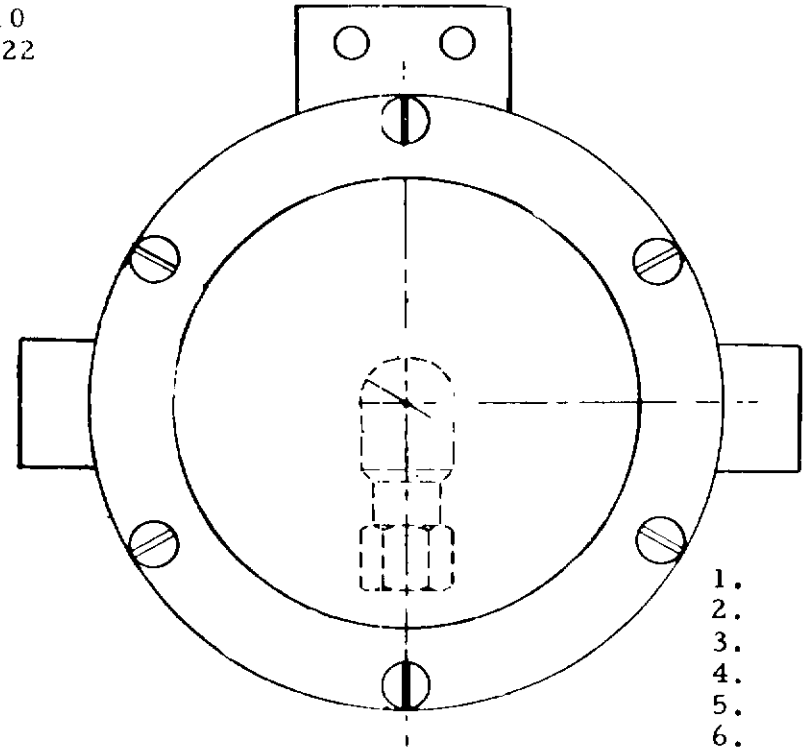

WATER VALVE ASSEMBLY
A-19722-1

1.	13-617-2	O-Ring
2.	A-17937	Valve Cap Bottom
3.	2-1545	Spring
4.	13-617-1	O-Ring
5.	A-17942	Lower Plunger Rod
6.	3-1403-6	Screws (6)
7.	A-18192	Valve Top Cover
8.	3-1403-27	Screw
9.	A-17941	Upper Plunger
10.	13-606	Rubber Diaphragm
11.	A-18312	Diaphragm Cover
12.	A-17947	Valve Body

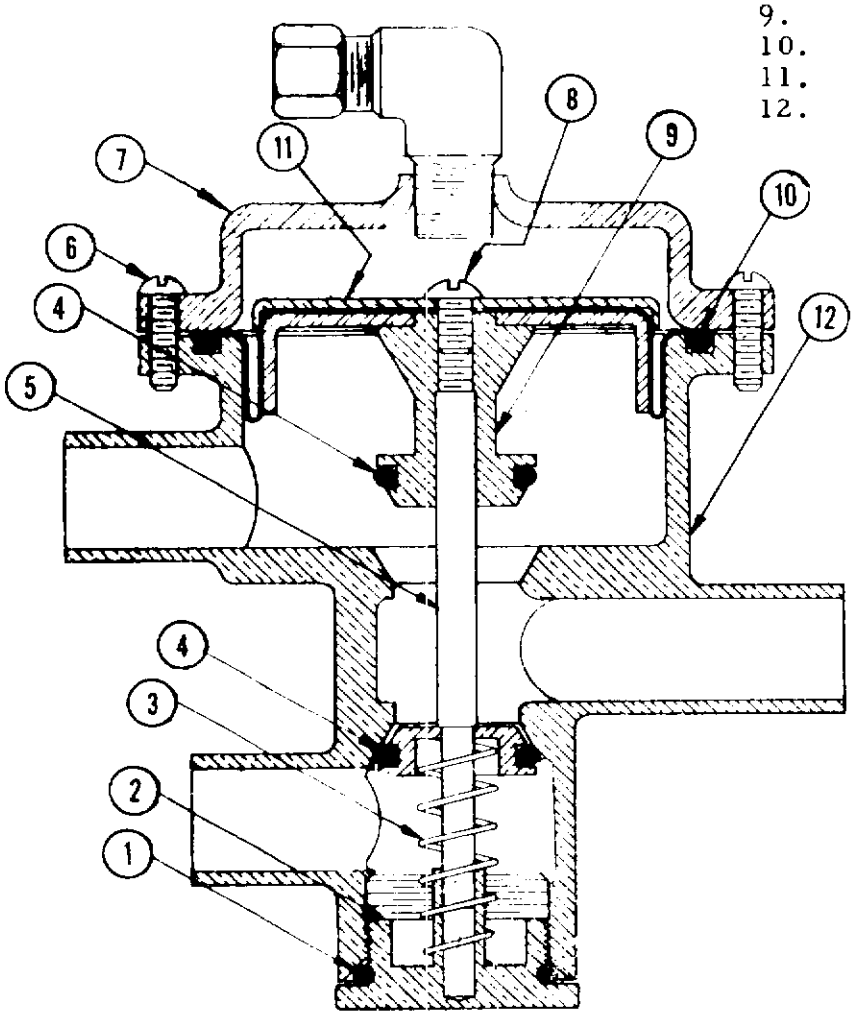

A24561-001
KIT 1

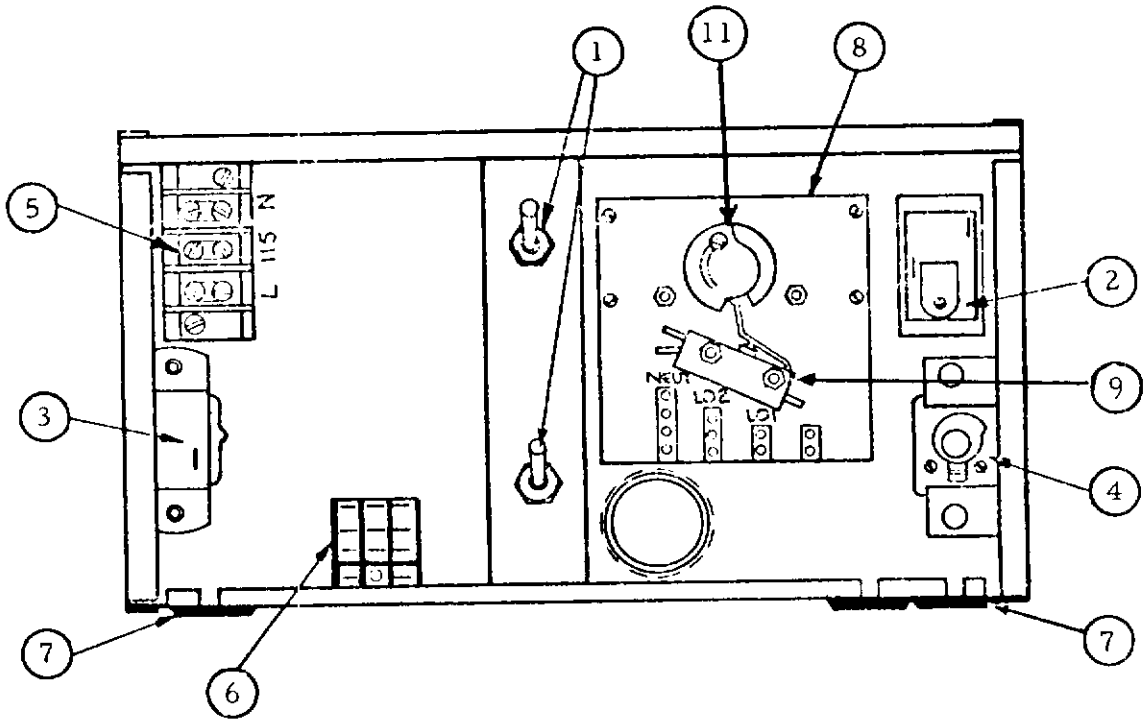

CONTROL BOX ASSEMBLY

ITEM No.	PART NO.	NAME
1.	12-426-1	Switches
2.	11-352	Head Pressure Control - Air Cooled Only
2.	11-357	High Head Pressure Control- Water Cooled Only
3.	11-353	Bin Control
4.	11-351	Cube Size Control
5.	12-813	Terminal Block
6.	12-1645	Relay
7.	13-124	Grommets
8.	A-21038-1	Timer Assy.
9.	12-1480	Timer Micro Switch
*10.	12-1478-1	Timer Motor Only
11.	2-1651	Cam Assy.

* Not Shown

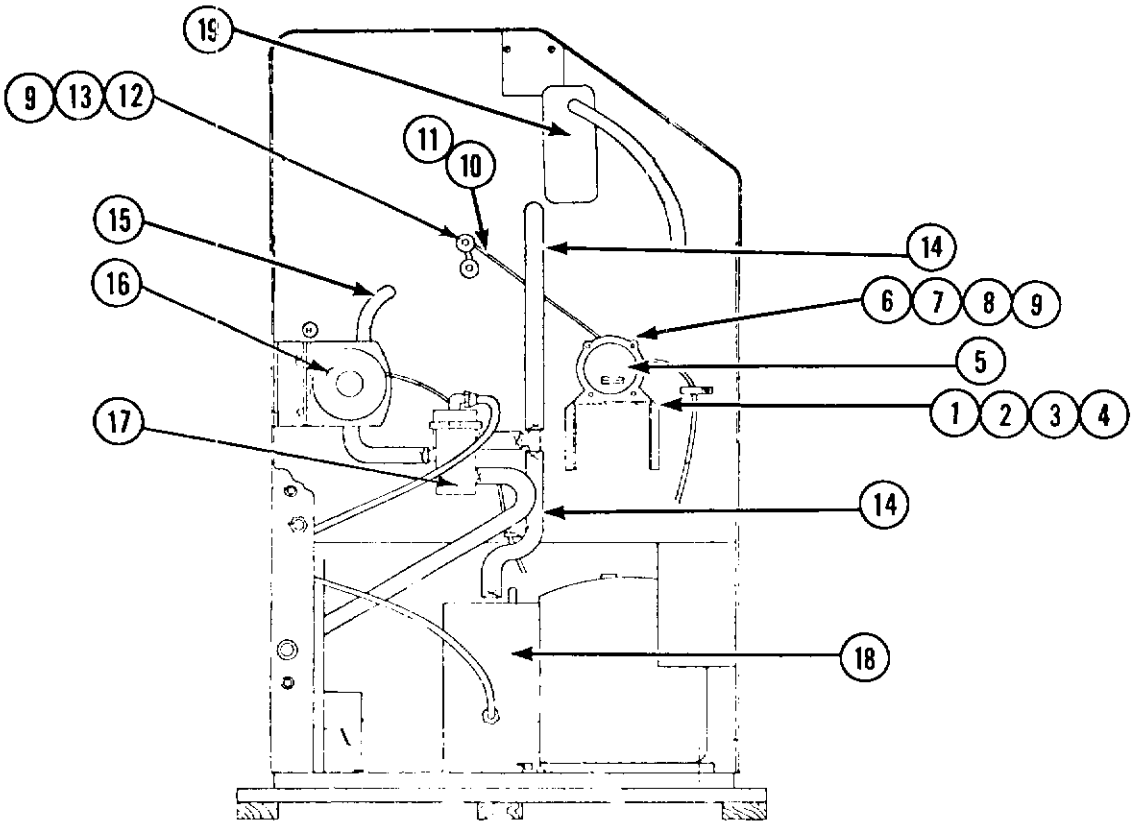

CABINET VIEW - LEFT SIDE

ITEM NO.	PART NO.	NAME
1.	3-1403-28	Machine Screw
2.	3-1406-6	Nut
3.	3-1407-4	Washer
4.	3-1417-5	Lock Washer
5.	12-1346-1	Drive Motor
6.	S-7128	Driven Arm
7.	A-7033	Bearing
8.	S-7558	Bearing Clip
9.	3-431	Set Screw
10.	S-7132	Linkage Rod
11.	A-6726	Linkage Complete w/arms
12.	A-6462	Driven Arm
13.	S-7130	Collar
14.	13-674-6	Tggon Tubing per ft.
15.	13-674-9	Tggon Tubing per ft.
16.	12-1532-1B	Water Pump
17.	A-19722	Water Valve
18.	A19026	Defrost Water Tank
19.	A-19039	Freezer and Suction Line Ass'y.

MM-110 J COMPLETE UNIT

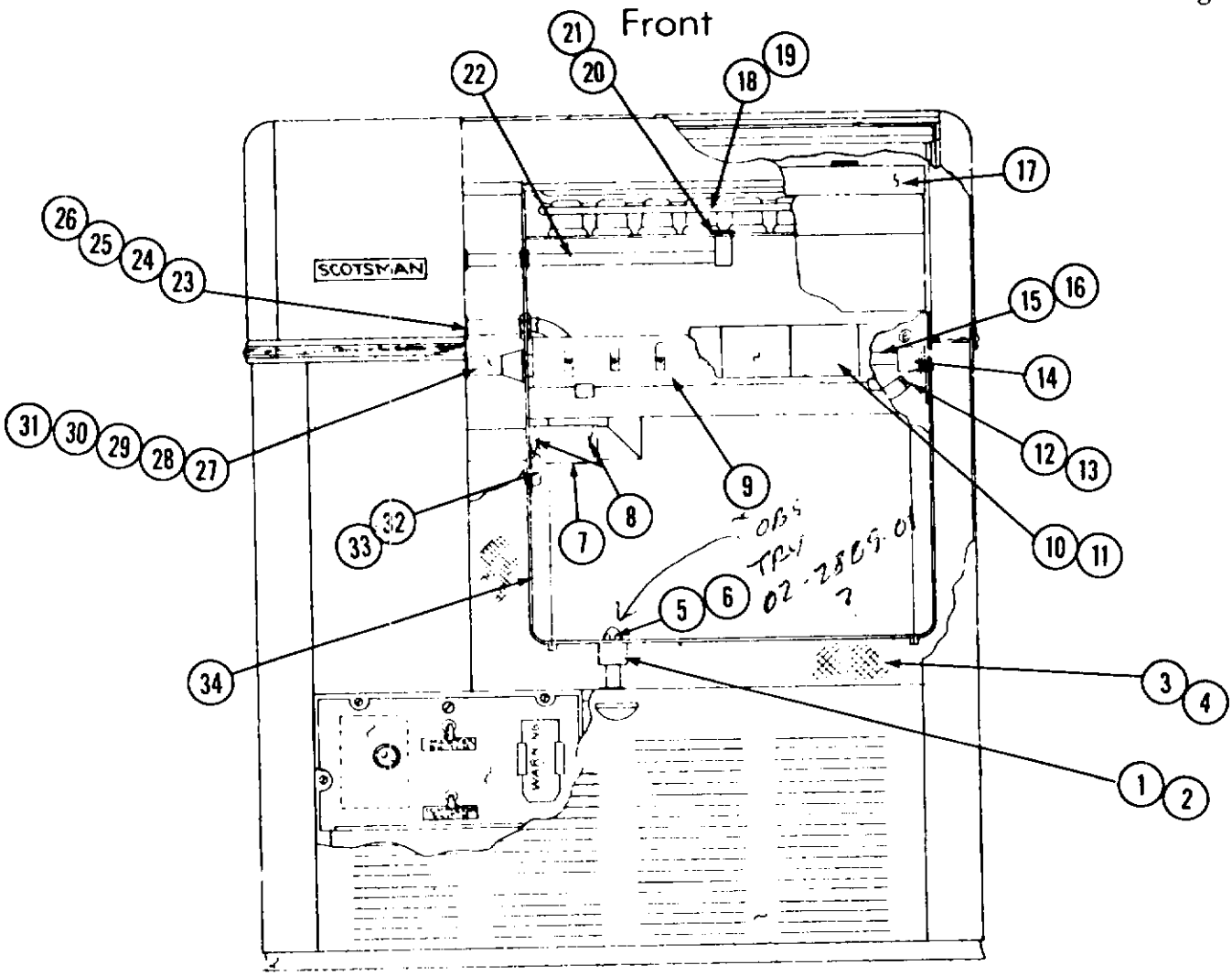

ITEM NO.	PART NO.	NAME
1.	A-18102	Storage Drain Fitting
2.	2-530	"O" Ring
3.	A-15721-1	Insulation Bottom
4.	A-16246	Insulation Layout
5.	A-18090	Drain Fitting (Male)
6.	A-6448	Drain Strainer
7.	5-170-2	Tygon Hose
8.	2-537-1	Clamps (2 required)
9.	A-16412	Cube Chute
10.	A-16439	Curtain Ass'y
11.	3-727	Thumb Screws (2)
12.	2-1338-2	Clamp
13.	13-674-5	Tygon Tube
14.	A-16963	End Bearing
15.	A-16432	Sprayer Tube
16.	2-1803-1	Jets
17.	2-1489	Plastic Insul. Cover
18.	A-19039	Freezer Suction Line Assy.
19.	13-573	Rubber Cupholder
20.	S-7434	Adapter
21.	3-1409-3	Fiber Washer
22.	A-16437	Inlet Tube
23.	A-16970	Inlet Tube
24.	2-541	"O" Ring
25.	S-9965	"O" Ring Nut
26.	13-125	Grommet
27.	S-8887	Drive Bearing Support
28.	S-7639	Drive Journal Ass'y
29.	S-7635	Nut
30.	3-1409-8	Fiber Washer
31.	13-169	Grommet
32.	A-19555	Bulb Cover
33.	13-590	Bulb Gasket
34.	A-18889	Storage & Resv. Assy.

MM110J CASE AND HOOD ASSY.

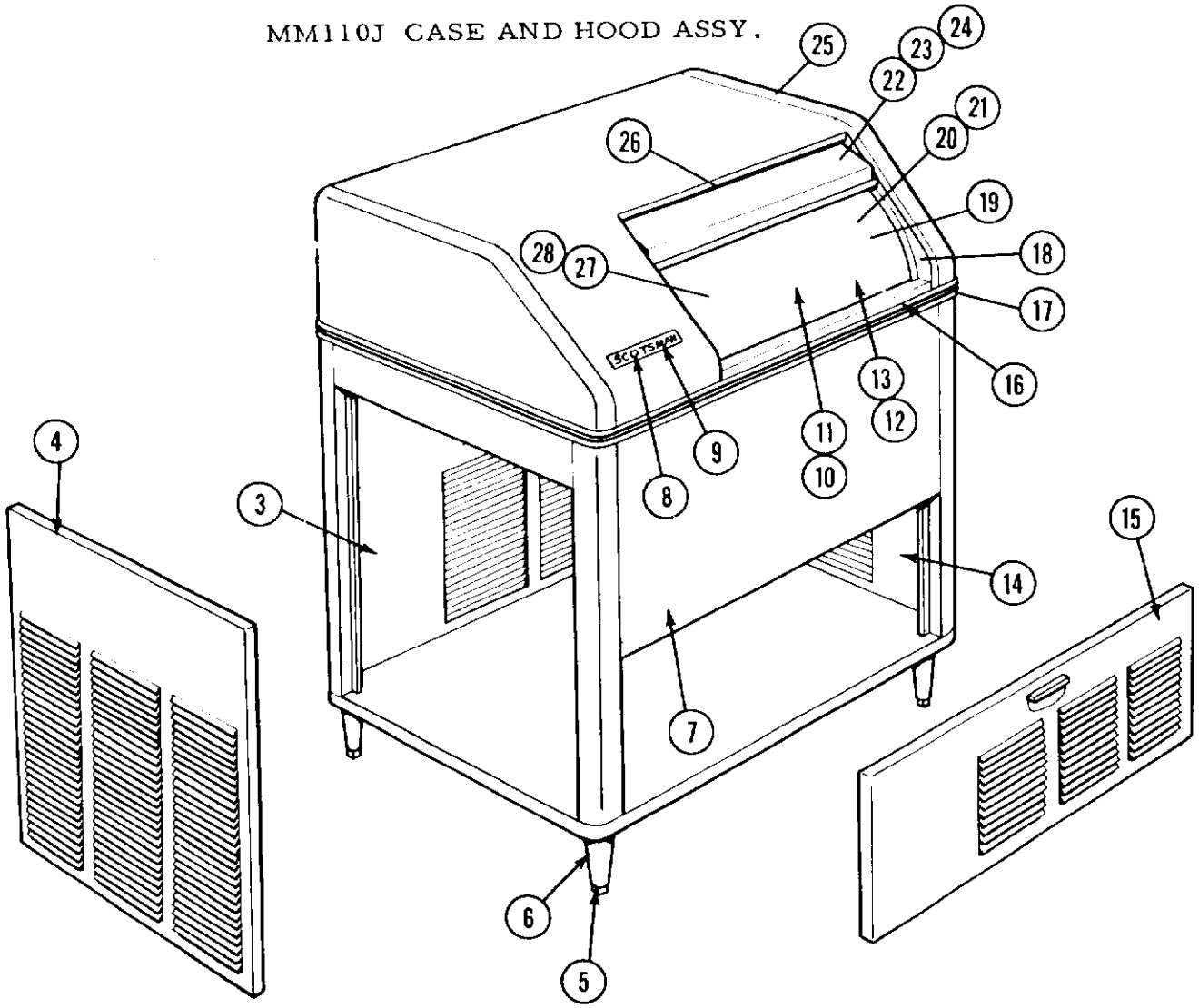

ITEM NO.	PART NO. GRAY	S.S.	NAME
1.	2-530		"O" Ring Drain*
2.	A-6448		Drain Strainer*
3.	A-16563	A-16563-2	Back Door
4.	S-9405	S-9405-S	Left Door
5.	8-522	8-522-1	Leg Leveler
6.	A-15803	A-15803-1	Leg
7.	A-18842	A-18842-1	Case Assy
8.	15-156		Emblem
9.	3-271		Speed Nuts*
10.	A-18102		Storage Drain Assy*
11.	A-18090		Drain Fitting Male*
14.	A-16561	A-16561-2	Right Door
15.	A-15789	A-15789-2	Front Door
16.	15-324		Plastic Insert (per foot)
17.	A-6510		Moulding Strip, Front
18.	A-16208		Door Track
19.	A-18889		Storage Bin Assy*
20.	A-19555		Bulb Cover*
21.	13-590		Bulb Gasket*
22.	2-1735	A-15559	Sliding Door
23.	3-640		Door Blides (Door)
24.	3-1195		Door Glides (Hood)
25.	A-19238	A-19238-1	Hood Assy
26.	2-1736		Door Lanyard

* Not Shown

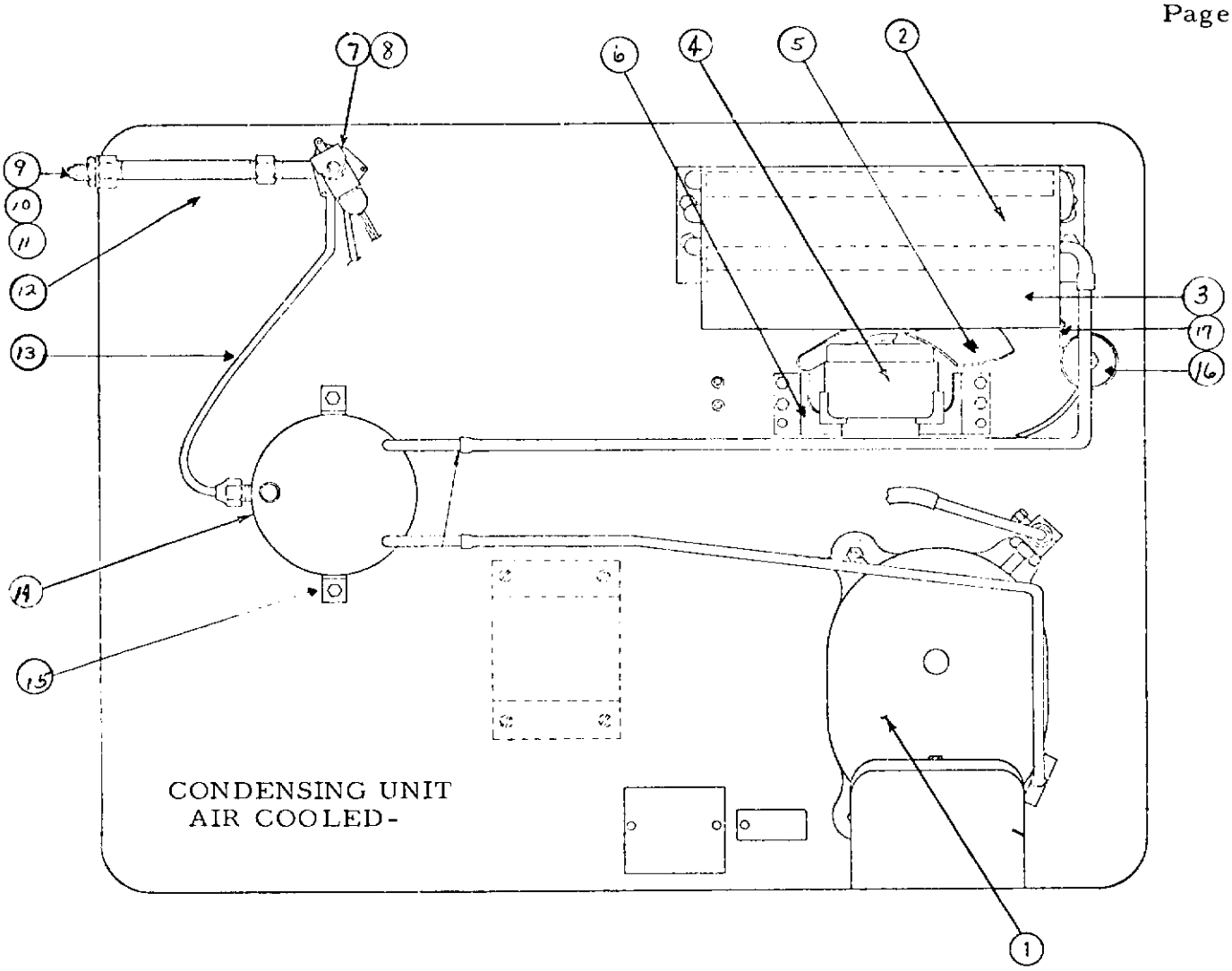

ITEM NO.	PART NO.	NAME
1.	18-2201-1	Motor Compressor 115/60/1
	18-2201-25	Klixon (overload)*
	18-2201-26	Compressor Relay*
	18-2201-29	Start Capacitor*
2.	18-234	Condenser
3.	A-18229	Condenser Shroud
4.	12-1575-1	Fan Motor
	12-1573-8	Lead Wire (Fan Motor)*
5.	18-231	Fan Blade
6.	18-422	Fan Motor Bracket
7.	12-1434-1	Water Solenoid Valve
8.	A-19788-4	Water Flow Control*
9.	A-19239	Inlet Water Fitting
10.	16-526	Brass Nipple
11.	16-540	Coupling
12.	A-18696	Inlet Water Assy Complete
13.	5-397-1	Nylon Water Line per ft.
14.	A-19026	Defrost Water Tank
15.	A-1-233	Water Tank Bracket
16.	2-350	Drier
17.	A-19386	Drier Brace

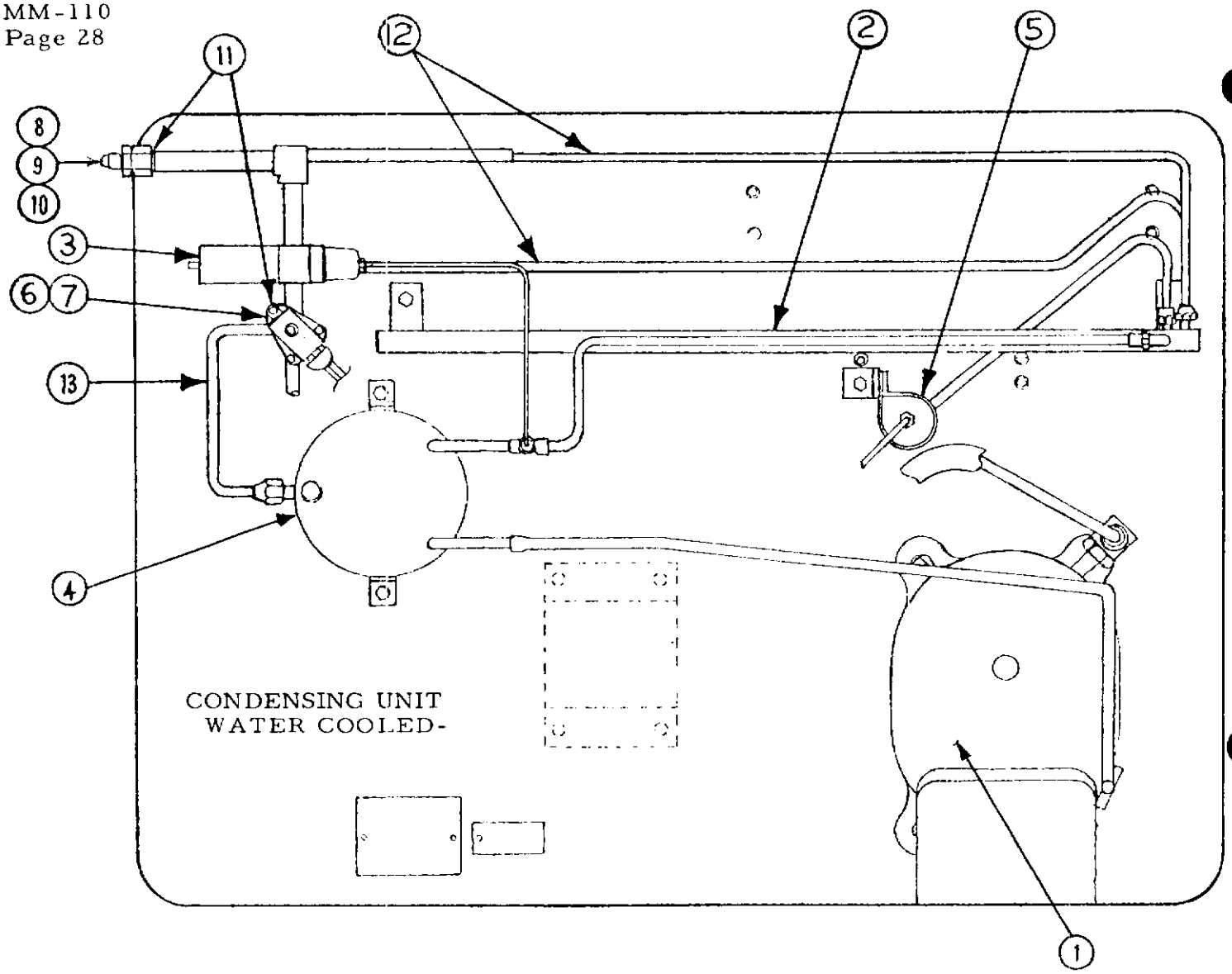

ITEM NO.	PART NO.	NAME
1.	18-2201-1	Motor Compressor 115/60/1
	18-2201-25	Klixon (overload)*
	18-2201-26	Compressor Relay*
	18-2201-29	Start Capacitor
2.	18-368	Condenser
3.	11-198	Water Regulator Valve
4.	A-19026	Defrost Water Tank
5.	2-350	Drier
	A-19386	Drier Brace
6.	12-1434-1	Water Solenoid Valve
7.	A-19788-4	Water Flow Control*
8.	A-19239	Inlet Water Fitting
9.	16-527	Brass Nipple
10.	16-537	Brass Tee
11.	A-18696-1	Inlet Water Assy Complete
12.	5-397-2	Nylon Water Line per ft. - 3/8"
13.	5-397-1	Nylon Water Line per ft. - 1/4"

* Not Shown

COMPLETE DRIVE LINKAGE

Part No. A-6726

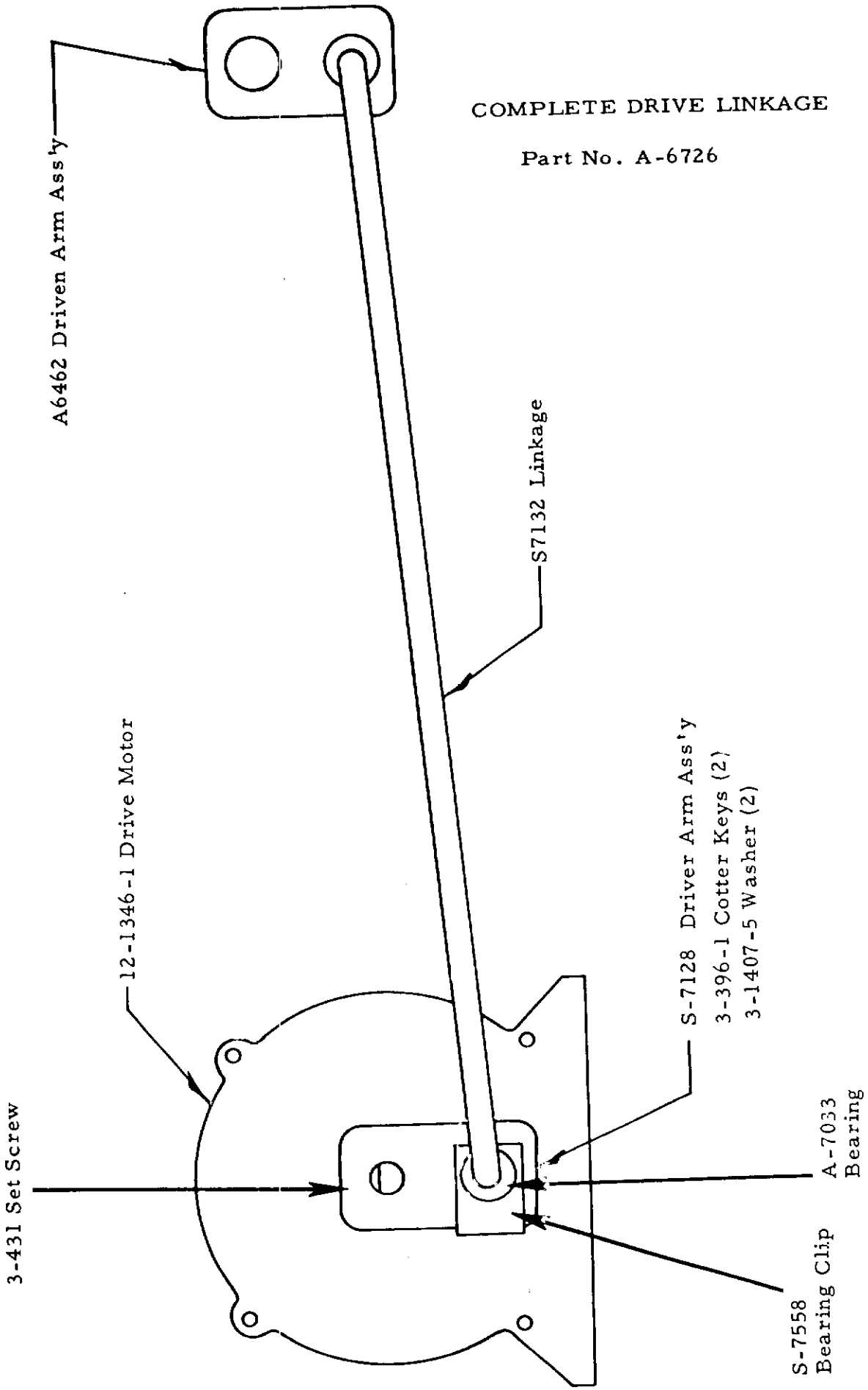

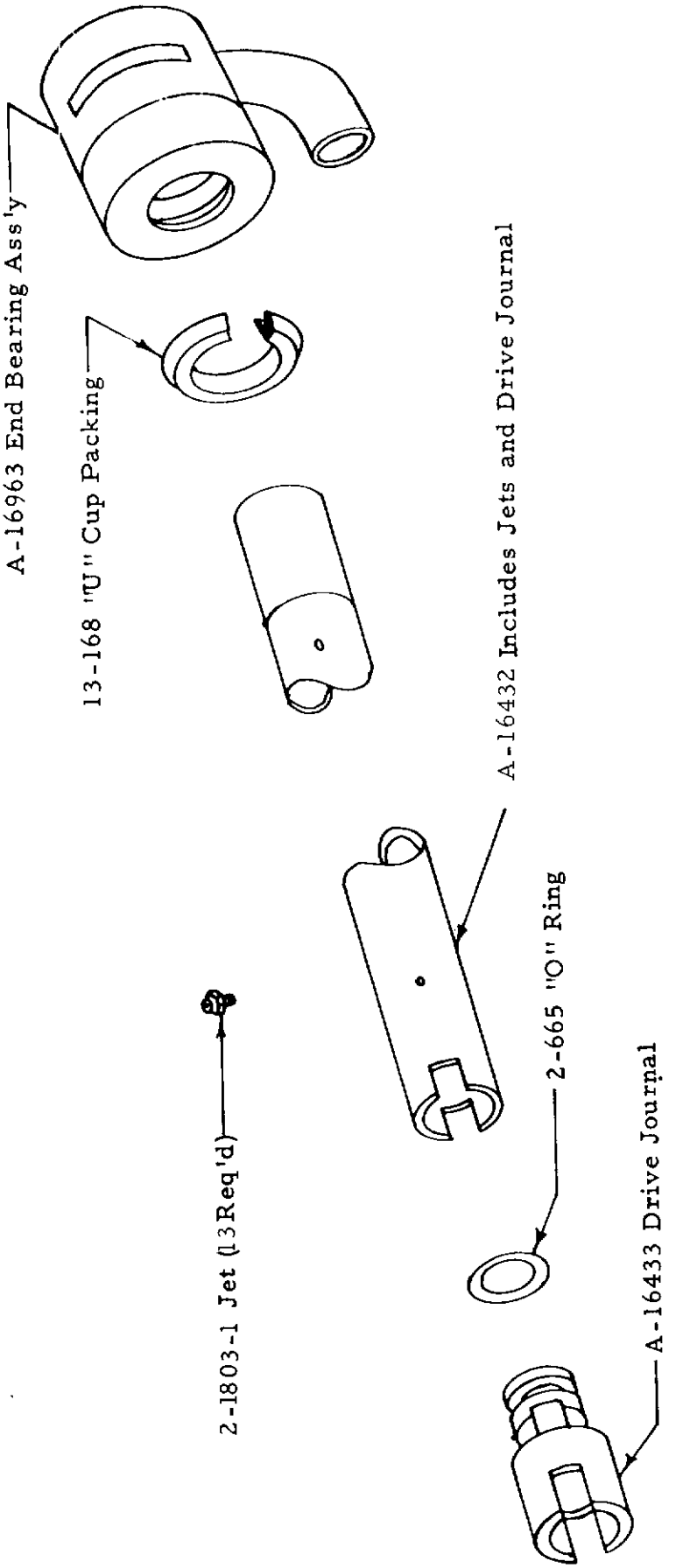

SPRAYER TUBE ASSEMBLY

FUNCTIONAL PARTS
DESCRIPTION

11-352	Fan cycle - head pressure control Robert Shaw #A P 20-1066 120# 140# Range Automatic reset - SPST Nonadjustable
11-353	Bin Thermostat Cutler Hammer #9530 N 213 Cut Off 35° cut in 39° Adjustable calibrate for altitude over 2,000 ft.
11-357	High pressure Cut off - Water cooled models Robert Shaw #A P 21-2048 Control opens 190# P.S.I. Manual re-set - Adjustable
11-351	Cube size thermostat Rance A11-387 Reverse acting, closes on temperature Decrease - Has adjustment dial
12-1645	Relay 115/60/1 Ameco or Potter Bumfield 2 P.D.T. By passes Thermostat during freeze cycle.
18-699-3	Water cooled condenser W.C. models only Packless #QVWC-37 3/4 H.P. rating - upright tank type
12-1532-1B	Water recirculating, sump pump Hartell Inc. 3000 RPM - shaded pole, thermally protected motor - 1/25 H.P. 115/60/1
18-2201-1	Motor compressor 115/60/1 Copeland refrigeration - Copelaweld RSF-0050-1AA 2 Pole, 3500 RPM Hermetic for use with refrigerant R-12
A-21038-1	Finishing Clock or Timer Manufactured by Queen Products Div. 2-1651 Knob cam assembly 12-1480 Micro switch.
12-1434-1	Water inlet solenoid Detroit Controls Corp. #S-30-A 115/60/1 coil - Nylon body 1/4" MPT inlet & outlet No flow control. Also American Standard Control #SSV-20206

SERVICE - COMPLETE UNIT

ALL STEPS LISTED BELOW SHOULD ONLY BE STARTED WHEN WATER AND ELECTRICAL SUPPLY ARE OFF TO PREVENT ACCIDENTS.

To remove cabinet top or hood.

1. Remove two back end screws in rear moulding strip.
2. Pull out black insert tape concealing screws.
3. Remove balance of screws in moulding strips.
4. Lift hood straight up.

To remove Sump Pump.

1. Remove left side service panel.
2. Disconnect hose clamps and hoses on pump ports.
3. Remove electrical lead to control box.
4. Remove 2 screws in pump mounting bracket.

To remove Agitator Motor on MM110

1. Remove left side service panel
2. Disconnect wires at the control box terminal board.
3. Loosen the Allen set screw on driver crank arm and remove the drive arm.
4. Remove the four hold-down screws and remove the motor.

To remove the jet tube assembly on Model MM110

1. Remove the plastic curtain assembly.
2. Remove the cube rack.
3. Lift the right end of the jet tube straight up and slide the other end out of the driving slot.

To remove Three Way Water Valve

1. Remove left side service door.
2. Remove all hose clamps to water valve.
3. Remove upper water line connection to elbow on top valve housing.
4. Loosen two nut and bolt assemblies holding valve to mounting bracket. Valve now drops free.
5. Replace in reverse of above.

To replace Storage Bin Door

1. Lift door up and slide back as you normally would to remove ice from bin.
2. Remove screw at center rear edge of door where it is attached to lanyard.
3. Pull door straight out.
4. Install repaired or new door in reverse of step number 2 above.

MAINTENANCE INSTRUCTION FOR SCOTSMAN SUPER CUBERS

THE FOLLOWING MAINTENANCE MUST BE ACCOMPLISHED TWO (2) TIMES PER YEAR ON ALL SCOTSMAN SUPER CUBERS. CALL YOUR AUTHORIZED SCOTSMAN SERVICE DEPARTMENT.

1. Clean air-cooled condenser; This is to be done frequently with the machine shut off.
2. Clean water system and evaporator, sump tank and screen, using Scotsman Ice Machine Cleaner or equivalent.
3. Remove jet tube and manually clean jets by unscrewing jets.
4. Check curtain assembly.
5. Tighten all electrical connections.
6. Tighten all bolts.
7. Check water supply. Check water pressure flow through flow control. Clean water strainer.
8. Oil jet tubes drive motor three(3) places. Use SAE 20 oil - 3 oil cups.
9. Oil Condenser fan motor. Punch sealed cap or remove screws where possible.
10. Check for refrigeration leaks with halide torch.
11. Check for water leaks. Tighten drain line connections.
12. Check size and condition of cubes. Adjust as required. See Service Analysis
13. Section.
    Check bin thermostat setting. Factory set at 35° out, 39° in.

CLEANING INSTRUCTIONS FOR SCOTSMAN ICE MACHINES MODELS MM110J, SC100J and SM105J

1. Remove front access door.
2. Locate control box with time clock knob protruding through cover.
3. Start unit through a harvest cycle manually. This may be done by turning time clock knob clockwise until the snap of the timer microswitch is heard.
4. Let unit finish cube harvest cycle and start into freezing cycle. This will be approximately 5 minutes after Step #3 has been completed. At this time turn the compressor switch off, the lower of the two switches in the control box.
5. Locate the sump reservoir which is in the storage bin area and directly behind the ice discharge chute. This discharge chute is covered by a series of white plastic curtains which are free to swing out into the storage bin. Pour 4 ounces (half bottle) of "Scotsman Ice Machine Cleaner" into the sump reservoir.
6. Locate insulation panel which is directly above platen. Lift insulation panel, pour the remaining 4 ounces of "Scotsman Ice Machine Cleaner" into platen.
7. Let unit operate normally for 10 to 15 minutes into the freezing cycle. No ice will be made because the motor compressor is not in operation.
8. At the end of this time put the unit through 2 or 3 harvest cycles manually to allow fresh make up water to clean out remaining solution. Each time waiting approximately 5 minutes after the loud snap until the nest harvest cycle is done manually.
9. Turn the compressor switch back on.
10. Check each new batch of cubes until they are clear and until acid tast has been removed from cubes.
11. Put hot water in storage bin to melt the cubes and thereby clean the drains with the same solution that has just cleaned the unit.
12. Use a damp cloth to wipe off curtains and inside of storage bin.
13. Replace all access doors.
14. Unit is now ready for continued automatic operation.

PARTS LIST MM110J

CABINET PARTS

		S. S. Finish
2-1736	Sliding Door Lanyard	
A-19238	Case hood assembly, less doors	A-19238-1
A-16208	Door slide track	
15-156	Emblem	
A-6509	Moulding strip - rear	
A-6510	Moulding strip - front	
A-15789	Cabinet front service	A-15789-2
A-16561	Cabinet right side service door	A-1656-2
A-16563	Cabinet rear service door	A-16563-2
2-1735	Sliding Door	A-15559
S-9405	Cabinet left side service door	S-9405-S

CONTROL BOX - ELECTRICAL COMPONENTS

12-813	Terminal Block
A-21038-1	Timer Assembly
12-1480	Timer Micro-switch
11-351	Cube size control
12-426-1	On-Off switches (2)
11-353	Bin thermostat
12-1645	Complete cube relay
11-352	Fan cycle control A.C.
11-357	H. Pressure control

CONDENSING UNITS AND REFRIGERANT CIRCUIT

	AIR-COOLED	WATER-COOLED
Freezer Cup and Platen only	A-16448	Same
Freezer and H X assembly complete	A-19039	Same
Drier - Refrigerant	2-350	Same
Motor compressor 115/60/1	18-2201-1	Same
Relay	18-2201-26	Same
Starting capacitor	18-2201-29	Same
Fan motor	18-1575-1	None
Fan blade	18-321	None
Condenser	18-334	18-699-3
Shroud for condenser	A-18229	
Klixon overload	18-2201-25	Same
Tire type valve cap	16-563	Same
Tire type valve core	16-560	Same
Rubber cube cup holder	S-9251	Same
Plastic curtain rod assembly	A-16465	Same
Water Regulating Valve	None	11-198

4. HOT WATER CONDENSER TANK

A-19026	Hot water tank complete - Air & Water cooled.

5. WATER VALVE

A-19722	Complete Valve
13-617-2	O-Ring
A-17937	Valve Cap Bottom
2-1545	Compression Spring
13-617-1	O-Ring
A-17942	Lower Plunger
3-1403-6	Cover Screws (6)
A-18192	Valve Cover
A-17941	Upper Plunger
13-606	Rubber Diaphram
A-18312	Diaphram Cover
A-17947	Valve Body

6. WATER CIRCUIT

12-1434-1	Inlet water solenoid
16-162	Inlet water strainer
A-19788-4	Inlet water flow control
12-1532-1B	Sump pump assembly
A-16432	Sprayer tube assembly
2-1803-1	Sprayer tube jet only

7. DRIVE MOTOR AND LINKAGE

12-1346-1	Drive Motor
A-6726	Drive Linkage assembly
A-6462	Driver Arm Assembly
S-7132	Linkage Rod
S-7128	Driver Arm Assembly
S-8887	Drive Bearing Support
S-7639	Driving Journal

8. STORAGE BIN AND COMPONENTS

2-530	"O" Ring
A-18090	Storage Bin Drain Assembly, Male
A-6448	Drain, strainer
A-18102	Storage Bin Drain Ass'y, Female
A-19555	Bin Thermostat Bulb Cover
13-590	Bin Thermostat Bulb Gasket
A-16412	Cube Chute
A-16439	Curtain Assembly

9. MISCELLANEOUS

2-540	Ice Scoop
15-324	Plastic trim insert-per ft.
1-657	Packing crate
12-1532-51	Sump Pump motor only
19-343	Scotsman Ice Machine Cleaner
5-397-2	Nylon tube (per foot) 3/8"
5-379-1	Nylon tube (per foot) 1/4"

TABLE OF CONTENTS
MM-205

Foreward	1
Table of Contents	2
Photograph and Ice Making Capacity	3
Specifications and Dimensions	4-5
Selecting Location:	
Location	6
Uncrating	6
Preparation for Installation	6-7
Installation	7-8
Water Supply and Drain	11-12
Electrical Connection and Characteristics	8
Wiring Diagrams:	
Air Cooled	9
Water Cooled	10
Diagram Plumbing Connections	11
Diagram Installation Practice	12
Final Check List	13
Start-Up	14-15
Cycle of Operation:	
Harvest Cycle	16
Freezing Cycle	17
Service Analysis Charts	18-19
Exploded Views - Component Parts:	
Sump Pump	20
Control Box	21
Complete Unit (End View)	22
Complete Unit (Front View)	23
Case Parts	24
Hot Water Tank	25
Condensing Unit (Air Cooled)	26
Condensing Unit (Water Cooled)	27
Water Valve	28
Evaporator Assy	29
Service Information	
Installation of Water Valve Kit	30
Water Valve Assembled	31
Drive Linkage and Spray Bar	32
Functional Parts and Maintenance	33-35
Service Complete Unit	36-38
Maintenance Instructions	38
Parts List	39-40

THIS PAGE
INTENTIONALLY
LEFT BLANK

THIS PAGE
INTENTIONALLY
LEFT BLANK

SCOTSMAN

SUPER CUBER
MM-205
SERIES

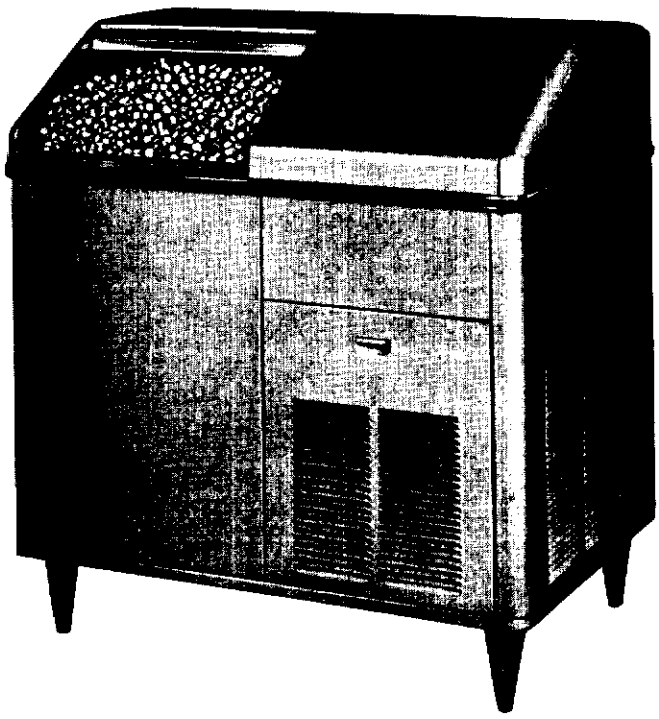

ice making capacity

Air Cooled Models

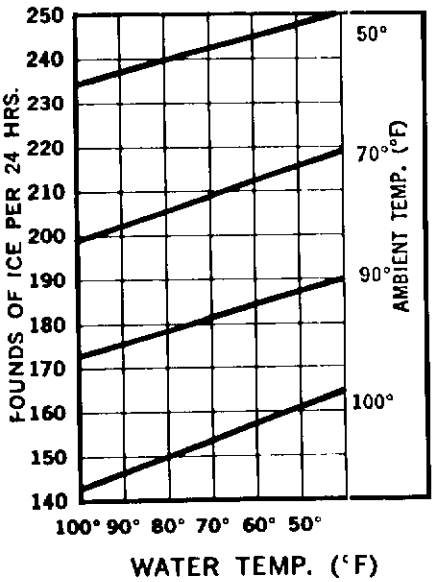

Water Cooled Models

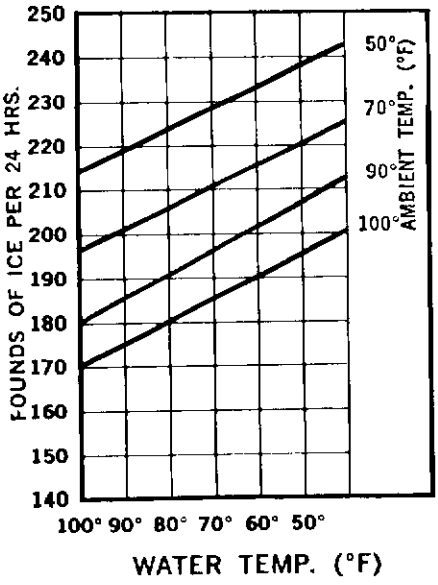

SPECIFICATIONS

SUPER CUBER MM-205 SERIES	MODEL MM-205	MODEL MM-205W	MODEL MM-205-SS	MODEL MM-205W-SS
Daily capacity up to 200 lbs.	X	X	X	X
Self-contained 150 lb. capacity storage bin	X	X	X	X
Air cooled condenser	X		X	
Water cooled condenser		X		X
Heavy duty ½ HP. Compressor	X	X	X	X
Standard 115 V, 60 cy, 1 ph AC—	X	X	X	X
¼" water inlet SAE Flare	X		X	
½" water inlet OD Copper		X		X
⅝" OD copper condensate drain	X	X	X	X
⅝" OD copper storage bin drain	X	X	X	X
⅝" water outlet Copper	X	X	X	X
Hammerloid grey exterior	X	X		
Stainless steel exterior			X	X
Stainless steel lined storage bin	X	X	X	X
45 ¼" high (with legs)	X	X	X	X
39 ¼" high (without legs)	X	X	X	X
44 ¼" wide	X	X	X	X
24 ½" depth	X	X	X	X
Approximate shipping weight	420	420	420	420

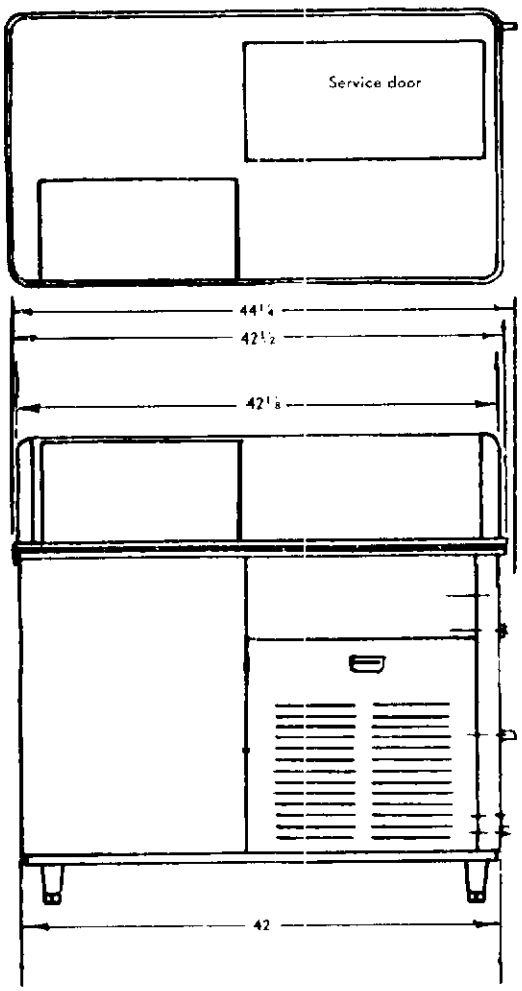

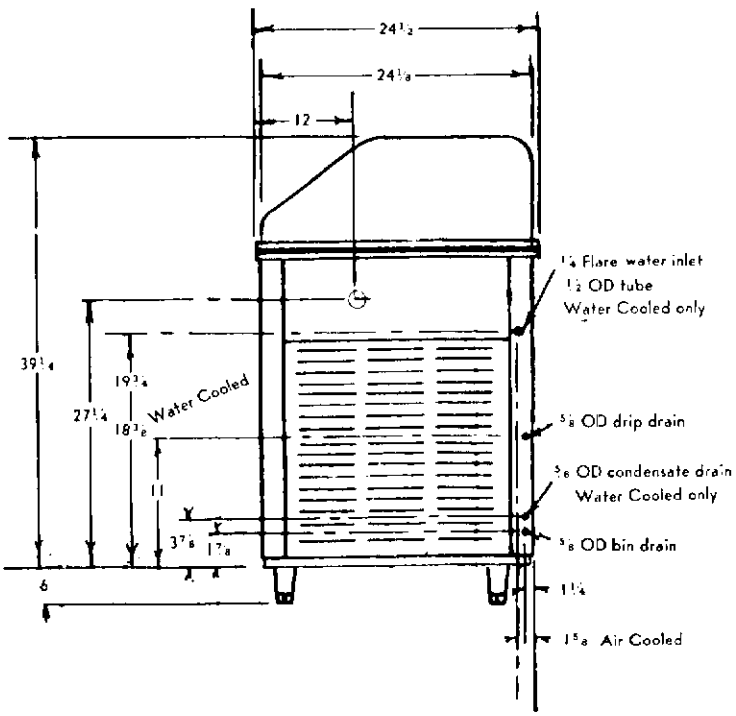

SPECIFICATIONS

	MODEL MM-205H	MODEL MM-205WH
Compressor 1/2 H.P.	115/60/1	115/60/1
Condenser	Air Cooled	Water Cooled
Refrigerant	Refrigerant 12	Refrigerant 12
Refrigerant Charge	24 ounces	24 ounces
Power Consumption	17 Amperes	17 Amperes
Cubes per Harvest	198 Miniature sized cubes	198 Miniature sized cubes
Water Consumption to Produce Ice	2 Gallons per Hour	2 Gallons per Hour
Water Used by the Condensing Unit		30 Gallons per Hour Average - Varies with Water Temperature.
DIMENSIONS		
Height-with 6" Legs	45 1/4"	45 1/4"
Height-Less 6" Legs	39 1/4"	39 1/4"
Width	44 1/4"	44 1/4"
Depth	24 1/2"	24 1/2"
WEIGHTS		
Uncrated	400 lbs.	400 lbs.
Crated	420 lbs	420 lbs

INSTALLATION

UNCRATING OF MACHINE

1. The complete machine comes in one crate. After the crate is removed, inspect for concealed damage. Remove the bottom skid by removing all bolts. Then cut all wires holding support packing from refrigerant line. Then loosen shipping bolts on the compressor. Be sure the compressor is floating free on spring mounts. Then check all refrigerant lines for rubbing or touching other surfaces. Also check for possible transportation damage.

2. Remove all service doors and panels.

3. Remove leg packages in compartment base and install 4 legs in unit base sockets. Level unit with adjustable legs.

4. Loosen motor compressor hold down nuts until motor compressor rides freely on mounting springs.

5. Remove water strainer from storage package for installation in water supply line feeding unit.

6. Open electrical control box and prepare for hook up, use knock outs, cord connectors etc. Then check unit name plate voltage against building source voltage and make sure they correspond. Caution--Improper voltage supplied to units will void your warranty protection.

7. Make sure all service valves on the condensing unit are open and turned as far as possible to the left. Replace the valve caps after checking the valves. All Models are shipped with valves back seated.

8. Make sure that the flow of air is not impeded in any way over condenser on air-cooled models. Keep condenser clean. (Check and clean the condenser monthly.)

9. Operating room temperatures are minimum 50° F. and maximum 100° F.

10. Have the installation and warranty cards been filled out and sent to factory to insure warranty protection?

LOCATION OF THE ICE CUBE MACHINE

UNDER BAR INSTALLATIONS--Locate, if possible, so left end panel is accessible. Locate unit so proper circulation can be attained around the unit and behind it at least four inches. Provide plumbing and electrical connections so the unit can be moved out where the entire top hood can be removed and the unit can still be operated.

KITCHEN INSTALLATIONS--As a rule, the kitchen is not the most practical place to install an air-cooled condensing unit, as grease is almost always present and makes cleaning of the condensing unit difficult. Do not locate near range or steam table or other heating devices that may be used in the kitchen.

STOREROOM INSTALLATIONS--Be sure storeroom is of adequate size and properly ventilated. A small, poorly ventilated room will greatly impair the efficiency of the unit. The storeroom must be kept above 50 degrees in the winter months.

INSTALLATION

BASEMENT INSTALLATIONS--Locate machine in the coolest place. Locate the machine in a dry place. Keep away from furnace and boiler room. Keep away from service chutes and runways, also coal or other dust of any kind. If the machine is set over a floor drain, block the machine up enough to eliminate any possible damage to the machine.

LOCATE THE MACHINE SO IT CAN BE SERVICED WHEN NECESSARY. ALLOW AT LEAST FOUR INCHES OF SPACE AROUND THE MACHINE FOR CIRCULATING AIR.

IMPORTANT: ADJUST LEVELER LEGS. MACHINE MUST BE LEVEL.

Remove water reservoir cover and take out paper packing around float ball, make sure overflow standpipe is securely in place.

Remove water strainer from storage bin for installation on unit or in water supply line feeding unit.

Remove 3/4" flat shipping slug between 3 way water valve stem and body. Replace rear service panel.

Remove all masking tape and packing members from curtains and inner cube making compartments. Re-align components such as sump pump that may have shifted in transit.

INSTALLATION

WATER SUPPLY AND DRAIN CONNECTIONS

Pages 11 & 12 show recommended water piping connections and drain facilities for Model MM-205 and MM205W.

WATER SUPPLY

The recommended water supply line is 1/4" OD copper tubing for air-cooled units. Connect to a cold water supply line with regular plumbing fittings with a shut-off valve installed in an accessible place between supply line and machine. The water strainer supplied with the unit should be mounted with clean-out plug down. Locate the strainer next to the machine and the arrow in the direction of the flow, as per Page 12.

The water supply line connects to the 1/4" OD soft copper tubing (See Figures Page 12). Use care in connecting up water line to thd machine. Water supply must be installed to conform with local code.

Water connections for the MM-205W water-cooled units is 1/2" OD copper tubing one connection on cabinet for both make-up water and condenser water.

DRAIN

The recommended drain; is 5/8" OD copper tubing. Sweat to drain connection (See Page 12). Must be run to open or trapped drain. If drain is a long run, allow a 1/4" pitch per foot. Drain must be installed to conform with local code.

ELECTRICAL CONNECTIONS AND CHARACTERISTICS

MM-205	110-115 V, 60 Cycle	Single Phase, 17 Amps.

All external wiring should conform with National Underwriters' and local code requirements. Check the voltage on the line before connecting the machine. Model MM-205 requires 110-115 volts, 60 cycle, single phase.

The MM-205 should be wired to a 20 Amp. circuit. Be certain that the Super Cubers are on their own circuit and individually fused. The maximum allowable voltage variation should not exceed 10 % of the nameplate rating even under starting conditions. Low voltage can cause erratic operation, and may be responsible for serious damage to the overload switches and motor windings.

WIRING DIAGRAM

MM-205

Air Cooled

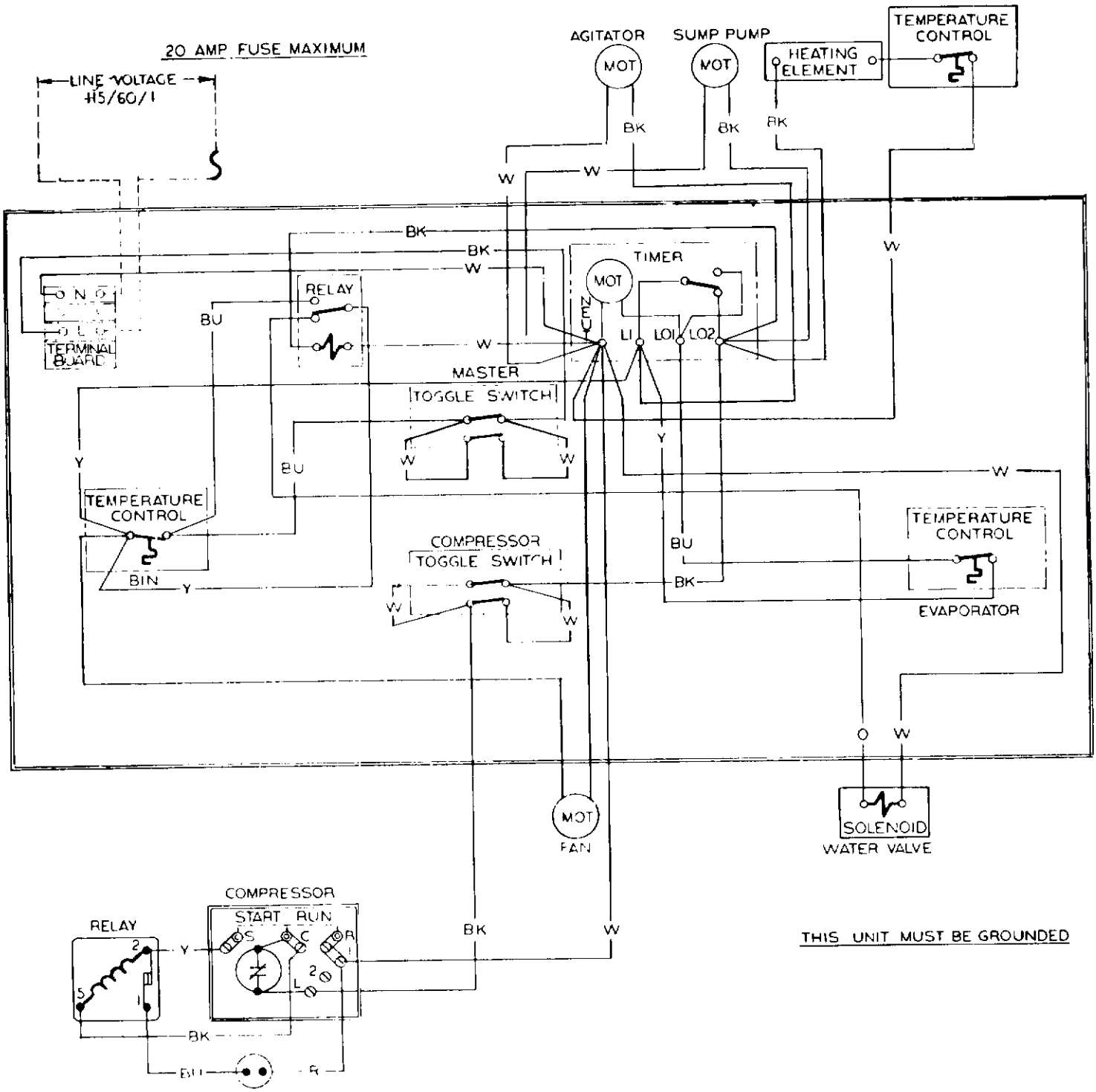

WIRING DIAGRAM

MM-205

Water Cooled

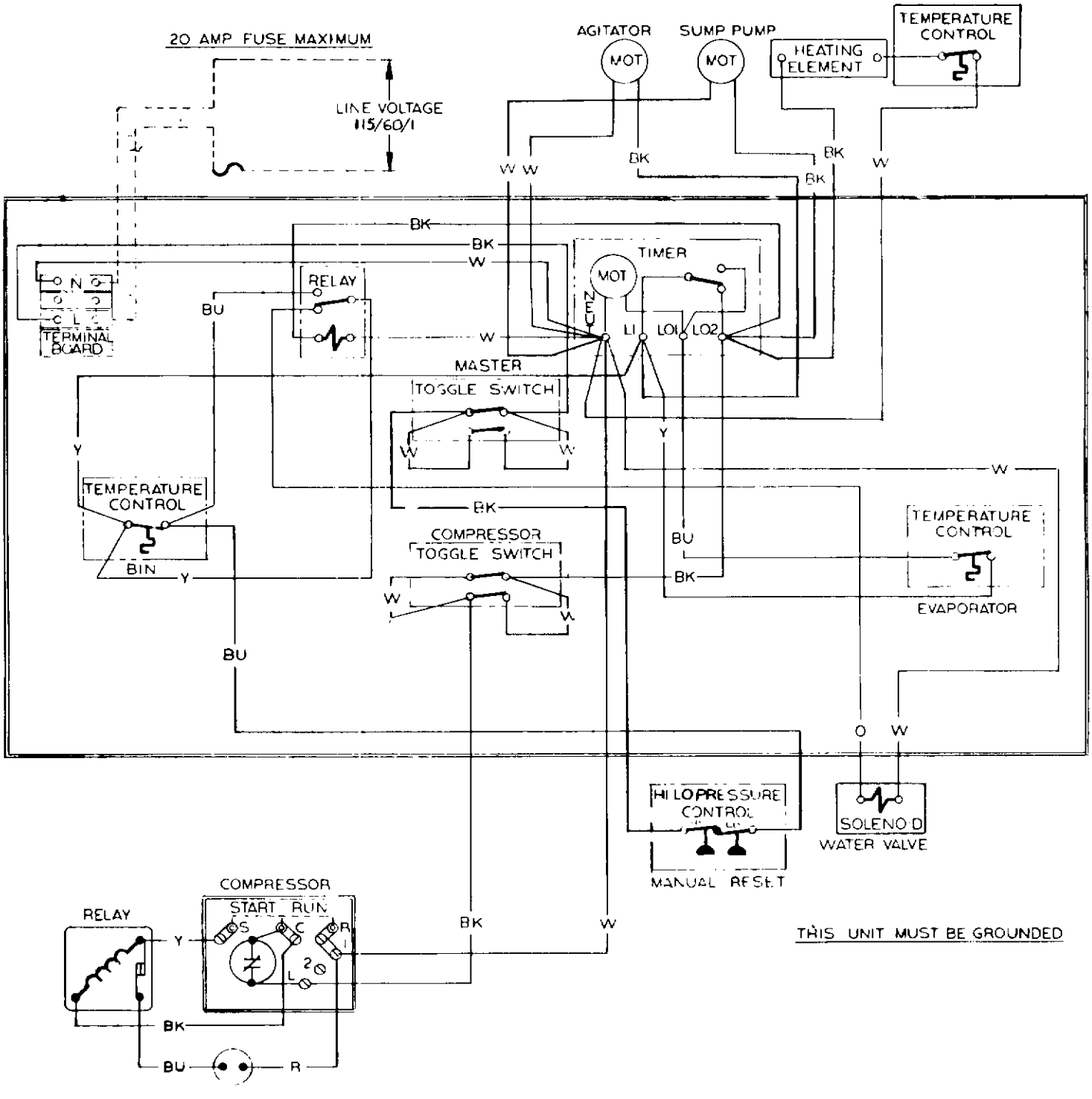

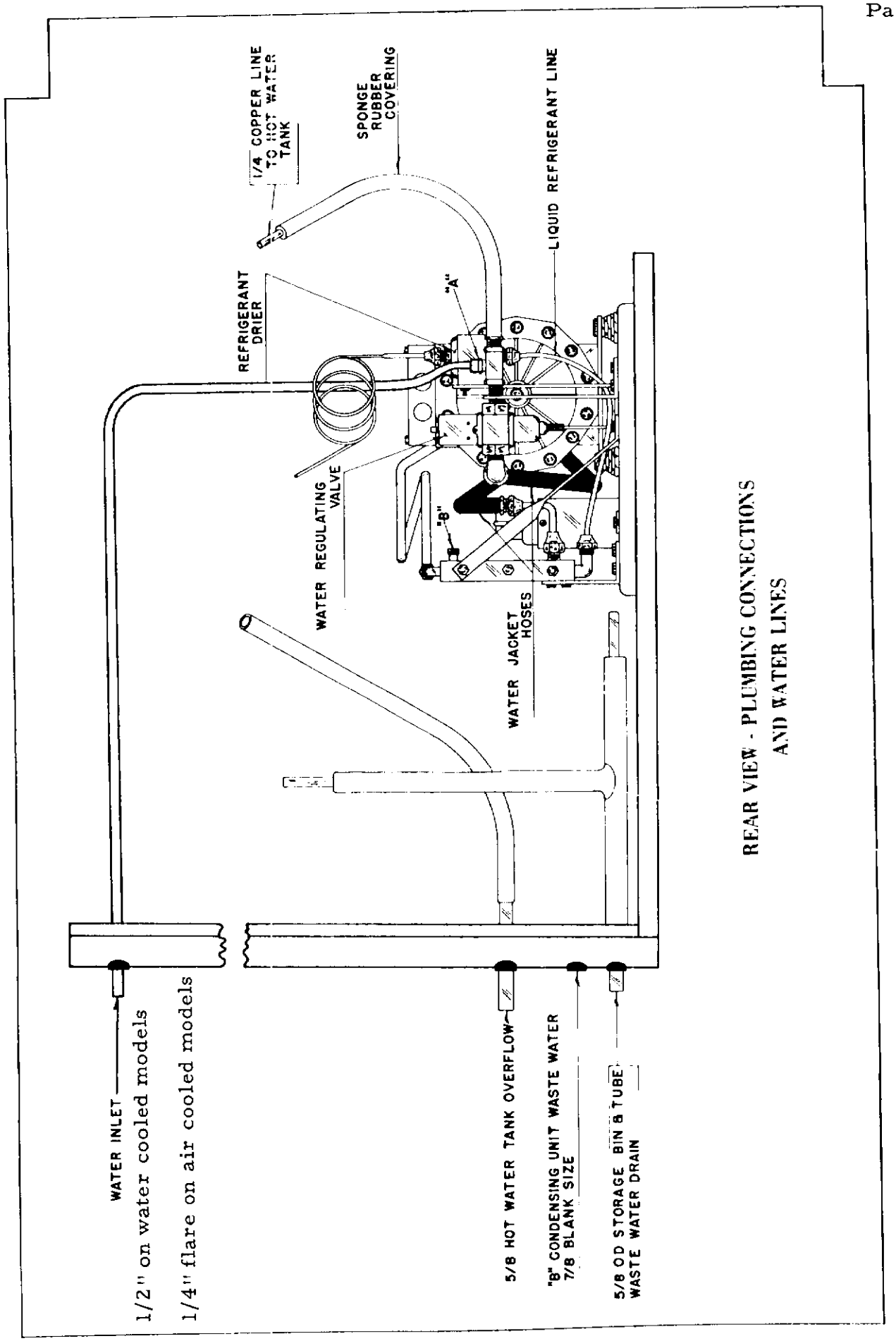

REAR VIEW - PLUMBING CONNECTIONS
AND WATER LINES

INSTALLATION PRACTICE

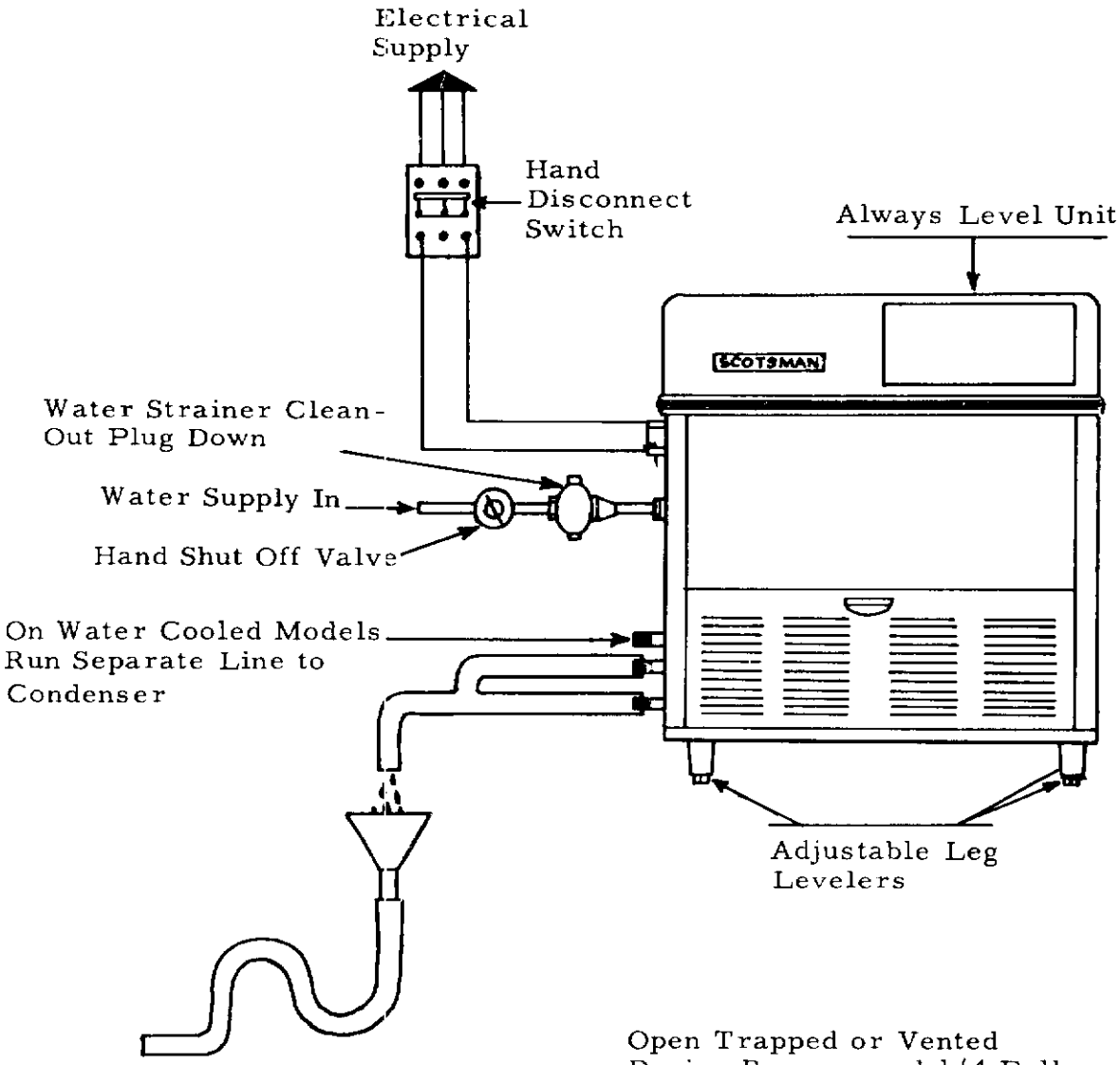

FINAL CHECK LIST

1. Is the unit level? (IMPORTANT)
2. Have all electrical and piping connections been made?
3. Has the voltage been tested and checked against the nameplate rating?
4. Have the compressor hold-down bolts been lossened so the compressor rides freely on its mounting springs.
5. Is the water supply valve open and the electric power on?
6. Is the water reservoir filled and shut off? Paper removed and float adjusted.
7. Is the unit clean?
8. Has the owner been given the operating manual, and has he been instructed on how to operate the machine?
9. Have the installation and warranty cards been filled out? This is the owner's protection as well as the sellers.
10. Check all refrigerant and conduit lines to guard against vibrations and possible failure.
11. Is there 4" clearance behind and around unit for proper air circulation?
12. Is unit in a room where ambient temperatures are minimum 50° F. even in winter months?

INSTALLATION

START UP

1. On all water cooled models, turn on water supply to water-cooled condenser and check for leaks in connections made.

2. Turn on cube supply at hand shut-off valve. Make sure hot water tank fills to overflow, if it does not, adjust timer lever to 2 1/2 minute setting. NOTE: Unit has built-in water flow control set to reduce flow rate to approximately .45 gallons per minute.

3. Check electrical circuit. 17 Amps. Do not connect with other appliances into one ordinary wall outlet: 115 volts required.
4. Inspect components in electrical control box, check for loose or frayed wire, then turn both manual switches to "on" position. NOTE: All "H" model cubers have two manual on-off switches. One is for motor compressor only during cleaning operation, one is master switch for complete unit.

5. Turn disc on time clock to the right just far enough for water solenoid valve to energize. Allow clock to take it through harvest cycle. This will be approximately two minutes. Dial pointer should be set on Number 2. After the compressor starts, turn the dial completely around and send it through another harvest cycle. Do this several times. This will completely flush out machine of any dust that may have accumulated in shipment.

6. After machine has been properly flushed, allow it to go into a freezing cycle - check for possible water leaks, check sump pump operation - should be running freely. Also note if jet tube travel is correct, and that none of the jets are plugged. Jet spray of water should hit the middle of the cups.

7. Time clock dial does not rotate at the end of the harvest cycle; it is started later by the cube size control located in the control box.

8. Freezing time will be approximately 18 minutes in a 70 degree ambient. (Longer if above, and shorter if below.) Average complete cycle time is 20 minutes.

9. Watch first cube harvest and check to make sure that plastic curtain has not not been damaged in shipment.

10. Check size of cubes made: If too small, after a second cycle, adjust cube size control to lower or colder setting - until desired cube size is reached.

INSTALLATION

11. Check texture of cubes made: Partially cloudy cubes throughout suggest unit running short of water near end of freezing, or possibly an extremely bad water condition, which would indicate use of filtering or purifying equipment. Contact SCOTSMAN - Queen Products, Div., Ice Machine Service Department, Albert Lea, Minnesota, for futher details.

12. With unit on harvest cycle, take a handful of cubes made and hold on storage bin thermostat cover. Should cut unit off in one or two minutes - remove ice: unit should cut back on automatically. Thermostat is factory set at 35 degrees out, 39 degrees in.

13. Install gauges and check head and back pressure: air-cooled models, head pressure after twenty minutes of freezing cycle at 70° ambient will be approximately 125 pounds PSI. The back pressure starts out at approximately 50 pounds PSI and gradually pulls down to approximately 4 pounds PSI just before harvest cycle. Higher ambients and dirty condenser will cause higher pressures. Water-cooled models have water regulating valves factory set at 125 pounds PSI: check reading and adjust if necessary. Back pressure will operate the same as on air-cooled models.

14. Remove gauges, replace control box cover and all service panels.

15. Instruct owner on how to operate and clean machine.

HARVEST CYCLE
MM-205

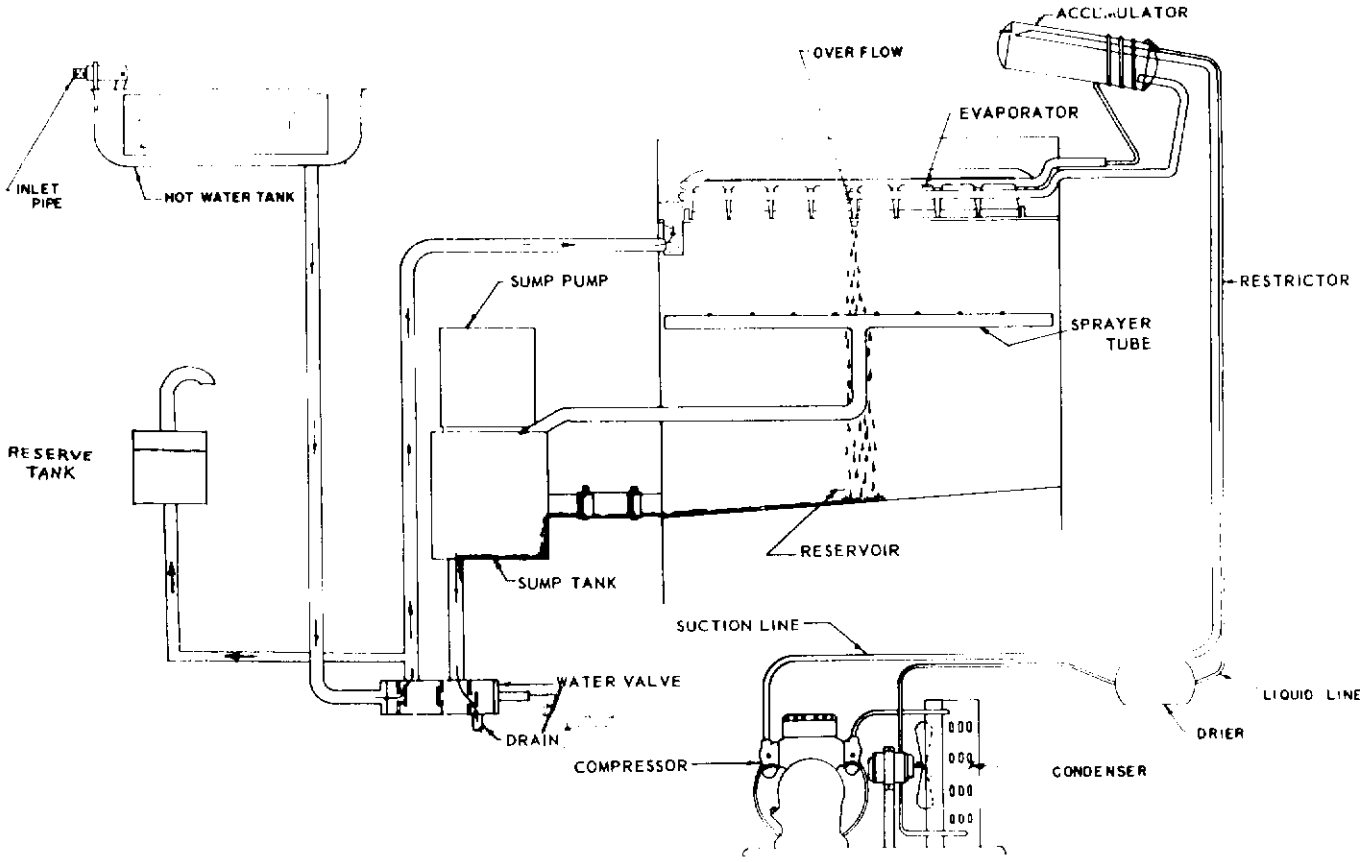

At the end of the freezing cycle the time clock operated switch opens compressor, sump pump and heater element circuit, and closes circuit to time clock motor, drive motor and solenoid operated water valve. At this time, the water valve allows heated water in hot water tank to flow by gravity through solenoid operated valve, and into the upper cavity of the freezing chamber, and, at the same time allows the surplus water from the preceding batch of ice cubes to go down the drain. The hot water from the water tank flows into the rubber platen holding the cups and by conduction on back of cups causes cubes to defrost. The platen cavity is completely filled up to the overflow point, and continues to overflow while in the defrost cycle; the amount of this water running over the overflow pipe is controlled by the size of the flow control orifice and the length of harvest time setting on the time clock; overflow water goes down the drain also. Meanwhile, cubes being released from the cups drop by gravity and are mechanically ejected through curtained opening into storage bin by jet tube which is actuated by drive motor. At completion of harvest cycle, the micro-switch on the timer now drops points holding defrost components in cycle and switches to freezing cycle set of contacts. Clock motor now stops and will not start until cube size control closes once more. The freezing cycle starts and the water valve allows the hot water tank to refill. The chilled water from the upper cavity flows by gravity through the water valve along with water from reserve tank, into the sump tank. Here it is picked up by the sump pump and this water is used to produce the next batch of cubes.

FREEZING CYCLE
MM-205

Water Circuit - Refrigerant

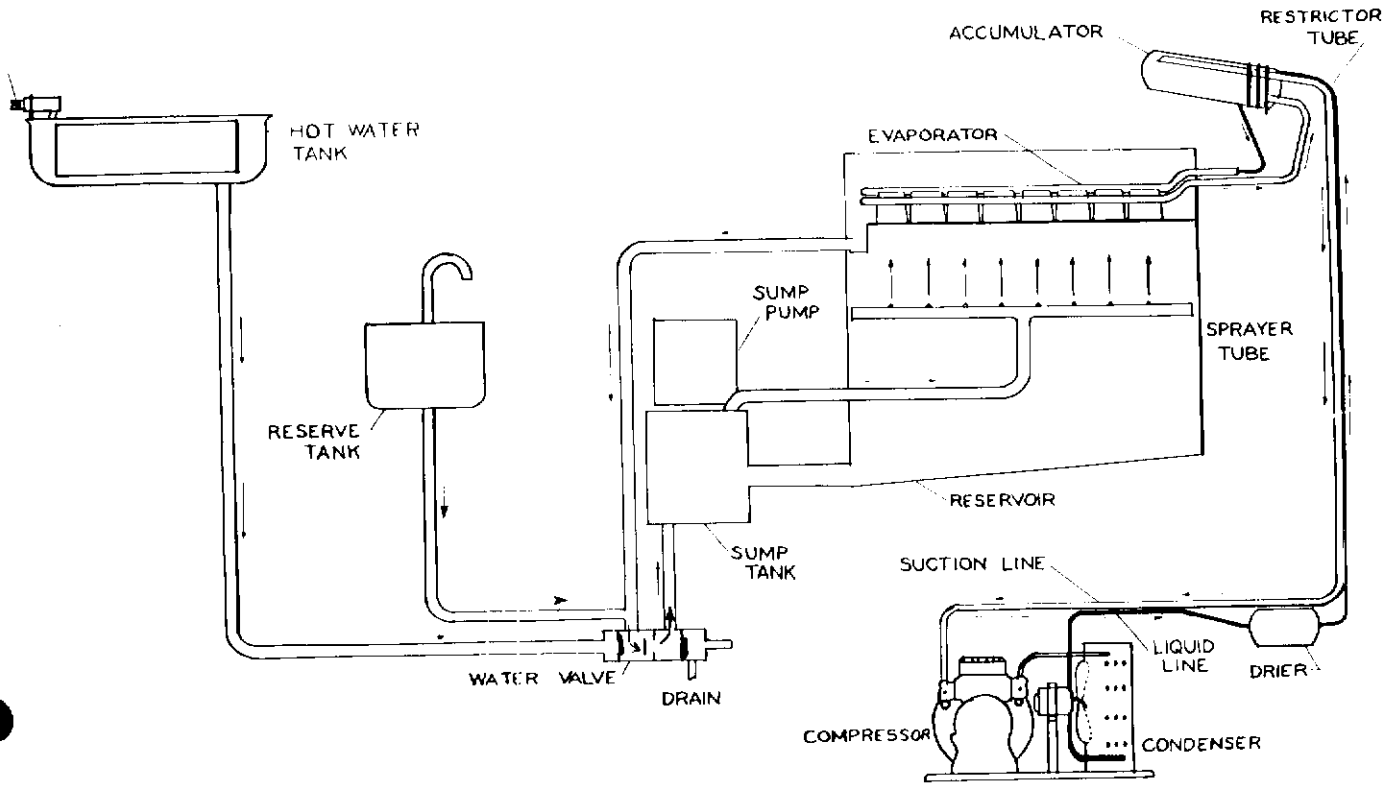

At the start of the freezing cycle, reservoir and sump tank contain enough water to make a complete batch of ice cubes, plus approximately an extra pint. When time clock closes load circuit, it starts the compressor, sump pump and heater element in hot water tank. At the same time, it opens the circuit to clock motor. (Clock motor does not run first part of freezing cycle---This is approximately 10 minutes.) This timer has a single pole double throw micro-switch for carrying and directing current. After a predetermined amount of ice is frozen, the cube size or reverse acting temperature control closes, actuating the time clock motor circuit which continues the freezing cycle approximately 9 more minutes. (After clock motor starts, freezing will be 12 minutes less defrost time setting.

Harvest water is used to produce the next batch of ice, therefore on the initial start up it is necessary to have the unit in a harvest cycle. This can be done by manually turning timer to harvest position.

SERVICE ANALYSIS

SYMPTOM	POSSIBLE CAUSE	SUGGESTED CORRECTION
Shortage of water	Water spraying out through curtains	Replace broken curtains if any broken. Adjust travel of jet tube if spraying too far forward.
	Three-Way water valve leaking	Check the valve for foreign matter. Check valve seats and replace if necessary.
	Water entering hot water tank too slowly	Check pressure at source-2 required. Dirt in solenoid flow control- blow out.
		Partial restrictions in water strainer. Clean Strainer.
Irregular size cubes and some cloudy	Some jets plugged	Clean jets.
	Shortage of water	See Shortage of Water
	Cube Chute in path of spray	Reposition cube chute.
	Unit not level	Water overflowing air vent holes on low side burning cubes. Level as required.
Cubes too large	Cube size control set low	Raise setting on cube size control.
Decreased ice capacity	Inefficient compressor	Replace.
	Leaky water valve	Replace or repair.
	High head pressure	Dirty condenser. Clean. Bad fan motor. Replace. Non-condensable gas in the system: purge the system. Too hot a location with poor circulation: relocate the unit, or provide for ventilation by cutting openings. Overcharge of refrigerant. Correct the charge.
	Partially restricted cap tube	Purge & replace charge
Hole washed inside cube	Water over the top of cube cups during h	unit.

SERVICE ANALYSIS

SYMPTOM	POSSIBLE CAUSE	SUGGESTED CORRECTION
Unit will not run.	Blown fuse	Replace fuse & check for cause of blown fuse.
	Bin thermostat set too high	Adjust thermostat. Set between 35° out to 39 degrees in.
	Switch in Off position	Turn switch to On position.
	Inoperative master switch	Replace switch
	Timer contacts open	Replace timer contacts.
Compresser cycles intermittently	Low voltage	Check circuit for overloading. Check voltage at the supply to the building. If low, contact the power company.
	Dirty condenser	Clean with vacuum cleaner, air or stiff brush. (Do NOT use wire brush.)
	Air circulation blocked	Allow sufficient air space all around unit.
	Inoperative condenser fan motor	Check to see if defective. If defective, replace.
	Non-condensable gases in system	Purge the system.
Cubes too small	Cube size control set too high	Lower the setting. Turn towards colder.
	Partially restricted capillary	Blow charge, add new gas & drier.
	Moisture in system	Replace the dryer.
	Shortage of water	See remedies for shortage of water.
	Shortage of refrigerant	Check for leaks and recharge.
Cloudy cubes	Shortage of water	See remedies for shortage of water.
	Dirty water supply	Use water softener or water filter.
	Restricted strain on pump	Clean pump strainer.
	Accumulation of impurities	Use SCOTSMAN Ice Machine Cleaner.
Poor harvests	Too short defrost time	Check and adjust harvest cycle. Timer should be set between 2 or 2 1/2.
	Restriction in incoming water	Check water feed line strainer and flow reducing valve. To give greater water flow increasing defrost time.
	Insufficient quantity of hot water	Cold ambient - must be 50° minimum faulty fan control on aircooled models.
	Solenoid valve not opening the water valve	Solenoid binding or burned out. Replace.
	Air vent holes in upper cube cups plugged	Clean out holes.

MM-205

SUMP PUMP

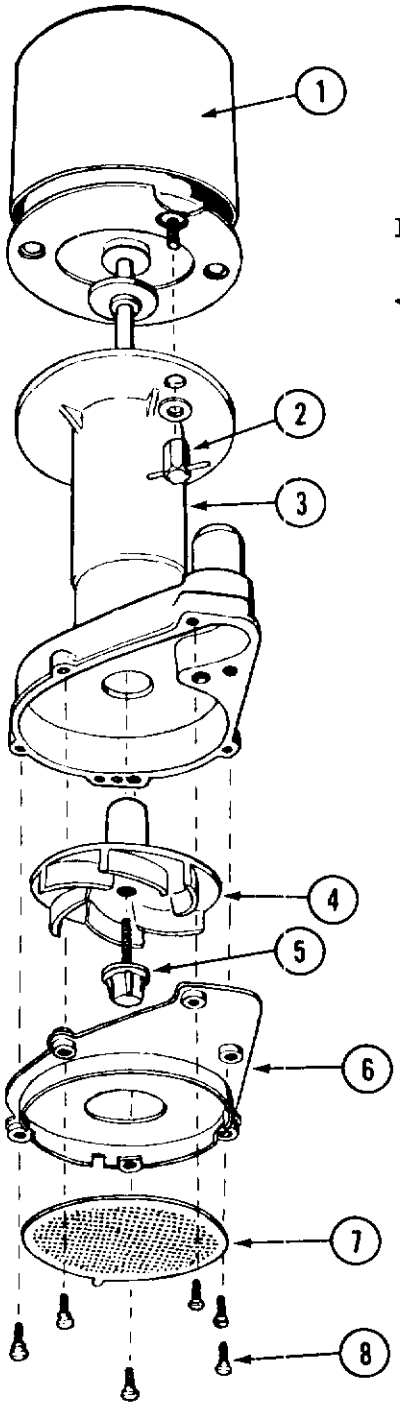

ITEM NO.	PART NO.	NAME
1.	12-1351-22	Motor Only
2.	12-1351-32	Wing Hex Nuts
3.	12-418-30	Pump Body
4.	12-1351-21	Impellar and Spring
5.	12-1351-31	Impellar Screw and Gasket
6.	12-1351-27	Bottom Inlet Plate
7.	12-1351-26	Inlet Screen
8.	12-1351-29	Wing Screws
	~~12-418-1~~ 12-1701-01	Complete Pump " "

MM-205H CONTROL BOX ASSY

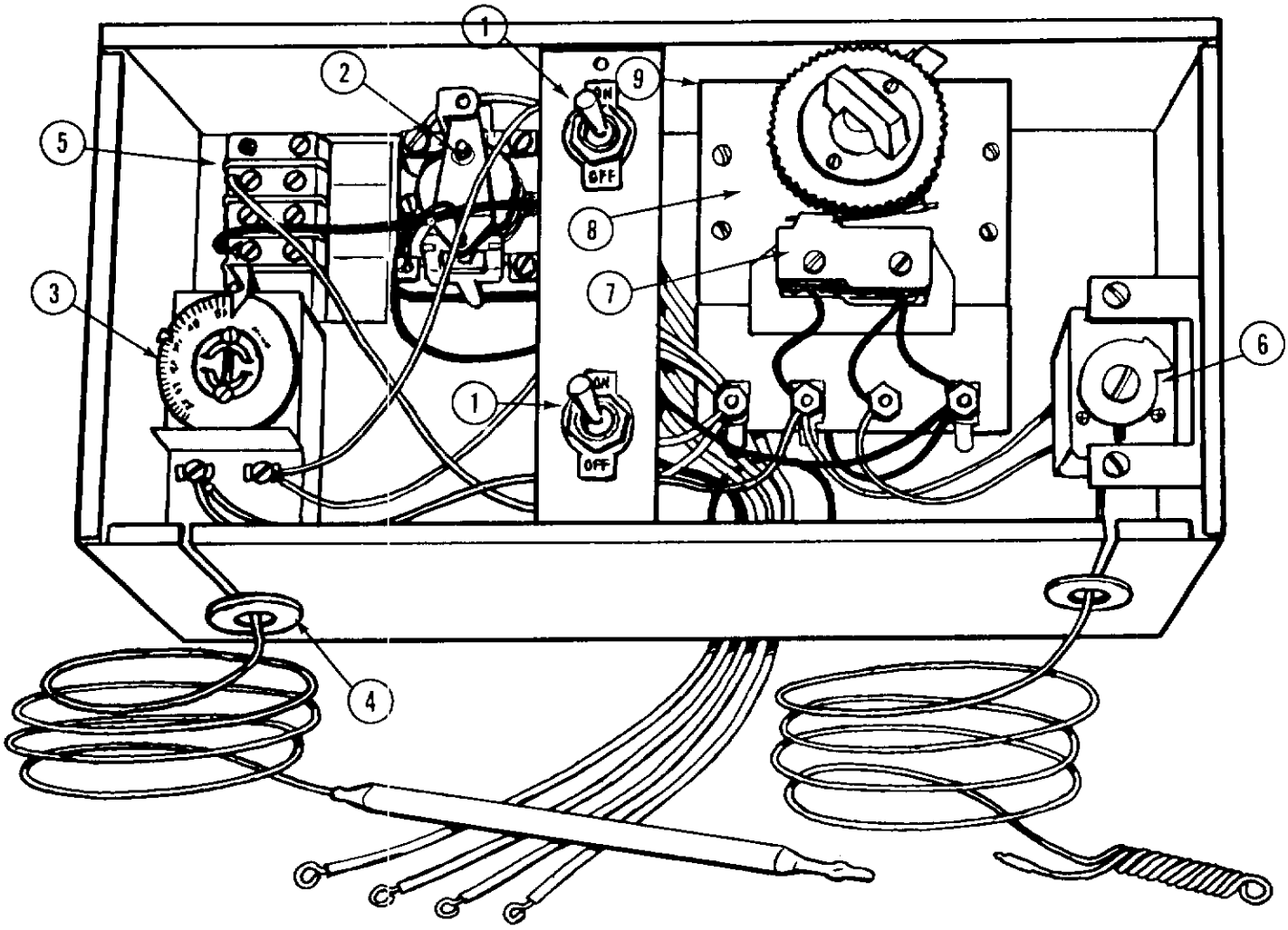

ITEM NO.	PART NO.	NAME
1.	12-537	Switches
2.	12-419	Relay
3.	11-99-1	Bin Control
4.	13-124	Grommets
5.	12-813	Terminal Block
6.	11-851-20	Cube Size Control
~~7.~~	~~12-645-20~~	Timer Micro-Switch only
~~8.~~	~~12-645-1~~	Timer
~~9.~~	~~12-367~~	Timer Motor only
10.	A19C70-C21	TIMER ASSY

MM-205
COMPLETE UNIT

(Right Side)

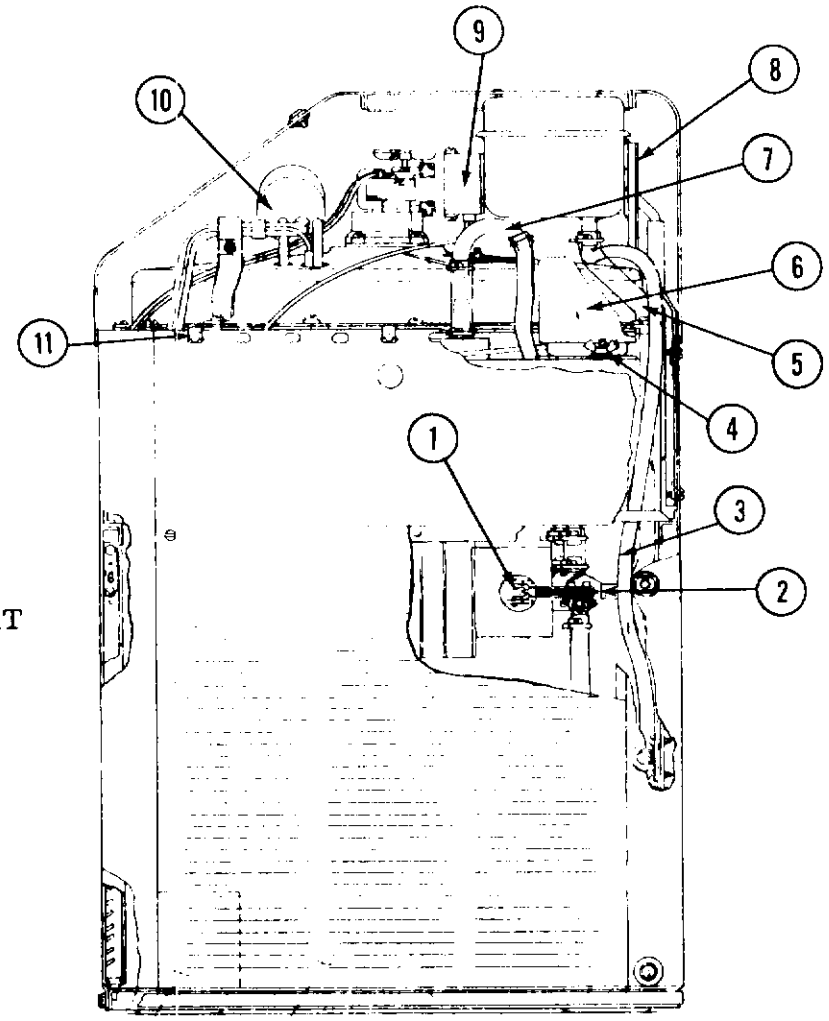

ITEM NO.	PART NO.	NAME
1.	12-248-1	Solenoid
2.	A-13460	Complete Valve
3.	13-79	Rubber Drain Tube per ft.
4.	3-552	Wing Nut
5.	5-179	Tygon Tube per ft.
6.	12-418-1	Sump Pump
7.	A-17080	Elbow
8.	A-6742	Hot Water Tank Bracket
9.	A-6480	Thermo Box Cover
10.	S-9508	Suction & Acc. Assy
11.	3-449	Speednuts (18)

MM-205
COMPLETE UNIT

(Front)

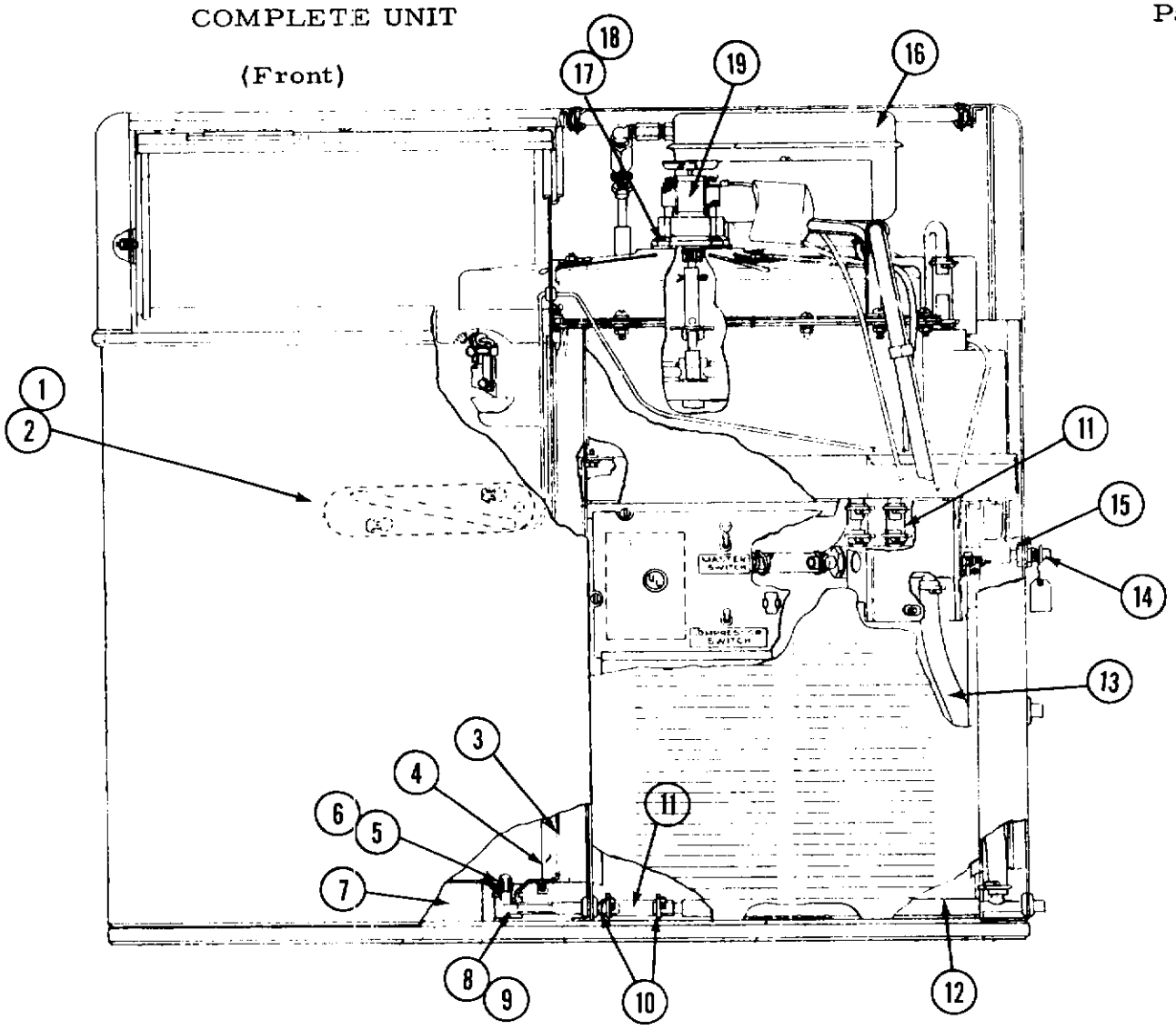

ITEM NO.	PART NO.	NAME
1.	A-15759	Bulb Cover
2.	13-590	Bulb Gasket
3.	A-15743	Insulation Layout
4.	A-15705	Storage Bin
5.	A-6448	Strainer
6.	A-18090	Drain Fitting (Male)
7.	A-15721-2	Bottom Insulation
8.	A-18103	Drain Ass'y
9.	2-530	"O" Ring
10.	2-1338	Hose Clamp
11.	5-179	Tygon Tube per ft.
12.	A-16174	Drain Assy
13.	13-567	Drain Tube per ft.
14.	A-9755	Inlet Water Tube
15.	S-7044	Nut
16.	A-12870	Tank Cover
17.	13-176	Drive Motor Gasket
18.	3-1211	Screw (4)
19.	12-675-1	Drive Motor

MM-205H CASE PARTS

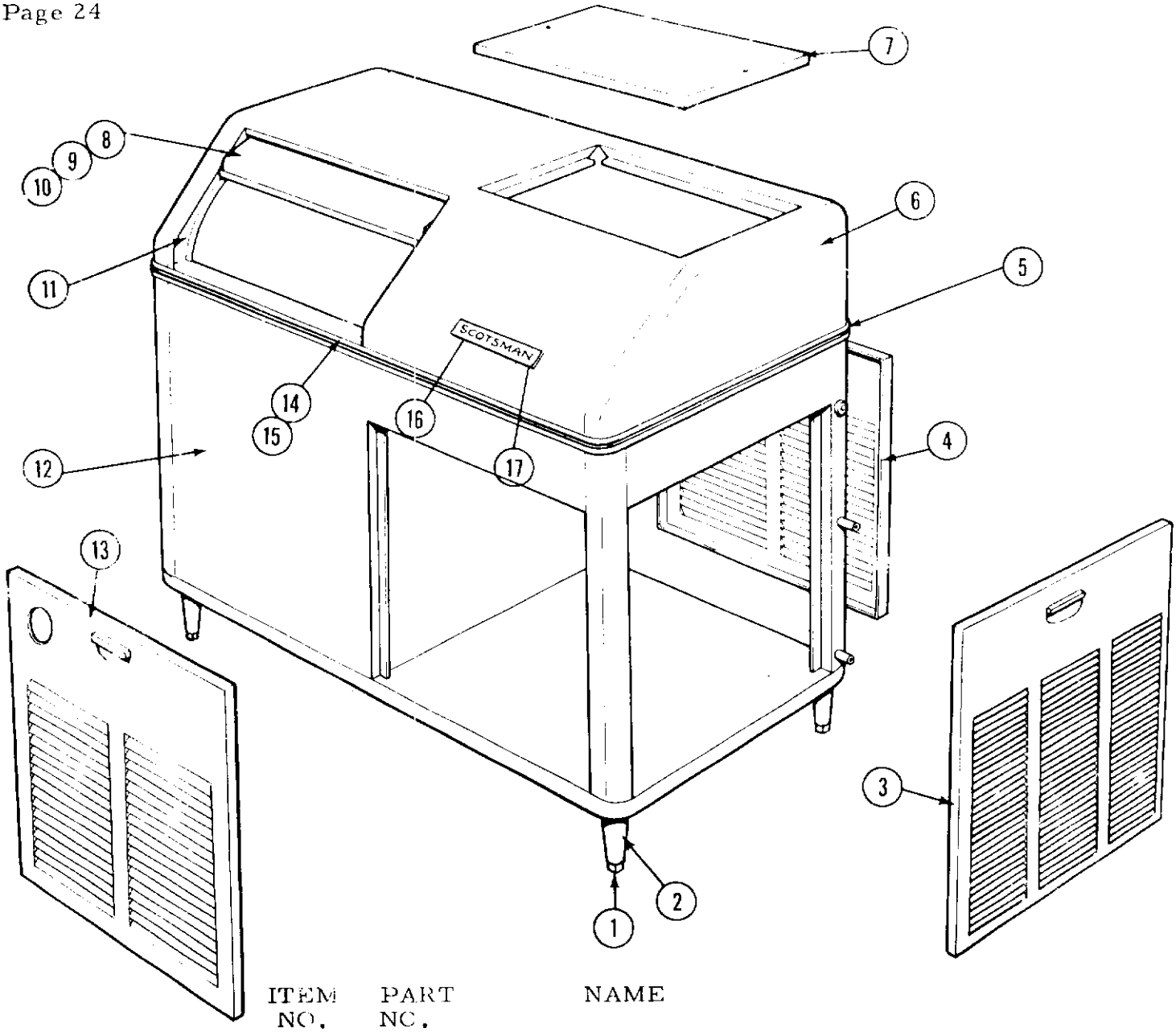

ITEM NO.	PART NO.	NAME
1.	8-522	Leg Levlers
2.	A-15803	Leg
3.	S-6840	Side Door
4.	A-8739	Back Door
5.	A-5862	Rear Moulding Strip
6.	A-15603	Hood (less doors)
7.	S-6849	Top Door
8.	A-15559	Sliding Door
9.	3-643	Door Glide
10.	2-1616	Door Catch
11.	A-16208	Door Track
12.	A-16177	Case Ass'y (less doors)
13.	A-15866	Front Door
14.	A-5863	Moulding Strip
15.	15-324	Plastic Insert
16.	15-156	Emblem
17.	3-271	Speed Nuts

MM-205
HOT WATER TANK

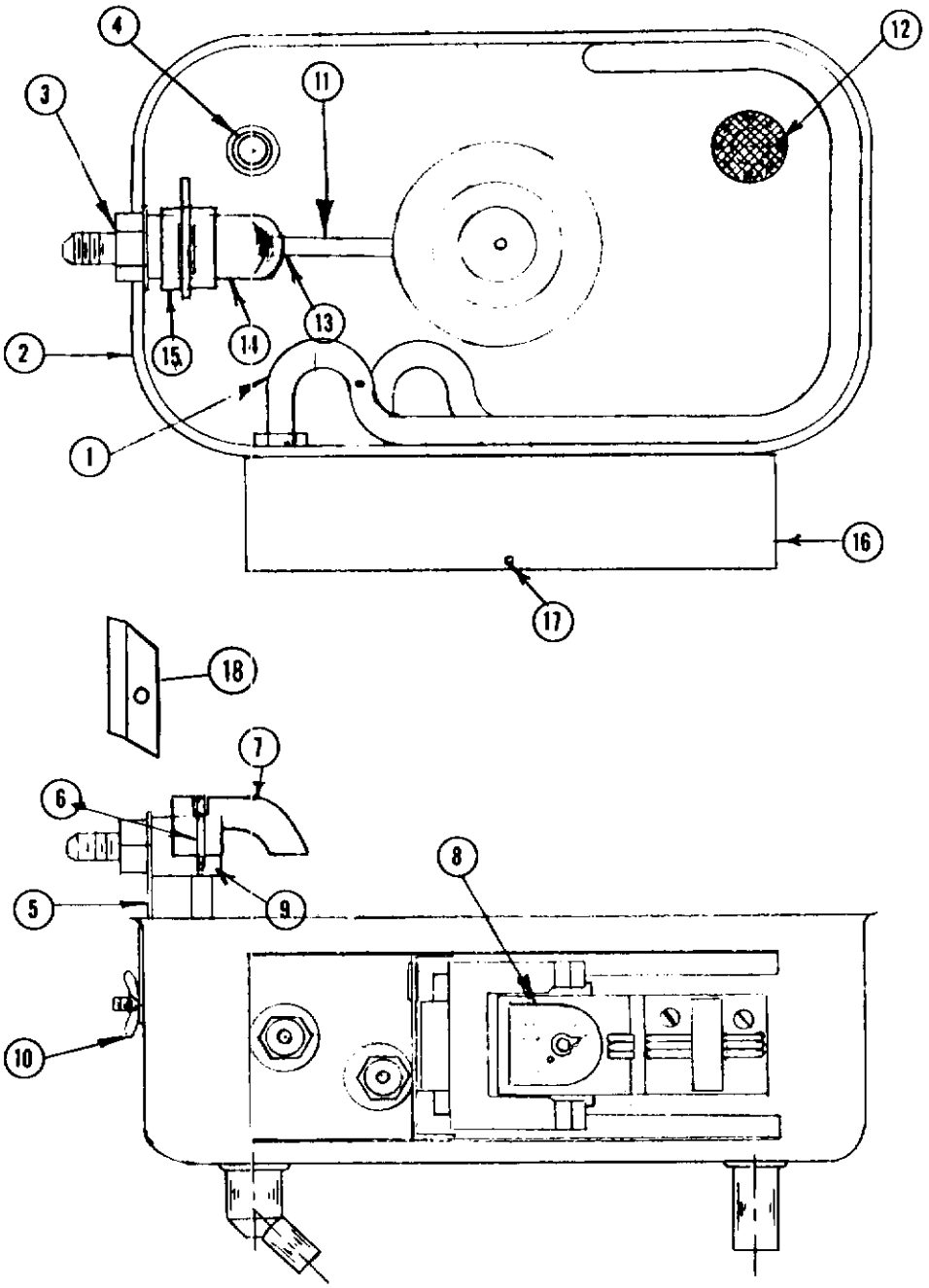

ITEM NO.	PART NO.	NAME
1.	12-1421-20	Heating Element
2.	A-6467	Hot Water Tank Only
3.	S-7044	Nut
4.	A-18691	Stand Pipe
5.	A-12869	Inlet Water Bracket
6.	2-1259	Valve Pin
7.	2-1320	Water Deflector, plastic
8.	12-246	Thermo Disc
9.	A-6771	Water Inlet Valve Ass'y (complete with float)
	A06771-020	
10.	3-255	Wing Nut
11.	A-12068	Float Ass'y (includes arm)
12.	A-5998	Screen
13.	A-5777	Valve Seat Holder (*)
14.	S-6947	Valve Seat (*)
15.	3-1001	Rivet, Stainless Steel (*)
16.	A-6480	Thermostat Box Cover
17.	3-129	Screw
18.	A-18418	Water Deflector
19.	A-18557	Hot Water Tank Complete (less cover)

MM-205
CONDENSING UNIT
1/2 HP Air Cooled, Copeland

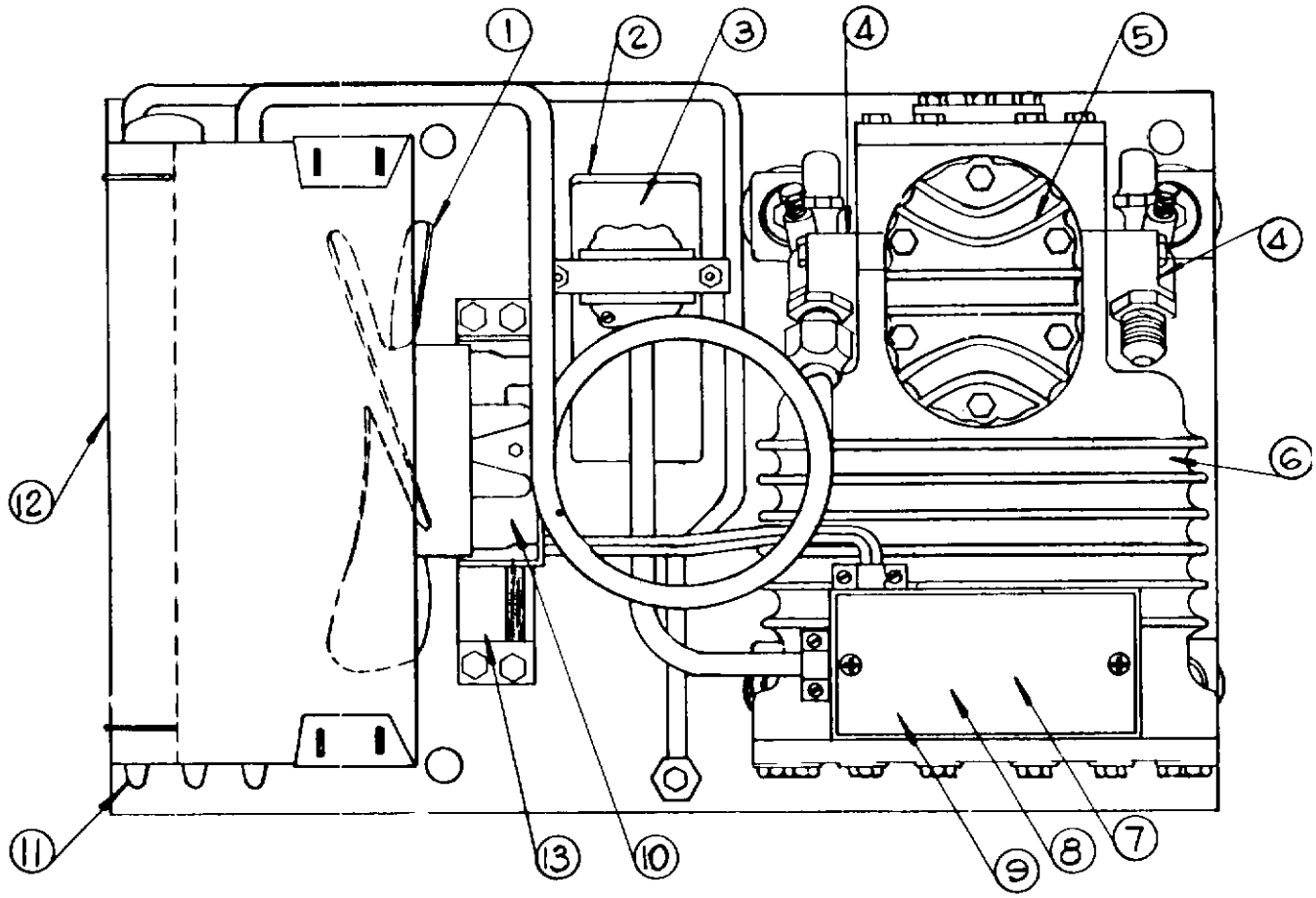

ITEM NO.	PART NO.	NAME
1.	18-363	Fan Blade
2.	18-1901-7	Starting Capacitor
3.	18-1903-4	Relay
4.	18-337	Suction, Service Valve (18-237 Discharge Valve)
5.	18-326	Valve Plate & Gasket Kit Assembly (*)
6.	18-325	Motor Compressor 115/60/1
7.	18-347	Overload Klixon (*)
8.	18-241	Treminal Assembly (*)
		Note: Not available as a complete mounted ass'y

ITEM NO.	PART NO.	NAME
9.	18-270	Terminal Board (*)
10.	18-333-1	Fan Motor
11.	18-334	Condenser
12.	A-12111	Shroud
13.	18-388	Fan Motor Bracket

NOTE: Overload Not Used On Units That Are Inherent Protected. If Possible Use Copeland Part No. When Ordering Capacitors & Relays

CONDENSING UNIT

½ HP Water Cooled, Copeland

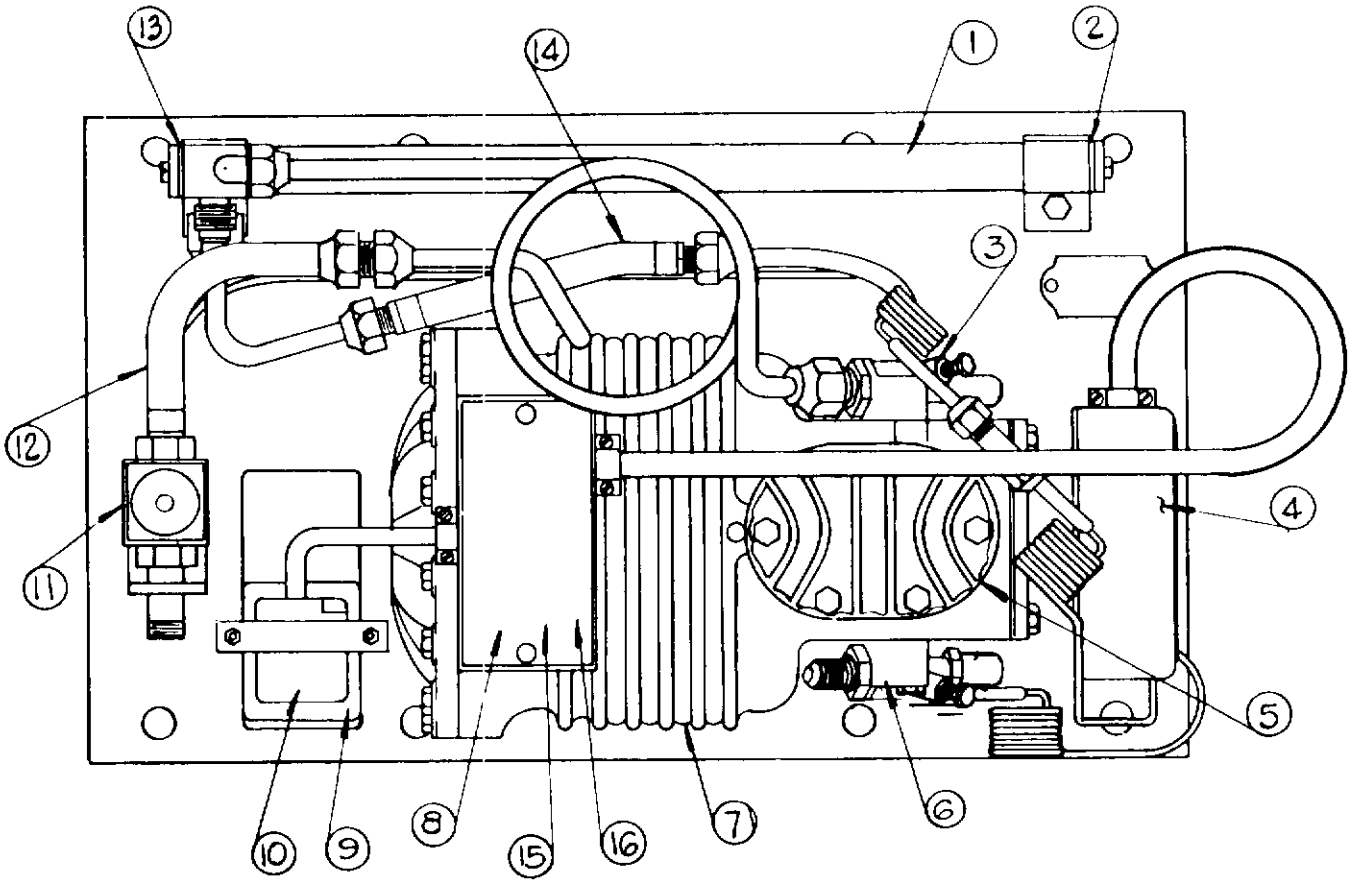

ITEM NO.	PART NO.	NAME
1.	18-368	Condenser
2.	18-262	Plain Gasket
3.	18-237	Discharge Service Valve
4.	11-286	High Pressure Control
5.	18-326	Valve Plate & Gasket Kit Assembly (*)
6.	18-337	Suction Service Valve
7.	18-355	Motor Compressor 115/60/1
8.	18-347	Klixon Overload (*)
9.	18-1901-7	Starting Capacitior
10.	18-1903-4	Relay
11.	11-198	Water Valve
12.	18-260	Compressor to Valve Water Hose
13.	18-263	Manifold Gasket
14.	18-261	Compressor to Condener Water Hose
15.	18-270	Terminal Board (*)
16.	18-241	Terminal Assembly (*)

If Possible Use Copeland Part No When Ordering Capacitors & Relays.

(*) Not Shown

Note:

Not available as a complete mounted assembly.

MM-205

3 WAY WATER VALVE

ITEM NO.	PART NO.	NAME
1.	S-6926	Valve Inlet Cap
2.	13-148	Rubber Valve Seat (3 per unit)
3.	A-8139-20	All Items Covered by No. 3 are included in Repair Kit
4.	3-165	Machine Screw
5.	~~12-2481~~ 12-0248-01	Solenoid
6.	S-8995	Solenoid Pin
7.	2-420	Spring
8.	S-6928	Arm Support Ass'y
9.	3-396-1	Cotter Keys (2 required)
10.	S-7973	Pins (2 required)
11.	S-6932	Valve Arm
12.	A-12545	Valve Body
13.	3-88	Washer (4 required)
14.	3-61	Nut (4 required)
15.	S-6925	Valve Packing Gland
16.	2-557	Valve Stem Guide
17.	2-419	Compr. Spring
18.	S-6924	Valve Seat Washer
19.	2-418	Spring
20.	2-424	Packing
21.	S-6931	Packing Washer
22.	3-570	Fiber Washer
	A-13460	Complete Valve

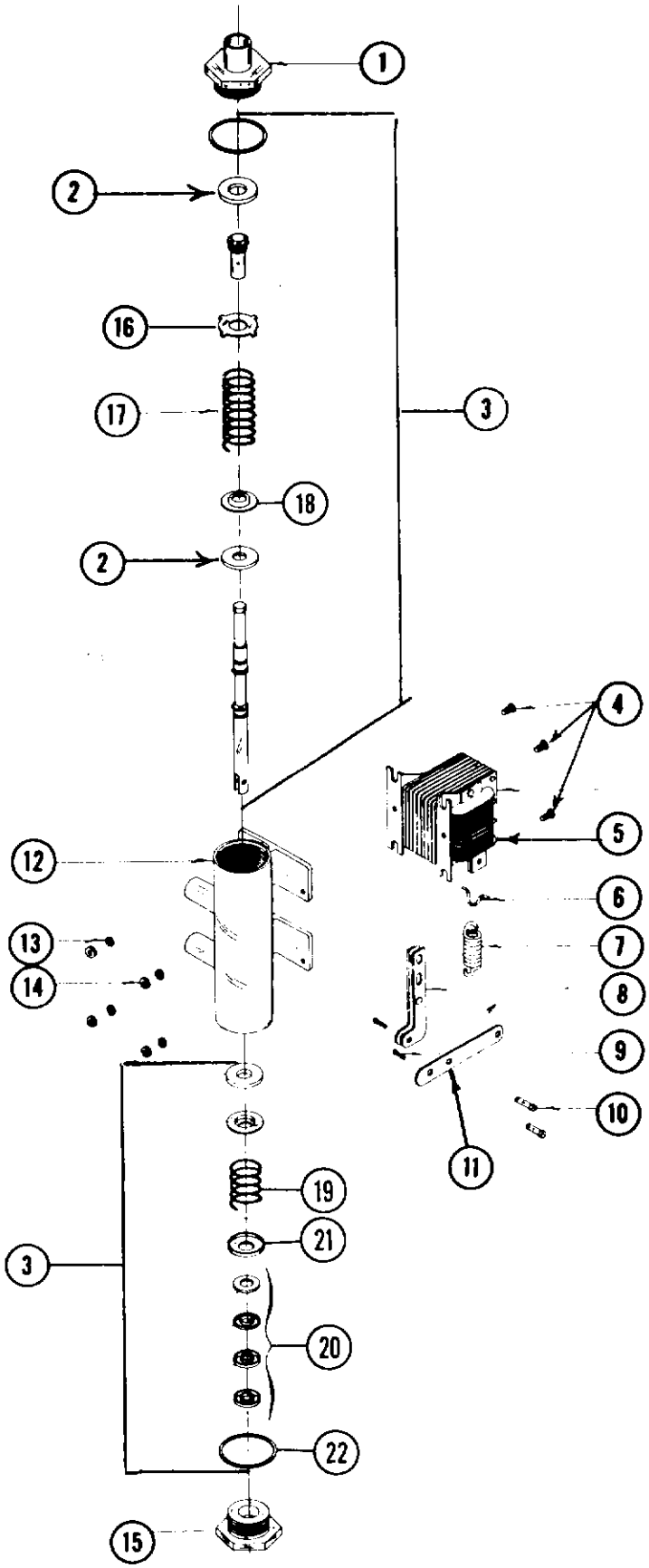

Note:

Complete A-8139-20 kit will be substituted on orders for stem only.

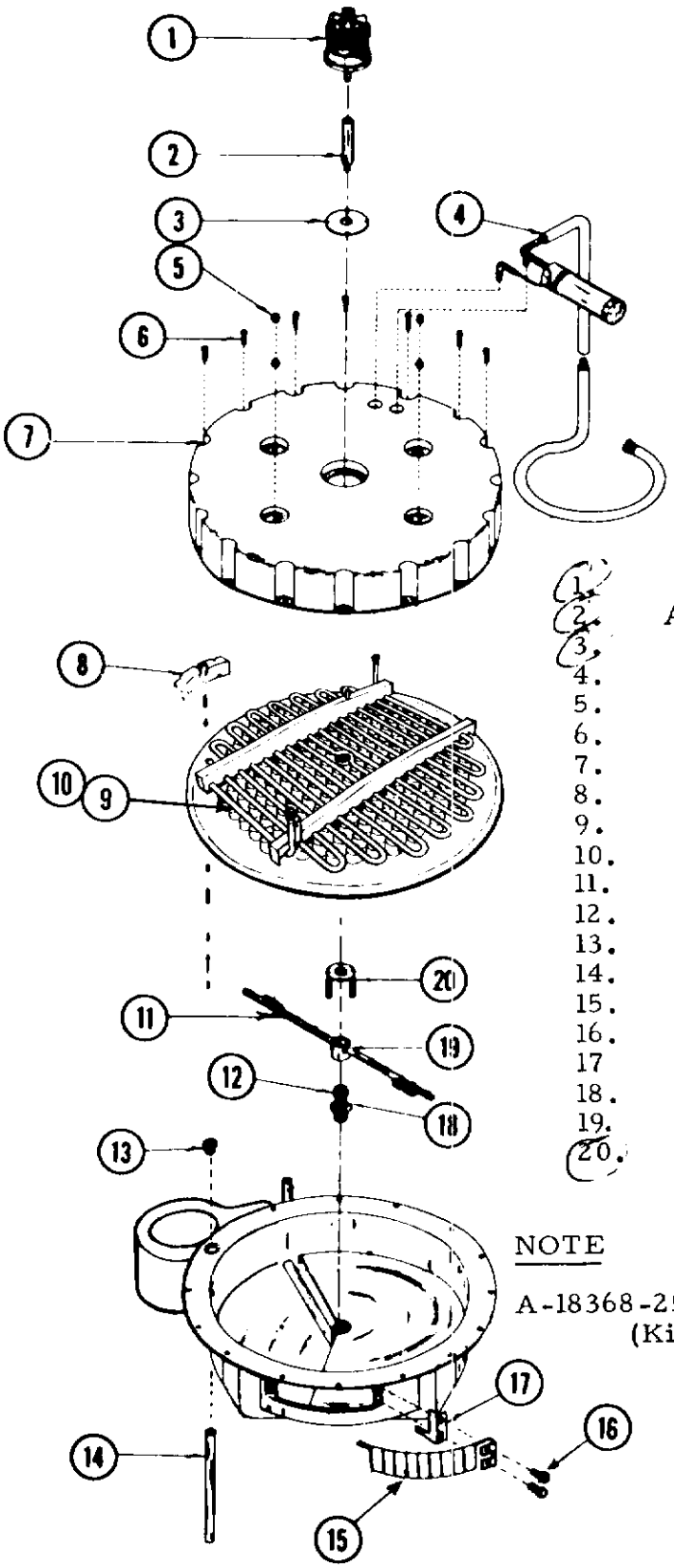

MM-205

COMPLETE EVAPORATOR ASSY

1.	12-675-1	Drive Motor
2.	A-6084	Drive Shaft
3.	13-176	Drive Motor Gasket
4.	S-9508	Suction Line, Cap Tube Assy
5.	3-357	Screw (4)
6.	3-10	Screws (16 required)
7.	A-18356	Top Freezing Chamber
8.	A-12472	Water Baffle
9.	A-18367	Platen Assembly
10.	13-626	Rubber Cup Holder
11.	A-18361	Spray Bar
12.	S-6909	Inlet & Bearing Assy
13.	S-7434	Adapter
14.	A-16238	Hot Water Tube
15.	A-15807	Curtain Assy
16.	S-7234	Cap Nuts
17	S-7730	Cube Stopper
18.	2-433	O-Ring
19.	S-6907	Jets
20.	S-6900	Drive Arm

NOTE

A-18368-25 Complete Freezer Repair Kit
(Kit does not include items No. 1, 2, 3 and 20.)

INSTRUCTIONS FOR INSTALLING A8139-20 VALVE REPAIR KIT

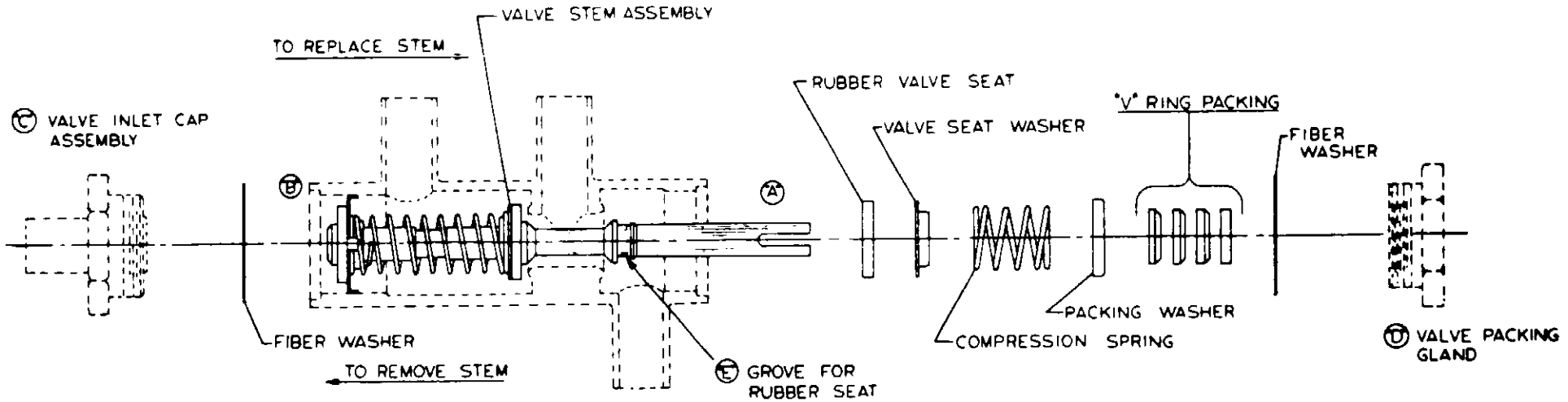

1. REMOVE COTTER KEY AND STAINLESS STEEL PIN (NOT SHOWN) FROM VALVE STEM END "A".
2. REMOVE "C" VALVE INLET CAP ASSEMBLY AND "D" VALVE PACKING GLAND FROM VALVE BODY.
3. REMOVE VALVE STEM ASSEMBLY AS SHOWN.
4. CLEAN THE INSIDE OF THE VALVE BODY.
5. INSERT ASSEMBLED PORTION OF VALVE KIT (VALVE STEM ASSEMBLY), AS SHOWN, THRU END "B".
6. SCREW "C" VALVE INLET CAP, TO VALVE BODY (BE SURE TO INSERT NEW FIBER WASHER) TO POSITION OR SECURE VALVE STEM ASSEMBLY IN VALVE BODY.
7. ASSEMBLE IN SEQUENCE PARTS SHOWN IN DIAGRAM AND PACKED LOOSE IN THE KIT.
   NOTE: USE ½" COPPER TUBE OR EQUIVALENT OVER STEM END "A" TO PUSH RUBBER VALVE SEAT INTO GROOVE "E".
8. SCREW "D", VALVE PACKING GLAND, TO BODY. (BE SURE TO INSTALL NEW FIBER WASHER).
9. ASSEMBLE STAINLESS STEEL PIN AND COTTER KEY TO END "A"

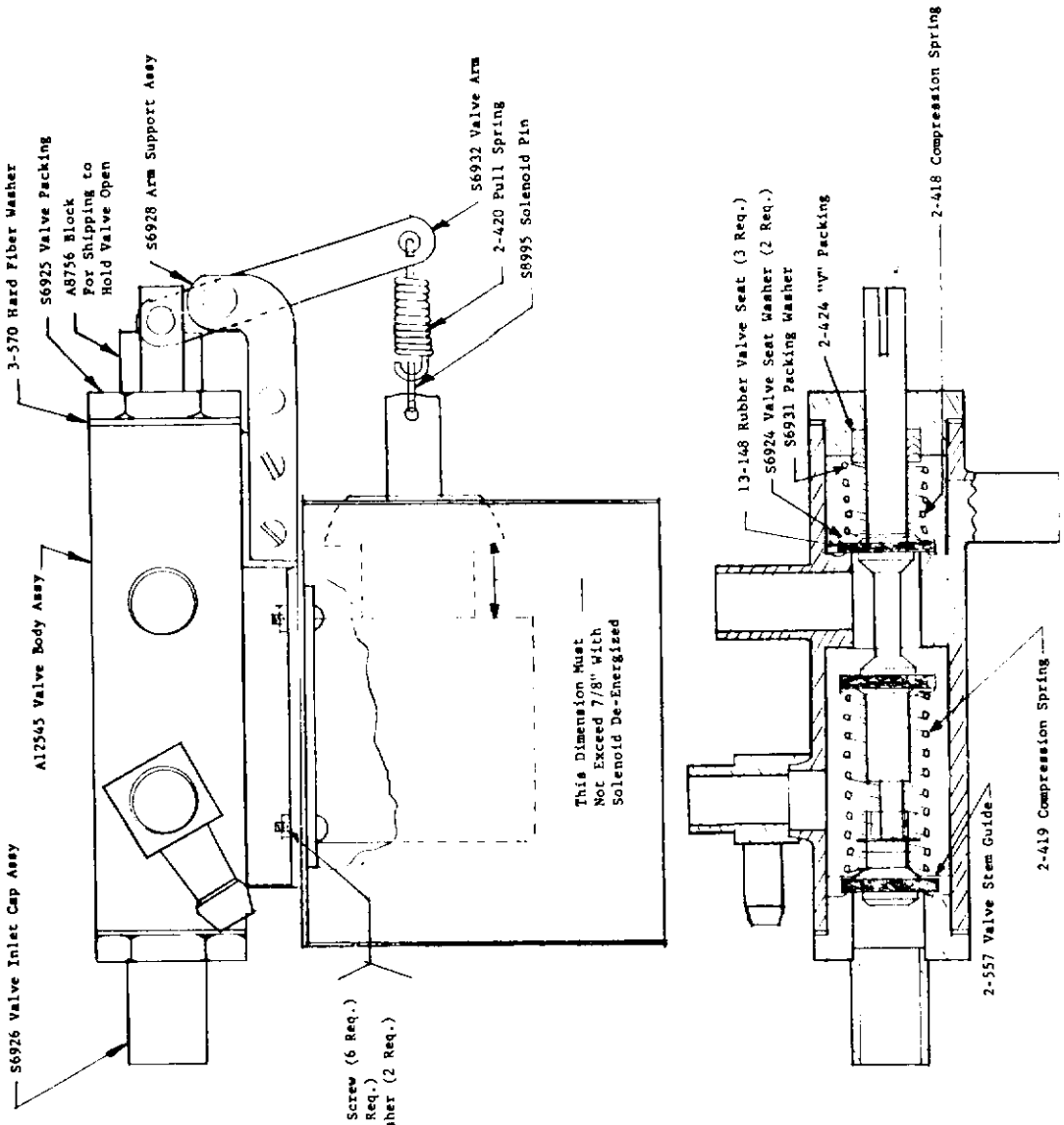

WATER VALVE ASSEMBLED

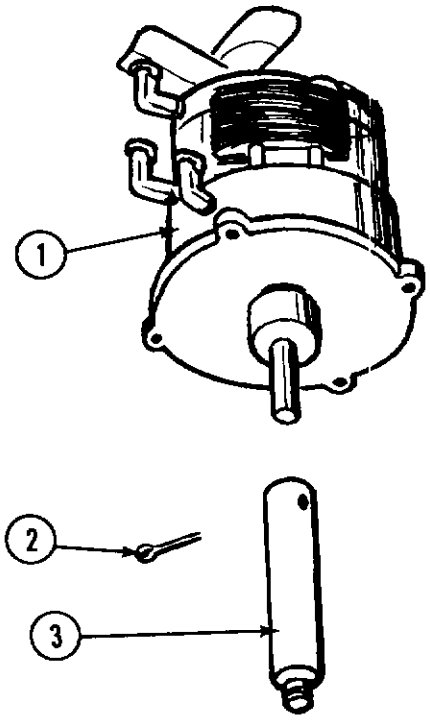

Note: Left Hand Thread

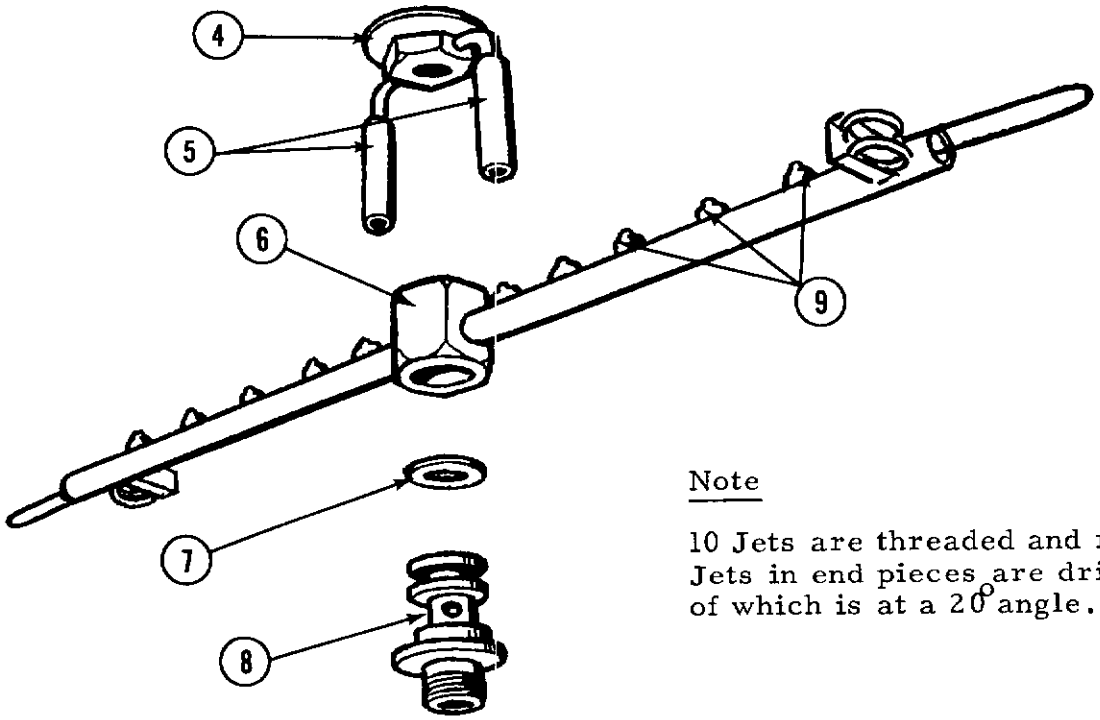

DRIVE LINKAGE AND SPRAY BAR
MM-205

Item no.	Part no.	Name
1.	12-675-1	Drive Motor
2.	3-290	Cotter Ket
3.	A-6084	Drive Shaft
4.	S-6900	Drive Arm
5.	S-7315	Rubber Covers
6.	A-18361	Spray Bar
7.	2-433	"O" Ring
8.	S-6909	Inlet & Bearing Assy
9.	S-6907	Jets

Note

10 Jets are threaded and removeable. Jets in end pieces are drilled holes, one of which is at a 20° angle.

FUNCTIONAL PARTS AND MAINTENANCE

PART NAME: Relay

NUMBER: 12-419

FUNCTION: Relay is used as a by-pass on the bin thermostat when it tries to cut unit off on a full bin of cubes during a freezing cycle. This insures full cubes every time a harvest occures and prevents short cycling on bin thermostat.

SETTING: Factory set.

REPAIRABLE: No. Replace when inoperative.

MAINTENANCE: Check electrical connections and blow points free of lint or dirt.

PART NAME: Temperature Control White Rodgers Type 1604-31
Storage Bin

NUMBER: 11-99-1

FUNCTION: To automatically cut machine off when ice level in storage bin reaches thermobulb. Automatically starts machine when ice level in bin falls below bulb location.

SETTING: Most of these controls have adjustable differential. Setting on range dial should be 35° cut out, 39° cut in.

REPAIRABLE: No. Replace when inoperative. If out of warranty it can be sent in through your local refrigeration supply dealer and repaired or replaced for a small percentage of original cost.

MAINTENANCE: Remove cover, check points for corrosion or arcing every 6 months. Blow control free of bugs dirt, etc. Check capillary for cracks or worn spots due to vibration.

Hold a small handful of ice on thermostat bulb to check operation of control. Tighten electrical connections.

PART NAME: Water valve with solenoid

NUMBER: A-13460-Water valve only
A-8140-Solenoid &Mounting Hardware
12-248-1 Solenoid only

FUNCTION: This water valve is electrically operated by a solenoid. Valve proper has three valve seats and four water ports. This valve is the heart of the water control system. During freezing cycle it uses two upper openings to circulate water between sump tank and sump pump plus excess overflow water caught in reserve tank. Closes off openings to hot water and drain tube. During defrost period, electrically operated solenoid pulls seats back from hot water supply and drain but closes center port to direct hot water to top of platen. Hot water goes up into freezer through first top opening to defrost cubes while water used in freezing cycle and left in sump tank drains through second top opening and out through drain opening.

SETTING: None. Factory set.

REPAIRABLE: Yes, All components are replaceable including valve seats, gaskets, V-packing, solenoids, etc.

MAINTENANCE: Valve and entire unit should be cleaned with ice machine cleaner every six months. In many localities heavy scale accumulation will lodge in valve and hold rubber seats open. This will either let warm water seep into sump freezer supply and cause long freezing cycle or else it will let sump freezer supply seep down drain and cause shortage of cube supply water. This results in short cycles, partial cubes and cloudy cubes. Manually flushing valve will also help in many cases.

FUNCTIONAL PARTS AND MAINTENANCE

PART NAME: Agitator Drive Motor Merkle Korff

NUMBER: 12-675-1

FUNCTION: This motor is used to drive the linkage mechanism which in turn drives the oscillating jet spray tubes. This provides a constant spray movement to all the inverted cube molds and by so doing also aerates the water producing clear solid Scotsman cubes.

SETTING: No settings on motor.

REPAIRABLE: Yes-to some extent. Not recommended although front bearings and windings could possibly be replaced by electric motor shop. Normally replace out of warranty motors.

MAINTENANCE: Oil every six months or less as use indicates. Use SAE 20 oil. There are three oil cups on the motor and gear case to add oil. Drive linkage should be inspected to insure free movement with no binding or drag on drive motor.

PART NAME: Timer

NUMBER: 12-645-1

FUNCTION: Heart of the cyclematic control system is the temperature control Part No. 11-351 and the time clock it actuates. All electrical components are connected to the time clock terminal board and are shunted by means of a single pole, double throw micro-switch to either the freezing cycle or harvest cycle. Micro-switch is actuated by two metal cams that are directly connected to the electric timer clock motor. Timer has a 12 minute cycle, 9 1/2 minutes on defrost cycle. Time clock face has numerals to 7 on half the face. Each numeral represents a one minute period. Face also has a lever beneath it which can be moved to lengthen or shorten defrost period.

SETTING: Normal setting for defrost is 2 1/2 minutes.

REPAIRABLE: Yes. Micro-Switch only, Part No. 12-645-20 is replacable as well as timer clock motor only, Part No. 12-367.

MAINTENANCE: Check all electrical connections, blow contact points free of dust, dirt, etc.

FUCTIONAL PARTS AND MAINTENANCE

PART NAME: Reverse Acting Temperature Control

NUMBER: 11-351

FUNCTION: Reverse acting temperature control, closes on temperature decrease, opens on temperature rise. Control determines length of freezing cycle and by the same token, the cube size. A lower setting on control will produce larger cubes, a higher setting, smaller cubes. This control actuates time clock motor, which then takes over balance of freezing cycle and also defrost period.

SETTING: Control is adjustable with screw driver on off-set cam.

REPAIRABLE: No, Replace when inoperative.

MAINTENANCE: Check electrical connections. Blow points free of dust, dirt, lint, etc.

PART NAME: Solenoid

NUMBER: 12-248-1

FUNCTION: Solenoid is mounted directly on water valve body. Adequate stops are present in the housing of the solenoid but may require bending or adjusting. An electrically operated solenoid which is used to open and close the water valve through mechanical linkage. Solenoid is a continuous duty type.

SETTING: Solenoid itself requires no adjustment, however, linkage should be adjusted so that solenoid can make positive contact when energized and core will leave field when de-energized.

REPAIRABLE: No. Replace when inoperative.

MAINTENANCE: Solenoid proper requires no maintenance, but care should be exercised to insure proper voltage to coil to avert burn-outs. Mechanical linkage can be oiled and adjusted to prevent drag on solenoid. Many solenoid burn-outs are caused indirectly such as a sticking time clock which will keep solenoid energized for long periods of time.

PART NAME: Sump pump

NUMBER 12-418-1

FUNCTION: Recirculating pump used to pump supply water in sump tank to jet tubes during freezing cycle.

SETTING: Factory set

REPAIRABLE: Yes. Motors rewound, impeller blades replaced. Generally out of warranty pumps are replaced by motor only part no. 12-1351-22.

MAINTENANCE: None. Grease seal ball bearing permanently lubricated

SERVICE - COMPLETE UNIT

ALL STEPS LISTED BELOW SHOULD ONLY BE STARTED WHEN WATER AND ELECTRICAL SUPPLY ARE OFF TO PREVENT ACCIDENTS.

To remove cabinet top or hood.

1. Removee two back end screws in rear moulding strip.
2. Pull out black insert tape concealing screws.
3. Remove balance of screws in moulding strips.
4. Lift hood straight up.

To remove Sump Pump.

1. Remove hood top panel.
2. Disconnect hose clamp on goose neck.
3. Remove electrical lead to control box.
4. Loosen 2 wing nuts and washer. This disengages pump cover.

To remove Drive Motor

1. Remove hood top panel.
2. Disconnect electrical cord in control box
3. Reach in through curtained opening and remove drive fork from drive shaft attached to motor. Note drive fork has left hand thread.
4. Remove 4 screws holding drive motor to freezer dome and pull drive motor shaft out.

To remove the Jet Tube assembly

1. Reach in through storage bin sliding door and remove two brass thumb screws holding plastic curtain closed.
2. Open curtain on hinge and reach hand into opening, feeling for spray bar.
3. Follow spray bar to center hub, turn spray bar so one end points towards curtain opening. Now lift straight up on spray bar. then out after spray bar comes off center hub.

To remove Water Inlet Valve to hot water tank.

1. Remove hood top panel.
2. Remove hot water tank cover.
3. Loosen 1/4" SAE flare nut to water inlet valve.
4. Loosen hex sided brass nut holding valve to bracket.
5. Remove and replace water inlet valve.

To remove complete Hot Water Tank

1. Remove complete hood.
2. Remove the two hose clamps to drain lines.
3. Loosen 1/4" SAE flare nut to inlet valve.
4. Disconnect lead wire to control box, lift up from bracket clips and out.

To change hot water tank Heating Element

1. Remove top hood service panels.
2. Remove hot water tank cover.
3. Drain all water from hot water tank.
4. Remove stainless steel thermostat cover.
5. Remove lock nut from each element prong.
6. Install new element, fill tank and check operation. Should heat water to 140°F.

SERVICE - COMPLETE UNIT

To remove solenoid-Operated Three Way Water Valve

1. Remove lower front and right side service doors.
2. Remove all hose clamps to solenoid operated water valve.
3. Remove upper and lower hex head cap screws holding valve housing to frame.
4. Drop entire assembly down, unplug cord to solenoid at solenoid, loosen solenoid nut and bolt assemblies holding solenoid to brass valve proper.
5. Replace in reverse of above.

To replace Storage Bin Door

1. Lift door up and slide back as you normally would to remove ice from bin.
2. Pull door straight out.
3. Install repaired or new door in reverse of step number 2 above.

To replace Motor Compressor Valve Plate

1. Install compound gauge in suction service valve port and close suction service valve by turning valve stem all the way in. (Front seated)
2. Operate motor compressor until gauge reading reaches zero. Turn off unit.
3. Front seat discharge service valve.
4. Loosen all head bolts and tap head lightly with rubber-faced or plastic hammer to break loose.
5. Remove head, defective valve plate and any gasket material that may have stuck to head or compressor body.
6. Install new valve plate with all new gaskets as provided, tightening each head bolt a little at a time until all are snug.
7. Remove port gauge plug from discharge valve and crack open suction side letting gas purge off trapped air from head. Install hi side gauge in this port, back up both service valve stems and check around valve plate for refrigerant leaks.
8. Start unit, noting head & back pressures. If normal, let run until compressor gets warm. Tighten all head bolts once more, and again check for leaks.

To replace the Compressor

1. Front seat both suction service valve and discharge service valve on the compressor.
2. Disconnect the wiring from the compressor
3. Remove the bolts holding the service valve to the motor compressor body.
4. Remove the compressor hold-down nuts and lift the compressor out of the unit. unit.
5. Reverse steps 1 through 4 in replacing the compressor.
6. Check the compressor for oil before connecting the oil lines. Should be 2 inches down from the top of the oil plug hole or not over 1/2 of sight class
7. Remove the gauge port plug from the discharge service valve. Crack the suction service valve slightly, allowing some gas to escape out the gauge port of the discharge valve. When you have thoroughly purged the compressor, replace the plug and open all valves. It may be necessary to charge the unit because some of the gas was lost when the defective compressor was removed. Check & charge if necessary.

MAINTENANCE INSTRUCTION FOR SCOTSMAN SUPER CUBERS

THE FOLLOWING MAINTENANCE MUST BE ACCOMPLISHED TWO (2) TIMES PER YEAR ON ALL SCOTSMAN SUPER CUBERS. CALL YOUR AUTHORIZED SCOTSMAN SERVICE DEPARTMENT.

1. Clean air-cooled condenser; This is to be done frequently with the machine shut off.
2. Clean hot water tank and evaporator, sump tank and screen, using Scotsman Ice Machine Cleaner or equivalent.
3. Remove jet tube and manually clean jets by unscrewing jets.
4. Check curtain assembly.
5. Tighten all electrical connections.
6. Tighten all bolts.
7. Check water supply. Check water pressure flow through flow control. Clean water strainer.
8. Oil jet tubes drive motor three(3) places. Use SAE 20 oil - 3 oil cups.
9. Grease plunger on water solenoid valve with high temp grease. -OPTIONAL
10. Oil Condenser fan motor. Punch sealed cap or remove screws where possible.
11. Check for refrigeration leaks with halide torch.
12. Check for water leaks. Tighten drain line connections.
13. Check size and condition of cubes. Adjust as required. See Service Analysis Section.
14. Check bin thermostat setting. Factory set at 35° out, 39° in.

PROCEDURE FOR USE OF SCOTSMAN ICE MACHINE CLEANER IN SCOTSMAN ICE MACHINES

1. Remove front access door
2. Locate control box with time clock knob protruding thru cover.
3. Put unit through a harvest cycle manually. This may be done by turning time clock knob clockwise until a loud snap is heard.
4. Let unit finish cube harvest cycle and start into freezing cycle. This will be approximately 5 minutes after the loud snap in Step #3 is heard. At this time turn the compressor switch off, the lower of the two switches in the control box.
5. Locate the hot water tank which is directly under the top access door. Remove door. Remove the hot water tank cover by pulling up around the edge until it snaps off. Pour 4 ounces (half bottle) of "Scotsman Ice Machine Cleaner" into the hot water tank.
6. Locate the sump reservoir which is in the storage bin area and directly behind the ice discharge chute. This discharge chute is covered by a series of white plastic curtains which are free to swing out into the storage bin. Pour 4 ounces (half bottle) of "Scotsman Ice Machine Cleaner" into the sump reservoir.
7. Let unit operate normally for 10-15 minutes into the freezing cycle. No ice will be made because the motor compressor is not in operation.
8. At the end of this time put the unit through 2 or 3 harvest cycles manually to allow fresh make up water to clean out remaining solution. Each time waiting approximately 5 minutes after the loud snap until the next harvest cycle is done manually.
9. Turn the compressor switch back on.
10. Check each new batch of cubes until they are clear and until acid taste has been removed from cubes.
11. Put hot water in storage bin to melt the cubes and thereby clean the drains with the same solution that has just cleaned the unit.
12. Use a damp cloth to wipe off curtains and inside of storage bin.
13. Replace all access doors.
14. Unit is now ready for continued automatic operation.

PARTS LIST MM - 205

1. CABINET PARTS

A-15603	Case hood assembly, less doors
S-6849	Hood top door
A-16208	Door slide
15-156	Emblem
A-5862	Moulding strip - rear
A-5863	Moulding strip - front
A-15866	Cabinet right side front service
S-6840	Cabinet right side service door
A-8739	Cabinet rear service door
A-15559	Sliding Door

2. CONTROL BOX - ELECTRICAL COMPONENTS

12-645-1	Timer Assembly
12-645-20	Timer micro-switch
11-351	Cube size control
12-537	On-Off switch
11-99-1	Bin thermostat
12-419	Complete cube relay

3. CONDENSING UNITS AND REFRIGERANT CIRCUIT

	AIR - COOLED	WATER - COOLED
Freezer Cup and platen only	A-18367	
Freezer and H X assembly complete kit	A-18368-25	Same
Suction H X and accumulator line	S-9508	Same
Drier	2-544	Same
Motor compressor 115/60/1	18-325	18-355
Valve plate and gasket kit	18-326	Same
Relay	18-1903-4	Same
Starting capacitor	18-1901-7	18-1901-7
Fan motor	18-333-1	
Fan blade	18-363	
Condenser	18-334	18-354
Shroud for condenser	A-12111	
Klixon overload	18-347	Same
Replaceable terminal assembly	18-241	Same
Terminal board	18-270	Same
Compressor to water valve hose		18-260
Compressor to condenser hose		18-261
Plain gasket for 18-259		18-262
Manifold gasket for 18-259		18-263
Manual re-set dual pressure control		11-286
Water regulating valve		11-198

PARTS LIST - MM-205

4. HOT WATER TANK

A-18557	Hot water tank complete - s.s., less cover
A-6467	Hot water tank only - - - s.s.
A-18691	Standpipe
A-6771	Water inlet valve
S-6947	Rubber seat for valve
A-5998	Drain Screen
A-12068	Float Assembly
12-246	Thermostat
12-1421-20	Rod type heating element
A-12870	Hot water tank cover

5. WATER VALVE

A-13460	3-Way water valve less solenoid
A-8140	Solenoid & mounting hardware
13-148	Replacement rubber valve seats
2-424	V-packing
2-418	Compression spring 1 inch
2-419	Compression spring 2 1/2 inches
2-420	Solenoid pull spring 1 1/2 inches
S-8995	Solenoid pull key

6. WATER CIRCUIT

16-162	Inlet water strainer
A-13346-4	Inlet water flow control
12-418-1	Sump pump assembly
S-9749	Sump tank cover
A-18361	Sprayer tube assembly
S-6907	Sprayer tube jet only
S-7730	Rubber, cube stopper
S-6909	Jet bearing hub
A-12489	Reserve Tank

7. DRIVE MOTOR AND LINKAGE

12-675-1	Drive motor
A-6084	Drive shaft
S-6900	Drive fork
13-176	Drive motor gasket

8. STORAGE BIN AND COMPONENTS

A-15705	Storage bin
A-18090	Storage bin drain assembly
A-6448	Drain, strainer
A-15759	Bin thermostat bulb cover
13-590	Bin thermostat bulb gasket
A-15807	Curtain assembly

9. MISCELLANEOUS

2-540	Ice Scoop
15-324	Plastic trim insert-per ft.
1-657	Packing crate
12-1351-22	Sump Pump motor only
19-343	Scotsman Ice Machine Cleaner

TABLE OF CONTENTS

Table of Contents 1
Photograph and Ice Making Capacity 2-3
Specifications and Dimensions 4
Selecting Location:
- Location 6
- Uncrating 5
- Preparation for Installation 6

Installation – Water Drain 7
Wiring Diagrams:
- Air Cooled 8
- Water Cooled 9

Diagram Installation Practice 10
Final Check List 11
Start-Up 12-13
Cycle of Operation:
- Harvest Cycle 13-14
- Freezing Cycle 15-16

Service Analysis Charts 17-18
Exploded Views – Component Parts:
- Sump Pump 19
- Control Box 20
- Complete Unit (Top View W.C.) 21
- Complete Unit (End View) 22
- Complete Unit (Top View A.C.) 23
- Case Parts 24
- Compressor Assembly – Air and Water 25
- Water Valve 26
- Freezer Assembly 27-28
- Drive Linkage and Spray Bar 29
- Functional Parts and Maintenance 30
- Service Complete Unit 31

Maintenance Instructions 32

All specifications within this manual are subject to change without notice.

THIS PAGE
INTENTIONALLY
LEFT BLANK

SCOTSMAN®
SUPER CUBER
MM-210 SERIES

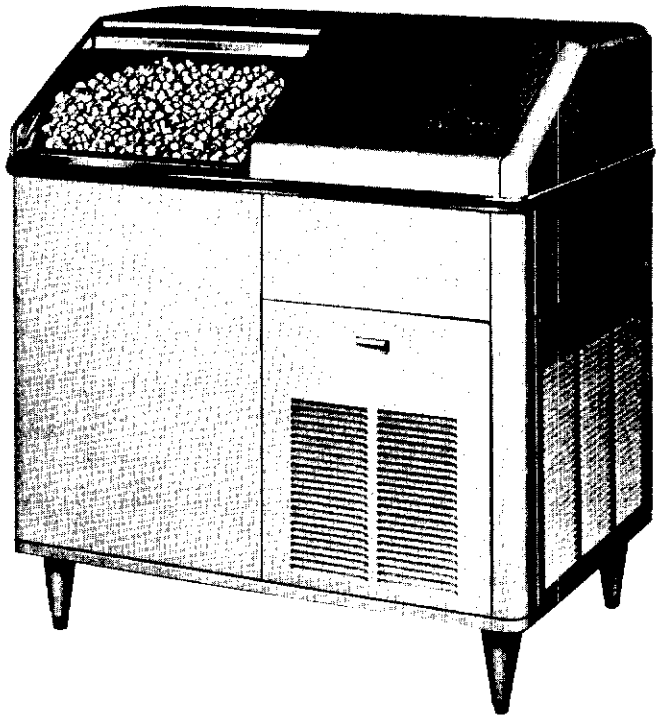

ICE MAKING CAPACITY:

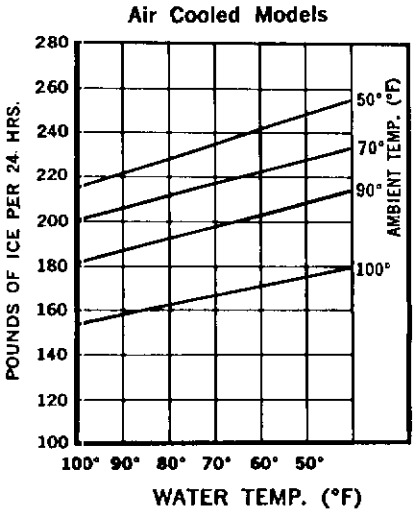

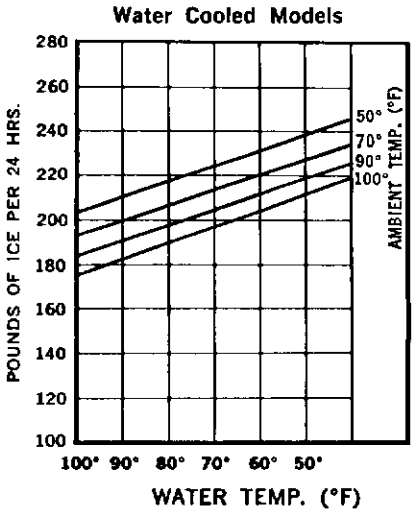

SPECIFICATIONS

SUPER CUBER MM-210 SERIES	MODEL MM-210J	MODEL MM-210WJ	MODEL MM-210J-SS	MODEL MM-210WJ-SS
CONDENSER, Air Cooled	X		X	
CONDENSER, Water Cooled		X		X
COMPRESSOR 3/4 HP	X	X	X	X
FINISH, Hammerloid Grey	X	X		
FINISH, Stainless Steel			X	X
SHIPPING WEIGHT	380	380	385	385

STANDARD ELECTRICALS	MINIMUM WIRE SIZES	TOTAL AMPERAGE
115/60/1	2 wire 12 gauge	16.9 Amperes

CAPACITY: Refer to Production Chart
STORAGE BIN; (self-contained) 150 lbs.
Stainless Steel Lined
DEPTH: 24-1/2"
WIDTH: 44-1/4"
HEIGHT: (with legs) 45-1/4" to 46"
HEIGHT: (without legs) 39-1/4"

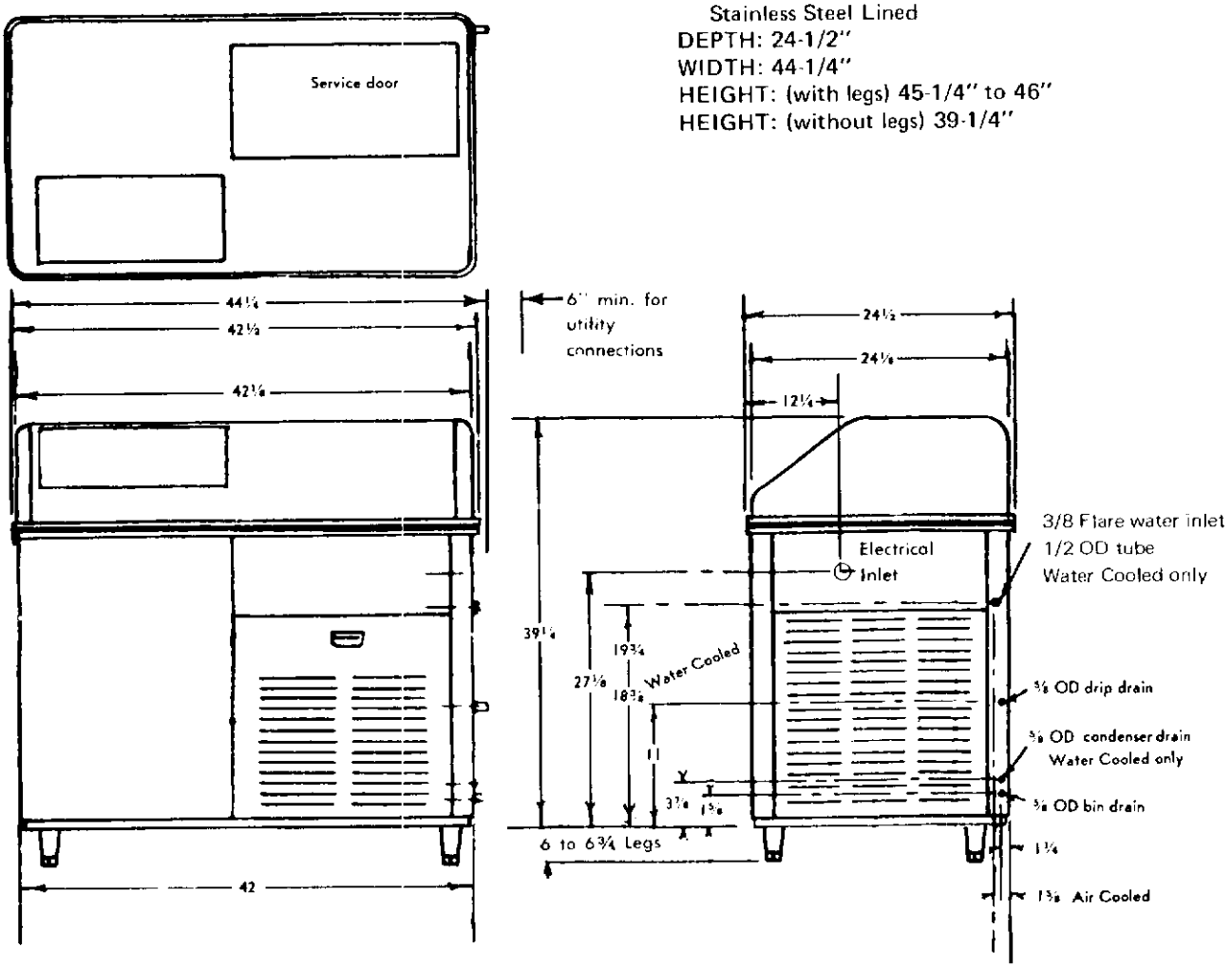

SPECIFICATIONS

	Air Cooled	Water Cooled
Water Pressure (minimum)	20 pounds	Same
Refrigerant Control	Capillary Tube	Same
Compressor 3/4 H.P.	Copelaweld 115/60/1	Same
Condenser	Air Cooled	Water Cooled
Refrigerant	Refrigerant 12	Same
Refrigerant Charge	20 ounces	20 ounces
Power Consumption	17.25 Amperes	17 Amperes
Cubes per Harvest	198 miniature cubes	Same
Water Consumption to Produce Ice	2 Gal. per hour	Same
Dimensions		
Height - with 6" legs	45-1/4"	45-1/4"
Height - less 6" legs	39-1/4"	39-1/4"
Width	44-1/4"	44-1/4"
Depth	24-1/2"	24-1/2"
Weights		
Uncrated	385 lbs.	385 lbs.
Crated	405 lbs.	405 lbs.

INSTALLATION

UNCRATING OF MACHINE

1. The complete machine comes in one crate. After the crate is removed, inspect for concealed damage. Remove the bottom skid by removing all bolts. Then cut all wires holding support packing from refrigerant line. Be sure the compressor is snug on mounts. Then check all refrigerant lines for rubbing or touching other surfaces. Also check for possible transportation damage.

2. Remove all service doors and panels.

3. Remove leg package in compartment base and install 4 legs in unit base sockets.

4. Remove protective shipping tape from bin door, freezer curtain.

5. Remove water strainer from storage package for installation in water supply line feeding unit.

6. Open electrical control box and prepare for hook up, use knock outs, cord connectors, etc. Then check unit name plate voltage against building source voltage and make sure they correspond. Caution – improper voltage supplied to units will void your warranty protection.

7. Make sure suction service valve on the condensing unit is fully back seated. Replace the valve cap after checking. All models are shipped with valve back seated.

8. Make sure that the flow of air is not impeded in any way over condenser on air-cooled models. Keep condenser clean. (Check and clean the condenser monthly.)

9. Operating room temperatures are minimum 50° F. and maximum 100° F.

10. Remove Warranty card and Users Manual from storage bin and wipe bin clean with damp cloth.

11. Fill out warranty card completely including model and serial numbers as taken from aluminum plate found behind front service panel and forward to Scotsman factory using self mailing card.

12. Level unit with adjustable legs, call authorized Scotsman distributor or dealer for proper installation, start up and check.

LOCATION OF THE ICE CUBE MACHINE

UNDER BAR INSTALLATIONS – Locate, if possible, so left end panel is accessible. Locate unit so proper circulation can be attained around the unit and behind it at least four inches. Provide plumbing and electrical connections so the unit can be moved out where the entire top hood can be removed and the unit can still be operated.

KITCHEN INSTALLATION – As a rule, the kitchen is not the most practical place to install an air-cooled condensing unit, as grease is almost always present and makes cleaning of the condensing unit difficult. Do not locate near range or steam table or other heating devices that may be used in the kitchen.

STOREROOM INSTALLATIONS – Be sure storeroom is of adequate size and properly ventilated. A small, poorly ventilated room will greatly impair the efficiency of the unit. The Storeroom must be kept above 50 degrees in the winter months.

BASEMENT INSTALLATIONS – Locate machine in the coolest place. Locate the machine in a dry place. Keep away from furnace and boiler room. Keep away from service chutes and runways, also coal or other dust of any kind. If the machine is set over a floor drain, block the machine up enough to eliminate any possible damage to the machine.

LOCATE THE MACHINE SO THAT IT CAN BE SERVICED WHEN NECESSARY. ALLOW AT LEAST FOUR INCHES OF SPACE AROUND THE MACHINE FOR CIRCULATING AIR.

IMPORTANT: ADJUST LEVELER LEGS. MACHINE MUST BE LEVEL.

ELECTRICAL CONNECTIONS AND CHARACTERISTICS

	115 volts, 60 cycle, single phase	Water-cooled
Compressor	14.0 Amperes	14.0 Amperes
Sump Motor	1.32 Amperes	1.32 Amperes
Fan-Air Cooled Models.	.75 Amperes	None
Spray Bar Motor	.6 Amperes	.6 Amperes
TOTAL – FULL LOAD AMPERES	16.67 Amperes	15.92 Amperes

This unit should be wired to a 20 Amp. circuit. Be certain that the Super Cubers are on their own circuit and individually fused. The maximum allowable voltage variation should not exceed 10 per cent of the nameplate rating even under starting conditions. Low voltage can cause erratic operation, and may be responsible for serious damage to the overload switches and motor windings.

All external wiring should conform with National State and local code requirements. Check the voltage on the line before connecting the machine.

ELECTRICAL CONNECTIONS

12 Gauge wire will be adequate for short runs. For runs exceeding 50 feet, go to next heavier gauge. NOTE: All Scotsman cubers require a neutral wire and a solid earth ground wire.

WATER SUPPLY AND DRAIN CONNECTIONS

WATER SUPPLY – Air Cooled Models

The recommended water supply line is 3/8" OD copper tubing for air-cooled units. Connect to a cold water supply line with regular plumbing fittings with a shut-off valve installed in an accessible place between supply line and machine. The water strainer supplied with the unit should be mounted with clean-out plug down. Locate the strainer next to the machine and the arrow in the direction of the flow.

A 3/8" male flare fitting is provided on right rear corner for convenience in hook up.

WATER SUPPLY – Water Cooled Models

Water cooled models have same inlet water supply as the air cooled models. An additional 5/8" condenser water drain is added, however.

When choosing the water supply for this cuber, consideration should be given to:

A. Length of run.
B. Water clarity and purity.
C. Adequate supply pressures.

Since water is the most important single ingredient in producing ice, you cannot over emphasize the three items mentioned above. Low water pressure (below 20 pounds) may cause malfunction of the three way water valve. Water containing excessive minerals will tend to produce cloudy colored cubes and scale build up on parts in the water system.

Heavily clorinated water can be controlled using charcoal or carbon filters.

WIRING DIAGRAM
Air Cooled

115/60/1

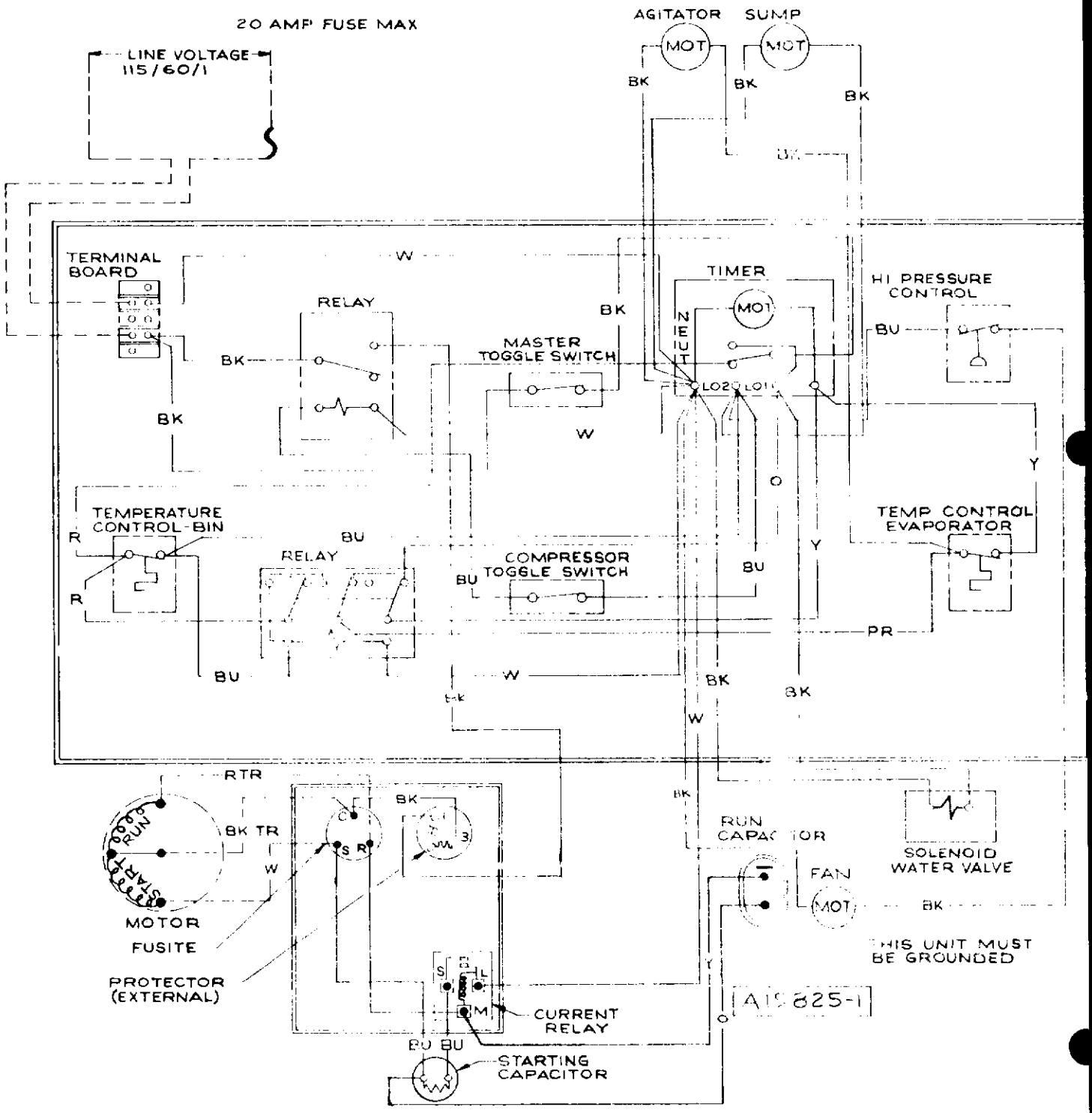

WIRING DIAGRAM
Water Cooled

115/60/1

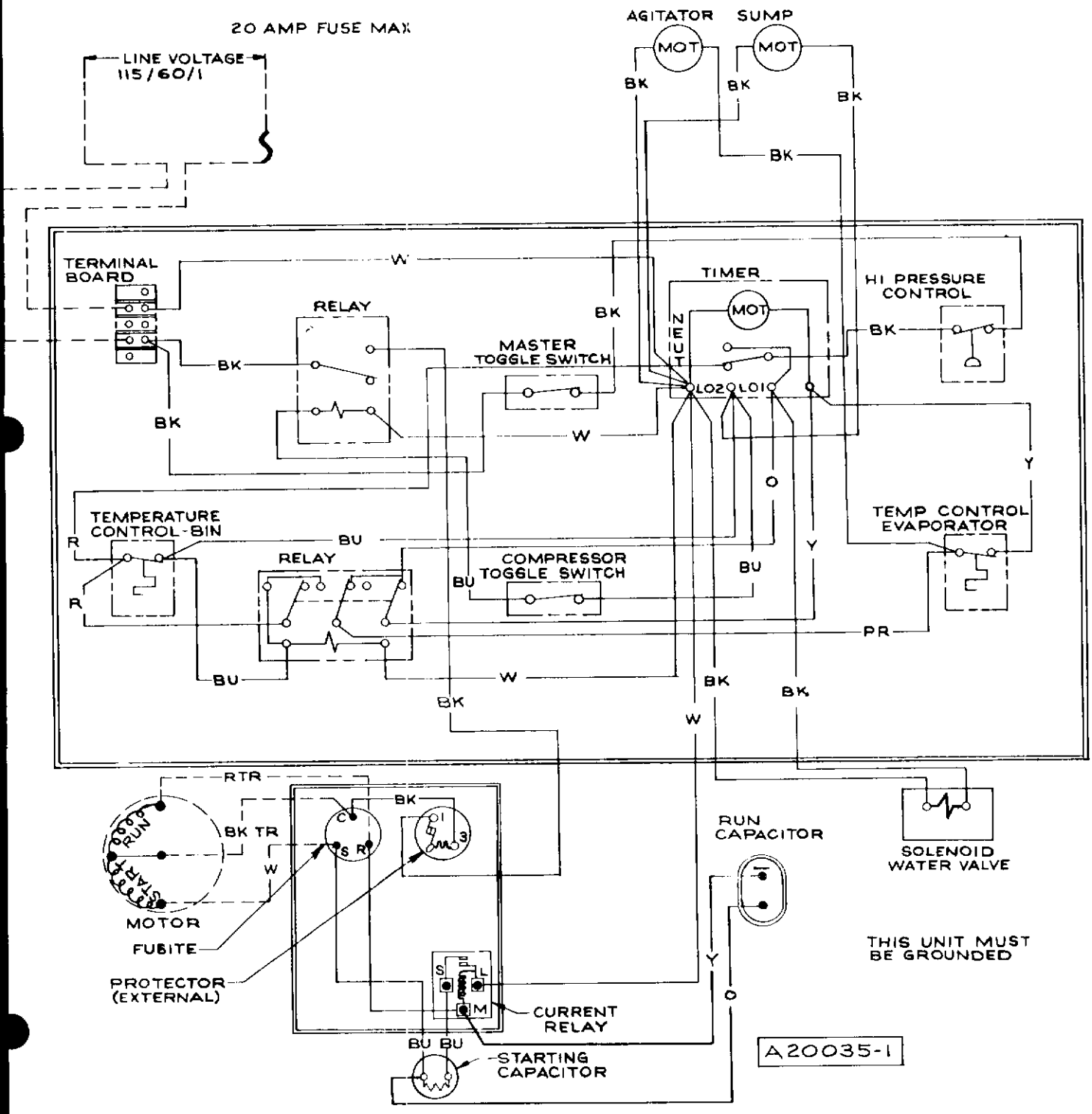

INSTALLATION PRACTICE

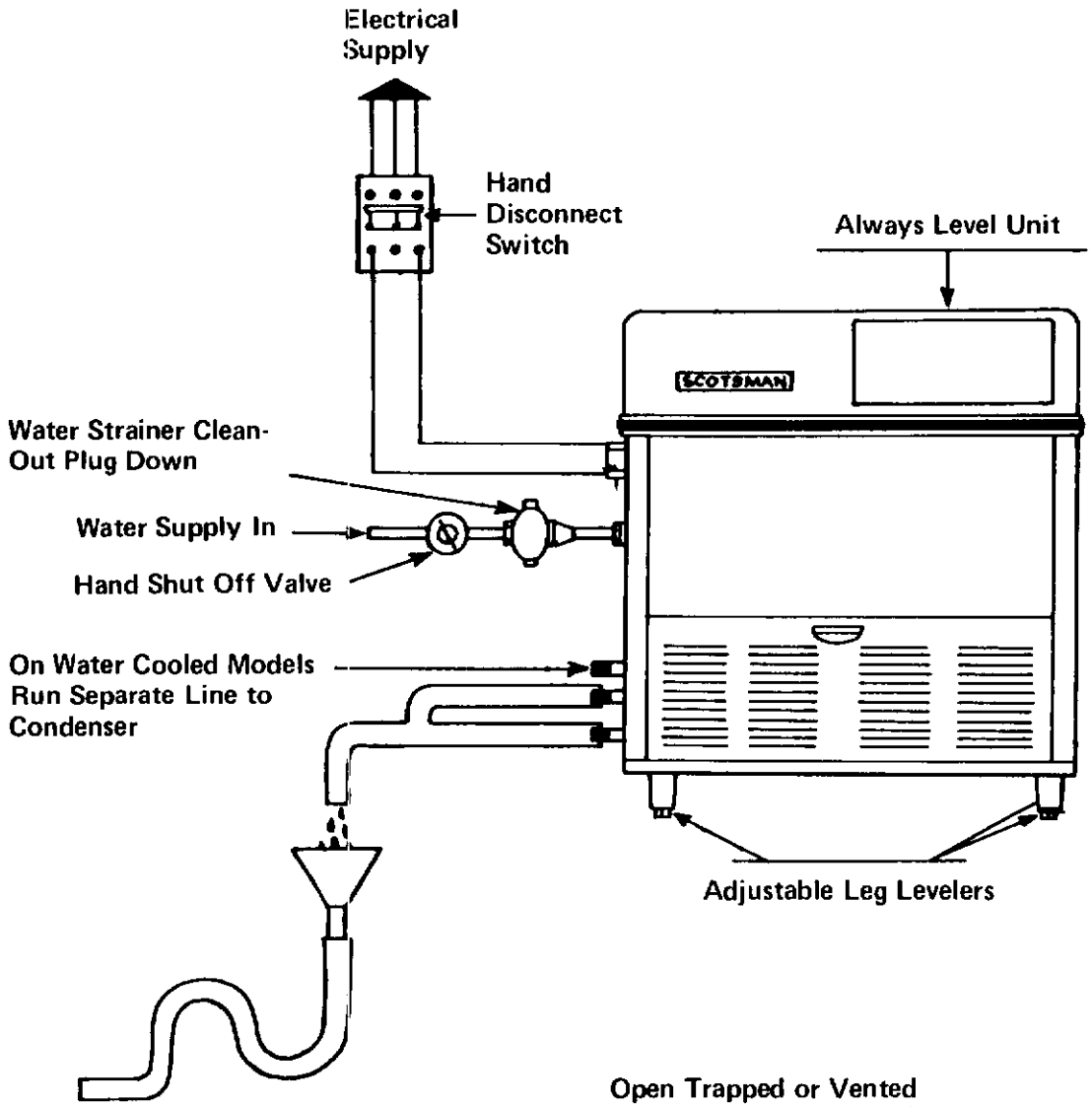

FINAL CHECK LIST

1. Is the unit level? (IMPORTANT)
2. Have all electrical and piping connections been made?
3. Has the voltage been tested and checked against the nameplate rating?
4. Have the compressor hold-down bolts been checked to insure the compressor is snug to its mounting pads?
5. Is the water supply valve open and the electric power properly hooked up?
6. All masking tape removed from doors, panels and inner freezer curtain?
7. Is the unit clean? Has storage ben been wiped clean with cold water cloth?
8. Has the owner been given the operating manual, and has he been instructed on how to operate the machine?
9. Have the installation and warranty cards been filled out? Check for correct model and serial numbers from serial plate on unit then promptly mail card to factory.
10. Check all refrigerant and conuit lines to guard against vibrations and possible failure.
11. Is there 4" clearance behind and around unit for proper air circulation?
12. Is unit in a room where ambient temperatures are minimum 50° F. even in winter months?
13. Has water supply pressure been checked to insure at least a minimum pressure of 20 pounds?

INSTALLATION – START UP

1. Remove hood (top) service panel and lower front, right side service doors to facilitate start up and check out.

2. Make sure water supply is turned on, then check timer finishing clock in main control box making sure the micro switch roller is resting down in offset slot in the cam (harvest position). If adjustment is necessary, turn timer knob clockwise into harvest position.

3. Inspect components in electrical control box, check for loose or frayed wire, then turn both manual switches to "on" position. All cubers have two manual on-off switches. One is for motor compressor only during cleaning operation, one is master switch for complete unit.

4. When both switches are thrown "on", water inlet solenoid will be energized allowing water to enter cuber, thru warm water tank, 3 way water valve and up into back side of freezer cup section. This will "fill" icemaker for the freezing cycle - Check operation of spray bar drive motor thru hood top panel. Spray bar motor should be running during harvest cycle.

5. Allow clock to carry unit through harvest cycle. This will be approximately three minutes. Dial pointer should be set on Number 3-1/2. After the compressor starts, turn the dial completely around and send it through another harvest cycle. Do this several times. This will completely flush out machine of any dust that may have accumulated in shipment.

6. After machine has been properly flushed, allow it to go into a freezing cycle - check for possible water leaks, check sump pump operation - should be running freely. Also note if jet tube operation is correct, and that none of the jets are plugged.

7. Time clock dial does not rotate at the end of the harvest cycle; it is started later by the cube size thermostat control located in the control box.

8. Freezing time will be approximately 20 minutes in a 70 degree ambient. (Longer if above, and shorter if below.) Average complete cycle time is 25 minutes.

9. Watch first cube harvest and check to make sure that plastic curtain sections have not been damaged in shipment. Also that curtains do not swing back into freezer and catch on spray bar.

10. Check size of cubes made: If too small, after a second cycle, adjust cube size control to lower or colder setting - until desired cube size is reached. Normal cube size is with a 1/4" depression in crown.

11. Check texture of cubes made: Partially cloudy cubes throughout suggest unit running short of water near end of freezing, or possibly an extremely bad water condition, which would indicate use of filtering or purifying equipment. Contact SCOTSMAN - Queen Products, Div., Ice Machine Service Department, Albert Lea, Minnesota, for further details.

INSTALLATION

12. With unit on harvest cycle, take a handful of cubes made and hold on storage bin thermostat cover. Should cut unit off at end of harvest cycle. Remove ice, unit should cut back on automatically in 3 or 4 minutes. Thermostat is factory set at 35 degrees out, 39 degrees in.

13. Install gauges and check head and back pressure: air-cooled models, head pressure after twenty minutes of freezing cycle at 70° ambient will be approximately 125 pounds PSI. The back pressure starts out at approximately 50 pounds PSI and gradually pulls down to approximately 4 pounds PSI just before harvest cycle. Higher ambients and dirty condenser will cause higher pressures. Water-cooled models have water regulating valves factory set at 135 pounds PSI: check reading and adjust if necessary. Back pressure will operate the same as on air-cooled models.

14. Remove gauges, replace control box cover and all service panels.

15. Instruct owner on how to operate and clean machine.

HARVEST CYCLE

At the end of the freezing cycle the time clock operated switch opens compressor, sump pump and fan motor circuit, and closes circuit to time clock motor, spray drive motor and solenoid operated inlet water valve. Inlet water pressure at bottom of hot water tank now forces heated water out the top of tank through warm water tubing and into back side of evaporator cup section. At the same time the surplus water from the preceding batch of ice cubes goes through three way water valve and off to drain. Water from the hot water tank flows into the rubber platen holding the evaporator cups and by conduction on back of cups causes the formed ice cubes to defrost or drop out. The platen-evaporator cavity is normally filled to the overflow level in 2 or 2-1/2 minutes. The amount of water running over the overflow pipe is controlled by the size of the flow control orifice and the length of the harvest time setting on the time clock past the overflow point. Over-flow water goes down the drain also.

Meanwhile, cubes released drop by gravity and are mechanically ejected thru curtained opening into ice storage bin by sprayer tube which is being actuated by drive motor. At the completion of harvest cycle, the micro-switch on the timer now drops points holding defrost components in cycle and switches to freezing cycle set of contacts. Timer completes harvest cycle when micro-switch roller lifts out of rear cam slot. Timer clock motor now stops and will not start again until cube size thermostat control closes once more. Electrically harvest cycle components cease, freezing cycle components start up. Chilled defrost water from the upper cavity now flows by gravity back through the three way water valve into freezer sump or reservoir pan. Here water is picked up by the water pump and continually recirculated through sprayer tube to produce the next batch of cubes.

HARVEST CYCLE – Water Circuit

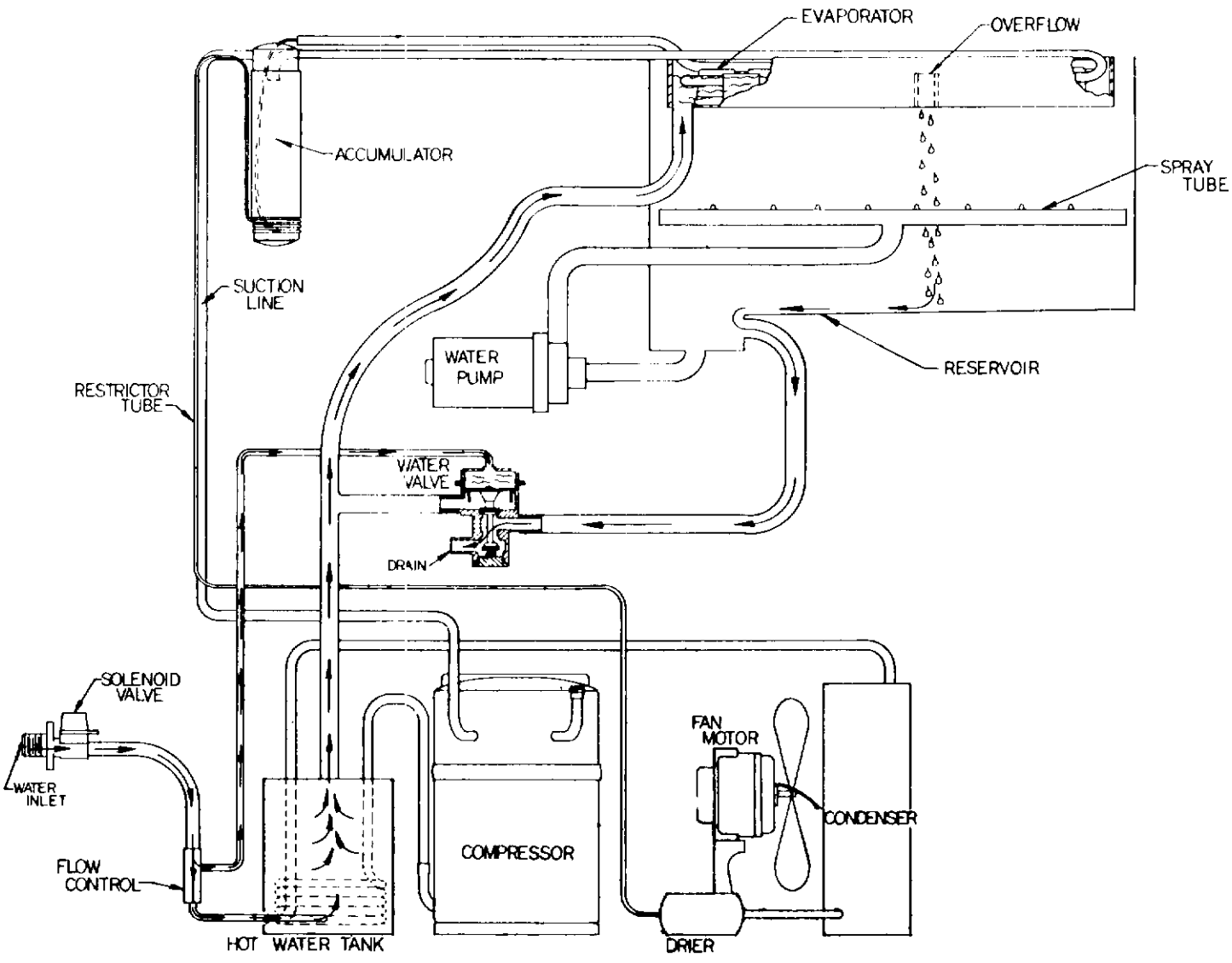

FREEZING CYCLE

As the freezing cycle starts, electrically the components operating are the compressor and fan motor, recirculating water pump and the sprayer tube drive motor.

The refrigerant curcuit which equalized at about 50 pounds gauge during the "off" or harvest cycle, thru the capillary refrigerant control, now rises rapidly to 125 - 135 pounds head pressure. The suction or low side pressure starting at 50 pounds pulls down fairly quickly to about 25 pounds at which point the ice cubes are starting to form a thin shell in cube cups. Continuing from 25 pounds slowly on down towards the finished cube pressure of approximately 5 pounds takes an average of 20-25 minutes.

During this portion of the freezing cycle the electrical brain is the reverse acting, cube size thermostat. This thermostat electrically is holding the freezing cycle components "live". When the ice cubes are about 3/4 formed, the decreasing suction pressure and temperature, activate the temperature sensing bulb of the reverse acting, cube size control, closing its contacts. This does not interrupt the freezing cycle, the closing of the cube size thermostat contacts electrically transfers the finishing of the freezing cycle to the finishing clock motor or timer as it is sometimes called. One full revolution of the timers dial is 12 minutes as is noted by the numerals on the dial however of the total 12 minutes on the timer dial, 3 minutes are used for the defrost or harvest cycle.

This means then that after the cube size contacts close they activate the timer motor. This control takes over and continues freezing cycle for another 9 minutes with timer dial now turning. When the 9 minutes are completed, an offset in the timer dial allows a micro switch with activating arm riding on that cam to drop into the slot electrically stopping the freezing cycle and starting the 3 minutes harvest cycle - The clock motor continues thru harvest cycles. A notch on the timer dial now lifts micro switch arm up on dial, electrically stopping harvest cycle and starts back into a new freezing cycle.

FREEZING CYCLE

Water & Refrigerant Circuit

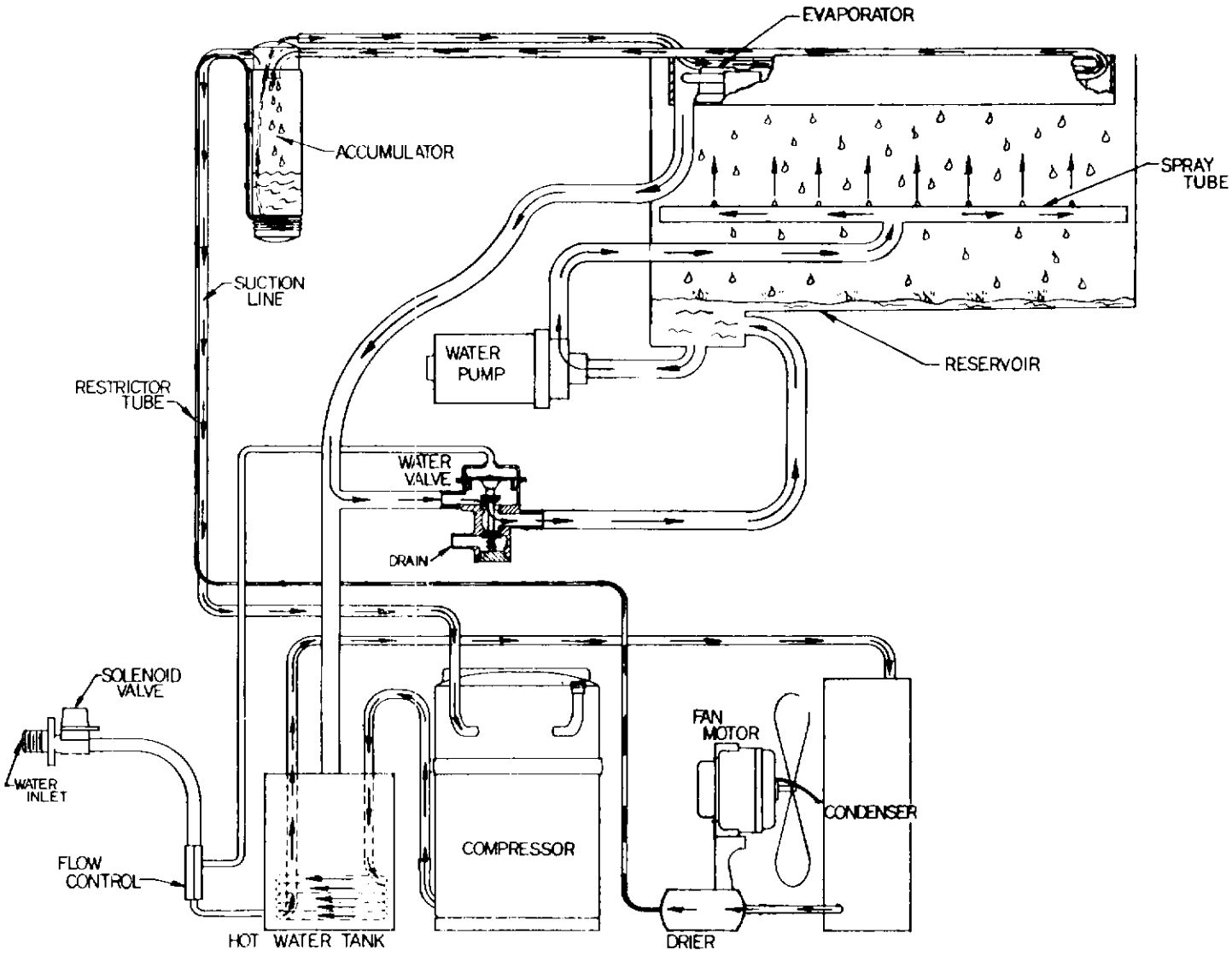

SERVICE ANALYSIS

SYMPTOM	POSSIBLE CAUSE	SUGGESTED CORRECTION
Irregular size cubes and some cloudy	Some jets plugged	Clean jets.
	Shortage of water	See Shortage of Water.
	Unit not level	Water overflowing air vent holes on low side burning cubes. Level as required.
Cubes too large	Cube size control turned too cold	Turn setting on cube size control dial towards warmer
Decreased ice capacity	Inefficient compressor	Replace.
	Leaky water valve	Replace or repair.
	High head pressure	Dirty condenser. Clean. Bad fan motor. Replace.
	Non-condensable gas in the system;	Purge the system.
	Poor Air circulation or excessively hot location	Relocate the unit, or provide for ventilation by cutting openings.
	Overcharge of refrigerant	Correct the charge. Purge off slowly.
	Partially restricted cap tube	Purge & replace charge and drier
Hole washed inside cube	Water over the top of the cube cups during harvest.	Level unit.
Poor harvests	Too short defrost time	Check and adjust harvest cycle. Timer should be set at 2-1/2.
	Restriction in incoming water	Check water feed line strainer and flow reducing valve. To give greater water flow increasing defrost time.
	Insufficient quantity of hot water	Cold ambient - must be 50° minimum faulty fan control on air cooled models.
	Solenoid valve not opening the water valve	Solenoid binding or burned out. Replace.
	Air vent holes in upper cube cups plugged	Clean out holes.

SYMPTOM	POSSIBLE CAUSE	SUGGESTED CORRECTION
Unit will not run.	Blown fuse	Replace fuse & check for cause of blown fuse.
	Bin thermostat set too high	Adjust thermostat. Set between 35° out to 39° in.
	Switch in Off position	Turn switch to On position.
	Inoperative master switch	Replace switch
	Timer contacts open	Replace timer micro-switch
Compresser cycles intermittently	Low voltage	Check circuit for overloading. Check voltage at the supply to the building. If low, contact the power company.
	Dirty condenser	Clean with vacuum cleaner, air or stiff brush. (Do NOT use wire brush.)
	Air circulation blocked	Allow sufficient air space all around unit.
	Inoperative condenser fan motor	Check to see if defective. If defective, replace.
	Non-condensable gases in system.	Purge the system.
Cubes too small	Cube size control set too high	Lower the setting. Turn towards colder.
	Partially restricted capillary tube.	Blow charge, add new gas & drier. After evacuating system with suction pump.
	Moisture in system	Same as above.
	Shortage of water	See remedies for shortage of water.
	Shortage of refrigerant	Check for leaks and recharge.
Cloudy cubes	Shortage of water	See remedies for shortage of water.
	Dirty water supply	Use water softener or water filter.
	Restricted drain on pump	Clean pump strainer.
	Accumulated impurities	Use SCOTSMAN Ice Machine Cleaner
Shortage of water	Water spraying out through curtains	Replace broken curtains if any broken.
	Three-Way water valve leaking	Check the valve for foreign matter. Check valve seats and replace if necessary.
	Water entering hot water tank too slowly	Check pressure at source - 20 lb. required. Dirt in solenoid and flow control - blow out.
		Partial restrictions in water strainer. Clean Strainer.

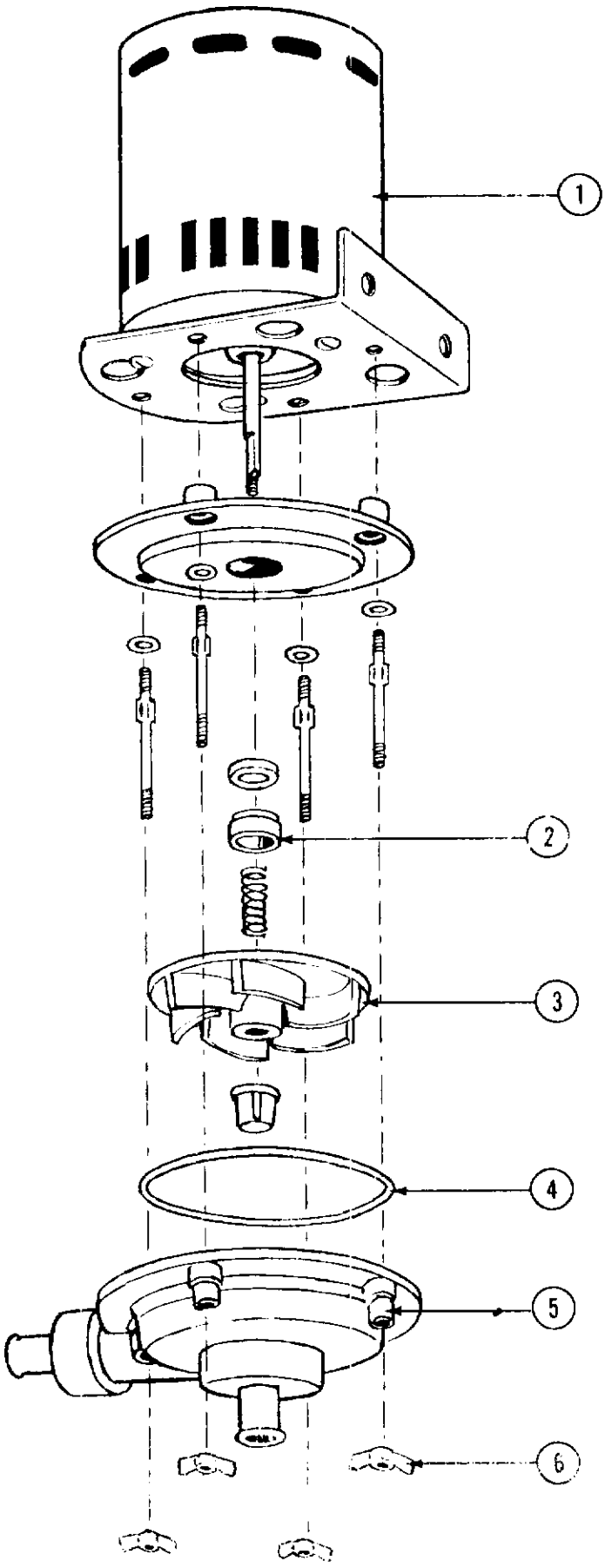

SUMP PUMP ASSEMBLY
PART NO. 12-1532-1

1.	12-1532-51	Motor only
2.	12-1532-57	Water Seal
3.	12-1532-58	Impeller
4.	12-1532-60	O-Ring
5.	12-1532-61	Outlet Housing
6.	12-1532-62	Wing Nuts

REPLACING SEAL ON GPPS UNITS

1. Remove Wing nuts on housing, remove housing.
2. Remove impeller by holding impeller down and backing off impeller nut.
3. Remove the 4 No. 8-32 studs holding pump base to mounting plate.
4. Lift base off plate. Seal will slide off at same time.
5. Remove ceramic seal part and rubber cup from base plate.
6. Install new ceramic part and cup in base. Make sure cup does not "roll" and that ceramic is in firmly. Be careful not to scratch ceramic face.
7. Re-assemble base to mounting plate with the 4 studs, keeping motor shaft centered in ceramic.
8. Lightly lubricate "O" ring in carbon seal member. Use a nonpetroleum base lubricant. Do not use motor oil or 3 in one oil. This has deteriorating effect on the plastic.
9. Carefully slide carbon seal member down shaft until face contacts ceramic seat. Drop spring over shaft.
10. Engage tip of spring in slot on back of carbon. Hold motor shaft stationery and rotate spring and carbon member until top spring tip is directly on opposite side of shaft from flat.
11. Put impeller on shaft. Spring tip should engage slot in bottom of impeller to provide drive for seal.
12. Hold impeller flat against base plate. Screw on impeller nut until tips on bottom of nut touch tips of impeller hub. Back off slightly until impeller snaps up, the tips of impeller locating between the tips of the nut. This prevents impeller from backing off shaft, and automatically provides clearance between impeller and base plate.
13. Replace pump housing, making sure "O" ring is in position on base plate.
14. Replace 4 Wing nuts.

CONTROL BOX
115/60/1

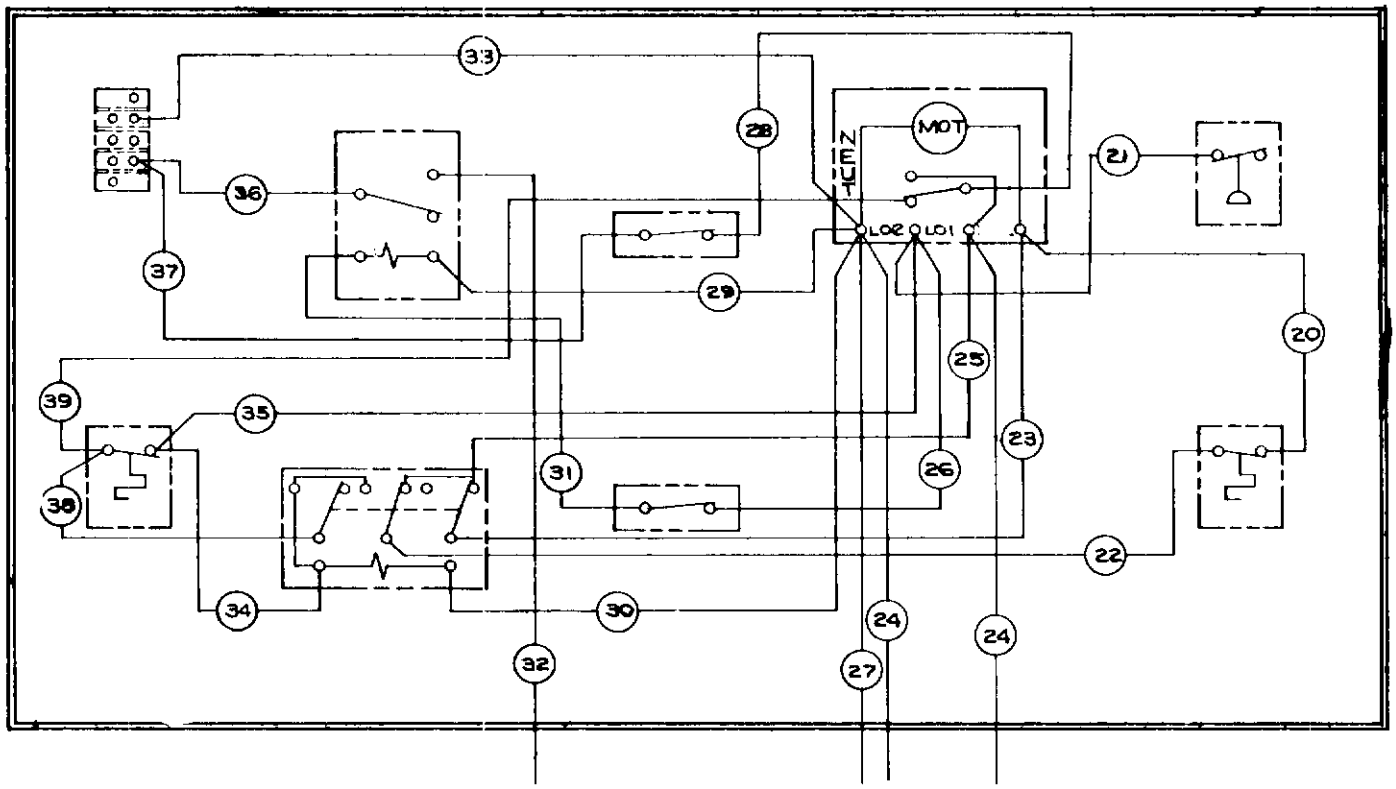

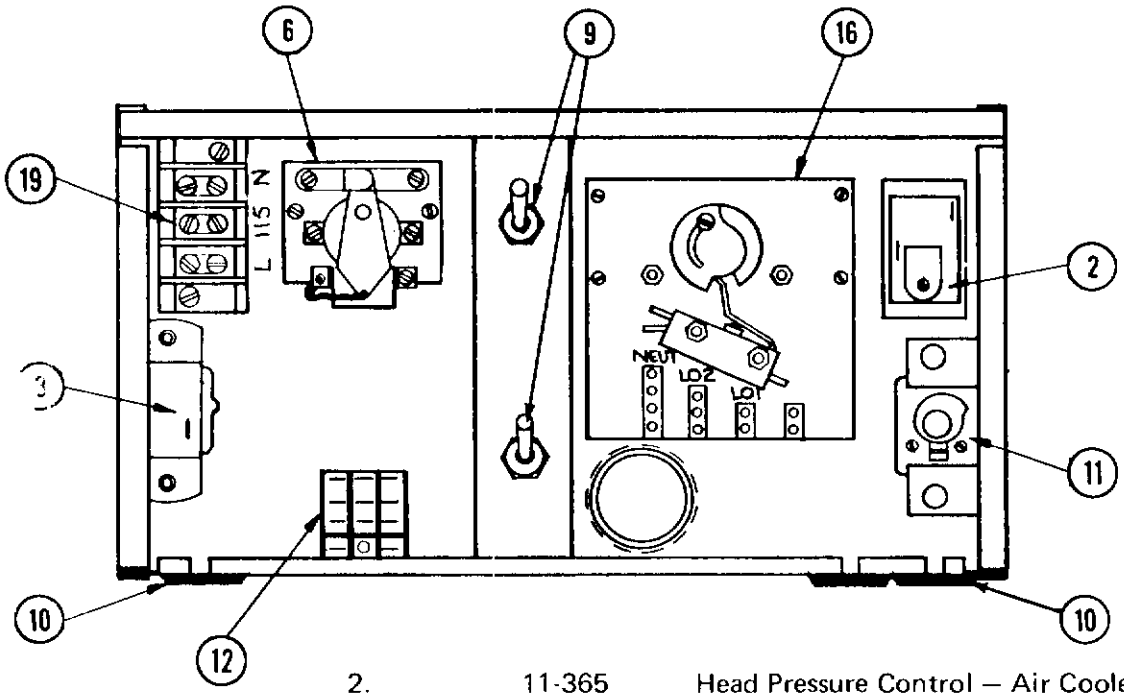

2.	11-365	Head Pressure Control – Air Cooled Only
2.	11-357	Head Pressure Control – Water Cooled Only
3.	11-353	Bin Thermostat
6.	12-419	Relay
9.	12-426-1	Switches
10.	13-124	Grommet
11.	~~11-345~~ 351	Cube Size Thermostat
12.	12-1598	Complete Cycle Relay
16.	A-21038-1	Timer
19.	12-813	Terminal Block

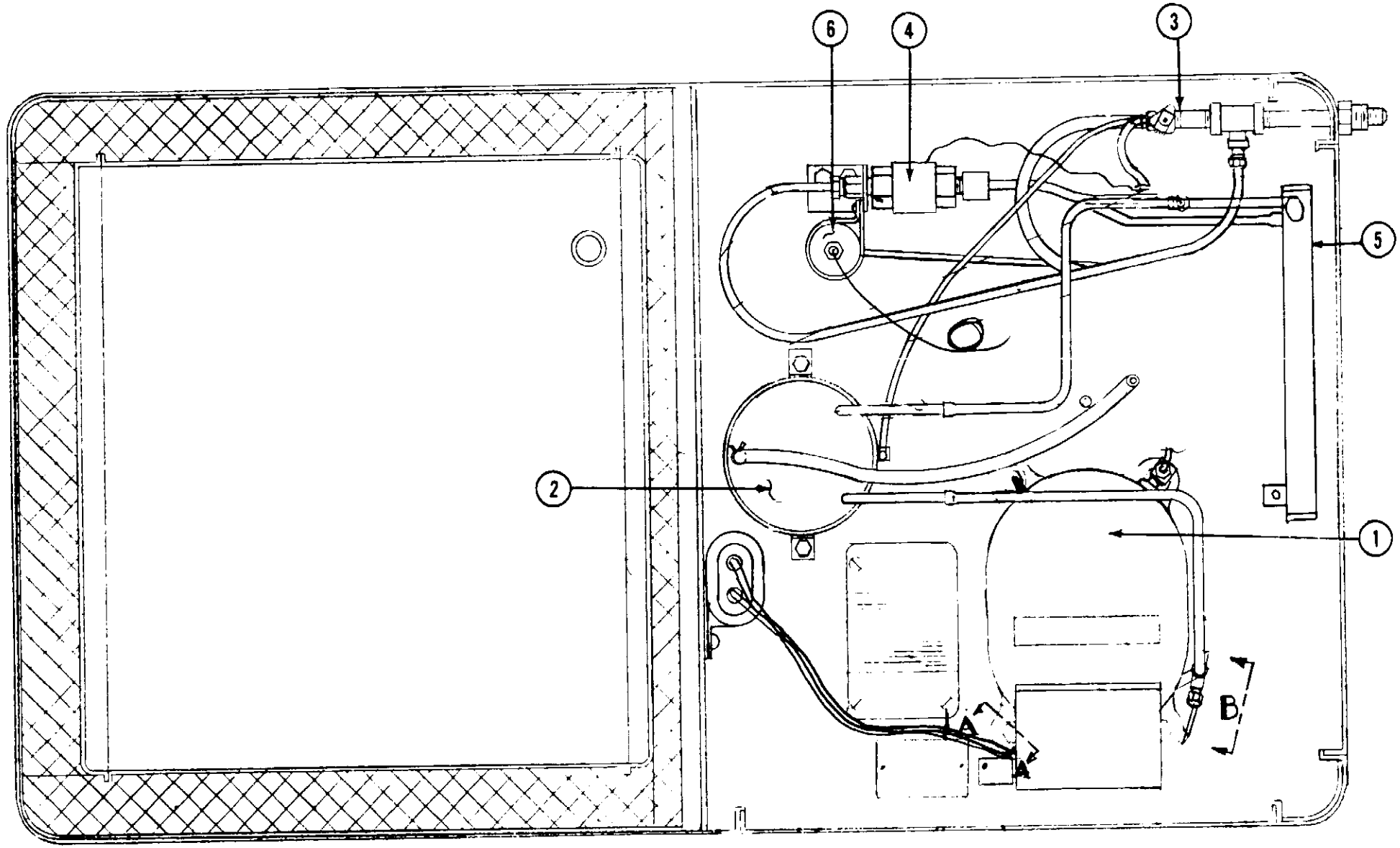

CABINET TOP VIEW

MM- 210WJ

1.	18-2430	Motor Compressor
2.	A-20161	Warm Water Tank
3.	12-1434-1	Inlet Water Solenoid
4.	11-198	Water Regulating Valve
5.	18-354	Water Cooled Condenser
6.	2-544	Refrigerant Drier

CABINET FRONT – END VIEWS

1.	2-1741	Drain Top
2.	2-1742	Drain Bottom
3.	2-932	Hose Clamps (2)
4.	2-785	Spring
5.	13-617-11	O-Ring
6.	13-674-8	Tubing – Order by foot
7.	12-1532-1	Water Pump
8.	12-675-1	Agitator Motor
11.	A17954-1	Three Way Water Valve
12.	A-19555	Bulb Cover
13.	13-590	Cover Gasket
14.	A-16108	Holder Buttons (2)

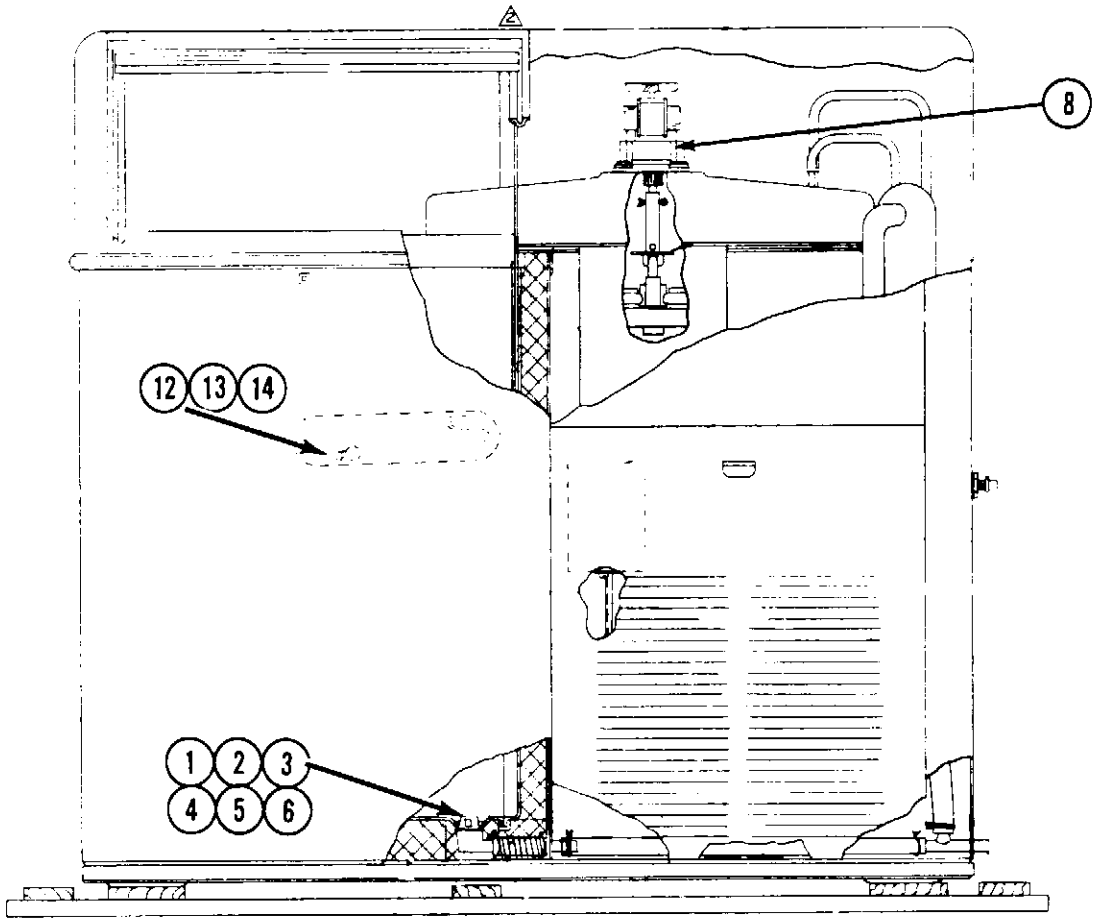

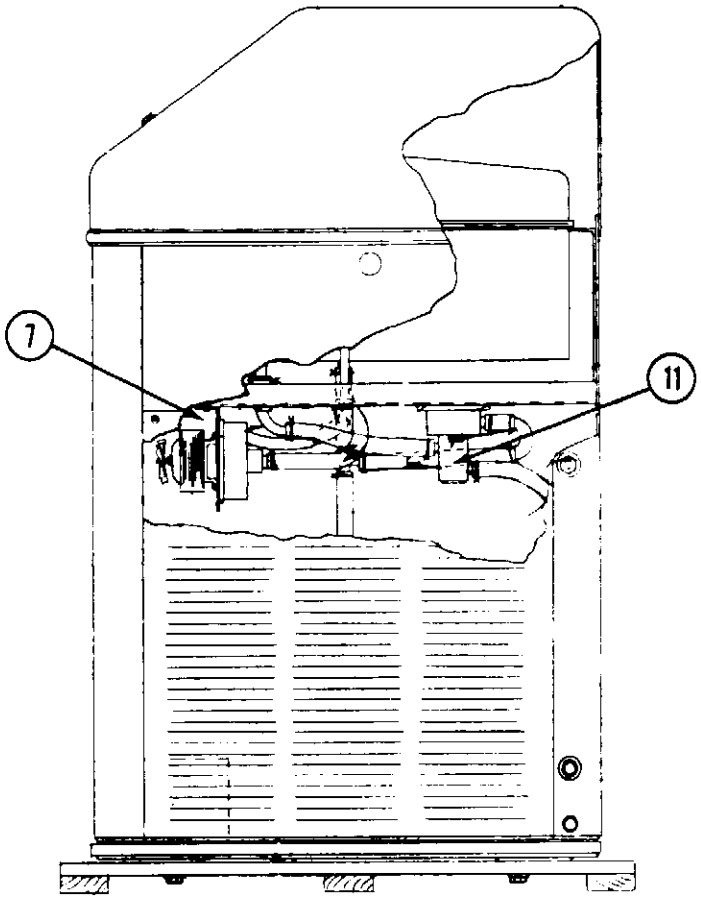

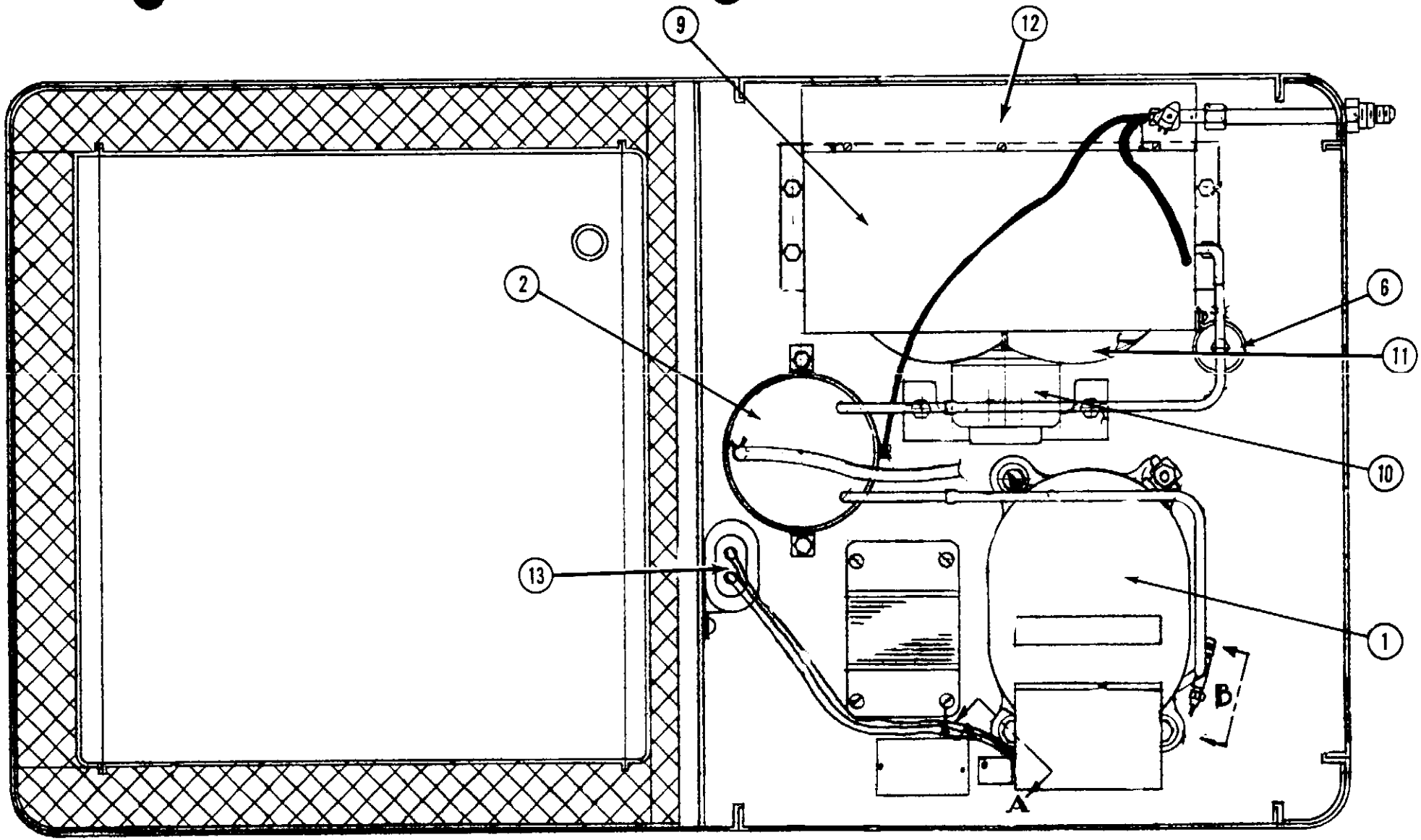

CABINET TOP VIEW

1.	18-2430	Motor Compressor
2.	A-20161	Warm Water Tank
6.	2-544	Refrigerant Drier
9.	18-334	Air Cooled Condenser
10.	12-1681-1	Fan Motor
11.	18-625	Fan Blade
12.	A-21355	Shroud Extension
13.	18-1902-17	Running Capacitor

CASE PARTS

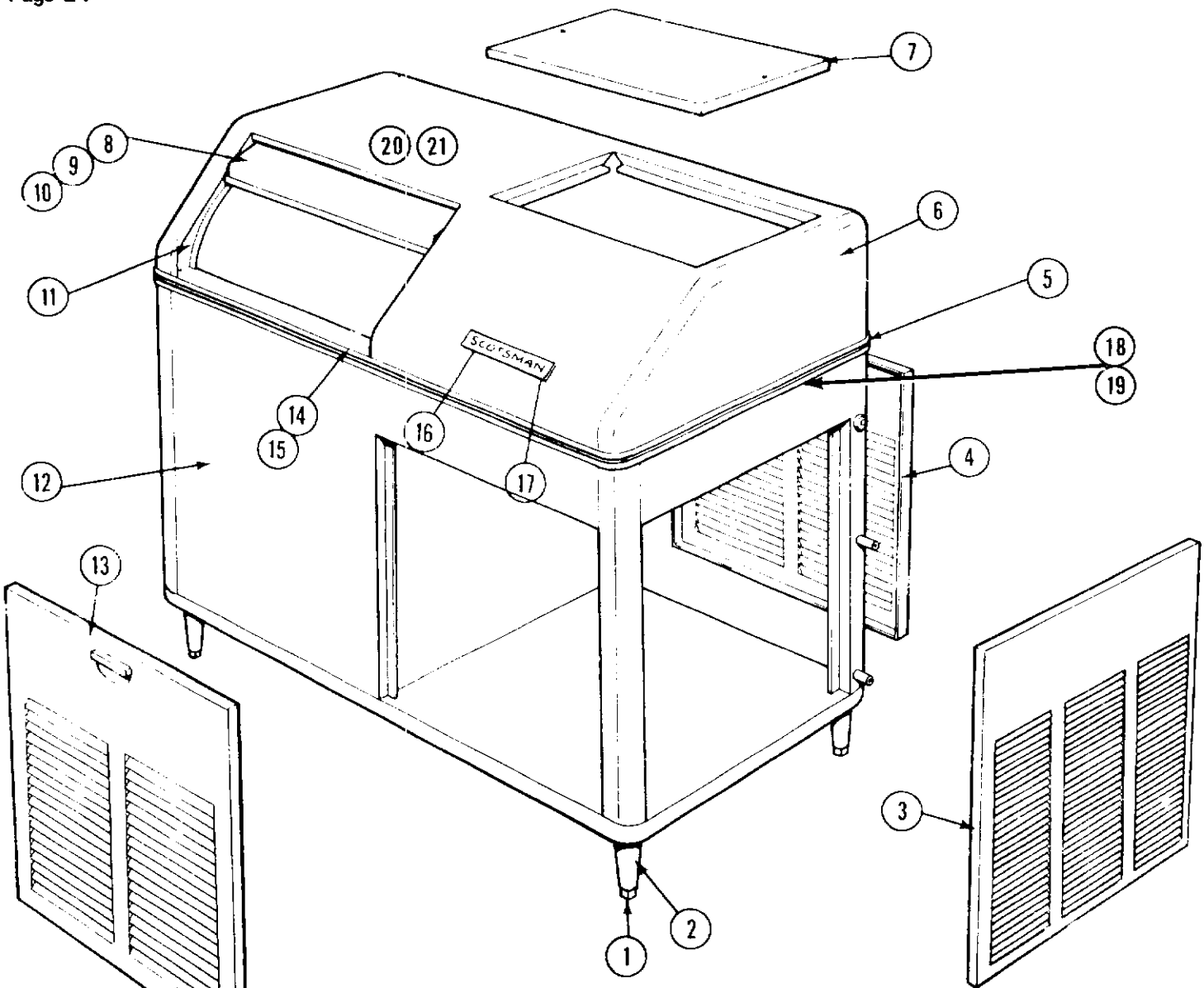

1.	8-522	Leg Levelers
2.	A-15803	Leg
3.	S-6840	Side Door
4.	A-8739	Back Door
5.	A-5862	Rear Moulding Strip
6.	A-19852	Hood (less doors)
7.	A-7676	Top Door
8.	A-15559	Sliding Door
9.	3-640	Door Glide
10.	2-1616	Door Catch
11.	A-16208	Door Track
12.	A-19520	Case Ass'y (less doors)
13.	A-15866	Front Door
14.	A-5863	Moulding Strip
15.	15-324	Plastic Insert - per foot
16.	15-156	Emblem
17.	3-271	Speed Nuts
18.	3-1507	"U" Type speed nuts 18/unit*
19.	3-1419-7	Screws for 3-1507*
20.	2-1736	Cable Stop*
21.	3-1276	Wing Screw*

* Not Shown

Add letter "S" to parts for stainless steel finish

MOTOR COMPRESSOR
Air and Water
115/60/1 3500 RPM

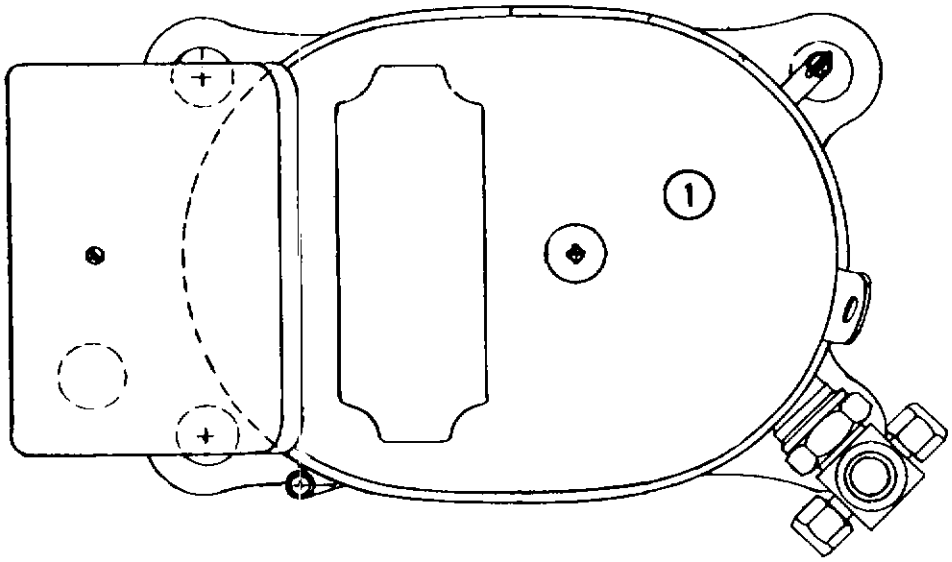

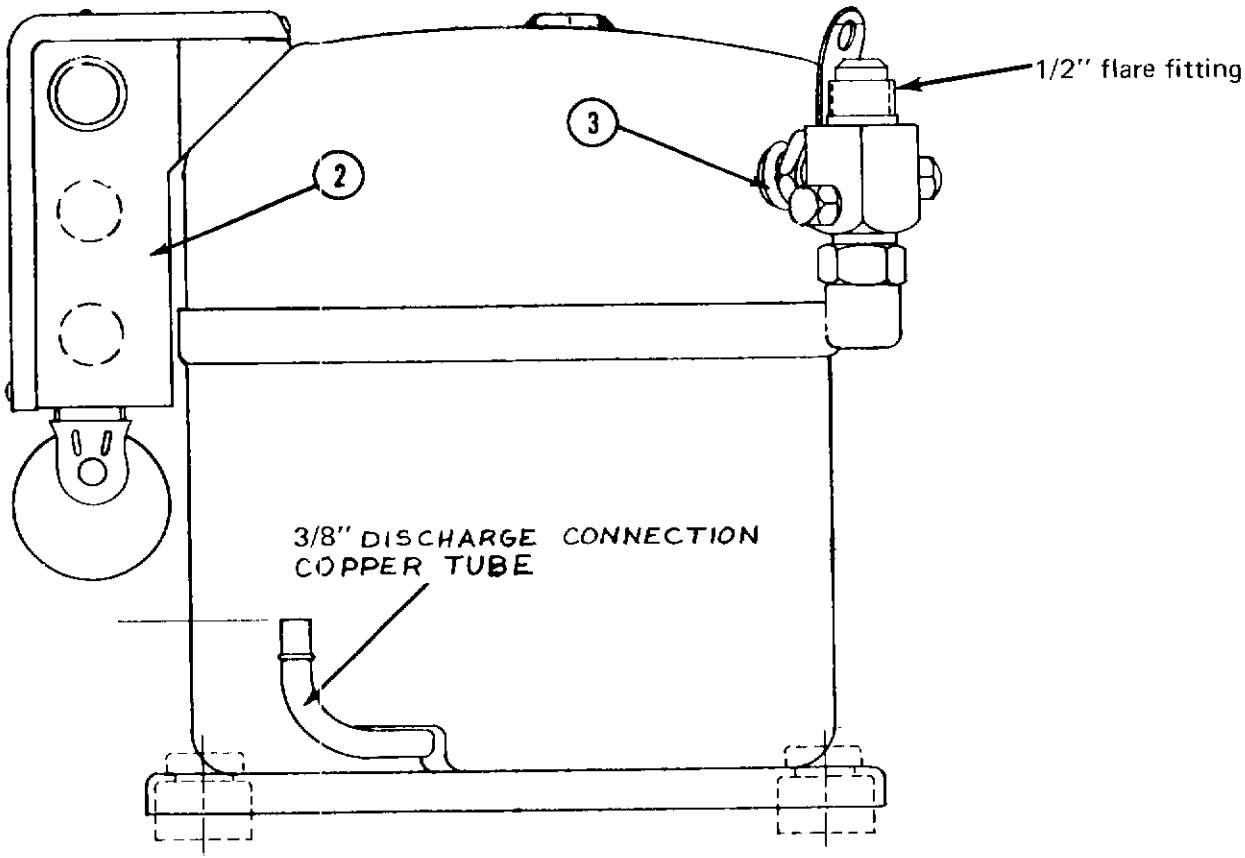

*On base – not shown.

1.	18-2430	Compressor Only Copelaweld Model RSL2-0075-1AA
2.	18-2400-25	Compressor Overload
	18-2410	Relay
	18-2420	Capacitor - Start
3.	18-2201-30	Suction Valve
	*18-1902-17	Capacitor - Run
	18-2300-29	Service Valve Seal

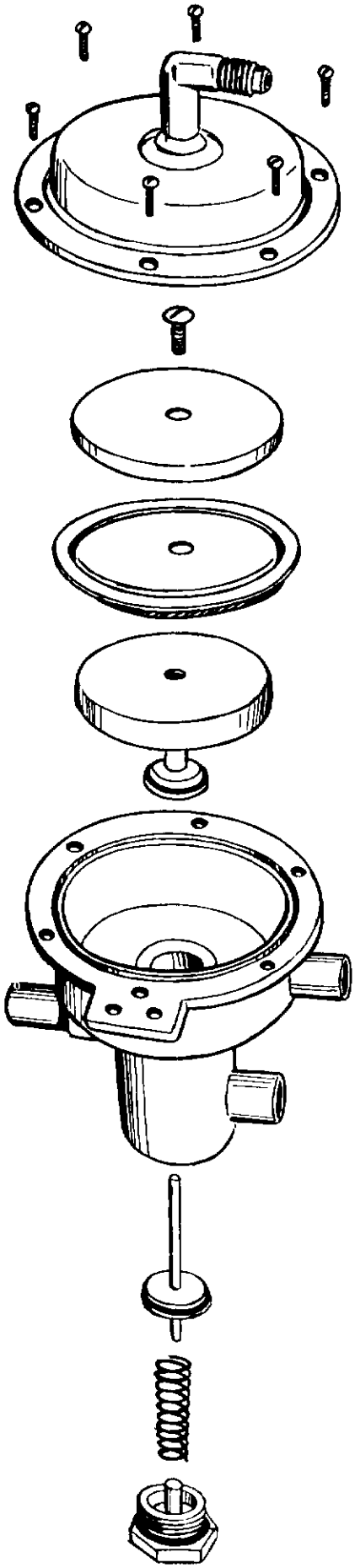

WATER VALVE ASSEMBLY
A- 17954-1

1.	13-617-2	O-Ring
2.	A-17937	Valve Cap Bottom
3.	2-1545	Spring
4.	13-617-1	O-Ring
5.	A-17942	Lower Plunger Rod
6.	3-1403-6	Screws (6)
7.	A-18192	Valve Top Cover
8.	3-1403-27	Screw
9.	A-17941	Upper Plunger
10.	13-606	Upper Diaphragm
11.	A-18312	Diaphragm Cover
12.	A-17947	Valve Body

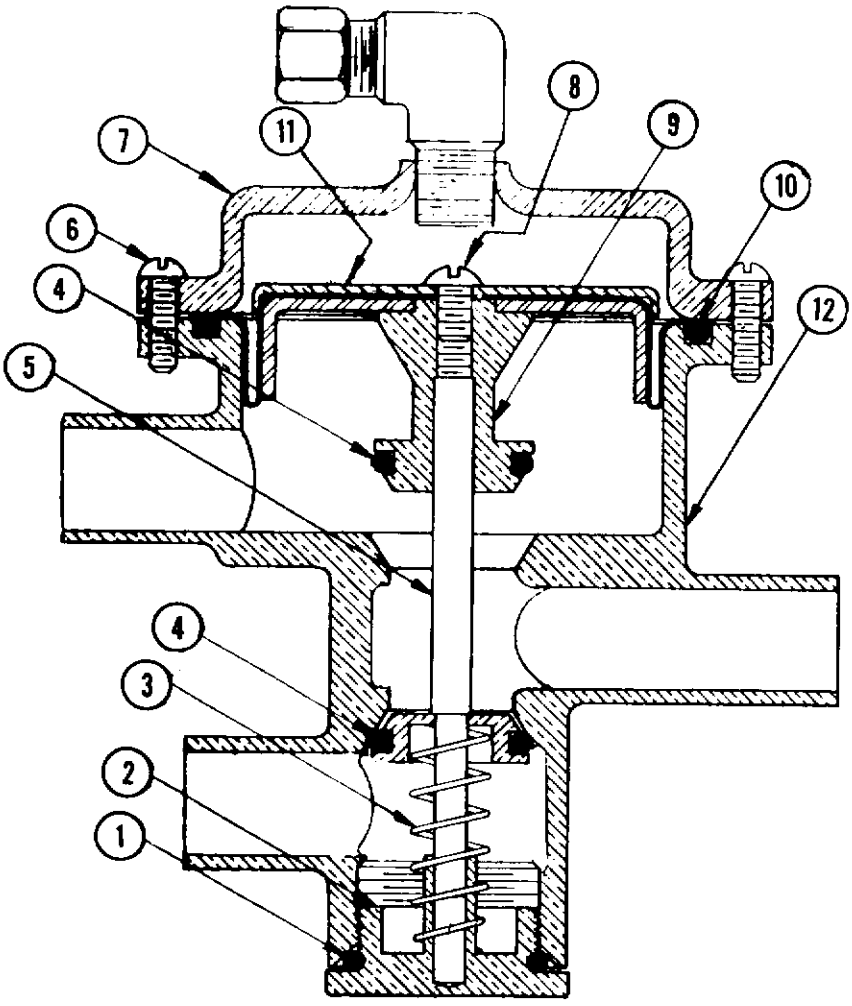

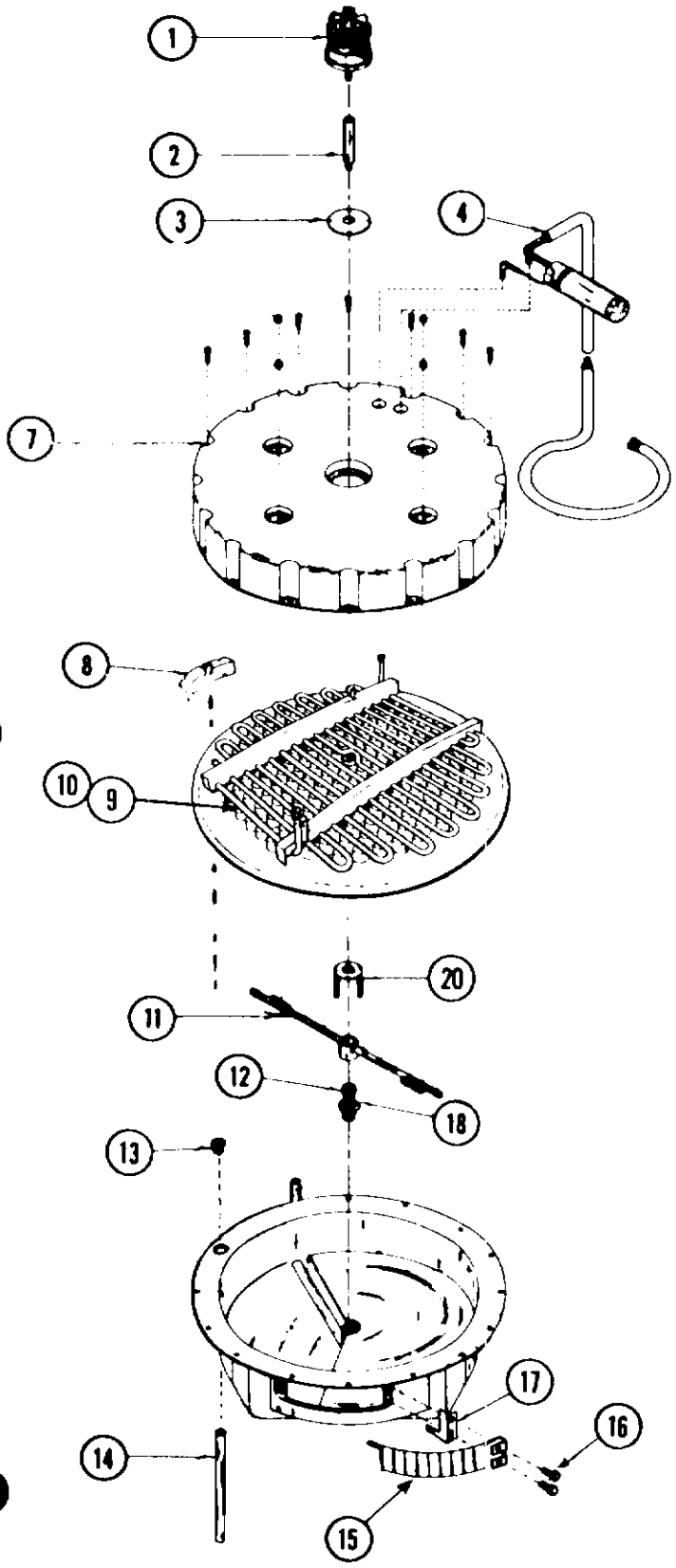

MM-210J FREEZER ASSEMBLY

1.	A-23390-1	Drive Motor
2.	A-6084	Drive Shaft
3.	13-176	Drive Motor Gasket
4.	A-22511	Suction Line, Cap Tube Assy
7.	A-22431	Top Freezing Chamber
8.	A-20169	Water Baffle
9.	A22290	Platen Assembly
10.	13-626	Rubber Cup Holder
11.	A-18361	Spray Bar
12.	A-19508	Inlet & Bearing Assy.
13.	S-7434	Adapter
14.	A-16238	Hot Water Tube
15.	A-19541	Curtain Assy.
16.	S-7234	Cap Nuts
17.	S-7730	Cube Stopper
18.	2-433	O-Ring
20.	S-6900	Drive Arm

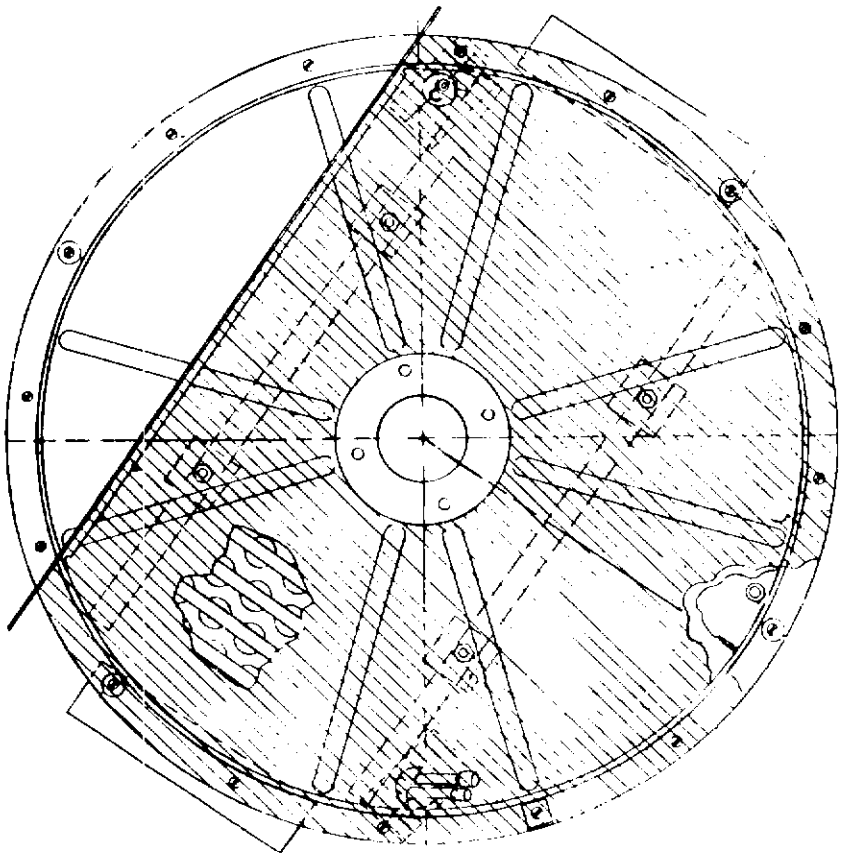

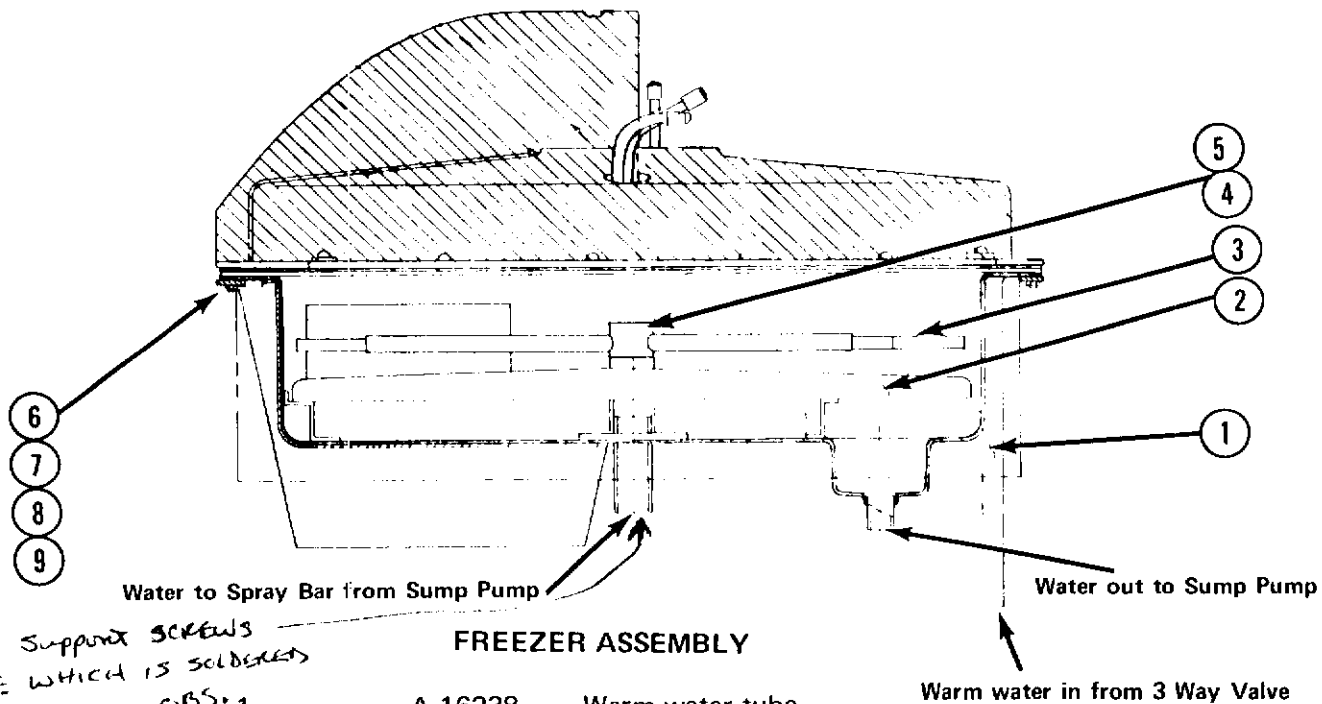

SPRAY BAR SUPPORT SCREWS INTO TUBE WHICH IS SOLDERED INTO SUMP, SUMP IS OBS.

FREEZER ASSEMBLY

1.	A-16238	Warm water tube
2.	2-1672	Plastic Inner Pan
3.	A-18361	Spray Bar, Complete
4.	A-19508	Jet Bearing Shaft
5.	2-433	O-Ring
6.	3-1403-31	Screw 16/unit
7.	3-1406-6	Nut 16/unit
8.	3-1417-5	Washer 16/unit
9.	A-5839	Bolt Reinforcement Plate 8/unit

DRIVE LINKAGE AND SPRAY BAR

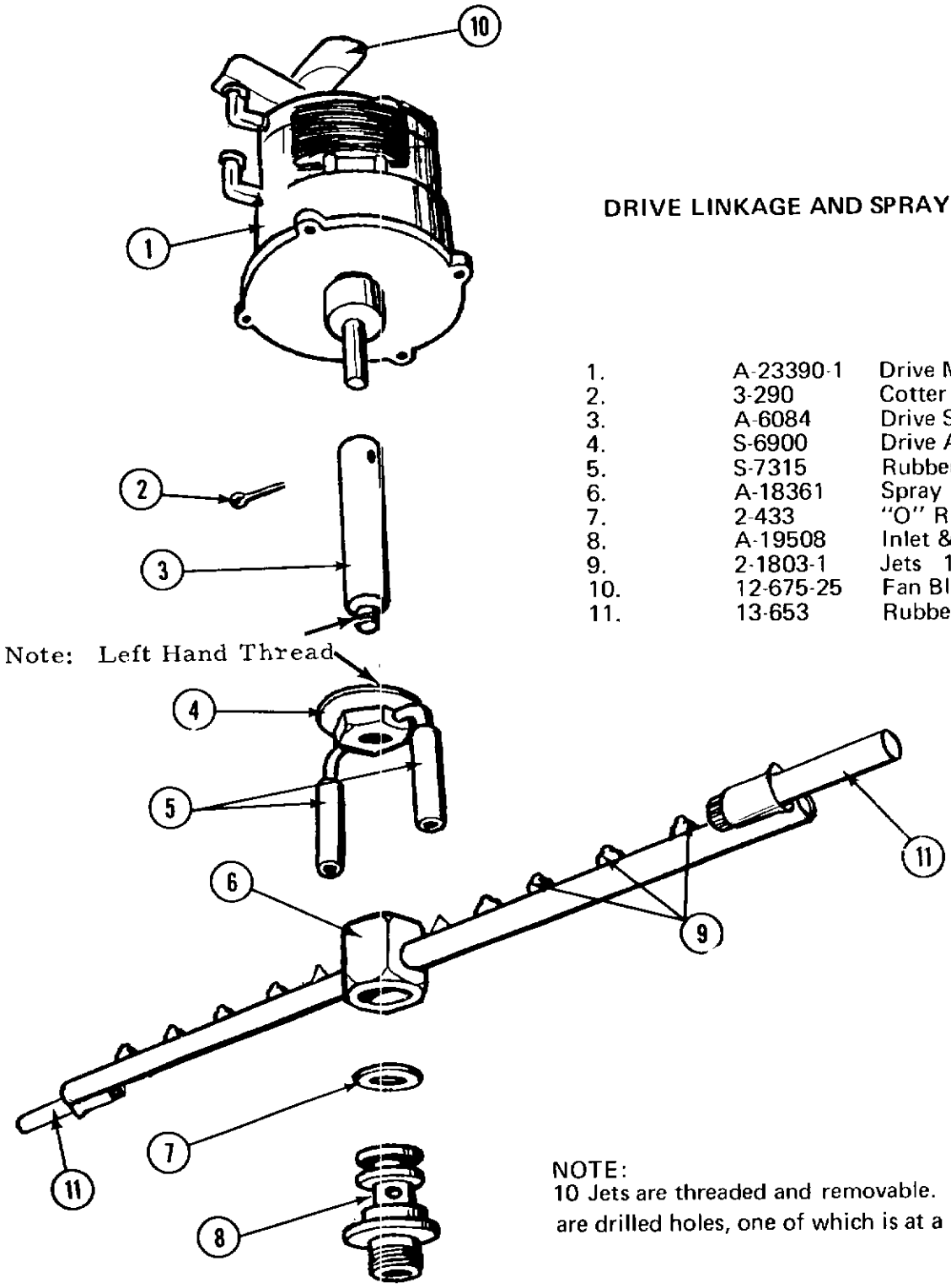

1.	A-23390-1	Drive Motor
2.	3-290	Cotter Key
3.	A-6084	Drive Shaft
4.	S-6900	Drive Arm
5.	S-7315	Rubber Covers
6.	A-18361	Spray Bar, Complete
7.	2-433	"O" Ring
8.	A-19508	Inlet & Bearing Assy.
9.	2-1803-1	Jets 10/units
10.	12-675-25	Fan Blade
11.	13-653	Rubber Spray Bar Tips

NOTE:
10 Jets are threaded and removable. Jets in end pieces are drilled holes, one of which is at a 20° angle.

FUNCTIONAL PARTS DESCRIPTION

11-365	Fan cycle - head pressure control Robert Shaw No. A P 20-1066 120 lb. 140 lb. Range Automatic reset - SPST Nonadjustable
11-353	Bin Thermostat Cutler Hammer No 9530 N 213 Cut Off 35° cut in 39° Adjustable calibrate for altitude over 2000 ft.
11-357	High pressure Cut off — Water Cooled models Robert Shaw No. A P 21-2048 Control opens 190 lb. P.S.I. Manual re-set - Adjustable
12-419	Relay - (by passes thermostat during freezing cycle) Potter - Brumfield No. PR5AY 115/60/1 - SPDT Rated 25 amps
11-345	Cube size thermostat Ranco A11-377 Reverse acting, closes on temperature Decrease - Has adjustment dial
12-1598	Relay 115/60/1 Ameco or Potter Bumfield 3 PDT No. KU-14A-15 Holds cuber drive motor thru Harvest cycle
18-354	Water cooled condenser W.C. models only Halstead-Mitchell No. EL-75
12-1532-1	Water recirculating, sump pump Hartell Inc. 3000 RPM - shaded pole, thermally protected motor - 1/25 H.P. 115/60/1
18-2430	Motor compressor 115/60/1 Copeland refrigeration - Copelaweld RSL2-0075-1AA 2 Pole, 3500 RPM Hermetic for use with refrigerant R-12
A-21038-1	Finishing Clock or Timer 2-1721-51 Knob assembly 2-1721-50 Micro switch.
12-1434-1	Water inlet solenoid Detroit Controls Corp. No. S-30-A 115/60/1 coil - Nylon body 1/4" MPT inlet & outlet No flow control. Also American Standard Control No. SSV-20206
18-1902-17	Running Capacitor Copeland Refrigeration No. 014-0001-00 10 Microfarad rating

SERVICE – COMPLETE UNIT

ALL STEPS LISTED BELOW SHOULD ONLY BE STARTED WHEN WATER AND ELECTRICAL SUPPLY ARE OFF TO PREVENT ACCIDENTS.

To remove cabinet top or hood.

1. Remove two back end screws in rear moulding strip.
2. Pull out black insert tape concealing screws.
3. Remove balance of screws in moulding strips.
4. Lift hood straight up.

To remove Sump Pump.

1. Remove lower right side service panel.
2. Disconnect hose clamp on goose neck.
3. Remove electrical lead to control box.
4. Remove 2 screws in pump mounting bracket.

To remove Drive motor

1. Remove hood top panel.
2. Disconnect electrical cord connectors from motor coil.
3. Reach in through curtained opening and remove drive fork from drive shaft attached to motor. Note drive fork has left hand thread.
4. Remove 4 screws holding drive motor to freezer dome and pull drive motor shaft out.

To remove the Jet Tube assembly

1. Reach in through storage bin sliding door and remove two brass thumb screws holding plastic curta n closed.
2. Open curtain on hinge and reach hand into opening, feeling for spray bar.
3. Follow spray bar to center hub, turn spray bar so one end points towards curtain opening. Now lift straight up on spray bar and out, after spray bar comes off center hub.

To remove Three Way Water Valve

1. Remove lower front right side service door.
2. Remove all hose clamps to water valve.
3. Remove upper water line connection to elbow on top valve housing.
4. Loosen two nut and bolt assemblies holding valve to mounting bracket. Water valve now drops free.
5. Replace in reverse of above.

To replace Storage Bin Door

1. Lift door up and slide back as you normally would to remove ice from bin.
2. Remove screw at center rear edge of door where it is attached to lanyard.
3. Pull door straight out.
4. Install repaired or new door in reverse of step number 2 above.

MAINTENANCE INSTRUCTION FOR SCOTSMAN SUPER CUBERS

THE FOLLOWING MAINTENANCE SHOULD BE SCHEDULED EACH (6) SIX MONTHS ON ALL SCOTSMAN SUPER CUBERS. CALL YOUR AUTHORIZED SCOTSMAN SERVICE DEPARTMENT.

1. Clean air-cooled condenser; This is to be done frequently with the machine shut off.
2. Clean water system and evaporator, sump tank and screen, using Scotsman Ice Machine Cleaner or equivalent.
3. Remove jet tube and manually clean jets by unscrewing jets.
4. Check curtain assembly.
5. Tighten all electrical connections.
6. Tighten all bolts.
7. Check water supply. Check water pressure flow through flow control. Clean water strainer.
8. Oil jet tubes drive motor three (3) places. Use SAE 20 oil - 3 oil cups.
9. Oil Condenser fan motor. Punch sealed cap or remove screws where possible.
10. Check for refrigeration leaks with halide torch.
11. Check for water leaks. Tighten drain line connections.
12. Check size and condition of cubes. Adjust as required. See Service Analysis Section.
13. Check bin thermostat setting. Factory set at 35^{0} out, 39^{0} in.

PROCEDURE FOR USE OF SCOTSMAN ICE MACHINE CLEANER

1. Remove lower front access door.
2. Locate control box with time clock knob protruding thru cover.
3. Put unit through a harvest cycle manually. This may be done by turning time clock knob clockwise until a loud snap is heard.
4. Let unit finish cube harvest cycle and start into freezing cycle. This will be approximately 5 minutes after the loud snap in Step No. 3 is heard. At this time turn the compressor switch off, the lower of the two switches in the control box.
5. Locate the sump reservoir which is in the storage bin area and directly behind the ice discharge chute. This discharge chute is covered by a series of white plastic curtains which are free to swing out into the storage bin. Pour 4 ounces (half bottle) of "Scotsman Ice Machine Cleaner" into the sump reservoir.
6. Let unit operate normally for 10-15 minutes into the freezing cycle. No ice will be made because the motor compressor is not in operation.
7. At the end of this time put the unit through 2 or 3 harvest cycles manually to allow fresh make up water to clean out remaining solution. Each time waiting approximately 5 minutes after the loud snap until the next harvest cycle is done manually.
8. Turn the compressor switch back on
9. Check each new batch of cubes until they are clear and until acid taste has been removed from cubes.
10. Put hot water in storage bin to melt the cubes and thereby clean the drains with the same solution that has just cleaned the unit.
11. Use a damp cloth to wipe off curtains and inside of storage bin.
12. Replace lower front access door.
13. Unit is now ready for continued automatic operation.

TABLE OF CONTENTS

FORWORD 1

TABLE OF CONTENTS 2

SPECIFICATION AND DIMENSIONS 3-4

PHOTOGRAPH AND ICE MAKING CHART 5

SELECTING LOCATION

- Location 6
- Uncrating 6
- Preparation for Installation 6
- Setting up Machine 7
- Placing Machine Section in Place 7
- Installing Crusher 7
- Plumbing 7-8
- Electrical 8
- Start Up 9
- Wiring Diagram 230/60/1 AC 10
- Wiring Diagram 230/60/1 WC 11
- Wiring Diagram 208-220/60/3 AC 12
- Wiring Diagram 208-220/60/3 WC 13
- Wiring Diagram 208/60/1 AC 14
- Wiring Diagram 208/60/1 WC 15
- Diagram Plumbing Connections 16
- Final Check List 17

CYCLE OF OPERATION

- Harvest cycle 18
- Freezing cycle 19

SERVICE ANALYSIS CHARTS 20-23

EXPLODED VIEWS OF COMPONENT PARTS

- Sump Pump 24'
- Control Box 25
- Drive Linkage, Spray Bars 26
- Front View, Complete Unit 27
- Top View, Air Cooled 28
- Top View, Water Cooled 29
- Air Cooled Case Assy 30
- Water Cooled Case Assy 31
- Hot Water Tank and Water Valve Assy 32
- Spray Bar and Bearing Assy 33
- Drain Valve Assembly 34

SERVICE INFORMATION

- Water Valve Adjustment 35
- Miscellaneous Service Information 36
- Removing & Replacing Component Parts 37-38
- Functional Part & Maintenance 39-44
- Maintenance Instructions 45
- Part List 46-48

THIS PAGE
INTENTIONALLY
LEFT BLANK

THIS PAGE
INTENTIONALLY
LEFT BLANK

SPECIFICATIONS

	MM-510H	MM-510WH
Compressor	1 hp twin cylinder Semi Hermetic	1 hp twin cylinder Semi Hermetic
Condenser	Cleanable Air Cooled	Cleanable Water Cooled
Refrigerant	R12	R12
Refrigerant Charge	53 ounces	53 ounces
Refrigerant Control	Twin Capillary Tube	Twin Capillary Tube
Power Consumption	10 Amp., 3 Wire 230 V., 60 Cycle Single Phase	10 Amp., 3 Wire 230 V., 60 Cycle Single Phase
Water Consumption to Produce Ice	4 1/2 Gallons per hour	4 1/2 Gallons per hour
Water Used by Condenser		1 to 3 1/2 Gallons per minute. Varies with water temperature.
Ice Capacity	See Chart. Page 5	See Chart. Page 5
Companion Bins	B-400 B-650 B-1250	Same Same Same
Cube Size	Scotsman Miniture cube	Same
Cubes Per Harvest	416	416

Note: All Scotsman Super Cubers require neutral wire for secondary 115 volt component circuit: 3 phase cubers require 4 wire service with neutral. Special voltages upon request.

SPECIFICATIONS

SUPER CUBER MM-510 SERIES	MODEL MM-510H	MODEL MM510WH	MODEL MM-510H-SS	MODEL MM-510WH-SS
Daily capacity up to 500 lbs.	X	X	X	X
400 lb., 650 lb. or 1250 lb. storage unit	X	X	X	X
Air cooled condenser	X		X	
Water cooled condenser		X		X
Heavy duty 1 HP. Compressor	X	X	X	X
Standard 115-230 V, 60 cy, 1 ph, 3 wire	X	X	X	X
½" water inlet IPT	X	X	X	X
¾" overflow drain IPT	X	X	X	X
½" drain on B650H bin NPT				
¾" sump drain IPT	X	X	X	X
¾" condenser drain IPT	X		X	
Hammerloid grey exterior	X	X		
Stainless steel exterior			X	X
Stainless steel lined storage bin	X	X	X	X
98 5/8" height (with legs) and B650H	X	X	X	X
90 5/8" height (without legs) and B650H	X	X	X	X
110 5/8" height (with C-5B crusher with legs) and B650H	X	X	X	X
102 5/8" height (with C-5B crusher without legs) and B650H	X	X	X	X
46 3/8" width including bin	X	X	X	X
34 1/8" Overall depth including bin (water cooled)	X		X	
39 1/8" Overall depth including bin (air cooled)		X		X
Approximate shipping weight	536	536	536	536

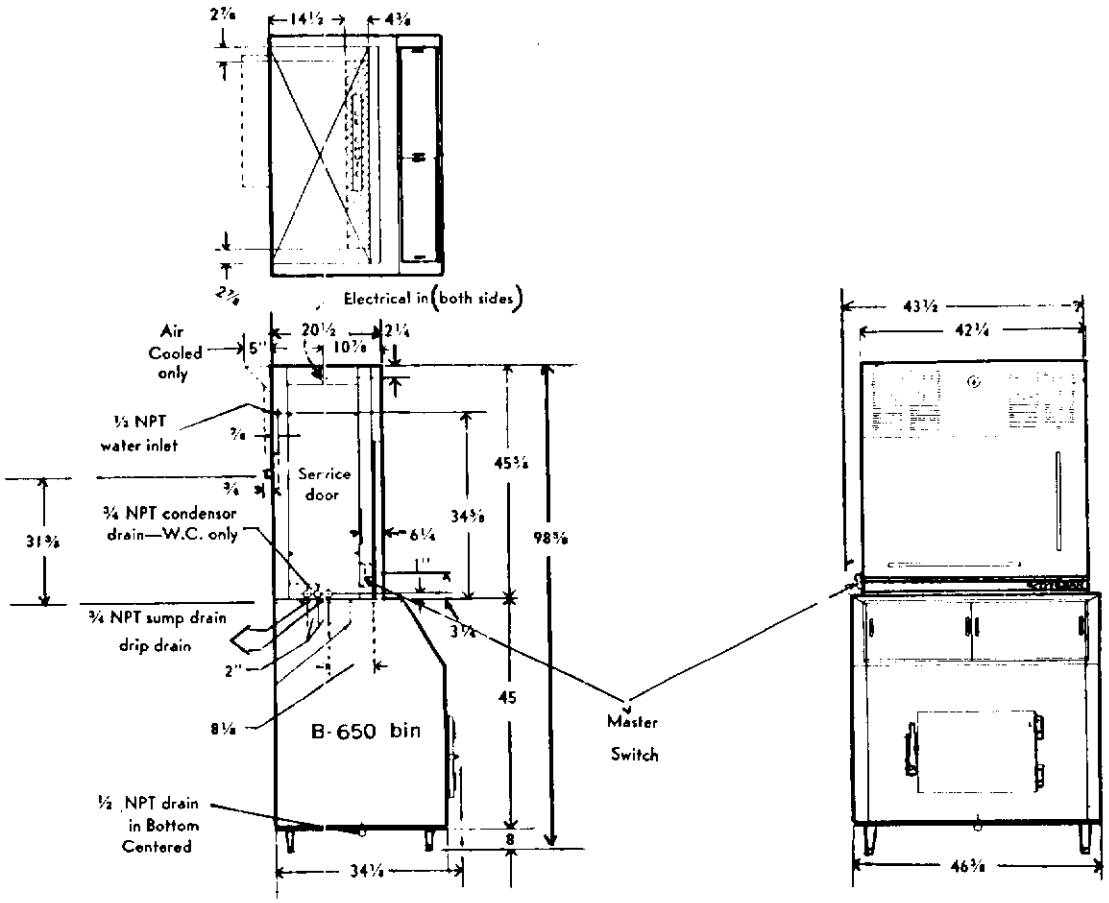

SCOTSMAN

SUPER CUBER
MM-510
SERIES

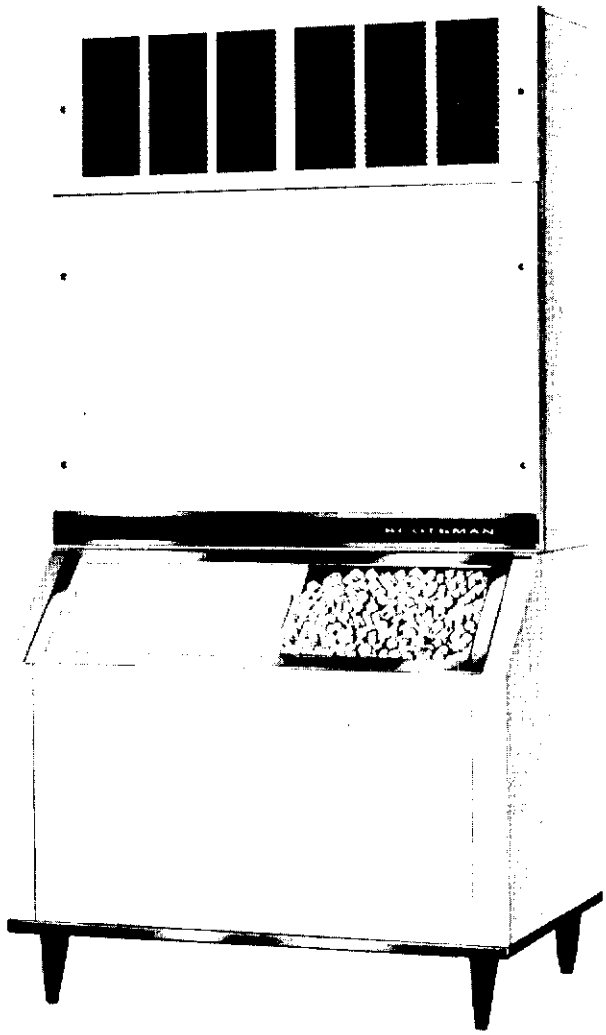

with B-400 bin

ice making capacity

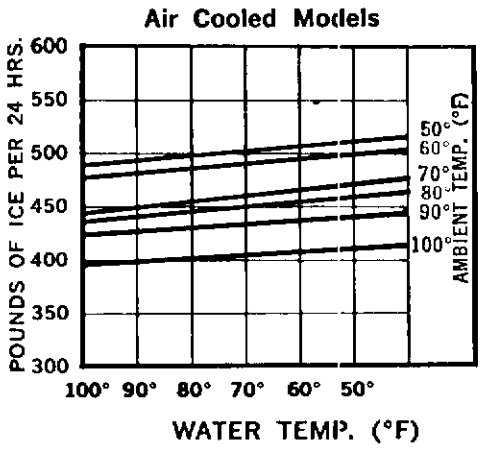

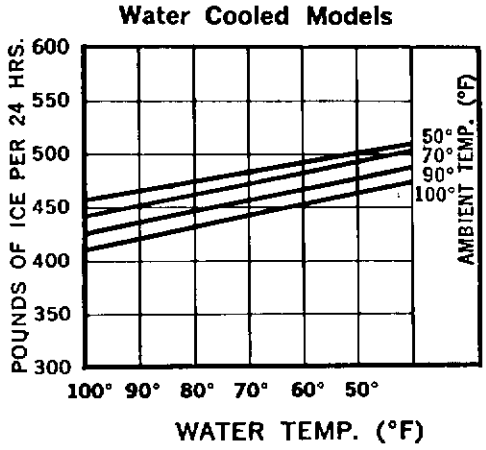

INSTALLATION

LOCATION

1. Select a location as convenient as possible for the user.
2. Accessible to the necessary electrical and plumbing connections.
3. If possible, have minimum space of 12 inches above top and from left end panel for service.
4. A minimum of 24 inches for the convenience of the user in front of the machine.
5. Room temperatures--minimum of 50 degrees, maximum of 100 degrees.

UNCRATING

1. If possible, do not uncrate until equipment is in permanent location.
2. Storage bin and machine compartments are shipped in separate crates.
3. Remove hold-down bolts from skids.
4. Remove crate in usual manner for wood crating.
5. Remove warranty card and Users manual from storage bin and wipe bin clean with damp cloth.
6. Fill out warranty card completely including model and serial numbers as taken from aluminum plate found behind front service panel and forward to Scotsman factory using self-mailing card.

PREPARATION FOR INSTALLATION

1. Inspect complete unit cabinetry for shipping damage. Notify carrier of concealed damage claims.
2. Remove all service doors and panels.
3. Remove water reservoir cover and take out paper packing around float ball, make sure plastic overflow standpipe is securely in place. Adjust water level, by bending float arm, to the highest possible elevation without running over overflow standpipe.
4. Remove leg package from bin and install 4 legs in base sockets of bin.
5. Loosen motor compressor hold down nuts until motor compressor rides freely on mounting springs.
6. Remove all masking tape and packing members from curtains and inner cube making compartments. Re-align components such as sump pump or cube racks that may have shifted in transit.
7. Remove water strainer from machine section for installation on unit or in water supply line feeding unit.
8. Open electrical control box and prepare for hook up. Use knock outs, cord connectors, etc. Then check unit nameplate voltage against building source voltage to make sure they correspond. Caution - Improper voltage applied to units will void your warranty protection.

SETTING UP MACHINE

1. Be sure floor strength is capable of 1,000 pounds in an area of 29 inches by 42 inches.
2. If ceiling height permits, use 6 inch base legs for the storage bin which will make a more convenient height for the user and allow more fall from the storage bin drain.
3. Storage bin must be absolutely level. (This is important).

PLACING MACHINE SECTION IN POSITION ON ICE STORAGE COMPARTMENT

1. Remove front top service door and large front service door to facilitate handling.
2. Extreme caution must be used to prevent damage to the equipment or injury to the personnel.
3. If at all possible, use Carrying Handles. Have four men available at this installation.
4. If handles are not available, place 2 x 4's or other available shims at all four corners which allows clearance for fingers.
5. Place 2 x 4's lengthwise across storage bin a short distance in from front and back which will allow clearance for fingers when section is set in place.
6. Each man should take a position at corners of machine section using one hand to lift with and other hand to steady machine. (CAUTION--all four men should be instructed to lift together so as not to tip unit over.)
7. After machine is in position on 2 x 4's on bin section, tilt machine forward and backward to remove 2 x 4's.
8. Place machine section in exact position on storage compartment gasket.
9. Bolt two back tie straps to hold machine section in place.

WHEN INSTALLING C5-B CRUSHER

1. Unpack crusher and check electrical connections to make sure it is in proper running condition.
2. Place crusher in exact position on storage bin.
3. Bolt two back tie straps to hold crusher section in place on bin.
4. Follow steps under paragraph, "Placing Machine Section in position on Ice Storage Compartment."

PLUMBING

1. Refer to Installation Diagram page 16.
2. Water inlet should be 3/8 inch pipe or larger.
3. Strainer should be installed on outside of machine as close as possible to unit.
4. A shut-off valve either of globe or gate type should be installed next to strainer for convenience of the service man.
5. MM-510 is equipped with three separate drains so as to comply with all plumbing codes. Drain marked drip pan drain is to catch any condensation that may come from the unit and must have fall as it flows by gravity. Bin has own centered, bottom drain.
6. Drain marked sump should be kept 3/4 inch in size with adequate fall which assures complete emptying of the sump tank at the end of the freezing cycle; and also with enough velocity to remove any sediment or solids which may have accumulated from the preceding batch of ice cubes.
7. Storage drain should be connected to open drain.
8. On water cooled models the drain from the condenser has slight pressure. (NOTE: If outlet of connected drain is visible, it is helpful to the service man in checking condenser water valve.)

9. Air cooled models MM-510 do not use condenser drain connection since refrigerant cooling medium is air rather than water.
10. In areas where vast amounts of solids and impurities are present in the water supply, it may be necessary to use some type of filtering equipment on the water that is used in the actual manufacture of the ice and not for the condenser.
11. If above condition is true, it is suggested to disconnect water line from present location in machine compartment and connect it to a 1/4 inch OD copper line which may be run to the filtering equipment. (Note: if water softening equipment is available in building, connect 1/4 inch line in soft water ahead of heater.)
12. For water treatment over and above normal local impurities, consult Service Dept., Scotsman Queen Products, Albert Lea, Minnesota.

ELECTRICAL

1. IMPORTANT. An ice machine must be connected by a competent electrician.
2. Refer to wiring diagrams, pages 10-15 for proper voltage hookup in accordance with voltage stamped on complete unit serial plate.
3. Compressor motor operates on high voltage only and all component parts operate on 110 volts only. (CAUTION. In areas where a wild phase is present in their system, it must be kept out of machine.) Note: Part #12-532 Heating Element Requires 230 V.
4. Electrician should be instructed to install proper disconnect switch of a three pole variety with solid neutral.
5. Select proper amperage load and fuses per diagrams on pages 10-15 whose voltage corresponds to unit voltage.

MANUAL SWITCH

A manual switch is provided at bottom of left side of icemaker for the convenience of the user when it is desired to shut the unit down for a period of time. When any electrical component parts are being removed or serviced, it is recommended that the line switch be put in the "OFF" position.

DUAL PRESSURE CONTROL

A high pressure control is provided to shut down the complete unit in case of extremely high head pressures or interrupted water supply. Some models are equipped with a lock-out type, and the unit will remain off until the control is reset manually. (To reset, press down small plunger on top of control.) The high pressure control should be set at 190 pounds.

The low pressure control is provided as an added safety precaution in case of a broken or leaking refrigerant line. This prevents drawing in air or moisture. The setting of the low pressure control should be zero pounds cut-out and 32 pounds cut-in.

START - UP

1. Make sure all service valves on the condensing unit are open and turned as far as possible to the left. Replace the valve caps after checking the valves. All models are shipped with valves open.
2. Make sure that the flow of air is not impeded in any way over condenser on air-cooled models. Keep condenser clean. (Check and clean the condenser monthly).
3. On all water-cooled models, turn on water supply to water-cooled condenser and check for leaks in connections made.
4. Turn on cube supply at hand shut-off vlave. Make sure hot water tank fills to proper level, if it does not, adjust level to 1/4" below overflow pipe by bending float rod.
5. NOTE: Unit has built-in flow control set to approximately .4 gallons per minute.
6. Check electrical circuit for proper voltage from building source. Do not connect with other appliances.
7. Remove cover from control box, check for loose or frayed wire, then turn manual switch to "on" position. Note: All "H" models have motor compressor only switch in control box.
8. Turn disc on time clock to the right just far enough for water solenoid valve to energize. Allow clock to take it through harvest cycle. This will be approximately three minutes. (Figures on dial represent minutes).
9. Dial pointer should be set on Number 2. After the compressor starts, turn the dial completely around and send it through another harvest cycle. Do this several times. This will completely flush machine of any dust that may have accumulated in shipment.
9. After machine has been properly flushed, allow it to go into a freezing cycle--check for possible water leaks, check sump pump operation--should be running freely. Also note if jet tube travel is correct, and that none of the jets are plugged.
10. Time clock dial does not rotate at the end of the harvest cycle; it is started later by the cube size control located in the control box.
11. Freezing time will be approximately 20 minutes in a 70 degree ambient. (Longer if above, and shorter if below). After 15 minutes of the freezing cycle, check water in float chamber with a thermometer. (Should be approximately 130-140 degrees at this time.) If temperature is not correct adjust thermostat.
12. Watch first harvest and check to make sure that plastic curtains have not been damaged in shipment.
13. Check size of cubes made: If too small after a second complete cycle; adjust cube size control to lower or colder setting.
14. Check texture of cubes made; partially cloudy cubes throughout suggest unit running short of water near end of freezing, or possibly an extremely bad water condition, which would indicate use of filtering or purifying equipment. Contact SCOTSMAN -- Queen Products, Service Department, Albert Lea, Minnesota, for further details.
15. With unit on harvest cycle, take a handful of cubes made and hold on storage bin thermostat cover. Should cut unit off in one to two minutes. Remove ice; unit should cut back on automatically. Thermostat is factory set at 35° out, 39° in.
16. Replace all panels and service doors.

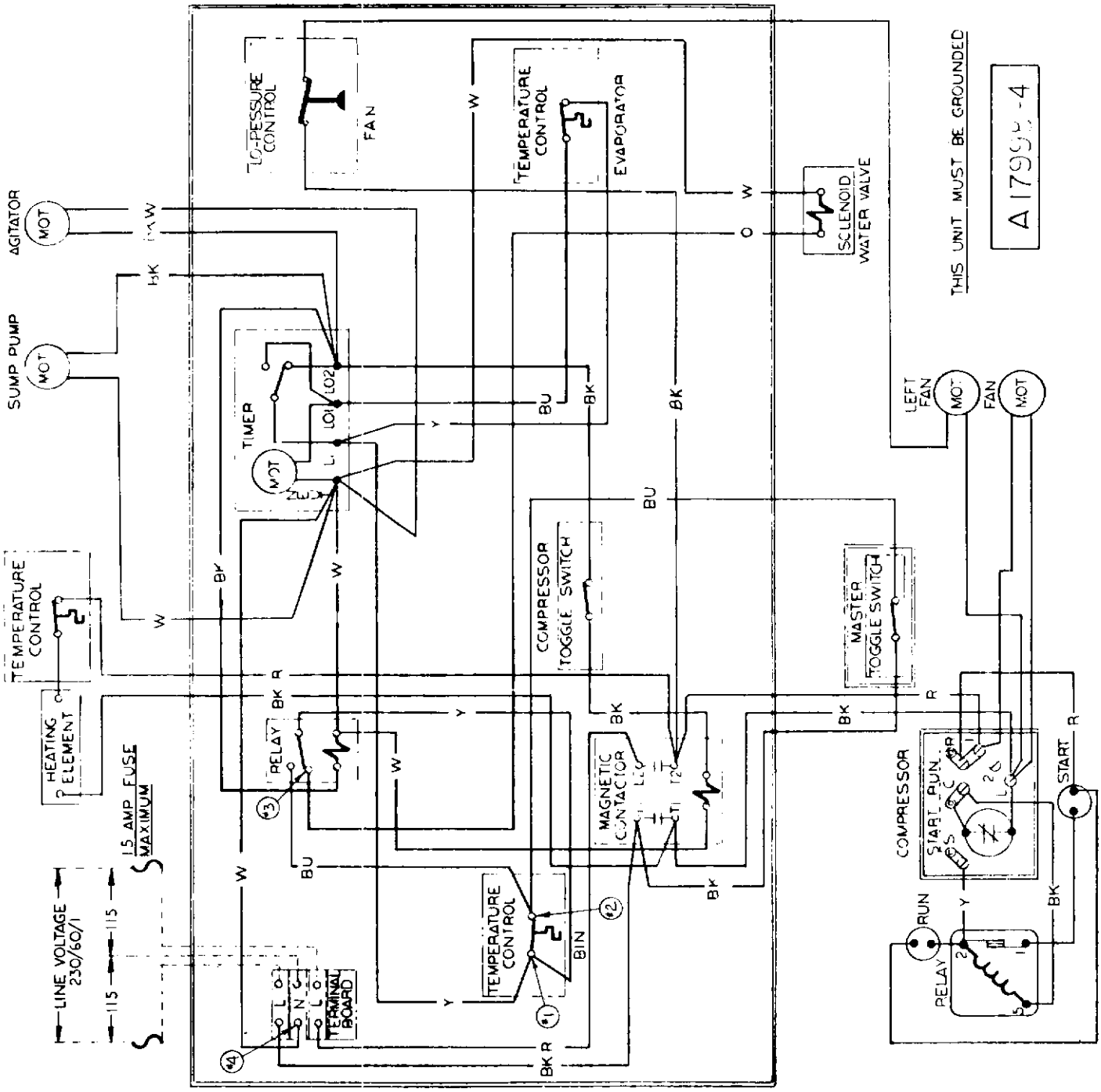

MM-510
WIRING DIAGRAM

230/60/1 AIR COOLED

A-17998-4

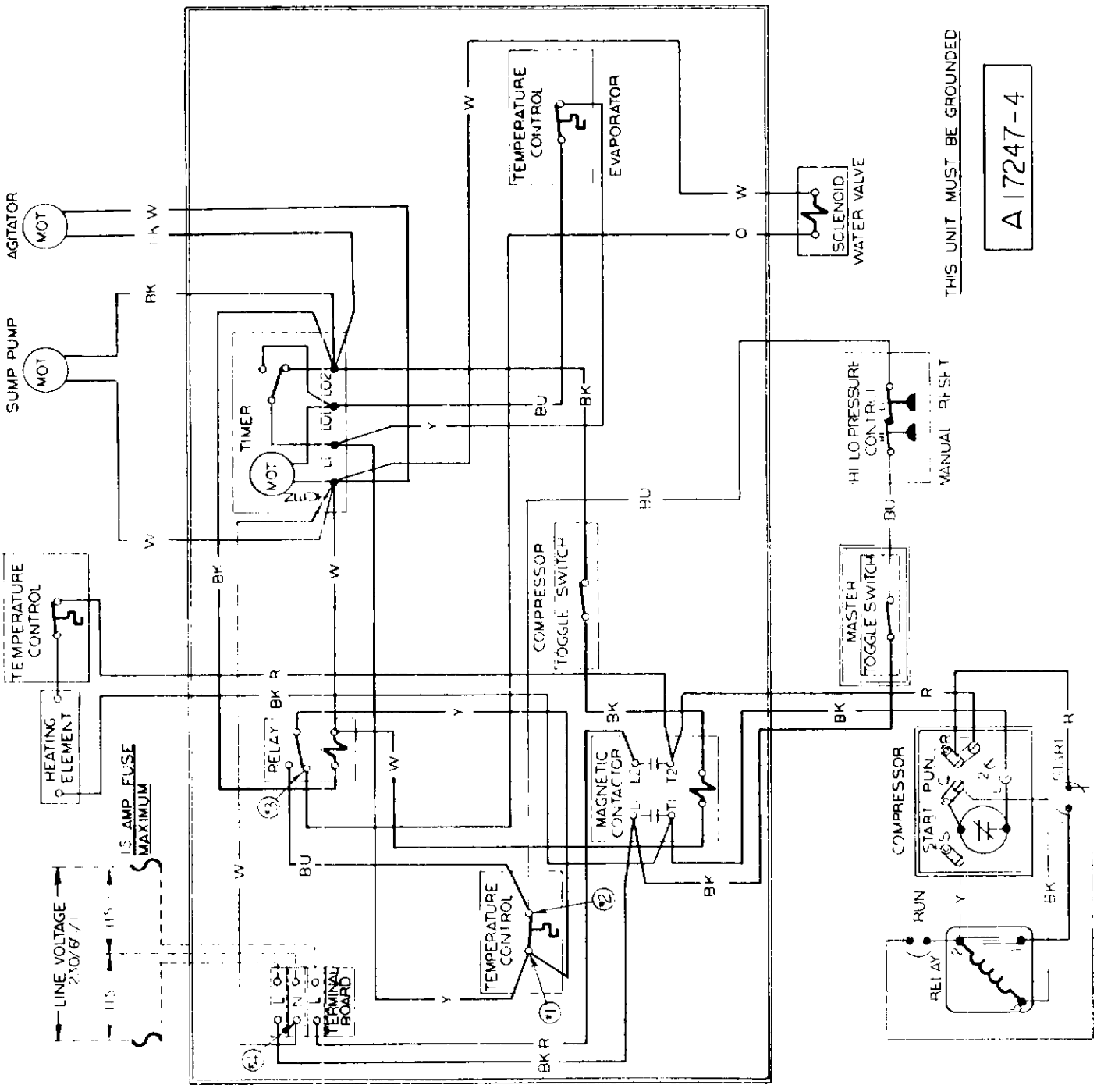

MM-510
WIRING DIAGRAM
230/60/1 WATER COOLED
A-17247-4

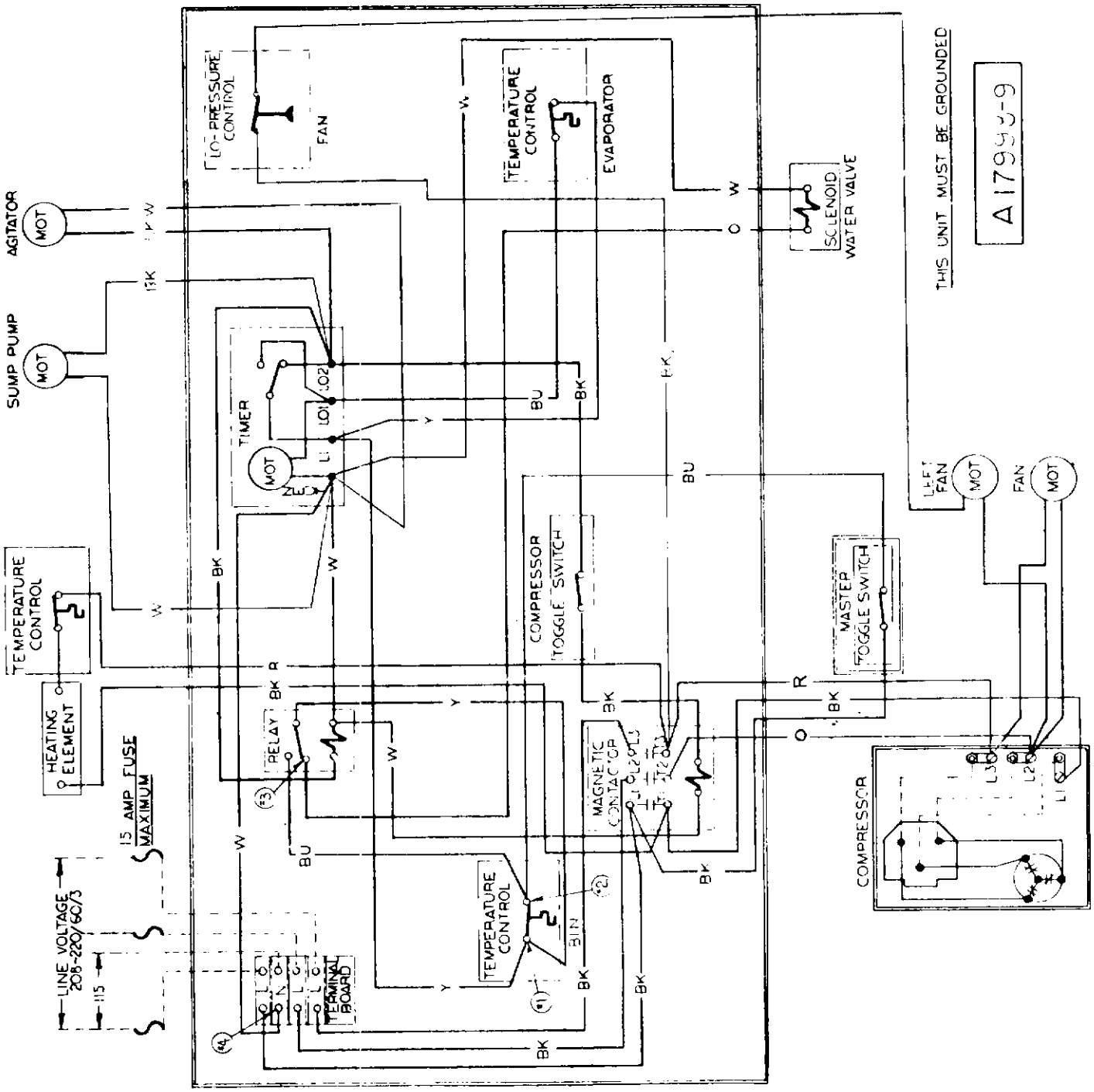

MM-510
WIRING DIAGRAM

208/220/60/3 AIR COOLED
A-17998-9

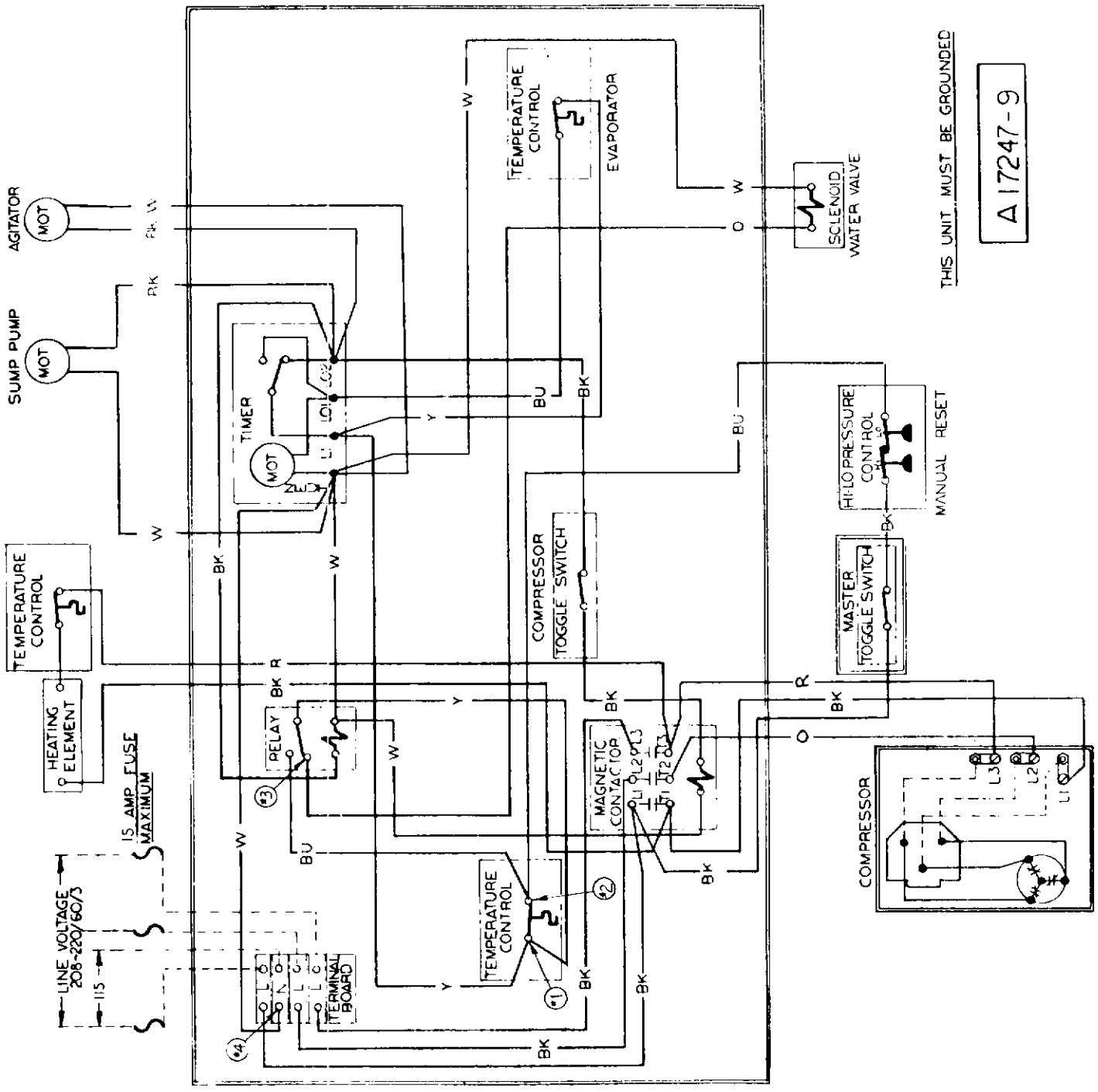

MM-510
WIRING DIAGRAM

208/220/60/3 WATER COOLED
A-17247-9

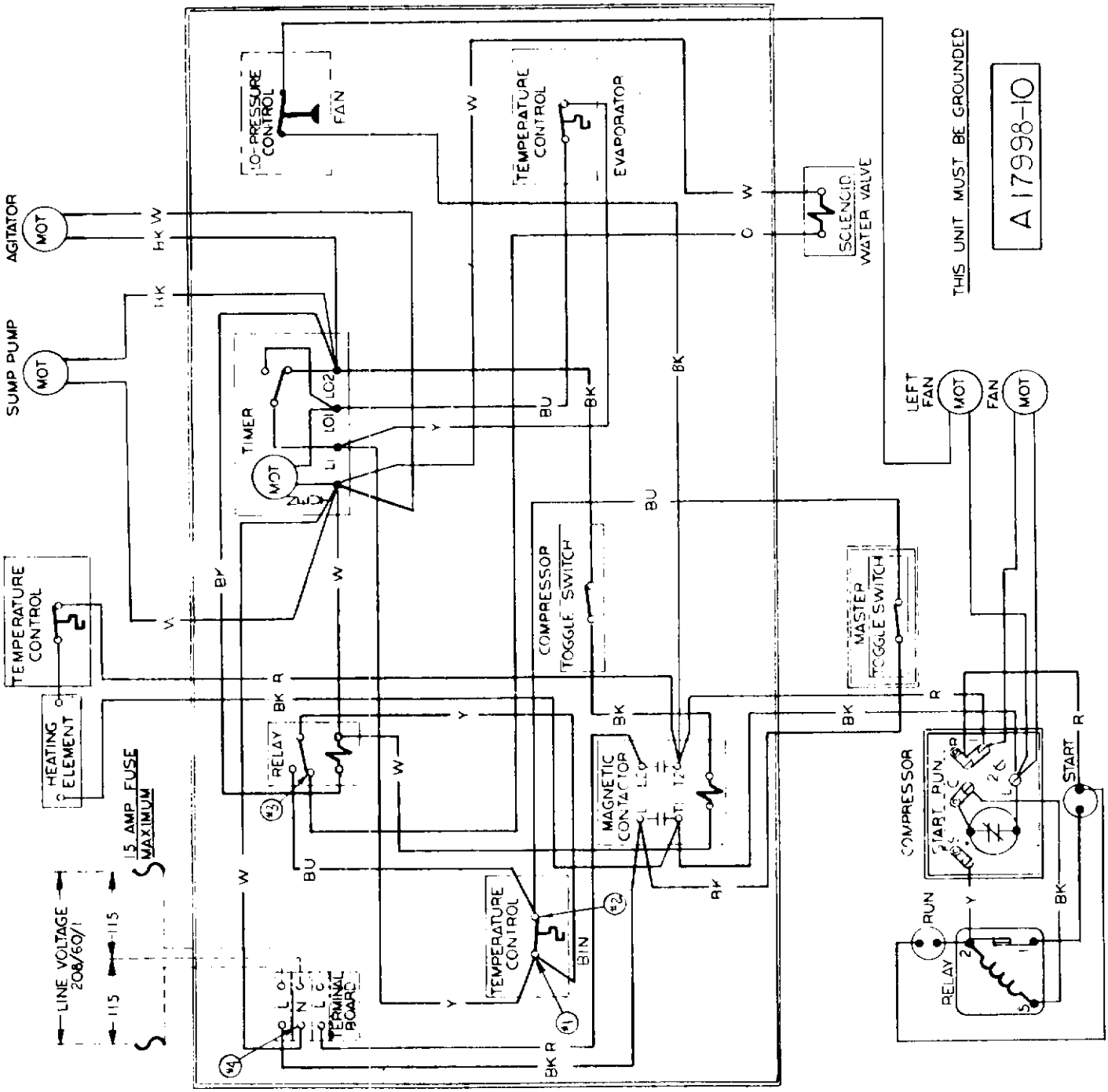

MM-510
WIRING DIAGRAM

208/60/1 AIR COOLED
A-17998-10

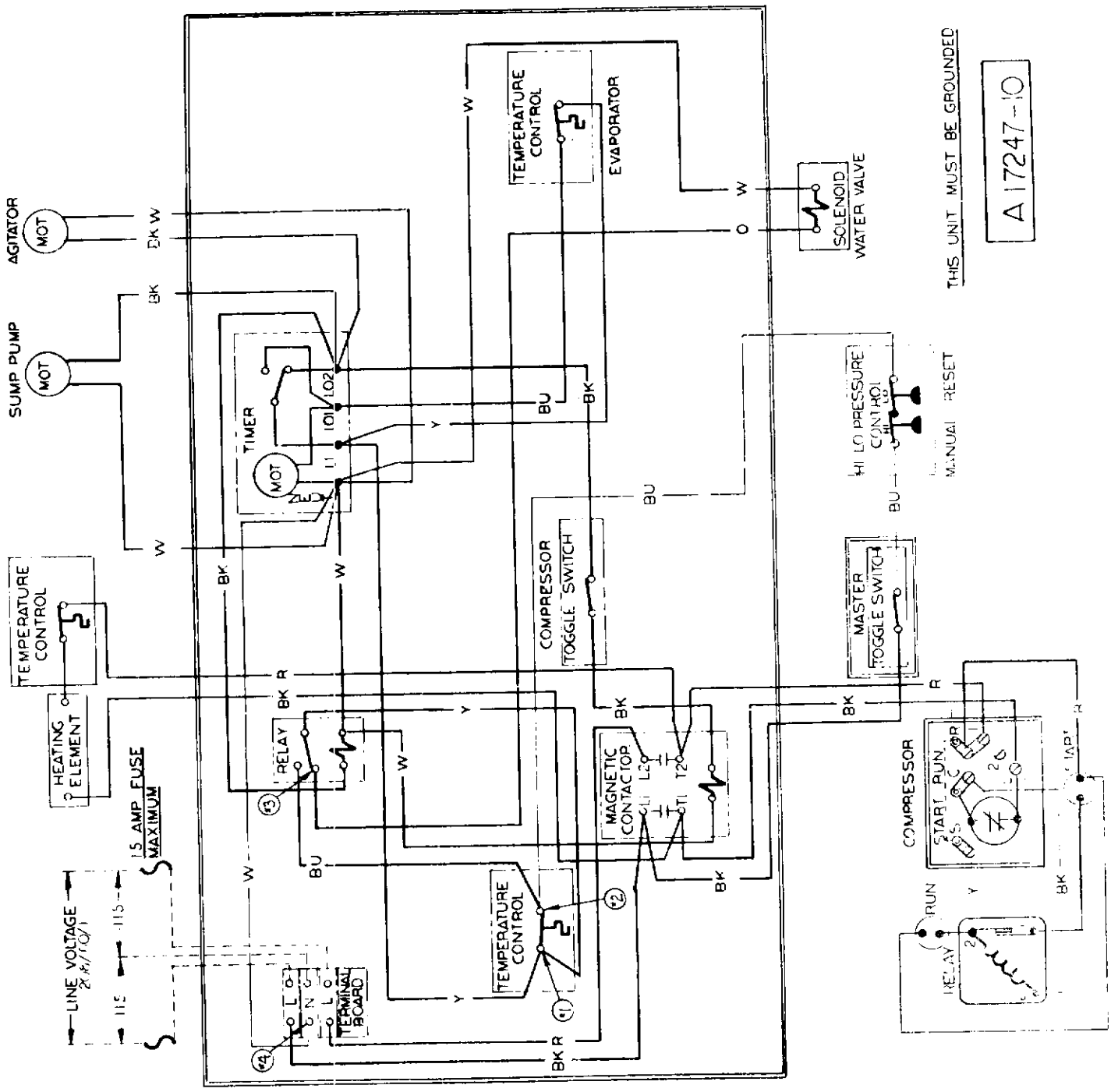

MM-510
WIRING DIAGRAM

208/60/1 WATER COOLED
A-17247-10

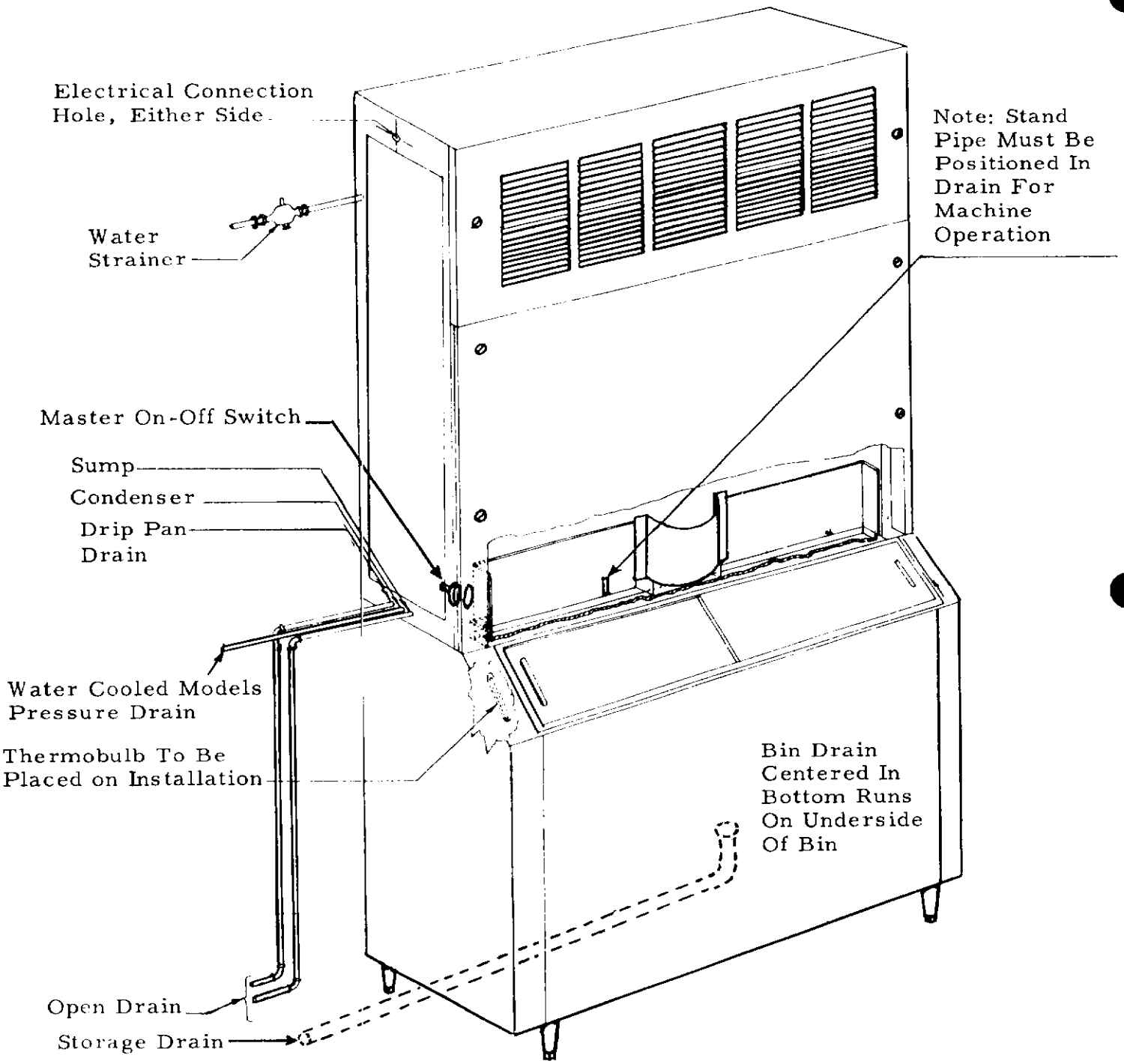

NOTE: Hand shut off valve to be located ahead of water strainer. Air cooled models do not use condenser or pressures drain.

MM-510 INSTALLATION
WITH B-400 SERIES BIN

INSTALLATION

FINAL CHECK LIST

1. Is the machine level? (Important)
2. Have all electrical and plumbing connections been made and checked?
3. Is the water supply valve open and the electrical power on?
4. Has the voltage been load-tested and checked against nameplate voltage?
5. Have the compressor hold-down bolts been loosened so that the compressor rides freely on its mounting springs?
6. Has float been checked and set in hot water tank for proper water level?
7. Turn machine on and test heater and thermostat. After 20 minutes of freezing cycle, check water in float tank (should be approximately 130 to 140 degrees by this time). If temperature is not correct, adjust thermostat.
8. Operate machine for at least two complete cycles.
9. Is the machine quiet in operation?
10. Have the installation and warranty cards been filled out?
11. Has the owner been instructed on how to operate the machine?
12. Is the machine clean?
13. Check the storage bin thermostat for proper setting of approximately 35 degrees cut out, 39 degrees cut in.
14. Head pressure average 135 # P.S I.
15. Back or suction pressure equalize with head during harvest cycle. During start of freeze cycle starts at about 60# P S I gradually pulls down to 3-5 # P S I end of freezing cycle.

HARVEST CYCLE

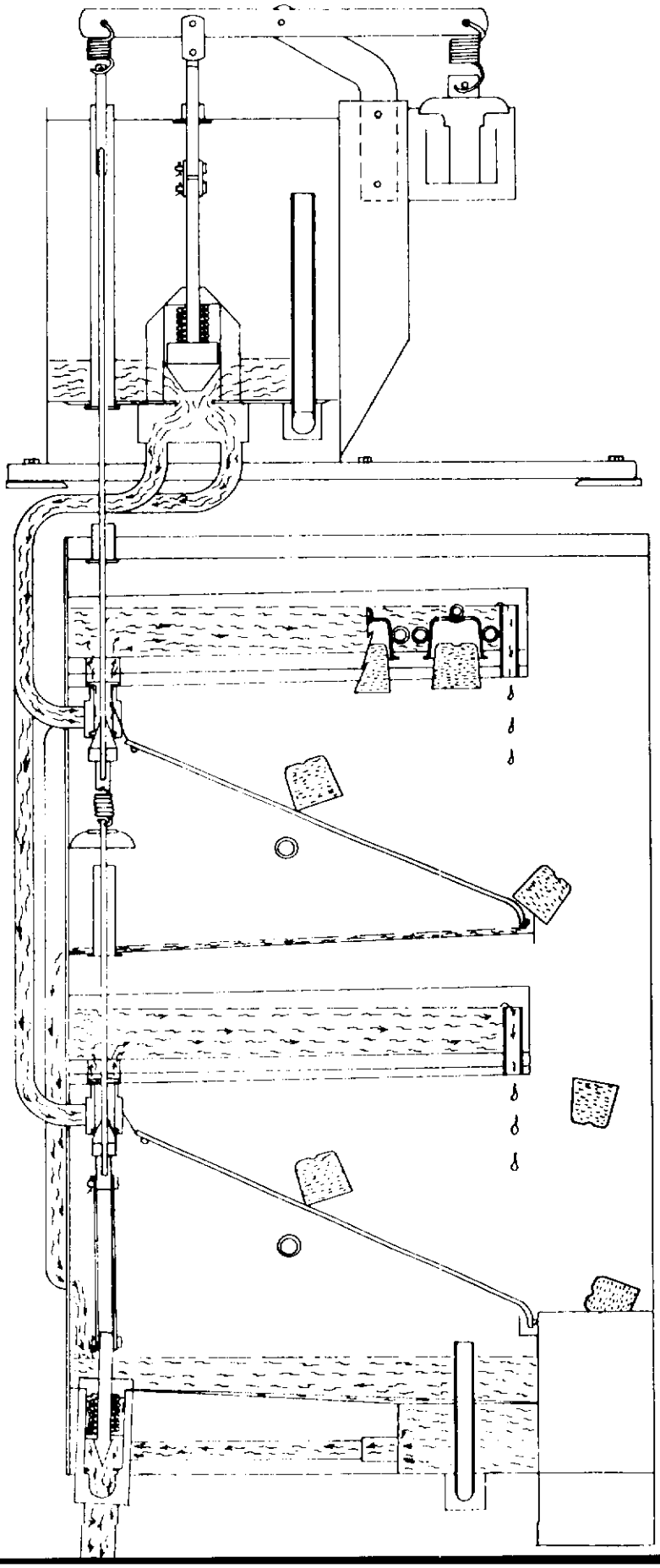

At the end of the freezing cycle the hot water from the water tank flows into the rubber platen holding the cups and by conduction on back of cups causes cubes to defrost. The platen cavity is completely filled up to the overflow point, and continues to overflow while in the defrost cycle; the amount of this water running over the overflow pipe is controlled by the flow control and the length of harvest time setting on the time clock; overflow water goes down the drain also. Meanwhile, cubes being released from the cups drop by gravity onto cube chute, then through curtained opening into storage bin. At completion of harvest cycle, the micro-switch on the timer shaft now drops points holding defrost components in cycle and switches to freezing cycle set of contacts. Clock motor now stops and will not start until cube size control closes once more. The freezing cycle starts and the water valve allows the hot water tank to refill. The chilled water from the upper cavity flows by gravity through the water valve to the sump tank and reservoir. This water is used to produce the next batch of cubes.

FREEZING CYCLE

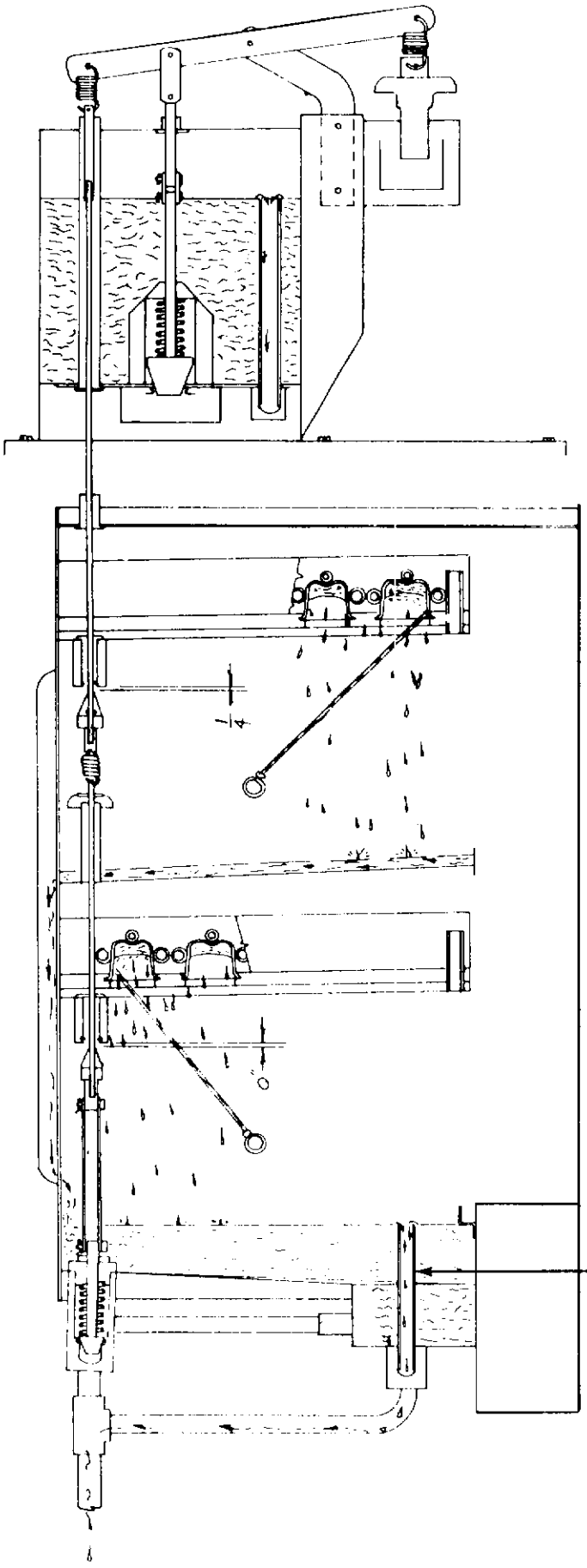

At the start of the freezing cycle, reservoir and sump tank contain enough water to make a complete batch of ice cubes, plus approximately an extra quart. When time clock closes load circuit, it starts the compressor, sump pump and heater element in hot water tank. At the same time it opens the circuit to clock motor. (Clock motor does not run first part of freezing cycle- - this is approximately 10 minutes) This timer has a single pole, double throw micro-switch for carrying and directing current. After a predetermined amount of ice is frozen, the cube size or reverse acting temperature switch closes, actuating the time clock motor circuit which continues the freezing cycle approximately 10 more minutes. (After clock motor starts, freezing time will be 12 minutes less defrost time setting.) At the end of the 10 minute period, time clock operated switch opens compressor, sump pump and heater element circuit, and closes circuit to time clock motor and solenoid operated water valve. At this time, the water valve allows heated water in hot water tank to flow by gravity through solenoid valve, and into the upper cavity of the freezing chamber, and, at the same time allows the surplus water from the preceding batch of ice cubes to go down the drain.

NOTE: Harvest water is used to make next batch of ice, therefore on initial start up it is necessary to have unit in a harvest cycle. This can be done by manually turning timer dial. Average cycle time is 20-25 minutes.

SERVICE ANALYSIS

Symptom	Possible Cause	Suggested Correction
1. Unit will not run.	Power off. Blown fuse.	Check main switch, fuses and wiring
	Manual switch in off position.	Turn manual switch to "on"
	High pressure control locked out.	Reset and check for cause of control off.
	Ambient temperature of room too low.	Must be above 50° Farenheit.
	Bin thermostat set too high.	Set approximately 35° cut out, 39° cut in.
2. Compressor cycles intermittently.	Low voltage.	Check with volt meter. Notify power company if 10% over or under nameplate rating.
	Air in system causing high head.	Purge system. Evacuate and re-charge.
	Shortage of refrigerant.	Check frost line, should be cool but not frost on suction service valve.
3. Cubes small. (short cycle)	Cube size control not properly set.	Set control to colder setting
	Moisture in system.	Change dryer and refrigerant.
	Short of water.	Flow control plugged.
		Clean out - install filter in supply line.
	Lower drain valve in sump tank leaking.	Flush or remove and clean. Replace rubber O-ring seat.
	Sump tank stand pipe not properly seated.	Check and re position.
4. Cubes small. (long cycle)	Shortage of refrigerant.	Check frost line and add refrigerant. Refer to name-plate for correct amount of refrigerant.

SERVICE ANALYSIS

Symptom	Possible Cause	Suggested Correction
5. Cubes too large. (slow defrost)	Very small shortage of refrigerant.	Check frost line. Add refrigerant slowly.
	Water valves not holding in hot water tank.	Hold float closed and check during freeze cycle.
	Cube size control set too cold.	Reset to warmer setting on adjustable cam.
6. Cubes cloudy.	Drain valve and sump tank leaking.	Check during freeze cycle.
	Curtains damaged or binding.	Repair or replace.
	Restriction in incoming water.	Check at float in hot water tank and flow control.
	Screen plugged on bottom of sump pump.	Remove and clean.
7. Irregular cubes. (some clear, some cloudy)	Clogged jets in jet tubes.	Remove and clean. Use care not to elongate jet holes in plastic tubes.
	Cube slides interfering with jets.	Adjust so that jet streams center in cube rack slots.
8. Improper harvest.	Time clock not set properly.	Reset on No. 2 with adjustable cam.
	Drain valves in hot water tank leaking which prevents water from coming up to temperature.	Inspect and repair. Check rubber O-ring seat under tapered plunger.
	Incoming water restricted.	Check water lines, etc.
	Float valve leaking. (Hot Water Tank)	Check during freeze cycle, float valve should fill tank to 1/2" below overflow pipe then shut water supply off. Replace rubber seat if leak continues.

SERVICE ANALYSIS

Symptom	Possible Cause	Suggested Correction
8. Improper harvest. (Cont'd.)	Stand pipe not properly seated, in hot water tank.	Remove cover and check.
	Machine not level. (Allow water to stand in upper cavities and freeze.)	Level machine.
	Burned out heating element in hot water tank.	Replace.
9. High head pressure.	Over-charge of refrigerant.	Purge.
	Air in system.	Purge.
	Defective water regulating valve.	Replace.
	Burned out or stuck fan motor(s) air cooled.	Replace or oil as needed.
	Water regulating valve improperly adjusted.	Readjust to desired head 135# water cooled models.
	Incoming water restricted.	Check screens, lines, etc.
10. High suction.	Dirty or plugged condenser. Air cooled.	Blow condenser clean.
	Inefficient compressor. valve plate.	Check with gauges and replace if necessary.
	Moisture in refrigerant system.	Purge refrigerant, replace dryer, and re-charge.
	Shortage of refrigerant.	Check frost line, add refrigerant until cool suction service valve is felt.
	Overcharge of refrigerant.	Purge.
11. Low suction pressure.	Moisture in system.	Purge charge, evacuate, replace dryer, and re-charge to nameplate charge.

SERVICE ANALYSIS

Symptom	Possible Cause	Suggested Correction
11. Low Suction pressure. (Cont'd.)	Extreme shortage of refrigerant.	Add refrigerant.
	Ambient temperatures too low. Air cooled.	Increase ambient to minimum 50°F.
12. Water leaking from plastic tubing in upper left hand corner above cube discharge openings.	Float level set too high in hot water tank.	Readjust. Bend float arm to hold water level 1/2" below overflow.
	Float valve leaking.	
	Water-logged float ball.	
13. Unit noisy.	Hold-down bolts on compressor not loosened.	Turn up until unit is free, floating on mounting springs.
	Refrigerant lines vibrating.	Straighten.
	Compressor short of oil.	Check oil level. Proper level 1 1/2 inches below crankcase port or 1/2 of sight glass.
	High head pressures.	Check with gauges. Normal head pressure is 135-150#. Purge if necessary.
	Shroud touching fan blades on air cooled models.	Reposition shroud.

MM-510 SUMP PUMP

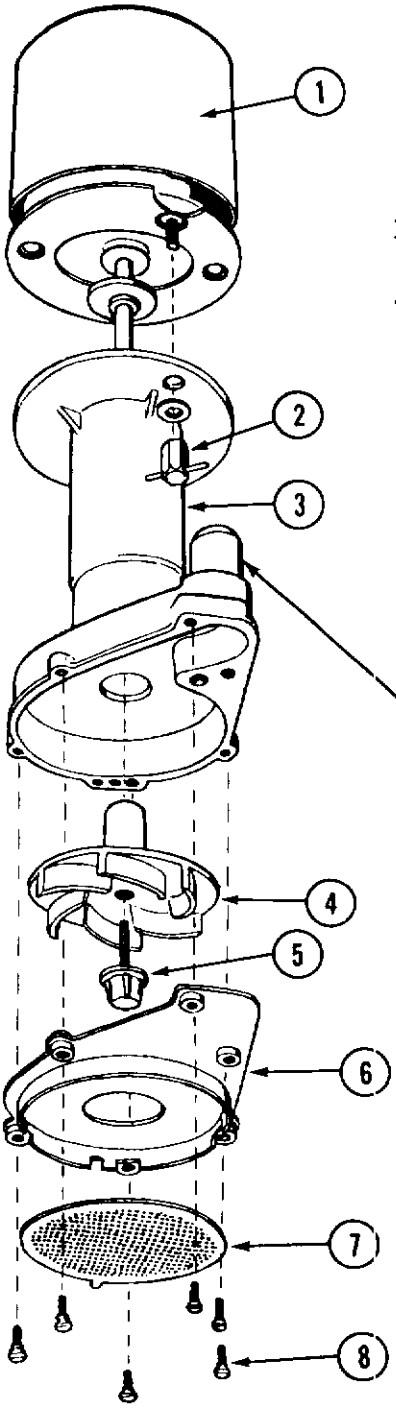

ITEM NO.	PART NO.	NAME
1.	12-1351-22	Motor Only
2.	12-1351-32	Wing Hex Nuts
3.	12-1351-30	Pump Body
4.	12-1351-21	Impellar and Spring
5.	12-1351-31	Impellar Screw and Gasket
6.	12-1351-27	Bottom Inlet Plate
7.	12-1351-26	Inlet Screen
8.	12-1351-29	Wing Screws
	12-1351-1	Complete Pump

Note: Models MM-510 use 3/4" I.D. Discharge spout. 1" O.D. fitting.

MM-510 H CONTROL BOX ASSY

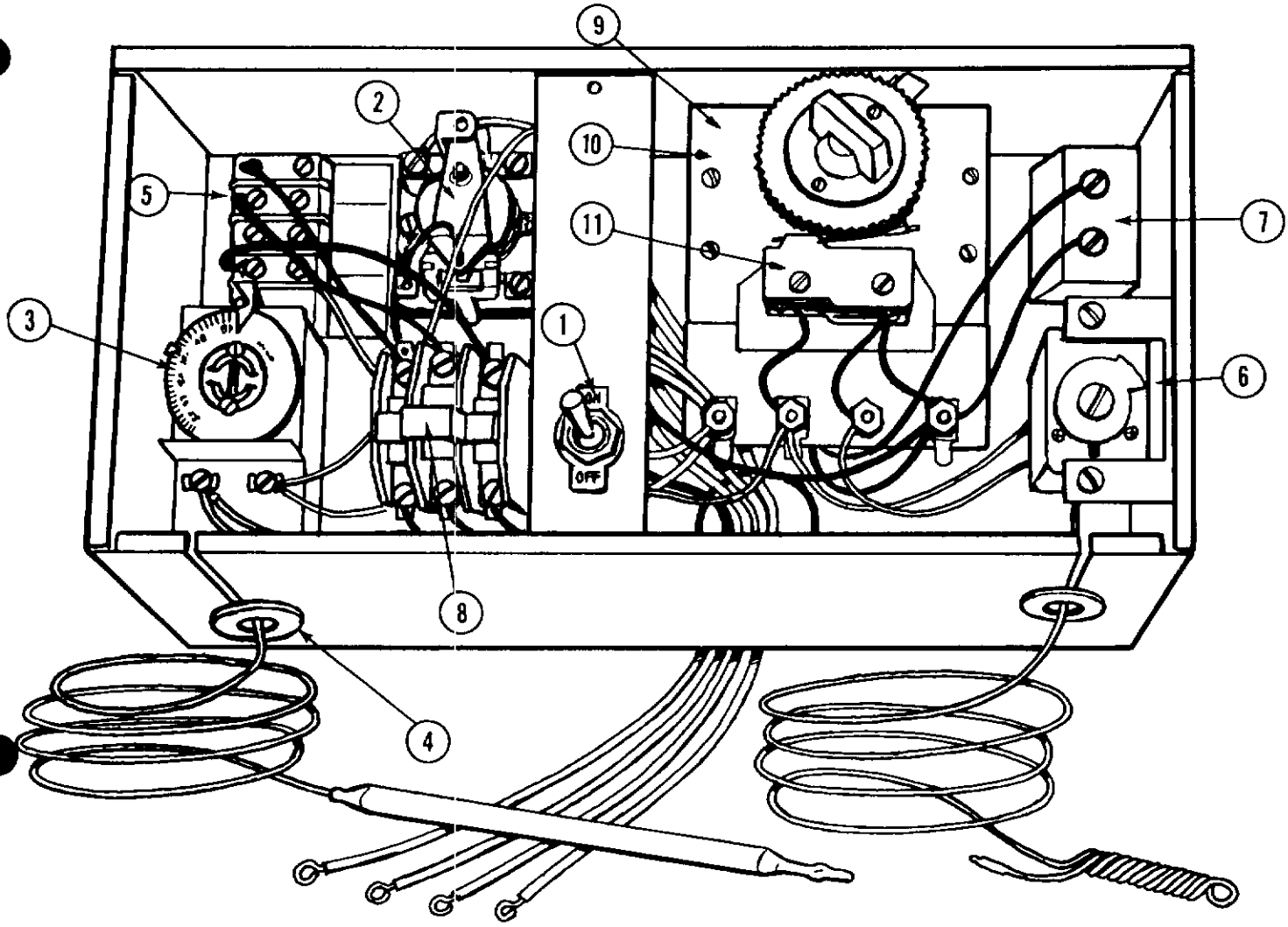

ITEM NO.	PART NO.	NAME
1.	12-426	Switch-Compressor only
2.	12-419	Relay
3.	11-99-1	Bin Control
4.	13-124	Grommet
5.	12-813	Terminal Block
6.	11-351-1	Cube Size Control
7.	11-352	Fan Control A.C.
8.	12-820-1	Contactor 115/230/60/1
	12-739-1	Contactor 115/208-220/60/3
9.	12-645-1	Timer
10	12-367	Timer Motor only
11.	12-645-20	Micro-Switch

MM-510 DRIVE LINKAGE

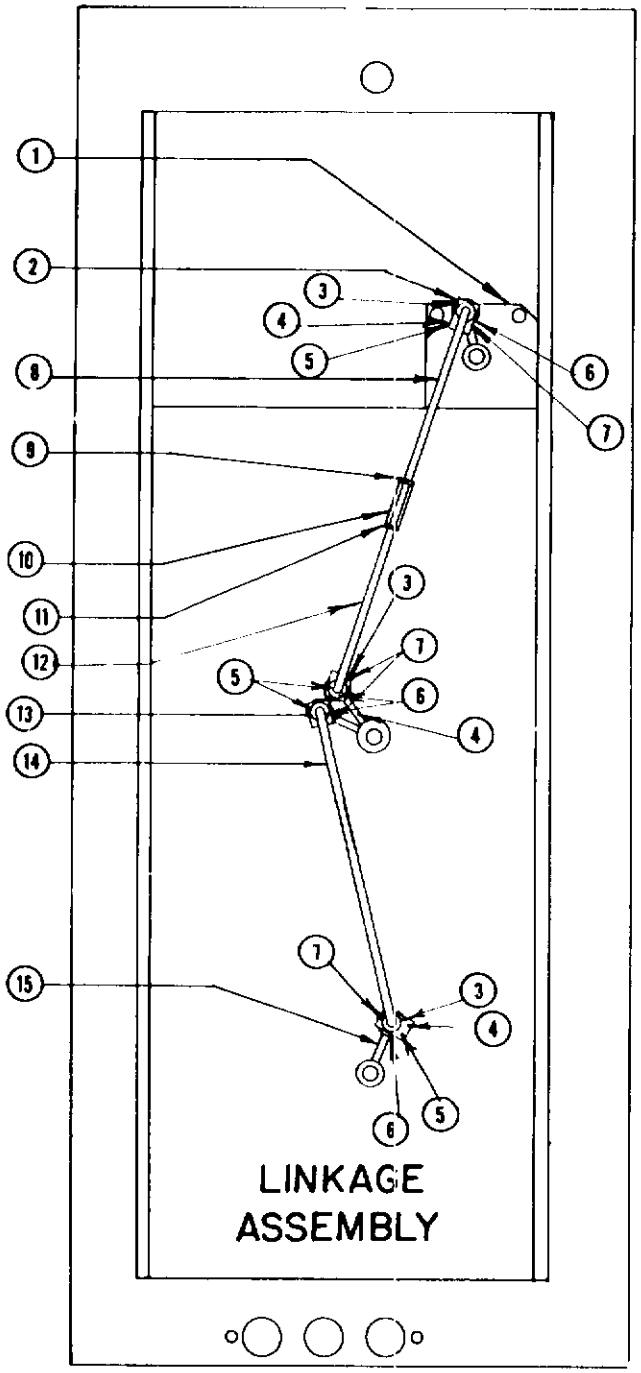

ITEM NO.	PART NO.	NAME
1.	12-1383-1	Drive Motor
2.	S-9666	Driver Arm
3.	S-7558	Bearing Clip
4.	3-431	Set Screw
5.	3-75	Washer
6.	3-396-1	Cotter Key S.S.
7.	A-7033	Bearing
8.	S-7940	Upper Linkage (left)
9.	S-7937	Linkage Nut (left)
10.	S-7936	Linkage Coupling
11.	3-357	Nut (right)
12.	S-7938	Linkage (right)
13.	A-17233	Double Driver Arm
14.	A-17234	Lower Linkage
15.	A-17232	Driver Arm
16.	12-426	Switch
	A-17230	Linkage Complete (less motor.)

MM-510 H AIR AND WATER COOLED

Front View

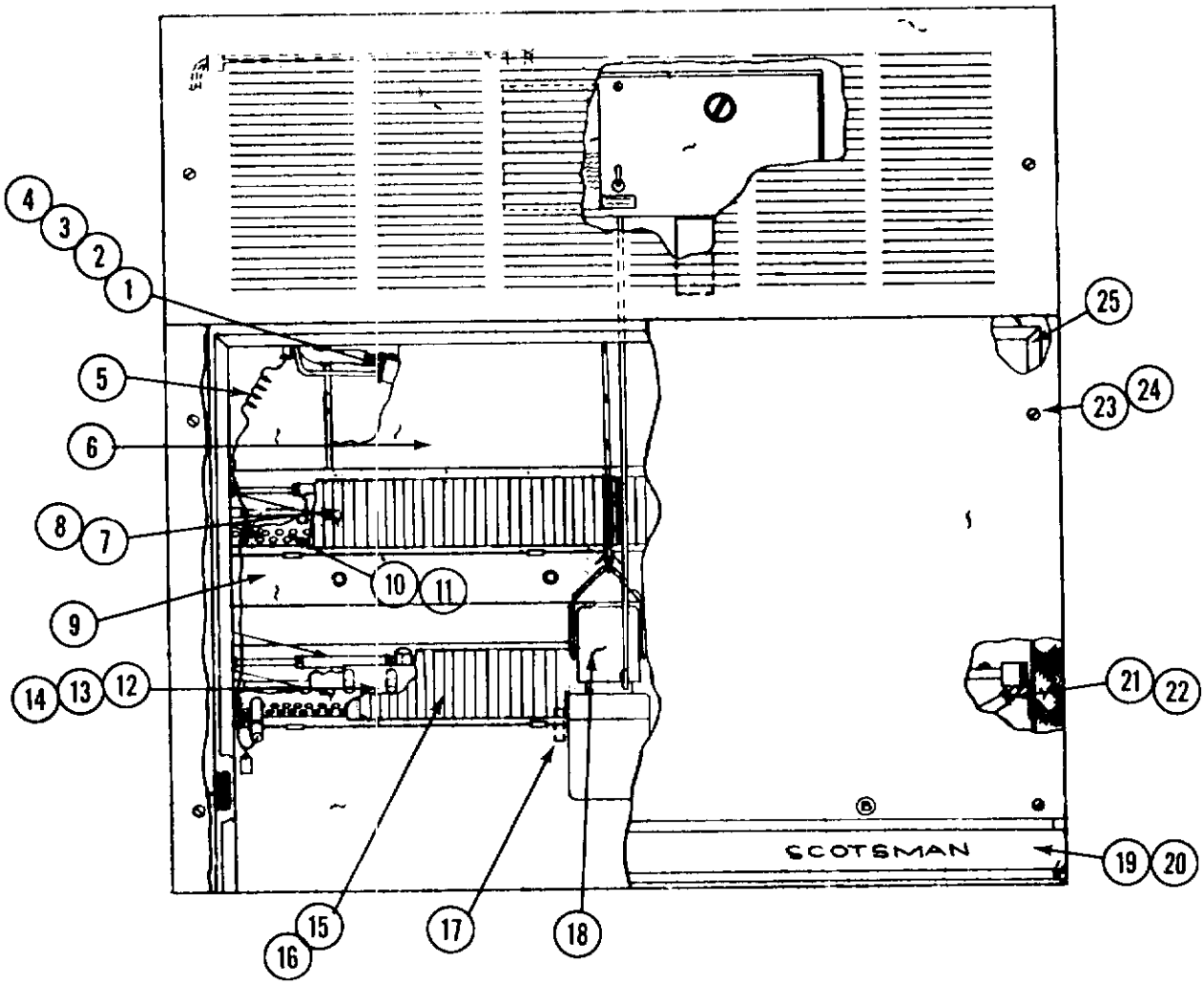

ITEM NO.	PART NO.	NAME
1.	A-18537	Freezer Complete
2.	A-16537-1	Left Cup Ass'y (2 required)
3.	A-16538-1	Right Cup Ass'y (2 required)
4.	13-573	Rubber Cup holder (4 required)
5.	A-16677	Upper Face Plate
6.	S-9805	Accumulator Cover
7.	A-16541	Upper Curtain Ass'y
8.	3-727	Thumb Nut
9.	A-16662	Lower Face Plate
10.	A-16543	Upper Cube Chute(Right
11.	A-16542	Upper Cube Chute (Left)
12.	A-16545	Cube Chute (Right)
13.	A-16544	Cube Chute (Left)
14.	A-16656	Cube Deflector
15.	A-16679	Left Curtain Ass'y
16.	A-16680	Right Curtain Ass'y
17.	A-17521	Stand Pipe
18.	12-1351-1	Sump Pump
19.	15-474	Emblem Decal
20.	A-5720-9	Moulding Trim (2 required)
21.	2-1338-1	Hose Clamp (4 required)
22.	5-348	Tygon Tube Per Ft.
23.	3-1029	Nut (6 required)
24.	3-789	Screw (6 required)
25.	A-17256	Door Gasket

In Package:

*	A-16108	Buttons
	13-590	Bulb Gasket
	A-15759	Bulb Cover

MM-510 H AIR COOLED

Top View

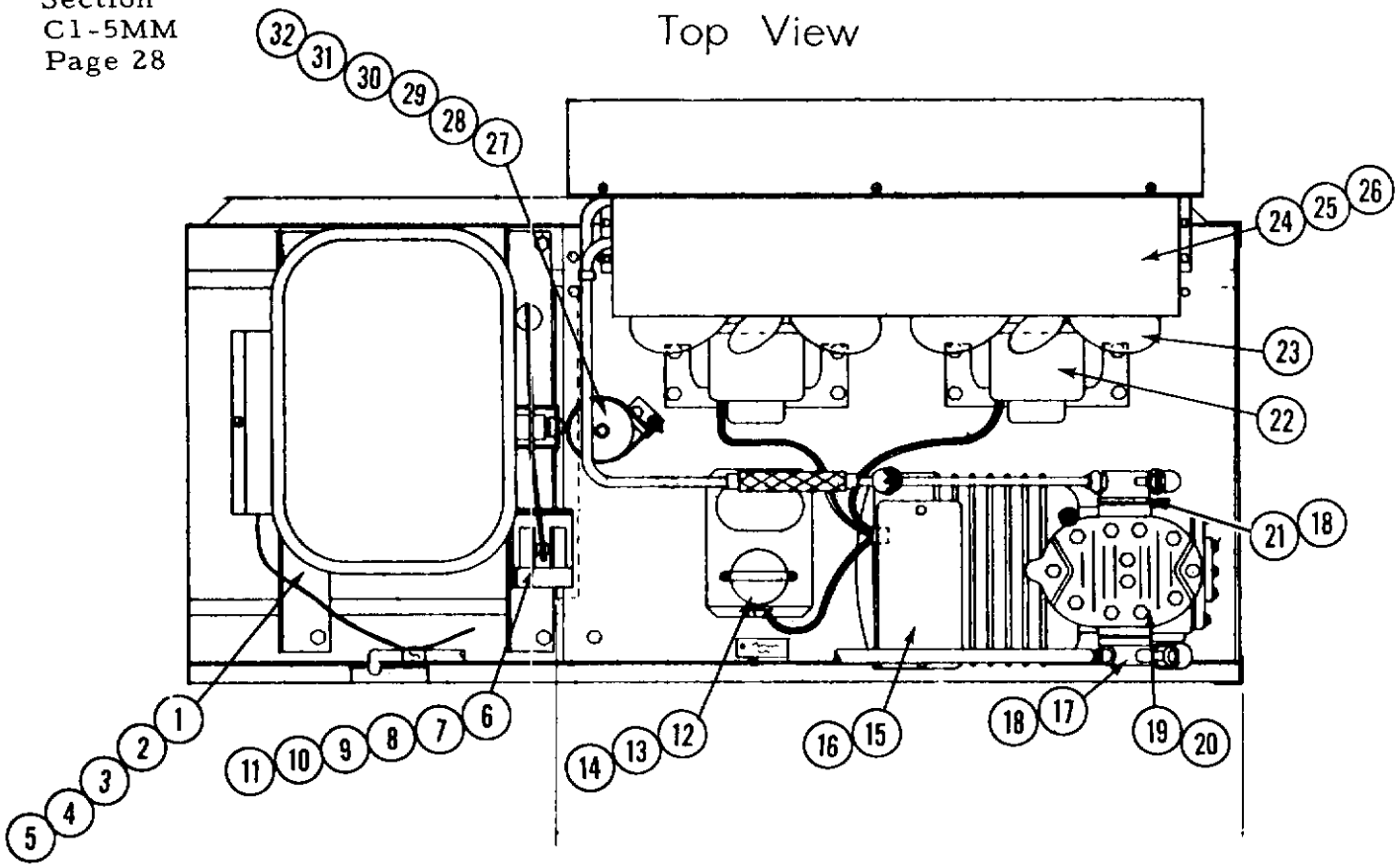

ITEM NO.	PART NO.	NAME
1.	12-1383-1	Drive Motor*
2.	13-100	Grommets (4 required) *
3.	3-50	Screws (4 required)*
4.	3-70	Nut (4 required)
5.	3-1021	Washer (8 required)*
6.	12-1396-1	Solenoid
7.	A-18276	Solenoid Mount
8.	3-1284	Elastic Stop Nut *
9.	13-625	Grommet*
10.	13-298	Washer, Rubber*
11.	3-499	Screw*
12.	18-1901-15	Start Capacitor
13.	18-1902-17	Run Capacitor
14.	18-1903-18	Relay
15.	18-270	Terminal Board
16.	18-533	Klixon
17.	18-561	Suction Serv. Valve

ITEM NO.	PART NO.	NAME
18.	18-242	Service Valve Gasket
19.	18-1921-2	Compressor 230/60/1
	18-1921-7	Compressor 208/60/1
	18-1921-3	Compressor 208/230/60/3
20.	18-326	Valve Plate & Gasket Kit
21.	18-337	Discharge Valve
22.	18-559	Fan Motor
23.	18-625	Fan Blade
24.	A-17329	Shroud
25.	2-784	Shroud Fastener (6 required)
26.	18-624	Condensor
27.	3-75	Washer
28.	3-11	Screw
29.	3-60	Nut
30.	2-677	Dryer
31.	A-6355	Dryer Bracket
32.	A-9388	Dryer Brace

*Not Shown

MM-510 H WATER COOLED

Top View

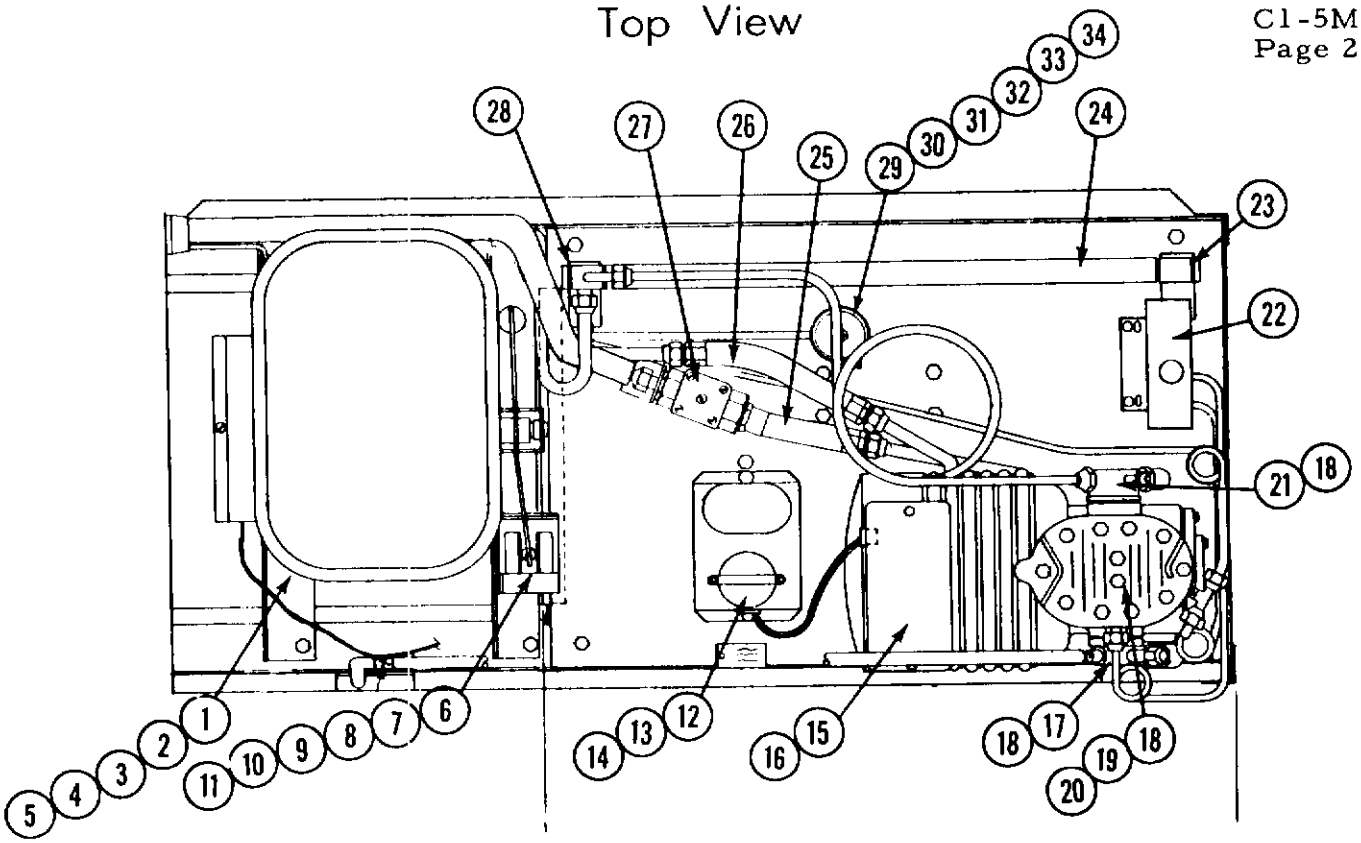

ITEM NO.	PART NO.	NAME
1.	12-1383-1	Drive Motor*
2.	13-100	Grommet (4 required)*
3.	3-50	Screws*
4.	3-70	Nut*
5.	3-1021	Washers*
6.	12-1396-1	Solenoid
7.	A-18276	Solenoid Mount
8.	3-1284	Elastic Stop Nut
9.	13-625	Grommet
10.	13-298	Washer, Rubber
11.	3-499	Screw
12.	18-1901-15	Start Capacitor
13.	18-1902-17	Run Capacitor
14.	18-1903-18	Relay
15.	18-270	Terminal Board
16.	18-533	Klixon
17.	18-561	Suction Serv. Valve
18.	18-242	Serv. Valve Gasket
19.	18-546	Compressor 230/60/1
	18-550	Compressor 208/60/1
	18-571	Compressor 208-220/60/3
20.	18-326	Valve Plate
21.	18-1908	Discharge Serv valve
22.	11-286	Hi-L0 Press. Control
23.	18-548	Condensor Gasket
24.	18-599	Condensor
25.	18-260	Flexible Hose
26.	18-261	Flexible Hose
27.	11-198	Water Regulator
28.	18-549	Manifold Gasket
29.	3-75	Washer
30.	3-11	Screw
31.	3-60	Nut
32.	2-677	Dryer
33.	A-6355	Dryer Bracket
34.	A-9388	Dryer Brace

(*) Not Shown

MM-510 AIR COOLED CASE ASSY

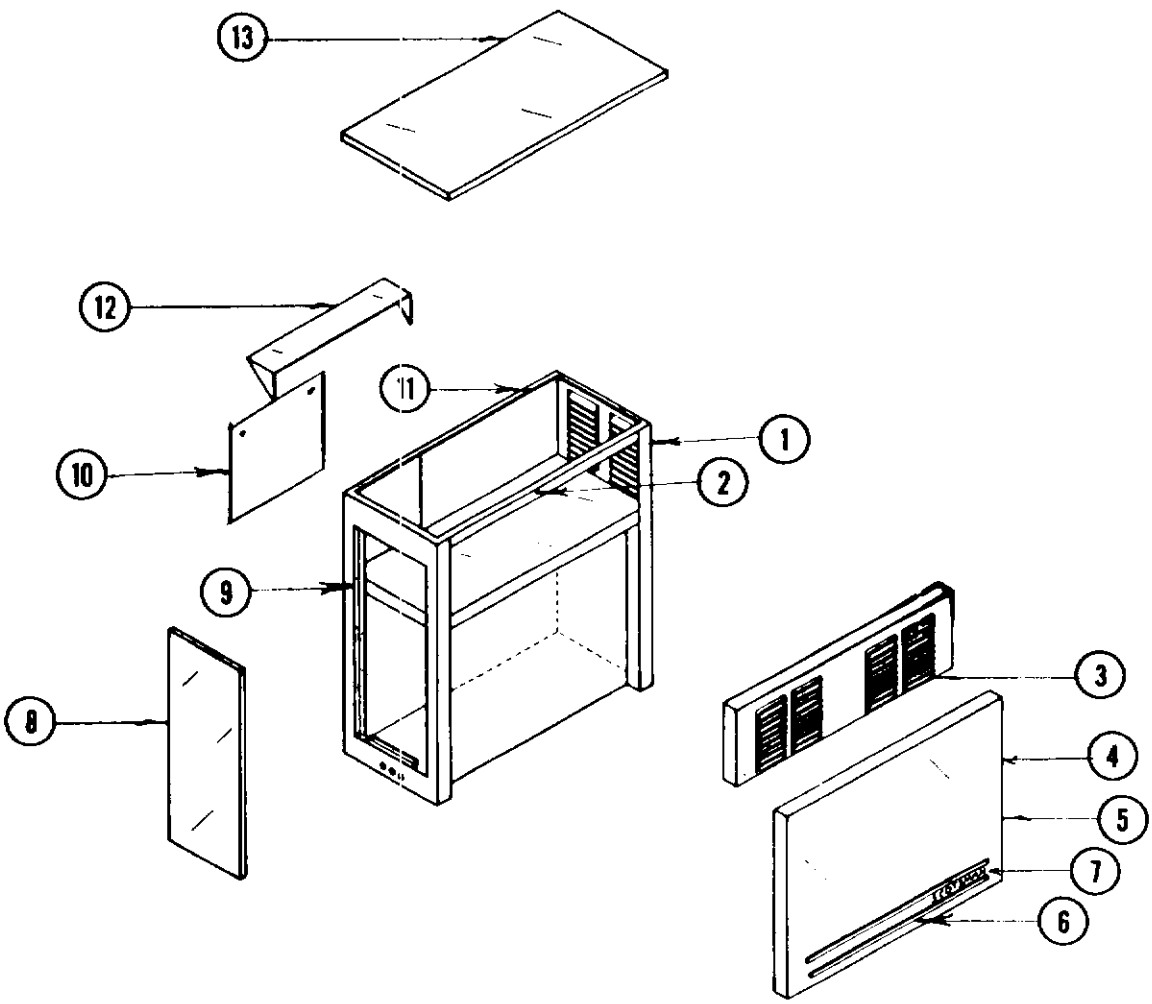

ITEM NO.	PART NO.	NAME
1.	A-8490	Right Side Panel
2.	A-17238	Top Channel
3.	A-16875	Upper Door Front
4.	A-17571	Door Gasket
5.	A-17352	Front Lower Door Assembly Complete
6.	A-5720-9	Moulding Strip
7.	15-474	Emblem Decal
8.	A-17211	Left Side Door
9.	A-17210	Left Side Panel Assy
10.	A-8495	Back Assembly
11.	A-8483	Top Back Ass'y
12.	A-8521	Shroud Top
13.	A-5694	Top Panel

MM-510 WATER COOLED CASE ASSY

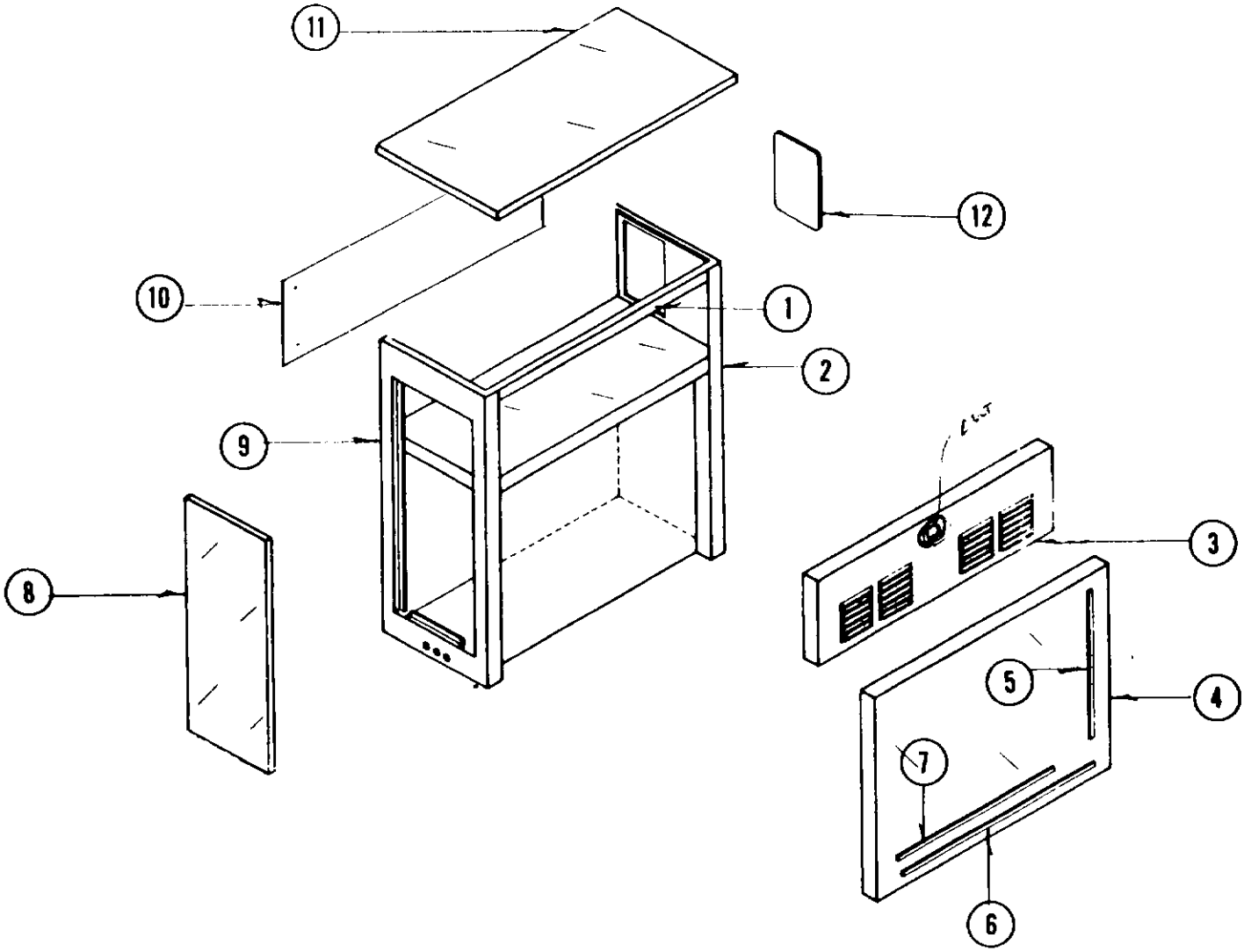

ITEM NO.	PART NO.	NAME
1.	A-17238	Top Channel Ass'y
2.	A-9323	Right Side Panel
3.	A-16875	Upper Door Ass'y
4.	A-17352	Front Lower Door
5.	A-17571	Door Gasket
6.	A-5720-9	Moulding Strip
7.		(2 required) 36 - 3/32"
7.	15-474	Emblem Decal
8.	A-17211	Left Side Door
9.	A-17210	Left Side Panel Ass'y
10.	A-9321	Back Assembly
11.	A-5694	Top Panel
12.	A-5693	Right Side Panel Door

MM-510 HOT WATER TANK AND WATER VALVE ASSEMBLIES

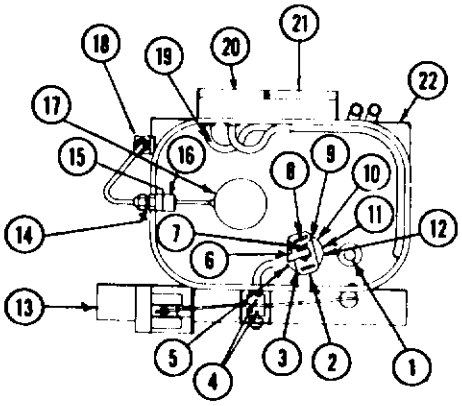

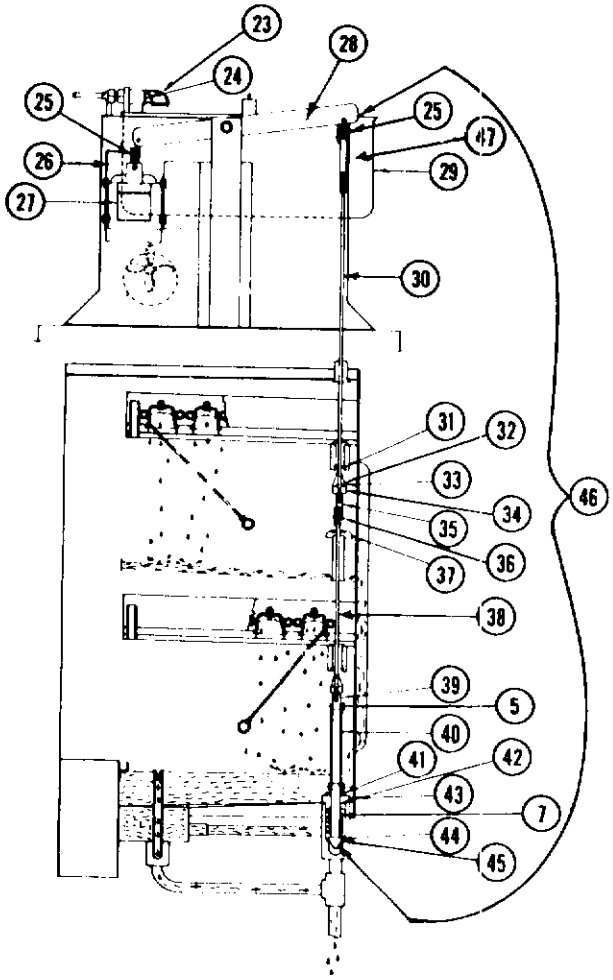

ITEM NO.	PART NO.	NAME	LIST PRICE
1.	A-8610	Stand Pipe	
2.	A-16973	Valve Plunger	
3.	A-8188	Plunger Link (SS) (2 reqd)	
4.	3-774	Roll Pins (2 required	
5.	S-7974	Stainless Pins (2 required)	
6.	3-396-1	Cotter Pins SS (2 required)	
7.	2-419	Compression Spring	
8.	3-255	Wing Nuts (2 required)	
9.	A-8182	Valve Seat Ass'y	
10.	A-8186	Drain Ass'y	
11.	2-543	'O' Ring	
12.	2-530	'O' Ring (drain Ass'y	
13.	A-8175	Right Bracket	
14.	A-6771	Water Inlet Valve Ass'y	
15.	A-5777	Valve Seat Holder	
16.	S-6947	Rubber Valve Seat	
17.	A-12068	Float & Arm Ass'y	
18.	A-13346-4	Flow Control	
19.	12-1455	Heating Element	
20.	12-246	Thermostat (*)	
21.	A-6480	Thermo Disc Cover	
22.	A-8173	Left Bracket	
23.	2-1320	Plastic Deflector	
24.	2-1259	Valve Pin	
25.	2-420	Spring	
27.	12-1396-1	Solenoid	
28.	A-8763	Lever Ass'y & Arm	
29.	A-8171	Hot Water Tank Sub	
30.	A-8199	Valve Rod	
31.	2-541	'O' Ring	
32.	S-8949	Valve Guide	
33.	2-545	'O' Ring	
34.	S-8948	Lock Nut	
35.	S-8946	Valve Nut	
36.	2-549	Spring	
37.	A-18355	Deflector Ass'y	
38.	S-8951	Lower Rod	
39.	S-8950	Lower Valve Nut	
40.	S-8953	Lower Valve Link (2)	
41.	S-8578	Drain Nut Stop	
42.	S-8942	Valve Guide Ass'y	
43.	S-7891	Nut	
44.	S-6924	Valve Seat Washer (2 required)	
45.	2-541	'O' Ring	
46.	A-8332	Water Valve Linkage Assembly	
47.	S-8943	Upper Valve Rod	
	A-18036-1	Hot Water Tank Complete	

* Not Shown

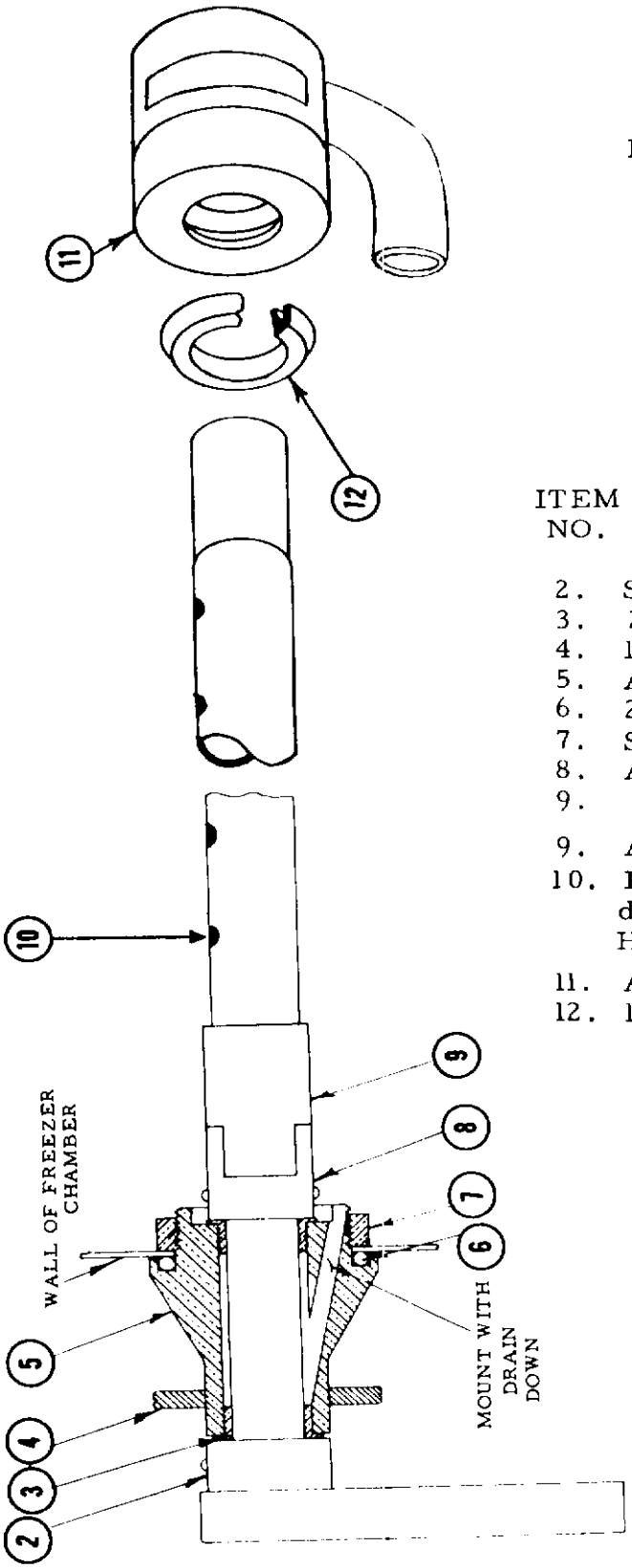

MM-510 SPRAY BAR
2 per unit

ITEM NO.	PART NO.	NAME
2.	S-7130	Collar
3.	2-438	Flange Bearing
4.	13-169	Grommet
5.	A-5660	Drive Bearing Support
6.	2-610	"O" Ring
7.	S-7635	Nut
8.	A-5679	Driving Journal
9.		Ass'y
9.	A-16931	Sprayer Tube
10.	Plastic spray bars have 26 drilled holes instead of jets. Holes are .078 diameter.	
11.	A-16929	End Bearing Ass'y.
12.	13-588	"U" Cup

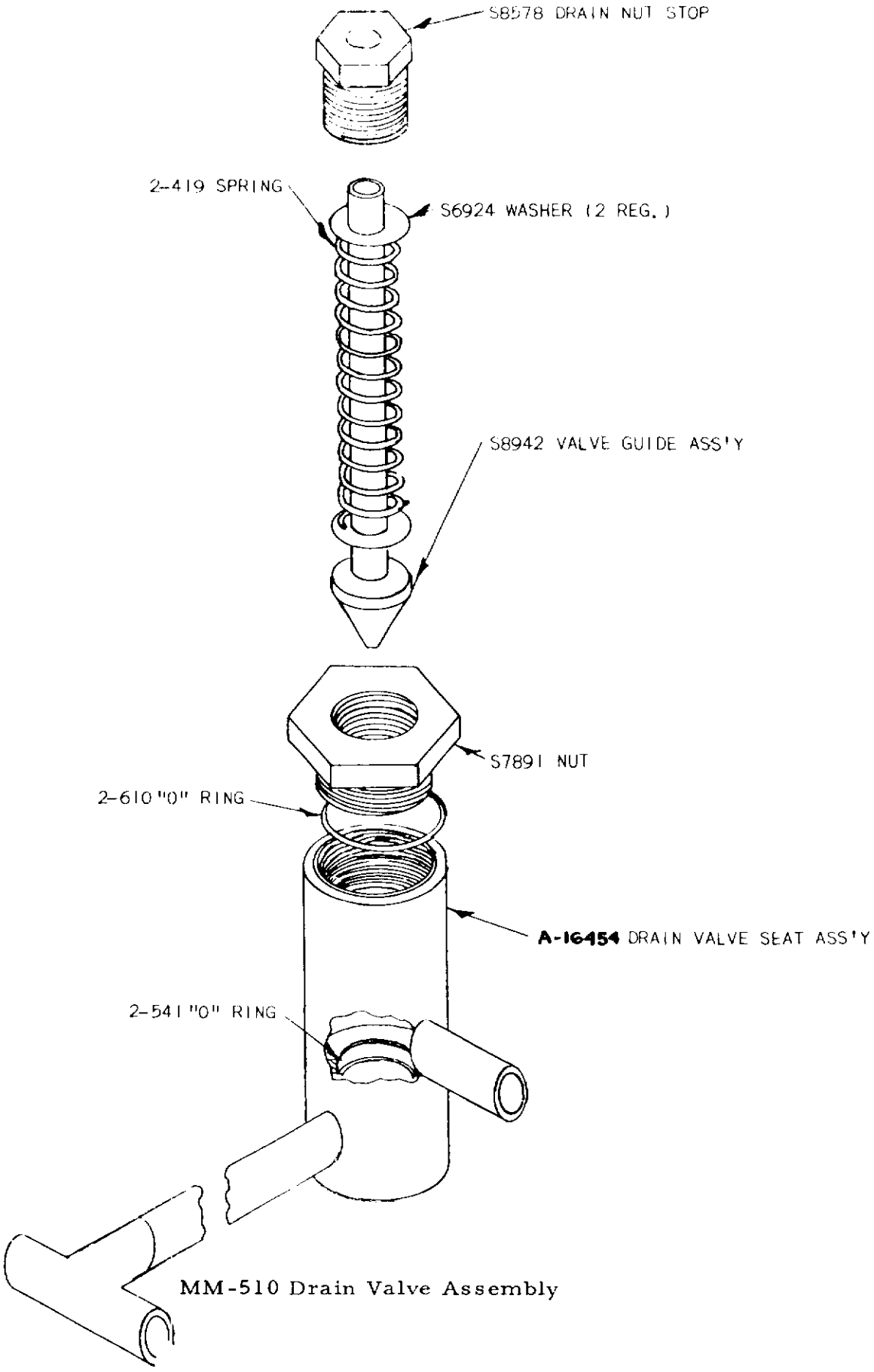

MM-510 Drain Valve Assembly

MM-510
WATER VALVE ASSEMBLY
LINKAGE AND ADJUSTMENT

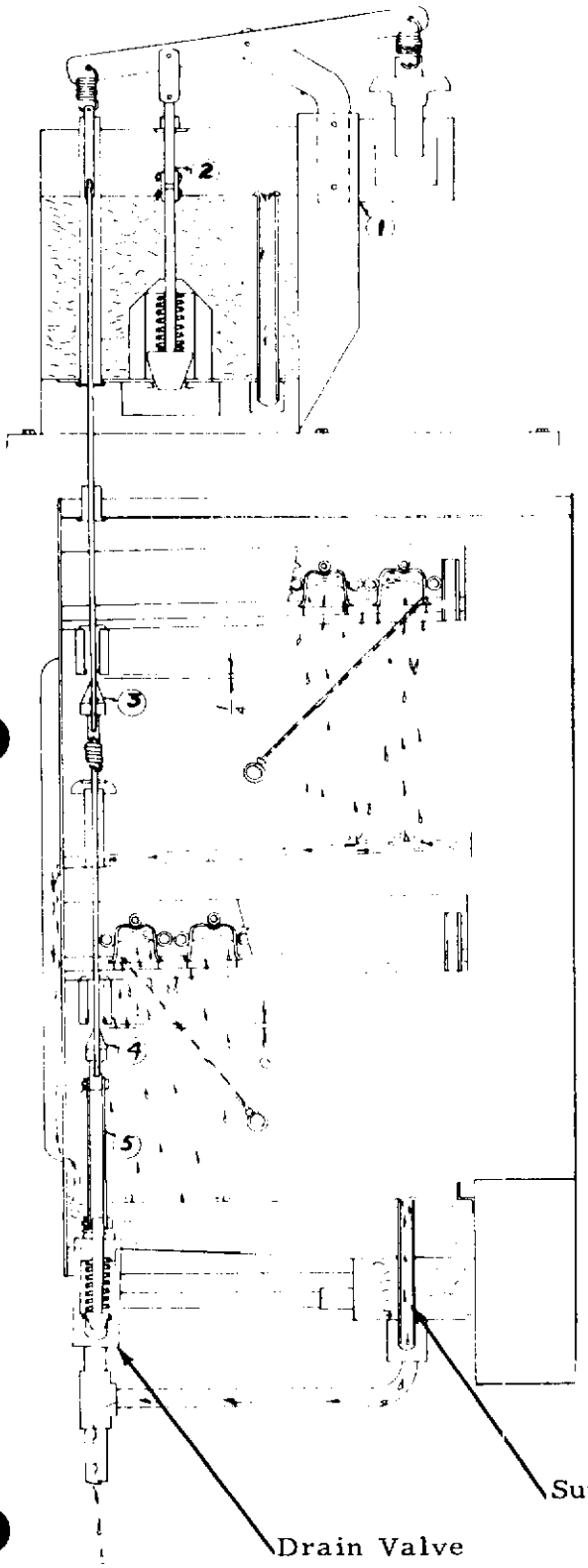

INSTRUCTIONS -- WATER VALVE ADJUSTMENT

Adjust solenoid at Point 1 up or down to the point where linkage at Point 2 is free and valve is closed in hot water tank with solenoid open wide.

Adjust valve at Point 3 to 1/4 inch distance from end of valve guide (S-9849) to valve seat (solenoid wide open).

Adjust valve at Point 4 to 0 inch distance from end of valve guide (S-8949) to valve seat (solenoid wide open).

Linkage at Point 5 adjusted to be free.

With solenoid closed, valve in hot water tank should be open about 3/8 inch or more. Valve at Points 3 and 4 should be closed. Spring at Point 3 should be stretched about 1/4 inch. Valve at Point 5 should be open about 3/8 inch.

Trouble -- Hot water tank valve not opening wide enough
Solenoid should be adjusted lower so to obtain full travel of solenoid.

SERVICE

Scotsman models MM-510 now provide the user with a new size cube, the Scotsman miniture-cube.

By comparison with the regular Scotsman model SC-500 cuber, whose cabinet it resembles. Models MM-510 produce 416 cubes versus 160 regular sized cubes in the SC-500 cuber series. For practical purposes we can say the miniture cube is 1/4 the size of regular Scotsman cubes.

Other features of interest are as follows:

1. Both air and water cooled models use a one horsepower motor compressor.
2. Air cooled models utilize a fan control on one of the two fan motors to maintain head pressure in low ambient location.
3. Hot water for defrost heated electrically.
4. Plastic curtains secured with thumb screws.
5. Cube chutes fabricated from stainless steel sheets rather than former plated rod types.
6. Spray bars made of special plastic with drilled holes acting as jet spray nozzles.
7. Automatic defrost and freezing cycles actuated by thermostatic temperature control.
8. Spray bar motor oscillates at 40 RPM.
9. Defrost setting on finishing clock is 2 minutes.
10. New style finishing clock has enclosed micro switch and offset adjustable cams to carry and direct electrical current thru defrost cycle.
11. Single refrigerant pass across tops of all cube cup models.
12. All evaporator surfaces are tin dipped.

SERVICE

REMOVING AND REPLACING COMPONENT PARTS

Capillary Tubes

These controls are an integral part of the suction line, being soldered to it along most of its entirety.

To Replace Compressor Valve Plate

1. Install compound gauge in suction service valve port and close suction service valve by turning valve stem all the way in (Front seated)
2. Operate motor compressor until gauge reading reaches zero. Turn off unit.
3. Front seat discharge service valve.
4. Loosen all head bolts and tap head lightly with rubber-faced or plastic hammer to break loose.
5. Remove head, defective valve plate and any gasket material that may have stuck to head or compressor body.
6. Install new valve plate with all new gaskets as provided, tightening each head bolt a little at a time until all are snug.
7. Remove port gauge plug from discharge valve and crack open suction side letting gas purge off trapped air from head. Install hi side gauge in this port, back up both service valve stems and check around valve plate for refrigerant leaks.
8. Start unit, noting head and back pressures. If normal, let run until compressor gets warm. Tighten all head bolts once more, and again check for leaks.

To Replace the Compressor

1. Front seat both suction service valve and discharge service valve on the compressor.
2. Disconnect the wiring from the compressor.
3. Remove the bolts holding the service valve to the motor compressor body.
4. Remove the compressor hold-down nuts and lift the compressor out of the unit.
5. Reverse steps 1 through 4 in replacing the compressor.
6. Check the compressor for oil before connecting the oil lines. Should be 2 inches down from the top of the oil plug hole or 1/2 of sight glass.
7. Remove the gauge port plug from the discharge service valve. Crack the suction service valve slightly, allowing some gas to escape out the gauge port of the discharge valve. When you have thoroughly purged the compressor, replace the plug and open all valves. It may be necessary to charge the unit because of some of the gas was lost when the defective compressor was removed. Check and charge if necessary.

SERVICE

REMOVING AND REPLACING COMPONENT PARTS

To Remove Sump Pump

1. Put line switch in "Off" position.
2. Disconnect motor leads from terminals marked sump pump in control box.
3. Loosen cord connector and pull motor leads free.
4. Remove splash cover from sump and lift out pump.
5. Disconnect hoses.
6. To replace, reverse procedure.

To Remove Jet Tubes

1. Remove curtains from cube discharge openings.
2. Remove cube slides.
3. Push jet tube up at right end of tube, and bring forward far enough to acquire space to pull left end of tube out of drive mechanism.
4. Now remove stationary elbow coupling from right end of jet tube. Jet tube is now free, can be cleaned from right end opening.
5. To replace, reverse procedure. (Be sure to replace bearing on end of jet tube.) Check O-Ring in right side elbow.

To Adjust Linkage on Jet Tubes

1. Remove access panel.
2. Loosen lock nuts on turn buckles. (Note. One lock nut has left hand thread, the other right.)
3. Adjust turn buckle for desired linkage. (Note. Check at cube discharge opening with flashlight to be sure jet sprays are hitting front and back cups.)
4. Caution. Be sure to tighten lock nuts after adjustment has been made.

To Remove Jet Tube Drive Motor

1. Disconnect motor leads on terminals marked drive motor in control box.
2. Loosen connector and remove leads from control box.
3. Loosen Allen head set screw in drive arm.
4. Remove drive arm.
5. Remove motor hold-down bolts. (Note. For easy removal of hold-down bolts, remove access panel.)

To Remove Large End Panels

1. Remove concealed screws under door gasket.
2. Remove screws from top and back panels.
3. Pull panels loose from rear of machine.
4. Pull forward and remove. (Note. All insulation used in this machine is in sections in a solid form and can be removed readily to repair water leaks, or any other trouble that might develop.

FUNCTIONAL PARTS & MAINTENANCE

PART NAME:	Jet Tube Assembly.
PART NUMBER:	A-16931 2 per unit
PART FUNCTION:	This tube acts as the water distributor for the ice cube cups. Each tube has 26 jets over its length with each jet feeding one row of cups from front to back. Supply water is forced into the jet tubes by the sump pump and is directed upward in a continuous stream. Drive motor through drive linkage forces these tubes back and forth over a 20° arc which covers all cube cups.
PART SETTINGS:	Factory set. Occasionally the spray tube travel will be either too far forward or back missing the first or last row of cups as the case may be. This can be corrected by adjusting the nuts provided on the drive linkage.
PART REPAIRABLE:	No, jets not replaceable, clean openings with 5/64" drill.
PART MAINTENANCE:	Check inlet supply elbow to make sure O-ring there is not worn letting water leak at this point. All jets should be cleaned also. By running Scotsman Ice Machine Cleaner through unit this step will eliminate hand cleaning. Partially plugged jets will produce cloudy or partial cubes. Wholly plugged jet will not produce a cube in cube cups it normally covers.
PART NAME:	Sump Pump.
PART NUMBER:	12-1351-1
PART FUNCTION:	Recirculating Pump used to pump supply water in sump tank to jet tubes during freezing cycle.
PART SETTINGS:	Factory set.
PART REPAIRABLE:	Yes. Motors rewound, impeller blades replaced. Motors only are also available for this pump, Part No. 12-1351-22.
PARTS MAINTENANCE:	Cleaning a stuck motor with carbon tetrachloride or equivalent will re-activate the majority of the motors returned for this reason.

FUNCTIONAL PARTS & MAINTENANCE

PART NAME:	Agitator Drive Motor 40 RPM	Merkle Korff
PART NUMBER:	12-1383-1	
PART FUNCTION:	This motor is used to drive the linkage mechanism which in turn drives the osxillating jet spray tubes. This provides a constant spray movement to all the inverted cube molds and by so doing also aerates the water producing clear, solid Scotsman cubes.	
PART SETTINGS:	No settings on motor, however, there are adjustable mounts which allow for moving motor slightly to position correctly.	
PART REPAIRABLE:	Yes, to some extent. Bearings, windings, etc., may be replaced in electric motor shops. Normally replace.	
PART MAINTENANCE:	Proper care in oiling with SAE 20 every six months or less as use indicates. There are two oil cups on the motor and a gear case hex head screw which has to be removed to change or add oil in gear case proper. Drive linkage should be inspected to insure free movement and no binding or drag on drive motor.	
PART NAME:	Spray Tube Drive Linkage	
PART NUMBER:	A-17230	
PART FUNCTION:	To connect and transmit mechanically, drive motor power to jet tubes assembly. Consists of 3 arms fastened one each to the two jet tubes and one drive motor. Arms are connected by a two piece rod which has an adjustment nut in the middle to correct spray tube travel.	
PART SETTINGS:	Factory set. Linkage should be adjusted so that there is no drag on drive motor and also to insure spray tube travel across all cube cups.	
PART REPAIRABLE:	Yes. All components replaceable.	
PART MAINTENANCE:	Check linkage for binding or worn spots. Tighten set screws holding arms to spray tubes and drive motor.	

PART NAME:	Hot water tank complete.
PART NUMBER:	A-18036-1
PART FUNCTION:	Tank serves dual purpose, stores correct amount of incoming supply water for next freezing cycle and also heats it electrically for use in defrosting preceding batch of cubes. Water inlet valve and float ball maintain correct water level. Thermostat and heating element maintain constant hot water temperature. 135°F.
PART SETTINGS:	Factory set. Water float level has adjustment arm. Water level should be maintained 1/4" below overflow pipe. Thermostat governing temperature, of heating element has a scale and pointer which is factory set 135°F.
PART REPAIRABLE:	Yes. All components of tank are replaceable. Water inlet valve. A-6771, heating element part No. 12-1455R and thermostat Part No. 12-246 are easily changed.
PART MAINTENANCE:	Periodic cleaning with Scotsman Ice Machine Cleaner will dissolve accumulated scale on inlet valve seat, heating element and side walls of hot water tank. This in turn prevents excess loss due to leaky inlet valve and more efficient operation of heating element.
PART NAME:	Water Valve Assembly
PART NUMBER:	A-8332
PART USAGE:	Used on all models.
PART FUNCTION:	This portion of water valve extends thru unit from top to bottom and is actuated by the 12-1396-1 solenoid. During defrost periods it positions one seat to each freezer assembly and shunts hot water to those trays while also opening bottom drain valve. During freezing cycle seats to freezers drop down as does bottom drain seat, closing off drain water. This assembly made in sections which can be dismantled from inside.
PART SETTINGS:	Entire valve can be adjusted either individually on each seat and drain seat or as a whole by taking up top rod adjustment to solenoid.
PART REPAIRABLE:	Yes. All components in valve linkage available from factory stock.
PART MAINTENANCE:	Care should be exercised in seeing that seats to platens or freezer trays, close fully during defrost and that hot water drain in tank opens 3/4" letting defrost water leave tank. Linkage when in defrost position will allow the 12-1396-1 actuating solenoid to fully close and when in freezing cycle to fully open. Seats, rods and springs in valve linkage should be checked for adjustment and wear every six months.

FUNCTIONAL PARTS & MAINTENANCE

PART NAME:	Solenoid
PART NUMBER:	12-1396-1
PART FUNCTION:	An electrically operated solenoid which is used to open and close the water valve through mechanical linkage. Solenoid is a continuous duty type.
PART SETTINGS:	Solenoid itself requires no adjustment, however, linkage should be adjusted so that solenoid can make positive contact when energized and core will leave field when de-energized. Adjust linkage so that solenoid travels approximately 3/4" to close when energized.
PART REPAIRABLE:	No. Replace when in-operative.
PART MAINTENANCE:	Solenoid proper requires no maintenance but care should be exercised to insure proper voltage to coil to avert burn-outs. Mechanical linkage can be oiled and adjusted to prevent drag on solenoid. Many solenoid burn-outs are caused indirectly such as a sticking time clock which will keep solenoid energized for long periods of time.
PART NAME:	Relay Potter and Brumfield Type PR5AX
PART NUMBER:	12-419
PART FUNCTION:	Relay is used as a by-pass on the bin thermostat when it tries to cut unit off on a full bin of cubes during a freezing cycle. This insures full cubes every time a harvest occurs and prevents short cycling on bin thermostat.
PART SETTINGS:	Factory set.
PART REPAIRABLE:	No. Replace when in-operative.
PART MAINTENANCE:	Check electrical connections and blow points clear of lint or dirt.

FUNCTIONAL PARTS & MAINTENANCE

PART NAME:	Reverse Acting Temperature Control
PART NUMBER:	11-351-1
PART FUNCTION:	Reverse acting temperature control, closes on temperature decrease, opens on temperature rise. Control determines length of freezing cycle and by the same token, the cube size. A lower setting on control will produce larger cubes, a higher setting, smaller cubes. This control actuates time clock motor, Part No. 12-645-1, which then takes over balance of freezing cycle (10 minutes) and also defrost period 2 minutes.
PART SETTINGS:	Adjustable by screw driver slot.
PART REPAIRABLE:	No. Replace when inoperative.
PART MAINTENANCE:	Check electrical connections. Blow points free of dust, dirt, lint, etc.
PART NAME:	Contactor
PART NUMBER:	12-820-1
PART FUNCTION:	Across the line contactor used to provide protection for hi voltage compressor only. Contactor is wired so any of the controls in pilot circuit such as bin thermostat will cause contactor holding coil to drop contact points when actuated. There are no overloads or resets on this control.
PART SETTINGS:	Factory set, no adjustments necessary.
PART REPAIRABLE:	No, Replace
PART MAINTENANCE:	Check control for loose electrical connections and blow free of any dust, dirt, etc.

FUNCTIONAL PARTS & MAINTENANCE

PART NAME:	Temperature Control Storage Bin. White Rodgers Type 1604-31
PART NUMBER:	11-99-1
PART FUNCTION:	To automatically cut machine off when ice level in storage bin reaches thermostat bulb. Automatically starts machine when ice level in bin falls below bulb location.
PART SETTINGS:	Most of these controls have differential being 4°F. Settings are 35° cut out and 39° cut in.
PART REPAIRABLE:	No. Replace when inoperative. If out of warranty it can be sent in through your local refrigeration supply dealer and repaired or replaced for a small percentage of original cost.
PART MAINTENANCE:	Remove cover, check points for corrosion or arcing every six months. Blow control free of bugs, dirt, etc. Check capillary for cracks or worn spots due to vibration. Hold small handful of ice on thermostat bulb to check operation of control. Tighten electrical connections.
PART NAME:	Timer. Automatic Electric.
PART NUMBER:	12-645-1
PART USAGE:	Heart of the cyclematic control system is the cube size temperature control Part No. 11-351-1 and the time clock it actuates. All electrical components are connected to the time clock terminal board and are shunted by means of a micro-switch to either the freezing cycle or harvest cycle. Micro-switch is in turn actuated by two metal cans that are directly connected to the electric timer clock motor. Timer has a 12 minute cycle, 10 minutes on freezing cycle after being cut on by low temperature control and 2 minutes on defrost cycle. Time clock face has numerals to 12 on half the face. Each numeral represents a minute period. Face also has a lever beneath it which can be moved to lengthen or shorten defrost period.
PART SETTINGS:	Normal setting for defrost is on No. 2 which is 2 minutes.
PART REPAIRABLE:	Yes. Micro-switch, Part No. 12-645-1 are replaceable as well as timer clock motor only Part No. 12-367.
PART MAINTENANCE:	Check all electrical connections, blow contact points free of dust, dirt, etc.

MAINTENANCE INSTRUCTIONS FOR SCOTSMAN SUPER CUBERS

THE FOLLOWING MAINTENANCE MUST BE ACCOMPLISHED TWO (2) TIMES PER YEAR ON ALL SCOTSMAN SUPER CUBERS.

1. Clean air-cooled condenser. This is to be done frequently with the machine shut off. Air cooled models.
2. Clean hot water tank and evaporator, sump tank and screen, using Scotsman Ice Machine Cleaner or equivalent.
3. Remove jet tube and manually clean jets. Use 5/64" drill.
4. Check curtain assemblies. Replace any broken sections.
5. Tighten all electrical connections.
6. Tighten all bolts.
7. Check water supply. Clean and flush flow control. Clean water strainer.
8. Oil jet tubes drive motor three (3) places. Use SAE 20 oil--2 oil cups, 1 crankcase screw covered opening.
9. Oil sump pump motor. Necessary to remove pump on some models. Use SAE 20 oil. Note: Some pumps are ball bearing style, they have no oilers hence need no oiling.
10. Oil condenser fan motor. Punch sealed cap or remove screws where possible.
11. Check for refrigeration leaks with halide torch.
12. Check for water leaks. Tighten drain line connections.
13. Check size and condition of cubes. Adjust as required. See Service Analysis Section.
14. Check bin thermostat setting. Factory set at 35° out, 39° in.

PROCEDURES FOR USE OF SCOTSMAN ICE MACHINE CLEANER IN SCOTSMAN ICE MACHINE.

1. Remove front access doors.
2. Locate control box with time clock knob protruding thru cover.
3. Put unit through a harvest cycle manually. This may be done by turning time clock knob clockwise until a loud snap is heard.
4. Let unit finish cube harvest cycle and start into freezing cycle. This will be approximately 5 minutes after the loud snap in Step #3 is heard. At this time turn off the compressor switch.
5. Locate the hot water tank which is directly behind the top access door. Remove the hot water tank cover by pulling up around the edge until it snaps off. Pour 16 ounces, of "Scotsman Ice Machine Cleaner" into the hot water tank.

6. Locate the sump reservoirs which are directly behind the ice discharge chutes. The discharge chutes are covered by a series of white plastic curtains which are free to swing out into the storage bin. Pour 8 ounces, of "Scotsman Ice Machine Cleaner" into each sump reservoir at both the upper and lower levels.

7. Let unit operate normally for 10-15 minutes into the freezing cycle. No ice will be made because the motor compressor is not in operation.

8. At the end of this time put the unit through 2 or 3 harvest cycles manually to allow fresh make up water to clean out remaining solution. Each time waiting approximately 5 minutes after the loud snap until the next harvest cycle is done manually.

9. Turn the compressor switch back on.

10. Check each new batch of new cubes until they are clean and until acid taste has been removed from cubes.

11. Put hot water in storage bin to melt the cubes and thereby clean the drains with the same solution that has just cleaned the unit.

12. Use a damp cloth to wipe off curtains and inside of storage bin.

13. Replace all access doors.

14. Unit is now ready for continued automatic operation.

DESCRIPTION	
CASE PARTS	
Scotsman Emblem	15-474
Left Side Door	A-17211
Bulb Cover	A-15759
Bulb Gasket	13-590
Adaptor Plug (Freezer Assembly)	S-7434
Right Side Panel, W.C.	A-9323
Right Side Panel, A.C.	A-8490
Left Side Panel	A-17210
Back Panel, W.C.	A-9321
Back Panel, A.C.	A-8495
Drive Bearing Support	A-5660
Top Panel	A-5694
Center Cube Deflector	A-16656
Upper Cube Chute, Left	A-16542
Upper Cube Chute, Right	A-16543
Lower Cube Chute, Left	A-16544
Lower Cube Chute, Right	A-16544
Right Side Panel, W.C.	A-5693
Shroud Top, A.C.	A-8521
Upper Curtain Assembly	A-16541
Lower Curtain Assembly, Right	A-16680
Lower Curtain Assembly, Left	A-16679
Door Nut, 6 reqd.	3-1029
Door Screws, 6 reqd.	3-789
Upper Door Assembly	A-16875
Front Door Liner Assembly	2-1536
Lower Front Door Assembly	A-17352
Upper Face Plate Assembly	A-16677
Lower Face Plate Assembly	A-16662
Bulb Holder Buttons	A-16108
Cube Tray Assembly, 2 reqd.	A-18026
Accumulator Cover	S-9805
Door Gasket	A-17250

For stainless steel case parts add -S to Part No.

DESCRIPTION	
ELECTRICAL	
Fan Control, A.C.	11-352
Temperature Control (W-R)	11-99-1
Timer	12-645-1
Control, Cube Size	11-351-1
Relay (Bin Thermostat)	12-419
Drive Motor	12-1383-1
Sump Pump	12-1351-1
Contactor	12-820-1
Terminal Block	12-813
Toggle Switch (On/Off)	2/unit 12-426
COND. UNIT	
Dryer	2-677
Relay	18-1903-18
Dual Pressure Control	11-286
Motor Compressor-- 230/60/1, W.C.	18-546
Valve Plate and Gaskets	18-326
Water Cooled Condenser	18-599
Water Regulating Valve	11-198
Motor Compressor, 230/60/1. W.C.	18-550
Starting Capacitor	18-1901-15
Running Capacitor	18-1902-17
Overload Klixon	18-533
Terminal Assembly	18-270
Service Valve Gasket	18-561
Plain Condenser Gasket	18-548
Manifold Condenser Gasket	18-549
(2 per unit) Fan Motor	18-559
(2 per unit) Fan Blades	18-625
(2 per unit) Fan Motor Bracket	18-636
Condenser, Air Cooled	18-624
Vibration Eliminator	16-317
Motor Compressor, 230/60/1, A.C.	18-1921-2
Motor Compressor, 208/60/1, A.C.	18-1921-7

WATER VALVE

DESCRIPTION	
Upper Valve Rod	S-8943
Rubber Valve Seat "O" Ring	2-541
Rubber Valve Seat "O" Ring	2-530
Middle Valve Rod	A-8199
Valve Nut	S-8946
Middle Valve Spring	2-549
Lower Valve Rod	S-8951
Lower Valve Link	S-8953
Spring (Drain Valve Seat Assembly)	2-419

WATER CIRCUIT

Spray Tube Assembly	A-16931
Inlet Pipe Assembly (Upper)	A-5858
Inlet Pipe Assembly (Lower)	A-5857
End Bearing Assembly	A-16929
Overflow Pipe (Sump)	A-17521
Strainer	16-207
"U" Cup	13-588

DRIVE MOTOR & LINKAGE

Single Driven Arm Assembly	A-17232
Double Driven Arm Assembly	A-17233
Linkage Coupling	S-7936
Lingage Rod, Lower	A-17234
Left Linkage Rod	S-7940
Linkage Rods, Right	S-7938
Complete Drive Linkage Assembly	A-17230
Driver Arm Assembly	S-9666
Set Screw	3-431
Drive Motor	12-1383-1
Left Linkage Nut	S-7937
Right Lock Nut (Two required)	3-357
Driving Journal Assembly	A-5679
Drive Motor Grommets	13-100
Bearing, Oil Lite	A-7033

DESCRIPTION	
Water Valve Assembly Complete	A-8332
Valve Seat Washer	S-6924
Valve Lever	A-8763
Valve Plunger	A-16973
Valve Link	A-8188
Drain Valve Seat Assembly	A-8182
Drain Valve Guide	S-8942
Valve Guide Assembly	S-8949
Short Pin (Water Valve) S.S.	S-7974
Roll Pin	3-774
Water Deflector Cup	A-18355
Spring (Solenoid & Water Valve)	2-420

HOT WATER TANK

Long Pin (Solenoid)	
Water Inlet Valve	A-6771
Valve Seat	S-6947
Nut (Inlet Valve)	S-7044
Hot Water Tank Assembly	A-18036-1
Standpipe Overflow	A-8610
Hot Water Tank Cover	A-13385
Compression Spring (Hot Water Tank)	2-419
Float Assembly	A-12068
Drain Screen, Water Tank	A-16378
Valve Spring	2-419
Wing Nut	3-255
Right Bracket Support	A-8175
Left Bracket Support	A-8173
Hot Water Tank	A-8171
Heating Element	12-1455R
O Ring	2-530
Solenoid	12-1396-1
Flow Control	A-13346-4
Thermostat	12-246
Thermo Disc Cover	A-6480
Plastic Water Deflector	2-1320
Solenoid Mount	A-18275
Elastic Stop Nut, 4 reqd.	3-1284
Grommet, 4 reqd.	13-625
Washers, 4 reqd.	13-298
Screws	3-499

AF1-A series

MODEL AF1A SERIES FLAKERS ended at Serial Number 11P-117795. Utility connections on 'A' Model were run thru the rear of the cabinet. On the 'B' Model utilities are run thru the left side,

The cabinet parts effected are case panel rear and case assy. For all parts on the AF1-A units use the AF1-B parts list.

AF1-B series

MODEL AF1B SERIES FLAKERS start at Serial Number 11P-117795. Two major changes identify the "B" model over earlier models.

1. Rear Hood Panel not a part of trip strip, is easily removed for access to water reservoir, gear motor, etc.

2. Utility hookups concentrated and routed to rear panels.

STORAGE BIN FRONT VIEW

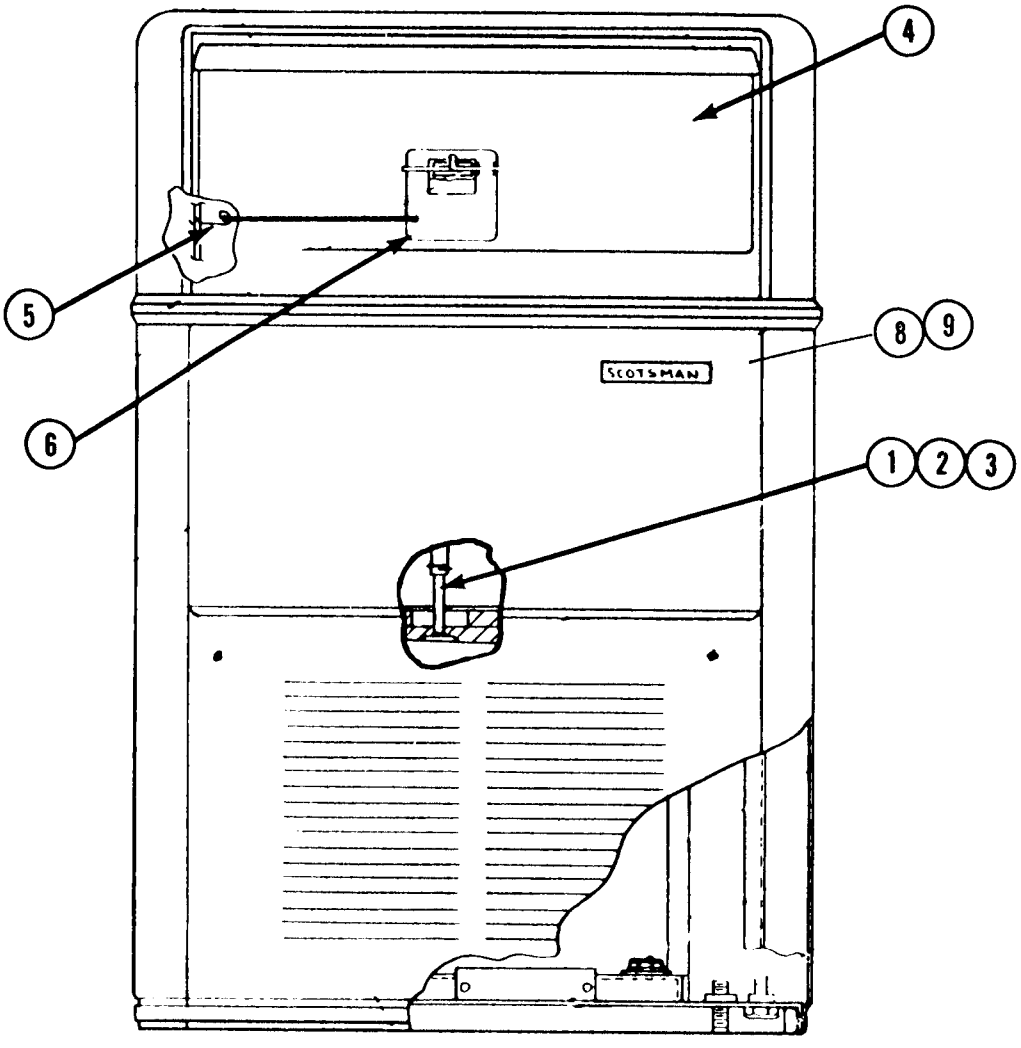

ITEM NO.	PART NO.	DESCRIPTION
1.	02-1957-00	Drain Tube
2.	02-1751-00	Drain Fitting
3.	13-0617-36	O Ring
4.	A27469-001	Storage Bin
5.	03-1415-00	Bulb Holder
6.	13-0779-01	Spout Grommet
7.	13-0780-01	Sealing Gasket
8.	15-0156-00	Emblem
9.	03-0271-00	Speed Nut

CABINET ASSEMBLY

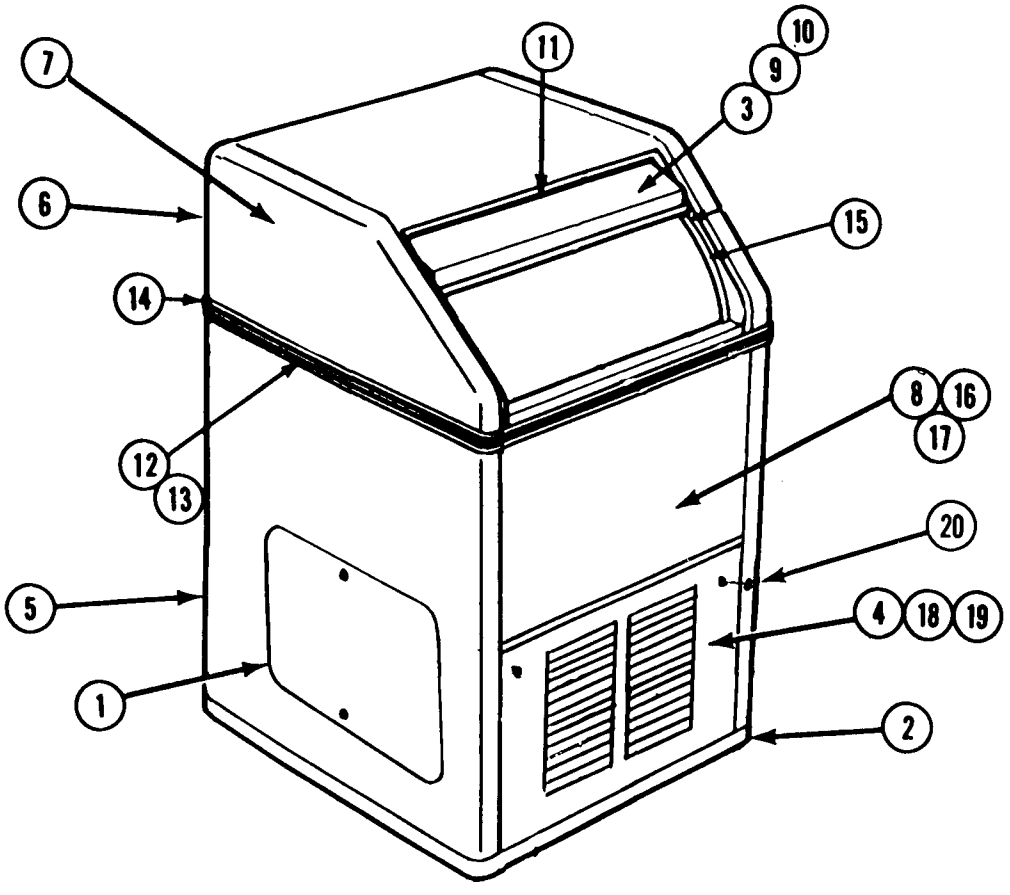

STAINLESS STEEL

ITEM NO.	PART NO.	DESCRIPTION
1.	A07676-005	Service Door
2.		Not Req'd
3.	02-1735-01	Access Door
4.	A24427-001	Front Door Assy.
5.	A25326-001	Case Panel Rear
6.	A25325-001	Hood Panel Rear
7.	A24429-001	Hood Assy.
8.	A25847-001	Case Assy.
9.	03-1276-00	Wing Screw
10.	02-1736-00	Door Lanyard
11.	03-1195-00	Hood Guide (3)
12.	A25342-001	Moulding Strip
13.	15-0324-00	Plastic Insert Per Foot
14.	S08983-000	Clip (2)
15.	A16208-000	Door Track
16.	15-0156-00	Scotsman Emblem
17.	03-0271-00	Push Nut (2)
18.	03-0468-00	Door Catch (2)
19.	13-0113-00	Door Grommet (2)

ENAMEL

ITEM NO.	PART NO.	DESCRIPTION
1.	A07676-00S	Service Door
2.	A08902-014	Moulding Strip (2)
3.	A15559-000	Ice Access Door
4.	A24427-002	Front Door
5.	A25326-002	Case Panel Rear
6.	A25325-002	Hood Panel Rear
7.	A24429-002	Hood Assy.
8.	A25847-002	Case Assy.
9.	03-1276-00	Wing Screw
10.	02-1736-00	Door Lanyard
11.	03-1195-00	Hood Guide (3)
12.	A25342-001	Moulding Strip
13.	15-0324-00	Plastic Insert Per Foot
14.	S08983-000	Clip (2)
15.	A16208-000	Door Track
16.	15-0156-00	Scotsman Emblem
17.	03-0271-00	Push Nut (2)
18.	03-0468-00	Door Catch (2)
19.	13-0113-00	Door Grommet (2)
20.	03-1419-09	Screw

CONTROL BOX

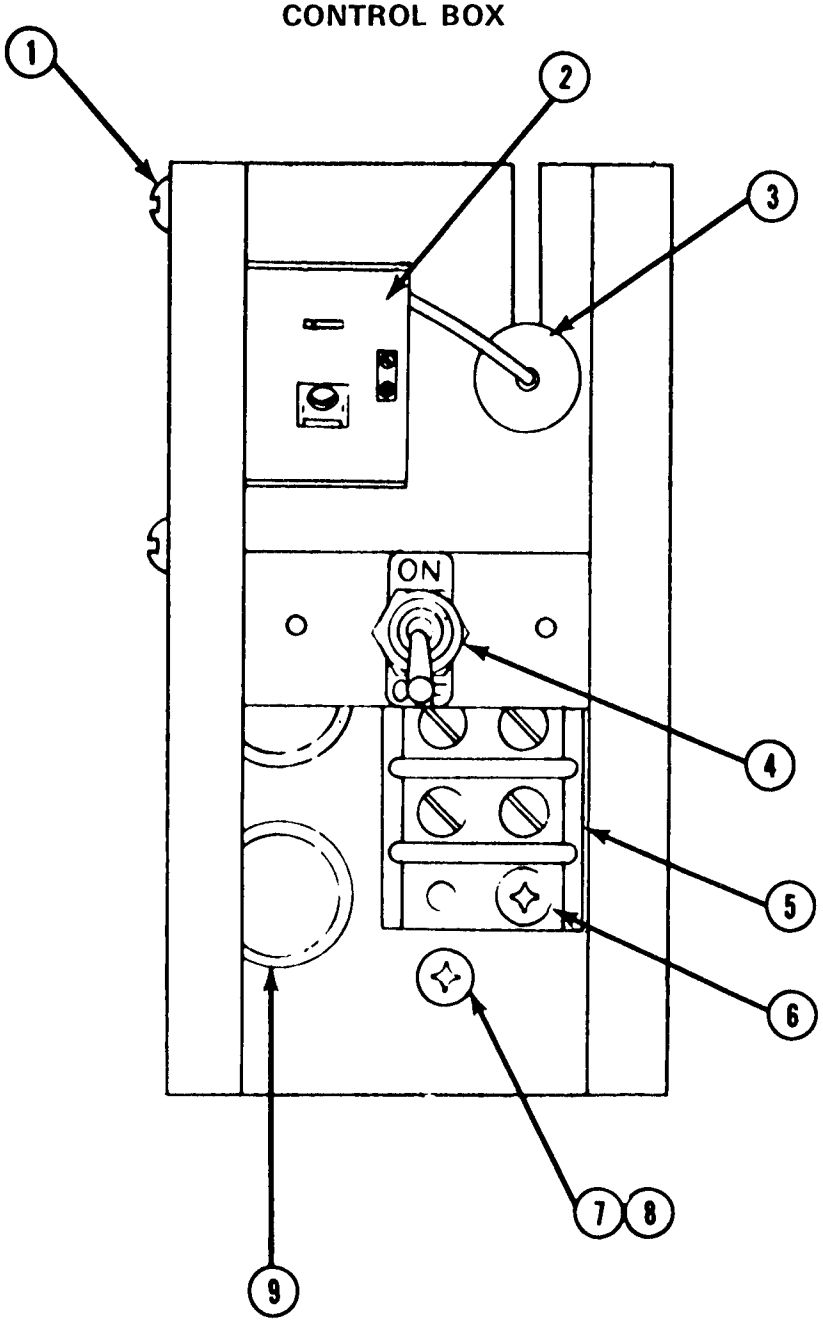

ITEM NO.	PART NO.	DESCRIPTION
1.	03-1403-17	Screw (2 req'd)
2.	11-0354-00	Temp. control
3.	13-0557-00	Grommet
4.	12-0426-01	Switch
5.	12-0813-04	Term. Block
6.	03-1403-31	Screw (2 req'd)
7.	03-1417-04	Washer
8.	03-1403-26	Screw
9.	12-1213-10	Snap Bushing (2 req'd)

RESERVOIR ASSEMBLY

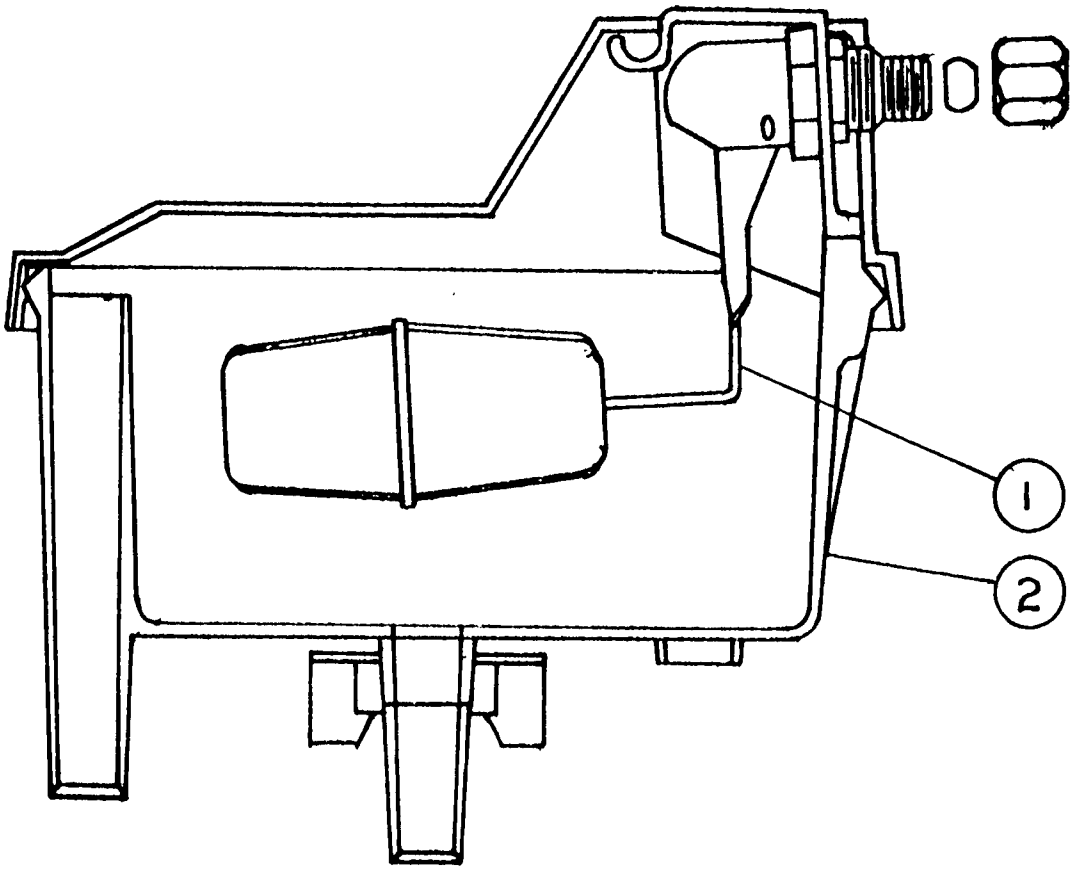

ITEM NO.	PART NO.	DESCRIPTION
1.	02-2217-02	Valve Assy.
2.	02-2217-01	Reservoir Complete

A25995-021
GEAR MOTOR ASSEMBLY
1/10 H.P.
115/60/1

11.5 RPM at output shaft

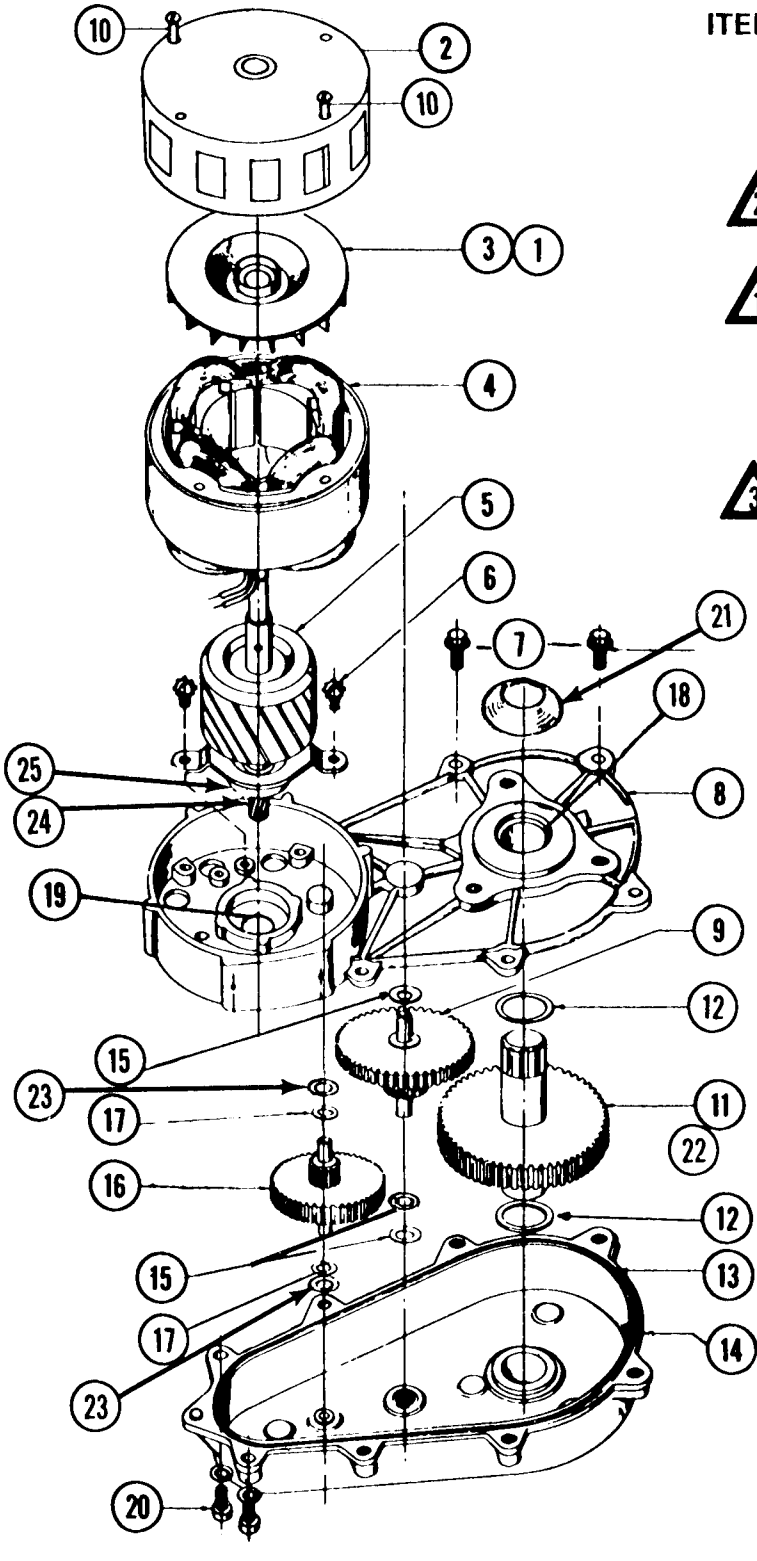

ITEM NO.	PART NO.	DESCRIPTION
1.	03-1246-00	Set Screw (2)
2.	A17047-000	Motor Housing
3.	A16915-000	Cooling Fan
4.	12-1400-01	Stator Assy.
2 5.	A26454-001	Rotor & 1st. Gear Kit
6.	03-1245-00	Screws (2)
7.	03-1251-00	Flange Screws (6)
1 8.	A16920-021	Gear Case Cover
9.	02-1521-00	Gear and Pinion
10.	03-1403-43	Motor Bolts (4)
11.	A26650-001	Gear and Output Shaft
12.	03-1408-21	Washer (2)
13.	02-1505-00	"O" Ring
3 14.	A24184-001	Gear Case Kit
15.	03-1408-06	Washer (3)
16.	02-2224-01	1st Gear and Pinion
17.	03-1408-19	Washer (2)
18.	02-1503-00	Grease Seal
19.	02-1504-00	Grease Seal
20.	03-1252-00	Screw (2)
21.	13-0709-01	Water Shed
22.	03-1475-01	Key
23.	03-1408-20	Washer (2)
24.	13-0617-04	Slinger Ring
25.	02-1501-00	Rotor Bearing

NOTE:

1 Cover comes with grease seals items 18 & 19.

2 Fiber gear (item 16 and rotor bearing (item 25) included in the rotor kit.

3 Includes items: 8, 13, 15, 17, 18, 19, 23 and gear lube.

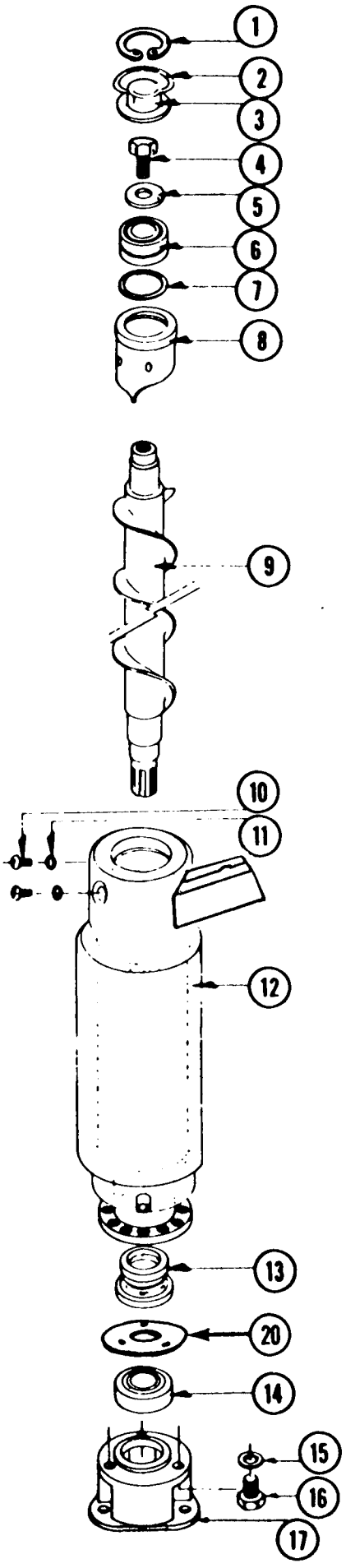

FREEZER ASSEMBLY

ITEM NO.	PART NO.	DESCRIPTION
1.	03-1558-03	Retainer Ring
2.	A08162-000	Cap Hook
3.	A07701-000	Cap
4.	03-0758-00	Screw
5.	A07699-000	Washer
6.	02-0547-000	Top Bearing
7.	13-0617-16	"O" Ring
8.	A26706-001	Breaker w/Bearing
9.	02-1313-00	Auger
10.	03-1407-16	Screw (2 req'd)
11.	03-1417-07	Washer (2 req'd)
12.	A24590-020	Evaporator Shell Includes Suction Line, etc.
13.	A18945-000	Water Seal
14.	02-0417-00	Bearing, Lower
15.	03-1410-04	Washer (3 req'd)
16.	03-1405-42	Cap Screw (3 req'd)
17.	08-0595-01	Adapter
18.	15-0575-01	Spline Drive Coupling
19.	13-0709-01	Shaft Drip Shield - rubber
20.	03-1505-00	Gasket
21.	13-0628-00	Gasket
22.	A18153-000	Drip Pan Assembly

COMPRESSOR ASSEMBLY

115/60/1

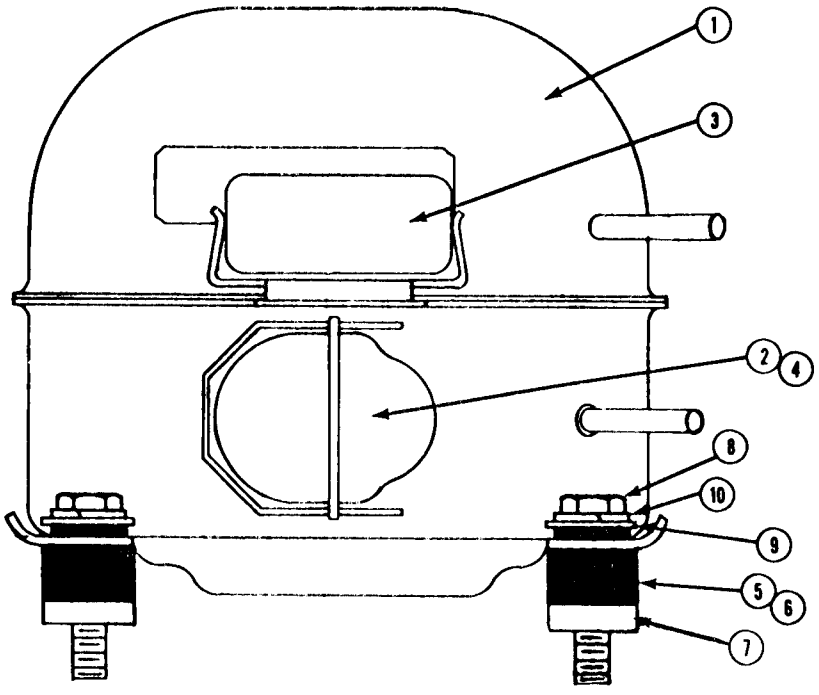

ITEM NO.	(Tecumseh) PART NO.	(Copeland) PART NO.	DESCRIPTION
1.	18-0108-01	18-4400-01	Compressor
*2.	18-0108-25	18-4400-42	Relay
3.	18-0108-28	18-4100-43	Start Capacitor
*4.	18-0108-30	18-4400-41	Overload
5.	18-0108-40	18-2200-28	Mounting Grommet
6.	18-0108-41	18-2200-27	Mounting Sleeve
7.	A19029-000		Mounting Spacer
8.	03-1405-40		Screw
9.	03-1408-29		Flat Wahser
10.	03-1410-04		Lockwasher

*Parts Not Shown

AF1 "A" Models were first produced with a Tecumseh compressor, catalog #43, Scotsman part No. 18-0108-01. As announced in Service Bulletin PS-5-76 issued 7-15-76, model AF1A with serial number 10Q243216 was last unit produced with original Tecumseh compressor. Starting April 1976 Copeland compressor, Scotsman part No. 18-4400-01 was used as standard production.

1. **AF1 "B" Models** after unit serial number 10Q243217 are manufactured with Copeland compressor, Scotsman part No. 18-4400-01. This usage continued thru serial number 10Q273559 in August 1976. A supplier work stoppage caused a return to the Tecumseh compressor Scotsman part No. 18-0108-01 as follows on 325 units. Serial number 4Q286108 thru 286432.

Next run of serial numbers for 280 units, serial No. 5Q301467 thru 301746 use a new style Copeland compressor, Scotsman part No. 18-4400-01, Copeland model JFC1-0025-1AA-210.

Serial numbers 5Q301747 thru 301790 = 44 units were 50 Hertz units, used Tecumseh compressors.

2. 18-0108-01 is no longer available from Tecumseh. For replacement order compressor 18-4700-01 & conversion kit 18-0108-50 for mounting. Refer to AF1C for additional info on 18-4700-01.

3. Order proper compressor components for compressor used.

CHASSIS ASSEMBLY
LEFT SIDE

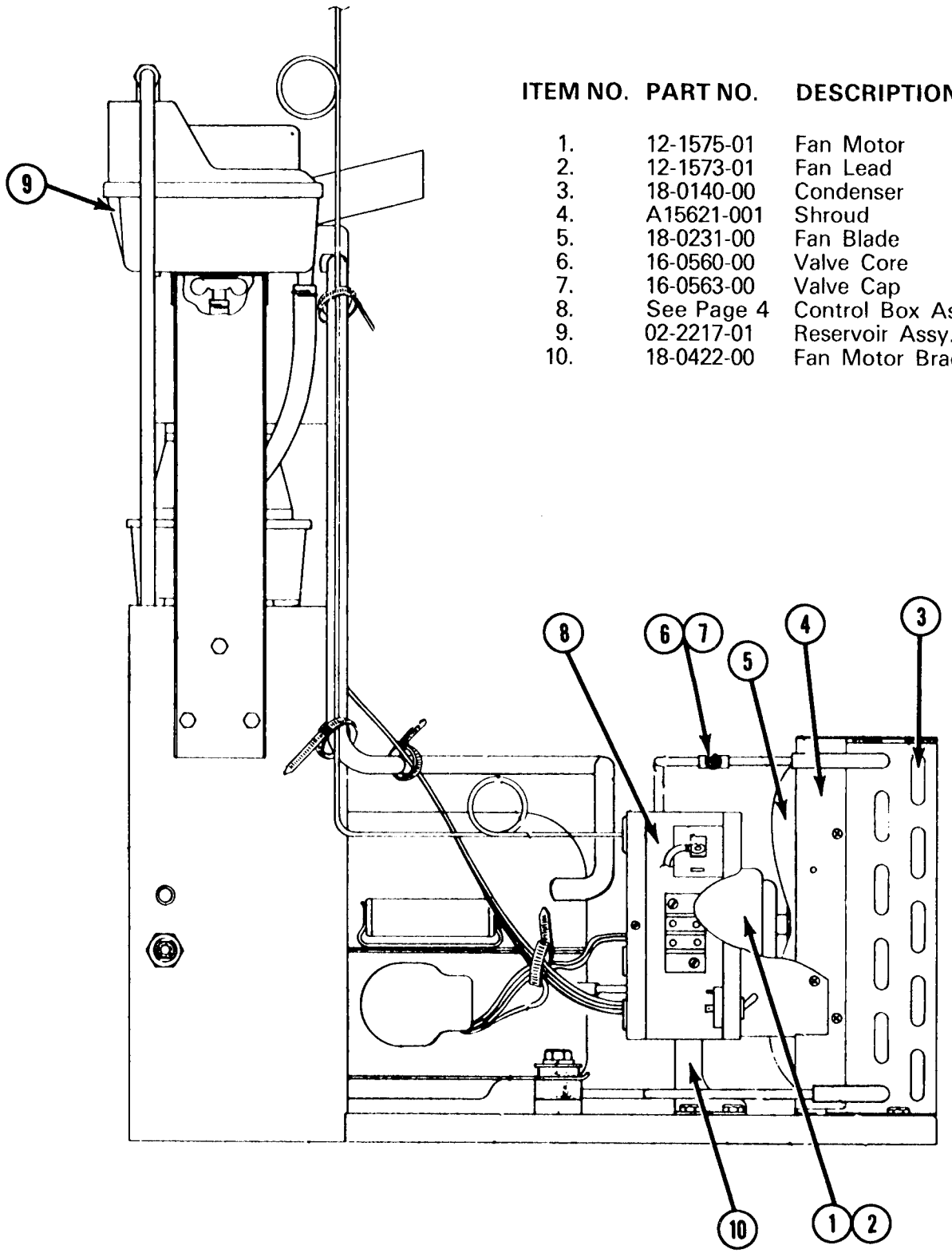

ITEM NO.	PART NO.	DESCRIPTION
1.	12-1575-01	Fan Motor
2.	12-1573-01	Fan Lead
3.	18-0140-00	Condenser
4.	A15621-001	Shroud
5.	18-0231-00	Fan Blade
6.	16-0560-00	Valve Core
7.	16-0563-00	Valve Cap
8.	See Page 4	Control Box Assy.
9.	02-2217-01	Reservoir Assy.
10.	18-0422-00	Fan Motor Bracket

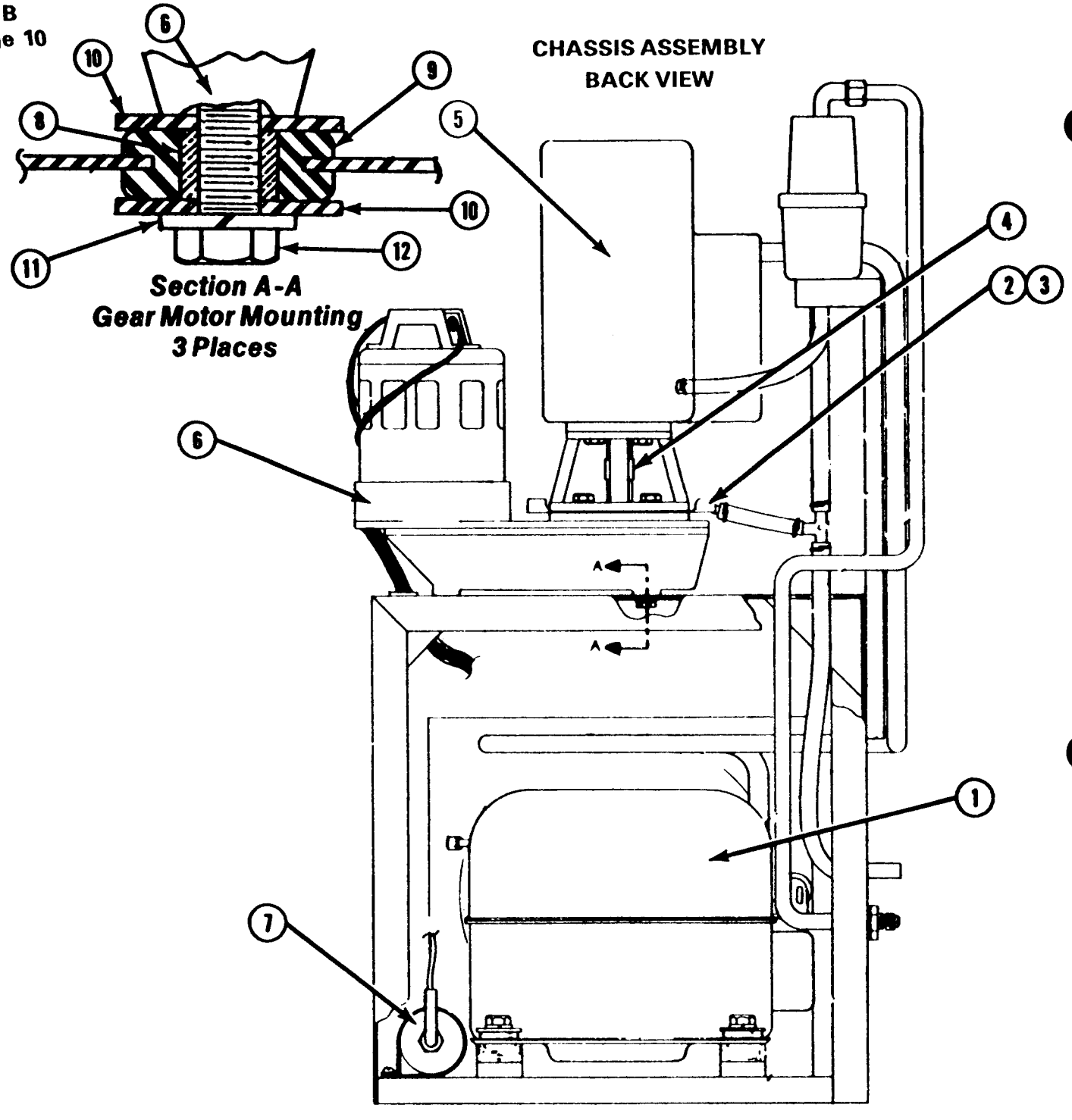

ITEM NO.	PART NO.	DESCRIPTION
1.	See Page 8	Compressor
2.	A18153-000	Drip Pan
3.	03-1505-00	Gasket
4.	15-0575-01	Coupling
5.	See Page 7	Freezer Assy.
6.	See Page 6	Gear Motor Assy.
7.	02-0350-00	Drier
8.	A24925-001	Metal Sleeve (3)
9.	13-0639-00	Grommet (3)
10.	03-1408-02	Flat Washer (6)
11.	03-1410-03	Lock Washer (3)
12.	03-1405-45	Screw (3)

CENTRIFUGAL SWITCH

SWITCH ADJUSTMENT

.03 minimum gap between switch lever and mechanism with centrifugal mechanism actuated (motor running). Switch circuit should be closed When motor is stopped and centrifugal mechanism deactivates, the switch circuit should be broken. There should be enough adjustment by loosening the switch mounting screws and tilting switch in direction required. If this fails, a small amount of bending can be done on the switch lever.

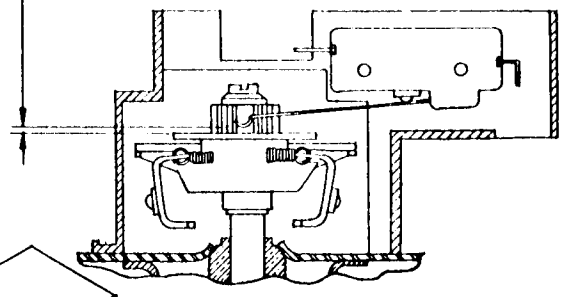

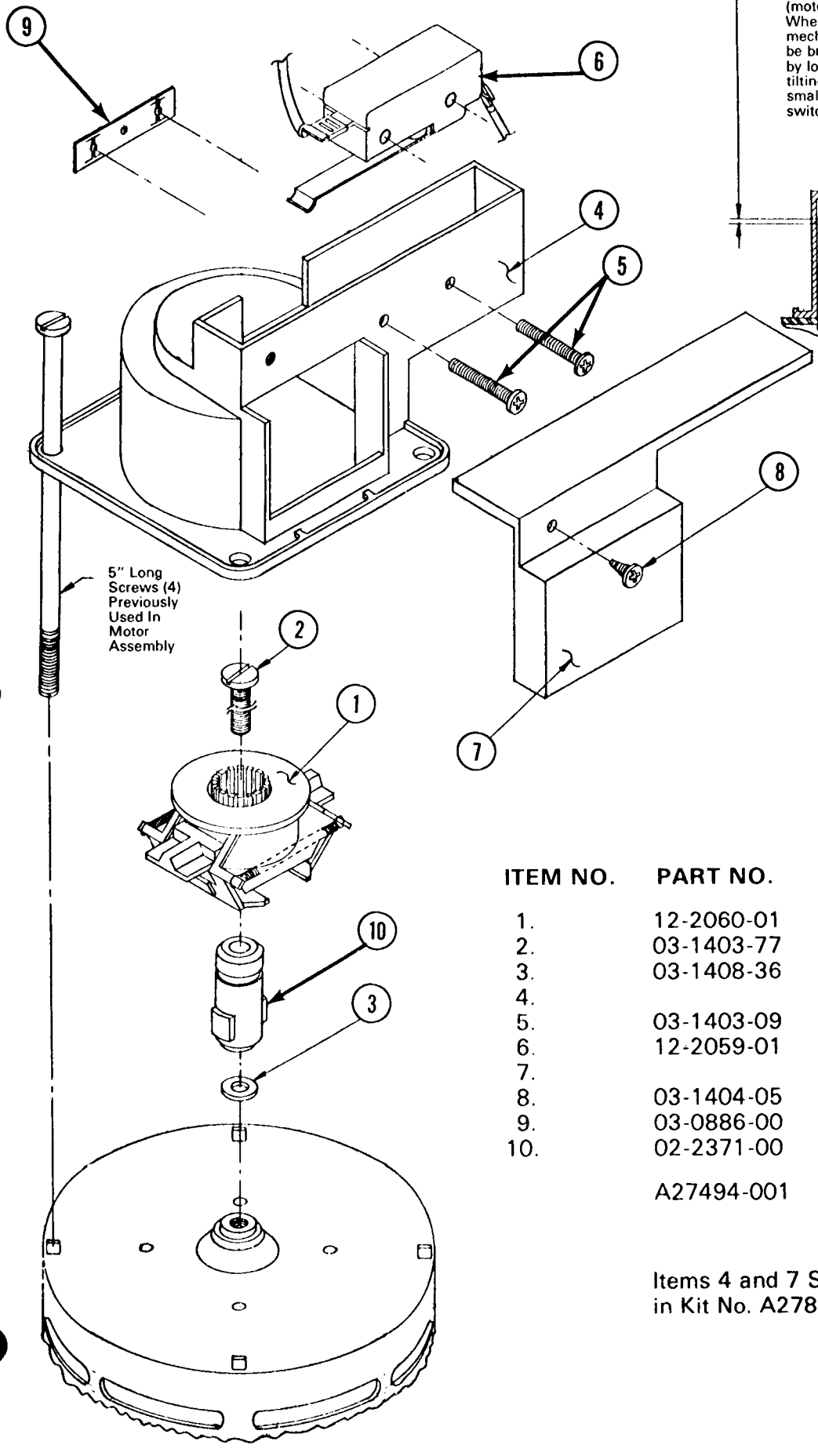

ITEM NO.	PART NO.	DESCRIPTION
1.	12-2060-01	Centrifugal Actuator
2.	03-1403-77	Screw
3.	03-1408-36	Washer
4.		Switch Mounting Case
5.	03-1403-09	Screw (2)
6.	12-2059-01	Switch
7.		Switch Case Cover
8.	03-1404-05	Screw
9.	03-0886-00	Speed Nut
10.	02-2371-00	Shaft Extension
	A27494-001	Centrifugal Switch Kit Complete w/17-1328-01 inst.

Items 4 and 7 Supplied in Kit No. A27895-001

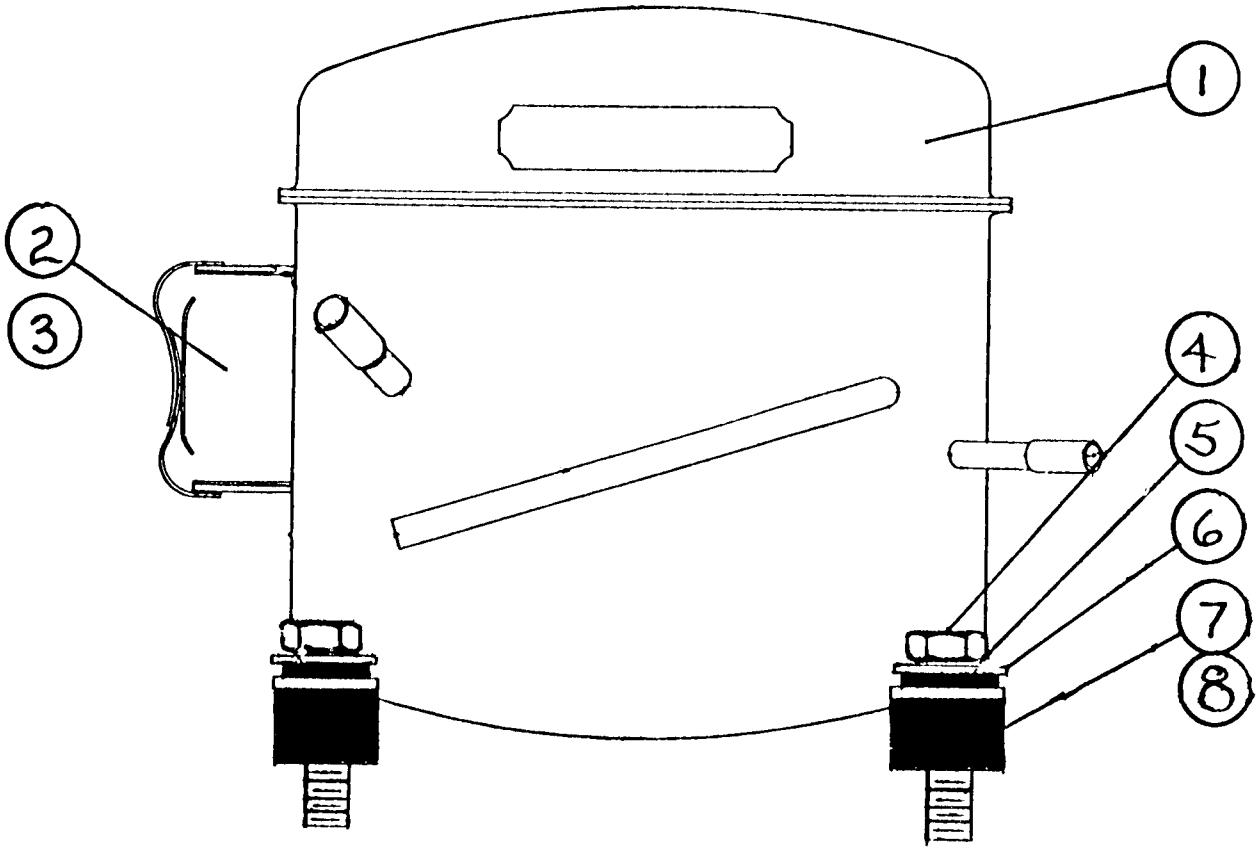

COMPRESSOR ASSEMBLY
115/60/1

AF1 "C" Models first manufactured in January 1977 with starting serial No. 8C323470 uses new Tecumseh compressor model AE1410A Scotsman part No. 18-4700-01.

ITEM NO.	PART NO.	DESCRIPTION
1.	18-4700-01	Compressor
2.	18-4700-30	Relay — Tecumseh 820RR12B11 GE 3ARR12-WR17 Relay — Tecumseh 82003CRB15 TI 3CR211-179
3.	18-4700-29	Overload — Tecumseh 830MRTC21 TI MRT28AGK-296
4.	03-1405-20	Screw
5.	03-1410-04	Lockwasher
6.	03-1408-29	Flatwasher
7.	18-4700-28	Mounting Grommet
8.	18-0108-41	Mounting Sleeve

CHASSIS ASSEMBLY
Left Side

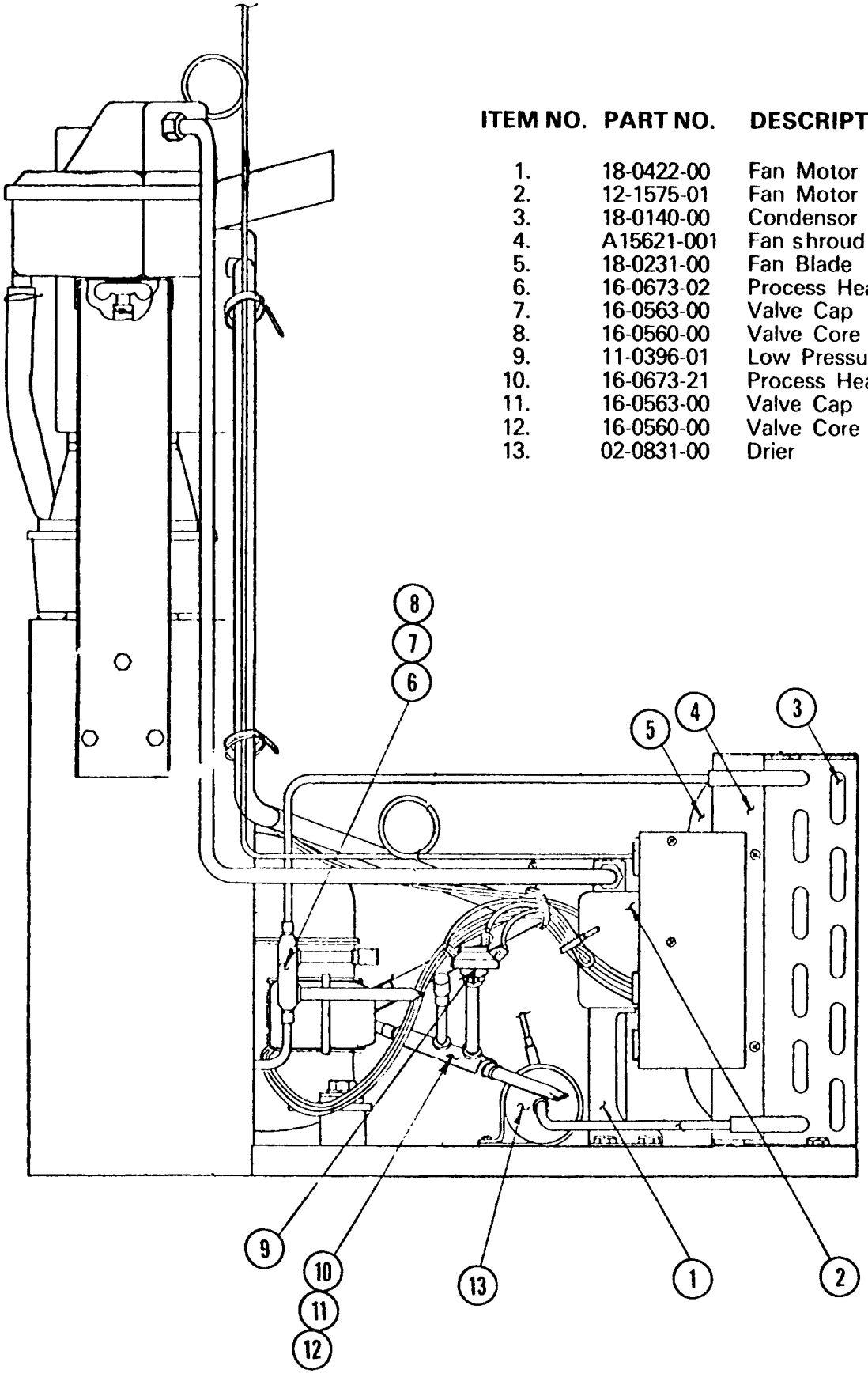

ITEM NO.	PART NO.	DESCRIPTION
1.	18-0422-00	Fan Motor Mount
2.	12-1575-01	Fan Motor
3.	18-0140-00	Condensor
4.	A15621-001	Fan shroud
5.	18-0231-00	Fan Blade
6.	16-0673-02	Process Header
7.	16-0563-00	Valve Cap
8.	16-0560-00	Valve Core
9.	11-0396-01	Low Pressure Switch
10.	16-0673-21	Process Header
11.	16-0563-00	Valve Cap
12.	16-0560-00	Valve Core
13.	02-0831-00	Drier

CHASSIS ASSEMBLY
Back View

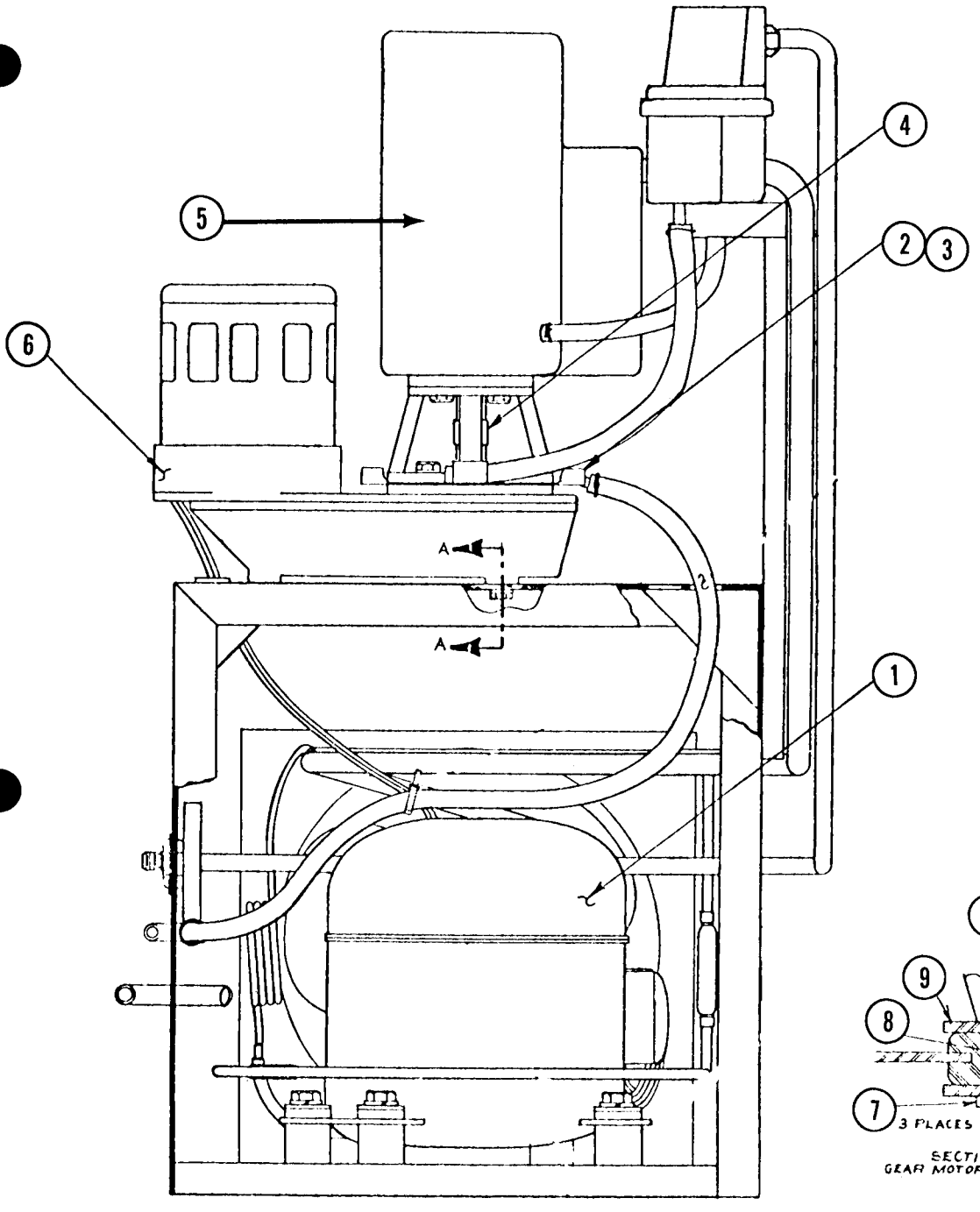

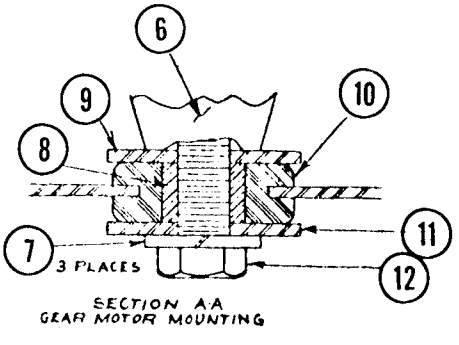

ITEM NO.	PART NO.	DESCRIPTION
1.	See Page 1	Compressor
2.	A18153-000	Drip Pan
3.	13-0628-00	Gasket
4.	15-0575-01	Spline Coupling
5.	See Page 6	Freezer Assy.
6.	See Page 7	Gear-Motor Assy.
7.	03-1410-03	Washer
8.	A24925-001	Spacer
9.	03-1408-02	Washer
10.	13-0639-00	Grommet
11.	03-1408-02	Washer
12.	03-1405-45	Screw

CABINET ASSEMBLY

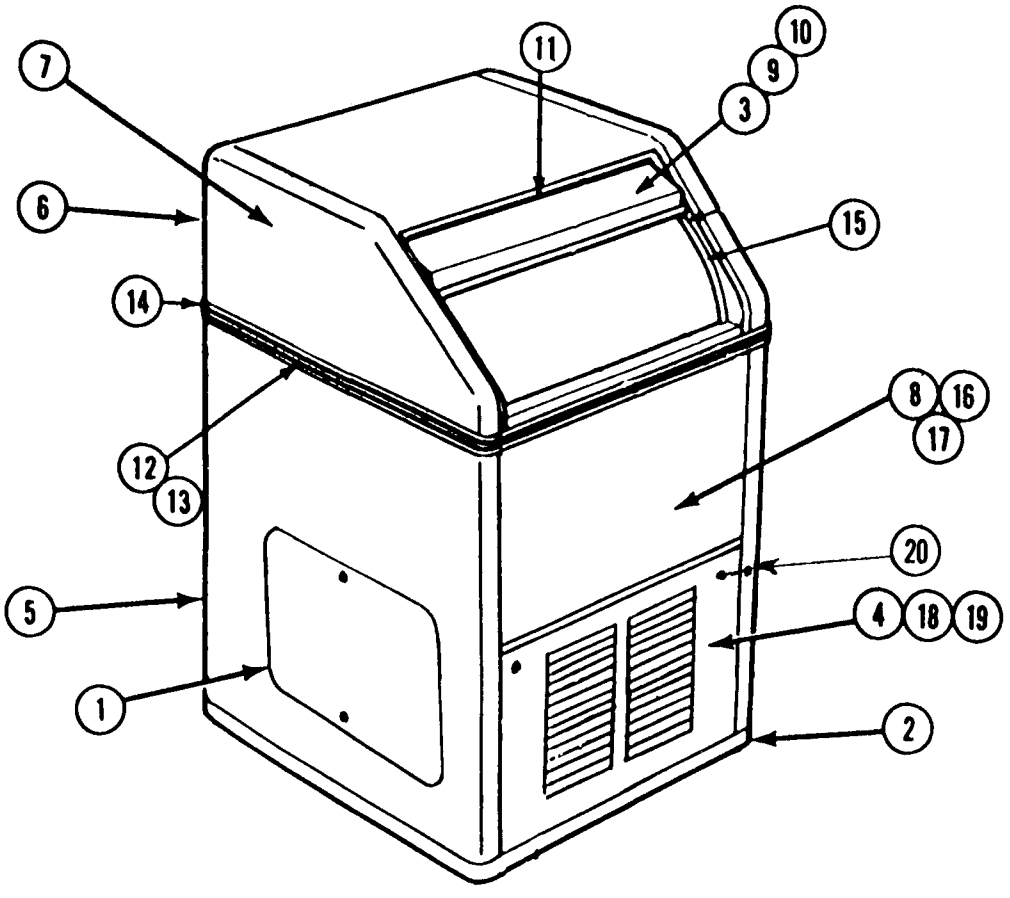

ENAMEL

ITEM NO.	PART NO.	DESCRIPTION
1.	A07676-005	Service Door
2.		Not Req'd
3.	02-1735-01	Access Door
4.	A24427-001	Front Door Assy.
5.	A25326-001	Case Panel Rear
6.	A25325-001	Hood Panel Rear
7.	A24429-001	Hood Assy.
8.	A25847-001	Case Assy.
9.	03-1276-00	Wing Screw
10.	02-1736-00	Door Lanyard
11.	03-1195-00	Hood Guide (3)
12.	A25342-001	Moulding Strip
13.	15-0324-00	Plastic Insert Per Foot
14.	S08983-000	Clip (2)
15.	A16208-000	Door Track
16.	15-0156-00	Scotsman Emblem
17.	03-0271-00	Push Nut (2)
18.	03-0468-00	Door Catch (2)
19.	13-0113-00	Door Grommet (2)

STAINLESS STEEL

ITEM NO.	PART NO.	DESCRIPTION
1.	A07676-00S	Service Door
2.	A08902-014	Molding Strip (2)
3.	A15559-000	Ice Access Door
4.	A24427-002	Front Door
5.	A25326-002	Case Panel Rear
6.	A25325-002	Hood Panel Rear
7.	A24429-002	Hood Assy.
8.	A25847-002	Case Assy.
9.	03-1276-00	Wing Screw
10.	02-1736-00	Door Lanyard
11.	03-1195-00	Hood Guide (3)
12.	A25342-001	Moulding Strip
13.	15-0324-00	Plastic Insert Per Foot
14.	S08983-000	Clip (2)
15.	A16208-000	Door Track
16.	15-0156-00	Scotsman Emblem
17.	03-0271-00	Push Nut (2)
18.	03-0468-00	Door Catch (2)
19.	13-0113-00	Door Grommet (2)
20.	03-1419-09	Screw

STORAGE BIN FRONT VIEW

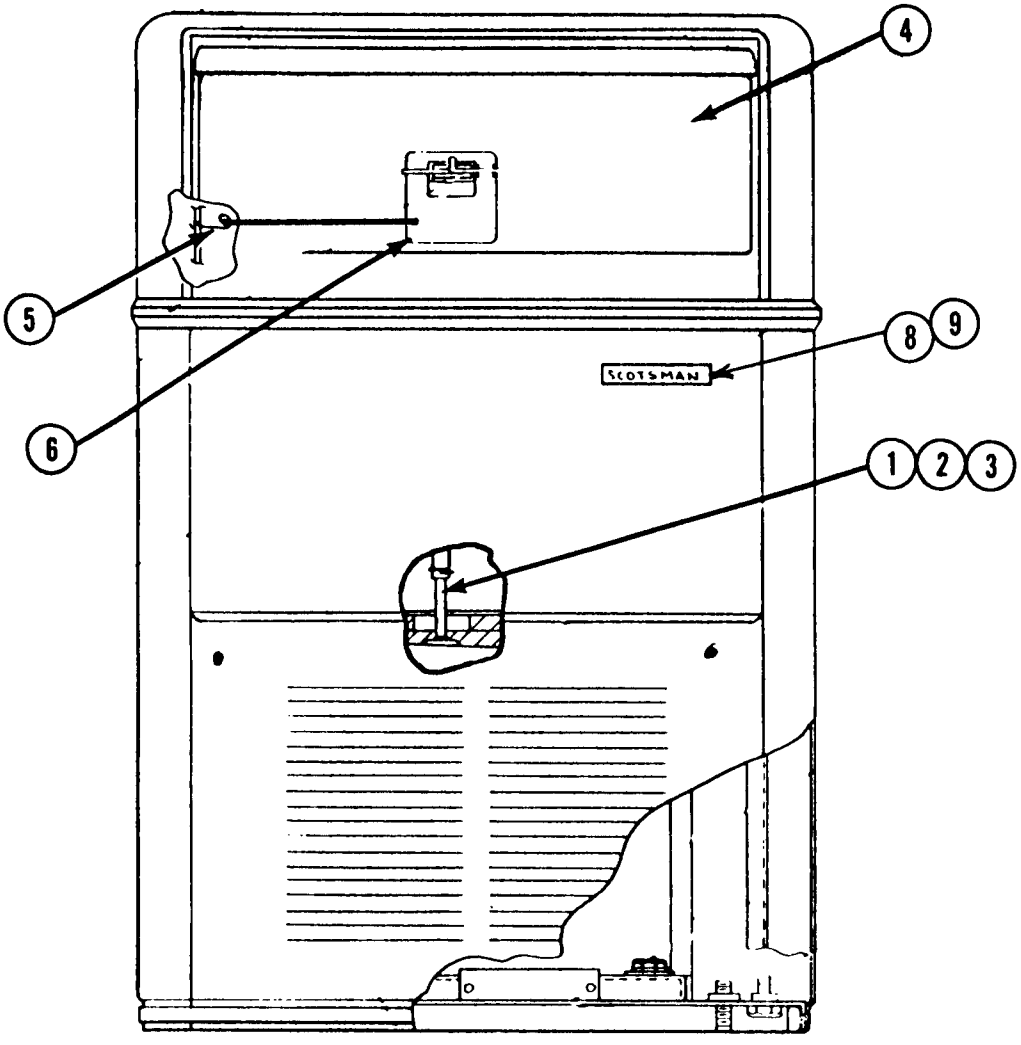

ITEM NO.	PART NO.	DESCRIPTION
1.	02-1957-00	Drain Tube
2.	02-1751-00	Drain Fitting
3.	13-0617-36	O Ring
4.	A27469-001	Storage Bin
5.	03-1415-00	Bulb Holder
6.	13-0779-01	Spout Grommet
7.	13-0780-01	Sealing Gasket
8.	15-0156-00	Emblem
9.	03-0271-00	Speed Nut

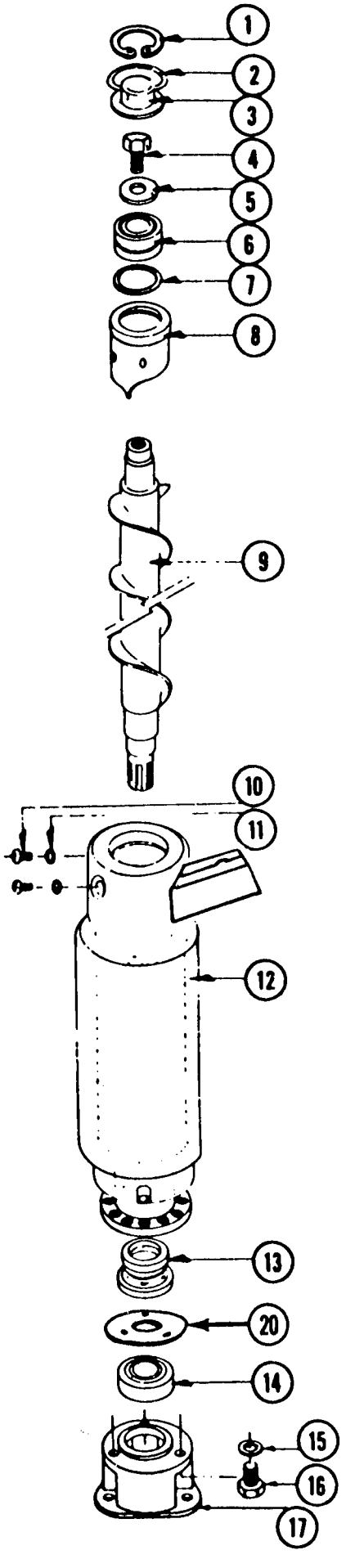

FREEZER ASSEMBLY

ITEM NO.	PART NO.	DESCRIPTION
1.	03-1558-03	Retainer Ring
2.	A08162-000	Cap Hook
3.	A07701-000	Cap
4.	03-0758-00	Screw
5.	A07699-000	Washer
6.	02-0547-00	Top Bearing
7.	13-0617-16	"O" Ring
8.	A26706-001	Breaker w/Bearing
9.	02-1313-00	Auger
10.	03-1407-16	Screw (2 req'd)
11.	03-1417-07	Washer
12.	A27192-020	Evaporator Shell Includes Suction Line, Etc.
13.	A18945-000	Water Seal
14.	02-0417-00	Bearing, Lower
15.	03-1410-04	Washer (3 req'd)
16.	03-1405-42	Cap Screw (3 req'd)
17.	08-0595-01	Adapter
18.	15-0575-01	Spline Drive Coupling
19.	13-0709-01	Shaft Drip Shield - rubber
20.	03-1505-00	Gasket
21.	13-0628-00	GAsket
22.	A18153-000	Drip Pan Assembly

STOUFFER
Graphic Arts

A25995-021
GEAR MOTOR ASSEMBLY
1/10 H.P.
115/60/1

11.5 RPM at output shaft

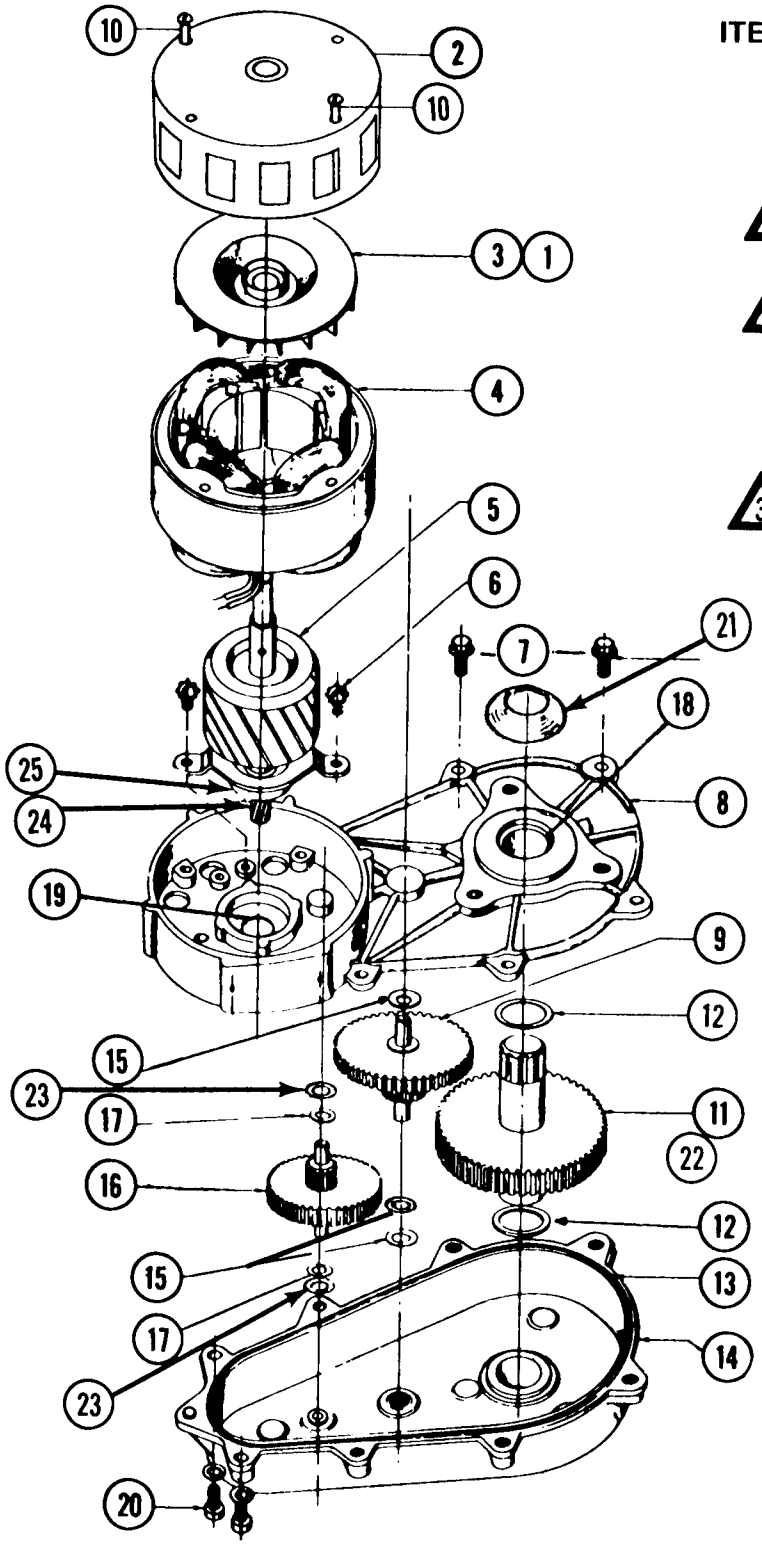

ITEM NO.	PART NO.	DESCRIPTION
1.	03-1246-00	Set Screw (2)
2.	A17047-000	Motor Housing
3.	A16915-000	Cooling Fan
4.	12-1400-01	Stator Assy.
2 5.	A26454-001	Rotor & 1st. Gear Kit
6.	03-1245-00	Screws (2)
7.	03-1251-00	Flange Screws (6)
1 8.	A16920-021	Gear Case Cover
9.	02-1521-00	Gear and Pinion
10.	03-1403-43	Motor Bolts (4)
11.	A26650-001	Gear and Output Shaft
12.	03-1408-21	Washer (2)
13.	02-1505-00	"O" Ring
3 14.	A24184-001	Gear Case Kit
15.	03-1408-06	Washer (3)
16.	02-2224-01	1st Gear and Pinion
17.	03-1408-19	Washer (2)
18.	02-1503-00	Grease Seal
19.	02-1504-00	Grease Seal
20.	03-1252-00	Screw (2)
21.	13-0709-01	Water Shed
22.	03-1475-01	Key
23.	03-1408-20	Washer (2)
24.	13-0617-04	Slinger Ring
25.	02-1501-00	Rotor Bearing

NOTE:

1. Cover comes with grease seals items 18 & 19.
2. Fiber gear (item 16 and rotor bearing (item 25) included in the rotor kit.
3. Includes items: 8, 13, 15, 17, 18, 19, 23 and gear lube.

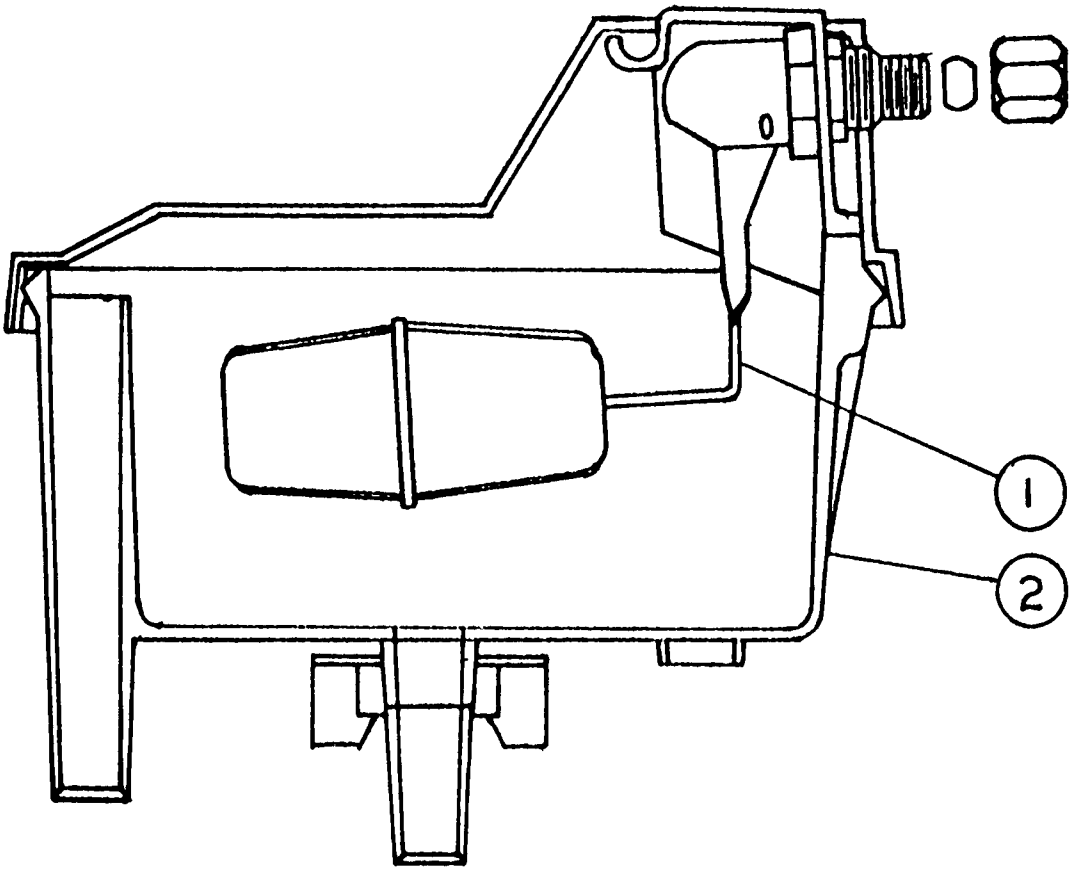

RESERVOIR ASSEMBLY

ITEM NO.	PART NO.	DESCRIPTION
1.	02-2217-02	Valve Assy.
2.	02-2217-01	Reservoir Complete

CONTROL BOX

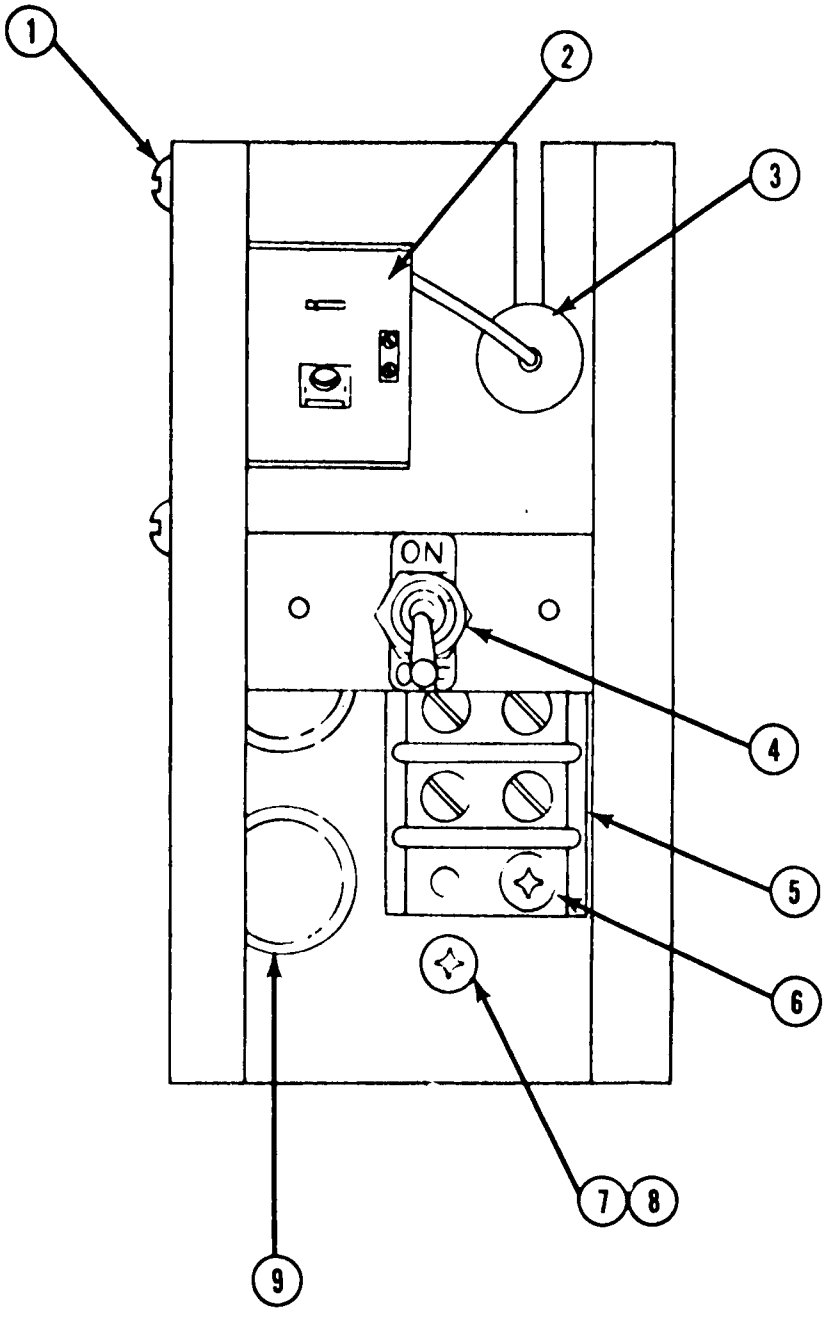

ITEM NO.	PART NO.	DESCRIPTION
1.	03-1403-17	Screw (2 req'd)
2.	11-0354-00	Temp. Control
3.	13-0557-00	Grommet
4.	12-0426-01	Switch
5.	12-0813-04	Term. Block
6.	03-1403-31	Screw (2 req'd)
7.	03-1417-04	Washer
8.	03-1403-26	Screw
9.	12-1213-10	Snap Bushing (2 req'd)

CENTRIFUGAL SWITCH

SWITCH ADJUSTMENT

.03 minimum gap between switch lever and mechanism with centrifugal mechanism actuated (motor running). Switch circuit should be closed When motor is stopped and centrifugal mechanism deactivates, the switch circuit should be broken. There should be enough adjustment by loosening the switch mounting screws and tilting switch in direction required. If this fails, a small amount of bending can be done on the switch lever.

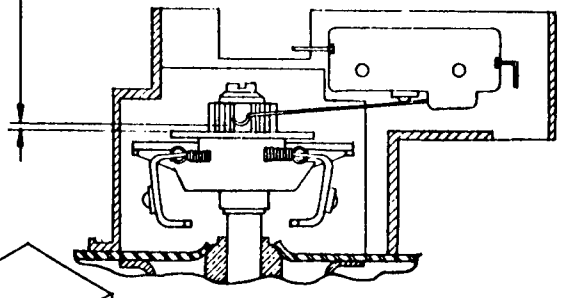

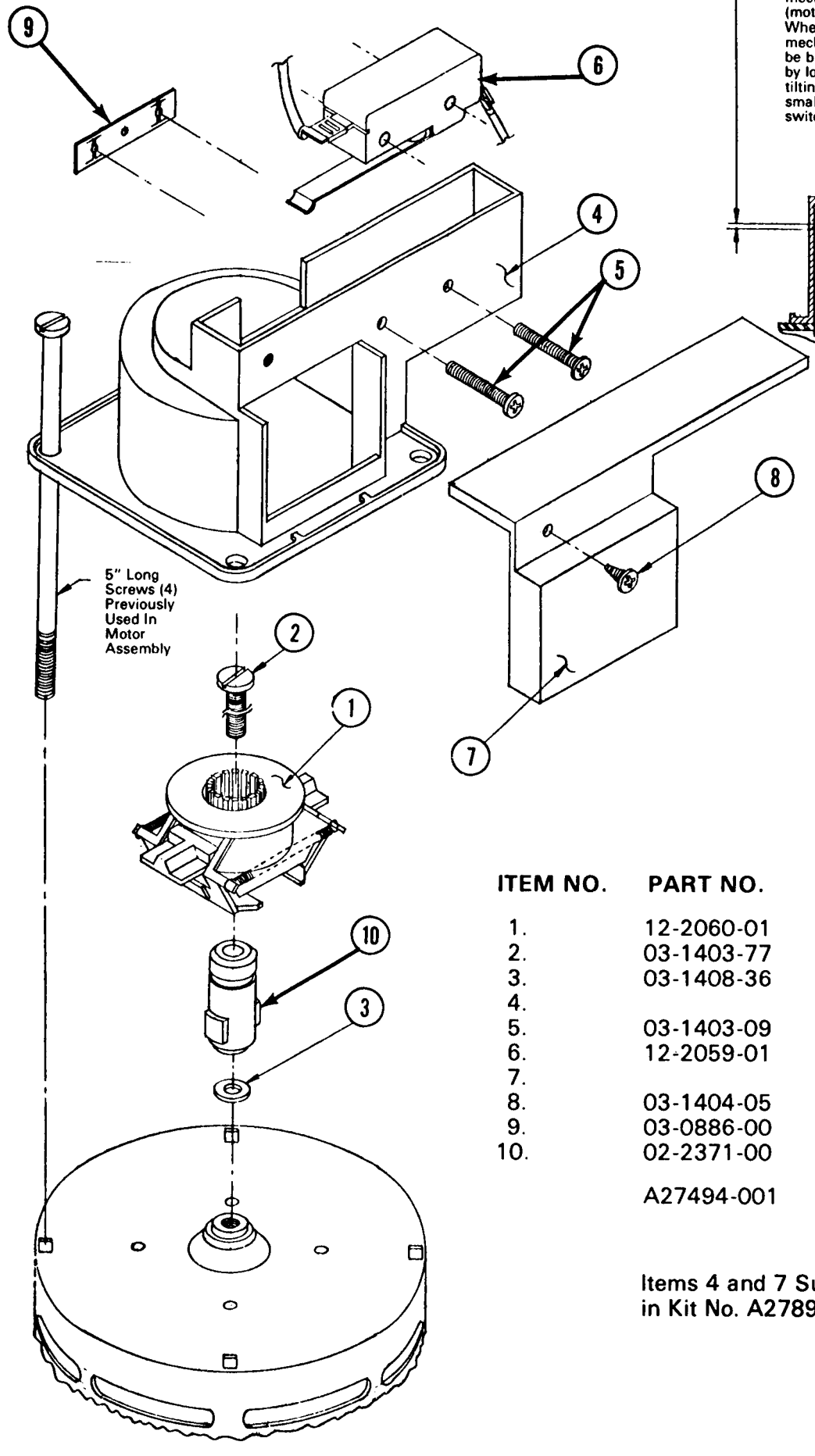

ITEM NO.	PART NO.	DESCRIPTION
1.	12-2060-01	Centrifugal Actuator
2.	03-1403-77	Screw
3.	03-1408-36	Washer
4.		Switch Mounting Case
5.	03-1403-09	Screw (2)
6.	12-2059-01	Switch
7.		Switch Case Cover
8.	03-1404-05	Screw
9.	03-0886-00	Speed Nut
10.	02-2371-00	Shaft Extension
	A27494-001	Centrifugal Switch Kit Complete w/17-1328-01 inst.

Items 4 and 7 Supplied in Kit No. A27895-001

FLAKER CHASSIS

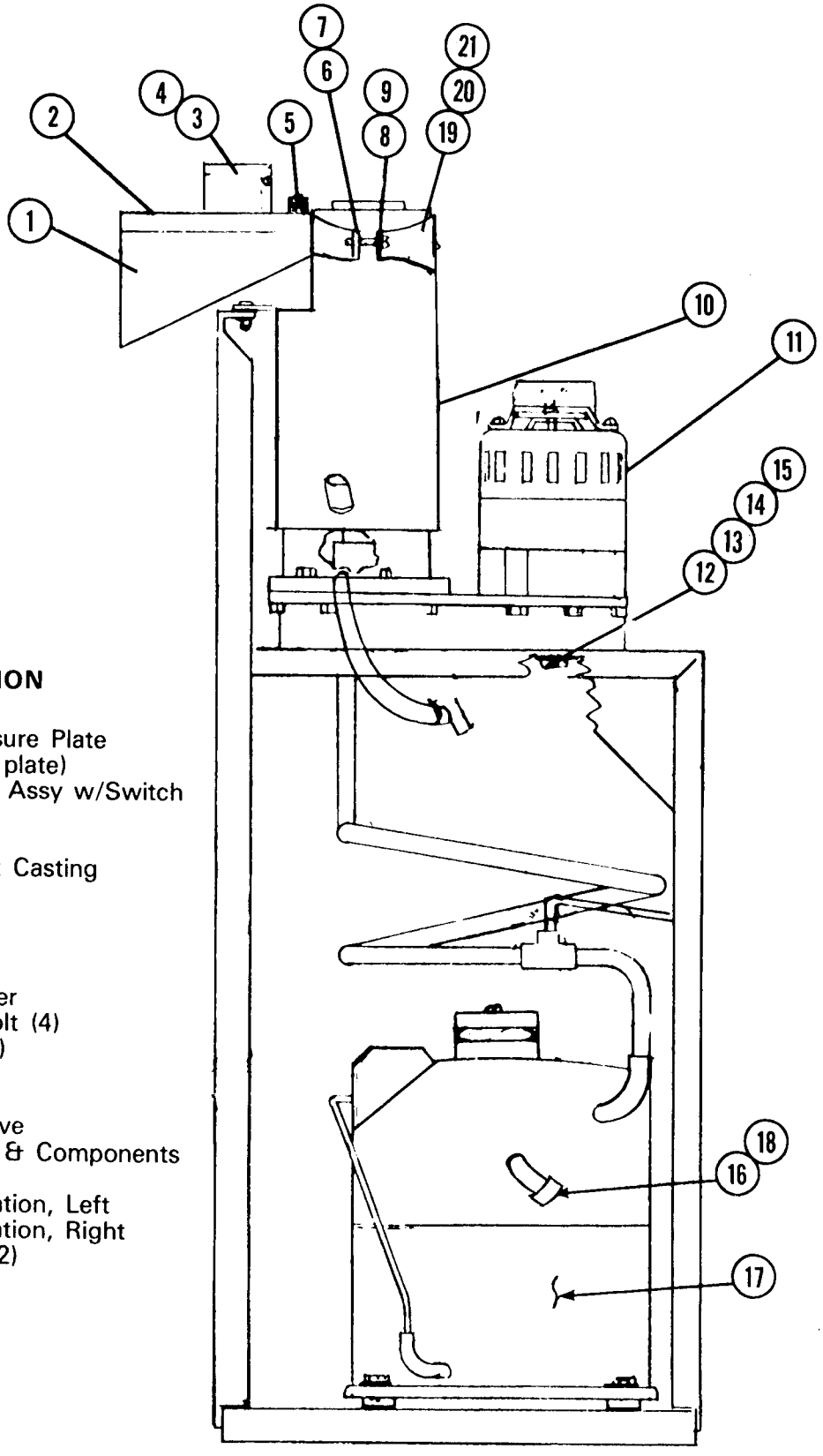

ITEM NO.	PART NO.	DESCRIPTION
1.	A16360-000	Spout Pressure Plate
2.	A16357-000	Spout (less plate)
3.	A14975-000	Switch Box Assy w/Switch
4.	12-1018-00	Switch
5.	A14256-000	Nut
6.	A14254-000	Front Spout Casting
7.	13-0679-00	"O" Ring
8.	03-1403-53	Screws
9.	03-1417-07	Washers
10.	See Page 4	Freezer
11.	See Page 3	Gear Reducer
12.	A18301-000	Shoulder Bolt (4)
13.	13-0115-00	Grommet (4)
14.	03-1407-05	Washer (4)
15.	03-1407-09	Washer (4)
16.	16-0560-00	Schader Valve
17.	See Page 5	Compressor & Components
18.	16-0563-00	Cap
19.	A15070-000	Spout Insulation, Left
20.	A15071-000	Spout Insulation, Right
21.	A08736-000	Tin Straps (2)

FLAKER CHASSIS

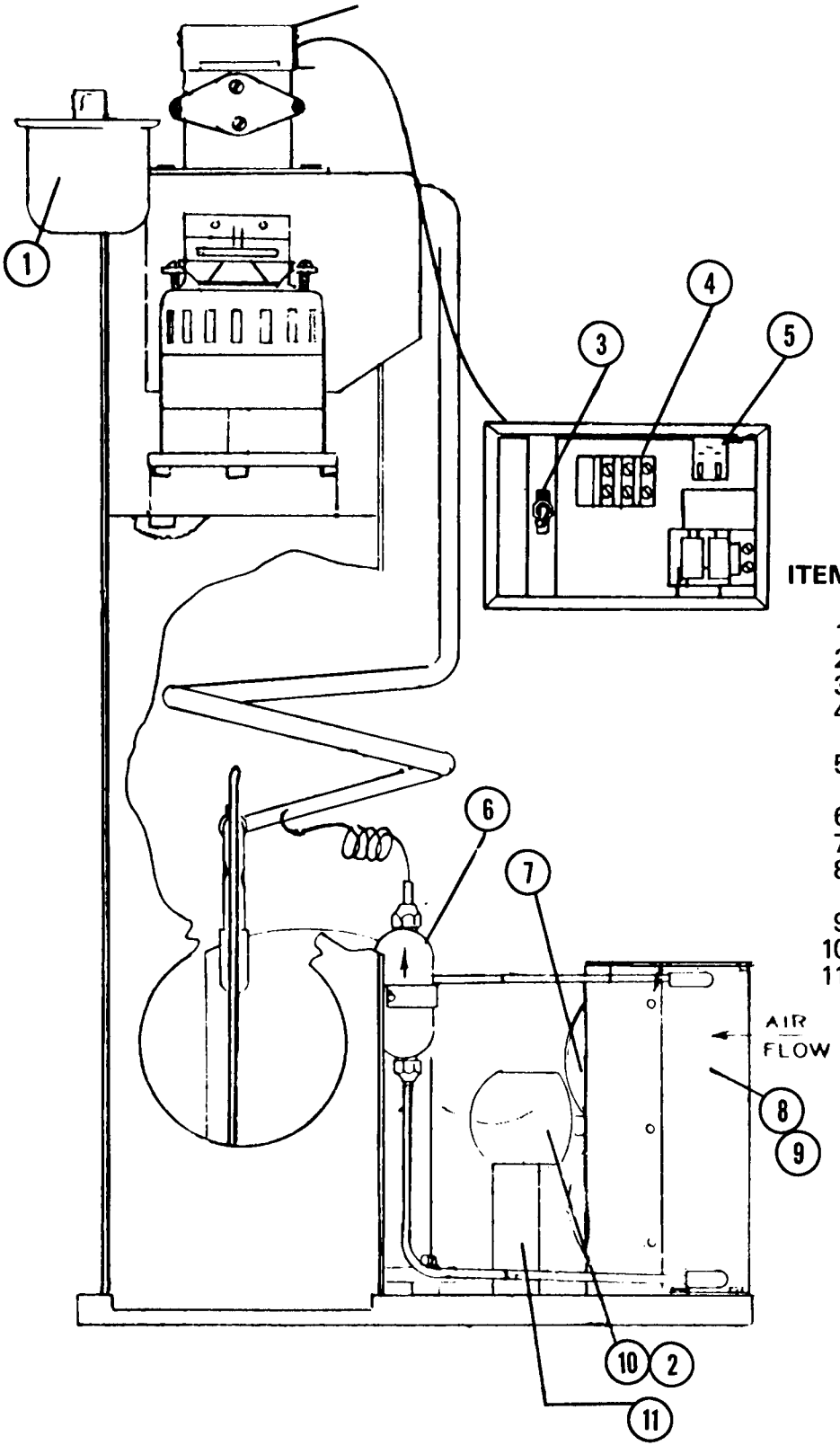

ITEM NO.	PART NO.	DESCRIPTION
1.	See Page 6 & 7	Reservoir
2.	12-1573-01	Switch
3.	12-0426-01	Terminal
4.	12-0813-04	Board Temperature
5.	11-0354-00	Control Drier
6.	02-0350-00	Fan Blade
7.	18-0231-00	Condenser
8.	A15621-001	Shroud Condenser
9.	18-0140-00	Fan Motor
10.	12-1575-01	Fan Motor
11.	18-0422-00	Mount

A25995-021
GEAR MOTOR ASSEMBLY
1/10 H.P.
115/60/1

11.5 RPM at output shaft

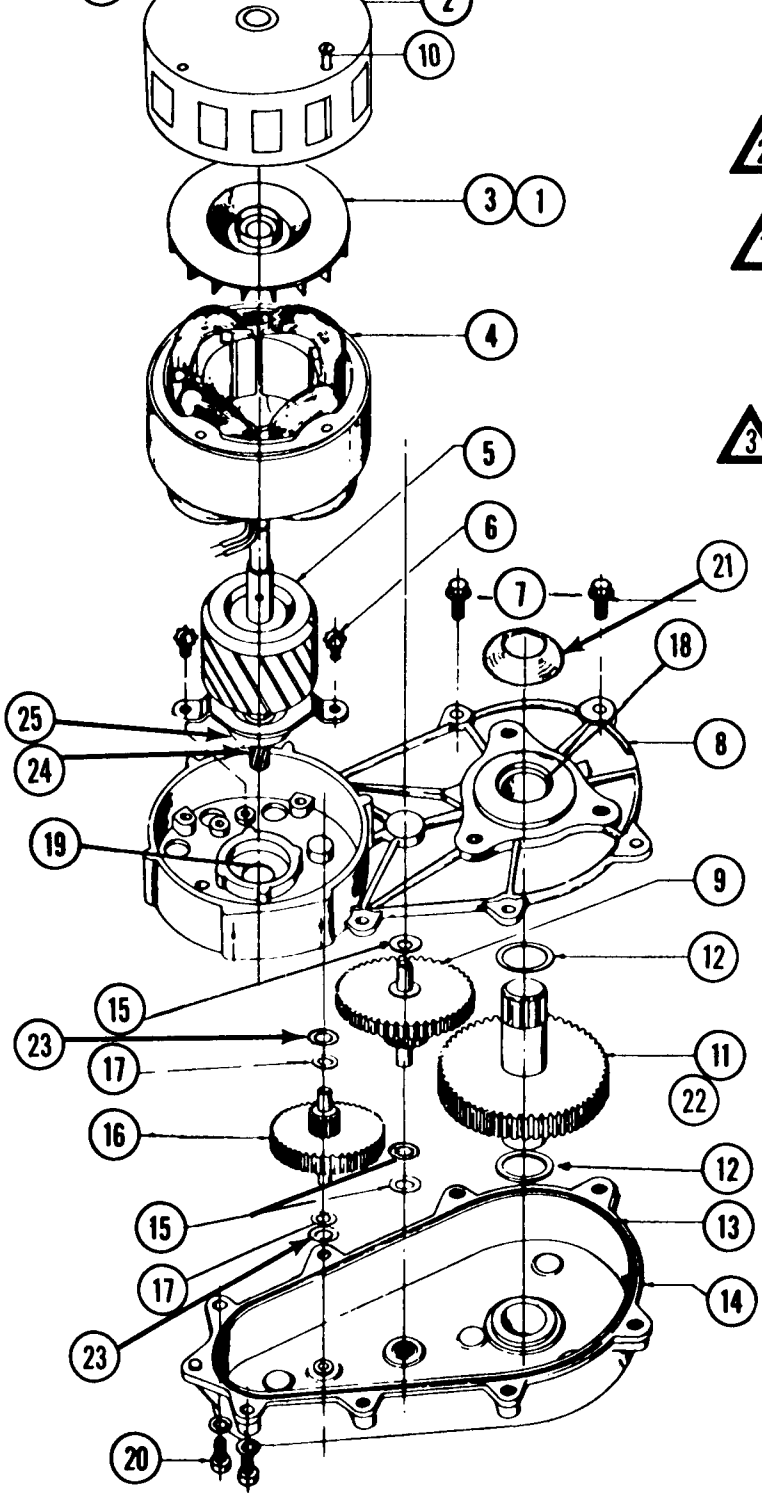

ITEM NO.	PART NO.	DESCRIPTION
1.	03-1246-00	Set Screw (2)
2.	A17047-000	Motor Housing
3.	A16915-000	Cooling Fan
4.	12-1400-01	Stator Assy.
2 5.	A26454-001	Rotor & 1st. Gear Kit
6.	03-1245-00	Screws (2)
7.	03-1251-00	Flange Screws (6)
1 8.	A16920-021	Gear Case Cover
9.	02-1521-00	Gear and Pinion
10.	03-1403-43	Motor Bolts (4)
11.	A26650-001	Gear and Output Shaft
12.	03-1408-21	Washer (2)
13.	02-1505-00	"O" Ring
3 14.	A24184-001	Gear Case Kit
15.	03-1408-06	Washer (3)
16.	02-2224-01	1st Gear and Pinion
17.	03-1408-19	Washer (2)
18.	02-1503-00	Grease Seal
19.	02-1504-00	Grease Seal
20.	03-1252-00	Screw (2)
21.	13-0709-01	Water Shed
22.	03-1475-01	Key
23.	03-1408-20	Washer (2)
24.	13-0617-04	Slinger Ring
25.	02-1501-00	Rotor Bearing

NOTE:

1. Cover comes with grease seals items 18 & 19.
2. Fiber gear (item 16 and rotor bearing (item 25) included in the rotor kit.
3. Includes items: 8, 13, 15, 17, 18, 19, 23 and gear lube.

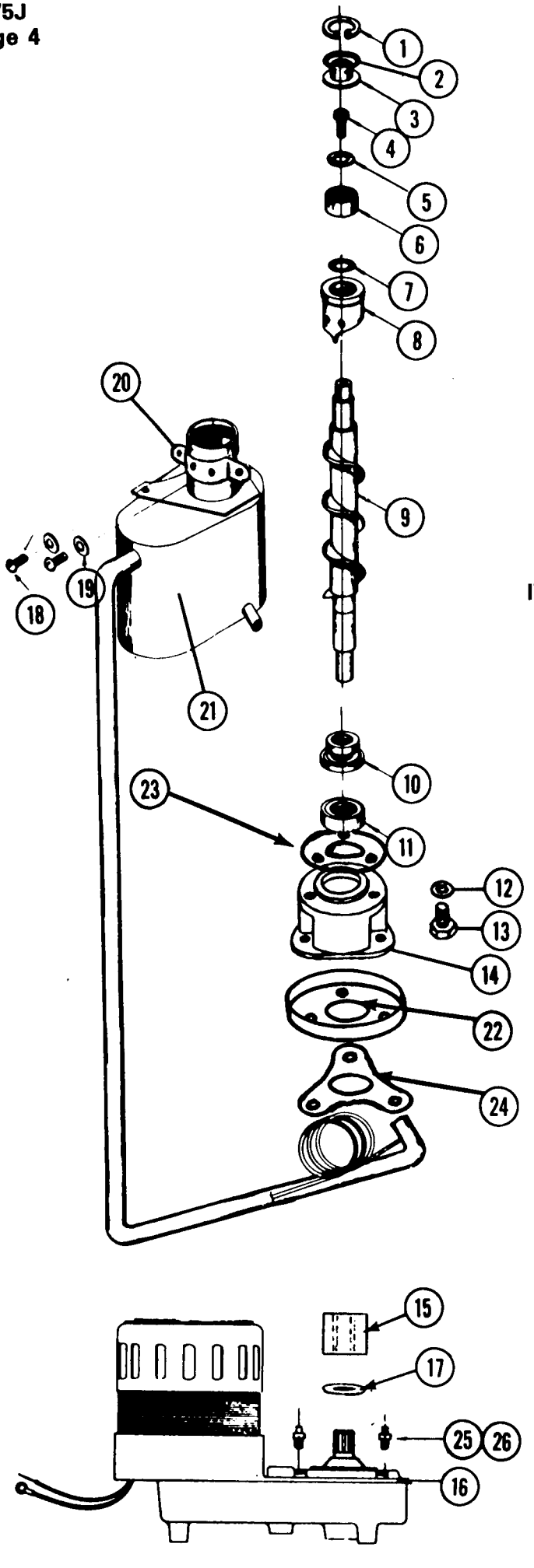

FREEZER ASSEMBLY

ITEM NO.	PART NO.	DESCRIPTION
1.	03-1558-03	Snap Ring
2.	A08162-000	Cap Hook
3.	A07701-000	Cap
4.	03-0758-00	Cap Screw
5.	A07699-000	Washer
6.	02-0547-00	Top Bearing
7.	13-0617-16	"O" Ring
8.	A26706-001	Breaker w/Bearing
9.	02-1313-00	Auger
10.	A18945-000	Water Seal
11.	02-0417-00	Lower Bearing
12.	03-1410-04	Washer(3 req'd)
13.	03-1405-42	Screw (3 req'd)
14.	08-0595-01	Adapter
15.	15-0575-01	Spline Adapter
16.	See Page 3	Gear Reducer
17.	13-0709-01	Drip Shield
18.	03-1403-48	Screw (2 req'd)
19.	03-1410-03	Washer (2 reqd)
20.	A18430-000	Spout Plate
21.	A26587-020	Worm Tube w/Suction Line
22.	A18153-000	Drip Pan
23.	03-1505-00	Gasket
24.	13-0628-00	Gasket
25.	03-1417-12	Lockwasher (3 req'd)
26.	03-1420-04	Screw (3 req'd)

COMPRESSOR ASSEMBLY
115/60/1

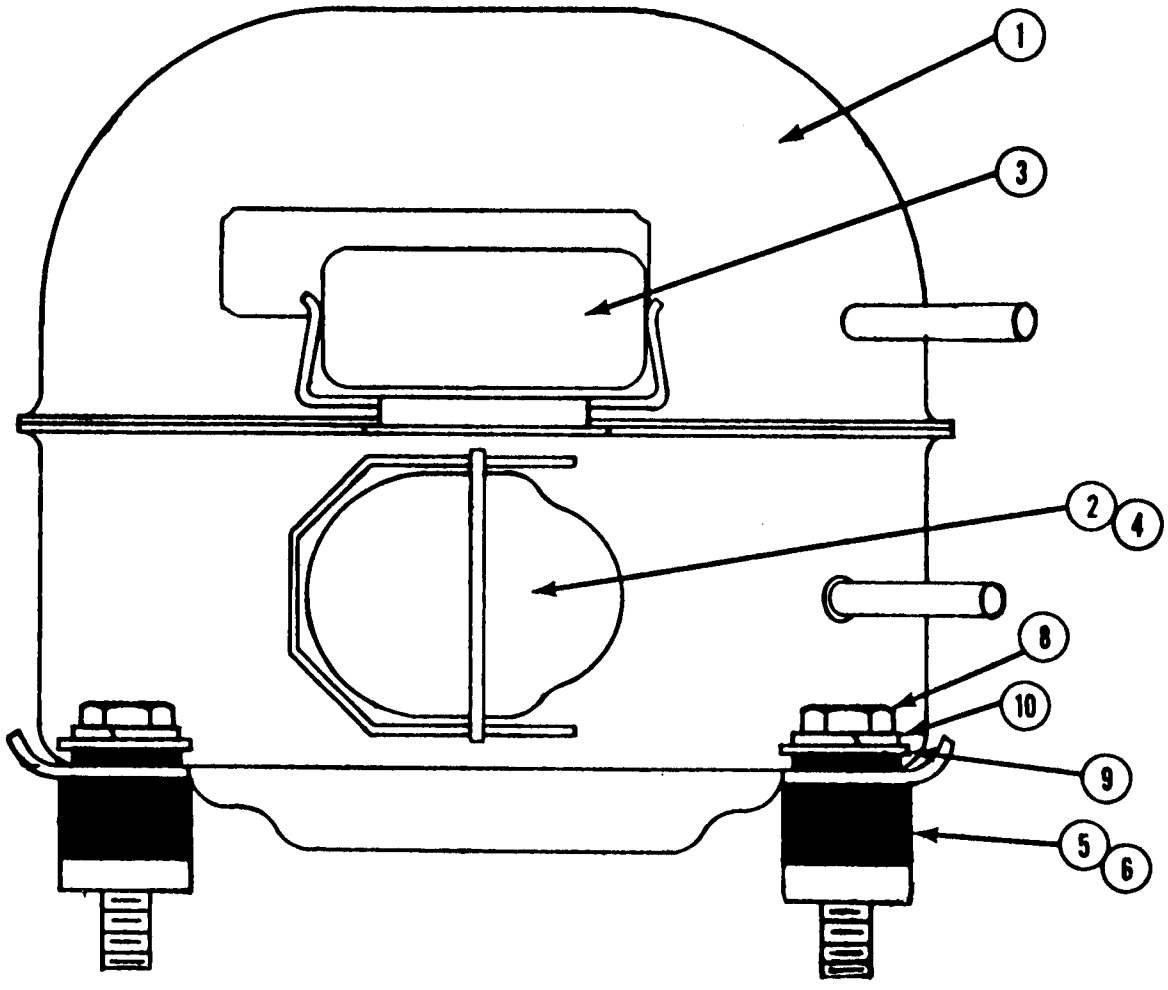

ITEM NO.	PART NO.	DESCRIPTION
1.	18-0108-01	Compressor Complete
*2.	18-0108-25	Relay Tecumseh No. 82627 Spencer No. 9660-041-172
3.	18-0108-28	Capacitor Tecumseh No. 85635-2 243-293 MFD @ 110 V.
*4.	18-0108-30	Overload Tecumseh No. 83426
5.	18-0108-40	Mounting Grommet
6.	18-0108-41	Mounting Sleeve
7.	A19029-000	Mounting Spacer
8.	03-1405-40	Screw
9.	03-1408-29	Flat Washer
10.	03-1410-04	Lock Washer

*Parts Not Shown

Original SF75 "J" models all used Tecumseh compressor model Cat. #43, Scotsman part No. 18-0108-01 thru serial No. 8Q234360.

1 No longer available from Tecumseh. For replacement order compressor 18-4700-01 & conversion mounting kit 18-0108-50.

2 Once 18-4700-01 has been used new components should be used: Relay 18-4700-30, overload 18-4700-29 & capacitor not req'd.

RESERVOIR ASSEMBLY

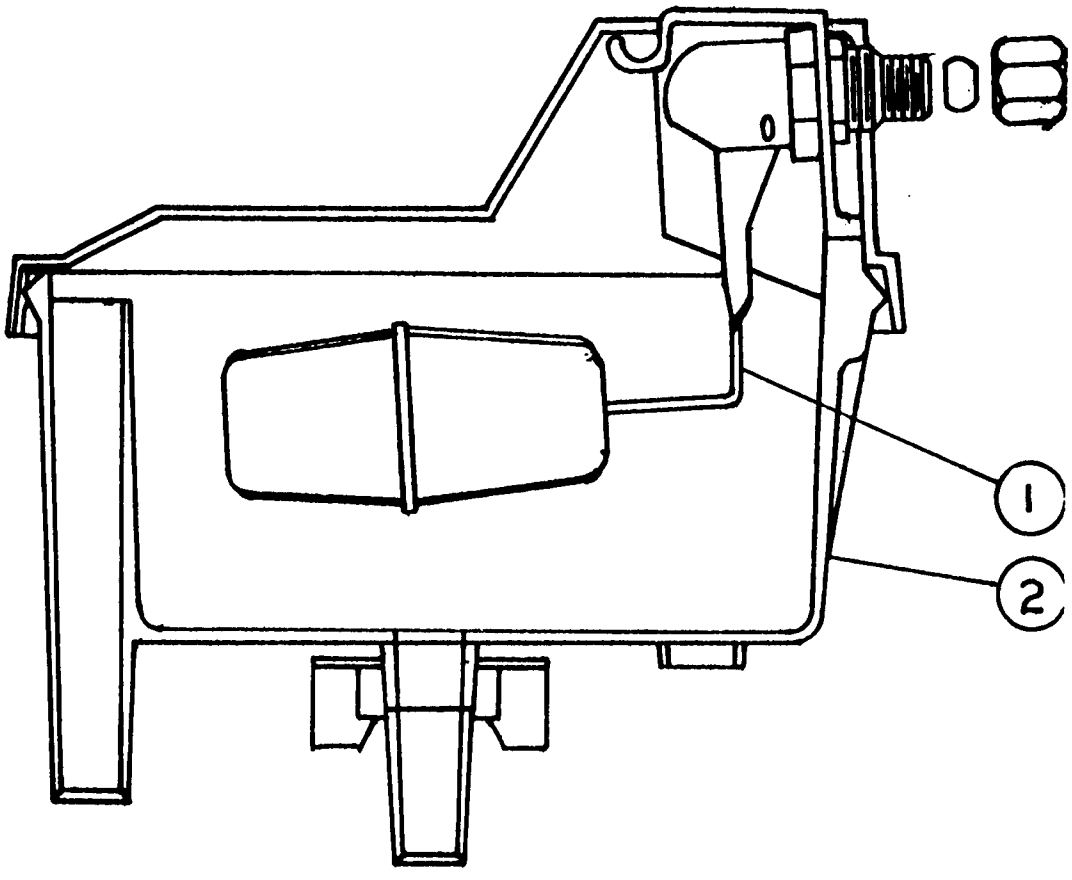

ITEM NO.	PART NO.	DESCRIPTION
1.	02-2217-02	Valve Assy.
2.	02-2217-01	Reservoir Complete

RESERVOIR ASSEMBLY

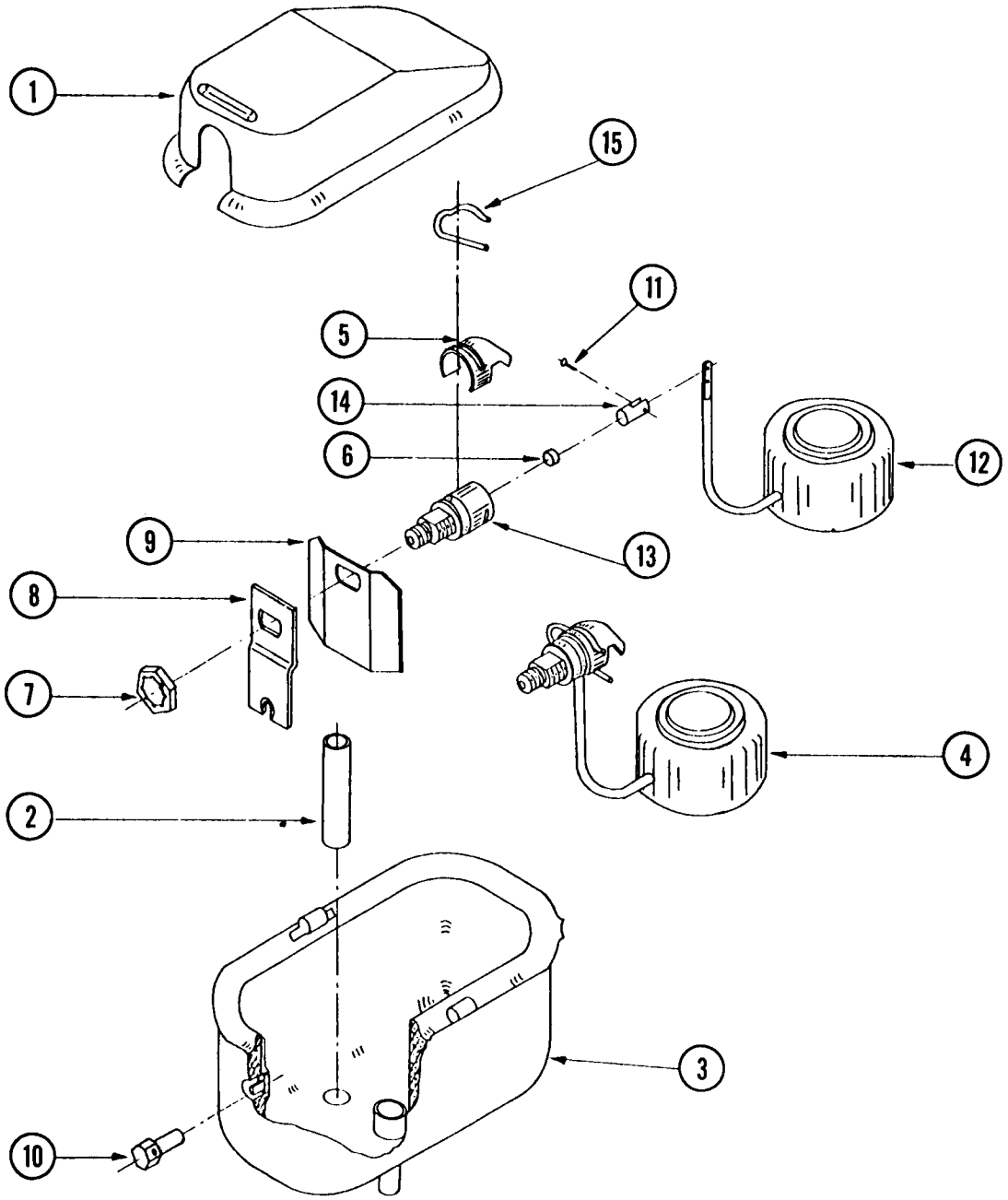

RESERVOIR

ITEM NO.	PART NO.	DESCRIPTION
1.	A16012-000	Reservoir Cover
2.	S06715-000	Stand Pipe
3.	A08351-000	Reservoir Complete Less Item No: 1 & 2
4.	S08138-000	Valve Complete Includes Items 5, 6, 11, 12, 13, 14 & 15
5.	02-1320-00	Water Deflector
6.	S06947-000	Valve Seat
7.	03-1394-00	Pal Nut
8.	A12869-000	Bracket
9.	A18418-001	Water Deflector
10.	A08055-000	Bracket Nut
11.	03-1001-00	Rivet
*12.		Float
*13.		Inlet Valve
*14.		Valve Seat Holder
15.	02-1259-00	Valve Pin

NOTE: Use of this reservior was discontinued about mid 1975. Current units use the reservoir on page 6.

***Use Item #4**

CASE AND HOOD ASSEMBLY

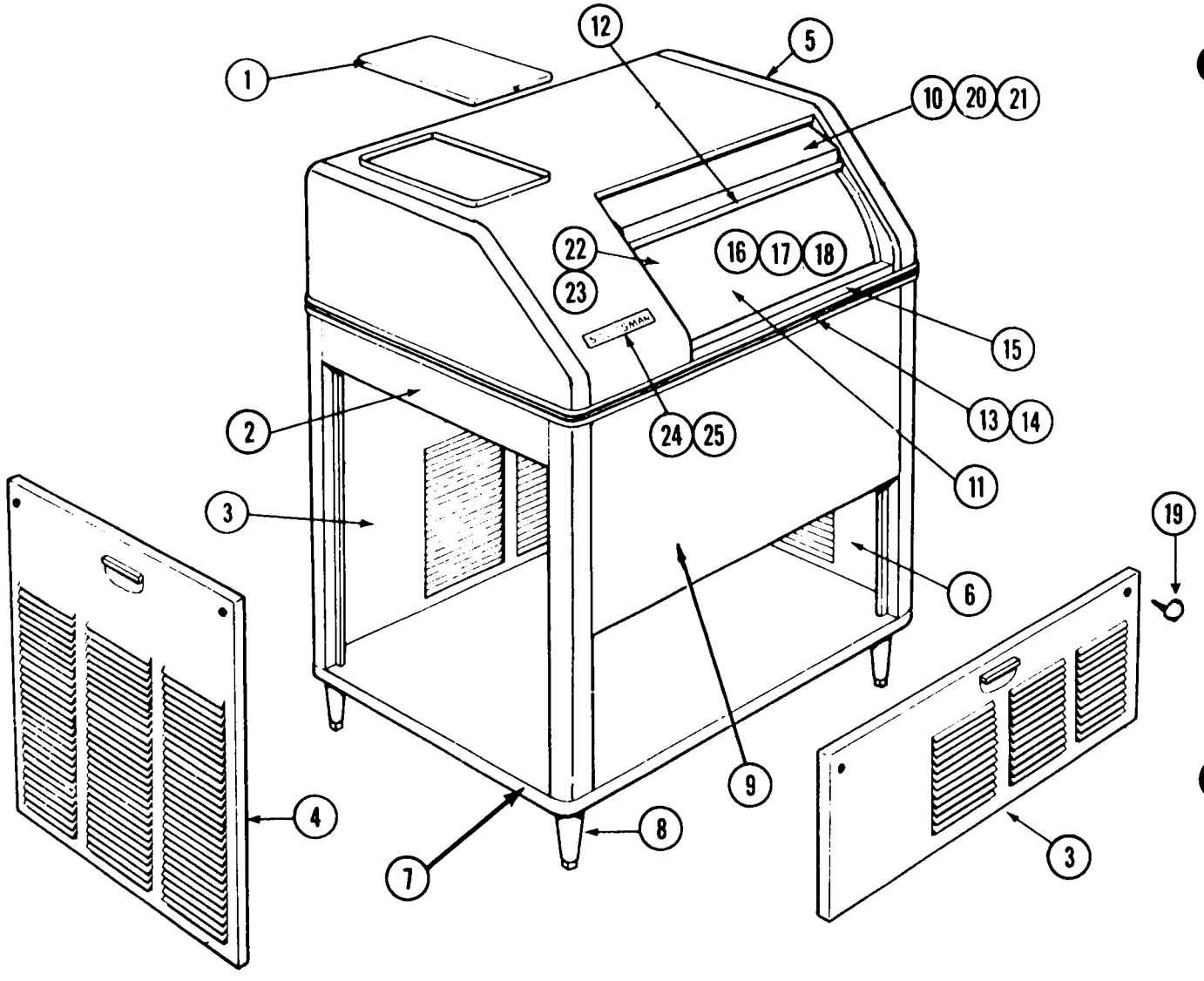

Common To all Painted & S.S.

ITEM NO.	Painted PART NO.	S.S. PART NO.	DESCRIPTION
1.	A06767-008	A06767-00S	Top Door Assy.
2.	A07714-008	A07714-00S	Left Panel
3.	A16563-008	A16563-002	Door
4.	S09405-008	S09405-00S	Left Door
5.	A20939-008	A20939-001	Hood Assy.
6.	A16561-008	A16561-002	Right Door
7.	Not Req'd.	A08902-004	Moulding Strip
8.	KLP2E	KLP2S	Legs Optional (4 in set)
9.	A18291-008	A18291-001	Case Assy.
10.	02-1735-01	A15559-000	Door Assy.
11.	A18871-000		Storage Bin Assy.
*12.	02-1616-00		Door Catch
13.	A06510-000		Front Moulding
14.	15-0324-00		Insert (order per ft.)
15.	A16208-000		Door Track Assy.
*16.	02-1741-00		Drain Fitting, Top
*17.	02-1742-00		Drain Fitting, Bottom
*18.	13-0617-11		Drain "O" Ring
19.	03-1419-09		Screws, Panel
*20.	03-0640-00		Door Glides (S.S. Door only)
*21.	03-1195-00		Door Glides, Hood
22.	02-1415-00		Bulb Holder
23.	13-0557-00		Grommets
24.	15-0156-00		Emblem
25.	03-0271-00		Speed Nuts (2 req'd)
26.	02-1736-00		Lanyard, Door Stop
*27.	16-0162-00		Strainer

CENTRIFUGAL SWITCH

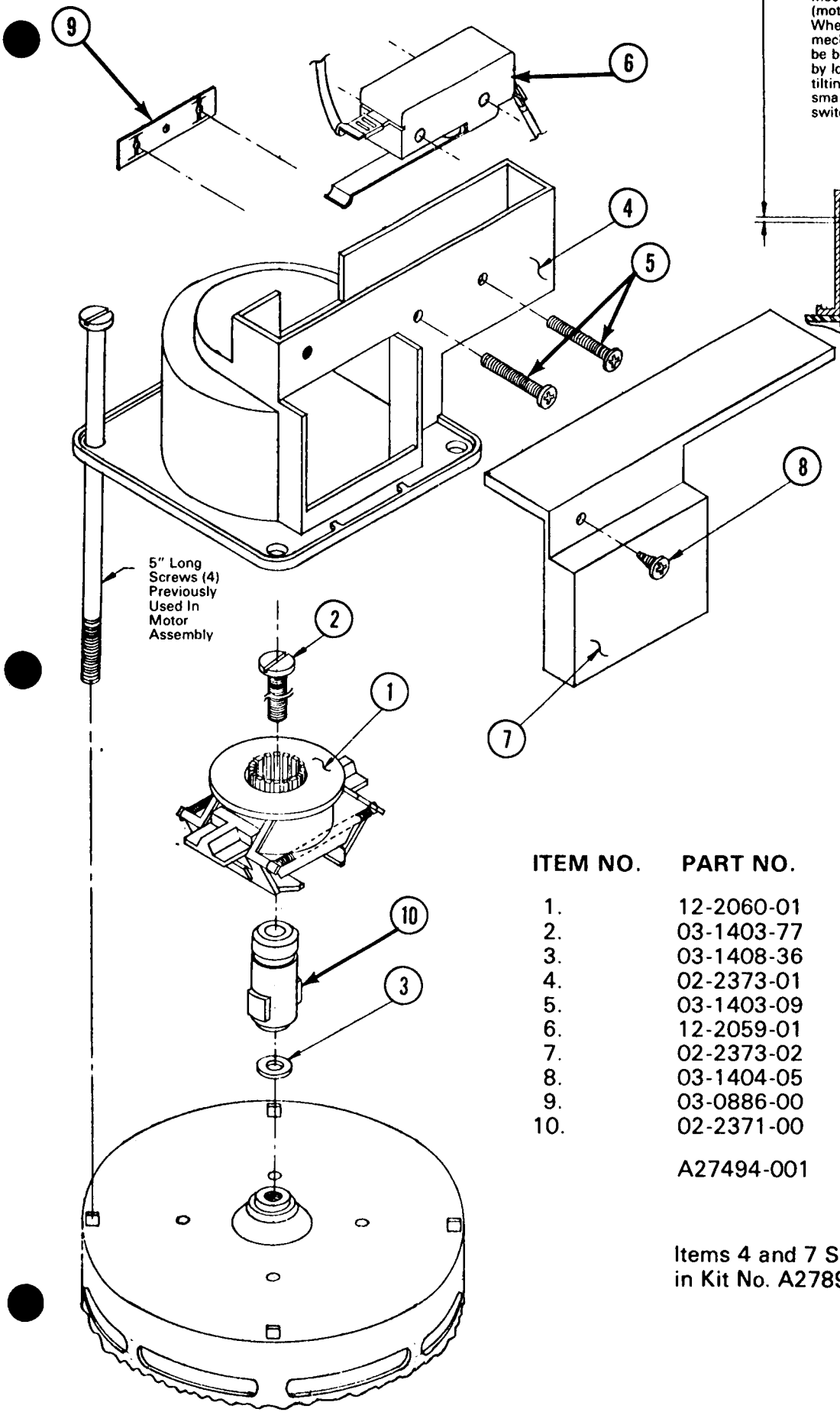

SWITCH ADJUSTMENT

.03 minimum gap between switch lever and mechanism with centrifugal mechanism actuated (motor running). Switch circuit should be closed When motor is stopped and centrifugal mechanism deactivates, the switch circuit should be broken. There should be enough adjustment by loosening the switch mounting screws and tilting switch in direction required. If this fails, a small amount of bending can be done on the switch lever.

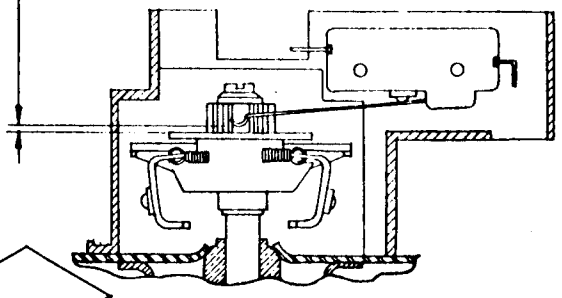

ITEM NO.	PART NO.	DESCRIPTION
1.	12-2060-01	Centrifugal Actuator
2.	03-1403-77	Screw
3.	03-1408-36	Washer
4.	02-2373-01	Switch Mounting Case
5.	03-1403-09	Screw (2)
6.	12-2059-01	Switch
7.	02-2373-02	Switch Case Cover
8.	03-1404-05	Screw
9.	03-0886-00	Speed Nut
10.	02-2371-00	Shaft Extension
	A27494-001	Centrifugal Switch Kit Complete w/17-1328-01 inst.

Items 4 and 7 Supplied in Kit No. A27895-001

CHASSIS

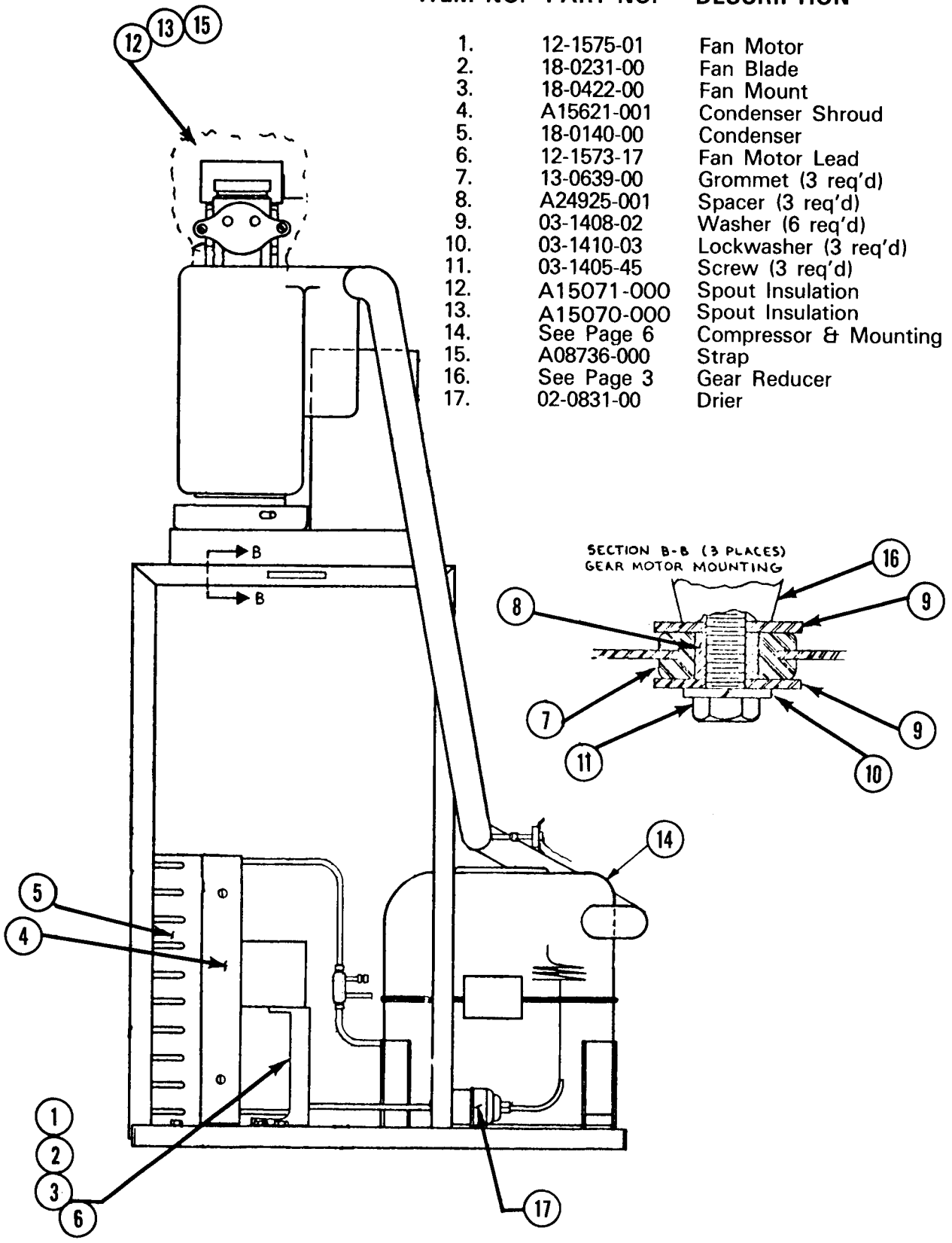

ITEM NO.	PART NO.	DESCRIPTION
1.	12-1575-01	Fan Motor
2.	18-0231-00	Fan Blade
3.	18-0422-00	Fan Mount
4.	A15621-001	Condenser Shroud
5.	18-0140-00	Condenser
6.	12-1573-17	Fan Motor Lead
7.	13-0639-00	Grommet (3 req'd)
8.	A24925-001	Spacer (3 req'd)
9.	03-1408-02	Washer (6 req'd)
10.	03-1410-03	Lockwasher (3 req'd)
11.	03-1405-45	Screw (3 req'd)
12.	A15071-000	Spout Insulation
13.	A15070-000	Spout Insulation
14.	See Page 6	Compressor & Mounting Hardware
15.	A08736-000	Strap
16.	See Page 3	Gear Reducer
17.	02-0831-00	Drier

CHASSIS

ITEM NO.	PART NO.	DESCRIPTION
1.	12-1575-01	Fan Motor
2.	18-0231-00	Fan Blade
3.	18-0422-00	Fan Mount
4.	A15621-001	Condenser Shroud
5.	18-0140-00	Condenser
6.	12-1573-17	Fan Motor Lead
7.	13-0639-00	Grommet (3 req'd)
8.	A24925-001	Spacer (3 req'd)
9.	03-1408-02	Washer (6 req'd)
10.	03-1410-03	Lockwasher (3 req'd)
11.	03-1405-45	Screw (3 req'd)
12.	A15071-000	Spout Insulation
13.	A15070-000	Spout Insulation
14.	See Page 6	Compressor & Mounting Hardware
15.	A08736-000	Strap
16.	See Page 3	Gear Reducer
17.	02-0831-00	Drier

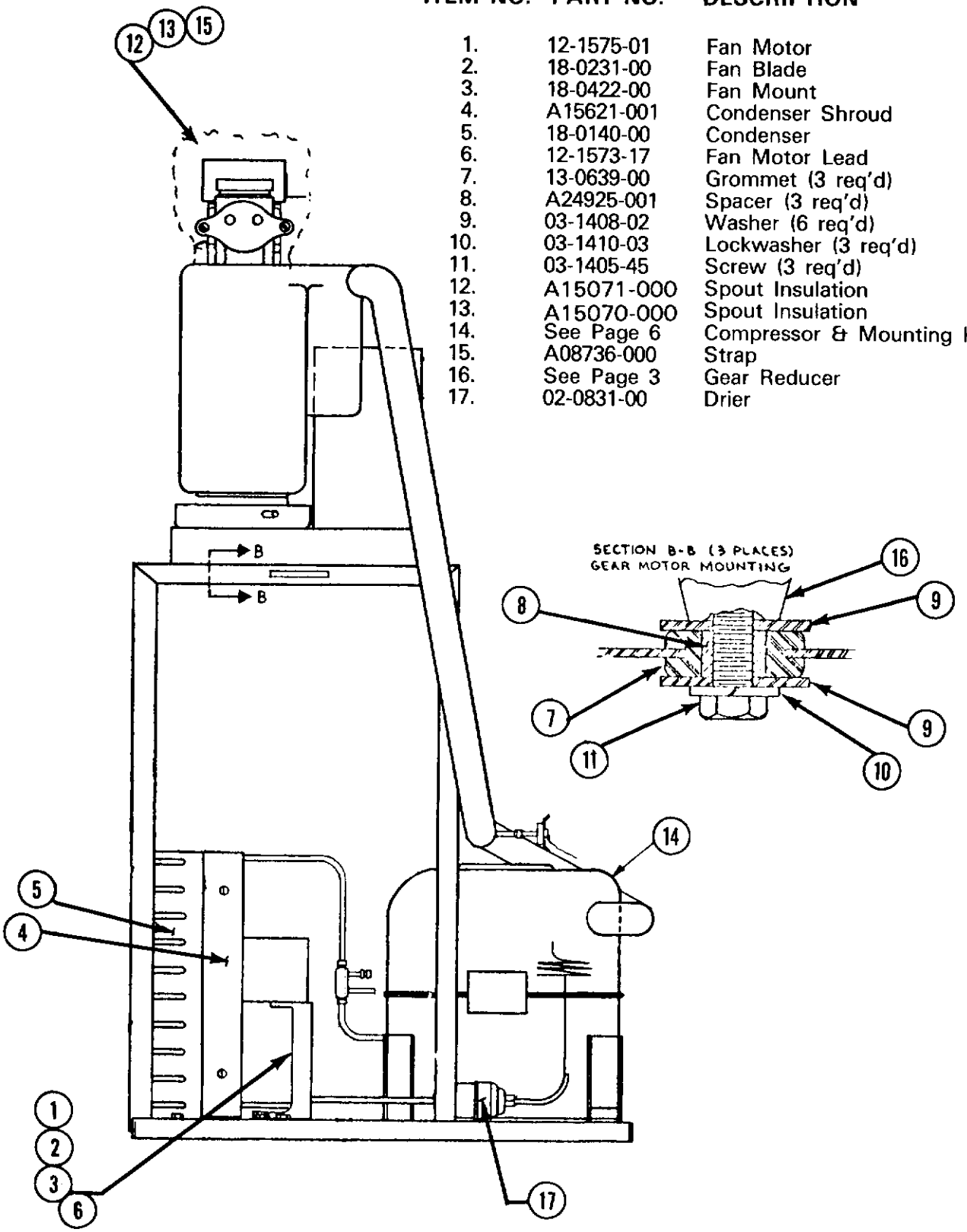

CHASSIS

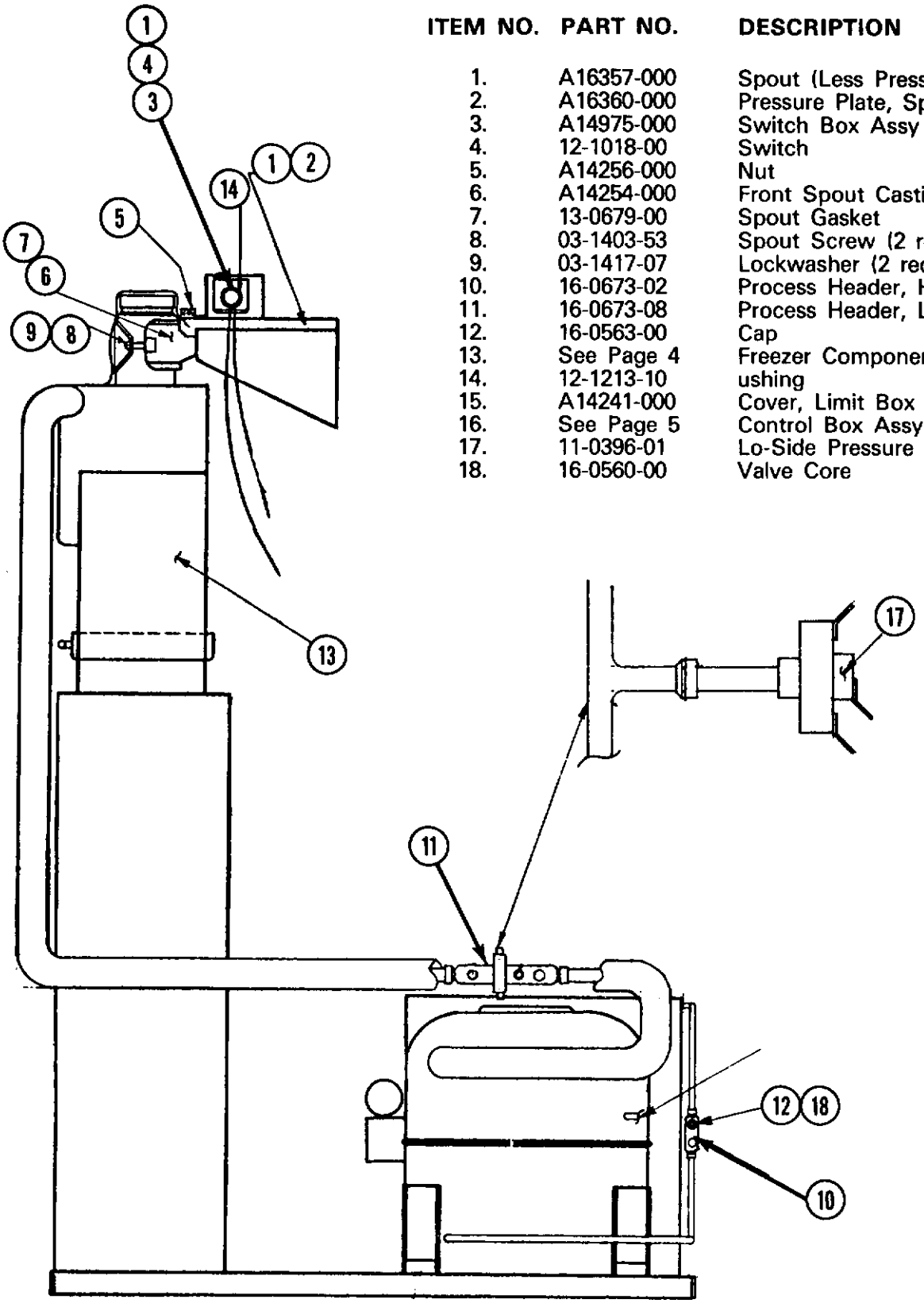

ITEM NO.	PART NO.	DESCRIPTION
1.	A16357-000	Spout (Less Pressure Plate)
2.	A16360-000	Pressure Plate, Spout
3.	A14975-000	Switch Box Assy w/Switch
4.	12-1018-00	Switch
5.	A14256-000	Nut
6.	A14254-000	Front Spout Casting
7.	13-0679-00	Spout Gasket
8.	03-1403-53	Spout Screw (2 req'd)
9.	03-1417-07	Lockwasher (2 req'd)
10.	16-0673-02	Process Header, Hi Pressure
11.	16-0673-08	Process Header, Lo Pressure
12.	16-0563-00	Cap
13.	See Page 4	Freezer Components
14.	12-1213-10	ushing
15.	A14241-000	Cover, Limit Box
16.	See Page 5	Control Box Assy.
17.	11-0396-01	Lo-Side Pressure Switch
18.	16-0560-00	Valve Core

A25995-021
GEAR MOTOR ASSEMBLY
1/10 H.P.
115/60/1

11.5 RPM at output shaft

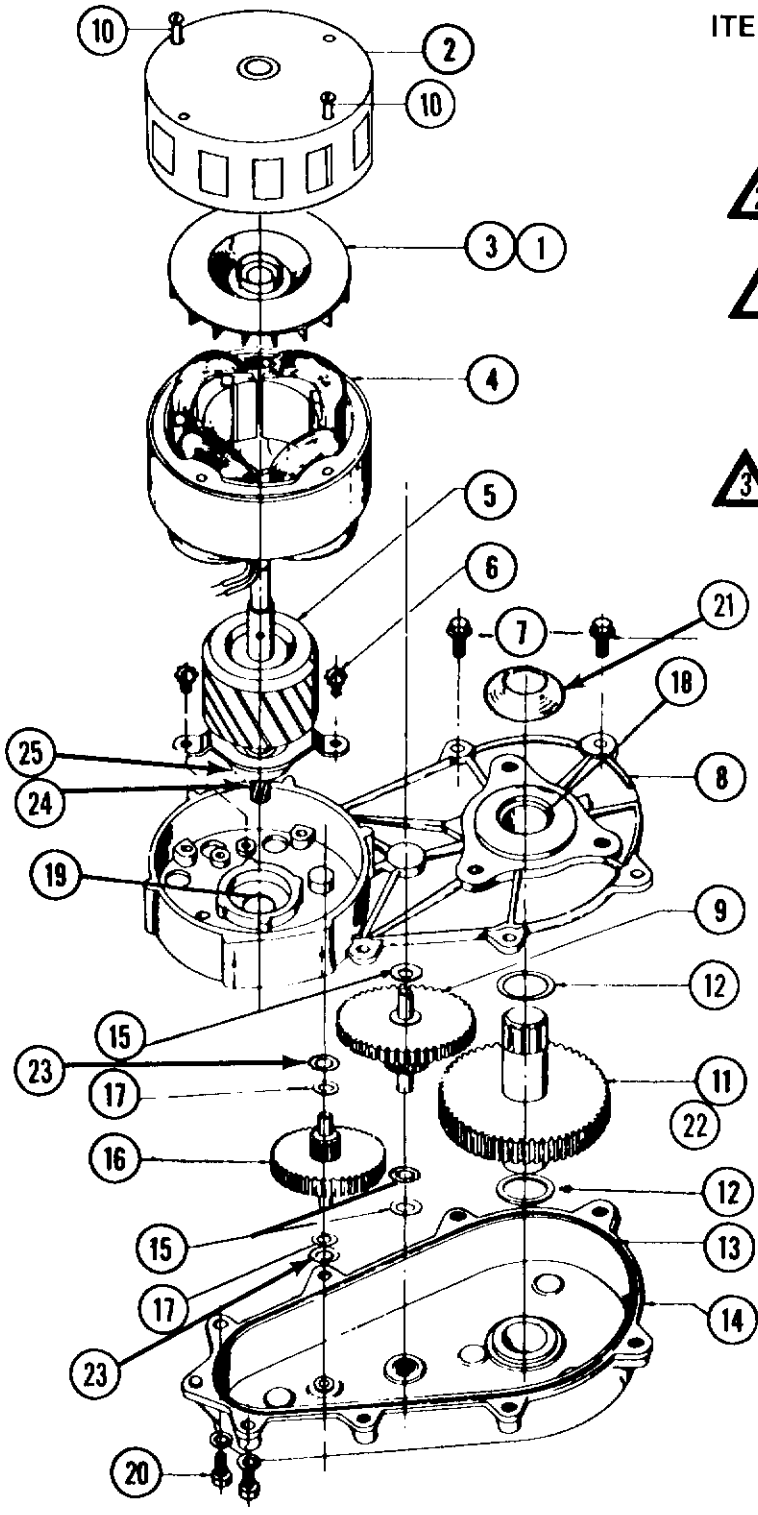

ITEM NO.	PART NO.	DESCRIPTION
1.	03-1246-00	Set Screw (2)
2.	A17047-000	Motor Housing
3.	A16915-000	Cooling Fan
▲2 4.	12-1400-01	Stator Assy.
5.	A26454-001	Rotor & 1st. Gear Kit
6.	03-1245-00	Screws (2)
7.	03-1251-00	Flange Screws (6)
▲1 8.	A16920-021	Gear Case Cover
9.	02-1521-00	Gear and Pinion
10.	03-1403-43	Motor Bolts (4)
11.	A26650-001	Gear and Output Shaft
12.	03-1408-21	Washer (2)
▲3 13.	02-1505-00	"O" Ring
14.	A24184-001	Gear Case Kit
15.	03-1408-06	Washer (3)
16.	02-2224-01	1st Gear and Pinion
17.	03-1408-19	Washer (2)
18.	02-1503-00	Grease Seal
19.	02-1504-00	Grease Seal
20.	03-1252-00	Screw (2)
21.	13-0709-01	Water Shed
22.	03-1475-01	Key
23.	03-1408-20	Washer (2)
24.	13-0617-04	Slinger Ring
25.	02-1501-00	Rotor Bearing

NOTE:

▲1 Cover comes with grease seals items 18 & 19.

▲2 Fiber gear (item 16 and rotor bearing (item 25) included in the rotor kit.

▲3 Includes items: 8, 13, 15, 17, 18, 19, 23 and gear lube.

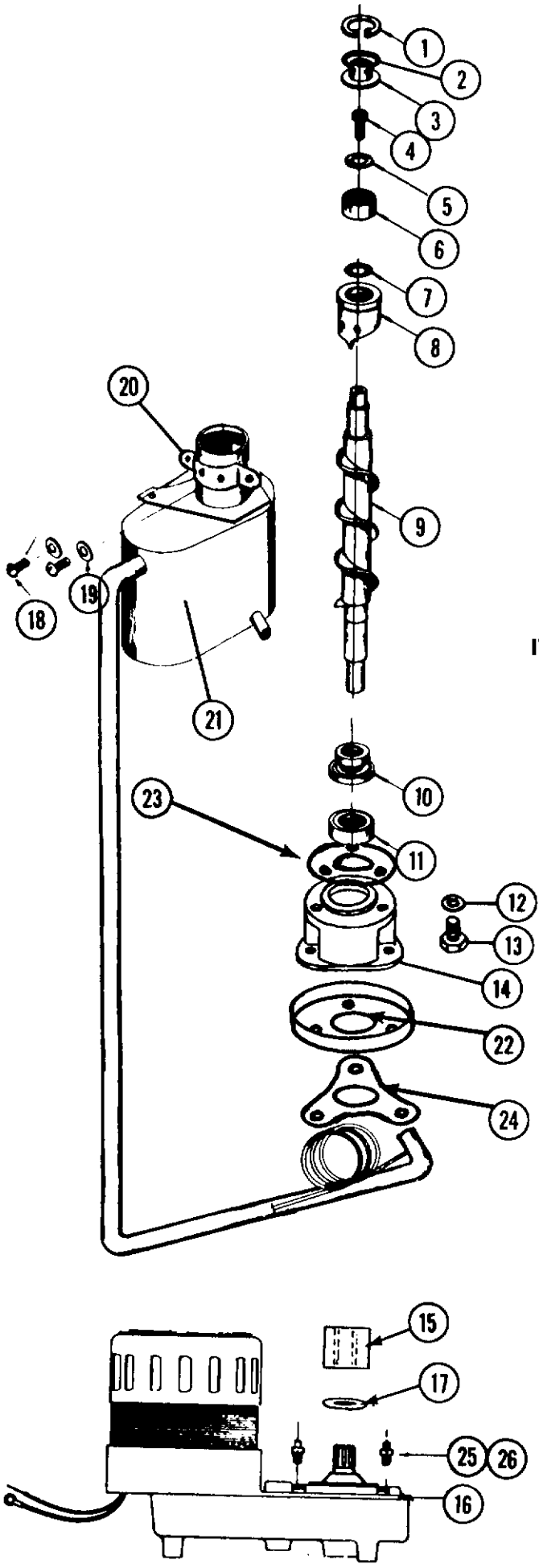

FREEZER ASSEMBLY

ITEM NO.	PART NO.	DESCRIPTION
1.	03-1558-03	Snap Ring
2.	A08162-000	Cap Hook
3.	A07701-000	Cap
4.	03-0758-00	Cap Screw
5.	A07699-000	Washer
6.	02-0547-00	top Bearing
7.	13-0617-16	"O" Ring
8.	A26706-001	Breaker w/Bearing
9.	02-1313-00	Auger
10.	A18945-000	Water Seal
11.	02-0417-00	Lower Bearing
12.	03-1410-04	Washer (3 req'd)
13.	03-1405-42	Screw (3 req'd)
14.	08-0595-01	Adapter
15.	15-0575-01	Apline Adapter
16.	See Page 3	Gear Reducer
17.	13-0709-01	Drip Shield
18.	03-1403-48	Screw (2 req'd)
19.	03-1410-03	Washer (2 req'd)
20.	A18430-000	Spout Plate
21.	A26587-020	Worm Tube w/Suction Line
22.	A18153-000	Drip Pan
23.	03-1505-00	Gasket
24.	13-0628-00	Gasket
25.	03-1417-12	Lockwasher (3 req'd)
26.	03-1420-04	Screw (3 req'd)

CONTROL BOX ASSY.

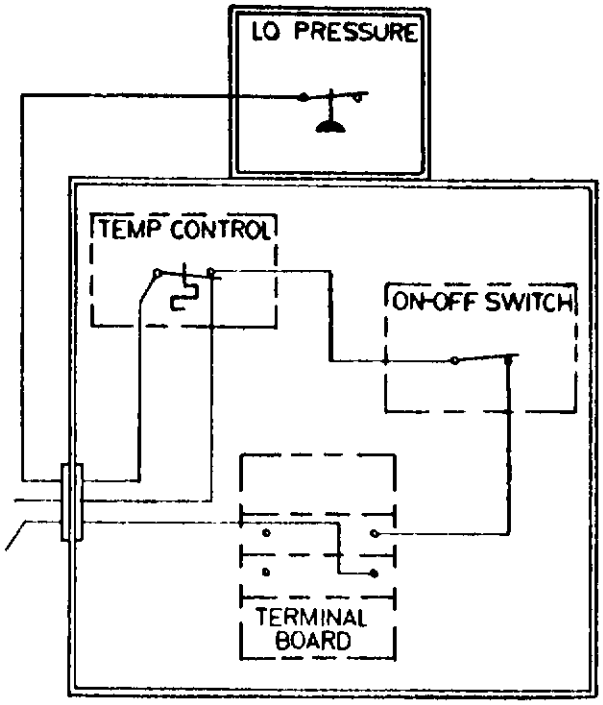

ITEM NO.	PART NO.	DESCRIPTION
1.	11-0358-01	Lo-Pressure Control
2.	11-0354-00	Temp. Control
3.	03-1403-14	Screw (2)
4.	12-0813-04	Terminal Board
5.	03-1403-31	Screw
6.	03-1421-07	Nut, Speed
7.	12-0426-01	Switch
8.	12-1213-10	Bushing
9.	03-1403-02	Screw (2)

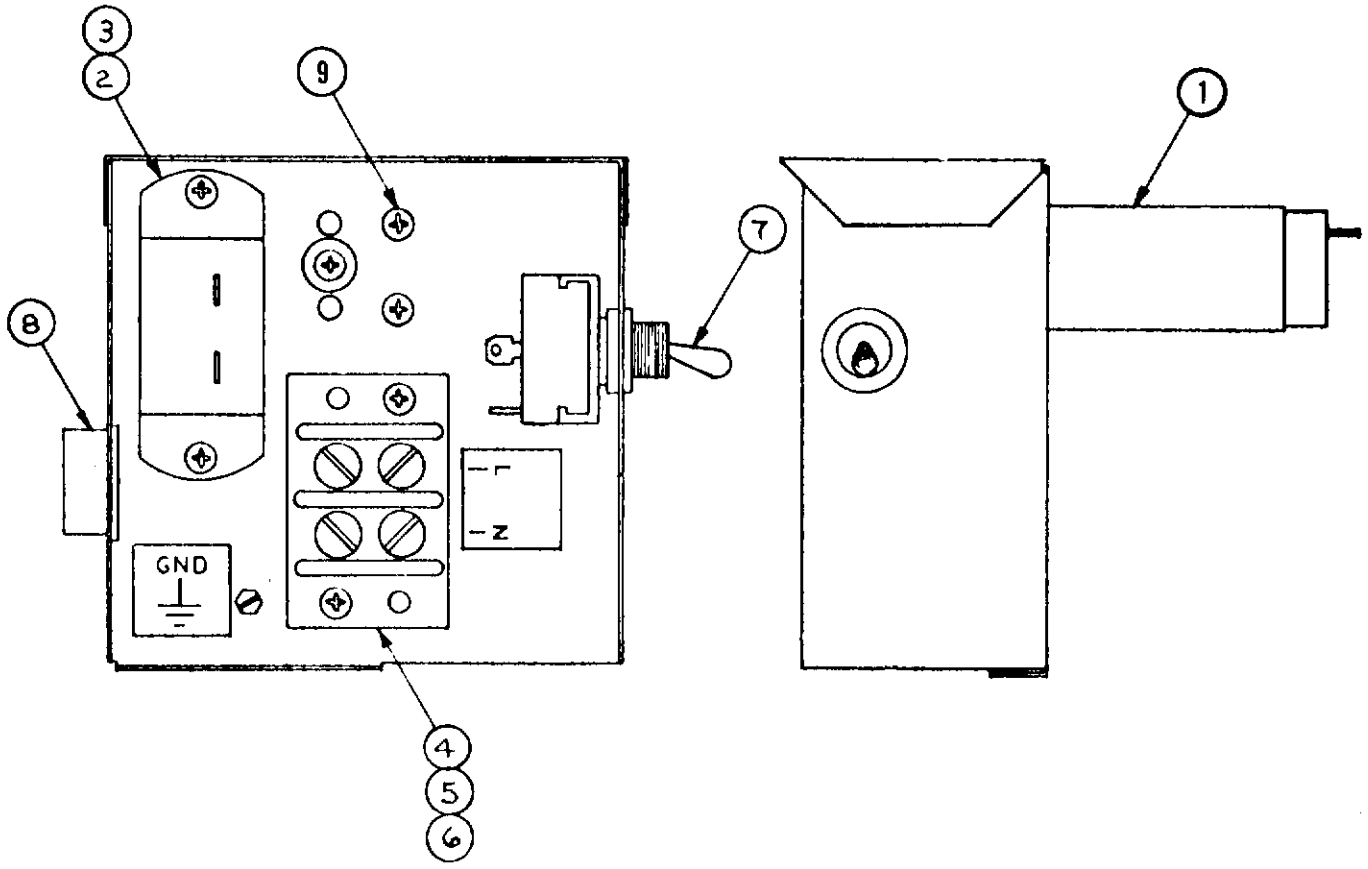

COMPRESSOR ASSEMBLY
115/60/1

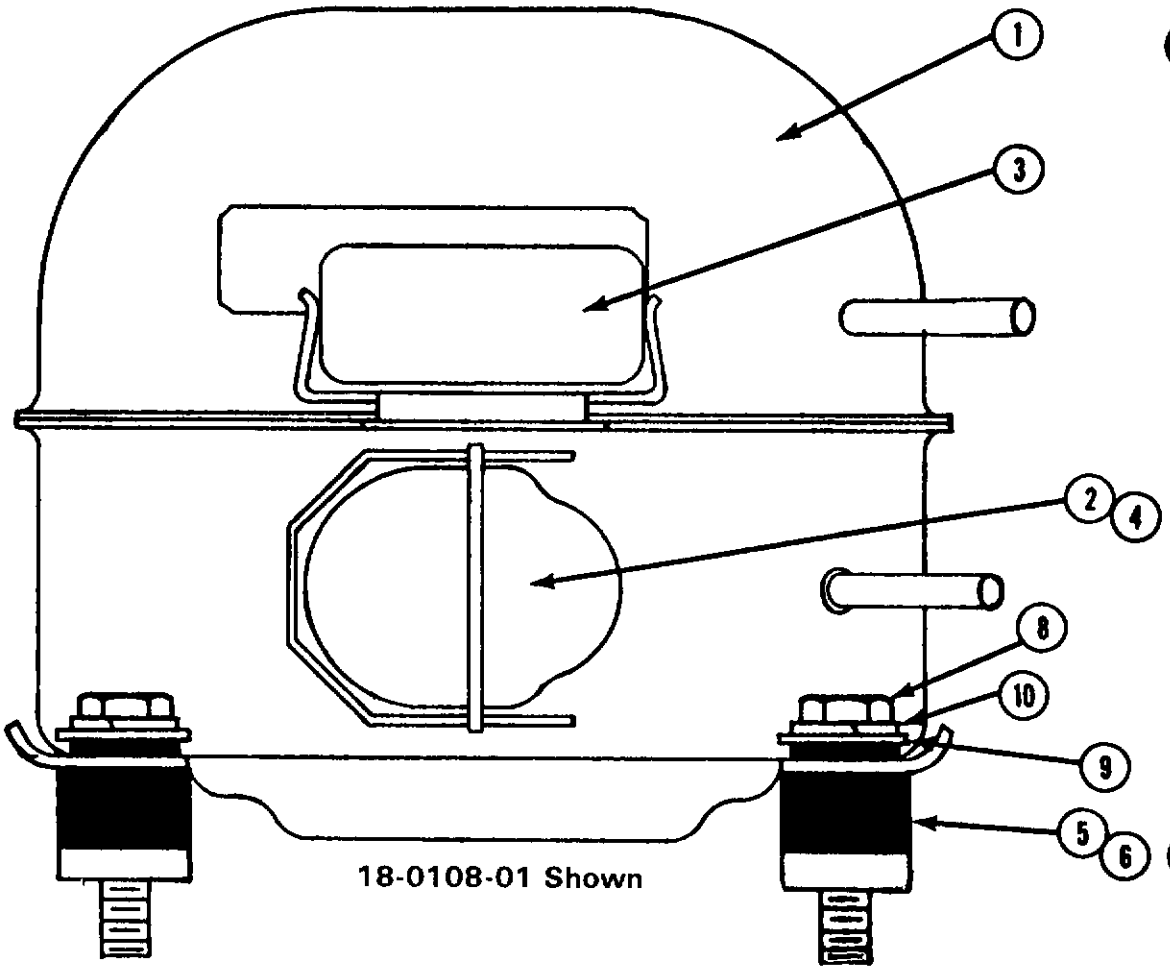

18-0108-01 Shown

ITEM NO.	(Tecumseh) PART NO.	(Copeland) PART NO.	DESCRIPTION
1.	18-0108-01	18-4400-01	Compressor
*2.	18-0108-25	18-4400-42	Relay
3.	18-0108-28	18-4100-43	Start Capacitor
*4.	18-0108-30	18-4400-41	Overload
5.	18-0108-40	18-2200-28	Mounting Grommet
6.	18-0108-41	18-2200-27	Mounting Sleeve
7.	A19029-000		Mounting Spacer
8.	03-1405-40		Screw
9.	03-1408-29		Flat Wahser
10.	03-1410-04		Lockwasher

*Parts Not Shown

(1) **SF75 "A"** In May 1976, starting with serial number 11Q253313 a Copeland compressor, Scotsman part No. 18-4400-01 is used. Usage thru July 1976, last serial No. 10Q272622 production thru September and October, serial numbers 3Q281842 thru 4Q289014 used Tecumseh compressor, Scotsman part No. 18-0108-01.

November, December 1976 and January 1977 serial numbers 6Q301792 thru 7C314700 used Copeland compressor Scotsman part No. 18-4400-01.

(2) 18-0108-01 is no longer available from Tecumseh. For replacement order compressor 18-4700-01 & conversion mounting kit 18-0108-50. Refer to SF75B for additional infor on 18-4700-01.

(3) Order proper compressor components for compressor used.

RESERVOIR ASSEMBLY

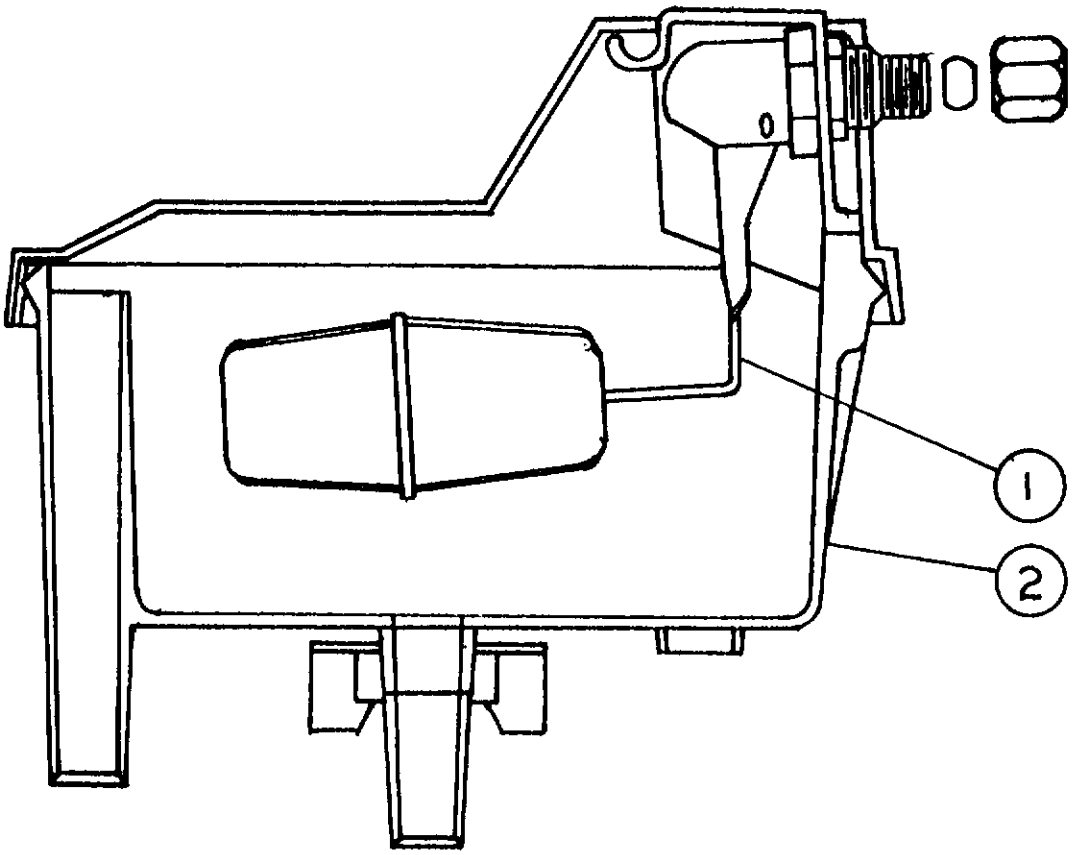

ITEM NO.	PART NO.	DESCRIPTION
1.	02-2217-02	Valve Assy.
2.	02-2217-01	Reservoir Complete

CASE AND HOOD ASSEMBLY

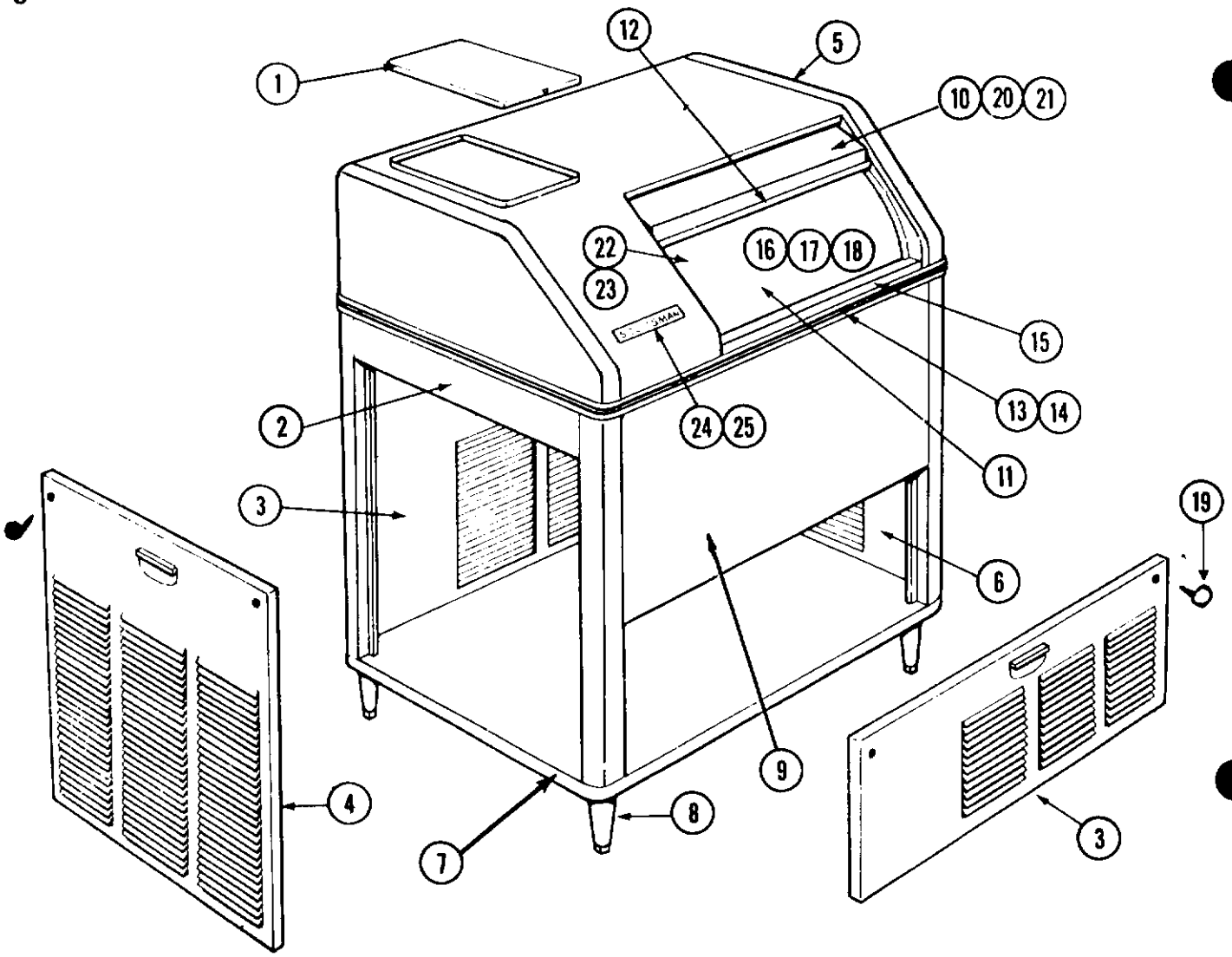

Common To All Painted & S.S.

ITEM NO.	Painted PART NO.	S.S. PART NO.	DESCRIPTION
1.	A06767-008	A06767-00S	Top Door Assy.
2.	A07714-008	A07714-00S	Left Panel
3.	A16563-008	A16563-002	Door
4.	S09405-008	S09405-00S	Left Door
5.	A20939-008	A20939-001	Hood Assy.
6.	A16561-008	A16561-002	Right Door
7.		A08902-004	Moulding Strip
8.	KLP2E	KLP2S	Legs Optional (4 in set)
9.	A18291-008	A18291-001	Case Assy.
10.	02-1735-01	A15559-000	Door Assy.
11.	A18891-000		Storage Bin Assy.
*12.	02-1616-00		Door Catch
13.	A06510-000		Front Moulding
14.	15-0324-00		Insert (Order Per Ft.)
15.	A16208-000		Door Track Assy.
*16.	02-1741-00		Drain Fitting, Top
*17.	02-1742-00		Drain Fitting, Bottom
*18.	13-0617-11		Drain "O" Ring
19.	03-1419-09		Screws, Panel
*20.	03-0640-00		Door Glides
*21.	03-1195-00		Door Glides, Hood
22.	02-1415-00		Bulb Holder
23.	13-0557-00		Grommets
24.	15-0156-00		Emblem
25.	03-0271-00		Speed Nuts (2 req'd)
26.	02-1736-00		Lanyard, Door Stop
*27.	16-0162-00		Strainer

* Not Shown

CENTRIFUGAL SWITCH

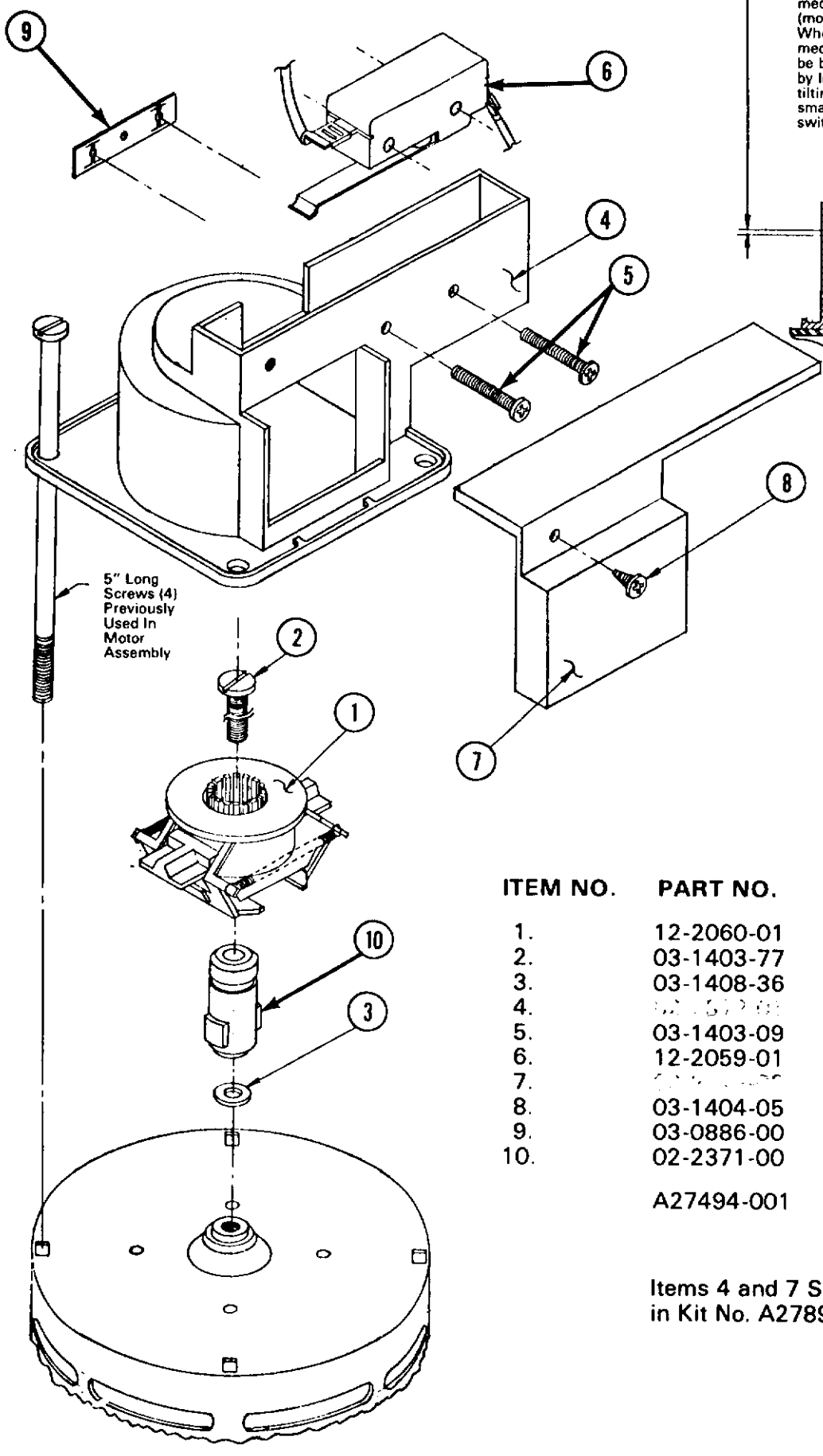

SWITCH ADJUSTMENT

.03 minimum gap between switch lever and mechanism with centrifugal mechanism actuated (motor running). Switch circuit should be closed When motor is stopped and centrifugal mechanism deactivates, the switch circuit should be broken. There should be enough adjustment by loosening the switch mounting screws and tilting switch in direction required. If this fails, a small amount of bending can be done on the switch lever.

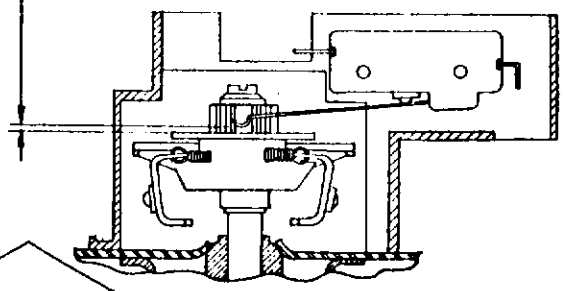

ITEM NO.	PART NO.	DESCRIPTION
1.	12-2060-01	Centrifugal Actuator
2.	03-1403-77	Screw
3.	03-1408-36	Washer
4.		Switch Mounting Case
5.	03-1403-09	Screw (2)
6.	12-2059-01	Switch
7.		Switch Case Cover
8.	03-1404-05	Screw
9.	03-0886-00	Speed Nut
10.	02-2371-00	Shaft Extension
	A27494-001	Centrifugal Switch Kit Complete w/17-1328-01 inst.

Items 4 and 7 Supplied in Kit No. A27895-001

CHASSIS

ITEM NO.	PART NO.	DESCRIPTION
1.	12-1575-01	Fan Motor
2.	18-0231-00	Fan Blade
3.	18-0422-00	Fan Mount
4.	A15621-001	Condenser Shroud
5.	18-0140-00	Condenser
6.	12-1573-17	Fan Motor Lead
7.	13-0639-00	Grommet (3 req'd)
8.	A24925-001	Spacer (3 req'd)
9.	03-1408-02	Washer (6req'd)
10.	03-1410-03	Lockwasher (3 req'd)
11.	03-1405-45	Screw (3 req'd)
12.	A15071-000	Spout Insulation
13.	A15070-000	Spout Insulation
14.	See Page 6	Compressor & Mounting Hardware
15.	A08736-000	Strap (2 req'd)
16.	See Page 3	Gear Reducer
17.	16-0563-00	Cap
18.	16-0560-00	Valve Core

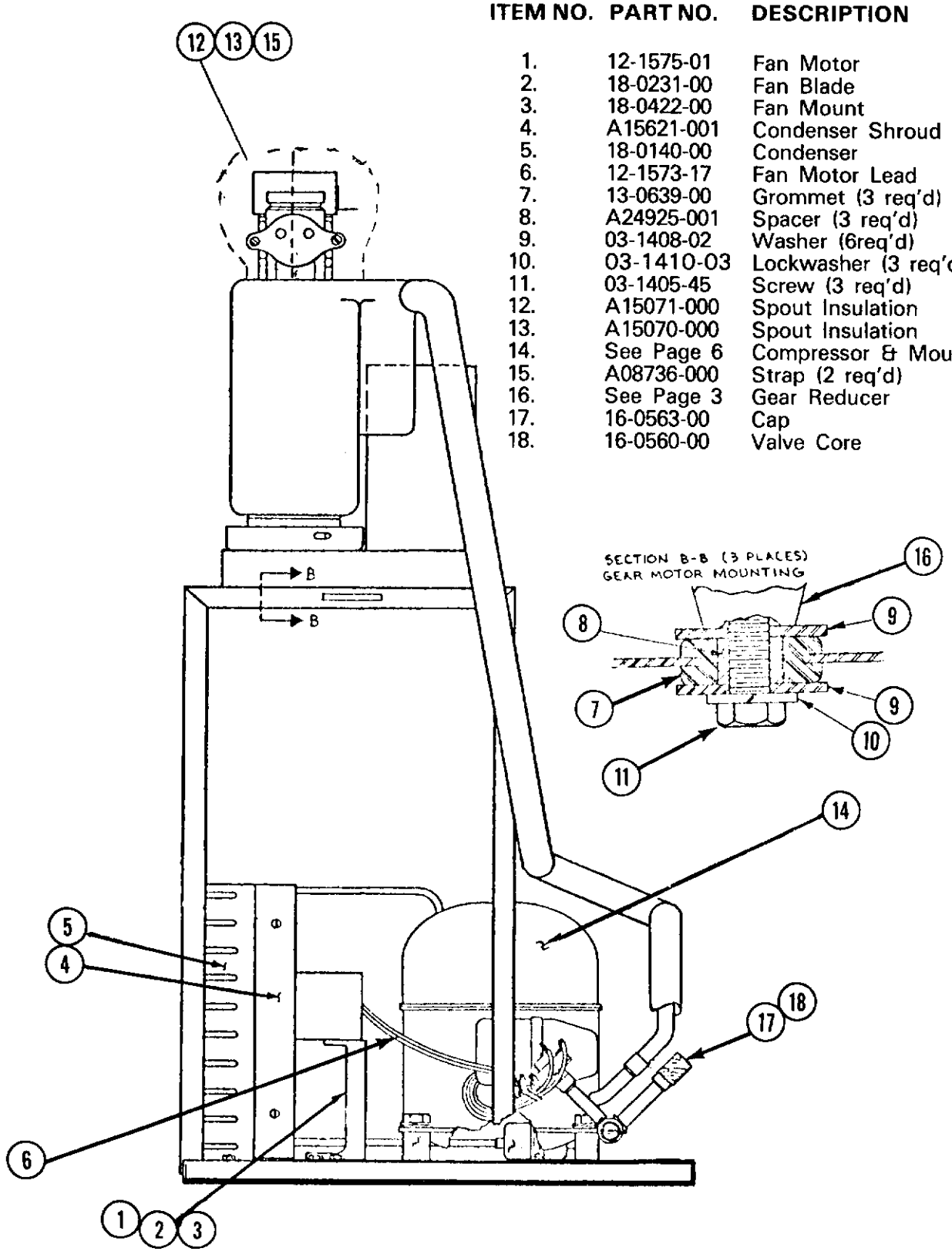

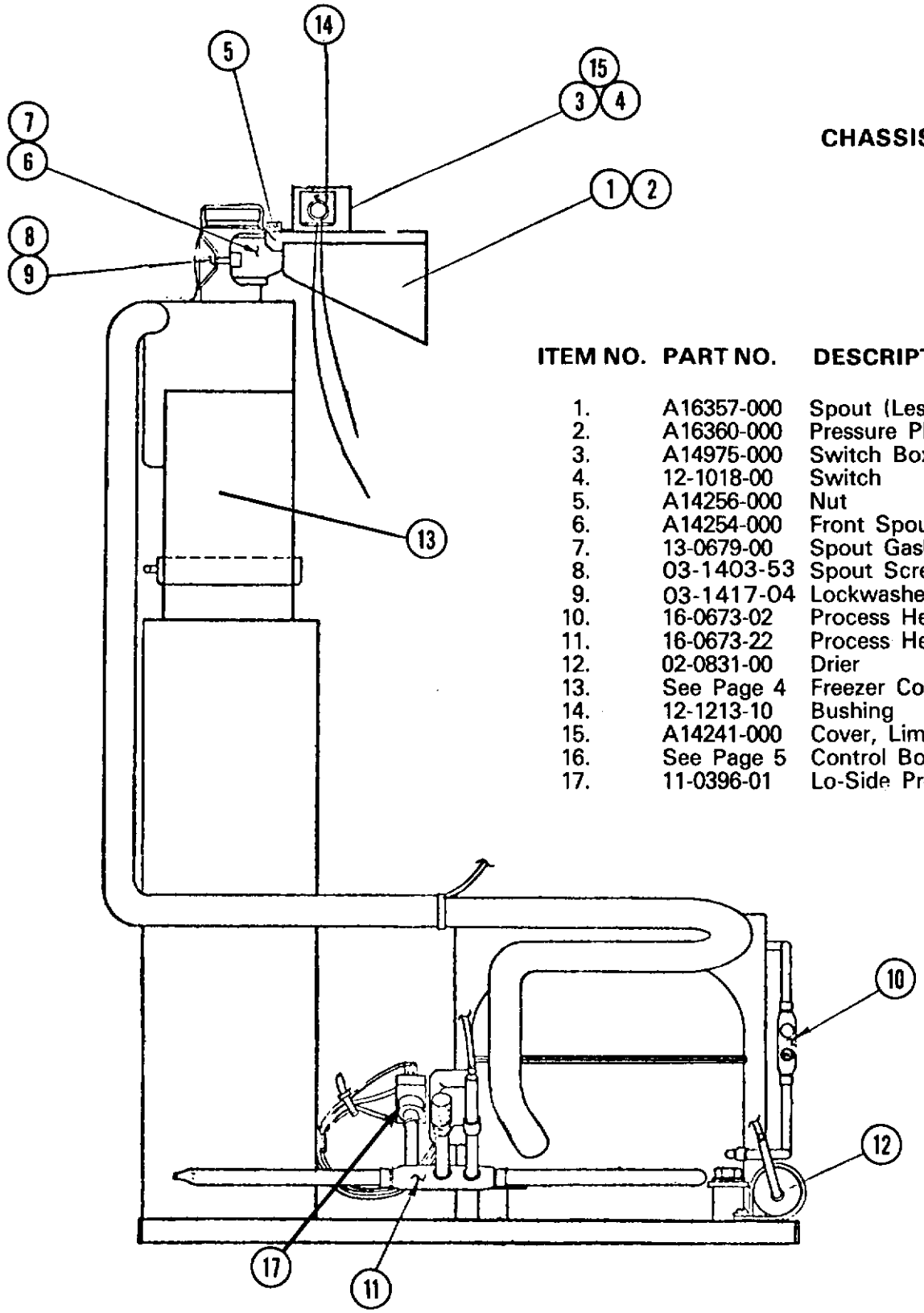

CHASSIS

ITEM NO.	PART NO.	DESCRIPTION
1.	A16357-000	Spout (Less Pressure Plate)
2.	A16360-000	Pressure Plate, Spout
3.	A14975-000	Switch Box Assy. w/Switch
4.	12-1018-00	Switch
5.	A14256-000	Nut
6.	A14254-000	Front Spout Casting
7.	13-0679-00	Spout Gasket
8.	03-1403-53	Spout Screw (2 req'd)
9.	03-1417-04	Lockwasher (2 req'd)
10.	16-0673-02	Process Header
11.	16-0673-22	Process Header
12.	02-0831-00	Drier
13.	See Page 4	Freezer Components
14.	12-1213-10	Bushing
15.	A14241-000	Cover, Limit Box
16.	See Page 5	Control Box Assy.
17.	11-0396-01	Lo-Side Pressure Switch

A25995-021
GEAR MOTOR ASSEMBLY
1/10 H.P.
115/60/1

11.5 RPM at output shaft

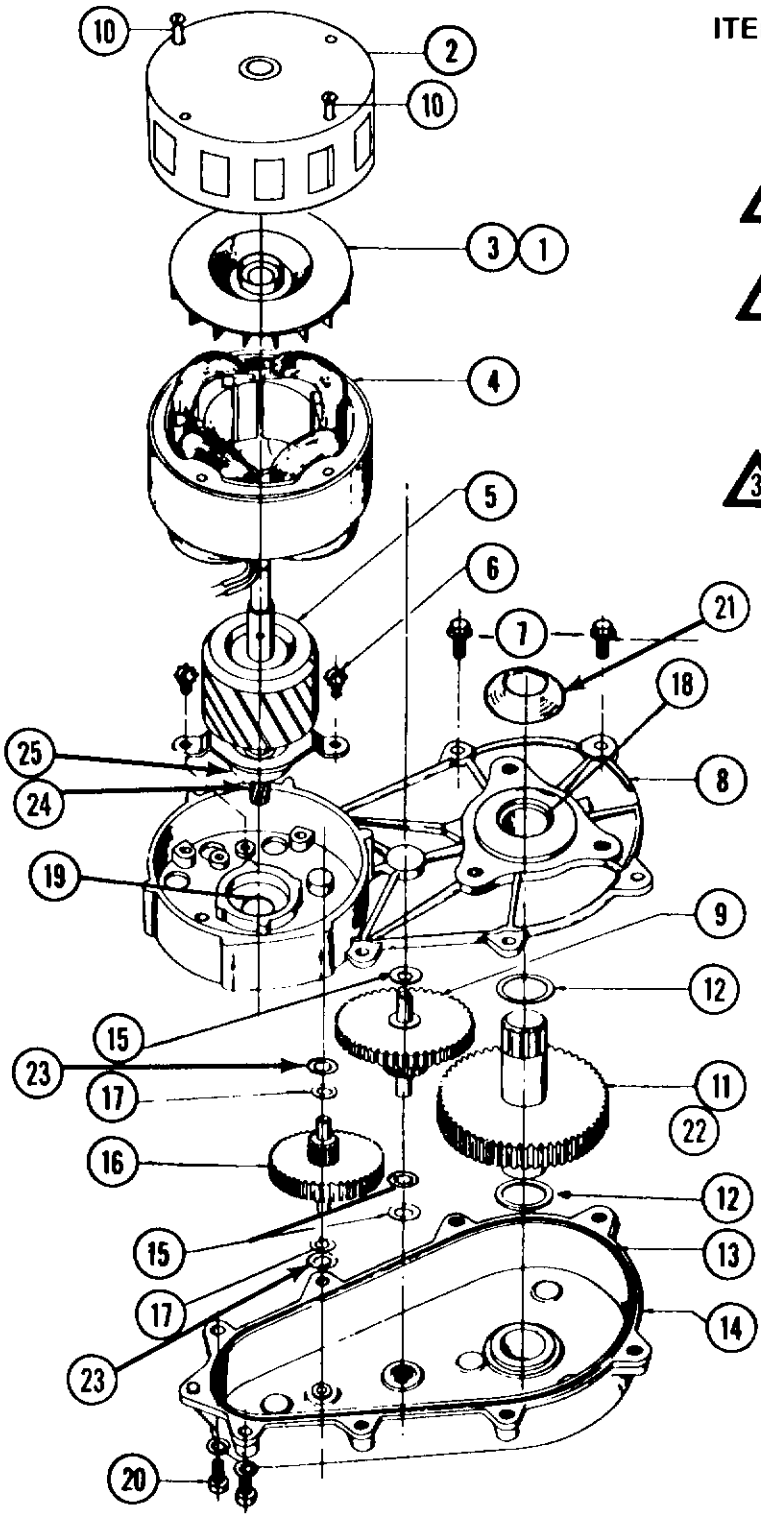

ITEM NO.	PART NO.	DESCRIPTION
1.	03-1246-00	Set Screw (2)
2.	A17047-000	Motor Housing
3.	A16915-000	Cooling Fan
4.	12-1400-01	Stator Assy.
2 5.	A26454-001	Rotor & 1st. Gear Kit
6.	03-1245-00	Screws (2)
7.	03-1251-00	Flange Screws (6)
1 8.	A16920-021	Gear Case Cover
9.	02-1521-00	Gear and Pinion
10.	03-1403-43	Motor Bolts (4)
11.	A26650-001	Gear and Output Shaft
12.	03-1408-21	Washer (2)
3 13.	02-1505-00	"O" Ring
14.	A24184-001	Gear Case Kit
15.	03-1408-06	Washer (3)
16.	02-2224-01	1st Gear and Pinion
17.	03-1408-19	Washer (2)
18.	02-1503-00	Grease Seal
19.	02-1504-00	Grease Seal
20.	03-1252-00	Screw (2)
21.	13-0709-01	Water Shed
22.	03-1475-01	Key
23.	03-1408-20	Washer (2)
24.	13-0617-04	Slinger Ring
25.	02-1501-00	Rotor Bearing

NOTE:

1. Cover comes with grease seals items 18 & 19.
2. Fiber gear (item 16 and rotor bearing (item 25) included in the rotor kit.
3. Includes items: 8, 13, 15, 17, 18, 19, 23 and gear lube.

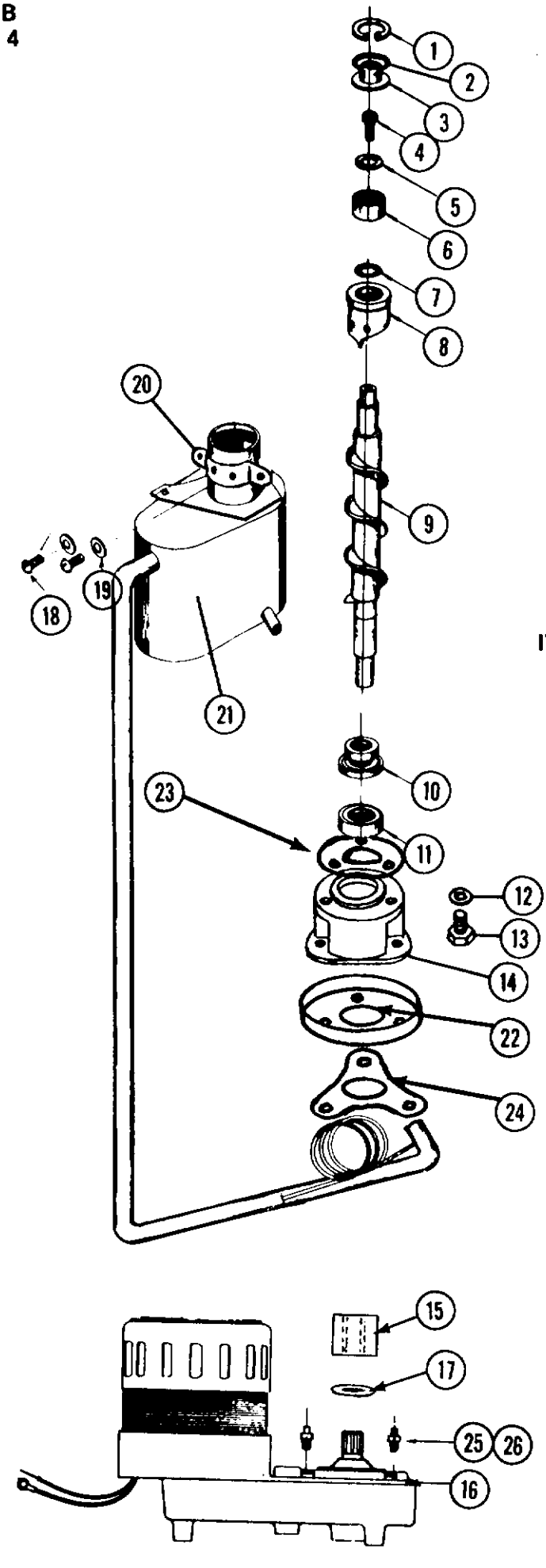

FREEZER ASSEMBLY

ITEM NO.	PART NO.	DESCRIPTION
1.	03-1558-03	Snap Ring
2.	A08162-000	Cap Hook
3.	A07701-000	Cap
4.	03-0758-00	Cap Screw
5.	A07699-000	Washer
6.	02-0547-00	top Bearing
7.	13-0617-16	"O" Ring
8.	A26706-001	Breaker w/Bearing
9.	02-1313-00	Auger
10.	A18945-000	Water Seal
11.	02-0417-00	Lower Bearing
12.	03-1410-04	Washer (3 req'd)
13.	03-1405-42	Screw (3 req'd)
14.	08-0595-01	Adapter
15.	15-0575-01	Apline Adapter
16.	See Page 3	Gear Reducer
17.	13-0709-01	Drip Shield
18.	03-1403-48	Screw (2 req'd)
19.	03-1410-03	Washer (2 req'd)
20.	A18430-000	Spout Plate
21.	A27212-020	Worm Tube w/Suction Line
22.	A18153-000	Drip Pan
23.	03-1505-00	Gasket
24.	13-0628-00	Gasket
25.	03-1417-12	Lockwasher (3 req'd)
26.	03-1420-04	Screw (3 req'd)

CONTROL BOX ASSY.

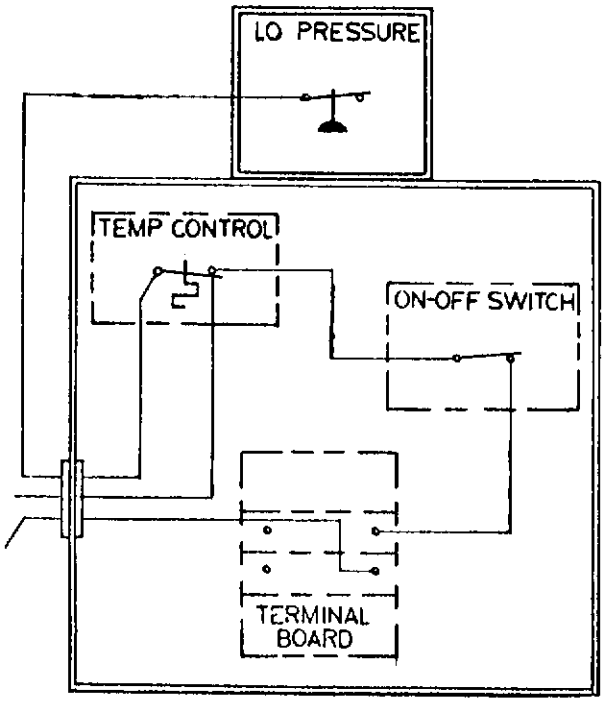

ITEM NO.	PART NO.	DESCRIPTION
1.	11-0358-01	Lo Pressure Cont.
2.	11-0354-00	Temp Control
3.	03-1403-14	Screw (2 req'd)
4.	12-0813-04	Terminal Board
5.	03-1403-31	Screw
6.	03-1421-07	Nut, Speed
7.	12-0426-01	Switch
8.	12-1213-10	Bushing
9.	03-1403-02	Screw (2 req'd)

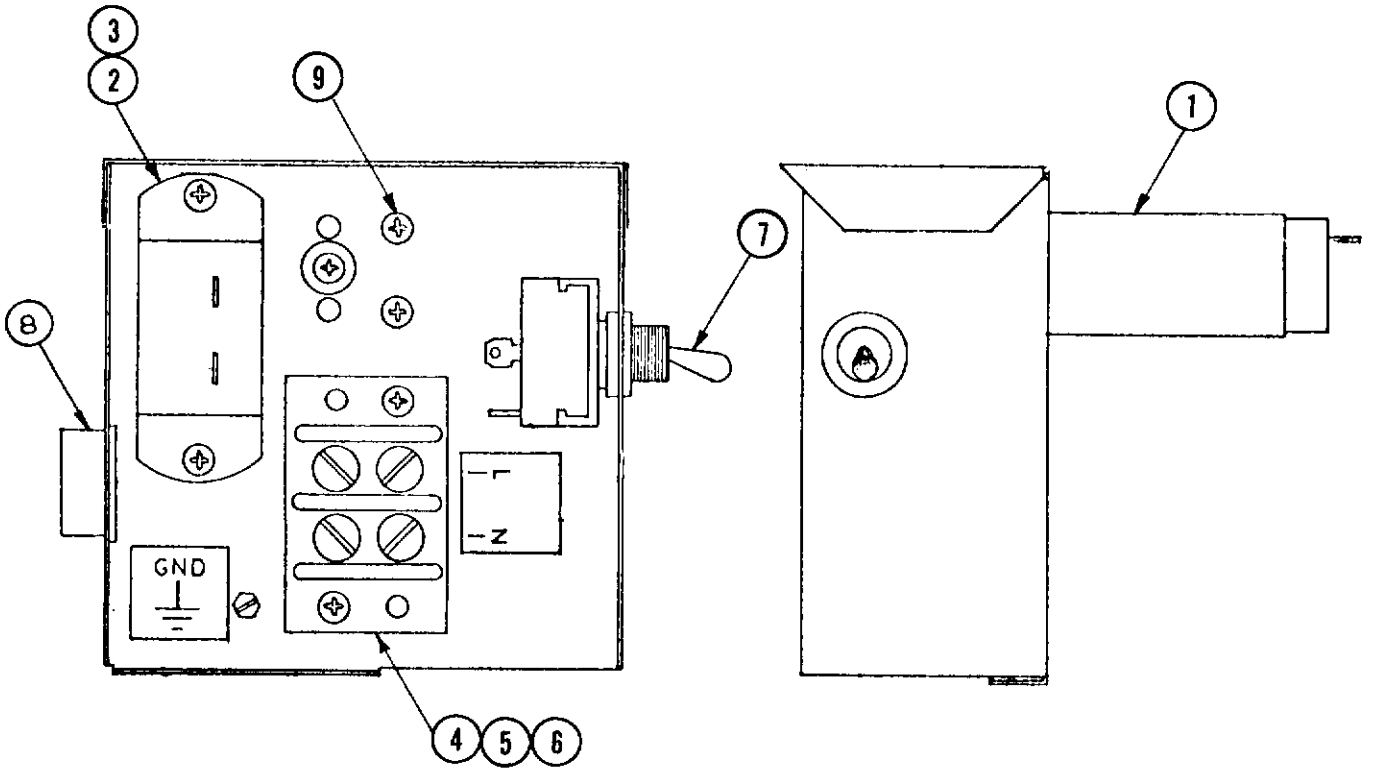

COMPRESSOR ASSEMBLY
115/60/1

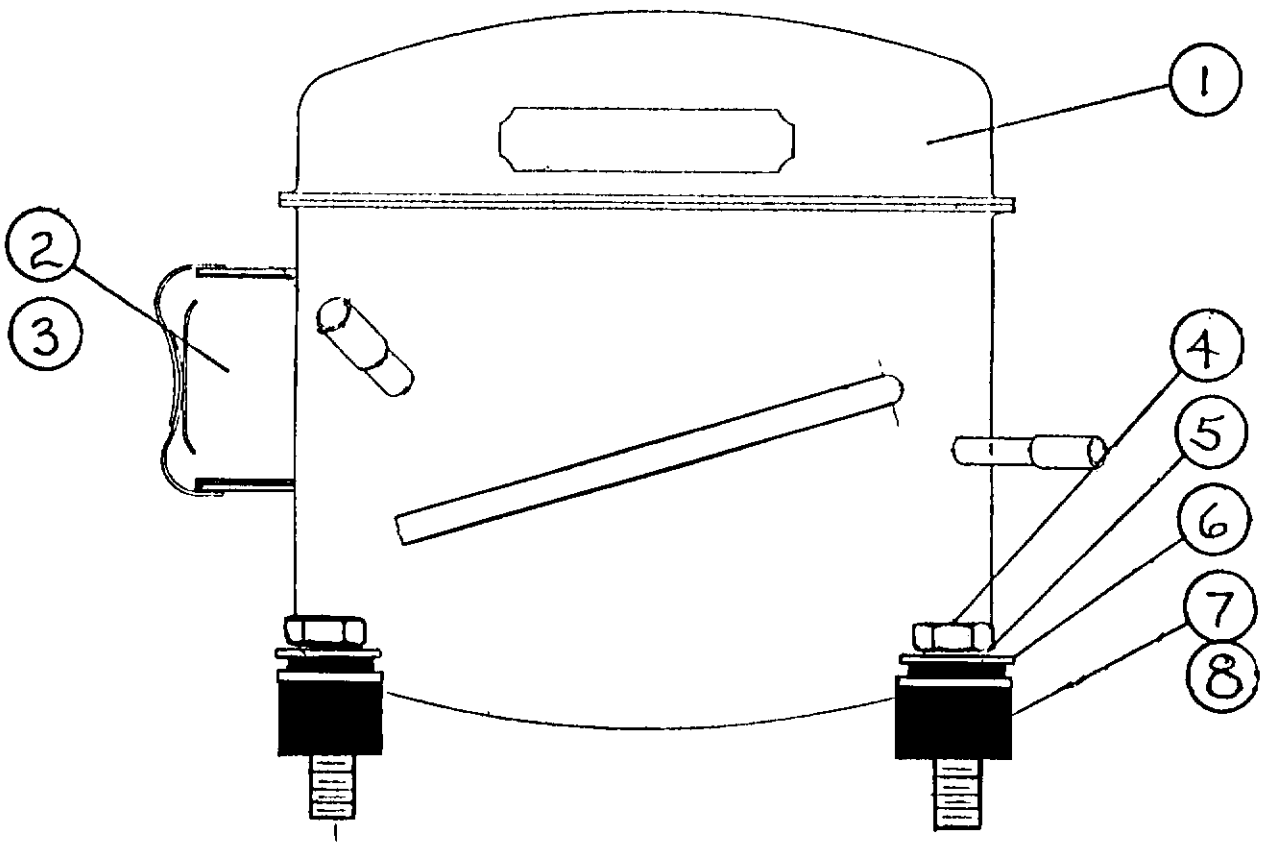

MODEL SF75 "B"

March production introduce the new "B" model flaker. All "B" models will incorporate a new Tecumseh compressor, Scotsman part No. 18-4700-01. First "B" model serial number is 9C323825. Replacement parts are per chart below.

ITEM NO.	PART NO.	DESCRIPTION
1.	18-4700-01	Compressor
2.	18-4700-30	Relay — Tecumseh 820RR12B11 GE 3ARR12-WR17 Relay — Tecumseh 82003CRB15 TI 3CR211-179
3.	18-4700-29	Overload — Tecumseh 830MRTC21 TI MRT28AGK-296
4.	03-1405-20	Screw
5.	03-1410-04	Lockwasher
6.	03-1408-29	Flatwasher
7.	18-4700-28	Mounting Grommet
8.	18-0108-41	Mounting Sleeve

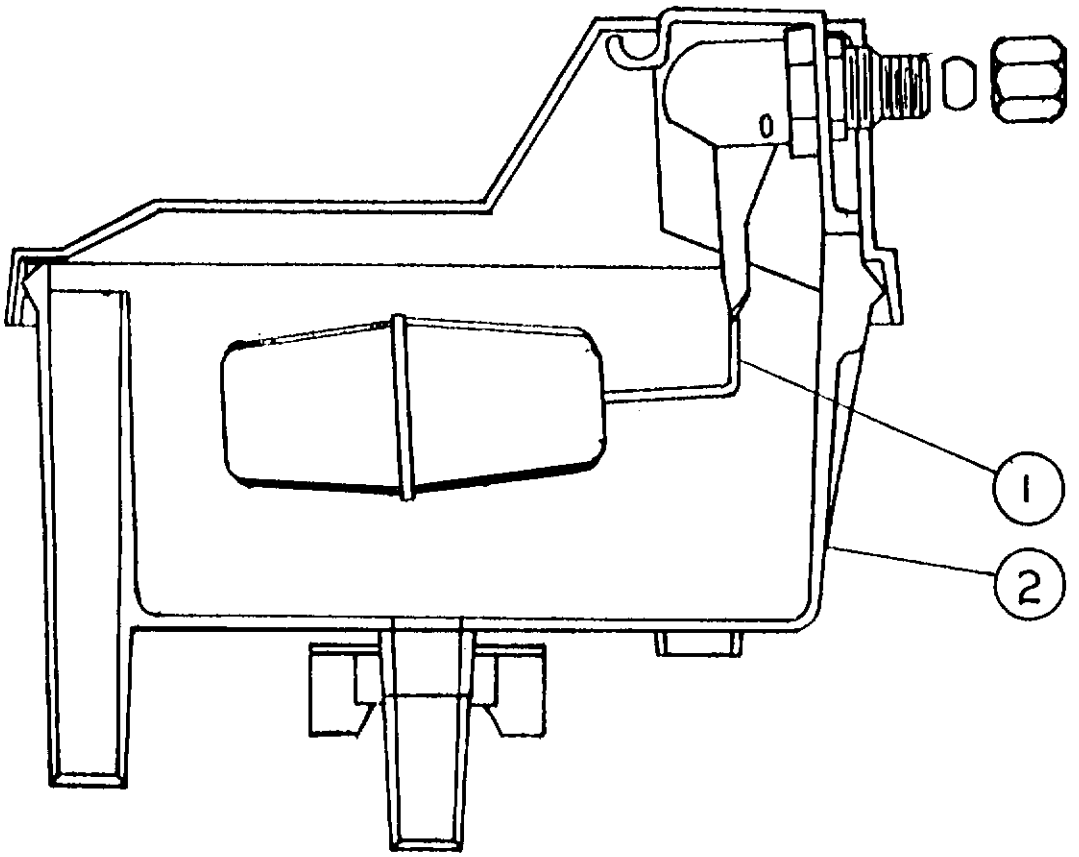

RESERVOIR ASSEMBLY

ITEM NO.	PART NO.	DESCRIPTION
1.	02-2217-02	Valve Assy.
2.	02-2217-01	Reservoir Complete

CASE AND HOOD ASSEMBLY

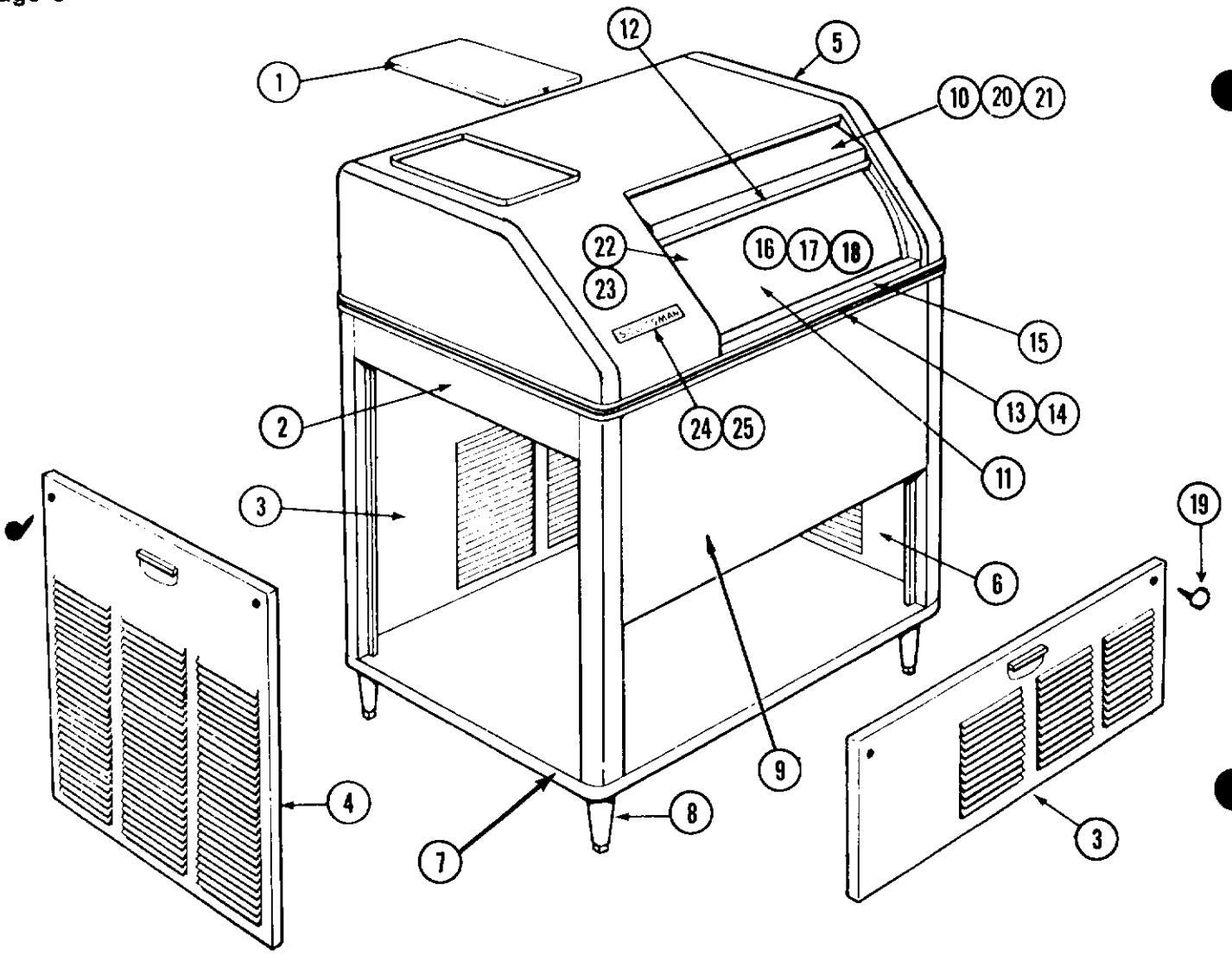

Common To All Painted & S.S.

ITEM NO.	Painted PART NO.	S. S. PART NO.	DESCRIPTION
1.	A06767-008	A06767-00S	Top Door Assy.
2.	A07714-008	A07714-00S	Left Panel
3.	A16563-008	A16563-002	Door
4.	S09405-008	S09405-00S	Left Door
5.	A20939-008	A20939-001	Hood Assy.
6.	A16561-008	A16561-002	Right Door
7.		A08902-004	Moulding Strip
8.	KLP2E	KLP2S	Legs Optional (4 in set)
9.	A18291-008	A18291-001	Case Assy.
10.	02-1735-01	A15559-000	Door Assy.
11.	A18891-000		Storage Bin Assy.
*12.	02-1616-00		Door Catch
13.	A06510-000		Front Moulding
14.	15-0324-00		Insert (order per ft.)
15.	A16208-000		Door Track Assy.
*16.	02-1741-00		Drain Fitting, Top
*17.	02-1742-00		Drain Fitting, Bottom
*18.	13-0617-11		Drain "O" Ring
19.	03-1419-09		Screws, Panel
*20.	03-0640-00		Door Glides
*21.	03-1195-00		Door Glides, Hood
22.	02-1415-00		Bulb Holder
23.	13-0557-00		Grommets
24.	15-0156-00		Emblem
25.	03-0271-00		Speed Nuts (2 req'd)
26.	02-1736-00		Lanyard, Door Stop
27.	16-0162-00		Strainer

* Not Shown

CENTRIFUGAL SWITCH

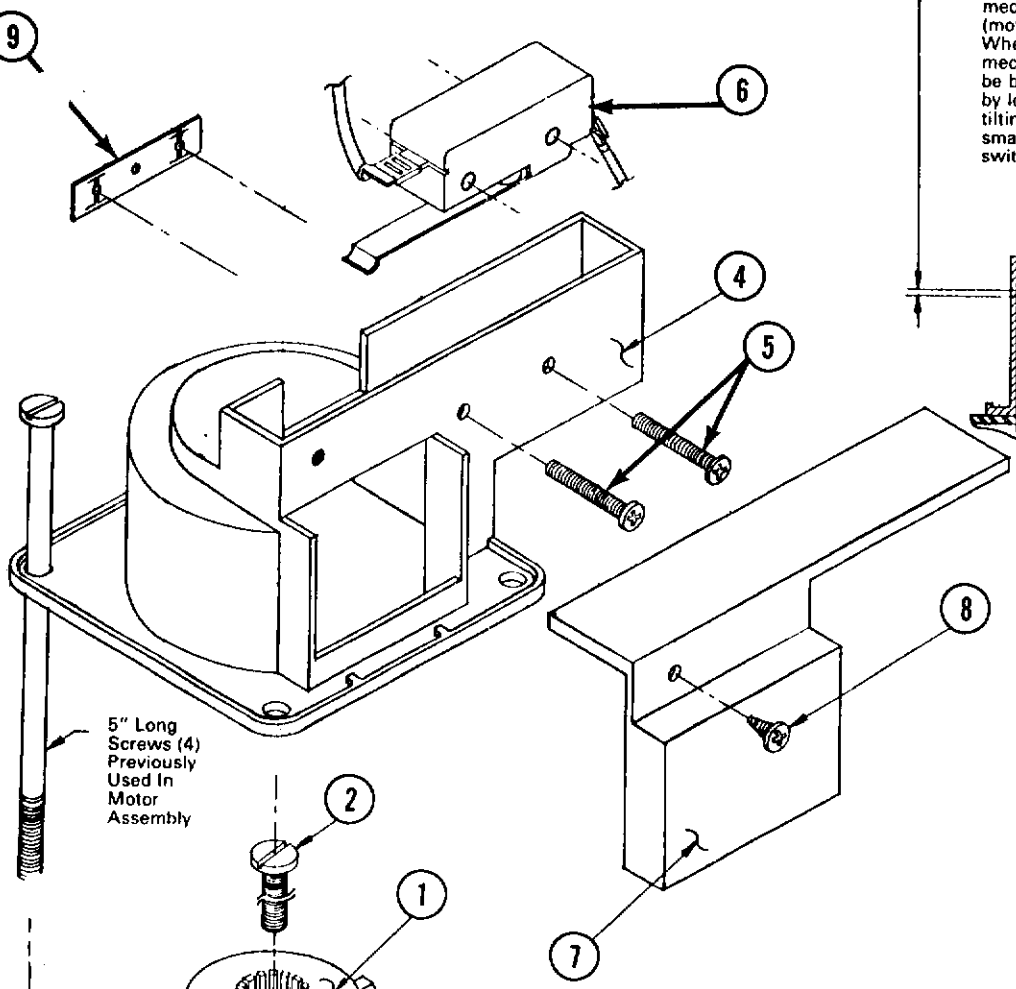

SWITCH ADJUSTMENT

.03 minimum gap between switch lever and mechanism with centrifugal mechanism actuated (motor running). Switch circuit should be closed When motor is stopped and centrifugal mechanism deactivates, the switch circuit should be broken. There should be enough adjustment by loosening the switch mounting screws and tilting switch in direction required. If this fails, a small amount of bending can be done on the switch lever.

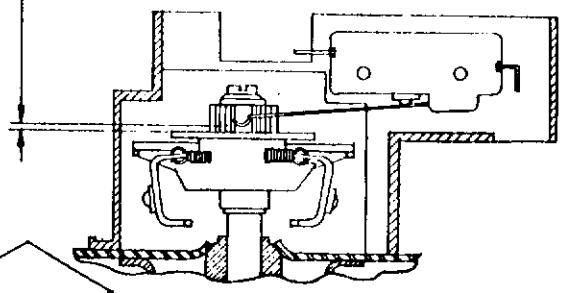

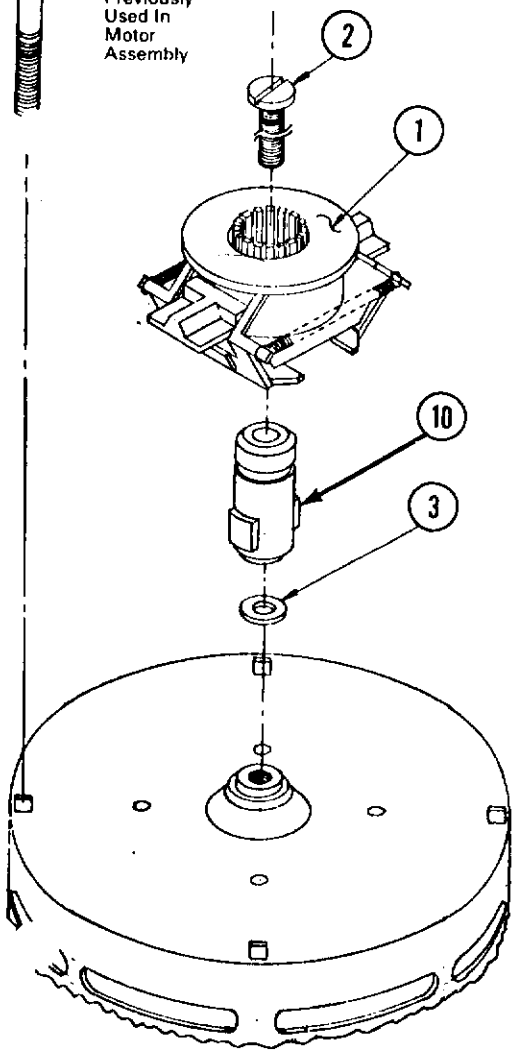

ITEM NO.	PART NO.	DESCRIPTION
1.	12-2060-01	Centrifugal Actuator
2.	03-1403-77	Screw
3.	03-1408-36	Washer
4.		Switch Mounting Case
5.	03-1403-09	Screw (2)
6.	12-2059-01	Switch
7.		Switch Case Cover
8.	03-1404-05	Screw
9.	03-0886-00	Speed Nut
10.	02-2371-00	Shaft Extension
	A27494-001	Centrifugal Switch Kit Complete w/17-1328-01 inst.

Items 4 and 7 Supplied in Kit No. A27895-001

CHASSIS ASSEMBLY
AIR COOLED

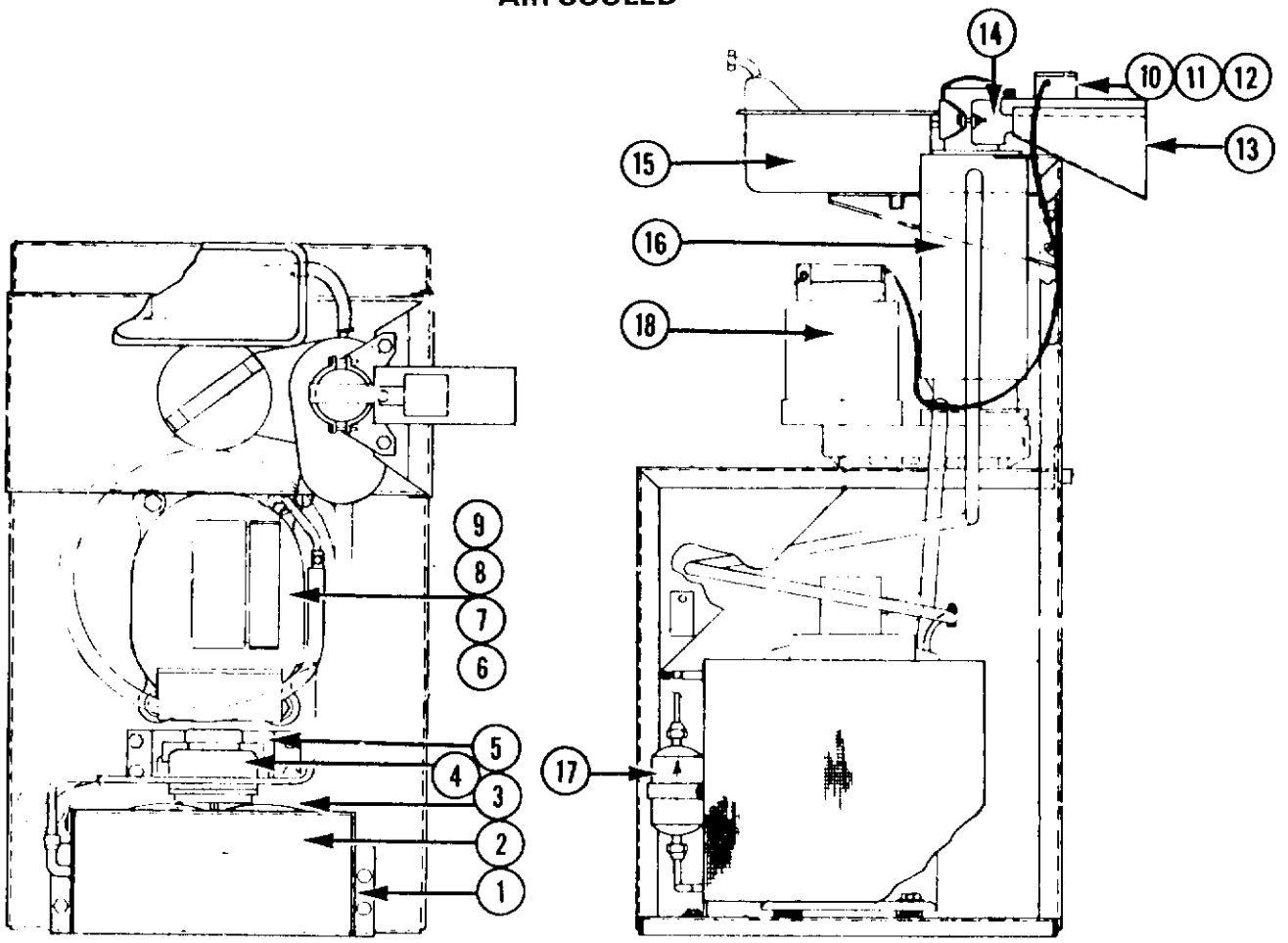

ITEM NO.	PART NO.	DESCRIPTION
1.	18-0234-00	Condenser (Air Cooled)
2.	A18229-000	Fan Shroud
3.	18-0231-00	Fan Blade
4.	12-1575-01	Fan Motor
4.	12-1573-02	Fan Motor Lead
5.	18-0422-00	Fan Motor Bracket
6.	18-2200-01	Motor Compressor
7.	18-2200-26	Compressor Relay*
8.	18-1901-10	Start Capacitor
9.	18-2200-25	Compressor Overload*
10.	12-1018-00	Spout Micro Switch
11.	A16357-000	Spout Pressure Plate Assy.
12.	A16360-000	Pressure Plate Only
13.	A14254-000	Spout Casting
14.	13-0679-00	Spout Casting — "O" Ring*
15.	See Page 3 & 4	Water Reservoir
16.	See Page 8	Freezer Assy.
17.	02-0350-00	Drier
18.	See Page 5	Gear - Motor Assy.

* Not Shown

CHASSIS ASSEMBLY
WATER COOLED

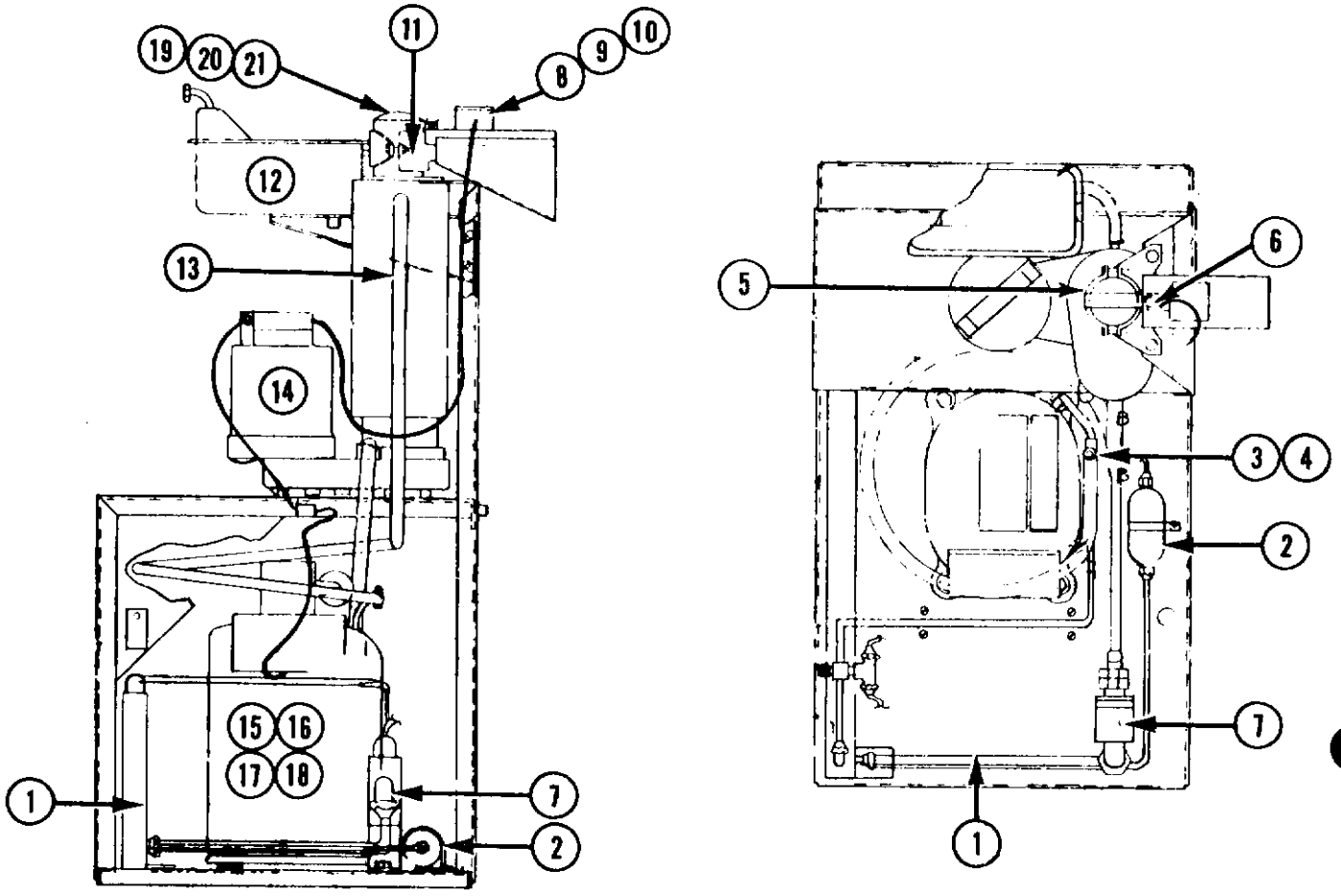

ITEM NO.	PART NO.	DESCRIPTION
1.	18-0368-00	Condenser (Water Cooled)
2.	02-0350-00	Drier
3.	16-0563-00	Valve Cap
4.	16-0560-00	Valve Core
5.	A18430-000	Spout Plate
6.	A14256-000	Spout Knurled Nut
7.	11-0198-00	Water Regulating Valve
8.	12-1018-00	Spout Micro Switch
9.	A16360-000	Spout Pressure Plate
10.	02-1321-000	Pressure Plate Spring
11.	A14254-000	Spout Casting
12.	See Page 3 & 4	Water Reservoir
13.	See Page 8	Freezer
14.	See Page 5	Gear Motor
15.	18-2200-01	Motor Compressor
16.	18-2200-26	Compressor Relay*
17.	18-1901-10	Start Capacitor*
18.	18-2200-25	Compressor Overload*
19.	A15070-000	Spout Insulation Left
20.	A15071-000	Spout Insulation Right
21.	A08736-000	Straps

* Not Shown

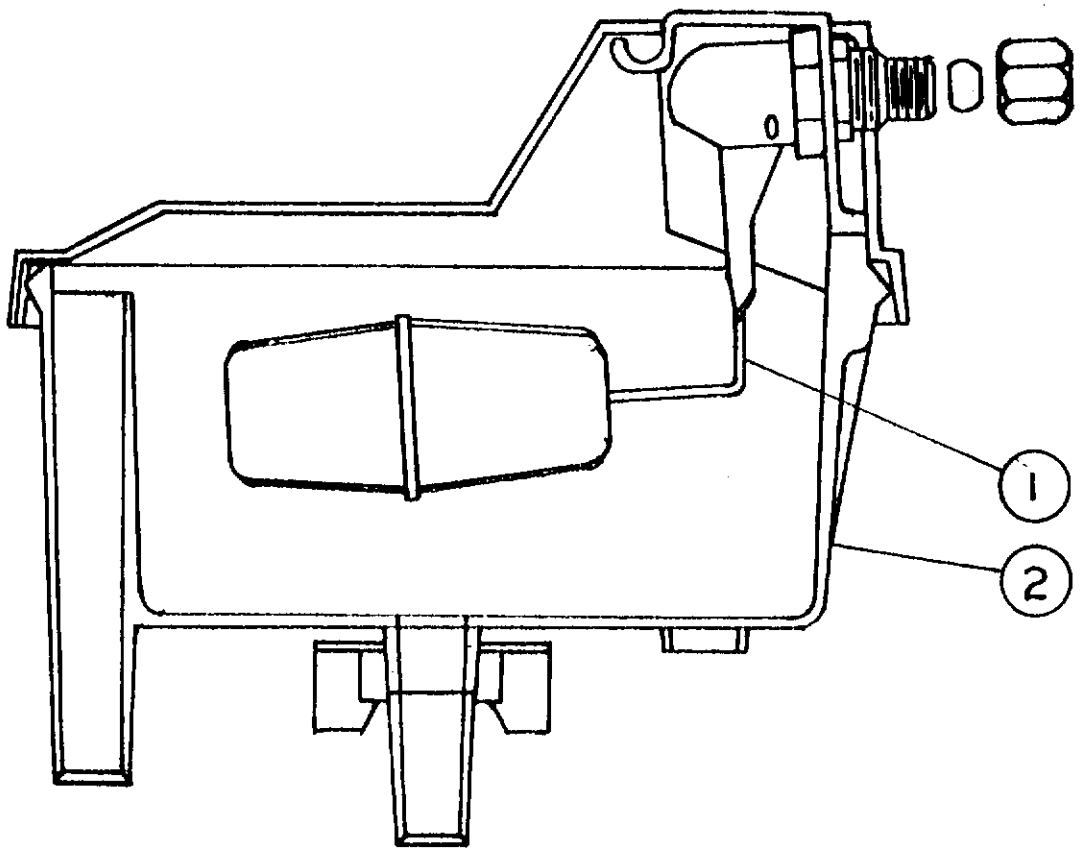

RESERVOIR ASSEMBLY

ITEM NO.	PART NO.	DESCRIPTION
1.	02-2217-02	Valve Assy.
2.	02-2217-01	Reservoir Complete

RESERVOIR ASSEMBLY

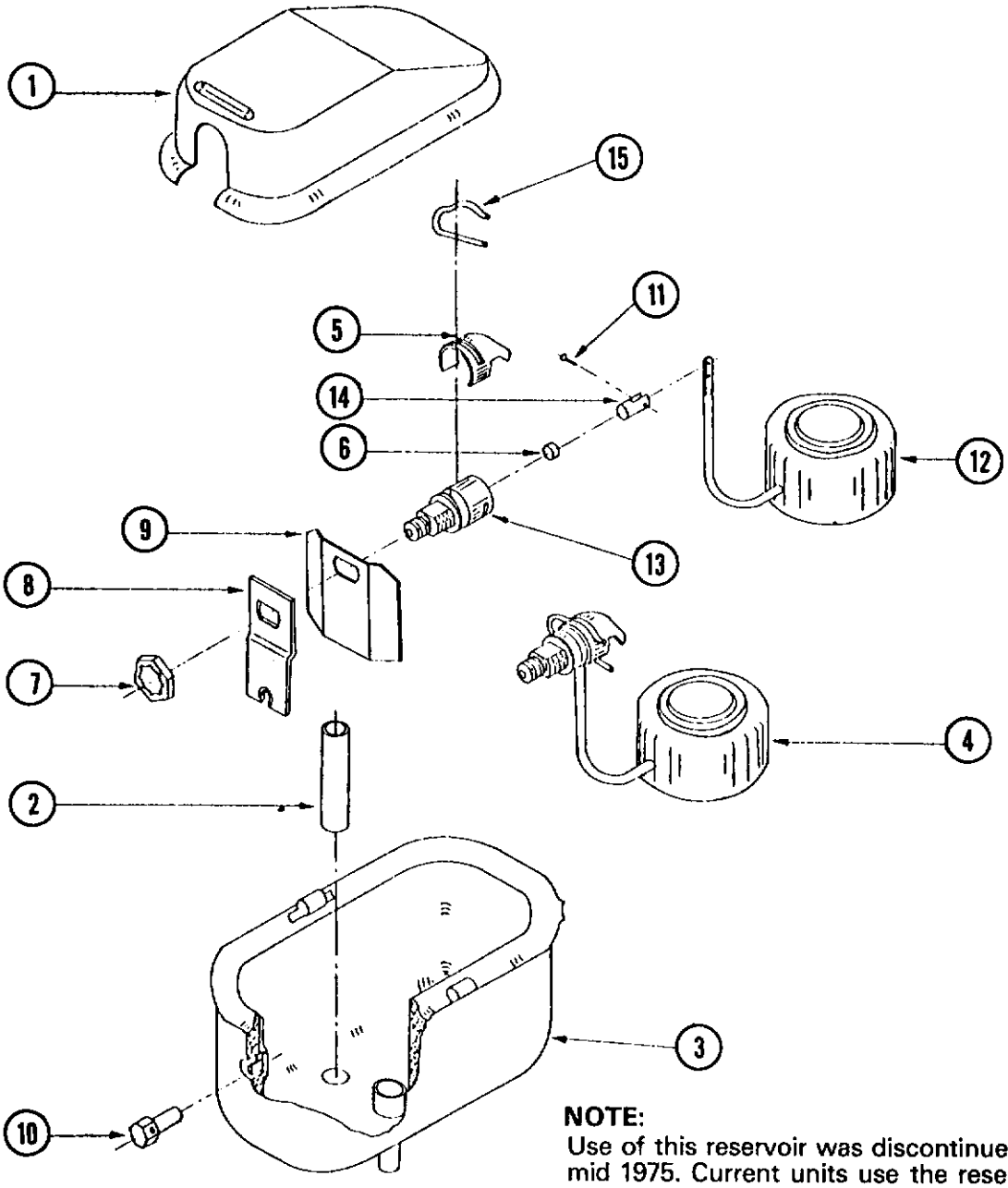

NOTE:
Use of this reservoir was discontinued about mid 1975. Current units use the reservoir on page .

ITEM NO.	PART NO.	DESCRIPTION	
1.	A16012-000	Reservoir Cover	
2.	S06715-000	Stand Pipe	*Use Item 4
3.	A08339-000	Reservoir Complete Less Item No. 1 & 2	
4.	S08138-000	Valve Complete Includes Items 5, 6, 11, 12, 13, 14 & 15	
5.	02-1320-00	Water Deflector	
6.	S06947-000	Valve Seat	
7.	03-1394-00	Pal Nut	
8.	A12869-000	Bracket	
9.	A18418-001	Water Deflector	
10.	A08055-000	Bracket Nut	
11.	03-1001-00	Rivet	
*12.		Float	
*13.		Inlet Valve	
*14.		Valve Seat Holder	
15.	02-1259-00	Valve Pin	

A25995-021
GEAR MOTOR ASSEMBLY
1/10 H.P.
115/60/1

11.5 RPM at output shaft

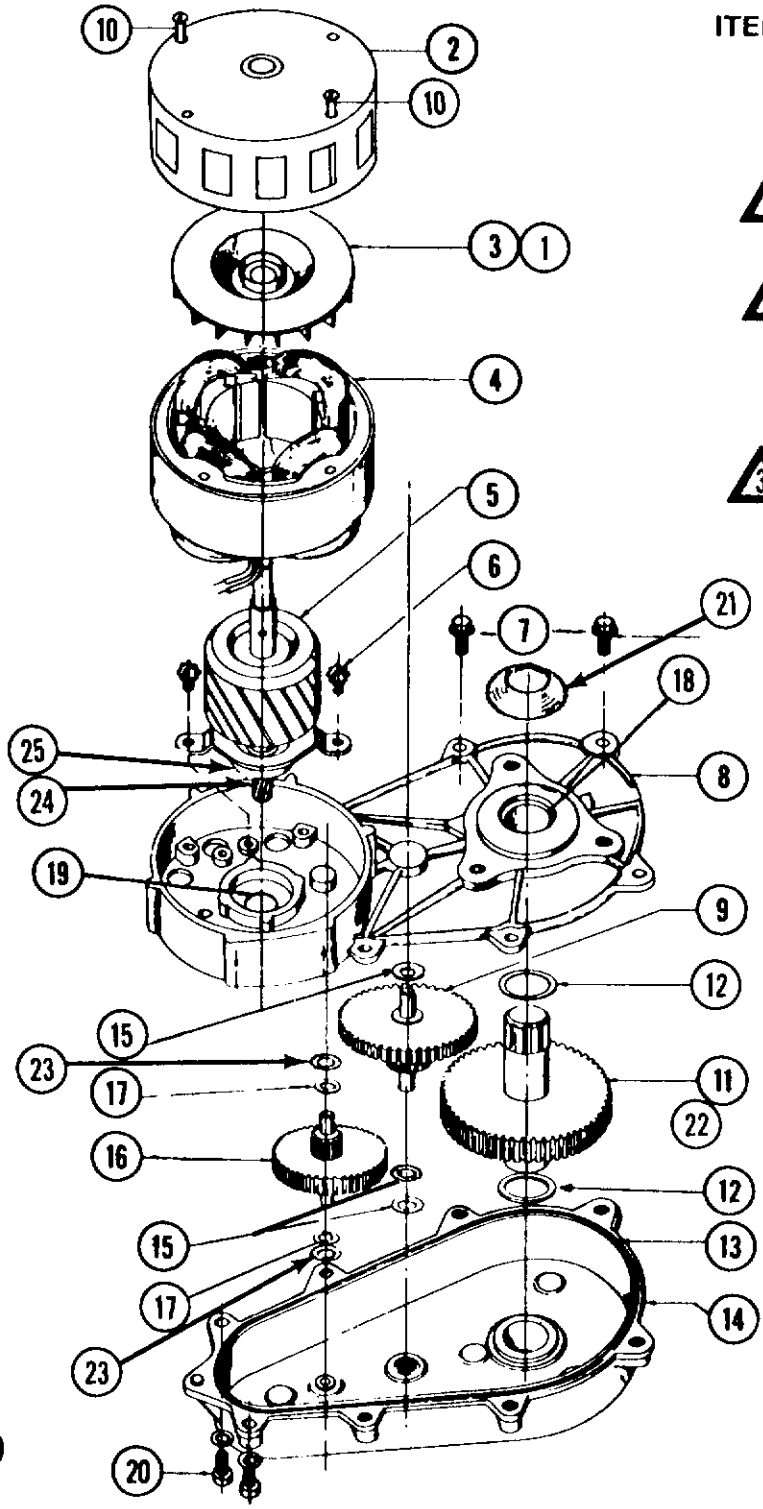

ITEM NO.	PART NO.	DESCRIPTION
1.	03-1246-00	Set Screw (2)
2.	A17047-000	Motor Housing
3.	A16915-000	Cooling Fan
4.	12-1400-01	Stator Assy.
2 5.	A26454-001	Rotor & 1st. Gear Kit
6.	03-1245-00	Screws (2)
7.	03-1251-00	Flange Screws (6)
1 8.	A16920-021	Gear Case Cover
9.	02-1521-00	Gear and Pinion
10.	03-1403-43	Motor Bolts (4)
11.	A26650-001	Gear and Output Shaft
12.	03-1408-21	Washer (2)
3 13.	02-1505-00	"O" Ring
14.	A24184-001	Gear Case Kit
15.	03-1408-06	Washer (3)
16.	02-2224-01	1st Gear and Pinion
17.	03-1408-19	Washer (2)
18.	02-1503-00	Grease Seal
19.	02-1504-00	Grease Seal
20.	03-1252-00	Screw (2)
21.	13-0709-01	Water Shed
22.	03-1475-01	Key
23.	03-1408-20	Washer (2)
24.	13-0617-04	Slinger Ring
25.	02-1501-00	Rotor Bearing

NOTE:

1 Cover comes with grease seals items 18 & 19.

2 Fiber gear (item 16 and rotor bearing (item 25) included in the rotor kit.

3 Includes items: 8, 13, 15, 17, 18, 19, 23 and gear lube.

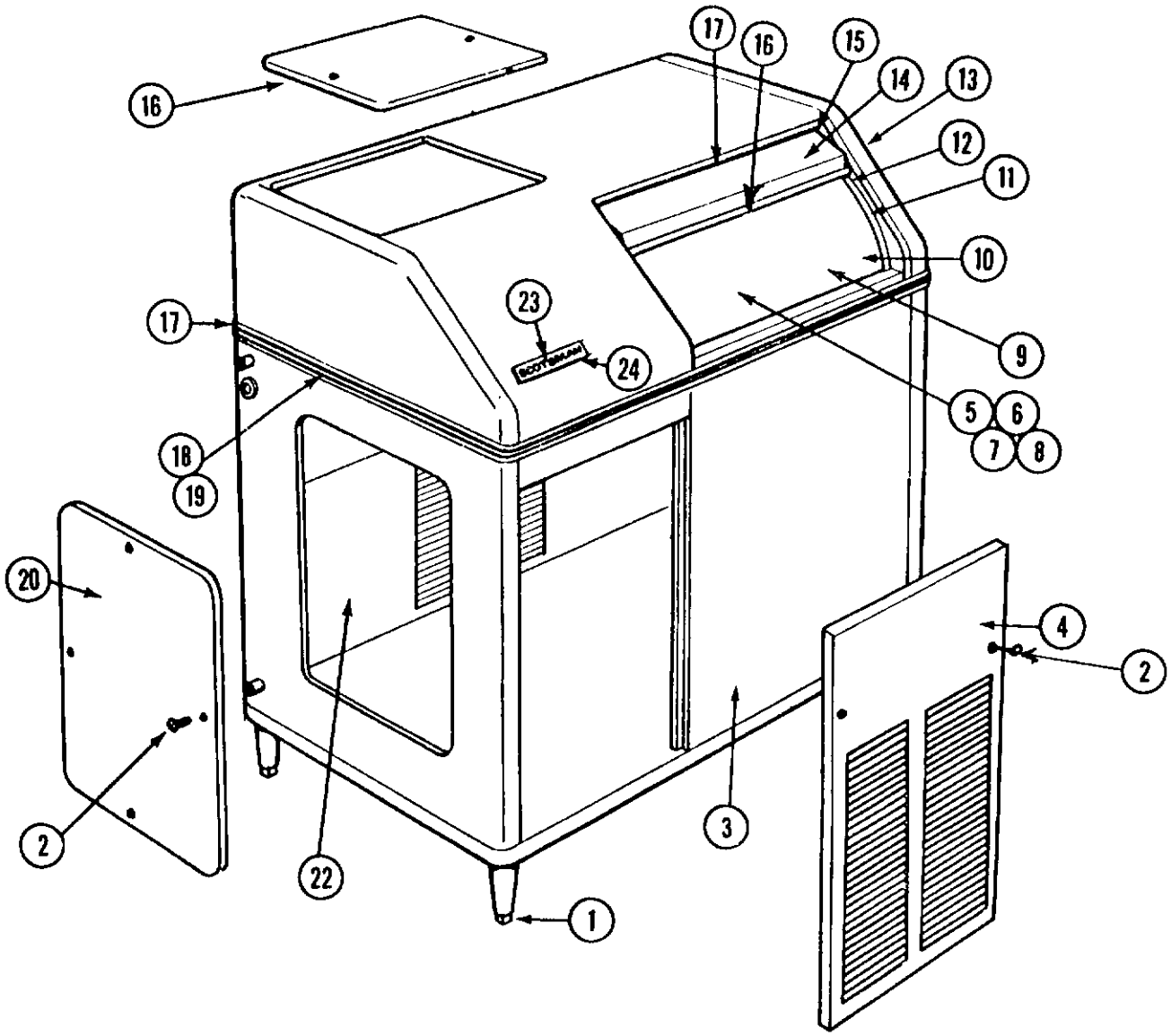

ITEM NO.	PART NO. Enamel	S.S.	DESCRIPTION	ITEM NO.	PART NO. Enamel	S.S.	DESCRIPTION
**1.	KLP2E	KLP2S	Leg Levelers	13.	A16208-000	A16208-000	Door Track
2.	03-1419-09	03-1419-09	Screws	14.	03-1415-00	03-1415-00	Bulb Holder*
3.	A20586-008	A20586-002	Case Assembly	15.	02-1736-00	02-1736-00	Door Stop*
4.	A15791-008	A15791-002	Front Door	16.	A07676-005	A07676-00S	Top Door
5.	02-1741-00	02-1741-00	Drain Top*	17.	A05796-000	A05796-000	Rear Trim
6.	02-1742-00	02-1742-00	Drain Bottom*	18.	15-0324-00	15-0324-00	Plastic Moulding—Trim
7.	13-0617-11	13-0617-11	O Ring (Drain)*	19.	S03646-000	S03646-000	Front Moulding Strip
8.	A19046-000	A19046-000	Storage Bin Assy.*	20.	S06713-008	S06713-00S	Side Door
			Insulation Layout*	21.			
9.	03-0640-00	03-0640-00	Door Glides (door)*	22.	A08740-008	A08740-00S	Rear Door
10.	03-1195-00	03-1195-00	Door Glides (hood)*	23.	15-0156-00	15-0156-00	Emblem
11.	A20924-008	A20924-001	Case Hood Assy.	24.	03-0271-00	03-0271-00	Speednuts*
12.	02-1735-01	A15559-000	Sliding Door				

****Legs Optional**

***Not Shown**

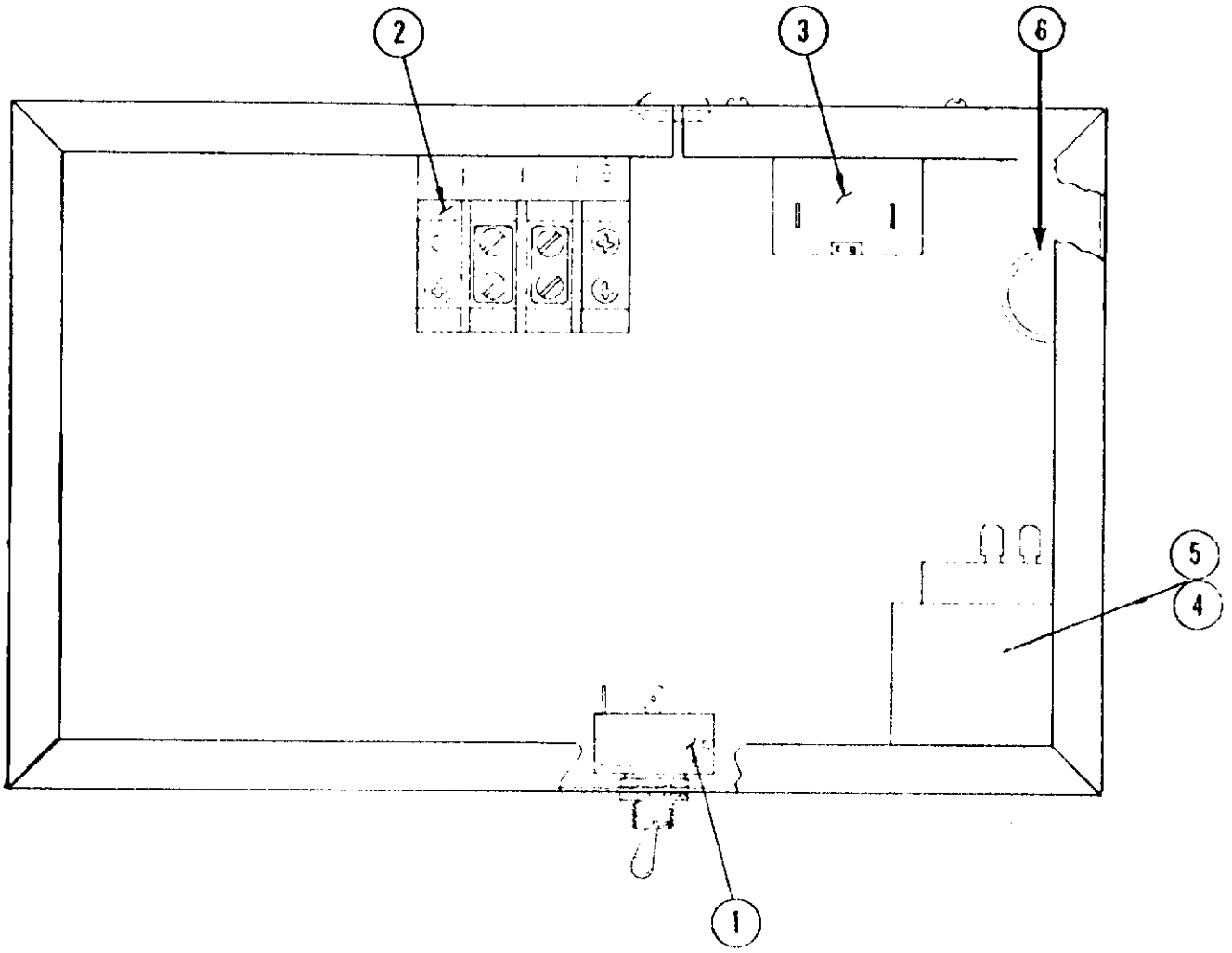

ITEM NO.	PART NO.	DESCRIPTION
/.	12-0426-01	Switch — On-Off
2.	12-0813-04	Terminal Board
3.	11-0354-00	in Thermostat
4.	03-1403-14	Screw (2)
5.	11-0357-00	HighPressure Control (Water Cooled Only)
5.	11-0358-000	Low Pressure Control
6.	12-1213-00	Snap Bushing

FREEZER ASSEMBLY

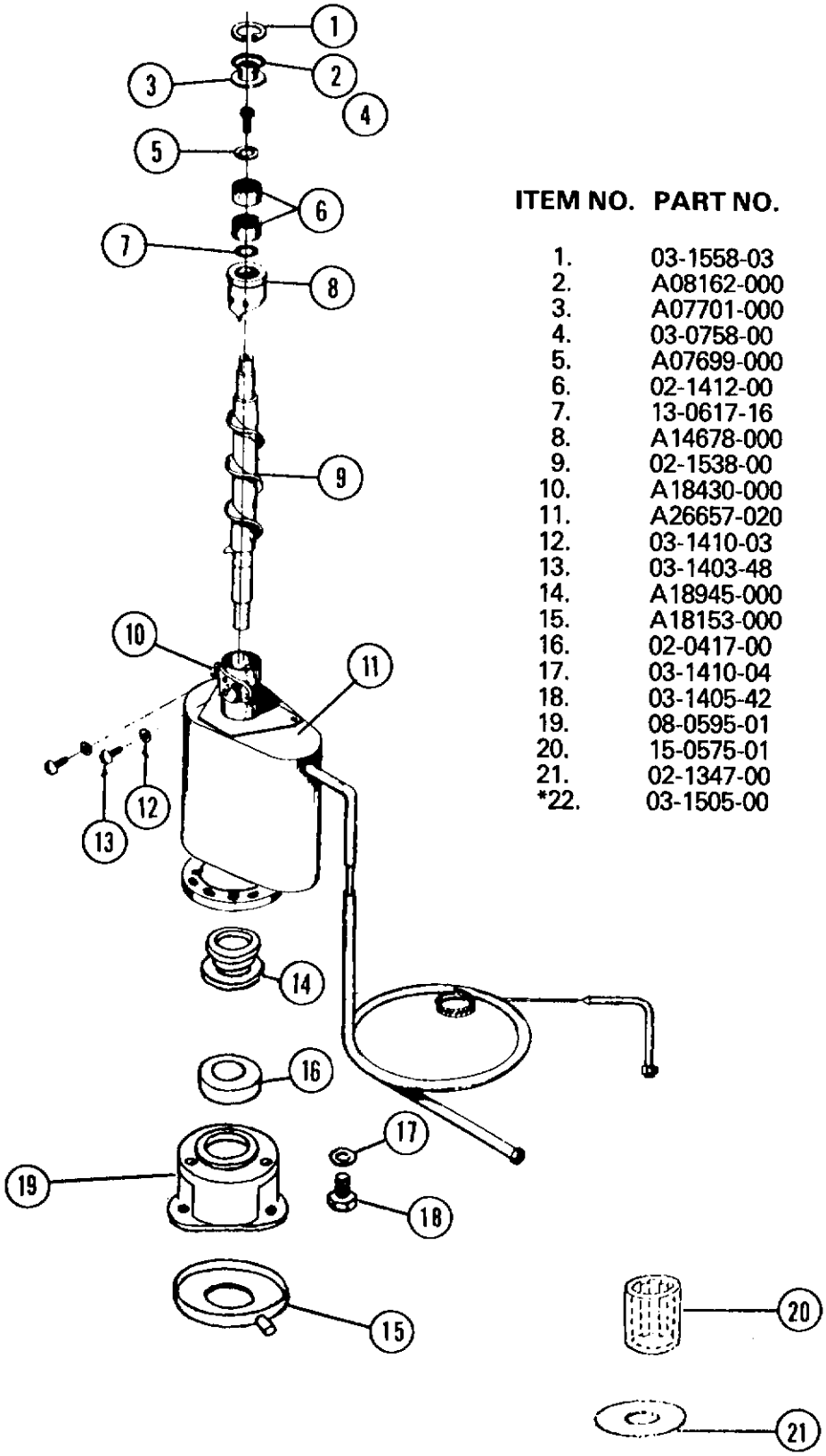

ITEM NO.	PART NO.	DESCRIPTION
1.	03-1558-03	Snap Ring
2.	A08162-000	Cap Hook
3.	A07701-000	Cap
4.	03-0758-00	Cap Screw
5.	A07699-000	Washer
6.	02-1412-00	Bearing
7.	13-0617-16	"O" Ring
8.	A14678-000	Breaker with Bearing & O Ring
9.	02-1538-00	Auger
10.	A18430-000	Spout Plate
11.	A26657-020	Worm Tube — Suction Line
12.	03-1410-03	Washer
13.	03-1403-48	Screws
14.	A18945-000	Water Seal
15.	A18153-000	Drip Pan
16.	02-0417-00	Lower Bearing
17.	03-1410-04	Washer
18.	03-1405-42	Screw
19.	08-0595-01	Adapter
20.	15-0575-01	Spline Drive Coupling
21.	02-1347-00	Shaft Drip Shield rubber
*22.	03-1505-00	Freezer to Adapter Gasket

CENTRIFUGAL SWITCH

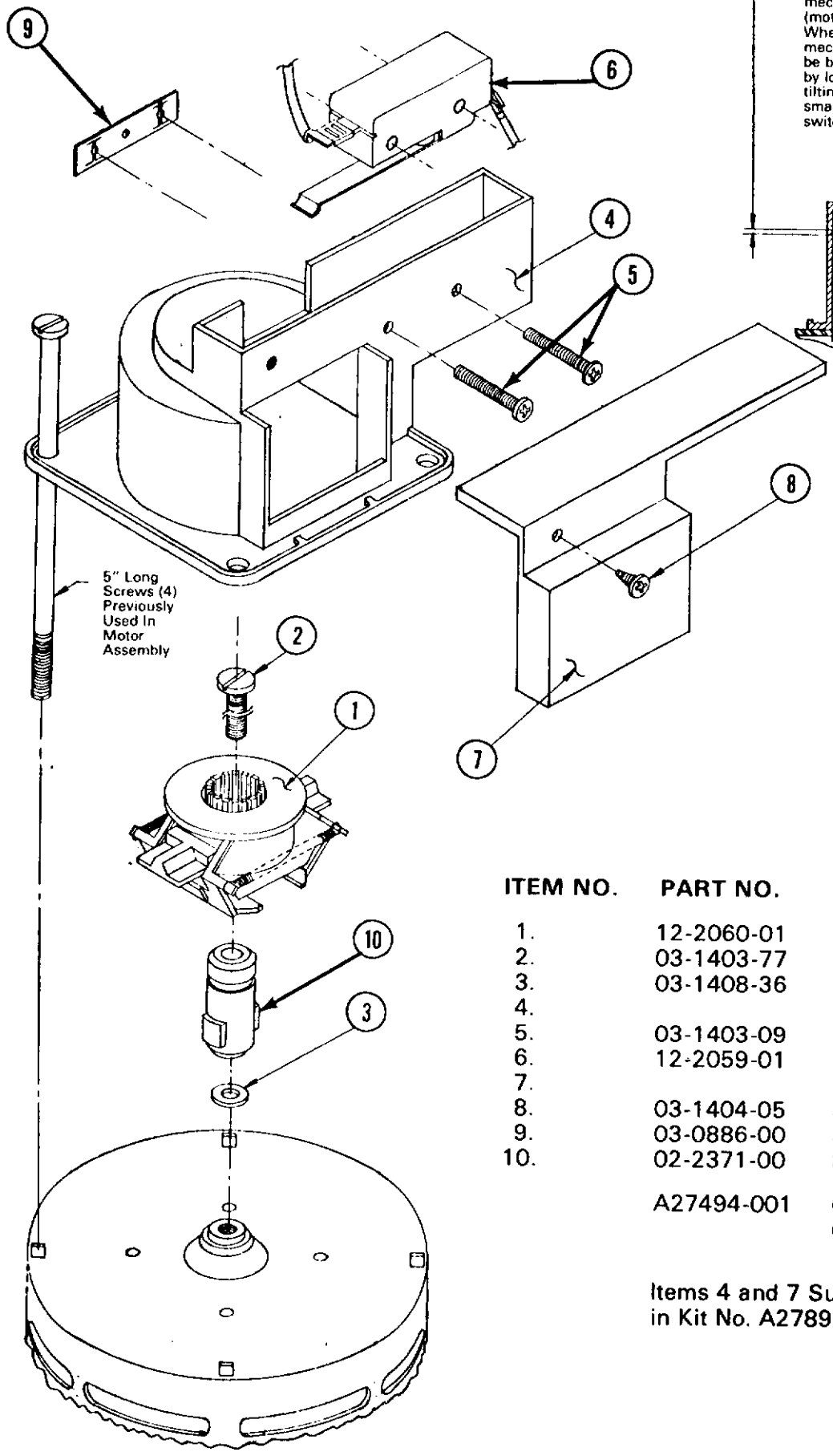

SWITCH ADJUSTMENT

.03 minimum gap between switch lever and mechanism with centrifugal mechanism actuated (motor running). Switch circuit should be closed When motor is stopped and centrifugal mechanism deactivates, the switch circuit should be broken. There should be enough adjustment by loosening the switch mounting screws and tilting switch in direction required. If this fails, a small amount of bending can be done on the switch lever.

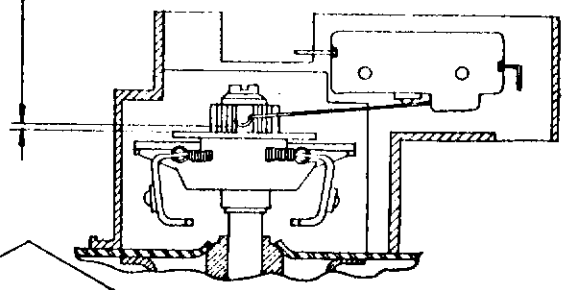

ITEM NO.	PART NO.	DESCRIPTION
1.	12-2060-01	Centrifugal Actuator
2.	03-1403-77	Screw
3.	03-1408-36	Washer
4.		Switch Mounting Case
5.	03-1403-09	Screw (2)
6.	12-2059-01	Switch
7.		Switch Case Cover
8.	03-1404-05	Screw
9.	03-0886-00	Speed Nut
10.	02-2371-00	Shaft Extension
	A27494-001	Centrifugal Switch Kit Complete w/17-1328-01 inst.

Items 4 and 7 Supplied in Kit No. A27895-001

AIR COOLED

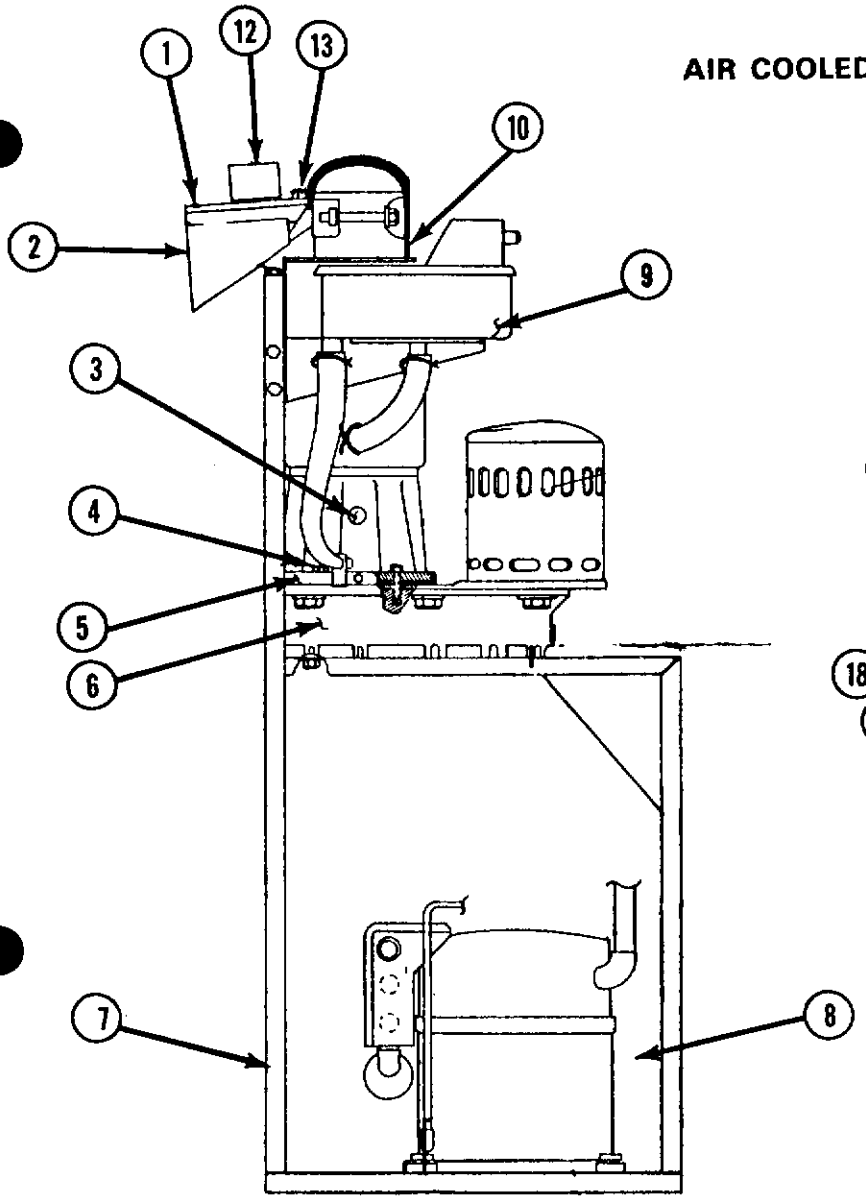

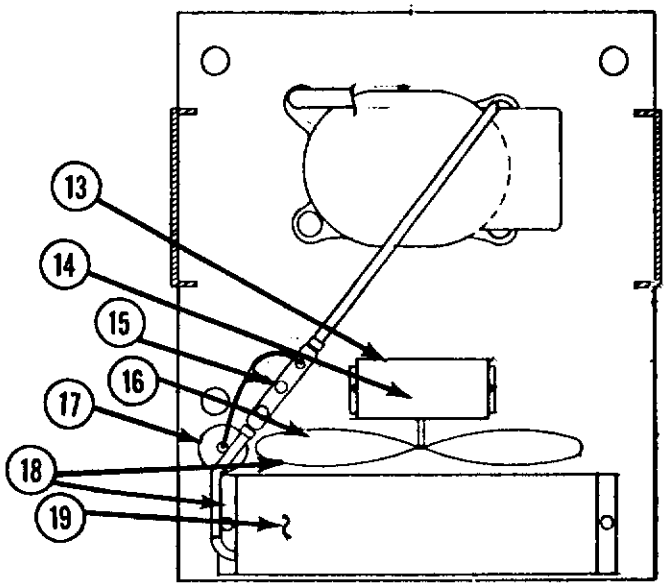

ITEM NO.	PART NO.	DESCRIPTION
1.	A16350-000	Spout Assy.
2.	A16353-000	Spout Pressure Plate
3.	15-0573-01	Drive Coupling
4.	03-1420-03	Cap Screw
5.	A24156-001	Drip Pan
6.	See Page 4	Gear Motor
7.	A22758-000	Chassis
8.	See Page 7	Compressor
9.	02-2217-01	Water Reservoir
10.	See Page 8	Freezer
11.	A14256-000	Knurled Nut
12.	A14975-000	Control Limit Box
13.	A25548-001	Fan Mount
14.	12-1576-01	Fan Motor
15.	16-0673-04	Porcess Header
16.	18-0363-00	Fan Blade
17.	02-0544-00	Drier
18.	A23825-001	Shroud
19.	18-0396-01	Condenser

WATER COOLED

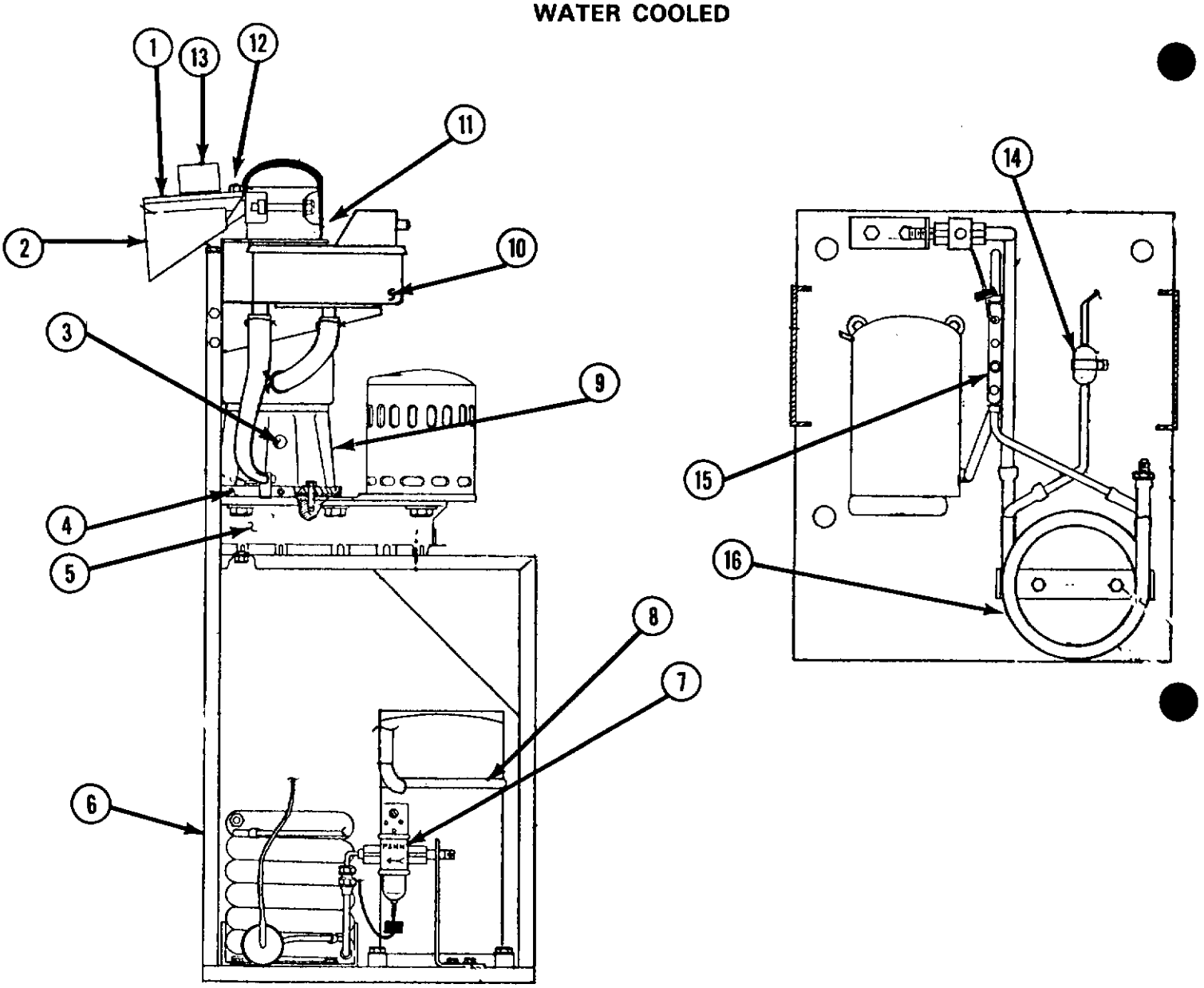

ITEM NO.	PART NO.	DESCRIPTION
1.	A16350-000	Spout Assembly
2.	A16353-000	Spout Pressure Plate
3.	15-0573-01	Drive Coupling
4.	A24156-001	Drip Pan
5.	See Page 4	Gear Motor
6.	A22758-000	Chassis
7.	11-0198-02	Water Regulating Valve
8.	See Page 7	Compressor
9.	02-1629-00	Base Adapter
10.	See Page 6	Water Reservoir
11.	See Page 8	Freezer (See Exploded View)
12.	A14256-000	Knurled Nut
13.	A14975-000	Control Limit Box
14.	02-0544-00	Drier
15.	16-0673-04	Process Header
16.	18-3305-02	Condenser

CASE ASSEMBLY

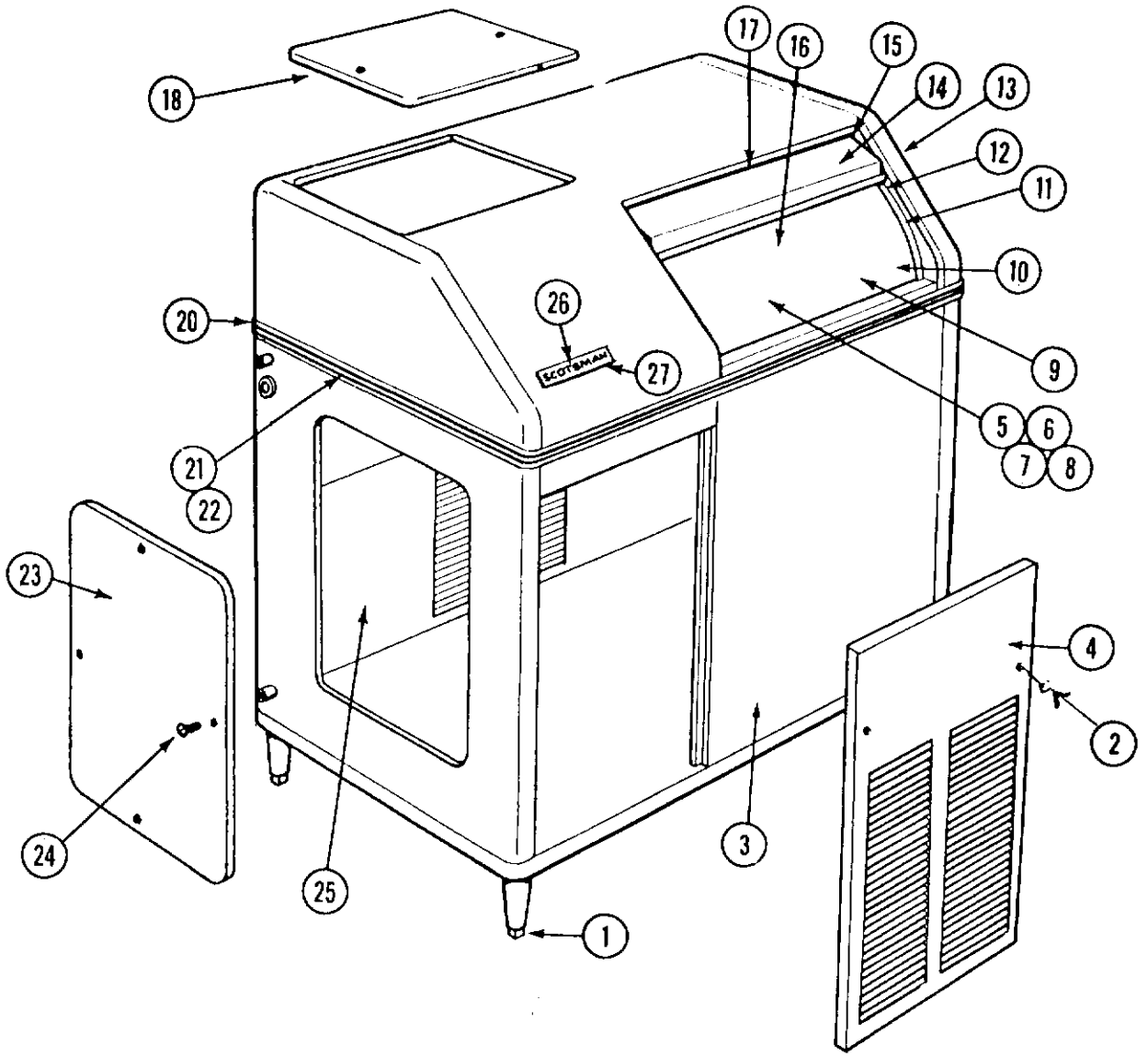

ITEM NO.	PART NO. ENAMEL	S.S.	DESCRIPTION
1.	KLP2E	KLP2S	Leg
2.	03-1403-09	Same	Screw
3.	A20288-008	A20288-001	Case Assy.
4.	A21250-008	A21250-002	Front Door
5.	A21022-000	Same	Drain Assy.*
6.	13-0617-11	"	"O" Ring*
7.	02-1741-00	"	Drain (Top)*
8.	02-1742-00	"	Drain (Bottom)*
9.	A19736-000	"	Storage Bin Assy.*
11.	None	03-0640-00	Door Glides (door)
12.	03-1195-00	Same	Door Glides (hood)
[illegible]	A20992-008	A20992-001	Case Hood Assy.
[illegible]	02-1735-01	A15559-000	Sliding Door

ITEM NO.	PART NO. ENAMEL	S.S.	DESCRIPTION
15.	A16208-000	Same	Door Track
16.	02-1615-00	"	Bulb Holder*
17.	A16209-000	"	Door Catch*
18.	A07676-000	A07676-00S	Top Door
20.	A05829-000	Same	Rear Trim Strip*
21.	15-0324-00	"	Plastic Moulding-Trim
22.		"	Moulding Strip
23.	S06713-008	S06713-00S	Slide Door
24.	03-1419-09	Same	Screw S.S.
25.	A08741-008	A08741-00S	Rear Door
26.	15-0156-00	Same	Emblem
27.	03-0271-00	"	Speednut

*Not Shown

A22750-021
GEAR MOTOR ASSEMBLY
1/4 HP 115/60/1
OUTPUT SHAFT TURNS
AT 10 RPM

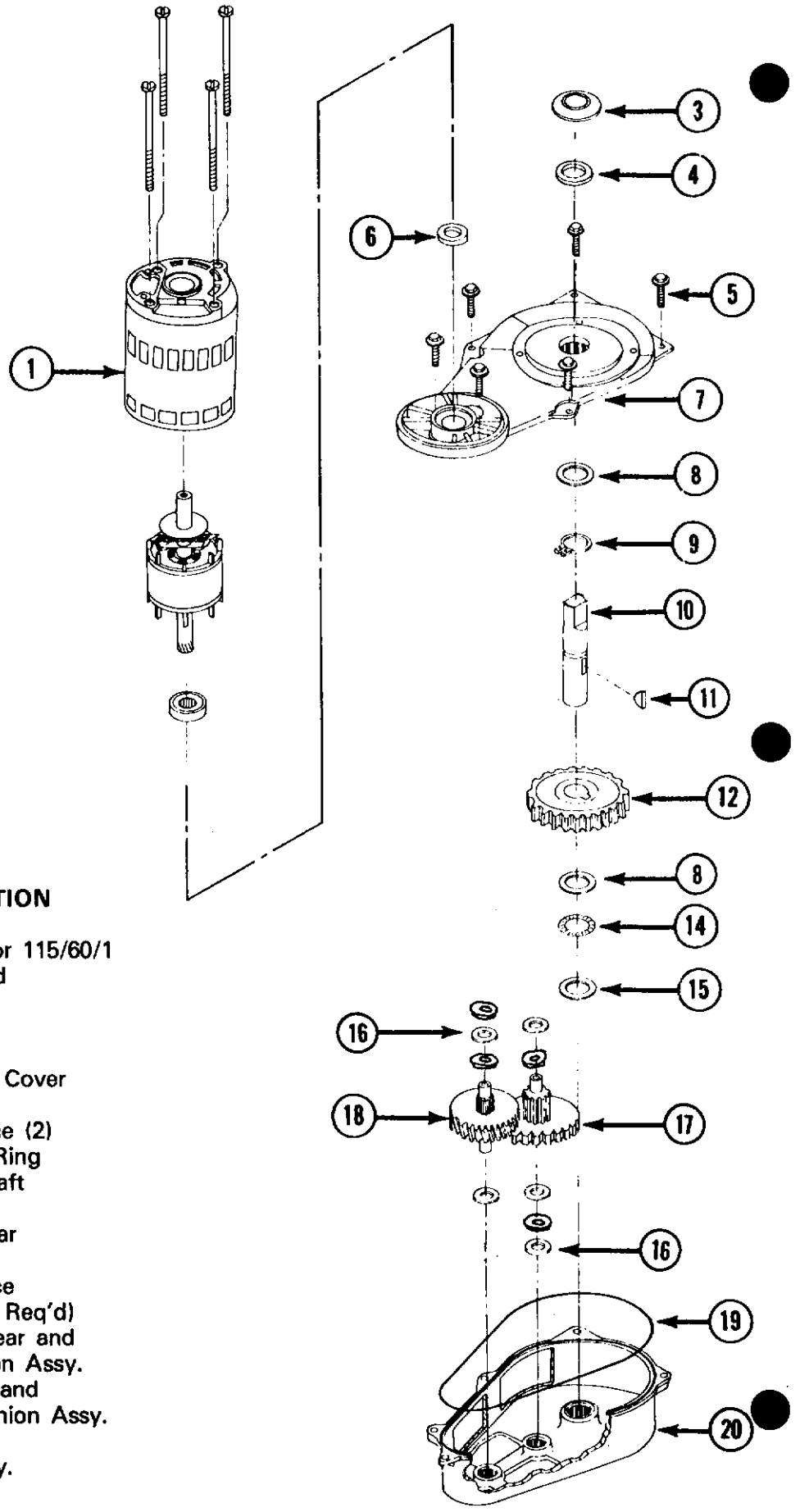

ITEM NO.	PART NO.	DESCRIPTION
1.	A26455-001	Drive Motor 115/60/1
3.	13-0709-02	Water shed
4.	02-1607-00	Oil Seal
5.	03-1251-01	Req'd)
6.	02-1606-00	Oil Seal
7.	A22200-000	Gear Case Cover Assembly
8.	02-1681-00	Thrust Race (2)
9.	03-1363-00	Retaining Ring
10.	02-1652-00	Output Shaft
11.	03-1364-00	Key
12.	02-1653-00	Output Gear
14.	02-1680-00	Bearing
15.	02-1679-00	Thrust Race
16.	03-1408-24	Washer (9 Req'd)
17.	02-1604-00	SEcond Gear and Third Pinion Assy.
18.	02-1603-00	First Gear and Second Pinion Assy.
19.	A26103-001	"O" Ring
20.	A22199-000	Case Assy.

CONTROL BOX

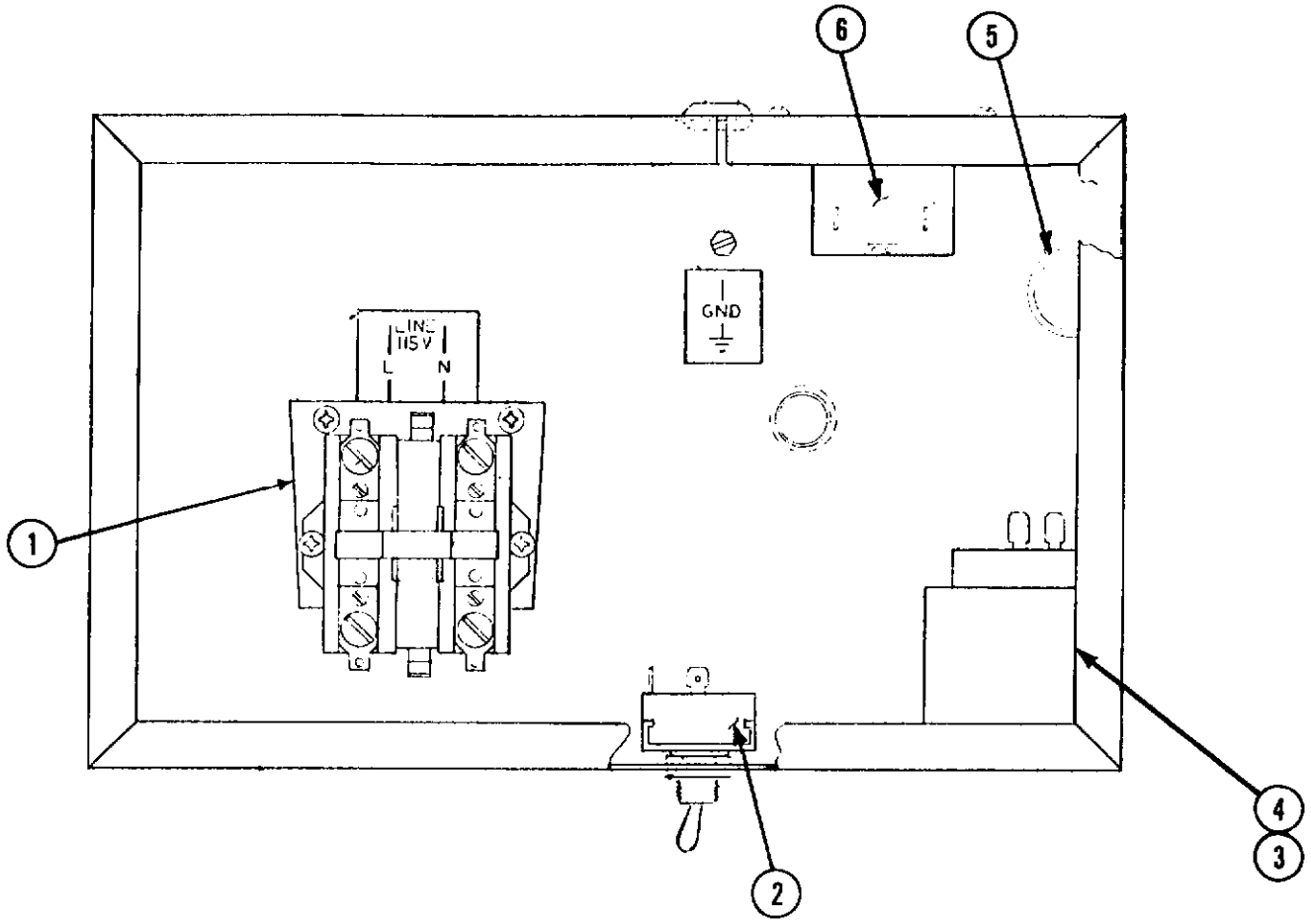

ITEM NO.	PART NO.	DESCRIPTION	
1.	12-0820-01	Contactor	
2.	12-0426-01	Switch	
3.	11-0362-00	Fan Speed Control (Air Cooled Only)	
3.	11-0357-00	High Pressure Control (Water Cooled)	
4.	11-0358-00	Low Pressure Control	
5.	12-1213-10	Snap Bushing	
6.	11-0354-00	Temp Control	
*7.	12-0474-00	Resistor—Fan Speed 115/60/1	Air Cooled Only
	12-0562-00	Resistor—Fan Speed 230/60/1	Air Cooled Only

*Not Shown

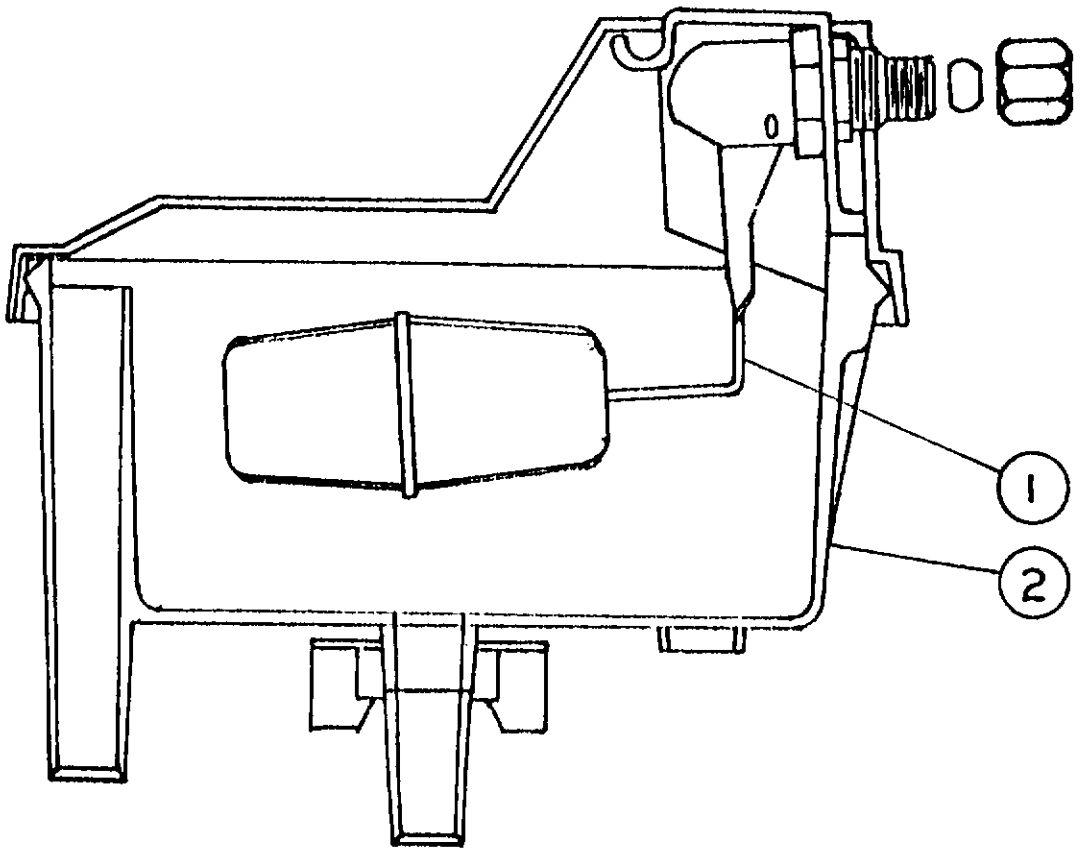

RESERVOIR ASSEMBLY

ITEM NO.	PART NO.	DESCRIPTION
1.	02-2217-02	Valve Assy.
2.	02-2217-01	Reservoir Complete

MOTOR COMPRESSOR

Air and Water

115/60/1 3500 RPM

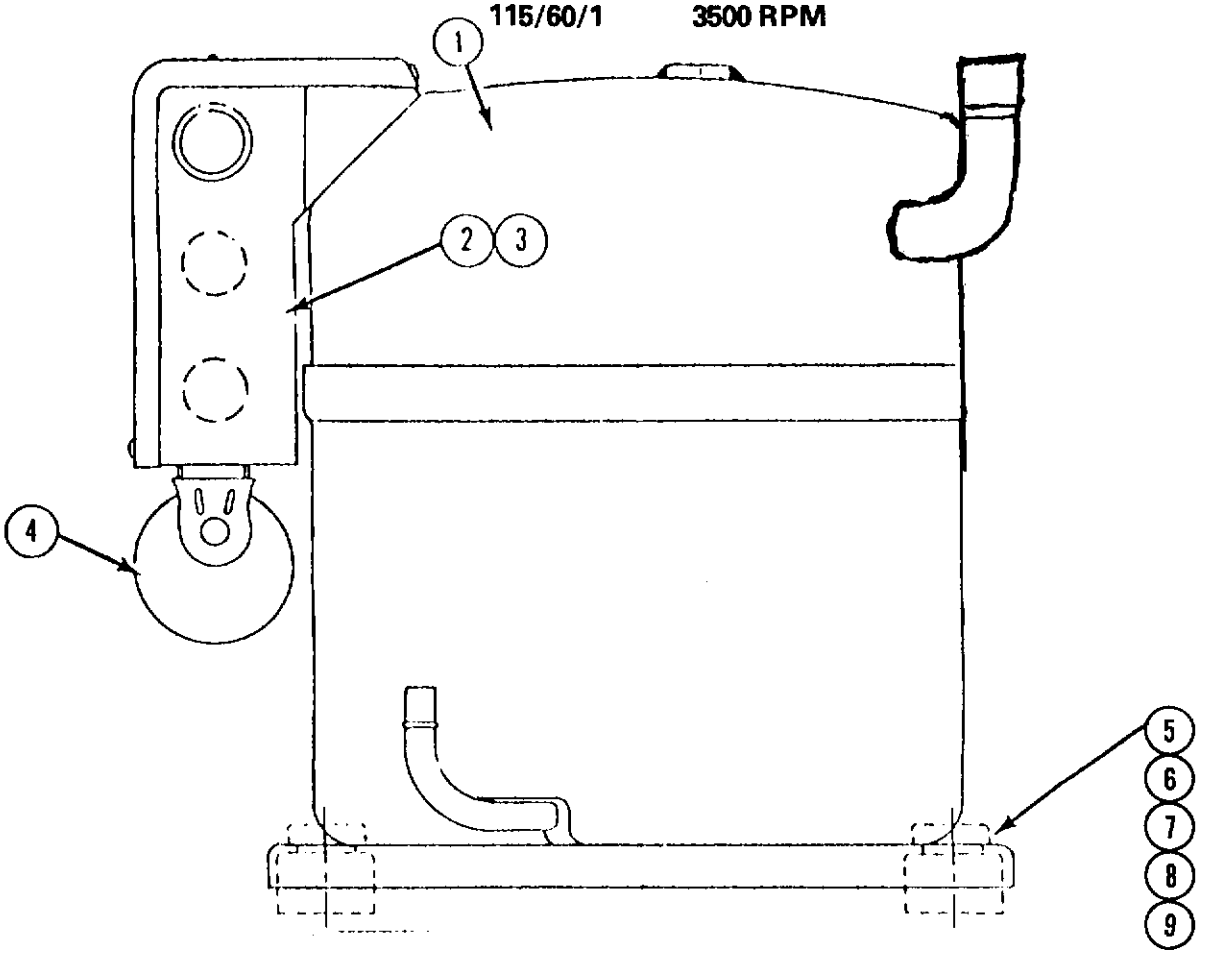

ITEM NO.	PART NO.	DESCRIPTION
1.	18-3900-01	Compressor P.N. RSL2-0075-1AA
2.	18-2410-00	Relay Cope.P.N. 040-0098-01
3.	18-2400-25	Overload Cope. P.N. 071-0127-06
4.	18-2420-00	Capacitor P.N. 014-0008-69
5.	18-2200-28	Mounting Grommet (4)
6.	18-2200-27	Mounting Sleeve (4)
7.	03-1405-40	Screw (4)
8.	03-1417-12	Lockwasher (4)
9.	03-1408-29	Washer (4)

FREEZER ASSEMBLY

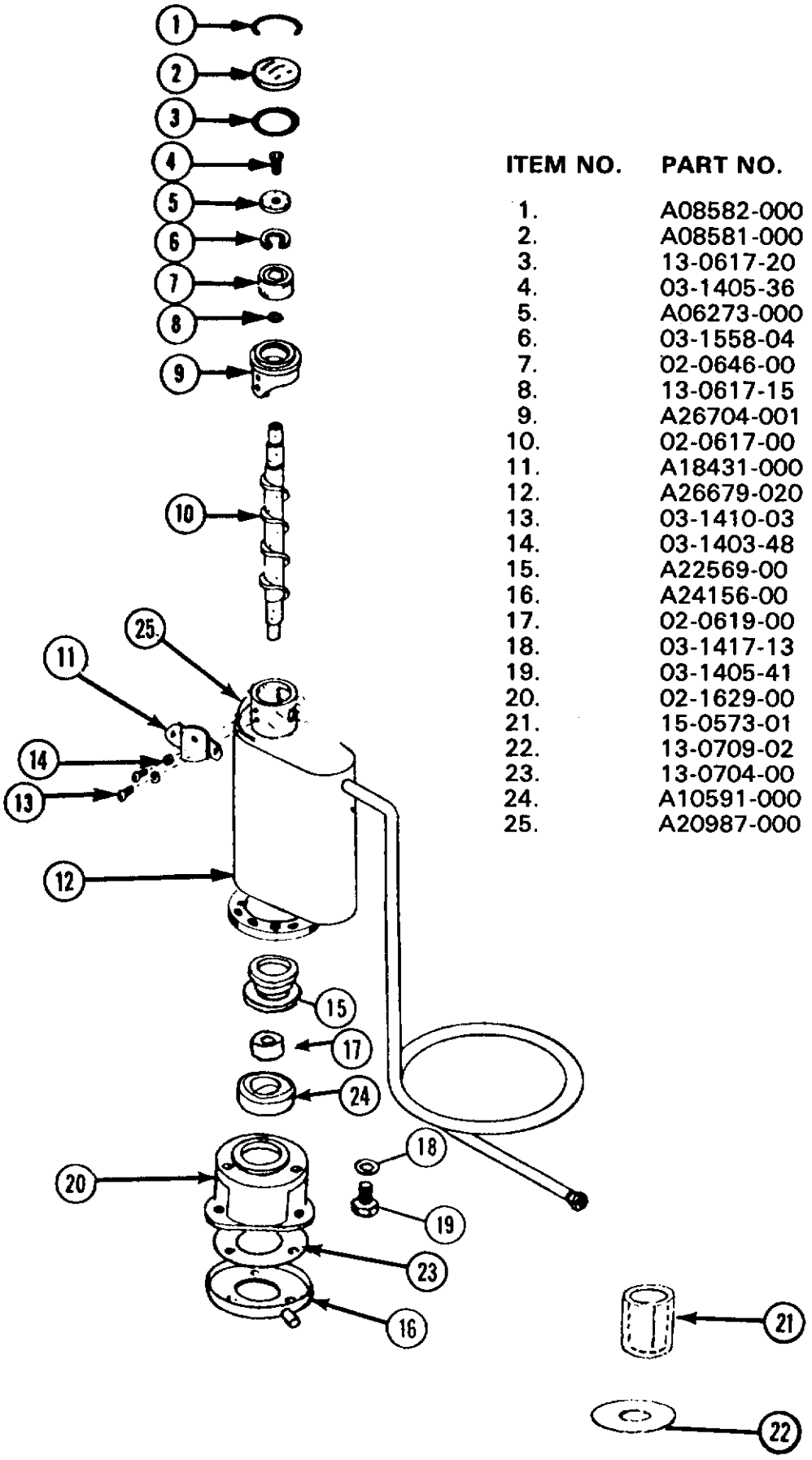

ITEM NO.	PART NO.	DESCRIPTION
1.	A08582-000	Cap Hook
2.	A08581-000	Cap
3.	13-0617-20	O Ring
4.	03-1405-36	Cap Screw
5.	A06273-000	Washer
6.	03-1558-04	Snap Ring
7.	02-0646-00	Bearing
8.	13-0617-15	O Ring
9.	A26704-001	Breaker with Bearing
10.	02-0617-00	Auger
11.	A18431-000	Spout Plate
12.	A26679-020	Worm Tube — Suction Line
13.	03-1410-03	Washer
14.	03-1403-48	Screw
15.	A22569-00	Water Seal
16.	A24156-00	Drip Pan
17.	02-0619-00	Lower Bearing
18.	03-1417-13	Washer
19.	03-1405-41	Screw
20.	02-1629-00	Adapter
21.	15-0573-01	Drive Coupling
22.	13-0709-02	Shaft Drip Shield Rubber
23.	13-0704-00	Cork Gasket
24.	A10591-000	Lower Bearing Retainer
25.	A20987-000	Freezer Support

CHASSIS ASSEMBLY

Air Cooled

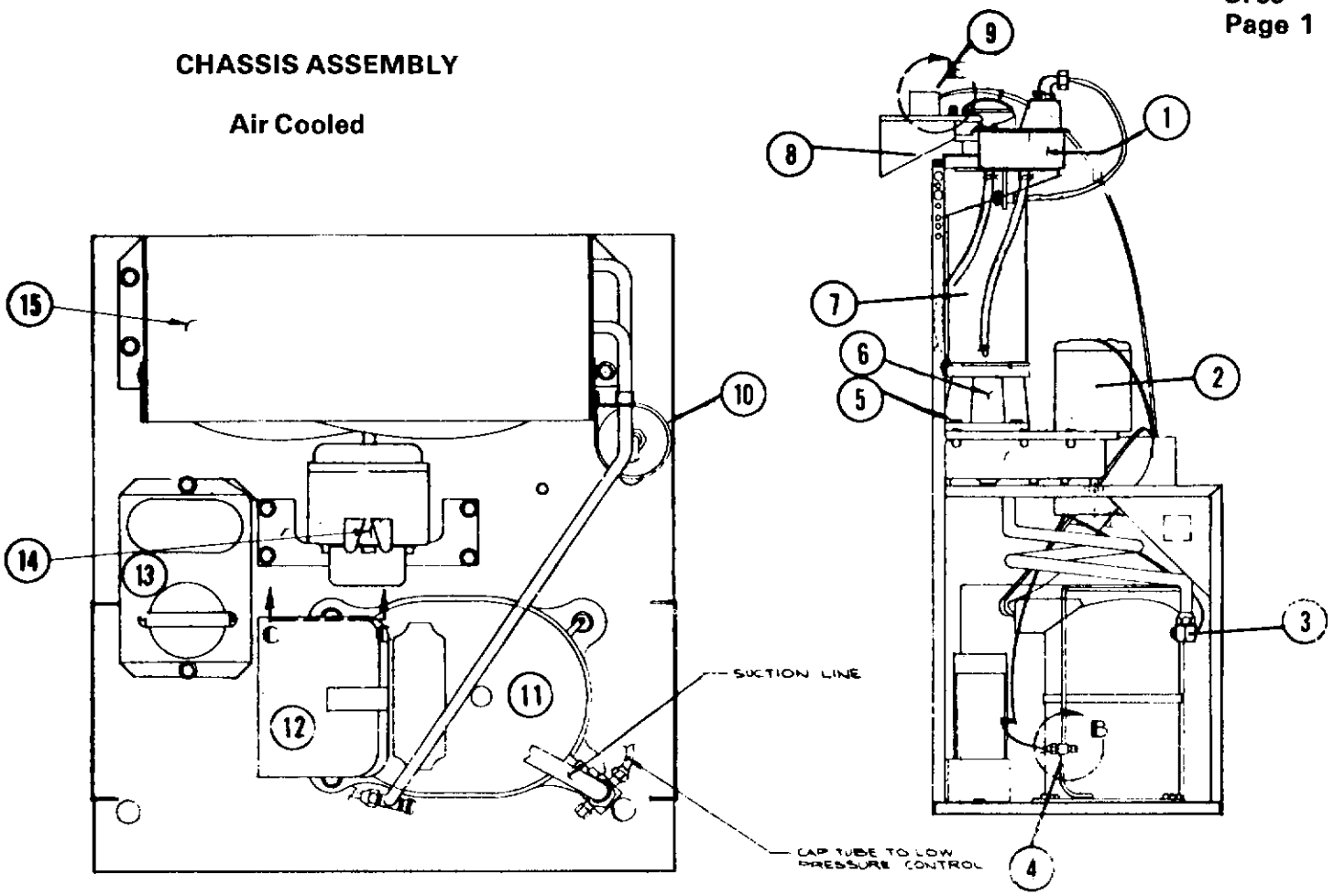

ITEM NO.	PART NO.	DESCRIPTION
1.	See Page 7 & 8	Water Reservoir
2.	See Page 6	Gear Motor 230/60/1
3.	18-2300-28	5/8" Flare Suction Service Valve
4.	16-0563-00	Service Valve Cap
4.	16-0560-00	Service Valve Core
5.	A24156-001	Drip Pan
5.	13-0704-00	Gasket
6.	02-1629-00	Fibre Adapter
6.	15-0573-01	Coupling — Freezer to Gear Motor
6.	03-1405-41	Screws - into Gear Motor (4/unit)
6.	03-1417-13	Lockwasher for above
7.	See Page 5	Freezer Assembly,
8.	A16350-000	Spout
9.	12-1018-00	Spout Micro Switch
10.	02-0544-00	Drier
11.	18-2300-02	Compressor Only 230/60/1
12.	18-2300-25	Compressor Overload
13.	18-1901-15	Start Capacitor
13.	18-1902-29	Running Capacitor
13.	18-1903-29	Relay
14.	18-0788-02	Fan Motor
14.	18-0787-00	Fan Blade
15.	18-0530-00	Condenser
15.	A17901-000	Condenser Shroud

CHASSIS ASSEMBLY

Water Cooled

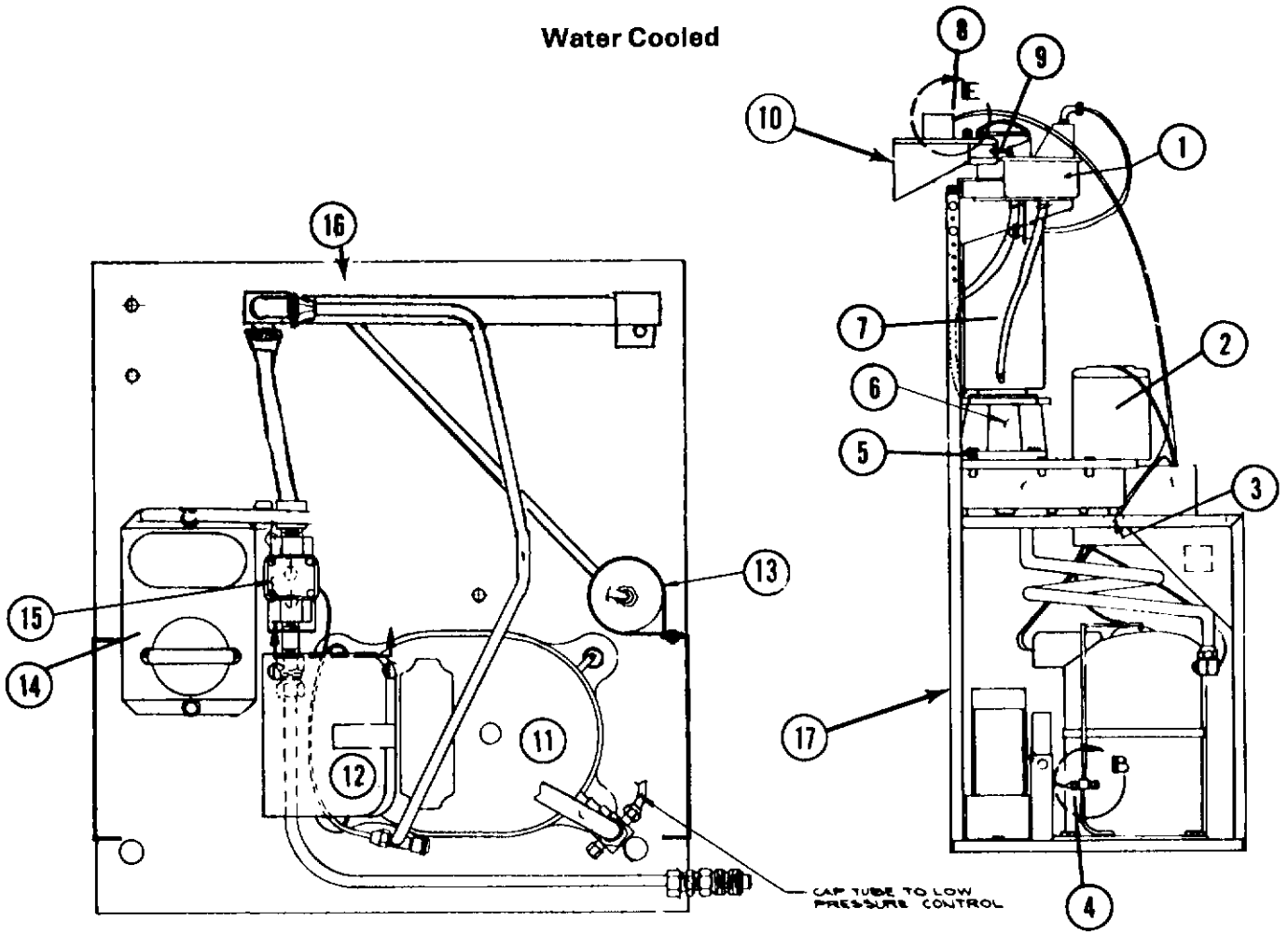

ITEM NO.	PART NO.	DESCRIPTION
1.	See Page 7 & 8	Water Reservoir
2.	See Page 6	Gear motor 230/60/1
3.	03-1405-18	Mounting Screws (3/Units)
3.	03-1410-04	Washers
4.	16-0563-00	Service Valve Cap
4.	16-0560-00	Service Valve Core
5.	A24156-001	Drip Pan
6.	02-1629-00	Fibre Adapter
6.	15-0573-01	Coupling Freezer to Gear Motor
6.	03-1405-41	Screws into Gear Motor (4/Unit)
6.	03-1417-13	Lockwashers for above
7.	See Page 5	Freezer Assembly
8.	A16350-000	Spout
9.	12-1018-00	Spout Micro Switch
10.	A16353-008	Spout pressure Plate
11.	18-2300-02	Compressor Only
12.	18-2300-25	Compressor Overload
13.	02-0544-00	Drier
14.	18-1901-15	Start Capacitor
14.	18-1902-29	Running Capacitor
14.	18-1903-29	Relay
15.	11-0198-00	Water Regulating Valve
16.	18-0354-00	Bar Condenser, Newer Units Use Round Condenser 18-3306-02
17.	A23147-000	Chassis

CASE ASSEMBLY

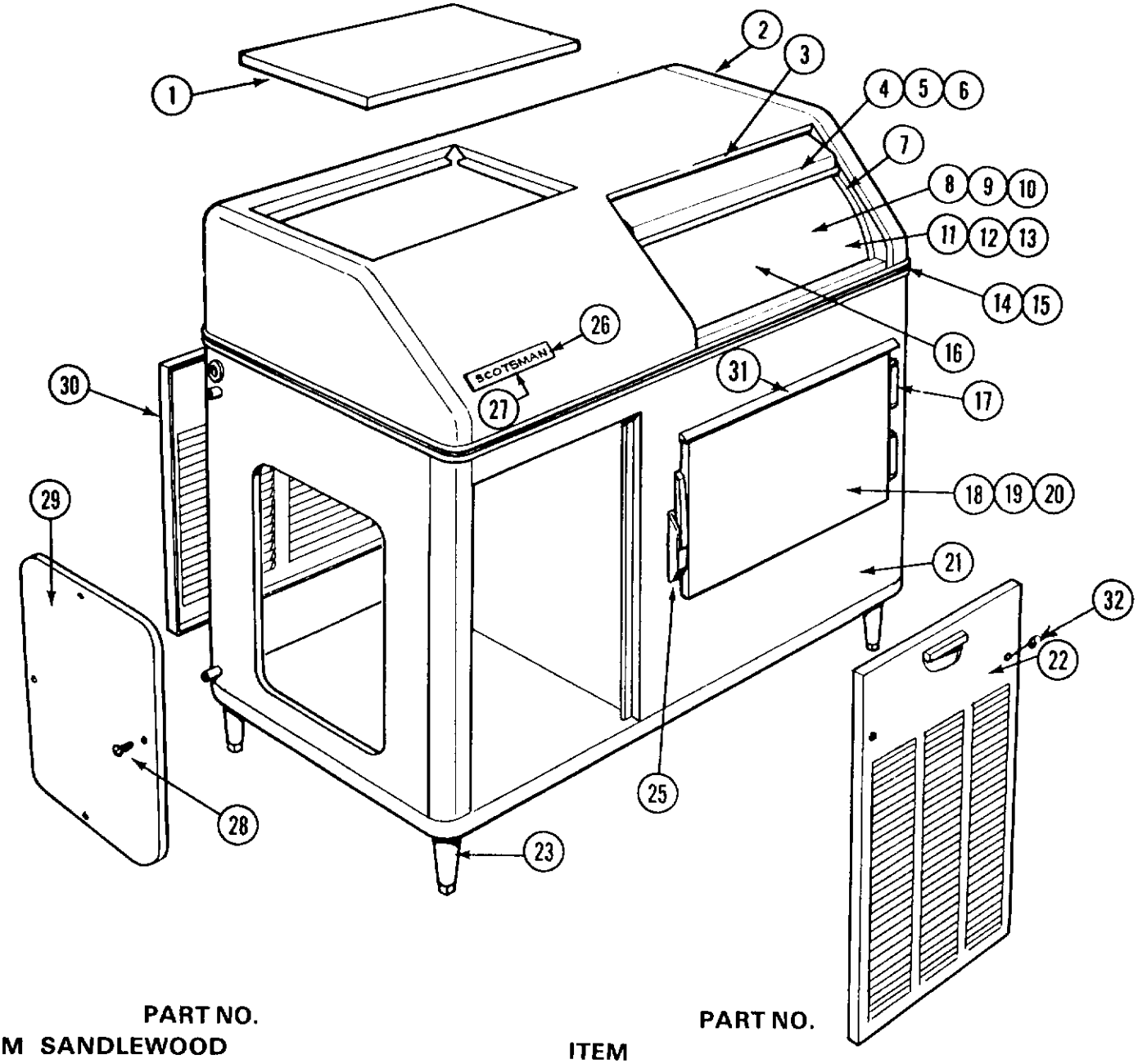

ITEM NO.	PART NO. SANDLEWOOD ENAMEL	S.S.	DESCRIPTION
1.	A07676-005	A07676-00S	Top Door
2.	A21026-008	A21026-001	Hood Assy.
1 3.	02-1736-00	Same	Door Stop
1 4.	02-1735-01	A15559-000	Sliding Door
5.	None	03-0640-00	Door Glides (door)
6.	03-1195-00	Same	Door Glides (hood)
7.	A16208-000	"	Door Track
8.	A20176-000	"	Storage Bin
11.	13-0617-11	"	"O" Ring* (drain)
12.	02-1741-00	"	Drain Fitting (Top)
13.	02-1742-00	"	Drain (Bottom)*
14.	15-0324-00	"	Plastic Trim (per ft.)
15.	S06413-000	"	Front Moulding Strip
16.	02-1615-00	"	Bulb Holders (2)
17.	02-1569-00	"	Hinge (2 req'd)

ITEM NO.	PART NO. ENAMEL	S.S.	DESCRIPTION
18.	A18300-010	A18300-002	Door Assy. Complete
19.	13-0264-00	Same	Door Gasket
20.	02-1000-00	"	Door Liner
21.	A19930-008	A19930-001	Case Assy. (less doors)
22.	A23148-008	A23148-001	Front Door
23.	KLP2E	KLP2S	
24.			
25.	02-1568-00	Same	Door Latch
26.	15-0156-00	Same	Emblem
27.	03-0271-00	Same	Speednut
28.	03-1419-04	Same	Screw
29.	S06713-008	S06713-00S	Side Door
30.	A07247-008	A07247-00S	Rear Door
31.	A16937-000	A16937-001	Awning
32.	03-1419-09	Same	Screw

*Not Shown

1 02-1735-00 Grey Door is still available for older units.

CONTROL BOX ASSEMBLY

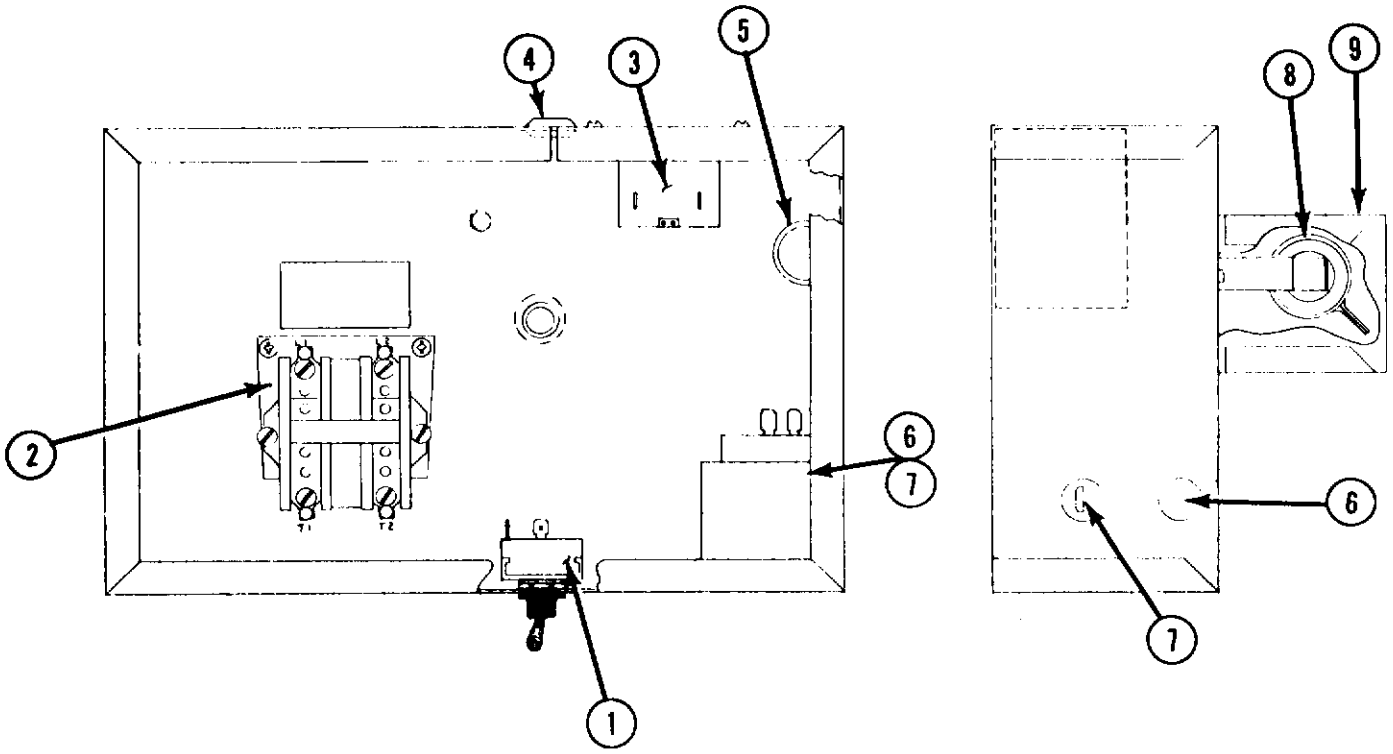

ITEM NO.	PART NO.	DESCRIPTION
1.	12-0426-01	Switch
2.	12-0820-02	Contactor
3.	11-0354-00	Bin Thermostat
4.	13-0557-00	Grommet
5.	12-1213-10	Snap Bushing
6.	11-0358-00	Low Pressure Control
7.	11-0362-00	Hi Pressure Control
8.	12-0481-00	Resistor (Air Cooled Only)
9.	A14369-000	Cover (Air Cooled Only)

FREEZER ASSEMBLY

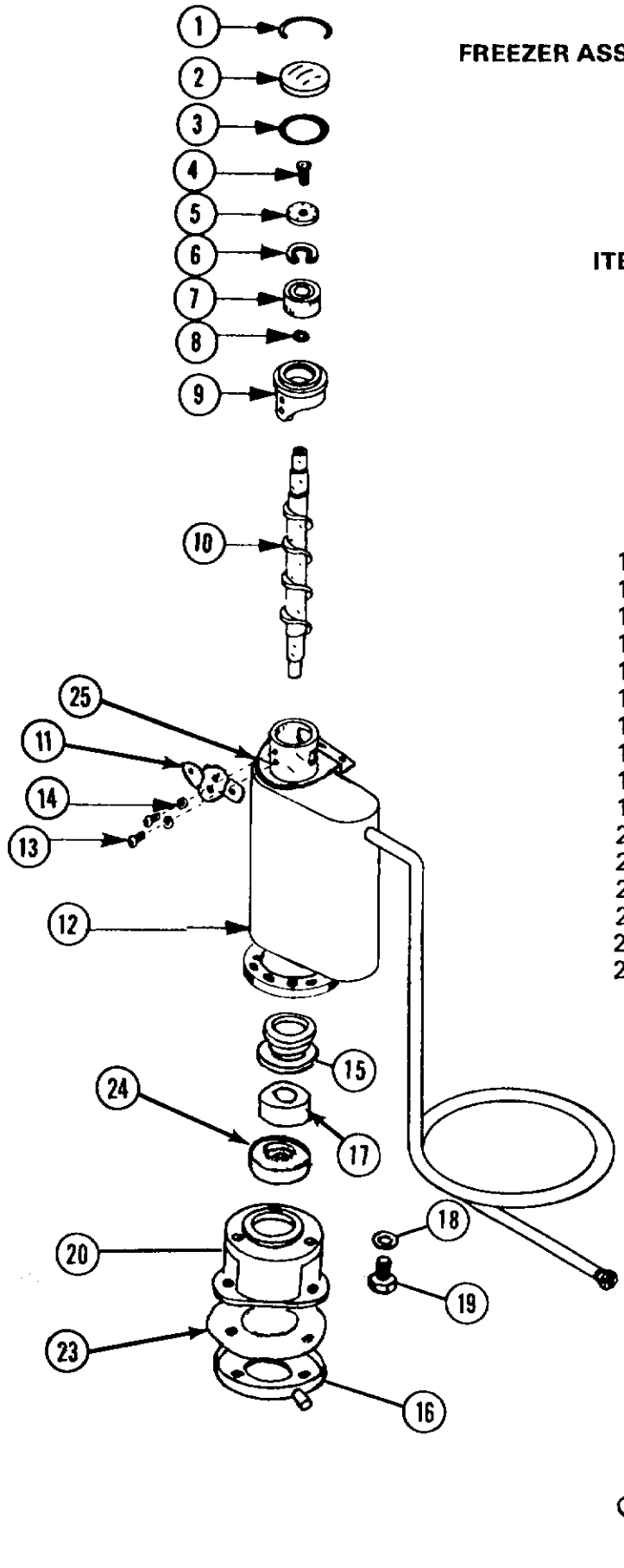

ITEM NO.	PART NO.	DESCRIPTION
1.	A08582-000	Cap Hook
2.	A08581-000	Cap
3.	13-0617-20	"O" Ring
4.	03-1405-36	Cap Screw
5.	A06273-000	Washer
6.	03-1558-04	Snap Ring
7.	02-0646-00	Bearing
8.	13-0617-15	"O" Ring
9.	A26705-001	Breaker with Bearing
10.	02-0751-00	Auger
11.	A18432-000	Spout Plate
12.	A26696-020	Worm Tube—Suction Line
13.	03-1410-03	Washer
14.	03-1403-48	Screw
15.	A22569-000	Water Seal
16.	A24156-001	Drip Pan
17.	02-0619-00	Lower Bearing
18.	03-1410-04	Washer
19.	03-1405-41	Screw
20.	02-1629-00	Adapter
21.	15-0573-01	Drive Coupling
22.	13-0709-02	Shaft Drip Shield Rubber
23.	13-0704-00	Drip Pan Gasket
24.	A10591-000	Lower Bearing Retainer
25.	A20987-000	Freezer Support

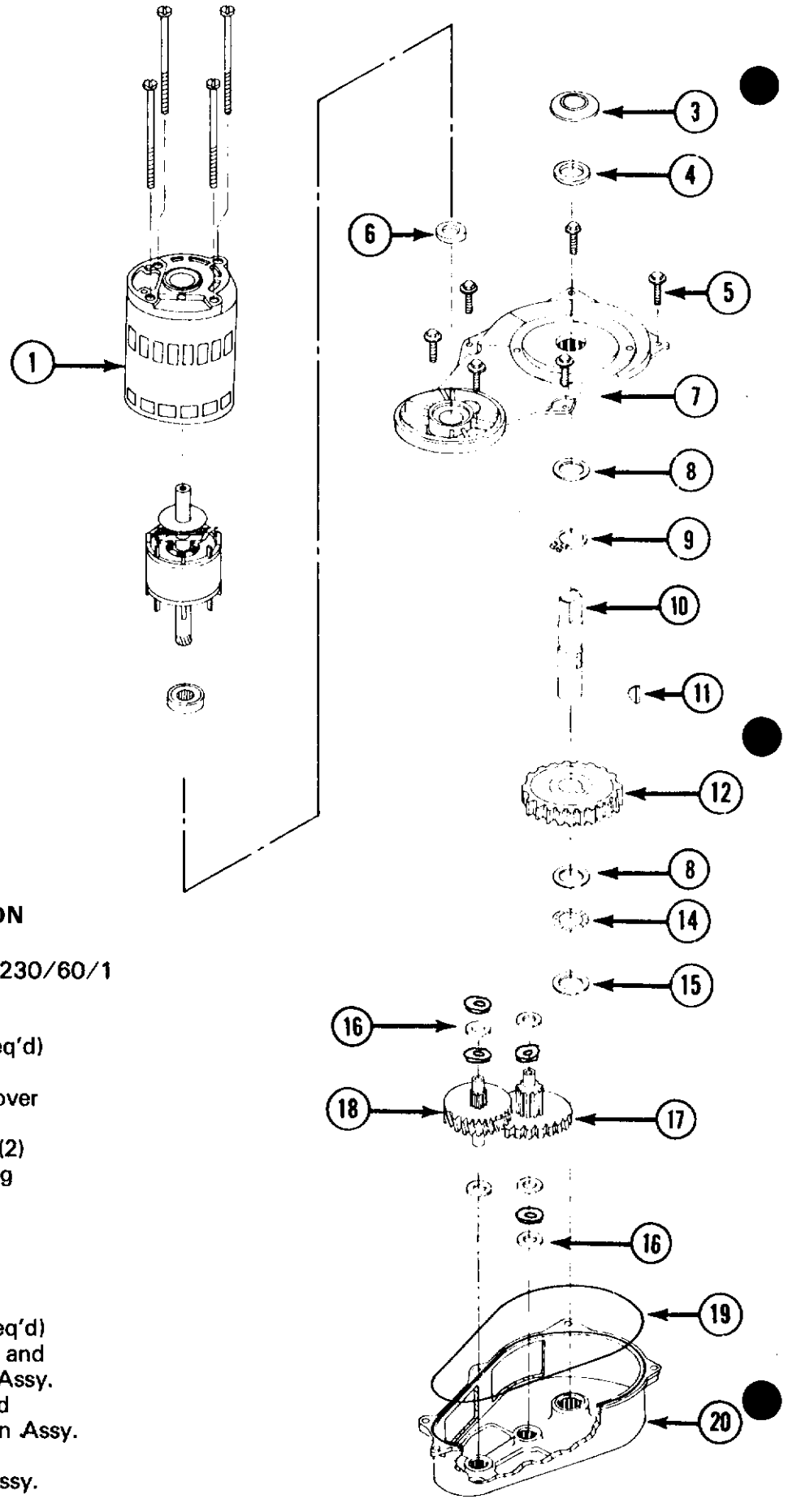

A22750-022
GEAR MOTOR ASSEMBLY
1/4 HP 230/60/1
OUTPUT SHAFT TURNS
AT 10 RPM

ITEM NO.	PART NO.	DESCRIPTION
1.	A26455-002	Drive Motor 230/60/1
3.	13-0709-02	Water Shed
4.	02-1607-00	Oil Seal
5.	03-1251-01	Screws (6 Req'd)
6.	02-1606-00	Oil Seal
7.	A22200-000	Gear Case Cover Assembly
8.	02-1681-00	Thrust Race (2)
9.	03-1363-00	Retaining Ring
10.	02-1652-00	Output Shaft
11.	03-1364-00	Key
12.	02-1653-00	Output Gear
14.	02-1680-00	Bearing
15.	02-1679-00	Thrust Race
16.	03-1408-24	Washer (9 Req'd)
17.	02-1604-00	Second Gear and Third Pinion Assy.
18.	02-1603-00	First Gear and Second Pinion Assy.
19.	A26103-001	"O" Ring
20.	A22199-000	Gear CAse Assy.

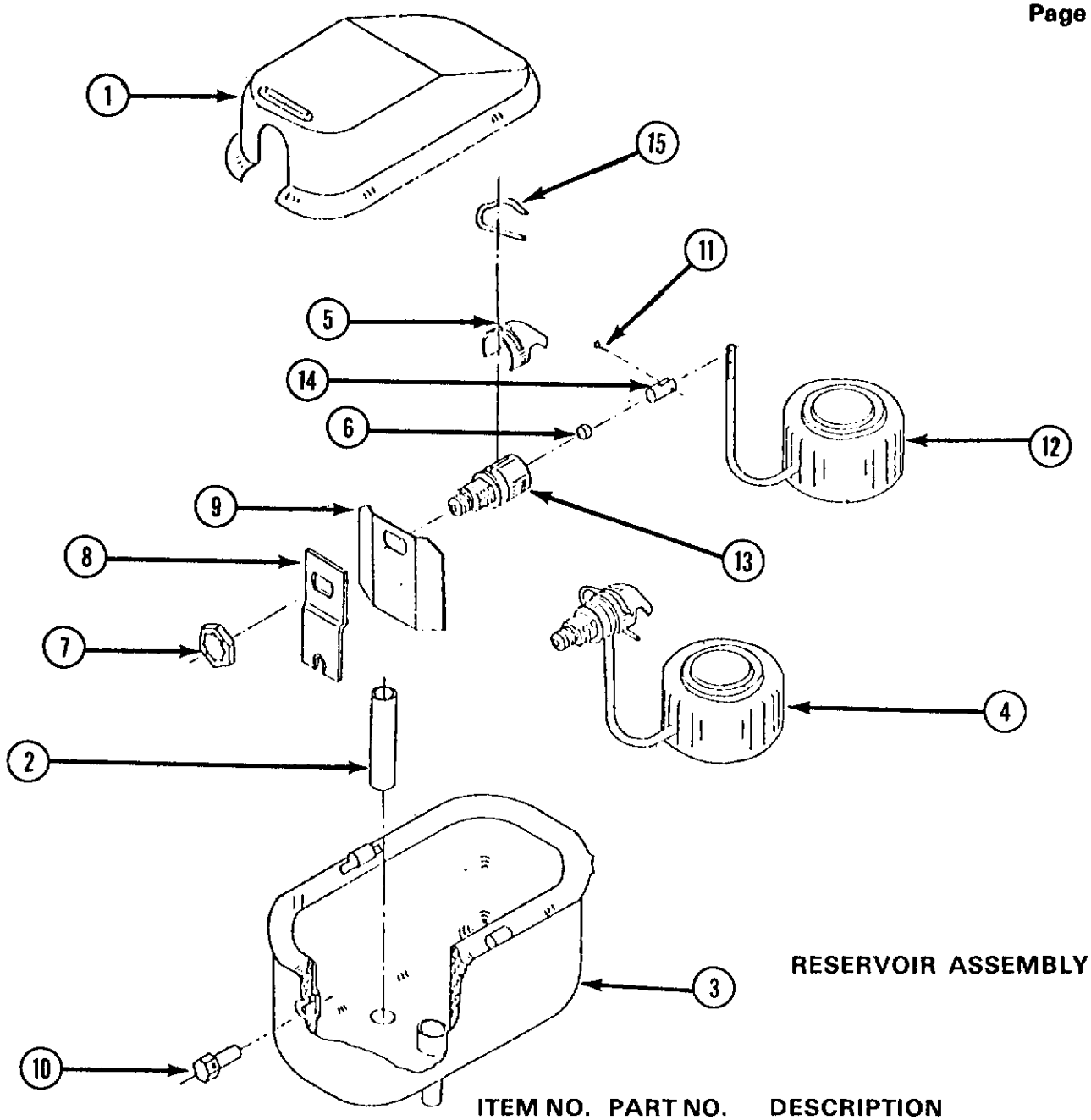

RESERVOIR ASSEMBLY

ITEM NO.	PART NO.	DESCRIPTION
1.	A16012-000	Reservoir Cover
2.	S06715-000	Stand Pipe
3.	A08339-000	Reservoir Complete Less Item No. 1 & 2
4.	S08138-000	Valve Complete Includes Items 5, 6, 11, 12, 13, 14 & 15
5.	02-1320-00	Water Deflector
6.	S06947-000	Valve Seat
7.	03-1394-00	Pal Nut
8.	A12869-000	Bracket
9.	A18418-001	Water Deflector
10.	A08055-000	Bracket Nut
11.	03-1001-00	Rivet
*12.		Float
*13.		Inlet Valve
*14.		Valve Seat Holder
15.	02-1259-00	Valve Pin

NOTE: Use of this reservoir was discontinued about mid 1975. Current units use the reservoir on page 8.

*Use Item #4

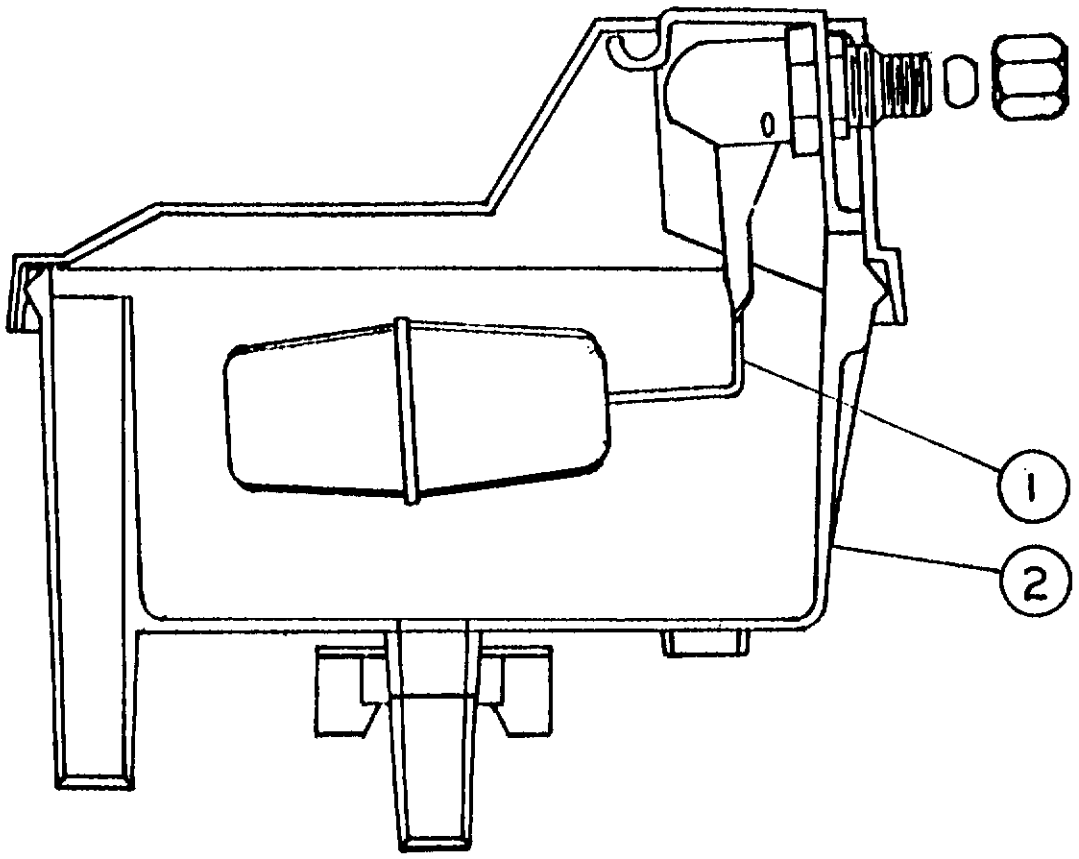

RESERVOIR ASSEMBLY

ITEM NO.	PART NO.	DESCRIPTION
1.	02-2217-02	Valve Assy.
2.	02-2217-01	Reservoir Complete

NOTE: Used on present models Mid 1975 on.

AIR COOLED

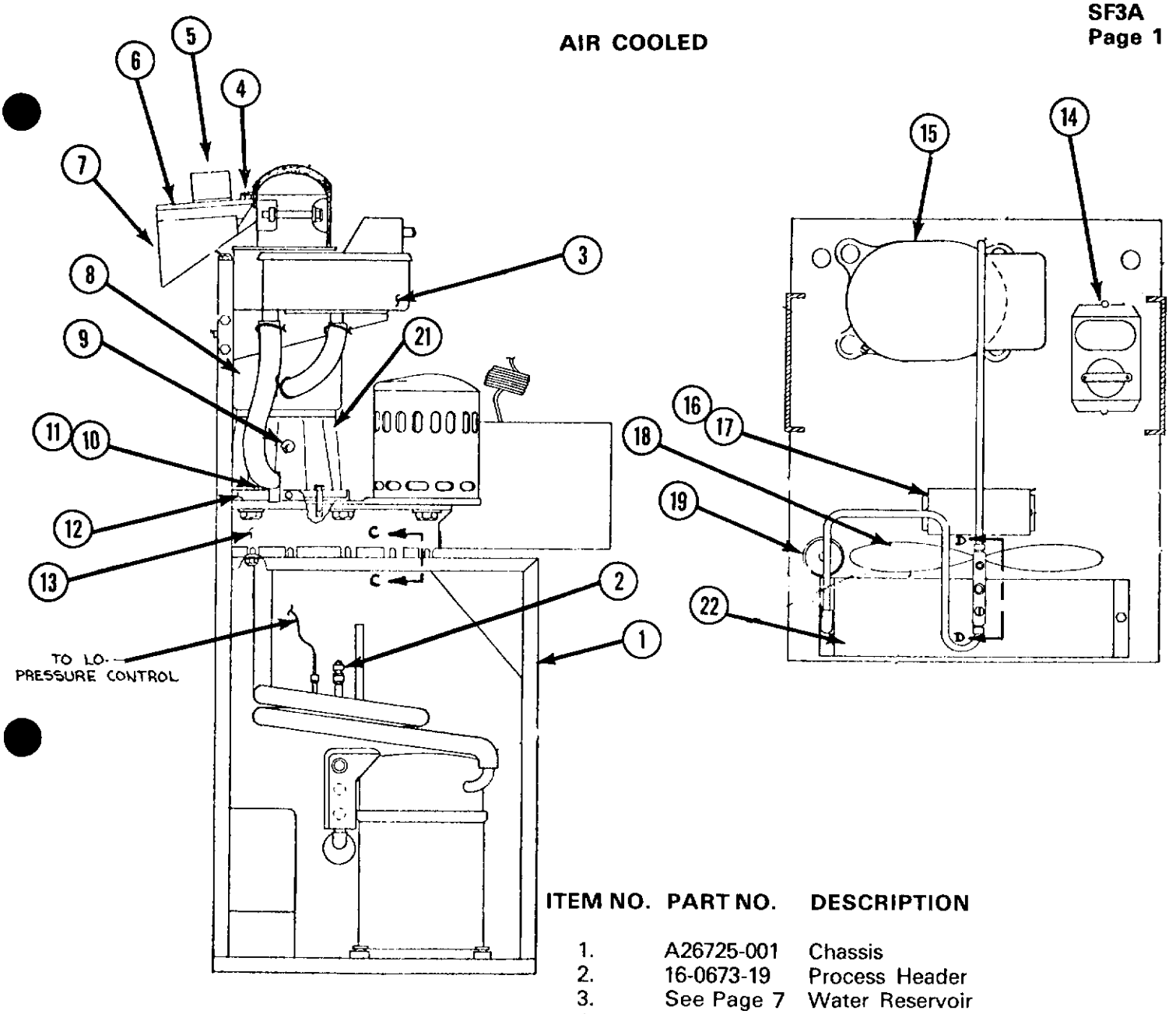

ITEM NO.	PART NO.	DESCRIPTION
1.	A26725-001	Chassis
2.	16-0673-19	Process Header
3.	See Page 7	Water Reservoir
4.	A14256-000	Nut
5.	12-1018-00	Spout Micro Switch
6.	A16350-000	Spout
7.	A16353-000	Spout Pressure Plate
8.	See Page 6	Freezer Assy. (See Exploded View)
9.	15-0573-01	Coupling
10.	03-1420-03	Screw
11.	03-1408-03	Washer
12.	A24156-001	Drip Pan
13.	See Page 3	Gear Motor Complete
14.	18-1900-31	Relay & Capacitor
15.	18-3800-02	Compressor
16.	18-0788-02	Fan Motor
17.	18-0597-00	Motor Mount
18.	18-0787-00	Fan Blade
19.	02-0544-01	Drier
20.	18-0397-01	Condenser
21.	02-1629-00	Fibre Adapter
22.	A17901-00	Condenser Shroud

WATER COOLED

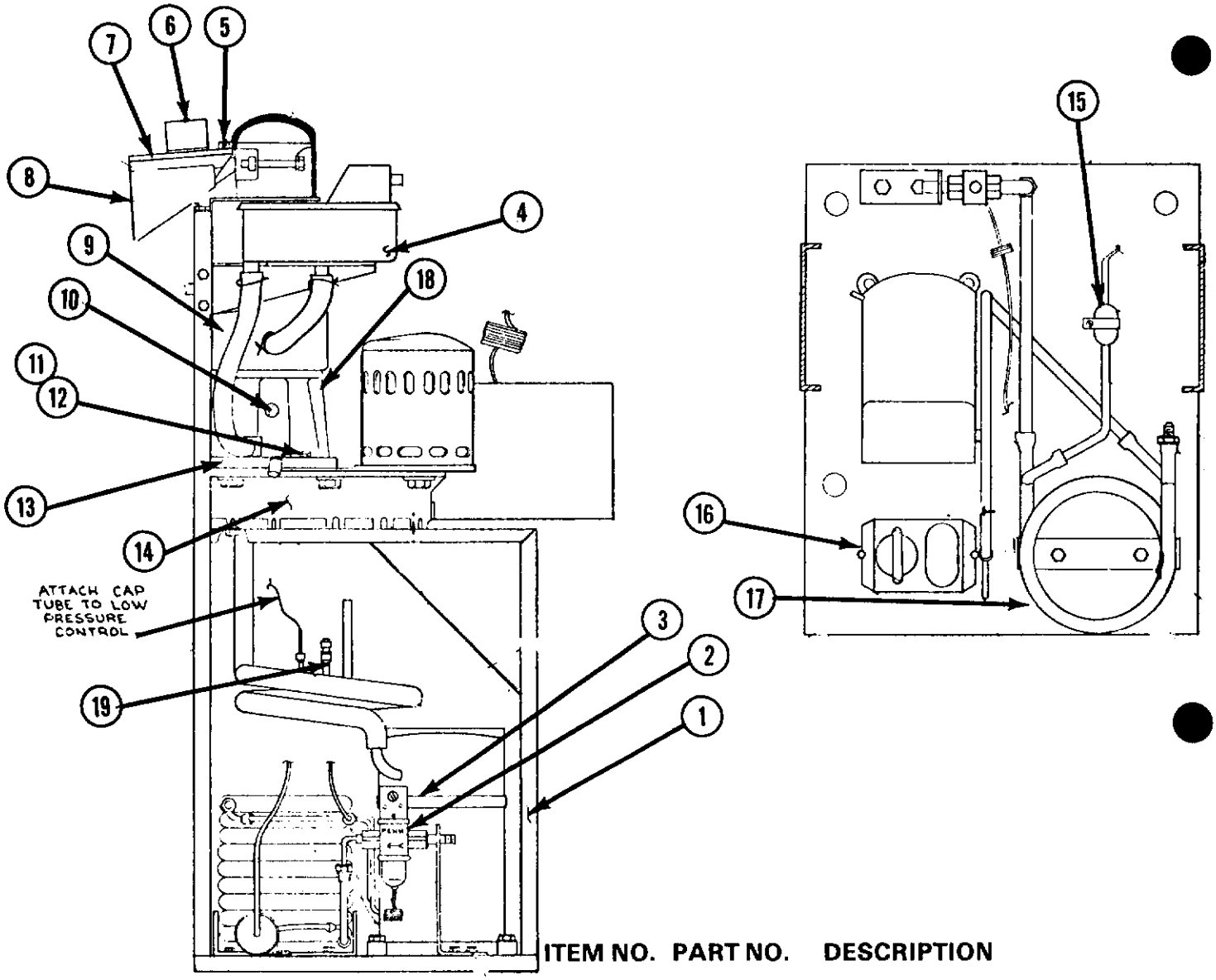

ITEM NO.	PART NO.	DESCRIPTION
1.	A26725-001	Chassis
2.	11-0198-00	Water Regulating Valve
3.	18-3800-02	Compressor
4.	See Page 7	Water Reservoir
5.	A14256-000	Nut
6.	12-1018-00	Spout Micro Switch
7.	A16350-000	Spout
8.	A16353-000	Spout Pressure Plate
9.	See Page 6	Freezer Assy
10.	15-0573-01	Coupling
11.	03-1420-03	Screw
12.	03-1408-03	Washer
13.	A24156-001	DripPan
14.	See Page 3	Gear Motor Complete
15.	02-0544-01	Drier
16.	18-1900-31	Relay and Capacitor
17.	18-3306-02	Water Cooled Condenser
18.	03-1629-00	Fibre Adapter
19.	16-0673-19	Process Header

A22750-022
GEAR MOTOR ASSEMBLY
1/4 HP 230/60/1
OUTPUT SHAFT TURNS
AT RPM

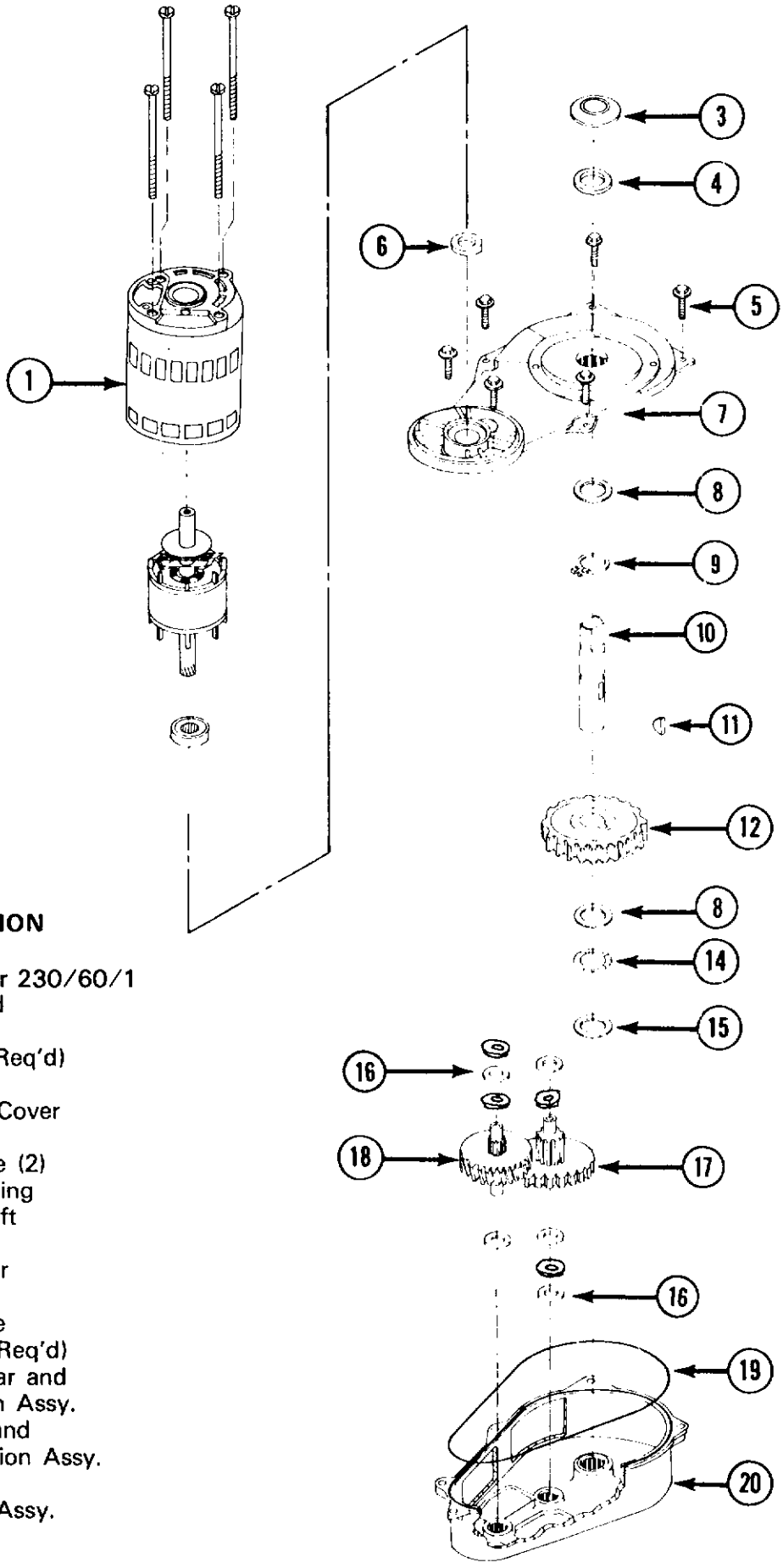

ITEM NO.	PART NO.	DESCRIPTION
1.	A26455-002	Drive Motor 230/60/1
3.	13-0709-02	Water Shed
4.	02-1607-00	Oil Seal
5.	03-1251-01	Screws (6 Req'd)
6.	02-1606-00	Oil Seal
7.	A22200-000	Gear Case Cover Assembly
8.	02-1681-00	Thrust Race (2)
9.	03-1363-00	Retaining Ring
10.	02-1652-00	Output Shaft
11.	03-1364-00	Key
12.	02-1653-00	Output Gear
14.	02-1680-00	Bearing
15.	02-1679-00	Thrust Race
16.	02-1408-24	Washer (9 Req'd)
17.	02-1604-00	Second Gear and Third Pinion Assy.
18.	02-1603-00	First Gear and Second Pinion Assy.
19.	A26103-001	"O" Ring
20.	A22199-000	Gear Case Assy.

CONTROL BOX ASSEMBLY

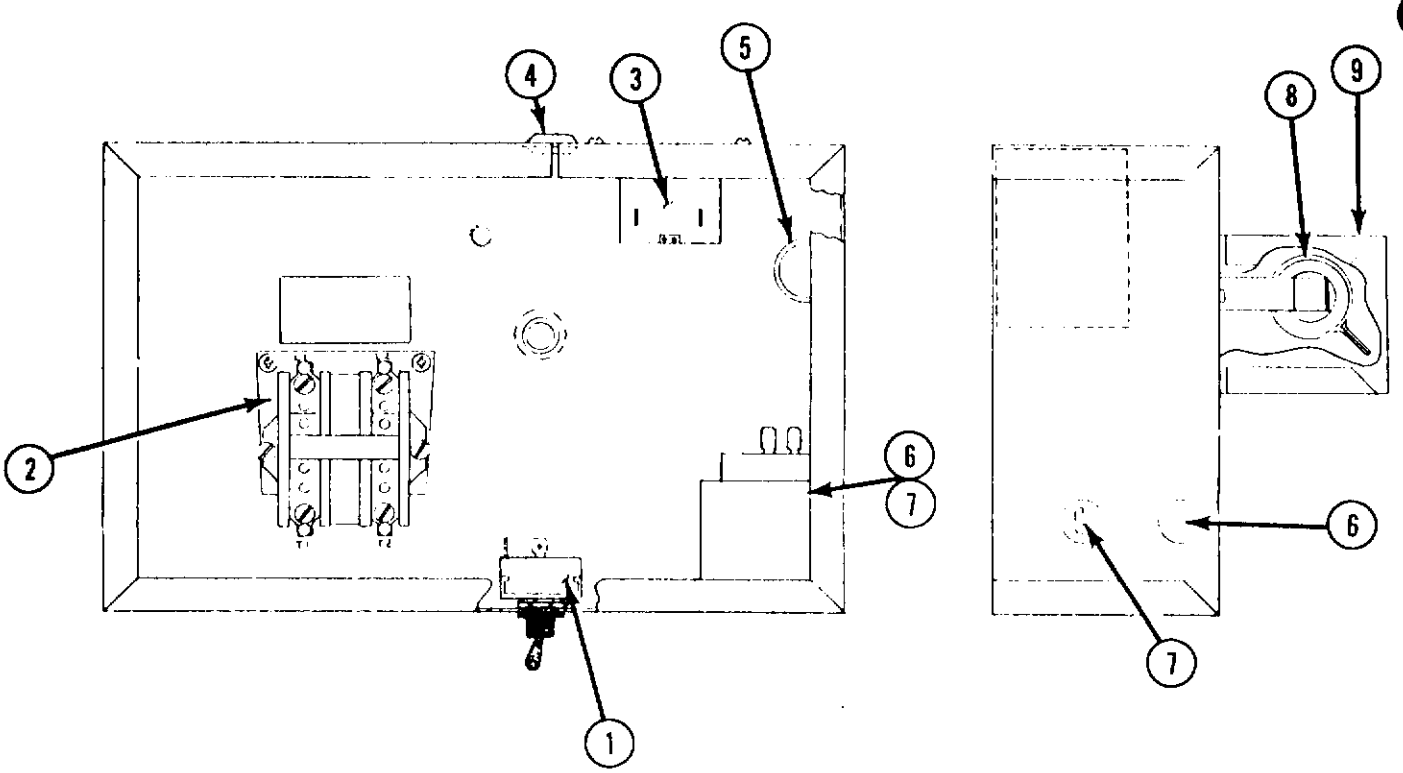

ITEM NO.	PART NO.	DESCRIPTION
1.	12-0426-01	Switch
2.	12-0820-02	Contactor
3.	11-0354-00	Bin Thermostat
4.	13-0557-00	Grommet
5.	12-1213-10	Snap Bushing
6.	11-0358-00	Lo Pressure Control
7.	11-0362-00	Hi Pressure Control
8.	12-0481-00	Resistor (Air Cooled Only)
9.	A14369-000	Cover (Air Cooled Only)

CASE ASSEMBLY

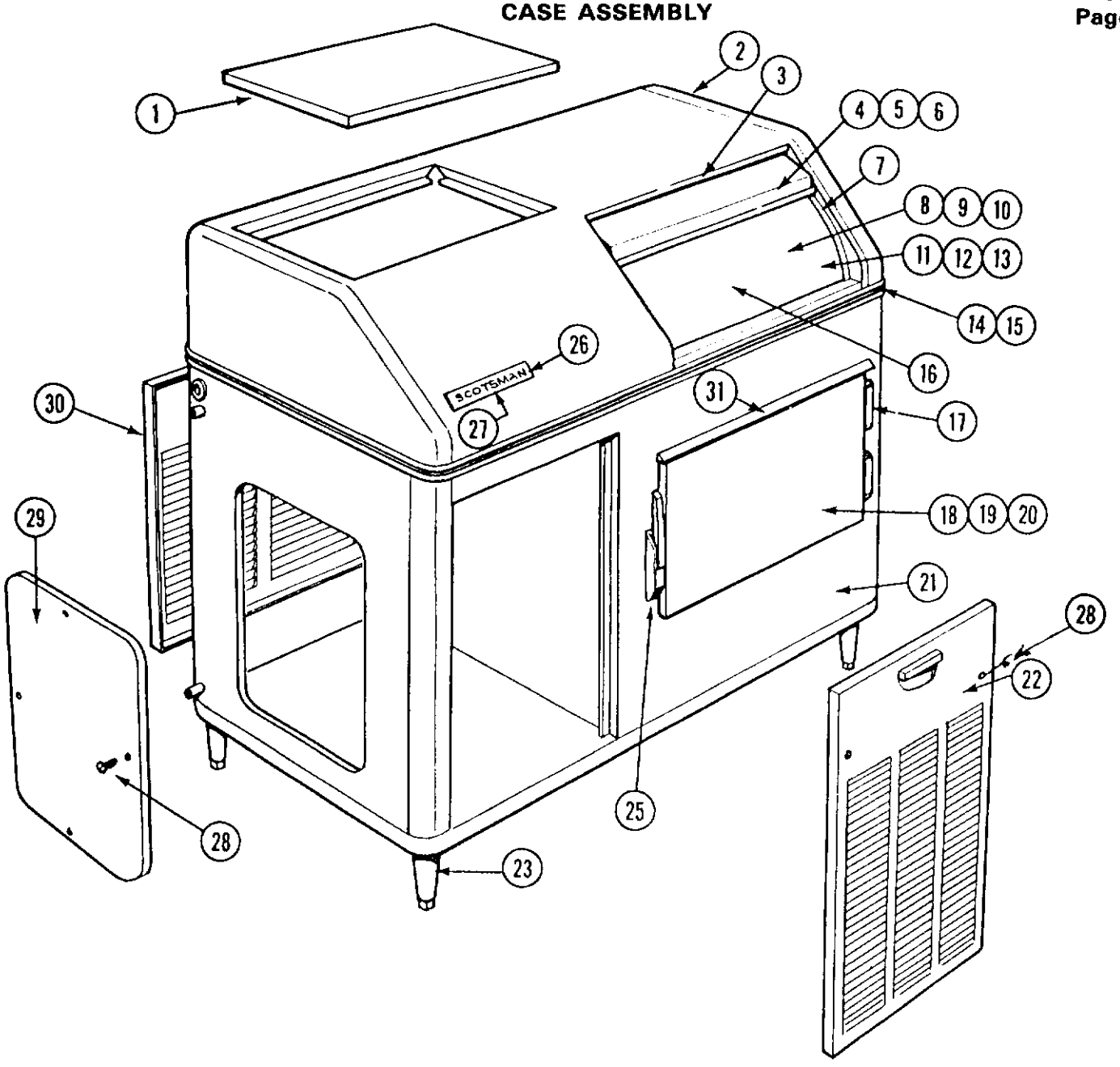

ITEM NO.	PART NO. Enamel	S.S.	DESCRIPTION
1.	A07676-005	A07676-00S	Top Door
2.	A21026-008	A21026-001	Hood Assy.
3.	02-1736-00	Same	Door Stop
4.	02-1735-01	A15559-000	Sliding Door
5.	None	03-0640-00	Door Gides (door)
6.	03-1195-00	Same	Door Glides (hood)
7.	A16208-000	"	Door Track
8.	A20176-000	"	Storage Bin
11.	13-0617-11	"	"O" Ring* (Drain)
12.	02-1741-00	"	Drain Fitting (Top)*
13.	02-1742-00	"	Drain (Bottom)*
14.	15-0324-00	"	Plastic Trim (Per Ft.)
15.	S06413-000	"	Front Moulding Strip
16.	02-1615-00	"	Bulb Holders (2)
17.	02-1569-00	"	Hinge (2 Req'd)
18.	A18300-010	A18300-002	Door Assy. Complete

ITEM NO.	PART NO. Enamel	S.S.	DESCRIPTION
19.	13-0264-00	Same	Door Gasket
20.	02-1000-00	"	Door Liner
21.	A19930-008	A19930-001	Case Assy. (less doors)
22.	A23148-008	A23148-001	Front Door
23.	KLP2E	KLP2S	Legs
24.			
25.	02-1568-00	Same	Door Latch
26.	15-0156-00	"	Emblem
27.	03-0271-00	"	Speednut
28.	03-1419-09	"	Screw
29.	S06713-008	S06713-00S	Side Door
30.	A07247-008	A07247-00S	Rear Door
31.	A16937-000	A16937-001	Awning

*Not Shown

FREEZER ASSEMBLY

MODELS

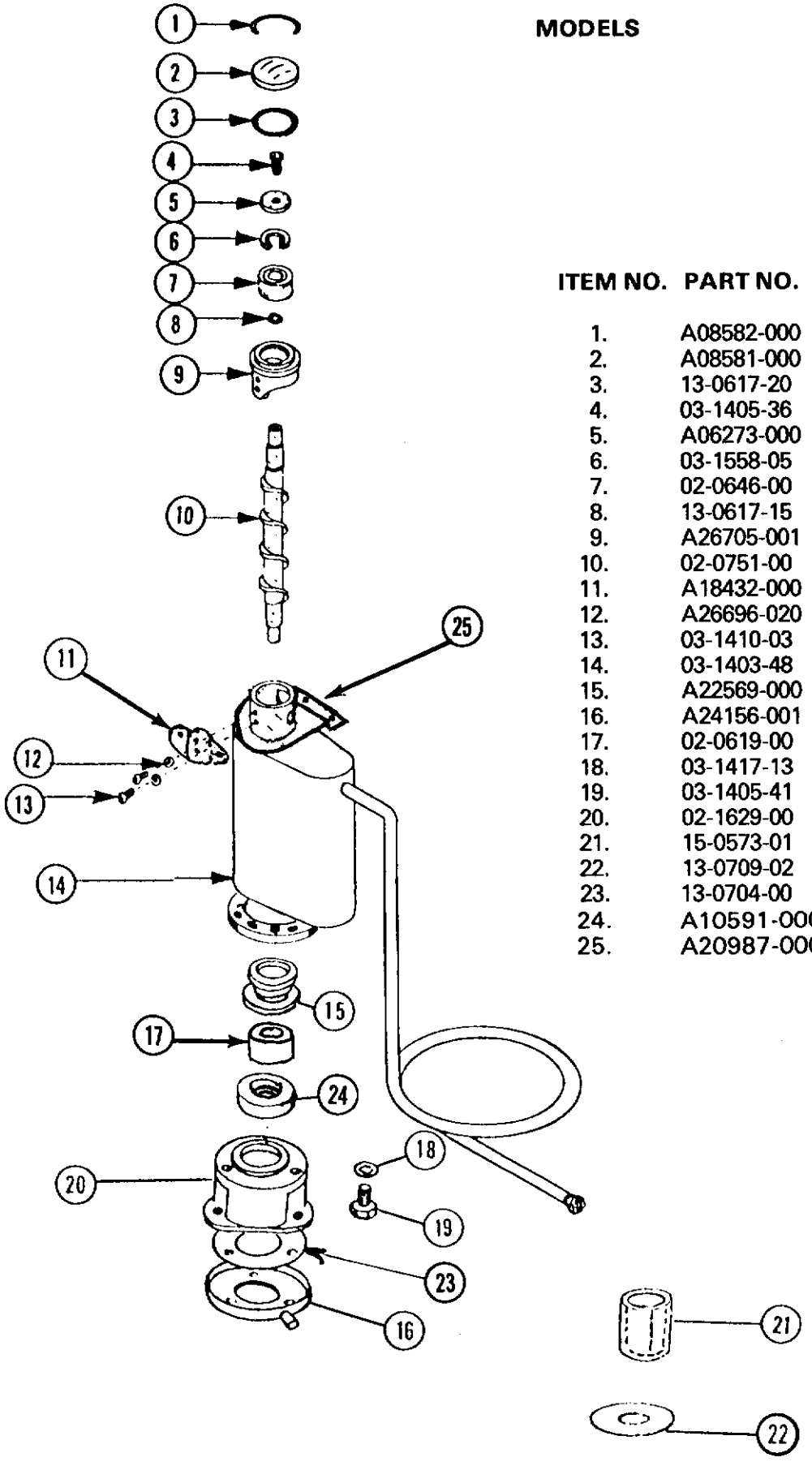

ITEM NO.	PART NO.	DESCRIPTION
1.	A08582-000	Cap Hook
2.	A08581-000	Cap
3.	13-0617-20	"O" Ring
4.	03-1405-36	Cap Screw
5.	A06273-000	Washer
6.	03-1558-05	Snap Ring
7.	02-0646-00	Bearing
8.	13-0617-15	"O" Ring
9.	A26705-001	Breaker with Bearing
10.	02-0751-00	Auger
11.	A18432-000	Spout Plate
12.	A26696-020	Worm Tube — Suction Line
13.	03-1410-03	Washer
14.	03-1403-48	Screw
15.	A22569-000	Water Seal
16.	A24156-001	Drip Pan
17.	02-0619-00	Lower Bearing
18.	03-1417-13	Washer
19.	03-1405-41	Screw
20.	02-1629-00	Adapter
21.	15-0573-01	Drive Coupling
22.	13-0709-02	Shaft Drip Shield Rubber
23.	13-0704-00	Drip Pan Gasket
24.	A10591-000	Lower Bearing Retainer
25.	A20987-000	Freezer Support

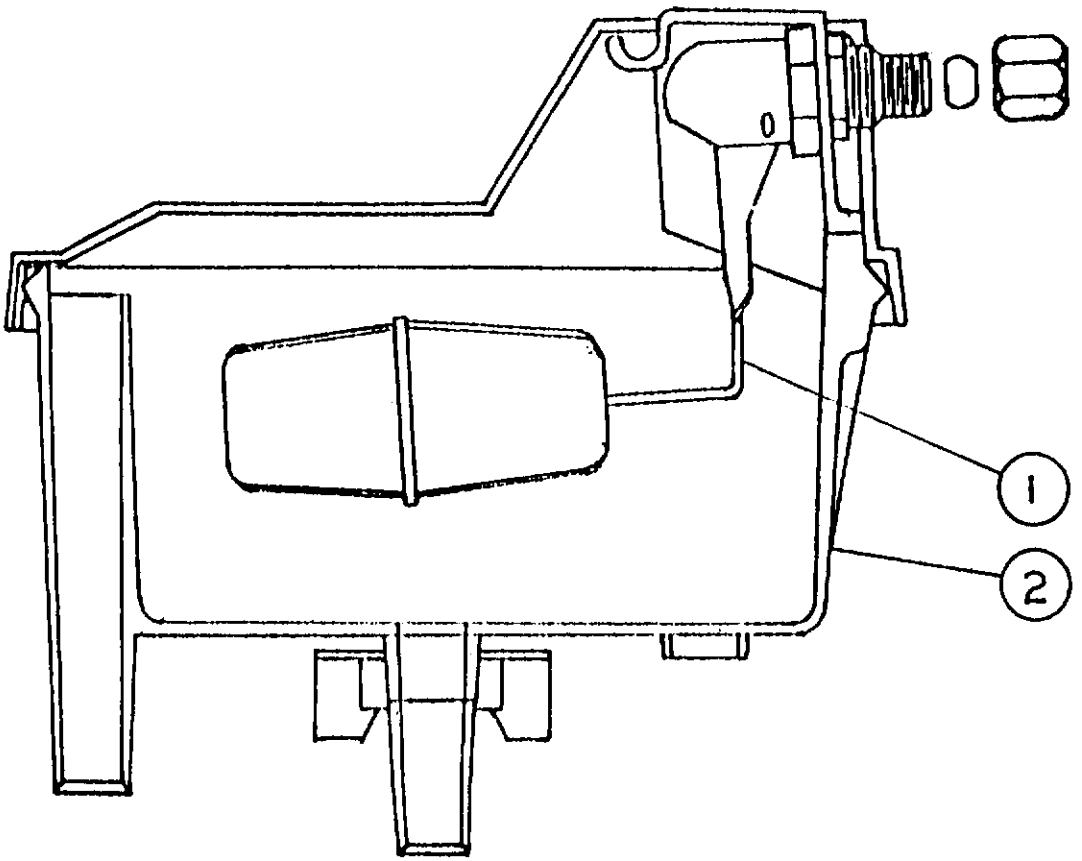

RESERVOIR ASSEMBLY

ITEM NO.	PART NO.	DESCRIPTION
1.	02-2217-02	Valve Assy.
2.	02-2217-01	Reservoir Complete

CHASSIS ASSEMBLY
Common to Air & Water Cooled

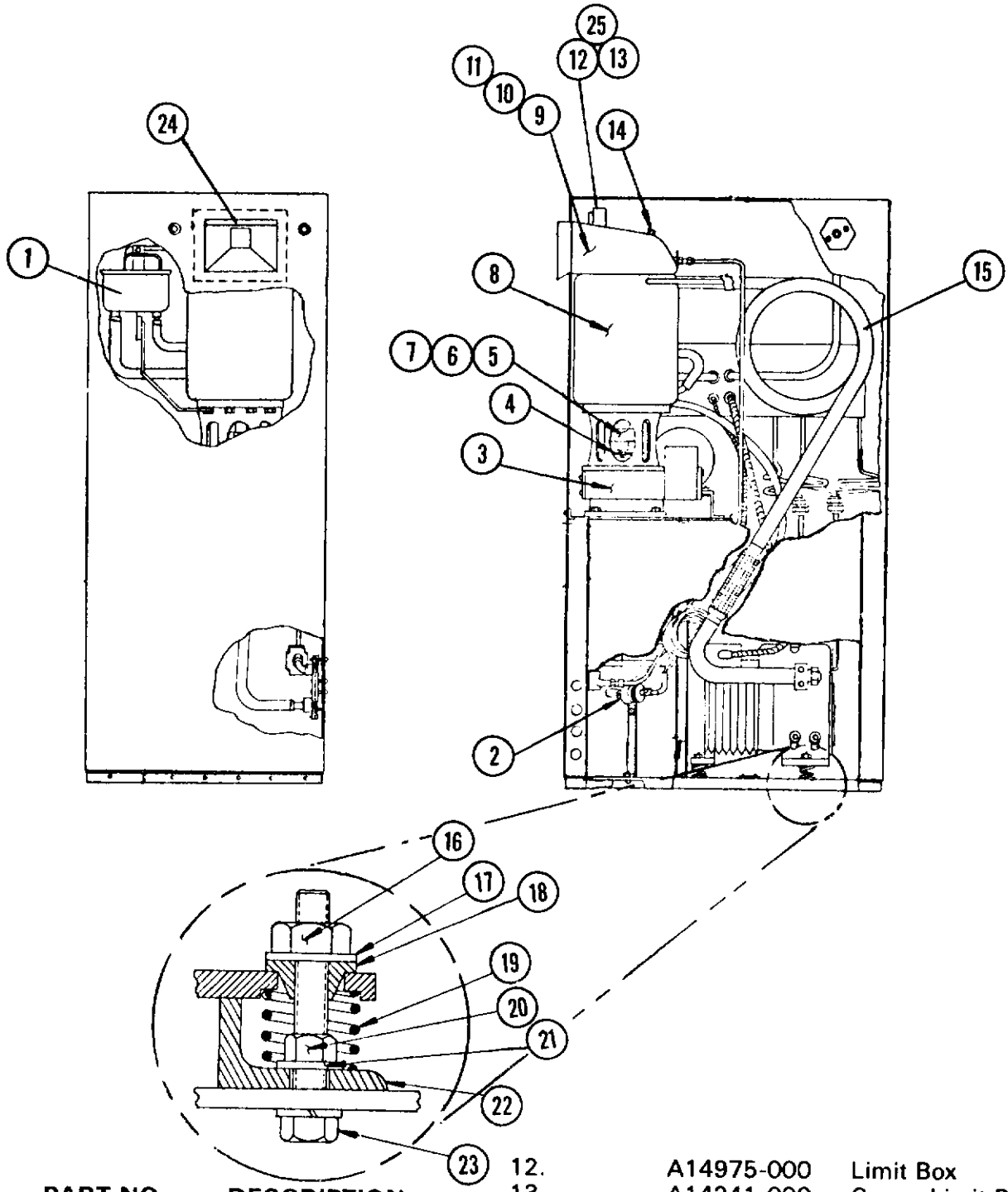

ITEM NO.	PART NO.	DESCRIPTION
1.	See Page 5	Reservoir
2.	02-0822-00	Drier
3.	See Page 7,8&9	Gear Reducer
4.	13-0152-00	Rubber Shield
5.	A08895-000	Coupling, Freezer
6.	02-1950-00	Key
7.	03-0431-02	Set Screw
8.	See Page 4	Freezer
9.	A06670-000	Pressure Plate
10.	A16668-000	Spout
11.	A20956-000	Spacer (2)
12.	A14975-000	Limit Box
13.	A14241-000	Cover, Limit Box
14.	A16926-000	Thumb Screw
15.	A11805-000	Sucton-Capillary Line
16.	18-1400-24	Nut
17.	03-1407-10	Washer
18.	18-1400-25	Spacer, Rubber
19.	18-0700-12	Spring, Gray
20.	18-1400-22	Nut
21.	18-0700-11	Lockwasher
22.	18-1400-26	Pad
23.	18-0700-10	Stud
24.	02-1321-00	Spring Only
25.	12-1018-00	Switch Only

CHASSIS ASSEMBLY
Air Cooled Units

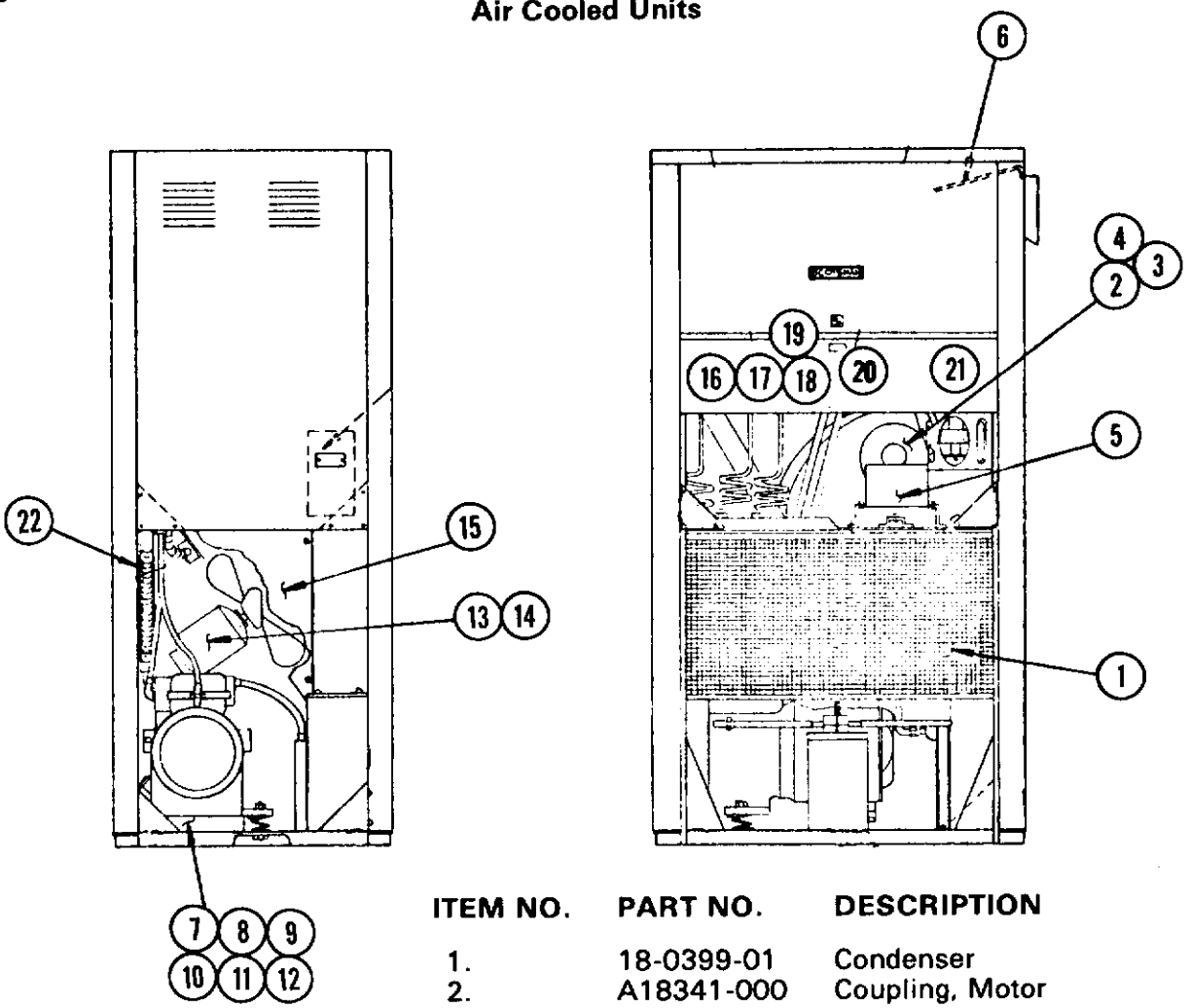

ITEM NO.	PART NO.	DESCRIPTION
1.	18-0399-01	Condenser
2.	A18341-000	Coupling, Motor
3.	02-1951-00	Key
4.	A23610-002	Motor 230/60/1
	A23610-007	Motor 208/60/1
5.	A11823-000	Motor Mount
6.	A16256-000	Diverting Shelt
7.	18-0789-02	Crankcase Heater
8.	18-0700-00	Compressor 230/60/1
	18-0711-00	Compressor 208/60/1
9.	18-1900-23	Relay-Capacitor Complete
10.	18-1901-23	Start Capacitor
11.	18-1902-23	Run Capacitor
12.	18-1903-21	Relay
13.	18-0788-02	Fan Motor 230/60/1
	18-0788-07	Fan Motor 208/60/1
14.	18-0787-00	Fan Blade
15.	A17625-000	Condenser Shroud
16.	11-0342-00	Hi-Pressure Control
17.	11-0343-00	Hi-Pressure Control
18.	11-0273-00	Lo-Pressure Control
19.	11-0099-01	Bin Control
20.	12-530A-00	Manual Starter
	12-0708-00	Heater Overload (State motor manufacture & voltage when ordering)
21.	12-0820-02	Contactor 230/60/1 & 208/60/1
22.	16-0365-00	Vibration Eliminator

Compressor Repair (Not shown)

18-0734-00	Klixon
18-0722-00	Gasket, Cylinder Head
18-0732-00	Suction Service Valve
18-0735-00	Terminal Assy.
18-0736-00	Gasket, Service Valve
18-0749-00	Terminal Board

CHASSIS ASSEMBLY
Water Cooled Units

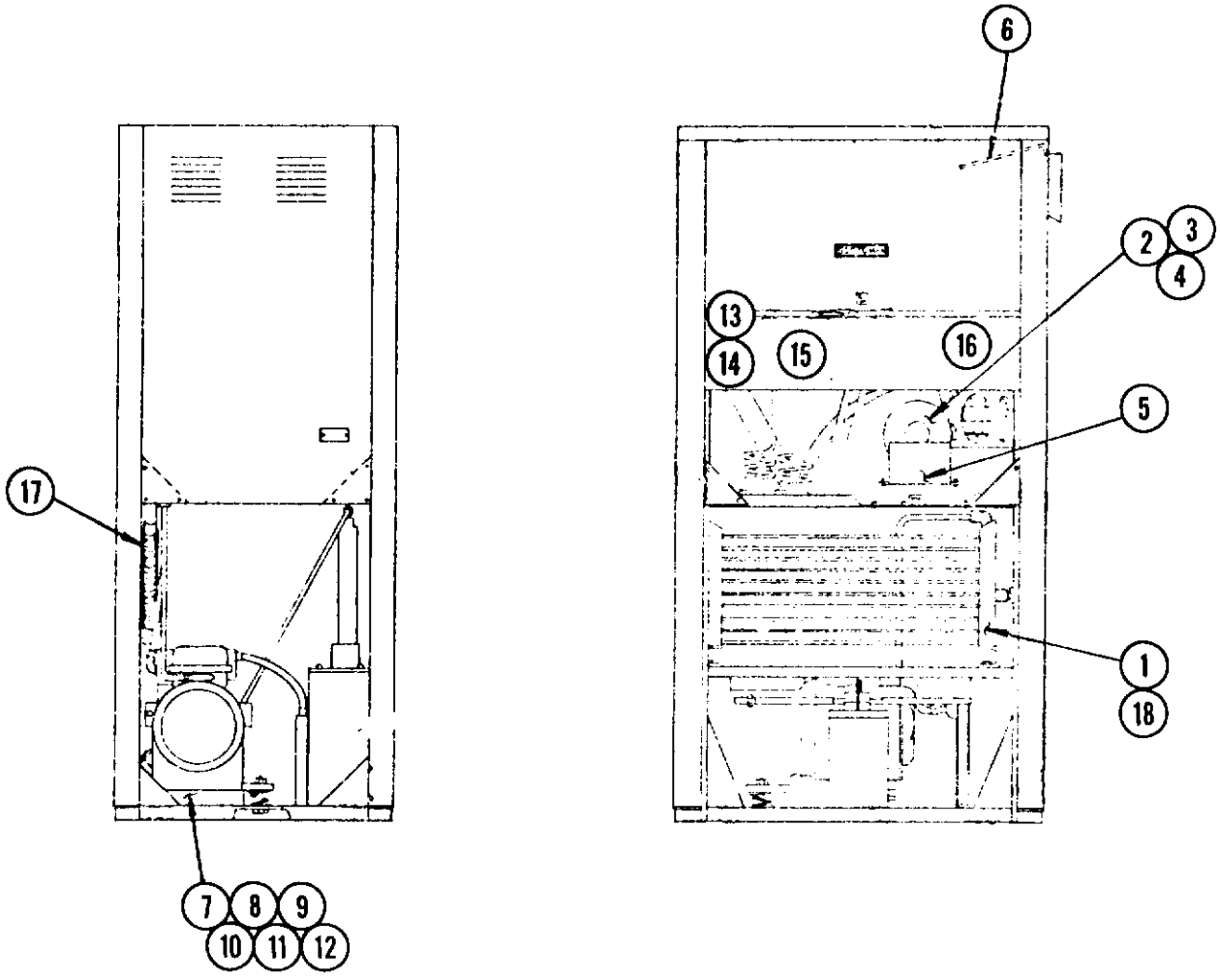

ITEM NO.	PART NO.	DESCRIPTION
1.	18-0754-00	Condenser
2.	A18341-000	Coupling, Motor
3.	02-1951-00	Key
4.	A23610-002	Motor 230/60/1
	A23610-007	Motor 208/60/1
5.	A11823-000	Motor Mount
6.	A16256-000	Diverting Shelf
7.	18-0789-02	Crankcase Heater
8.	18-0700-00	Compressor 230/60/1
	18-0711-00	Compressor 208/60/1
9.	18-1900-23	Relay-Capacitor Complete
10.	18-1901-23	Start Capacitor
11.	18-1902-23	Run Capacitor
12.	18-1903-21	Relay
13.	11-0099-01	Bin Thermostat
14.	11-0286-00	Hi-Lo Control
15.	12-530A-00	Manual Starter
	12-0708-00	Heater, Overload (state motor manufacture and voltage when ordering)
16.	12-0820-02	Contactor 230/60/1 & 208/60/1
17.	16-0365-00	Vibration Eliminator
18.	18-0741-00	Gasket, Condenser Manifold

Compressor Repair (Not shown)

18-0734-00	Klixon
18-0722-00	Gasket, Cylinder Head
18-0732-00	Suction Service Valve
18-0735-00	Terminal Assy.
18-0736-00	Gasket, Service Valve
18-0749-00	Terminal Board

FREEZER ASSEMBLY

**SF5 "G" & "H" models
single freezer models start
with Serial No. 61-2-035971**

NOTE: Ice Breaker has ten holes around circumference, six of these are used to secure breaker to freezer barrel. The four remaining holes are threaded and are used to lift breaker and worm shaft up. You remove the six holding screws, re-insert (4) into lifter or threaded holes, these have no bottom on barrel and by evenly drawing them down, ice breaker and worm is lifted up.

NOTE: Lower bearing or water seal cannot be changed from bottom must be pulled out from on top.

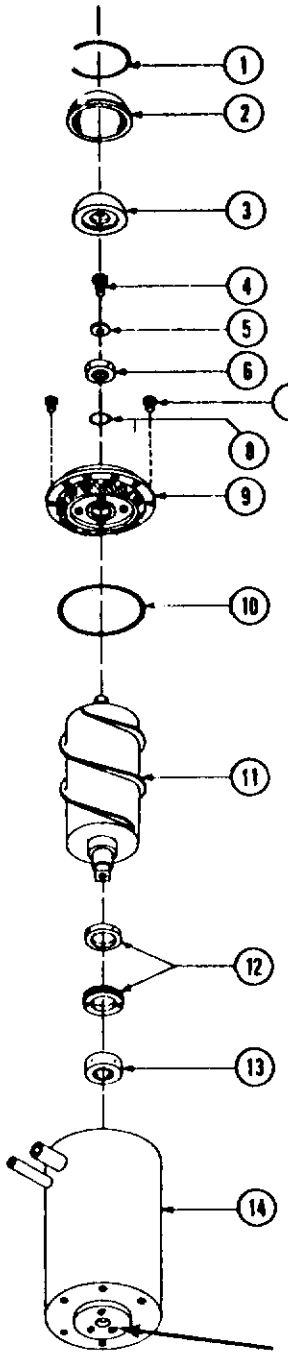

Tapped Holes 1/4 x 20 Thread

ITEM NO.	PART NO.	DESCRIPTION
1.	13-0617-18	O-Ring
2.	13-0231-00	Rubber Cap
3.	A09047-000	Styrofoam Cap.
4.	03-1405-36	Screw
5.	A06273-000	Washer
6.	02-0619-00	Top Bearing
7.	03-1405-25	Screws (6 required)
8.	13-0617-15	O-Ring
*9.	A11351-000	Ice Breaker W/Bearing
10.	13-0617-17	O-Ring
11.	A26075-001	Auger
12.	02-0776-00	Water Seal
13.	02-0775-00	Lower Bearing
14.	A08858-000	Freezer Worm Tube
*	A11351-001	Ice Breaker W/Bearing (Large Chunk - Sharp Tooth)

NOTE:

Lower bearing or water seal should be removed by pulling from the top. If bearing is worn badly and cannot be removed with a bearing puller, it can be pushed out by using three(3) 1/4 x 20 screws three inches long inserted in the tapped holes provided in the lower bearing retainer.

RESERVOIR ASSEMBLY

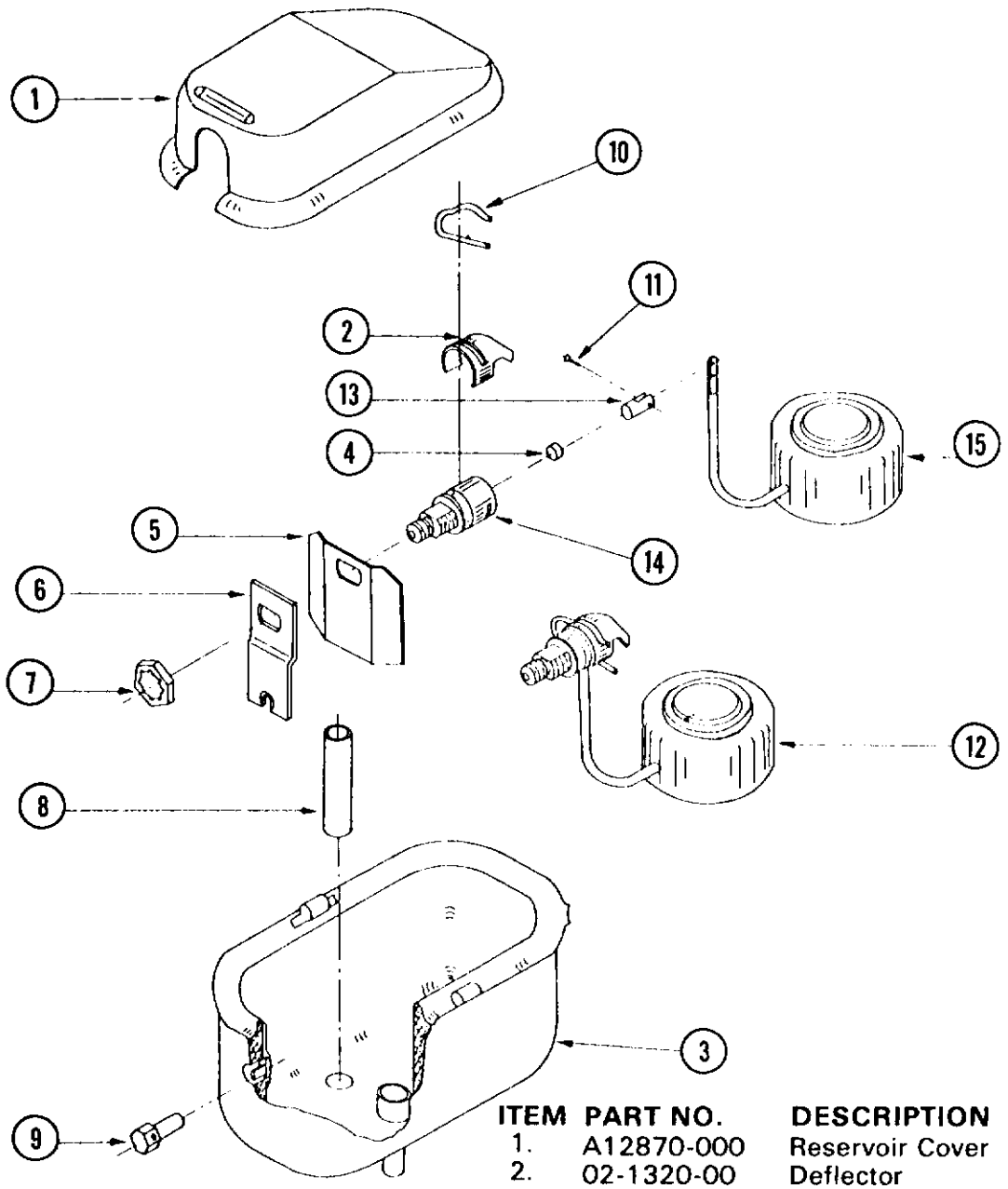

*Use Item 12

ITEM	PART NO.	DESCRIPTION
1.	A12870-000	Reservoir Cover
2.	02-1320-00	Deflector
3.	A13413-000	Reservoir Body
4.	S06947-000	Valve Seat
5.	A18418-001	Water Deflector
6.	A12869-000	Bracket
7.	S07044-000	Nut
8.	S06715-000	Stand Pipe
9.	A08055-000	Bracket Nut
10.	02-1259-00	Valve Pin
11.	03-1001-00	Rivet
12.	A09101-000	Valve & Float Complete includes Items 2, 4, 10, 11, 13, 14 & 15.
*13.		Valve Seat Holder
*14.		Water Inlet Valve
*15.		Float
	A08868-000	Reservoir Complete (Less Items 1 and 8)

CABINET PARTS
All Units

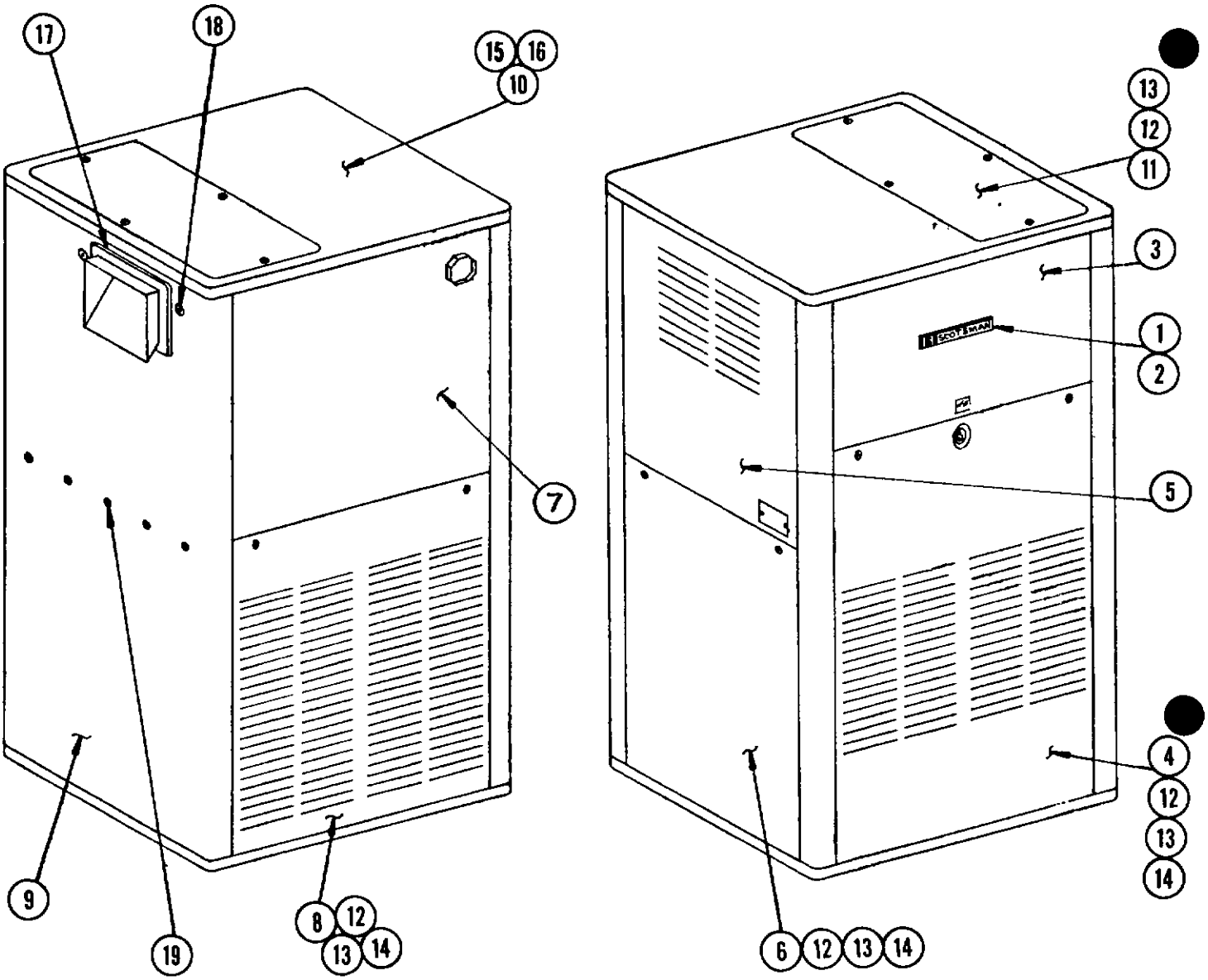

ITEM NO.	PAINTED PART NO.	S.S. PART NO.	DESCRIPTION
1.	15-0156-00	15-0156-00	Emblem
2.	03-0271-00	03-0271-00	Push Nut (2)
3.	A11864-008	A11864-00S	Panel, Front
4.	A11872-008	A11872-00S	Door, Front
5.	A17067-008	A17067-00S	Panel, Left
6.	A11877-008	A11877-00S	Door, Left
7.	A17068-008	A17068-00S	Panel, Back
8.	A11875-008	A11875-00S	Door, Back
9.	A11861-008	A11861-00S	Panel, Right
10.	A11868-008	A11868-00S	Panel, Top
11.	S06713-008	S06713-00S	Door, Top
12.	03-1419-09	03-1419-09	Screw
13.	03-1423-02	03-1423-02	Speed Nut
14.	13-0113-00	13-0113-00	Grommet
15.	03-1418-08	03-1418-08	Screw
16.	03-1423-04	03-1423-04	Speed Nut
17.	13-0591-01	13-0591-01	Spout Grommet
18.	13-0557-00	13-0557-00	Grommet
19.	03-1048-00	03-1048-00	Screw

GEAR REDUCER
Part No. 02-0768-00
Ratio 432 to 1

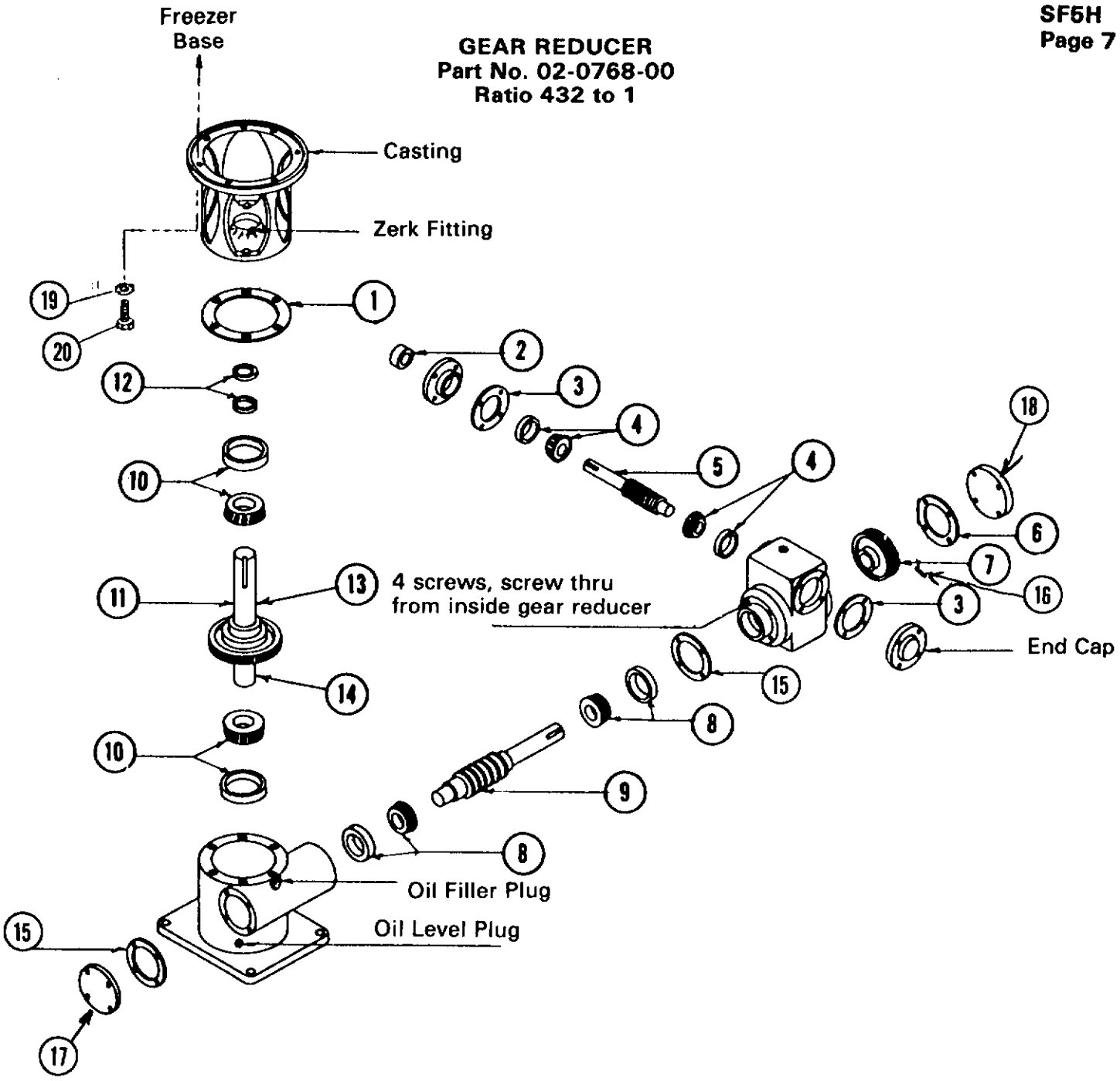

ITEM NO.	PART NO.	DESCRIPTION
1.	02-0768-28	Slow-Speed Cover Gasket
2.	02-0768-20	High-Speed Oil Seal
3.	02-0768-25	High-Speed Gasket
4.	02-0768-24	High-Speed Bearing
5.	02-0768-39	High-Speed Worm & Shaft, Integral
6.	02-0768-27	Intermediate Gasket
7.	02-0768-40	High-Speed Gear
8.	02-0768-23	Intermediate Roller Bearing
9.	02-0768-38	Intermediate Worm & Shaft, Integral
10.	02-0768-22	Slow-Speed Bearing
11.	02-0768-42	Slow-Speed Gear & Shaft Assembly
12.	02-0768-21	Slow-Speed Oil Seal
13.	02-0768-29	Slow-Speed Spacer (short)
14.	02-0768-30	Slow-Speed Spacer (long)
15.	02-0768-26	Gasket
16.	02-0768-37	Key & Pin
17.	02-0768-43	Intermediate Cap-Closed
18.	02-0268-44	High-Speed Attachment Housing Cover
19.	03-1407-07	Lockwasher
20.	03-1420-02	Screw

GEAR REDUCER SF5H

**All models with 10 RPM Gear Reducers
Sandlewood Painted Cabinets**

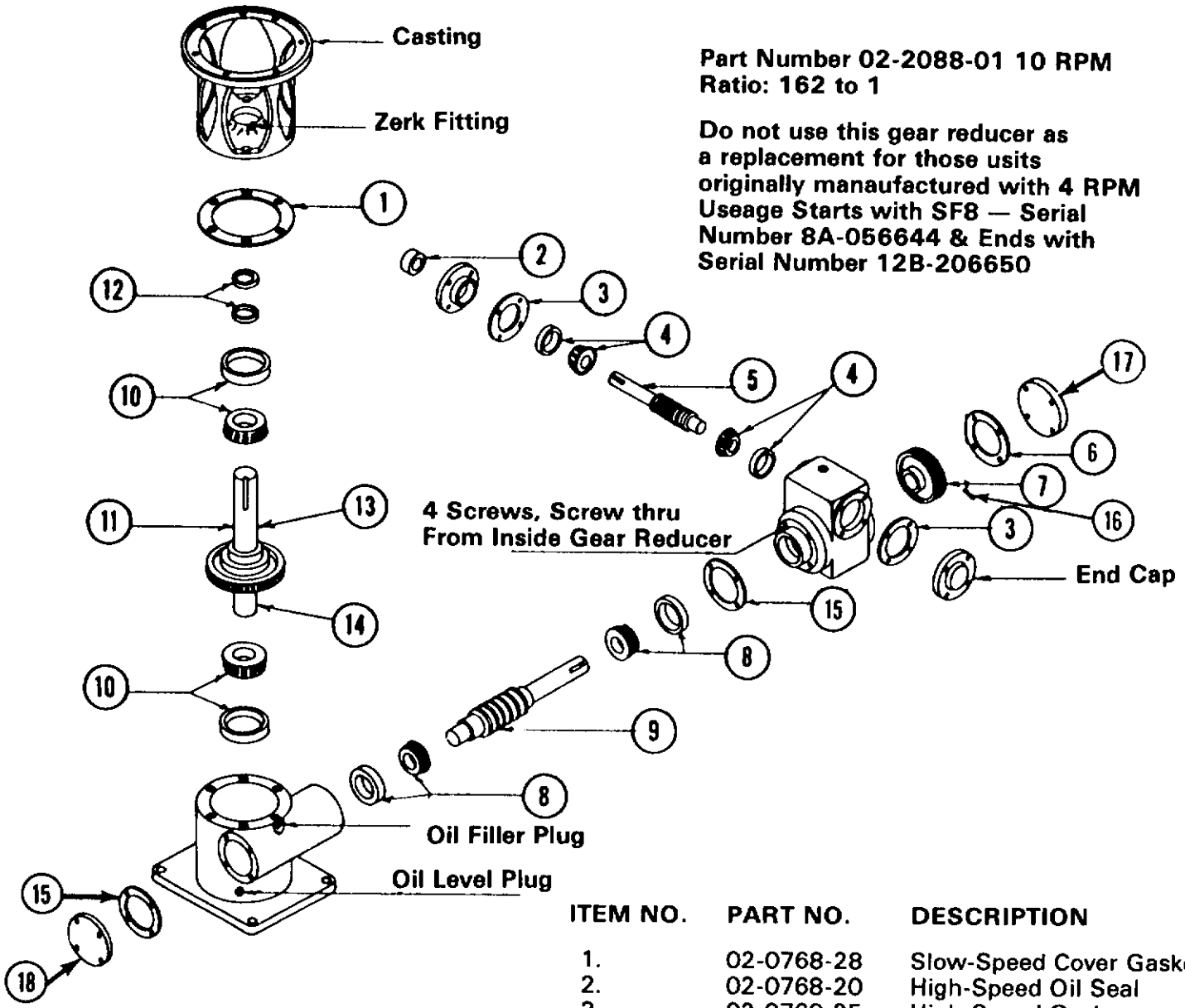

**Part Number 02-2088-01 10 RPM
Ratio: 162 to 1**

Do not use this gear reducer as a replacement for those usits originally manaufactured with 4 RPM Useage Starts with SF8 — Serial Number 8A-056644 & Ends with Serial Number 12B-206650

ITEM NO.	PART NO.	DESCRIPTION
1.	02-0768-28	Slow-Speed Cover Gasket
2.	02-0768-20	High-Speed Oil Seal
3.	02-0768-25	High-Speed Gasket
4.	02-0768-24	High-Speed Bearing
5.	02-2088-11	High-Speed Worm & Shaft, Integral
6.	02-0768-27	Intermediate Gasket
7.	02-2088-12	High-Speed Gear
8.	02-0768-23	Intermediate Roller Bearing
9.	02-0768-31	Slow-Speed Worm & Shaft, Integral
10.	02-0768-22	Slow-Speed Bearing
11.	02-0768-36	Slow Speed Gear & Shaft Assembly
12.	02-0768-21	Slow-Speed Oil Seal
13.	02-0768-29	Slow-Speed Spacer (short)
14.	02-0768-30	Slow-Speed Spacer (long)
	02-2088-01	Complete Reducer
15.	02-0768-26	Gasket
16.	02-0768-37	Key & Pin
17.	02-0768-44	High-Speed Cap
18.	02-0768-43	Intermediate Cap

GEAR REDUCER
SF5 - "G" & "H"

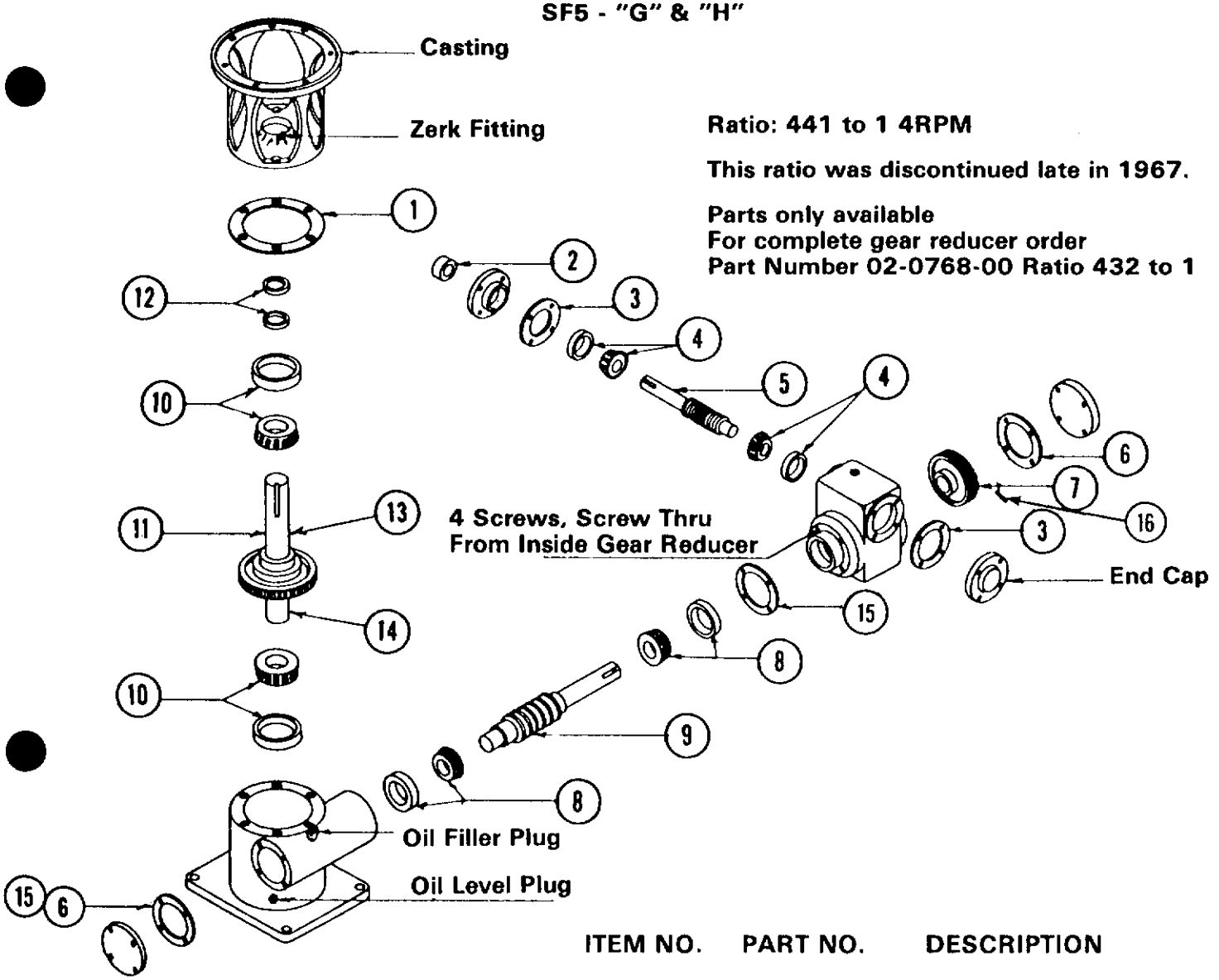

Ratio: 441 to 1 4RPM

This ratio was discontinued late in 1967.

Parts only available
For complete gear reducer order
Part Number 02-0768-00 Ratio 432 to 1

ITEM NO.	PART NO.	DESCRIPTION
1.	02-0768-28	Slow-Speed Cover Gasket
2.	02-0768-20	High-Speed Oil Seal
3.	02-0768-25	High-Speed Gasket
4.	02-0768-24	High-Speed Bearing
5.	02-0768-32	High-Speed Worm & Shaft, Integral
6.	02-0768-27	Intermediate Gasket
7.	02-0768-33	High-Speed Gear
8.	02-0768-23	Intermediate Roller Bearing
9.	02-0768-31	Slow-Speed Worm & Shaft, Integral
10.	02-0768-22	Slow-Speed Bearing
11.	02-0768-36	Slow-Speed Gear & Shaft Assembly
12.	02-0768-21	Slow-Speed Oil Seal
13.	02-0768-29	Slow-Speed Spacer (short)
14.	02-0768-30	Slow-Speed Spacer (long)
	02-0768-00	Complete Reducer
15.	02-0768-26	Gasket
16.	02-0768-37	Key & Pin

CHASSIS
FRONT VIEW
AIR COOLED
115/60/1

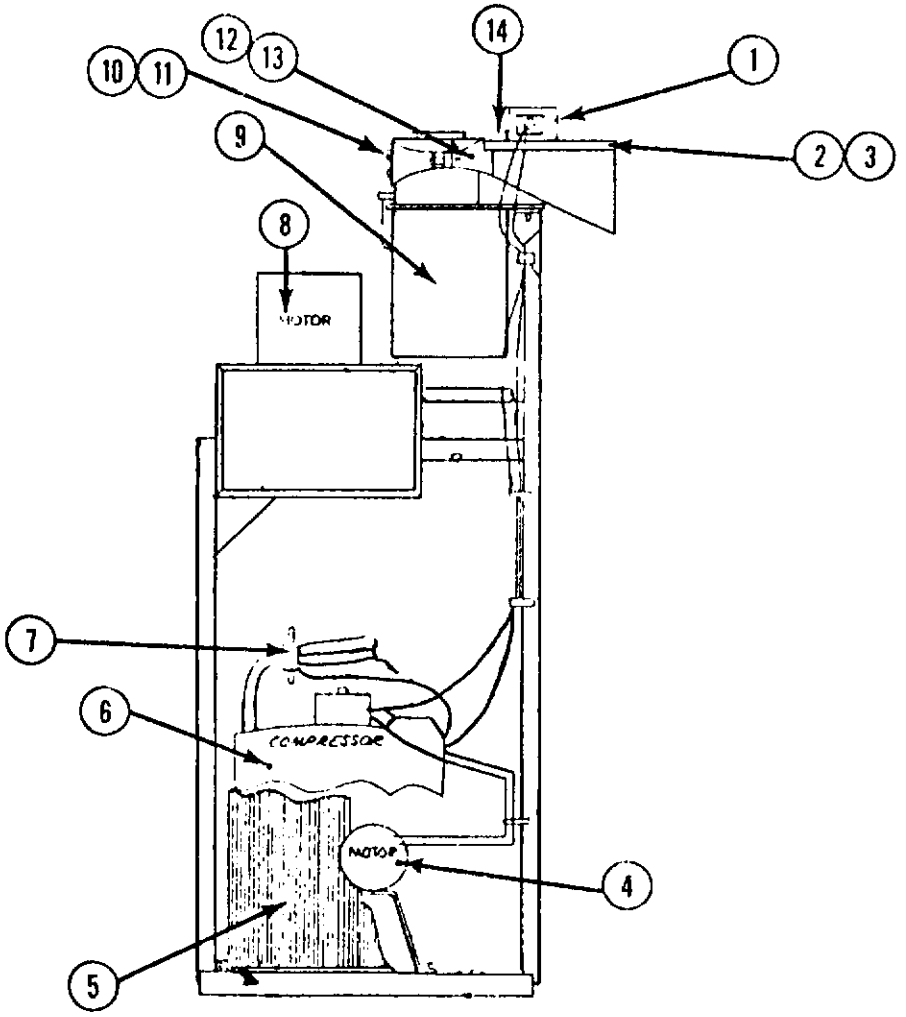

ITEM NO.	PART NO.	DESCRIPTION
1.	12-1018-00	Spout Micro Switch
2.	A16360-000	Spout Pressure Plate
3.	02-1321-00	Spring
4.	12-1575-01	Fan Motor
5.	18-0234-00	Condensor Air Cooled
6.	18-2200-1	Compressor
7.	11-0396-01	Low Pressure Switch
8.	See Page 7	Gear Motor Assy.
9.	See Page 6	Evaporator
10.	03-1403-35	Screws (2) Req.
11.	03-1417-07	Lockwasher (2) Req.
12.	A14254-000	Spout Casting
13.	13-0679-00	Gasket
14.	A14256-000	Mounting Nut

CHASSIS – BACK VIEW
AIR COOLED
115/60/1

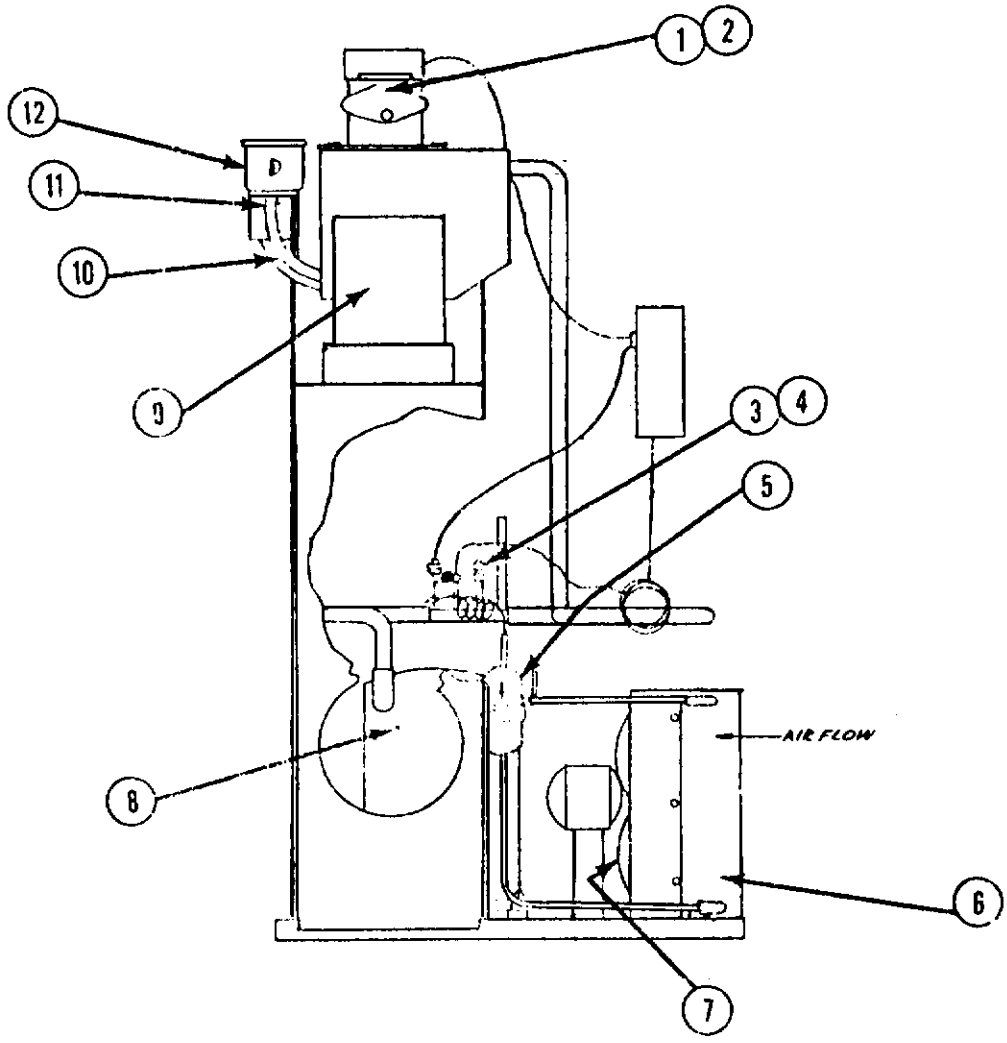

ITEM NO.	PART NO.	DESCRIPTION
1.	03-1403-35	Screws (2) Req.
2.	03-1417-07	Lockwasher (2) Req.
3.	16-0560-00	Valve Core
4.	16-0563-00	Valve Cap
5.	02-0831-00	Refrigerant Drier
6.	18-0234-00	Condensor Air Cooled
7.	18-0231-00	Fan Blade
8.	18-2200-01	Compressor
9.	See Page 6	Evaporator
10.	13-0674-09	Plastic Hose (order per ft.)
11.	02-0535-00	Hose Clamp
12.	See Page 8	Reservoir

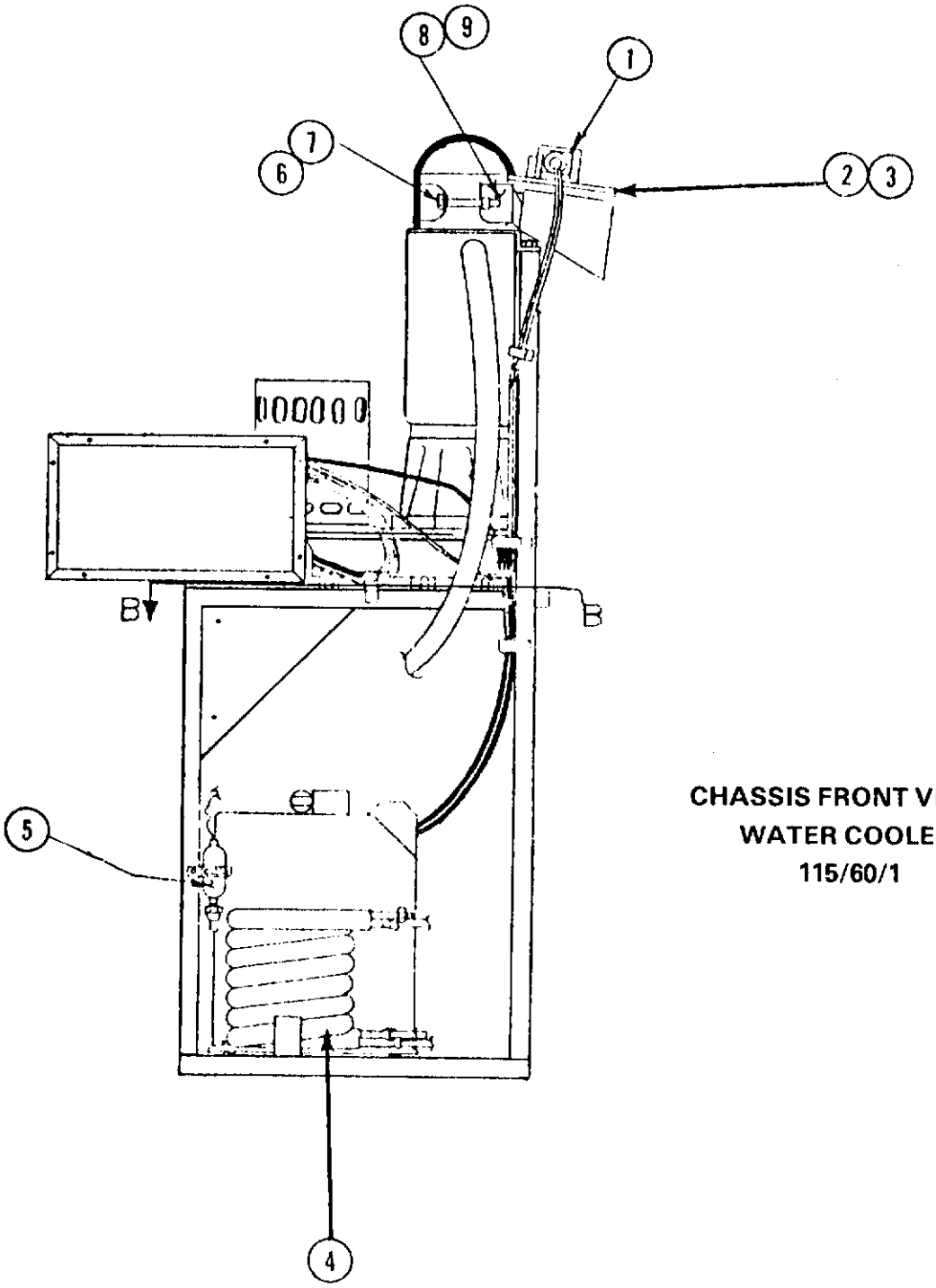

CHASSIS FRONT VIEW
WATER COOLED
115/60/1

ITEM NO.	PART NO.	DESCRIPTION
1.	12-1018-00	Spout Micro Switch
2.	A16360-000	Spout Pressure Plate
3.	02-1321-00	Spring
4.	18-3303-02	Condensor Water Cooled
5.	02-0831-00	Refrigerant Drier
6.	03-1403-35	Screws (2)
7.	03-1417-07	Lockwasher (2)
8.	A14254-000	Spout Casting
9.	13-0679-00	Gasket

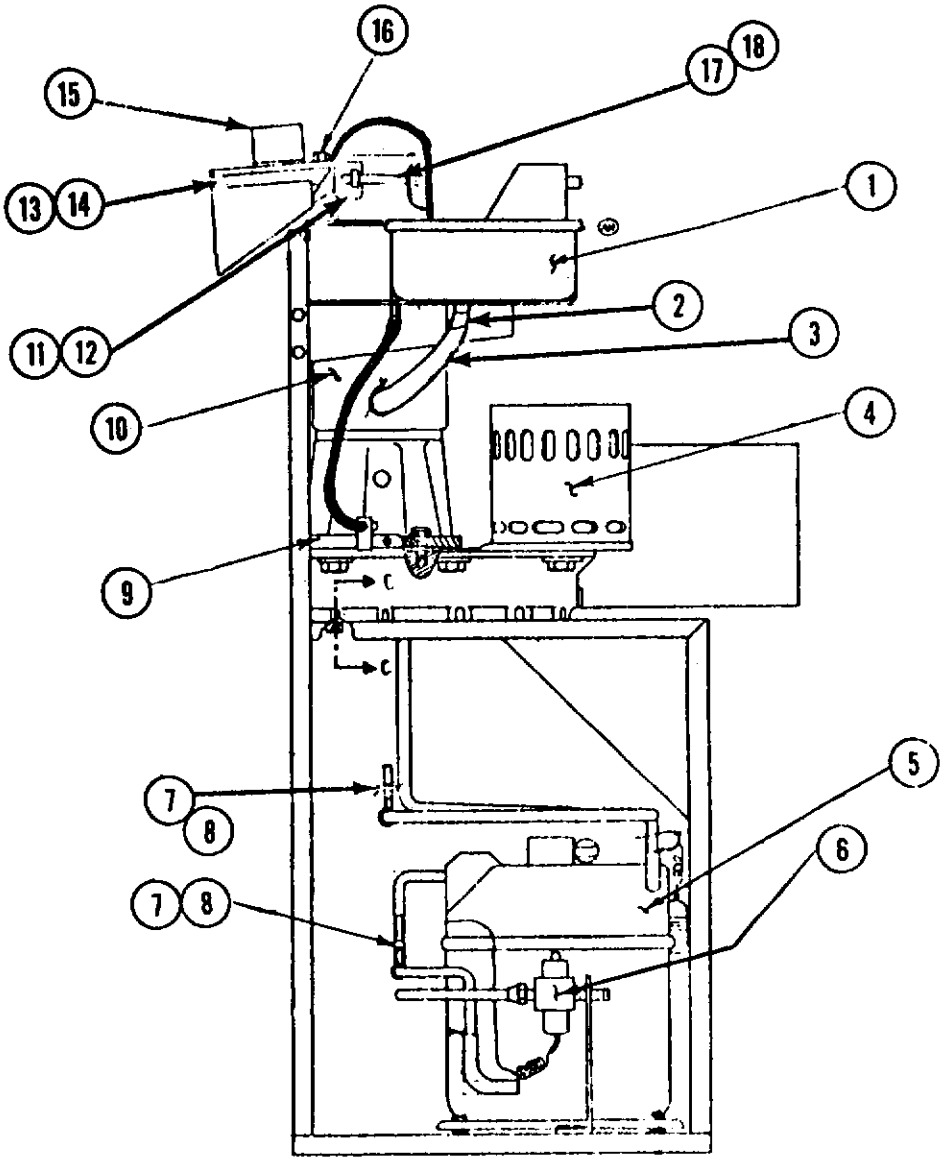

CHASSIS
BACK VIEW
WATER COOLED
115/60/1

ITEM NO.	PART NO.	DESCRIPTION
1.	02-2217-01	Reservoir (Complete)
2.	02-0535-00	Hose Clamp
3.	13-0674-09	Plastic Tube (order per ft.)
4.	See Page 7	Gear Motor Assy.
5.	18-2200-01	Compressor
6.	11-0198-02	Water Regulater Valve
7.	16-0560-00	Valve Core
8.	16-0563-00	Calve Cap
9.	A18153-000	Drip Pan
10.	See Page 6	Evaporator
11.	A14254-000	Spout Casting
12.	13-0679-00	Gasket
13.	A16360-000	Spout Pressure Plate
14.	02-1321-00	Spring
15.	12-1018-00	Spout Micro Switch
16.	A14256-000	Mounting Nut
17.	03-1403-35	Screws (2)
18.	03-1417-07	Lockwasher (2)

SF1 MODELS

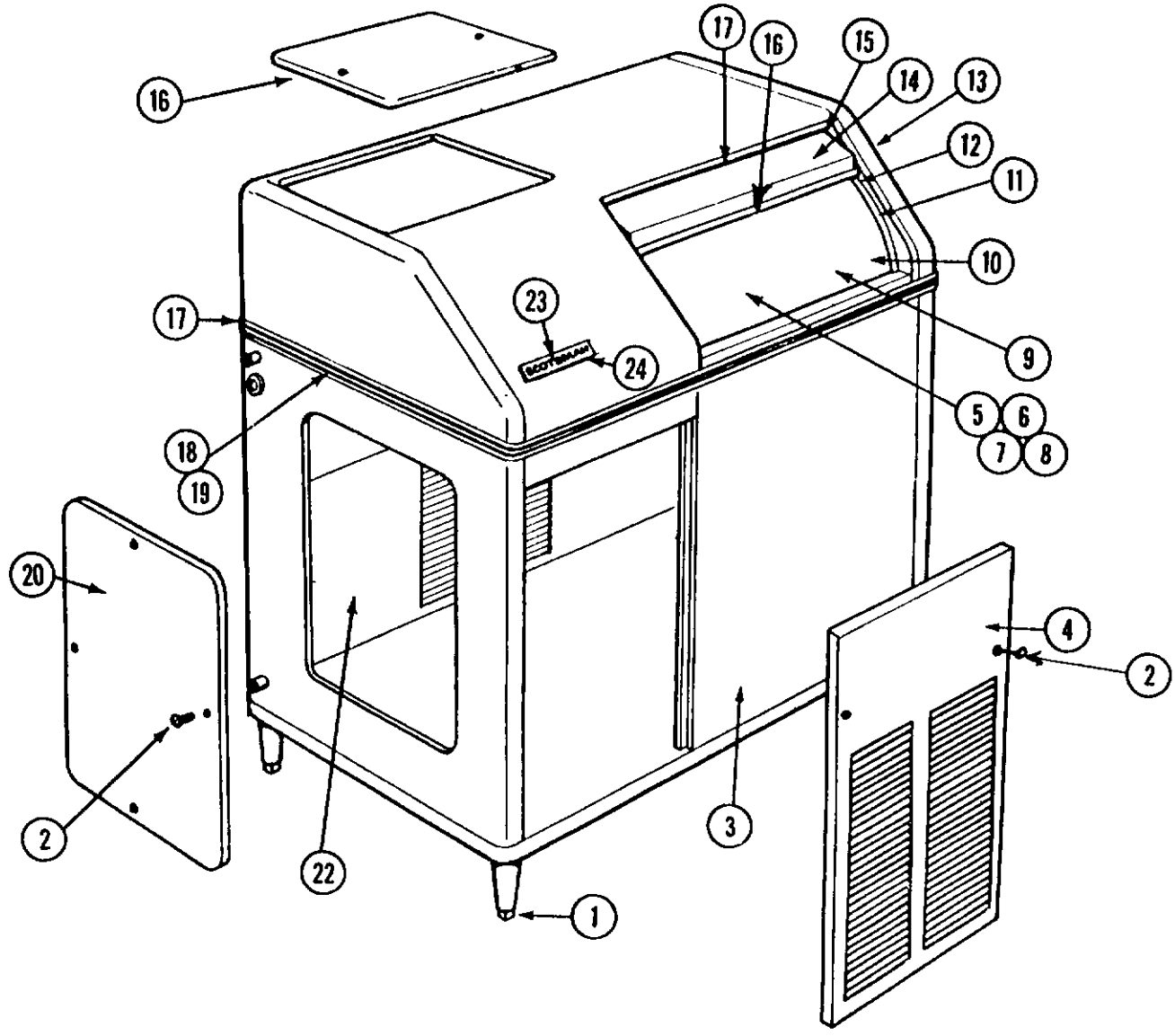

ITEM NO.	PART NO. Enamel	S.S.	DESCRIPTION	ITEM NO.	PART NO. Enamel	S.S.	DESCRIPTION
**1.	KLP2E	KLP2S	Leg Levelers	13.	A16208-000	A16208-000	Door Track
2.	03-1419-09	03-1419-09	Screws	14.	03-1415-00	03-1415-00	Bulb Holder*
3.	A20586-008	A20586-002	Case Assembly	15.	02-1736-00	02-1736-00	Door Stop*
4.	A15791-008	A15791-002	Front Door	16.	A07676-005	A07676-00S	Top Door
5.	02-1741-00	02-1741-00	Drain Top*	17.	A05796-000	A05796-000	Rear Trim
6.	02-1742-00	02-1742-00	Drain Bottom*	18.	15-0324-00	15-0324-00	Plastic Moulding—Trim
7.	13-0617-11	13-0617-11	O Ring (Drain)*	19.	S03646-000	S03646-000	Front Moulding Strip
8.	A19046-000	A19046-000	Storage Bin Assy.*	20.	S06713-008	S06713-00S	Side Door
			Insulation Layout*	21.	03-1419-09	03-1419-00	Screw (stainless)
9.	03-0640-00	03-0640-00	Door Glides (door)*	22.	A08740-008	A08740-00S	Rear Door
10.	03-1195-00	03-1195-00	Door Glides (hood)*	23.	15-0156-00	15-0156-00	Emblem
11.	A20924-008	A20924-001	Case Hood Assy.	24.	03-0271-00	03-0271-00	Speednuts*
12.	02-1735-01	A15559-000	Sliding Door				

**Legs Optional

*Not Shown

FREEZER ASSEMBLY

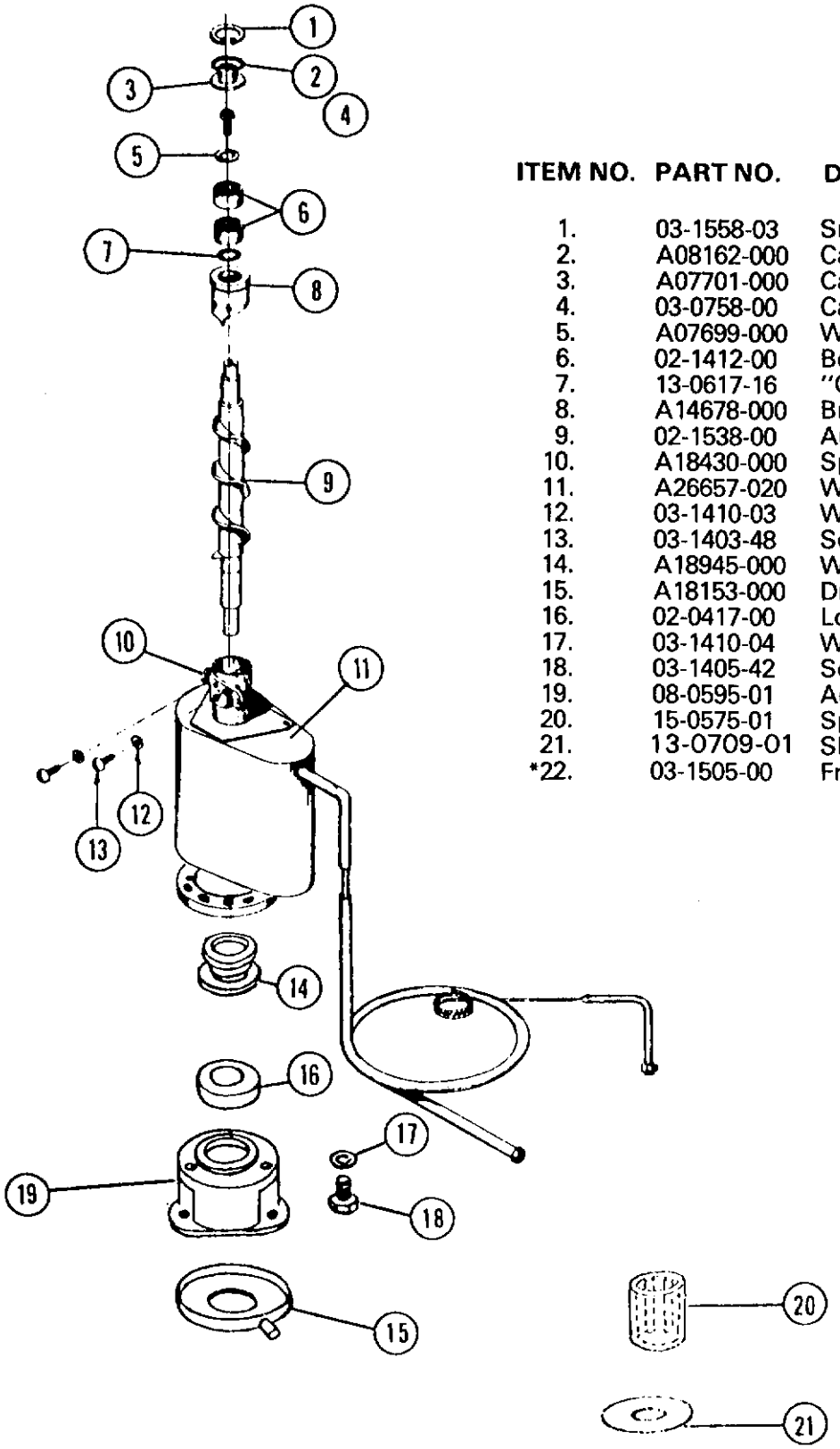

ITEM NO.	PART NO.	DESCRIPTION
1.	03-1558-03	Snap Ring
2.	A08162-000	Cap Hook
3.	A07701-000	Cap
4.	03-0758-00	Cap Screw
5.	A07699-000	Washer
6.	02-1412-00	Bearing
7.	13-0617-16	"O" Ring
8.	A14678-000	Breaker with Bearing & O Ring
9.	02-1538-00	Auger
10.	A18430-000	Spout Plate
11.	A26657-020	Worm Tube — Suction Line
12.	03-1410-03	Washer
13.	03-1403-48	Screws
14.	A18945-000	Water Seal
15.	A18153-000	Drip Pan
16.	02-0417-00	Lower Bearing
17.	03-1410-04	Washer
18.	03-1405-42	Screw
19.	08-0595-01	Adapter
20.	15-0575-01	Spline Drive Coupling
21.	13-0709-01	Shaft Drip Shield Rubber
*22.	03-1505-00	Freezer to adapter Gasket

A25995-021
GEAR MOTOR ASSEMBLY
1/10 H.P.
115/60/1

11.5 RPM at output shaft

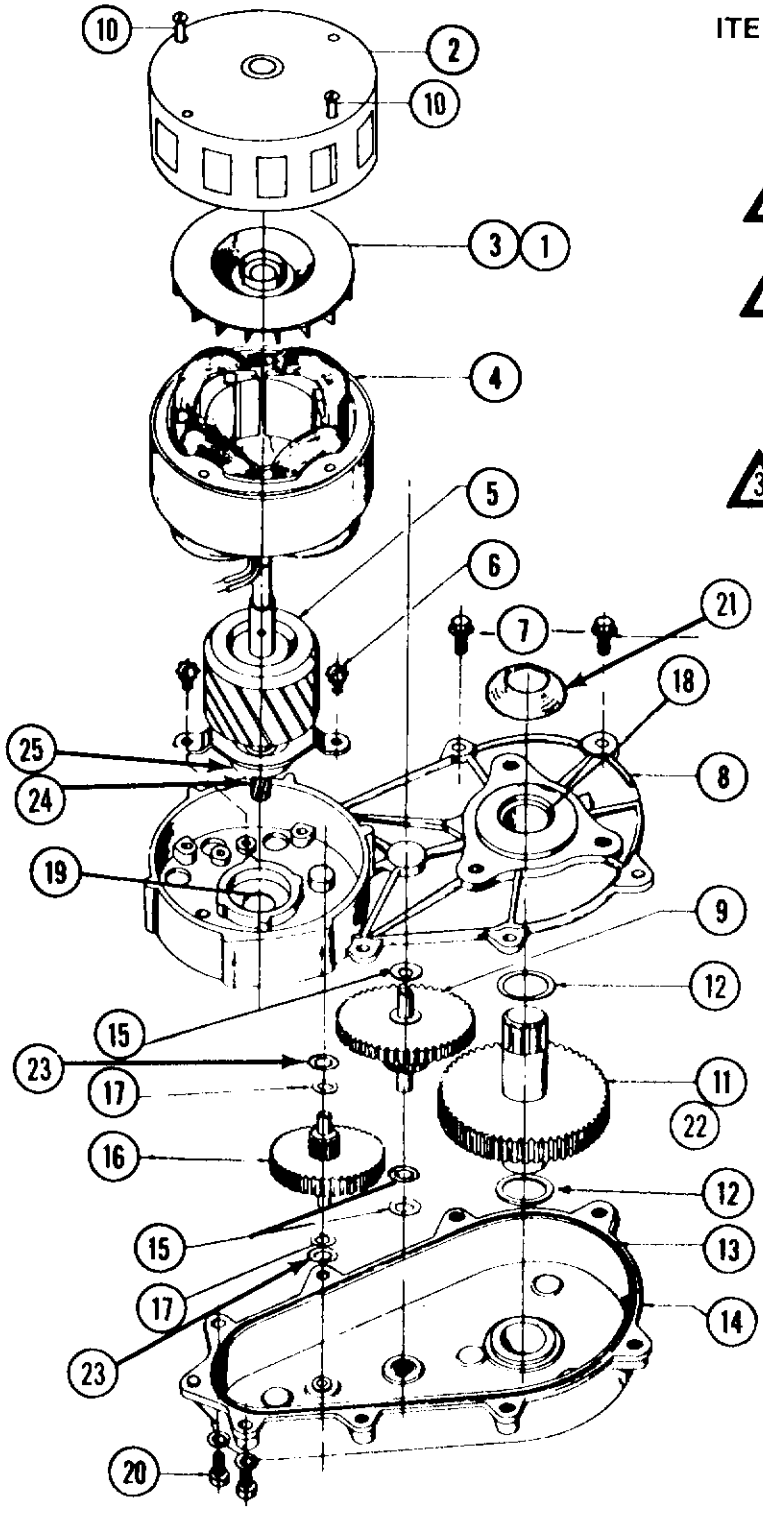

ITEM NO.	PART NO.	DESCRIPTION
1.	03-1246-00	Set Screw (2)
2.	A17047-000	Motor Housing
3.	A16915-000	Cooling Fan
4.	12-1400-01	Stator Assy.
2 5.	A26454-001	Rotor & 1st. Gear Kit
6.	03-1245-00	Screws (2)
7.	03-1251-00	Flange Screws (6)
1 8.	A16920-021	Gear Case Cover
9.	02-1521-00	Gear and Pinion
10.	03-1403-43	Motor Bolts (4)
11.	A26650-001	Gear and Output Shaft
12.	03-1408-21	Washer (2)
13.	02-1505-00	"O" Ring
3 14.	A24184-001	Gear Case Kit
15.	03-1408-06	Washer (3)
16.	02-2224-01	1st Gear and Pinion
17.	03-1408-19	Washer (2)
18.	02-1503-00	Grease Seal
19.	02-1504-00	Grease Seal
20.	03-1252-00	Screw (2)
21.	13-0709-01	Water Shed
22.	03-1475-01	Key
23.	03-1408-20	Washer (2)
24.	13-0617-04	Slinger Ring
25.	02-1501-00	Rotor Bearing

NOTE:

1. Cover comes with grease seals items 18 & 19.
2. Fiber gear (item 16 and rotor bearing (item 25) included in the rotor kit.
3. Includes items: 8, 13, 15, 17, 18, 19, 23 and gear lube.

RESERVOIR ASSEMBLY

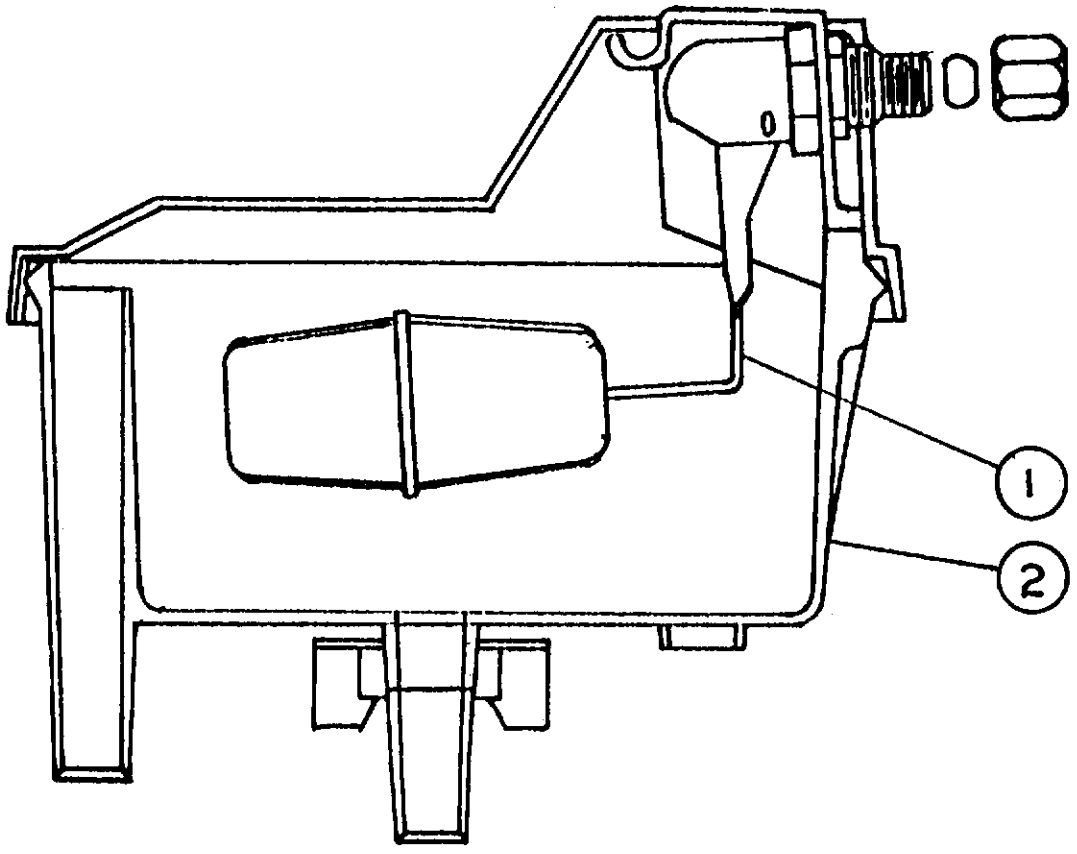

ITEM NO.	PART NO.	DESCRIPTION
1.	02-2217-02	Valve Assy.
2.	02-2217-01	Reservoir Complete

CONTROL BOX

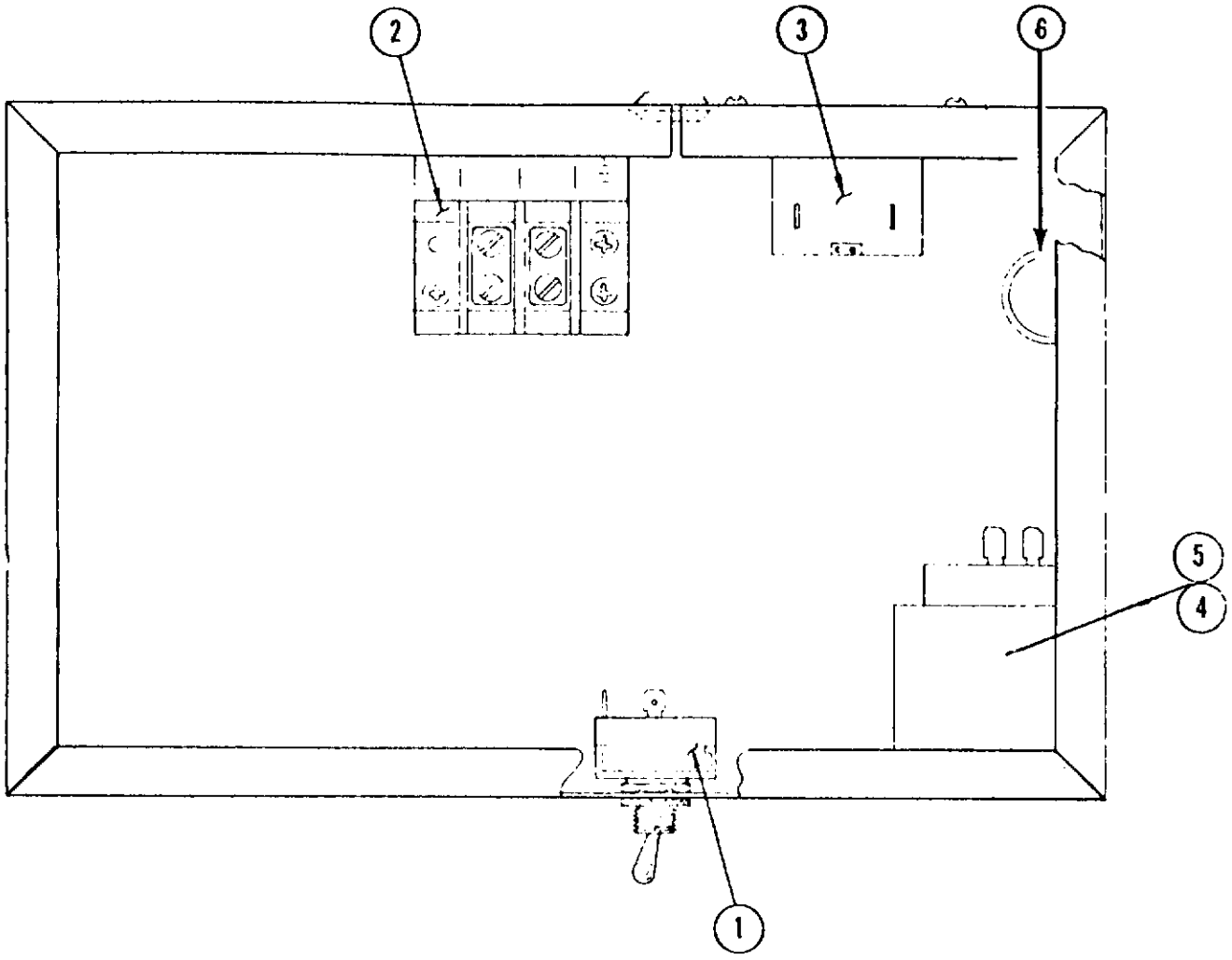

ITEM NO.	PART NO.	DESCRIPTION
1.	12-0426-01	Switch — On-Off
2.	12-0813-04	Terminal Board
3.	11-0354-00	Bin Thermostat
4.	03-1403-14	Screw (2)
5.	11-0357-00	High Pressure Control (Water Cooled Only)
5.	11-0358-00	Low Pressure Control
6.	12-1213-00	Snap Bushing

CENTRIFUGAL SWITCH

SWITCH ADJUSTMENT

.03 minimum gap between switch lever and mechanism with centrifugal mechanism actuated (motor running). Switch circuit should be closed When motor is stopped and centrifugal mechanism deactivates, the switch circuit shou be broken. There should be enough adjustment by loosening the switch mounting screws and tilting switch in direction required. If this fails, a small amount of bending can be done on the switch lever.

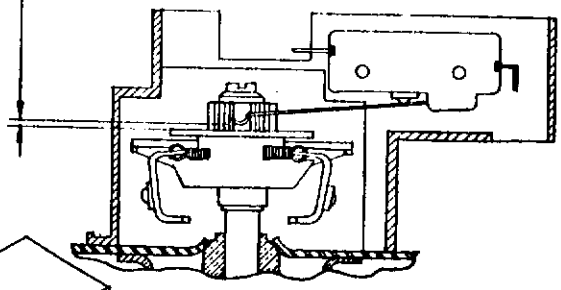

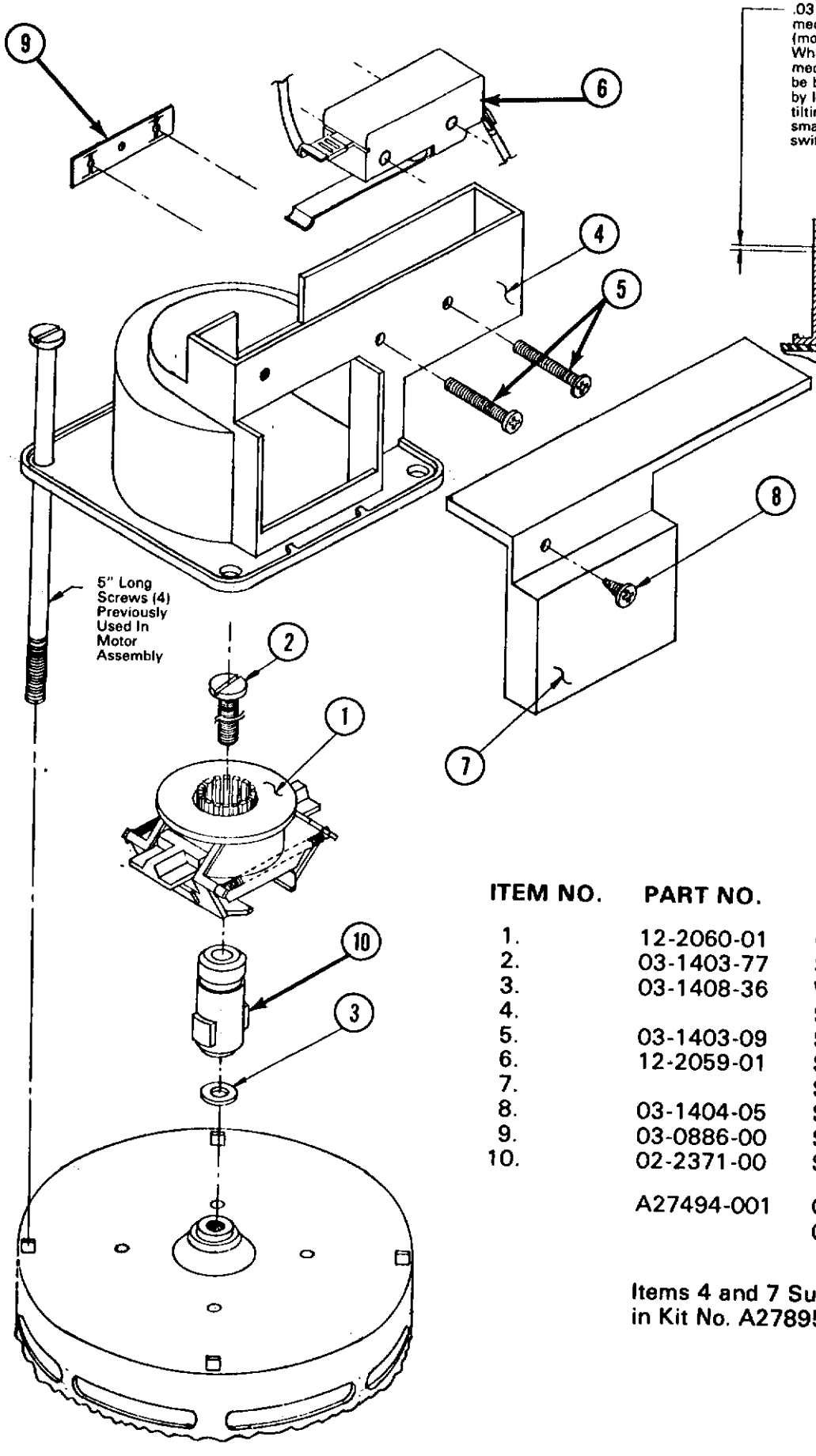

ITEM NO.	PART NO.	DESCRIPTION
1.	12-2060-01	Centrifugal Actuator
2.	03-1403-77	Screw
3.	03-1408-36	Washer
4.		Switch Mounting Case
5.	03-1403-09	Screw (2)
6.	12-2059-01	Switch
7.		Switch Case Cover
8.	03-1404-05	Screw
9.	03-0886-00	Speed Nut
10.	02-2371-00	Shaft Extension
	A27494-001	Centrifugal Switch Kit Complete w/17-1328-01 inst.

Items 4 and 7 Supplied in Kit No. A27895-001

CHASSIS ASSEMBLY
Water Cooled

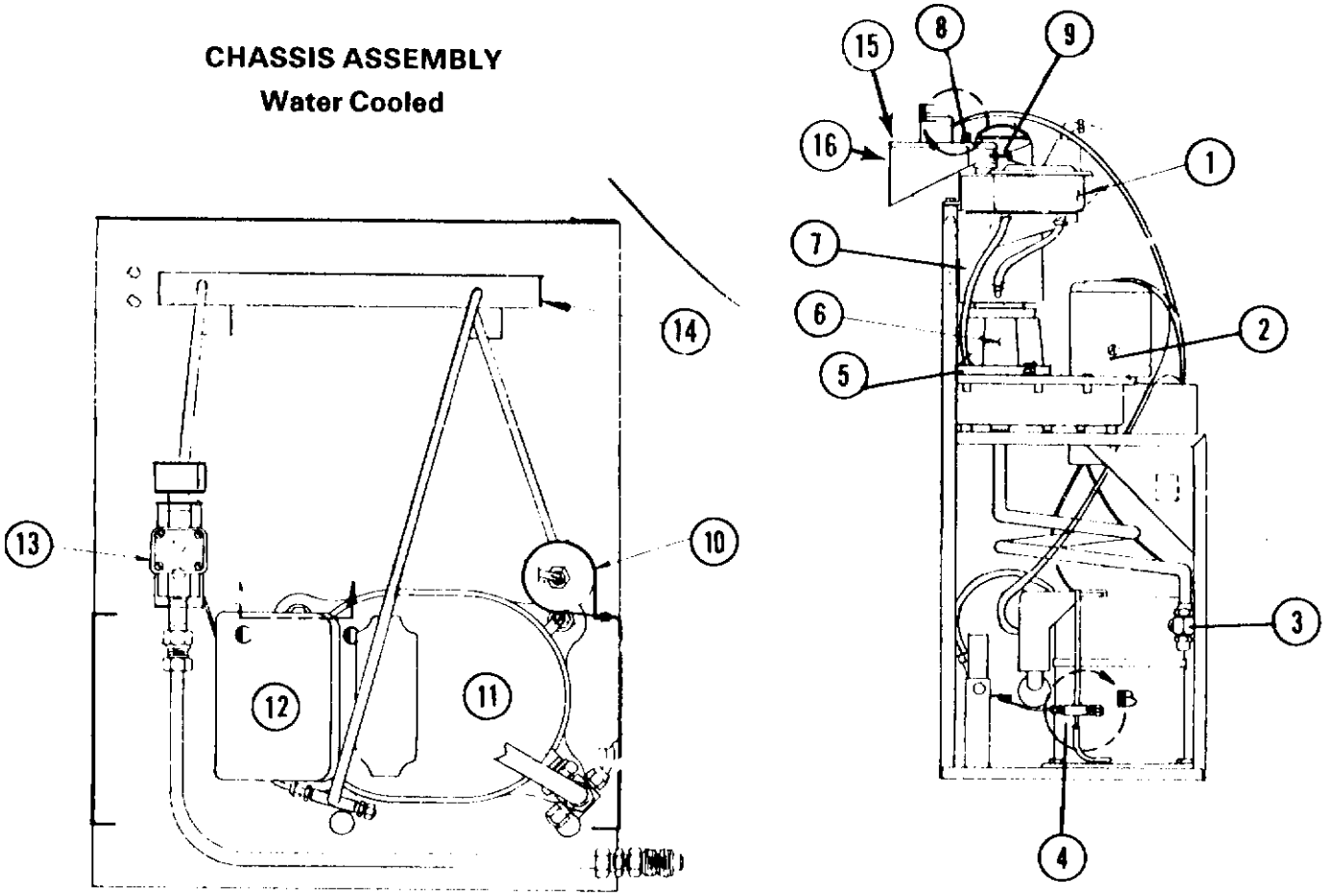

ITEM NO.	PART NO.	DESCRIPTION
1.	See Page 6 & 8	Water Reservoir
2.	See Page 7	Gear Motor
3.	18-2201-30	1/2" Flare, Suction Service Valve
4.	16-0563-01	Discharge Valve Cap
4.	16-0560-00	Discharge Valve Core
5.	A24156-001	Drip Pan
5.	13-0704-00	Gasket
6.	02-1629-00	Fiber Adapter
6.	15-0573-01	Coupling Assembly
6.	03-1405-41	Screws Into Gearmotor (4/Unit)
6.	03-1417-13	Lockwasher for above
7.	See Page 4	Freezer Assy. (See Exploded View)
8.	A14256-000	Knurled Nut
	A14269-000	Front Spout Casting
9.	03-1403-55	Screws thru Casting Halves
10.	02-0544-00	Drier
11.	18-2400-01	Motor Compressor
12.	18-2400-25	Compressor Overload
12.	18-2410-00	Compressor Relay
12.	18-2420-00	Starting Capacitor
13.	11-0198-00	Water Regulating Valve
14.	18-0368-00	Condenser (Halstead-Mitchell) New Units use Round Condenser 18-3305-02
15.	A16350-000	Spout Assembly
16.	A16353-000	Spout Pressure Plate

CHASSIS ASSEMBLY

Air Cooled

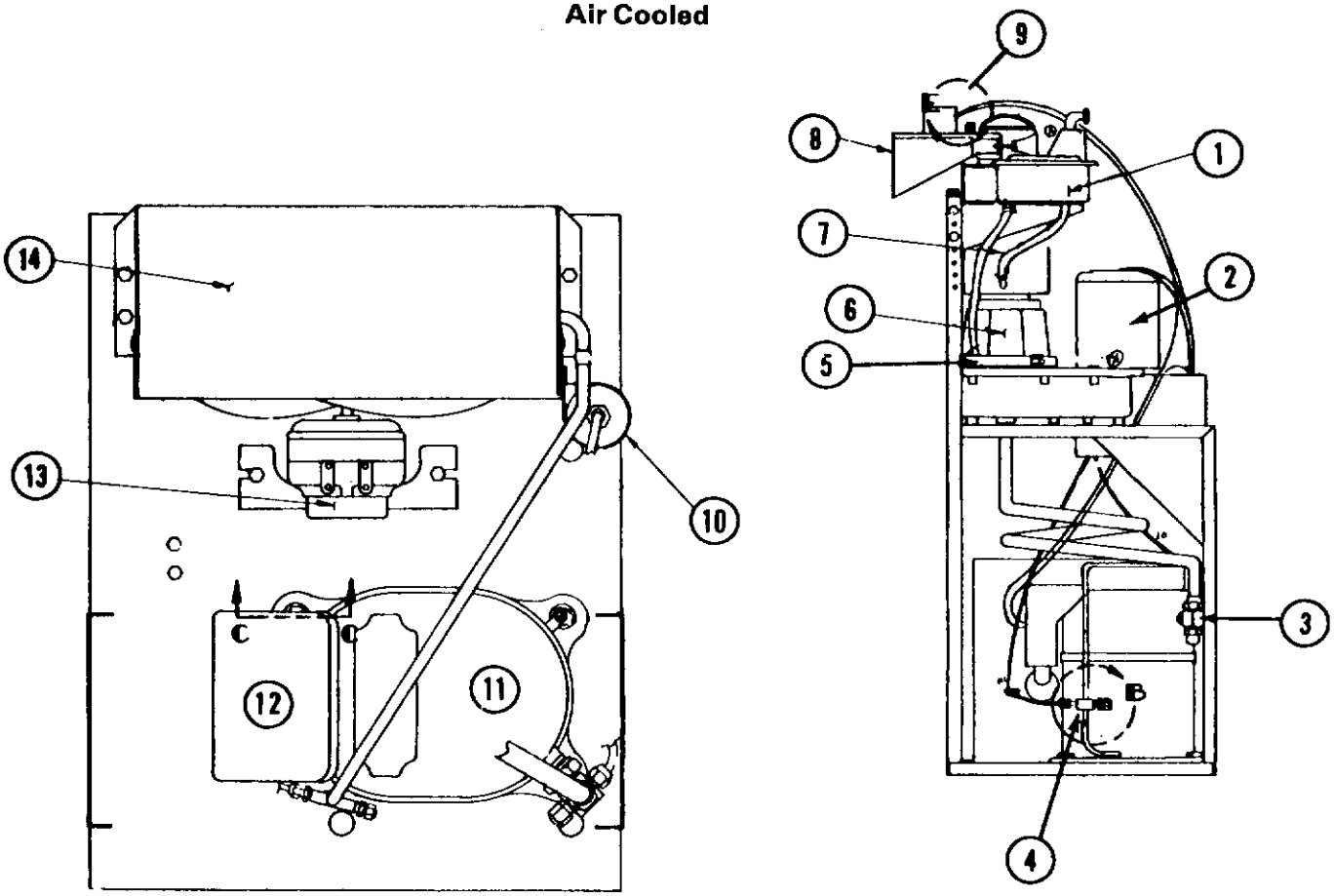

ITEM NO.	PART NO.	DESCRIPTION
1.	See Page 6 & 8	Water Reservoir
2.	See Page 7	Gear Motor
3.	18-2201-30	1/@" Flare Suction Service Valve
4.	16-0563-00	Discharge Valve Cap
4.	16-0560-00	Valve Core
5.	A24156-001	Drip Pan
5.	13-0704-00	Gasket
6.	02-1629-00	Fibre Adapter
6.	15-0573-01	Coupling Assembly
6.	03-1405-41	Screws into Gear Motor (4/Unit)
6.	03-1417-13	Lockwasher for Above
7.	See Page 4	Freezer Assy.
8.	A16350-000	Spout
9.	12-1018-00	Spout Micro Switch
10.	02-0544-00	Drier
11.	18-2400-01	Compressor
12.	18-2420-00	Capacitor 115V
12.	18-2421-00	Capacitor 208-230V
12.	18-2410-00	Relay 115V
12.	18-2203-04	RElay 208-230V
13.	12-1576-01	Fan Motor
13.	12-1573-03	Fan Motor Cord
13.	18-0363-00	Fan Blade
13.	18-0388-00	Motor Mount
14.	18-0396-01	Condenser
14.	A12111-000	Shroud

CONTROL BOX

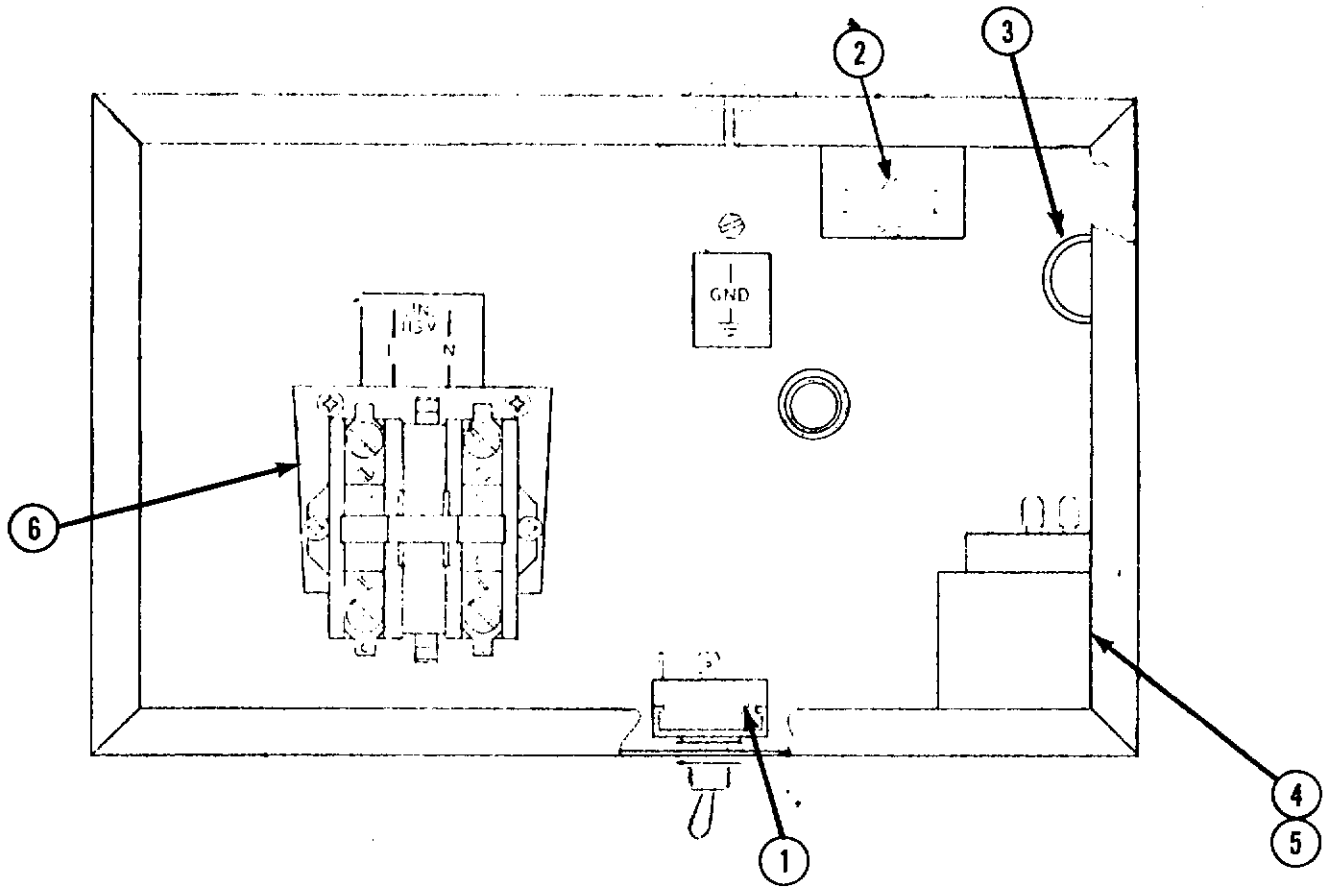

ITEM NO.	PART NO.	DESCRIPTION	
1.	12-0426-01	Switch — On-Off	
2.	12-0813-04	Terminal Board	
3.	11-0354-00	Bin Thermostat	
4.	11-0362-00	Fan Speed Control (Air Cooled Only)	
4.	11-0357-00	High Pressure Control (Water Cooled Only)	
5.	11-0358-00	Low Pressure Control	
6.	12-0820-00	Contactor	
*7.	12-0474-00	Resistor - Fan Speed 115/60/1	Air Cooled Only
*7.	12-0562-00	Resistor - Fan Speed 230/60/1	Air Cooled Only

*Not Shown

FREEZER ASSEMBLY

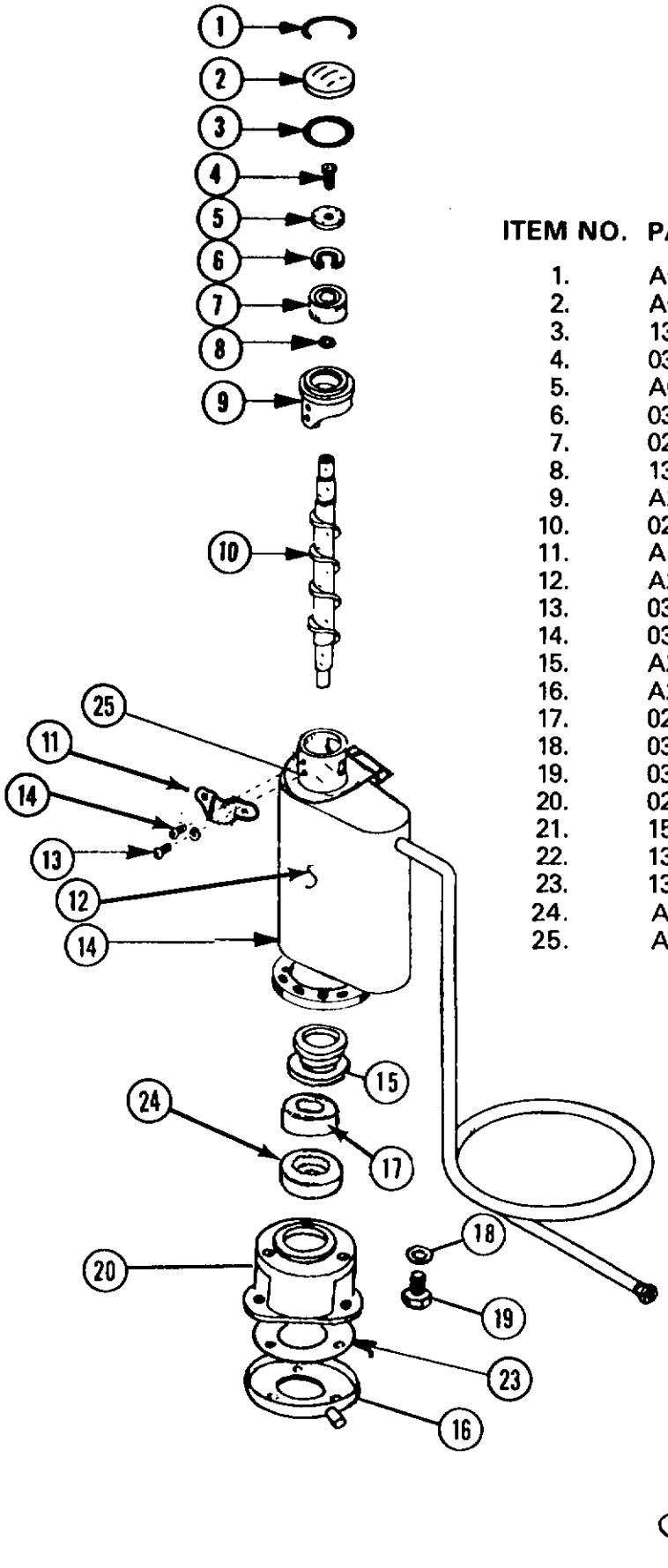

ITEM NO.	PART NO.	DESCRIPTION
1.	A08582-000	Cap Hook
2.	A08581-000	Cap
3.	13-0617-20	O Ring
4.	03-1405-36	Cap Screw
5.	A06273-000	Washer
6.	03-1558-04	Snap Ring
7.	02-0646-00	Bearing
8.	13-0617-15	"O" Ring
9.	A26704-001	Breaker with Bearing
10.	02-0617-00	Auger
11.	A18431-000	Spout Plate
12.	A26679-020	Worm Tube — Suction Line
13.	03-1410-03	Washer
14.	03-1403-48	Screw
15.	A22569-000	Water Seal
16.	A24156-00	Drip Pan
17.	02-0619-00	Lower Bearing
18.	03-1417-13	Washer
19.	03-1405-41	Screw
20.	02-1629-00	Adapter
21.	15-0573-01	Drive Coupling
22.	13-0709-02	Shaft Drip Shield Rubber
23.	13-0704-00	Cork Gasket
24.	A10591-000	Lower Bearing Retainer
25.	A20987-000	Freezer Support

CASE ASSEMBLY

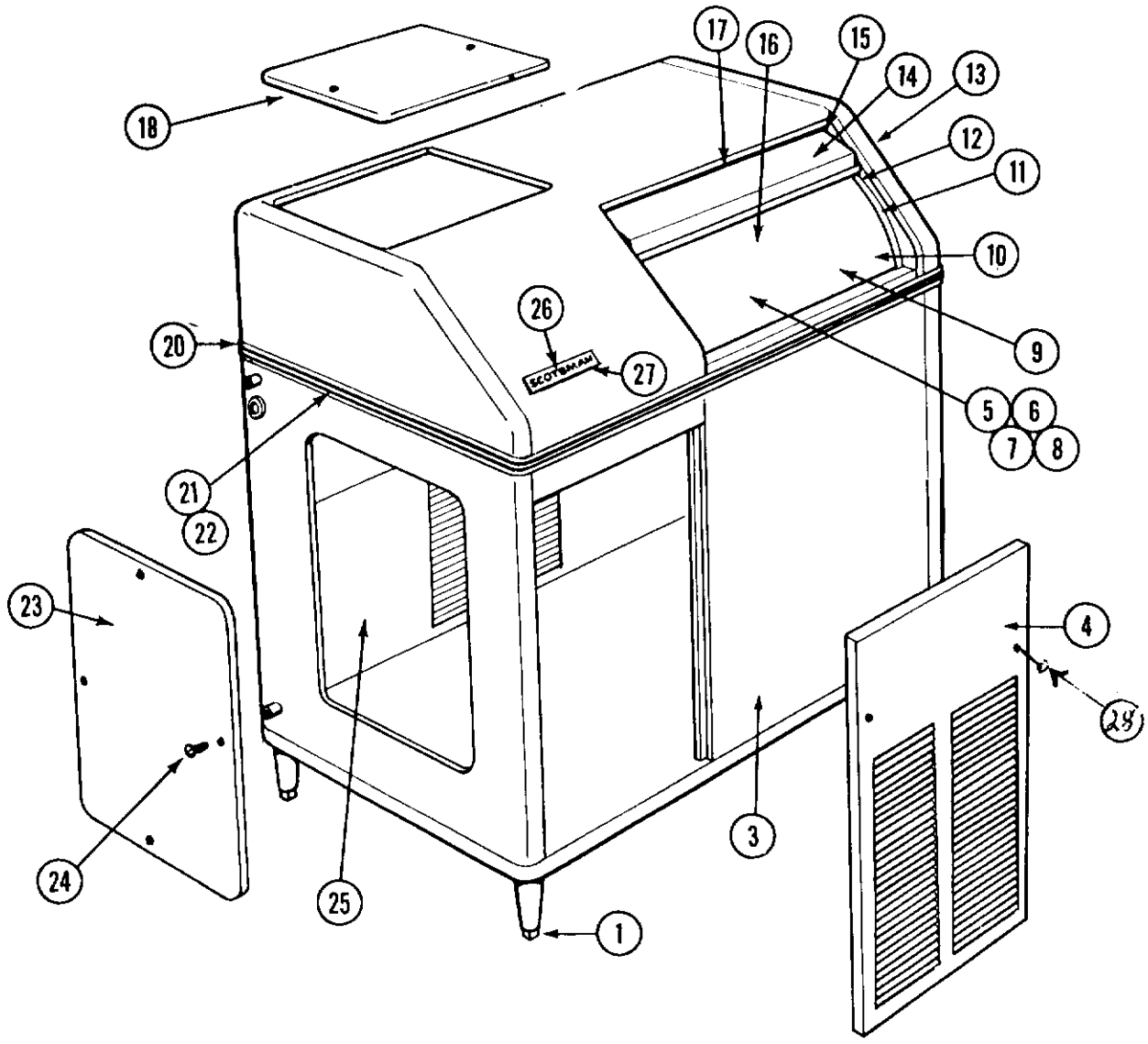

ITEM NO.	PART NO. SANDELWOOD	S.S.	DESCRIPTION
1.	KLP2E	KLP2S	Leg
2.			
▲1 3.	A20288-008	A20288-001	Case Assy.
▲1 4.	A21250-008	A21250-002	Front Door
5.	A21022-000	A21022-000	Drain Assy.*
6.	13-0617-11	13-0617-11	"O" Ring*
7.	02-1741-00	02-1741-00	Drain (top)*
8.	02-1742-00	02-1742-00	Drain (bottom)*
9.	A19736-000	A19736-000	Storage Bin Assy.*
11.	None	03-0640-00	Door Glides (door)
12.	03-1195-00	03-1195-00	Door Glides (hood)
13.	A20992-008	A20992-001	Case Hood Assy.
▲2 14.	02-1735-01	A15559-000	Sliding Door

ITEM NO.	PART NO. ENAMEL	S.S.	DESCRIPTION
15.	A16208-000	A16208-000	Door Track
16.	02-1615-00	02-1615-00	Bulb Holder*
17.	A16209-000	A16209-000	Door Catch*
18.	A07676-005	A07676-00S	Top Door
20.	A05829-000	A05829-000	Strip*
21.	15-0324-00	15-0324-00	Plastic Moulding—Trim
22.	S07413-000	S06413-000	Front Moulding Strip
23.	S06713-008	S06713-00S	Side Door
24.	03-1419-09		Screw S.S.
25.	A08741-008	A08741-00S	Rear Door
26.	15-0156-00		Emblem
27.	03-0271-00		Speednut
28.	03-1419-09		Screw

NOTE: Front door on water cooled models are:

* Not Shown

▲1 Enamel—A15793-008, S.S.—A15793-002

▲2 02-1735-00 Grey Door is still available for older units.

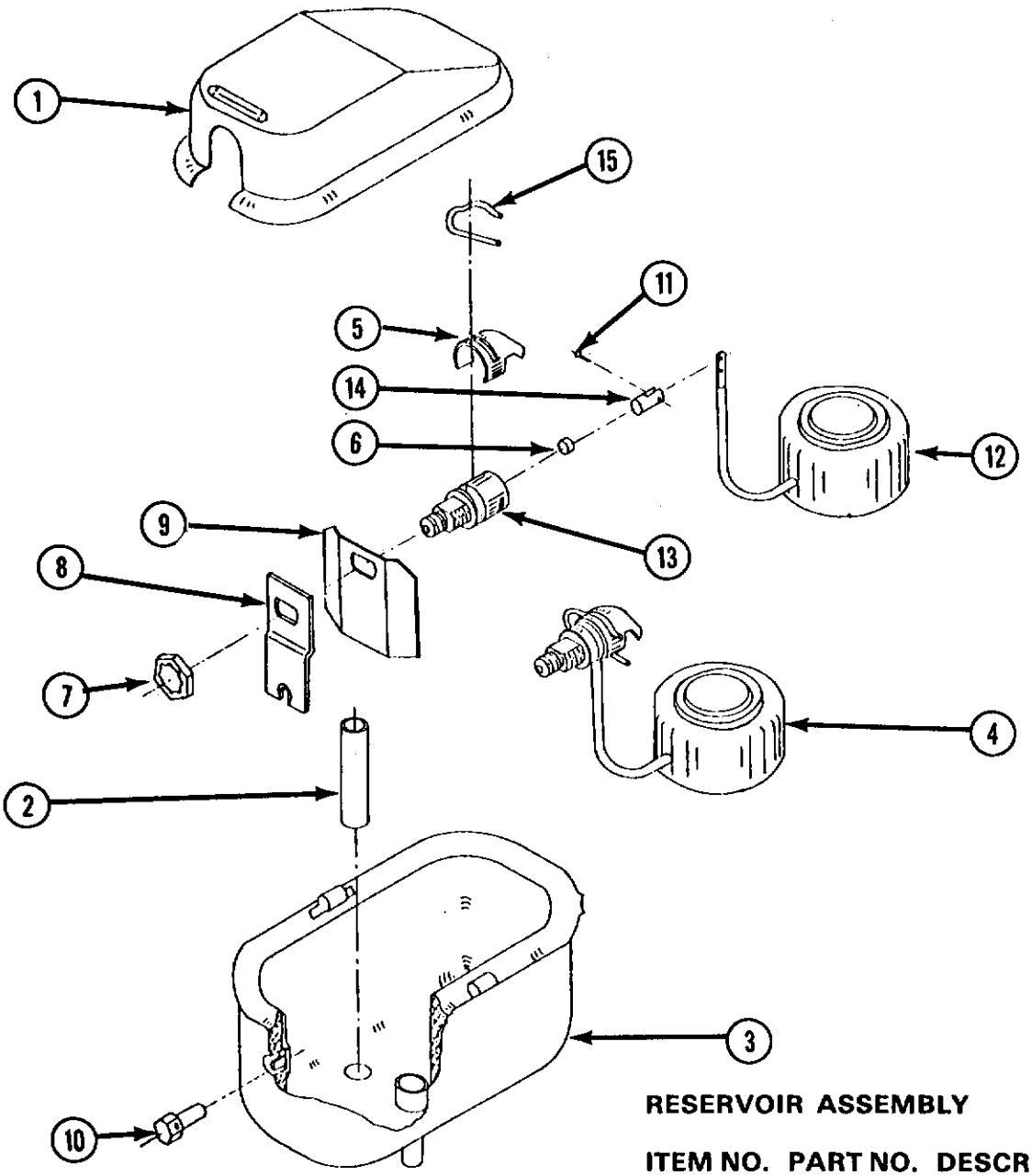

RESERVOIR ASSEMBLY

ITEM NO.	PART NO.	DESCRIPTION
1.	A16012-000	Reservoir Cover
2.	S06715-000	Stand Pipe
3.		Reservoir Complete Less Item No. 1 & 2
4.	S08138-000	Valve Complete Includes Items 5, 6, 11, 12, 13, 14 & 15
5.	02-1320-00	Water Deflector
6.	A08339-000	Valve Seat
7.	03-1394-00	Pal Nut
8.	A12869-000	Bracket
9.	A18418-001	Water Deflector
10.	A08055-000	Bracket Nut
11.	03-1001-00	Rivet
*12.		Float
*13.		Inlet Valve
*14.		Valve Seat Holder
15.	02-1259-00	Valve Pin

NOTE: Use of this reservoir was discontinued about mid 1975. Current units use the reservoir on page 8.

*Use Item #4

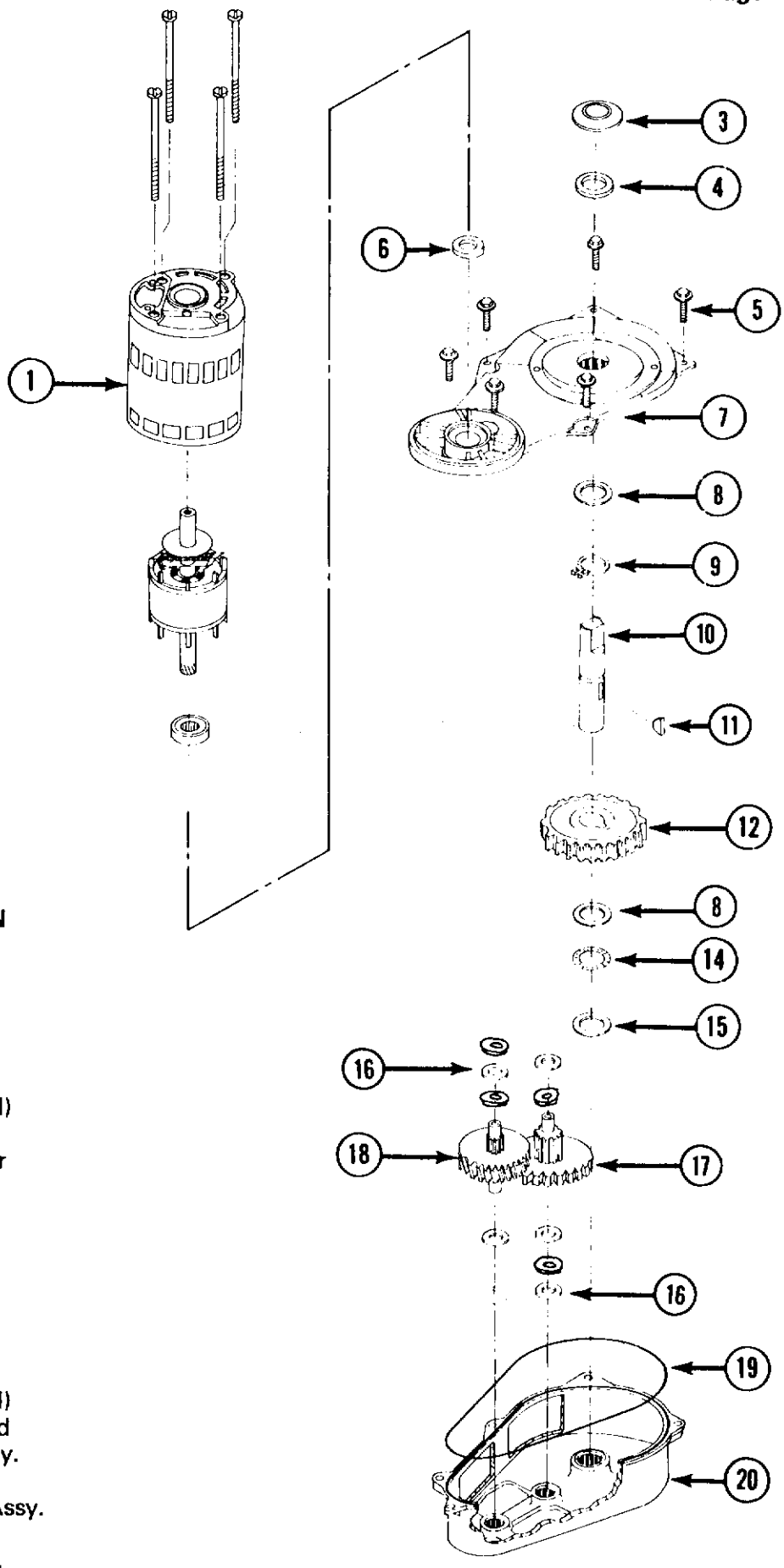

A22750-021
GEAR MOTOR ASSEMBLY
1/4 HP 115/60/1
OUTPUT SHAFT TURNS
AT 10 RPM

ITEM NO.	PART NO.	DESCCRIPTION
1.	A26455-001	Motor 115/60/1
3.	13-0709-02	Water Shed
4.	02-1607-00	Oil Seal
5.	03-1251-01	Screws (6 Req'd)
6.	02-1606-00	Oil Seal
7.	A22200-000	Gear Case Cover Assembly
8.	02-1681-00	Thrust Race (2)
9.	03-1363-00	Retaining Ring
10.	02-1652-00	Output Shaft
11.	03-1364-00	Key
12.	02-1653-00	Output Gear
14.	02-1680-00	Bearing
15.	02-1679-00	Thrust Race
16.	03-1408-24	Washer (9 Req'd)
17.	02-1604-00	Second Gear and Third Pinion Assy.
18.	02-1603-00	First Gear and Second Pinion Assy.
19.	A26103-001	"O" Ring
20.	A22199-000	Gear CAse Assy.

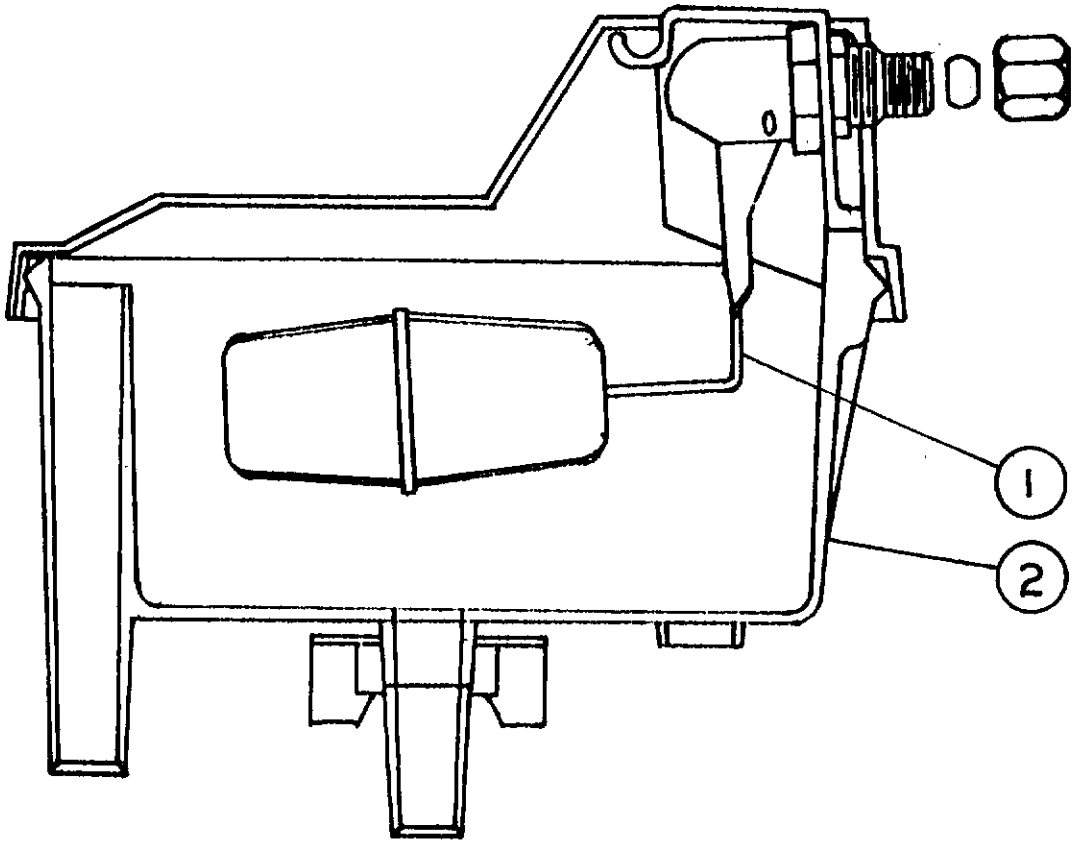

RESERVOIR ASSEMBLY

ITEM NO.	PART NO.	DESCRIPTION
1.	02-2217-02	Valve Assy.
2.	02-2217-01	Reservoir Complete

CHASSIS ASSY
LEFT SIDE

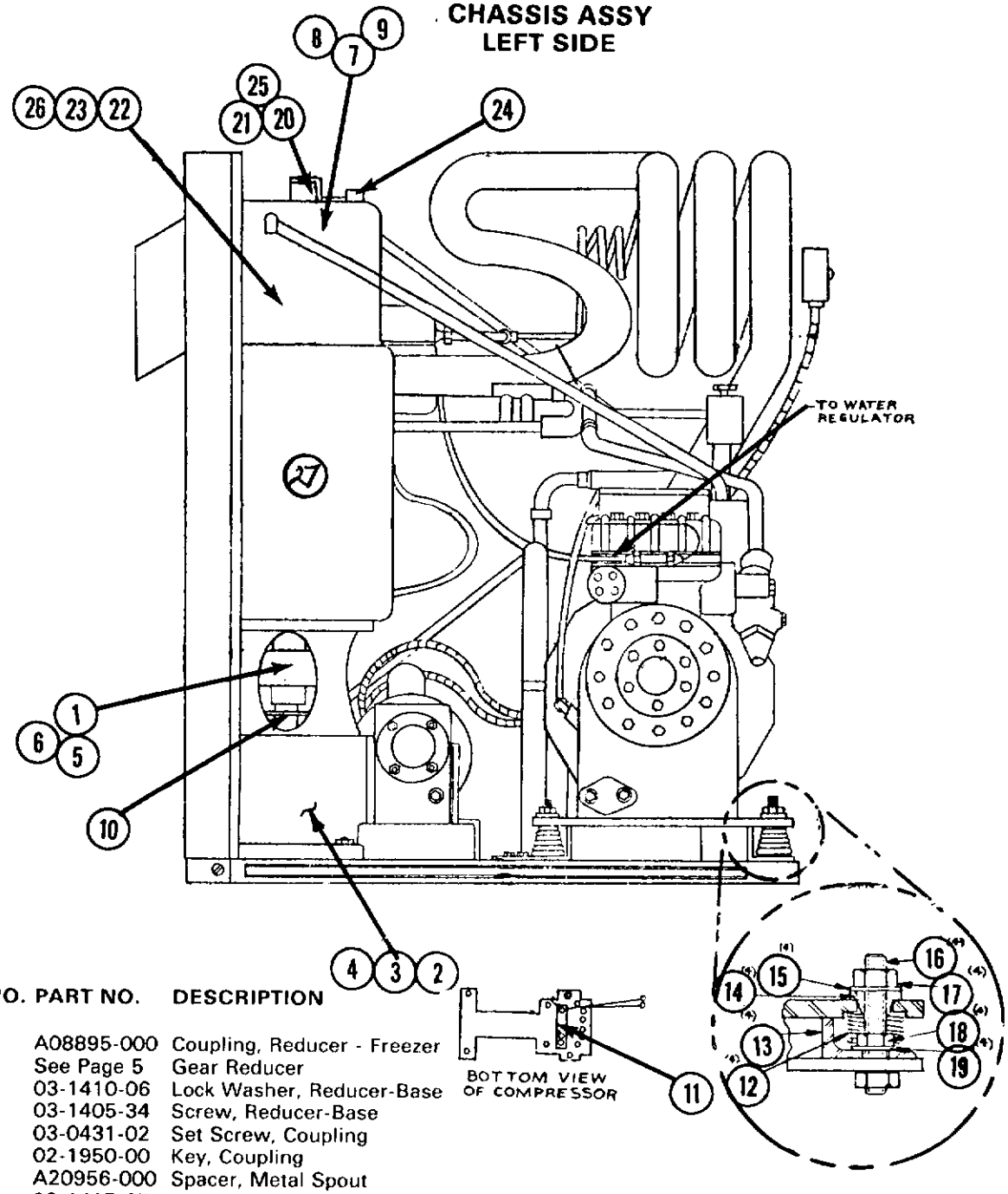

ITEM NO.	PART NO.	DESCRIPTION
1.	A08895-000	Coupling, Reducer - Freezer
2.	See Page 5	Gear Reducer
3.	03-1410-06	Lock Washer, Reducer-Base
4.	03-1405-34	Screw, Reducer-Base
5.	03-0431-02	Set Screw, Coupling
6.	02-1950-00	Key, Coupling
7.	A20956-000	Spacer, Metal Spout
8.	03-1417-07	Lockwasher
9.	03-1405-04	Screw
10.	A09056-000	Rubber Shield
11.	18-0789-02	Crankcase Heater
12.	18-0800-21	Spring, Maroon
13.	18-1400-26	Mounting Pads
14.	18-1400-25	Rubber Spacer
15.	03-1407-10	Washer
16.	18-0800-20	Mounting Stud
17.	18-1400-24	Mounting Nut, Upper
18.	18-1400-22	Mounting Nut, Lower
19.	18-0700-11	Washer
20.	A14975-000	Limit Box, LT. Freezer
21.	12-1018-00	Limit Switch only
22.	A16668-000	Spout - Less Switch & Plate
23.	A16670-000	Pressure Plate
24.	A16926-000	Thumb Nut
25.	A14241-000	Cover, Limit Box
26.	02-1321-00	Spring
27.	See Page 4	Freezer Assy.

CHASSIS ASSY
FRONT

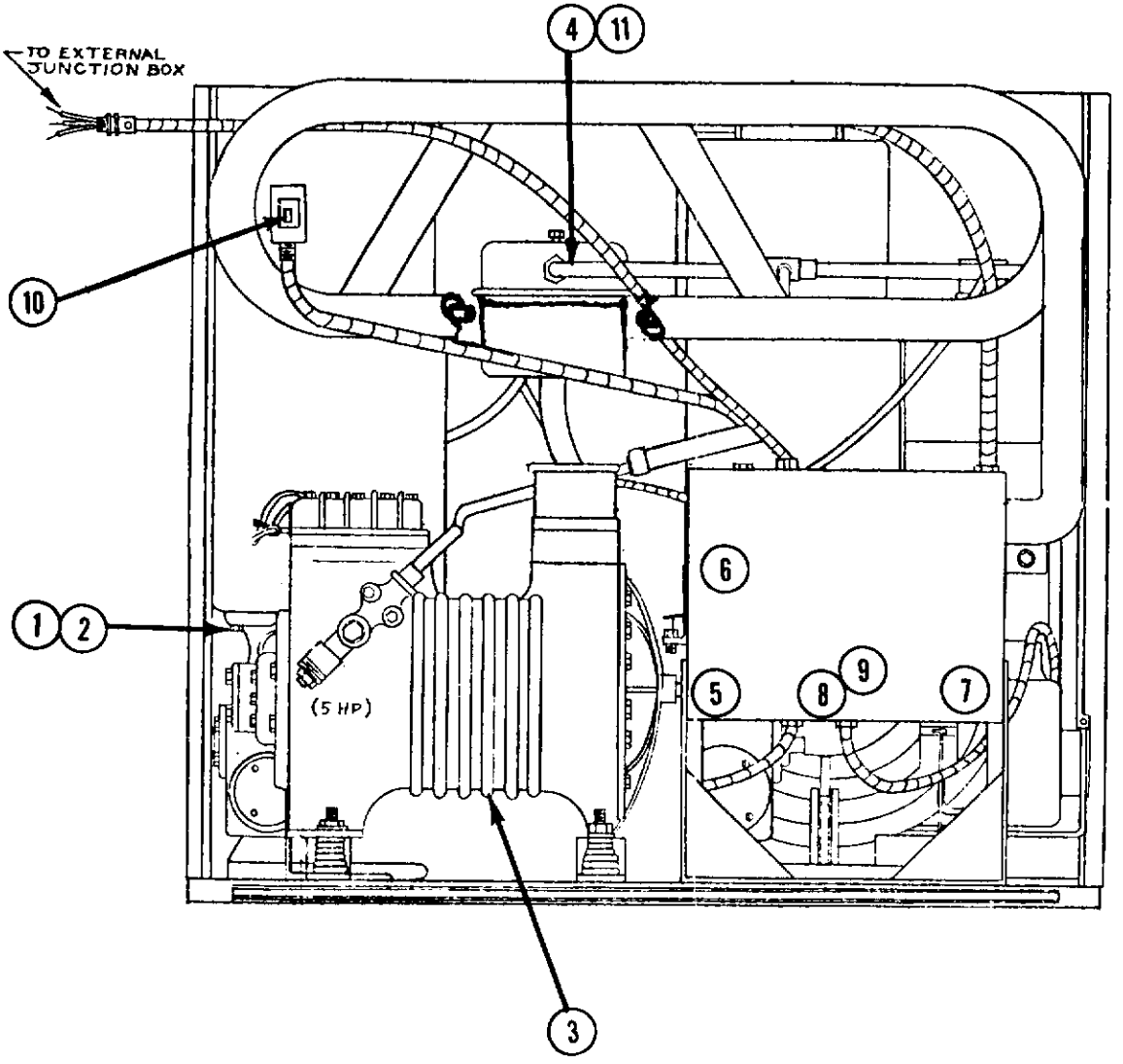

ITEM NO.	PART NO.	DESCRIPTION
1.	03-1420-02	Screw
2.	03-1407-07	Lockwasher
3.	18-0802-00	Comp. 230/60/1
	18-0804-00	Comp. 208-220/60/3
4.	See Page 6	Reservoir Assy.
5.	11-0354-01	Bin Control
6.	11-0286-01	Hi-Lo Pressure Control
7.	12-0831-02	Contactor 230/60/1
	12-0832-02	Contactor 208-220/60/3
8.	12-0468-32	Starter 230/60/1
	12-0468-20	Starter 208-220/60/3
9.	12-0707-06	Heater - Century Motor 230/60/1
	12-0707-07	Heater - General Electric 230/60/1
	12-0707-08	Heater - Westinghouse 230/60/1
	12-0707-07	Heater - Century 208-220/60/3
	12-0707-09	Heater - General Electric 208-220/60/3
	12-0707-08	Heater - Century 208-220/60/3
10.	12-0426-01	Switch
*11.	16-0162-00	Strainer, Water In

*Compressor Repair

18-0736-00	Gasket, Discharge Valve
18-0835-00	Gasket, Suction Valve
18-0834-00	Terminal Assy
18-0732-00	Discharge Service Valve
18-0829-00	Gasket, Valve plate to body

*Not Shown

CHASSIS ASSY
RIGHT SIDE

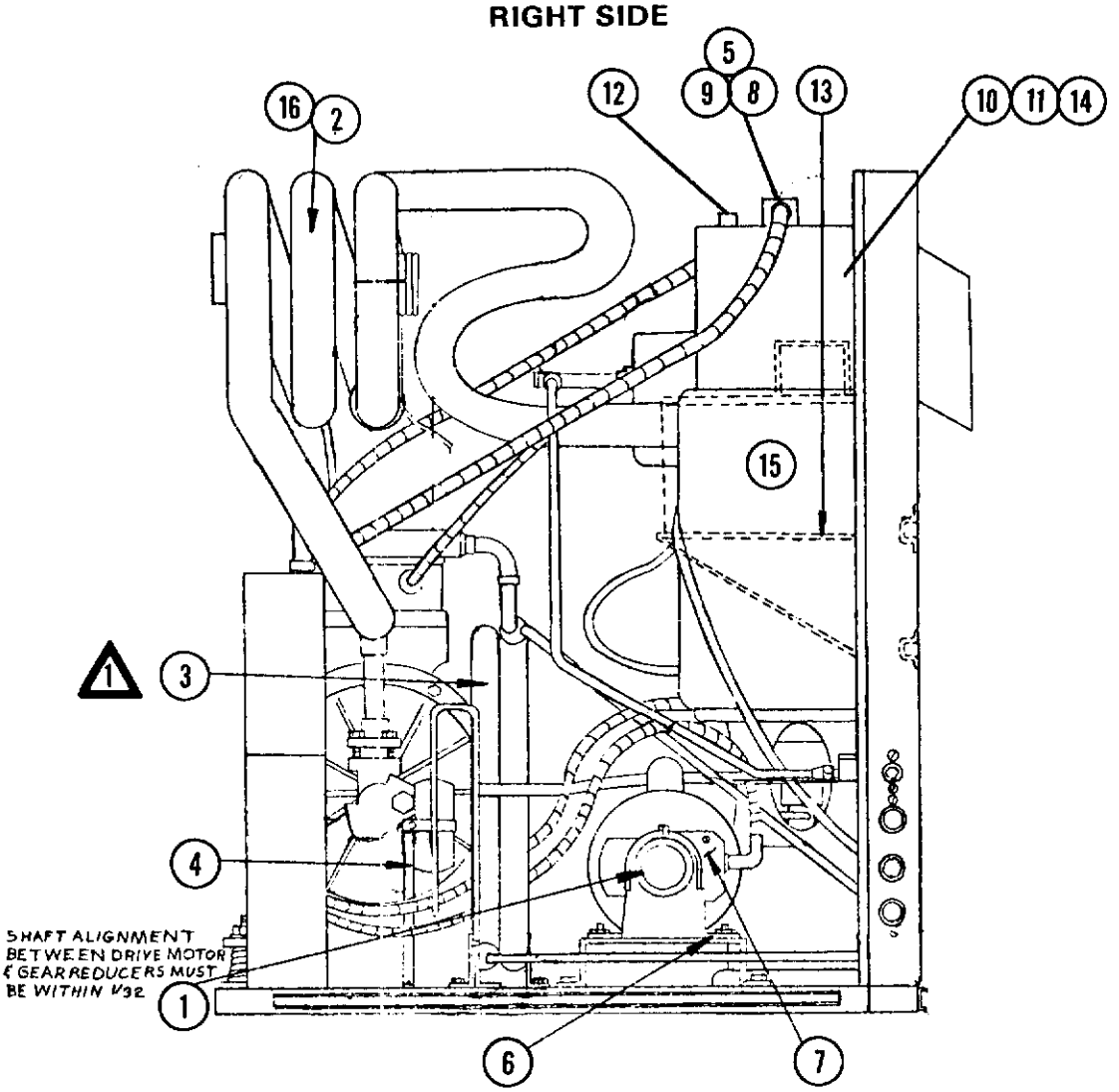

NOTE:

1 Circular Condenser began W/7B183102 in 1974 (PS-2-76), not interchangeable with bar type P.N. 18-0849-00.

ITEM NO.	PART NO.	DESCRIPTION
1.	A18341-000	Coupling, Motor-Reducer
2.	A08862-000	Suction Line Assy.
1 3.	18-1424-01	Condenser
4.	02-0822-00	Drier
5.	A14241-000	Cover, Limit Box
6.	A08893-000	Motor Mount
7.	A23610-002	Motor 230/60/1
	A23610-007	Motor 208-220/60/3
8.	A16849-000	Limit Box, RT. Freezer
9.	12-1018-00	Limit Switch only
10.	A16668-000	Spout - Less Switch & Plate
11.	A16670-000	Pressure Plate W/Spring
12.	A16926-000	Thumb Nut
13.	18-1900-28	Relay & Cap. Complete 230/60/1
	18-1901-20	Start Capacitor 230/60/1
	18-1902-28	Run Capacitor 230/60/1
	18-1903-28	Relay 230/60/1
14.	02-1321-00	Spring
15.	See Page 4	Freezer Assy.
16.	16-0326-00	Vibration Eliminator - Lo Side

FREEZER ASSEMBLY

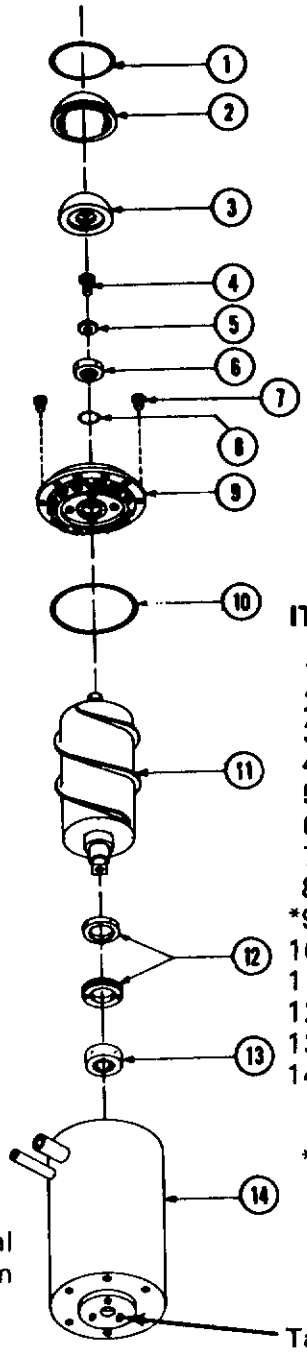

NOTE:
Ice Breaker has ten holes around circumference, six of these are used to secure breaker to freezer barrle. The four remaining holes are threaded and are used to lift breaker and worm shaft up. You remove the six holding screws, re-insert (4) screws into lifter or threaded holes, these have no bottom on barrel and by evenly drawing them down, ice breaker and worm is lifted up.

ITEM NO.	PART NO.	DESCRIPTION
1.	13-0617-18	O-Ring
2.	13-0231-00	Rubber Cap
3.	A09047-000	Styrofoam Cap
4.	03-1405-36	Screw
5.	A06273-000	Washer
6.	02-0619-00	Top Bearing
7.	03-1405-25	Screws (6 required)
8.	13-0617-15	O-Ring
*9.	A11351-000	Ice Breaker W/Bearing
10.	13-0617-17	O-Ring
11.	A26075-001	Auger
12.	02-0776-00	Water Seal
13.	02-0775-00	Lower Bearing
14.	A08858-000	Freezer Worm Tube
*	A11351-001	Ice Breaker W/Bearing (Large Chunk - Sharp Tooth)

NOTE:
Lower bearing or water seal cannot be changed from bottom must be pulled out from on top.

NOTE:
Lower bearing or water seal should be removed by pulling from the top. If bearing is worn badly and cannot be removed with a bearing puller, it can be pushed out by using three (3) 1/4 x 20 screws three inches long inserted in the tapped holes provided in the lower bearing retainer.

GEAR REDUCER
Part No. 02-0768-00
Ratio 432 to 1

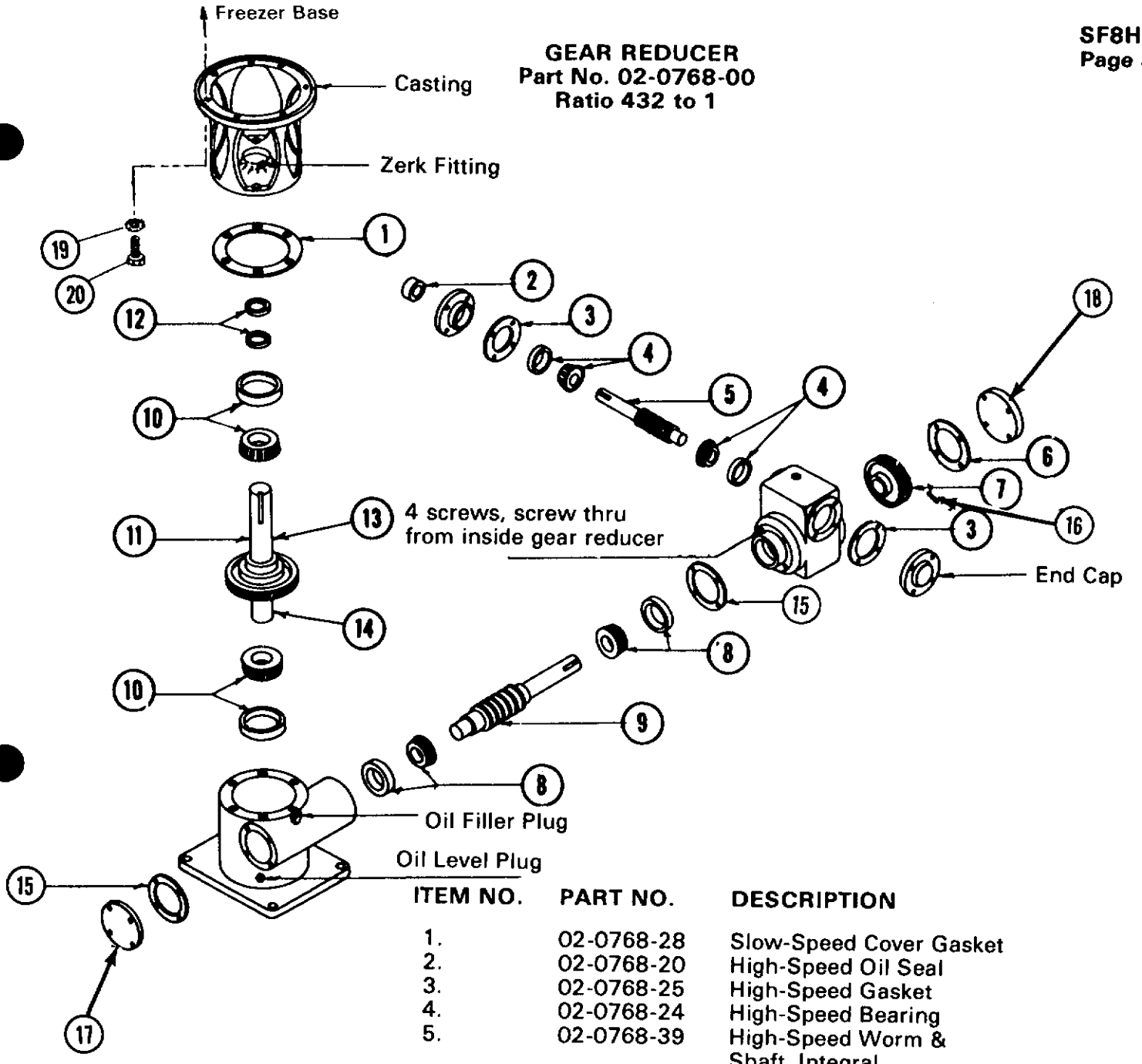

ITEM NO.	PART NO.	DESCRIPTION
1.	02-0768-28	Slow-Speed Cover Gasket
2.	02-0768-20	High-Speed Oil Seal
3.	02-0768-25	High-Speed Gasket
4.	02-0768-24	High-Speed Bearing
5.	02-0768-39	High-Speed Worm & Shaft, Integral
6.	02-0768-27	Intermediate Gasket
7.	02-0768-40	High-Speed Gear
8.	02-0768-23	Intermediate Roller Bearing
9.	02-0768-38	Intermediate Worm & Shaft, Integral
10.	02-0768-22	Slow-Speed Bearing
11.	02-0768-42	Slow-Speed Gear & Shaft Assembly
12.	02-0768-21	Slow-Speed Oil Seal
13.	02-0768-29	Slow-Speed Spacer (short)
14.	02-0768-30	Slow-Speed Spacer (long)
15.	02-0768-26	Gasket
16.	02-0768-37	Key & Pin
17.	02-0768-43	Intermediate Cap - Closed
18.	02-0768-44	High-Speed Attachment Housing Cover
19.	03-1407-07	Lockwasher
20.	03-1420-02	Screw

RESERVOIR ASSEMBLY

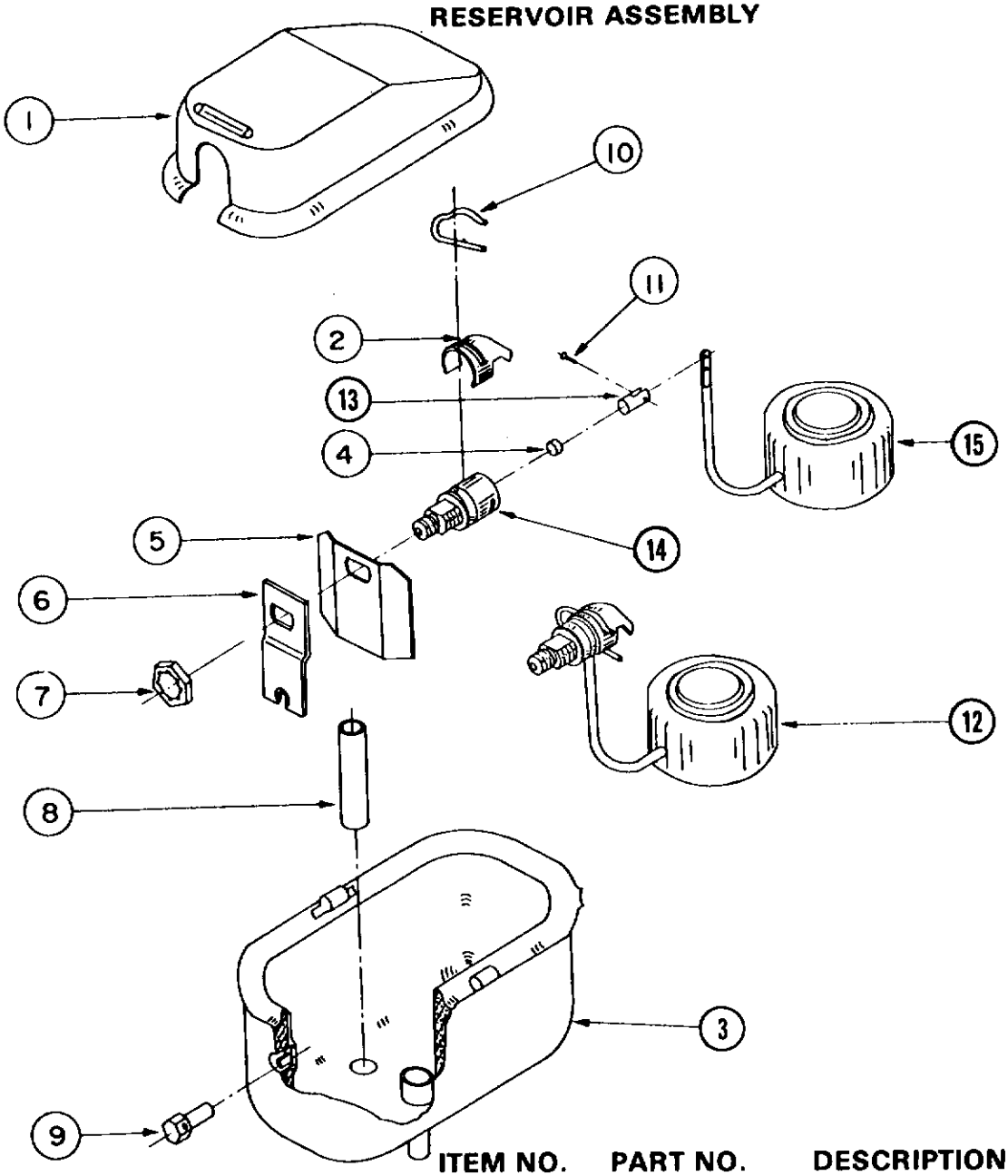

ITEM NO.	PART NO.	DESCRIPTION
1.	A12870-000	Reservoir Cover
2.	02-1320-00	Deflector
3.	A13413-000	Reservoir Body
4.	S06947-000	Valve Seat
5.	A18418-001	Water Deflector
6.	A12869-000	Bracket
7.	S07044-000	Nut
8.	S06715-000	Stand Pipe
9.	A08055-000	Bracket Nut
10.	02-1259-00	Valve Pin
11.	03-1001-00	Rivet
12.	A09101-000	Valve & Float Complete includes Items 2, 4, 10, 11, 13, 14, & 15
*13.		Valve Seat Holder
*14.		Water Inlet Valve
*15.		Float
	A08868-000	Reservoir Complete (Less Items 1 and 8)

*Use Item 12

SF-8 CASE ASSEMBLY

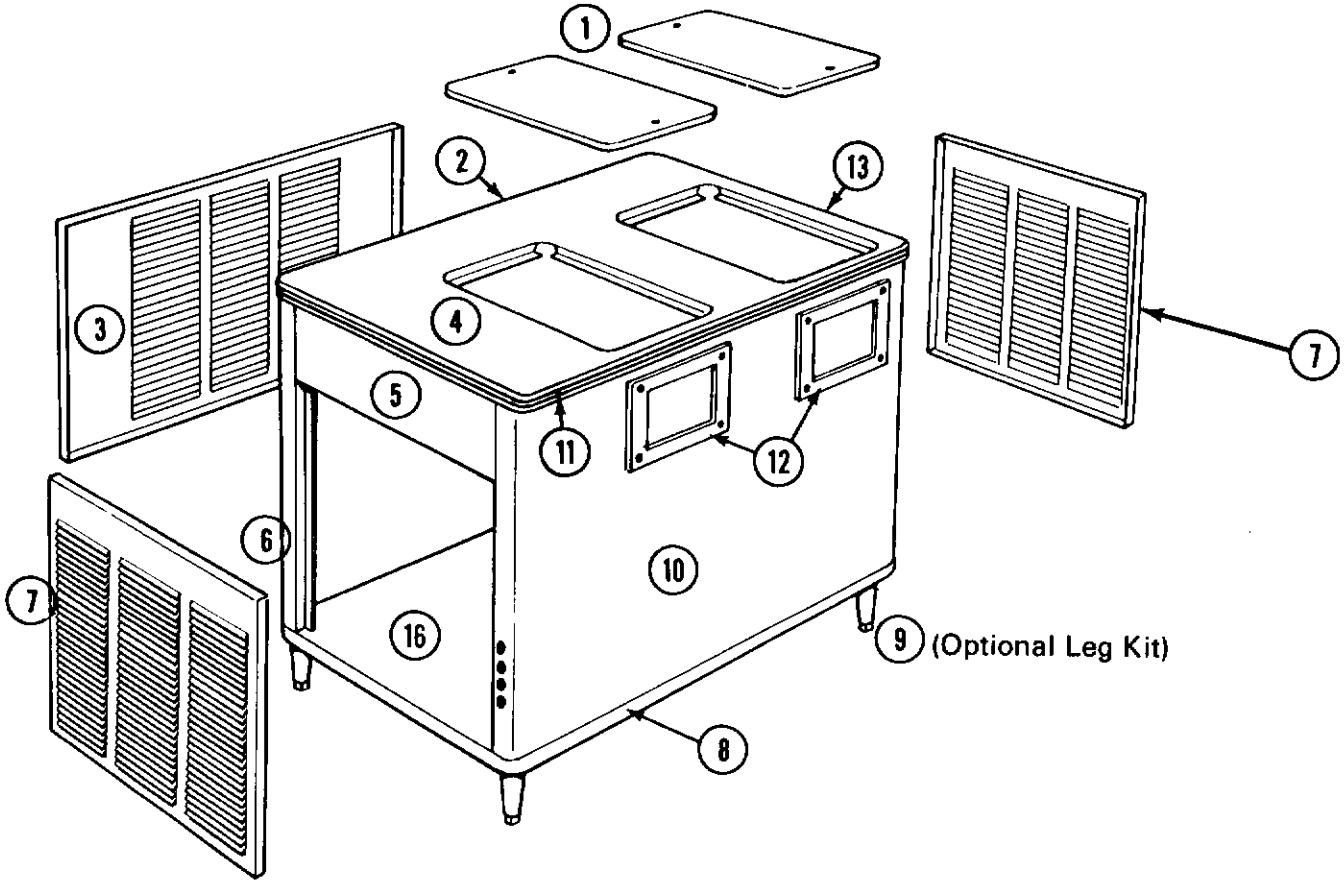

ITEM NO.	DESCRIPTION	PAINTED PART NO.	S.S. PART NO.
1.	Door Panel, Top (2 req'd.)	A22802-008	A22802-002
2.	Cab. Front panel Ass'y (*)	A08909-008	A08909-00S
3.	Front Door Assembly	A08912-008	A08912-00S
4.	Cab. Top Assembly	A17056-008	A17056-00S
5.	Right Panel	A08904-008	A08904-00S
6.	Case Corner Assembly (2)	A08916-008	A08916-00S
7.	Side Door Ass'y (2 req'd.)	A08914-008	A08914-00S
8.	Bottom Trim (2 req'd.)	A08902-012	A08902-012
9.	Leg Kit (Optional)	KLP2E	KLP2S
10.	Cab. Back Panel Ass'y	A08905-008	A08905-00S
11.	Top Trim Strip (2 req'd.)	A08902-011	A08902-011
12.	Spout Frame (2 req'd.)	13-0591-01	13-0591-01
13.	Left Panel (*)	A17069-008	A17069-00S
14.	Scotsman Emblem (*)	15-0156-00	15-0156-00
15.	Emblem Speednut (2 req'd.) (*)	03-0271-00	03-0271-00
16.	Unit Base	A18722-000	A18722-001

*Not Shown

SF8 CHASSIS FRONT VIEW
Thru "H" models

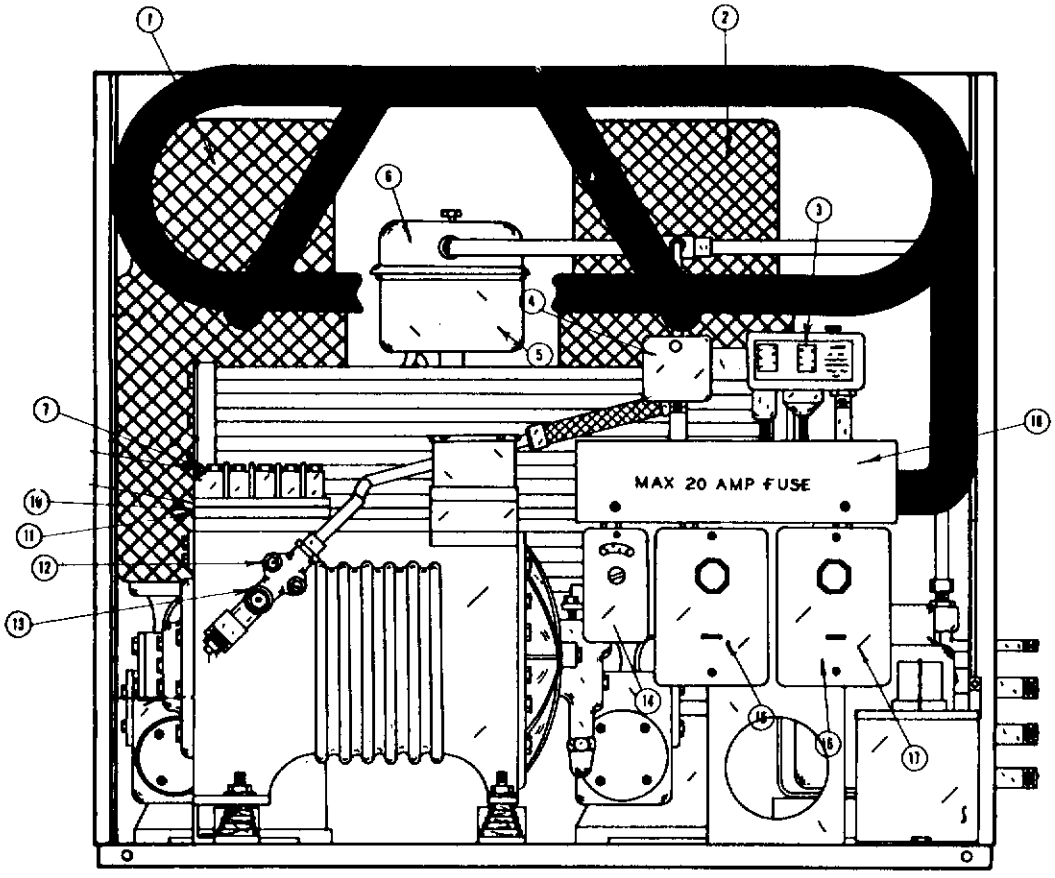

ITEM NO.	PART NO.	DESCRIPTION
1.	A16668-000	Spout only
2.	11-0286-00	High-Low Pressure Control
3.	11-0296-00	Water Failure Switch
4.	A08868-000	Reservoir Assembly
5.	A12870-000	Cover Assembly
6.	18-0835-00	Gasket, Suction Valve
7.	18-0835-00	Terminal Ass'y
10.	18-0829-00	Gasket, Valve Plate to body
11.	18-0732-00	Discharge Service Valve
12.	18-0736-00	Discharge Service Valve Gasket
13.	11-0099-00	Bin Control
14.	12-0468-30	Starter 230/60/1
	12-0468-20	Starter 208/220/60/3
15.	12-0831-02	Contactor 230/60/1
	12-0832-02	Contactor 208/220/60/3
16.		Heaters See Table 12-0707 State motor manufacturer & voltage when ordering

* Previous to "H" Models
A13474-000 Spout Ass'y., Left
A14283-000 Spout Ass'y., Right

SF8 CHASSIS SIDE VIEW
Used thru "H" Models

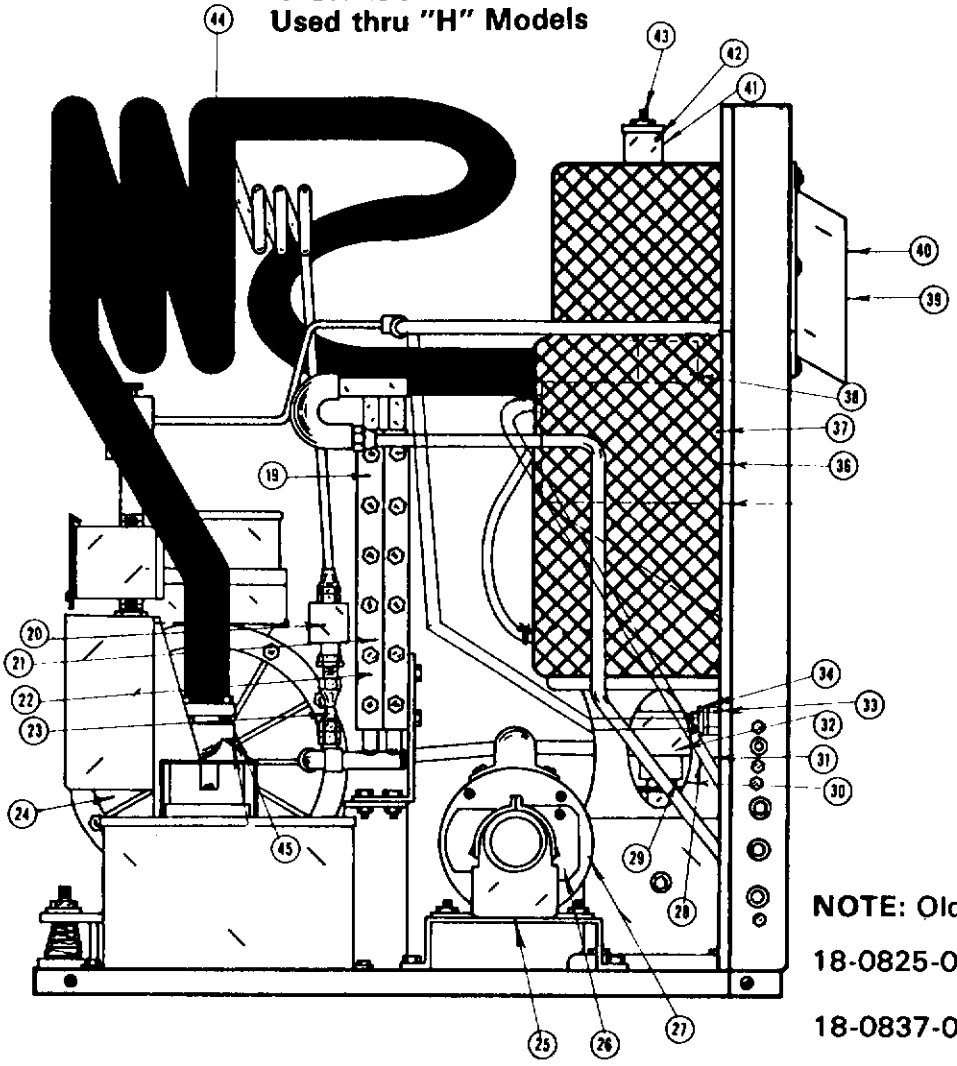

NOTE: Old Style

18-0825-00 Running Capacitor

18-0837-00 Relay

ITEM NO.	PART NO.	DESCRIPTION
19.	18-0821-00	Condenser
20.	02-0822-00	Drier
21.	18-0740-00	Condenser Gasket (6-hole)(*)
22.	18-0741-00	Condenser Gasket Manifold (5-hole)(*)
24.	18-0802-00	Motor Compressor 230/60/1
	18-0804-00	Motor Compressor 208/220/60/3
25.	A08893-000	Motor Mount Ass'y (2 per unit)
26.	A23610-002	Drive Motor 230/60/1 (use A23610-007 on 208/220/60/3)
27.	A18341-000	Flexible Coupling (motor to reducer)(*)
28.	A08895-000	Coupling Ass'y (reducer to worm shaft)
29.	03-0431-00	Set Screw (coupling)
30.	13-0152-00	Rubber Shield

Previous to "H" Models
A13678-000 Pressure Plate Spout
12-0984-00 Micro Switch

ITEM NO.	PART NO.	DESCRIPTION
31.	02-0768-00	Gear Reducer
32.	02-1947-00	Coupling Key (*)
33.	16-0162-01	Strainer
34.	11-0295-00	Water Pressure Reg. (*)
35.		
36.	18-1901-20	Starting Capacitor
37.	18-1902-28	Running Capacitor
38.	18-1903-28	Relay 230/60/1
39.	A16670-000	Presure Plate, Spout (*)
40.	02-1321-00	Spring
41.	A14241-000	Cover, Micro Boy
42.	03-1404-01	Screws (2 per unit)
43.	12-1018-00	Micro Switch
44.	A08862-000	Suction Line Ass'y
45.	18-0835-00	Suction Valve Gasket
46.		

(*) Not Shown

GEAR REDUCER SF8-WH
All models with 10 RPM Gear Reducers
Sandalwood painted Cabinets

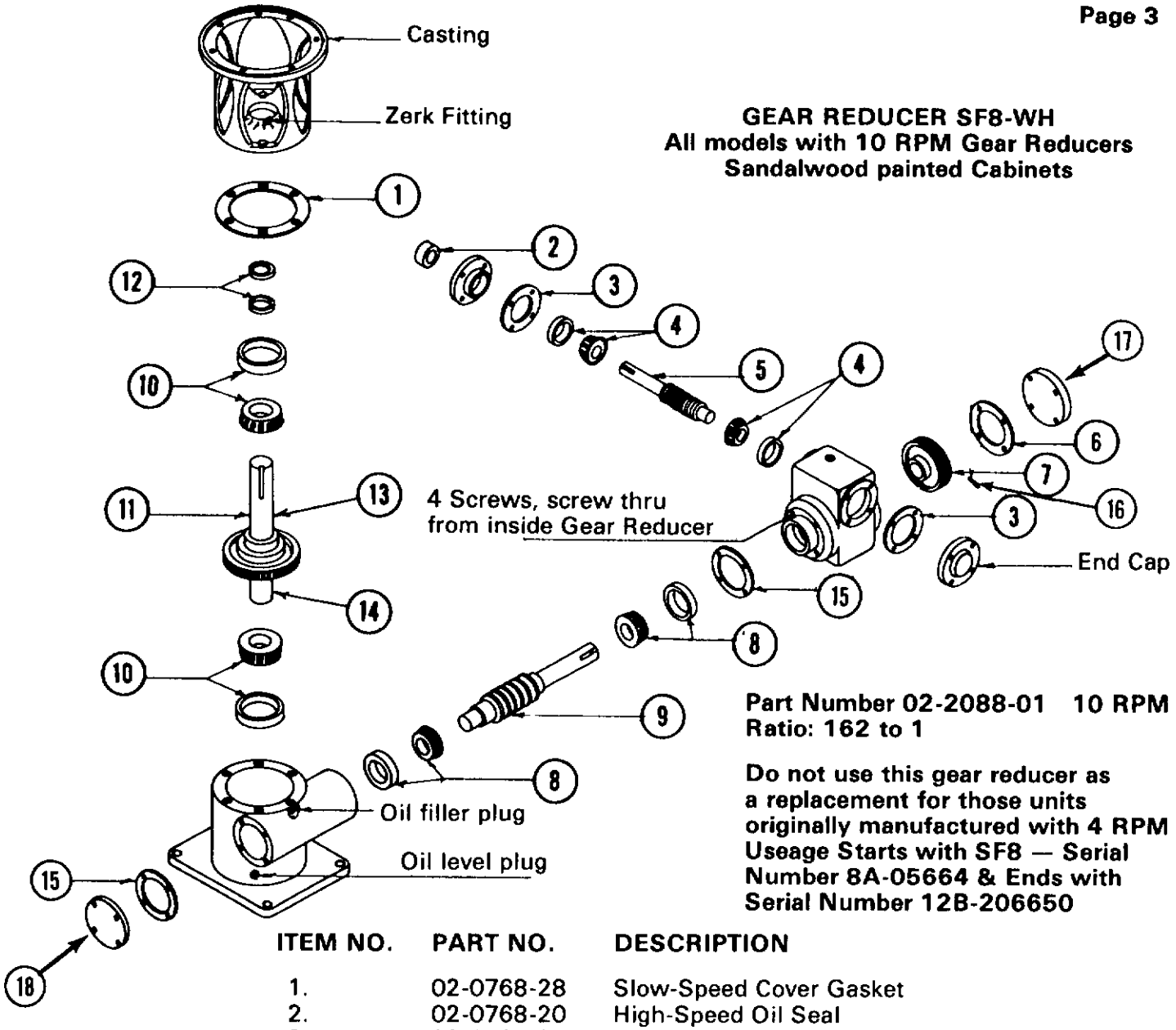

Part Number 02-2088-01 10 RPM
Ratio: 162 to 1

Do not use this gear reducer as a replacement for those units originally manufactured with 4 RPM Useage Starts with SF8 — Serial Number 8A-05664 & Ends with Serial Number 12B-206650

ITEM NO.	PART NO.	DESCRIPTION
1.	02-0768-28	Slow-Speed Cover Gasket
2.	02-0768-20	High-Speed Oil Seal
3.	02-0768-25	High-Speed Gasket
4.	02-0768-24	High-Speed Bearing
5.	02-2088-11	High-Speed Worm & Shaft, Integral
6.	02-0768-27	Intermediate Gasket
7.	02-2088-12	High-Speed Gear
8.	02-0768-23	Intermediate Roller Bearing
9.	02-0768-31	Slow-Speed Worm & Shaft, Integral
10.	02-0768-22	Slow-Speed Bearing
11.	02-0768-36	Slow-Speed Gear & Shaft Assembly
12.	02-0768-21	Slow-Speed Oil Seal
13.	02-0768-29	Slow-Speed Spacer (short)
14.	02-0768-30	Slow-Speed Spacer (long)
	02-2088-01	Complete Reducer
15.	02-0768-26	Gasket
16.	02-0768-37	Key & Pin
17.	02-0768-44	High-Speed Cap
18.	02-0768-43	Intermediate Cap

GEAR REDUCER
SF8 — "F", "G" & "H"

Ratio: 441 to 1 4RPM
This ratio was discontinued late in 1967

Parts only available.
For complete gear reducer order
Part Number 02-0768-00 Ratio 432 to 1

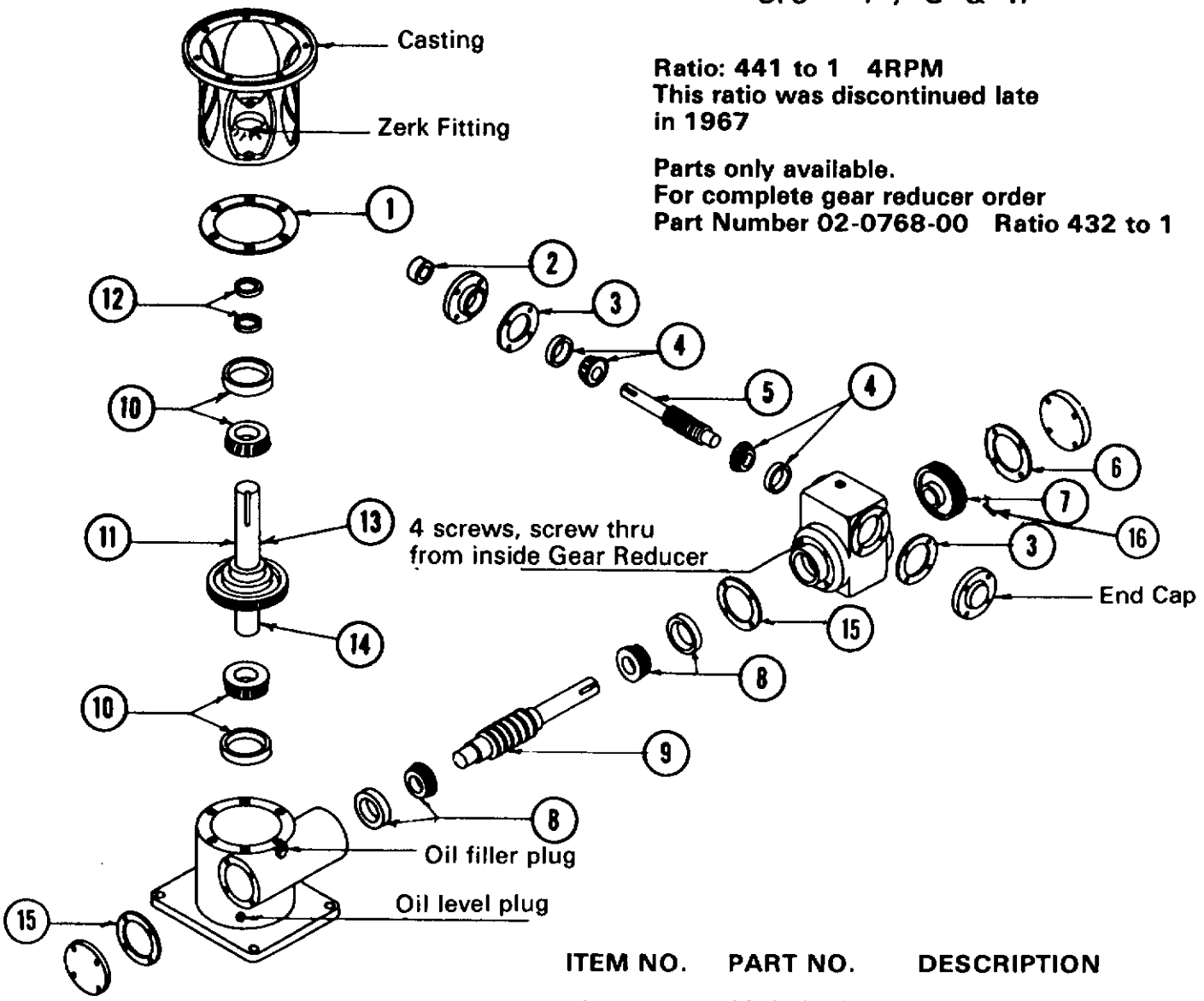

ITEM NO.	PART NO.	DESCRIPTION
1.	02-0768-28	Slow-Speed Cover Gasket
2.	02-0768-20	High-Speed Oil Seal
3.	02-0768-25	High-Speed Gasket
4.	02-0768-24	High-Speed Bearing
5.	02-0768-32	High-Speed Worm & Shaft, Integral
6.	02-0768-27	Intermediate Gasket
7.	02-0768-33	High-Speed Gear
8.	02-0768-23	Intermediate Roller Bearing
9.	02-0768-31	Slow-Speed Worm & Shaft, Integral
10.	02-0768-22	Slow-Speed Bearing
11.	02-0768-36	Slow-Speed Gear & Shaft Assembly
12.	02-0768-21	Slow-Speed Oil Seal
13.	02-0768-29	Slow-Speed Spacer (shor
14.	02-0768-30	Slow-Speed Spacer (long)
	02-0768-00	Complete Reducer
15.	02-0768-26	Gasket
16.	02-0768-37	Key & Pin

CHASSIS ASSY AIR COOLED

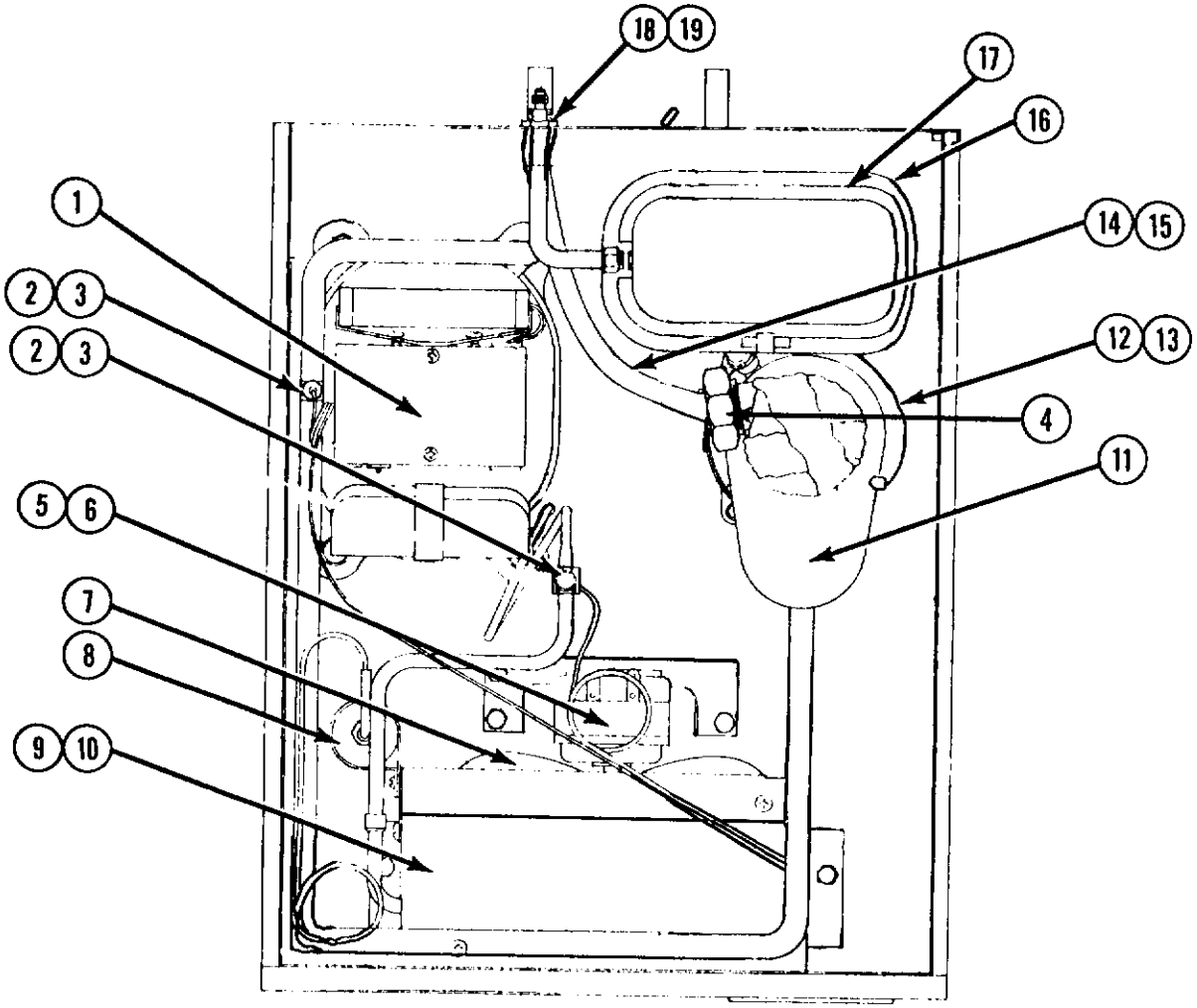

ITEM NO.	PART NO.	DESCRIPTION
1.	See Page 6	Compressor
2.	16-0563-00	Brass Cap
3.	16-0560-00	Valve Core
4.	See Page 3	Spout Assy.
5.	12-1576-01	Fan Motor
6.	18-0422-00	Motor Mount
7.	18-3309-01	Fan Blade & Nut
8.	02-0350-00	Drier
9.	18-1927-00	Condenser
10.	A24385-001	Shroud
11.	See Page 4	Freezer
12.	A18153-000	Drip Pan Assy.
13.	13-0628-00	Gasket
14.	13-0079-03	Tubing (Specify Feet)
15.	02-0534-00	Clamp
16.	02-2217-01	Reservoir Assy.
17.	A16012-000	Reservoir Cover
18.	03-1394-00	Nut
19.	03-1409-04	Washer

CHASSIS ASSY WATER COOLED

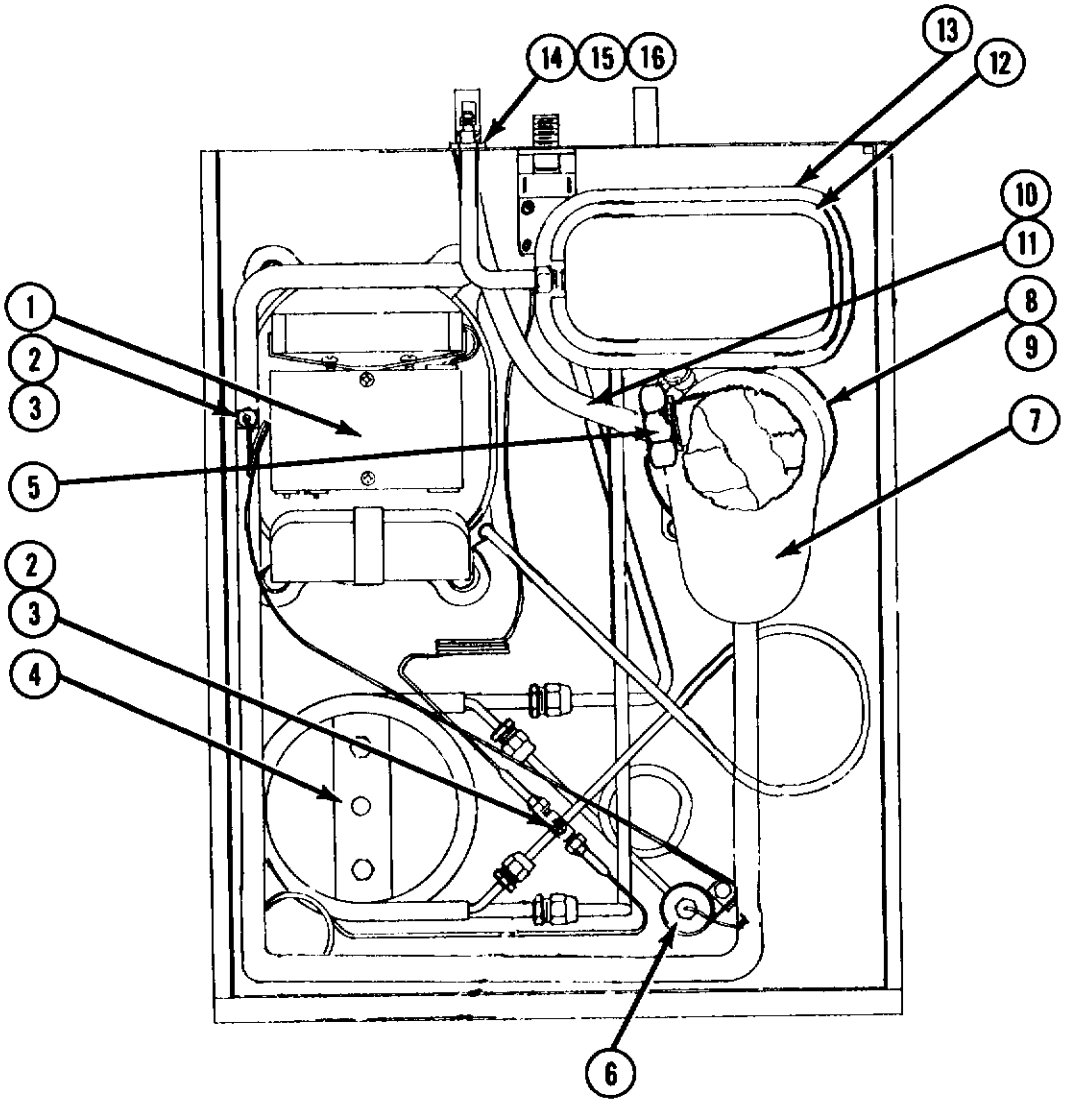

ITEM NO.	PART NO.	DESCRIPTION
1.	See Page 6	Compressor
2.	16-0563-00	Brass Cap
3.	16-0560-00	Valve Core
4.	18-3303-01	Condenser
5.	See Page 3	Spout Assy.
6.	02-0350-00	Drier
7.	See Page 4	Freezer
8.	A18153-000	Drip Pan Assy.
9.	13-0628-00	Gasket
10.	13-0079-03	Tubing, Drain (order by feet)
11.	02-0534-00	Clamp
12.	02-2217-01	Reservoir Assy.
13.	A16012-000	Reservoir Cover
14.	11-0198-00	Water Regulating Valve
15.	03-1394-00	Nut
16.	03-1409-04	Washer

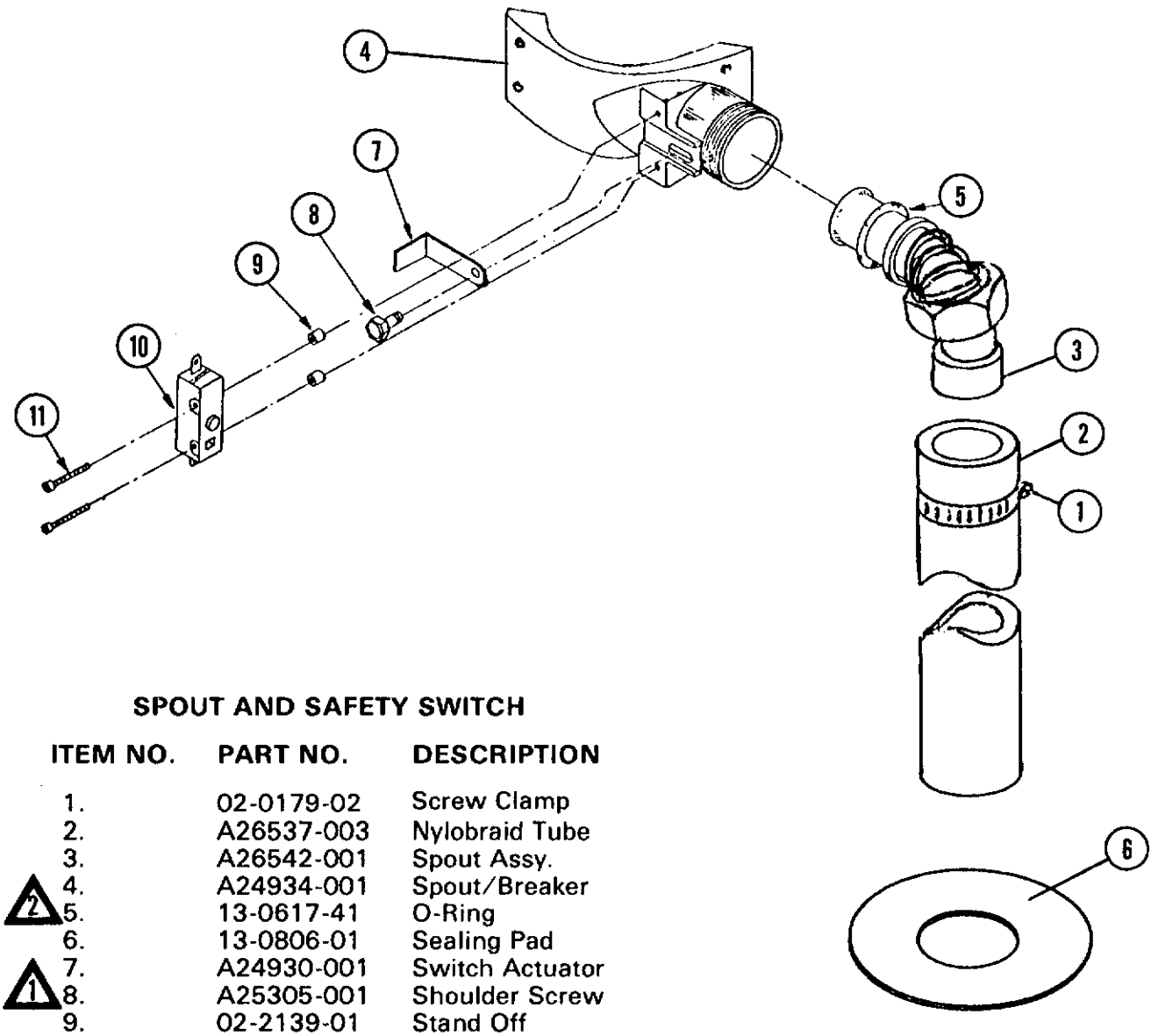

SPOUT AND SAFETY SWITCH

ITEM NO.	PART NO.	DESCRIPTION
1.	02-0179-02	Screw Clamp
2.	A26537-003	Nylobraid Tube
3.	A26542-001	Spout Assy.
2 4.	A24934-001	Spout/Breaker
5.	13-0617-41	O-Ring
6.	13-0806-01	Sealing Pad
7.	A24930-001	Switch Actuator
1 8.	A25305-001	Shoulder Screw
9.	02-2139-01	Stand Off
10.	12-1664-00	Switch
11.	03-1449-01	Nylon Screw

NOTE:

1 Tighten carefully, small thread & brass

2 A light coating of petro-jel req'd on O-Ring & Spring

FREEZER ASSEMBLY

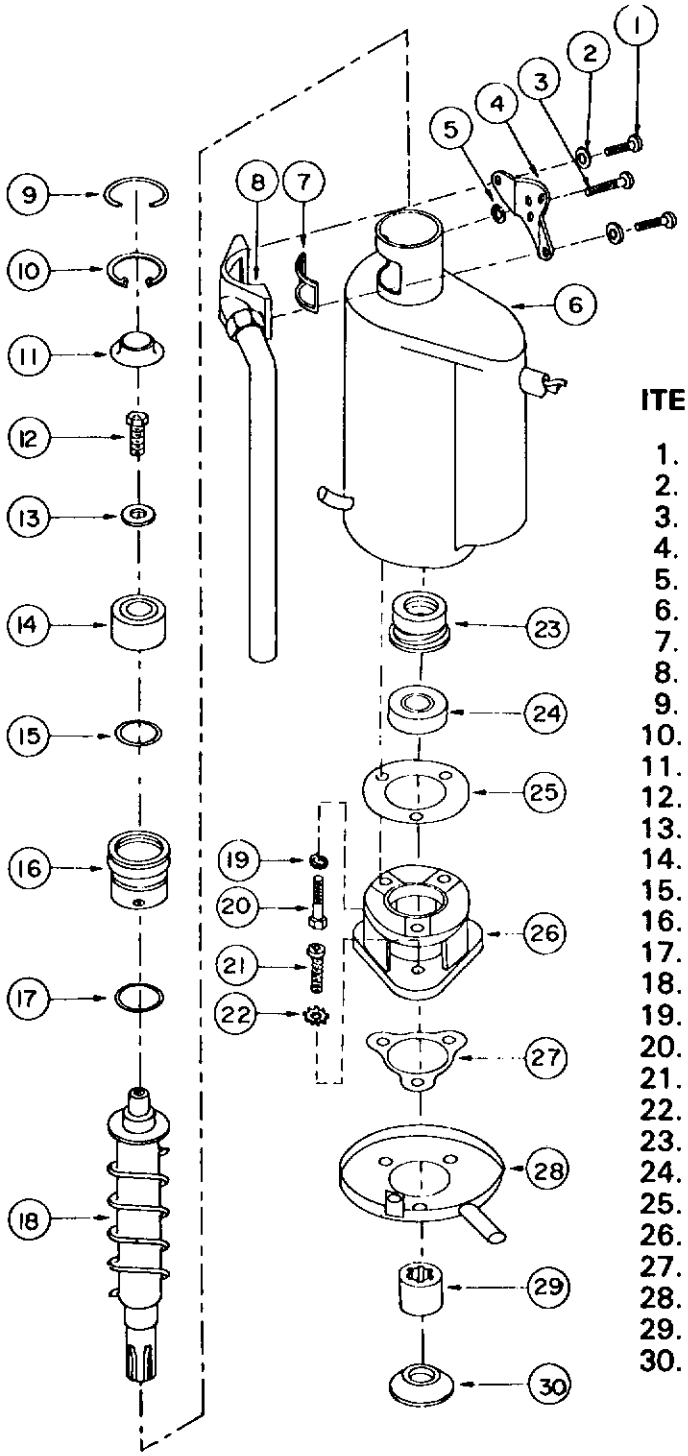

ITEM NO.	PART NO.	DESCRIPTION
1.	03-1544-03	Socket Head Screw (2)
2.	03-1417-07	Lockwasher (2)
3.	03-1506-01	Screw
4.	A18430-002	Spout Backing Plate
5.	03-1409-14	Rubber Washer
6.	A26569-020	Freezer
7.	13-0679-00	Spout Gasket
8.	See Page 3	Discharge Spout
9.	A08162-000	Cap Hook
10.	03-1558-03	Retaining Ring
11.	A07701-000	Cap
12.	03-0758-00	Screw
13.	A07699-000	Washer
14.	02-0695-00	Upper Bearing
15.	13-0617-16	"O" Ring - Internal
16.	A26707-001	Bearing Retainer w/Bearing
17.	13-0617-29	"O" Ring - External
18.	02-2046-01	Auger
19.	03-1410-04	Lockwasher (3)
20.	03-1405-42	Screw (3)
21.	03-1420-04	Screw (3)
22.	03-1417-12	Lockwasher (3)
23.	A18945-000	Water Seal
24.	02-0417-00	Lower Bearing
25.	03-1505-00	Gasket
26.	08-0595-01	Adapter
27.	13-0628-00	Gasket
28.	A18153-000	Drip Pan
29.	15-0575-01	Drive Coupling
30.	13-0709-01	Water Shed

A25995-021
GEAR MOTOR ASSEMBLY
1/10 H.P.
115/60/1

11.5 RPM at output shaft

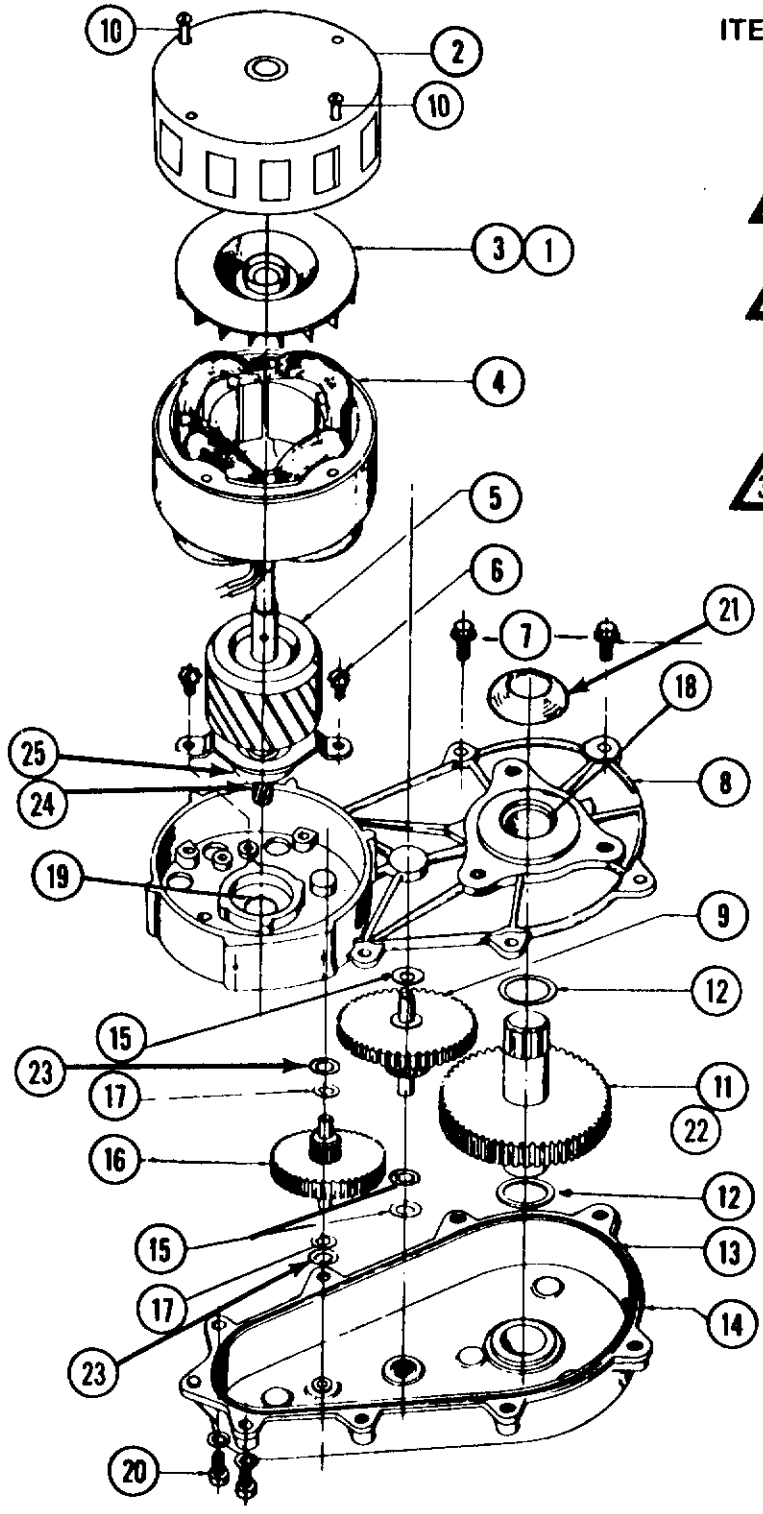

ITEM NO.	PART NO.	DESCRIPTION
1.	03-1246-00	Set Screw (2)
2.	A17047-000	Motor Housing
3.	A16915-000	Cooling Fan
2 4.	12-1400-01	Stator Assy.
2 5.	A26454-001	Rotor & 1st. Gear Kit
6.	03-1245-00	Screws (2)
1 7.	03-1251-00	Flange Screws (6)
1 8.	A16920-021	Gear Case Cover
9.	02-1521-00	Gear and Pinion
10.	03-1403-43	Motor Bolts (4)
11.	A26650-001	Gear and Output Shaft
12.	03-1408-21	Washer (2)
13.	02-1505-00	"O" Ring
3 14.	A24184-001	Gear Case Kit
15.	03-1408-06	Washer (3)
16.	02-2224-01	1st Gear and Pinion
17.	03-1408-19	Washer (2)
18.	02-1503-00	Grease Seal
19.	02-1504-00	Grease Seal
20.	03-1252-00	Screw (2)
21.	13-0709-01	Water Shed
22.	03-1475-01	Key
23.	03-1408-20	Washer (2)
24.	13-0617-04	Slinger Ring
25.	02-1501-00	Rotor Bearing

NOTE:

1. Cover comes with grease seals items 18 & 19.
2. Fiber gear (item 16 and rotor bearing (item 25) included in the rotor kit.
3. Includes items: 8, 13, 15, 17, 18, 19, 23 and gear lube.

COMPRESSOR 115/60/1

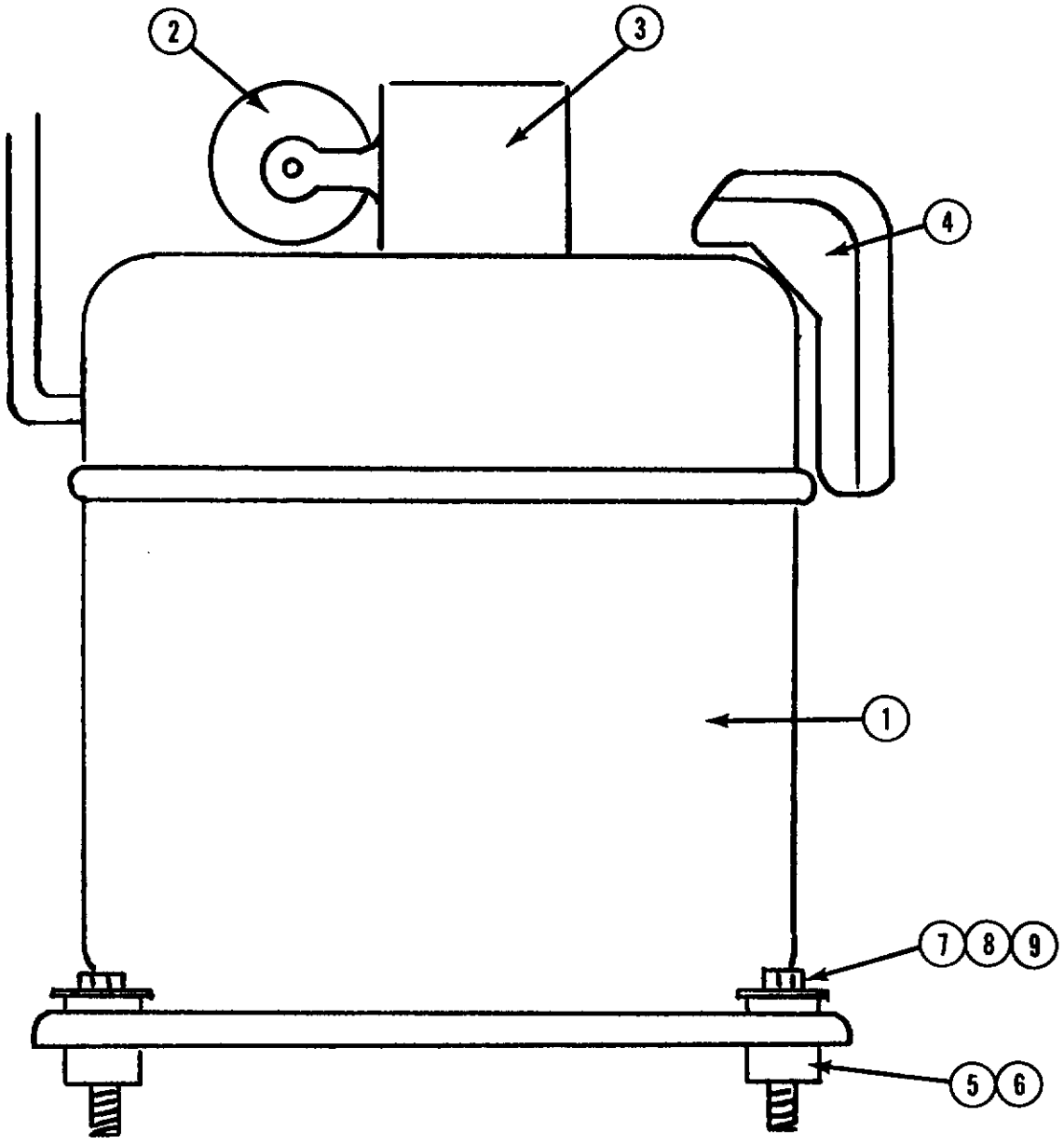

ITEM NO.	PART NO.	DESCRIPTION
1.	18-2200-01	Compressor
2.	18-1901-10	Capacitor
3.	18-2200-26	Relay
4.	18-2200-25	Overload
5.	18-2200-27	Sleeve (4)
6.	18-2200-28	Grommet (4)
7.	03-1405-40	Screw (4)
8.	03-1417-12	Washer (4)
9.	03-1408-02	Washer (4)

CONTROL BOX ASSEMBLY
Water and Air Cooled

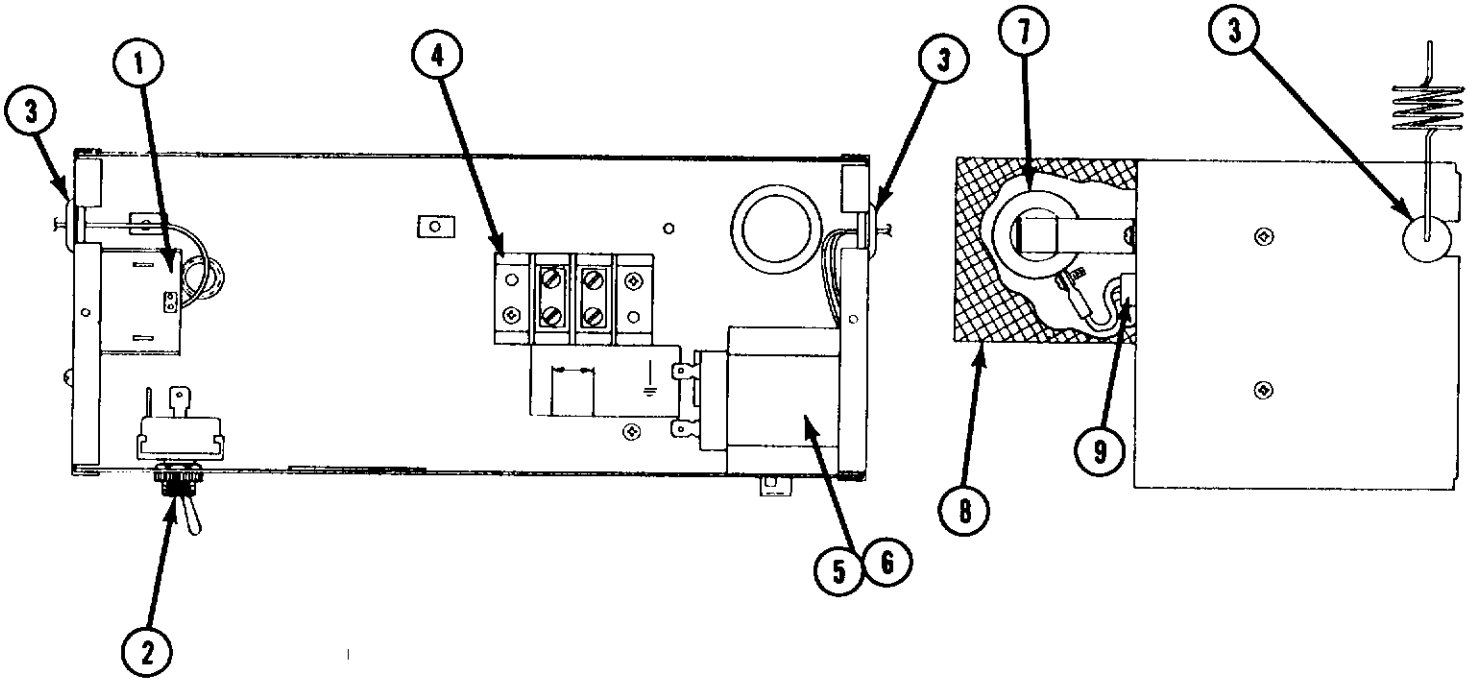

ITEM NO.	PART NO.	DESCRIPTION
1.	11-0354-00	Bin Control
2.	12-0426-01	Master Switch
3.	13-0557-00	Grommet
4.	12-0813-04	Terminal Board
5.	11-0358-00	Low Pressure Control
6.	11-0362-00	High Pressure Control (Air Cooled Models Only)
	11-0357-00	High Pressure Control (Water Cooled Models Only)
7.	12-0474-02	Resister (Air Cooled Models Only)
8.	A14384-000	Cover
9.	12-1213-04	Snap Bushing

CABINET PARTS

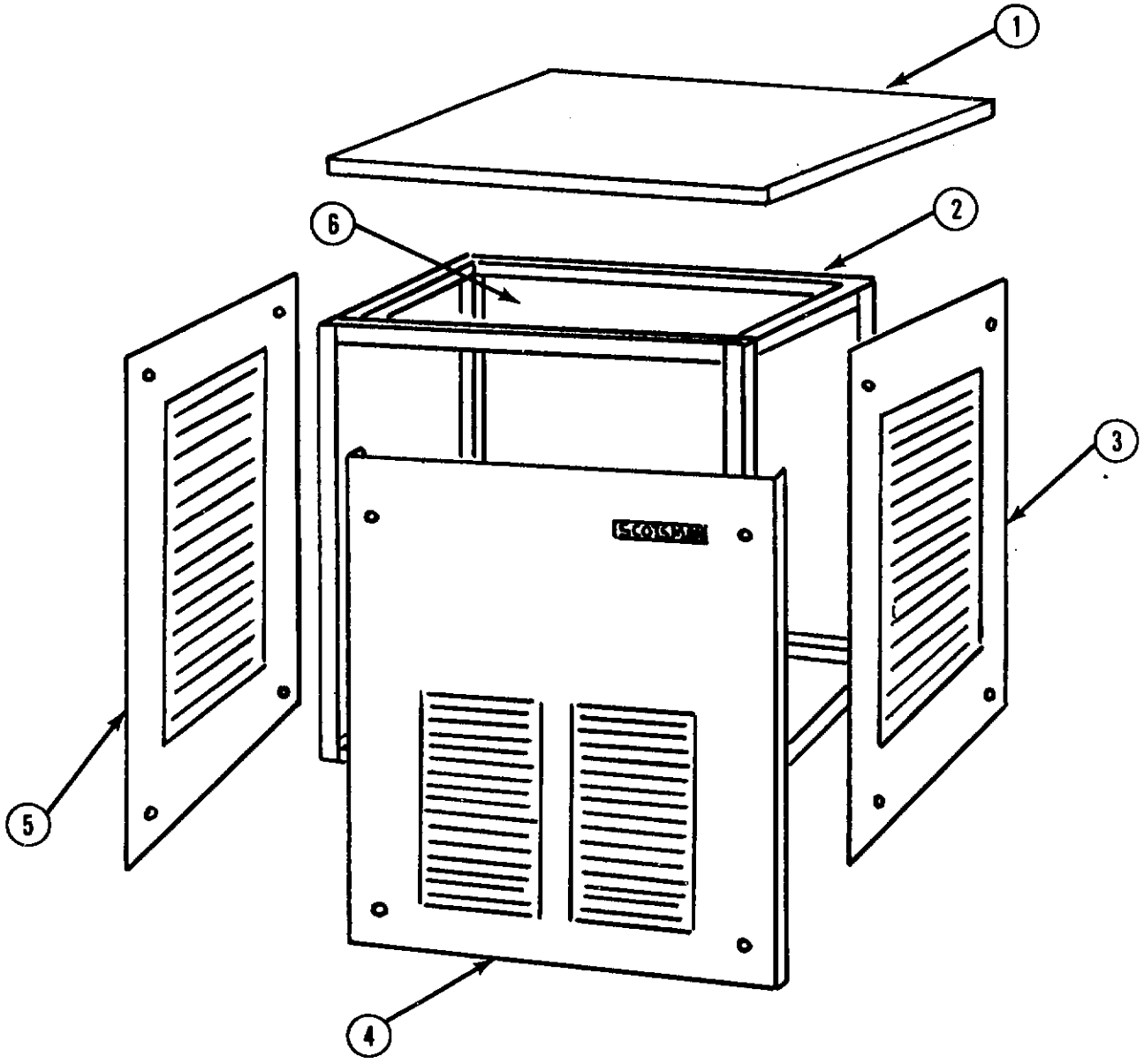

ITEM NO.	DESCRIPTION	ENAMEL	STAINLESS STEEL
1.	Panel Top	A23446-001	A23446-002
2.	Cabinet Frame	A23415-001	A23415-001
3.	Panel, Right Side	A23445-001	A23445-002
4.	Panel, Front	A23451-001	A23451-002
5.	Panel, Left Side	A23445-001	A23445-002
6.	Panel, Rear	A23450-001	A23450-002
*	Mounting Screws	03-1419-09	03-1419-09
*	Speed Nut	03-1507-00	03-1507-00
*	Aerosol Paint (Micromatte)	10-0314-01	

*Parts Not Illustrated

CENTRIFUGAL SWITCH

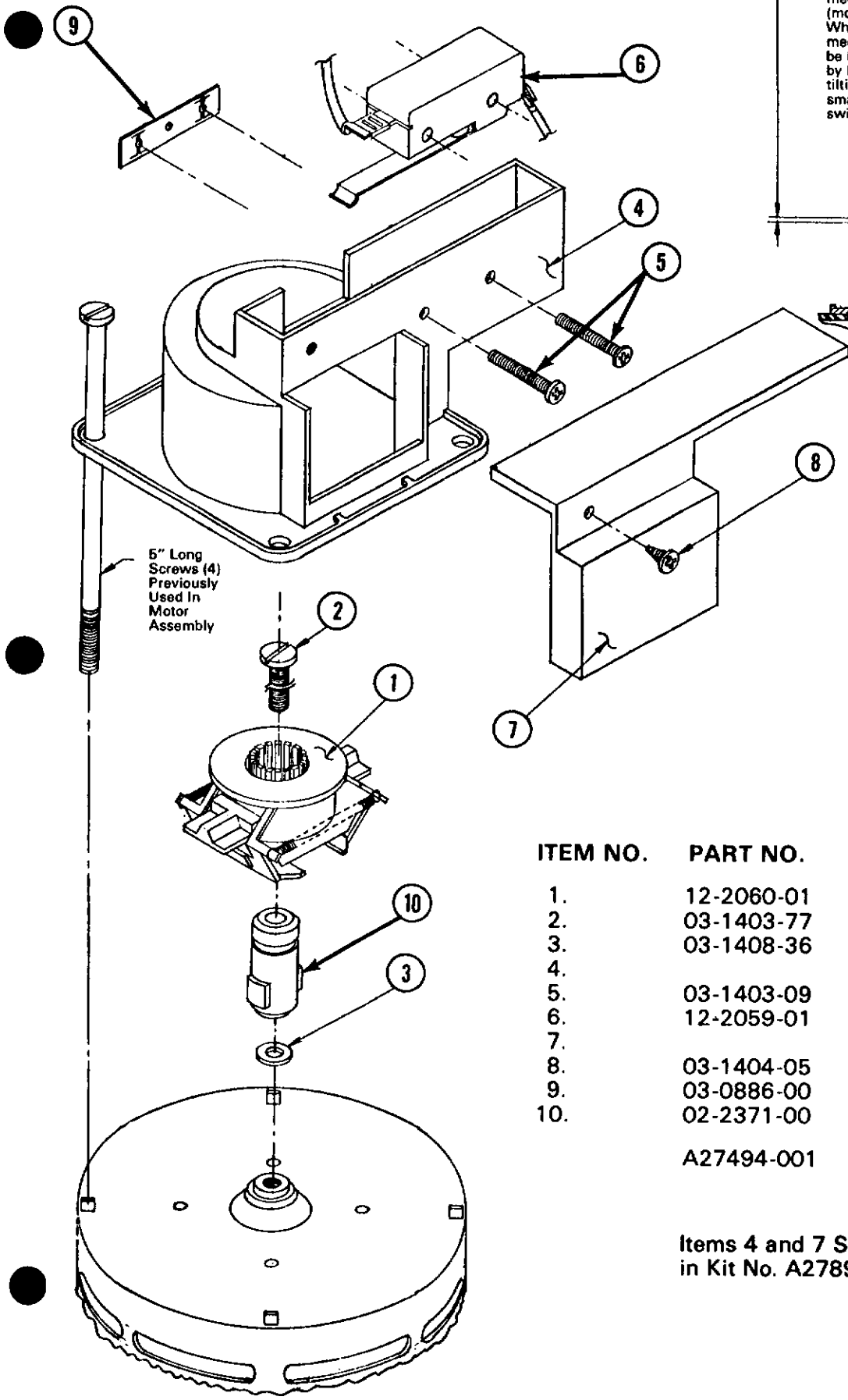

SWITCH ADJUSTMENT

.03 minimum gap between switch lever and mechanism with centrifugal mechanism actuated (motor running). Switch circuit should be closed When motor is stopped and centrifugal mechanism deactivates, the switch circuit should be broken. There should be enough adjustment by loosening the switch mounting screws and tilting switch in direction required. If this fails, a small amount of bending can be done on the switch lever.

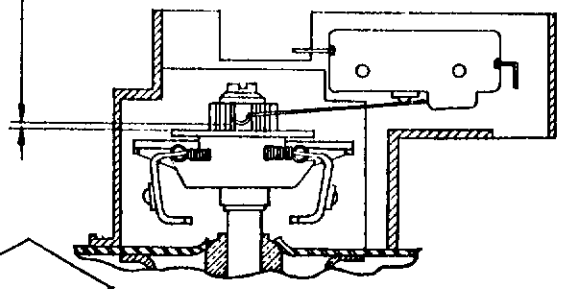

ITEM NO.	PART NO.	DESCRIPTION
1.	12-2060-01	Centrifugal Actuator
2.	03-1403-77	Screw
3.	03-1408-36	Washer
4.		Switch Mounting Case
5.	03-1403-09	Screw (2)
6.	12-2059-01	Switch
7.		Switch Case Cover
8.	03-1404-05	Screw
9.	03-0886-00	Speed Nut
10.	02-2371-00	Shaft Extension
	A27494-001	Centrifugal Switch Kit Complete w/17-1328-01 inst.

Items 4 and 7 Supplied in Kit No. A27895-001

AIR COOLED

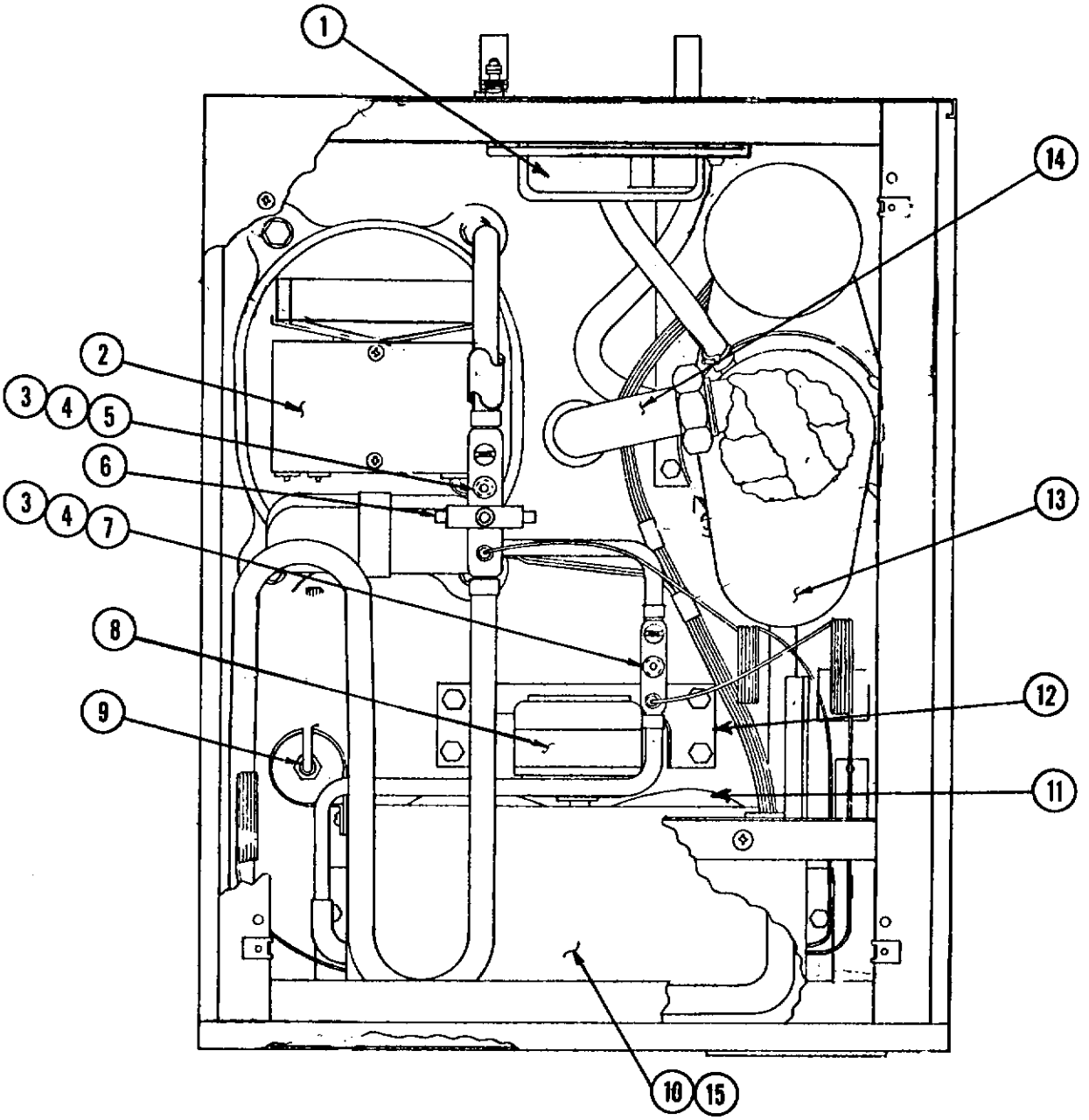

ITEM NO.	PART NO.	DESCRIPTION
1.	See Page 8	Reservoir
2.	See Page 5	Compressor
3.	16-0563-00	Brass Cap
4.	16-0560-00	Valve Core
5.	16-0673-08	Process Header
6.	11-0396-01	Pressure Switch, Lo-Side
7.	16-0673-04	Process Header
8.	12-1576-01	Fan Motor
9.	02-0831-00	Drier
10.	18-1927-00	Condenser
11.	18-3309-01	Fan Blade
12.	18-0422-00	Fan Motor Mount
13.	See Page 9	Freezer
14.	See Page 4	Spout
15.	A24385-001	Fan Shroud

WATER COOLED

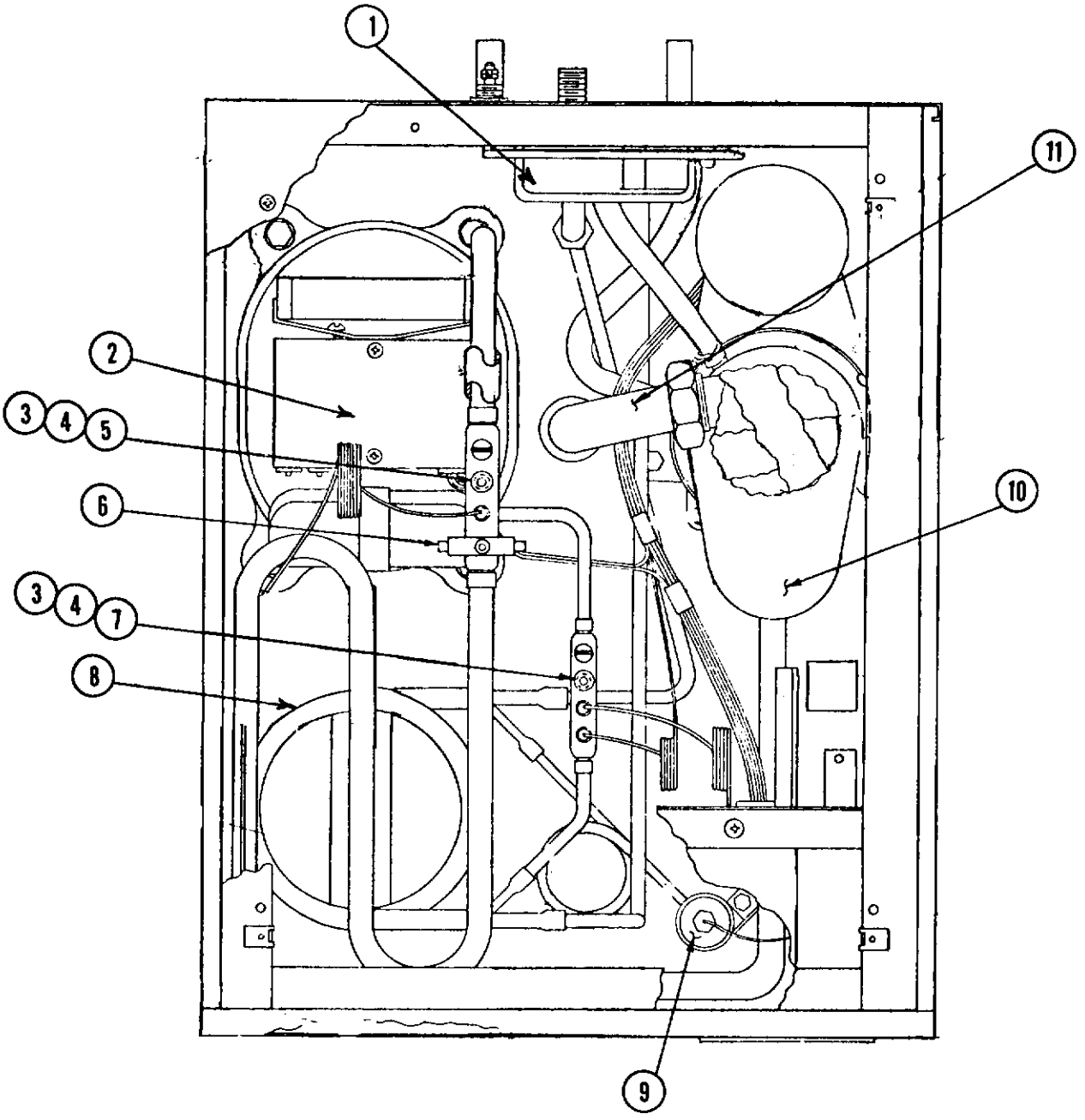

ITEM NO.	PART NO.	DESCRIPTION
1.	See Page 8	Reservoir
2.	See Page 5	Compressor
3.	16-0563-00	Brass Cap
4.	16-0560-00	Valve Core
5.	16-0673-08	Process Header (Low Side)
6.	11-0396-01	Low Pressure Switch
7.	16-0673-04	Process Header (High Side)
8.	18-3303-02	Condenser
9.	02-0831-00	Drier
10.	See Page 9	Freezer
11.	See Page 4	Spout

CONTROL BOX

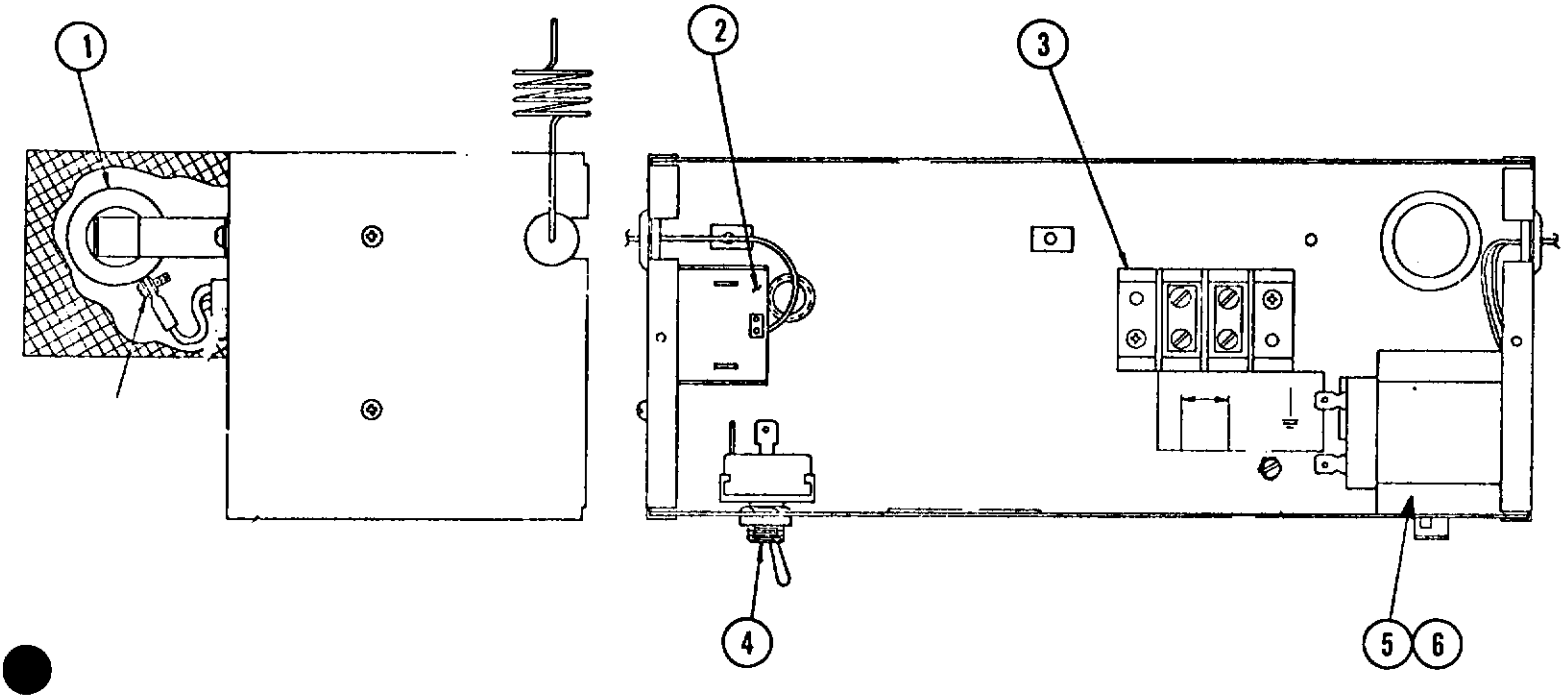

ITEM NO.	PART NO.	DESCRIPTION
1.	12-0474-02	Resister
2.	11-0354-00	Temp Control
3.	12-0813-04	Terminal Board
4.	12-0426-01	Switch
5.	11-0358-01	Low Pressure Control
6.	11-0362-01	High Pressure Control, Air Cool
	11-0388-02	High Pressure Control, Water Cool

SPOUT AND SAFETY SWITCH

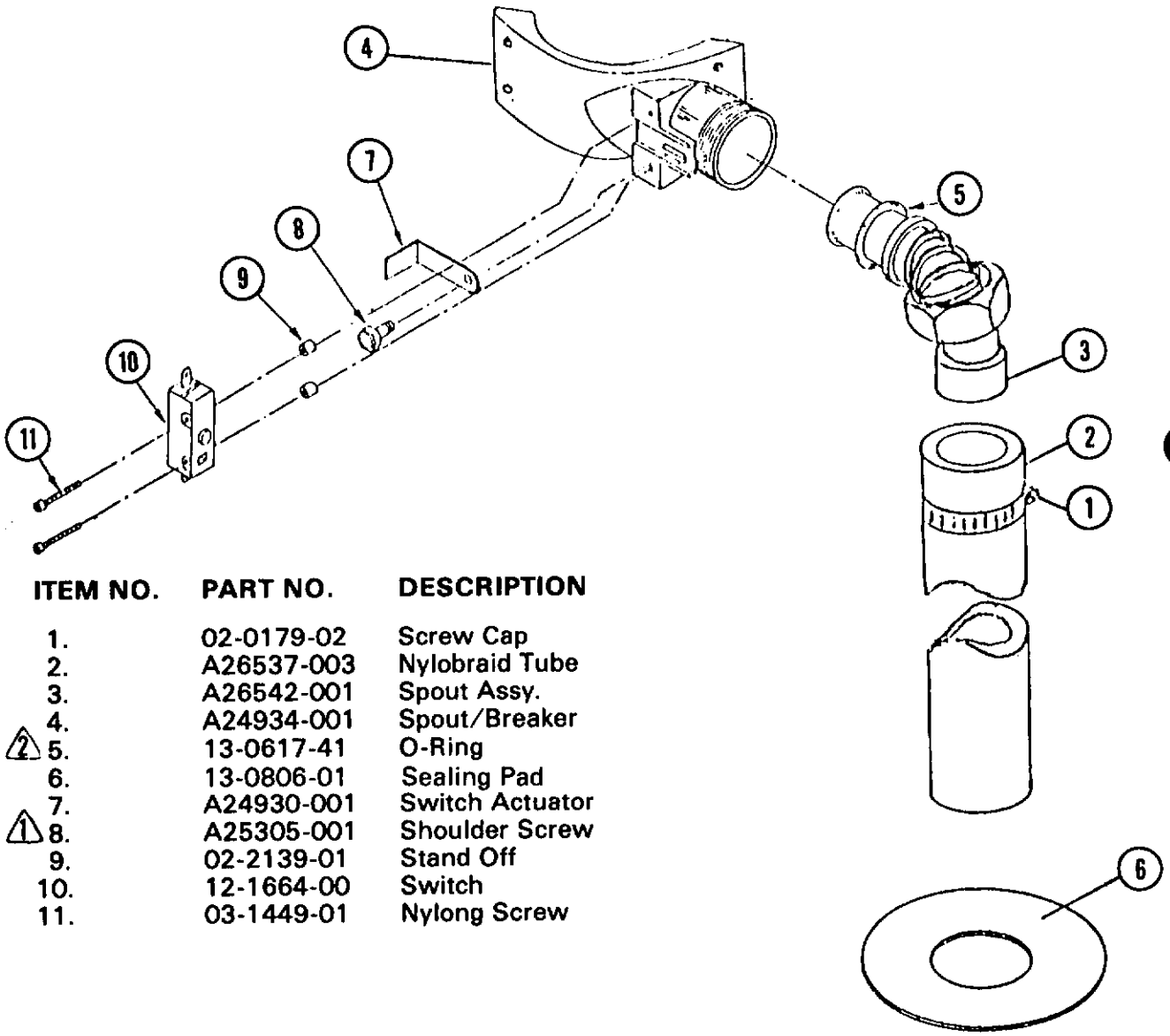

ITEM NO.	PART NO.	DESCRIPTION
1.	02-0179-02	Screw Cap
2.	A26537-003	Nylobraid Tube
3.	A26542-001	Spout Assy.
4.	A24934-001	Spout/Breaker
⚠2 5.	13-0617-41	O-Ring
6.	13-0806-01	Sealing Pad
7.	A24930-001	Switch Actuator
⚠1 8.	A25305-001	Shoulder Screw
9.	02-2139-01	Stand Off
10.	12-1664-00	Switch
11.	03-1449-01	Nylong Screw

NOTE:

⚠1 Tighten carefully, small thread & brass

⚠2 A light coating of petro-jel req'd on O-Ring & Spring

COMPRESSOR 115/60/1

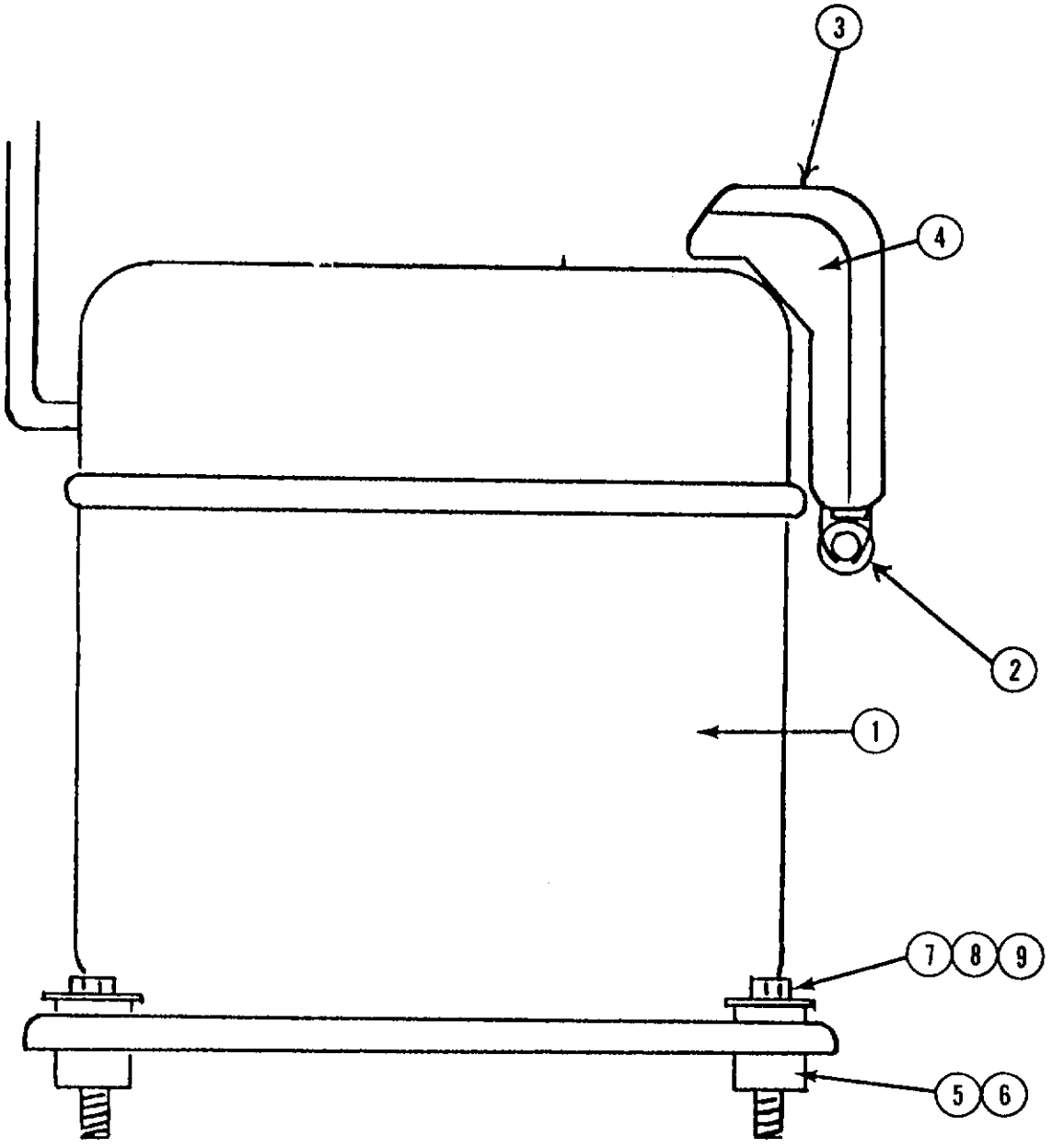

ITEM NO.	PART NO.	DESCRIPTION
1.	18-2200-01	Compressor
2.	18-1901-10	Capacitor
3.	18-2200-26	Relay
4.	18-2200-25	Overload
5.	18-2200-27	Sleeve (4)
6.	18-2200-28	Grommet (4)
7.	03-1405-40	Screw (4)
8.	03-1417-12	Washer (4)
9.	03-1408-02	Washer (4)

A25995-021
GEAR MOTOR ASSEMBLY
1/10 H.P.
115/60/1

11.5 RPM at output shaft

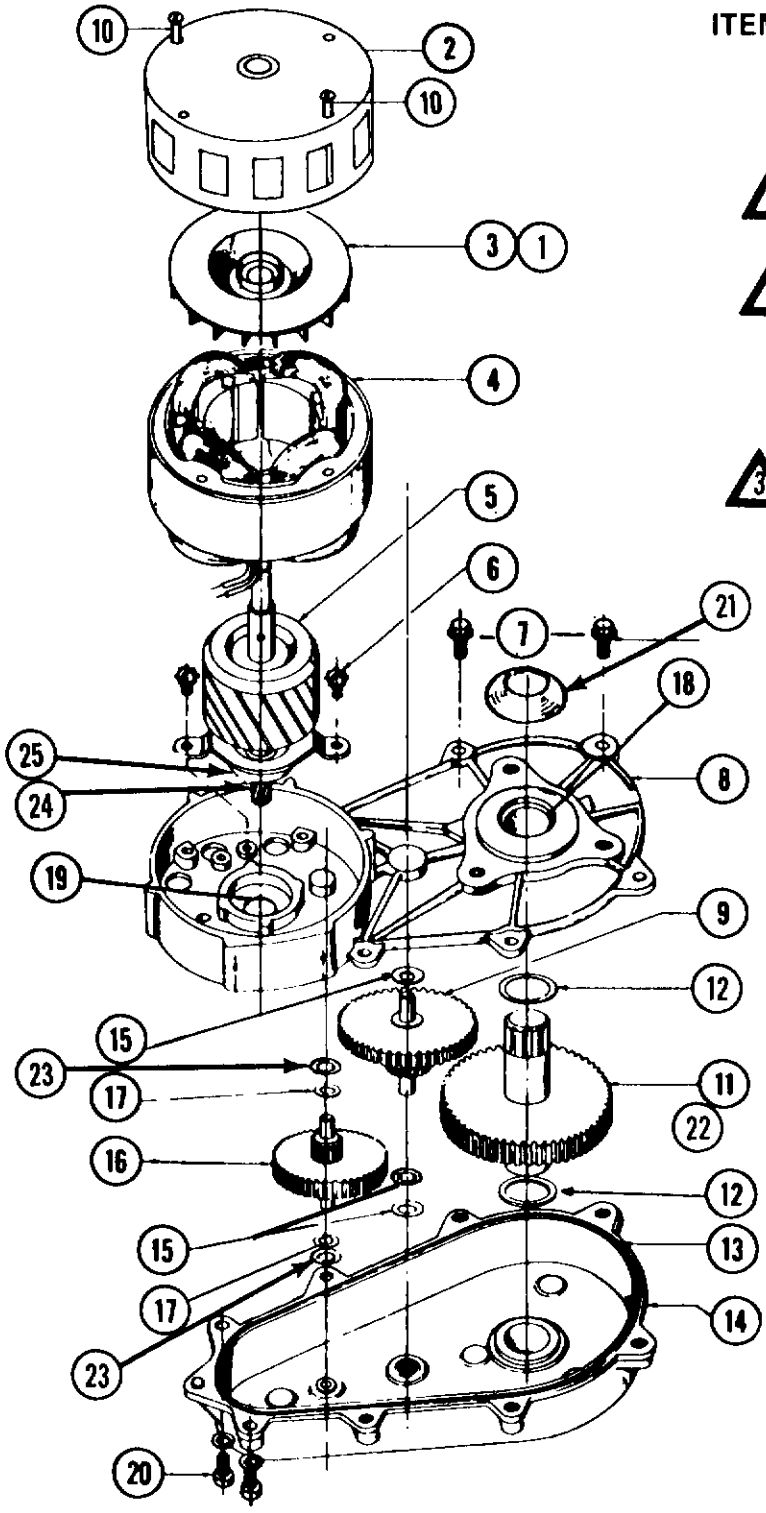

ITEM NO.	PART NO.	DESCRIPTION
1.	03-1246-00	Set Screw (2)
2.	A17047-000	Motor Housing
3.	A16915-000	Cooling Fan
4.	12-1400-01	Stator Assy.
2 5.	A26454-001	Rotor & 1st. Gear Kit
6.	03-1245-00	Screws (2)
1 7.	03-1251-00	Flange Screws (6)
8.	A16920-021	Gear Case Cover
9.	02-1521-00	Gear and Pinion
10.	03-1403-43	Motor Bolts (4)
11.	A26650-001	Gear and Output Shaft
12.	03-1408-21	Washer (2)
3 13.	02-1505-00	"O" Ring
14.	A24184-001	Gear Case Kit
15.	03-1408-06	Washer (3)
16.	02-2224-01	1st Gear and Pinion
17.	03-1408-19	Washer (2)
18.	02-1503-00	Grease Seal
19.	02-1504-00	Grease Seal
20.	03-1252-00	Screw (2)
21.	13-0709-01	Water Shed
22.	03-1475-01	Key
23.	03-1408-20	Washer (2)
24.	13-0617-04	Slinger Ring
25.	02-1501-00	Rotor Bearing

NOTE:

1. Cover comes with grease seals items 18 & 19.
2. Fiber gear (item 16 and rotor bearing (item 25) included in the rotor kit.
3. Includes items: 8, 13, 15, 17, 18, 19, 23 and gear lube.

CABINET PARTS

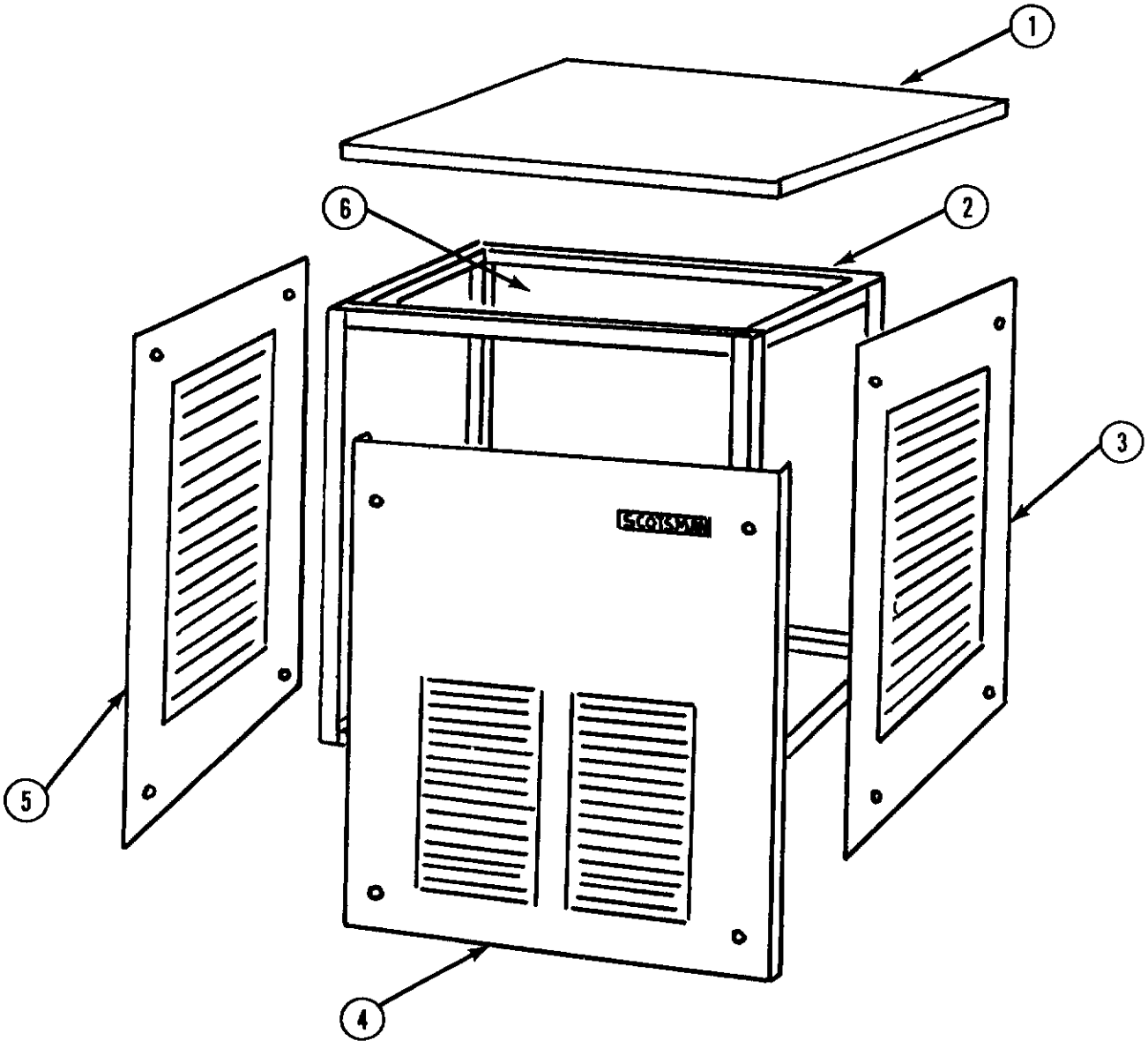

ITEM NO.	DESCRIPTION	ENAMEL	STAINLESS STEEL
1.	Panel Top	A23446-001	A23446-002
2.	Cabinet Frame	A23415-001	A23415-001
3.	Panel, Right Side	A23445-001	A23445-002
4.	Panel, Front	A23451-001	A23451-002
5.	Panel, Left Side	A23445-001	A23445-002
6.	Panel, Rear	A23450-001	A23450-002
*	Mounting Screws	03-1419-09	03-1419-09
*	Speed Nut	03-1507-00	03-1507-00
*	Aerosol Paint (Micromatte)	10-0314-01	

*Parts Not Illustrated

RESERVOIR ASSEMBLY

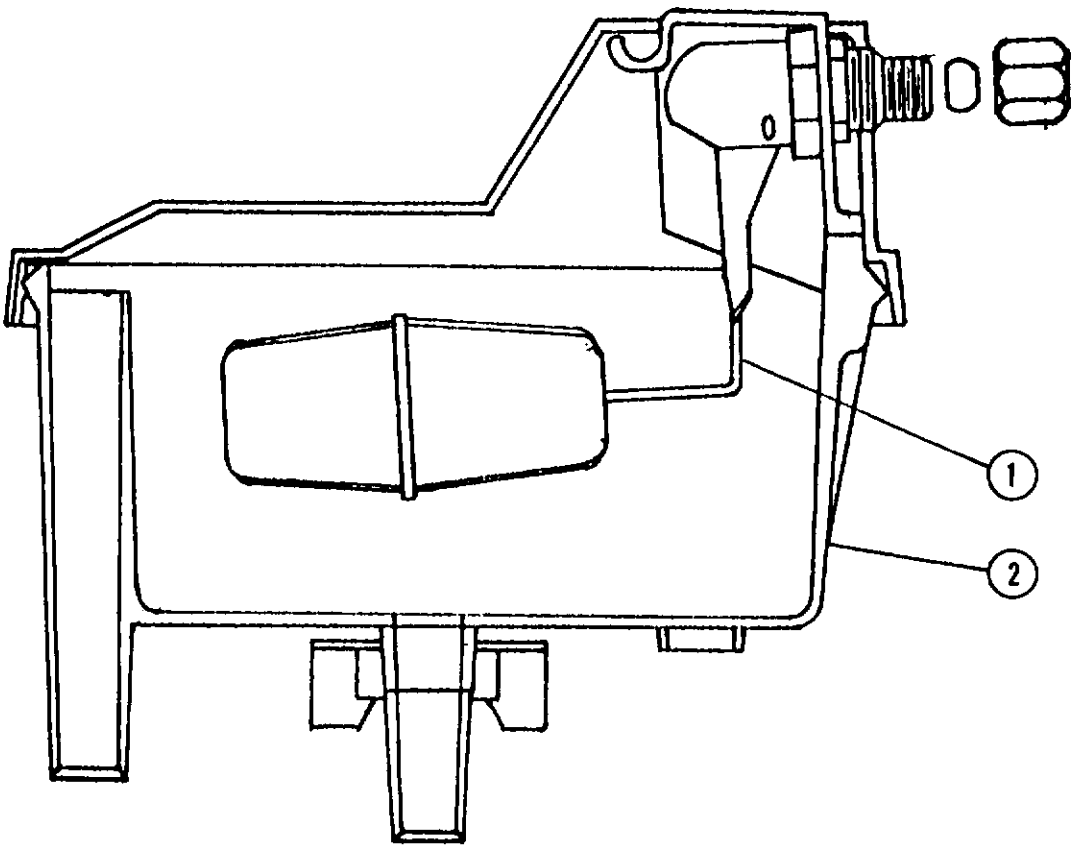

ITEM NO.	PART NO.	DESCRIPTION
1.	02-2217-02	Valve Assy.
2.	02-2217-01	Reservoir Complete

CENTRIFUGAL SWITCH

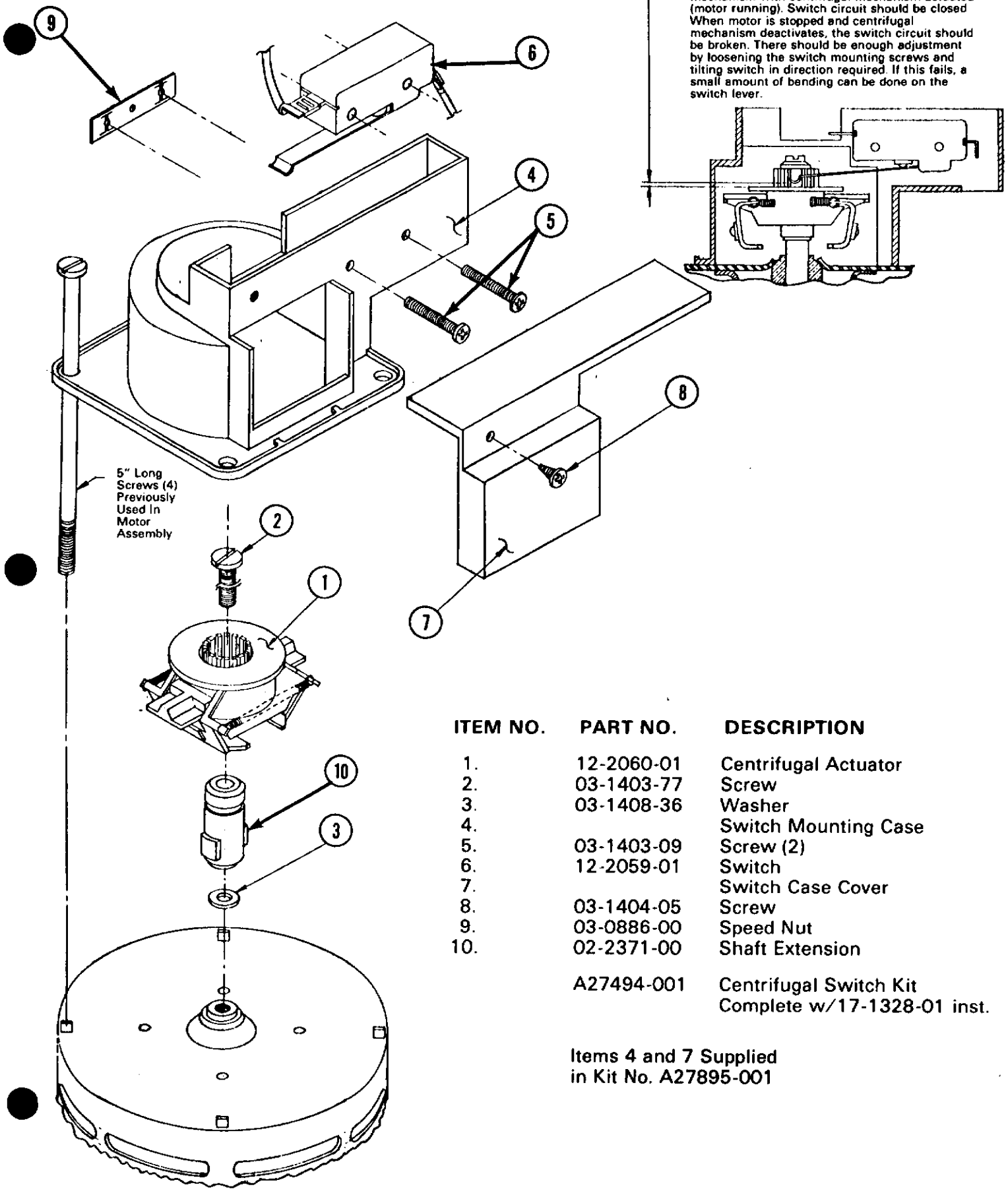

SWITCH ADJUSTMENT

.03 minimum gap between switch lever and mechanism with centrifugal mechanism actuated (motor running). Switch circuit should be closed When motor is stopped and centrifugal mechanism deactivates, the switch circuit should be broken. There should be enough adjustment by loosening the switch mounting screws and tilting switch in direction required. If this fails, a small amount of bending can be done on the switch lever.

ITEM NO.	PART NO.	DESCRIPTION
1.	12-2060-01	Centrifugal Actuator
2.	03-1403-77	Screw
3.	03-1408-36	Washer
4.		Switch Mounting Case
5.	03-1403-09	Screw (2)
6.	12-2059-01	Switch
7.		Switch Case Cover
8.	03-1404-05	Screw
9.	03-0886-00	Speed Nut
10.	02-2371-00	Shaft Extension
	A27494-001	Centrifugal Switch Kit Complete w/17-1328-01 inst.

Items 4 and 7 Supplied in Kit No. A27895-001

FREEZER ASSEMBLY

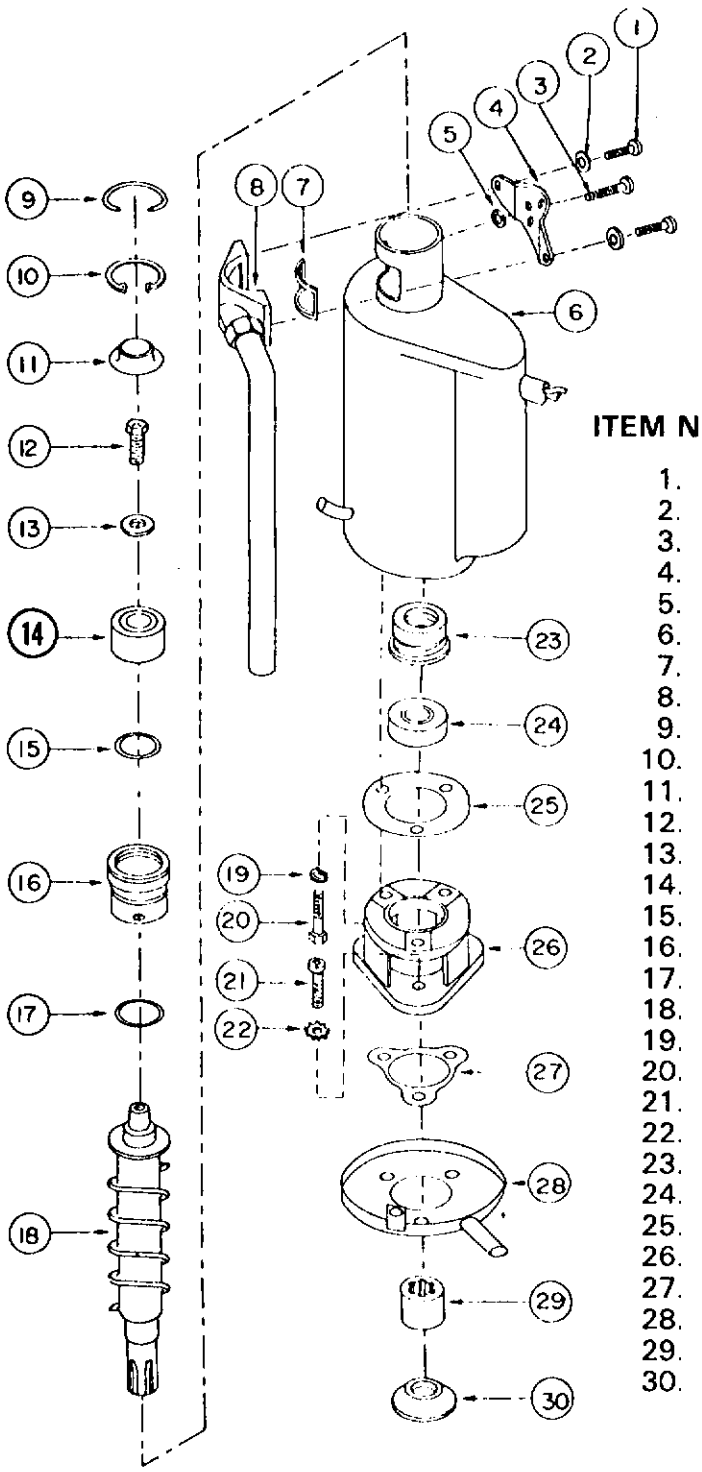

ITEM NO.	PART NO.	DESCRIPTION
1.	03-1544-03	Socket Head Screw (2)
2.	03-1417-07	Lockwasher (2)
3.	03-1506-01	Screw
4.	A18430-002	Spout Backing Plate
5.	03-1409-14	Rubber Washer
6.	A26569-020	Freezer
7.	13-0679-00	Spout Gasket
8.	See Page 3	Discharge Spout
9.	A08162-000	Cap Hook
10.	03-1558-03	Retaining Ring
11.	A07701-000	Cap
12.	03-0758-00	Screw
13.	A07699-000	Washer
14.	02-0695-00	Upper Bearing
15.	13-0617-16	"O" Ring - Internal
16.	A26707-001	Bearing Retainer w/Bearing
17.	13-0617-29	"O" Ring - External
18.	02-2046-01	Auger
19.	03-1410-04	Lockwasher (3)
20.	03-1405-42	Screw (3)
21.	03-1420-04	Screw (3)
22.	03-1417-12	Lockwasher (3)
23.	A18945-000	Water Seal
24.	02-0417-00	Lower Bearing
25.	03-1505-00	Gasket
26.	03-0595-01	Adapter
27.	13-0628-00	Gasket
28.	A18153-000	Drip Pan
29.	15-0575-01	Drive Coupling
30.	13-0709-01	Water Shed

AIR COOLED CHASSIS ASSEMBLY

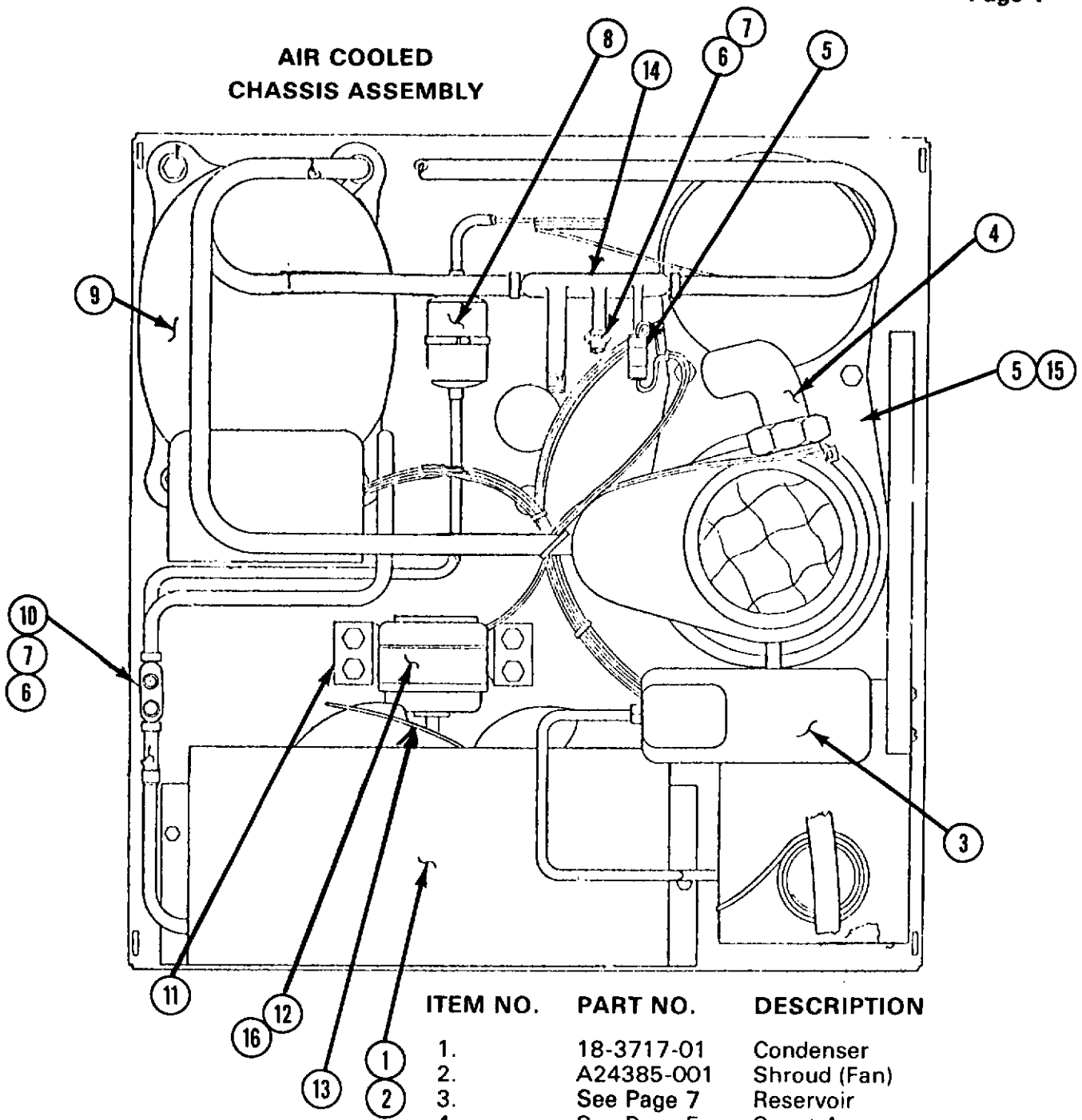

ITEM NO.	PART NO.	DESCRIPTION
1.	18-3717-01	Condenser
2.	A24385-001	Shroud (Fan)
3.	See Page 7	Reservoir
4.	See Page 5	Spout Assy.
5.	See Page 3	Gear Reducer
6.	16-0560-00	Valve Core
7.	16-0563-00	Brass Cap
8.	02-0831-00	Dryer
9.	See Page 6	Compressor
10.	16-0673-02	Process Header
11.	18-0422-00	Fan Mounting Bracket
12.	12-1576-01	Fan Motor
13.	18-3309-01	Fan Blade & Nut
14.	16-0673-04	Process Header
15.	A27109-001	Gear Reducer Mounting Plate
16.	12-1573-02	Fan Lead

WATER COOLED CHASSIS ASSY

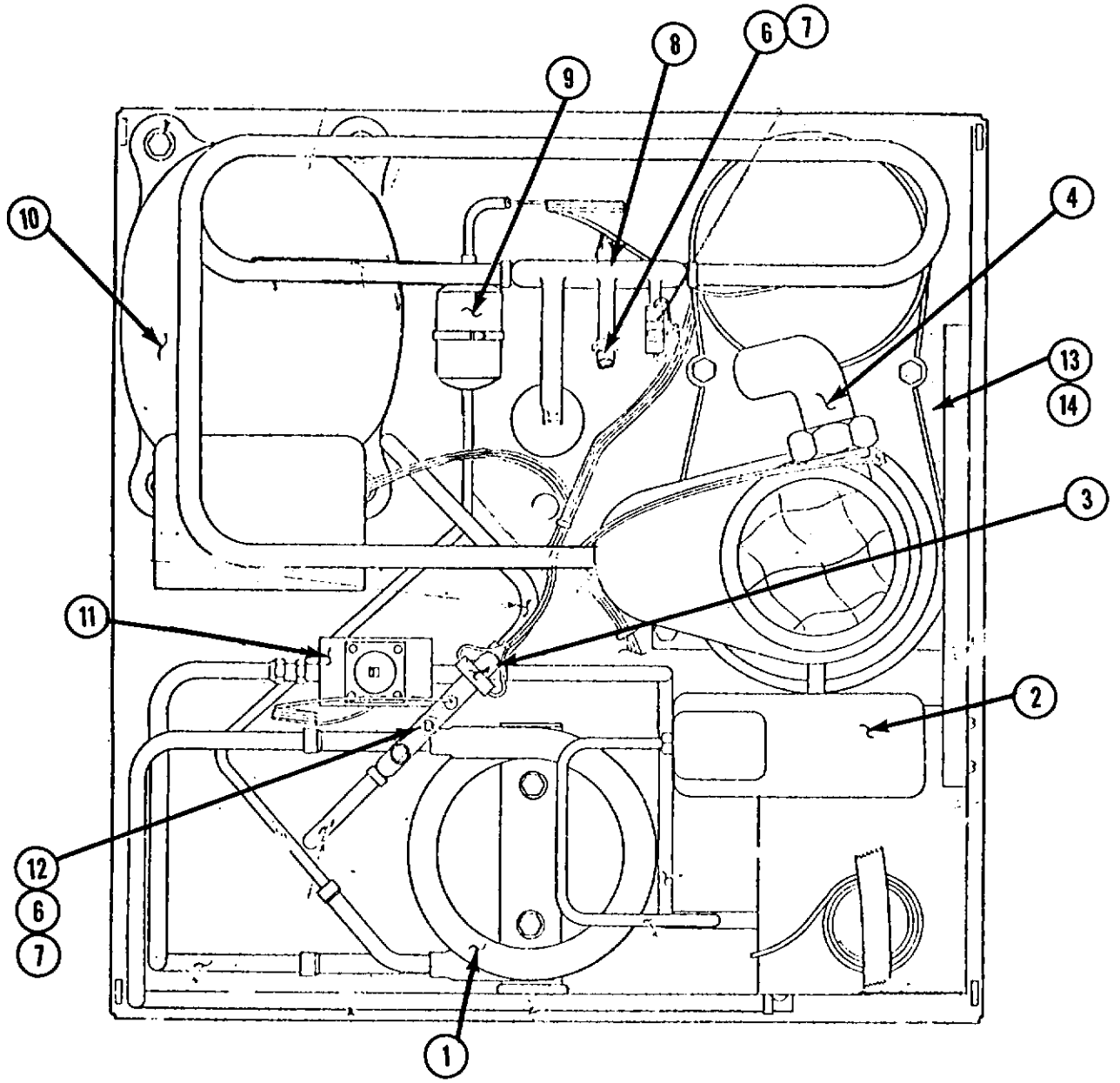

ITEM NO.	PART NO.	DESCRIPTION
1.	18-3303-02	Condensor
2.	See Page 7	Reservoir
3.	11-0397-01	High Pressure Switch
4.	See Page 5	Spout Assy.
5.	11-0396-01	Low Pressure Switch
6.	16-0560-00	Valve Core
7.	16-0563-00	Brass Cap
8.	16-0673-04	Process Header (Low Side)
9.	02-0831-00	Dryer
10.	See Page 6	Compressor
11.	11-0198-02	Water Regulator
12.	16-0673-06	Process Header
13.	See Page 3	Gear Reducer
14.	A27109-001	Gear Reducer Mounting Plate

A25995-021
GEAR MOTOR ASSEMBLY
1/10 H.P.
115/60/1

11.5 RPM at output shaft

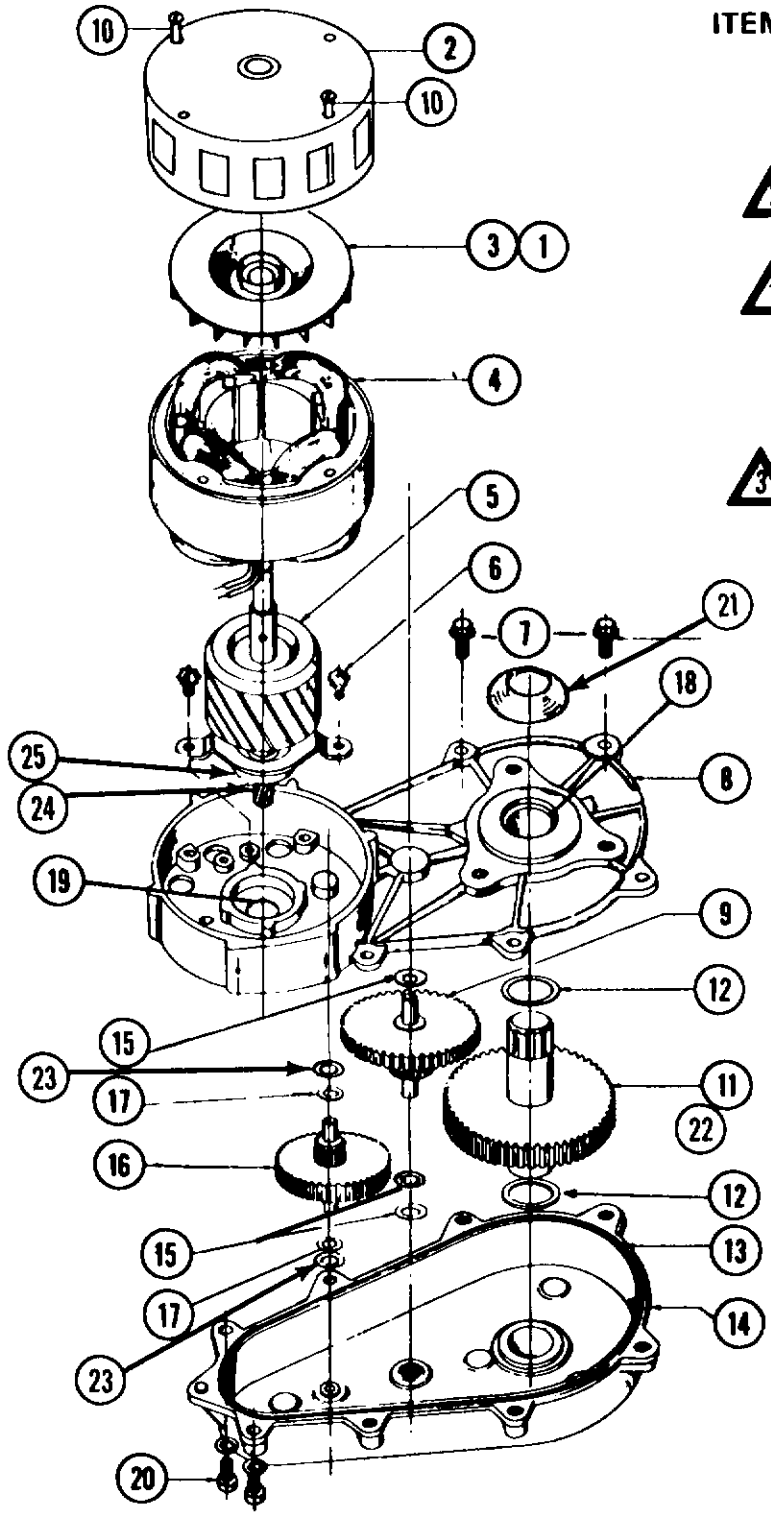

ITEM NO.	PART NO.	DESCRIPTION
1.	03-1246-00	Set Screw (2)
2.	A17047-000	Motor Housing
3.	A16915-000	Cooling Fan
▲2 4.	12-1400-01	Stator Assy.
5.	A26454-001	Rotor & 1st. Gear Kit
6.	03-1245-00	Screws (2)
▲1 7.	03-1251-00	Flange Screws (6)
8.	A16920-021	Gear Case Cover
9.	02-1521-00	Gear and Pinion
10.	03-1403-43	Motor Bolts (4)
11.	A26650-001	Gear and Output Shaft
12.	03-1408-21	Washer (2)
▲3 13.	02-1505-00	"O" Ring
14.	A24184-001	Gear Case Kit
15.	03-1408-06	Washer (3)
16.	02-2224-01	1st Gear and Pinion
17.	03-1408-19	Washer (2)
18.	02-1503-00	Grease Seal
19.	02-1504-00	Grease Seal
20.	03-1252-00	Screw (2)
21.	13-0709-01	Water Shed
22.	03-1475-01	Key
23.	03-1408-20	Washer (2)
24.	13-0617-04	Slinger Ring
25.	02-1501-00	Rotor Bearing

NOTE:

▲1 Cover comes with grease seals items 18 & 19.

▲2 Fiber gear (item 16 and rotor bearing (item 25) included in the rotor kit.

▲3 Includes items: 8, 13, 15, 17, 18, 19, 23 and gear lube.

CONTROL BOX ASSEMBLY
Water and Air Cooled

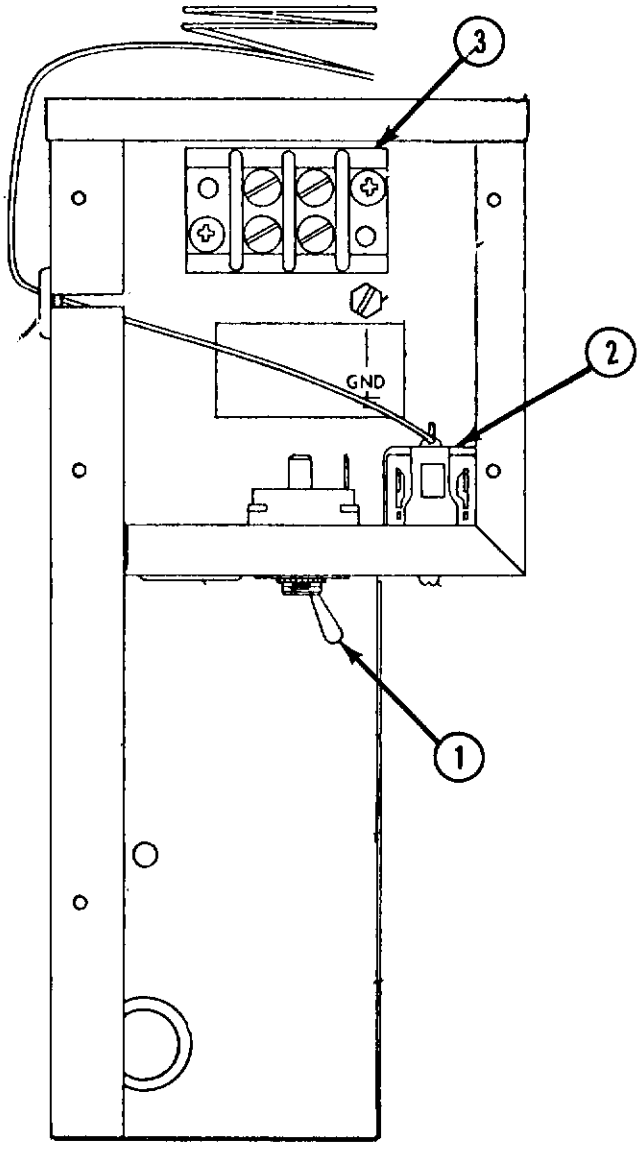

ITEM NO.	PART NO.	DESCRIPTION
1.	12-0426-01	Master Switch
2.	11-0354-00	Bin Thermostat
⚠1 3.	12-0813-04	Terminal Board
4.	A27108-001	Control Box Cover

⚠1 Not Shown

SPOUT AND SAFETY SWITCH

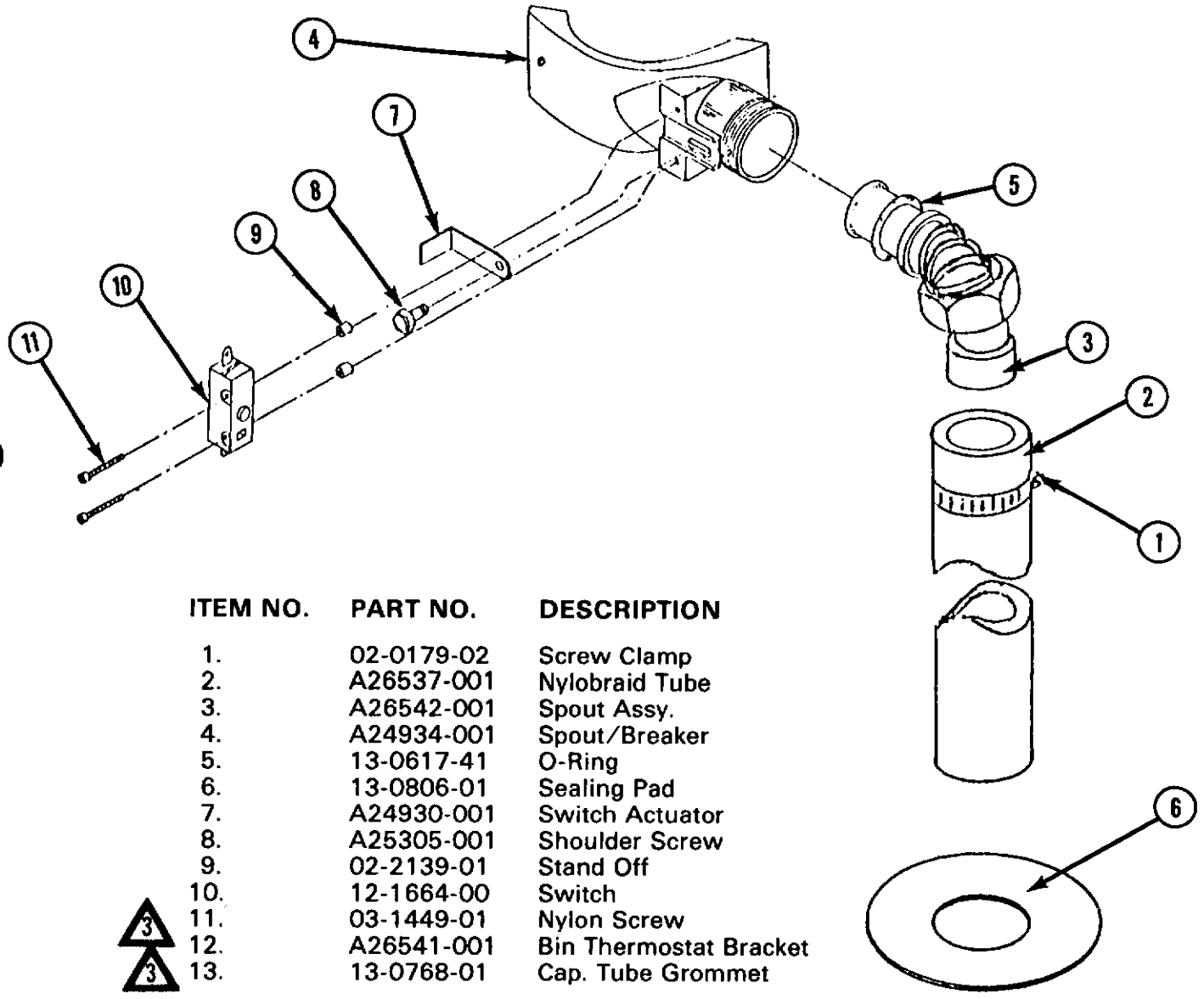

ITEM NO.	PART NO.	DESCRIPTION
1.	02-0179-02	Screw Clamp
2.	A26537-001	Nylobraid Tube
3.	A26542-001	Spout Assy.
4.	A24934-001	Spout/Breaker
5.	13-0617-41	O-Ring
6.	13-0806-01	Sealing Pad
7.	A24930-001	Switch Actuator
8.	A25305-001	Shoulder Screw
9.	02-2139-01	Stand Off
10.	12-1664-00	Switch
3 11.	03-1449-01	Nylon Screw
12.	A26541-001	Bin Thermostat Bracket
3 13.	13-0768-01	Cap. Tube Grommet

NOTE:

1 Tighten carefully, small thread & brass

2 A light coating of petro-jel req'd on O-Ring & Spring

3 Not Shown

COMPRESSOR 115/60/1

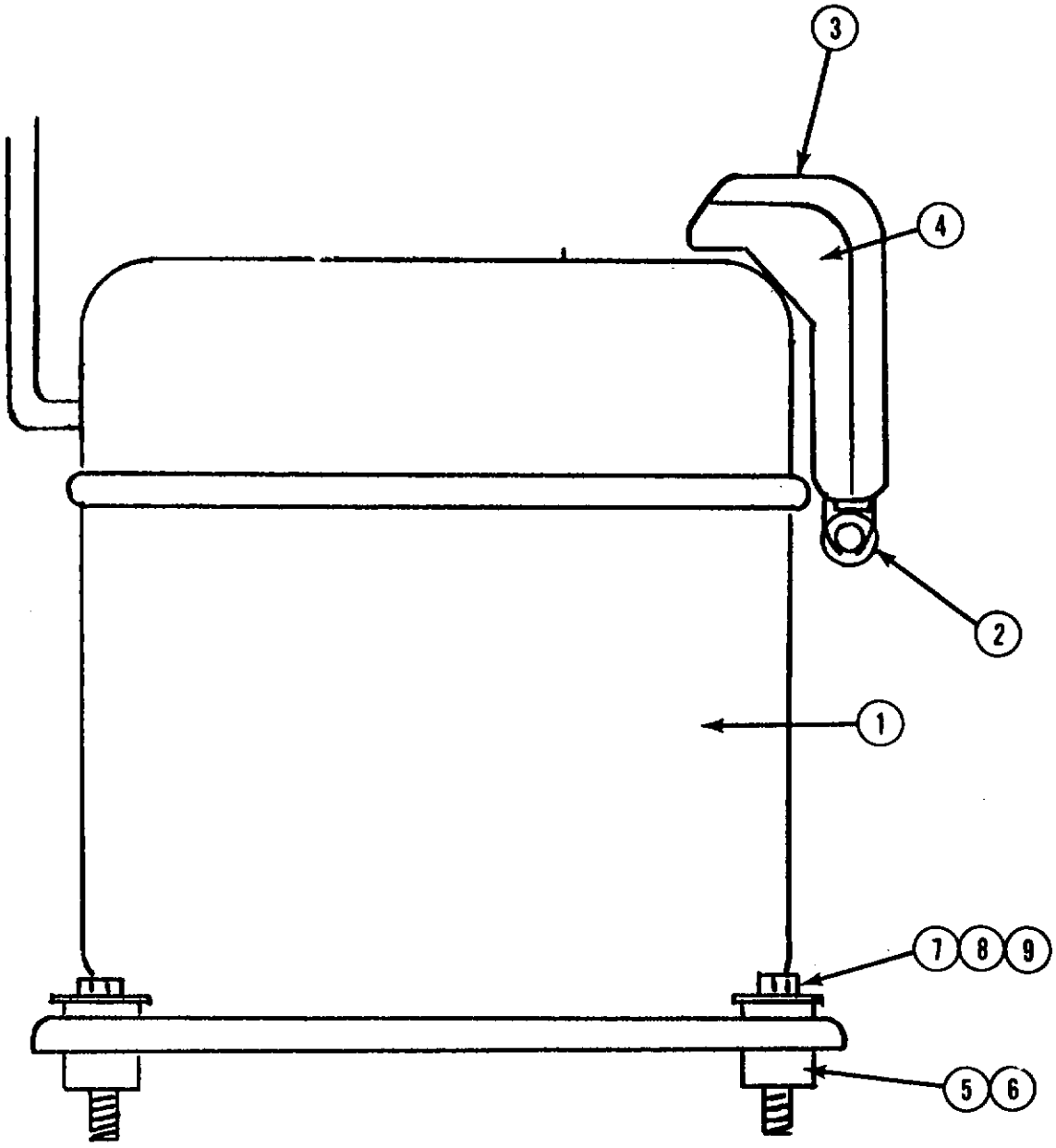

ITEM NO.	PART NO.	DESCRIPTION	
1.	18-4500-01	Compressor	Cope. No. RSF2-0050-1AA
2.	18-1901-33	Capacitor	Cope. No. 014-0008-71
*3.	18-2200-26	Relay	Cope. No. 040-0098-00
*4.	18-2200-25	Overload	Cope. No. 071-0127-34
5.	18-2200-27	Sleeve (4)	
6.	18-2200-28	Grommet (4)	
7.	03-1405-40	Screw (4)	
8.	03-1417-12	Washer (4)	
9.	03-1408-29	Washer (4)	

* Not Shown

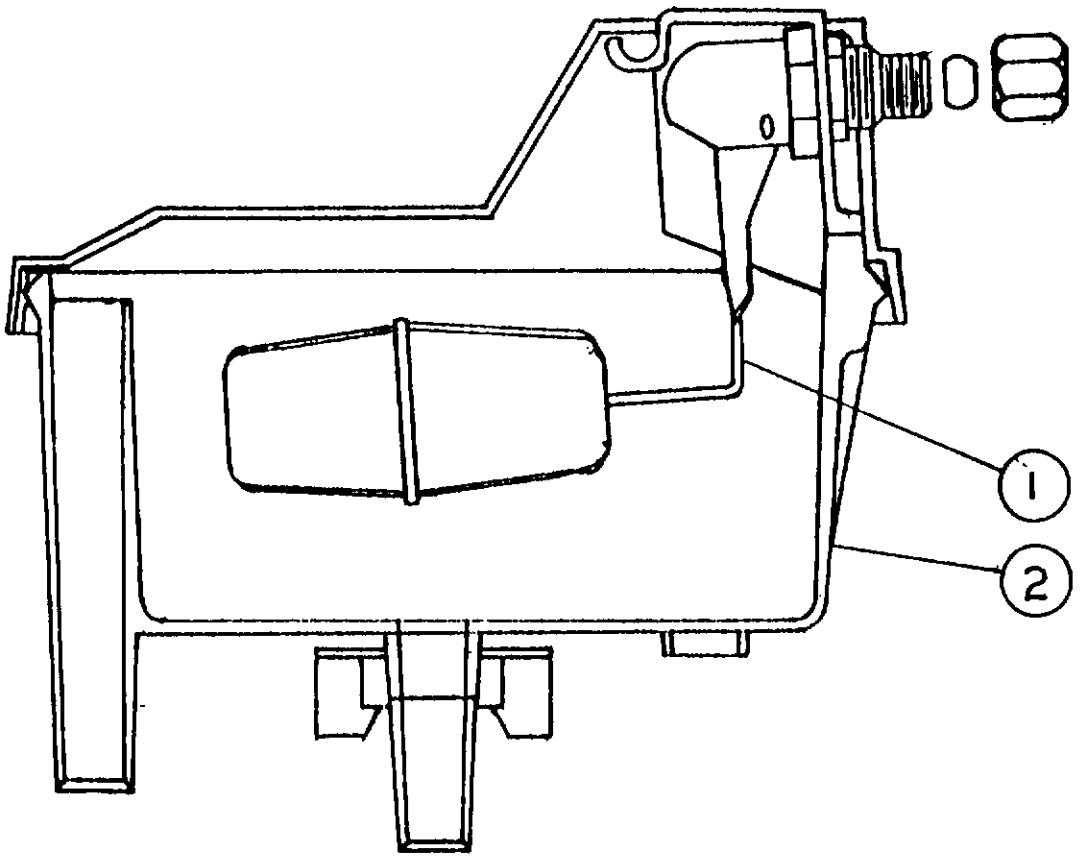

RESERVOIR ASSEMBLY

ITEM NO.	PART NO.	DESCRIPTION
1.	02-2217-02	Valve Assy.
2.	02-2217-01	Reservoir Complete

CABINET PARTS

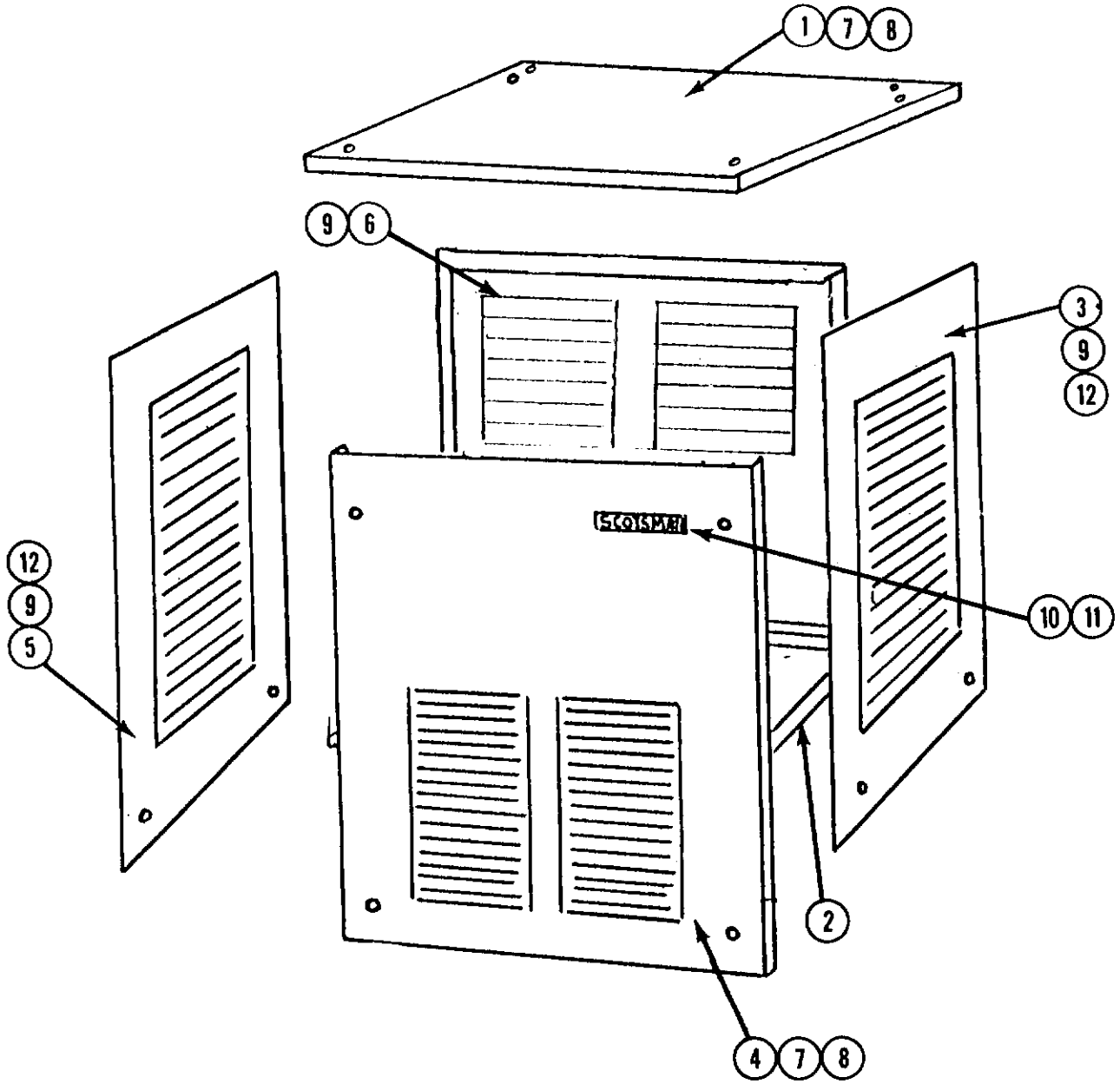

ITEM NO.	DESCRIPTION	ENAMEL	STAINLESS STEEL
1.	Panel Top	A26625-001	A26625-002
2.	Cabinet Base	A27103-001	A27103-001
3.	Panel, Right Side	A26624-001	A26624-002
4.	Panel, Front	A27111-001	A27111-002
5.	Panel, Left Side	A26623-001	A26623-002
6.	Panel, Rear	A26622-001	A26622-002
7.	Screw	03-1419-09	Same
8.	Speed Nut	03-1423-06	Same
9.	Screw	03-1404-09	Same
10.	Emblem	15-0580-01	Same
11.	Speed Nut	03-0271-00	Same
12.	Speed Nut	03-1507-00	Same

CENTRIFUGAL SWITCH

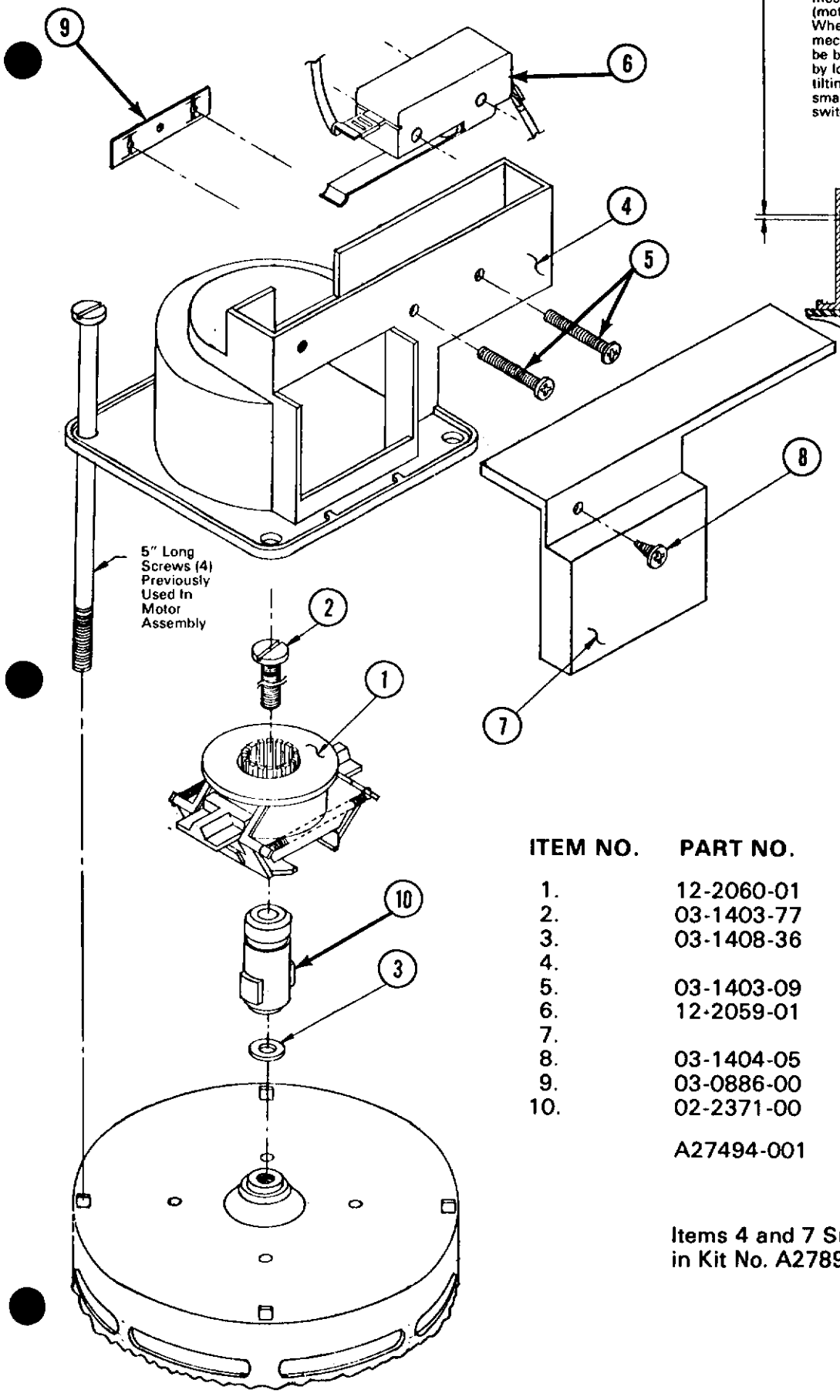

SWITCH ADJUSTMENT

.03 minimum gap between switch lever and mechanism with centrifugal mechanism actuated (motor running). Switch circuit should be closed When motor is stopped and centrifugal mechanism deactivates, the switch circuit should be broken. There should be enough adjustment by loosening the switch mounting screws and tilting switch in direction required. If this fails, a small amount of bending can be done on the switch lever.

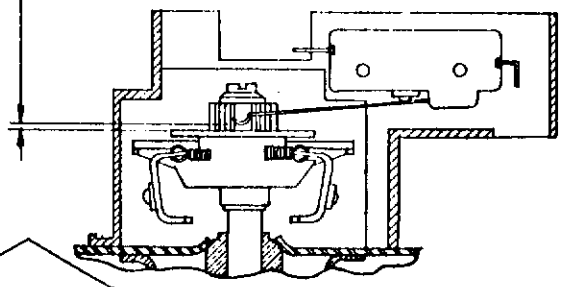

ITEM NO.	PART NO.	DESCRIPTION
1.	12-2060-01	Centrifugal Actuator
2.	03-1403-77	Screw
3.	03-1408-36	Washer
4.		Switch Mounting Case
5.	03-1403-09	Screw (2)
6.	12-2059-01	Switch
7.		Switch Case Cover
8.	03-1404-05	Screw
9.	03-0886-00	Speed Nut
10.	02-2371-00	Shaft Extension
	A27494-001	Centrifugal Switch Kit Complete w/17-1328-01 inst.

Items 4 and 7 Supplied in Kit No. A27895-001

FINAL ASSEMBLY
(Air Cooled)

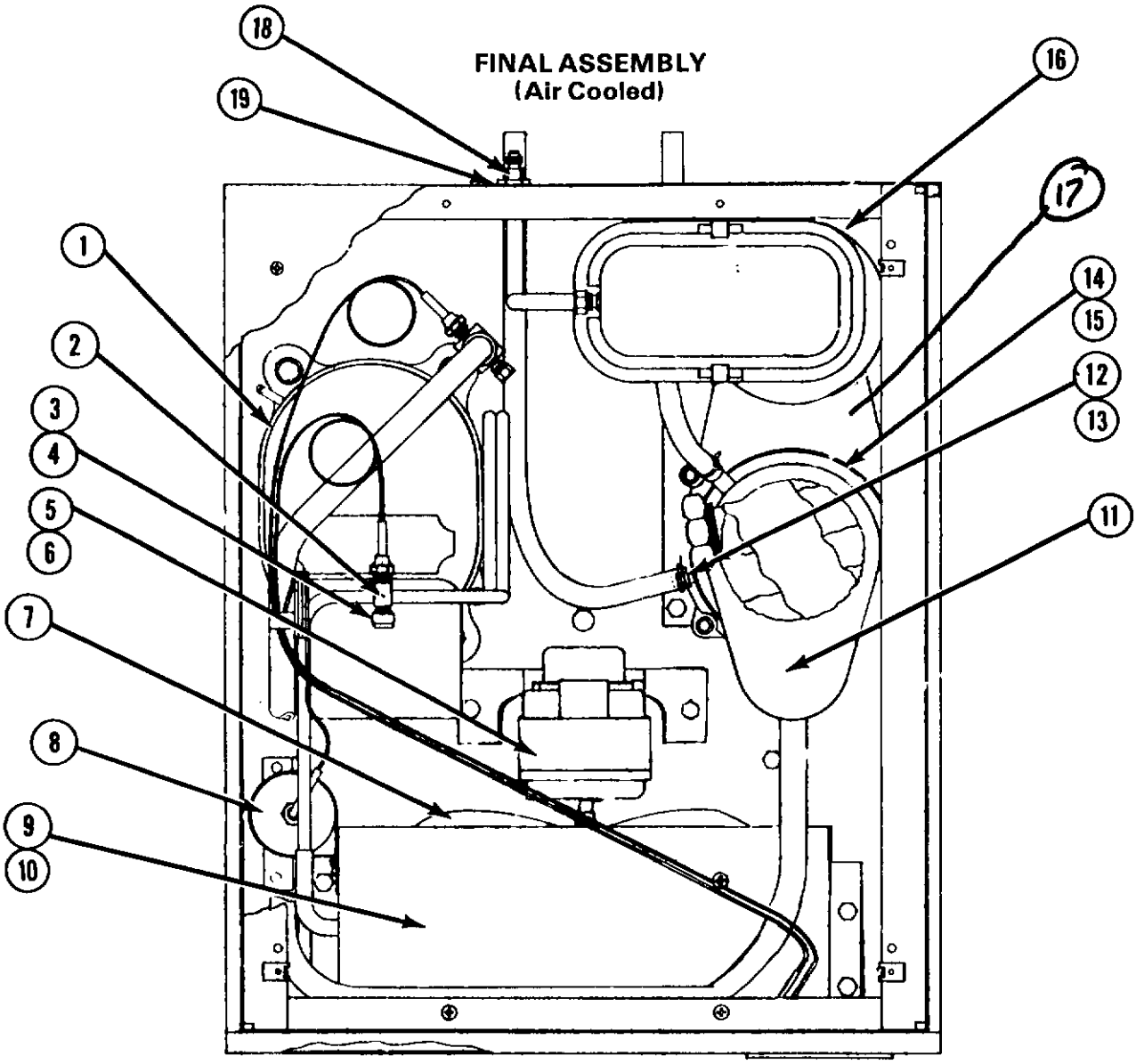

ITEM NO.	PART NO.	DESCRIPTION
1.	See Page 7	Compressor
2.	A20578-001	Adapter
3.	16-0563-00	Brass Cap
4.	16-0560-00	Valve Core
5.	18-0559-01	Fan Motor
6.	18-0388-00	Fan Motor Mount
7.	18-0625-00	Fan Blade & Nut
8.	02-0544-00	Drier
9.	18-0396-01	Condenser
10.	A23825-001	Shroud
11.	See Page 5	Freezer Assy.
12.	A24156-001	Drip Pan Assy.
13.	13-0704-00	Gasket
14.	13-0079-03	Tubing, Drain (Order by Ft.)
15.	02-0534-00	Clamp
16.	See Page 9 & 10	Reservoir Assy. A23532-001
17.	See Page 6	Gear Reducer
18.	03-1394-00	Nut
19.	03-1409-04	Washer

FINAL ASSEMBLY
(Water Cooled)

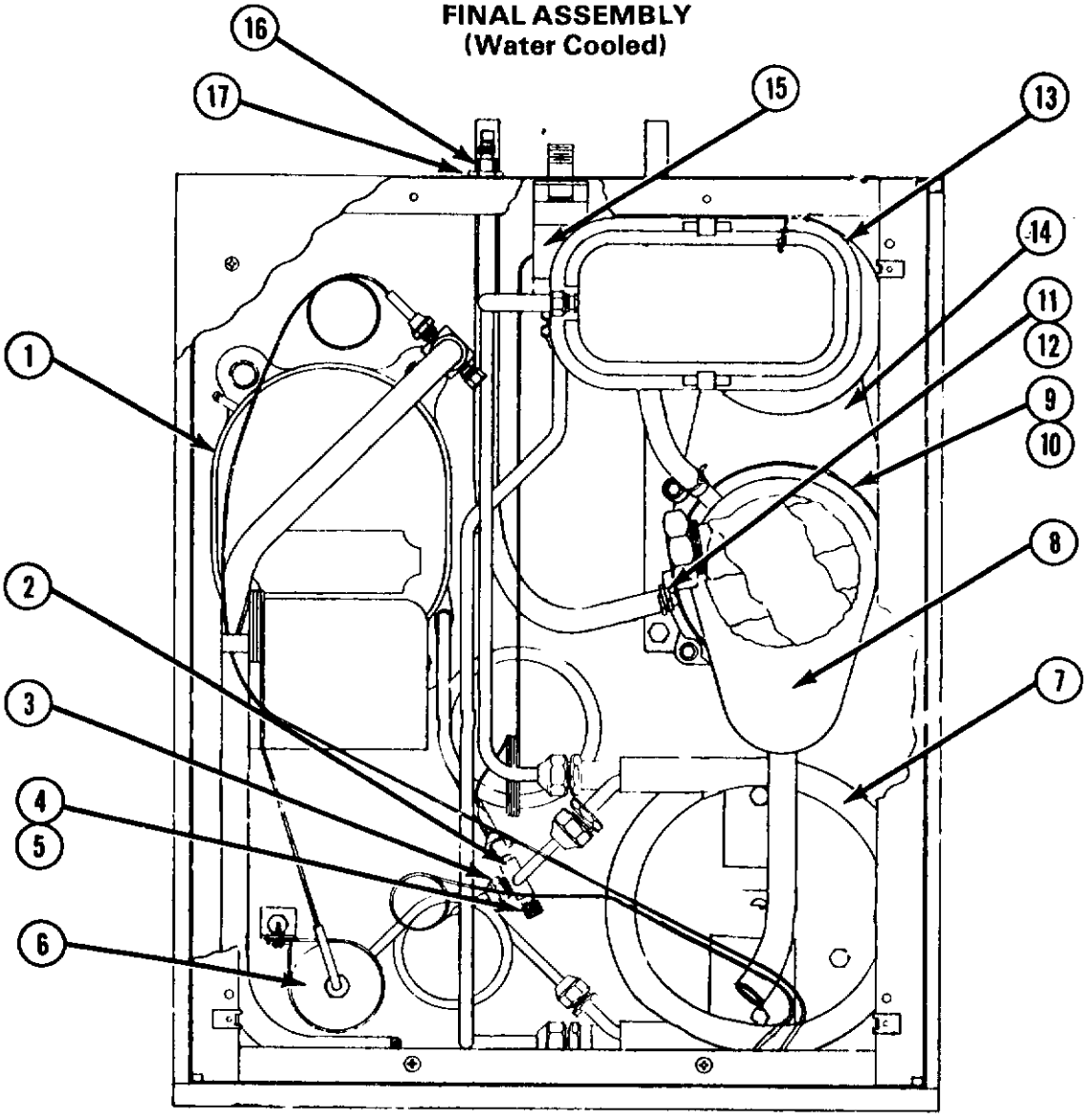

ITEM NO.	PART NO.	DESCRIPTION
1.	See Page 7	Compressor
2.	A20578-007	Adapter
3.	16-0652-01	Adapter
4.	16-0563-00	Brass Cap
5.	16-0560-00	Valve Core
6.	02-0544-00	Drier
7.	18-3305-01	Condenser
8.	See Page 5	Freezer Assy.
9.	A24156-001	Drip Pan Assembly
10.	13-0704-00	Gasket
11.	A21002-021	Tubing
12.	02-0534-00	Clamp
13.	See Page 9 & 10	Reservoir Assy.
14.	See Page 6	Gear Reducer
15.	11-0198-00	Water Regulating Valve
16.	03-1394-00	Nut
17.	03-1409-04	Washer

INSTALLATION INSTRUCTIONS

MODULAR FLAKER
ICE DISCHARGE TUBE

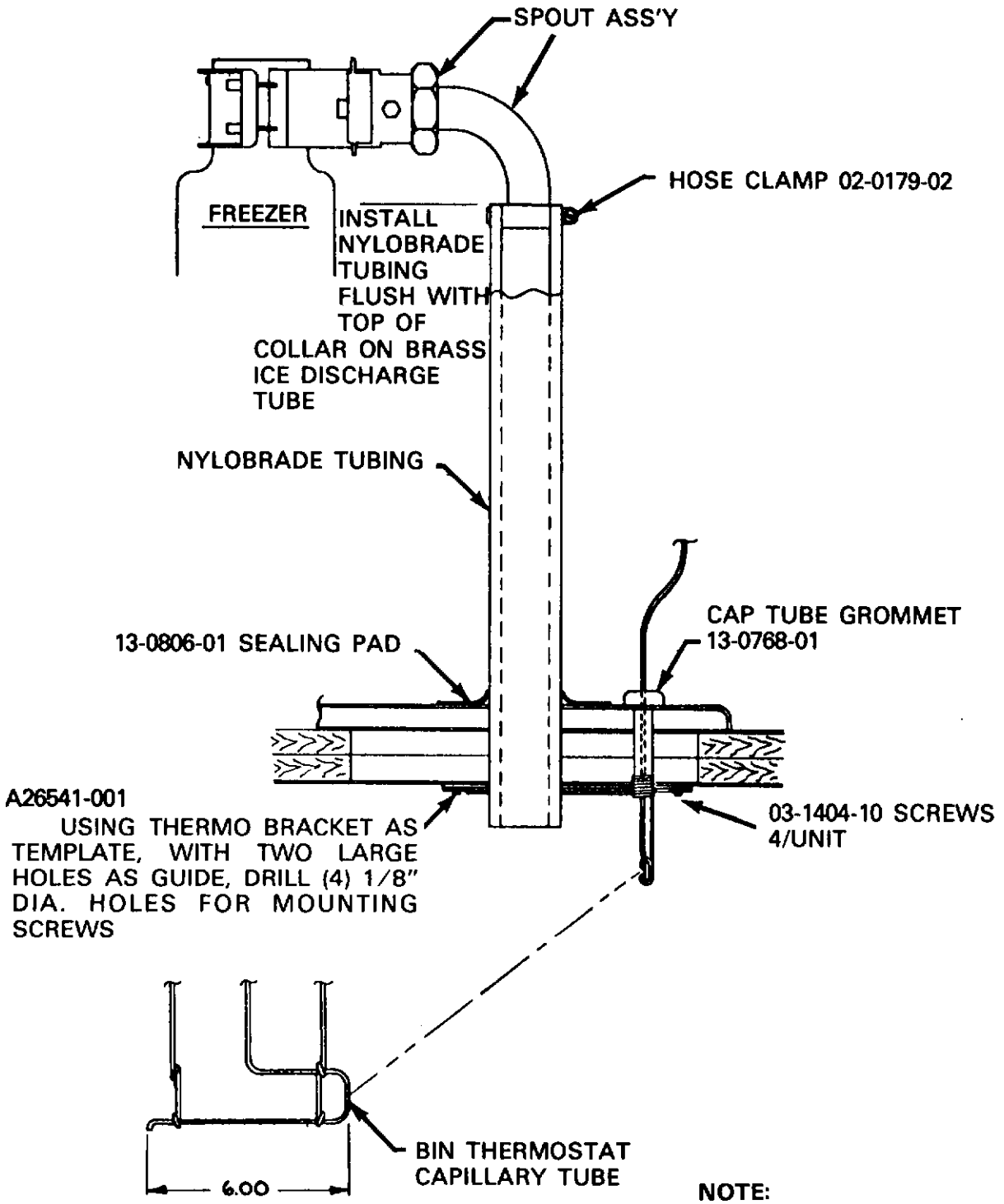

NOTE:
See page 4 for Spout Assy. Breakdown (Part No's.)

SPOUT AND SAFETY SWITCH

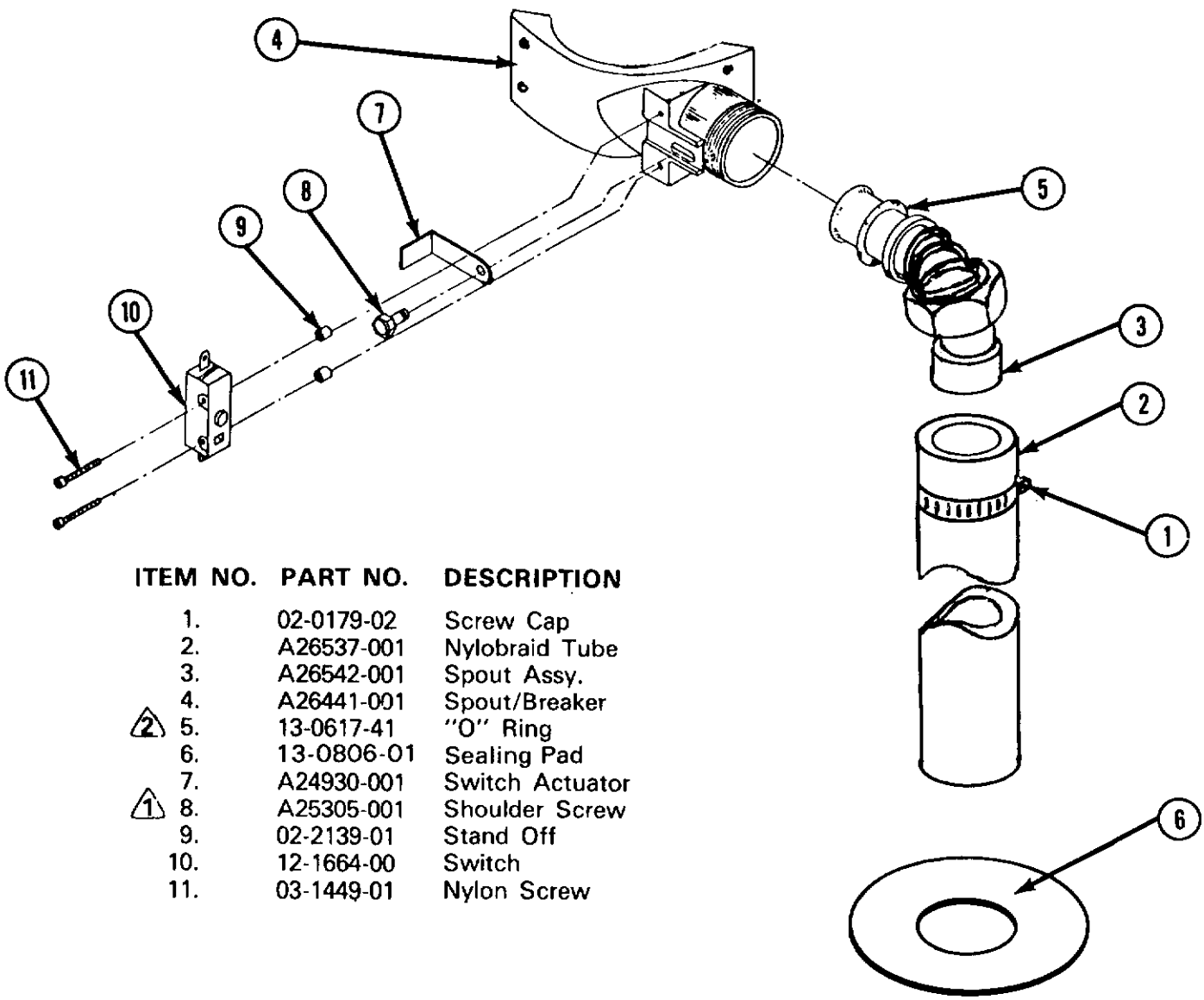

ITEM NO.	PART NO.	DESCRIPTION
1.	02-0179-02	Screw Cap
2.	A26537-001	Nylobraid Tube
3.	A26542-001	Spout Assy.
4.	A26441-001	Spout/Breaker
⚠2 5.	13-0617-41	"O" Ring
6.	13-0806-01	Sealing Pad
7.	A24930-001	Switch Actuator
⚠1 8.	A25305-001	Shoulder Screw
9.	02-2139-01	Stand Off
10.	12-1664-00	Switch
11.	03-1449-01	Nylon Screw

NOTE:

⚠1 Tighten carefully, small thread & brass.

⚠2 A light coating of petro-jel req'd on "O" Ring & Spring.

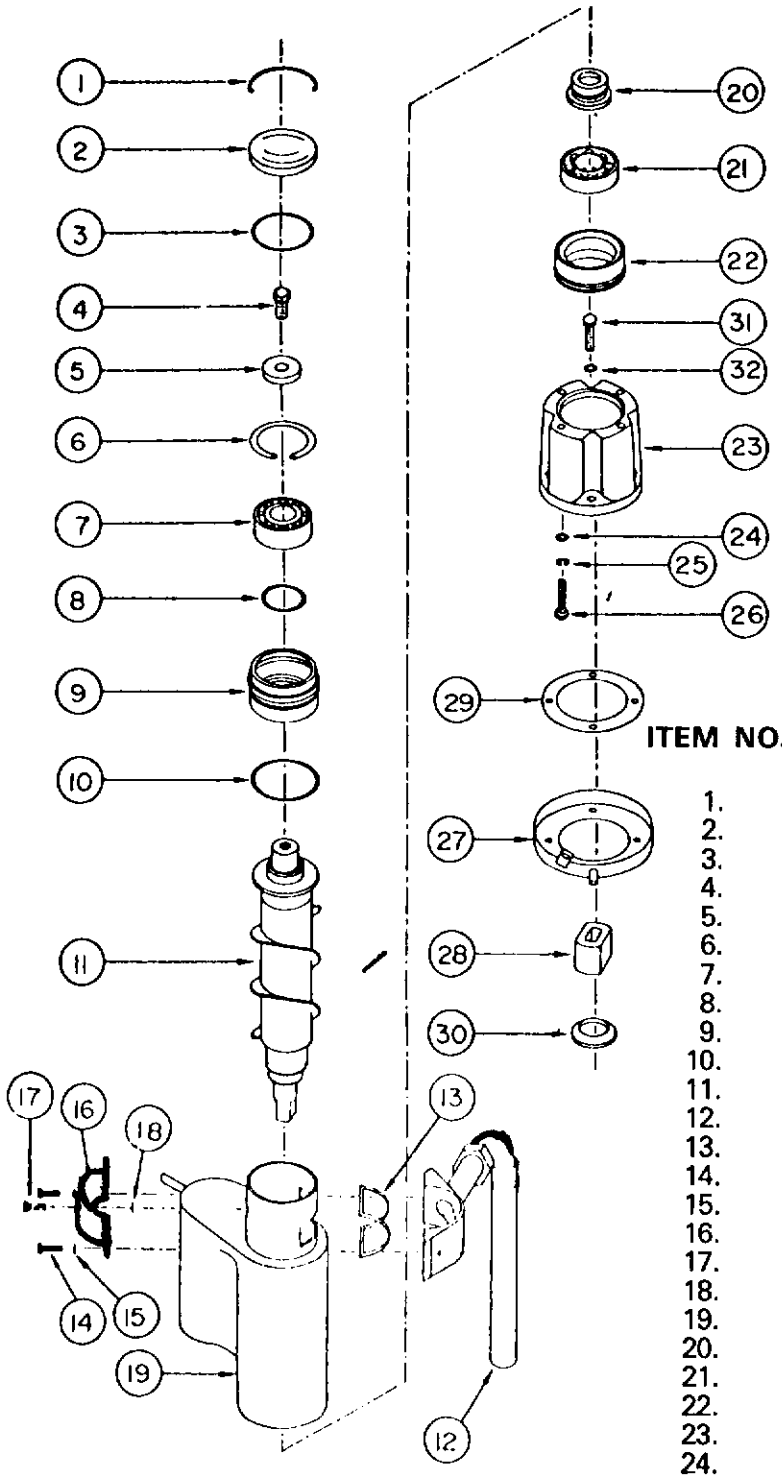

FREEZER ASSEMBLY

ITEM NO.	PART NO.	DESCRIPTION
1.	A08582-000	Cap Hook
2.	A08581-000	Cap
3.	13-0617-20	"O" Ring
4.	03-1405-36	Cap Screw
5.	A06273-000	Washer
6.	03-1558-04	Retaining Ring
7.	02-0646-00	Bearing
8.	13-0617-15	"O" Ring
9.	A26708-001	Bearing Retainer w/Bearing
10.	13-0617-40	"O" Ring
11.	02-2047-01	Auger
12.	See Page 4	Ice Spout Assy.
13.	02-1437-00	Gasket
14.	03-1544-02	Screw (2)
15.	03-1417-07	Lock Washer (2)
16.	A23515-001	Spout Plate
17.	03-1506-01	Screw
18.	03-1409-14	Washer
19.	A23558-020	Worm Tube Assy.
20.	A22569-000	Water Seal
21.	02-0619-00	Lower Bearing
22.	A10591-000	Bearing Retainer
23.	02-1629-00	Adapter
24.	03-1405-41	Screw (4)
25.	03-1410-04	Lock Washer (4)
26.	03-1408-03	Washer (4)
27.	A24156-001	Drip Pan
28.	15-0573-01	Coupling
29.	13-0704-00	Cork Gasket
30.	13-0709-02	Rubber Water Shed
31.	03-1420-03	Screw (4)
32.	03-1408-03	Washer (4)

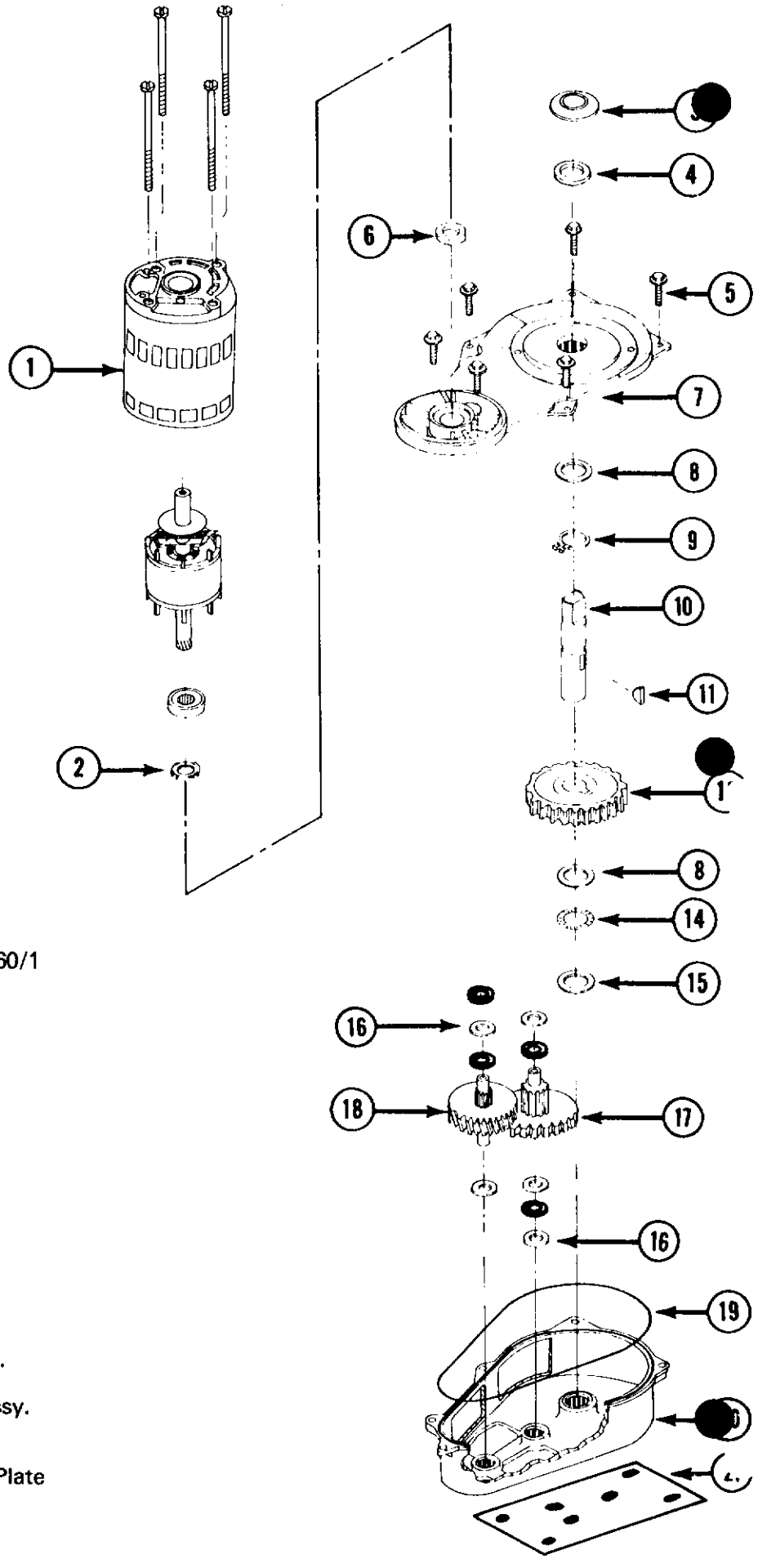

A24317-021
GEAR MOTOR ASSEMBLY
1/4 HP
OUT PUT SHAFT TURNS
AT 12 RPM

ITEM NO.	PART NO.	DESCRIPTION
1.	A26455-001	Drive Motor 115/60/1
2.	03-1426-00	Spring Washer
3.	13-0709-02	Water Shed
4.	02-1607-00	Oil Seal
5.	03-1251-01	Screws (6 Req'd)
6.	02-1606-00	Oil Seal
7.	A22200-000	Gear Case Cover Assembly
8.	02-1681-00	Thrust Race (2)
9.	03-1363-00	Retaining Ring
10.	02-1652-00	Output Shaft
11.	03-1364-00	Key
12.	02-1653-00	Output Gear
14.	02-1680-00	Bearing
15.	02-1679-00	Thrust Race
16.	03-1408-24	Washer (9 Req'd)
17.	02-2071-00	Second Gear and Third Pinion Assy.
18.	02-2072-00	First Gear and Second Pinion Assy.
19.	A26103-001	"O" Ring
20.	A22199-000	Gear Cse Assy.
21.	A26599-001	Motor Mounting Plate

MOTOR COMPRESSOR

Air and Water

115/60/1 3500 RPM

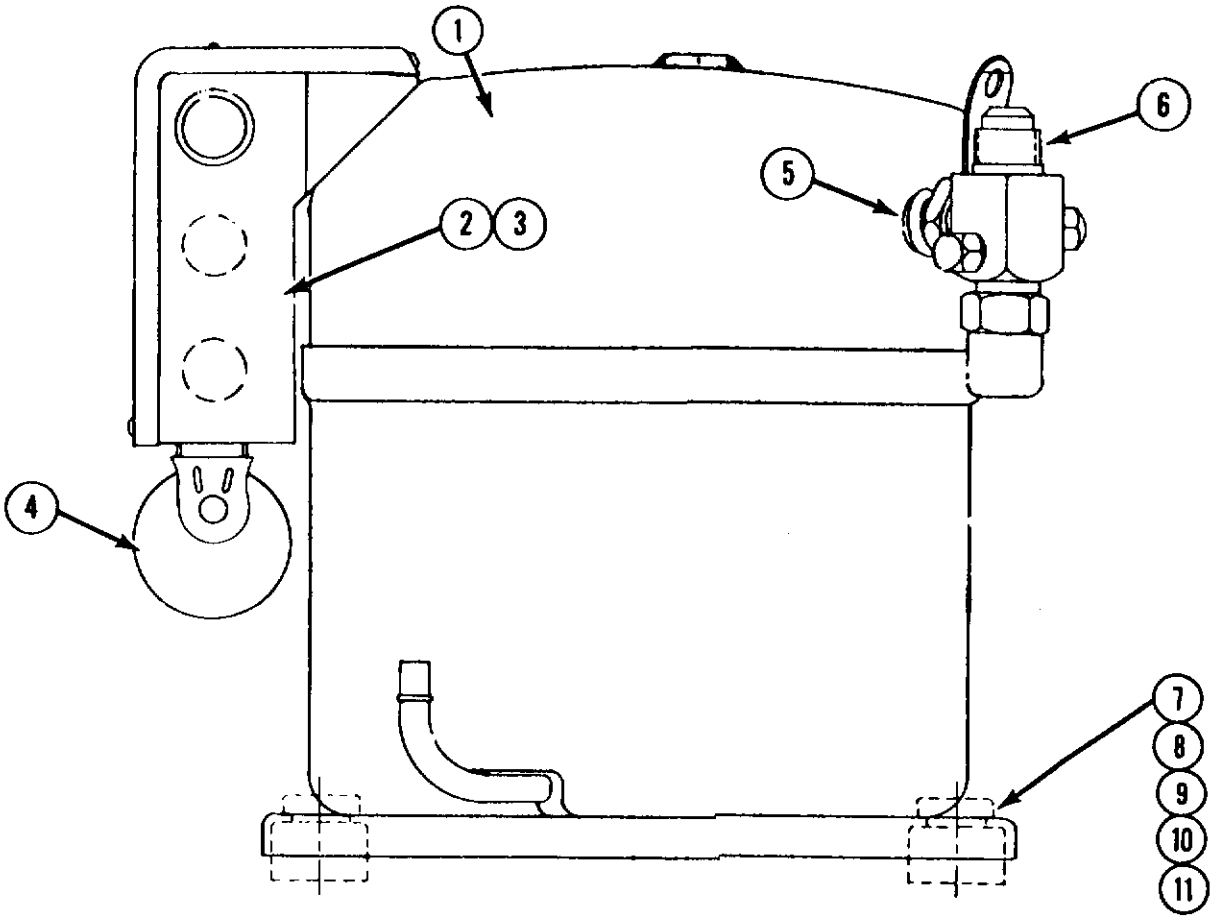

ITEM NO.	PART NO.	DESCRIPTION
1.	18-2400-01	Compressor
2.	18-2410-00	Relay
3.	18-2400-25	Overload
4.	18-2420-00	Capacitor
5.	18-2201-30	Rotolock Suction Valve
6.	18-2300-29	Valve Seal
7.	18-2200-28	Grommet
8.	18-2200-27	Sleeve
9.	03-1405-40	Screw
10.	03-1417-12	Washer
11.	03-1408-25	Washer

CONTROL BOX ASSEMBLY

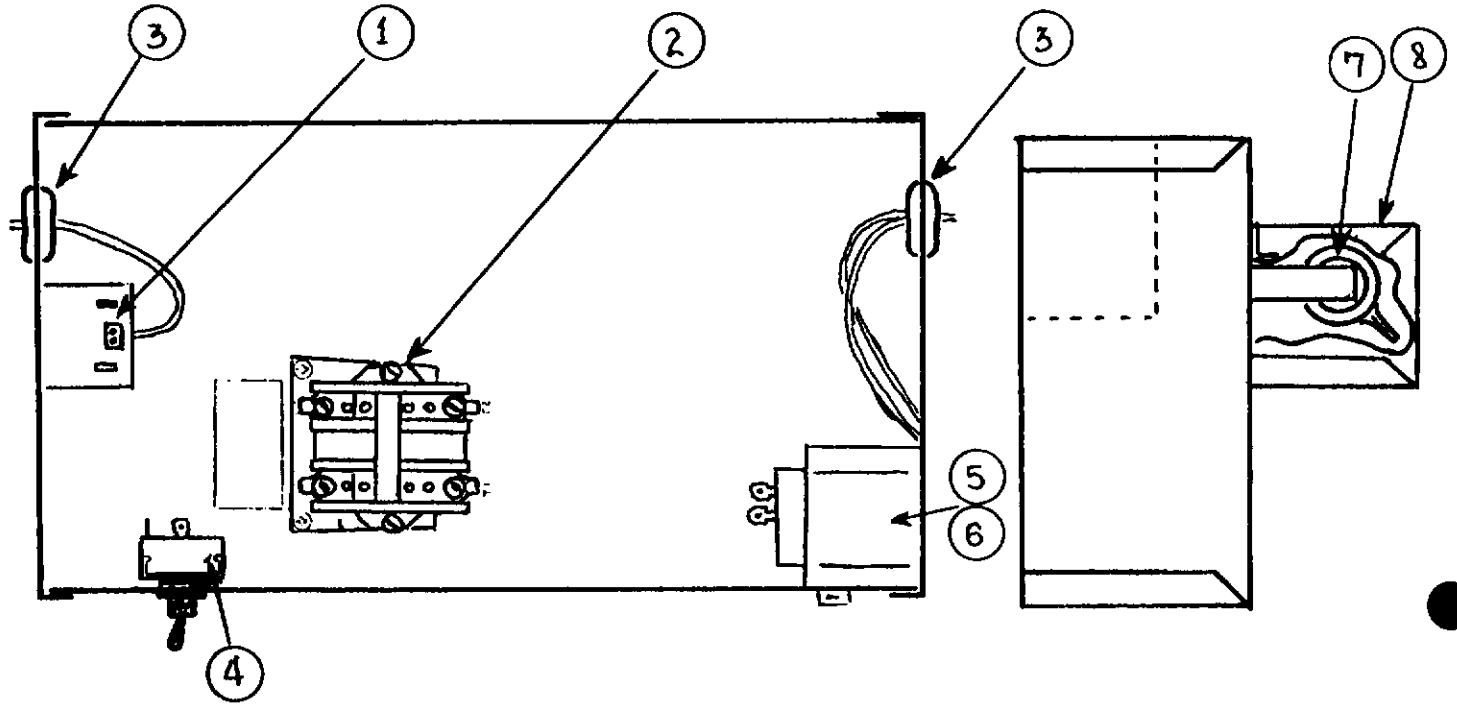

ITEM NO.	PART NO.	DESCRIPTION
1.	11-0354-00	Bin Control
2.	12-0820-01	Contactor
3.	13-0557-00	Grommet (3)
4.	12-0426-01	Switch
5.	11-0358-00	Lo Pressure Control
6.	11-0362-00	Hi Pressure Control (Air Cooled Only)
	11-0388-01	Hi Pressure Control (Water Cooled Only)
7.	12-0474-01	Resistor (Air Cooled Only)
8.	A14384-000	Cover (Air Cooled)

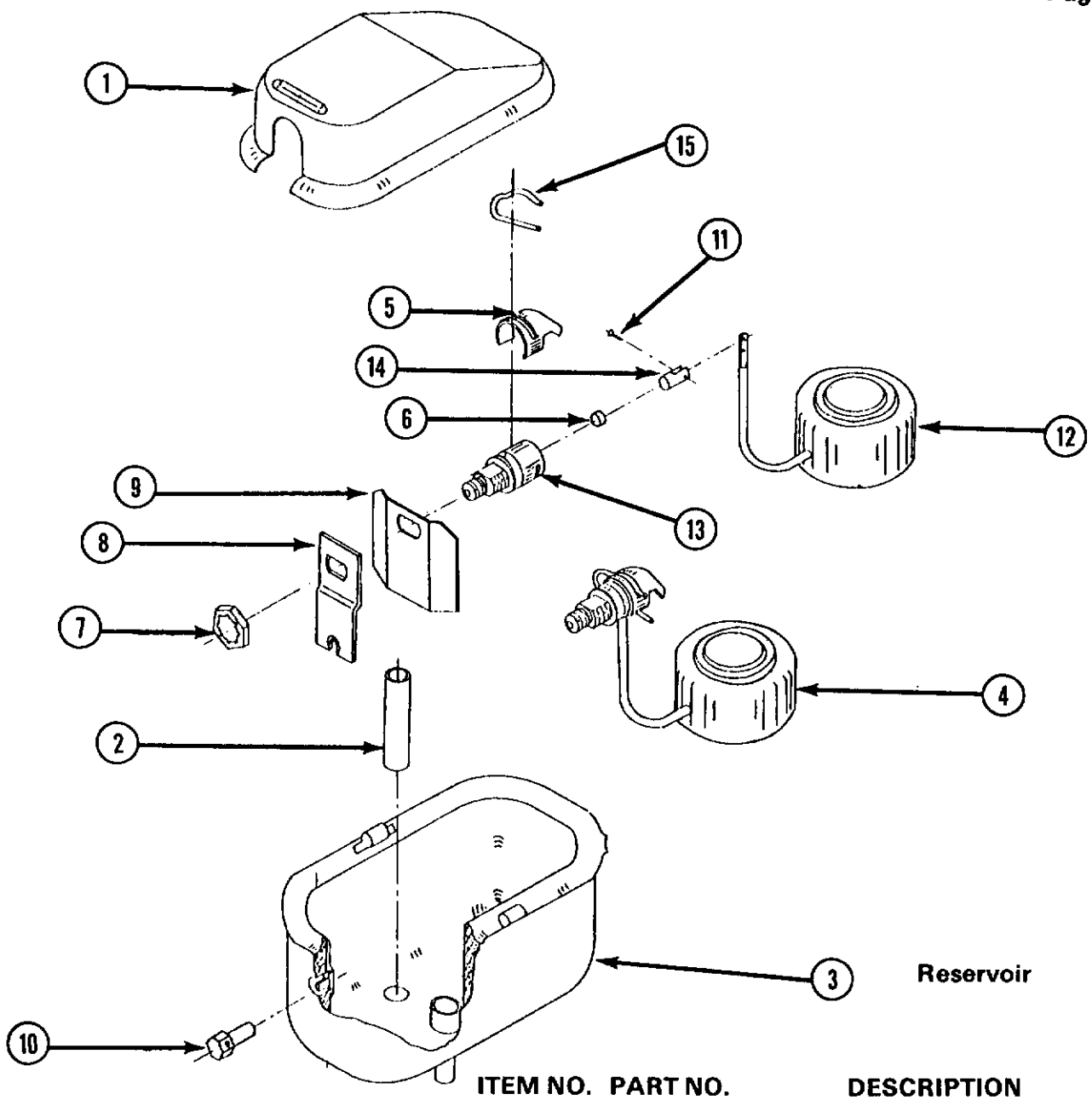

Reservoir

NOTE: Use of this reservoir was discontinued about mid 1975. Current units use the reservoir on page 10.

*Use Item #4

ITEM NO.	PART NO.	DESCRIPTION
1.	A16012-000	Reservoir Cover
2.	S06715-000	Stand Pipe
3.	A23532-001	Reservoir Complete Less Item No: 1 & 2
4.	S08138-000	Valve Complete Includes Items 5, 6, 11, 12, 13, 14 & 15
5.	02-1320-00	Water Deflector
6.	S06947-000	Valve Seat
7.	03-1394-00	Pal Nut
8.	A12869-000	Bracket
9.	A18418-001	Water Deflector
10.	A08055-000	Bracket Nut
11.	03-1001-00	Rivet
*12.		Float
*13.		Inlet Valve
*14.		Valve Seat Holder
15.	02-1259-00	Valve Pin

RESERVOIR ASSEMBLY

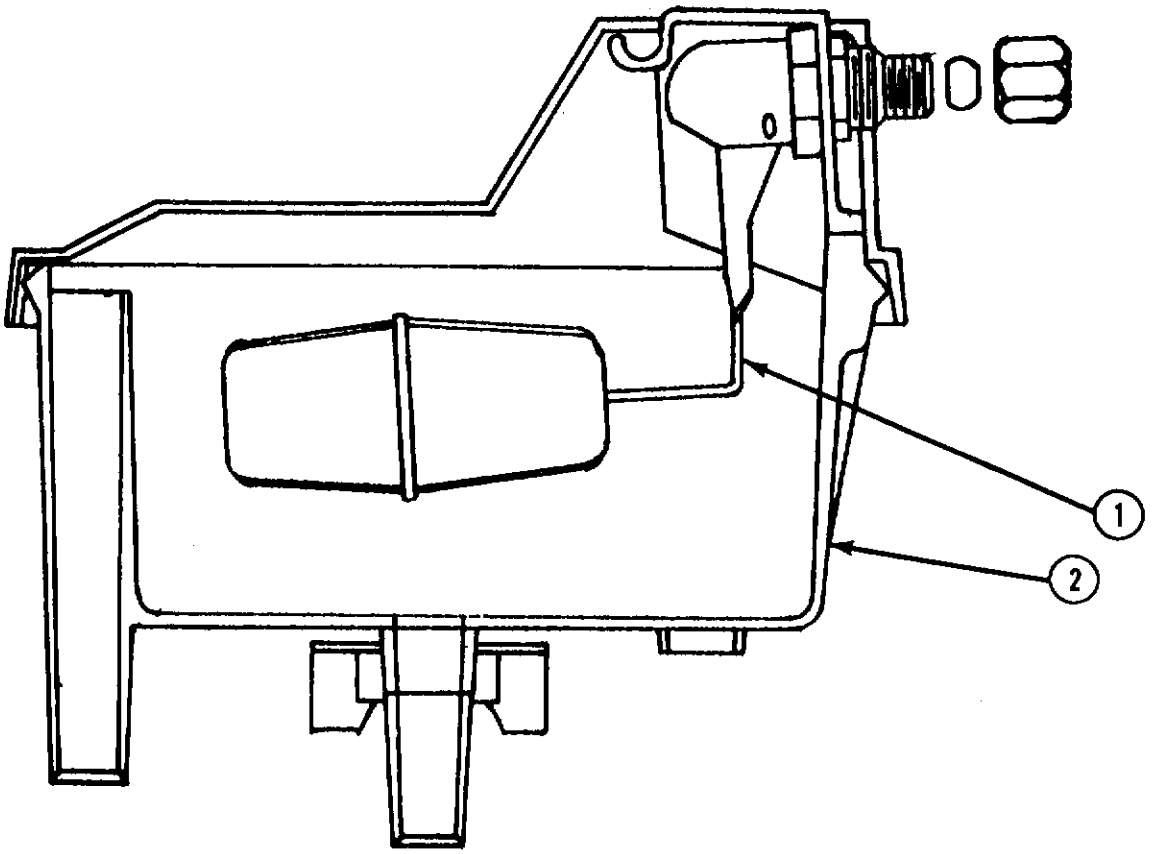

ITEM NO.	PART NO.	DESCRIPTION
1.	02-2217-02	Valve Assy.
2.	02-2217-01	Reservoir Complete

CABINET PARTS

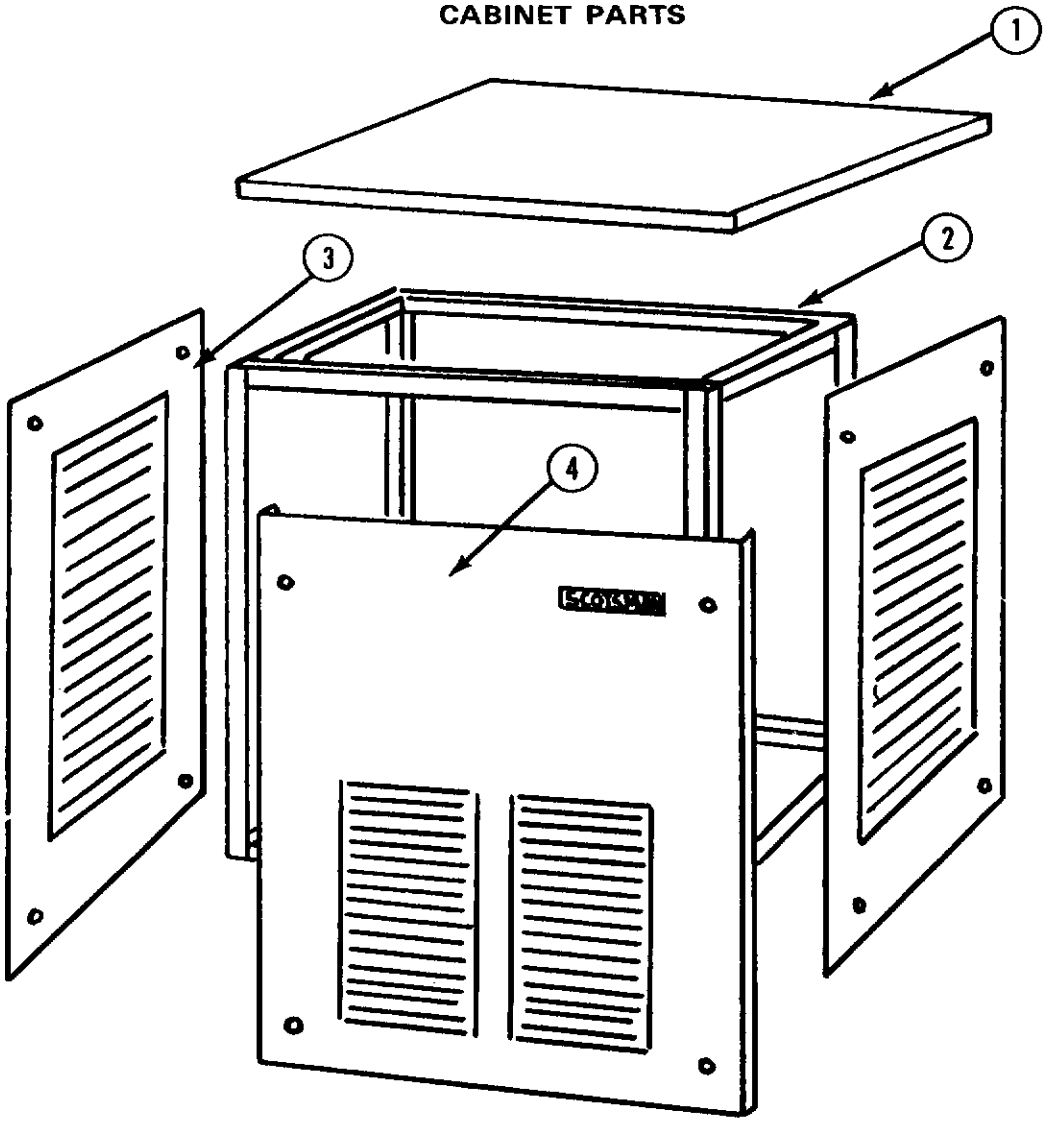

ITEM NO.	DESCRIPTION	ENAMEL	STAINLESS STEEL
1.	Panel Top	A24026-001	A24026-002
2.	Cabinet Frame	A23358-001	A23358-001
3.	Panel, Right Side	A23360-001	A23360-002
4.	Panel, Front	A23362-001	A23362-002
5.	Panel, Left Side	A23360-001	A23360-002
6.	Panel, Rear	A23370-001	A23370-002
*.	Mounting Screws	03-1419-09	03-1419-09
*.	Speed Nut	03-1507-00	03-1507-00
*.	Aerosol Paint (Micromatte)	10-0314-01	

CHASSIS ASSY.
Air Cooled

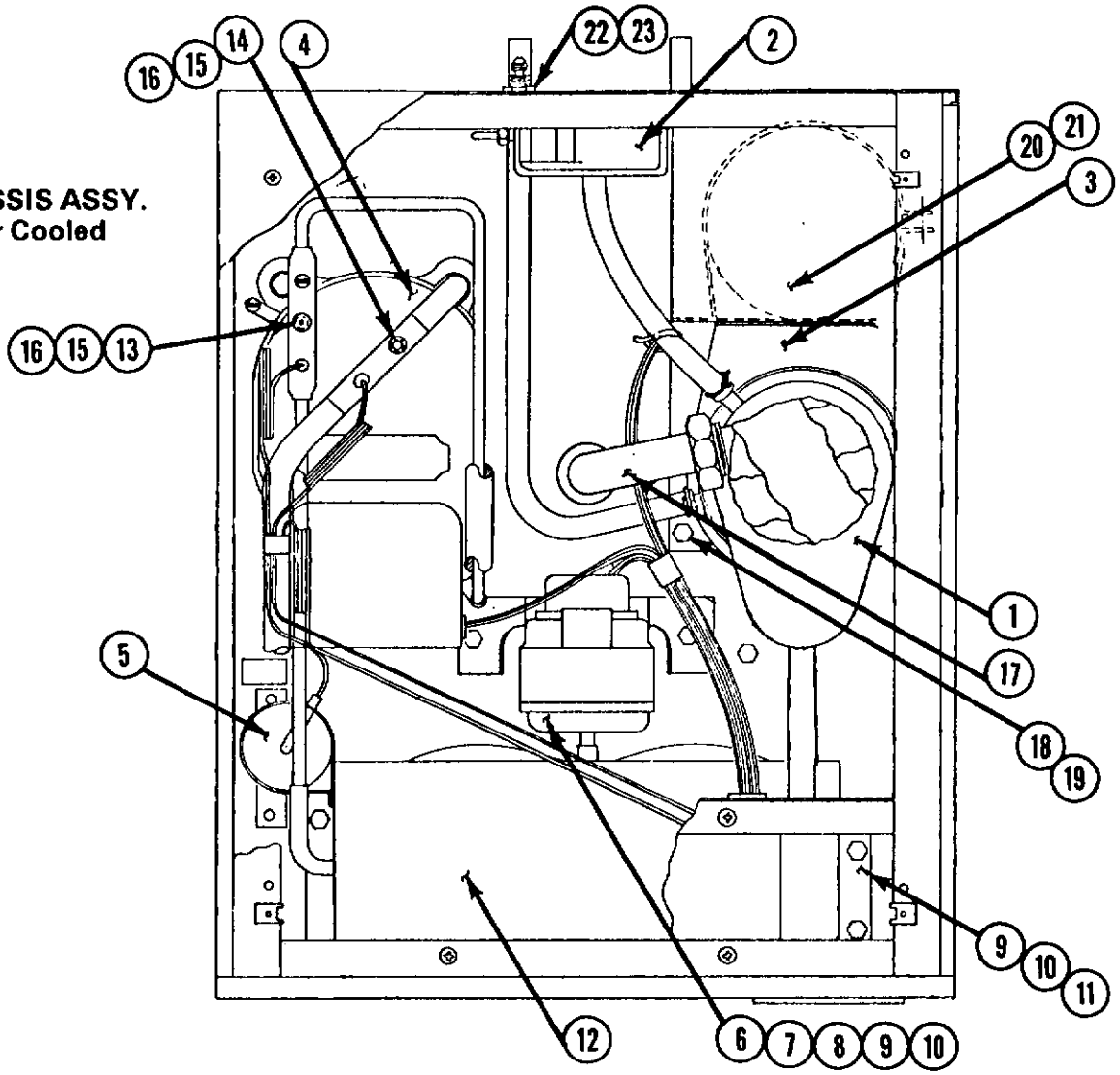

ITEM NO.	PART NO.	DESCRIPTION
1.	See Page 3	Freezer Assy.
2.	See Page 10	Reservoir
3.	See Page 4	Gear Reducer
4.	See Page 9	Compressor
5.	02-0544-01	Drier
6.	18-0559-01	Fan Motor
7.	18-0625-00	Fan Blade
8.	A25548-001	Fan Mounting Bracket
9.	03-1405-03	Screw
10.	03-1417-09	Washer
11.	18-0396-01	condenser
12.	A23825-001	Shroud
13.	16-0673-04	Process Header
14.	16-0673-07	Process Header
15.	16-0560-00	Valve Core
16.	16-0563-00	Brass Cap
17.	See Page 5	Spout Assy.
18.	03-1405-03	Screw
19.	03-1417-09	Lockwasher
20.	A26041-001	Motor Shield
21.	A26042-001	Shield Strap
22.	03-1394-00	Pal Nut
23.	03-1409-04	Fiber Washer

CHASSIS ASSY.
Water Cooled

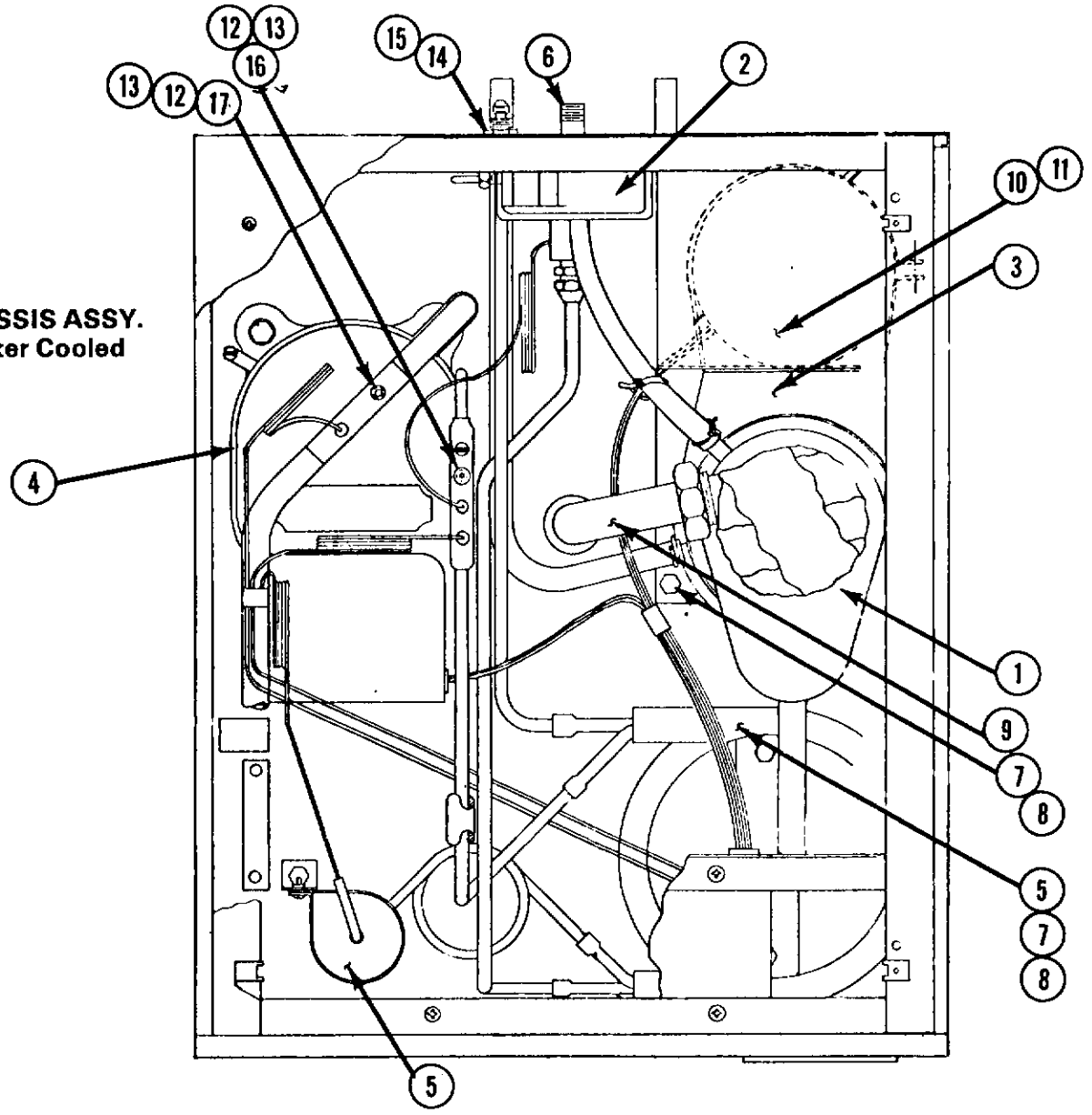

ITEM NO.	PART NO.	DESCRIPTION
1.	See Page 3	Freezer Assy.
2.	See Page 10	Reservoir
3.	See Page 4	Gear Reducer
4.	See Page 9	Compressor
5.	18-3305-02	Condenser
6.	11-0198-00	Water Regulating Valve
7.	03-1405-03	Screw
8.	03-1417-09	Lockwasher
9.	See Page 5	Spout Assy.
10.	A26041-001	Motor Shield
11.	A26042-001	Shield Strap
12.	16-0563-00	Brass Cap
13.	16-0560-00	Valve Core
14.	03-1394-00	Pal Nut
15.	03-1409-04	Fiber Washer
16.	16-0673-08	Process Header
17.	16-0673-07	Process Header

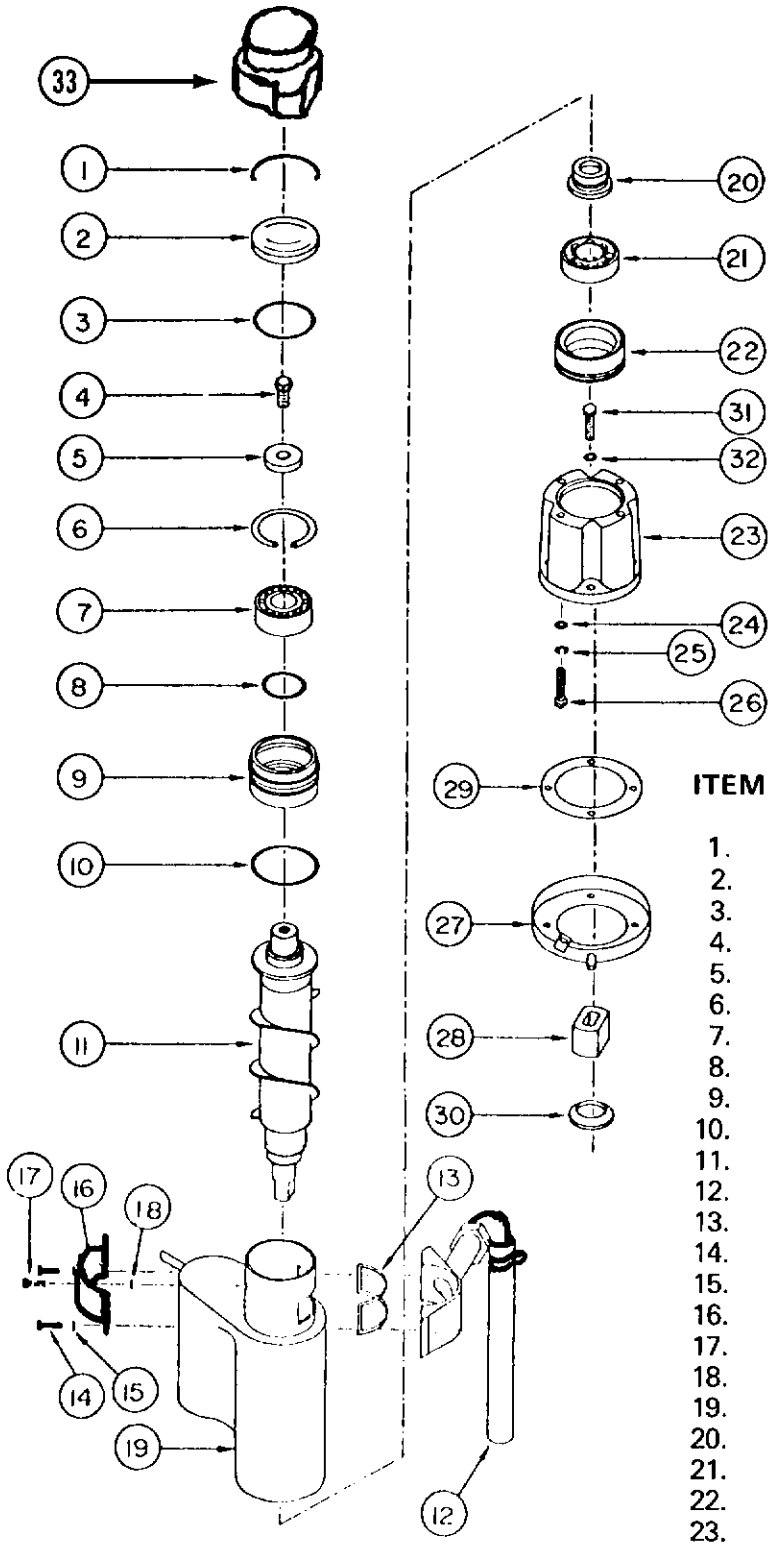

FREEZER ASSEMBLY

ITEM NO.	PART NO.	DESCRIPTION
1.	A08582-000	Cap Hook
2.	A08581-000	Cap
3.	13-0617-20	"O" Ring
4.	03-1405-36	Cap Screw
5.	A06273-000	Washer
6.	03-1558-04	Retaining Ring
7.	02-0646-00	Bearing
8.	13-1617-15	"O" Ring
9.	A26708-001	Bearing Retainer w/Bearing
10.	13-0617-40	"O" Ring
11.	02-2047-01	Auger
12.	See Page 5	Ice Spout Assy.
13.	02-1437-00	GAsket
14.	03-1544-02	Screw (4)
15.	03-1417-07	Lock Washer (4)
16.	A24928-001	Spout Plate
17.	03-1506-01	Screw
18.	03-1409-14	WAsher
19.	A26518-020	Freezer w/Heat Exch.
20.	A22569-000	Water Seal
21.	02-0619-00	Lower Bearing
22.	A10591-000	Bearing Retainer
23.	02-1629-00	Adapter
24.	03-1405-41	Screw (4)
25.	03-1410-04	Lock Washer (4)
26.	03-1408-03	Washer (4)
27.	A24156-001	Drip Pan
28.	15-0573-01	Coupling
29.	13-0704-00	Cork Gasket
30.	13-0709-02	Rubber Water Shed
31.	03-1420-03	Screw (4)
32.	03-1408-03	Washer (4)
33.	13-0809-01	Rubber Cap

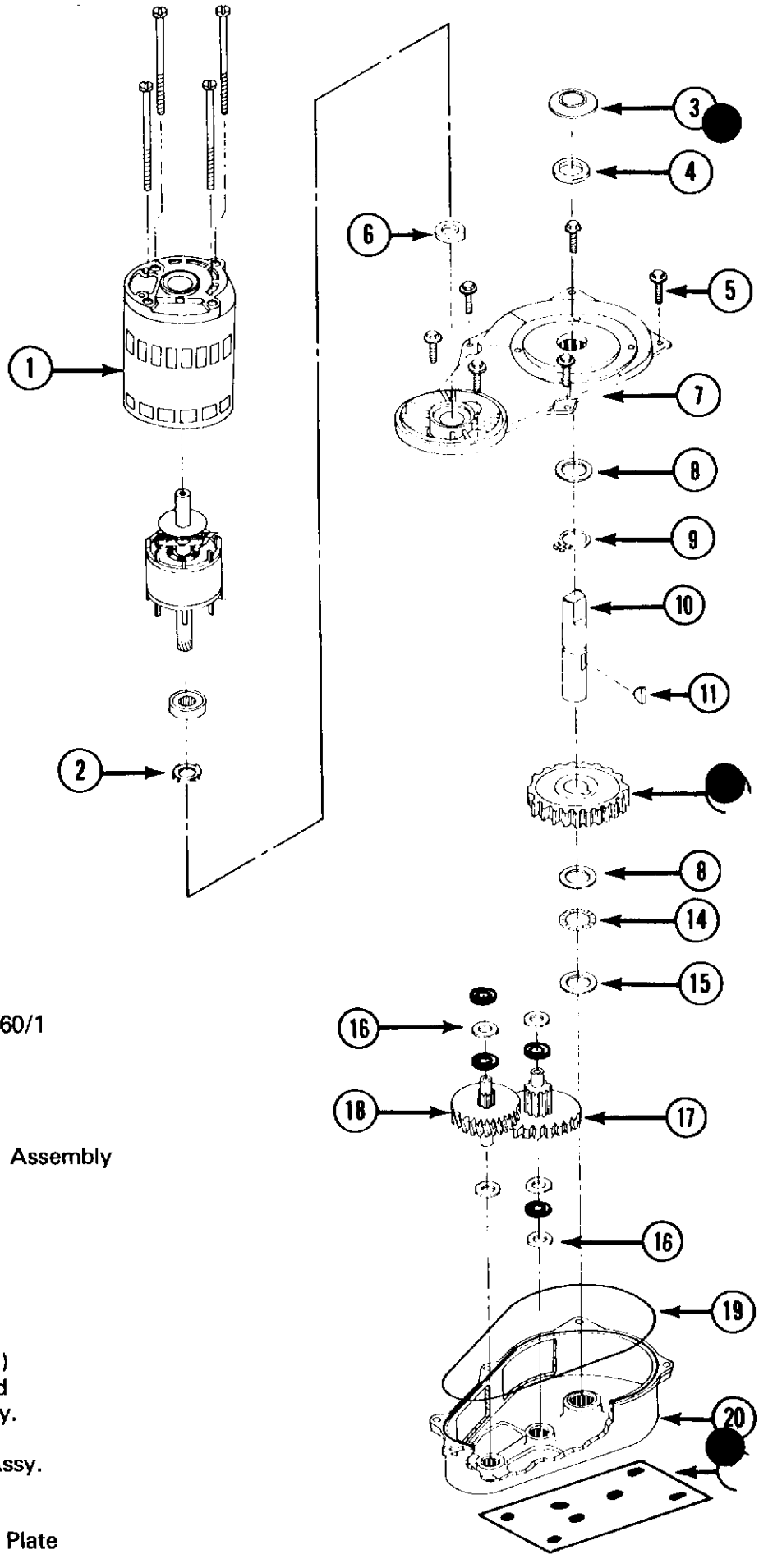

A24317-021
GEAR MOTOR ASSEMBLY
//4 HP 115/60/1
OUTPUT SHAFT TURNS
AT 12 RPM

ITEM NO.	PART NO.	DESCRIPTION
1.	A26455-001	Drive Motor 115/60/1
3.	13-0709-02	Water Shed
4.	02-1607-00	Oil Seal
5.	03-1251-01	Screws (6 req'd)
6.	02-1606-00	Oil Seal
7.	A22200-000	Gear Case Cover Assembly
8.	02-1681-00	Thruse Race (2)
9.	03-1363-00	Retaining Ring
10.	02-1652-00	Output Shaft
11.	03-1364-00	Key
12.	02-1653-00	Output Gear
14.	02-1680-00	Bearing
15.	02-1679-00	thrust Race
16.	03-1408-24	Washer (9 Req'd)
17.	02-2071-00	Second Gear and Third Pinion Assy.
18.	02-2072-00	First Gear and Second Pinion Assy.
19.	A26103-001	"O" Ring
20.	A22199-000	Gear Case Assy.
21.	A26599-001	Motor Mounting Plate

SPOUT AND SAFETY SWITCH

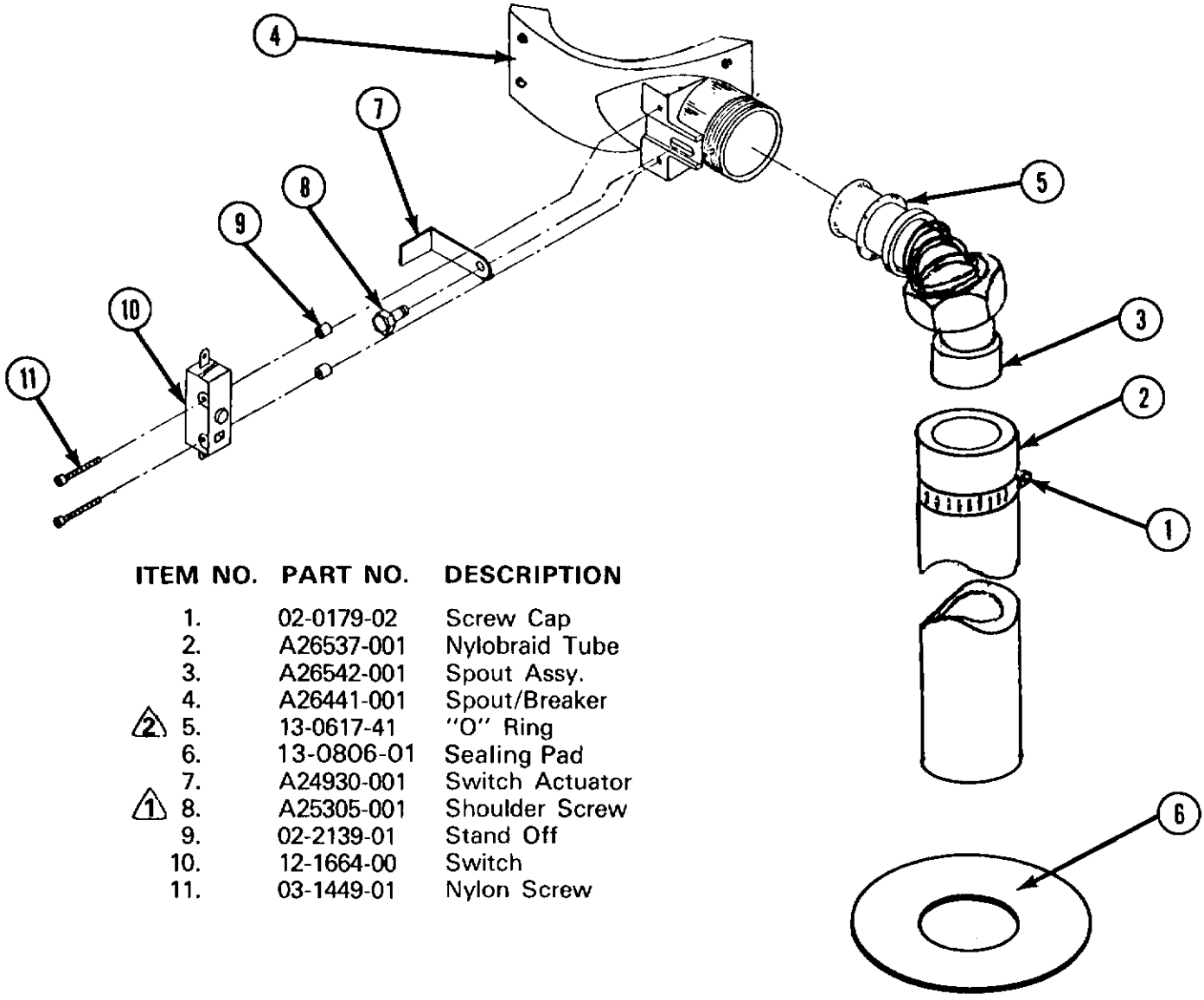

ITEM NO.	PART NO.	DESCRIPTION
1.	02-0179-02	Screw Cap
2.	A26537-001	Nylobraid Tube
3.	A26542-001	Spout Assy.
4.	A26441-001	Spout/Breaker
⚠2 5.	13-0617-41	"O" Ring
6.	13-0806-01	Sealing Pad
7.	A24930-001	Switch Actuator
⚠1 8.	A25305-001	Shoulder Screw
9.	02-2139-01	Stand Off
10.	12-1664-00	Switch
11.	03-1449-01	Nylon Screw

NOTE:

⚠1 Tighten carefully, small thread & brass.

⚠2 A light coating of petro-jel req'd on "O" Ring & Spring.

INSTALLATION INSTRUCTIONS

MODULAR FLAKER
ICE DISCHARGE TUBE

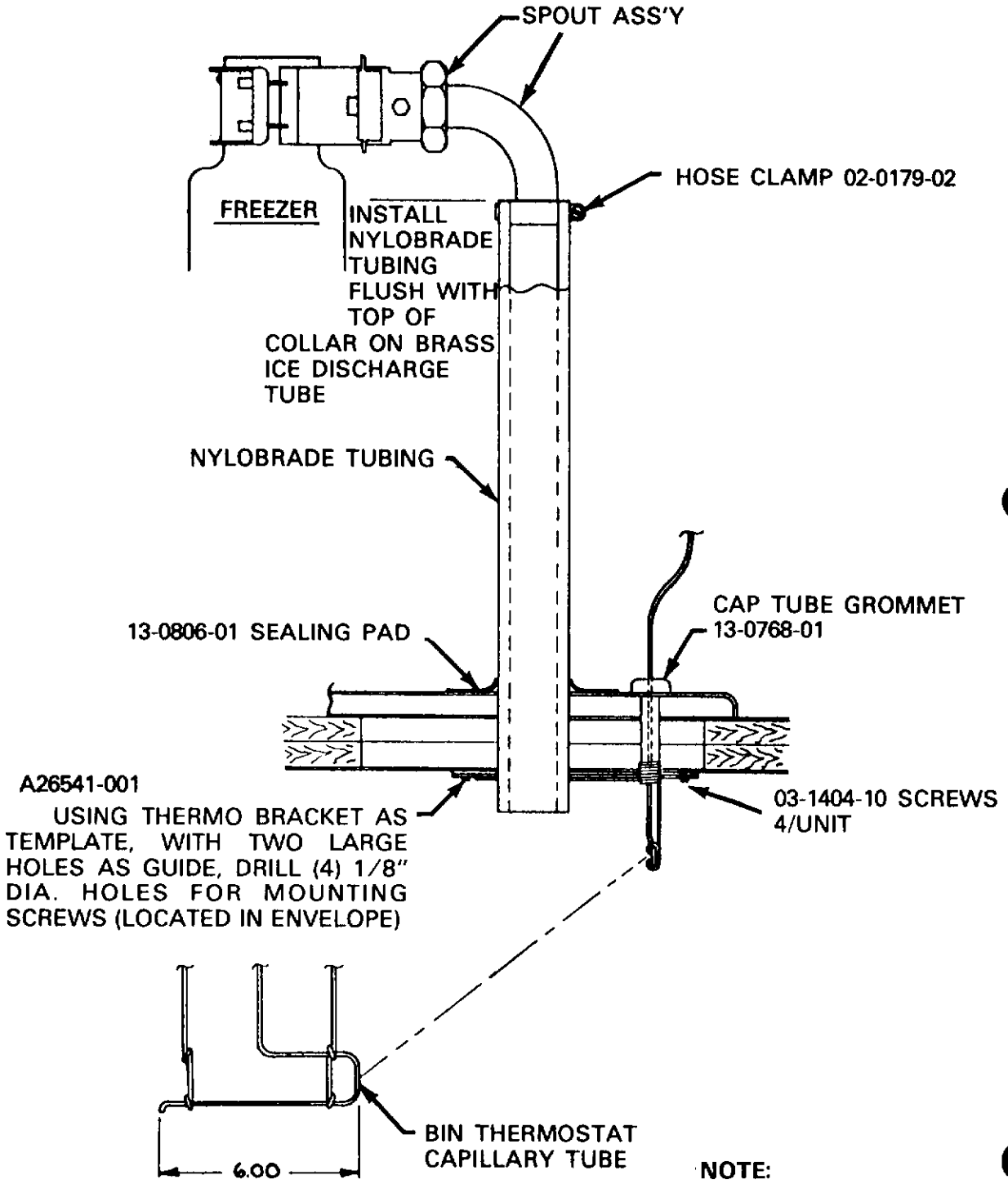

NOTE:

See page 5 for Spout Assy. Breakdown (Part No's.)

CONTROL BOX ASSEMBLY
Air Cooled
115/60/1

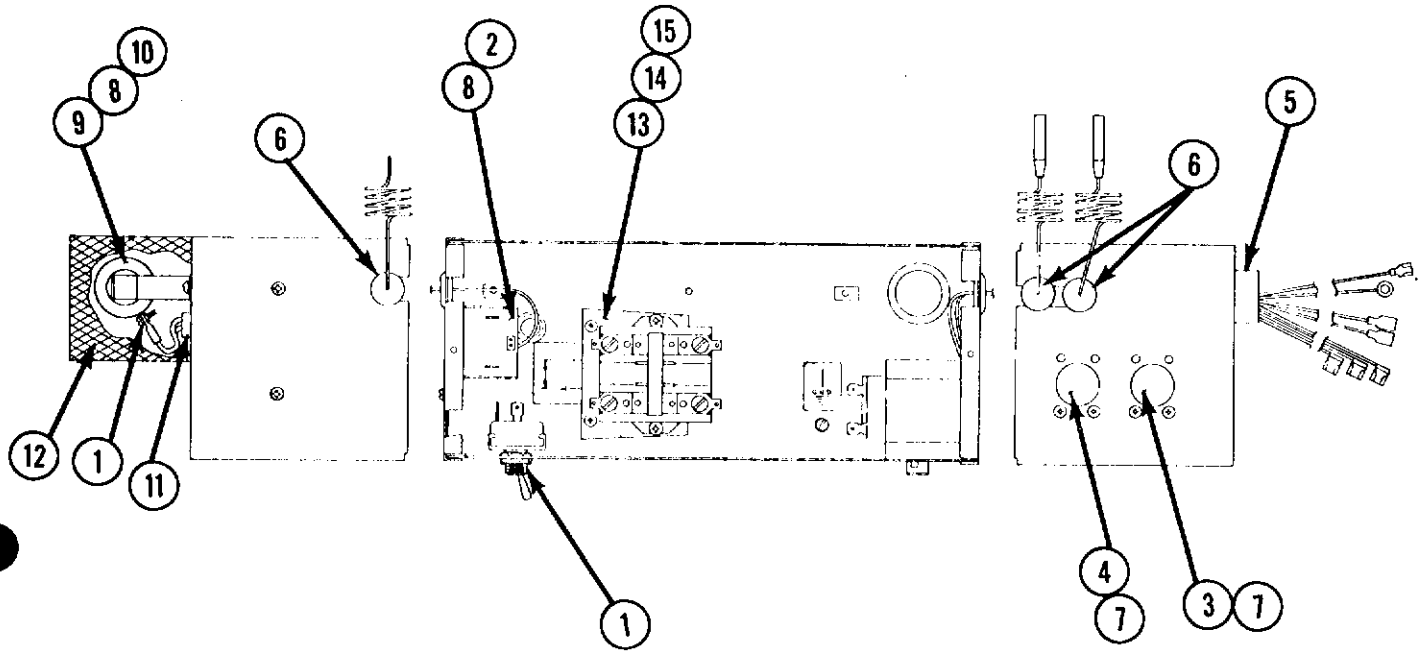

ITEM NO.	PART NO.	DESCRIPTION
1.	12-0426-01	Switch, Master
2.	11-0354-00	Bin Stat.
3.	11-0362-01	Pressure Control (Hi)
4.	11-0358-01	Pressure Control (Low)
5.	12-1213-11	Snap Bushing
6.	13-0557-00	Brommet
7.	03-1403-04	Screw
8.	03-1403-17	Screw
9.	12-0474-01	Resistor
10.	03-1421-04	Speed Nut
11.	12-1213-04	Snap Busings
12.	A14384-000	cover
13.	12-0820-01	Contactor
14.	03-1403-26	Screw
15.	03-1421-07	Speed Nut

CONTROL BOX ASSEMBLY
Water Cooled
115/60/1

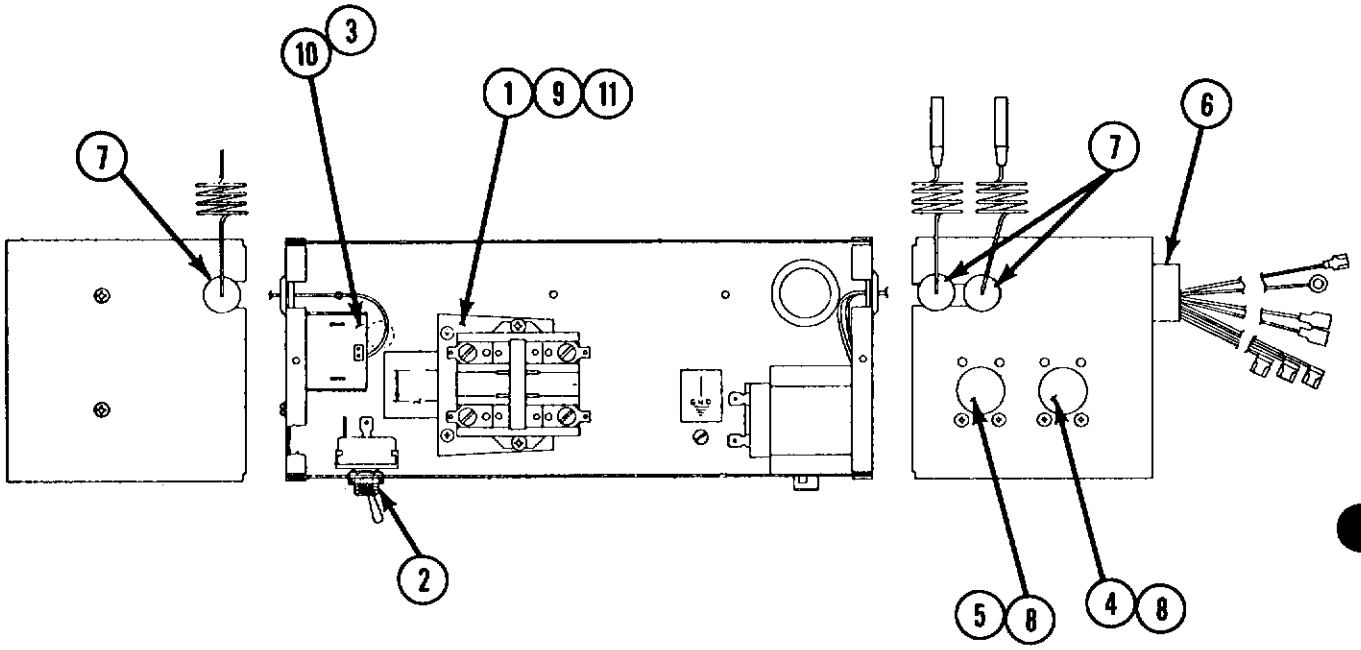

ITEM NO.	PART NO.	DESCRIPTION
1.	12-0820-01	Contactor
2.	12-0426-01	Switch, Master
3.	11-0354-00	Bin Stat.
4.	11-0388-02	Pressure Control (Hi)
5.	11-0358-01	Pressure Control (Lo)
6.	12-1213-11	Snap Bushing
7.	13-0557-00	Grommet
8.	03-1403-04	Screw
9.	03-1403-26	Screw
10.	03-1403-17	Screw
11.	03-1421-07	Speed Nut

MOTOR COMPRESSOR

Air and Water

115/60/1 3500 RPM

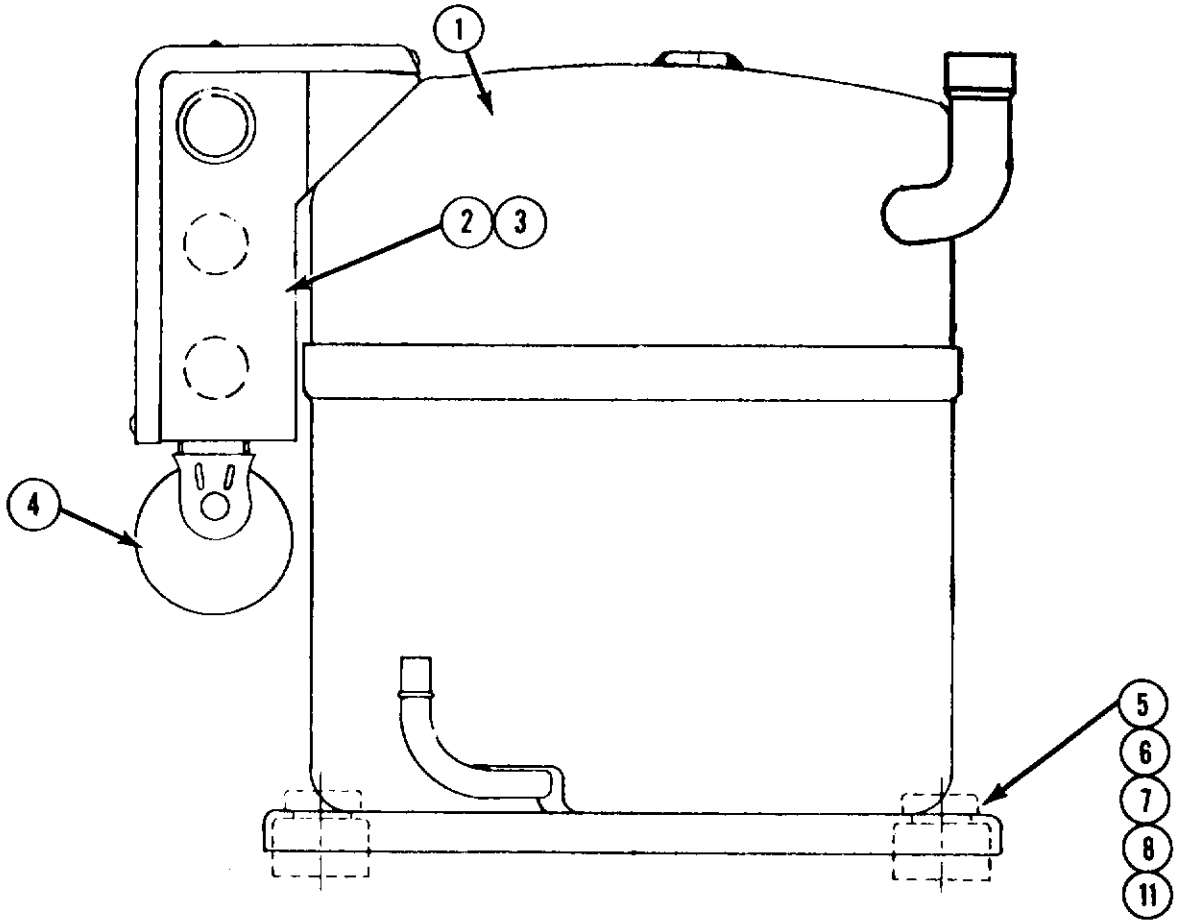

ITEM NO.	PART NO.	DESCRIPTION
/.	18-3900-01	Compressor Cope. P.N. RSL2-0075-1AA
2.	18-2410-00	Relay Cope. P.N. 040-0098-01
3.	18-2400-25	Overload Cope. P.N. 071-0127-06
4.	18-2420-00	Capacitor Cope. P.N. 014-0008-69
5.	18-2200-28	Mounting Grommet (4)
6.	18-2200-27	Mounting Sleeve (4)
7.	03-1405-40	Screw (4)
8.	03-1417-12	Lockwasher (4)
9.	03-1408-29	Washer (4)

RESERVOIR ASSEMBLY

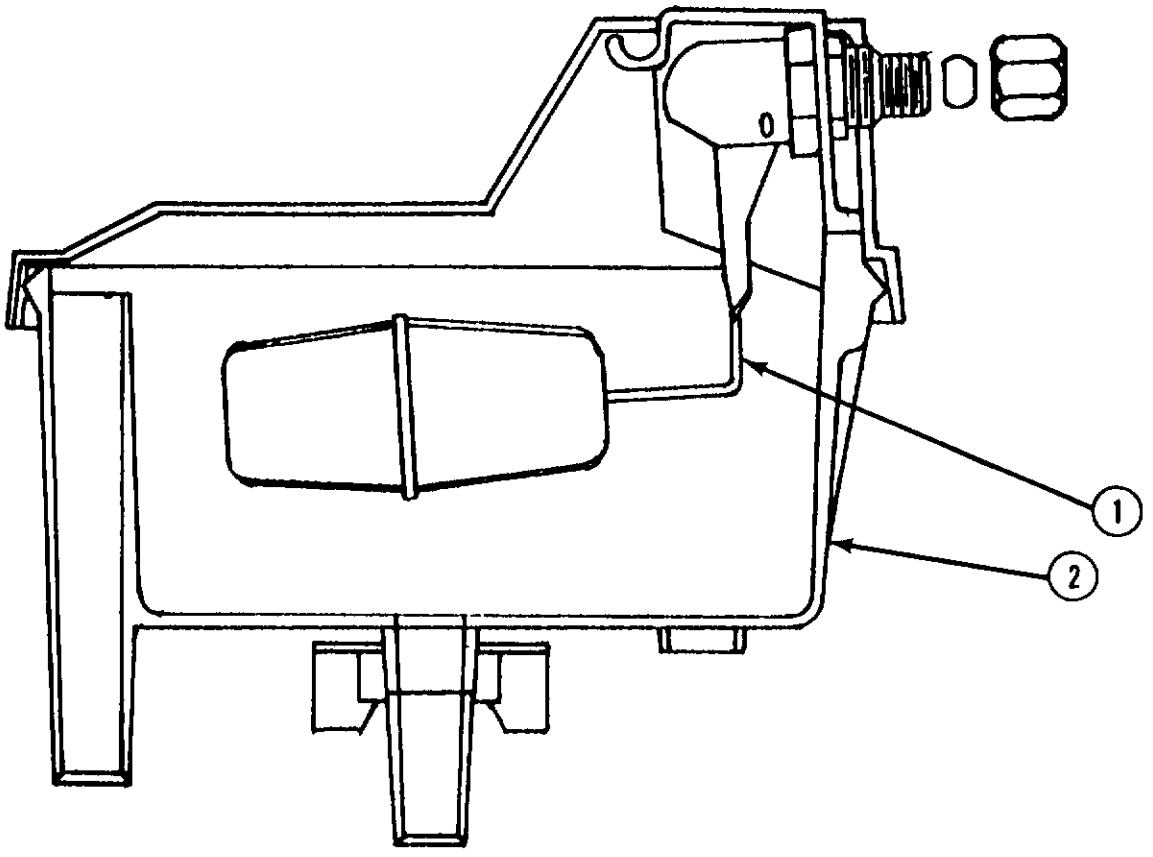

ITEM NO.	PART NO.	DESCRIPTION
1.	02-2217-02	Valve Assy.
2.	02-2217-01	Reservoir Complete

CABINET PARTS

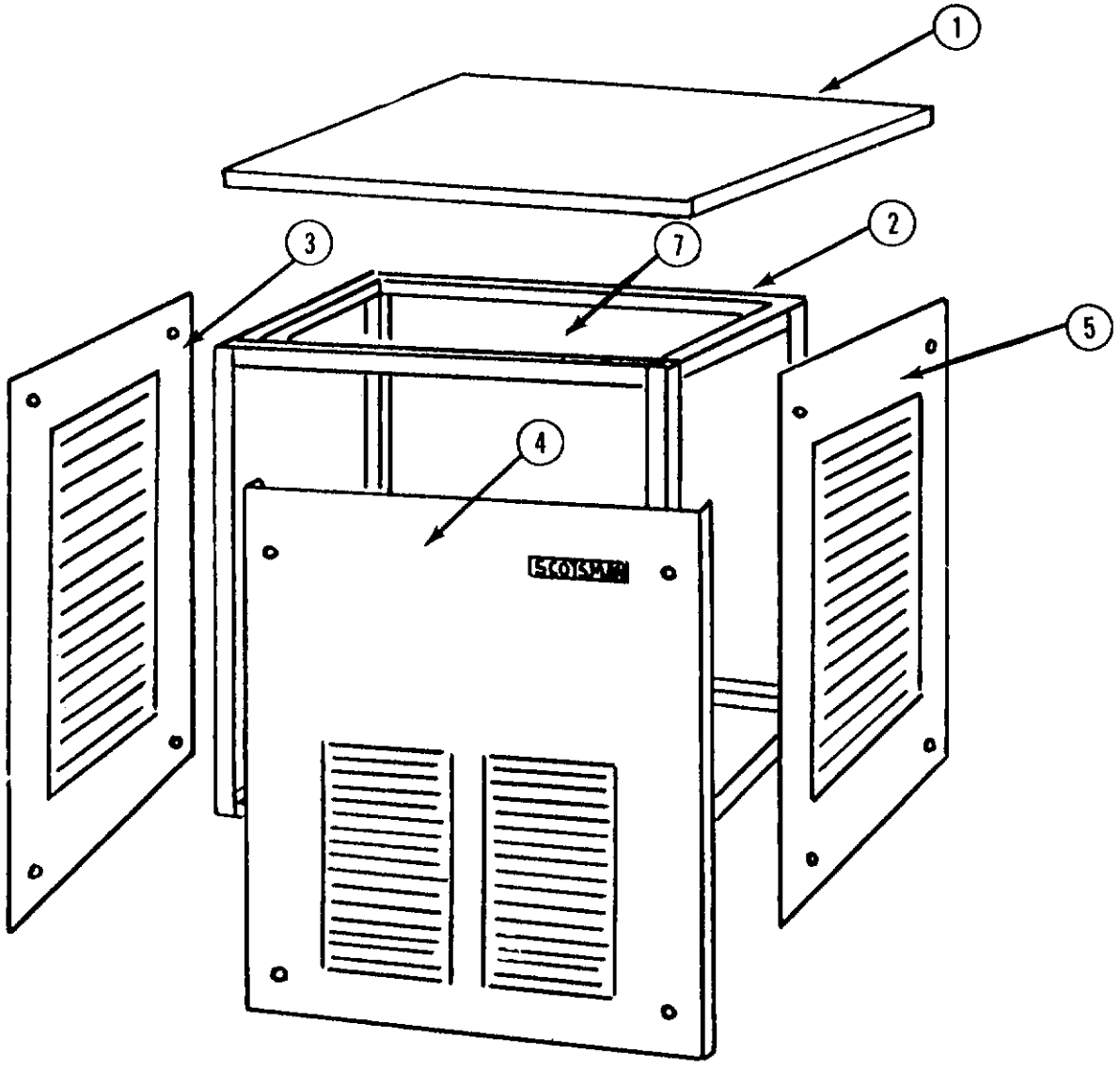

ITEM NO.	DESCRIPTION	ENAMEL	STAINLESS STEEL
1.	Panel Top	A24026-001	A24026-002
2.	Cabinet Frame	A23358-001	A23358-001
3.	Panel, Right Side	A23360-001	A23360-002
4.	Panel, Front	A23362-001	A23362-002
5.	Panel, Left Side	A23360-001	A23360-002
6.	Panel, Rear	A23370-001	A23370-002
*.	Mounting Screws	03-1419-09	03-1419-09
*.	Speed Nuts, Mounting	03-1507-01	03-1507-01
*.	Lockwasher, Mounting	03-1417-15	03-1417-15
7.	Panel, Rear	A23370-001	A23370-002

CHASSIS ASSY.
Air Cooled

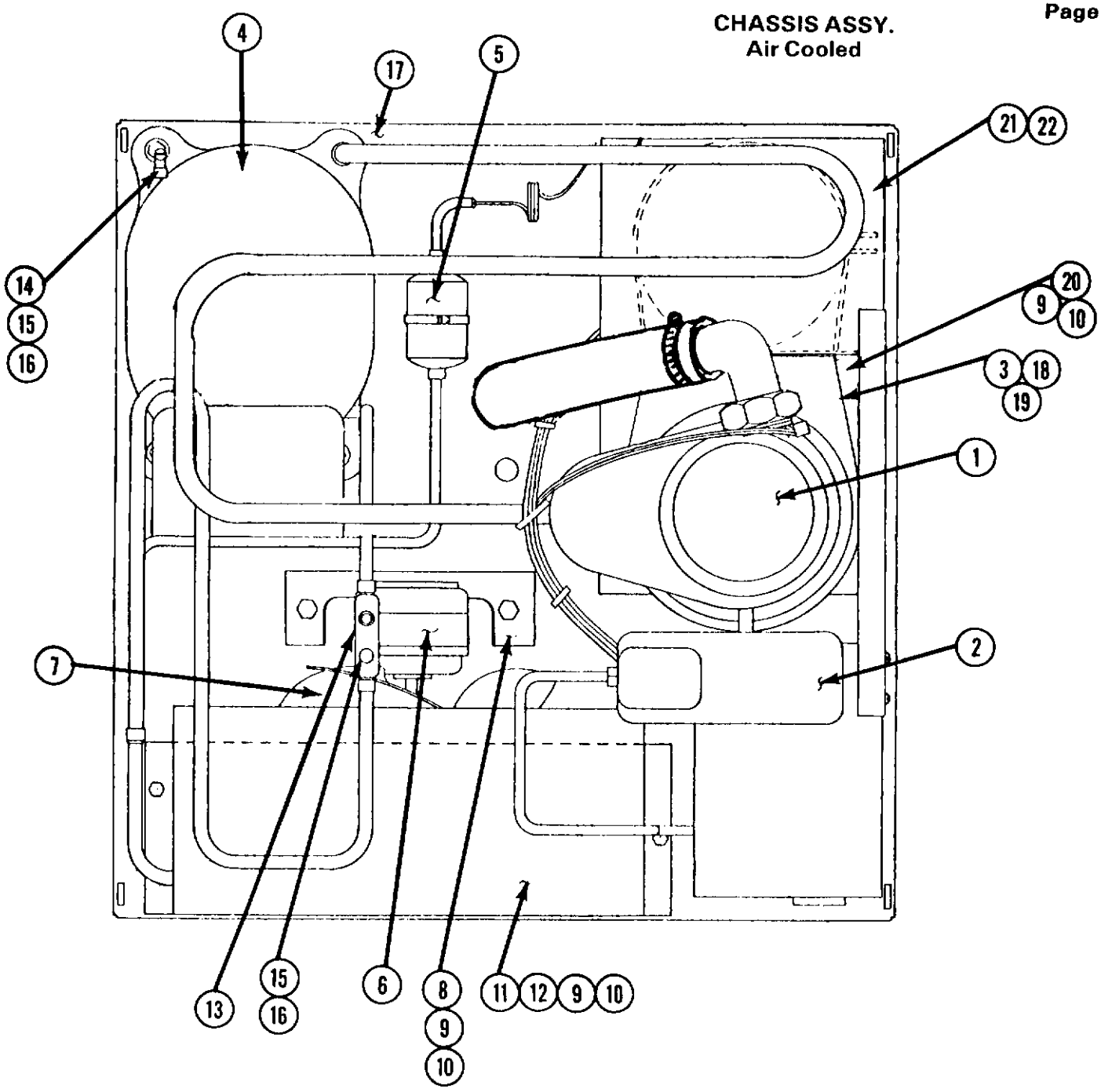

ITEM NO. PART NO. DESCRIPTION

1.	See Page 3	Freezer Assy.
2.	See Page 9	Reservoir
3.	See Page 4	Gear Reducer
4.	See Page 7	Compressor
5.	02-0544-01	Drier
6.	18-0559-01	Fan Motor
7.	18-0625-00	Fan Blade
8.	A25548-001	Fan Mounting Bracket
9.	03-1405-03	Screw
10.	03-1417-09	Washer
11.	18-0396-01	Condenser
12.	A23825-001	Shroud
13.	16-0673-18	Process Header
14.	16-0673-15	Process Header
15.	16-0560-00	Valve Core
16.	16-0563-00	Brass Cap
17.	A26596-001	Base Assy.
18.	03-1405-17	Screw, Plate-Reducer
19.	03-1417-12	Lockwasher
20.	A26599-001	Motor Plate
21.	A26041-001	Motor Shield
22.	A26042-001	Shield Strap

CHASSIS ASSY.
Water Cooled

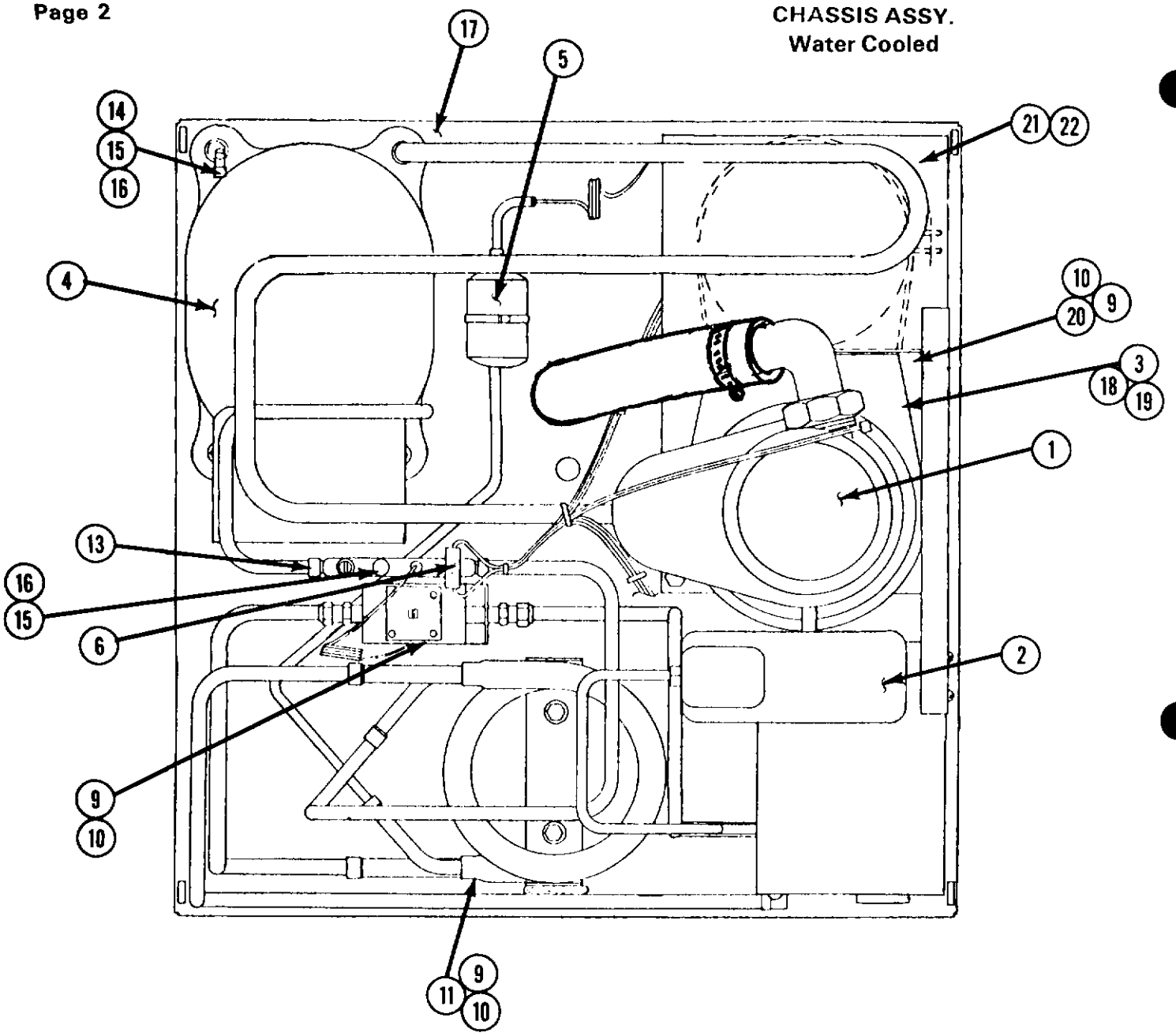

ITEM NO. PART NO. DESCRIPTION

1.	See Page 3	Freezer Assy.
2.	See Page 9	Reservoir
3.	See Page 4	Gear Reducer
4.	See Page 7	Compressor
5.	02-0544-01	Drier
6.	11-0397-01	Hi-Pressure Switch
7.	11-0198-00	Water Regulator
9.	03-1405-03	Screw
10.	03-1417-09	Washer
11.	18-3305-02	Condenser
13.	16-0673-08	Process Header
14.	16-0673-15	Process Header
15.	16-0560-00	Valve Core
16.	16-0563-00	Brass Cap
17.	A26596-001	Base Assy.
18.	03-1405-17	Screw, Mtg. Plate - Reducer (3)
19.	03-1417-12	Lockwasher, Plate - Reducer (3)
20.	A26599-001	Motor Plate
21.	A26041-001	Motor Shield
22.	A26042-001	Shield Strap

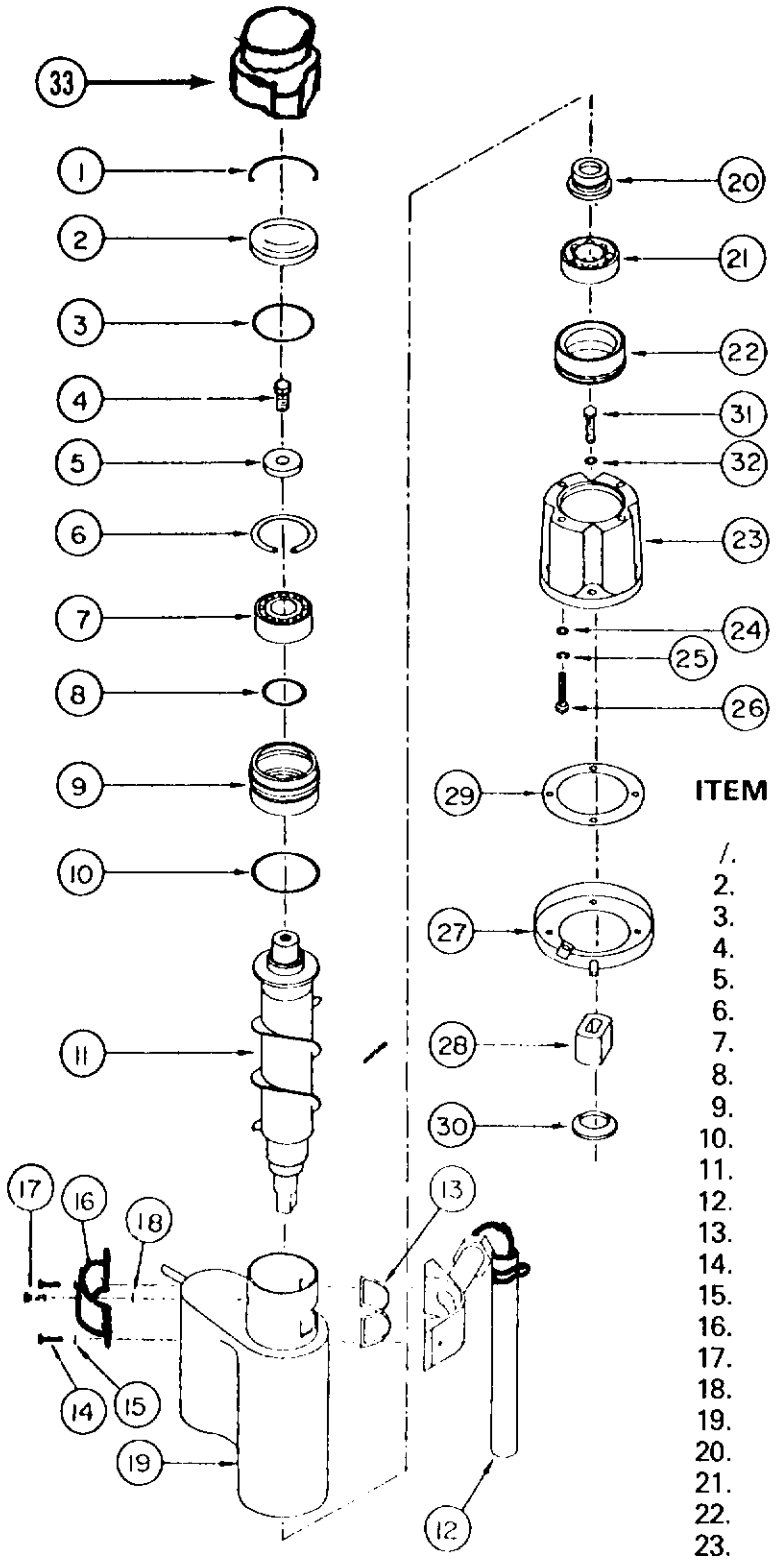

FREEZER ASSEMBLY

ITEM NO.	PART NO.	DESCRIPTION
/.	A08582-000	Cap Hook
2.	A08581-000	Cap
3.	13-0617-20	"O" Ring
4.	03-1405-36	Cap Screw
5.	A06273-000	Washer
6.	03-1558-04	Retaining Ring
7.	02-0646-00	Bearing
8.	13-1617-15	"O" Ring
9.	A26708-001	Bearing Retainer w/Bearing
10.	13-0617-40	"O" Ring
11.	02-2047-01	Auger
12.	See Page 5	Ice Spout Assy.
13.	02-1437-00	GAsket
14.	03-1544-02	Screw (4)
15.	03-1417-07	Lock Washer (4)
16.	A24928-001	Spout Plate
17.	03-1506-01	Screw
18.	03-1409-14	WAsher
19.	A26600-001	Freezer w/Heat Exch.
20.	A22569-000	Water Seal
21.	02-0619-00	Lower Bearing
22.	A10591-000	Bearing Retainer
23.	02-1629-00	Adapter
24.	03-1405-41	Screw (4)
25.	03-1410-04	Lock Washer (4)
26.	03-1408-03	Washer (4)
27.	A24156-001	Drip Pan
28.	15-0573-01	Coupling
29.	13-0704-00	Cork Gasket
30.	13-0709-02	Rubber Water Shed
31.	03-1420-03	Screw (4)
32.	03-1408-03	Washer (4)
33.	13-0809-01	Rubber Cap

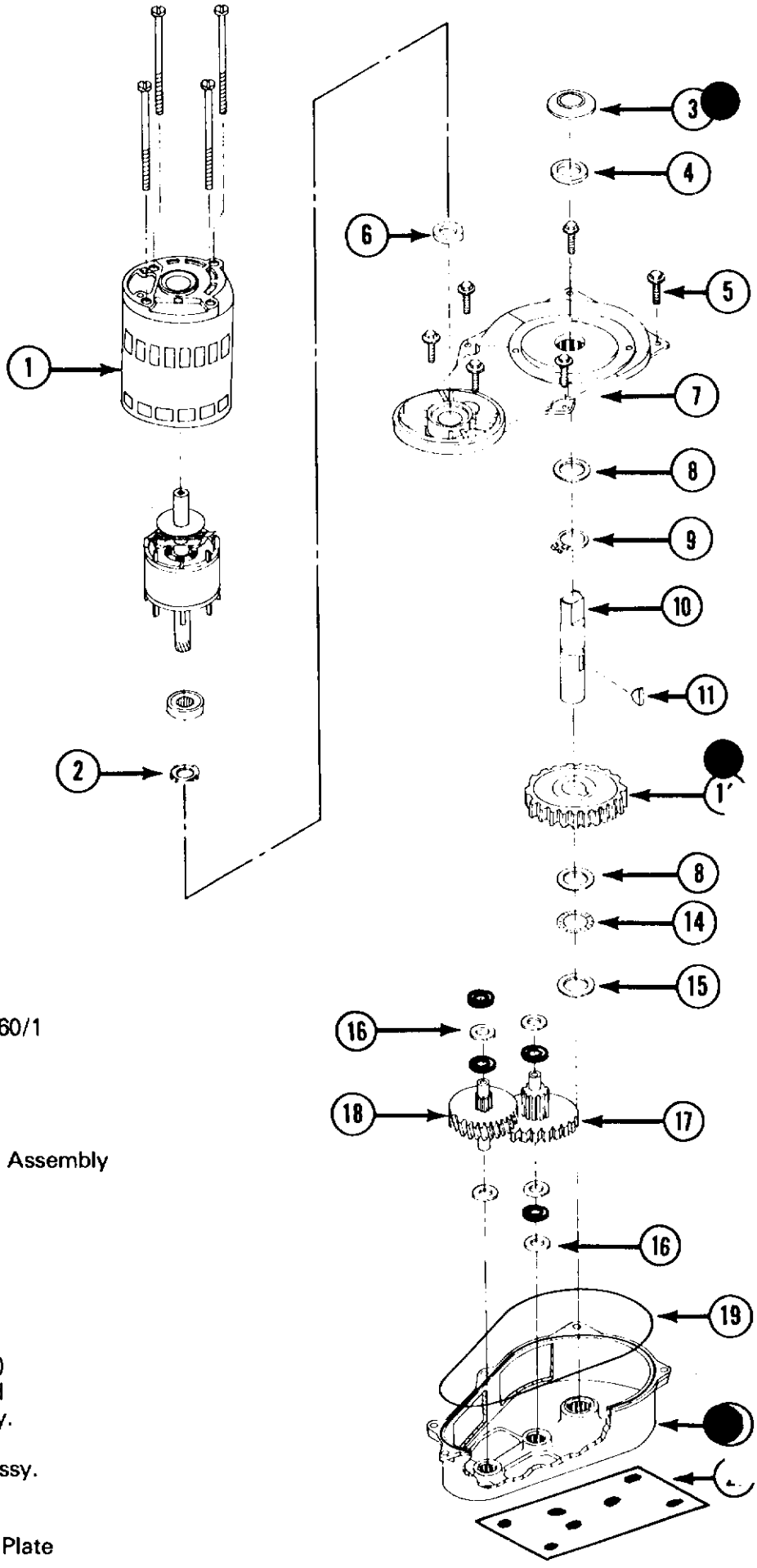

A24317-021
GEAR MOTOR ASSEMBLY
1/4 HP 115/60/1
OUTPUT SHAFT TURNS
AT 12 RPM

ITEM NO.	PART NO.	DESCRIPTION
1.	A26455-001	Drive Motor 115/60/1
3.	13-0709-02	Water Shed
4.	02-1607-00	Oil Seal
5.	03-1251-01	
6.	02-1606-00	
7.	A22200-000	Gear Case Cover Assembly
8.	02-1681-00	Thruse Race (2)
9.	03-1363-00	Retaining Ring
10.	02-1652-00	Output Shaft
11.	03-1364-00	Key
12.	02-1653-00	Output Gear
14.	02-1680-00	Bearing
15.	02-1679-00	thrust Race
16.	03-1408-24	Washer (9 Req'd)
17.	02-2071-00	Second Gear and Third Pinion Assy.
18.	02-2072-00	First Gear and Second Pinion Assy.
19.	A26103-001	"O" Ring
20.	A22199-000	Gear Case Assy.
21.	A26599-001	Motor Mounting Plate

SPOUT AND SAFETY SWITCH

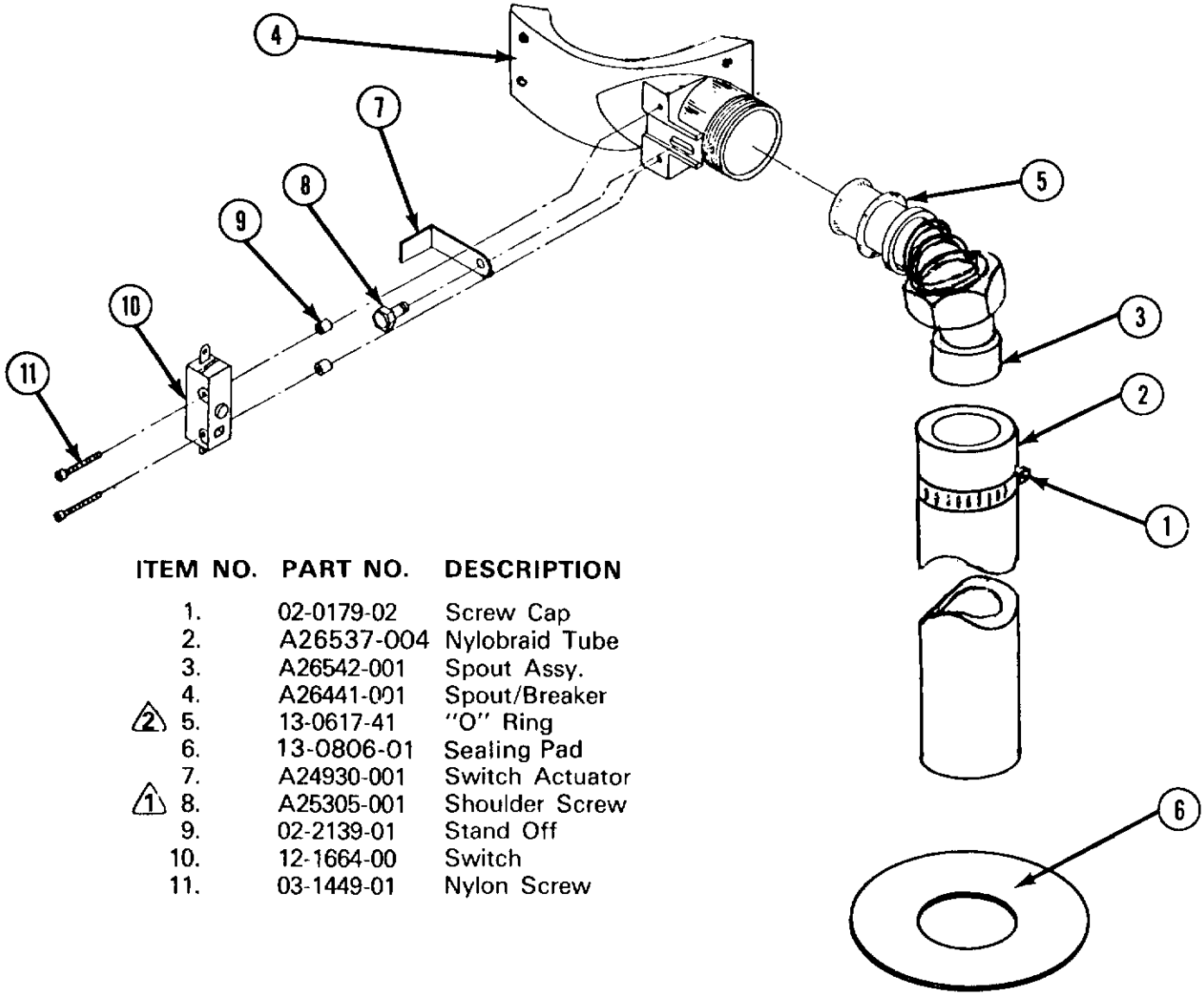

ITEM NO.	PART NO.	DESCRIPTION
1.	02-0179-02	Screw Cap
2.	A26537-004	Nylobraid Tube
3.	A26542-001	Spout Assy.
4.	A26441-001	Spout/Breaker
⚠2 5.	13-0617-41	"O" Ring
6.	13-0806-01	Sealing Pad
7.	A24930-001	Switch Actuator
⚠1 8.	A25305-001	Shoulder Screw
9.	02-2139-01	Stand Off
10.	12-1664-00	Switch
11.	03-1449-01	Nylon Screw

NOTE:

⚠1 Tighten carefully, small thread & brass.

⚠2 A light coating of petro-jel req'd on "O" Ring & Spring.

INSTALLATION INSTRUCTIONS

MODULAR FLAKER
ICE DISCHARGE TUBE

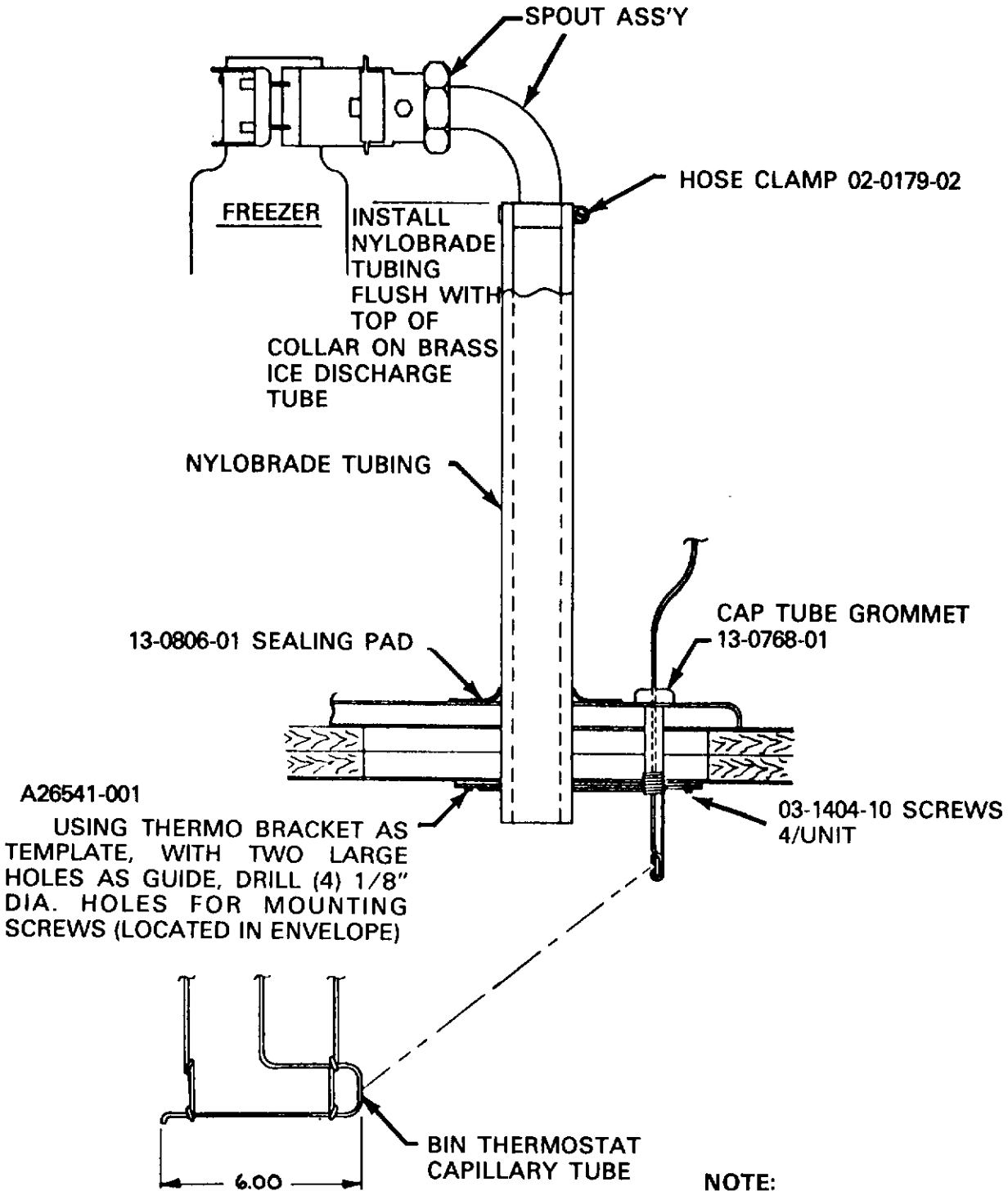

NOTE:

See page 5 for Spout Assy. Breakdown (Part No's.)

MOTOR COMPRESSOR
Air and Water
115/60/1 3500 RPM

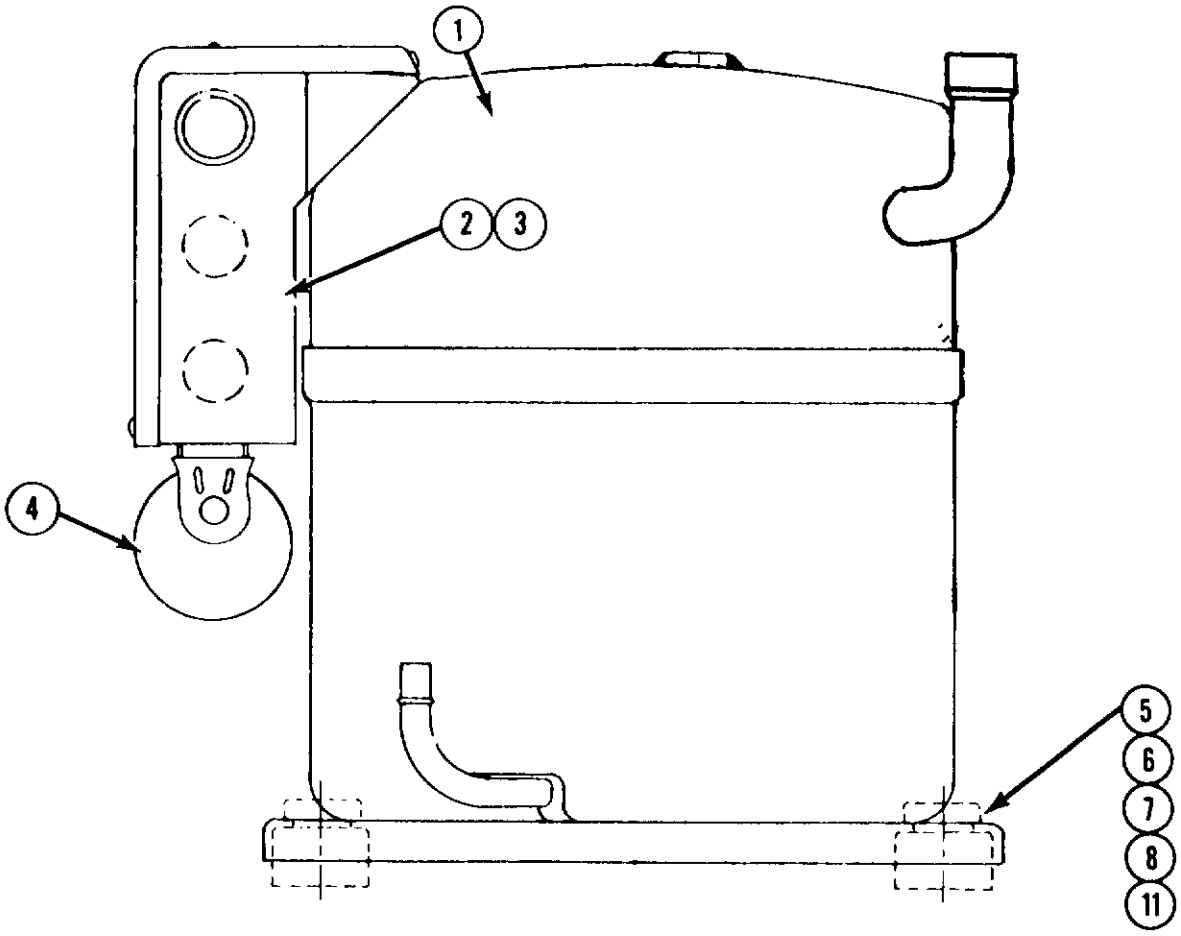

ITEM NO.	PART NO.	DESCRIPTION
/.	18-3900-01	Compressor Cope. P.N. RSL2-0075-1AA
2.	18-2410-00	Relay Cope. P.N. 040-0098-01
3.	18-2400-25	Overload Cope. P.N. 071-0127-06
4.	18-2420-00	Capacitor Cope. P.N. 014-0008-69
5.	18-2200-28	Mounting Grommet (4)
6.	18-2200-27	Mounting Sleeve (4)
7.	03-1405-40	Screw (4)
8.	03-1417-12	Lockwasher (4)
9.	03-1408-29	Washer (4)

CONTROL BOX ASSY.
115/60/1

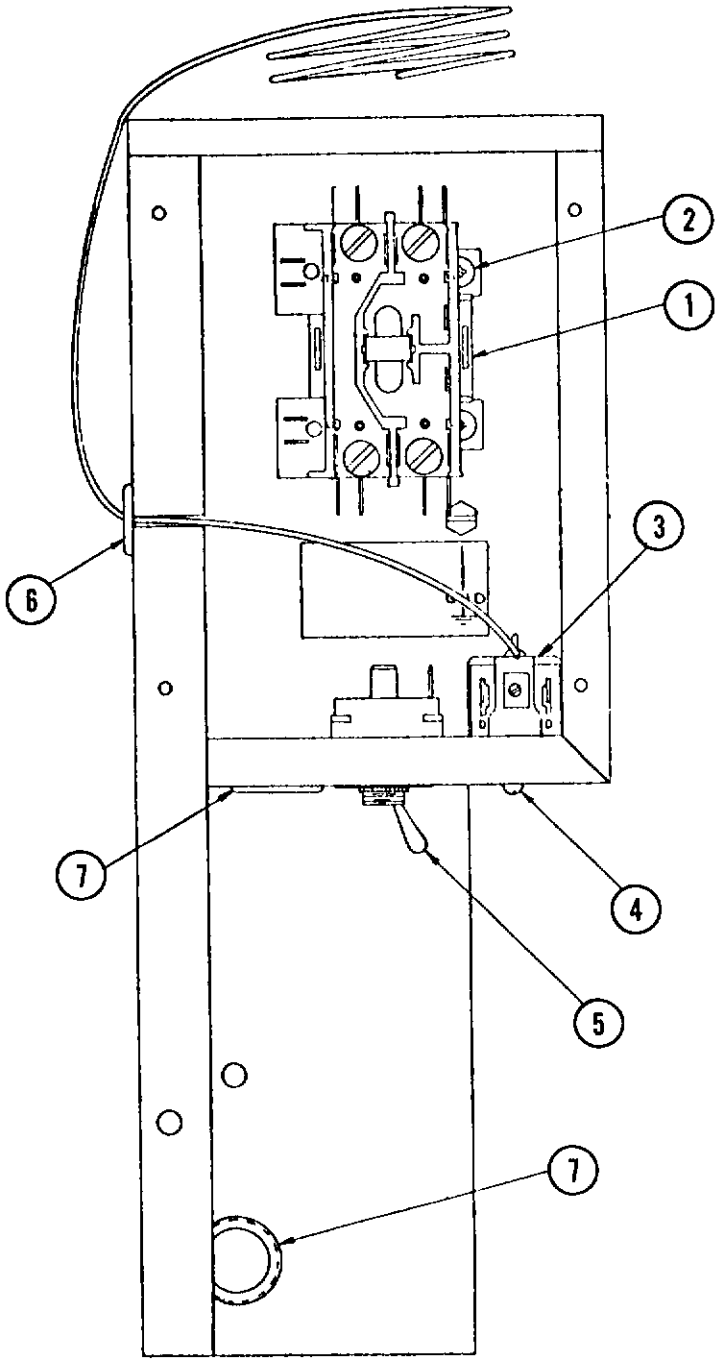

ITEM NO.	PART NO.	DESCRIPTION
1.	12-2037-01	Contactor
2.	03-1403-26	Screw, Contactor (2)
3.	11-0354-00	Bin Control
4.	03-1403-14	Screw, Bin Control (2)
5.	12-0426-01	Master Switch
6.	13-0557-00	Grommet
7.	12-1213-00	Snap Bushing

RESERVOIR ASSEMBLY

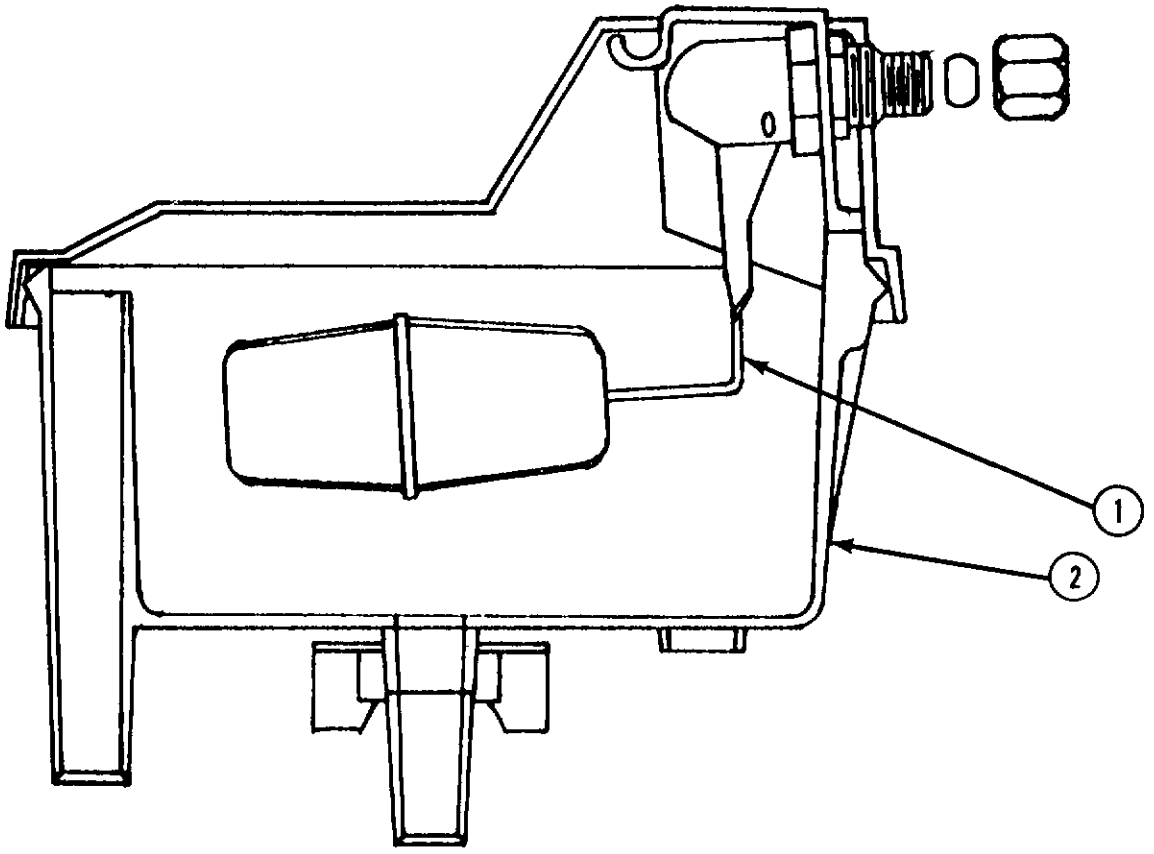

ITEM NO.	PART NO.	DESCRIPTION
1.	02-2217-02	Valve Assy.
2.	02-2217-01	Reservoir Complete

CHASSIS

(Air Cooled)

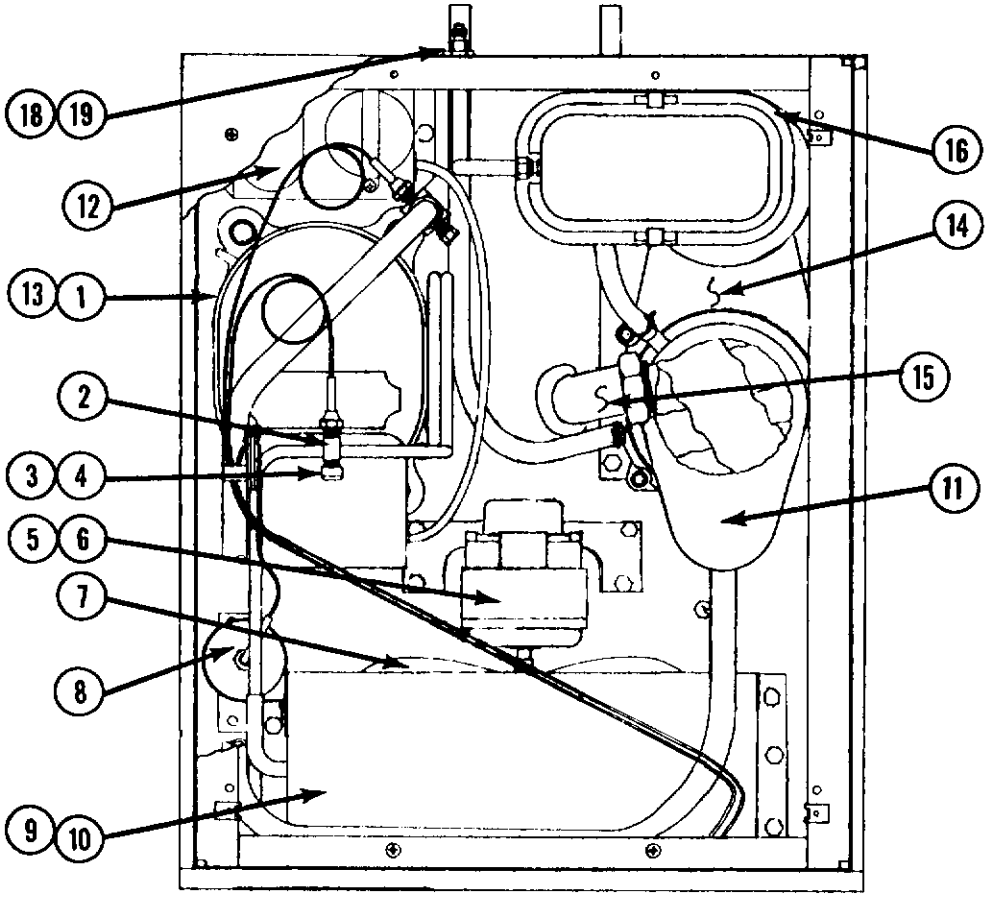

ITEM NO.	PART NO.	DESCRIPTION
1.	See Page 7	Compressor
2.	A20578-001	Adapter
3.	16-0563-00	Brass
4.	16-0560-00	Valve Core
5.	18-0597-00	Fan Motor Mount
6.	18-0788-02	Fan Motor 230/60/1
	18-0788-07	Fan Motor 208-220/60/3 208/60/1
7.	18-0787-00	Fan Blade & Nut
8.	02-0544-00	Drier
9.	18-0397-01	Condenser
10.	A17901-001	Shroud
11.	See Page 3	Freezer Ass'y
12.	See Page 7	Relay & Capacitor Ass'y
13.	See Page 7	Compressor Mounting Hardware
14.	See Page 6	Gear Reducer
15.	See Page 4 & 5	Spout Breaker
1 16.	See Page 9 & 10	Reservoir
17.	16-0162-00	Inlet Water Strainer
18.	03-1394-00	Nut
19.	03-1409-04	Washer

NOTE:

1 Not Shown

CHASSIS

(Water Cooled)

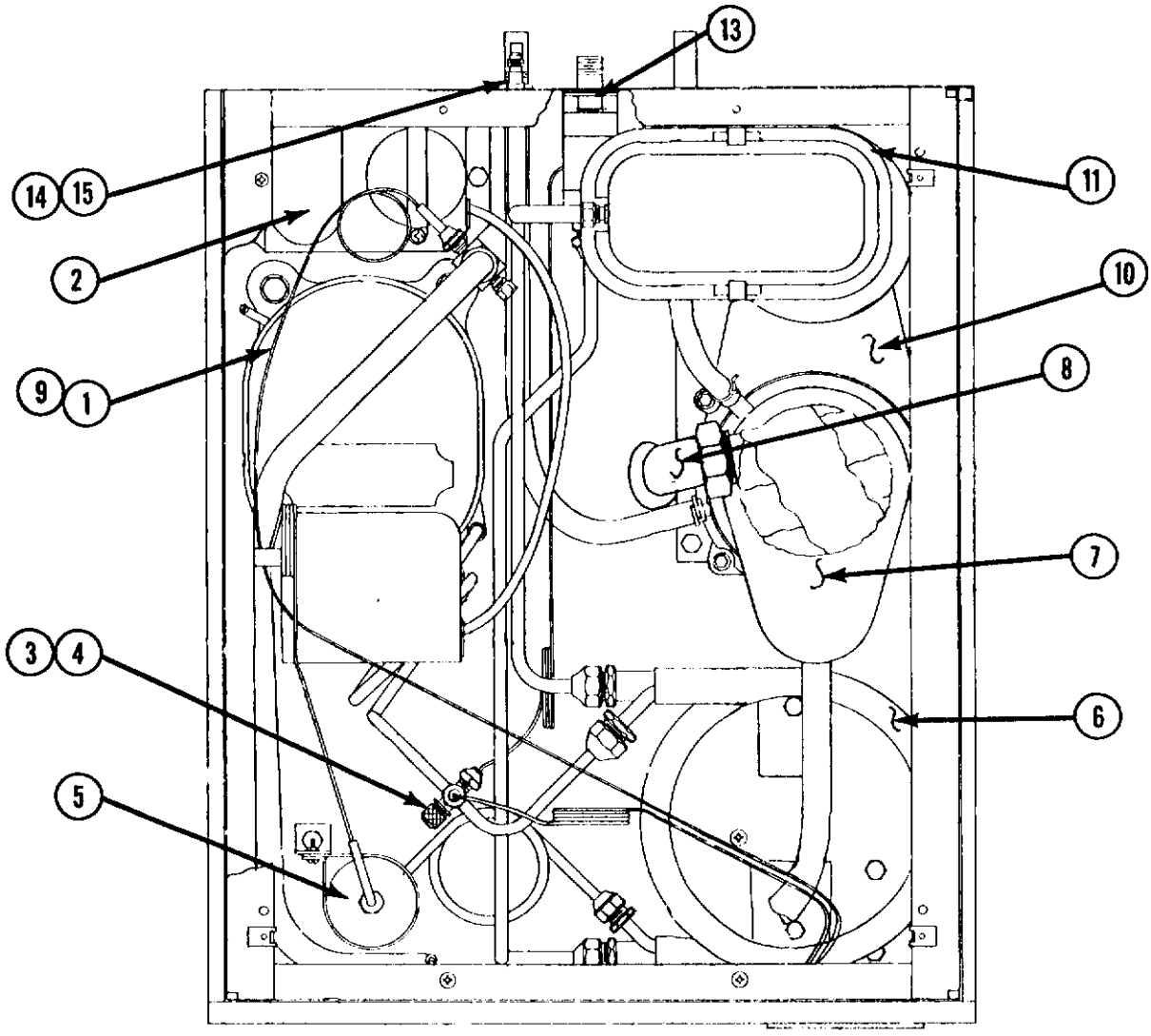

ITEM NO.	PART NO.	DESCRIPTION
1.	See Page 7	Compressor
2.	See Page 7	Relay & Capacitor Assy
3.	16-0563-00	Brass Cap
4.	16-0560-00	Valve Core
5.	02-0544-00	Drier
6.	18-3306-01	Condenser
7.	See Page 3	Freezer Assy
8.	See Page 4 & 5	Spout Breaker
9.	See Page 7	Compressor Mounting Hardware
10.	See Page 6	Gear Reducer
1 11.	See Page 9 & 10	Reservoir
12.	16-0162-00	Inlet Water Strainer
13.	11-0198-00	Water Regulating Valve
14.	03-1394-00	Nut
15.	03-1409-04	Washer

NOTE:

1 Not Shown

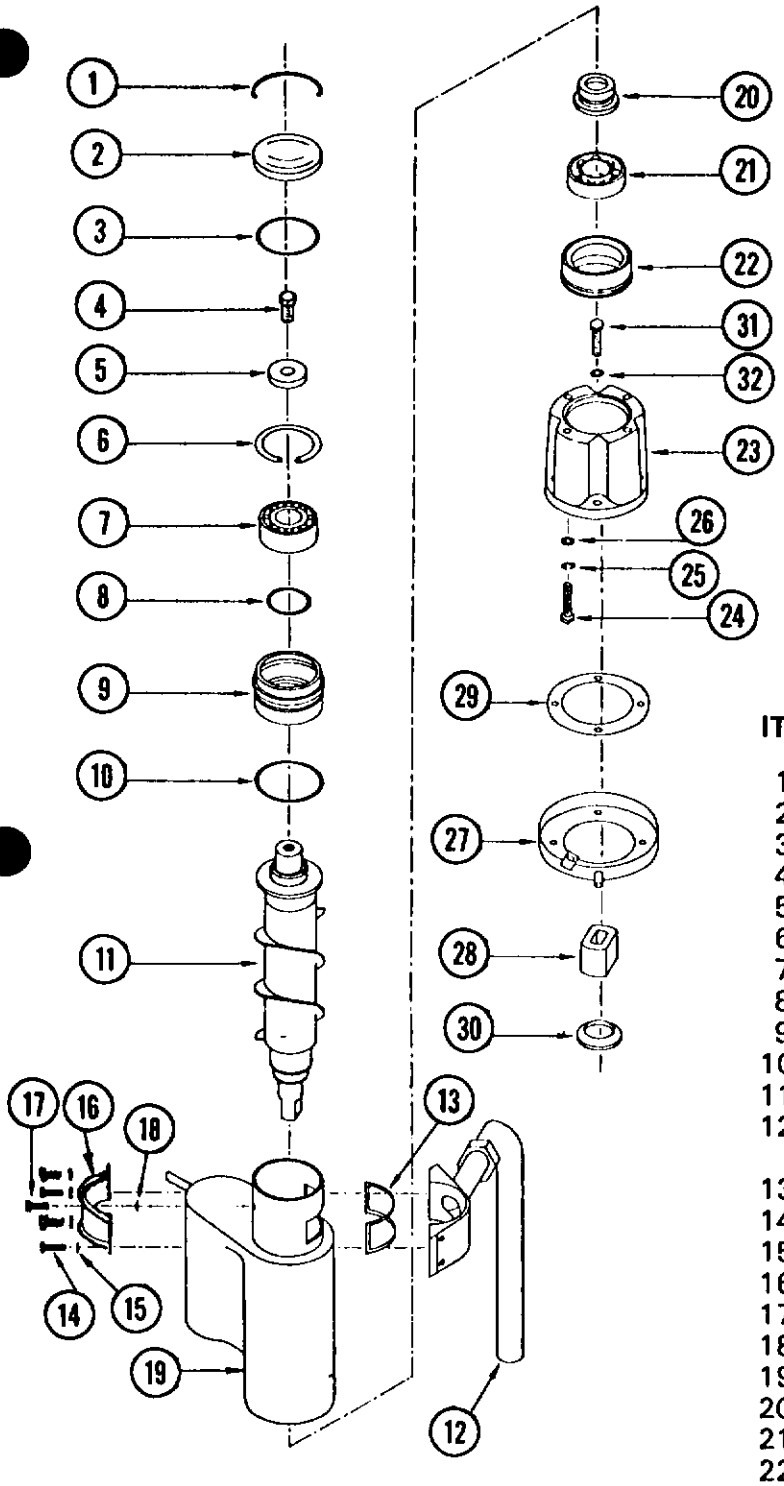

FREEZER ASSEMBLY

ITEM NO.	PART NO.	DESCRIPTION
1.	A08582-000	Cap Hook
2.	A08581-000	Cap
3.	13-0617-20	"O" Ring
4.	03-1405-36	Cap Screw
5.	A06273-000	Washer
6.	03-1558-04	Retaining Ring
7.	02-0646-00	Bearing
8.	13-1617-15	"O" Ring
9.	A23465-001	Bearing Retainer
10.	13-1617-40	"O" Ring
11.	02-2048-01	Auger
12.	See Page 4 & 5	Ice Spout Assy.
13.	02-1437-00	Gasket
14.	03-1544-03	Screw (4)
15.	03-1417-07	Lock Washer (4)
16.	A24928-001	Spout Plate
17.	03-1506-01	Screw
18.	03-1409-14	Washer
19.	A26547-020	Freezer w/Heat Exch.
20.	02-0929-00	Water Seal
21.	02-0619-00	Lower Bearing
22.	A10591-000	Bearing Retainer
23.	02-1629-00	Adapter
24.	03-1405-41	Screw (4)
25.	03-1410-04	Lock Washer (4);
26.	03-1408-03	Washer (4)
27.	A24156-001	Drip Pan
28.	15-0573-01	Coupling
29.	13-0704-00	Cork Gasket
30.	13-0709-02	Rubber Water Shed
31.	03-1420-03	Screw (4)
32.	03-1408-03	Washer (4)

SPOUT AND SAFETY SWITCH

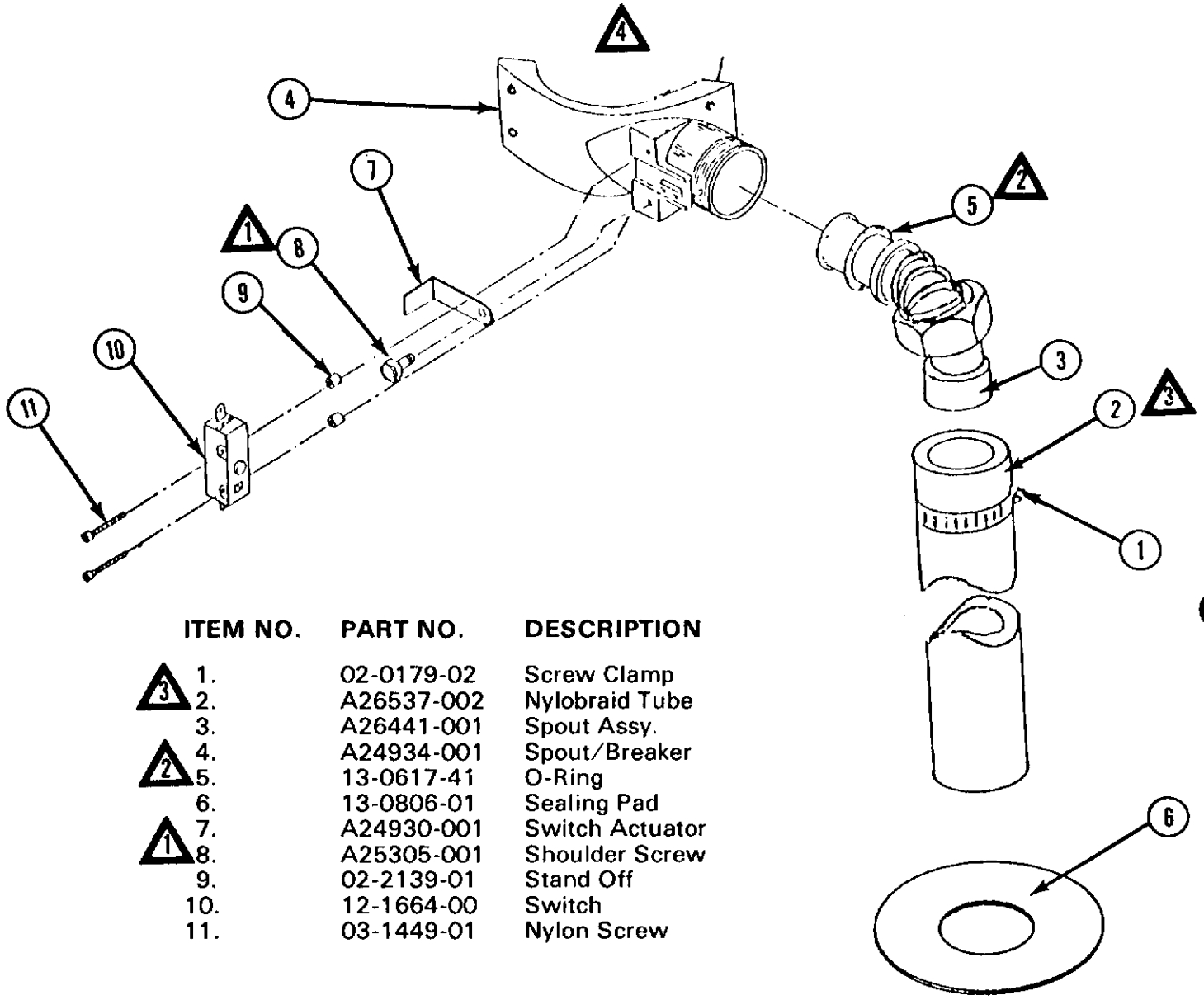

ITEM NO.	PART NO.	DESCRIPTION
1.	02-0179-02	Screw Clamp
2.	A26537-002	Nylobraid Tube
3.	A26441-001	Spout Assy.
4.	A24934-001	Spout/Breaker
5.	13-0617-41	O-Ring
6.	13-0806-01	Sealing Pad
7.	A24930-001	Switch Actuator
8.	A25305-001	Shoulder Screw
9.	02-2139-01	Stand Off
10.	12-1664-00	Switch
11.	03-1449-01	Nylon Screw

NOTE:

1. Tighten carefully, small thread & brass
2. A light coating of petro-jel req-d on O-Ring & spring
3. If this tube is req'd a larger hole will be req'd in the Unite Base & Bin
4. This type ice discharge was introduced in early 1976. For complete conversion to this refer to Scotsman Service Bulletin PS-12-75

INSTALLATION INSTRUCTIONS

MODULAR FLAKER
ICE DISCHARGE TUBE

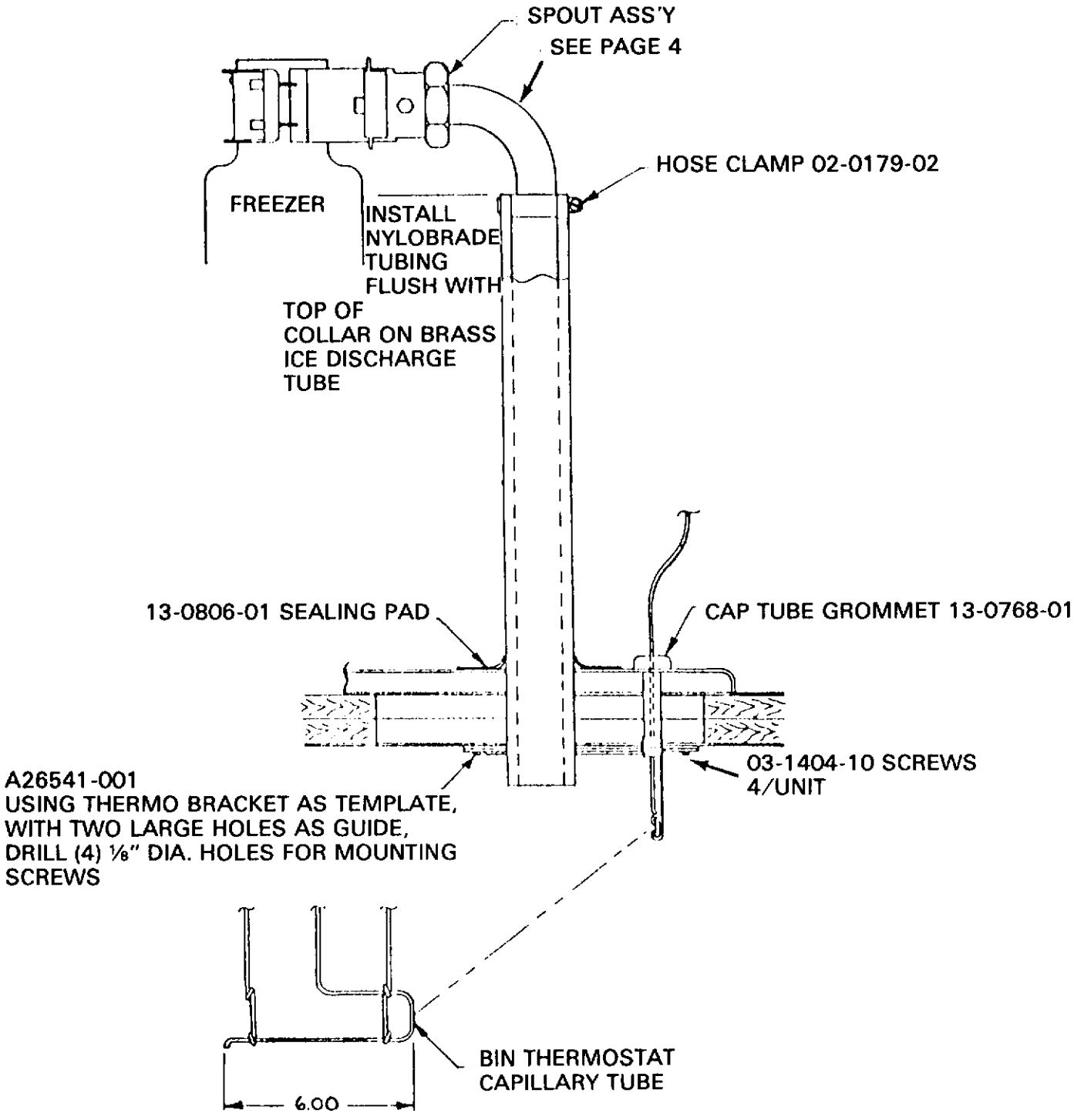

NOTE:
See page 3 & 4 for
Spout Assy. Breakdown (Part No.'s)

GEAR MOTOR ASSEMBLY
1/4 HP
OUTPUT SHAFT TURNS
AT 12 RPM

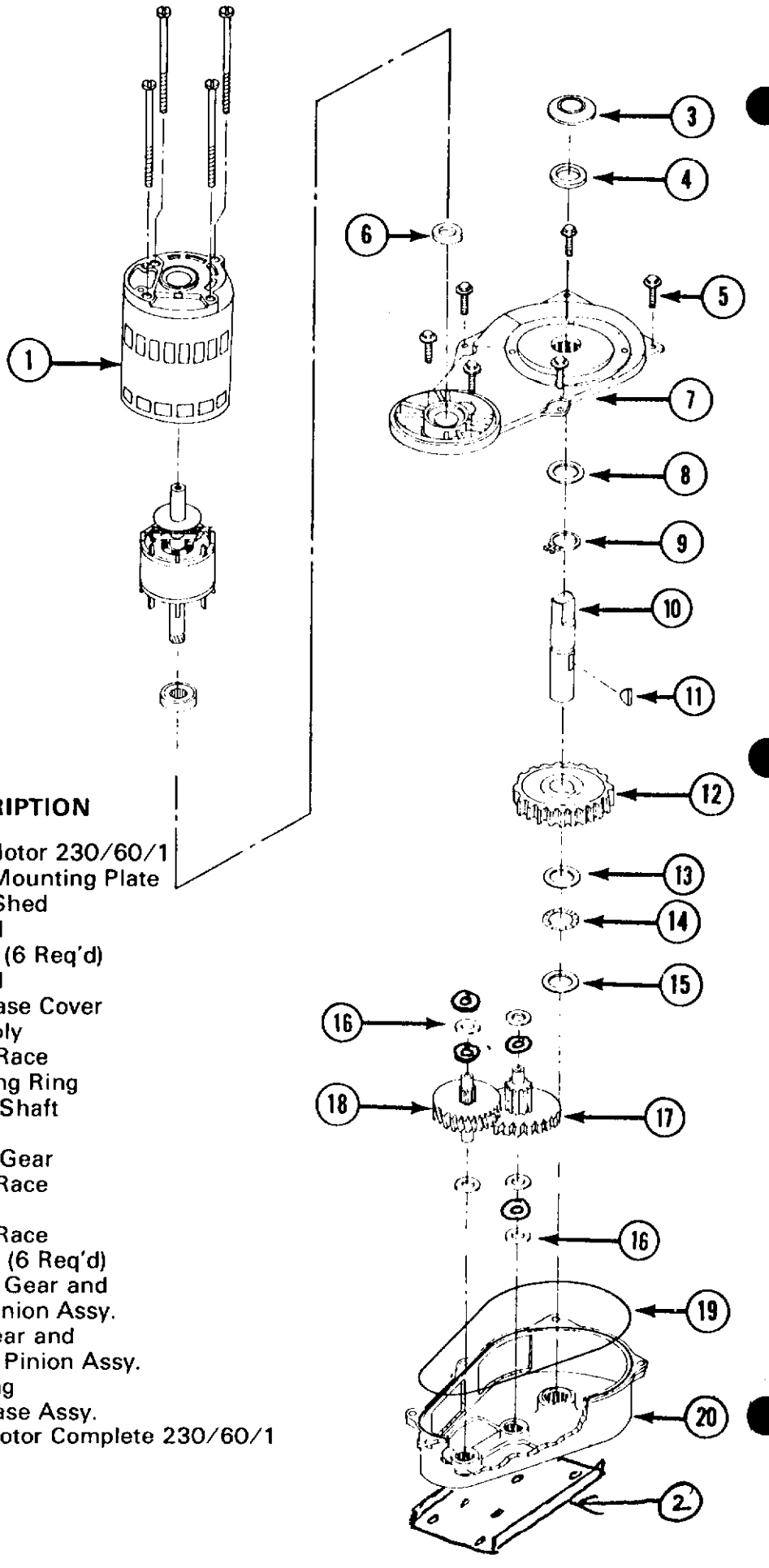

ITEM NO.	PART NO.	DESCRIPTION
1.	A26455-002	Drive Motor 230/60/1
2.	A26599-001	Motor Mounting Plate
3.	13-0709-02	Water Shed
4.	02-1607-00	Oil Seal
5.	03-1251-01	Screws (6 Req'd)
6.	02-1606-00	Oil Seal
7.	A22200-000	Gear Case Cover Assembly
8.	02-1681-00	Thrust Race
9.	03-1363-00	Retaining Ring
10.	02-1652-00	Output Shaft
11.	03-1364-00	Key
12.	02-1653-00	Output Gear
13.	02-1681-00	Thrust Race
14.	02-1680-00	Bearing
15.	02-1679-00	Thrust Race
16.	03-1408-24	Washer (6 Req'd)
17.	02-2071-00	Second Gear and Third Pinion Assy.
18.	02-2072-00	First Gear and Second Pinion Assy.
19.	A26103-001	"O" Ring
20.	A22199-000	Gear Case Assy.
	A24317-022	Gear Motor Complete 230/60/1

MOTOR COMPRESSOR

AIR AND WATER COOLED

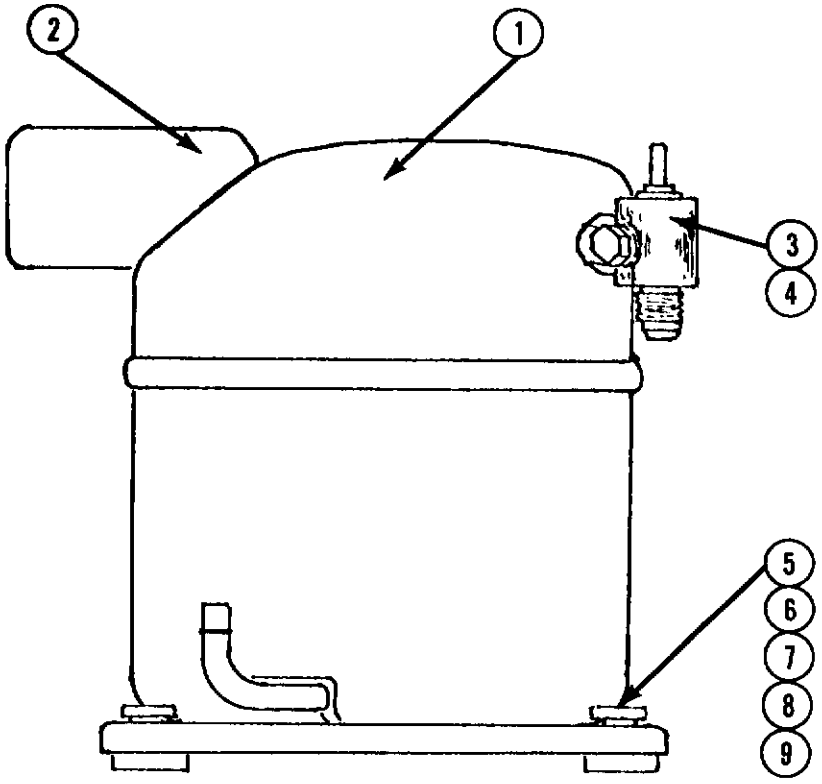

ITEM NO.	PART NO.	DESCRIPTION	COPE. P.N.
1.	18-2300-02	Compressor 230/60/1	SSE4-0100-CAB
	18-2300-03	Compressor 208-240/60/3	SSE4-0100-TFC
	18-2300-07	Compressor 208/60/1	SSE4-0100-CAH
2.	18-2300-25	Overload 230/60/1	071-0127-28
	18-2300-32	Overload 208/60/1	071-0329-02
3.	18-2300-28	Rotalock Valve	510-0132-01
4.	18-2300-29	Valve Seal	020-0028-00
5.	18-2300-27	Mounting Grommet (4)	027-0085-00
6.	18-2300-26	Mounting Sleeve (4)	028-0188-02
7.	03-1405-40	Screw (4)	
8.	03-1417-12	Washer (4)	
9.	03-1408-29	Washer (4)	

BELOW LISTED ITEMS LOCATED ON CHASSIS PAGE 1 & 2

18-1900-31	Relay & Capacitor Assy (230/60/1)	
		Cope No.
18-1901-15	Start Capacitor	014-0008-51
18-1902-29	Run Capacitor	014-0002-02
18-1903-29	Relay	040-0001-19

18-1900-34	Relay & Capacitor Assy (208/60/1)	
		Cope No.
18-1901-15	Start Capacitor	014-0008-51
18-1902-34	Run Capacitor	014-0001-04
18-1903-34	Relay	040-0001-16

CONTROL BOX ASSEMBLY

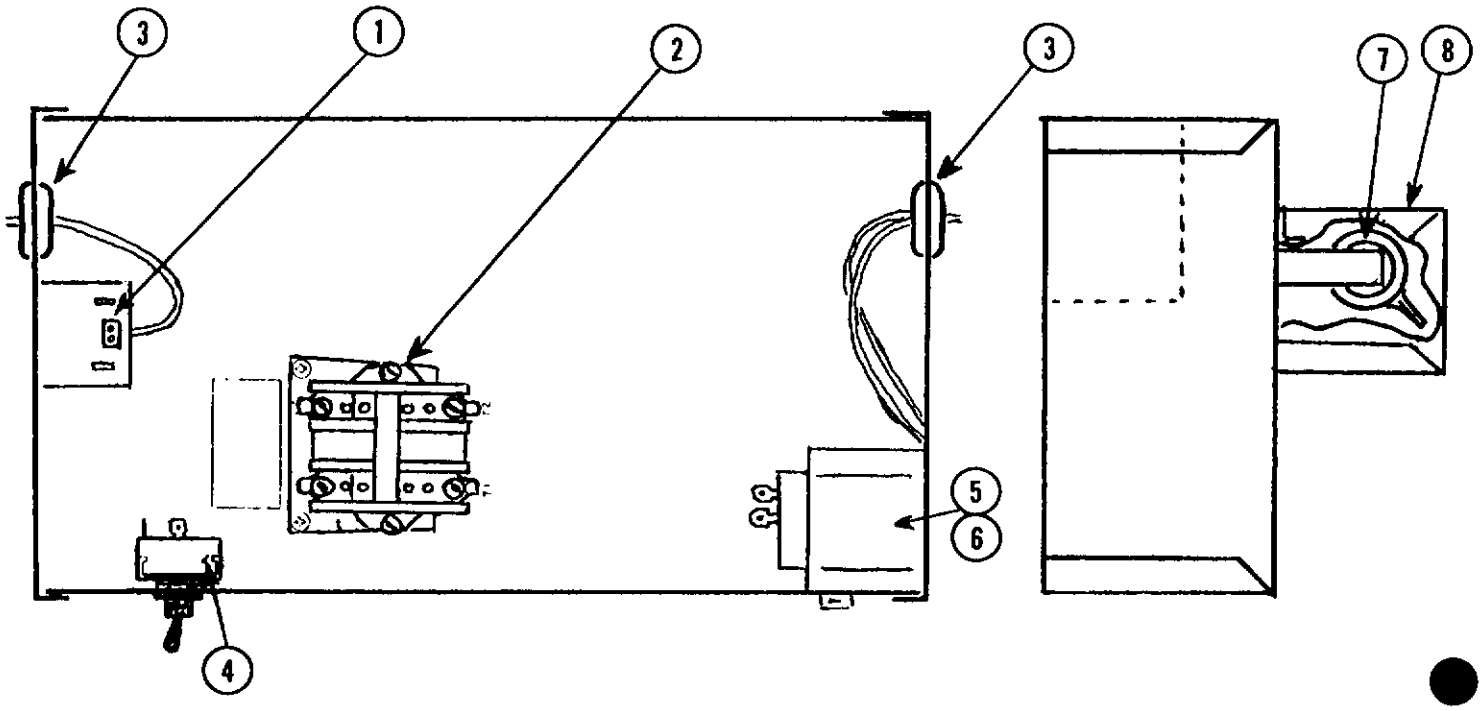

ITEM NO.	PART NO.	DESCRIPTION
1.	11-0354-00	Bin Thermostat
2.	12-0820-02	Contactor 230/60/1 & 208/60/1
⚠1	12-0739-02	Contactor 208-220/60/1
3.	13-0557-00	Grommet (3)
4.	12-0426-01	Switch
5.	11-0358-00	Lo Pressure Control
6.	11-0362-00	Hi Pressure Control (Air Cooled Only)
	11-0388-01	Hi Pressure Control (Water Cooled Only)
7.	12-0481-00	Resistor (Air Cooled Only)
8.	A14369-000	Cover (Air Cooled)

NOTE:

⚠1 Not Shown

RESERVOIR ASSEMBLY

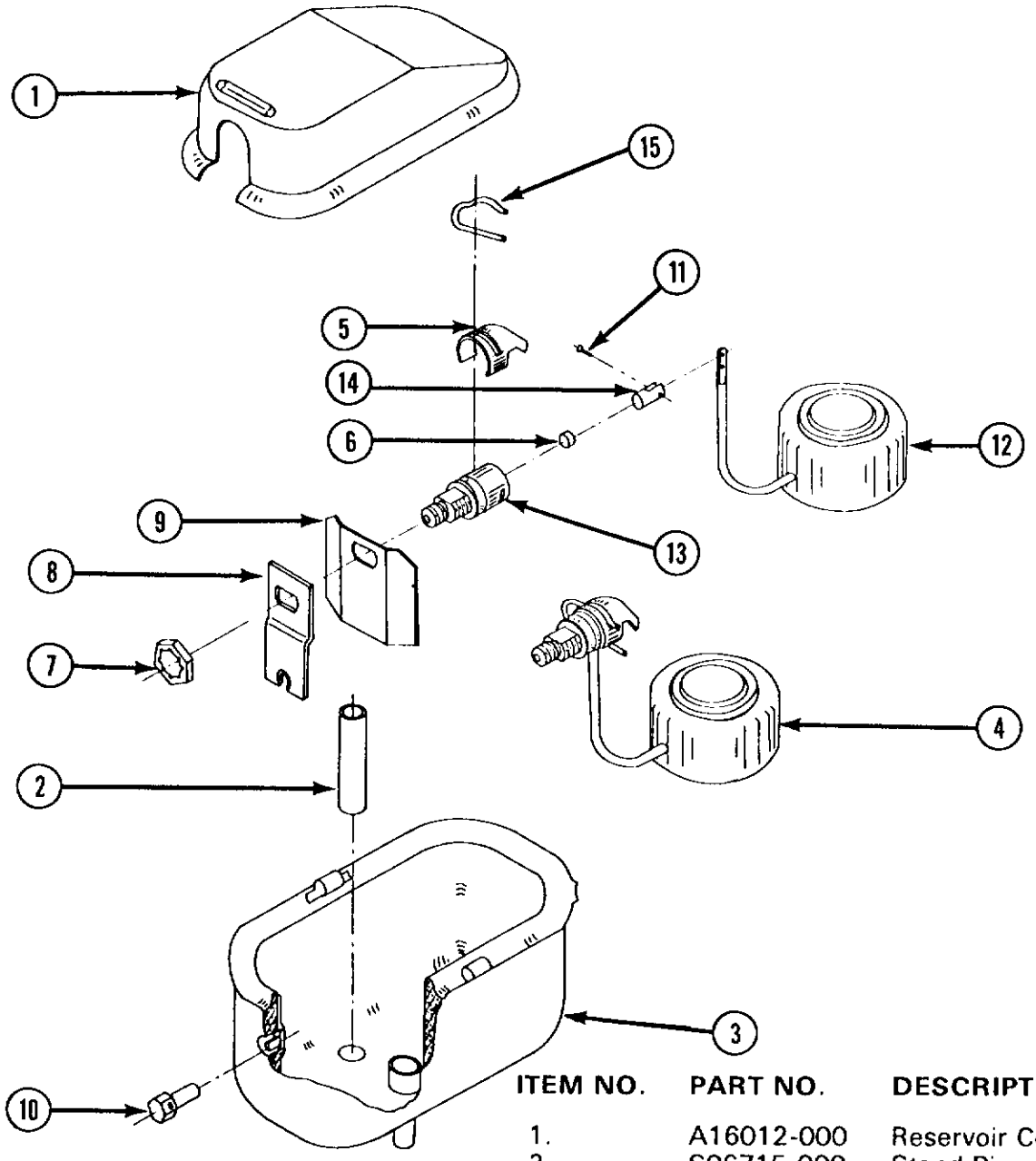

ITEM NO.	PART NO.	DESCRIPTION
1.	A16012-000	Reservoir Cover
2.	S06715-000	Stand Pipe
3.	A23532-001	Reservoir Complete Less Item No: 1 & 2
4.	S08138-000	Valve Complete Includes Items 5, 6, 11, 12, 13, 14 & 15
5.	02-1320-00	Water Deflector
6.	S06947-000	Valve Seat
7.	03-1394-00	Pal Nut
8.	A12869-000	Bracket
9.	A18418-001	Water Deflector
10.	A08055-000	Bracket Nut
11.	03-1001-00	Rivet
*12.		Float
*13.		Inlet Valve
*14.		Valve Seat Holder
15.	02-1259-00	Valve Pin

NOTE: Use of this reservoir was discontinued abot mid 1975. Current units use reservoir P.N. 02-2217-01.

***Use Item #4**

RESERVOIR ASSEMBLY

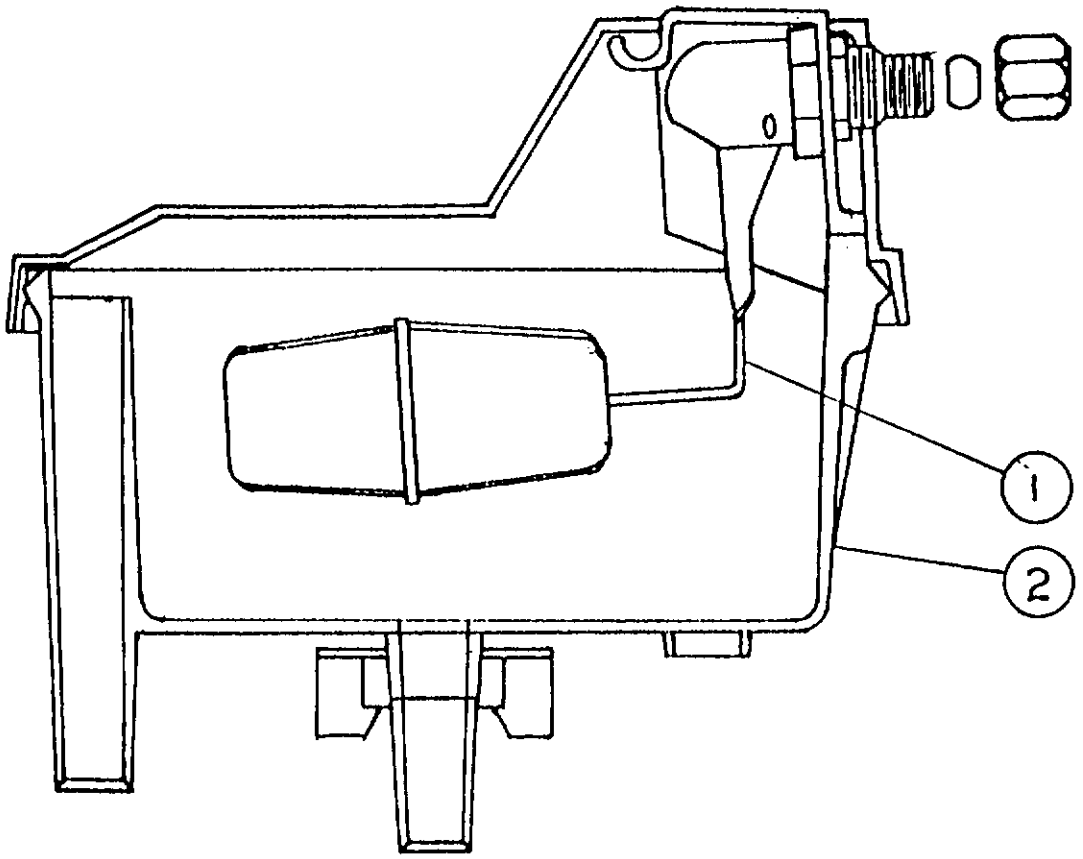

ITEM NO.	PART NO.	DESCRIPTION
1.	02-2217-02	Valve Assy.
2.	02-2217-01	Reservoir Complete

CABINET PARTS

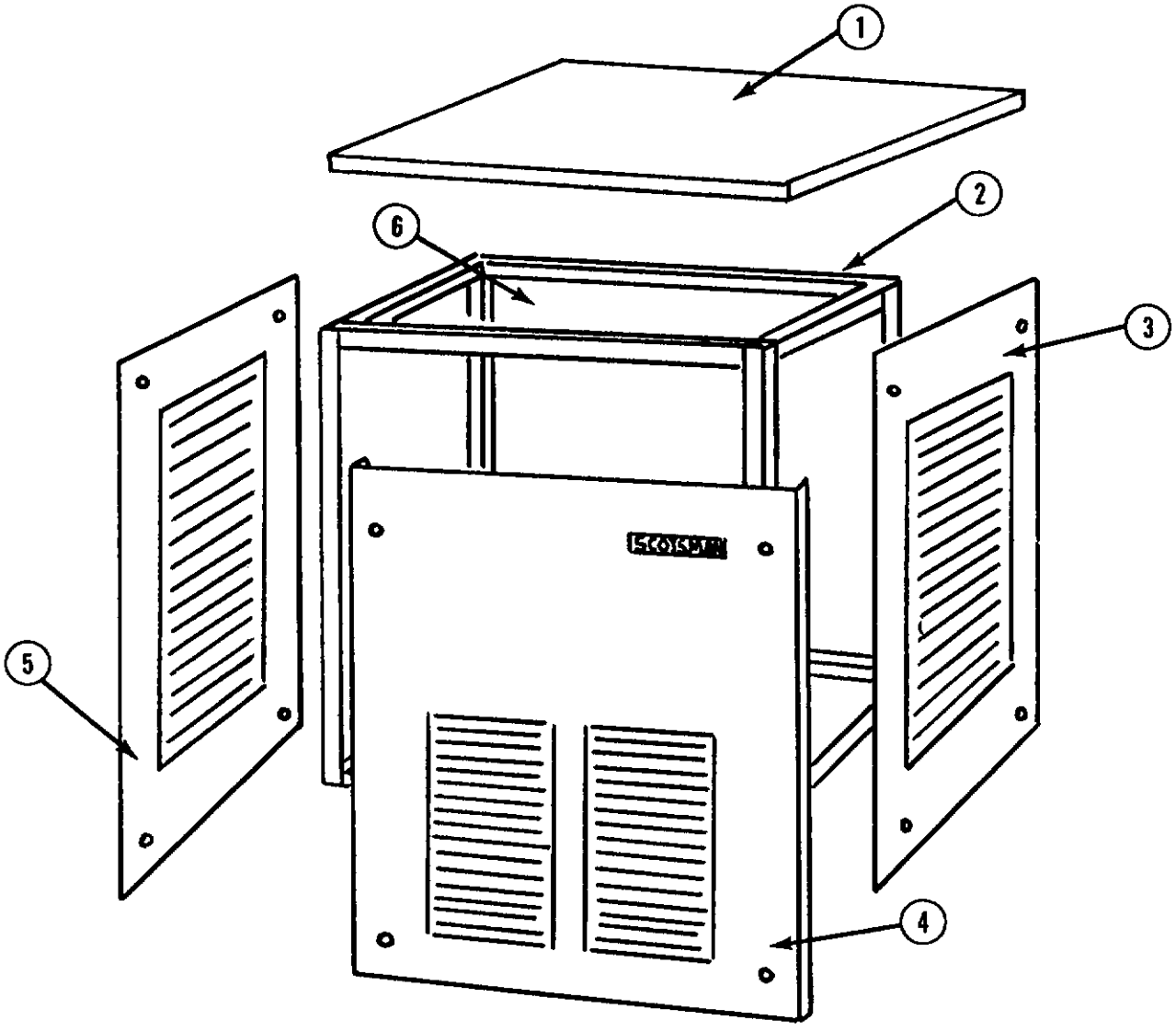

ITEM NO.	DESCRIPTION	ENAMEL	STAINELSS STEEL
1.	Panel Top	A24026-001	A24026-002
2.	Cabinet Frame	A24025-001	A24025-001
3.	Panel, Right side	A24029-001	A24029-002
4.	Panel, Front	A24027-001	A24027-002
5.	Panel, Left side	A24029-001	A24029-002
6.	Panel, Rear	A24018-001	A24028-002
*	Mounting Screws	03-1419-09	03-1419-09
*	Speed Nut	03-1507-00	03-1507-00
*	Emblem	15-0156-00	15-0156-00
*	Aerosol Paint (micromatte)	10-0314-01	

*Items not Illustrated

AIR COOLED CHASSIS

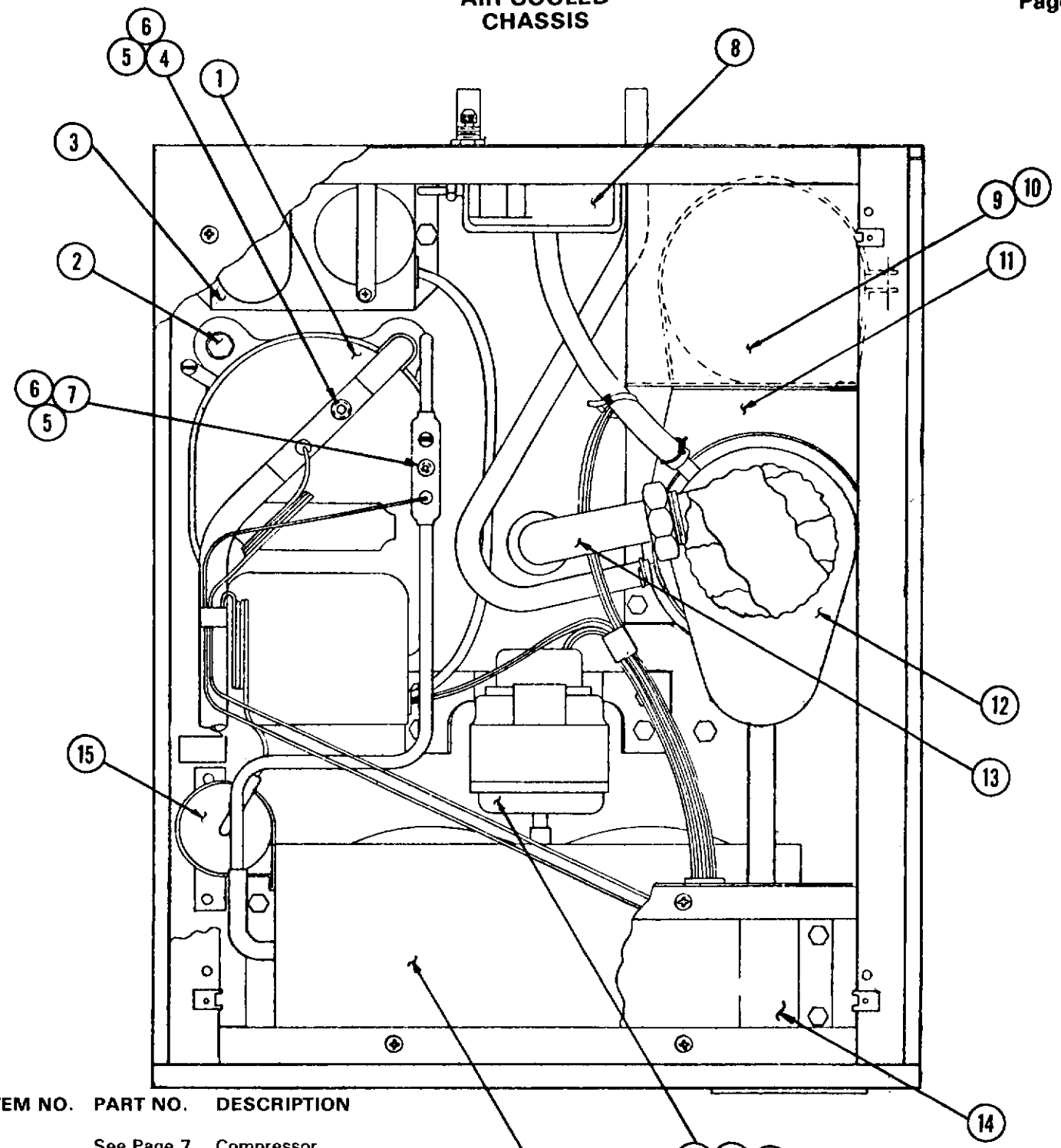

ITEM NO.	PART NO.	DESCRIPTION
1.	See Page 7	Compressor
2.	See Page 7	Compressor Mutg Hardware
3.	See Page 7	Relay-Capacitor
4.	16-0673-09	Process Header, Lo
5.	16-0560-00	Valve Core
6.	16-0563-00	Valve Cap
7.	16-0673-04	Process Header, Hi
8.	See Page 8	Reservoir
9.	A26041-001	Motor Shield
10.	A26042-001	Shield Clamp
11.	See Page 6	Gear Reducer
12.	See Page 3	Freezer
13.	See Page 4 & 5	Spout/Breaker
14.	18-0397-01	Condenser

ITEM NO.	PART NO.	DESCRIPTION
15.	02-0544-01	Drier
16.	A17901-001	Fan Shroud
17.	18-0788-02	Fan Motor 230/60/1
	18-0788-07	Fan Motor 208/60/1
	18-0788-07	Fan Motor 208-220/60/3
18.	18-0787-00	Fan Blade & Nut
19.	18-0597-00	Fan Bracket
20.	16-0162-00	Water Strainer

NOTE:

1 Not Shown

WATER COOLED CHASSIS

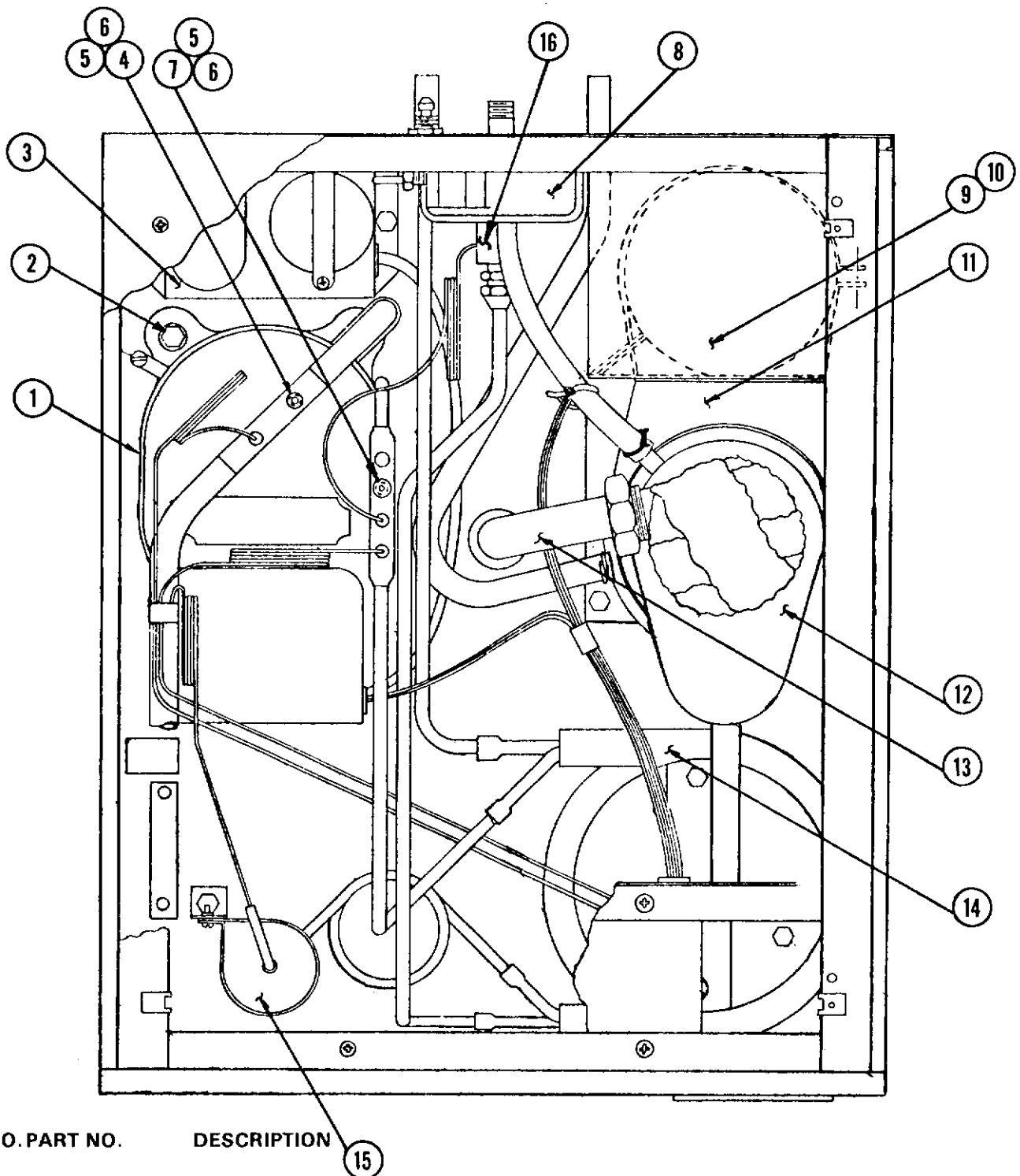

ITEM NO.	PART NO.	DESCRIPTION
1.	See Page 7	Compressor
2.	See Page 7	Compressor Mutg Hardware
3.	See Page 7	Relay-Capacitor
4.	16-0673-09	Process Header, Lo
5.	16-0560-00	Valve Core
6.	16-0563-00	Valve Cap
7.	16-0673-08	Process Header
8.	See Page 8	Reservoir
9.	A26041-001	Motor Shield
10.	A26042-001	Shield Clamp
11.	See Page 6	Gear Reducer
12.	See Page 3	Freezer
13.	See Page 4 & 5	Spout Breaker
14.	18-3306-02	Condenser

ITEM NO.	PART NO.	DESCRIPTION
15.	02-0544-01	Drier
(1) 16.	11-0198-02	Water Regulator
17.	16-0162-00	Water Strainer

NOTE:

(1) Not Shown

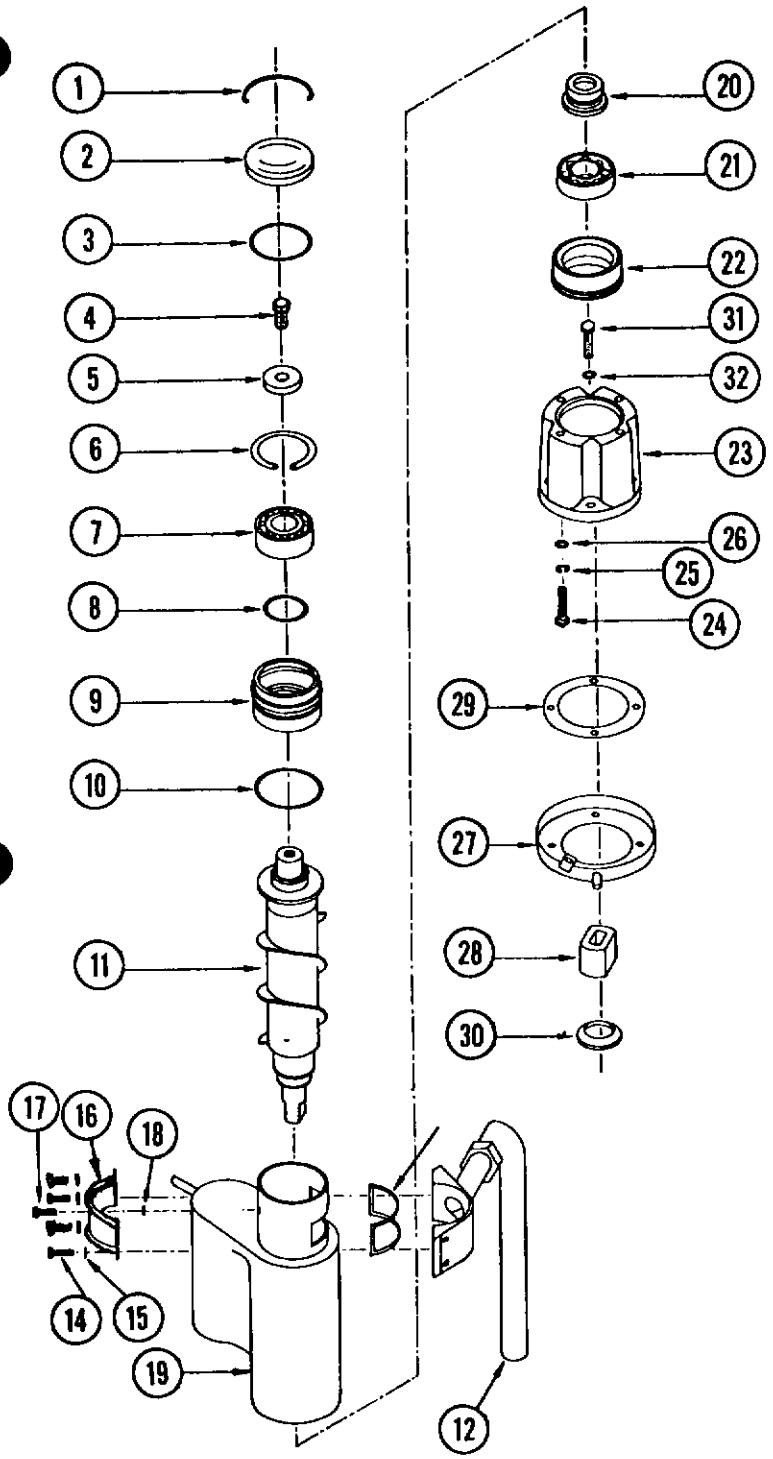

FREEZER ASSEMBLY

ITEM NO.	PART NO.	DESCRIPTION
1.	A08582-000	Cap Hook
2.	A08581-000	Cap
3.	13-0617-20	"O" Ring
4.	03-1405-36	Cap Screw
5.	A06273-000	Washer
6.	03-1558-04	Retaining Ring
7.	02-0646-00	Bearing
8.	13-1617-15	"O" Ring
9.	A23465-001	Bearing Retainer
10.	13-1617-40	"O" Ring
11.	02-2048-01	Auger
12.	See Page 4 & 5	Ice Spout Assy.
13.	02-1437-00	Gasket
14.	03-1544-03	Screw (4)
15.	03-1417-07	Lock Washer (4)
16.	A24928-001	Spout Plate
17.	03-1506-01	Screw
18.	03-1409-14	Washer
19.	A26547-020	Freezer w/Heat Exch.
20.	02-0929-00	Water Seal
21.	02-0619-00	Lower Bearing
22.	A10591-000	Bearing Retainer
23.	02-1629-00	Adapter
24.	03-1405-41	Screw (4)
25.	03-1410-04	Lock Washer (4);
26.	03-1408-03	Washer (4)
27.	A24156-001	Drip Pan
28.	15-0573-01	Coupling
29.	13-0704-00	Cork Gasket
30.	13-0709-02	Rubber Water Shed
31.	03-1420-03	Screw (4)
32.	03-1408-03	Washer (4)

SPOUT AND SAFETY SWITCH

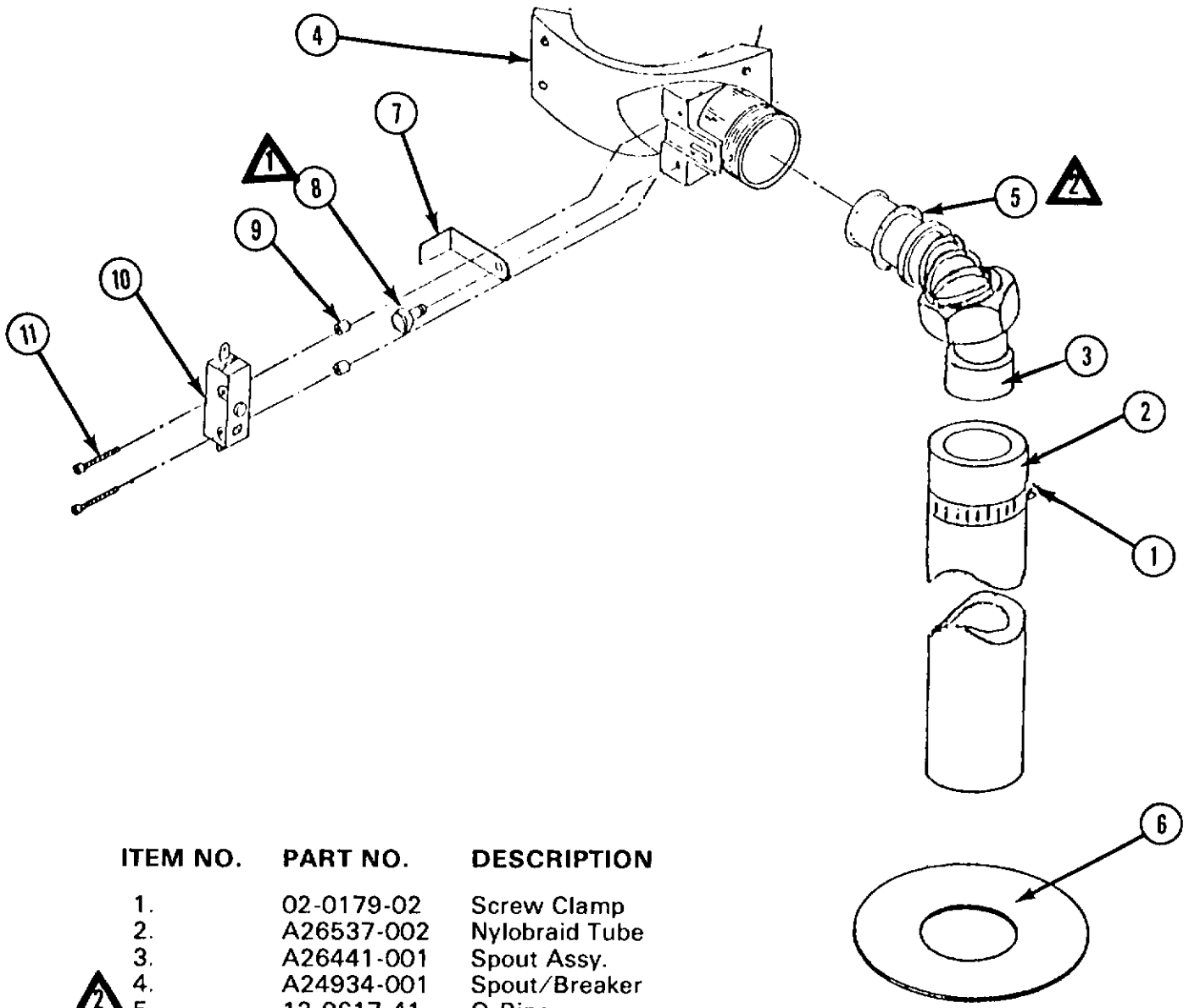

ITEM NO.	PART NO.	DESCRIPTION
1.	02-0179-02	Screw Clamp
2.	A26537-002	Nylobraid Tube
3.	A26441-001	Spout Assy.
2 4.	A24934-001	Spout/Breaker
5.	13-0617-41	O-Ring
6.	13-0806-01	Sealing Pad
1 7.	A24930-001	Switch Actuator
8.	A25305-001	Shoulder Screw
9.	02-2139-01	Stand Off
10.	12-1664-00	Switch
11.	03-1449-01	Nylon Screw

NOTE:

1 Tighten carefully, small thread & brass

2 A light coating of petro-jel req-d on O-Ring & spring

INSTALLATION INSTRUCTIONS

MODULAR FLAKER
ICE DISCHARGE TUBE

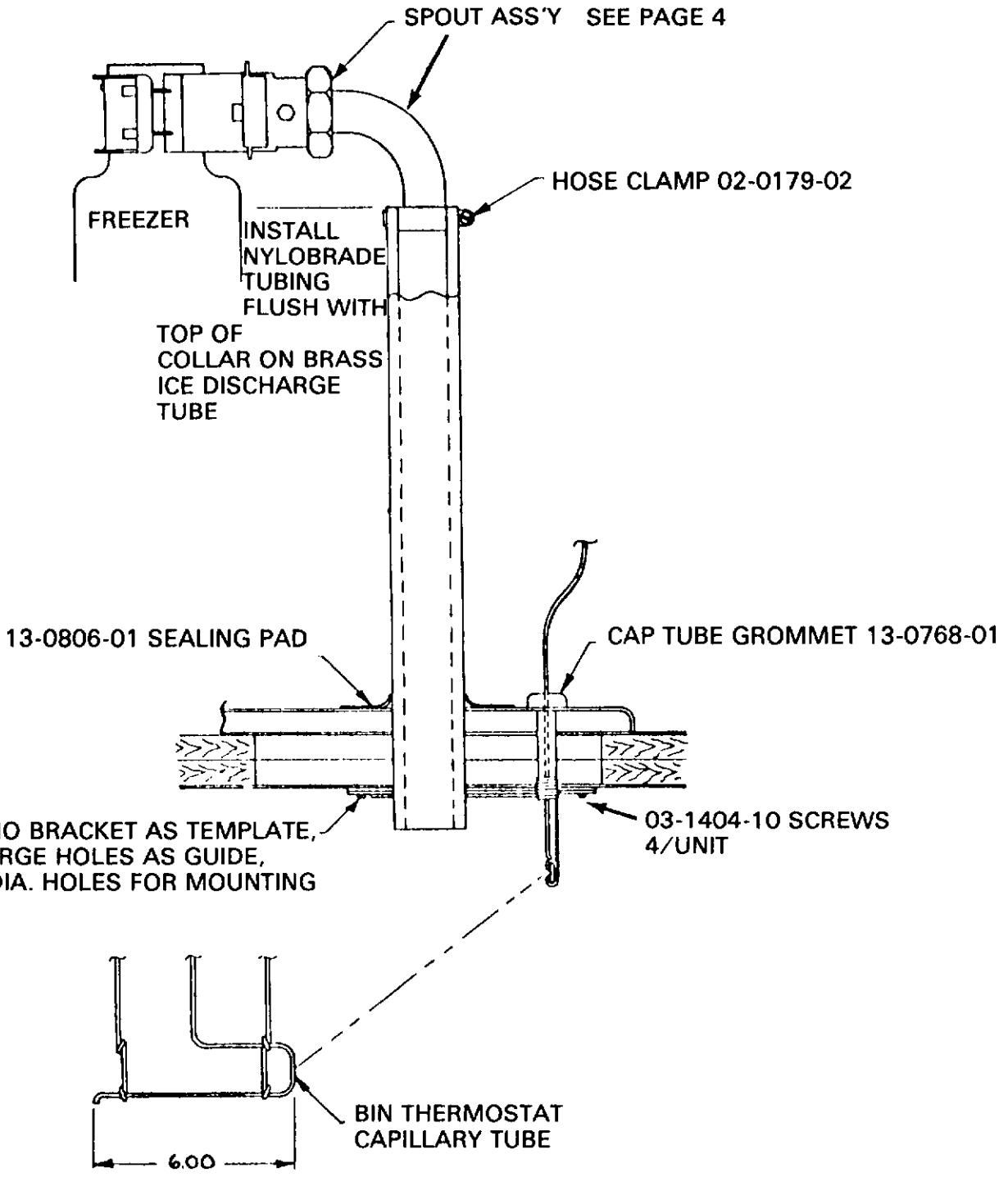

NOTE:
See page 3 & 4 for
Spout Assy. Breakdown (Part No.'s)

GEAR MOTOR ASSEMBLY
1/4 HP
OUTPUT SHAFT TURNS
AT 12 RPM

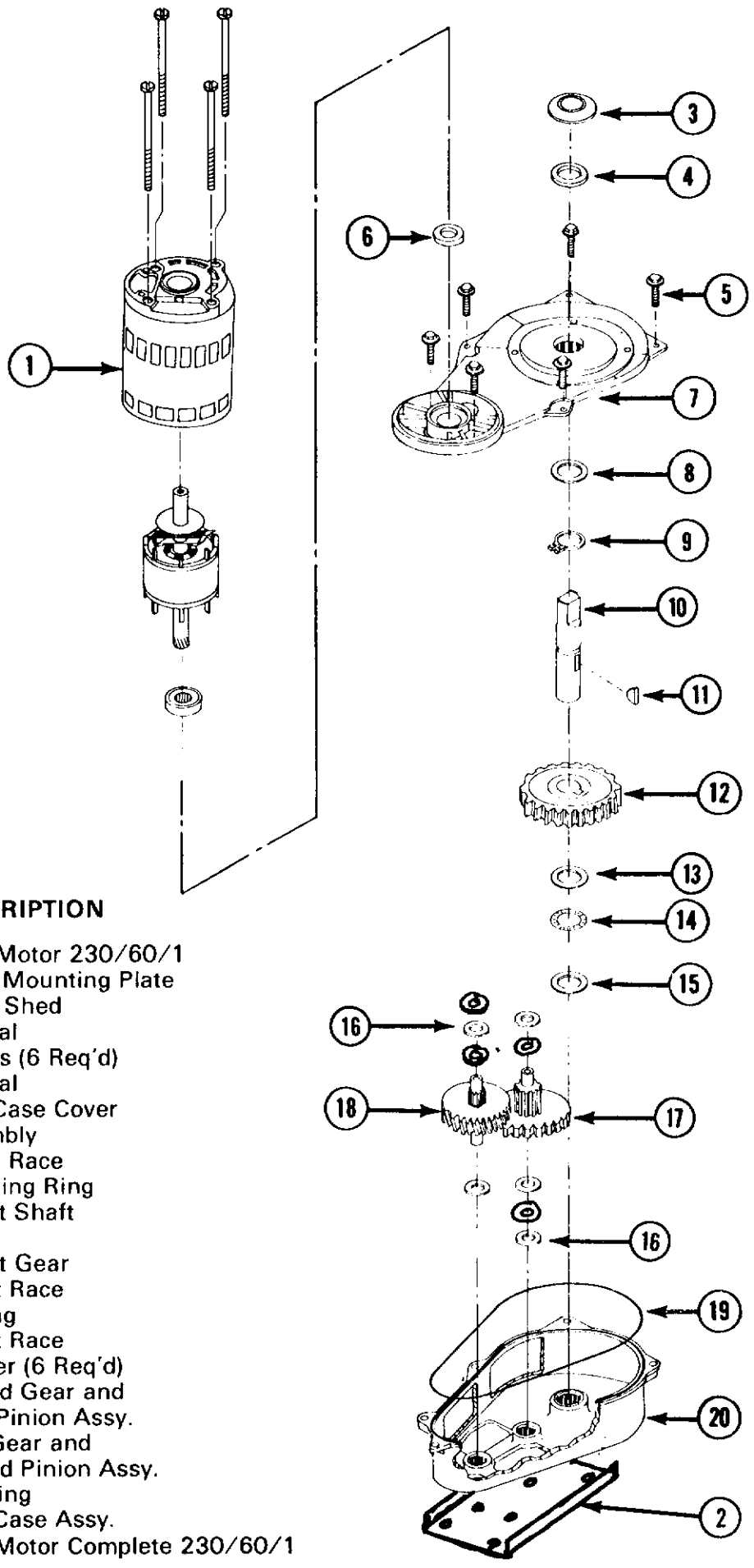

ITEM NO.	PART NO.	DESCRIPTION
1.	A26455-002	Drive Motor 230/60/1
2.	A26599-001	Motor Mounting Plate
3.	13-0709-02	Water Shed
4.	02-1607-00	Oil Seal
5.	03-1251-01	Screws (6 Req'd)
6.	02-1606-00	Oil Seal
7.	A22200-000	Gear Case Cover Assembly
8.	02-1681-00	Thrust Race
9.	03-1363-00	Retaining Ring
10.	02-1652-00	Output Shaft
11.	03-1364-00	Key
12.	02-1653-00	Output Gear
13.	02-1681-00	Thrust Race
14.	02-1680-00	Bearing
15.	02-1679-00	Thrust Race
16.	03-1408-24	Washer (6 Req'd)
17.	02-2071-00	Second Gear and Third Pinion Assy.
18.	02-2072-00	First Gear and Second Pinion Assy.
19.	A26103-001	"O" Ring
20.	A22199-000	Gear Case Assy.
	A24317-022	Gear Motor Complete 230/60/1

MOTOR COMPRESSOR

AIR AND WATER COOLED

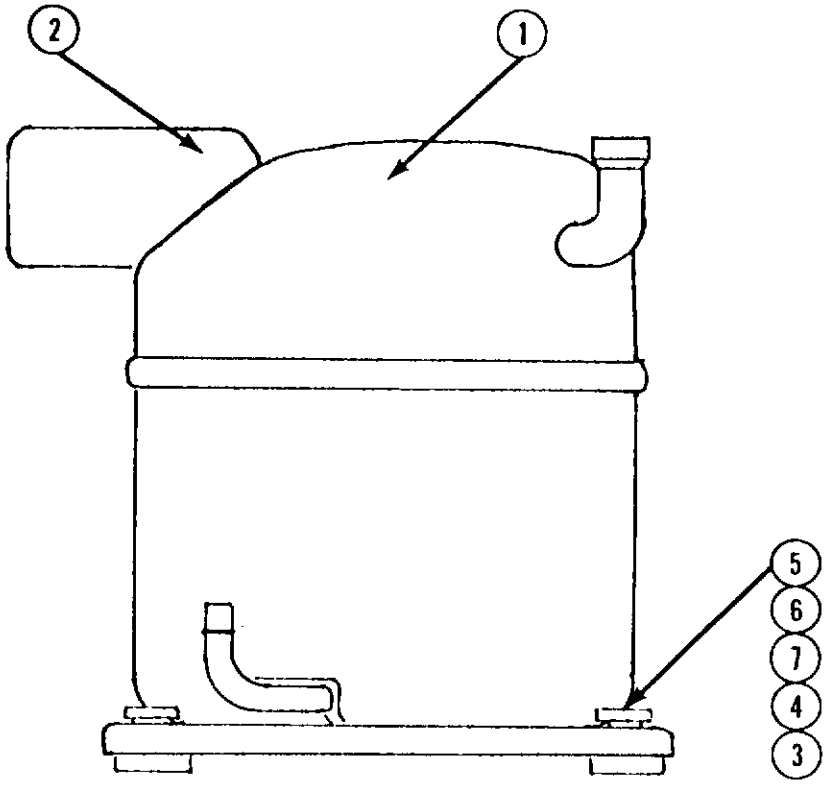

ITEM NO.	PART NO.	DESCRIPTION	COPE. P.N.
1.	18-3800-02	Compressor 230/60/1	SSE4-0100-CAB
	18-3800-03	Compressor 208-240/60/3	SSE4-0100-TFC
	18-3800-07	Compressor 208/60/1	SSE4-0100-CAH
2.	18-2300-25	Overload 230/60/1	071-0127-28
	18-2300-32	Overload 208/60/1	071-0329-02
3.	18-2300-27	Mounting Grommet (4)	027-0085-00
4.	18-2300-26	Mounting Sleeve (4)	028-0188-02
5.	03-1405-40	Screw (4)	
6.	03-1417-12	Washer (4)	
7.	03-1408-29	Washer (4)	

BELOW LISTED ITEMS LOCATED ON CHASSIS PAGE 1 & 2

18-1900-31	Relay & Capacitor Assy (230/60/1)	
		Cope No.
18-1901-15	Start Capacitor	014-0008-51
18-1902-29	Run Capacitor	014-0002-02
18-1903-29	Relay	040-0001-19

18-1900-34	Relay & Capacitor Assy (208/60/1)	
		Cope No.
18-1901-15	Start Capacitor	014-0008-51
18-1902-34	Run Capacitor	014-0001-04
18-1903-34	Relay	040-0001-16

RESERVOIR ASSEMBLY

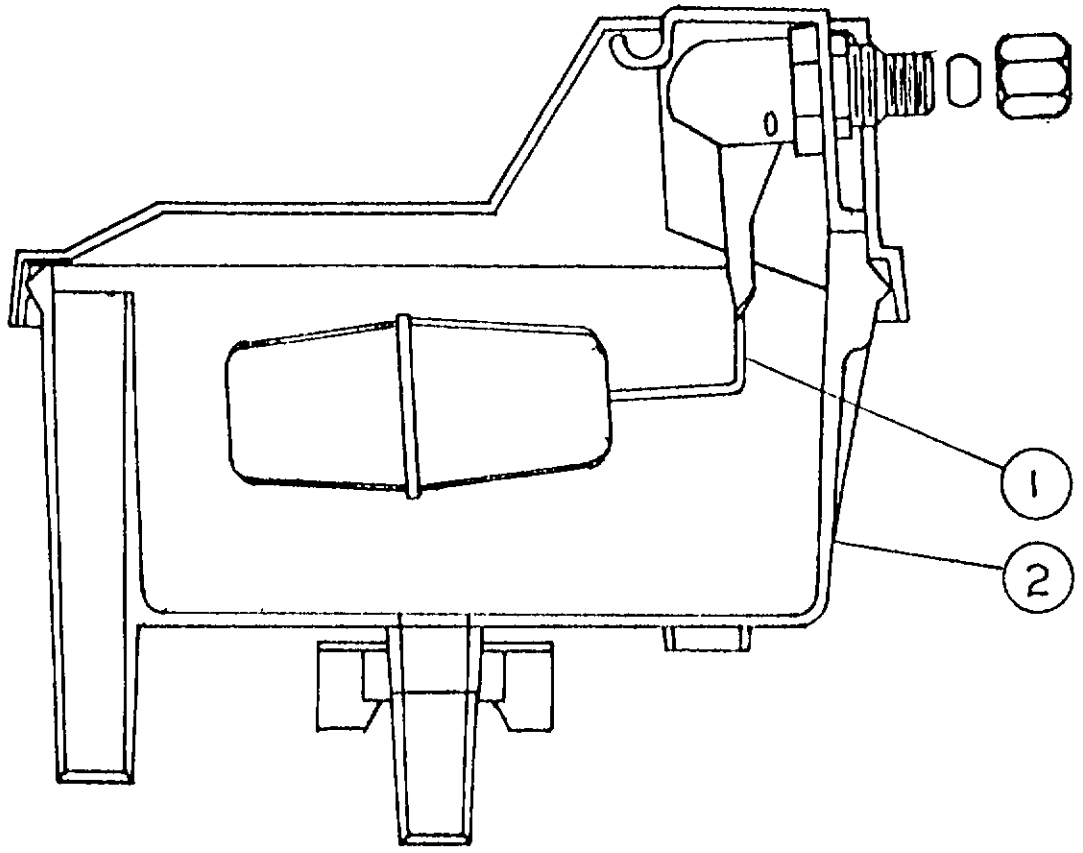

ITEM NO.	PART NO.	DESCRIPTION
	02-2217-02	Valve Assy.
2.	02-2217-01	Reservoir Complete

CONTROL BOX - AIR COOLED
(208/60/1 & 230/60/1 Shown)

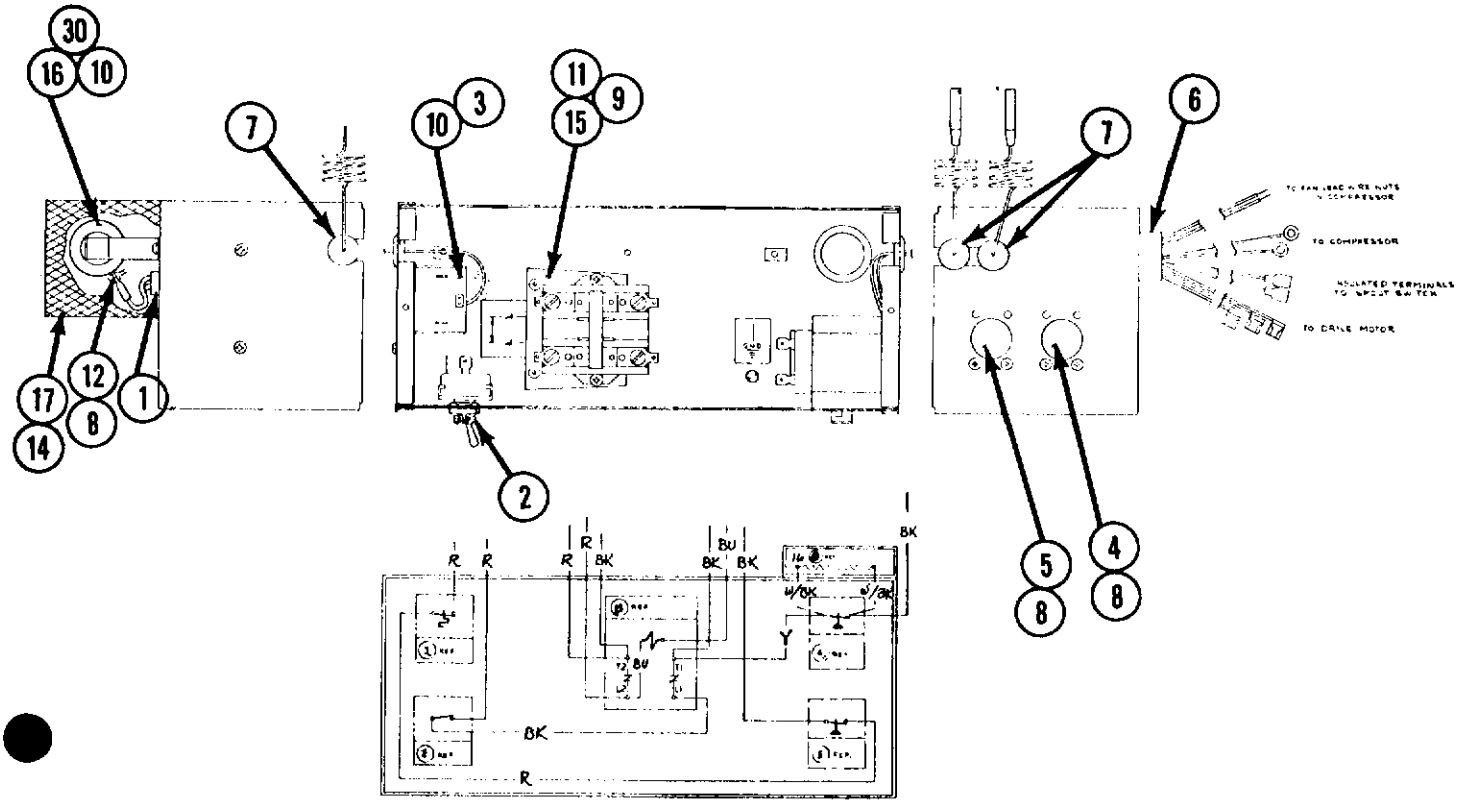

ITEM NO.	PART NO.	DESCRIPTION
1.	12-1213-04	Snap Bushing
2.	12-0426-01	Switch
3.	11-0354-00	Bin Thermostat
4.	11-0362-01	Hi Pressure Control
5.	11-0358-01	Lo Pressure Control
6.	12-1213-11	Snap Bushing
7.	13-0557-00	Grommet (3)
8.	03-1403-04	Screw
9.	03-1403-26	Screw
10.	03-1403-17	Screw
11.	03-1421-07	Speed Nut
12.	03-1421-02	Speed Nut
13.	03-1421-04	Speed Nut
14.	03-1404-08	Screw
15.	12-0820-02	Contactor 208/60/1 & 230/60/1
	12-0739-02	Contactor 208-220/60/3
16.	12-0481-00	Resistor
17.	A14369-000	Cover
18.	A23719-001	Control Box Cover

CONTROL BOX - WATER COOLED
(208/60/1 & 230/60/1 Shown)

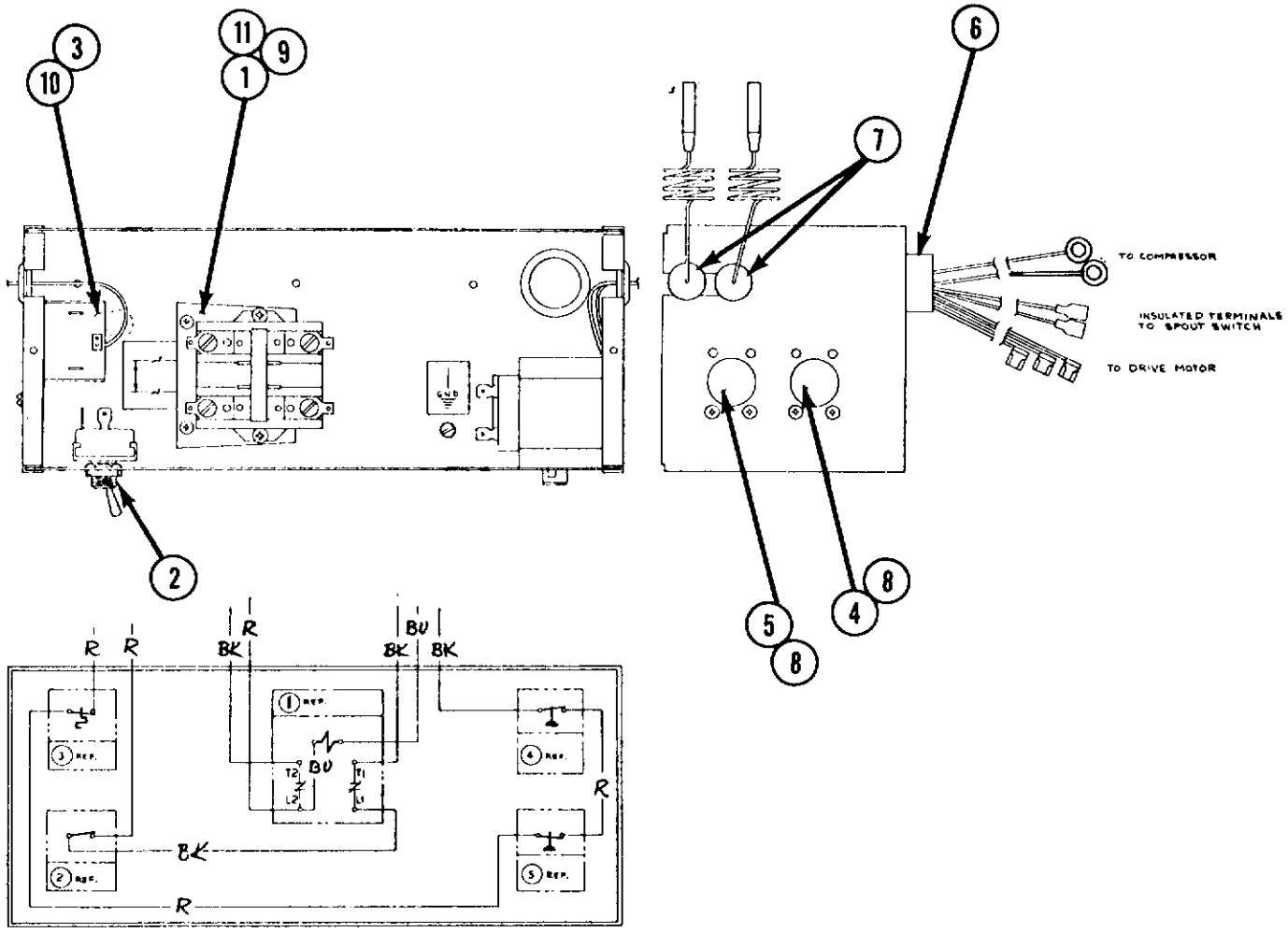

ITEM NO.	PART NO.	DESCRIPTION
1.	12-0820-02	Contactor 208/60/1 & 230/60/1
	12-0739-02	Contactor 208-220/60/3
2.	12-0426-01	Switch
3.	11-0354-00	Bin Thermostat
4.	11-0388-02	Hi Pressure Control
5.	11-0358-01	Lo Pressure Control
6.	12-1213-11	Snap Bushing
7.	13-0557-00	Grommet (3)
8.	03-1403-04	Screw
9.	03-1403-26	Screw
10.	03-1403-17	Screw
11.	03-1421-07	Speed Nut
12.	A23719-001	Control Box Cover

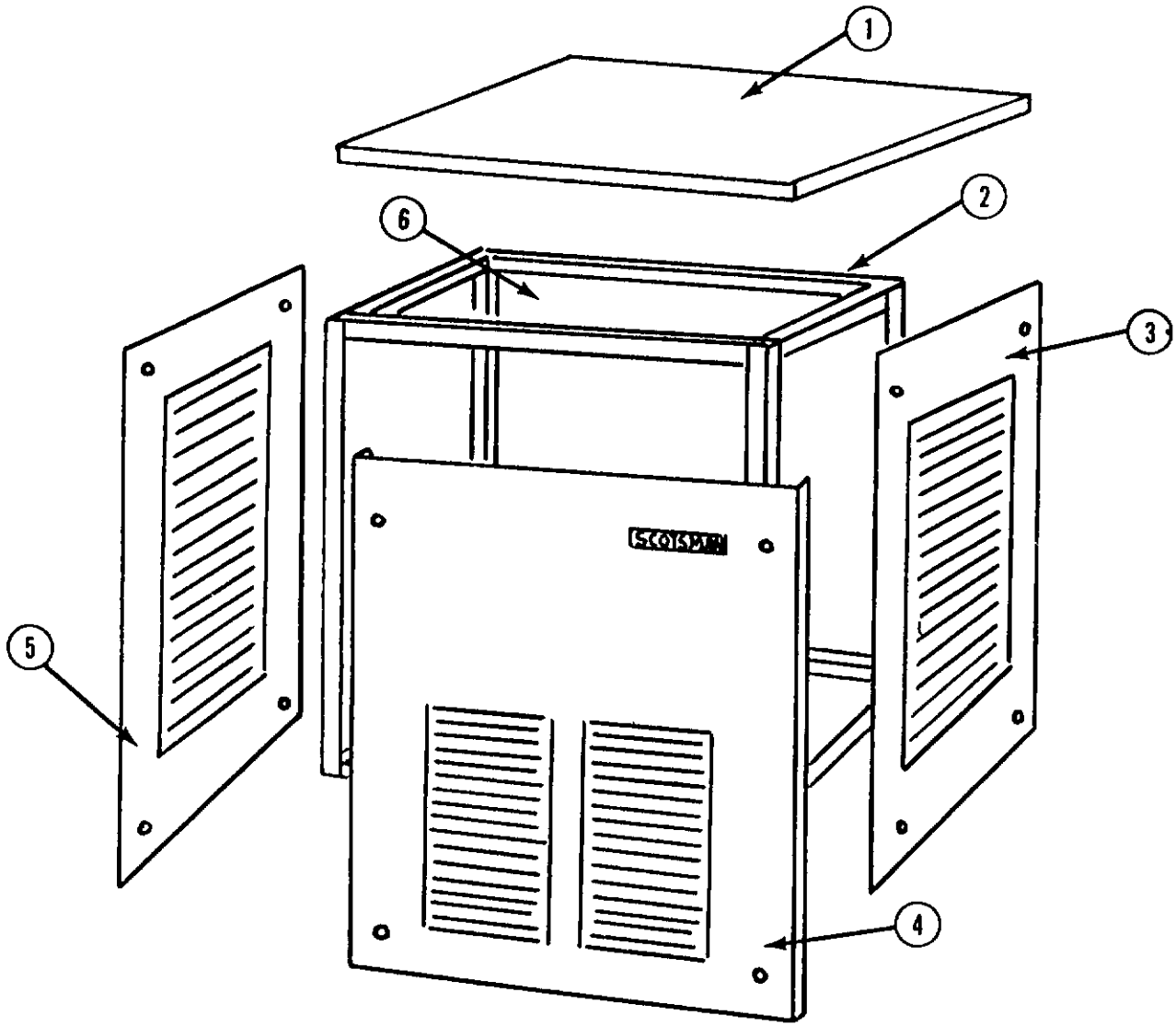

ITEM NO.	DESCRIPTION	ENAMEL	STAINLESS STEEL
1.	Panel Top	A24026-001	A24026-002
2.	Cabinet Frame	A24025-001	A24025-001
3.	Panel, Right Side	A24029-001	A24029-002
4.	Panel, Front	A24027-001	A24027-002
5.	Panel, Left Side	A24029-001	A24029-002
6.	Panel, Rear	A24018-001	A24018-002
*	Mounting Screws	03-1419-09	03-1419-09
*	Speed Nut	03-1507-00	03-1507-00
*	Emblem	15-0156-00	15-0156-00
	*Aerosol Paint (micromatte)	10-314-01	

*Items not Illustrated

FINAL ASSEMBLY

(Air Cooled)

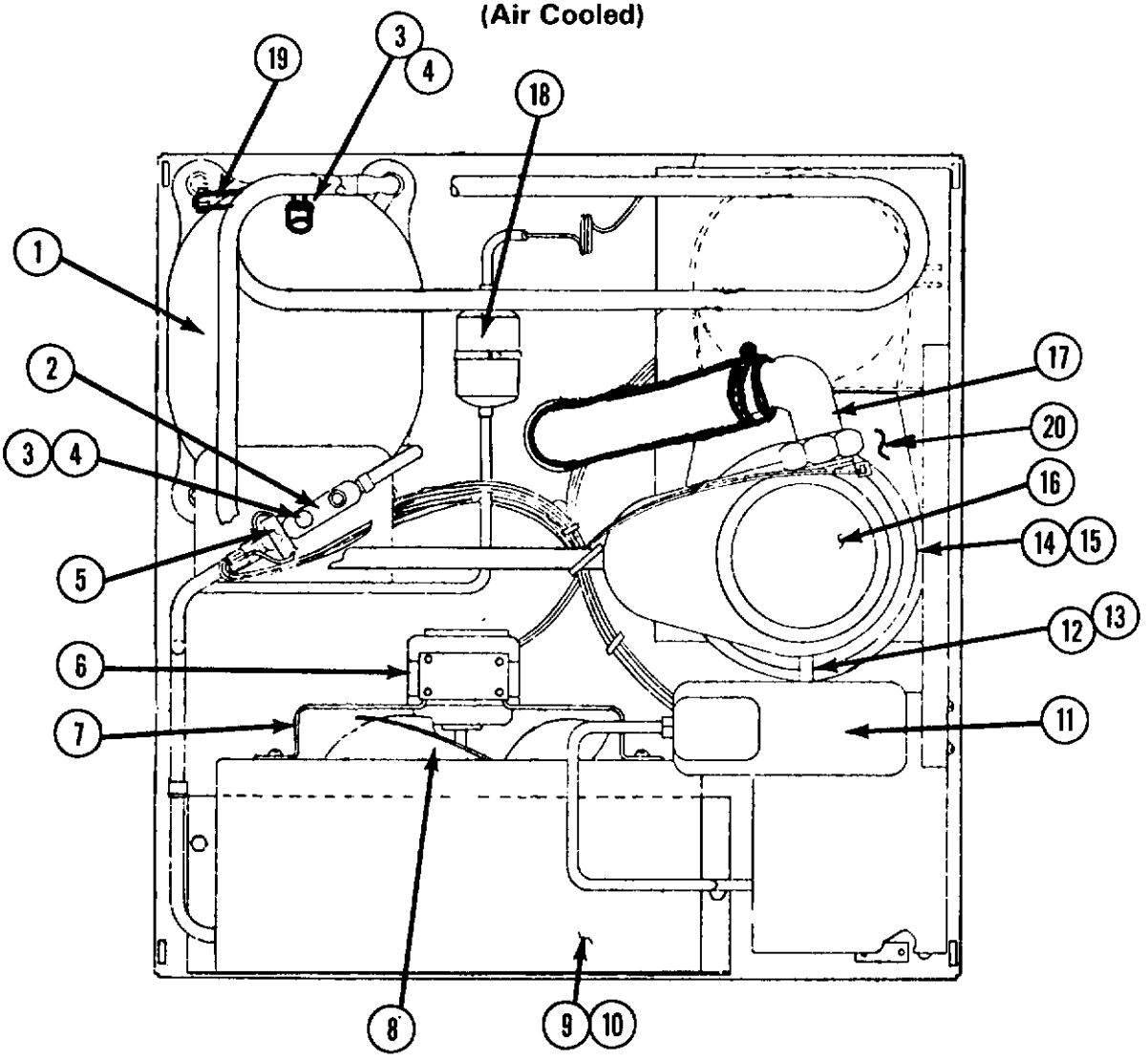

ITEM NO.	PART NO.	DESCRIPTION
1.	See Page 8	Compressor
2.	16-0673-04	Process Header
3.	16-0563-00	Brass Cap
4.	16-0560-00	Valve Core
5.	11-0398-01	Fan Pressure Control
6.	12-1575-02	Fan Motor 2/Unit
7.	02-2378-01	Fan Motor Bracket (2) Req. Per Motor
8.	18-0231-00	Fan Blade & Nut
9.	18-3714-01	Condenser
10.	A26161-001	Shroud
11.	See Page 6	Reservoir
12.	13-0674-09	Tubing
13.	02-0694-00	Clamp
14.	A24156-001	Drip Pan Ass'y.
15.	13-0704-00	Gasket
16.	See Page 3	Freezer Ass'y.
17.	See Page 4 & 5	Spout Ass'y. See Page 33
18.	02-0544-01	Drier
19.	A27281-001	Process Tube
20.	See Page 7	Gear Reducer

FINAL ASSEMBLY

(Water Cooled)

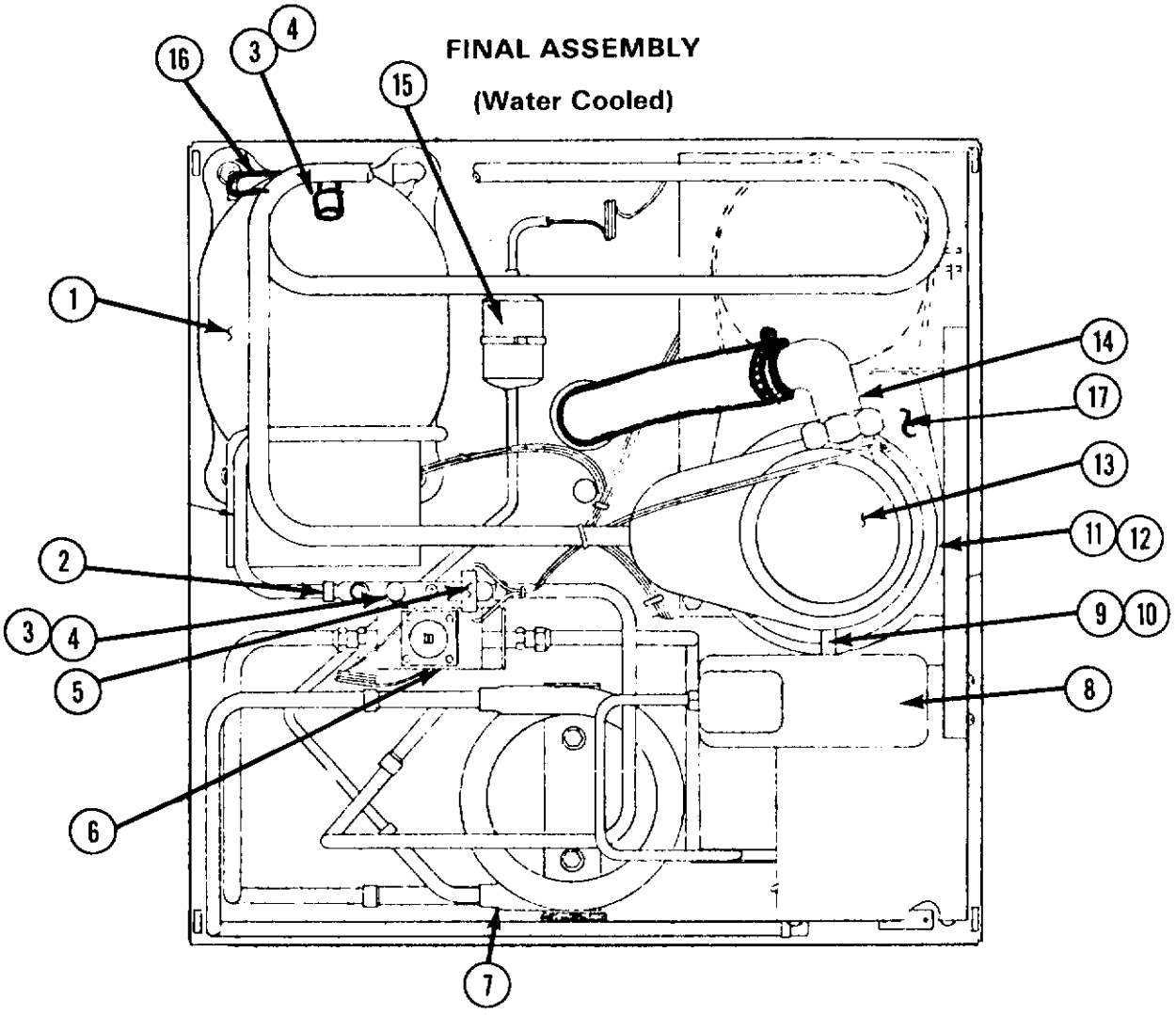

ITEM NO.	PART NO.	DESCRIPTION
1.	See Page 8	Compressor
2.	16-0673-08	Process Header
3.	16-0563-00	Brass Cap
4.	16-0560-00	Valve Core
5.	11-0397-01	Hi-Pressure Switch
6.	11-0198-02	Water Regulator Valve
7.	18-3306-02	Condensor (Water)
8.	See Page 6	Reservoir
9.	13-0674-09	Tubing
10.	02-0694-00	Clamp
11.	A24156-001	Drip Pan
12.	13-0704-00	Gasket
13.	See Page 3	Freezer Ass'y.
14.	See Page 4 & 5	Spout Ass'y.
15.	02-0544-01	Drier
16.		Process Tube
17.	See Page 7	Gear Reducer

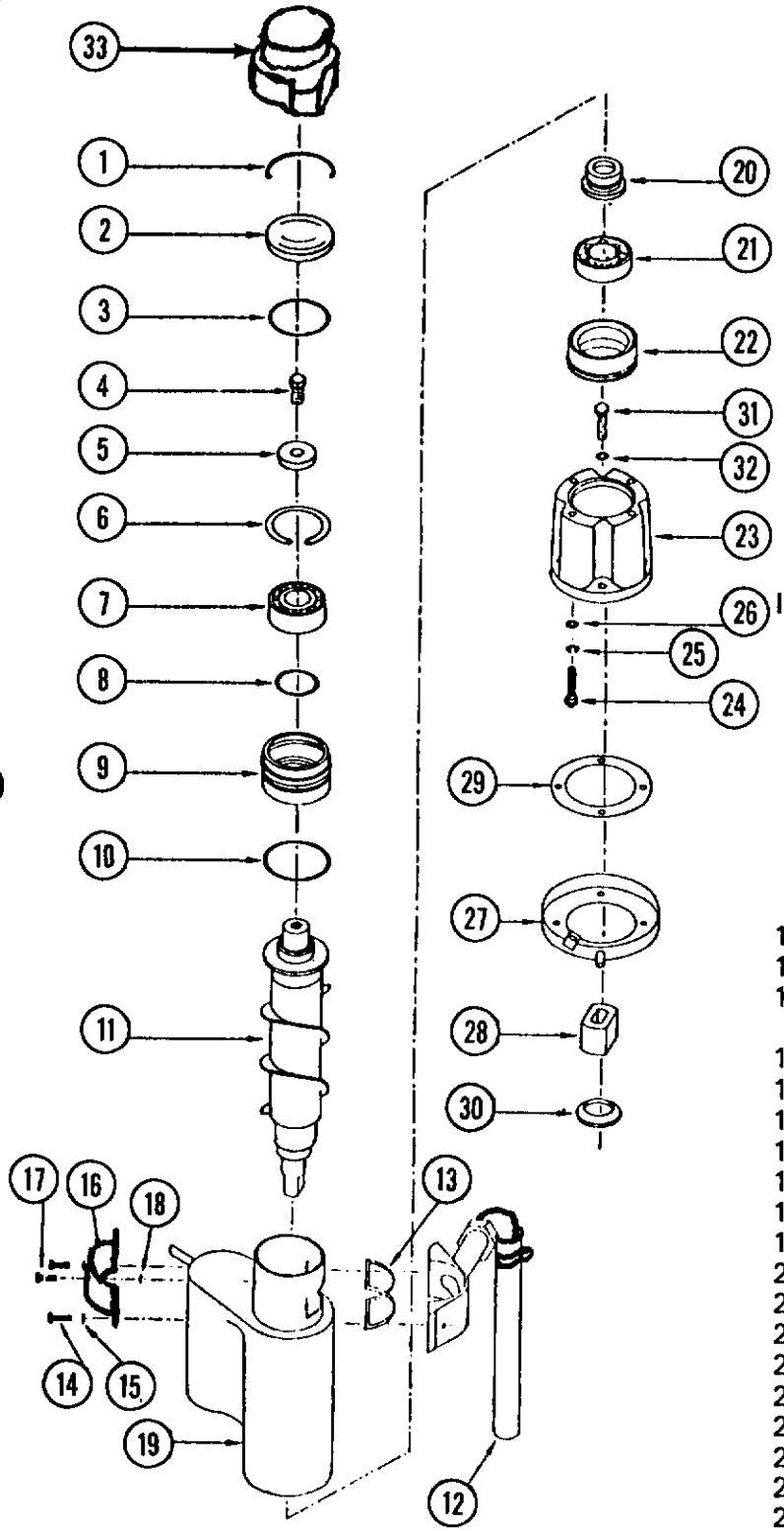

FREEZER ASSEMBLY

ITEM NO.	PART NO.	DESCRIPTION
1.	A08582-000	Cap Hook
2.	A08581-000	Cap
3.	13-0617-20	"O" Ring
4.	03-1405-36	Cap Screw
5.	A06273-000	Washer
6.	03-1558-04	Retaining Ring
7.	02-0646-00	Bearing
8.	13-1617-15	"O" Ring
9.	A23465-001	Bearing Retainer
10.	13-1617-40	"O" Ring
11.	02-2048-01	Auger
12.	See Page 4 & 5	Ice Spout Assy.
13.	02-1437-00	Gasket
14.	03-1544-03	Screw (4)
15.	03-1417-07	Lock Washer (4)
16.	A24928-001	Spout Plate
17.	03-1506-01	Screw
18.	03-1409-14	Washer
19.	A26869-001	Freezer w/Heat Exch.
20.	02-0929-00	Water Seal
21.	02-0619-00	Lower Bearing
22.	A10591-000	Bearing Retainer
23.	02-1629-00	Adapter
24.	03-1405-41	Screw (4)
25.	03-1410-04	Lock Washer (4);
26.	03-1408-03	Washer (4)
27.	A24156-001	Drip Pan
28.	15-0573-01	Coupling
29.	13-0704-00	Cork Gasket
30.	13-0709-02	Rubber Water Shed
31.	03-1420-03	Screw (4)
32.	03-1408-03	Washer (4)
33.	13-0809-01	Rubber Cap

SPOUT AND SAFETY SWITCH

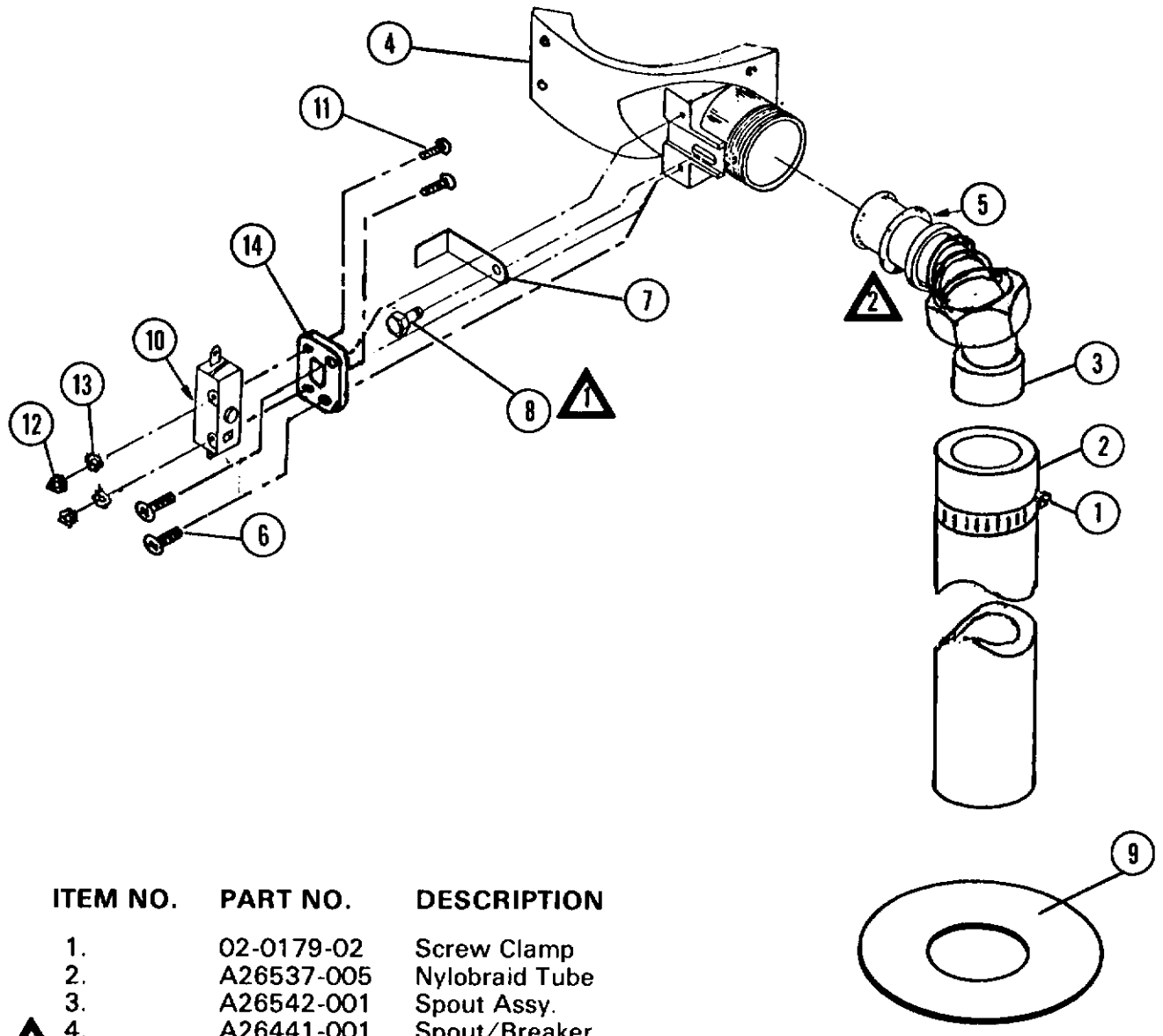

ITEM NO.	PART NO.	DESCRIPTION
1.	02-0179-02	Screw Clamp
2.	A26537-005	Nylobraid Tube
3.	A26542-001	Spout Assy.
2 4.	A26441-001	Spout/Breaker
2 5.	13-0617-41	"O" Ring
6.	03-1418-01	Screw
1 7.	A27511-001	Switch Actuator
1 8.	A25305-001	Shoulder Screw
9.	13-0806-01	Sealing Pad
10.	12-1664-00	Switch
11.	03-1418-38	Screw
12.	03-1406-01	Nut
13.	03-1417-01	Lockwasher
14.	02-2377-01	Thermal Barrier

NOTE:

1 Tighten carefully, small thread & brass

2 A light coating of petro-jel req'd on "O" Ring & spring

INSTALLATION INSTRUCTIONS

MODULAR FLAKER
ICE DISCHARGE TUBE

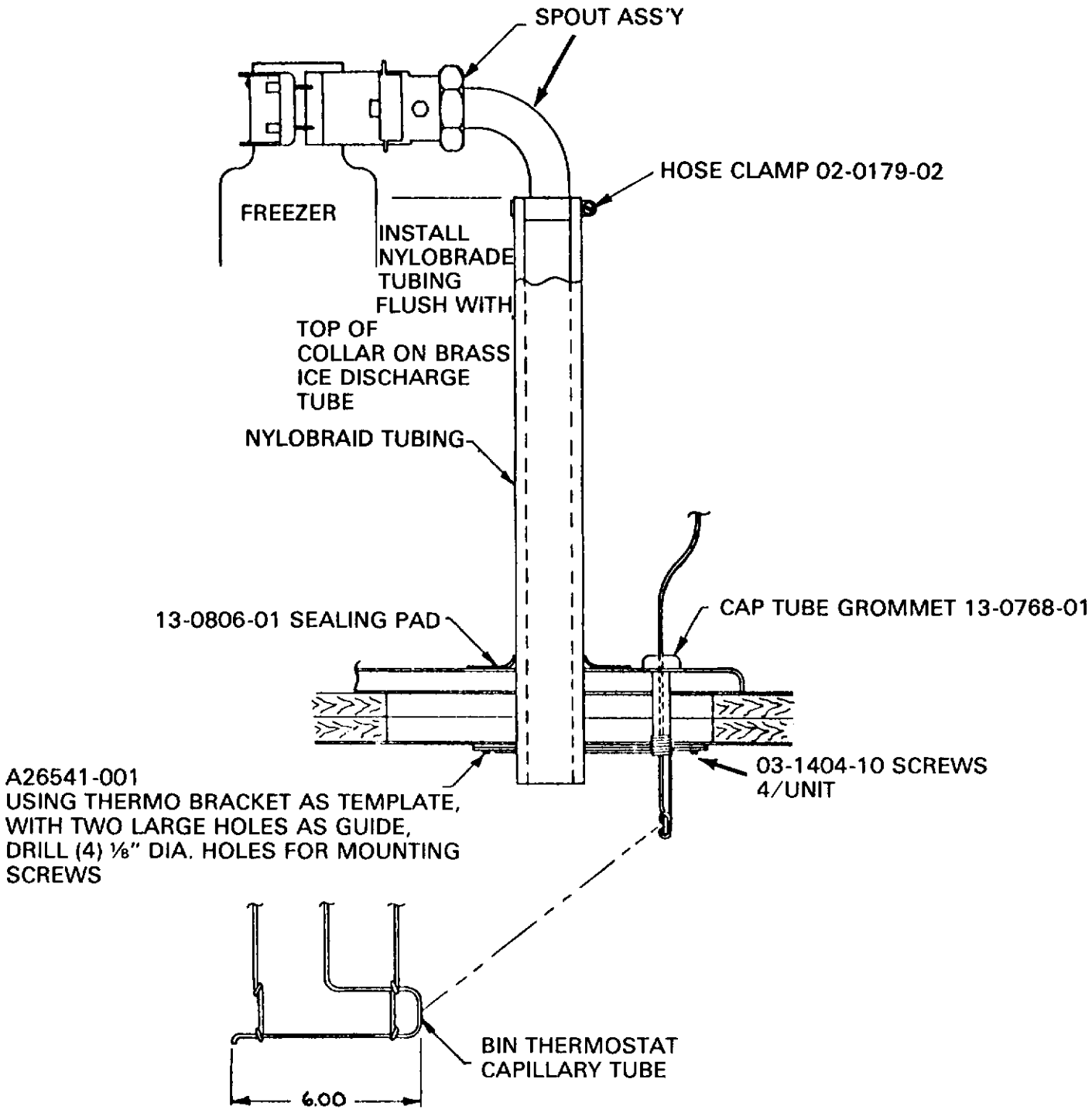

NOTE:
See page 3 & 4 for
Spout Assy. Breakdown (Part No.'s)

RESERVOIR ASSEMBLY

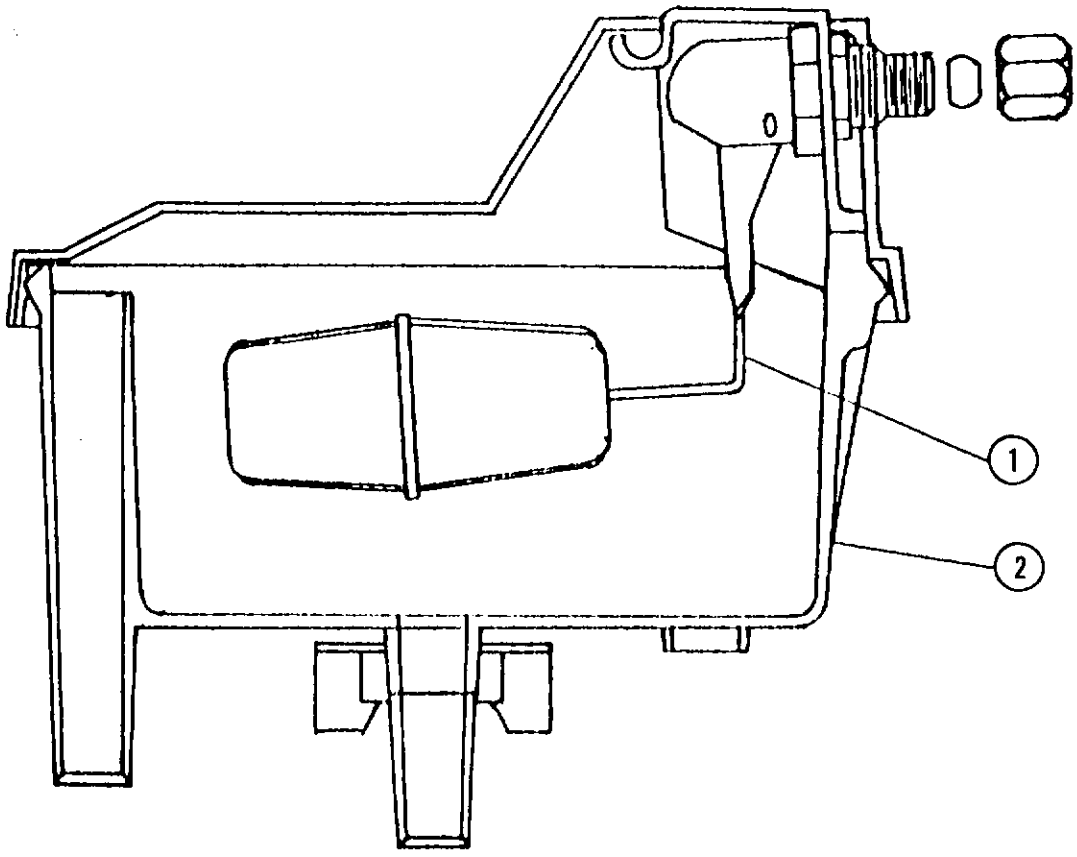

ITEM NO.	PART NO.	DESCRIPTION
1.	02-2217-02	Valve Assy.
2.	02-2217-01	Reservoir Complete

GEAR MOTOR ASSEMBLY
¼ HP 230/60/1
OUTPUT SHAFT TURNS
AT 12 RPM

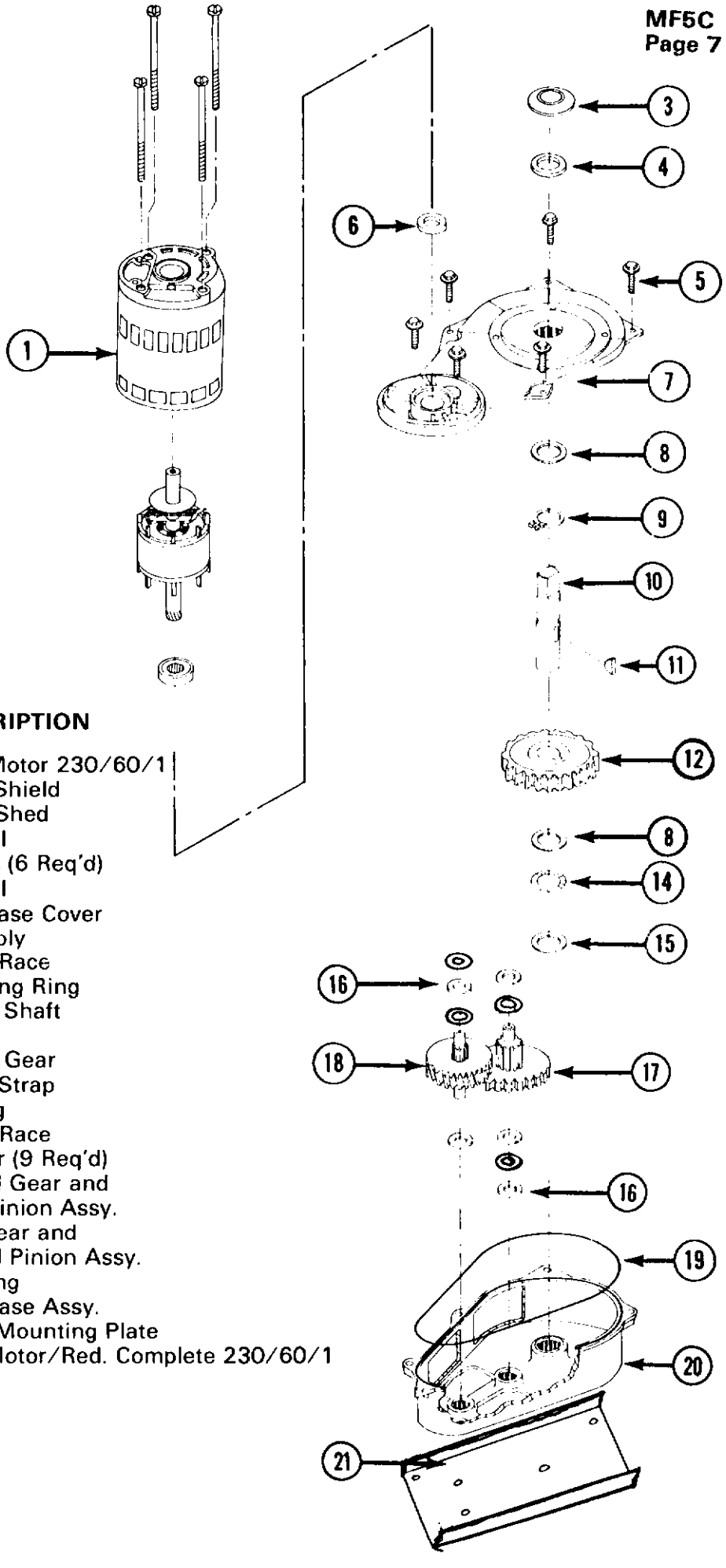

ITEM NO.	PART NO.	DESCRIPTION
1.	A26455-002	Drive Motor 230/60/1
⚠1 2.	A26041-001	Motor Shield
3.	13-0709-02	Water Shed
4.	02-1607-00	Oil Seal
5.	03-1251-01	Screws (6 Req'd)
6.	02-1606-00	Oil Seal
7.	A22200-000	Gear Case Cover Assembly
8.	02-1681-00	Thrust Race
9.	03-1363-00	Retaining Ring
10.	02-1652-00	Output Shaft
11.	03-1364-00	Key
⚠1 12.	02-1653-00	Output Gear
⚠1 13.	A26042-001	Shield Strap
14.	02-1680-00	Bearing
15.	02-1679-00	Thrust Race
16.	03-1408-24	Washer (9 Req'd)
17.	02-2071-00	Second Gear and Third Pinion Assy.
18.	02-2072-00	First Gear and Second Pinion Assy.
19.	A26103-001	"O" Ring
20.	A22199-000	Gear Case Assy.
21.	A26599-001	Motor Mounting Plate
	A24317-022	Gear Motor/Red. Complete 230/60/1

NOTE:

⚠1 Not Shown

MOTOR COMPRESSOR

AIR AND WATER COOLED

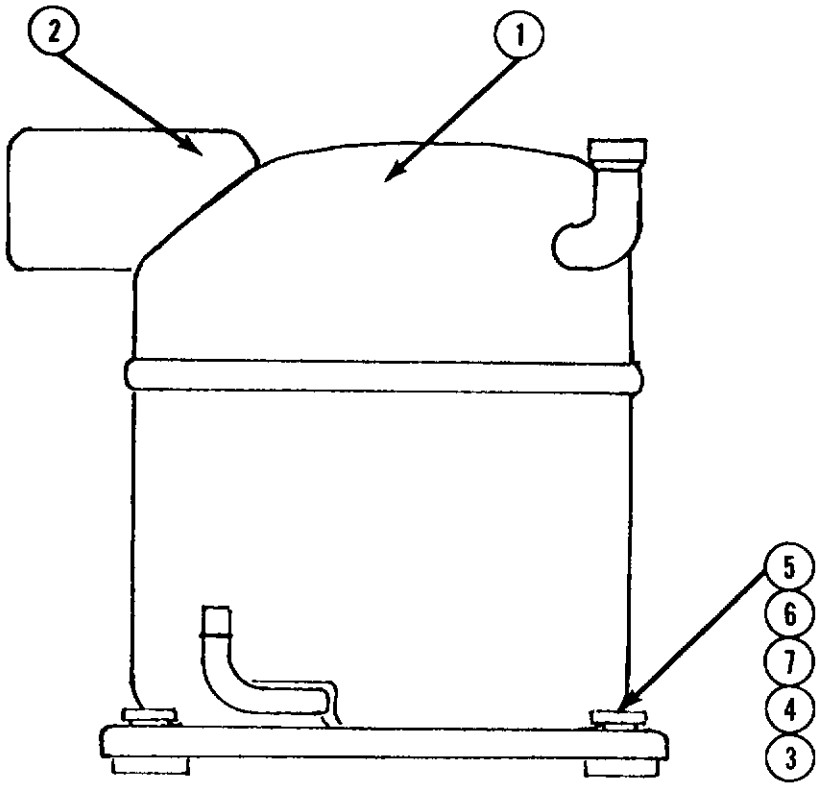

ITEM NO.	PART NO.	DESCRIPTION	COPE. P.N.
1.	18-3800-02	Compressor 230/60/1	SSE4-0100-CAB
	18-3800-03	Compressor 208-240/60/3	SSE4-0100-TFC
	18-3800-07	Compressor 208/60/1	SSE4-0100-CAH
2.	18-2300-25	Overload 230/60/1	071-0127-28
	18-2300-32	Overload 208/60/1	071-0329-02
3.	18-2300-27	Mounting Grommet (4)	027-0085-00
4.	18-2300-26	Mounting Sleeve (4)	028-0188-02
5.	03-1405-40	Screw (4)	Internally Protected
6.	03-1417-12	Lock Washer (4)	
7.	03-1408-29	Washer (4)	

BELOW LISTED ITEMS SHOWN ON CONTROL BOX PAGE 9 & 10

230/60/1

		Cope No.
18-1901-15	Start Capacitor	014-0008-51
18-1902-29	Run Capacitor	014-0002-02
18-1903-29	Relay	040-0001-19

208/60/1

		Cope No.
18-1901-15	Start Capacitor	014-0008-51
18-1902-34	Run Capacitor	014-0001-04
18-1903-34	Relay	040-0001-16

CONTROL BOX ASSEMBLY
208-230/60/3

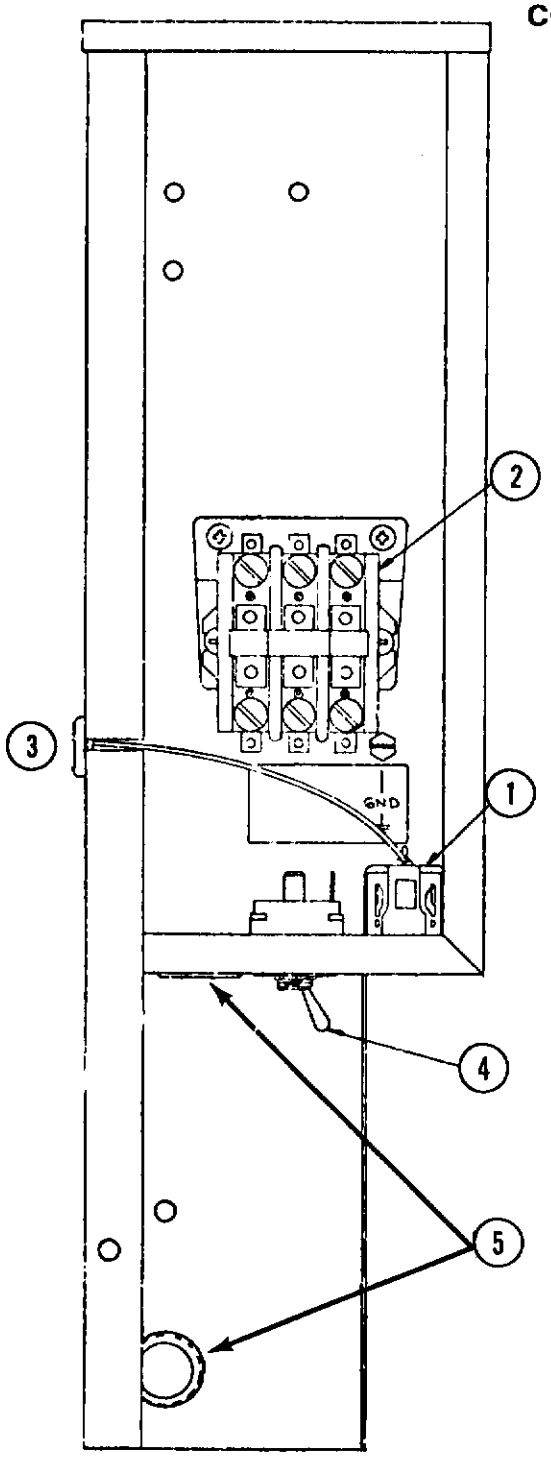

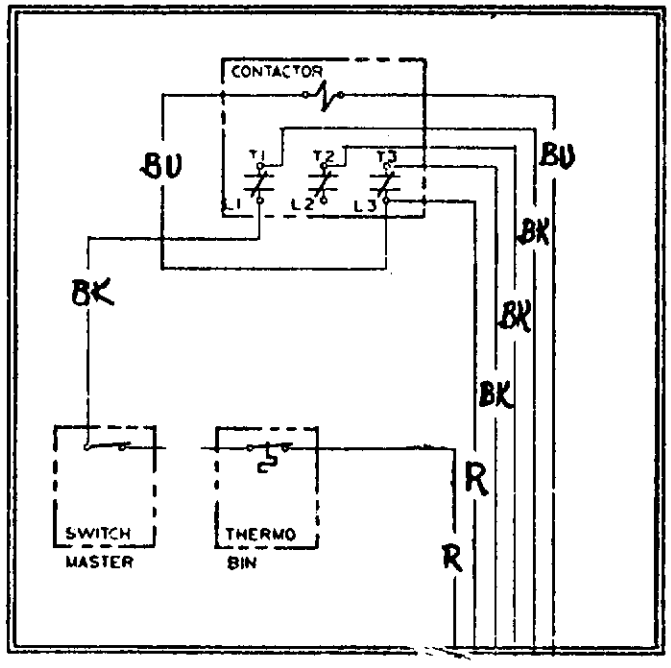

ITEM NO.	PART NO.	DESCRIPTION
1.	11-0354-00	Bin Control
2.	12-0739-02	Contactor
3.	13-0557-00	Grommet
4.	12-0426-01	Switch
5.	12-1213-10	Snap Bushing
6.	A26857-001	Control Box Cover

CONTROL BOX ASSEMBLY
230/60/1
208/60/1

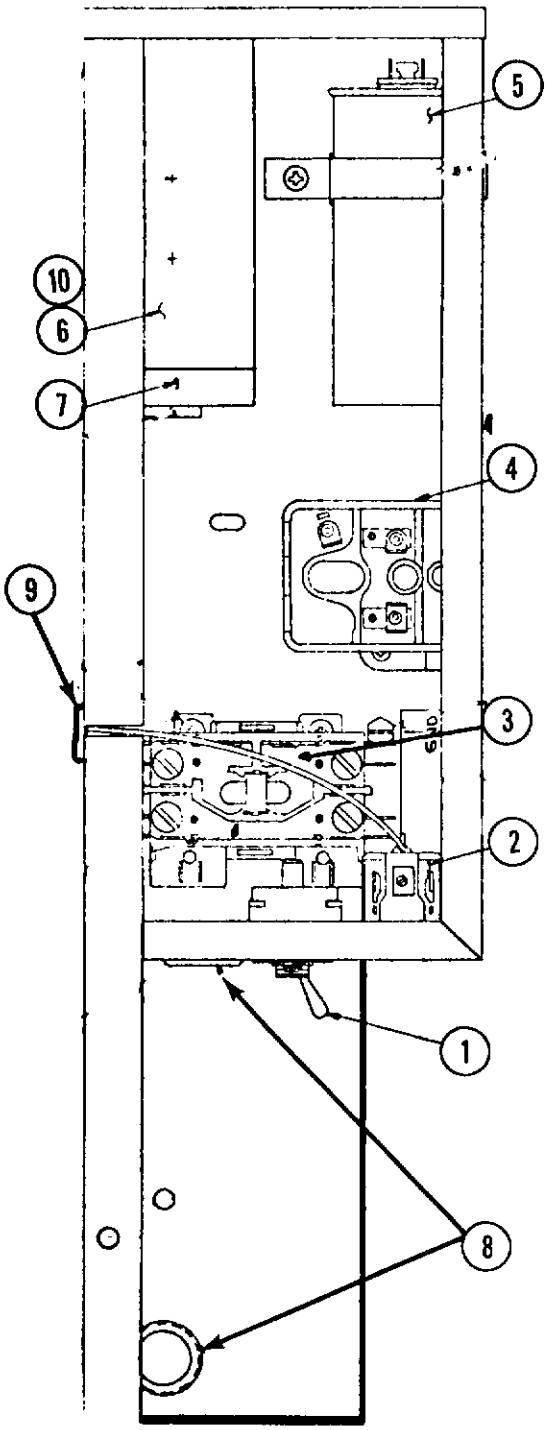

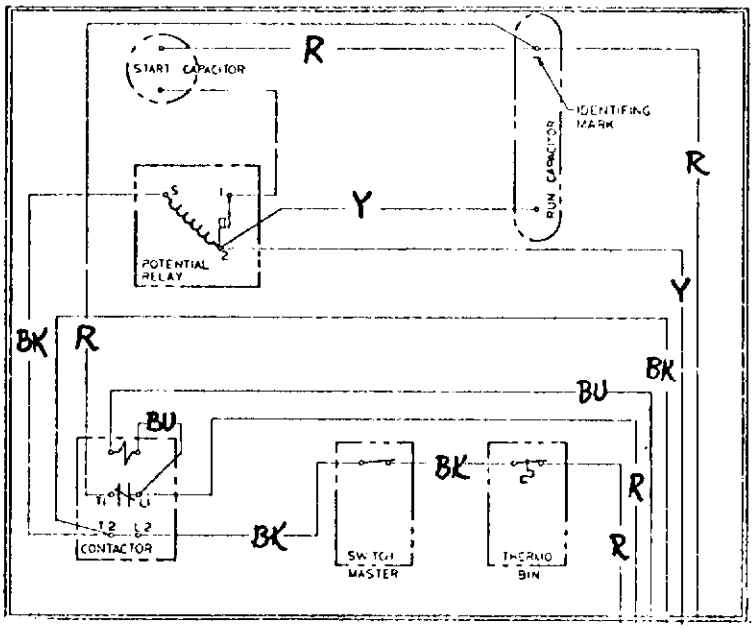

ITEM NO.	PART NO.	DESCRIPTION
1.	12-0426-01	Switch
2.	11-0354-00	Bin Control
3.	12-2048-02	Contactor
4.	18-1903-29	Relay 230/60/1
4.	18-1903-34	Relay 208/60/1
5.	18-1902-29	Run Capacitor 230/60/1
5.	18-1902-34	Run Capacitor 208/60/1
6.	18-1901-15	Start Capacitor
7.	18-3724-01	Capacitor Cap
8.	12-1213-10	Snap Bushing
9.	13-0557-00	Grommet
10.	18-2200-39	Capacitor Bracket
11.	A26857-001	Control Box Cover

CABINET PARTS

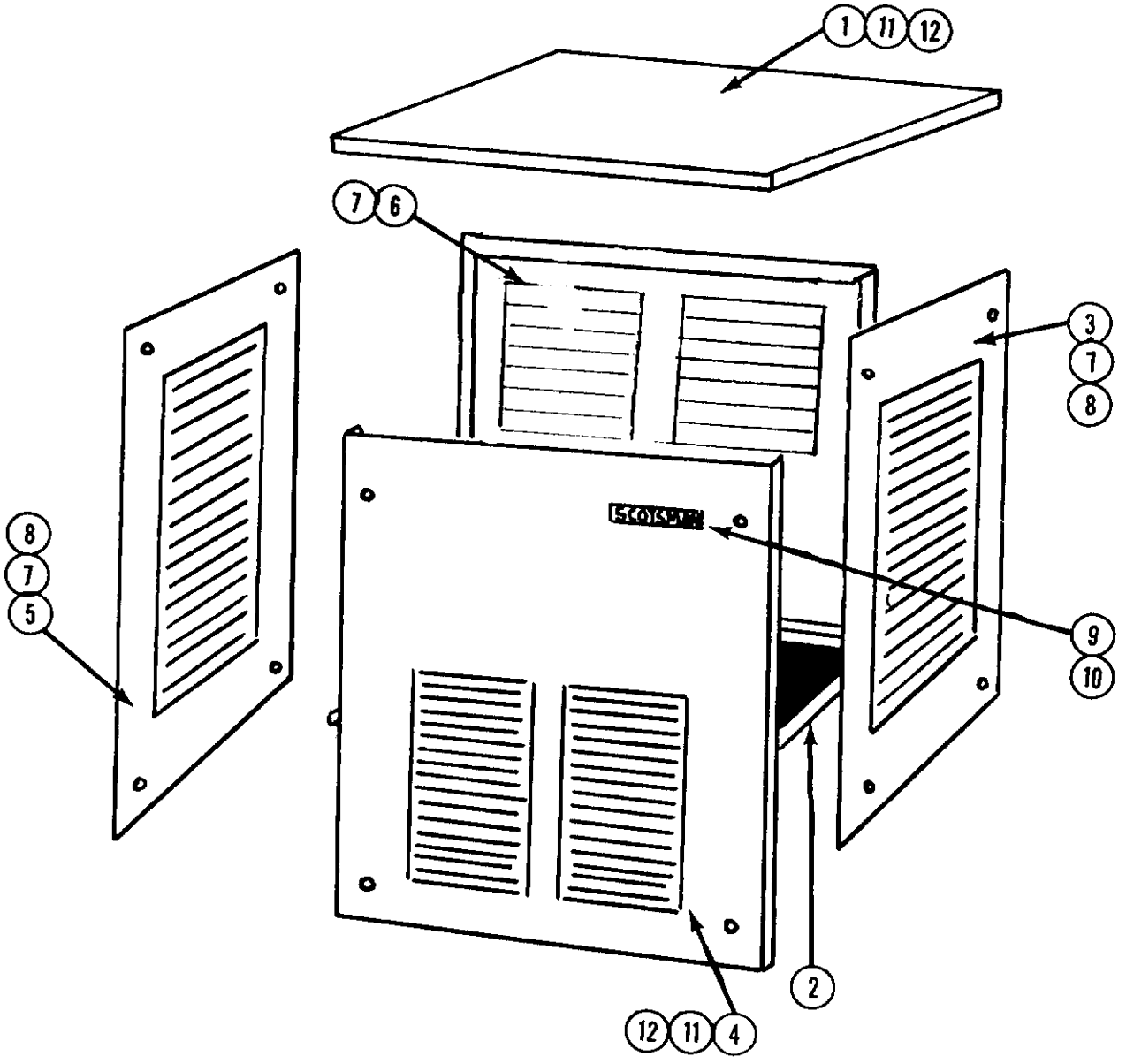

ITEM NO.	DESCRIPTION	ENAMEL	STAINLESS STEEL
1.	Panel Top	A26625-001	A26625-002
2.	Cabinet Base	A26596-001	Same
3.	Panel, Right Side	A26866-001	A26866-002
4.	Panel, Front	A26865-001	A26865-002
5.	Panel, Left Side	A26864-001	A26864-002
6.	Panel, Rear	A26863-001	A26863-002
7.	Mounting Screw	03-1404-09	Same
8.	Speed Nut	03-1507-01	Same
9.	Emblem	15-0580-01	Same
10.	Speed Nut	03-0271-00	Same
11.	Screw	03-1419-09	Same
12.	Speed Nut	03-1423-06	

CONTROL BOX — AIR COOLED
230/60/1 & 208/60/1

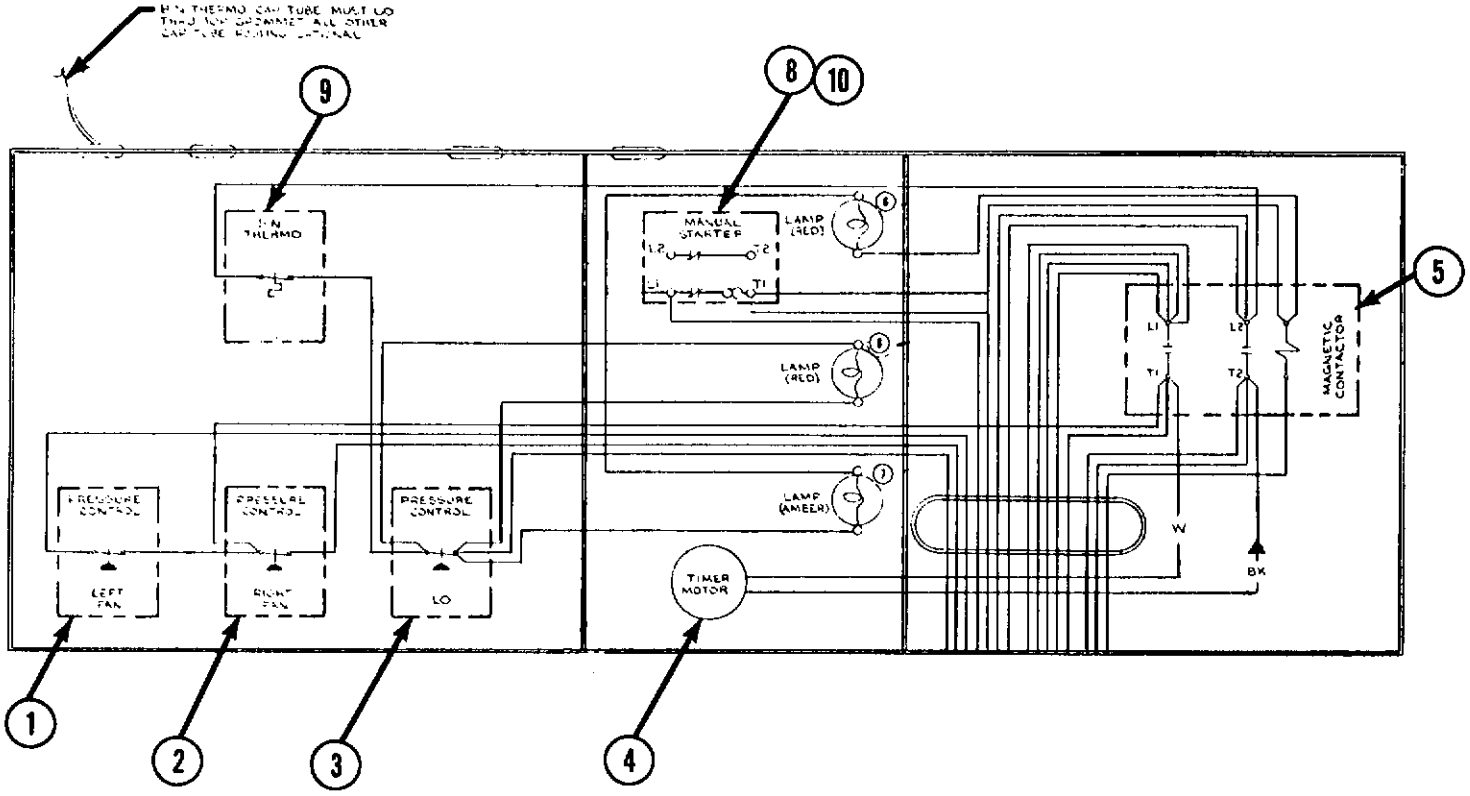

ITEM	PART NO.	DESCRIPTION
1.	11-0342-00	Fan Pressure Control - L
2.	11-0343-00	Fan Pressure Control - R
3.	11-0358-00	Lo Pressure Control
4.	12-2001-01	Elapsed Time Control
5.	12-0820-02	Contactor
6.	12-1997-01	Light-Red
7.	12-1997-02	Light - Amber
8.	12-530A-00	Manual Starter/Overload
9.	11-0354-00	Bin Thermostat
10.	12-0708	Heater, Overload (state motor manufacture and voltage when ordering

CONTROL BOX — WATER COOLED
230/60/1 & 208/60/1

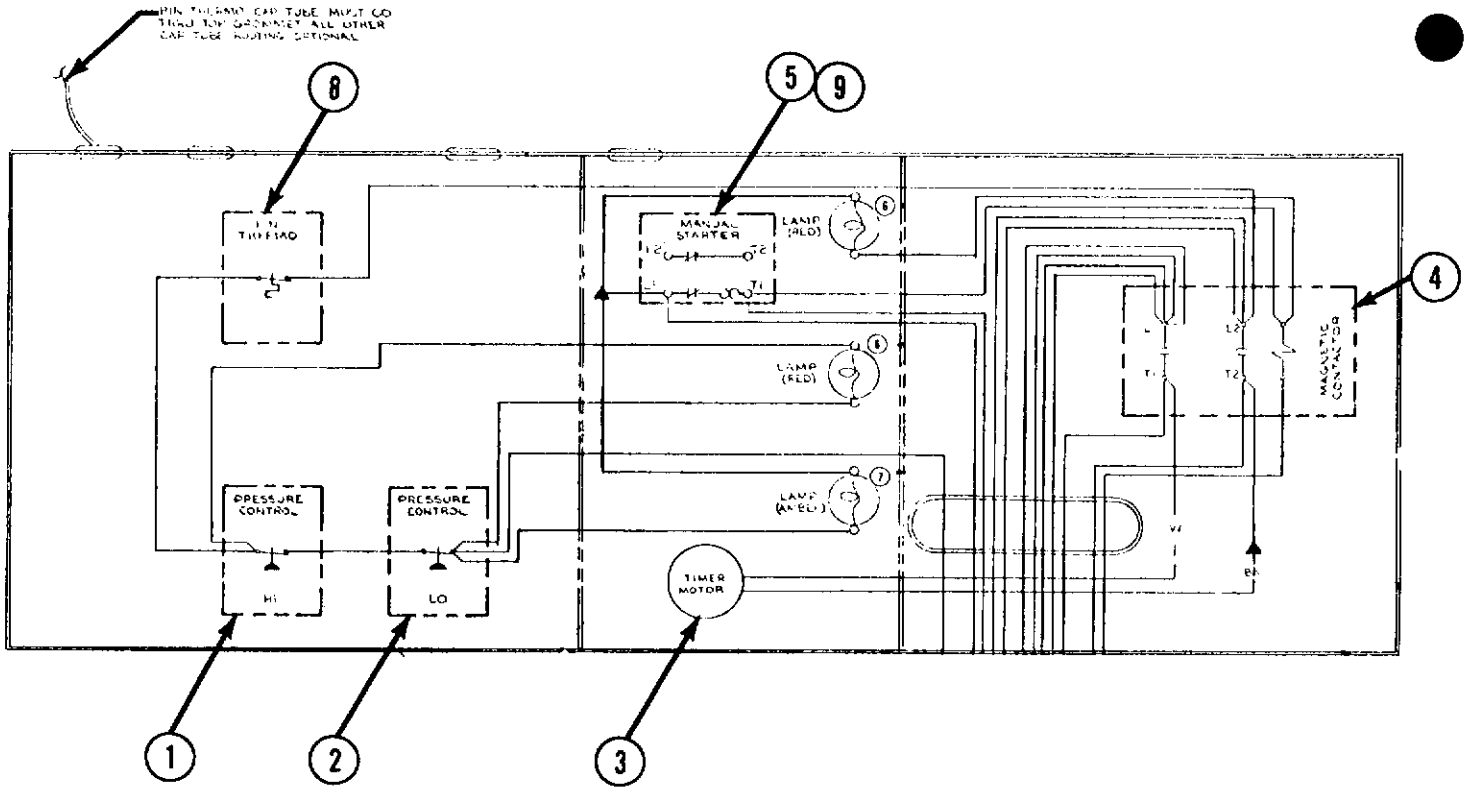

ITEM	PART NO.	DESCRIPTION
1.	11-0388-01	Hi Pressure Control
2.	11-0358-00	Lo Pressure Control
3.	12-2001-01	Elapsed Time Control
4.	12-0820-02	Contactor
5.	12-530A-00	Manual Starter/Overload
6.	12-1997-01	Light - Red
7.	12-1997-02	Light - Amber
8.	11-0354-00	Bin Thermostat
9.	12-0708	Heater, Overload (state motor manufacture and voltage when ordering)

CONTROL BOX — AIR COOLED
208-220/60/3

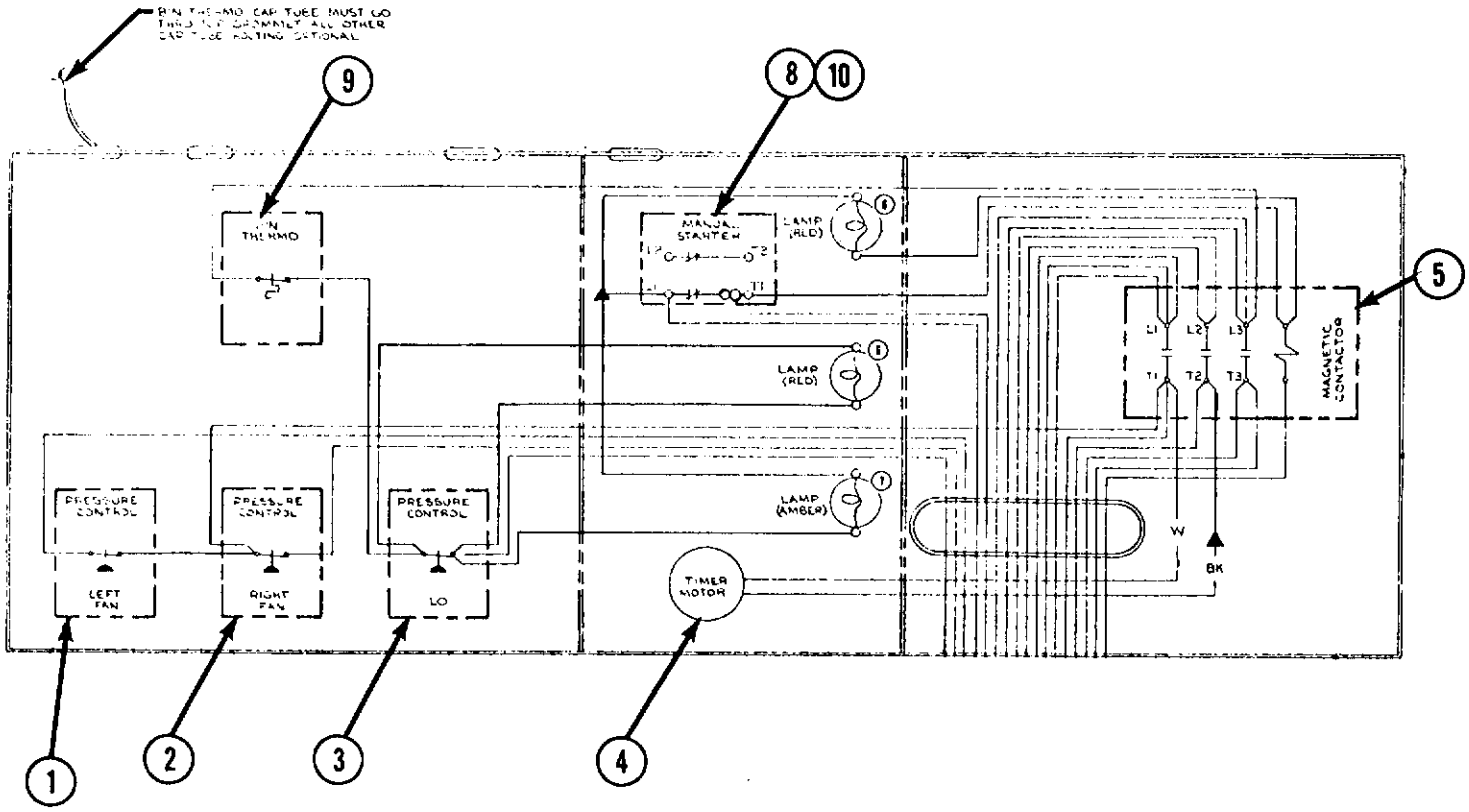

ITEM	PART NO.	DESCRIPTION
1.	11-0342-00	Fan Pressure Control - L
2.	11-0343-00	Fan Pressure Control - R
3.	11-0358-00	Lo Pressure Control
4.	12-2001-01	Elapsed Time Control
5.	12-0739-02	Contactor
6.	12-1997-01	Light - Red
7.	12-1997-02	Light - Amber
8.	12-530A-00	Manual Starter/Overload
9.	11-0354-00	Bin Thermostat
10.	12-0708	Heater, Overload (state motor manufacture and voltage when ordering)

CONTROL BOX — WATER COOLED
208-220/60/3

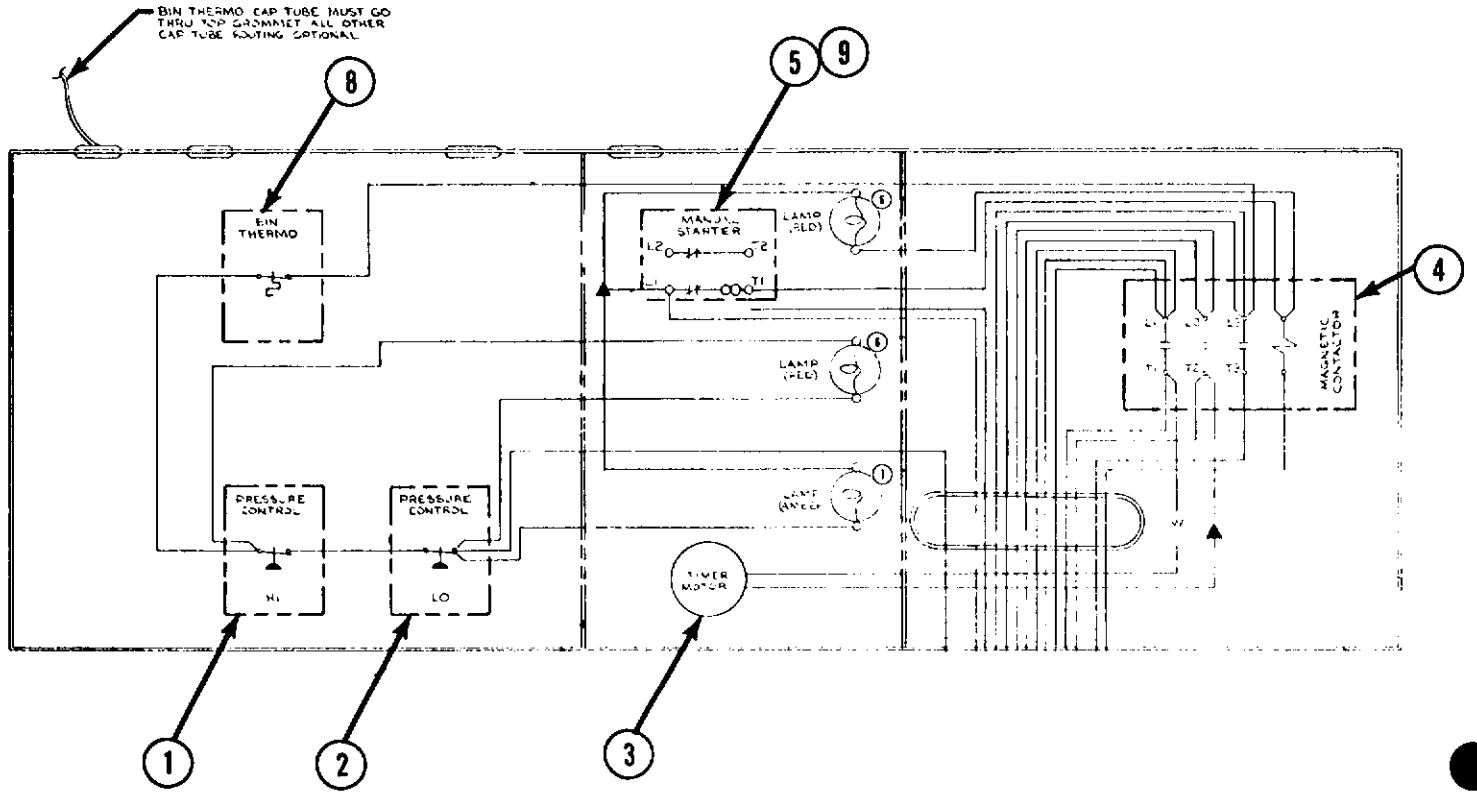

ITEM	PART NO.	DESCRIPTION
1.	11-0388-01	Hi Pressure Control
2.	11-0358-00	Lo Pressure Control
3.	12-2001-01	Elapsed Time Control
4.	12-0739-02	Contactor
5.	12-530A-00	Manual Starter/Overload
6.	12-1997-01	Light - Red
7.	12-1997-02	Light - Amber
8.	11-0354-00	Bin Thermostat
9.	12-0708	Heater, Overload (state motor manufacture and voltage when ordering)

TOP VIEW
AIR COOLED

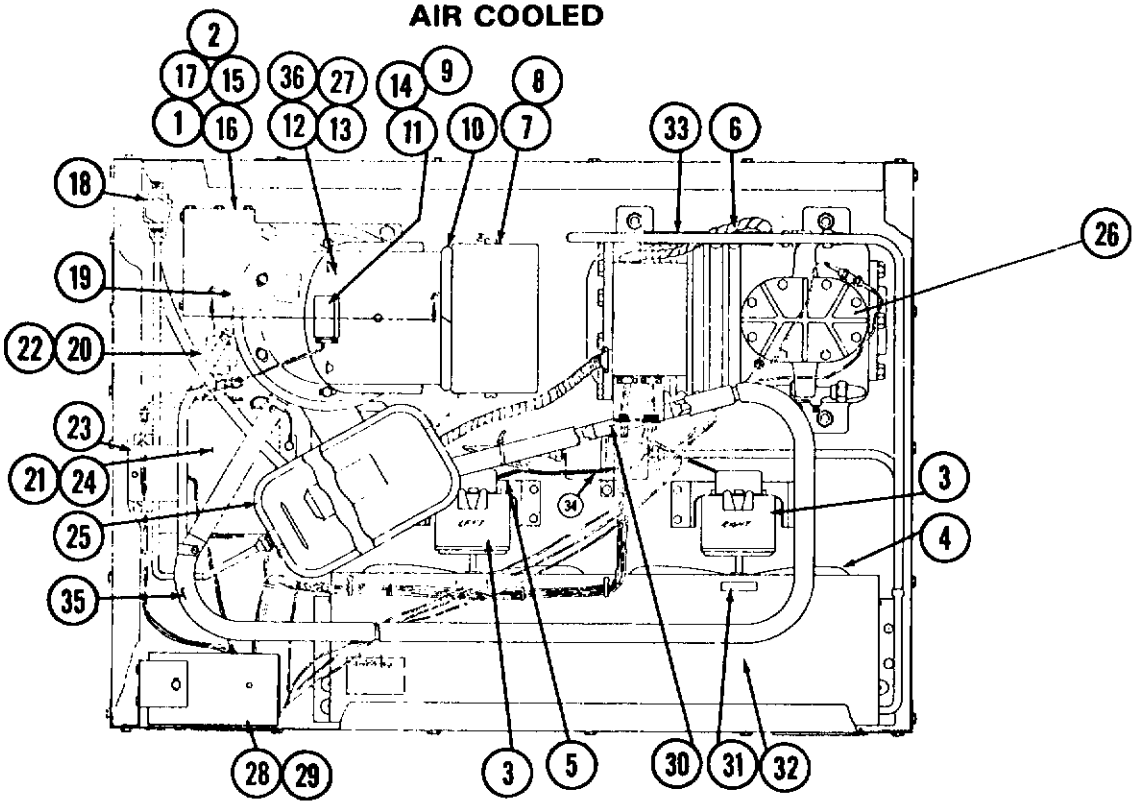

ITEM	PART NO.	DESCRIPTION
1.	A08895-000	Coupling, Reducer - Freezer
2.	A09056-000	Rubber Shield (below coupling)
3.	18-0788-02	Fan Motor 230/60/1
	18-0788-07	Fan Motor 208/60/1 and 208-220/60/3
4.	18-0787-00	Fan Blade 2/Unit
5.	18-1421-00	Fan Motor Mount 2/Unit
6.	18-0789-02	Crankcase Heater
7.	A25895-001	Ice Chute
8.	A25925-001	Ice Chute Cover
9.	A14241-000	Cover, Limit Box
10.	13-0595-00	Gasket (order per ft.)
11.	12-1018-00	Micro Switch
12.	A25965-001	Spout Only
13.	A16670-00	Spout Pressure Plate
14.	A16849-000	Spout Limit Box W/Switch
15.	02-1950-00	Key for Item #1
16.	See Page 8	Gear Reducer
17.	03-0431-02	Set Screw for Item #1
18.	16-0162-00	Water Strainer
19.	See Page 7	Freezer
20.	A18341-000	Coupling, Motor - Gear Reducer
21.	A08893-000	Mount, Motor
22.	02-1951-00	Coupling Key for Item #20
23.	11-0296-00	Water Failure Control
24.	A23610-002	Drive Motor 230/60/1
	A23610-007	Drive Motor 208/60/1 and 208-220/60/3
25.	See Page 11	Reservoir
26.	See Page 9	Compressor
27.	A16926-000	Thumb Nut
28.	A25898-001	Control Box Cover - Upper
29.	A25898-002	Control Box Cover - Lower
30.	16-0365-00	Vibration Eliminator - Lo Side
31.	18-0399-01	Air Cooled Condenser
32.	A13860-000	Shroud Condenser
33.	16-0246-00	Vibration Eliminator - Hi Side
34.	02-0822-00	Refrigerant Drier
35.	A25889-001	Suction Line Assembly
36.	A20956-001	Spacer, Spout

TOP VIEW
WATER COOLED

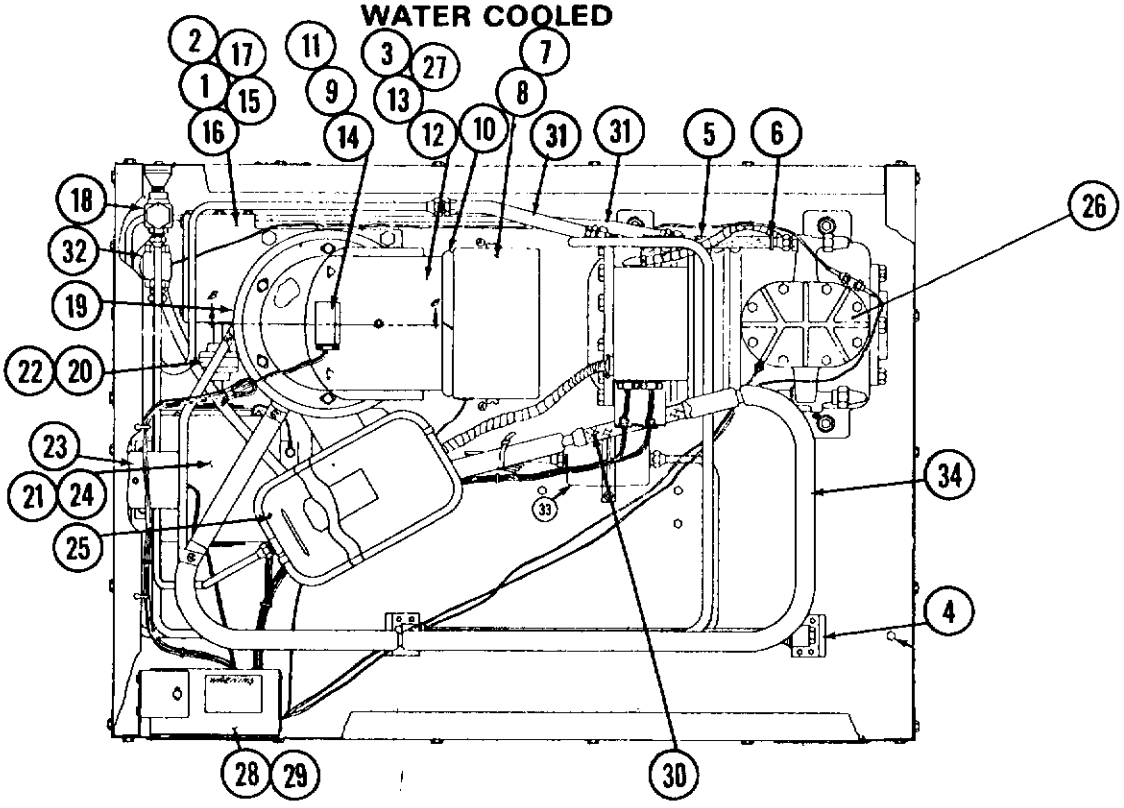

ITEM	PART NO.	DESCRIPTION
1.	A08895-000	Coupling, Reducer-Freezer
2.	A09056-000	Rubber Shield (below coupling)
3.	A20956-000	Spacer, Spout
4.	18-0754-00	Water Cooled Condenser
5.	16-0246-00	Hi Side Vibration Eliminator
6.	18-0789-02	Crankcase Heater
7.	A25895-001	Ice Chute
8.	A25925-001	Ice Chute Cover
9.	A14241-000	Cover, Limit Box
10.	13-0595-00	Gasket (order per ft.)
11.	12-1018-00	Micro Switch
12.	A25965-001	Spout Only
13.	A16670-00	Spout Pressure Plate
14.	A16849-000	Spout Limit Box W/Switch
15.	02-1950-00	Key for Item #1
16.	See Page 8	Gear Reducer
17.	03-0431-00	Set Screw for Item #1
18.	16-0162-00	Water Strainer
19.	See Page 7	Freezer
20.	A18341-000	Coupling, Motor-Gear Reducer
21.	A08893-000	Mount, Motor
22.	02-1951-00	Coupling Key for Item #20
23.	11-0296-00	Water Failure Control
24.	A23610-002	Drive Motor 230/60/1
	A23610-007	Drive Motor 208/60/1 and 208-220/60/3
25.	See Page 11	Reservoir
26.	See Page 10	Compressor
27.	A16926-000	Thumb Nut
28.	A25898-001	Control Box Cover - Upper
29.	A25898-002	Control Box Cover - Lower
30.	16-0365-00	Vibration Eliminator - Lo Side
31.	16-0271-00	Water Hose 2/Unit
32.	11-0198-00	Water Regulating Valve
33.	02-0822-00	Refrigerant Drier
34.	A25889-001	Suction Line Assembly

FREEZER ASSEMBLY

NOTE: Ice breaker has ten holes around circumference, six of these are used to secure breaker to freezer barrel. The four remaining holes are threaded and are used to lift breaker and worm shaft up. You remove the six holding screws, re-insert (4) screws into lifter or threaded holes, these have no bottom on barrel and by evenly drawing them down, ice breaker and worm is lifted up.

NOTE: Lower bearing or water seal cannot be changed from bottom must be pulled out from on top.

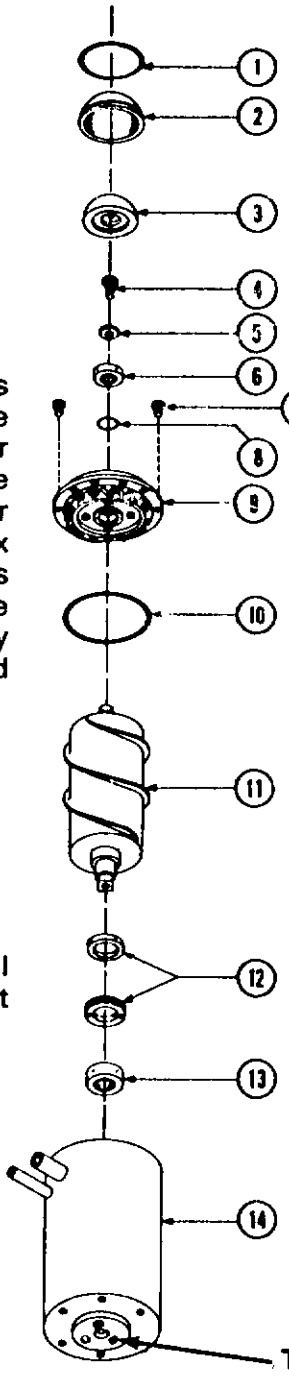

ITEM	PART NO.	DESCRIPTION
1.	13-0617-18	O-Ring
2.	13-0231-00	Rubber Cap
3.	A09047-000	Styrofoam Cap
4.	03-1405-36	Screw
5.	A06273-000	Washer
6.	02-0619-00	Top Bearing
7.	03-1405-25	Screws (6 required)
8.	13-0617-15	O-Ring
*9.	A11351-000	Ice Breaker W/Bearing
10.	13-0617-17	O-Ring
11.	A26075-001	Auger
12.	02-0776-00	Water Seal
13.	02-0775-00	Lower Bearing
14.	A08858-000	Freezer Worm Tube

* A11351-001 Ice Breaker W/Bearing (Large Chunk - Sharp Tooth)

NOTE:

Lower bearing or water seal should be removed by pulling from the top. If bearing is worn badly and cannot be removed with a bearing puller, it can be pushed out by using three (3) 1/4 x 30 screws three inches long inserted in the tapped holes provided in the lower bearing retainer.

GEAR REDUCER SF8
Part No. 02-0768-00
Ratio 432 to 1

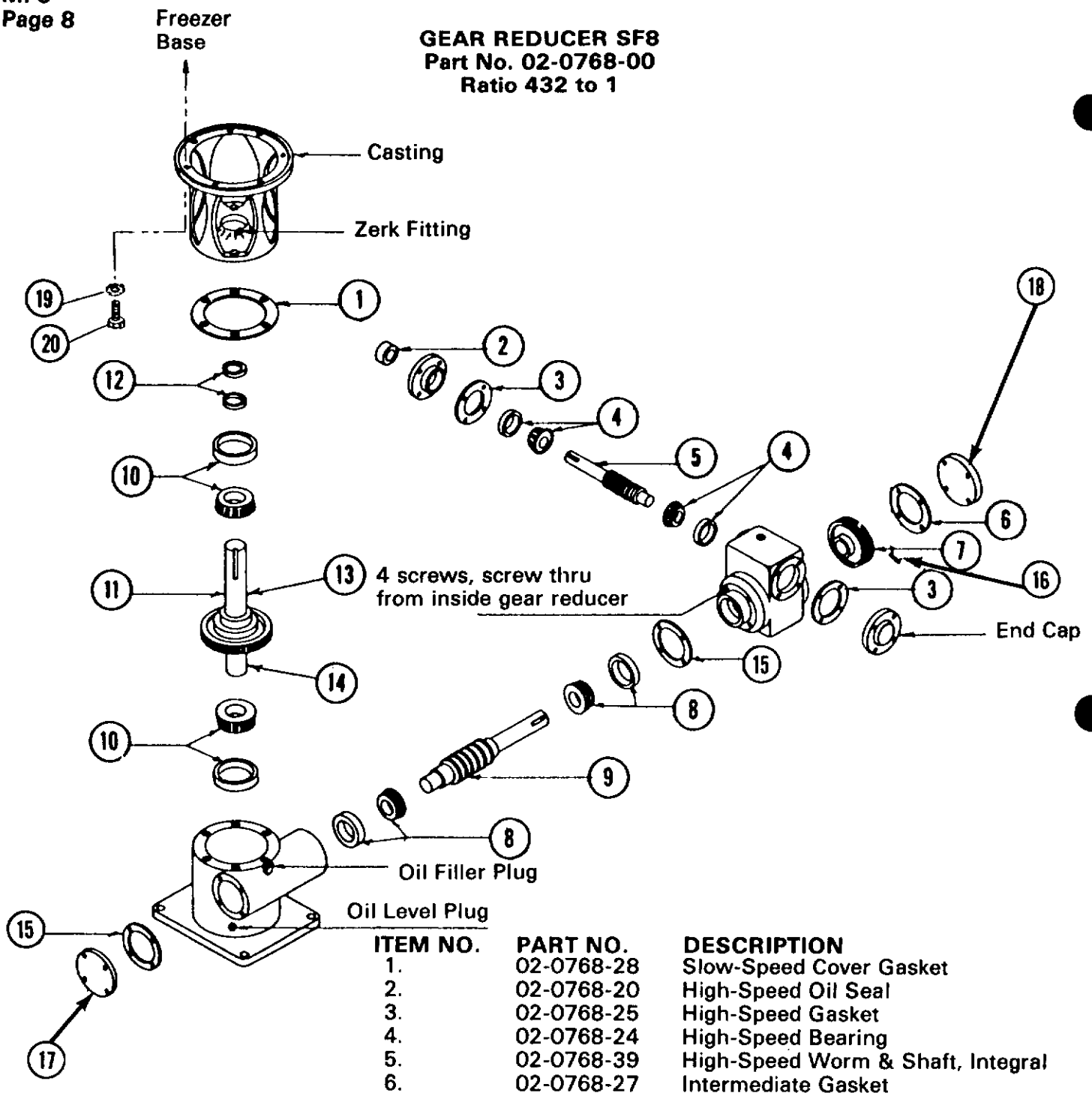

ITEM NO.	PART NO.	DESCRIPTION
1.	02-0768-28	Slow-Speed Cover Gasket
2.	02-0768-20	High-Speed Oil Seal
3.	02-0768-25	High-Speed Gasket
4.	02-0768-24	High-Speed Bearing
5.	02-0768-39	High-Speed Worm & Shaft, Integral
6.	02-0768-27	Intermediate Gasket
7.	02-0768-40	High-Speed Gear
8.	02-0768-23	Intermediate Roller Bearing
9.	02-0768-38	Intermediate Worm & Shaft, Integral
10.	02-0768-22	Slow-Speed Bearing
11.	02-0768-42	Slow-Speed Gear & Shaft Assembly
12.	02-0768-21	Slow-Speed Oil Seal
13.	02-0768-29	Slow-Speed Spacer (short)
14.	02-0768-30	Slow-Speed Spacer (long)
15.	02-0768-26	Gasket
16.	02-0768-37	Key & Pin
17.	02-0768-43	Intermediate Cap - Closed
18.	02-0768-44	High-Speed Attachment Housing Cover
19.	03-1407-07	Lockwasher
20.	03-1420-02	Screw

2 HP Air Cooled, Copeland

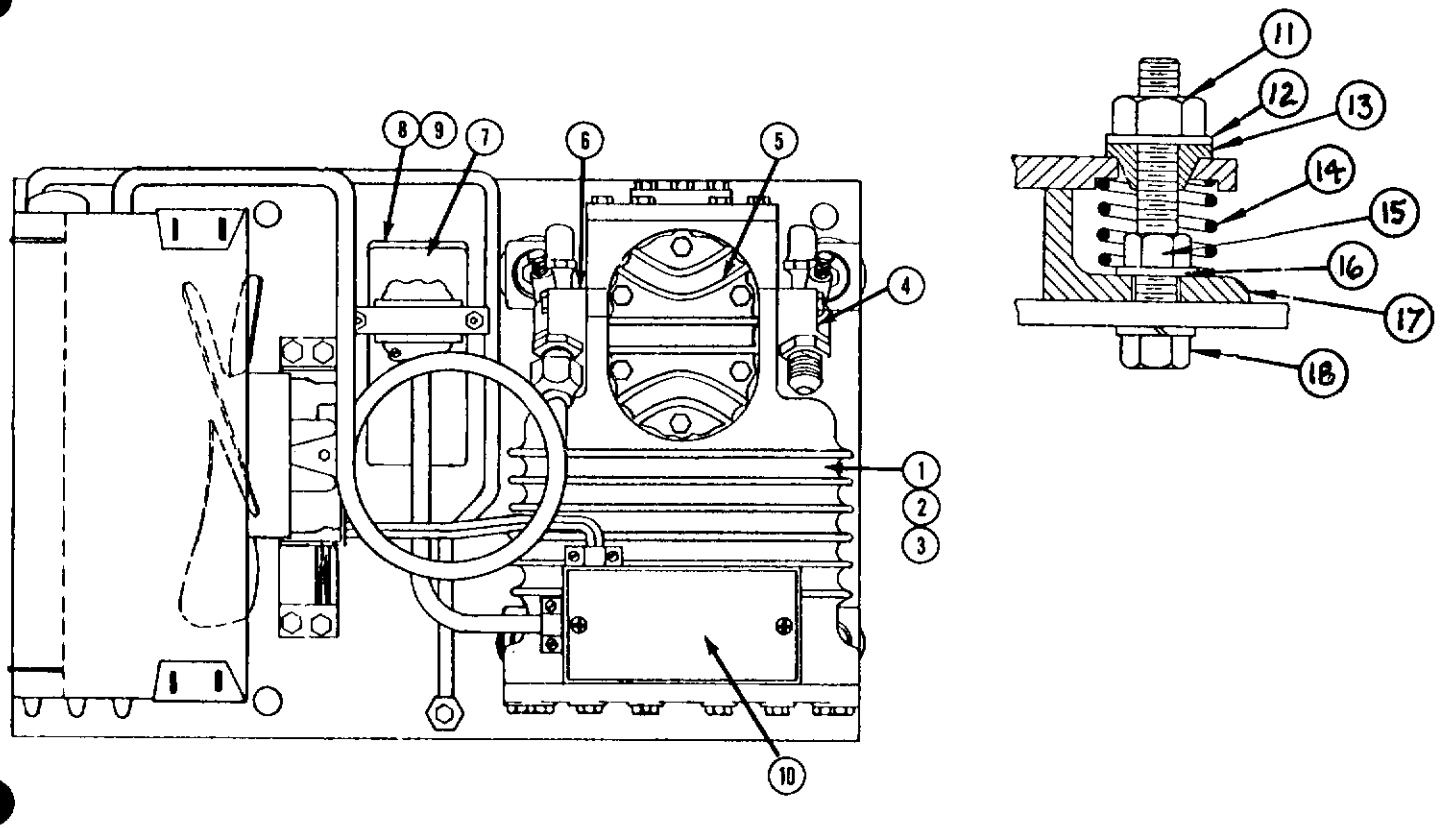

* NOTE: Simulated drawing for part identification. Component location differs in actual unit. Condenser has two fan motors, etc.

ITEM	DESCRIPTION	PART NO.		
		208/60/1	230/60/1	208-220/60/3
1.	Motor Compressor Copeland Model: EAL2-0200-CAH	18-0711-00		
2.	Motor Compressor Copeland Model: EAL2-0200-CAB		18-0700-00	
3.	Motor Compressor Copeland Model: EAL1-0200-TAC			18-0763-00
4.	Suction Service Valve	18-0732-00	Same	Same
5.	Valve Plate Kit	18-0722-00	Same	Same
6.	Discharge Service Valve	18-1909-00	Same	Same
7.	Compressor Relay	18-1903-21	18-1903-21	None
8.	Start Capacitor (320 Volts - 135-155 MFD)	18-1901-23	18-1901-23	None
9.	Run Capacitor (440 Volts - 25 MFD)	18-1902-23	18-1902-23	None
10.	Klixon Overload	18-0734-00	18-0734-00	None
		PART NO. ALL UNITS.		
11.	Nut, Mounting	18-1400-24		
12.	Washer	03-1407-10		
13.	Rubber Washer	18-1400-25		
14.	Spring, Gray	18-0700-12		
15.	Nut, Mounting	18-1400-22		
16.	Washer	18-0700-11		
17.	Pad, Mounting	18-1400-26		
18.	Stud, Mounting	18-0700-10		

2 HP Water Cooled, Copeland

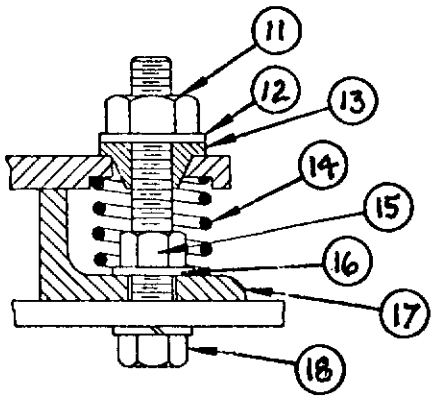

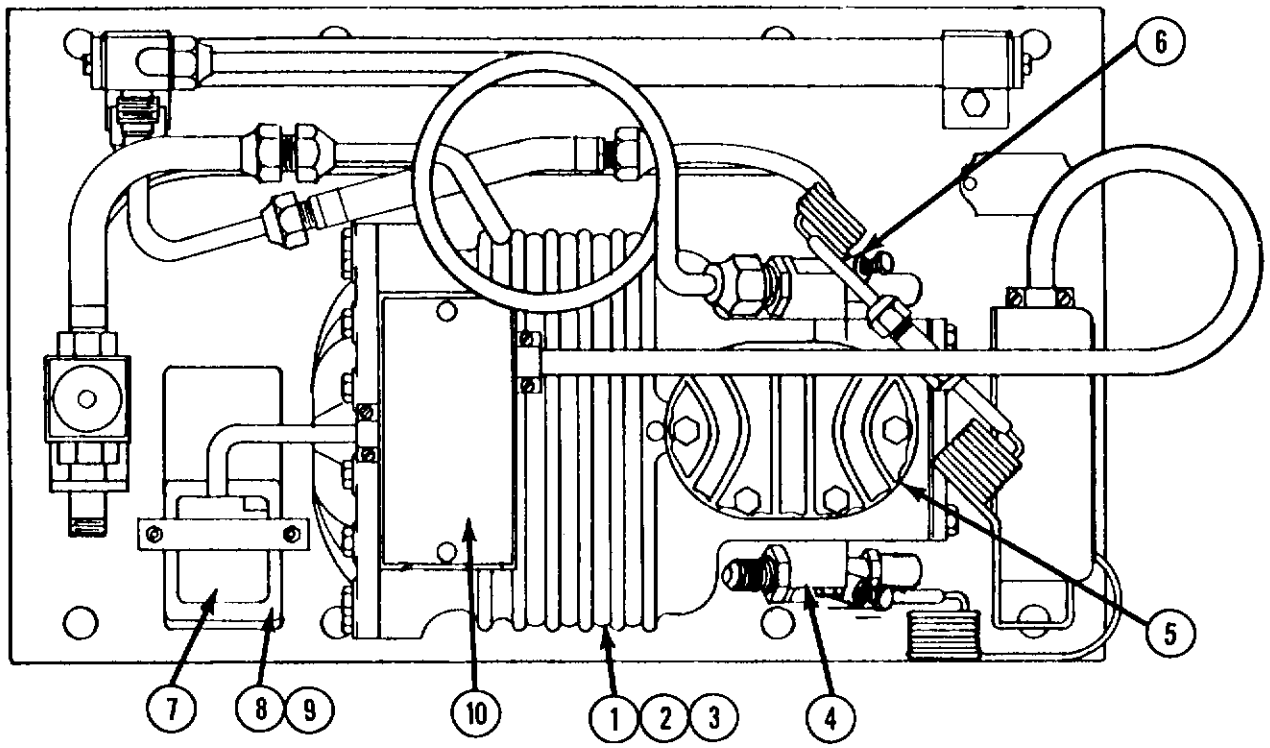

* NOTE: Simulated drawing only for parts identification. Component location differs in actual unit.

ITEM	DESCRIPTION	PART NO.		
		208/60/1	230/60/1	208-220/60/3
1.	Motor Compressor Copeland Model: EWL2-0200-CAH	18-0704-00		
2.	Motor Compressor Copeland Model: EWL2-0200-CAB		18-0702-00	
3.	Motor Compressor Copeland Model: EWL1-0200-TAC			18-0718-00
4.	Suction Service Valve	18-0732-00	Same	Same
5.	Valve Plate Kit	18-0722-00	Same	Same
6.	Discharge Service Valve	18-1909-00	Same	Same
7.	Compressor Relay	18-1903-21	18-1903-21	None
8.	Start Capacitor (320 Volt - 135-155 MFD)	18-1901-23	18-1901-23	None
9.	Run Capacitor (440 Volt - 25 MFD)	18-1902-23	18-1902-23	None
10.	Klixon Overload	18-0734-00	18-0734-00	None
		PART NO. ALL UNITS		
11.	Nut, Mounting	18-1400-24		
12.	Washer	03-1407-10		
13.	Spacer, Rubber	18-1400-25		
14.	Spring, Gray	18-0700-12		
15.	Nut, Mounting	18-1400-22		
16.	Washer	18-0700-11		
17.	Pad, Mounting	18-1400-26		
18.	Stud, Mounting	18-0700-10		

RESERVOIR ASSEMBLY

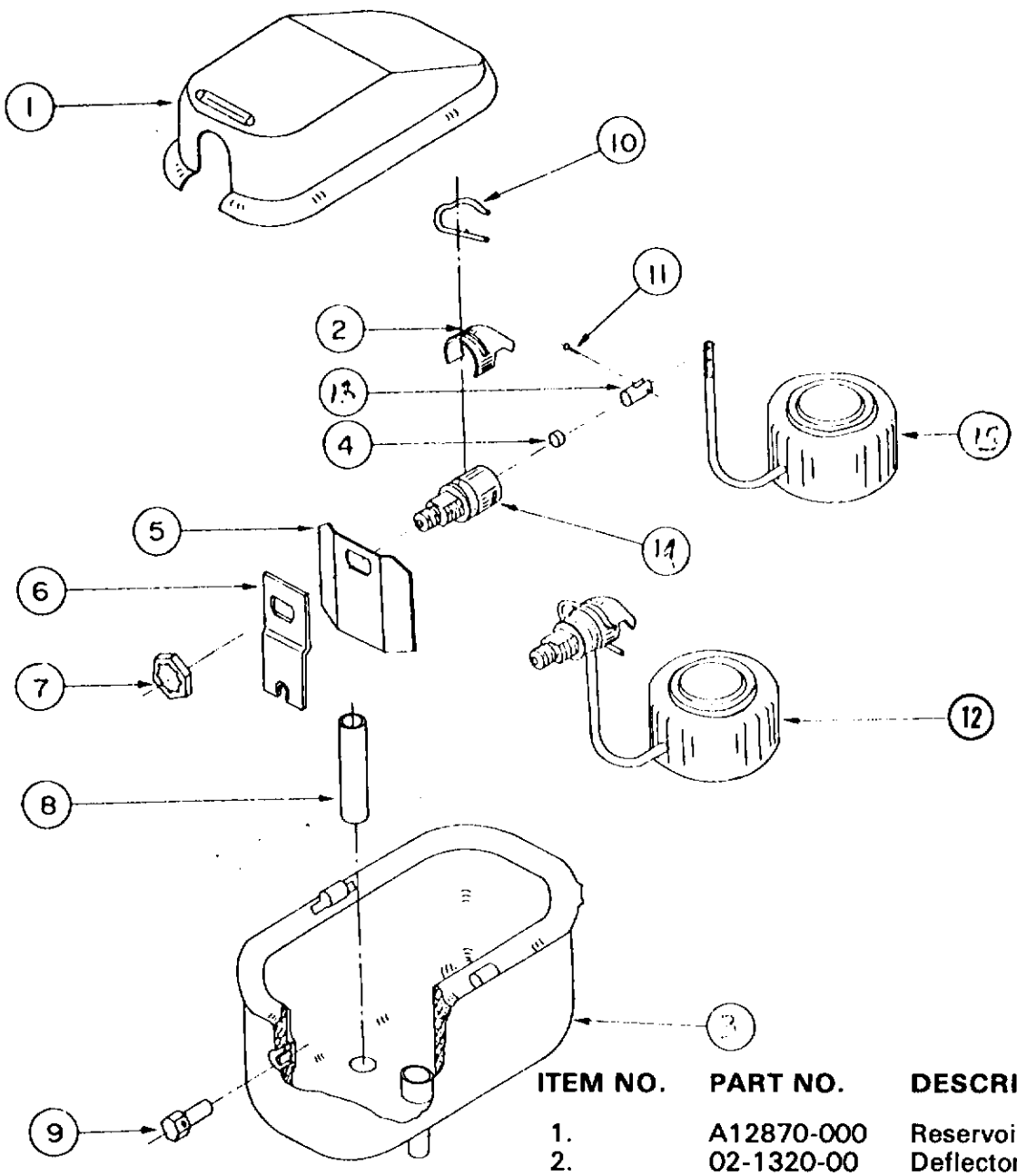

ITEM NO.	PART NO.	DESCRIPTION
1.	A12870-000	Reservoir Cover
2.	02-1320-00	Deflector
3.	A13413-000	Reservoir Body
4.	S06947-000	Valve Seat
5.	A18418-000	Water Deflector
6.	A12869-000	Bracket
7.	S07044-000	Nut
8.	S06715-000	Stand Pipe
9.	A08055-000	Bracket Nut
10.	02-1259-00	Valve Pin
11.	03-1001-00	Rivet
12.	A09101-000	Valve Complete Includes Items 2, 4, 10, 11, 13, 14, & 15
*13.		Seat Holder
*14.		Water Inlet Valve
*15.		Float

Not Available Separate
*Use Item 12

A08868-000 Reservoir Complete
(Less Items 1 and 8)

CABINET PARTS

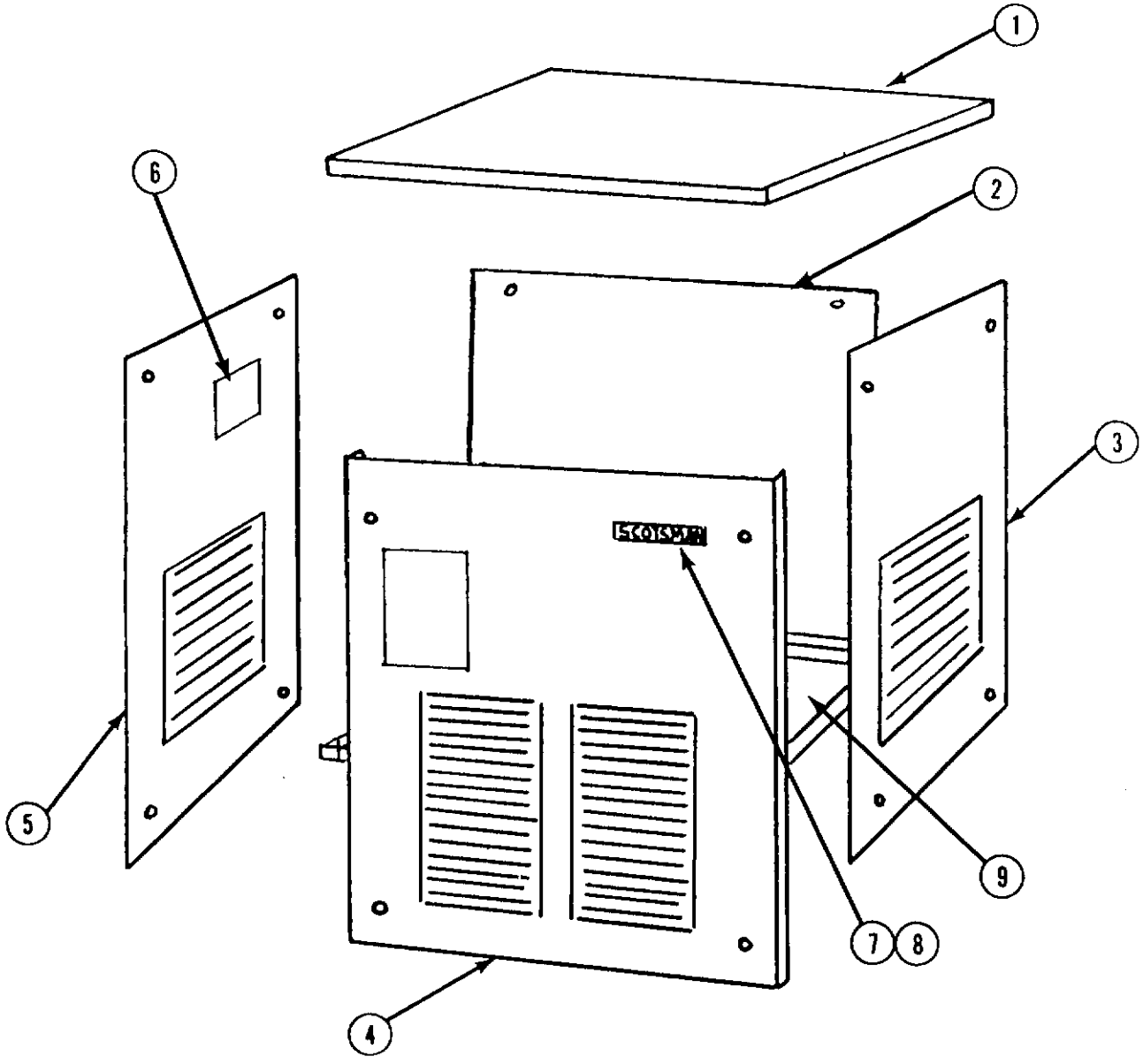

ITEM NO.	DESCRIPTION	ENAMEL	STAINLESS STEEL
1.	Panel, Top	A25883-003	A25883-002
2.	Panel, Rear	A25885-003	A25885-002
3.	Panel, Right Side	A25881-003	A25881-002
4.	Panel, Front	A25882-003	A25882-002
5.	Panel, Left Side	A25879-003	A25879-002
6.	Cover	A25919-003	A25919-002
7.	Emblem	15-0156-00	15-0156-00
8.	Push Nut (2)	03-0271-00	03-0271-00
9.	Base Assy	A25876-001	A25876-001
10.	Bottom, Base	A25888-001	A25888-001
11.	Screws, Panel	03-1405-01	03-1405-01

THIS SECTION LISTS THE CABINET PARTS ONLY FOR PRE-MIX UNITS.

FOR PARTS LISTING OF THE CHASSIS ASSEMBLY CONTAINING THE CONDENSING UNIT AND ICE-MAKING COMPONENTS OF PRE-MIX MACHINES REFER TO THE FOLLOWING SECTIONS.

CC2A	REFER TO SF2A
CC650J	REFER TO SF2J
CC1A	REFER TO SF1A
CC350J	REFER TO SF1J
CC75B	REFER TO SF75B
CC75A	REFER TO SF75A
CC225J	REFER TO SF75J

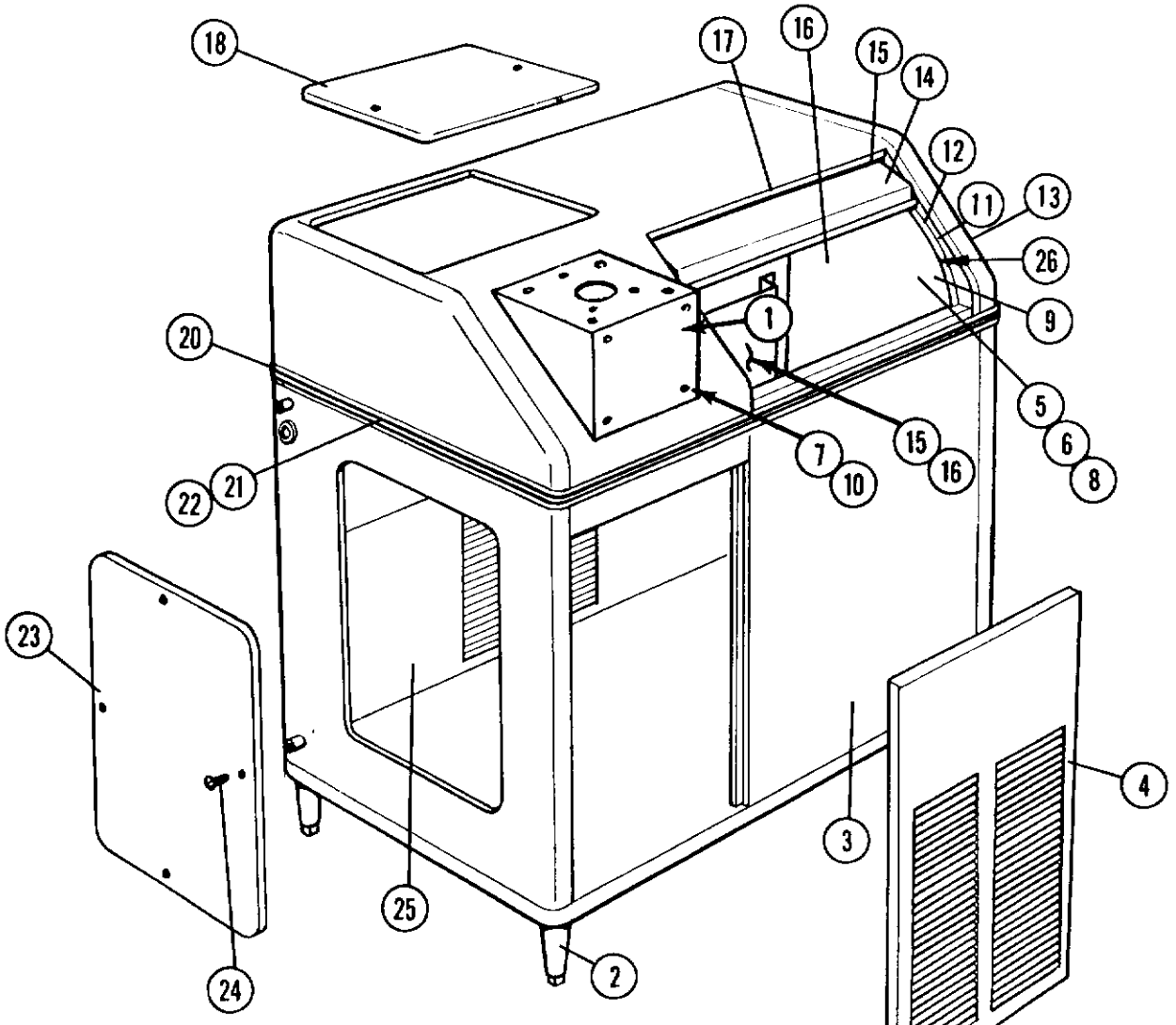

ITEM	PART NO.	NAME
1.	A17497-000	Cover, Mount Front
2.		Leg Kit (order thru Sales Dept.)
3.	A20288-002	Case Assy.
4.	A21250-001	Front Door
5.	02-1742-00	Drain Bottom
6.	13-0617-11	O-Ring, Drain
7.	03-1404-07	Screw (2)
8.	02-1741-00	Drain Top
9.	A19738-000	Storage Bin Assy.
10.	03-1421-07	Speed Nut
11.	03-0640-00	Door Glides (Door)
12.	03-1195-00	Door Glides (Hood)
13.	A20994-000	Hood Assy.
14.	A15559-000	Sliding Door
15.	A18203-000	Rt. Hose Baffle
16.	A18204-000	Lt. Hose Baffle
17.	02-1736-00	Door Stop
18.	A07676-002	Top Door
20.	A05829-000	Rear Trim Strip
21.	15-0324-00	Plastic Trim (per foot)
22.	S06413-000	Front Moulding Strip
23.	S06713-001	Side Door
24.	03-1419-09	Screw S.S.
25.	A08741-001	Rear Door
26.	A16208-000	Door Track

CC650J & CC2A
CASE and HOOD ASSY.

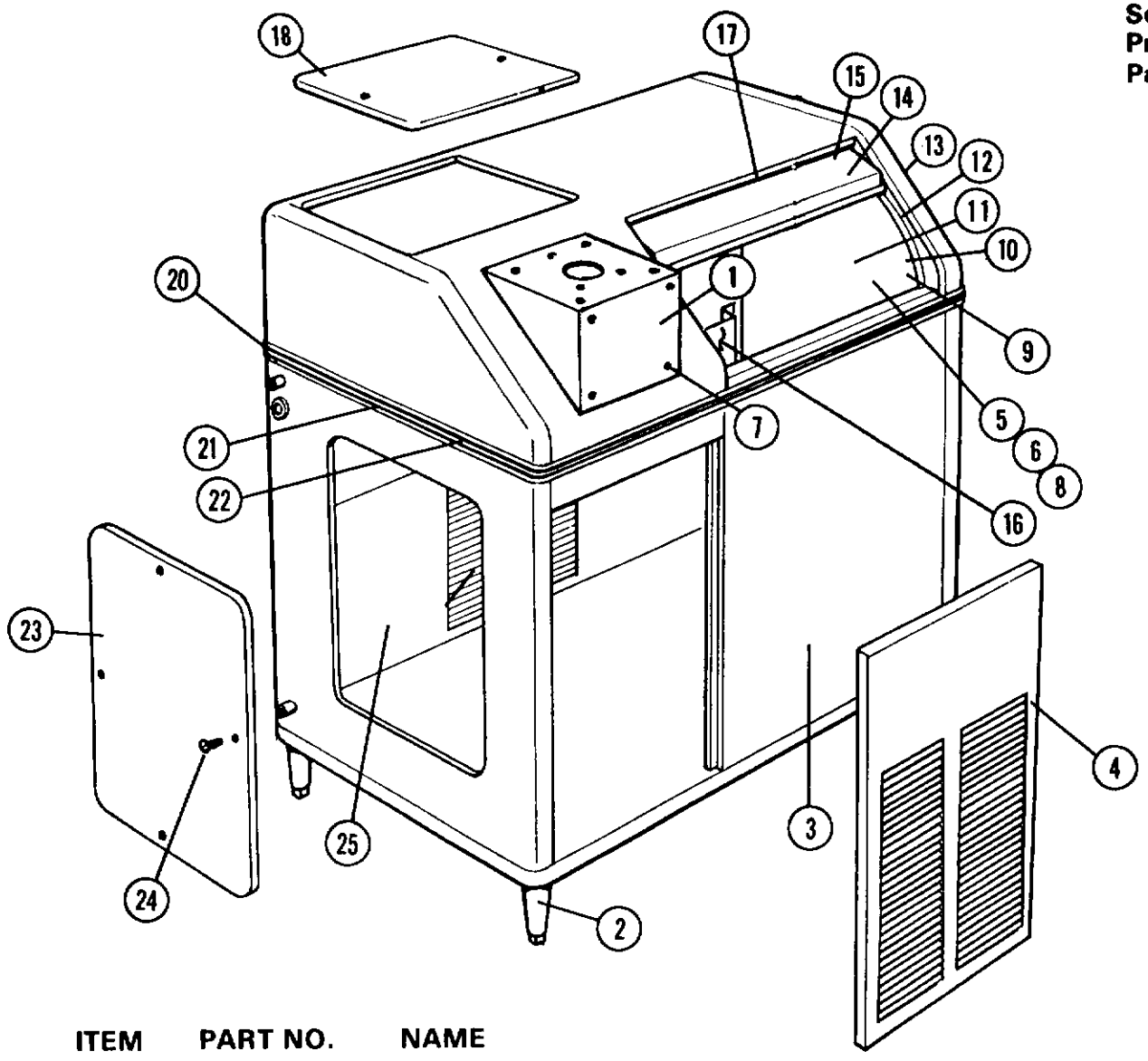

ITEM	PART NO.	NAME
1.	A17497-000	Cover, Mount
2.		Leg Kit (order from Sales)
3.	A20586-001	Case Assy. (Less Doors)
4.	A15791-001	Front Door
5.	02-1741-00	Drain Top
6.	13-0617-11	O-Ring (Drain)*
7.	03-1404-07	Screw (2)
8.	02-1742-00	Drain Bottom
9.	A19044-000	Storage Bin Assy.*
10.	03-0640-00	Door Glides (Door)*
12.	03-1195-00	Door Glides (Hood)*(3)
13.	A20947-000	Case Hood Assy.
14.	A15559-000	Sliding Door
15.	A16208-000	Door Track
16.	A17561-000	Baffle, Hose
17.	02-1736-00	Door Stop
18.	A07676-002	Top Door
20.	A05796-000	Rear Trim
21.	15-0324-00	Plastic Moulding Trim (per ft.)
22.	S03646-000	Front Moulding Strip
23.	S06713-001	Side Door
24.	03-1419-09	Screw (S.S.)
25.	A08740-001	Rear Door

CC350J & CC1A
CASE and HOOD ASSY.

CC225J, CC75A & CC75B
CASE and HOOD ASSY.

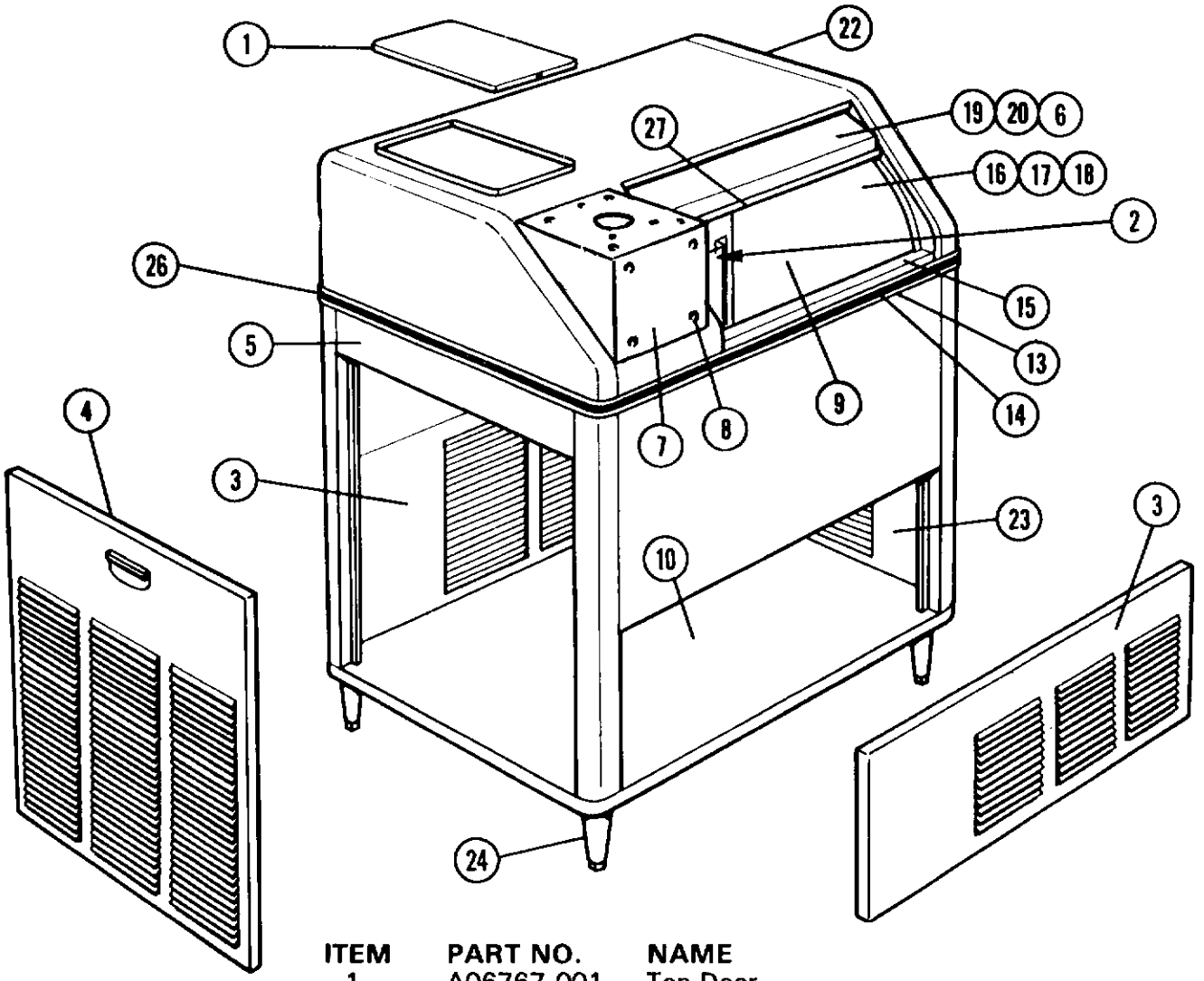

ITEM	PART NO.	NAME
1.	A06767-001	Top Door
2.	A17565-000	Baffle, Hoses
3.	A16563-001	Back & Front Door
4.	S09405-001	Left Door
5.	A07714-001	Left Panel
6.	02-1736-00	Door Stop
7.	A17497-000	Mount Cover
8.	03-1404-07	Screws (2)
9.	A18893-000	Storage Bin Assy.
10.	A18291-002	Case Assy.
13.	A06510-000	Front Moulding
14.	15-0324-00	Plastic Insert (order per ft.)
15.	A16208-000	Door Track Assy.
16.	02-1742-00	Drain, Bottom
17.	02-1741-00	Drain, Top
18.	13-0617-11	O-Ring, Drain
19.	A15559-000	Sliding Door
20.	03-0640-00	Door Glide (Door)*
21.	03-1195-00	Door Glide (Hood)* (3)
22.	A20940-000	Hood Assy.
23.	A16561-001	Right Door
24.		Leg Kit (order from sales)

CC2-A CASE AND HOOD ASSY.

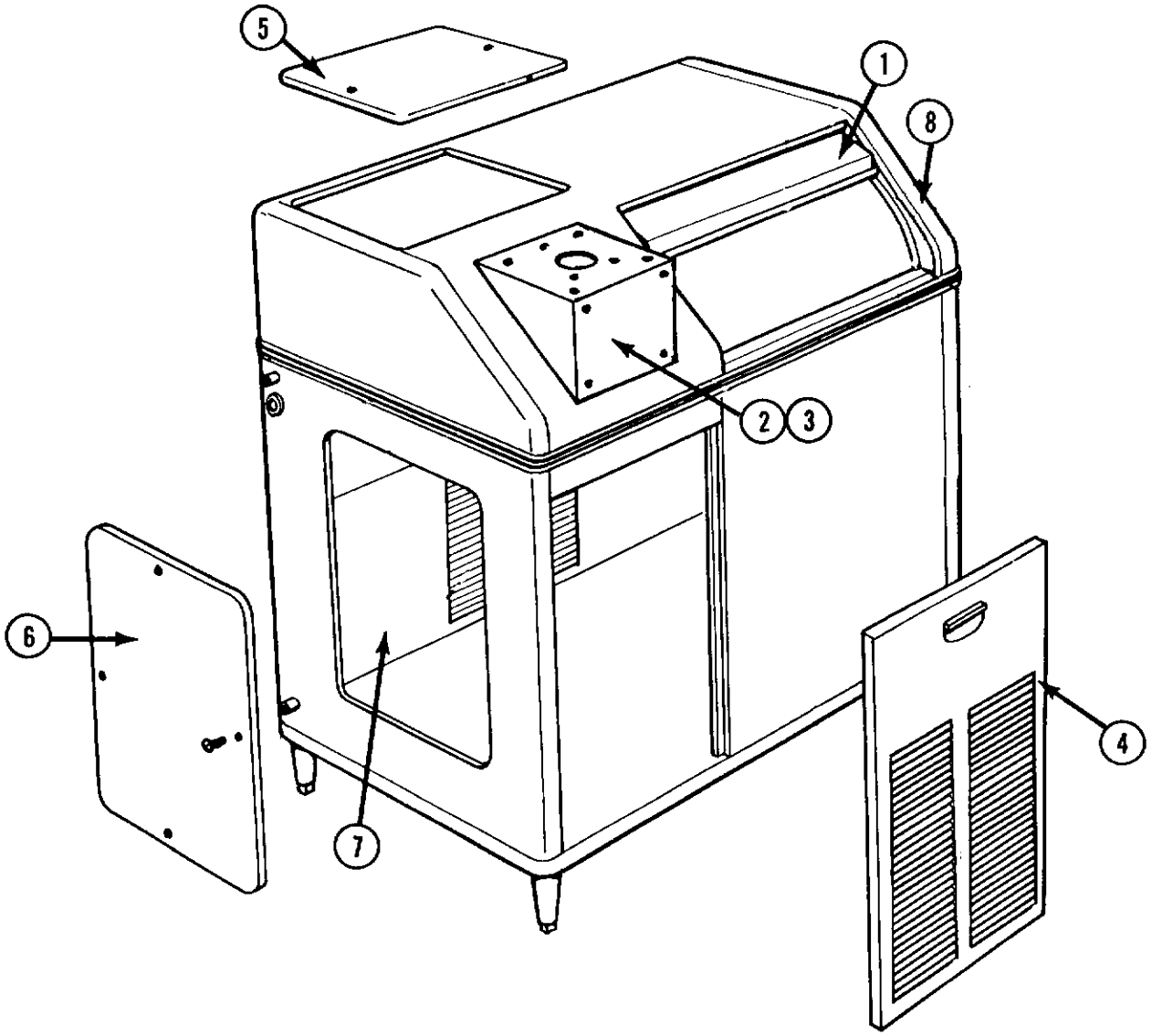

ITEM NO.	PART NO.	DESCRIPTION
1.	A15559-000	Ice Access Door
2.	A17497-000	Cover
3.	A18001-000	Top Mounting Plate
4.	A21250-001	Front Door Panel
5.	A07676-002	Top Service Door
6.	S06713-001	Side Door
7.	A08741-001	Rear Door
8.	A20994-000	Case Hood Ass'y.
9.	A20288-002	Case Fab Ass'y.
10.	A18207-000	Cold Plate Support
11.	A19738-000	Storage Bin

*All Other Parts Are Common To SF2A Model

PH2-A CASE AND HOOD ASSY

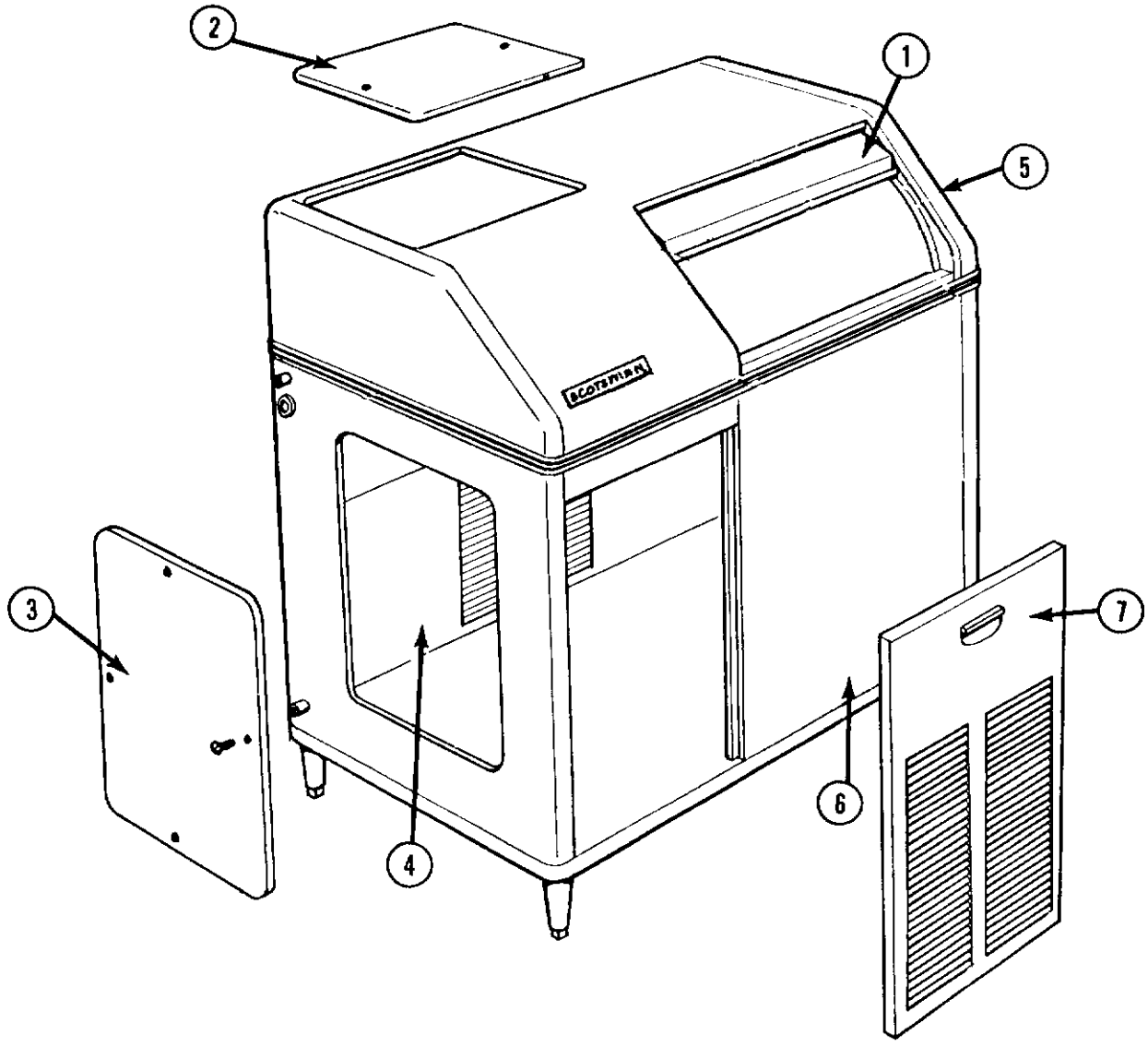

ITEM NO.	PART NO.	DESCRIPTION
1.	02-1735-01	Ice Access Door
2.	A07676-005	Top Service Door
3.	S06713-008	Side Door
4.	A08741-008	Rear Door
5.	A20992-008	Case Hood Assy.
6.	A20288-010	Case Fab Assy.
7.	A21250-008	Front Door Panel

*All Other Parts Are Common To SF2A Model Flaker.

RIGHT END VIEW

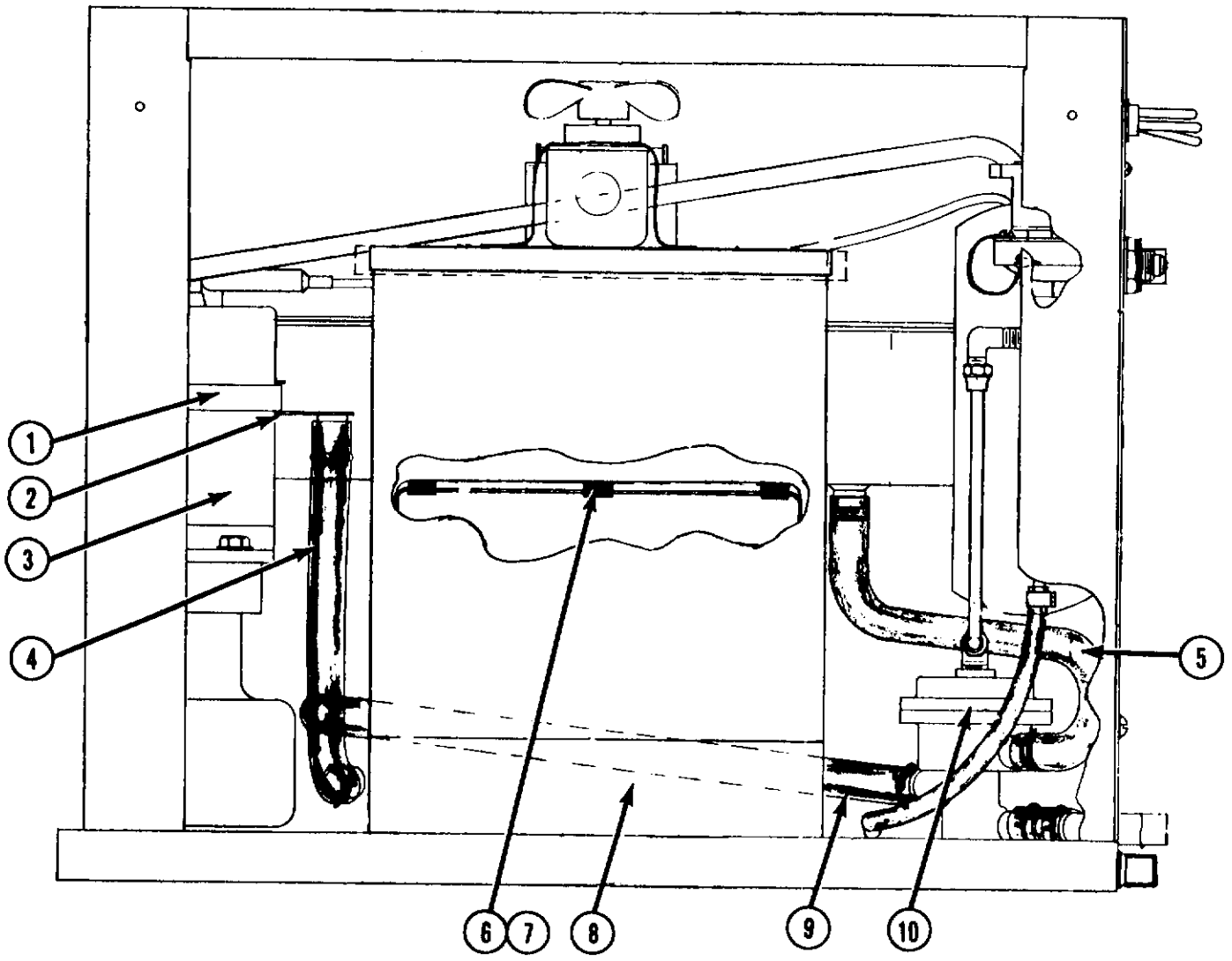

ITEM NO.	PART NO.	DESCRIPTION
1.	02-0706-00	Clamp
2.	A24056-001	Tube Bracket
3.	12-1930-01	Water Pump
4.	13-0674-07	Tubing (Order Per Ft.)
5.	05-0509-01	Tube Platen Drain
6.	03-1526-01	Curtain Clips (3)
7.	02-2038-01	Curtain Assy.
8.	02-2148-01	Cube Chute & Cover
9.	05-0501-01	Tube
10.	See Page 9	3 Way Valve

WATER COOLED
Top View

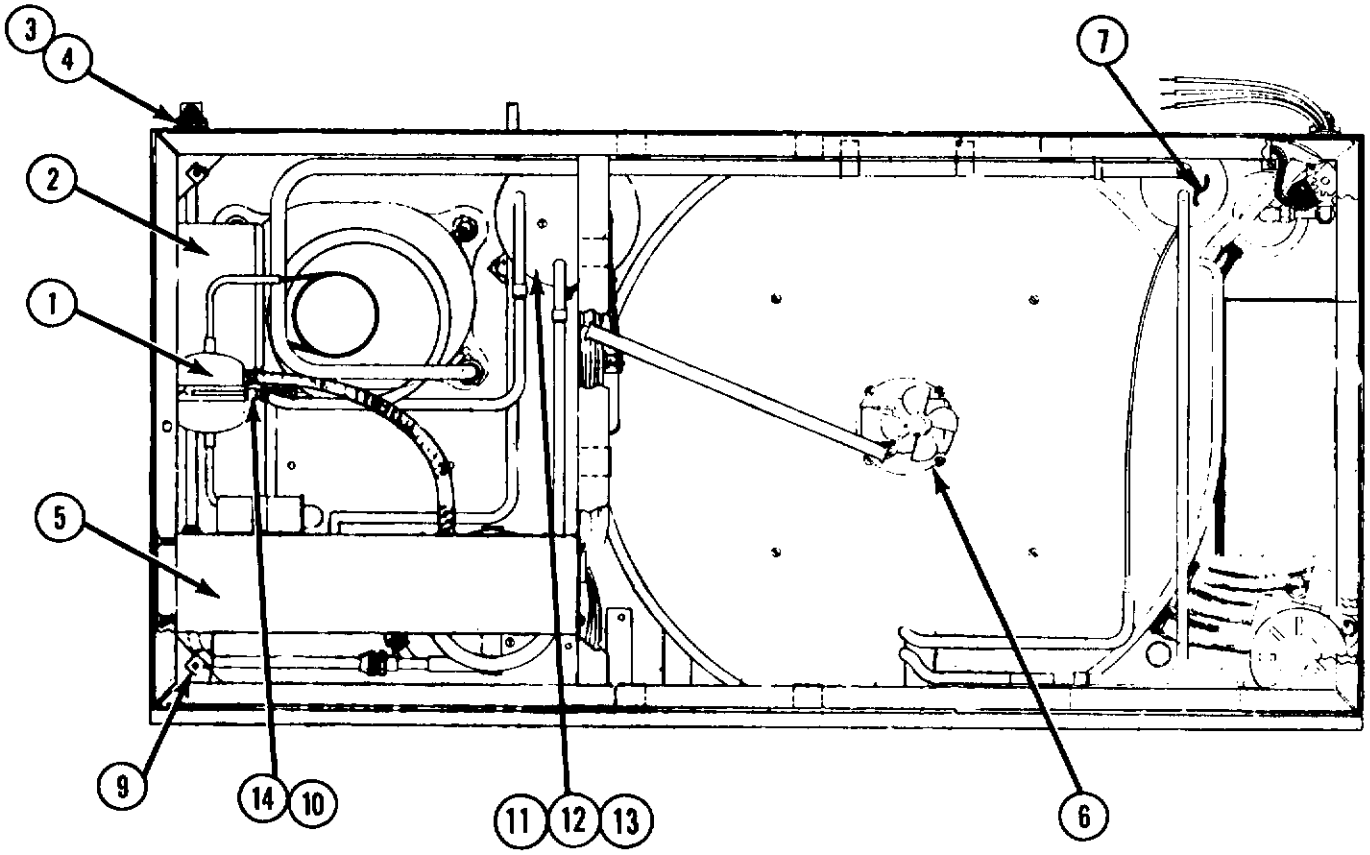

ITEM NO.	PART NO.	DESCRIPTION
1.	02-2187-01	Drier
2.	See Page 11	Compressor
3.	03-1409-06	Fiber Washer
4.	03-1394-01	Pal Nut
5.	See Page 10	Control Box
6.	See Page 7	Agitator Motor
7.	A23796-001	Suction Line Accumulator
8.	16-0162-01	Strainer (Not Shown)
9.	03-1423-02	Speed Nut
10.	16-0563-00	Valve Cap
11.	A19233-000	Bracket Tank
12.	03-0571-00	Screw
13.	A23790-001	Tank Assy.
14.	16-0560-00	Valve Core

AIR COOLED
Top View

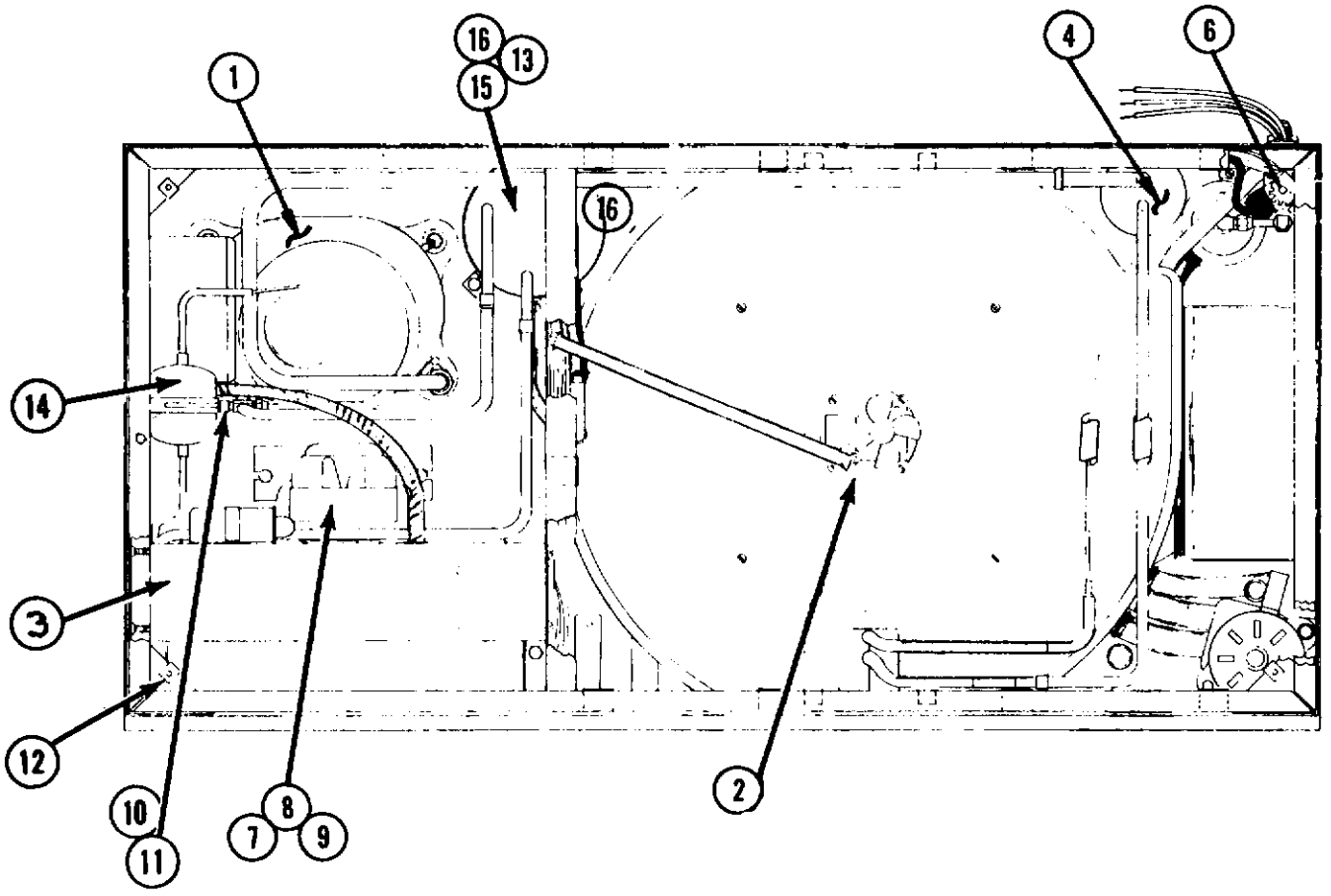

ITEM NO.	PART NO.	DESCRIPTION
1.	See Page 11	Compressor
2.	See Page 7	Agitator Motor
3.	See Page 10	Control Box
4.	A23796-001	Suction Line-Accumulator
5.	16-0162-01	Strainer (Not Shown)
6.	12-1434-01	Inlet Water Solenoid Valve
7.	12-1681-01	Fan Motor
8.	18-0625-00	Fan Blade
9.	A25548-001	Fan Motor Bracket
10.	16-0560-00	Valve Core
11.	16-0563-00	Valve Cap
12.	03-1423-02	Speed Nut
13.	A23790-001	Hot Water Tank
14.	02-2187-01	Drier
15.	A19233-000	Tank Bracket
16.	03-0571-00	Screw

WATER COOLED
Front View

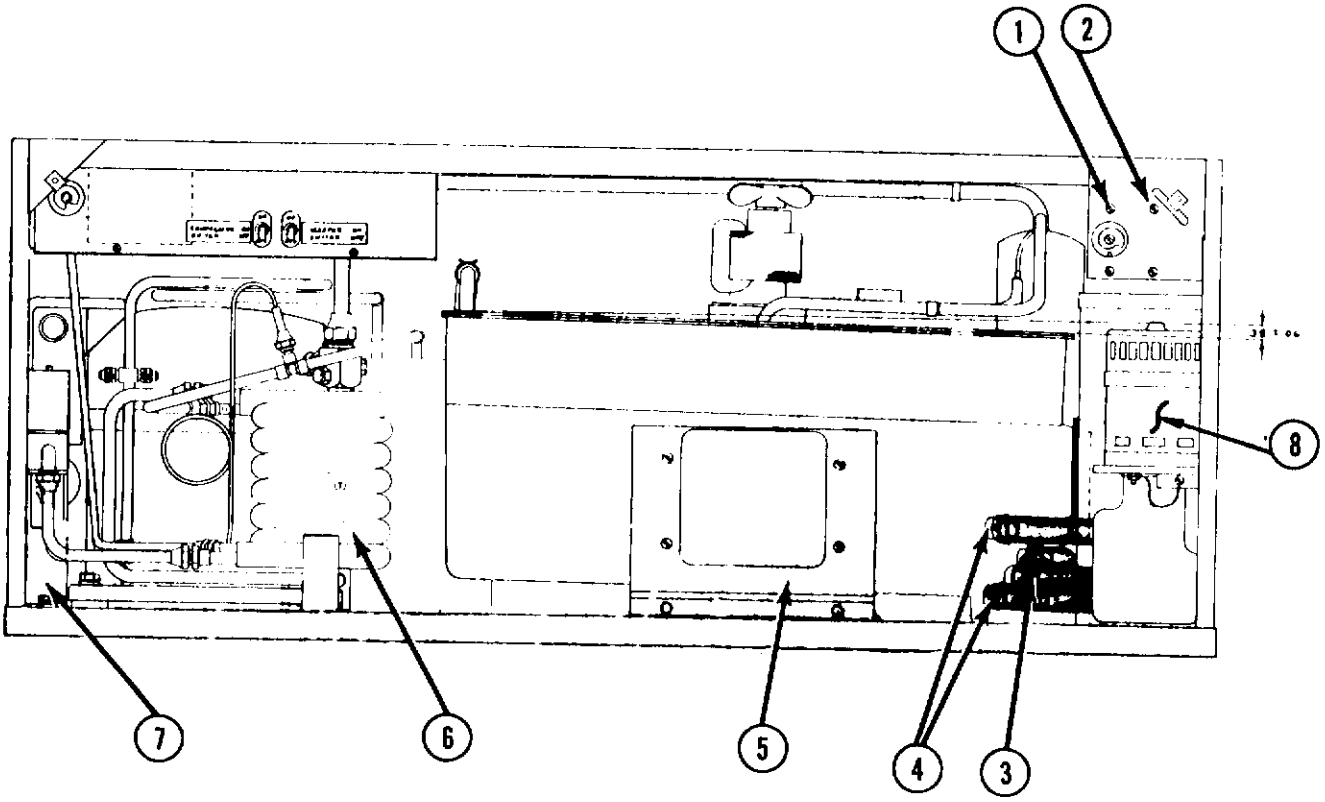

ITEM NO.	PART NO.	DESCRIPTION
1.	11-0345-02	MCL & MCM Cube Size Control
	11-0351-03	MCS Cube Size Control
2.	11-0353-03	Bin Control
3.	02-0179-00	Screw Type Hose Clamp
4.	02-1358-00	Spring Hose Clamp
5.	See Page 7	Freezer Assy.
6.	18-3305-02	Condenser Assy.
7.	11-0198-00	Water Regulator
8.	See Page 8	Water Pump

AIR COOLED
Front View

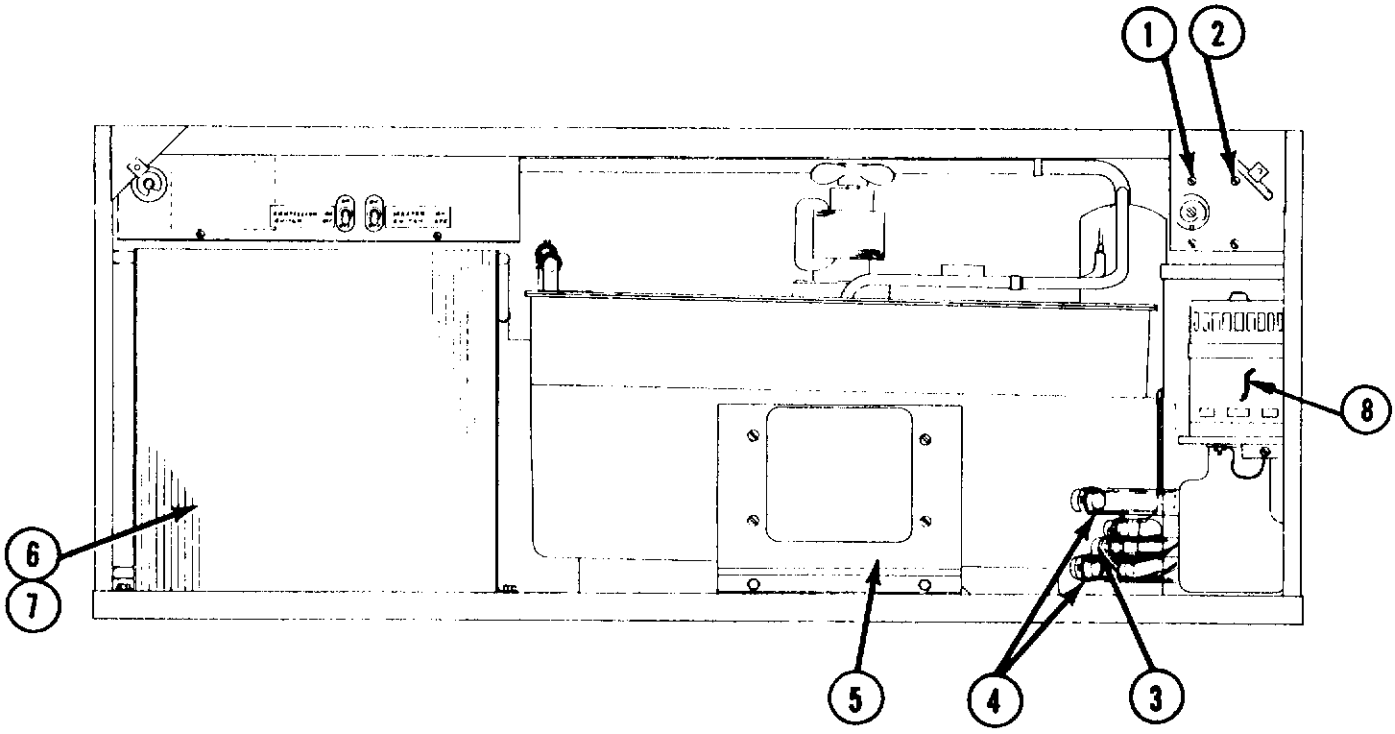

ITEM NO.	PART NO.	DESCRIPTION
1.	11-0345-02	MCM & MCL Cube Size Control
	11-0351-03	MCS Cube Size Control
2.	11-0353-03	Bin Control
3.	02-0179-00	Screw Type Hose Clamp
4.	02-1358-00	Spring Hose Clamp
5.	See Page 7	Freezer Assy.
⚠1 6.	18-0396-00	Condenser
7.	A23825-001	Shroud
8.	See Page 8	Water Pump

NOTE:

⚠1 Check Scotsman bulletin PS-2-74 if old condenser is the steel Karmazon type.

CABINET PARTS

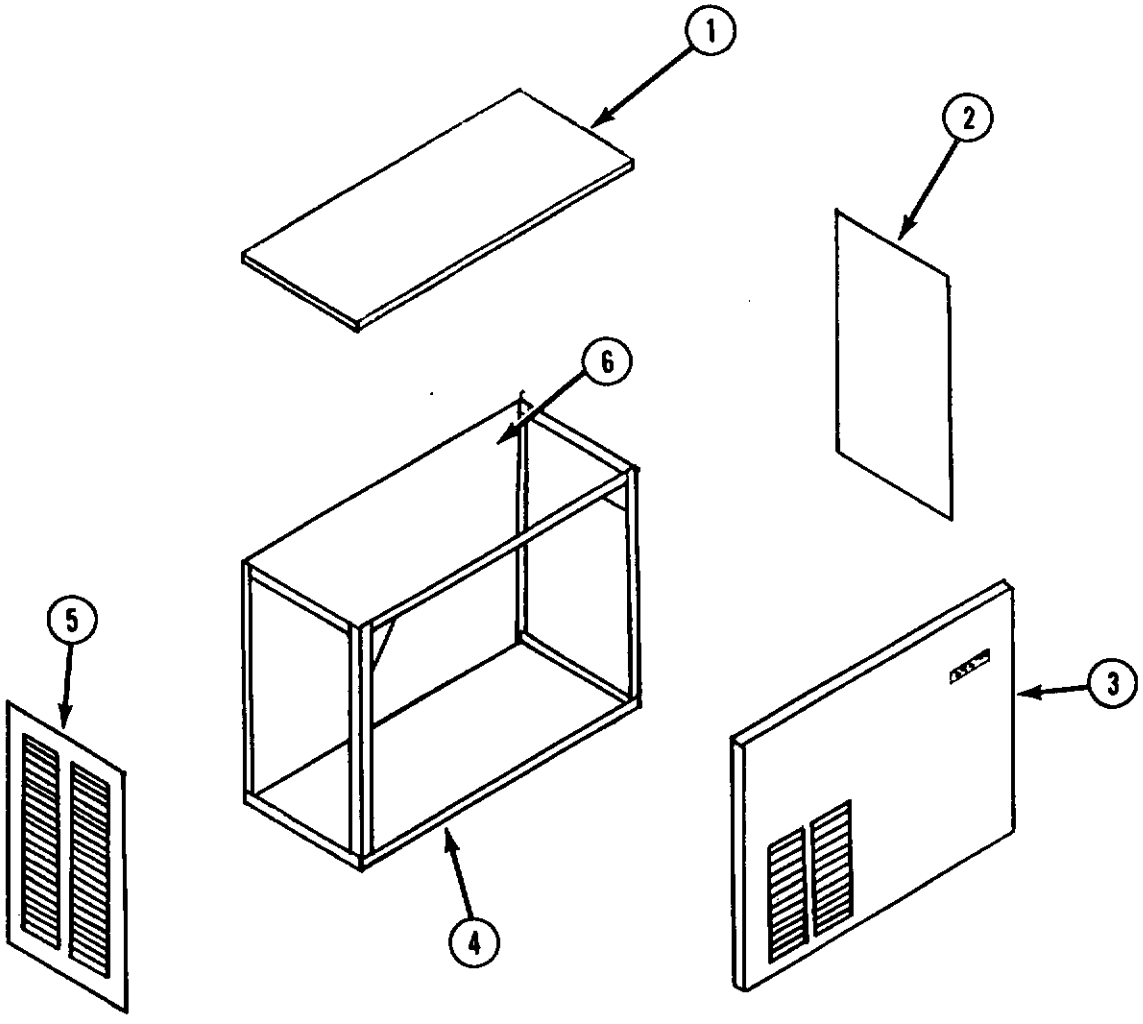

		Enamel	Stainless Steel
1.	Top Panel	A23784-001	A23784-002
2.	Panel, Right Side	A23783-001	A23783-002
3.	Panel, Front	A23785-001 Vinyl	A23785-002
4.	Cabinet Assy.	A23770-001	A23770-001
5.	Panel left side	A23782-001	A23782-002
6.	Back Panel	Fixed	A24833-001

★ Panel Conversion Kit (Enamel to Stainless Steel) (Kit Includes Items 1, 2, 3, 5, and 6) — Part No. SPK-MC1

FREEZER ASSEMBLY

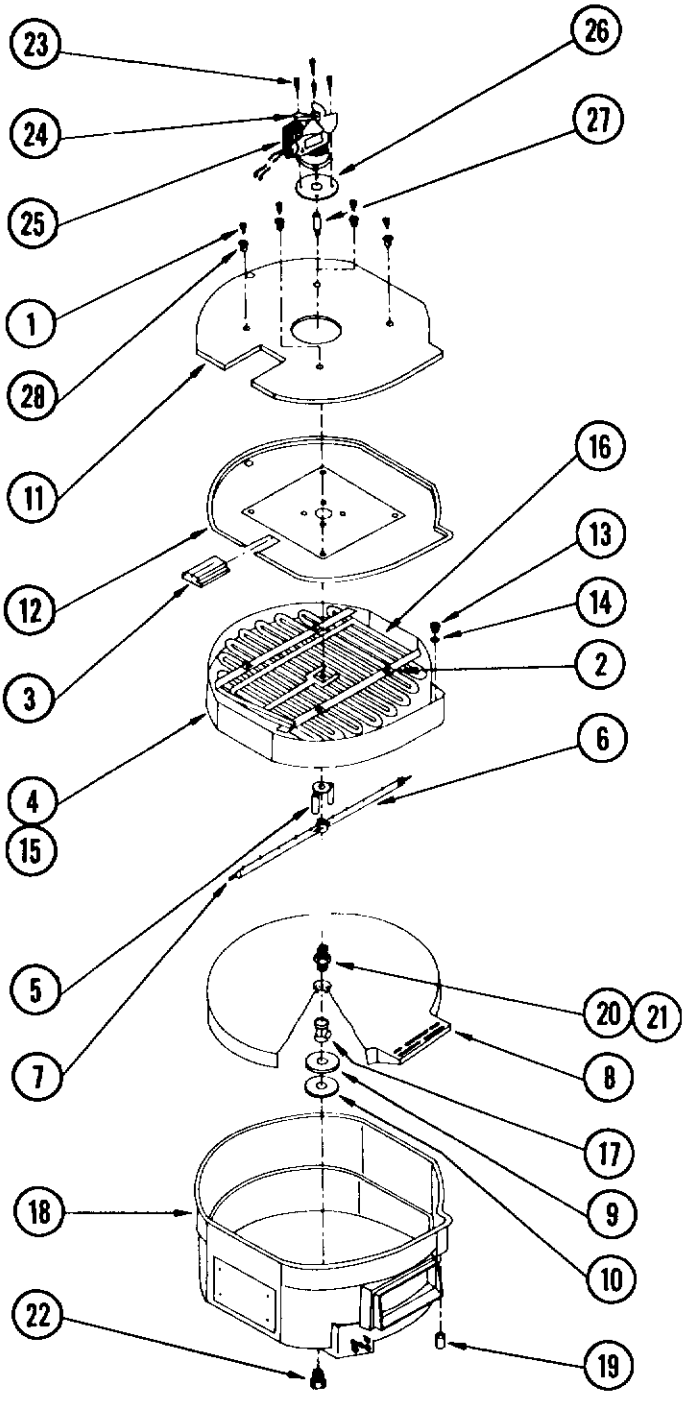

ITEM NO.	PART NO.	DESCRIPTION
1.	03-1404-10	Screw
2.	03-1422-04	Speed Clip
3.	13-0772-01	Rubber Insulator
4.	13-0758-01	Rubber Cup Holder - Large
	13-0757-01	Rubber Cup Holder - Medium
	13-0756-01	Rubber Cup Holder - Small
5.	02-2194-01	Drive Fork
6.	A25480-001	Spray Bar W/Rubber Tips
7.	13-0653-00	Rubber Tips
8.	02-2028-01	Inner Pan
9.	A23827-001	Metal Bottom Plate
10.	03-1409-11	Rubber Washer
11.	02-2124-01	Insulation Cover
12.	A24961-001	Cover Assembly
13.	S07434-000	Adapter Plug
14.	03-1409-03	Fiber Washer
15.	A24129-002	Platen Ass'bly - Large
	A23880-002	Platen Ass'bly - Medium
	A23803-002	Platen Ass'bly - Small
16.	A24198-001	Spray Deflector 2/Unit *
	A24198-003	Spray Deflector 1/Unit
	A24198-004	Spray Deflector 1/Unit
		* Above deflectors on small cube series MCS only. Not shown.
17.	02-2121-01	Water Inlet Tee
18.	A24054-001	Bottom Pan
19.	A16238-001	Hot Water Tube
20.	02-2120-01	Spray Bar Bearing
21.	13-0617-25	O-Ring for (20)
22.	02-2122-01	Bottom Plug
23.	03-1566-01	Screws
24.	12-0675-25	Fan Blade
25.	A24656-001	Agitator Motor W/Fan Blade
26.	13-0176-00	Grommet
27.	A23830-001	Drive Shaft
28.	A24830-001	Centering Washer

COMPLETE WATER PUMP
115/60/1
12-1930-01

ITEM NO.	PART NO.	DESCRIPTION
1.	12-1849-54	Nut (Hex)
2.	12-1849-55	Washer
3.	12-1849-56	Washer
4.	12-1849-57	Impeller
5.	12-1849-58	Lockwasher
6.	12-1849-59	Screw
7.	12-1849-60	O-Ring
8.	12-1849-61	Pump Housing
9.	12-1849-62	Screw

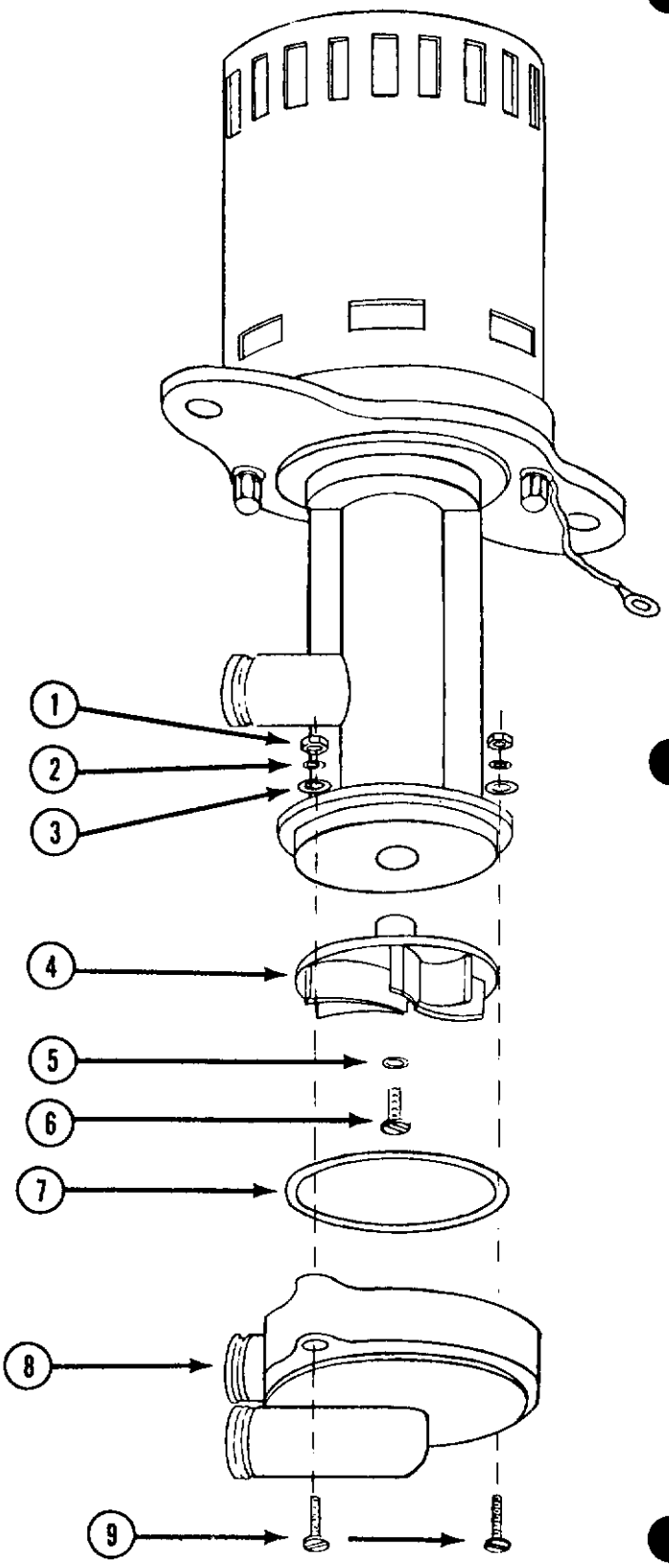

NOTE:

It is impractical to replace the Motor only or the Pump Body on these Water Pumps at the field level.

In the assembly procedure of the Motor and Body, it is necessary that the motor be centered properly to avoid damage to the impeller.

The supplier of these pumps uses special tools in assembly to center the motor and body correctly.

On this page is a listing of the replacement parts that are available and can be replaced on these pumps at the field level.

These pumps 12-1849 and 12-1930 are identical except for the length and design of the electrical leads.

12-1849-01 60" electrical leads with 1/4" quick connect ends. OBSOLETE replace with 12-1930-01 and proper lead.

12-1930-01 6" electrical lead with pin plug connection.

Wire assemblies used with 12-1930-01 pump.

12-1940-01 12" electrical lead with pin plug socket. Usage: AC30
12-1940-02 40" electrical lead with pin plug socket. Usage: MC1, MC25, MC30 and Top Chamber MC2, MC35, MC40
12-1940-03 50" electrical lead with pin plug socket. Usage: MC2, MC35 & MC40 Lower Chamber

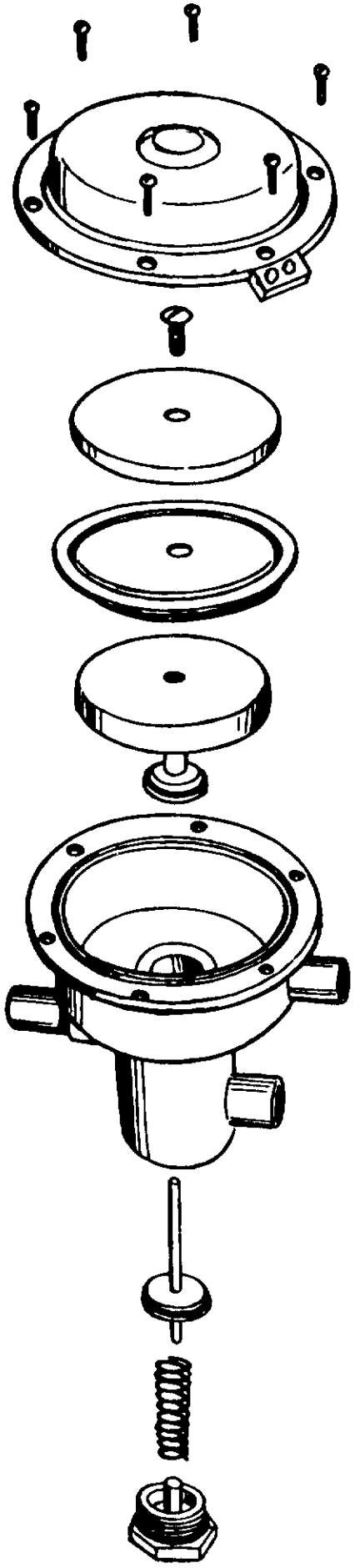

WATER VALVE ASSEMBLY

A19722-000

ITEM NO.	PART NO.	DESCRIPTION
1.	13-0617-02	O-Ring
2.	A17937-000	Valve Cap Bottom
3.	02-1545-00	Spring
4.	13-0617-01	O-Ring
5.	A17942-000	Lower Plunger Rod
6.	03-1403-06	Screws (6)
7.	A18192-000	Valve Top Cover
8.	03-1506-01	Screw
9.	A17941-000	Upper Plunger
10.	13-0606-00	Upper Diaphragm
11.	A18312-000	Diaphragm Cover
12.	A17947-000	Valve Body

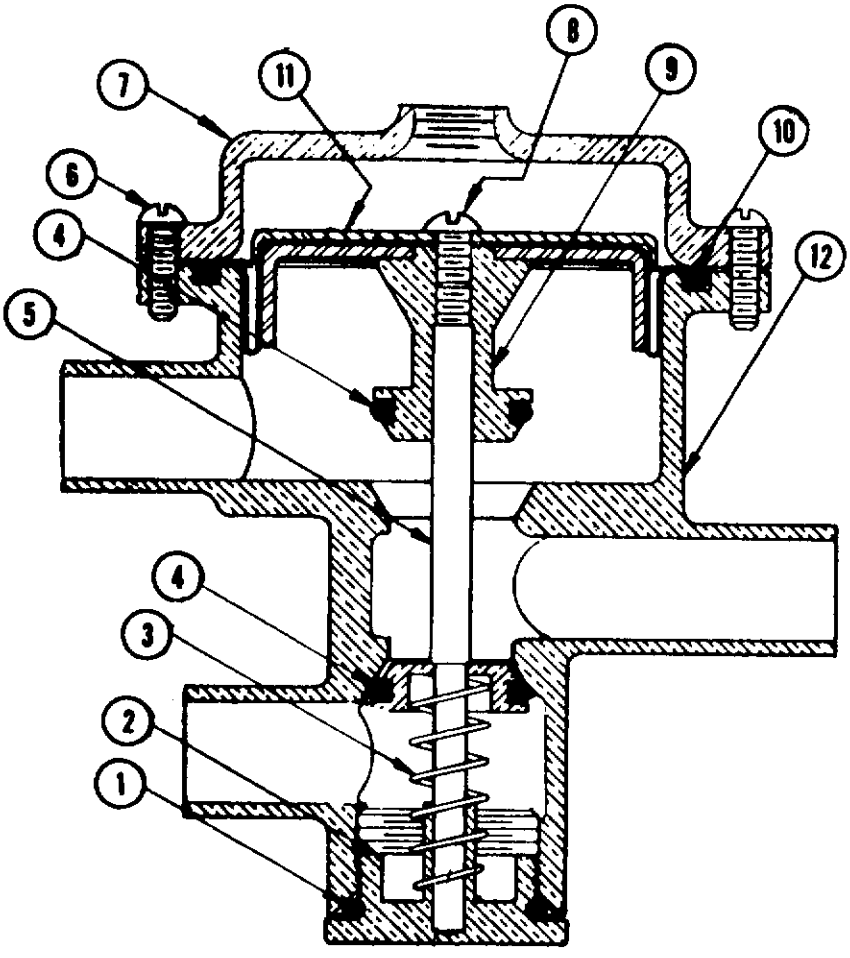

CONTROL BOX ASSY.

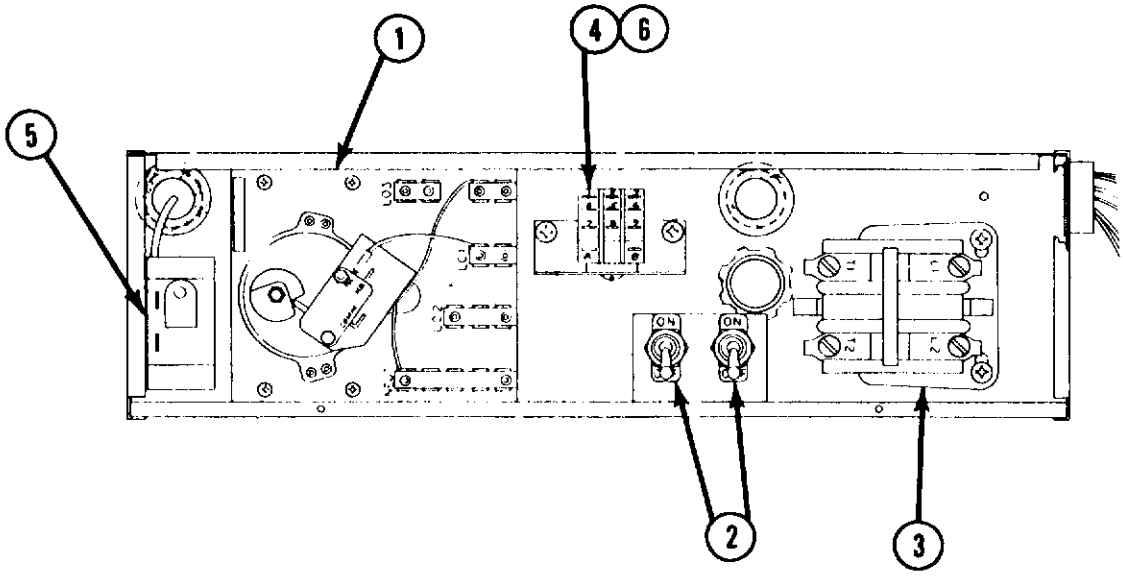

ITEM NO.	PART NO.	DESCRIPTION
1.	A25923-001	Timer
2.	12-0426-01	Toggle Switch
3.	12-0820-01	Contactor
4.	12-1598-00	Holding Relay
5.	11-0357-00	Pressure Control — Water Cooled
	11-0365-00	Pressure Control — Air Cooled
6.	A23965-001	Relay Bracket
7.	18-1902-17	Run Capacitor (Not Shown) Copeland No. 014-0001-00, 370 Volt, 10 MFD

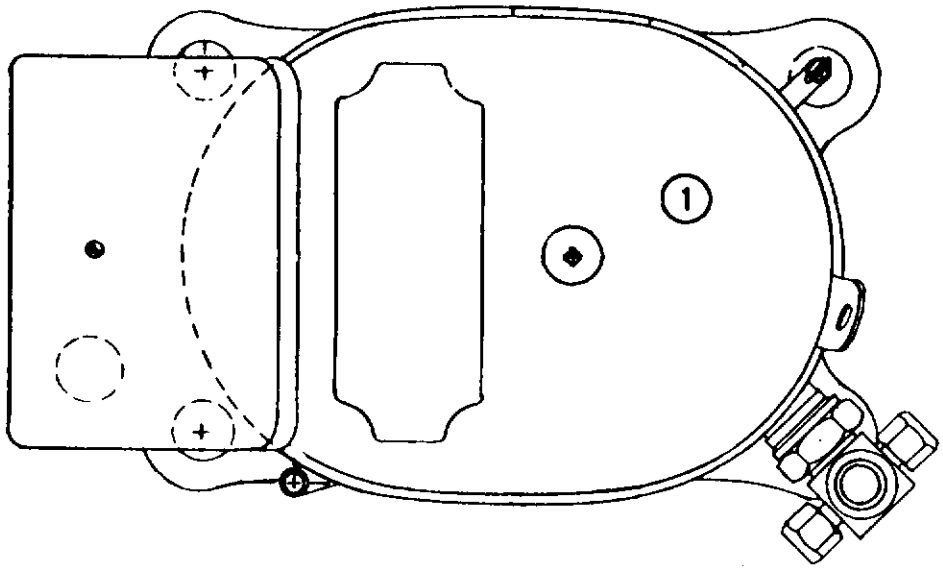

MOTOR
COMPRESSOR
Air and Water
115/60/1
3500 RPM
COPELAWELD
RSL2-0075-1AA

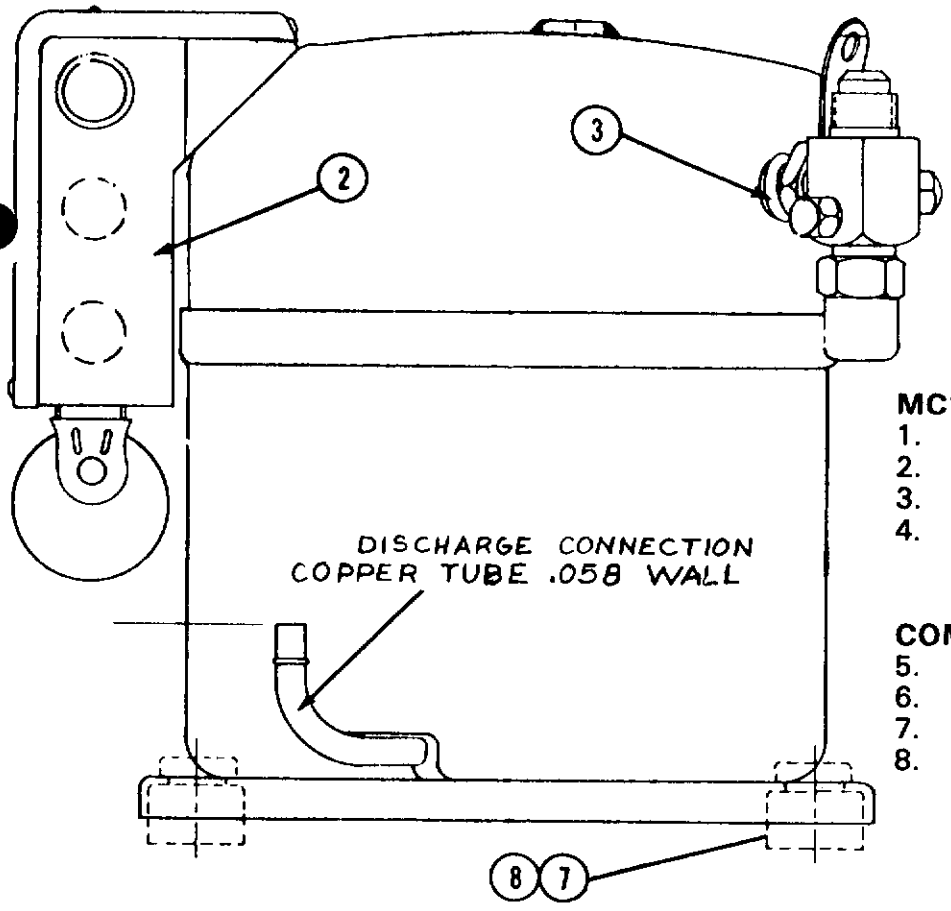

MC1-1 (115/60/1)

1.	18-2400-01	Compressor
2.	18-2400-25	Overload
3.	18-2410-00	Potential Relay
4.	18-2420-00	Start Capacitor

COMMON TO ALL COMPRESSORS

5.	18-2201-30	Rotolock Valve
6.	18-2300-29	Valve Seal
7.	18-2200-27	Mounting Sleeves
8.	18-2200-28	Grommets

18-2420-00 — General Electric No. 35F1441BC8 Copeland No. 014-0008-69, 282-340 MFD, 110 VAC 60 CPS.

18-2400-25 — Copeland No. 071-0127-06.

18-2410-00 — Copeland No. 040-0098-01

RIGHT END VIEW

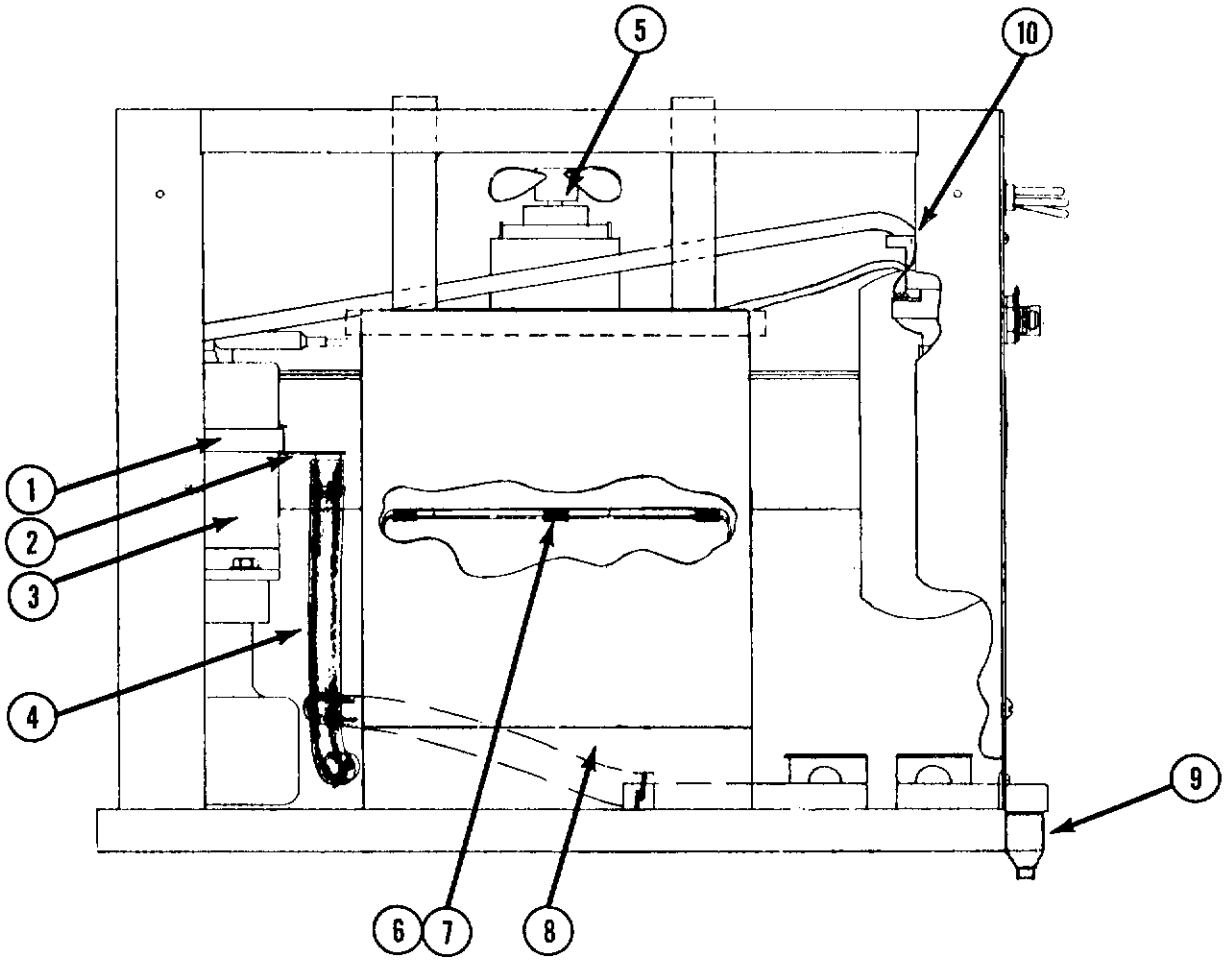

ITEM NO.	PART NO.	DESCRIPTION
1.	02-0706-00	Clamp
2.	A26426-001	Tube Bracket
3.	See Page 9	Water Pump
4.	13-0674-07	Tube (order per ft.)
5.	See Page 6	Agitator Motor
6.	03-1526-01	Curtain Clips
7.	02-2038-01	Curtain Assy.
8.	02-2148-01	Cube Chute W/Cover
9.	02-2296-01	Sump Drain
10.	12-1900-01	Water Inlet Solenoid
11.	16-0162-01	Stainer (Not Shown)

WATER COOLED
Top View

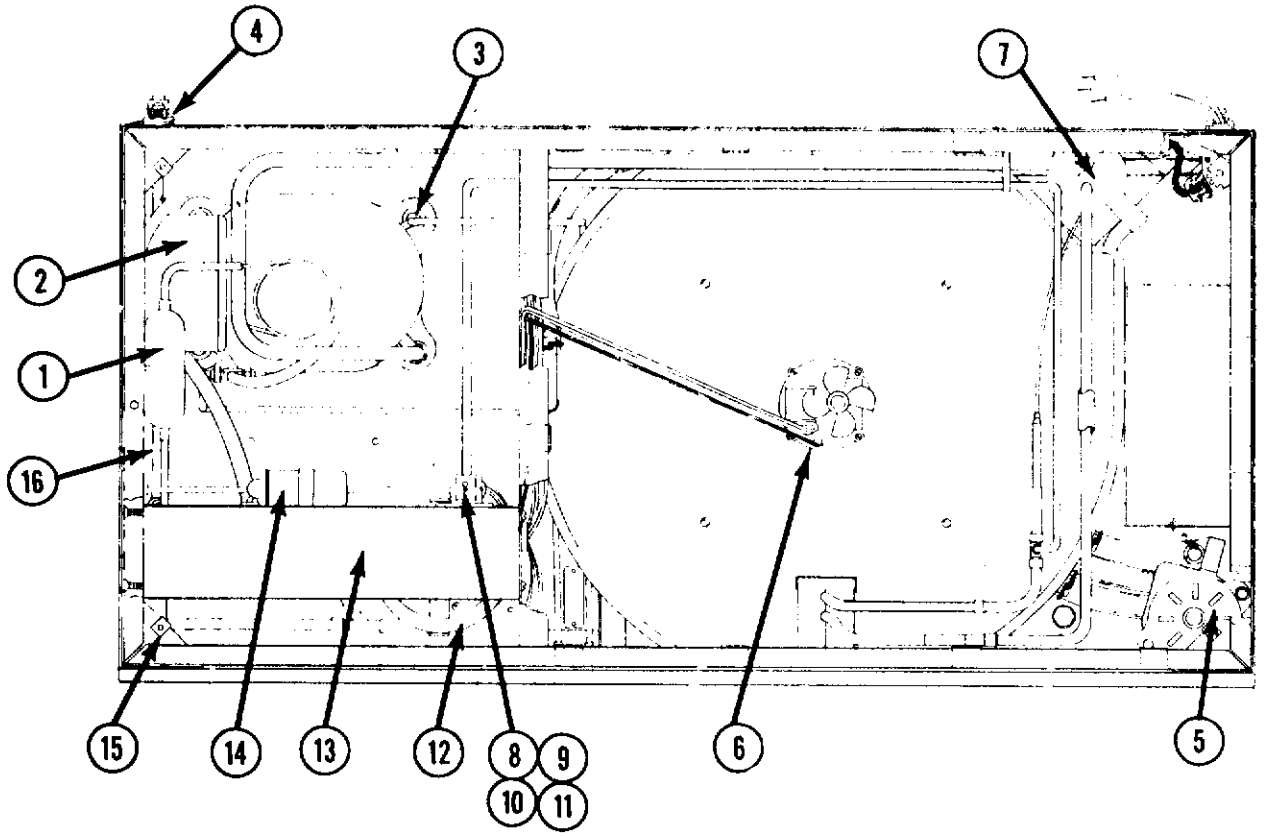

ITEM NO.	PART NO.	DESCRIPTION
1.	02-0544-01	Drier
2.	See Page 8	Compressor
3.	16-0673-15	Precess Header
4.	03-1394-01	Pal Nut
5.	See Page 9	Water Pump
6.	See Page 6	Agitator Motor
7.	A25220-001	Suction Line-Accumulator
8.	12-2007-03	Solenoid Valve Body
9.	12-2008-01	Valve Coil & Frame
10.	12-2009-01	Coil Clamp
11.	12-1490-04	Wire Assy.
12.	18-3305-02	Water Cooled Condenser
13.	See Page 7	Control Box
14.	18-1902-17	Run Capacitor
15.	03-1507-01	Speed Nut
16.	16-0673-14	Process Header

AIR COOLED
Top View

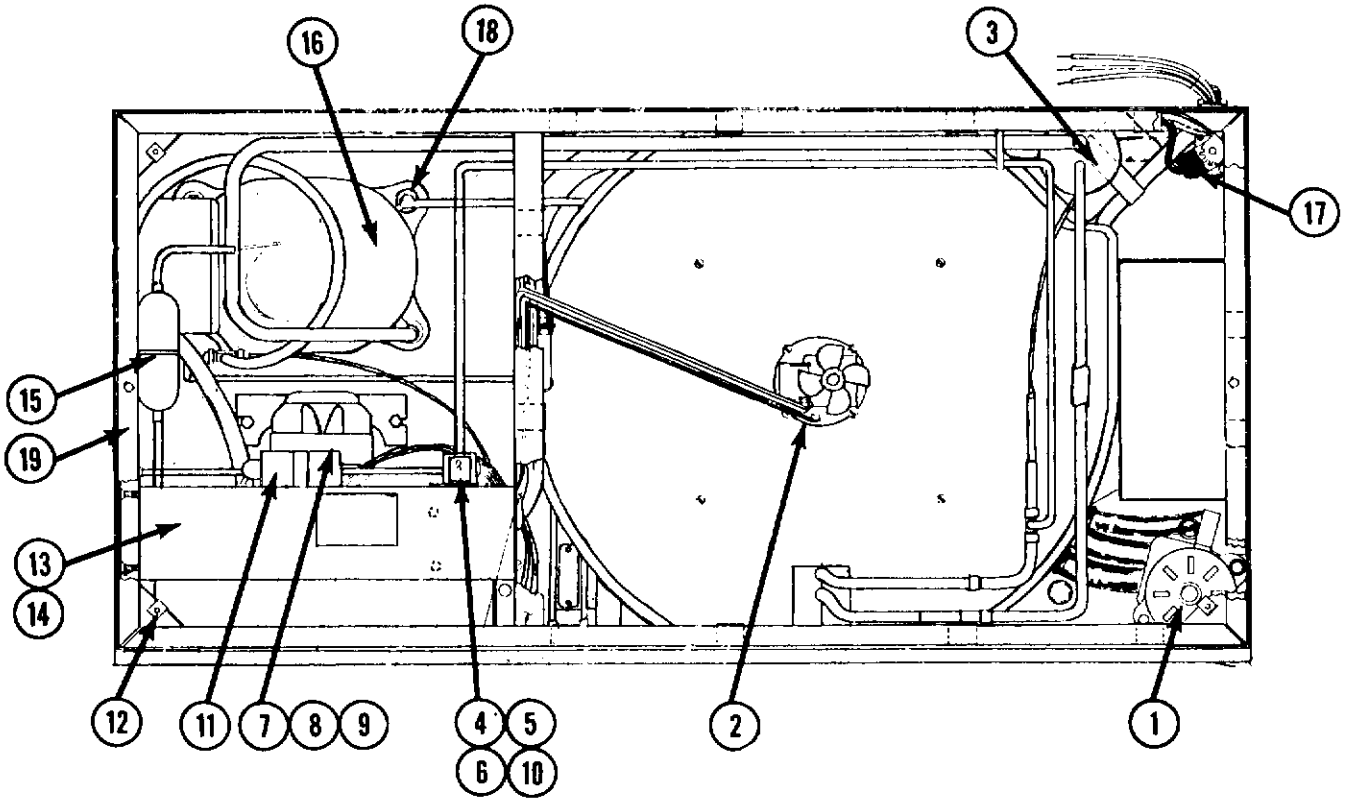

ITEM NO.	PART NO.	DESCRIPTION
1.	See Page 9	Water Pump
2.	See Page 6	Agitator Motor
3.	A25220-001	Suction Line-Accumulator
4.	12-2007-03	Solenoid Valve Body
5.	12-2008-01	Coil & Frame
6.	12-2009-01	Coil Clamp
7.	12-1681-01	Fan Motor
8.	18-0625-00	Fan Blade
9.	A25548-001	Fan Motor Bracket
10.	12-1490-04	Wire Assy.
11.	18-1902-17	Run Capacitor
12.	03-1507-01	Speed Nut
13.	18-0396-01	Condenser
14.	A23825-001	Condenser Shroud
15.	02-0544-01	Drier
16.	See Page 8	Compressor
17.	12-1900-01	Water Inlet Solenoid
18.	16-0673-15	Process Header
19.	16-0673-14	Process Header

WATER COOLED
Front View

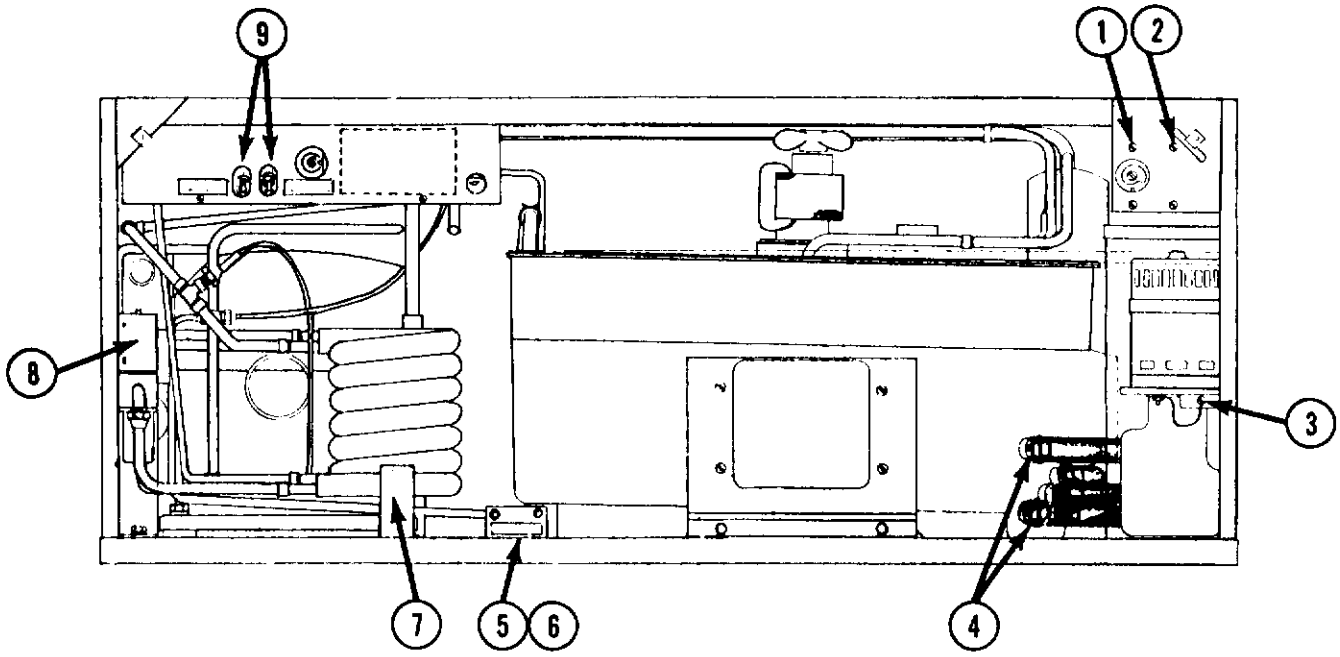

ITEM NO.	PART NO.	DESCRIPTION
1.	11-0345-02	Cube Size Control Medium-Large Cubes
	11-0351-03	For Small Cubes
2.	11-0353-03	Bin Thermostat - All
3.	See Page 9	Water Pump
4.	02-1358-00	Hose Clamps (4)
5.	16-0560-00	Service Valve Core
6.	16-0563-00	Service Valve Cap
7.	18-3305-02	W.C. Condenser
8.	11-0198-02	Water Regulating Valve
9.	12-0426-01	Toggle Switches

AIR COOLED
Front View

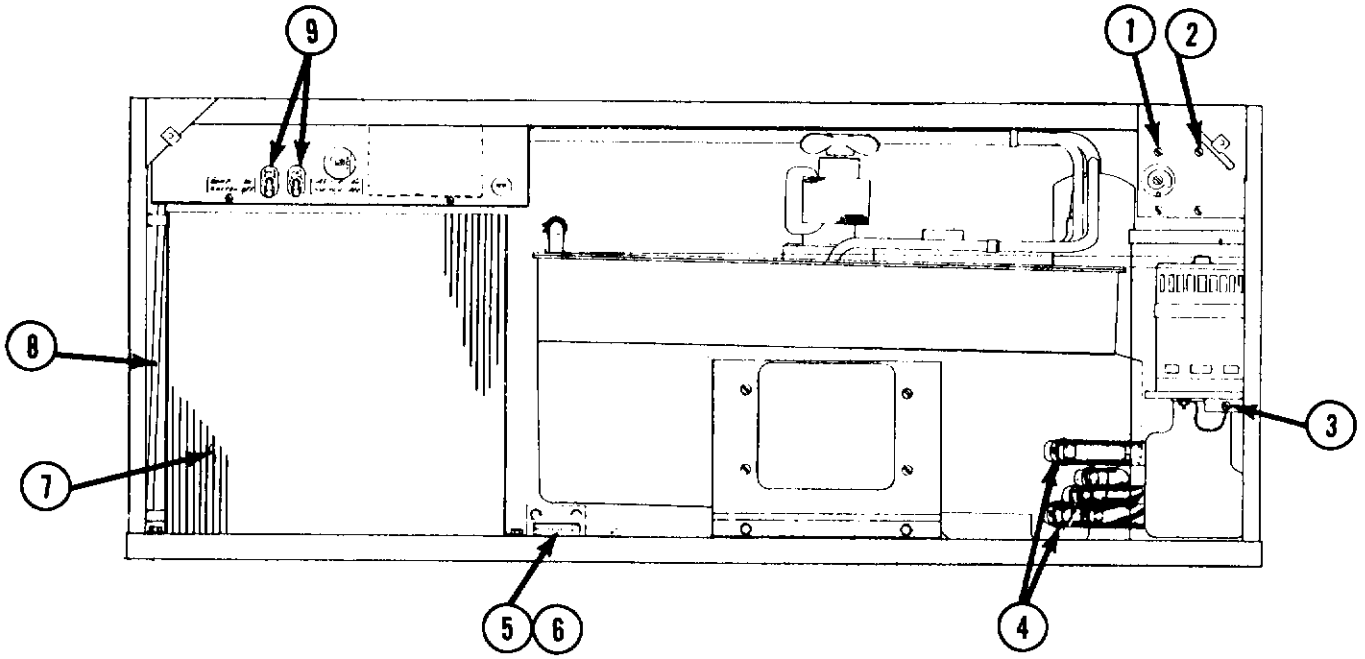

ITEM NO.	PART NO.	DESCRIPTION
1.	11-0345-02	Cube Size control medium-Large Cubes
	11-0351-02	Cube Size Control Small Cubes
2.	11-0353-03	Bin Thermostat - All
3.	See Page 9	Water Pump
4.	02-1358-00	Hose Clamps (4)
5.	16-0560-00	Service Valve Core
6.	16-0563-00	Service Valve Cap
7.	18-0396-01	Condenser
8.	A23825-001	Condenser Shroud
9.	12-0426-01	Toggle Switches

FREEZER ASSEMBLY

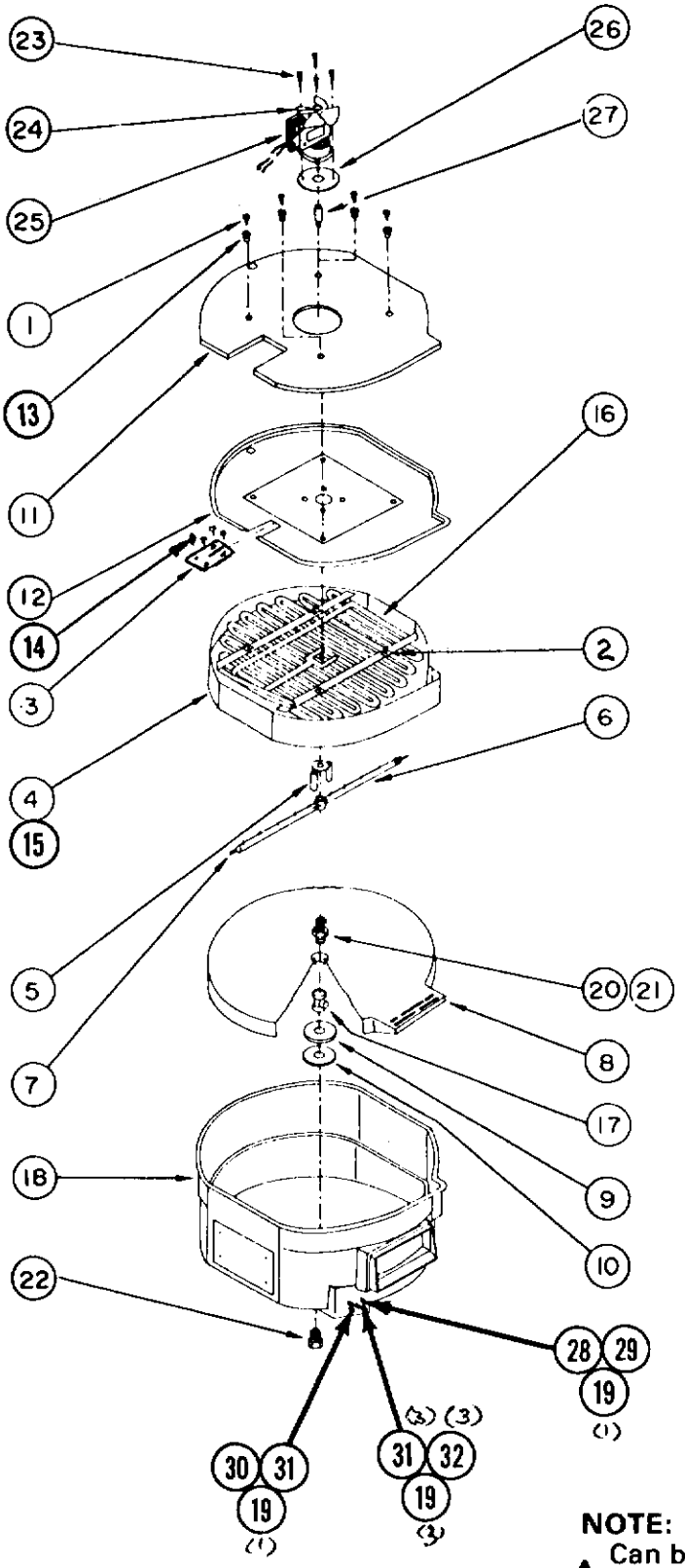

ITEM	PART NO.	DESCRIPTION
1.	03-1404-10	Screw
2.	03-1422-04	Speed Clip
3.	02-2129-01	Tube Spacer
⚠ 4.	13-0757-01	Rubber Cup Holder - Medium
	13-0756-01	Rubber Cup Holder - Small
5.	02-2194-01	Drive Fork
6.	A25480-001	Spray Bar W/Rubber Tips
7.	13-0653-00	Rubber Tips
8.	02-2028-01	Inner Pan
9.	A23827-001	Metal Bottom Plate
10.	03-1409-11	Rubber Washer
11.	02-2124-01	Insulation Cover
12.	A24803-001	Cover Assembly
13.	A24830-001	Centering Washer
14.	02-2065-02	Hole Plug (4)
15.	A24129-002	Rubber Platen Assy - Large
	A23880-002	Rubber Platen Assy. - Medium
	A27217-002	Plastic Platen Assy. - Medium
	A23803-002	Rubber Platen Assy. - Small
	A27218-002	Plastic Platen Assy. - Small
16.	A24198-001	Spray Deflector 2/unit *
	A24198-003	Spray Deflector 1/unit
	A24198-004	Spray Deflector 1/unit
		*Above deflectors on small cube series MC25S only. Not Shown.
17.	02-2121-01	Water Inlet Tee
18.	A24819-001	Bottom Pan
19.	13-0617-02	'O' Ring (5)
20.	02-2120-01	Spray Bar Bearing
21.	13-0617-25	O-Ring For (20)
22.	02-2122-01	Bottom Plug
23.	03-1404-28	Screws
24.	12-0675-25	Fan Blade
25.	A24656-001	Agitator Motor W/Fan Blade
26.	13-0176-00	Motor Gasket
27.	A23830-001	Drive Shaft
28.	A24379-001	Short Tube - Female
29.	02-2125-01	Stand Pipe - male
30.	02-2082-01	Pump Pickup - Male
31.	02-2081-01	Tube - Female (4)
32.	02-2080-01	Tube - Male (3)

NOTE:
⚠ Can be used as a replacement on Rubber Platens only.

CONTROL BOX
Air & Water Cooled
115/60/1

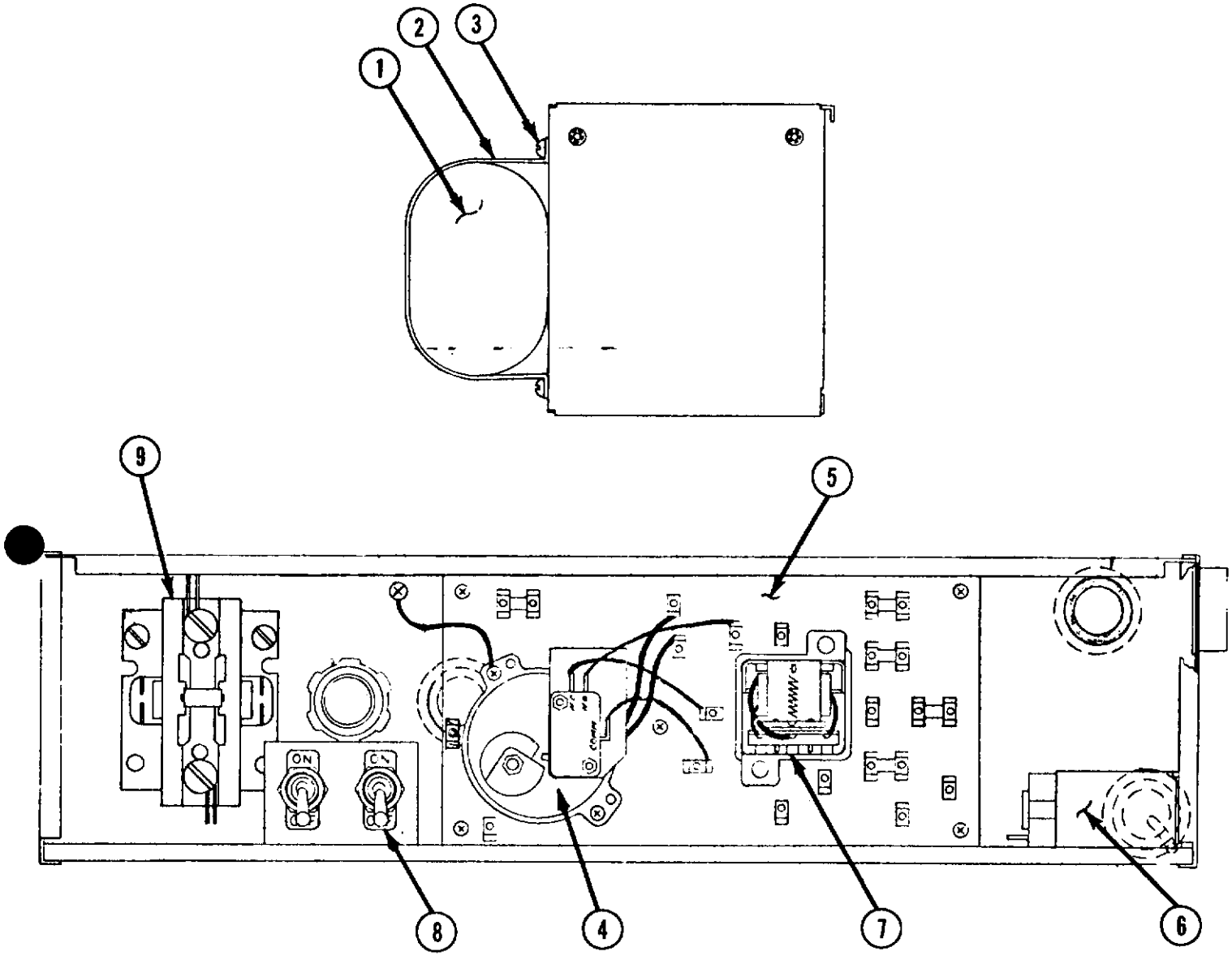

ITEM NO.	PART NO.	DESCRIPTION
1.	18-1902-17	Run Capacitor
2.	A25222-001	Strap
3.	03-1404-17	Screw
4.	12-1979-01	Timer
5.	12-1912-01	Circuit Board
6.	11-0389-02	Fan Cycle Control (A.C. only)
	11-0388-02	Pressure Control (W.C. only)
7.	12-1879-02	Relay
8.	12-0426-01	Switch
9.	12-2041-01	Contactor

COPELAND COMPRESSOR
3500 RPM

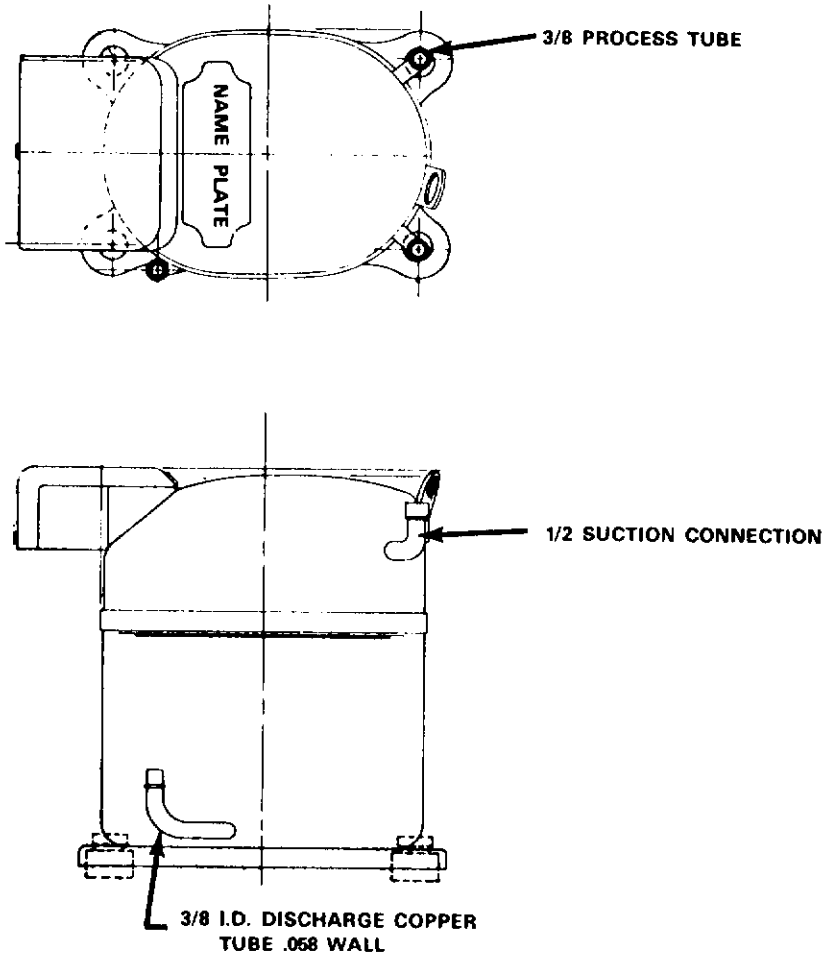

115/60/1

18-3900-01	Compressor Cope No. RSL 2-0075-1AA-233
18-2400-25	Compressor Overload Cope No. 071-0127-06
18-2420-00	Start Capacitor Cope No. 014-0008-69
18-1902-17	Run Capacitor (on Control Box)
18-2410-00	Relay Cope No. 040-0098-01
18-2200-27	Mounting Sleeves
18-2200-28	Mounting Grommets

COMPLETE WATER PUMP
115/60/1
12-1930-01

ITEM NO.	PART NO.	DESCRIPTION
1.	12-1849-54	Nut (Hex)
2.	12-1849-55	Washer
3.	12-1849-56	Washer
4.	12-1849-57	Impeller
5.	12-1849-58	Lockwasher
6.	12-1849-59	Screw
7.	12-1849-60	O-Ring
8.	12-1849-61	Pump Housing
9.	12-1849-62	Screw

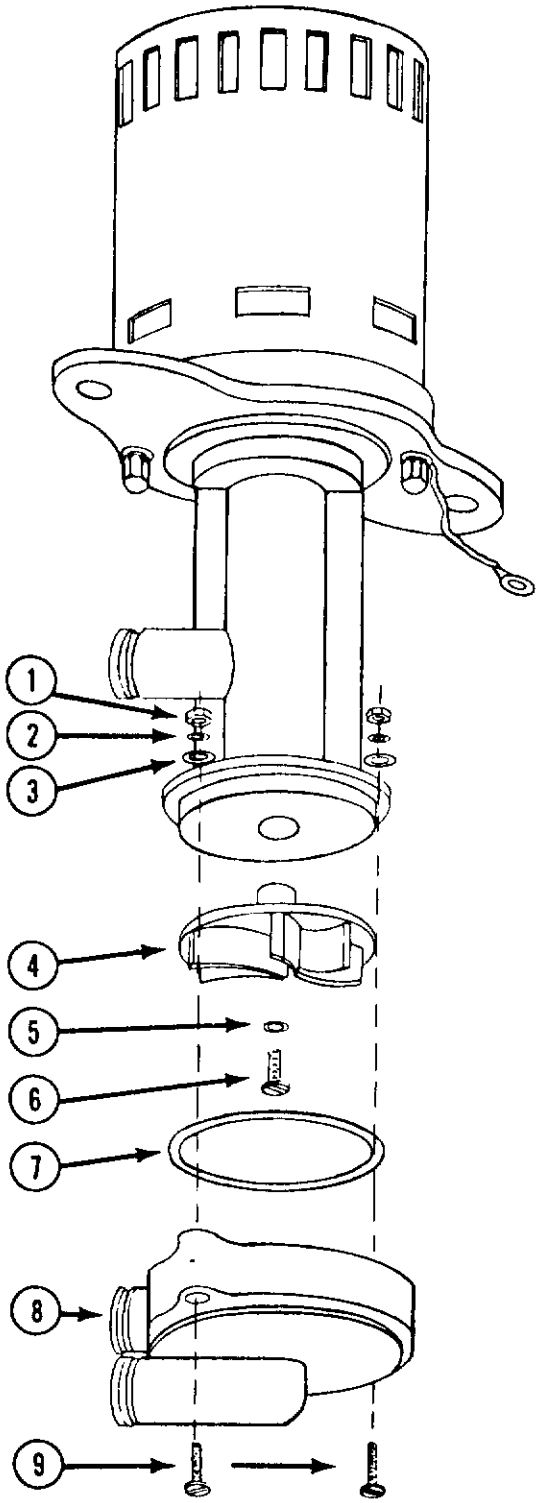

NOTE:

It is impractical to replace the Motor only or the Pump Body on these Water Pumps at the field level.

In the assembly procedure of the Motor and Body, it is necessary that the motor be centered properly to avoid damage to the impeller.

The supplier of these pumps uses special tools in assembly to center the motor and body correctly.

On this page is a listing of the replacement parts that are available and can be replaced on these pumps at the field level.

These pumps 12-1849 and 12-1930 are identical except for the length and design of the electrical leads.

12-1849-01 60" electrical leads with 1/4" quick connect ends. OBSOLETE replace with 12-1930-01 and proper lead.

12-1930-01 6" electrical lead with pin plug connection.

Wire assemblies used with 12-1930-01 pump.

12-1940-01 12" electrical lead with pin plug socket.
Usage: AC30
12-1940-02 40" electrical lead with pin plug socket.
Usage: MC1, MC25, MC30 and Top Chamber MC2, MC35, MC40
12-1940-03 50" electrical lead with pin plug socket.
Usage: MC2, MC35 & MC40 Lower Chamber

CABINET PARTS

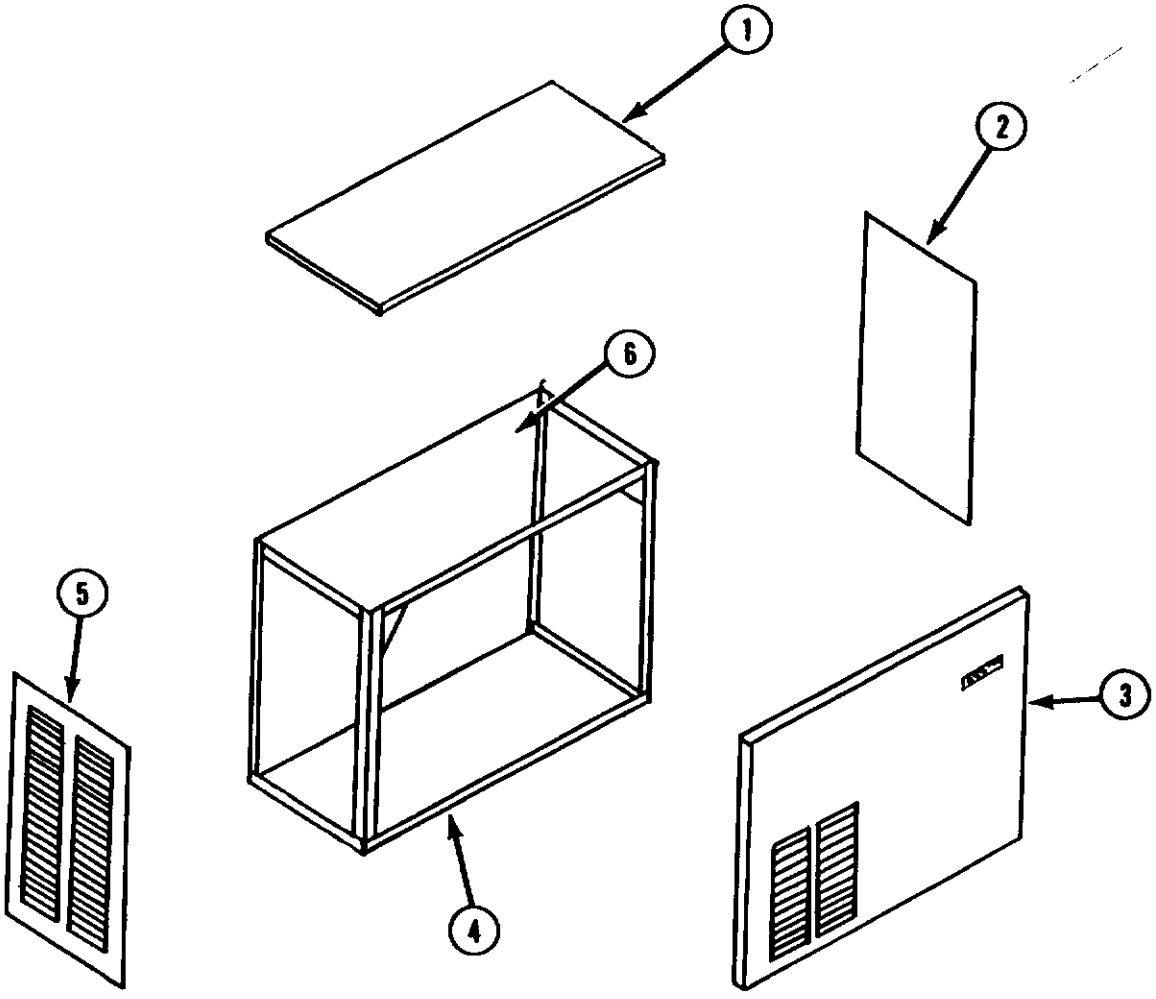

	Enamel	Stainless Steel
1. Top Panel	A23784-001	A23784-002
2. Panel, Right Side	A23783-001	A23783-002
3. Panel, Front	A23785-001 Vinyl	A23785-002
4. Cabinet Assy.	A26178-001	A26178-001
5. Panel left side	A23782-001	A23782-002
6. Back Panel	Fixed	A24833-001

*Panel Conversion Kit (Enamel to Stainless Steel) (Kit Includes Items 1, 2, 3, 5 and 6) — Part No. SPK-MC1

RIGHT END VIEW

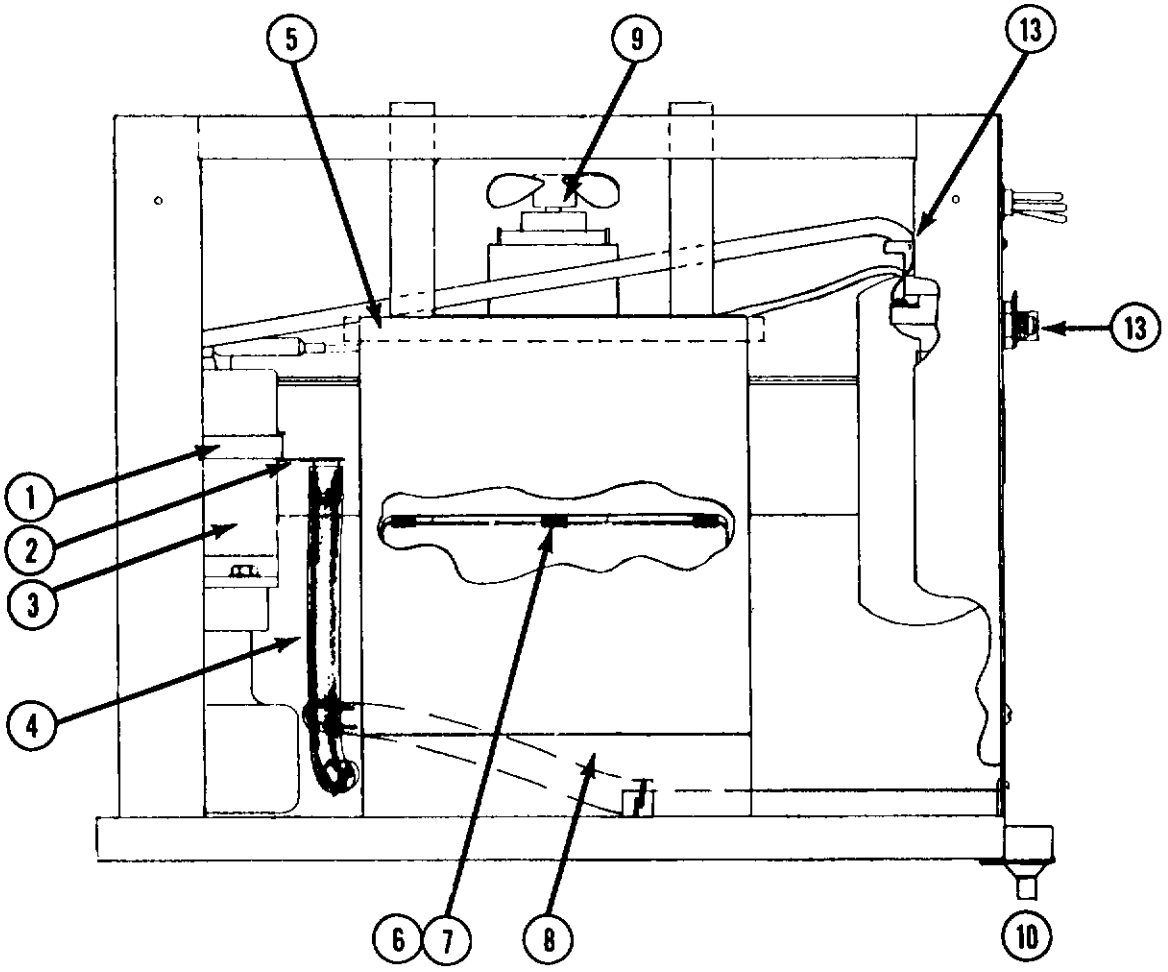

ITEM NO.	PART NO.	DESCRIPTION
1.	02-0706-00	Clamp
2.	A26426-001	Tube Bracket
3.	See Page 9	Water Pump
4.	13-0674-07	Tube (Order per ft.)
5.	16-0162-01	Strainer (Not Shown)
6.	03-1526-01	Curtain Clips
7.	02-2038-01	Curtain Assy.
8.	02-2148-01	Cube Chute/With Cover
9.	See Page 6	Agitator Motor
10.	02-2296-01	Drain Cup
13.	12-1900-07	Water Inlet Solenoid

AIR COOLED
Top View

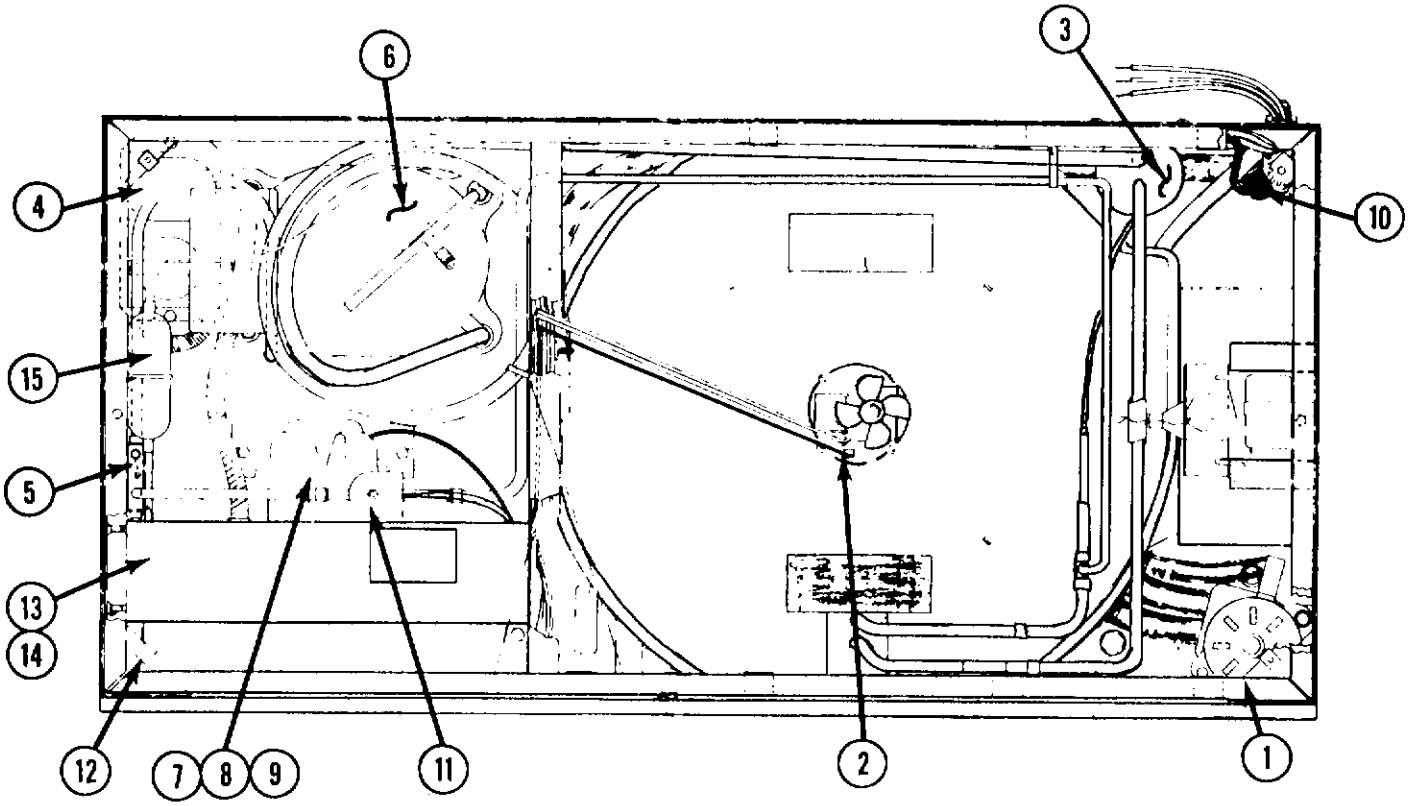

ITEM NO.	PART NO.	DESCRIPTION
1.	See Page 9	Water Pump
2.	See Page 6	Agitator Motor
3.	A26135-001	Suction Line-Accumulator
4.	See Page 8	Capacitor-Relay Assy.
5.	16-0673-10	Process Header
6.	See Page 8	Compressor
7.	12-1681-01	Fan Motor
8.	18-0625-00	Fan Blade
9.	A25548-001	Fan Motor Bracket
10.	12-1900-07	Water Inlet Solenoid
11.	12-2023-01	Hot Gas Solenoid
12.	03-1507-01	Speed Nut
13.	18-3703-01	Condenser
14.	A23825-001	Condenser Shroud
15.	02-0544-01	Drier

WATER COOLED
Top View

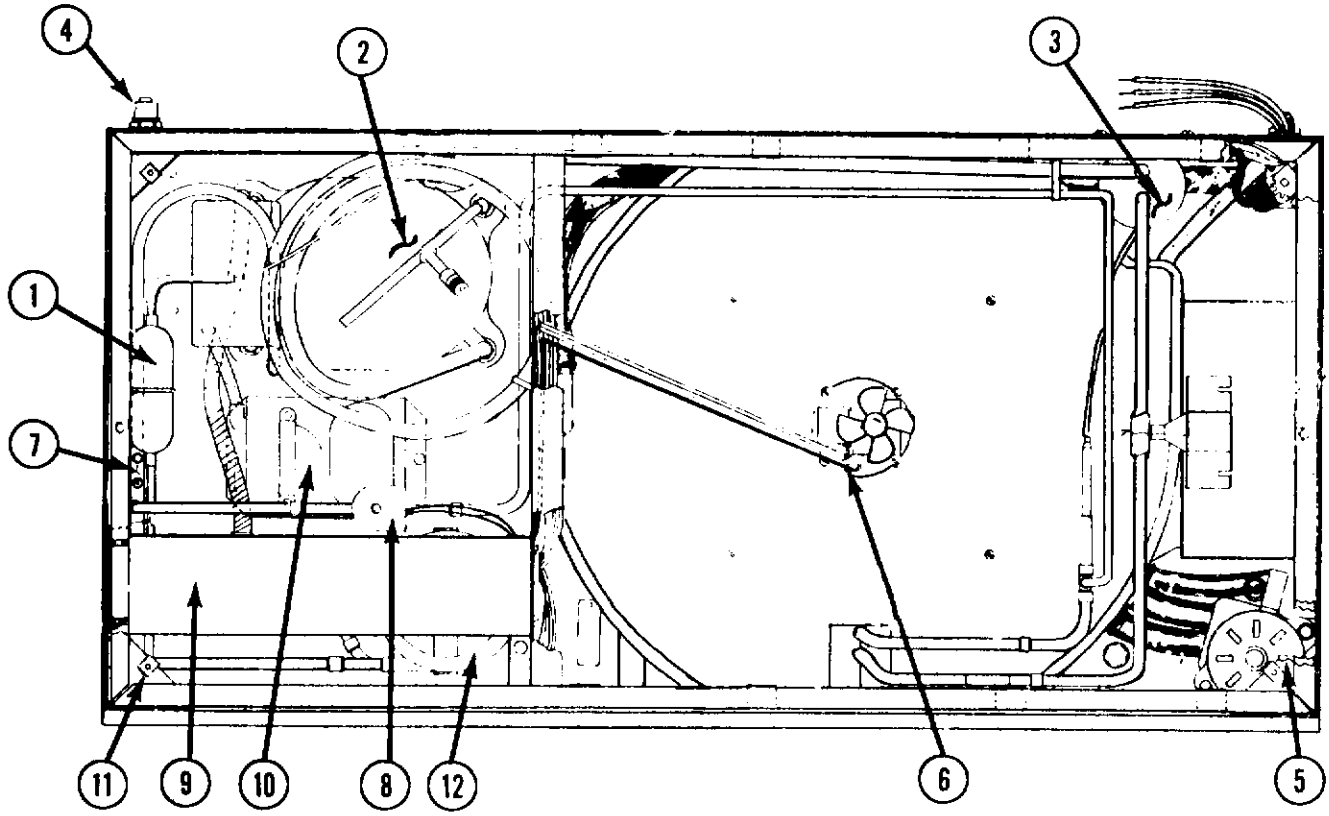

ITEM NO.	PART NO.	DESCRIPTION
1.	02-0544-01	Drier
2.	See Page 8	Compressor
3.	A26135-001	Suction Line-Accumulator
4.	03-1394-01	Pal Nut
5.	See Page 9	Water Pump
6.	See Page 6	Agitator Motor
7.	16-0673-10	Process Header
8.	12-2023-01	Hot Gas Solenoid
9.	See Page 7	Control Box
10.	See Page 8	Capacitor-Relay Assy.
11.	03-1507-01	Speed Nut
12.	18-3306-02	Water Cooled Condenser

AIR COOLED
Front View

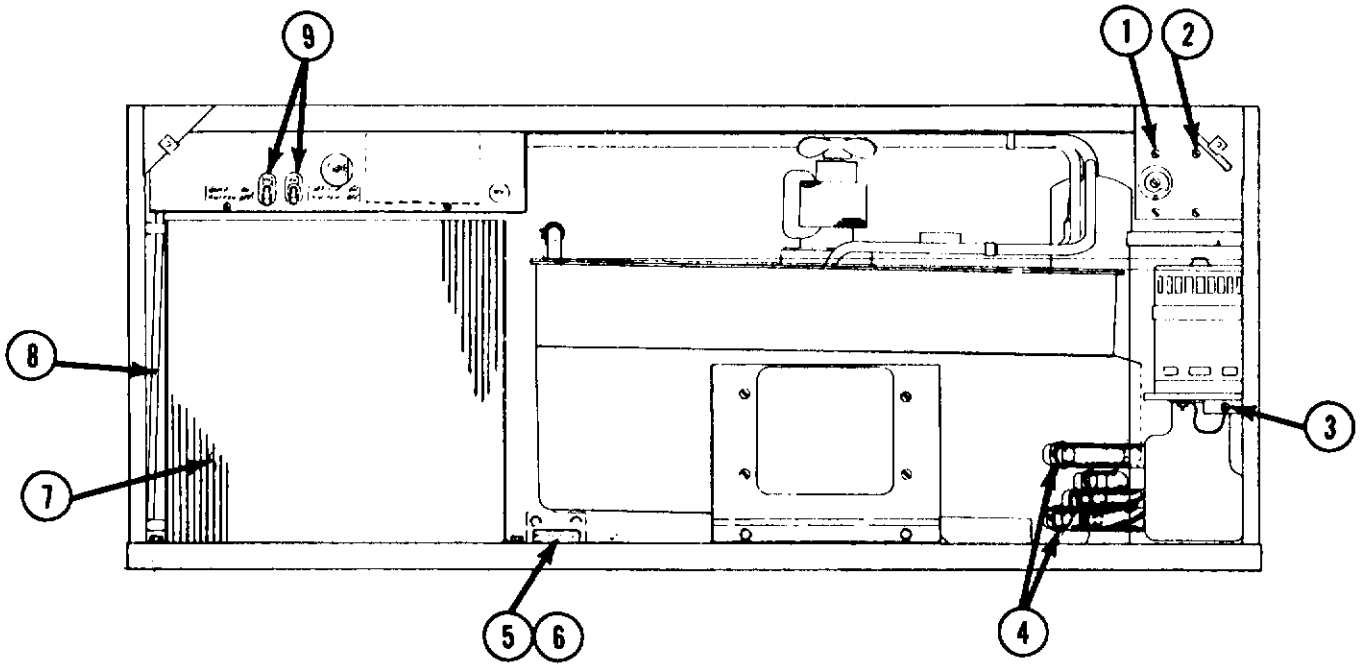

ITEM NO.	PART NO.	DESCRIPTION
1.	11-0345-02	Cube Size Control
2.	11-0353-03	Bin Thermostat - All
3.	See Page 9	Water Pump
4.	02-1358-00	Hose Clamps (4)
5.	16-0560-00	Service Valve Core
6.	16-0563-00	Service Valve Cap
7.	18-3703-01	Condenser
8.	A23825-001	Condenser Shroud
9.	12-0426-01	Toggle Switches

WATER COOLED
Front View

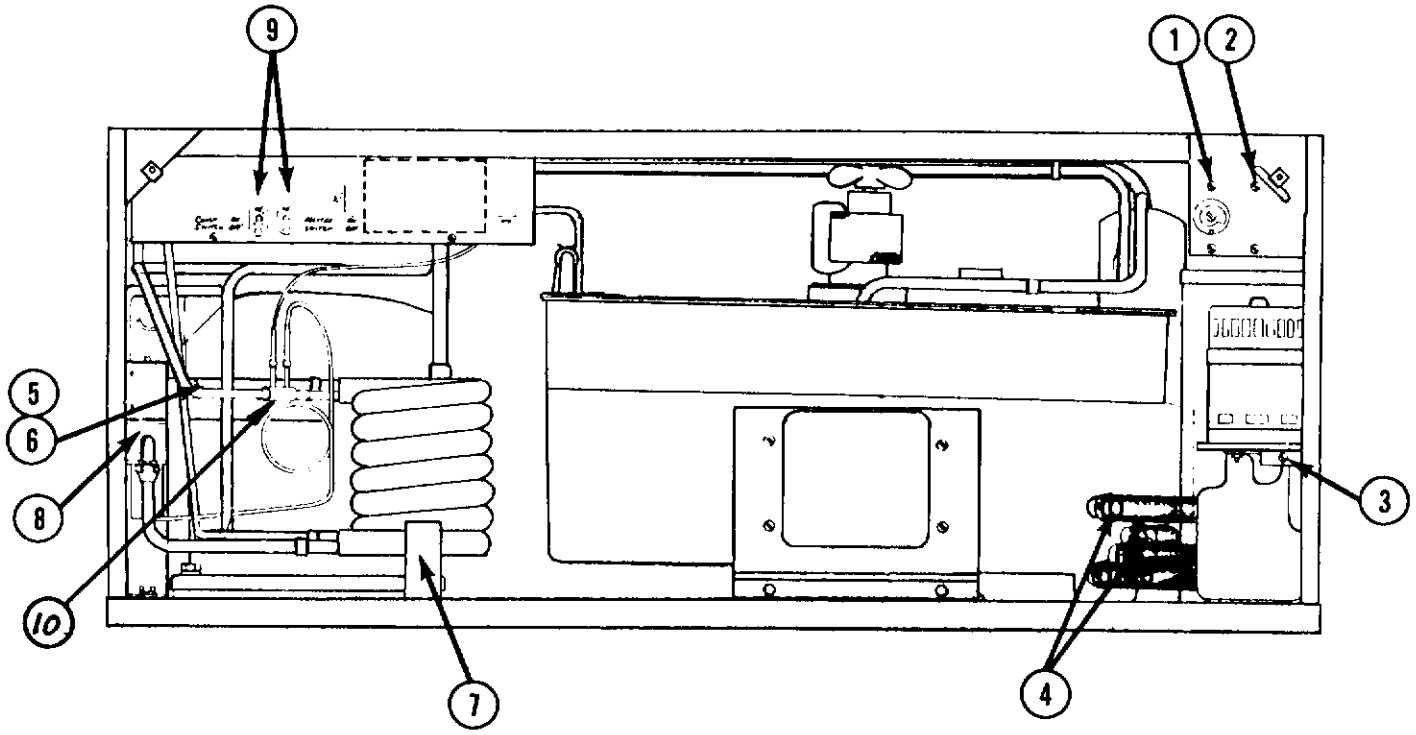

ITEM NO.	PART NO.	DESCRIPTION
1.	11-0345-02	Cube Size Control
2.	11-0353-03	Bin Thermostat - All
3.	See Page 9	Water Pump
4.	02-1358-00	Hose Clamps (4)
5.	16-0560-00	Service Valve Core
6.	16-0563-00	Service Valve Cap
7.	18-3306-02	W.C. Condenser
8.	11-0198-02	Water Regulating Valve
9.	12-0426-01	Toggle Switches
10.	16-0673-13	Process Header

CUBER
FREEZER ASSEMBLY

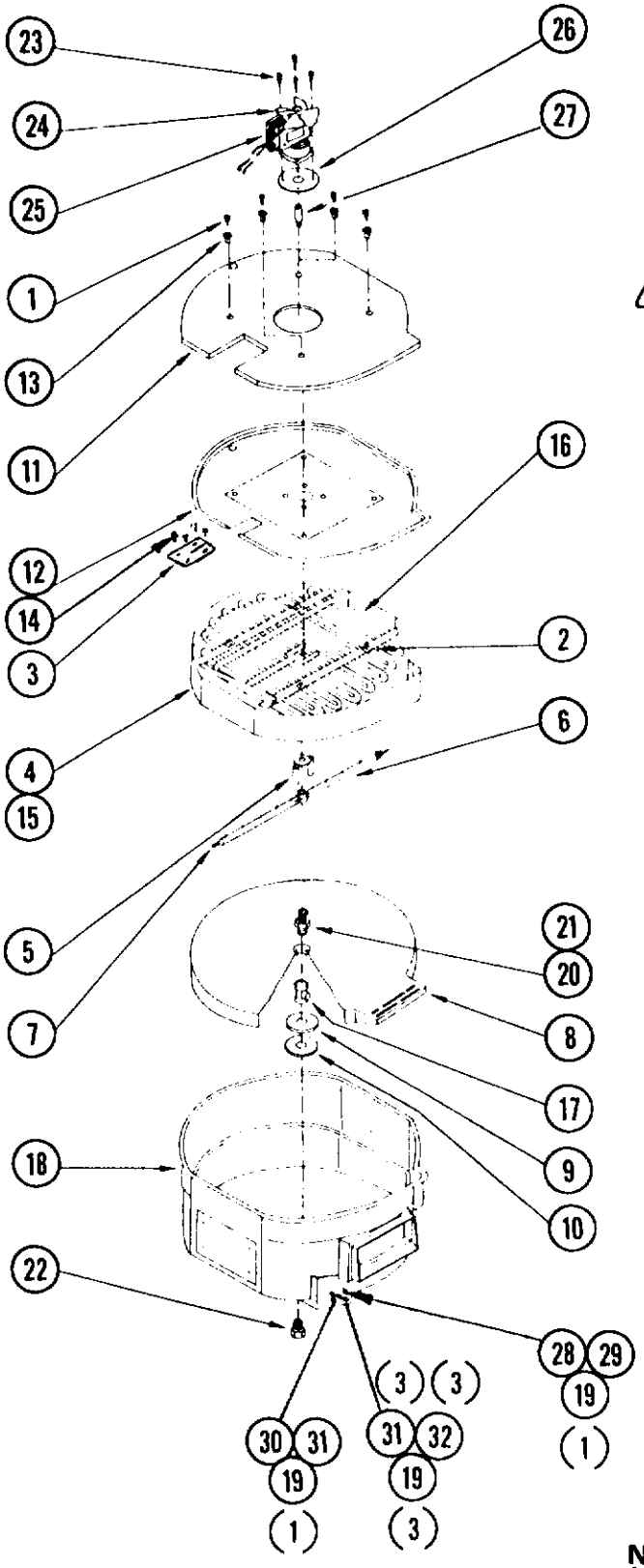

ITEM NO.	PART NO.	DESCRIPTION
1.	03-1404-10	Screw
2.	03-1422-04	Speed Clip
3.	02-2129-01	Tube Spacer
⚠1 4.	13-0757-01	Rubber Cup Holder - Medium
	13-0756-01	Rubber Cup Holder - Small
5.	02-2194-01	Drive Fork
6.	A25480-001	Spray Bar W/Rubber Tips
7.	13-0653-00	Rubber Tips
8.	02-2028-01	Inner Pan
9.	A23827-001	Metal Bottom Plate
10.	03-1409-11	Rubber Washer
11.	02-2124-01	Insulation Cover
12.	A24803-001	Cover Assembly
13.	A24830-001	Centering Washer
14.	02-2065-02	Hole Plug (4)
15.	A23880-002	Rubber Platen Assy. - Medium
	A27217-002	Plastic Platen Assy. - Medium
	A23803-002	Rubber Platen Assy. - Small
	A27218-002	Plastic Platen Assy. - Small
16.	A24198-001	Spray Deflector 2/Unit *
	A24198-003	Spray Deflector 1/Unit
	A24198-004	Spray Deflector 1/Unit
		*Above deflectors on small cube series MC30 S only. Not shown.
17.	02-2121-01	Water Inlet Tee
18.	A24819-001	Bottom Pan
19.	13-0617-02	"O" Ring (5)
20.	02-2120-01	Spray Bar Bearing
21.	13-0617-25	O-Ring For 20
22.	02-2122-01	Bottom Plug
23.	03-1404-28	Screws
24.	12-0675-25	Fan Blade
25.	A24656-001	Agitator Motor W/Fan Blade
26.	13-0176-00	Motor Gasket
27.	A23830-001	Drive Shaft
28.	A24379-001	Short Tube - Female
29.	02-2125-01	Stand Pipe - Male
30.	02-2028-01	Pump Pickup - Male
31.	02-2081-01	Tube - Female (4)
32.	02-2080-01	Tube - Male (3)

NOTE:
⚠1 Can be used as a replacement on Rubber Platens only.

CONTROL BOX
Air & Water Cooled
115/60/1

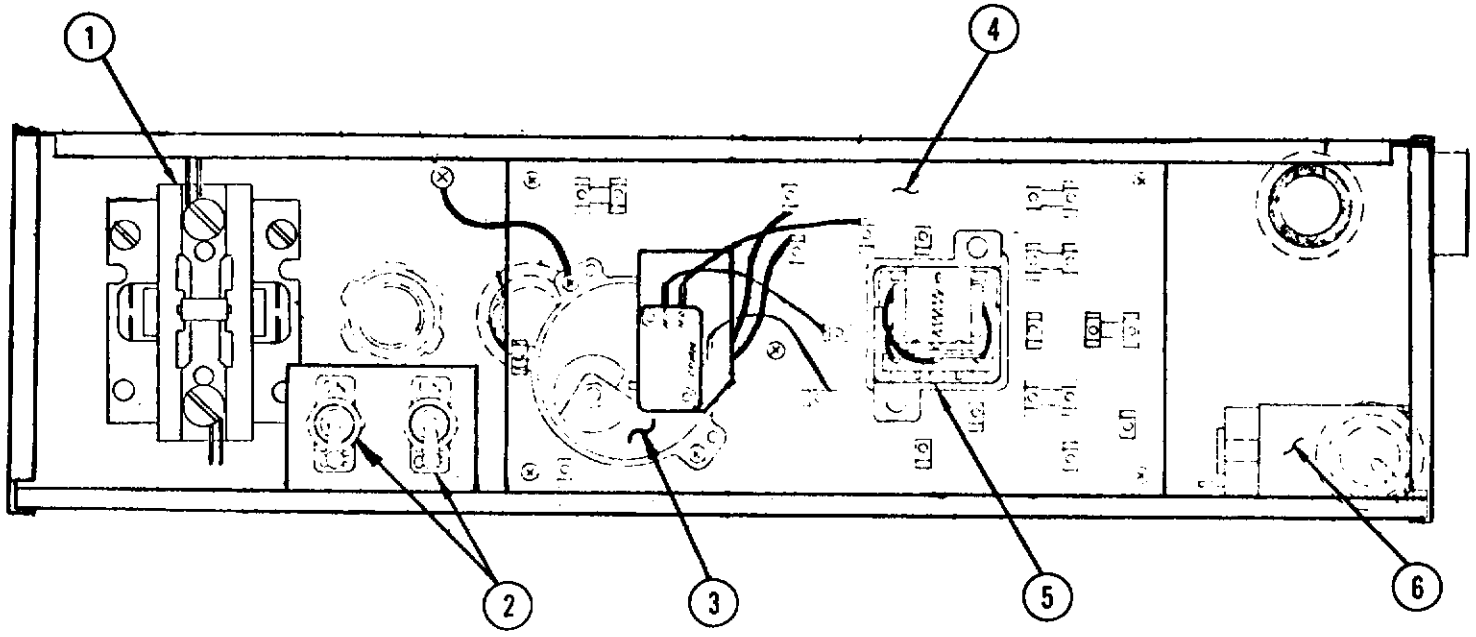

ITEM NO.	PART NO.	DESCRIPTION
1.	12-2041-01	Contactor
2.	12-0426-01	Switches
3.	12-1980-01	Timer
4.	12-1912-01	P.C. Board
5.	12-1879-02	Relay
6.	Not Req'd	Air Cooled Units
	11-0388-02	Pressure Control Water Cooled Only

COPELAWELD COMPRESSOR
3500 RPM

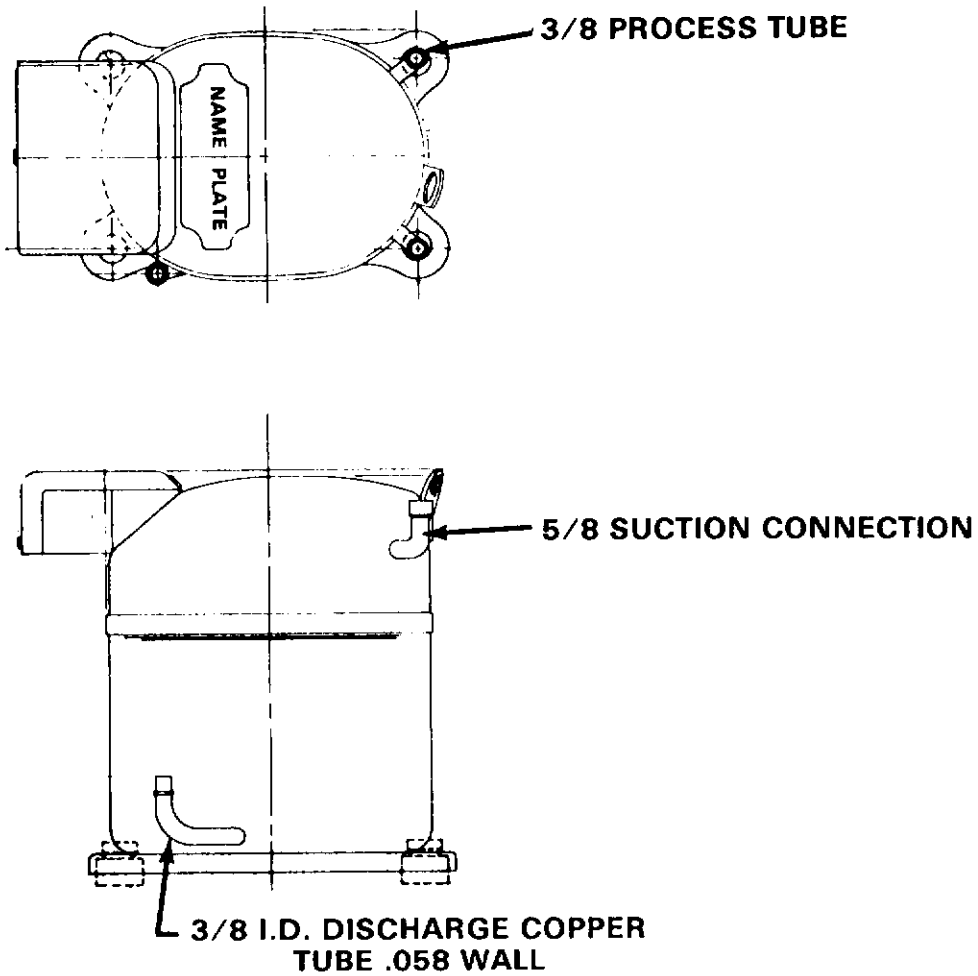

115/60/1

18-4200-01	Compressor Cope No. SSC4-0100-CAA
18-4200-40	Compressor Overload
18-1901-09	Start Capacitor Cope No. 014-0008-50
18-1902-45	Run Capacitor Cope No. 014-0002-09
18-1903-33	Relay Cope No. 040-0001-26
18-2300-26	Mounting Sleeves
18-2300-27	Grommets

COMPLETE WATER PUMP
115/60/1
12-1930-01

ITEM NO.	PART NO.	DESCRIPTION
1.	12-1849-54	Nut (Hex)
2.	12-1849-55	Washer
3.	12-1849-56	Washer
4.	12-1849-57	Impeller
5.	12-1849-58	Lockwasher
6.	12-1849-59	Screw
7.	12-1849-60	O-Ring
8.	12-1849-61	Pump Housing
	12-1849-62	Screw

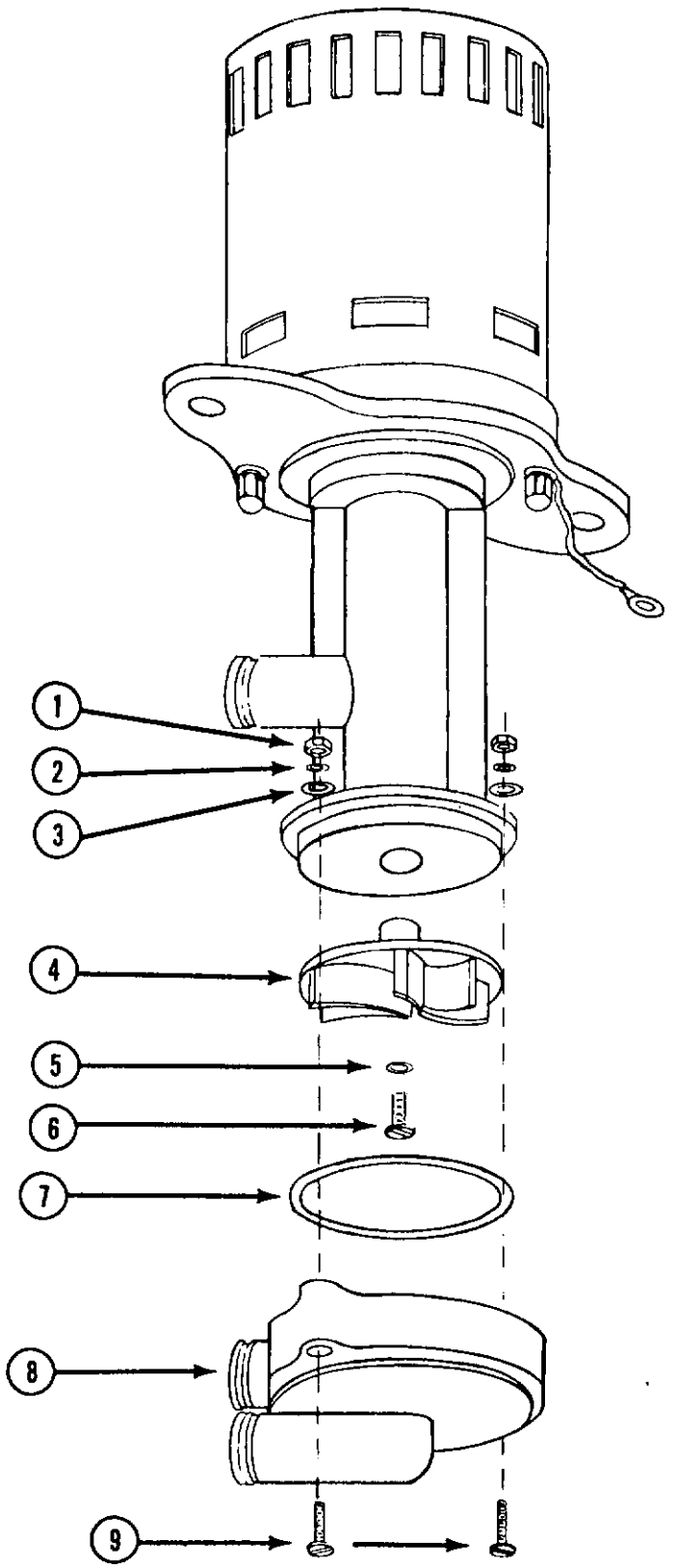

NOTE:

It is impractical to replace the Motor only or the Pump Body on these Water Pumps at the field level.

In the assembly procedure of the Motor and Body, it is necessary that the motor be centered properly to avoid damage to the impeller.

The supplier of these pumps uses special tools in assembly to center the motor and body correctly.

On this page is a listing of the replacement parts that are available and can be replaced on these pumps at the field level.

These pumps 12-1849 and 12-1930 are identical except for the length and design of the electrical leads.

12-1849-01 60" electrical leads with 1/4" quick connect ends. OBSOLETE replace with 12-1930-01 and proper lead.

12-1930-01 6" electrical lead with pin plug connection.

Wire assemblies used with 12-1930-01 pump.

12-1940-01 12" electrical lead with pin plug socket.
Usage: AC30
12-1940-02 40" electrical lead with pin plug socket.
Usage: MC1, MC25, MC30 and Top Chamber MC2, MC35, MC40
12-1940-03 50" electrical lead with pin plug socket.
Usage: MC2, MC35 & MC40 Lower Chamber

CABINET PARTS

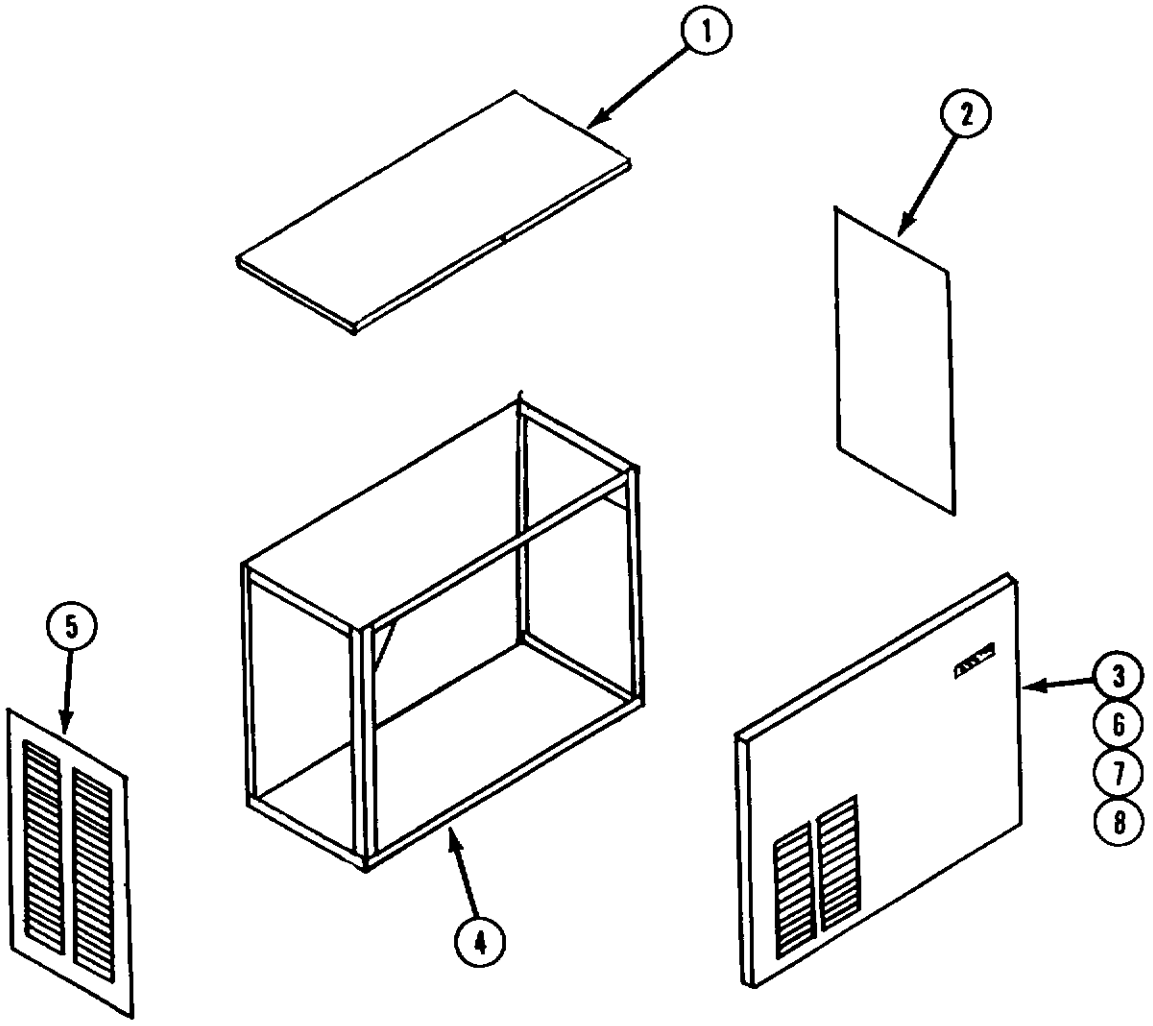

	Enamel	Stainless Steel
1. Top Panel	A23784-001	A23784-002
2. Panel, Right Side	A23783-001	A23783-002
3. Panel, Front	A23785-001 Vinyl	A23785-002
4. Cabinet Assy.	A26178-001	A26178-001
5. Panel Left Side	A23782-001	A23782-002
6. Front Panel Screw	A22061-001	03-1419-09
7. Emblem	15-0156-00	15-0156-00
8. Speed Nut	03-0271-00	03-0271-00

LEFT END VIEW

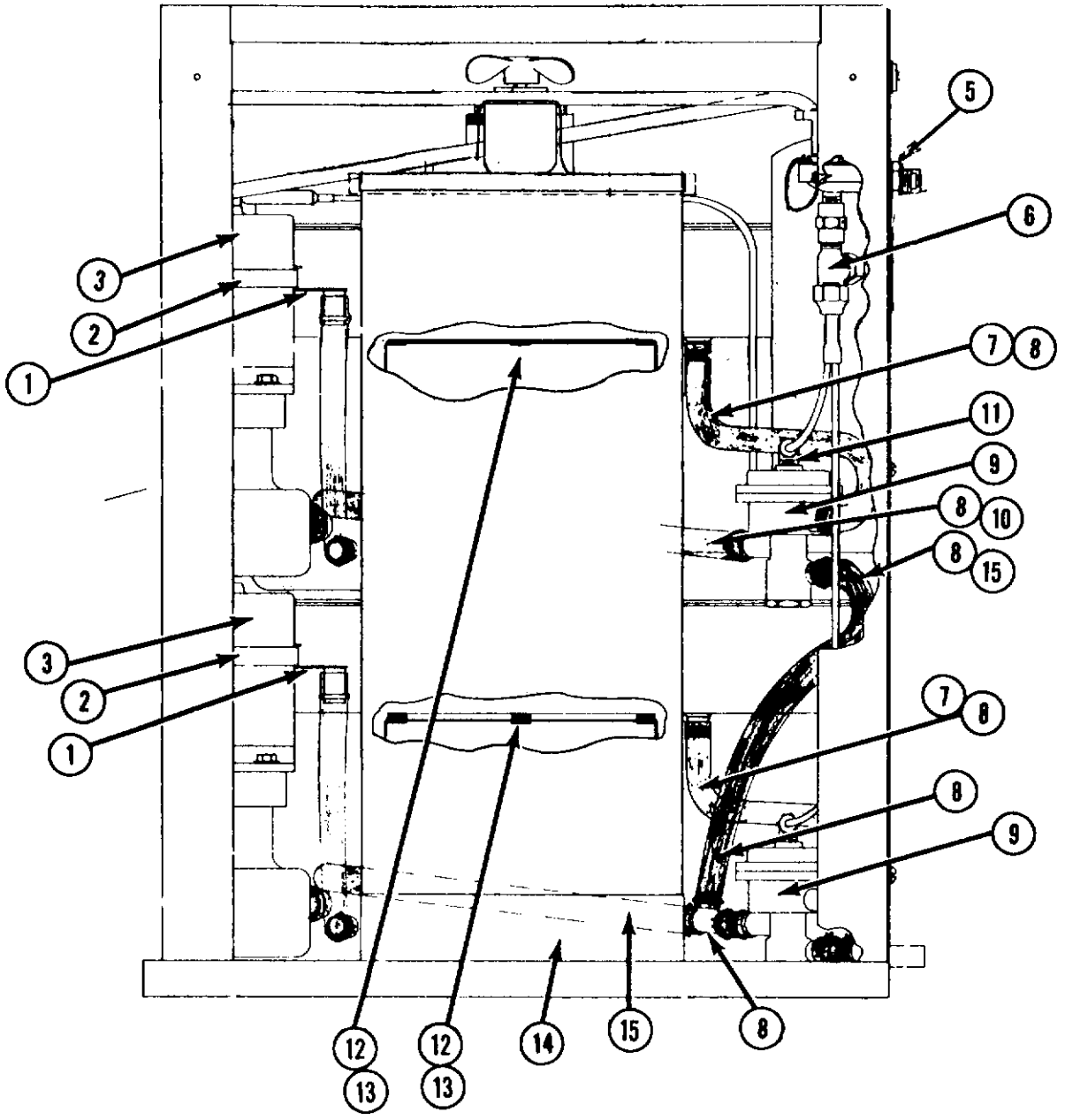

ITEM NO.	PART NO.	DESCRIPTION
1.	A24056-001	Tube & Bracket Assy.
2.	02-0706-00	Clamp
3.	See Page 11	Water Pump Assy.
5.	13-1394-01	Pal-Nut
6.	12-1434-01	Solenoid Valve
7.	05-0509-01	Tube Platen Drain
8.	02-1338-00	Hose Clamp
9.	See Page 9	3/Way Valve
10.	05-0501-01	Tube
11.	16-0620-07	Elbow
12.	02-2038-01	Curtain Assy.
13.	03-1526-01	Clips, Curtain
14.	02-2149-01	Cube Chute W/Cover

WATER COOLED
TOP VIEW

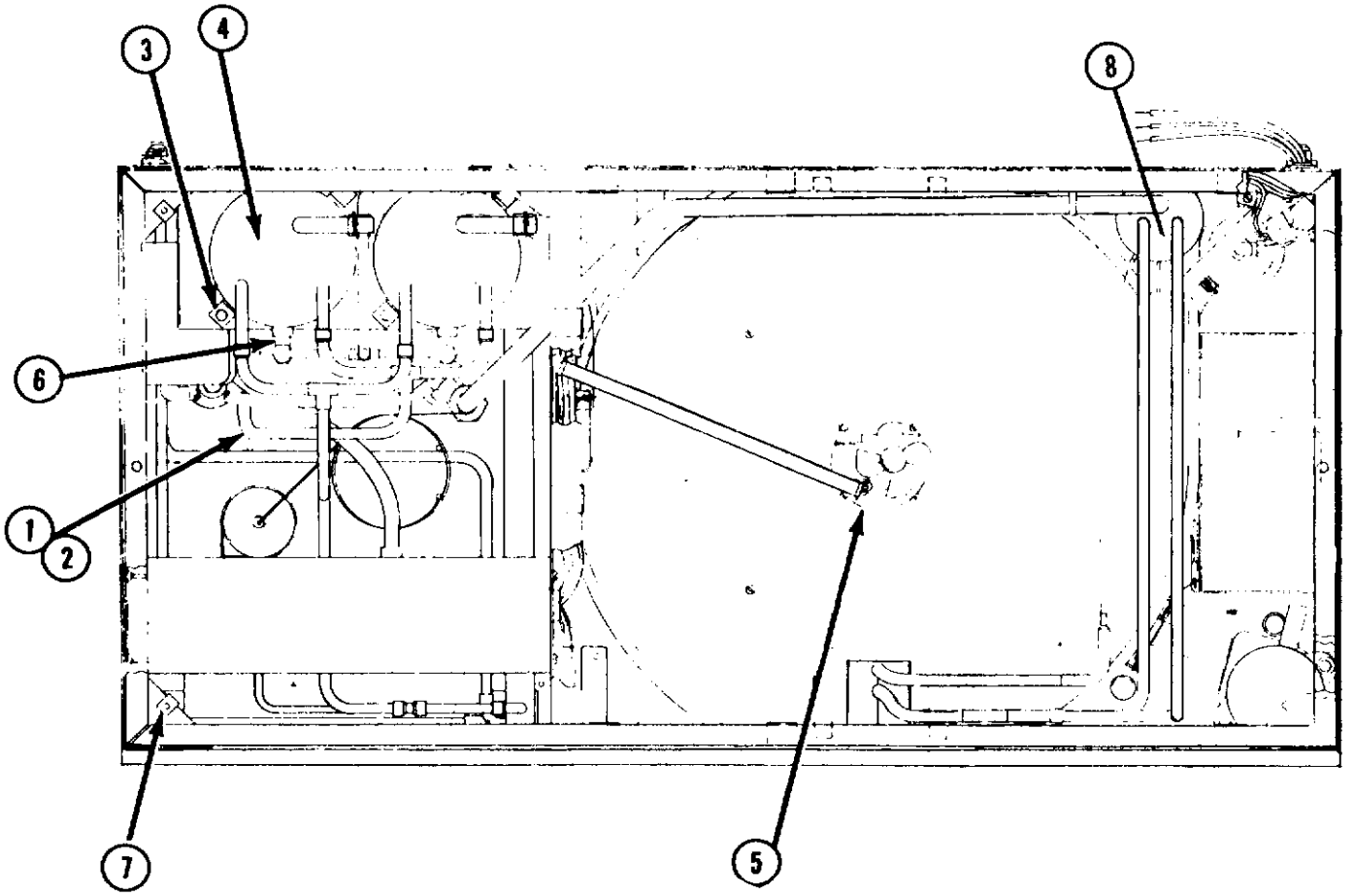

ITEM NO.	PART NO.	DESCRIPTION
1.	16-0560-00	Valve Core
2.	16-0563-00	Brass Cap
3.	A19233-000	Bracket Tank
4.	A23926-001	Tank Assy. (2)
5.	See Page 7	Agitator Motor
6.	A13346-002	Flow Control (.50 GPM)
7.	03-1423-02	Speed Nut
8.	A23902-001	Suction Line-Accumulator

WATER COOLED
FRONT VIEW

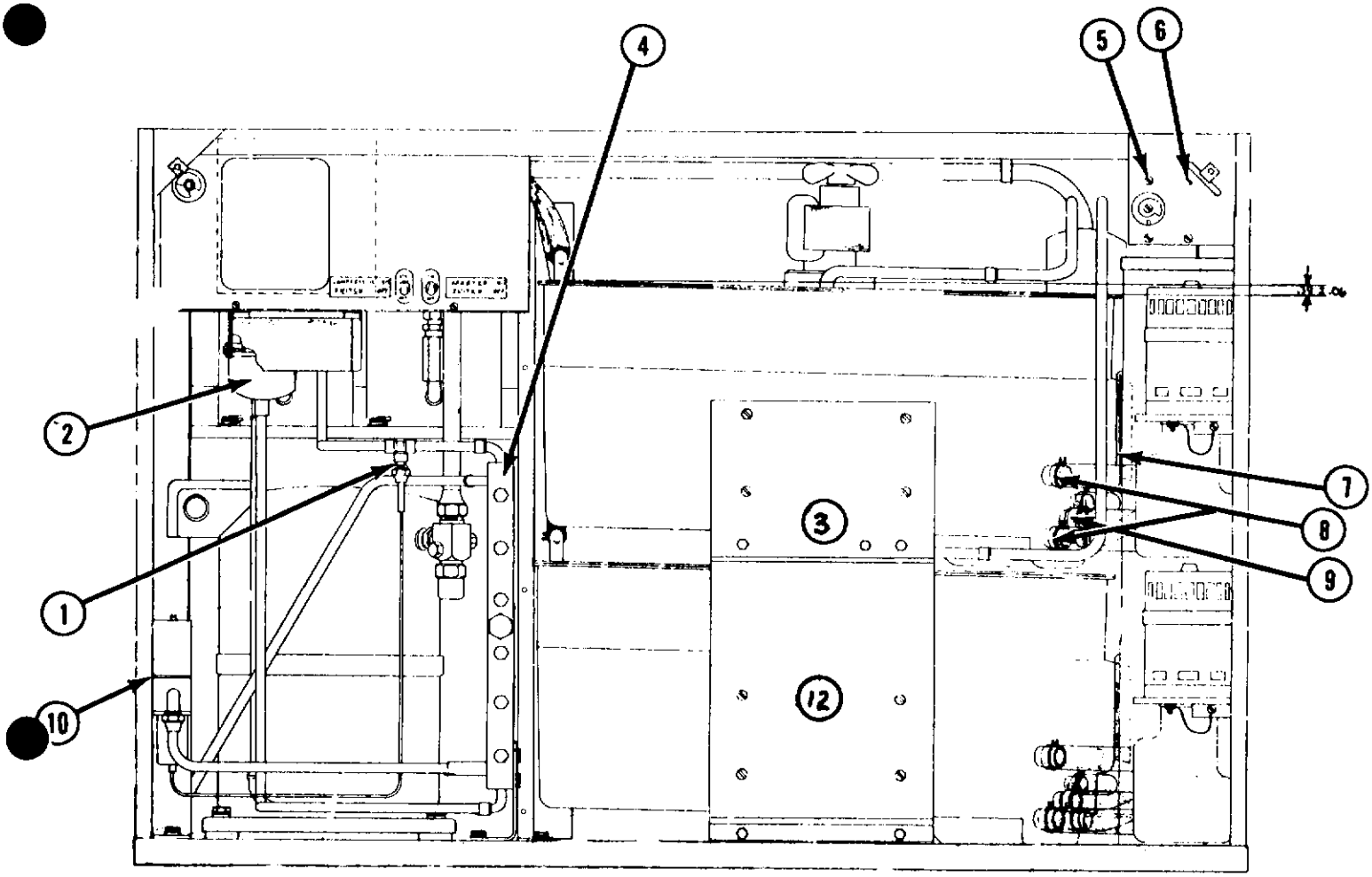

ITEM NO.	PART NO.	DESCRIPTION
1.	16-0652-01	Adapter
2.	02-2187-02	Drier
3.	A24502-001	Upper Mount
*4.	18-3308-01	Condenser (Edwards Condenser)
5.	11-0345-02	Cube Size Control (MCL-MCM)
	11-0351-03	Cube Size Control (MCS)
6.	11-0353-03	Bin Control
7.	13-0595-00	Gasket, Cube Chute
8.	02-2013-02	Hose Clamp
9.	02-0179-00	Hose Clamp
10.	11-0198-00	Water Regulator
11.	16-0162-01	Strainer (Not Shown)
12.	A24500-001	Lower Mount

* **NOTE:** Condenser, Part Number 18-3308-01, Halsted Mitchell Condenser, was used on water cooled models up to Serial Number 5N-038143. 18-3306-01 used after S.N. 5N-038143.

AIR COOLED
TOP VIEW

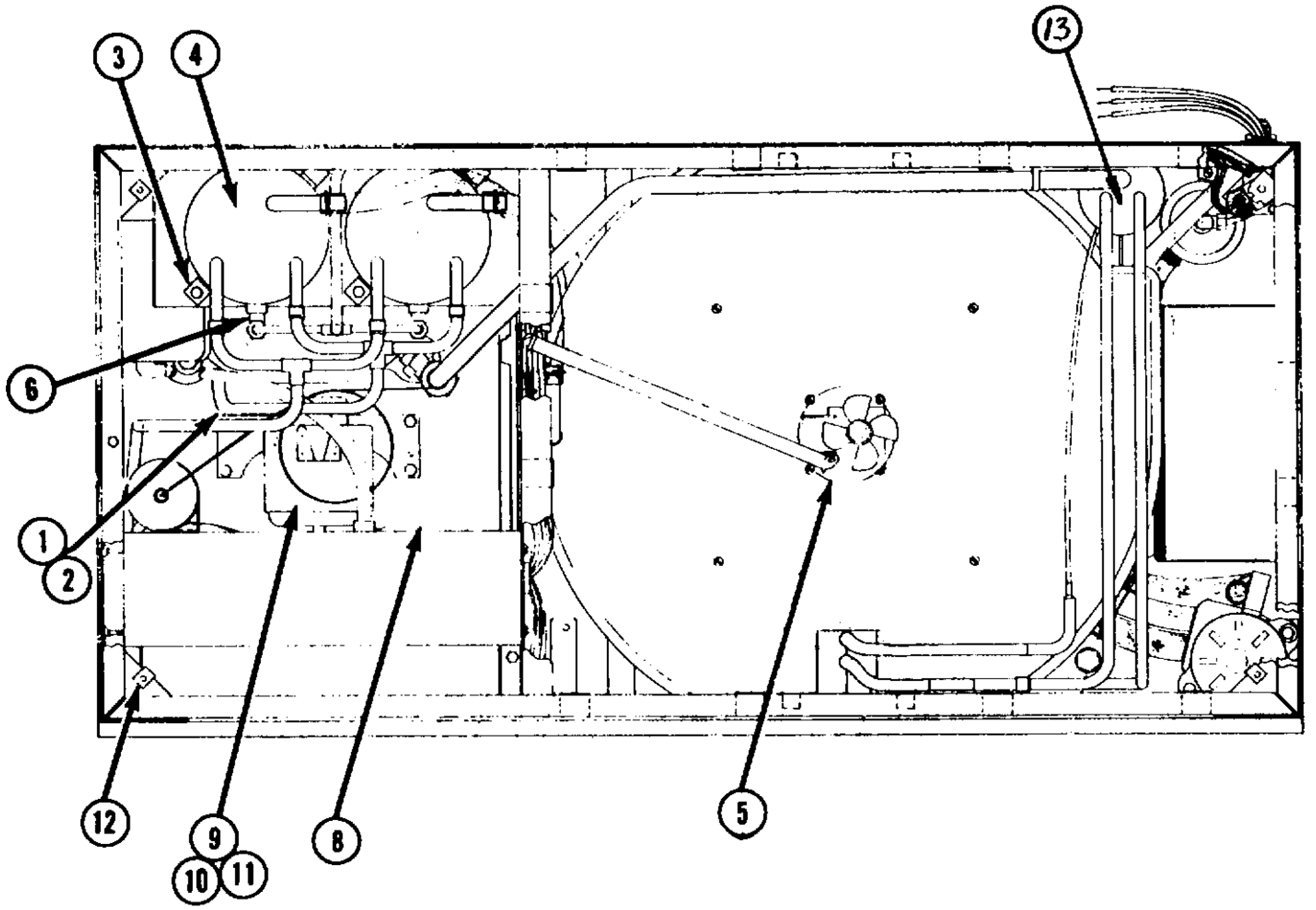

ITEM NO.	PART NO.	DESCRIPTION
1.	16-0563-00	Brass Cap
2.	16-0560-00	Valve Core
3.	A19233-000	Bracket Tank
4.	A23926-001	Tank Assembly (2)
5.	See Page 7	Agitator Motor
6.	A13346-002	Flow Control (.50 GPM)
8.	18-0787-00	Fan Blade
9.	18-0788-02	Fan Motor 115/230/60/1 (-4)
	18-0788-07	Fan Motor 115/208/60/1 (-10)
10.	18-0597-00	Mount, Fan Motor
11.	A24068-001	Spacer, Fan Motor
12.	03-1423-02	Speed Nut
13.	A23902-001	Suction Line-Accumulator

AIR COOLED
FRONT VIEW

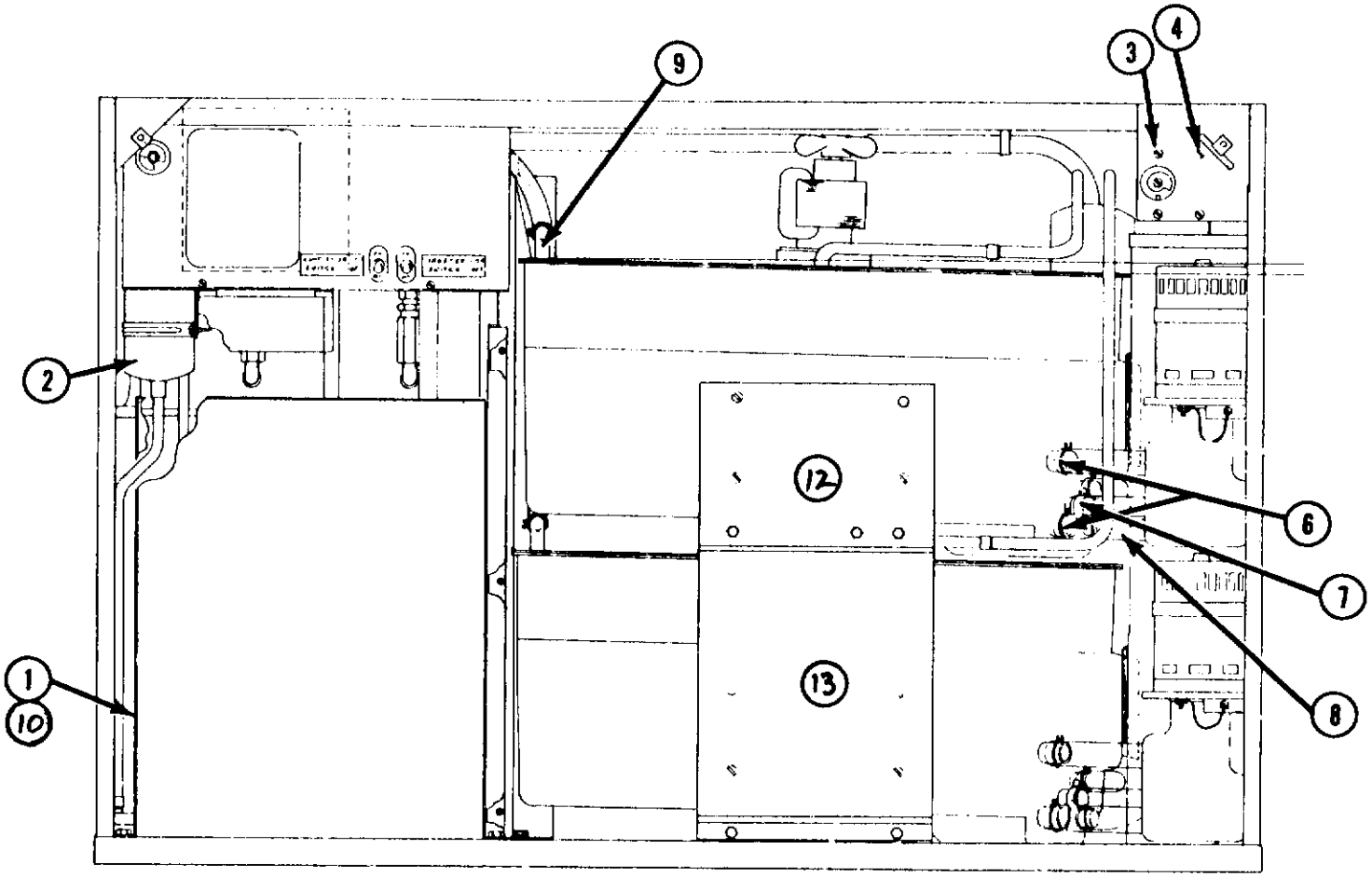

ITEM NO.	PART NO.	DESCIPTION
⚠1 1.	18-0398-01	Condenser, Air Cooled
2.	02-2187-02	Drier
3.	11-0345-02	Cube Size Control (MCL-MCM)
	11-0351-03	Cube Size Control (MCS)
4.	11-0353-03	Bin Control
6.	02-1358-00	Hose Clamp
7.	02-0179-00	Hose Clamp
8.	13-0674-07	Pump Tubing (Specify Feet)
9.	A23837-001	Harvest Elbows
10.	A23929-001	Shroud
11.	16-0162-01	Strainer (Not Shown)
12.	A24502-001	Upper Mount
13.	A24500-001	Lower Mount

⚠1 Refer to Scotsman Bulletin PS-1-74 if machine came equipped w/a Karmazon condenser.

CABINET PARTS

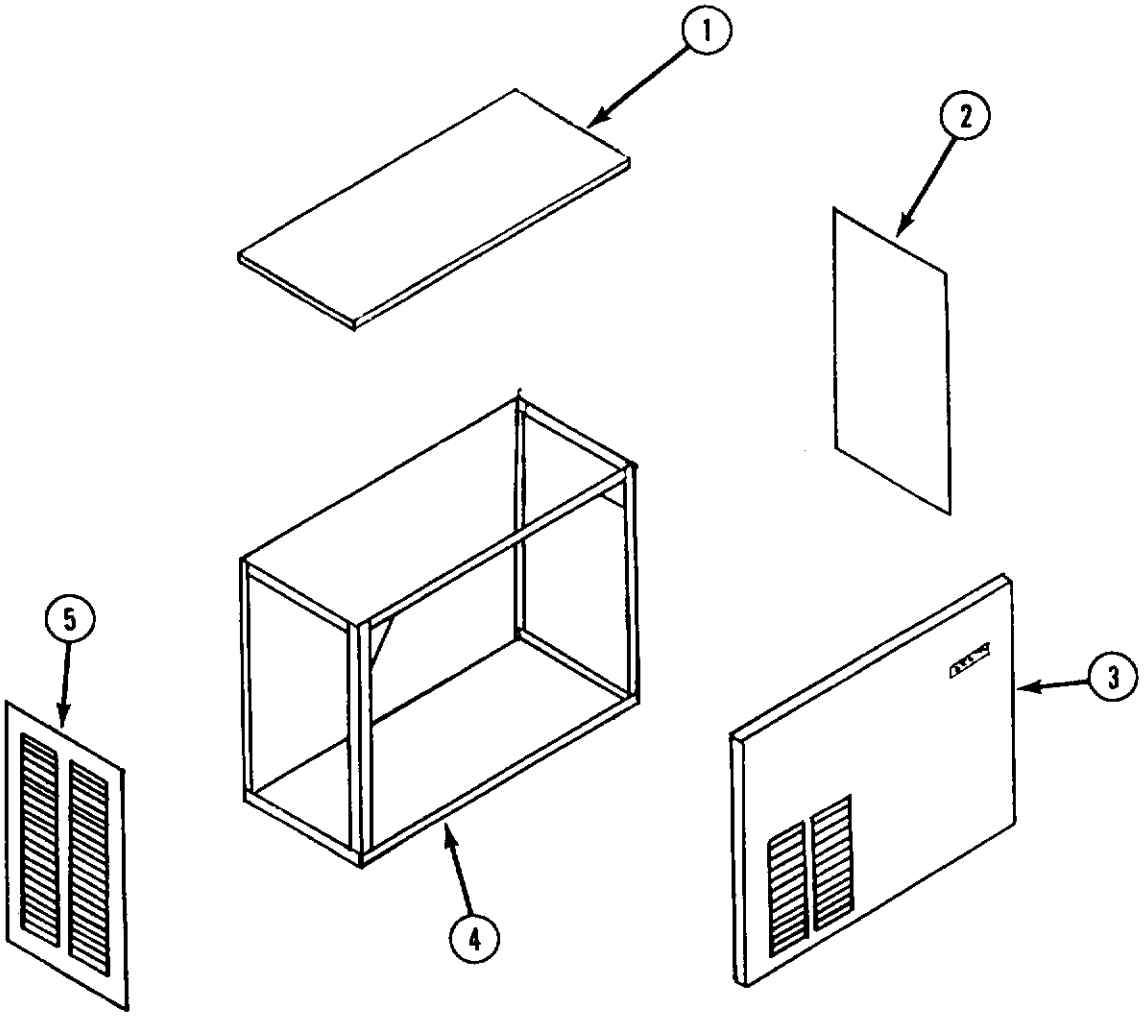

	Enamel	Stainless Steel
1. Top Panel	A23784-001	A23784-002
2. Panel, Right Side	A23900-001	A23900-002
3. Panel, Front	A23898-001 Vinyl	A23898-002
4. Cabinet Assy.	A23890-001	A23890-001
5. Panel, Left Side	A23899-001	A23899-002
6. Panel Back	Fixed	A24834-001
7. Screw, Front Panel	A22061-001	03-1419-09

*Panel Conversion Kit (Enamel to Stainless Steel) (Kit Includes Items 1, 2, 3, 5, and 6) — Part No. KPCS-2A. Order Kit from Sales Department.

TOP
FREEZER ASSEMBLY

ITEM NO.	PART NO.	DESCRIPTION
1.	03-1404-10	Screw
2.	03-1422-04	Speed Clip
3.	13-0772-01	Rubber Insulator
4.	13-0758-01	Rubber Cup Holder - Large
	13-0757-01	Rubber Cup Holder - Medium
	13-0756-01	Rubber Cup Holder - Small
5.	02-2194-01	Drive Fork
6.	A25480-001	Spray Bar W/Rubber Tips
7.	13-0653-00	Rubber Tips
8.	02-2028-01	Inner Pan
9.	A23827-001	Metal Plate
10.	03-1409-11	Rubber Washer
11.	02-2124-01	Insulation Cover
12.	A24961-001	Cover Assembly
13.	S07434-000	Adapter Plug
14.	03-1409-03	Fiber Washer
15.	A24129-002	Platen Ass'bly - Large
	A23880-002	Platen Ass'bly - Medium
	A23803-002	Platen Ass'bly - Small
16.	A24198-001	Spray Deflector 2/Unit*
	A24198-003	Spray Deflector 1/Unit
	A24198-004	Spray Deflector 1/Unit
		* Above deflectors on small cube series MCS only. Not shown.
17.	02-2121-01	Inlet Housing
18.	13-0617-25	O-Ring
19.	A24518-001	Water Drive Tube W/Top
20.	03-1559-01	Retainer Ring
21.	A24054-001	Bottom Pan
22.	A16238-001	Hot Water Tube
23.	A23911-001	Bushing-Seal Nut
24.	13-0168-00	Lip Seal
25.	03-1566-01	Screws
26.	12-0675-25	Fan Blade
27.	A24656-001	Drive Motor W/Fan Blade
28.	13-0176-00	Grommet
29.	A23830-001	Drive Shaft
30.	A24830-001	Centering Washer
31.	02-2271-01	Top, Water Drive Tube

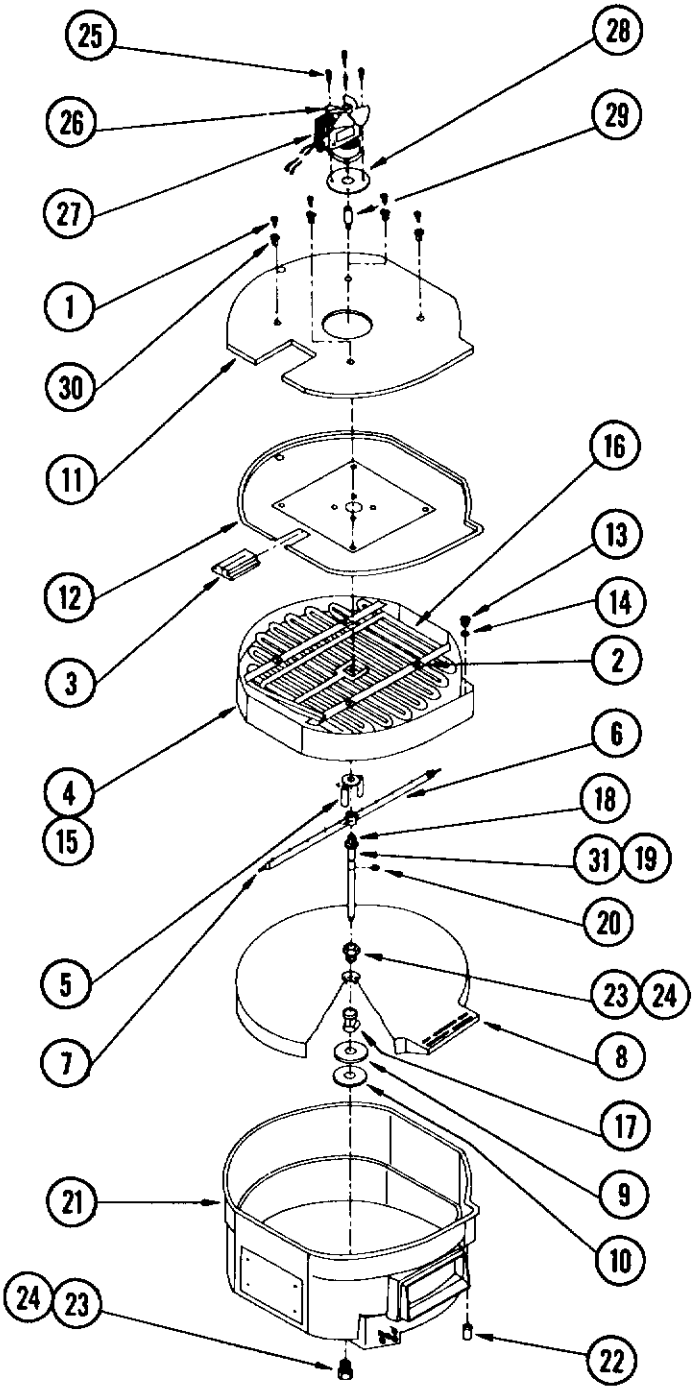

NOTE:

Units prior to GT 395246 (Sept. 1971) had right hand on Spray Bar Drive. To convert order items 17, 19, 23, and 24.

BOTTOM FREEZER

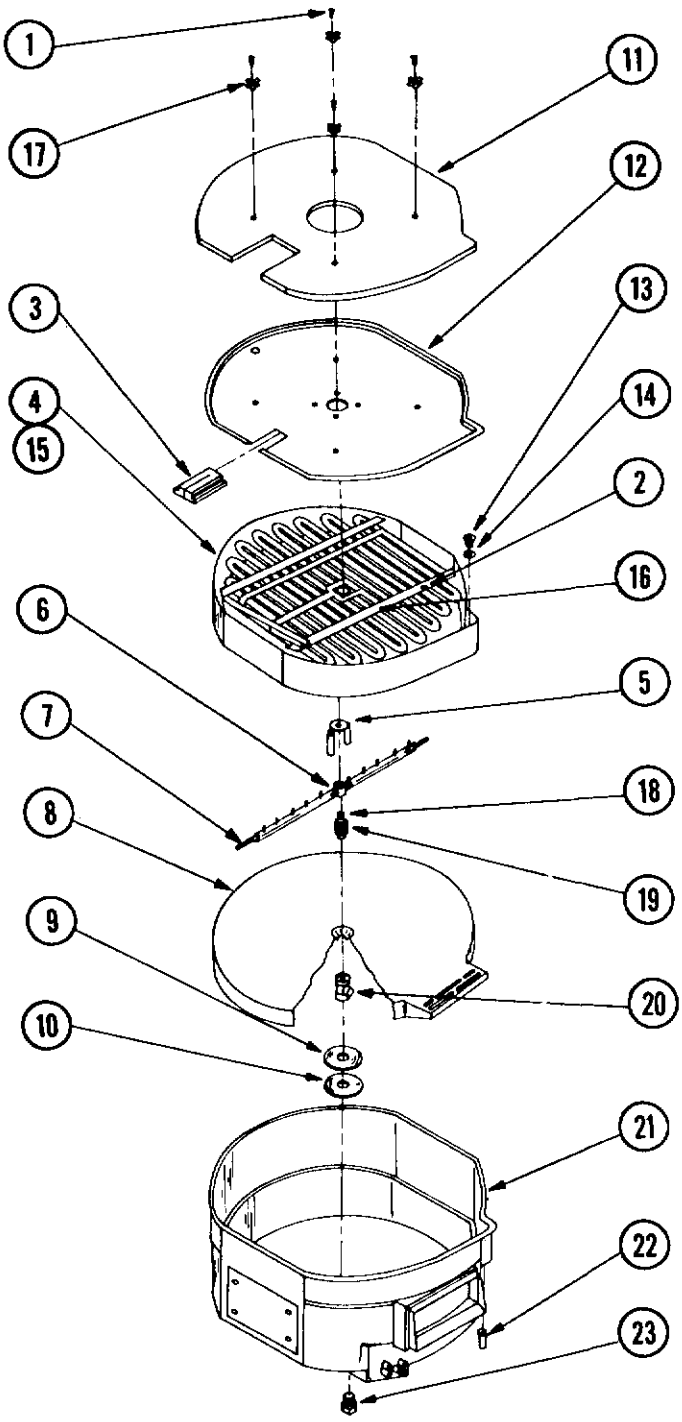

ITEM NO.	PART NO.	DESCRIPTION
1.	03-1404-10	Screw
2.	03-1422-04	Speed Clip
3.	13-0772-01	Rubber Insulator
4.	13-0758-01	Rubber Cup Holder - Large
	13-0757-01	Rubber Cup Holder - Medium
	13-0756-01	Rubber Cup Holder - Small
5.	02-2194-01	Drive Fork
6.	A25480-001	Spray Bar W/Rubber Tips
7.	13-0653-00	Rubber Tips
8.	02-2028-01	Inner Bottom
9.	A23827-001	Support Washer
10.	03-1409-11	Rubber Washer
11.	02-2124-01	Cover Insulation
12.	A24034-002	Cover Assembly
13.	S07434-000	Adapter Plug
14.	03-1409-03	Fiber Washer
15.	A24129-002	Platen Ass'bly - Large
	A23880-002	Platen Ass'bly - Medium
	A23803-002	Platen Ass'bly - Small
16.	A24198-001	Spray Deflector 2/Unit *
	A24198-003	Spray Deflector 1/Unit
	A24198-004	Spray Deflector 1/Unit
		* Above deflectors on small cube series MCS only. Not shown.
17.	A24830-001	Centering Washer
18.	13-0617-25	O-Ring
19.	02-2120-01	Spray Bar-Bearing
20.	02-2121-01	Inlet Housing
21.	A24819-001	Bottom Chamber
22.	A16238-001	Hot Water Tube
23.	02-2122-01	Bottom Plug

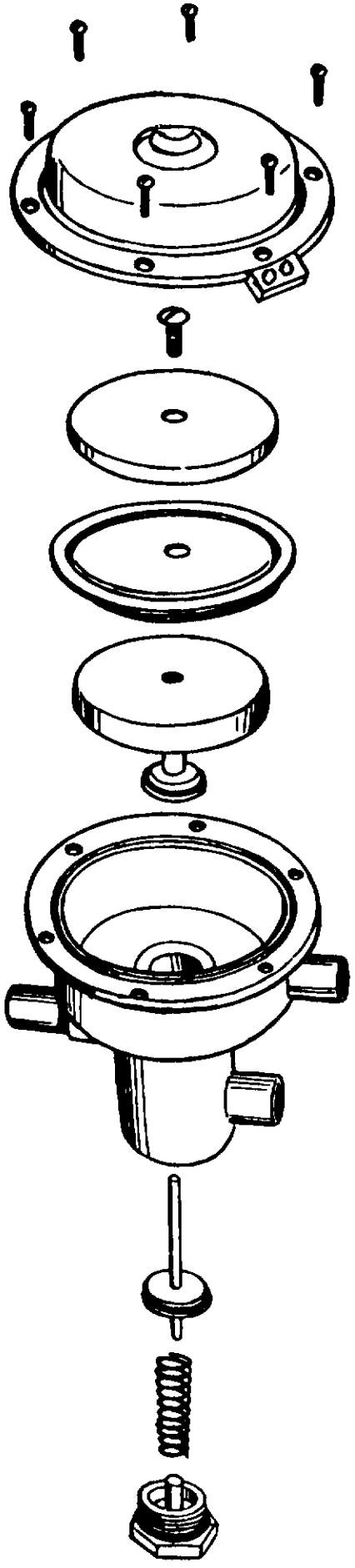

WATER VALVE ASSEMBLY
A19722-000

ITEM NO.	PART NO.	DESCRIPTION
1.	13-0617-02	O-Ring
2.	A17937-000	Valve Cap Bottom
3.	02-1545-00	Spring
4.	13-0617-01	O-Ring
5.	A17942-000	Lower Plunger Rod
6.	03-1403-06	Screws (6)
7.	A18192-000	Valve Top Cover
8.	03-1506-01	Screw
9.	A17941-000	Upper Plunger
10.	13-0606-00	Upper Diaphragm
11.	A18312-000	Diaphragm Cover
12.	A17947-000	Valve Body

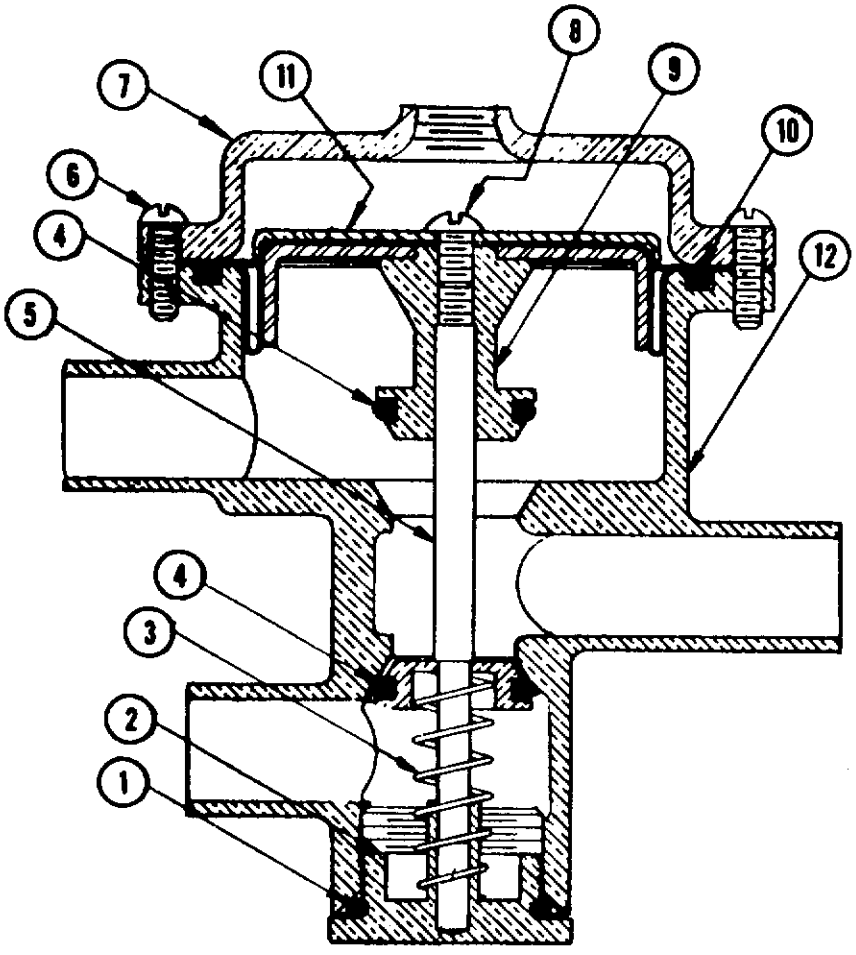

CONTROL BOX SCHEMATIC

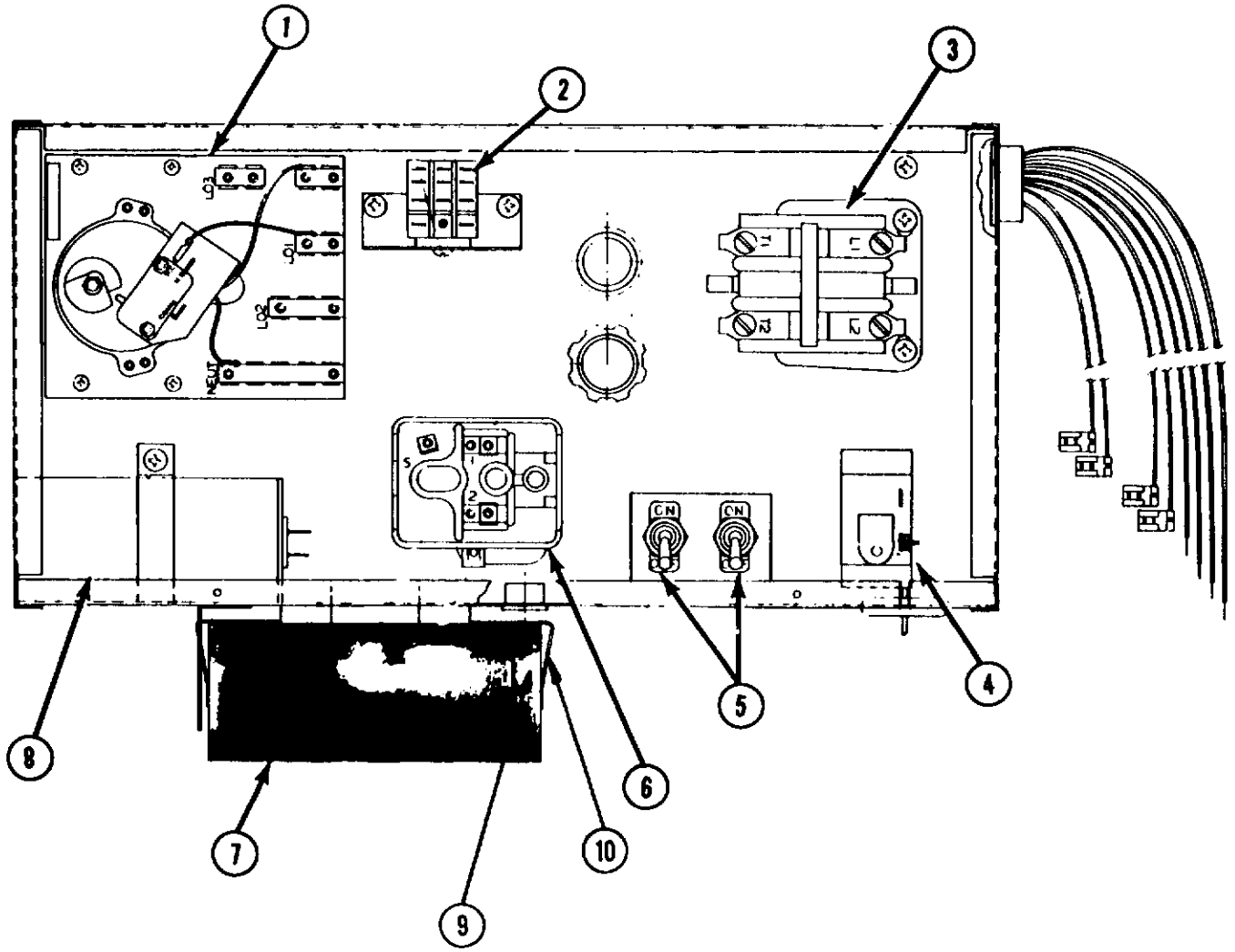

ITEM NO.	PART NO.	DESCRIPTION
1.	A25923-001	Timer Kit (12-1979-01)
2.	12-1598-00	Relay
3.	12-0820-01	Contactor
4.	11-0365-00	Pressure Control (Air Cooled)
	11-0357-00	Pressure Control (Water Cooled)
5.	12-0426-01	Switch
6.	18-1903-29	Potential Relay 115/230/60/1
	18-1903-34	Potential Relay 115/208/60/1
7.	18-1901-15	Start Capacitor
8.	18-1902-29	Run Capacitor 115/230/60/1
	18-1902-34	Run Capacitor 115/208/60/1
9.	18-2200-38	Cap, Capacitor
10.	18-2200-39	Bracket, Capacitor

COMPLETE WATER PUMP
115/60/1
12-1930-01

ITEM NO.	PART NO.	DESCRIPTION
1.	12-1849-54	Nut (Hex)
2.	12-1849-55	Washer
3.	12-1849-56	Washer
4.	12-1849-57	Impeller
5.	12-1849-58	Lockwasher
6.	12-1849-59	Screw
7.	12-1849-60	O-Ring
8.	12-1849-61	Pump Housing
9.	12-1849-62	Screw

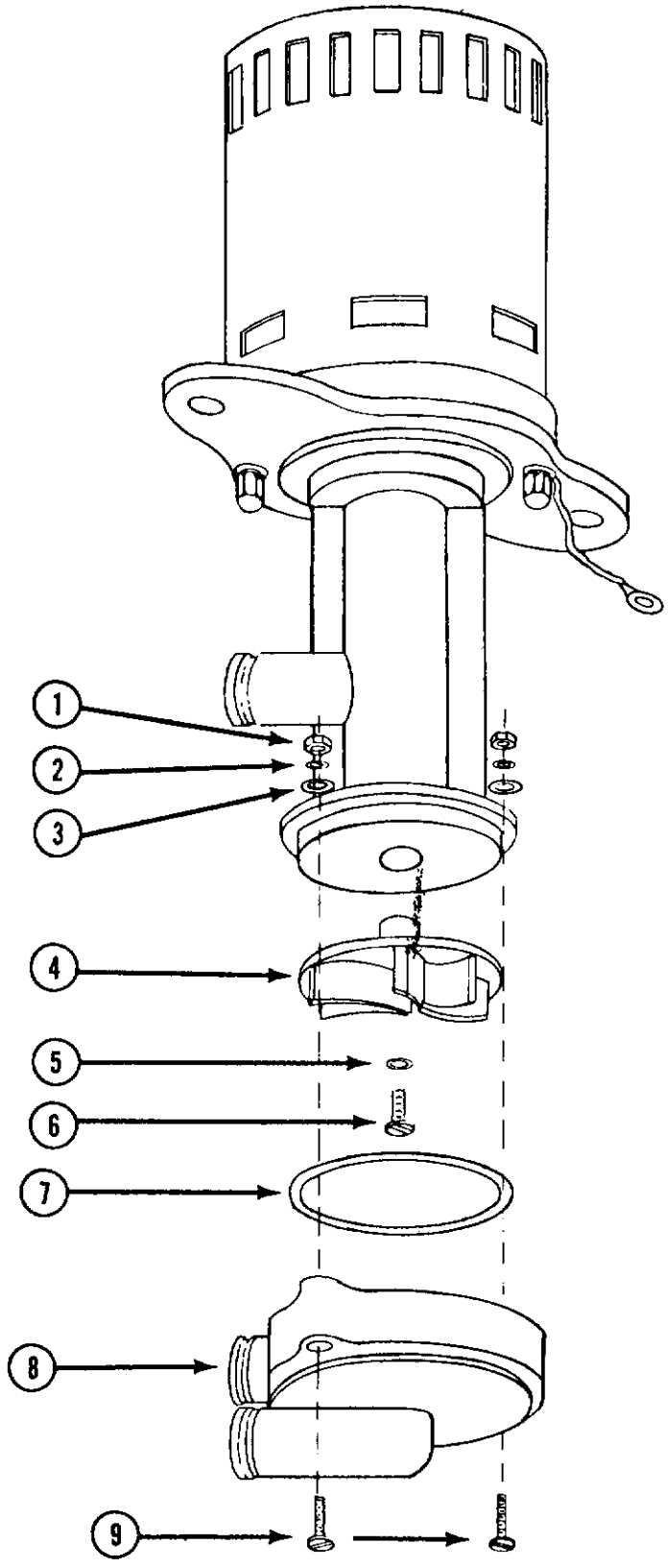

NOTE:

It is impractical to replace the Motor only or the Pump Body on these Water Pumps at the field level.

In the assembly procedure of the Motor and Body, it is necessary that the motor be centered properly to avoid damage to the impeller.

The supplier of these pumps uses special tools in assembly to center the motor and body correctly.

On this page is a listing of the replacement parts that are available and can be replaced on these pumps at the field level.

These pumps 12-1849 and 12-1930 are identical except for the length and design of the electrical leads.

12-1849-01 60" electrical leads with 1/4" quick connect ends. OBSOLETE replace with 12-1930-01 and proper lead.

12-1930-01 6" electrical lead with pin plug connection.

Wire assemblies used with 12-1930-01 pump.

12-1940-01 12" electrical lead with pin plug socket.
Usage: AC30
12-1940-02 40" electrical lead with pin plug socket.
Usage: MC1, MC25, MC30 and Top Chamber MC2, MC35, MC40
12-1940-03 50" electrical lead with pin plug socket.
Usage: MC2, MC35 & MC40 Lower Chamber

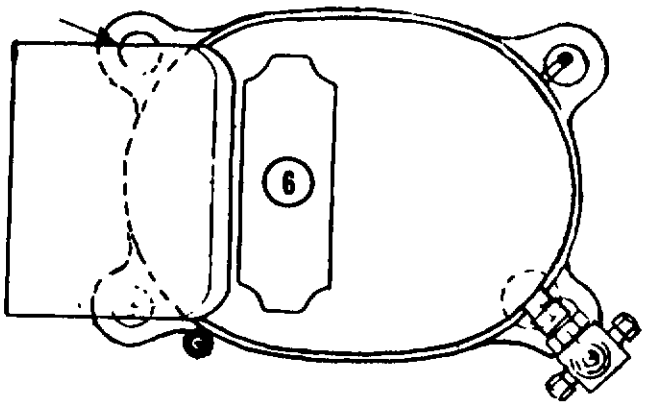

MOTOR COMPRESSOR
AIR & WATER
3500 RPM

MC2-10 (115/208/60/1)

1.	18-2300-07	Compressor
2.	18-1902-34	Run Capacitor
3.	18-1903-34	Potential Relay
4.	18-1901-15	Start Capacitor
5.	18-2300-32	Overload

MC2-9 (115/208-220/60/3)

1.	18-2300-03	Compressor
2.	18-2300-31	Overload

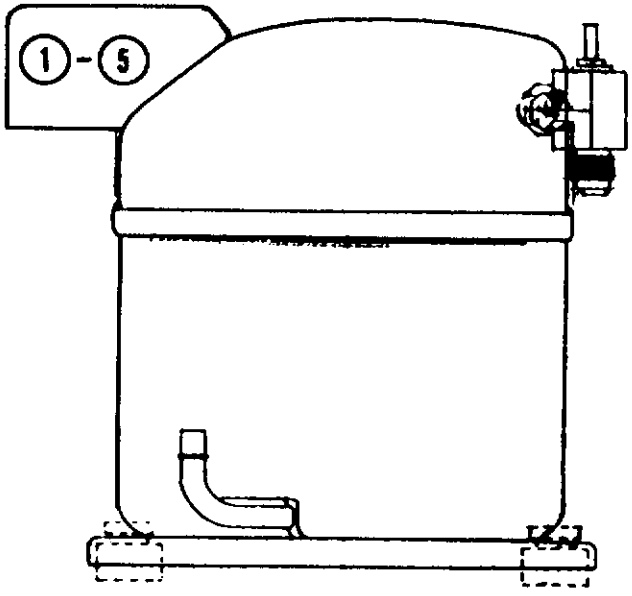

MC2-4 (115/230/60/1

1.	18-2300-02	Compressor
2.	18-1902-29	Run Capacitor
3.	18-1903-29	Potential Relay
4.	18-1901-15	Start Capacitor
5.	18-2300-23	Overload

COMMON TO ALL COMPRESSORS

6.	18-2300-28	Rotolock Valve
7.	18-2300-29	Valve Seal
8.	18-2300-26 & 27	Mounting Sleeves & Grommets

SPECIFICATIONS

18-1901-15 — Sprague No. A7929-Copeland No. 014-0008-51-4
145-175 MFC; 220 VAC; 60 CPS; 18,000 OHM Resistor.

18-1902-29 — Copeland No. 014-0002-02
370 Volt; 20 MFD

18-1902-34 — Copeland No. 014-0001-04-2
370 Volt; 15 MFD

18-1903-29 — Copeland No. 040-0001-19

18-1903-34 — Copeland No. 040-0001-16-3

AIR & WATER COOLED
Right End View

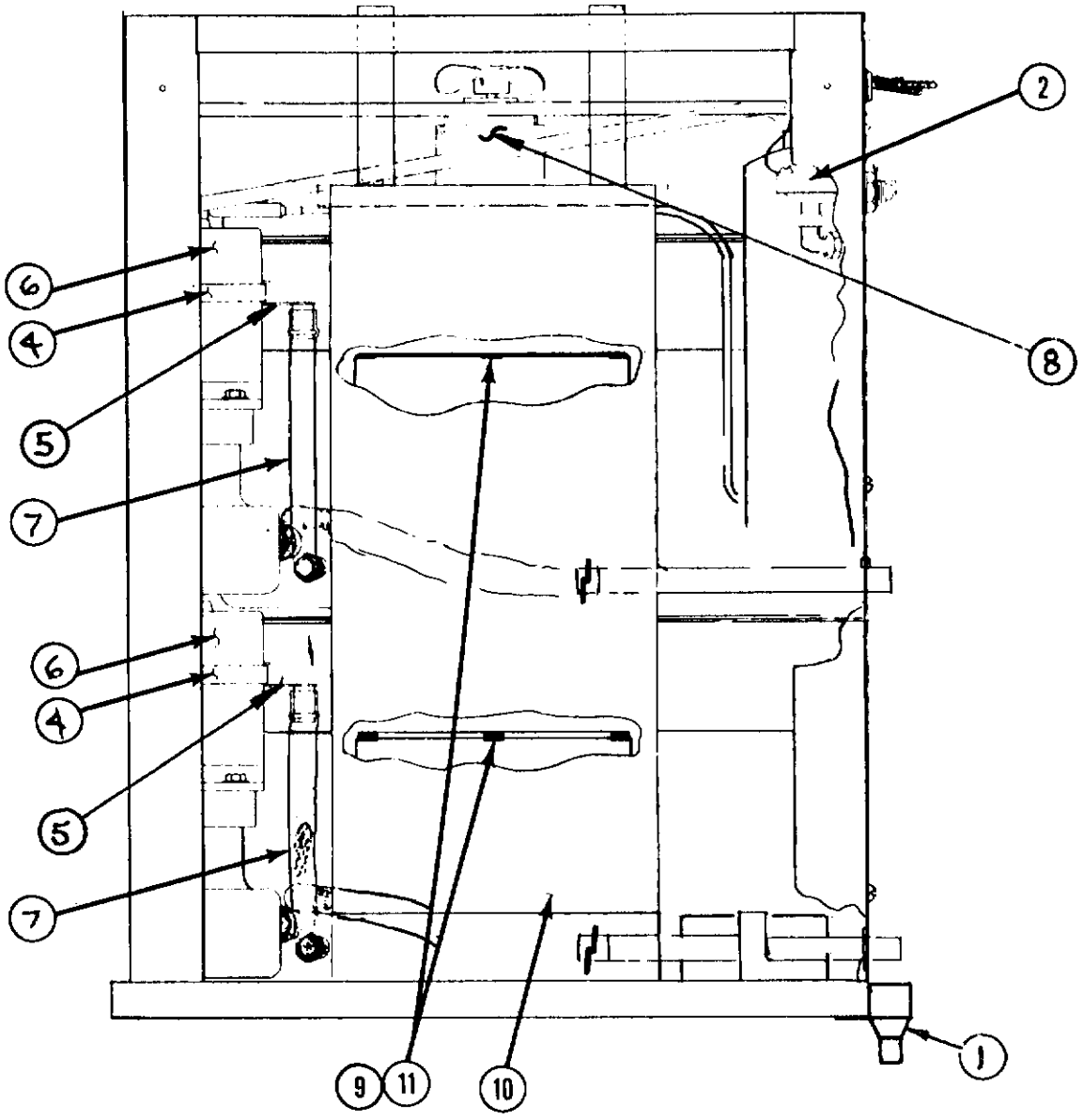

ITEM NO.	PART NO.	DESCRIPTION
1.	02-2296-01	Base Drain
2.	12-1434-01	Water Inlet Solenoid
3.	16-0162-01	Strainer (Not Shown)
4.	02-0706-00	Clamp
5.	A26426-001	Drain Tube Holder
6.	See Page 13	Water Pump
7.	13-0674-07	Tubing (order per ft.)
8.	See Page 10	Agitator Motor
9.	03-1526-01	Curtain Clips
10.	02-2149-01	Cube Chute W/Cover
11.	02-2038-01	Upper-Lower Curtain

WATER COOLED
Top View

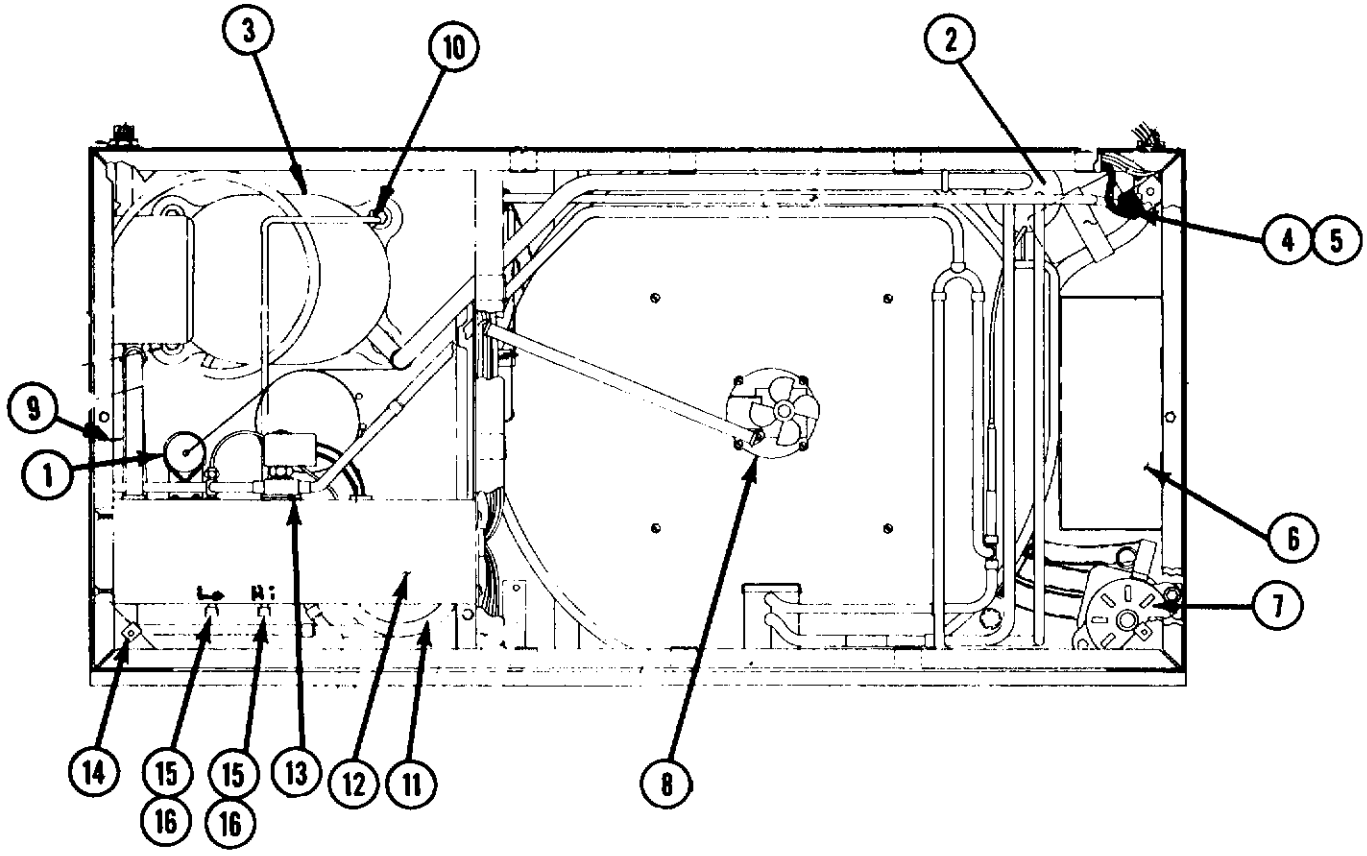

ITEM NO.	PART NO.	DESCRIPTION
1.	02-0677-01	Drier
2.	A25234-001	Suction Line - Accumulator
3.	See Page 12	Compressor
4.	12-1434-01	Water Inlet Solenoid
5.	12-1589-01	Solenoid Wire Assembly
6.	02-2149-01	Cube Chute W/Cover
7.	See Page 13	Water Pump
8.	See Page 10	Agitator Motor
9.	16-0673-10	Process Header
10.	16-0673-15	Process Tube
11.	18-3306-02	Condenser
12.	See Page 8 & 9	Control Box
13.	12-2023-01	Hot Gas Solenoid 115 Volt
14.	03-1507-01	Speed Nut
15.	16-0560-00	Valve Core
16.	16-0563-00	Valve Cap

AIR COOLED
Top View

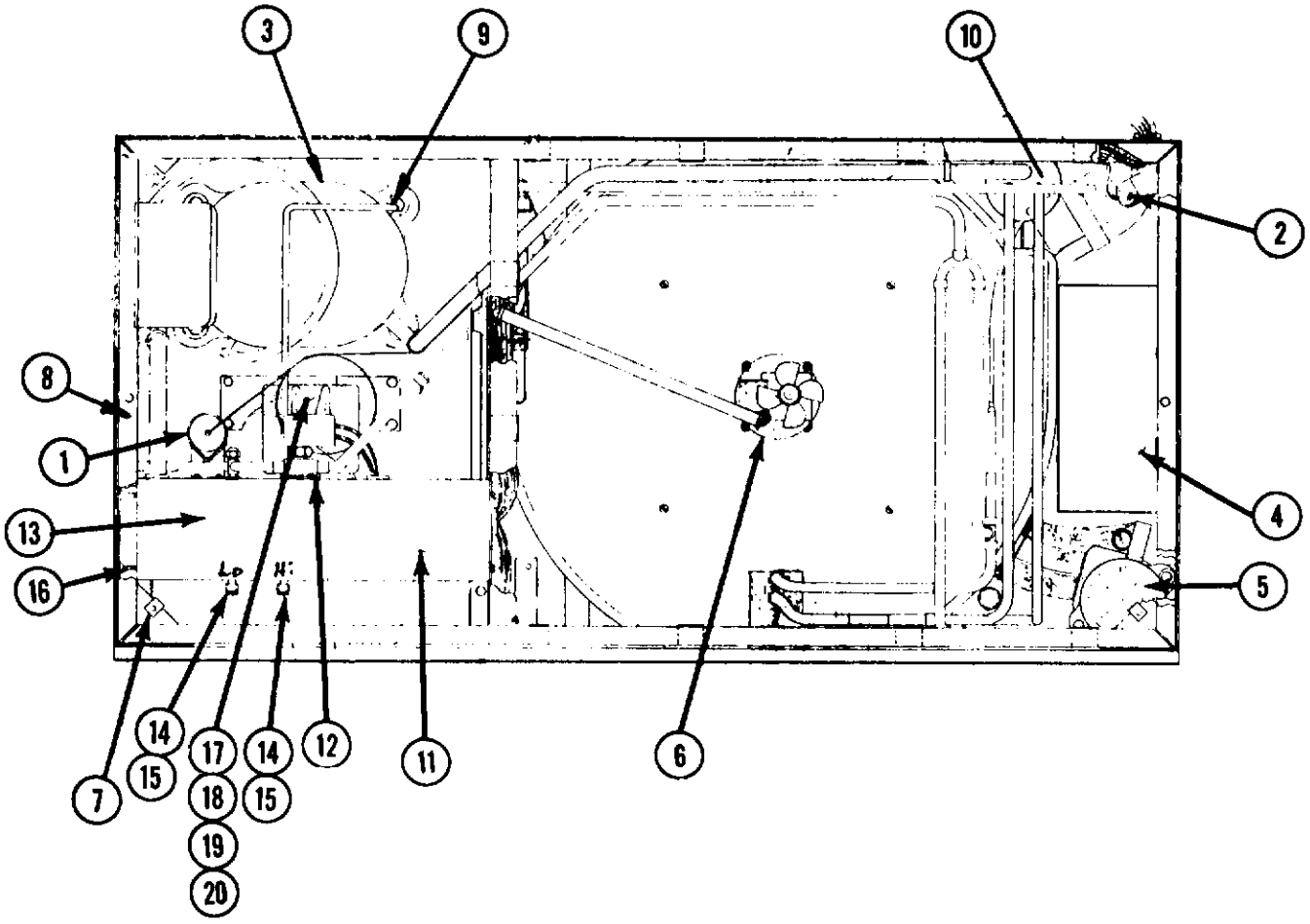

ITEM NO.	PART NO.	DESCRIPTION
1.	02-0677-01	Drier
2.	12-1434-01	Water Inlet Solenoid
3.	See Page 12	Compressor
4.	02-2149-01	Cube Chute W/Cover
5.	See Page 13	Water Pump
6.	See Page 10	Agitator Motor
7.	03-1507-01	Speed Nut
8.	16-0673-10	Process Header
9.	16-0673-15	Process Tube
10.	A25234-001	Suction Line - Accumulator
11.	See Page 6 & 7	Control Box
12.	12-2023-01	Hot Gas Solenoid 115 Volt
13.	18-0398-01	Condenser
14.	16-0560-00	Valve Core
15.	16-0563-00	Valve Cap
16.	A23929-001	Condenser Shroud
17.	18-3704-02	Fan Motor 115/230/60/1 (-4)
	18-3704-07	Fan Motor 115/208/60/1 (-10)
	18-3704-07	Fan Motor 115/208-220/60/3 (-9)
18.	18-0787-00	Fan Blade
19.	18-0597-00	Mount, Fan Motor
20.	A24068-001	Spacer, Fan Motor

WATER COOLED
Front View

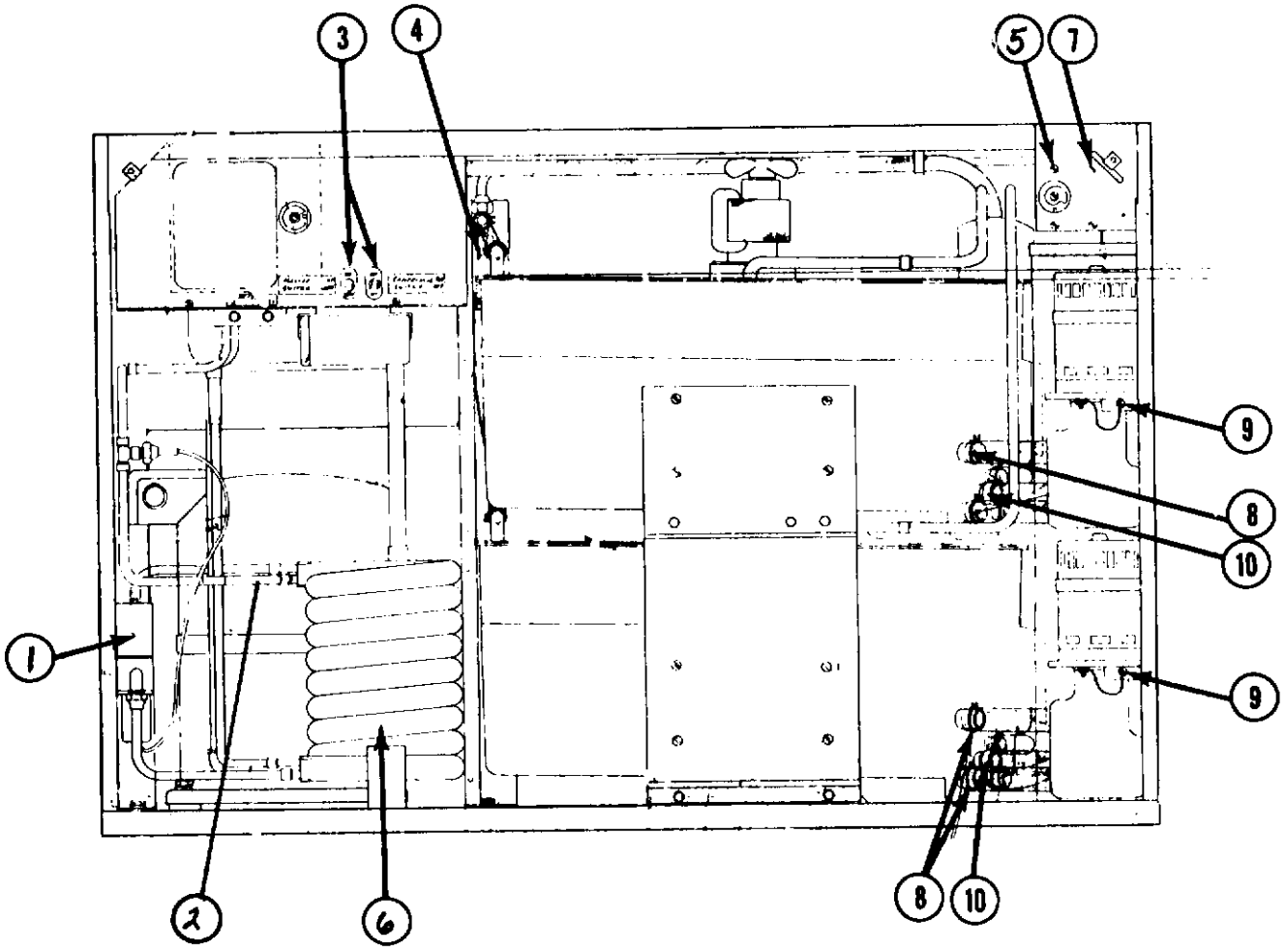

ITEM NO.	PART NO.	DESCRIPTION
1.	11-0198-02	Water Regulating Valve
2.	16-0673-13	Process Header
3.	12-0426-01	Toggle Switches
4.	A26230-001	Flow Control (2) (.50 GPM)
5.	11-0351-03	Cube Size Control (MCS)
	11-0345-02	Cube Size Control (MCM & MCL)
6.	18-3306-02	Condenser
7.	11-0353-03	Bin Thermostat
8.	02-1358-00	Hose Clamps
9.	See Page 13	Water Pumps
10.	02-0179-00	Screw Clamp

AIR COOLED
Front View

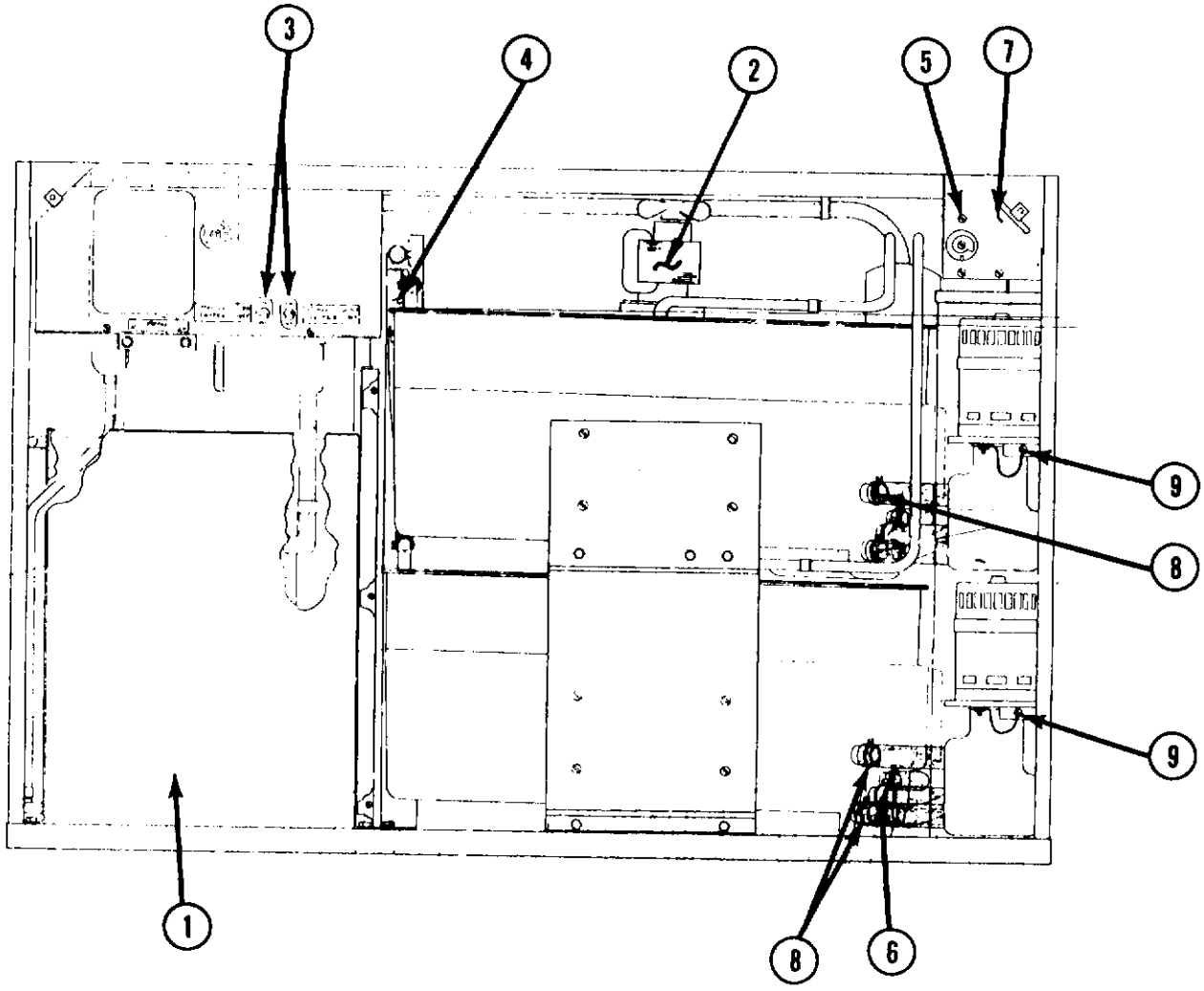

ITEM NO.	PART NO.	DESCRIPTION
1.	18-0398-01	Condenser
2.	See Page 10	Agitator Motor
3.	12-0426-01	Toggle Switches
4.	A26230-001	Flow Control (2) (.50GPM)
5.	11-0351-03	Cube Size Control (MCS)
	11-0345-02	Cube Size Control (MCM & MCL)
6.	02-0179-00	Screw Clamp
7.	11-0353-03	Bin Thermostat
8.	02-1358-00	Hose Clamps
9.	See Page 13	Water Pumps
10.		
11.		

CONTROL BOX — AIR COOLED
115/230/60/1 (-4)
115/208/60/1 (-10)

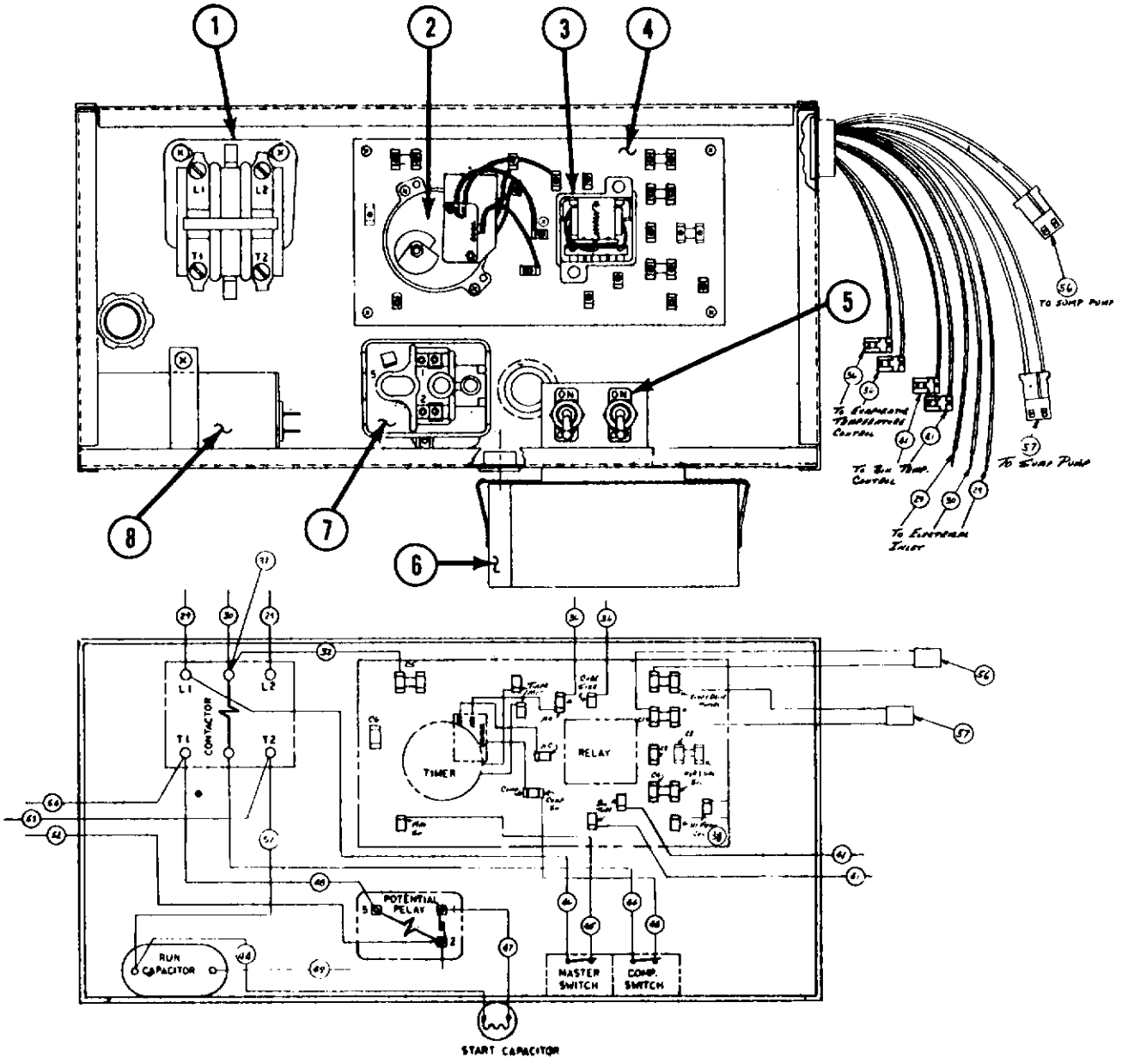

ITEM NO.	PART NO.	DESCRIPTION
1.	12-0820-01	Contactor
2.	12-1979-01	Timer - Switch Assembly
3.	12-1879-02	Relay
4.	12-1912-01	Circuit Board Only
5.	12-0426-01	Switches
6.	18-1901-15	Start Capacitor
7.	18-1903-34	Potential Relay 115/230/60/1 (-4)
	18-1903-29	Potential Relay 115/208/60/1 (-10)
8.	18-1902-29	Run Capacitor 115/230/60/1 (-4)
	18-1902-34	Run Capacitor 115/208/60/1 (-10)

CONTROL BOX — AIR COOLED

115/208-220/60/3 (-9)

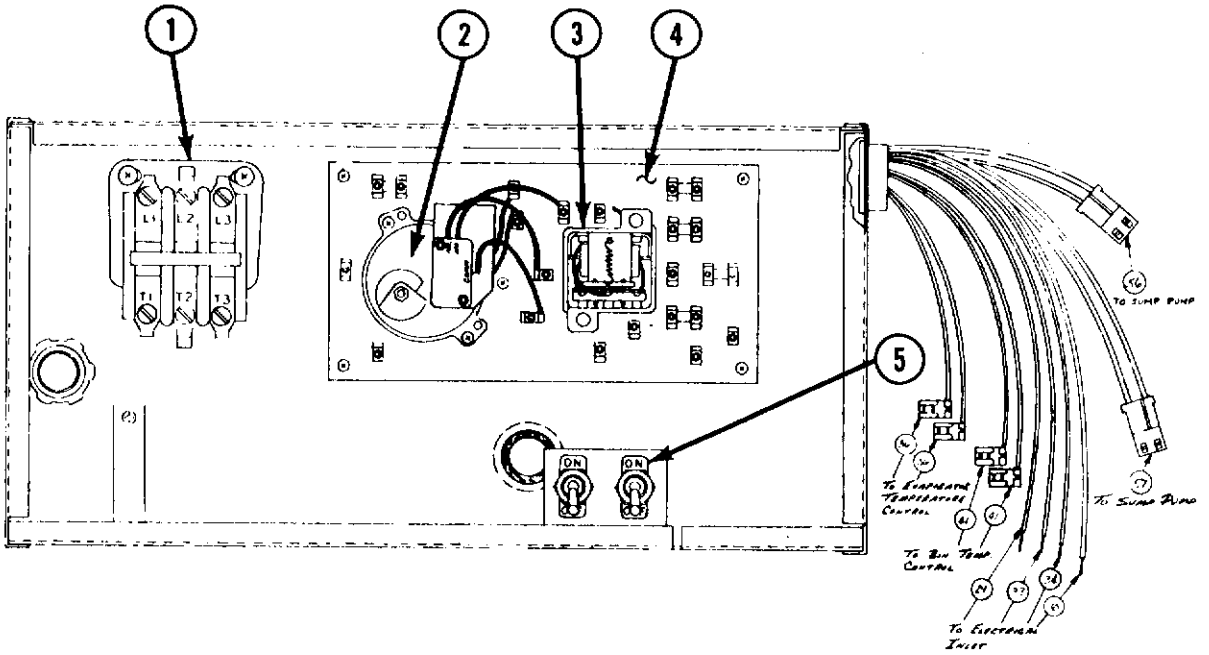

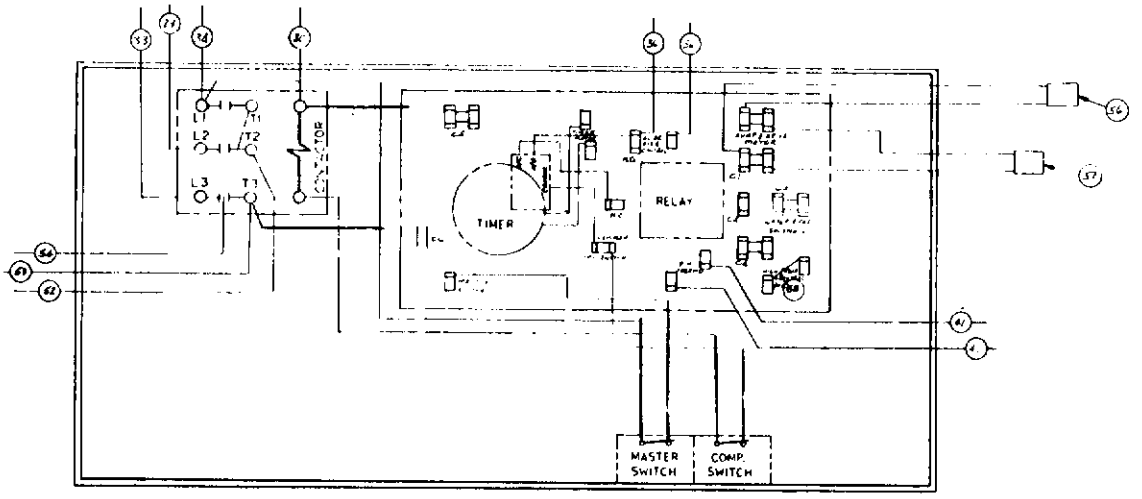

ITEM NO.	PART NO.	DESCRIPTION
1.	12-0739-01	Contactor
2.	12-1979-01	Timer - Switch Assembly
3.	12-1879-02	Relay
4.	12-1912-01	P.C. Board Only
5.	12-0426-01	Switches

CONTROL BOX — WATER COOLED
115/208-220/60/3 (-9)

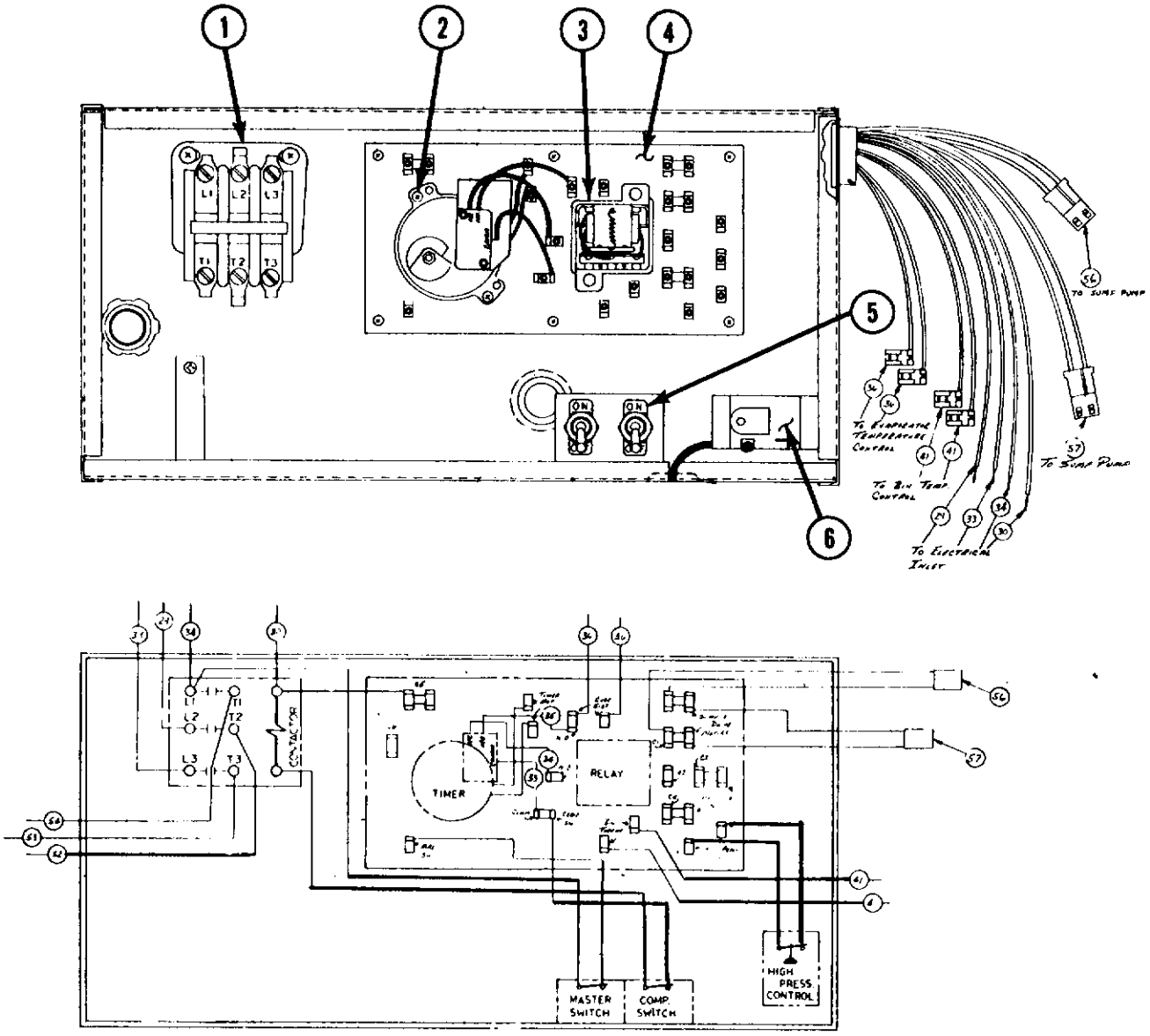

ITEM NO.	PART NO.	DESCRIPTION
1.	12-0739-01	Contactor
2.	12-1979-01	Timer - Switch Assembly
3.	12-1879-02	Relay
4.	12-1912-01	P.C. Board Only
5.	12-0426-01	Switches
6.	11-0388-02	Hi Pressure Control

CONTROL BOX — WATER COOLED
115/230/60/1 (-4)
115/208/60/1 (-10)

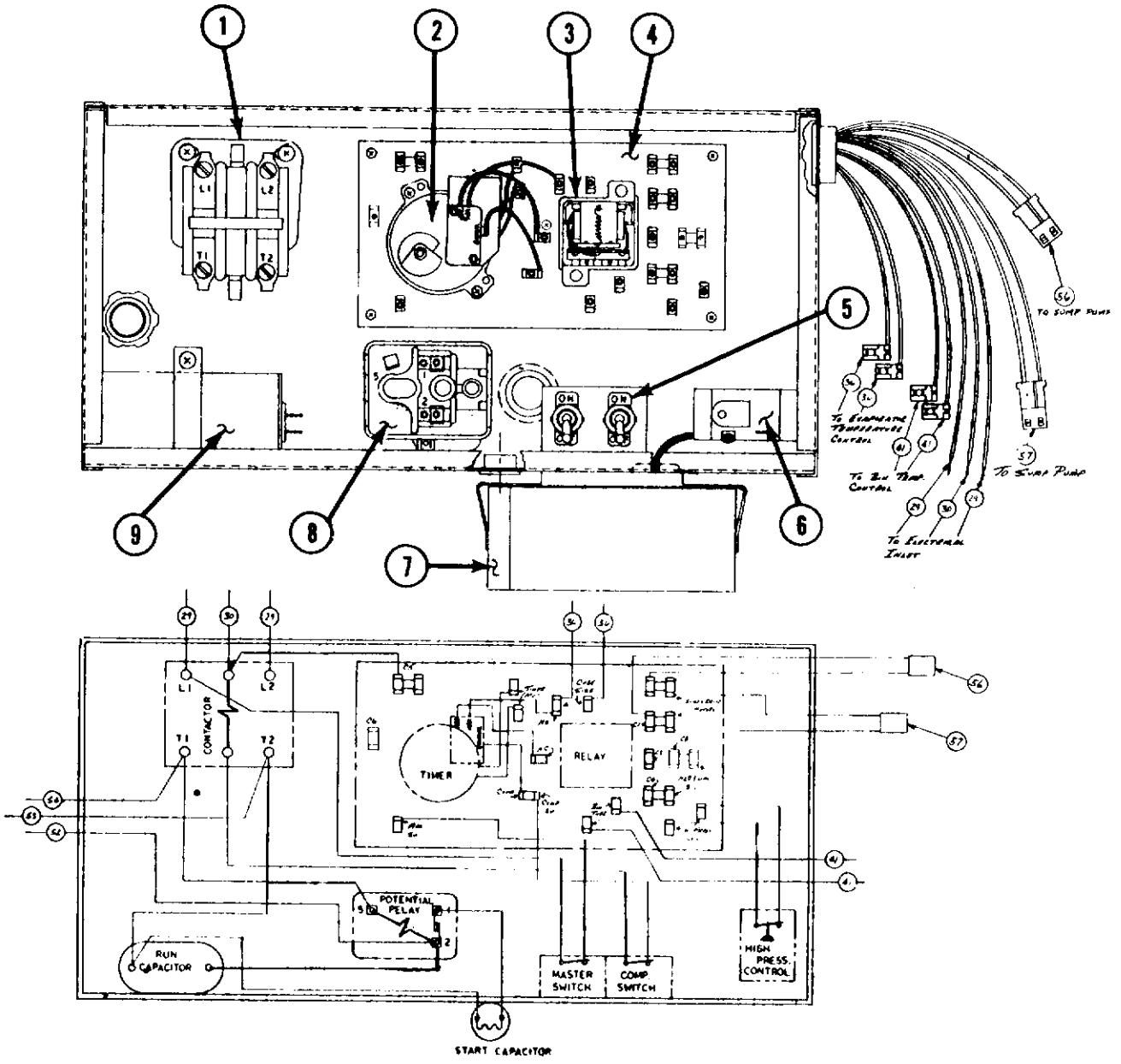

ITEM NO.	PART NO.	DESCRIPTION
1.	12-0820-01	Contactor
2.	12-1979-01	Timer - Switch Assembly
3.	12-1879-02	Relay
4.	12-1912-01	Circuit Board Only
5.	12-0426-01	Switches
6.	11-0388-02	Hi Pressure Control
7.	18-1901-15	Start Capacitor
8.	18-1903-29	Potential Relay 115/230/60/1
	18-1903-34	Potential Relay 115/208/60/1
9.	18-1902-29	Run Capacitor 115/230/60/1
	18-1902-34	Run Capacitor 115/208/60/1

TOP FREEZER ASSEMBLY

ITEM NO.	PART NO.	DESCRIPTION
1.	03-1404-10	Screw
2.	03-1422-04	Speed Clip
3.	02-2129-01	Tube Spacer
4.	13-0758-01	Rubber Cup Holder - Large
	13-0757-01	Rubber Cup Holder - Medium
	13-0756-01	Rubber Cup Holder - Small
5.	02-2194-01	Drive Fork
6.	A25480-001	Spray Bar W/Rubber Tips
7.	13-0653-00	Rubber Tips
8.	02-2028-01	Inner Pan
9.	A23827-001	Metal Plate
10.	03-1409-11	Rubber Washer
11.	02-2124-01	Insulation Cover
12.	A24961-001	Cover Assembly
13.	A24830-001	Centering Washer
14.	02-2065-02	Hole Plug
15.	A24129-002	Rubber Platen - Large
	A23880-002	Rubber Platen - Medium
	A27127-002	Plastic Platen - Medium
	A23803-002	Rubber Platen - Small
	A27218-002	Plastic Platen - Small
16.	A24198-001	Spray Deflector (2) MCS only
	A24198-003	Spray Deflector (1) MCS only
	A24198-004	Spray Deflector (1) MCS only
17.	02-2121-01	Inlet Housing
18.	13-0617-25	O-ring
*19.	A24518-001	Water Drive Tube Kit
20.		
21.	A24819-002	Bottom Pan
22.	A23830-001	Drive Shaft
23.	A27192-001	Bushing-Upper
24.	13-0168-00	Lip Seal
25.	03-1404-28	Screws
26.	12-0675-25	Fan Blade
27.	A24656-001	Drive Motor W/Fan Blade
28.	13-0176-00	Grommet
29.	02-2271-01	Top, Water Drive Tube
30.	A24379-001	Short Tube - Female
31.	02-2125-01	Stand Pipe - Male
32.	02-2082-01	Pump Pickup - Male
33.	02-2081-01	Tube - Female (4)
34.	02-2080-01	Tube - Male (3)
35.	13-0617-02	O-Ring (5)
36.	A27197-002	Bushing Lower

*Water Tube Kit includes items 23, 24, 29 and 36.

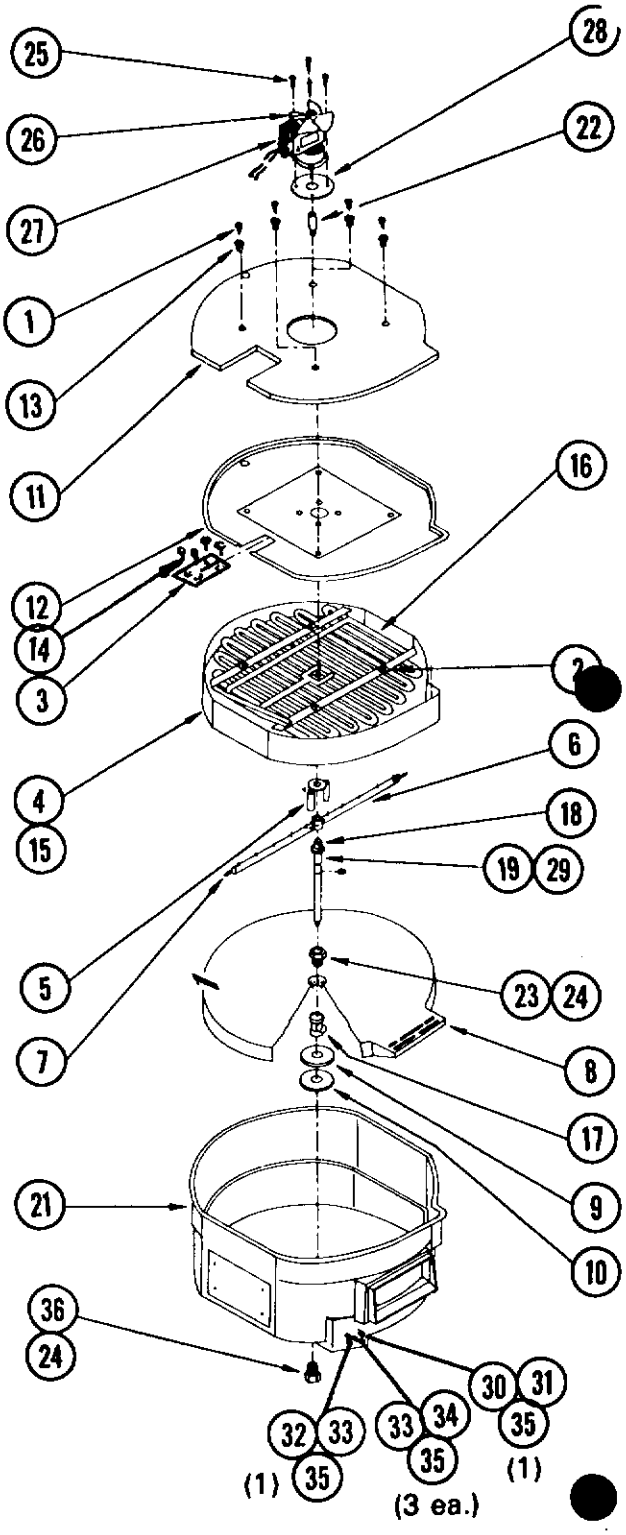

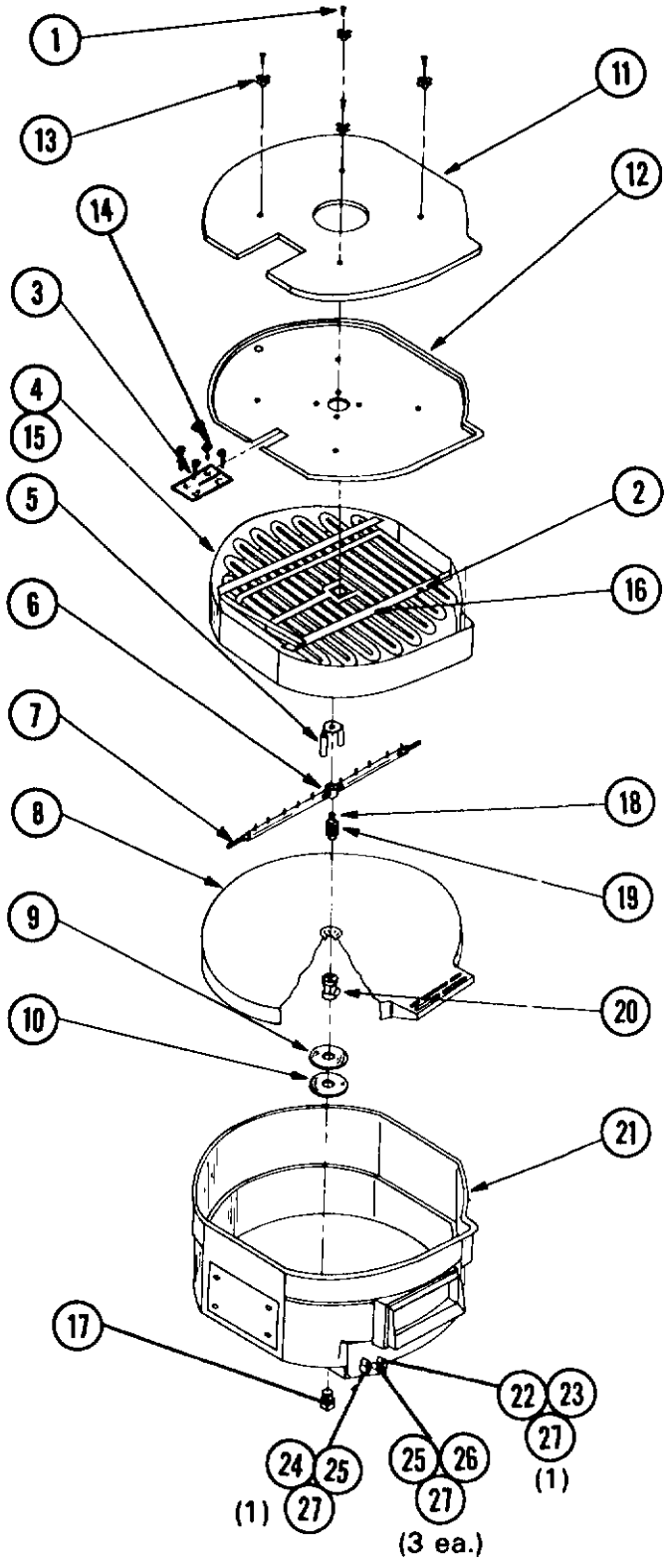

BOTTOM FREEZER

ITEM NO.	PART NO.	DESCRIPTION
1.	03-1404-10	Screw
2.	03-1422-04	Speed Clip
3.	02-2129-01	Tube Spacer
4.	13-0758-01	Rubber Cup Holder - Large
	13-0757-01	Rubber Cup Holder - Medium
	13-0756-01	Rubber Cup Holder - Small
5.	02-2194-01	Drive Fork
6.	A25480-001	Spray Bar W/Rubber Tips
7.	13-0653-00	Rubber Tips
8.	02-2028-01	Inner Bottom
9.	A23827-001	Support Plate
10.	03-1409-11	Rubber Washer
11.	02-2124-01	Cover Insulation
12.	A24034-002	Cover Assembly
13.	A24830-001	Centering Washer
14.	02-2065-02	Hole Plug
15.	A24129-002	Rubber Platen - Large
	A23880-002	Rubber Platen - Medium
	A27127-002	Plastic Platen - Medium
	A23803-002	Rubber Platen - Small
	A27218-002	Plastic Platen - Small
16.	A24198-001	Spray Deflector (2) MCS only
	A24198-003	Spray Deflector (1) MCS only
	A24198-004	Spray Deflector (1) MCS only
17.	02-2122-01	Bottom Plug
18.	13-0617-25	O-Ring
19.	02-2120-01	Spray Bar-Bearing
20.	02-2121-01	Inlet Housing
21.	A24819-001	Bottom Chamber
22.	A24379-001	Short Tube - Female
23.	02-2125-01	Stand Pipe - Male
24.	02-2082-01	Pump Pickup - Male
25.	02-2081-01	Tube - Female (4)
26.	02-2080-01	Tube - Male (3)
27.	13-0617-02	O-Ring (5)

COPELAWELD COMPRESSOR
3500 RPM

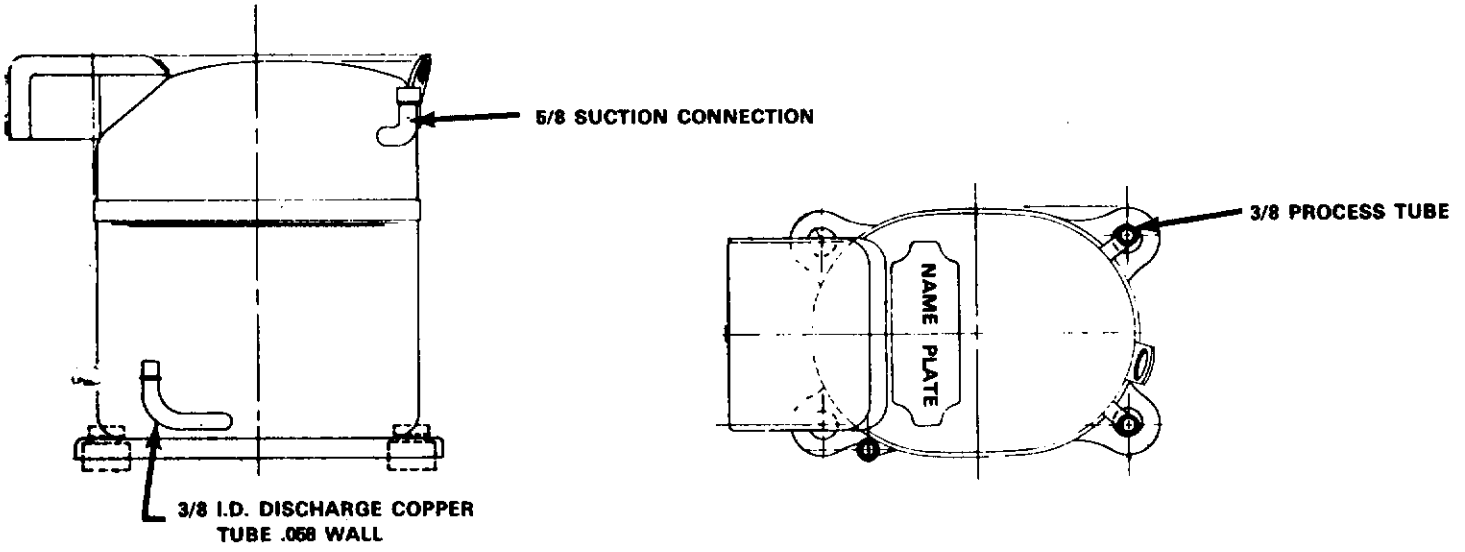

MODEL MC-35 CUBER - 775 UNITS (DECEMBER 76 - FEBRUARY 77)

MC35-4 (230/60/1) Units 420
Group serial numbers - 6Q306714 to 8C322941

MC35-10 (208/60/1) Units 205
Group serial numbers - 6Q306714 to 8C322941

MC35-9 (208-220/60/3) Units 150
Group serial numbers - 6Q307045 to 8C323271

DESCRIPTION	TECUMSEH	COPELAND	
Compressor 208/60/1	18-3850-02 AH7511B	18-3800-07	SSE4-0100-CAH
Compressor 230/60/1	18-3850/02 AH7511B	18-3800-02	SSE4-0100-LAB
Compressor 208-220/60/3	18-3850-03 AH7511A	18-3800-03	SSE4-0100-TFL
Relay 230/60/1	18-3850-40 82457	18-1903-29	
Relay 208/60/1	18-3850-40 82457	18-1903-34	
Capacitor-Start 208 or 230	18-1901-10 85668	18-1901-15	
Capacitor-Run 230	18-3850-41 85PR370B57	18-1902-29	
Capacitor-Run 208	18-3850-41 85PR370B57	18-1902-34	
Overload 230/60/1	Internal Protection	18-2300-25	
Overload 208/60/1	Internal Protection	18-2300-32	
Overload 200-220/60/3	Internal Protection	18-2300-31	

As noted in the parts table above, there is no interchangeability between the Copeland and Tecumseh compressors or components.

Therefore if failures are experienced, be sure to order the proper part numbers based on the make of compresso involved.

Current model MC35 cuber, after serial number 8C323271, again utilize Copeland compressors.

COMPLETE WATER PUMP
115/60/1
12-1930-01

ITEM NO.	PART NO.	DESCRIPTION
1.	12-1849-54	Nut (Hex)
2.	12-1849-55	Washer
3.	12-1849-56	Washer
4.	12-1849-57	Impeller
5.	12-1849-58	Lockwasher
6.	12-1849-59	Screw
7.	12-1849-60	O-Ring
8.	12-1849-61	Pump Housing
9.	12-1849-62	Screw

NOTE:

It is impractical to replace the Motor only or the Pump Body on these Water Pumps at the field level.

In the assembly procedure of the Motor and Body, it is necessary that the motor be centered properly to avoid damage to the impeller.

The supplier of these pumps uses special tools in assembly to center the motor and body correctly.

On this page is a listing of the replacement parts that are available and can be replaced on these pumps at the field level.

These pumps 12-1849 and 12-1930 are identical except for the length and design of the electrical leads.

12-1849-01 60" electrical leads with 1/4" quick connect ends. OBSOLETE replace with 12-1930-01 and proper lead.

12-1930-01 6" electrical lead with pin plug connection.

Wire assemblies used with 12-1930-01 pump.

12-1940-01 12" electrical lead with pin plug socket. Usage: AC30
12-1940-02 40" electrical lead with pin plug socket. Usage: MC1, MC25, MC30 and Top Chamber MC2, MC35, MC40
12-1940-03 50" electrical lead with pin plug socket. Usage: MC2, MC35 & MC40 Lower Chamber

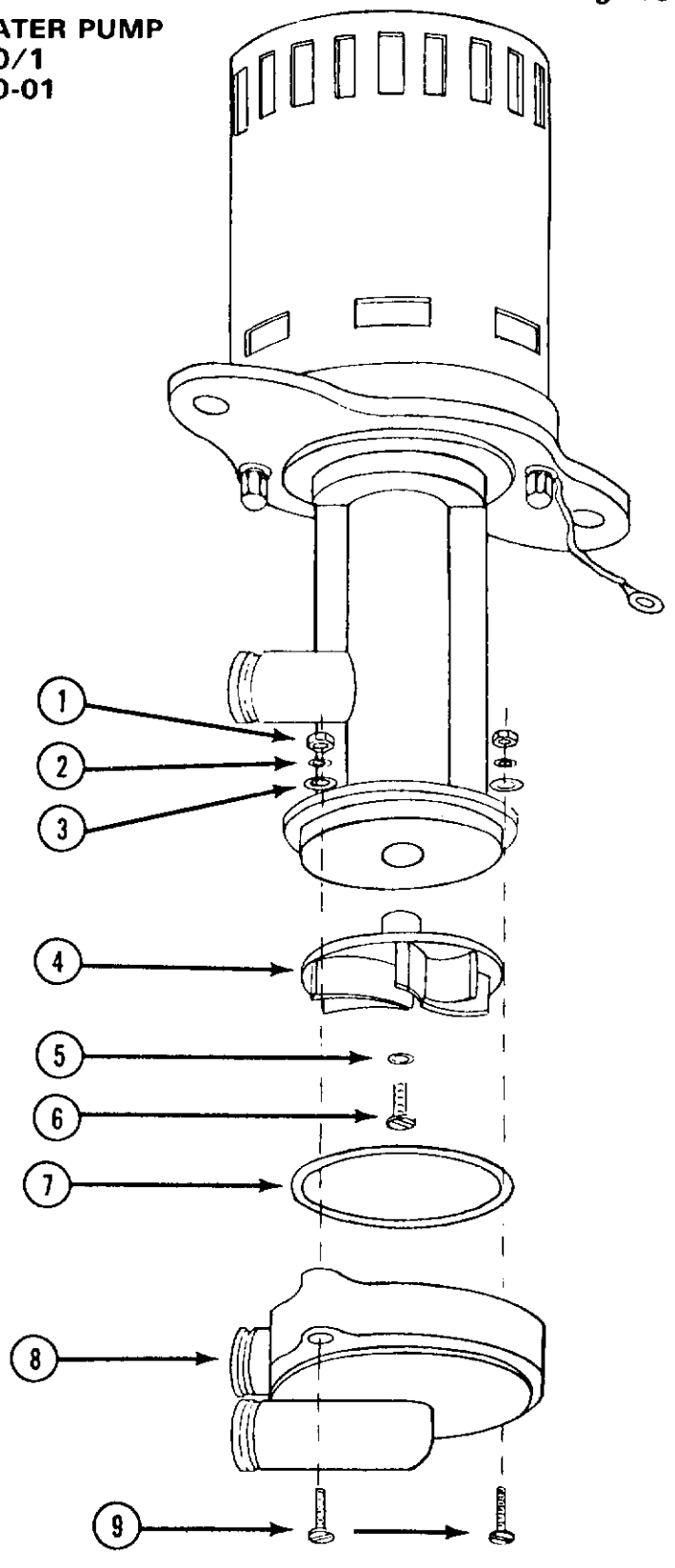

CABINET PARTS

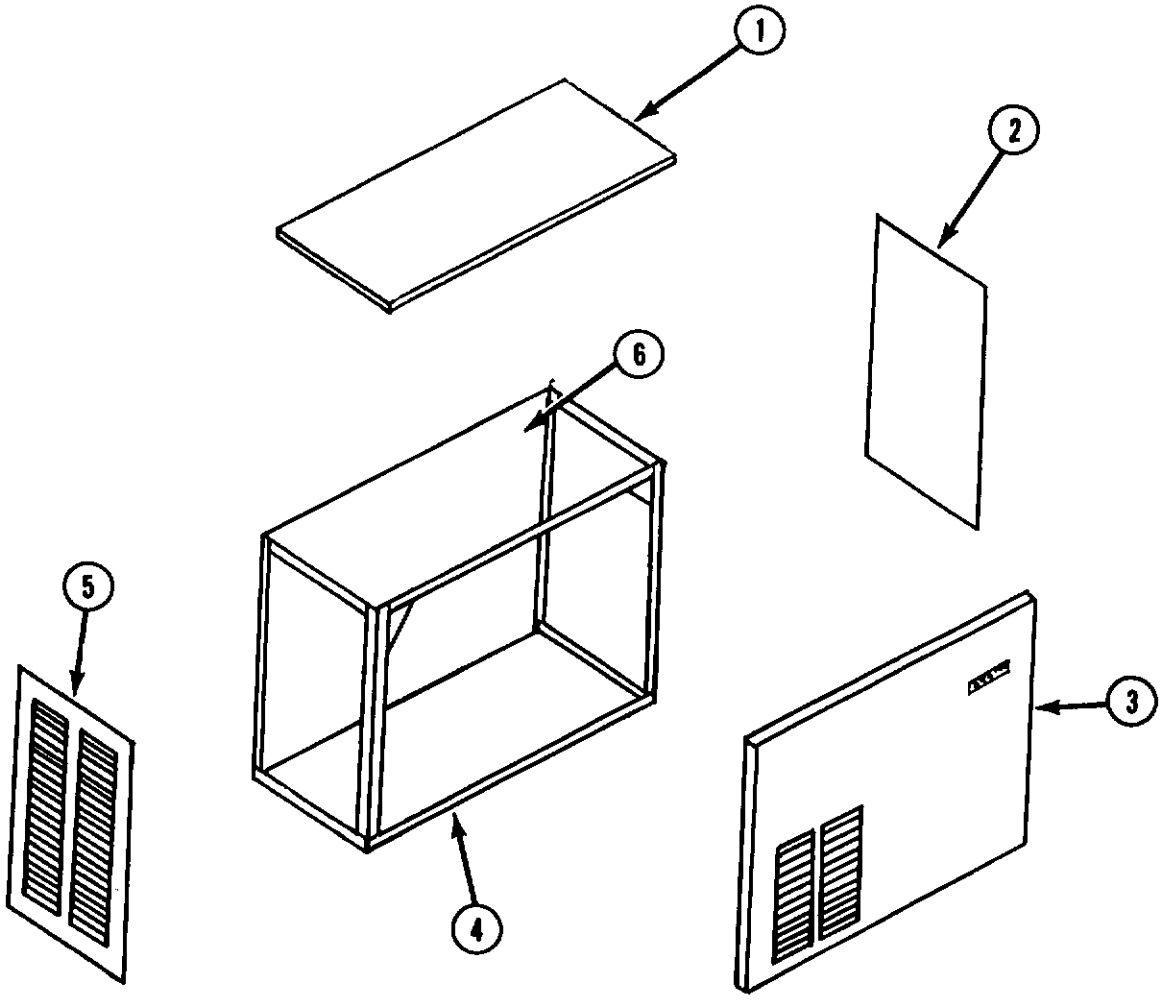

		Enamel	Stainless Steel
1.	Top Panel	A23784-001	A23784-002
2.	Panel, Right Side	A23900-001	A23900-002
3.	Panel, Front	A23898-001 Vinyl	A23898-002
4.	Cabinet Assy.	A26179-001	A26179-001
5.	Panel Left Side	A23899-001	A23899-002
6.	Back Panel	Fixed	Fixed

AIR AND WATER COOLED
Right End View

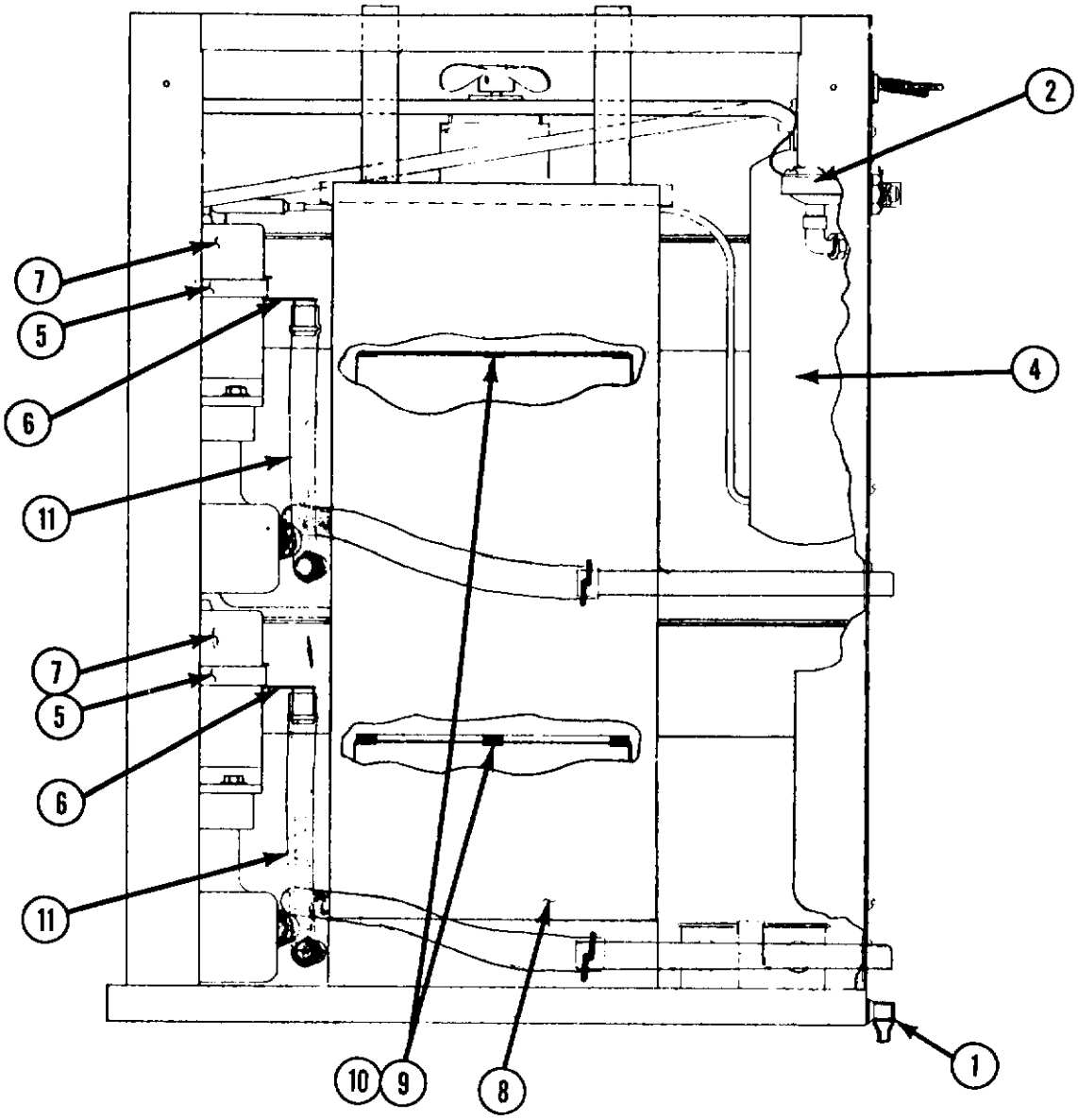

ITEM NO.	PART NO.	DESCRIPTION
1.	02-2296-01	Base Drain
2.	12-1434-01	Water Inlet Solenoid
3.	16-0162-01	Strainer
4.	A26172-001	Refrigerant Accumulator
5.	02-0706-00	Clamp, Water Pump
6.	A26426-001	Drain Tube Holder
7.	See Page 13	Water Pump
6.	02-2149-01	Cube Chute W/Cover
9.	02-2038-01	Curtain
10.	03-1526-01	Curtain Clips
11.	13-0674-07	Tubing (order per ft.)

Water Cooled

Top View

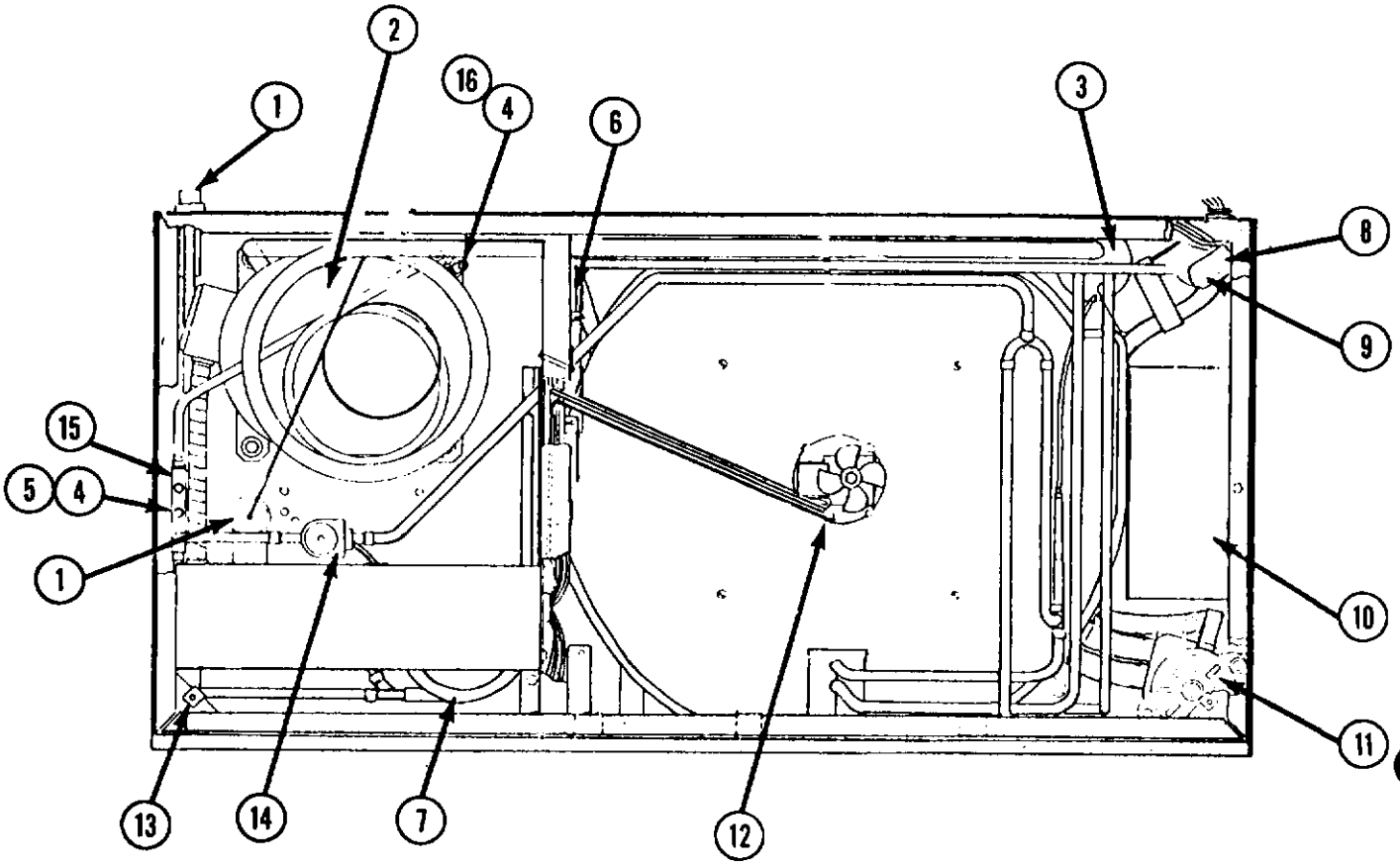

ITEM NO.	PART NO.	DESCRIPTION
1.	02-0677-01	Drier
2.	See Page 8	Compressor
3.	A26172-001	Suction Line-Accumulator
4.	16-0563-00	Schrader Valve Cap
5.	16-0560-00	Schrader Valve Core
6.	A26230-002	Flow Controls .30 GPM MCL-MCS
	A26230-001	Flow Controls .50 GPM MCM
7.	18-3306-02	Condenser
8.	12-1434-01	Water Inlet Solenoid
9.	12-1589-01	Solenoid Cord - Cap.
10.	02-2149-01	Cube Chute W/Cover
11.	See Page 13	Water Pump
12.	See Page 6	Agitator Motor
13.	03-1507-01	Speed Nut
14.	12-2023-01	Hot Gas Solenoid
15.	16-0673-10	Process Header
16.	16-0673-16	Process Header

WATER COOLED
FRONT VIEW

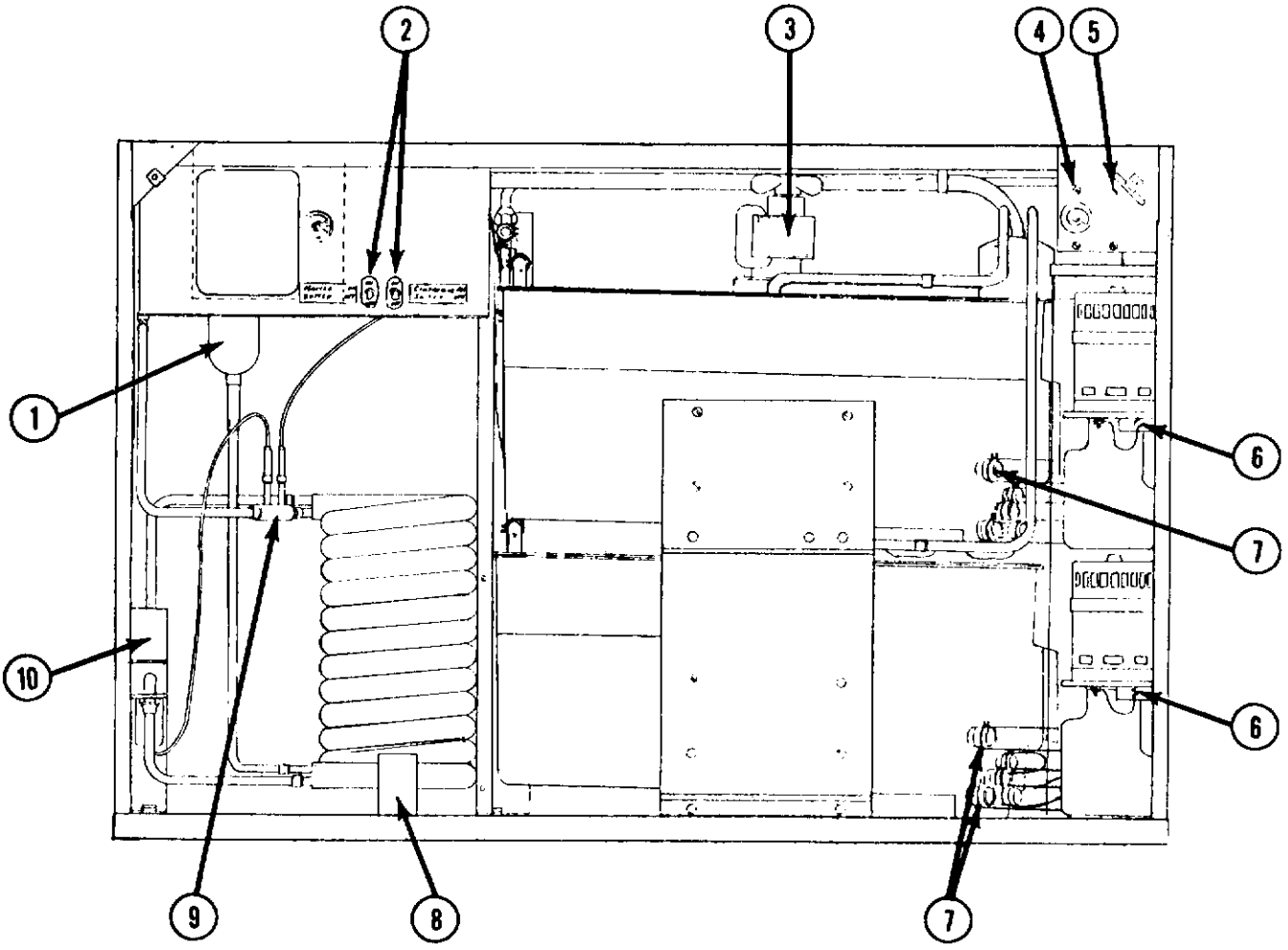

ITEM NO.	PART NO.	DESCRIPTION
1.	02-0677-01	Drier
2.	12-0426-01	On-Off Switches
3.	See Page 6	Agitator Motor
4.	11-0345-02	Cube Size Control
5.	11-0353-03	Bin Thermostat
6.	See Page 13	Water Pump
7.	02-1358-00	Hose Clamps
8.	18-3306-02	Water Cooled Condenser
9.	16-0673-13	Processing Tubing
10.	11-0198-02	Water Regulating Valve

AIR COOLED
TOP VIEW

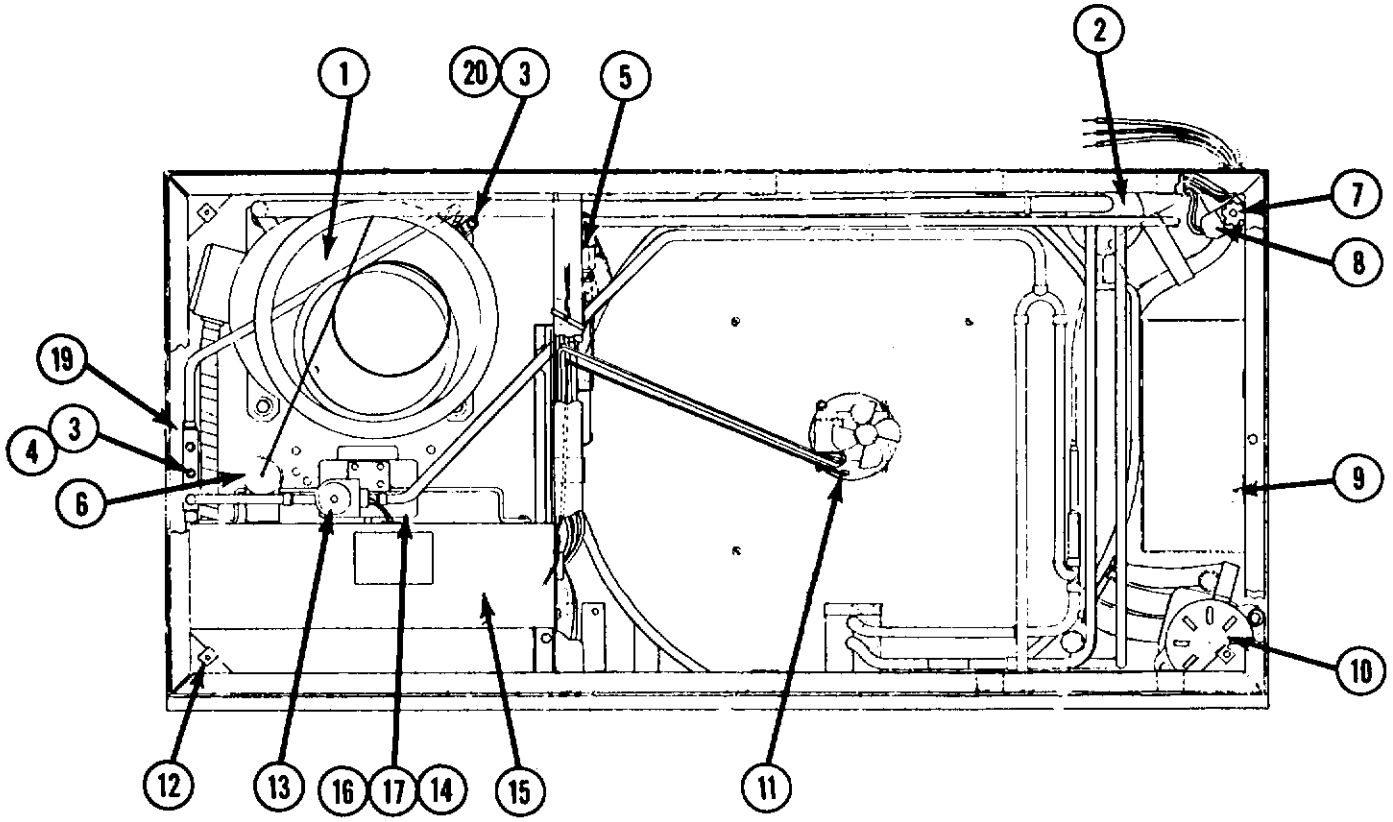

ITEM NO.	PART NO.	DESCRIPTION
1.	See Page 8	Compressor
2.	A26172-001	Suction Line-Accumulator
3.	16-0563-00	Schrader Valve Cap
4.	16-0560-00	Schrader Valve core
5.	A26230-002	Flow Controls .30 GPM MCS
	A26230-001	Flow Controls .50 GPM MCM
6.	02-0677-01	Drier
7.	12-1434-01	Water Inlet Solenoid
8.	12-1589-01	Solenoid Cord
9.	12-2149-01	Cube Chute W/Cover
10.	See Page 13	Water Pump
11.	See Page 6	Agitator Motor
12.	03-1507-01	Speed Nut
13.	12-2023-01	Hot Gas Solenoid
14.	A26174-001	Fan Motor Mount (2)
15.	18-3709-01	Air Cooled Condenser
16.	12-1575-01	Fan Motor 2/Unit
17.	18-0231-00	Fan Blade 2/Unit
18.	A26161-001	Shroud
19.	16-0673-10	Process Header
20.	16-0673-16	Process Header

AIR COOLED
FRONT VIEW

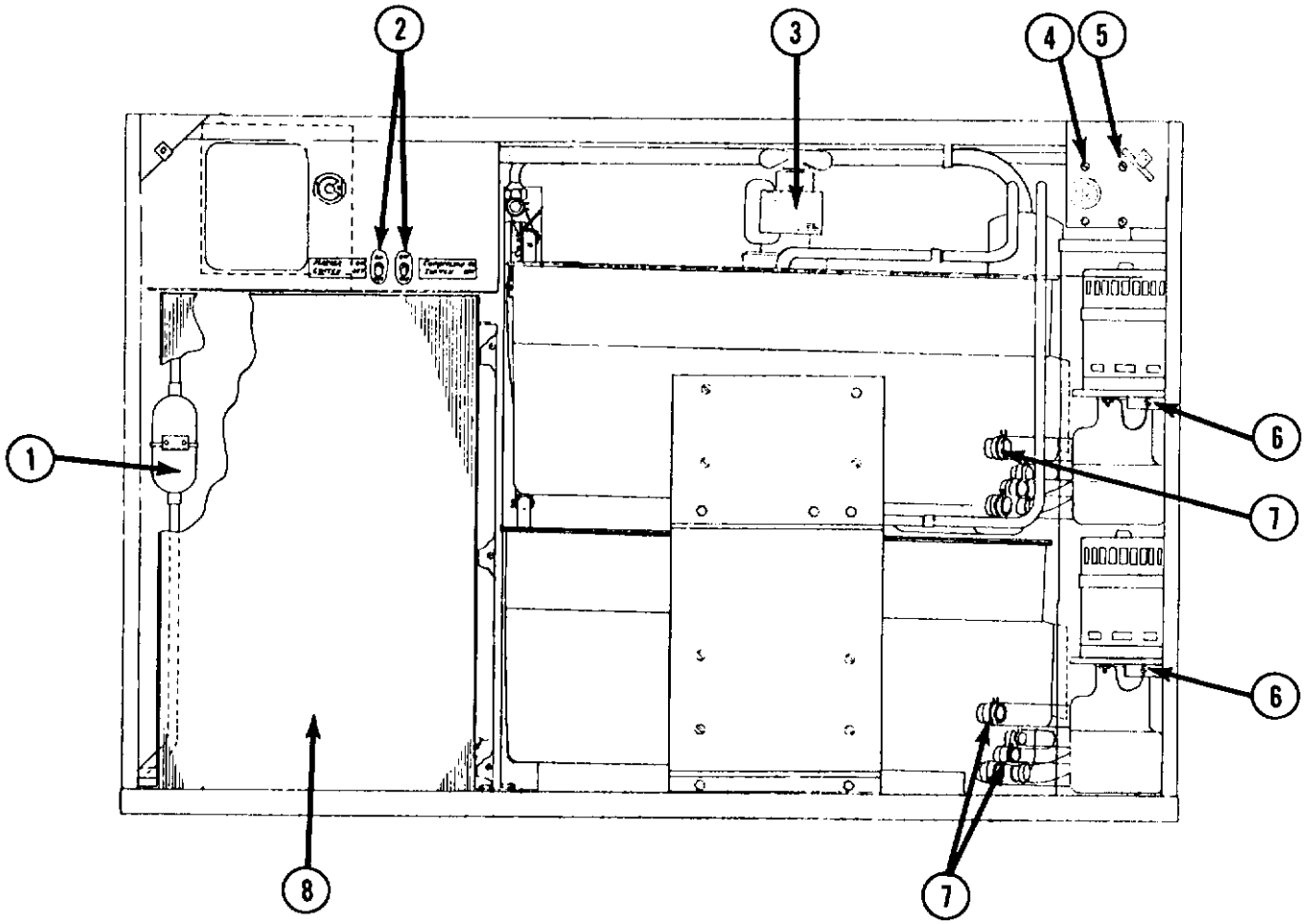

ITEM NO.	PART NO.	DESCRIPTION
1.	02-0677-01	Drier
2.	12-0426-01	On-Off Switches
3.	See Page 6	Agitator Motor
4.	11-0345-02	Cube Size Control
5.	11-0353-03	Bin Thermostat
6.	See Page 13	Water Pump
7.	02-1358-00	Hose Clamps
8.	18-3709-01	Air Cooled Condenser

TOP
FREEZER ASSEMBLY

ITEM	PART NO.	DESCRIPTION
1.	03-1404-10	Screw
2.	03-1422-04	Speed Clip
3.	02-2129-01	Tube Spacer
4.	13-0758-01	Rubber Cup Holder - Large
	13-0757-01	Rubber Cup Holder - Medium
	13-0756-01	Rubber Cup Holder - Small
5.	02-2194-01	Drive Fork
6.	A25480-001	Spray Bar W/Rubber Tips
7.	13-0653-00	Rubber Tips
8.	02-2028-01	Inner Pan
9.	A23827-001	Metal Plate
10.	03-1409-11	Rubber Washer
11.	02-2124-01	Insulation Cover
12.	A24961-001	Cover Assembly
13.	A24830-001	Centering Washer
14.	02-2065-02	Hole Plug
15.	A24129-002	Rubber Platen - Large
	A23880-002	Rubber Platen - Medium
	A27127-002	Plastic Platen - Medium
	A23803-002	Rubber Platen - Small
	A27218-002	Plastic Platen - Small
16.	A24198-001	Spray Deflector (2) MCS only
	A24198-003	Spray Deflector (1) MCS only
	A24198-004	Spray Deflector (1) MCS only
17.	02-2121-01	Inlet Housing
18.	13-0617-25	O-Ring
*19.	A24518-001	Water Drive Tube Kit
20.		
21.	A24819-002	Bottom Pan
22.	A23830-001	Drive Shaft
23.	A27197-001	Bushing-Upper
24.	13-0168-00	Lip Seal
25.	03-1404-28	Screws
26.	12-0675-25	Fan Blade
27.	A24656-001	Drive Motor W/Fan Blade
28.	13-0176-00	Grommet
29.	02-2271-01	Top, Water Drive Tube
30.	A24379-001	Short Tube - Female
31.	02-2125-01	Stand Pipe - Male
32.	02-2082-01	Pump Pickup - Male
33.	02-2081-01	Tube - Female (4)
34.	02-2080-01	Tube - Male (3)
35.	13-0617-02	O-Ring (5)
36.	A27197-002	Bushing Lower

*Water Tube Kit Includes
Items 23, 24, 29 and 36

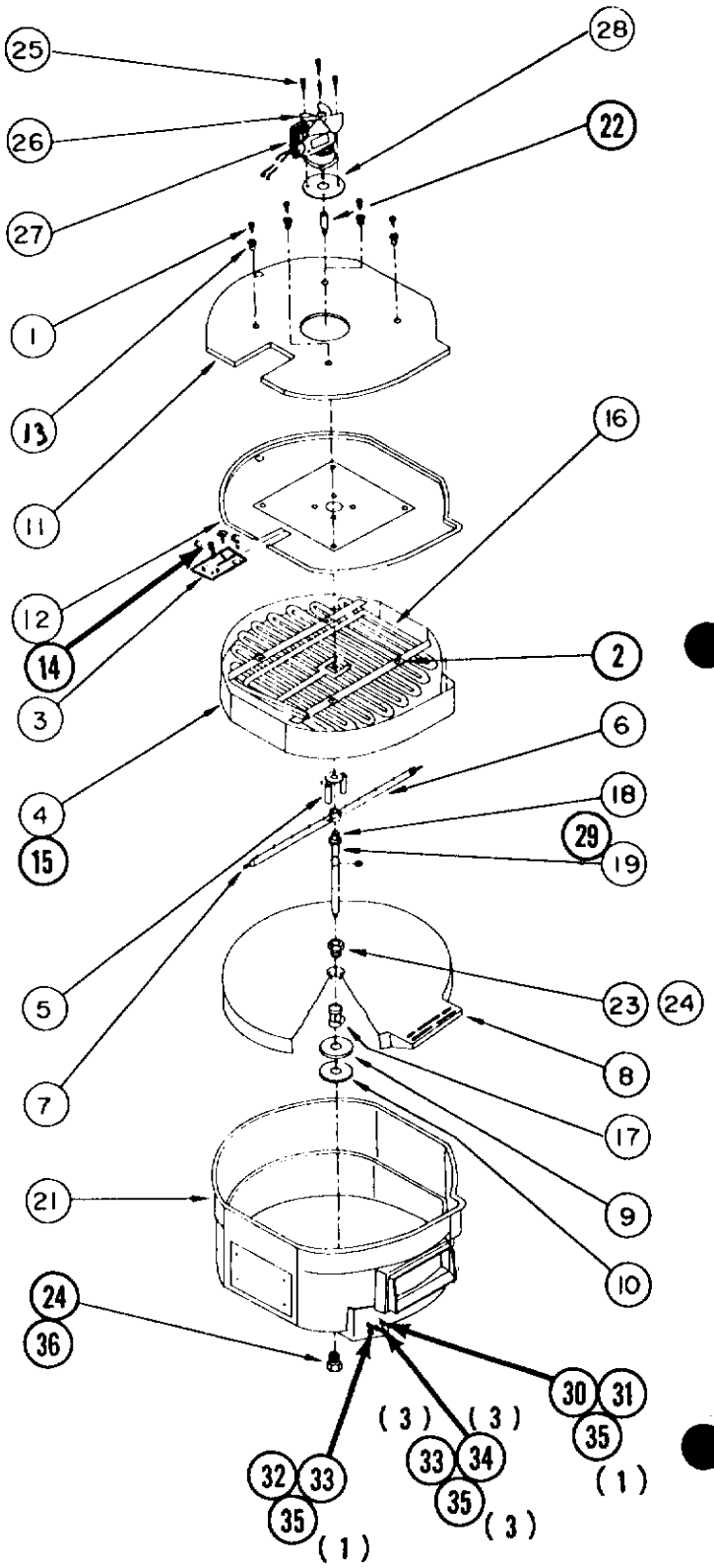

BOTTOM FREEZER

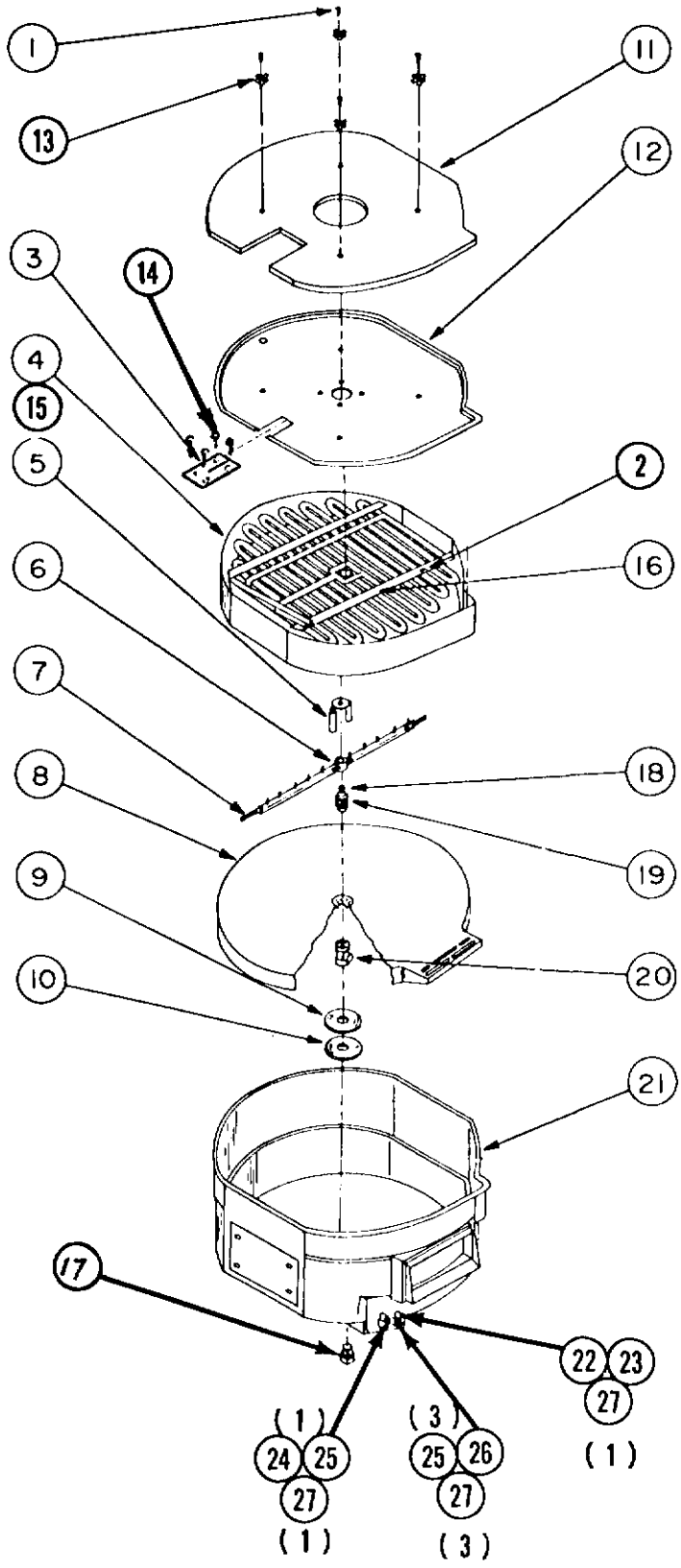

ITEM	PART NO.	DESCRIPTION
1.	03-1404-10	Screw
2.	03-1422-04	Speed Clip
3.	02-2129-01	Tube Spacer
4.	13-0758-01	Rubber Cup Holder - Large
	13-0757-01	Rubber Cup Holder - Medium
	13-0756-01	Rubber Cup Holder - Small
5.	02-2194-01	Drive Fork
6.	A25480-001	Spray Bar W/Rubber Tips
7.	13-0653-00	Rubber Tips
8.	02-2028-01	Inner Bottom
9.	A23827-001	Support Plate
10.	03-1409-11	Rubber Washer
11.	02-2124-01	Cover Insulation
12.	A24034-002	Cover Assembly
13.	A24830-001	Centering Washer
14.	02-2065-02	Hole Plug
15.	A24129-002	Rubber Platen - Large
	A23880-002	Rubber Platen - Medium
	A27127-002	Plastic Platen - Medium
	A23803-002	Rubber Platen - Small
	A27218-002	Plastic Platen - Small
16.	A24198-001	Spray Deflector (2) MCS only
	A24198-003	Spray Deflector (1) MCS only
	A24198-004	Spray Deflector (1) MCS only
17.	02-2122-01	Bottom Plug
18.	13-0617-25	O-Ring
19.	02-2120-01	Spray Bar-Bearing
20.	02-2121-01	Inlet Housing
21.	A24819-001	Bottom Chamber
22.	A24379-001	Short Tube - Female
23.	02-2125-01	Stand Pipe - Male
24.	02-2082-01	Pump Pickup - Male
25.	02-2081-01	Tube - Female (4)
26.	02-2080-01	Tube - Male (3)
27.	13-0617-02	O-Ring (5)

COPELAWELD COMPRESSOR

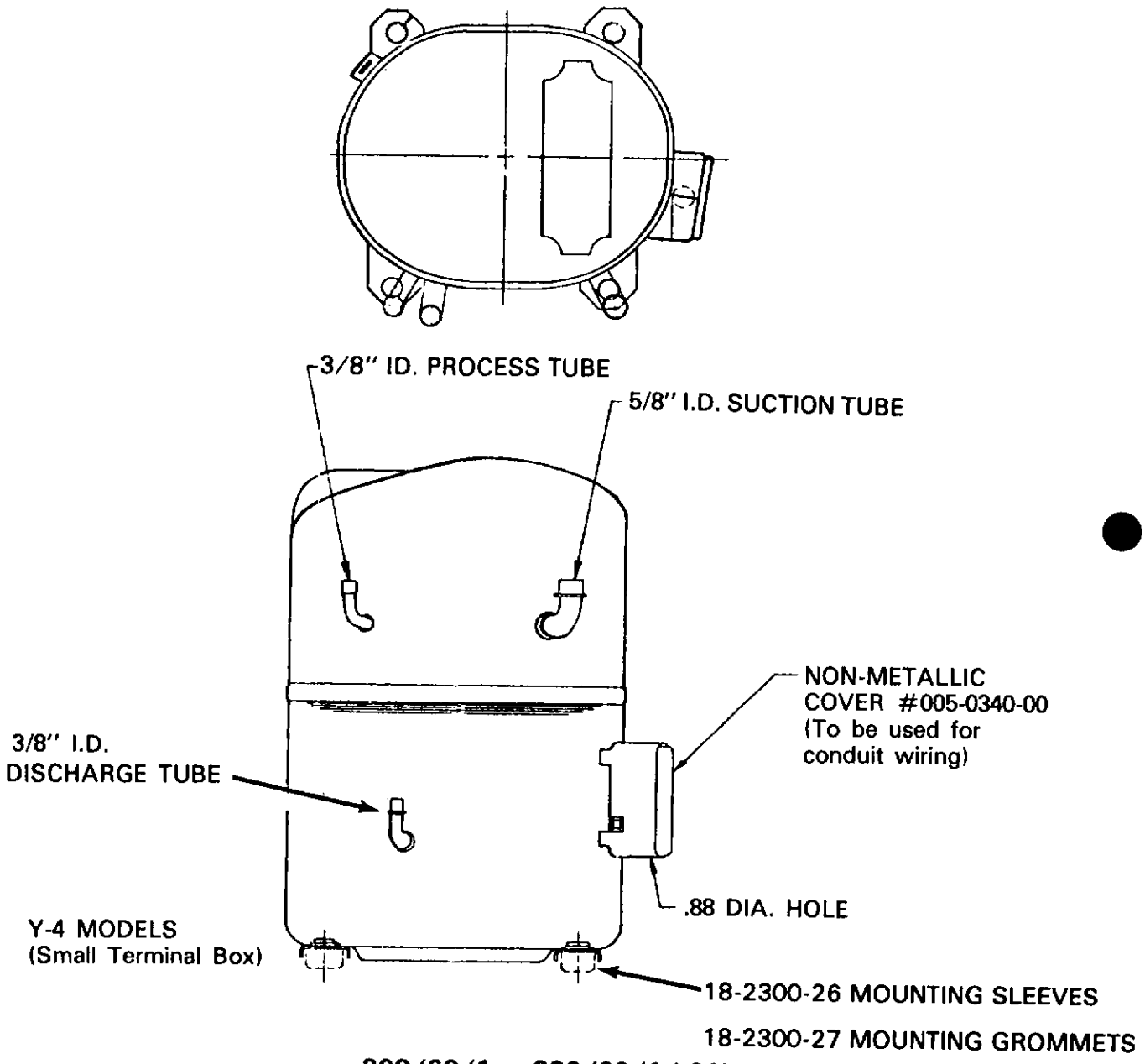

208/60/1 or 230/60/1 (-31)

Air or Water Cooled

18-4300-02	Compressor Cope # YSB4-0150-CFV
18-1903-34	Potential Relay Cope No. 040-0001-16
18-1902-45	Capacitor — Run Cope. No. 014-0002-09
18-1901-23	Capacitor — Start Cope No. 014-0006-01

208-220/60/3 (-9)
Air or Water Cooled

18-4300-03	Compressor — Cope # YSB4-0150-TFC

CONTROL BOX — AIR COOLED

115/208-230/60/1 (-31)

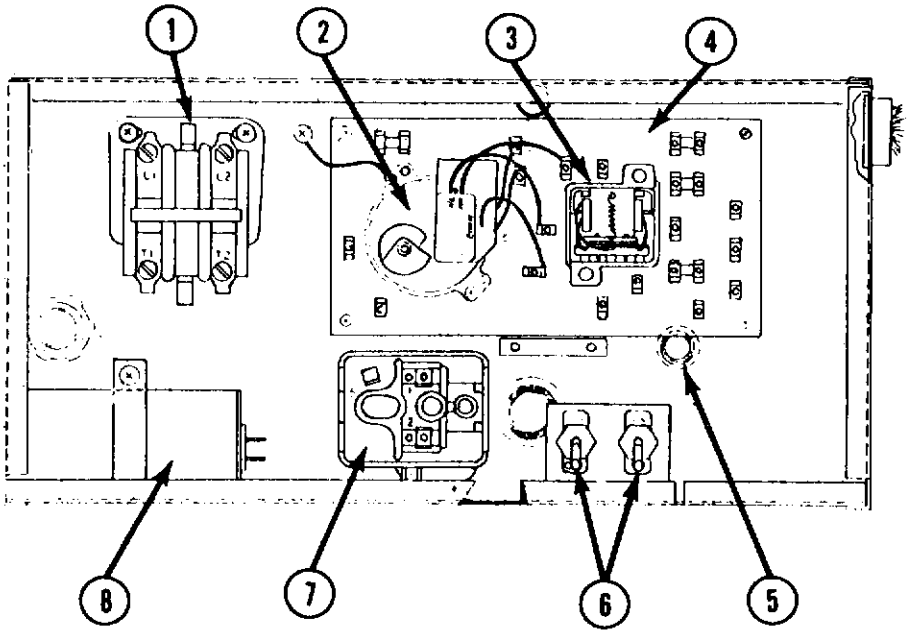

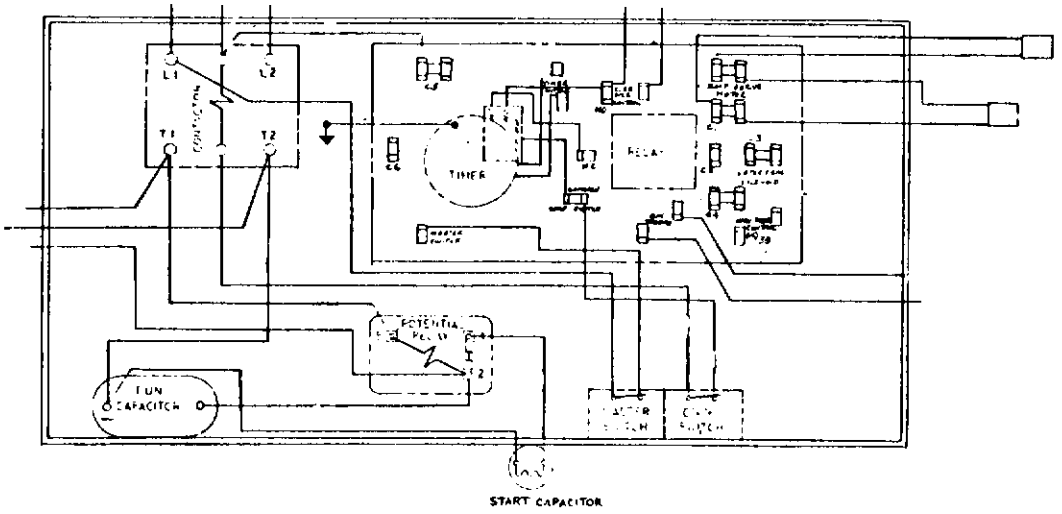

ITEM NO.	PART NO.	DESCRIPTION
1.	12-0820-01	Contactor
2.	12-1980-01	Timer
3.	12-1879-02	Relay
4.	12-1912-01	P.C. Board
5.	18-1901-23	Capcitor Start (On Back of Control Box)
6.	12-0426-01	On - Off Switches
7.	18-1903-34	Relay - Compressor
8.	18-1902-45	Capacitor - Run

May 1977 Production began using contactor P.N. 12-2037-01. This contactor may be used as a replacement for the one shown, but wiring & mounting may be affected.

CONTROL BOX — WATER COOLED

115/208-230/60/1 (-31)

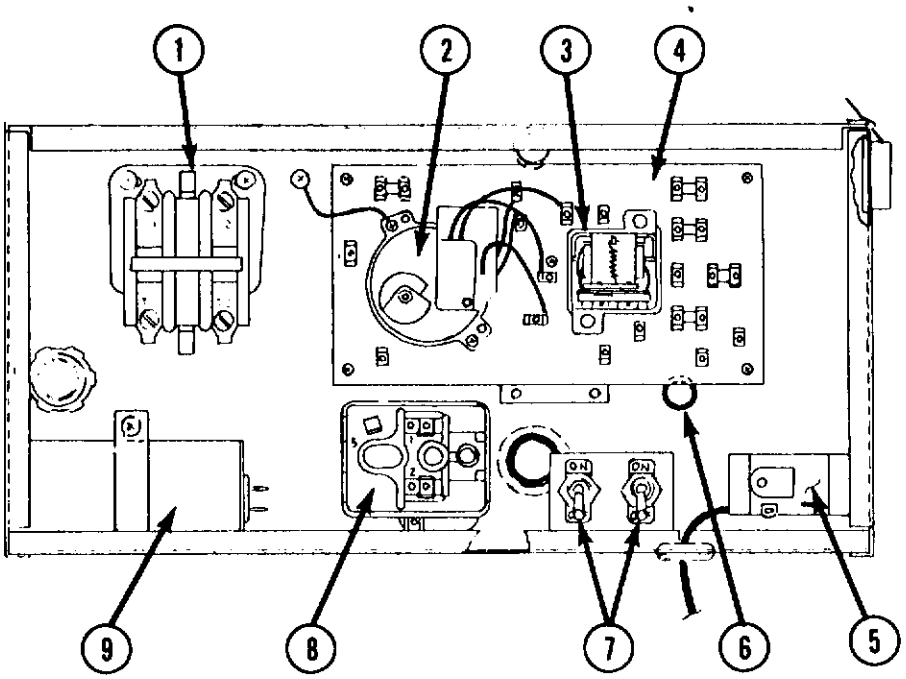

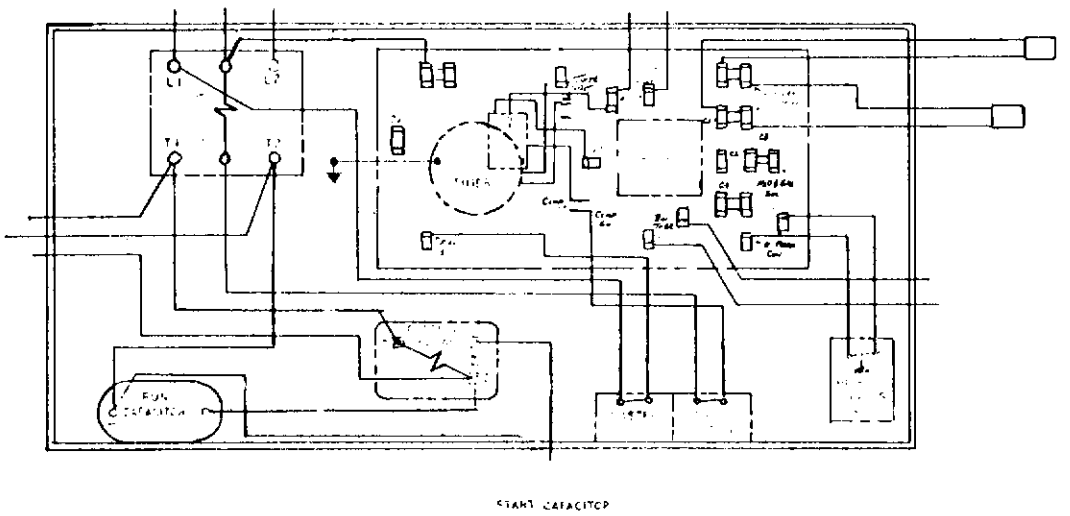

START CAPACITOR

ITEM NO.	PART NO.	DESCRIPTION
1.	12-0820-01	Contactor
2.	12-1980-01	Timer
3.	12-1879-02	Relay
4.	12-1912-01	P.C. Board
5.	11-0388-02	Hi Pressure Control
6.	18-1901-23	Capacitor Start (On Back of Control Box)
7.	12-0426-01	On - Off Switches
8.	18-1903-34	Relay - Compressor
9.	18-1902-45	Capacitor - Run

1 Man 1977 Production began using contactor P.N. 12-2037-01. This contactor may be used as a replacemene one shown, but wiring & mounting may be affected.

CONTROL BOX — AIR COOLED

115/208-220/60/3 (-9)

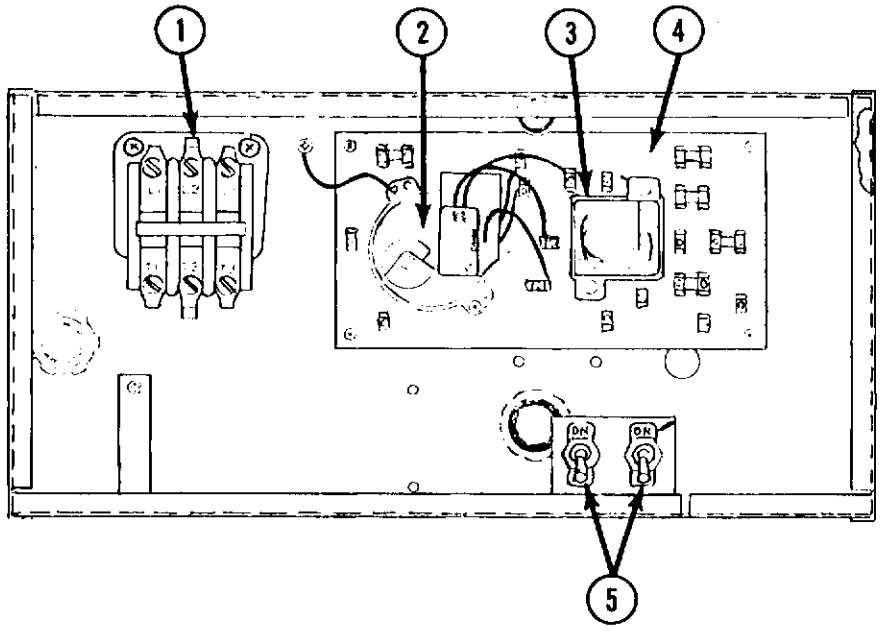

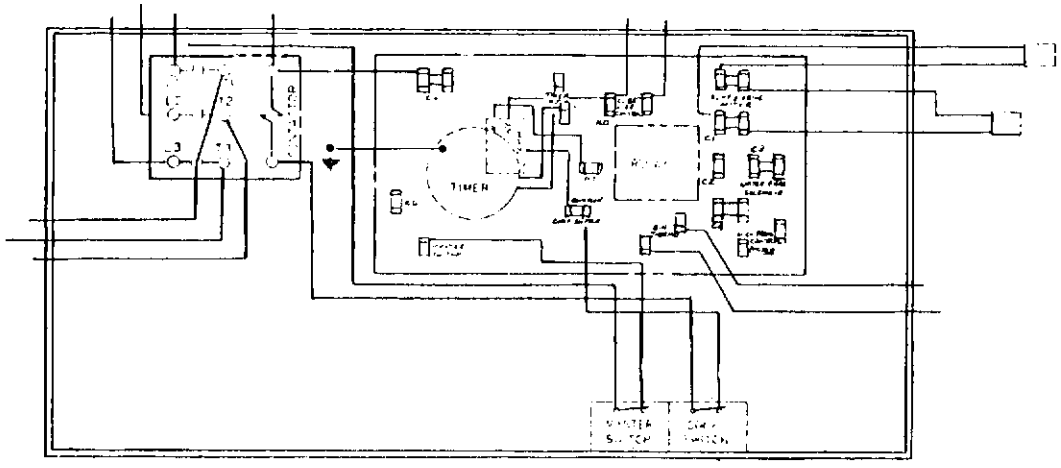

ITEM NO.	PART NO.	DESCRIPTION
1.	12-739-01	Contactor
2.	12-1980-01	Timer
3.	12-1879-02	Relay
4.	12-1912-01	P.C. Board
5.	12-0426-01	On - Off Switches

CONTROL BOX — WATER COOLED

115/208-220/60/3 (-9)

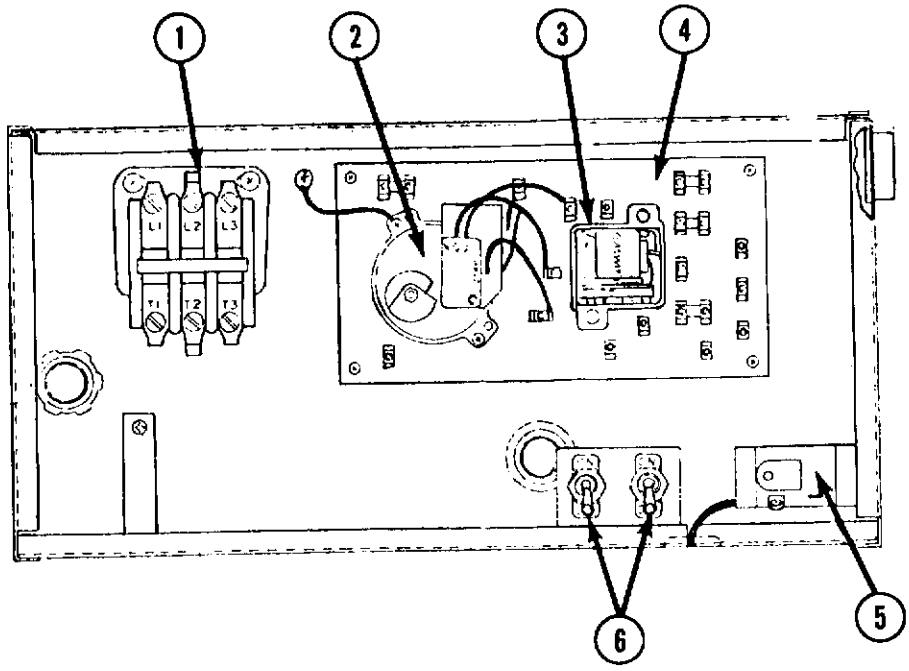

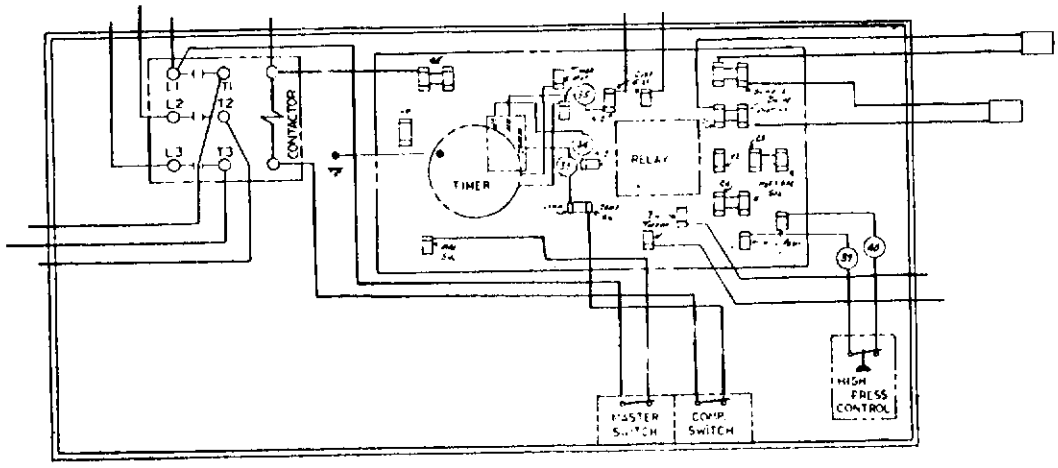

ITEM NO.	PART NO.	DESCRIPTION
1.	12-0739-01	Contactor
2.	12-1980-01	Timer
3.	12-1879-02	Relay
4.	12-1912-01	P.C. Board
5.	11-0388-02	Hi Pressure Control
6.	12-0426-01	On - Off Switches

COMPLETE WATER PUMP
115/60/1
12-1930-01

ITEM NO.	PART NO.	DESCRIPTION
1.	12-1849-54	Nut (Hex)
2.	12-1849-55	Washer
3.	12-1849-56	Washer
4.	12-1849-57	Impeller
5.	12-1849-58	Lockwasher
6.	12-1849-59	Screw
7.	12-1849-60	O-Ring
8.	12-1849-61	Pump Housing
9.	12-1849-62	Screw

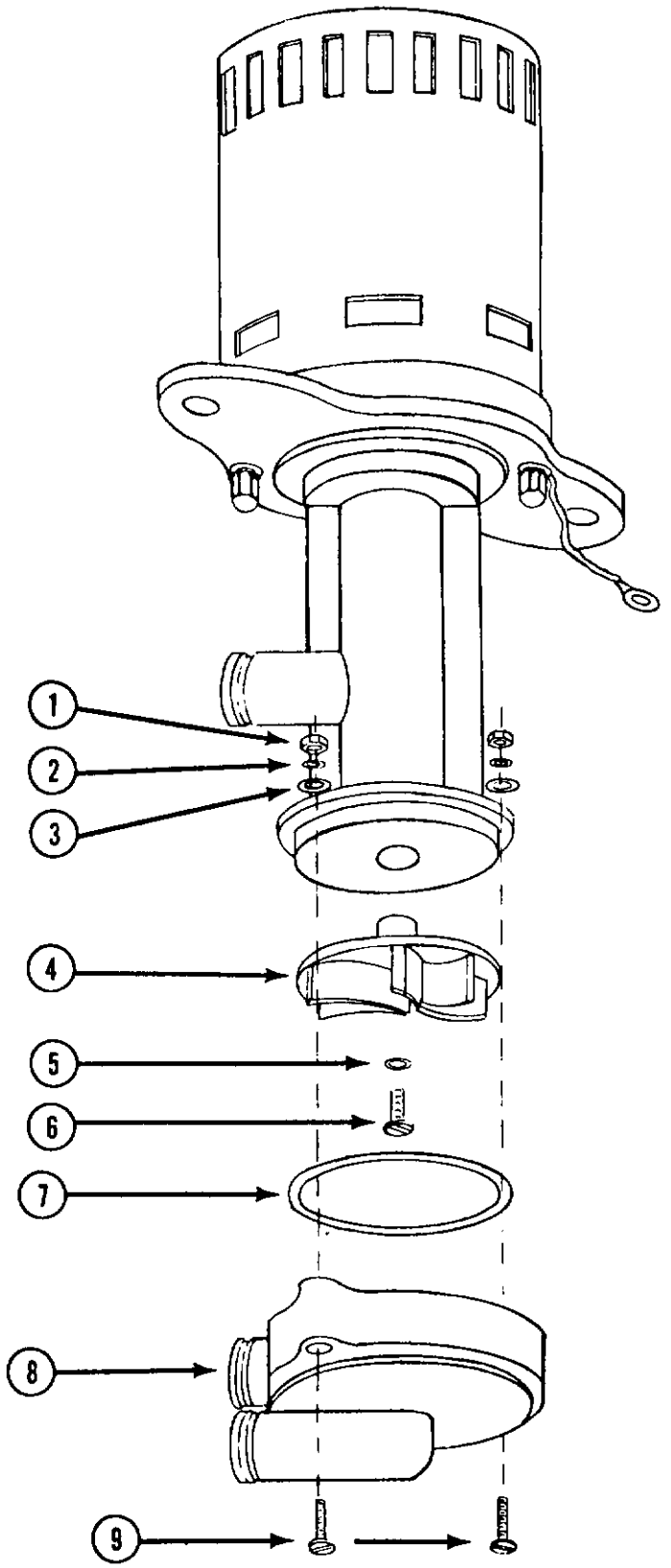

NOTE:

It is impractical to replace the Motor only or the Pump Body on these Water Pumps at the field level.

In the assembly procedure of the Motor and Body, it is necessary that the motor be centered properly to avoid damage to the impeller.

The supplier of these pumps uses special tools in assembly to center the motor and body correctly.

On this page is a listing of the replacement parts that are available and can be replaced on these pumps at the field level.

These pumps 12-1849 and 12-1930 are identical except for the length and design of the electrical leads.

12-1849-01 60" electrical leads with 1/4" quick connect ends. OBSOLETE replace with 12-1930-01 and proper lead.

12-1930-01 6" electrical lead with pin plug connection.

Wire assemblies used with 12-1930-01 pump.

12-1940-01 12" electrical lead with pin plug socket. Usage: AC30
12-1940-02 40" electrical lead with pin plug socket. Usage: MC1, MC25, MC30 and Top Chamber MC2, MC35, MC40
12-1940-03 50" electrical lead with pin plug socket. Usage: MC2, MC35 & MC40 Lower Chamber

CABINET PARTS

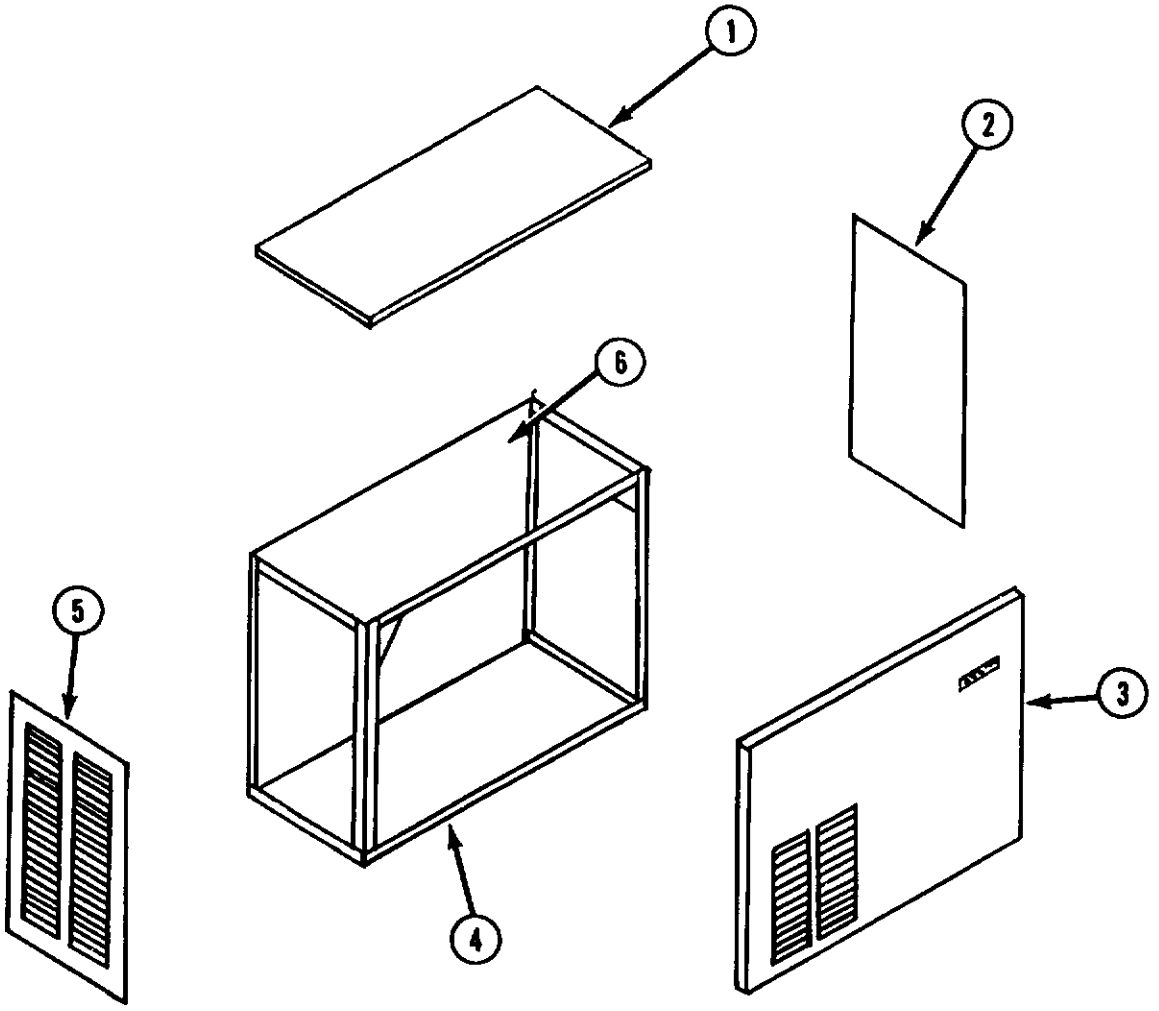

		Enamel	Stainless Steel
1.	Top Panel	A23784-01	A23784-002
2.	Panel, Right Side	A23900-001	A23900-002
3.	Panel, Front	A26183-001 Vinyl	A26183-002
4.	Cabinet Assy.	A26179-001	A26179-001
5.	Panel Left Side	A23899-001	A23899-002
6.	Back Panel	Fixed	Fixed

TABLE OF CONTENTS

SM15W-1, Internal Components 2
SM18W-1, Internal Components 3
SM18A-1, Internal Components 4
SM15W-1, Control Box 5
SM15W-1, Control Box 6
SM18W-1, Control Box 7
SM18A-1, Control Box 8
SM15W-1, Bin Insert Assembly 9
SM18W-1, Bin Insert Assembly 10
SM18A-1, Bin Insert Assembly 10
SM15W-1, Junction Box 11
SM18W-1, Junction Box 11
SM18A-1, Junction Box 11
SM15W-1, Water Pump Assembly 12
SM18W-1, Water Pump Assembly 12
SM18A-1, Water Pump Assembly 12
SM15W-1, Water Flow Valve 13
SM18W-1, Water Flow Valve 13
SM15W-1, Cabinet Parts 14
SM18W-1, Cabinet Parts 15
SM18A-1, Cabinet Parts 15
ALL MODELS, Accessory Parts 16

TABLE OF CONTENTS

SM15W-1, Internal Components 2
SM18W-1, Internal Components 3
SM18A-1, Internal Components 4
SM15W-1, Control Box 5
SM15W-1, Control Box 6
SM18W-1, Control Box 7
SM18A-1, Control Box 8
SM15W-1, Bin Insert Assembly 9
SM18W-1, Bin Insert Assembly 10
SM18A-1, Bin Insert Assembly 10
SM15W-1, Junction Box 11
SM18W-1, Junction Box 11
SM18A-1, Junction Box 11
SM15W-1, Water Pump Assembly 12
SM18W-1, Water Pump Assembly 12
SM18A-1, Water Pump Assembly 12
SM15W-1, Water Flow Valve 13
SM18W-1, Water Flow Valve 13
SM15W-1, Cabinet Parts 14
SM18W-1, Cabinet Parts 15
SM18A-1, Cabinet Parts 15
ALL MODELS, Accessory Parts 16

SM18W-1
Internal components
(Water Cooled)

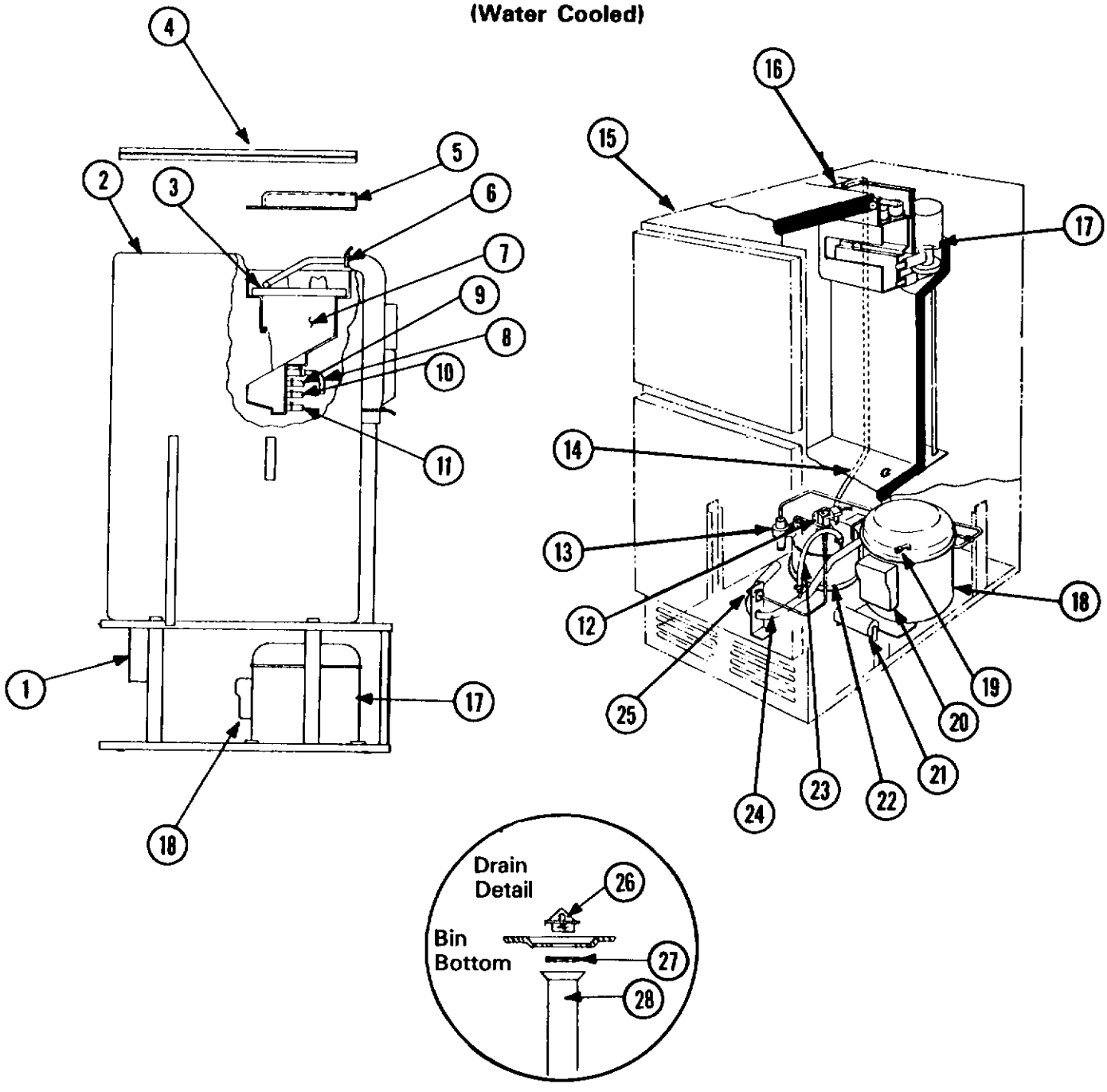

ITEM NO.	PART NO.	DESCRIPTION
1.		Control Box Assembly, **See Page 7**
2.	02-1634-01	Storage Bin
3.	13-0635-00	Rubber Cup Holder
4.	A26787-001	Insulation
5.	02-2274-01	Cover
6.	A19318-020	**Evaporator**
	A19319-020	**Evaporator Assembly Complete**
7.		Bin Insert Assembly, **See Page 10**
8.	A24230-001	Overflow Tube
9.	13-0688-02	Water Tube **(Order Number of Feet Required)**
10.	13-0688-01	Water Tube **(Order Number of Feet Required)**
11.	13-0688-01	Water Tube **(Order Number of Feet Required)**
12.	12-1434-02	Water Solenoid
13.		Water Flow Valve, **See Page 13**
14.	13-0674-01	Water Tube **(Order Number of Feet Required)**
15.		Cabinet Assembly, **See Page 15**

ITEM NO.	PART NO.	DESCRIPTION
16.	A19479-000	Water Tube Guide
17.		Water Pump Assembly, **See Page 12**
18.	18-2150-01	Compressor
19.	16-0560-00	Valve Core
19.	16-0563-00	Brass Cap
20.		Junction Box, **See Page 11**
21.	18-2151-01	Capacitor
22.	A19272-000	Condenser
23.	13-0674-01	Water Tube **(Order Number of Feet Required)**
24.	A23869-001	Copper Drain Tube
25.	03-1394-00	Water Line Nut
26.	02-1751-00	Drain Fitting
27.	13-0617-13	O-Ring
28.	02-1957-00	Drain Tube
29.	02-1918-00	Drier **(Not Shown)**

SM18A-1
INTERNAL COMPONENTS
(Air Cooled)

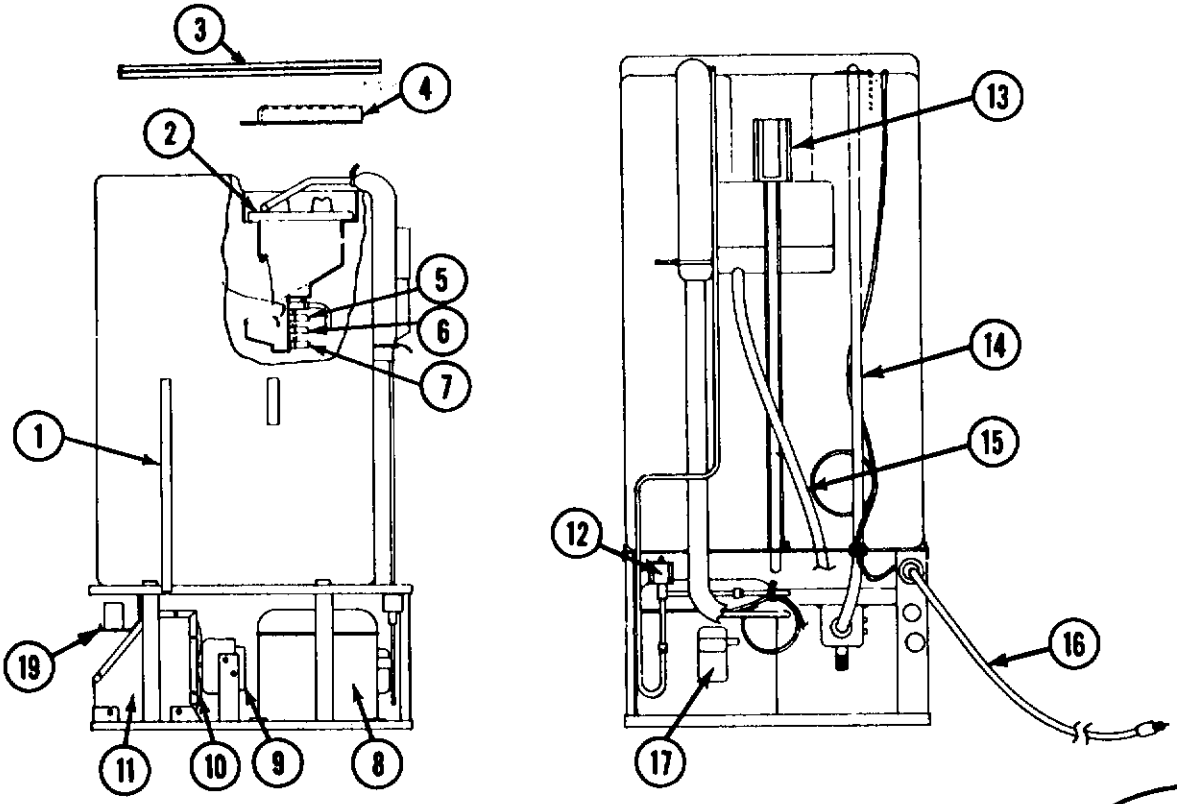

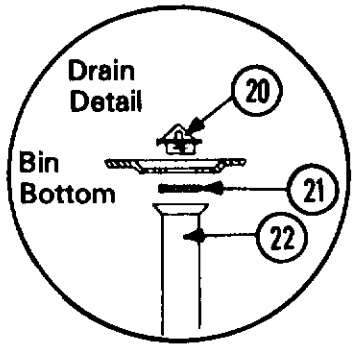

ITEM NO.	PART NO.	DESCRIPTION
1.	02-1634-01	Storage Bin
2.	A26115-020	**Evaporator**
	A26127-020	**Evaporator Assembly Complete**
3.	A26787-001	Insulation
4.	02-2274-01	Cover
5.	13-0688-02	Water Tube **(Order Number of Feet Required)**
6.	13-0688-01	Water Tube **(Order Number of Feet Required)**
7.	13-0688-01	Water Tube **(Order Number of Feet Required)**
8.	18-2150-01	Compressor
9.	12-2015-01	Fan Motor
10.	18-3710-01	Fan Blade
11.	18-3708-01	Condenser
12.	12-2008-01	Hot Gas Valve **Coil**
	12-2009-01	Hot Gas Valve **Clamp**
	12-2010-01	Hot Gas Valve **Body**
13.		Water Pump Assembly, See Page 12
14.	13-0674-01	Water Tube **(Order Number of Feet Required)**
15.	13-0674-04	Water Tube **(Order Number of Feet Required)**
16.	12-1638-07	Electrical Cord
	18-2150-21	Starting Device
	18-2150-24	Cover
18.	02-1918-00	Drier (Not Shown)
19.		Control Box Assembly, **See Page 8**
20.	02-1751-00	Drain Fitting
21.	13-0617-13	O-Ring
22.	02-1957-00	Drain Tube

SM15W-1
CONTROL BOX
(Used Up To Serial Number JB-319468)

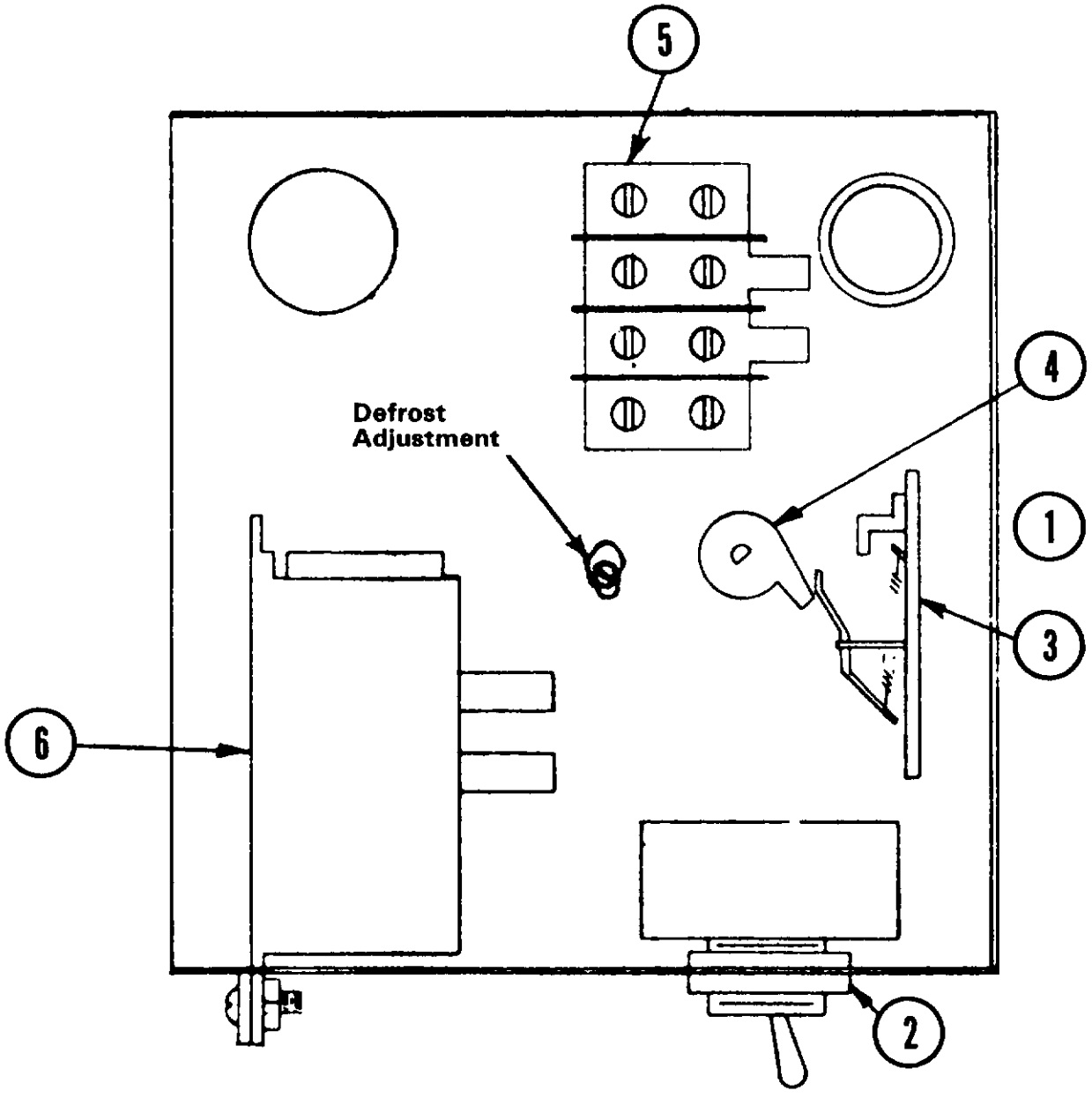

ITEM NO.	PART NO.	DESCRIPTION
1.	12-1450-01	Timer Motor (Not Shown)
2.	12-0426-01	Toggle Switch
3.	12-1449-00	Timer Switch
4.	02-1599-00	Cam
5.	12-1444-00	Terminal Block
6.	11-0366-00	Bin Thermostat

NOTE: The bin thermostat (6) is only an automatic "ON" and "OFF" switch. Adjusting this control WILL NOT affect the size or quality of the cubes.

SM15W-1
CONTROL BOX
(Used After Serial NumberJB-319468)

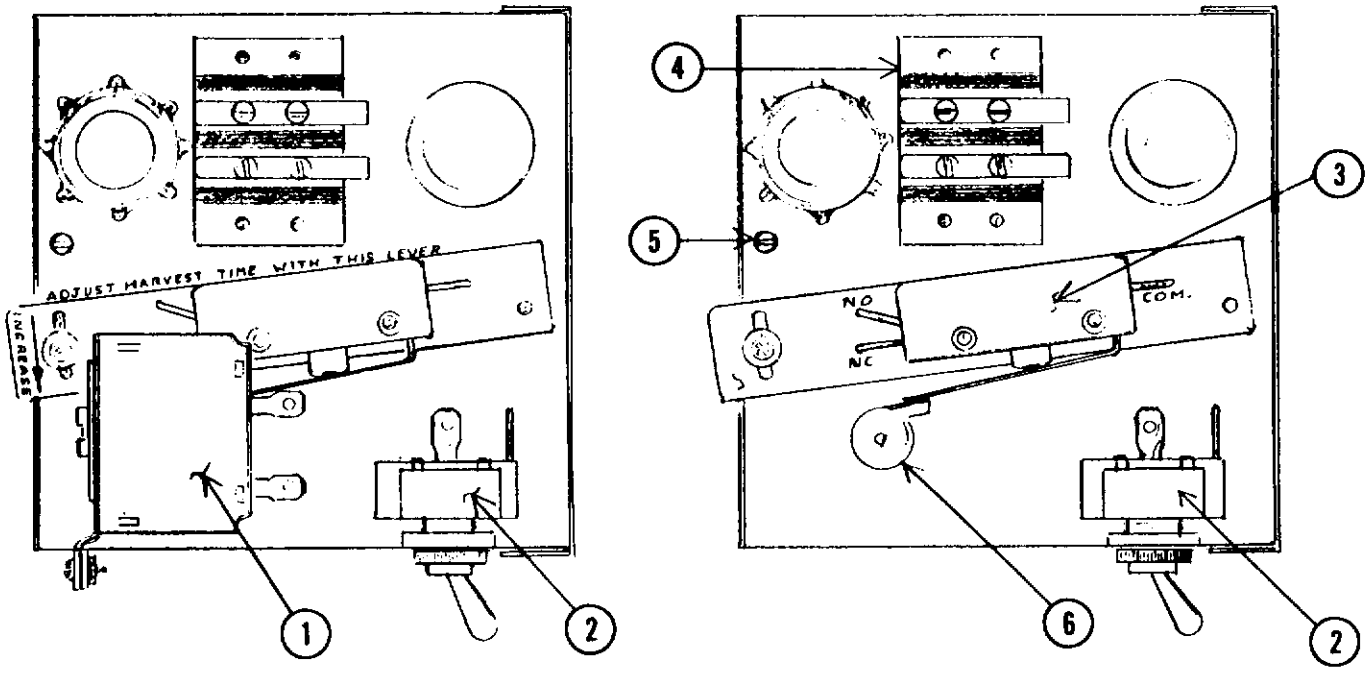

Thermostat Removed To Show Timer Motor Cam

ITEM NO.	PART NO.	DESCRIPTION
1.	11-0366-00	Thermostat
2.	12-0426-01	Toggle Switch
3.	A22568-000	Switch Assembly
4.	12-1444-00	Terminal Board
5.	03-1403-05	Ground Screw
6.	02-1599-00	Cam
7.	12-1450-01	Timer Motor **(Not Shown)**
8.		Control Box, **Obsolete, Use A24596-001**

NOTE: The bin thermostat (1) is only an automatic "ON" and "OFF" switch. Adjusting this control WILL NOT affect the size or quality of the cubes.

SM18W-1
CONTROL BOX

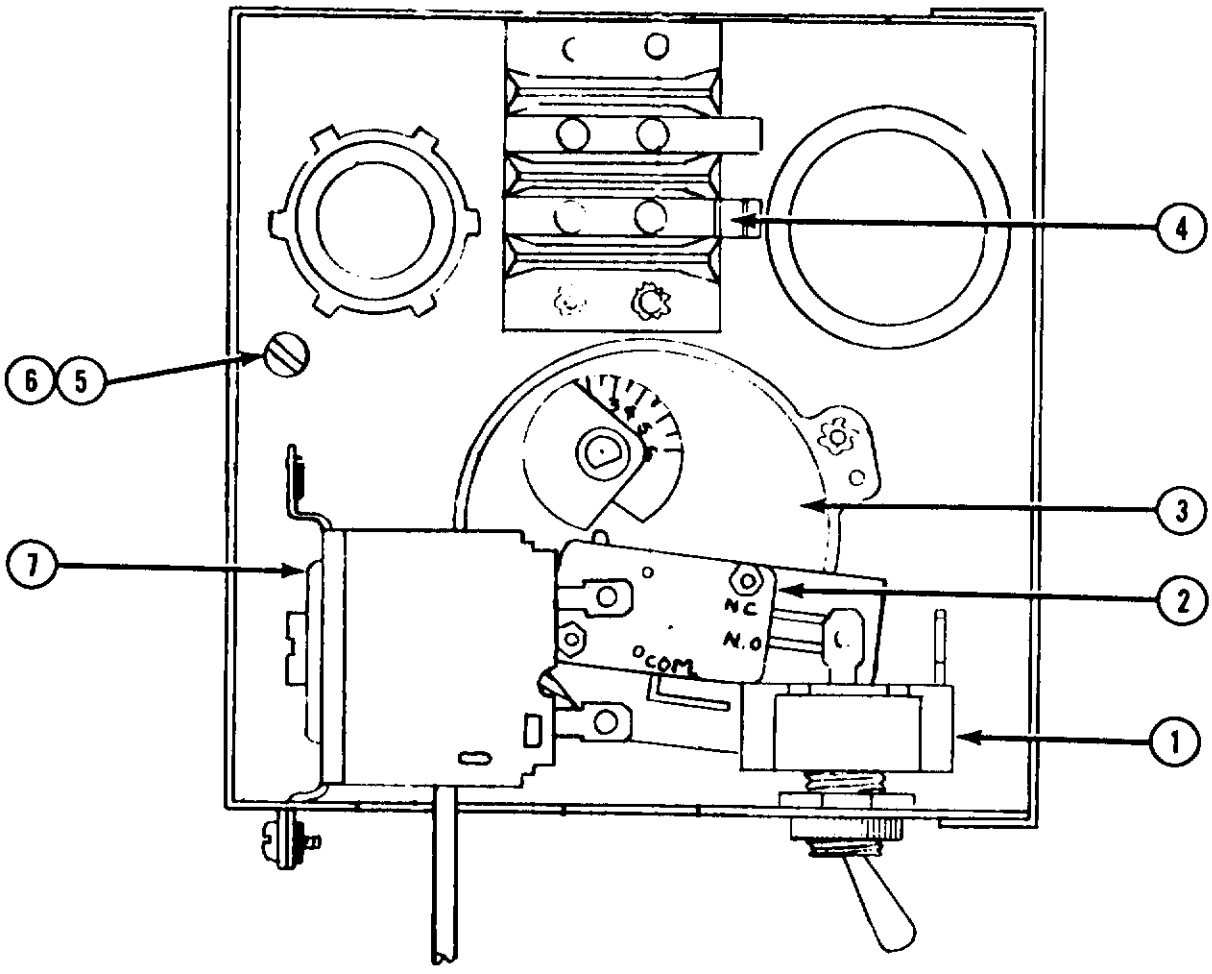

ITEM NO.	PART NO.	DESCRIPTION
1.	12-0426-01	Toggle Switch
2.	12-1721-50	Micro Switch
3.	**A25924-001**	**Timer Assembly Complete**
4.	12-1444-00	Terminal Board
5.	03-1403-05	Ground Screw
6.	03-1417-14	Ground Washer
7.	11-0366-00	Bin Thermostat
8.	12-1638-07	Power Cord **(Not Shown)**
9.	A18700-000	Control Box Cover **(Not Shown)**
10.	**A24596-001**	**Control Box Assembly (Includes Timer & Terminal Block)**

NOTE: The bin thermostat (7) is only an automatic "ON" and "OFF" switch. Adjusting this control WILL NOT affect the size or quality of the cubes.

SM18A-1
CONTROL BOX

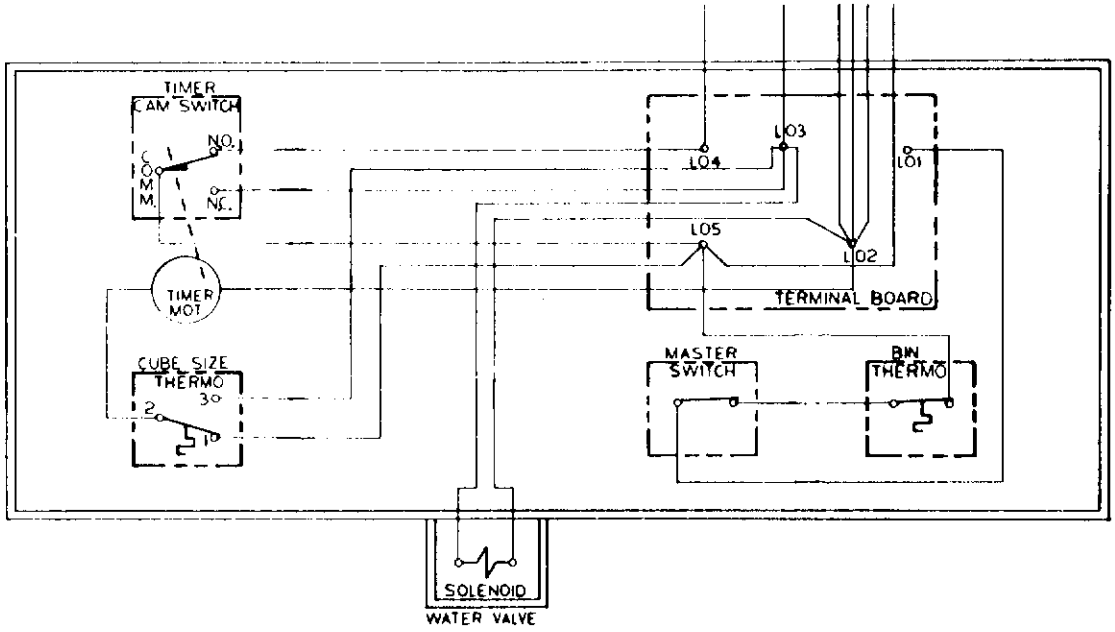

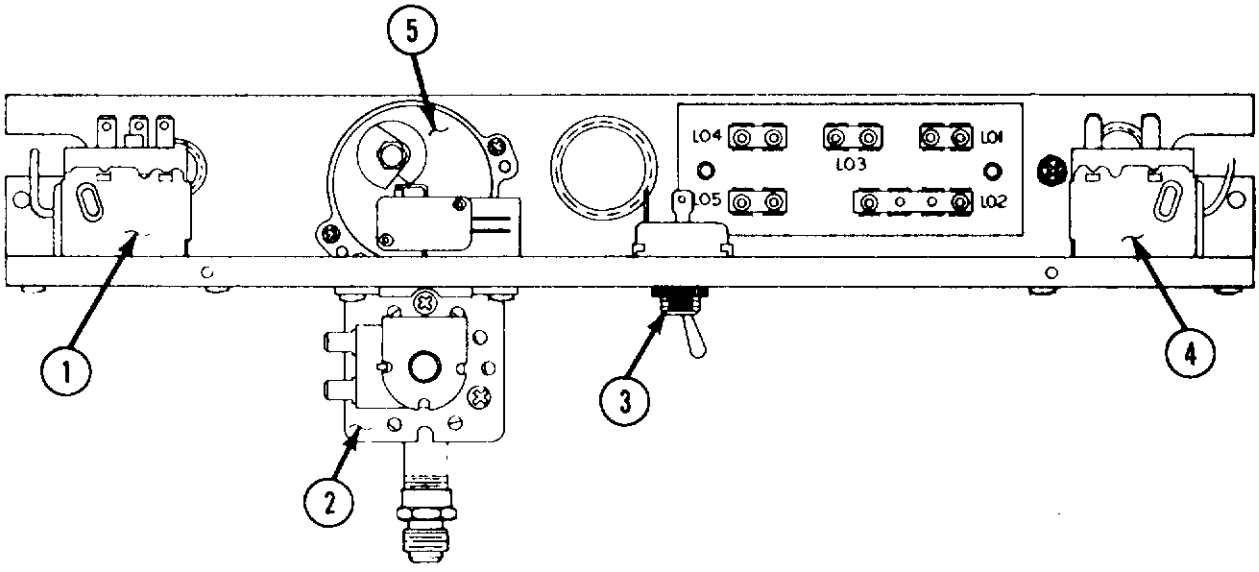

ITEM NO.	PART NO.	DESCRIPTION
1.	11-0395-01	Cube Size Control
2.	12-1646-02	Water Solenoid
3.	12-0426-01	Master Switch
4.	11-0366-00	Bin Thermostat
5.	12-1980-01	Timer
6.	16-0672-01	Nylon Valve Fitting (Not Shown)

NOTE: The bin thermostat (4) is only an automatic "ON" and "OFF" switch. Adjusting this control WILL NOT affect the size or quality of the cubes.

SM15W-1
BIN INSERT ASSEMBLY
(Used Up To Serial Number JX-351700)

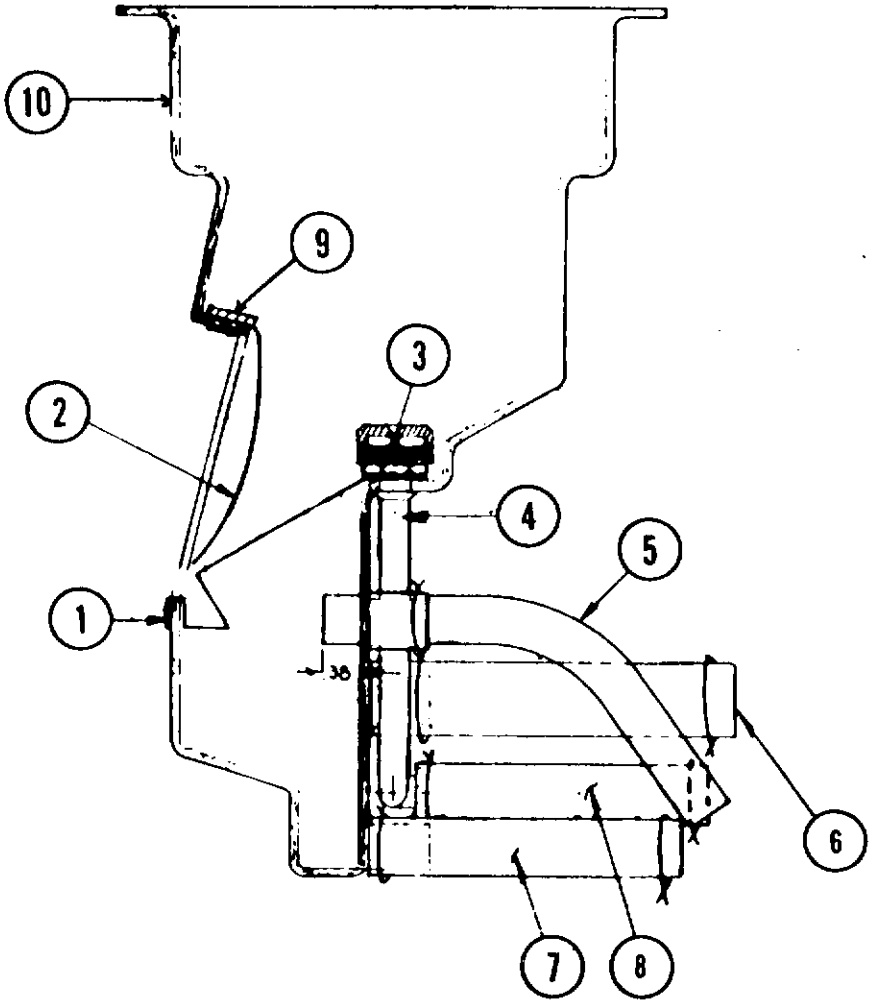

ITEM NO.	PART NO.	DESCRIPTION
1.	A19266-000	Cube Chute
2.	02-1781-00	Curtain
3.	02-1841-00	Jet Top **(Nozzle)**
4.	A19278-000	Spray Bar Assembly
5.	A24230-001	Overflow Tube
6.	13-0688-02	Water Tube **(Order Number of Feet Required)**
7.	13-0688-01	Water Tube **(Order Number of Feet Required)**
8.	13-0688-01	Water Tube **(Order Number of Feet Required)**
9.	03-1433-00	Plastic Button
10.	**A22532-00**	**Bin Insert Complete**
11.	A09543-000	Spinner **(Not Shown)**
12.	02-0534-01	Clamp
13.	02-1775-02	Clamp
14.	02-1840-00	Jet Base **(Not Shown)**

SM18W-1/SM18A-1
BIN INSERT ASSEMBLY

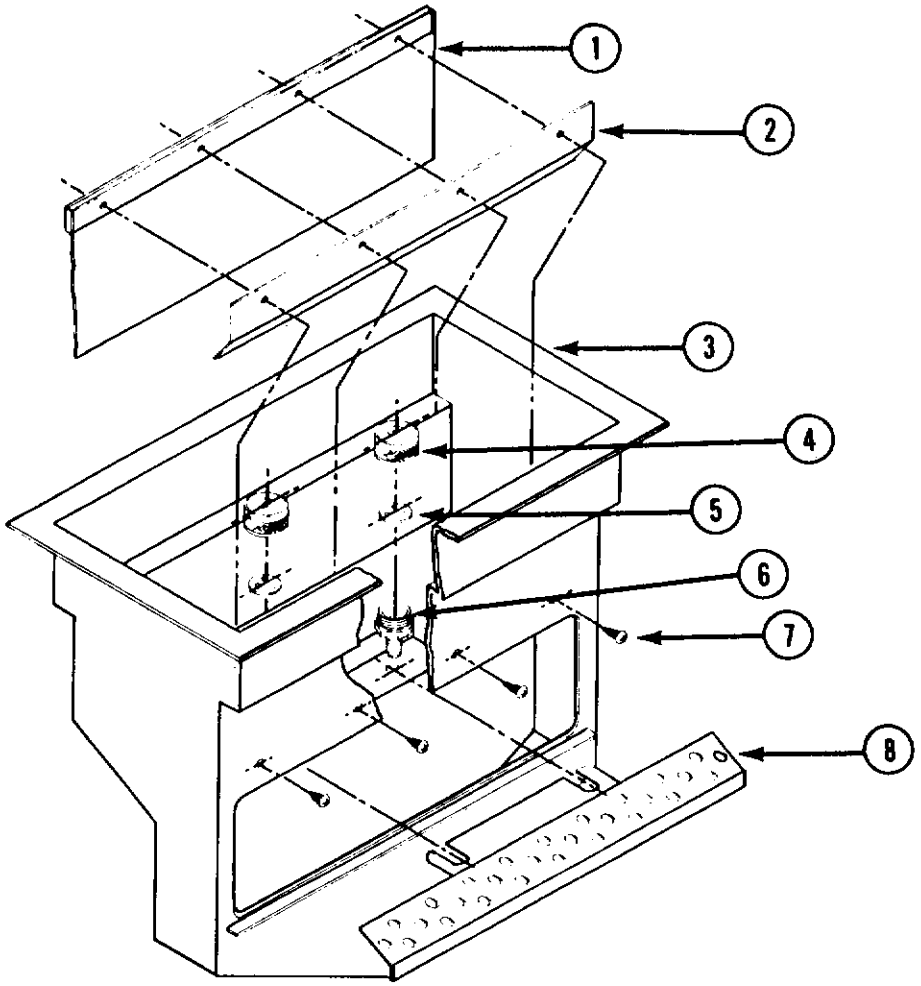

ITEM NO.	PART NO.	DESCRIPTION
1.	02-2053-01	Curtain
2.	A24155-001	Curtain Stiffner
3.	02-1923-00	Bin Insert
4.	02-1841-00	Jet Top (Nozzle)
5.	A09543-000	Spinner
6.	02-1840-00	Spray Jet Base
7.	03-1404-16	Screws
8.	A22518-000	Cube Chute
9.	A19278-000	Spray Bar Assembly **(Not Shown)**
10.	13-0617-08	O-Ring **(Not Shown)**
11.	A24230-001	Overflow Tube **(Not Shown)**
12.	**A22532-000**	**Bin Insert Complete**

WARNING: When removing jet top (4), be careful not to drop the small spinner (5). If dropped into the sump, the spinner may damage the water pump.

NOTE: The unit will not make ice properly if the spinners are not in place.

SM18W-1/SM18A-1
BIN INSERT ASSEMBLY

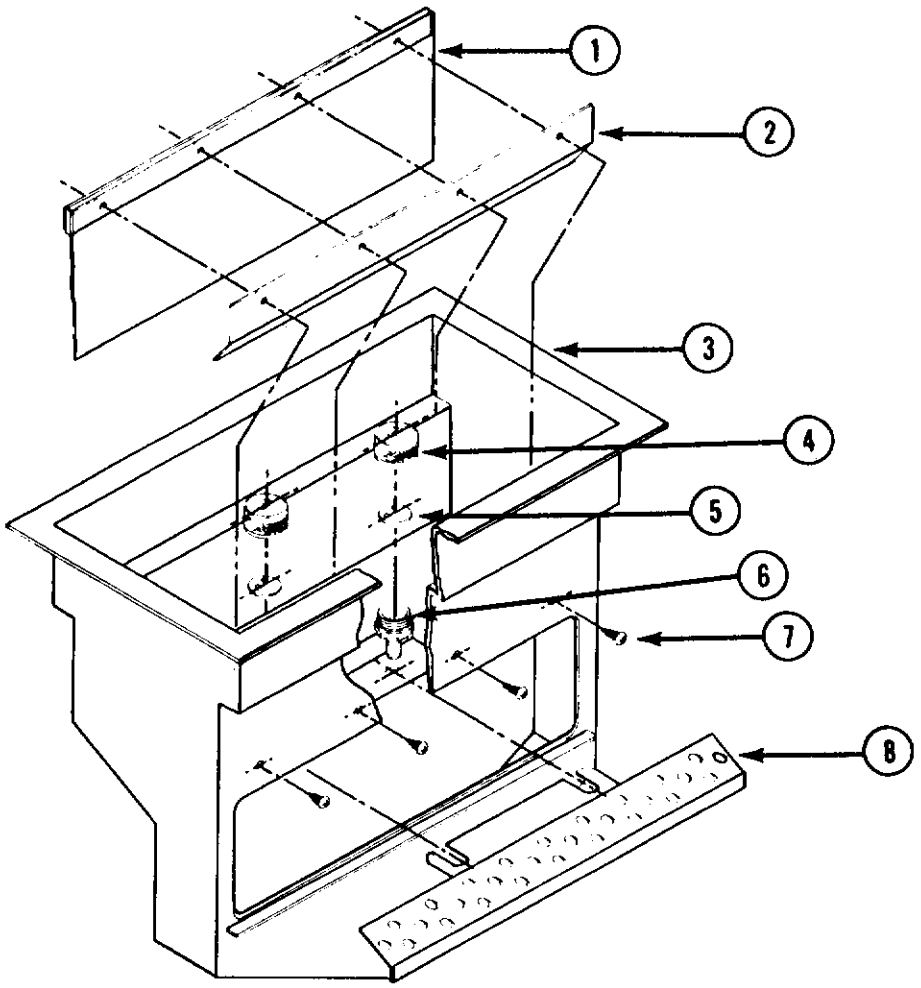

ITEM NO.	PART NO.	DESCRIPTION
1.	02-2053-01	Curtain
2.	A24155-001	Curtain Stiffner
3.	02-1923-00	Bin Insert
4.	02-1841-00	Jet Top (Nozzle)
5.	A09543-000	Spinner
6.	02-1840-00	Spray Jet Base
7.	03-1404-16	Screws
8.	A22518-000	Cube Chute
9.	A19278-000	Spray Bar Assembly **(Not Shown)**
10.	13-0617-08	O-Ring **(Not Shown)**
11.	A24230-001	Overflow Tube **(Not Shown)**
12.	**A22532-000**	**Bin Insert Complete**

WARNING: When removing jet top (4), be careful not to drop the small spinner (5). If dropped into the sump, the spinner may damage the water pump.

NOTE: The unit will not make ice properly if the spinners are not in place.

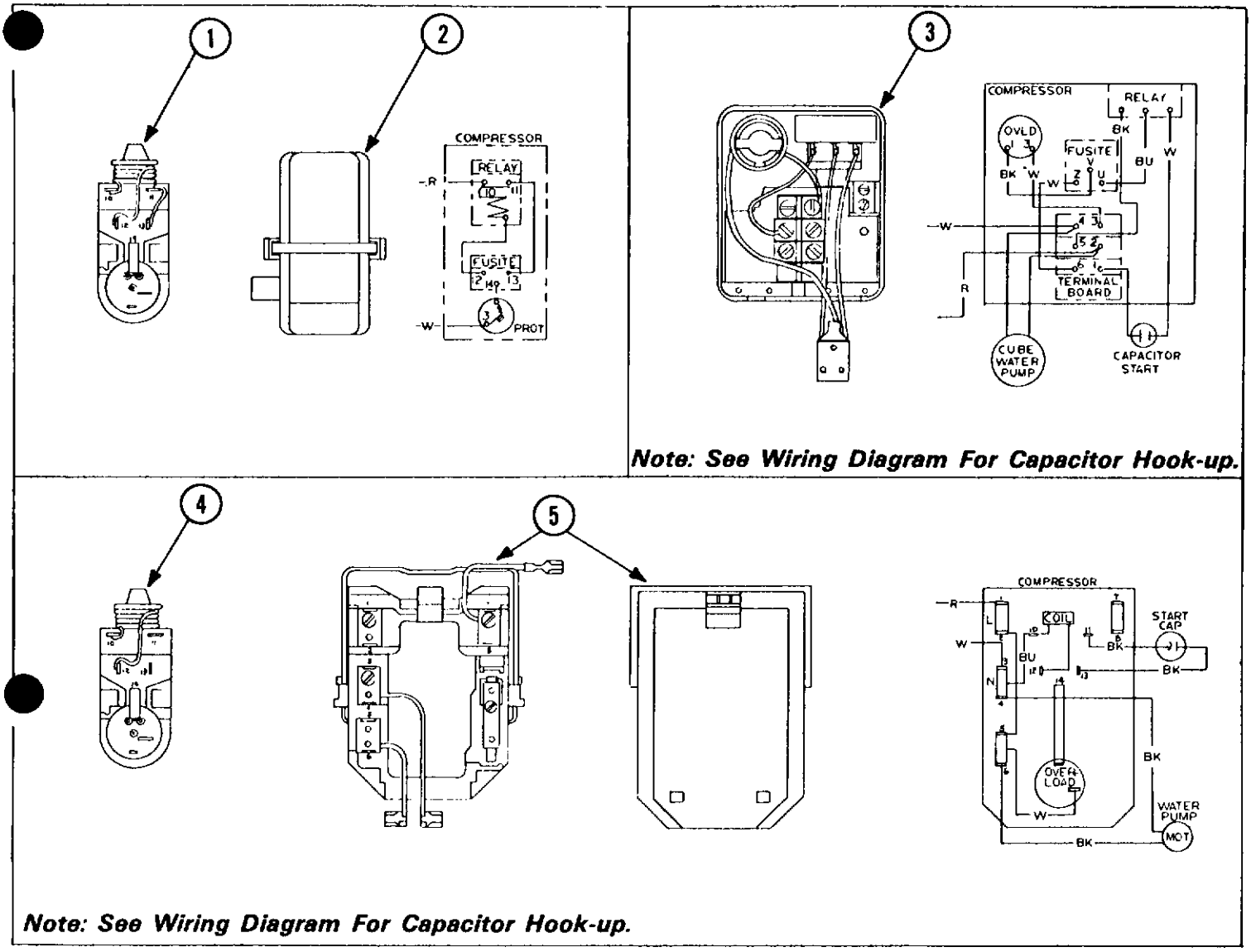

Note: See Wiring Diagram For Capacitor Hook-up.

Note: See Wiring Diagram For Capacitor Hook-up.

ITEM NO.	PART NO.	DESCRIPTION
1.	18-2150-21	Starting Device **(Air Cooled Only)**
2.	18-2150-24	Cover **(Air Cooled Only)**
3.	18-2150-07	Junction Box Complete **(Water Cooled Only)**
4.	18-2150-28	Starting Device **(Water Cooled Only)**
5.	18-2150-23	Terminal Board and Cover **(Water Cooled Only)**
6.	18-2151-01	*Capacitor **(Water Cooled Only)**

IMPORTANT:

1. Item Number 3 used up to Serial Number 4B231296. May be used on all **Water Cooled** units.
2. Item Number 4 and 5 used after Serial number 4B231297. Interchangeable with Item Number 3 on all Water Cooled Icemakers produced after 1971.
3. Item Number 1 and 4 are **Not Interchangeble.** Item Number 1 has a jumper wire between terminal 11 and 13. Item Number 4 does not have the jumper wire.

* Not Shown

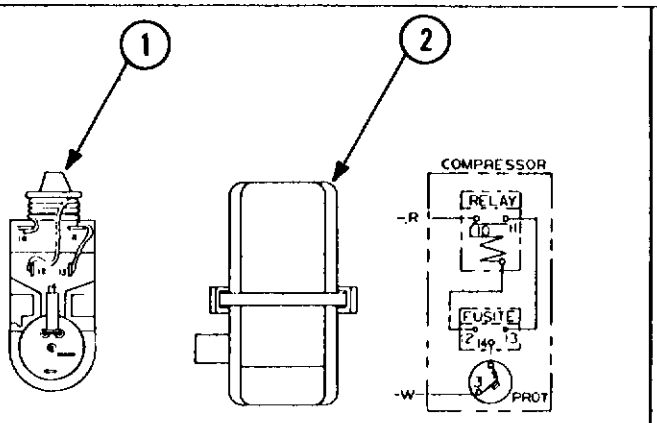

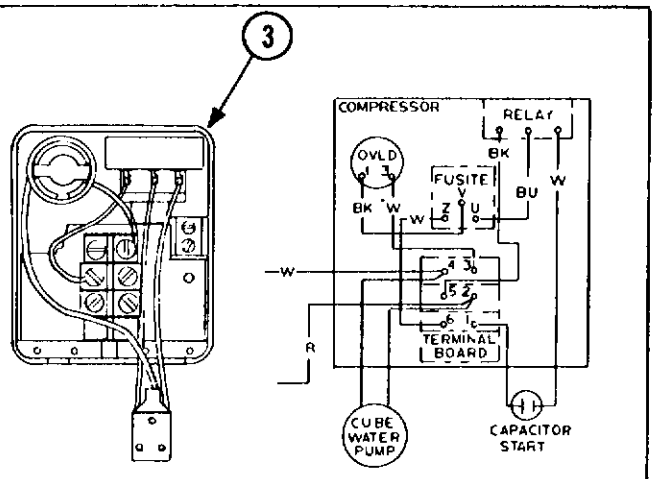

Note: See Wiring Diagram For Capacitor Hook-up.

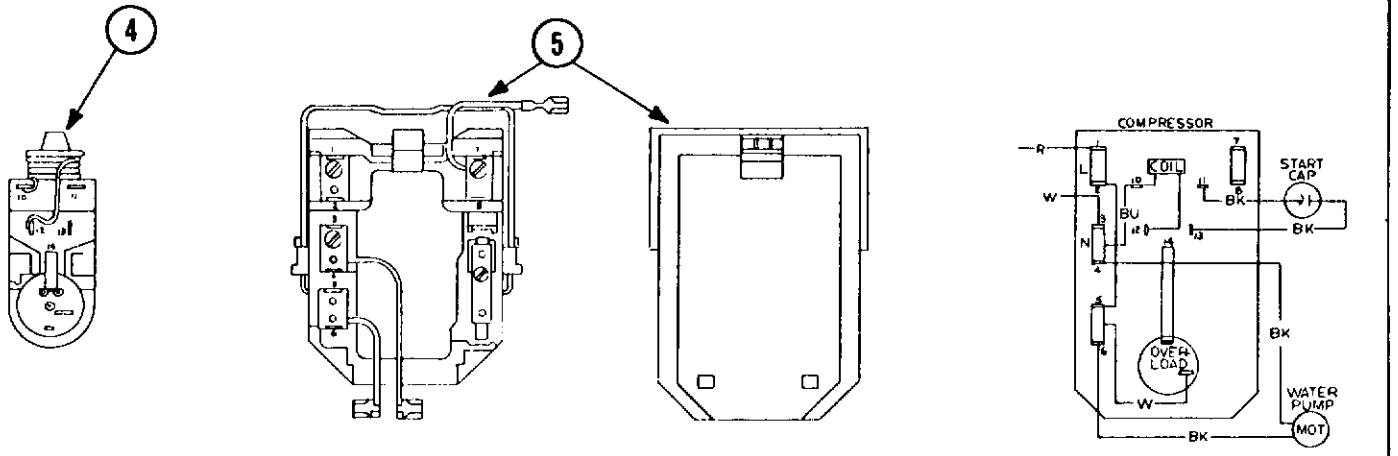

Note: See Wiring Diagram For Capacitor Hook-up.

ITEM NO.	PART NO.	DESCRIPTION
1.	18-2150-21	Starting Device **(Air Cooled Only)**
2.	18-2150-24	Cover **(Air Cooled Only)**
3.	18-2150-07	Junction Box Complete **(Water Cooled Only)**
4.	18-2150-28	Starting Device **(Water Cooled Only)**
5.	18-2150-23	Terminal Board and Cover **(Water Cooled Only)**
6.	18-2151-01	*Capacitor **(Water Cooled Only)**

IMPORTANT:

1. Item Number 3 used up to Serial Number 4B231296. May be used on all **Water Cooled** units.
2. Item Number 4 and 5 used after Serial number 4B231297. Interchangeable with Item Number 3 on all Water Cooled Icemakers produced after 1971.
3. Item Number 1 and 4 are **Not Interchangeble.** Item Number 1 has a jumper wire between terminal 11 and 13. Item Number 4 does not have the jumper wire.

* Not Shown

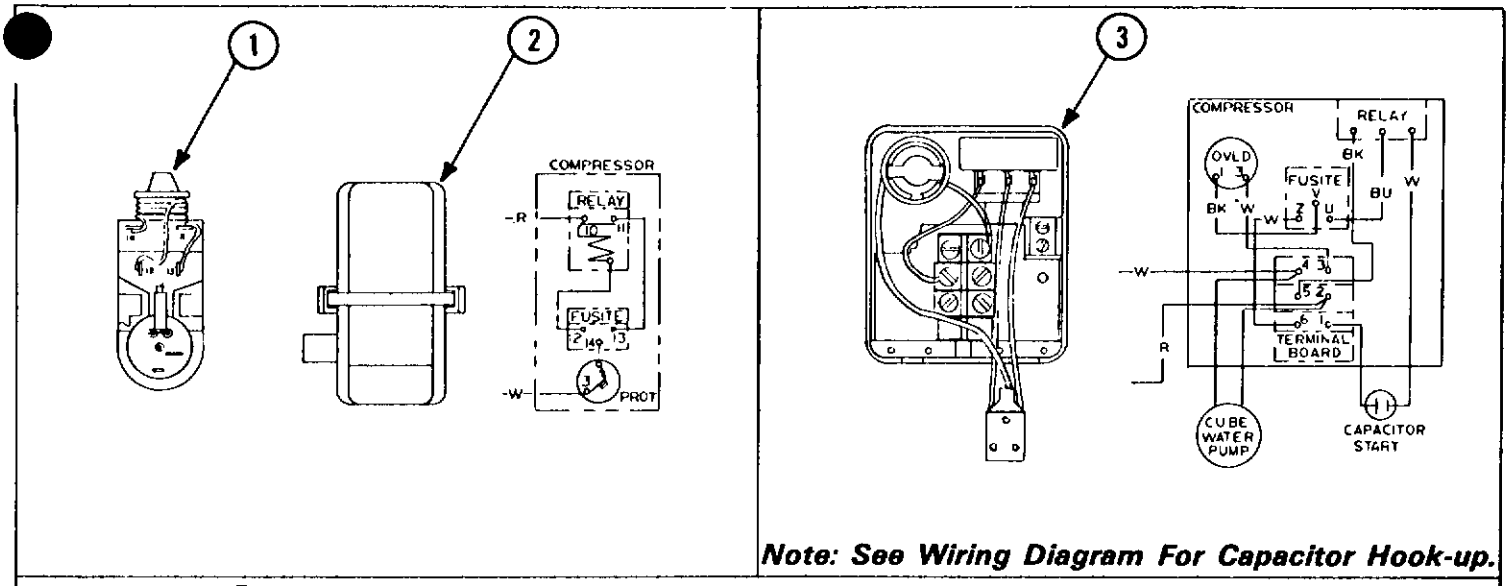

Note: See Wiring Diagram For Capacitor Hook-up.

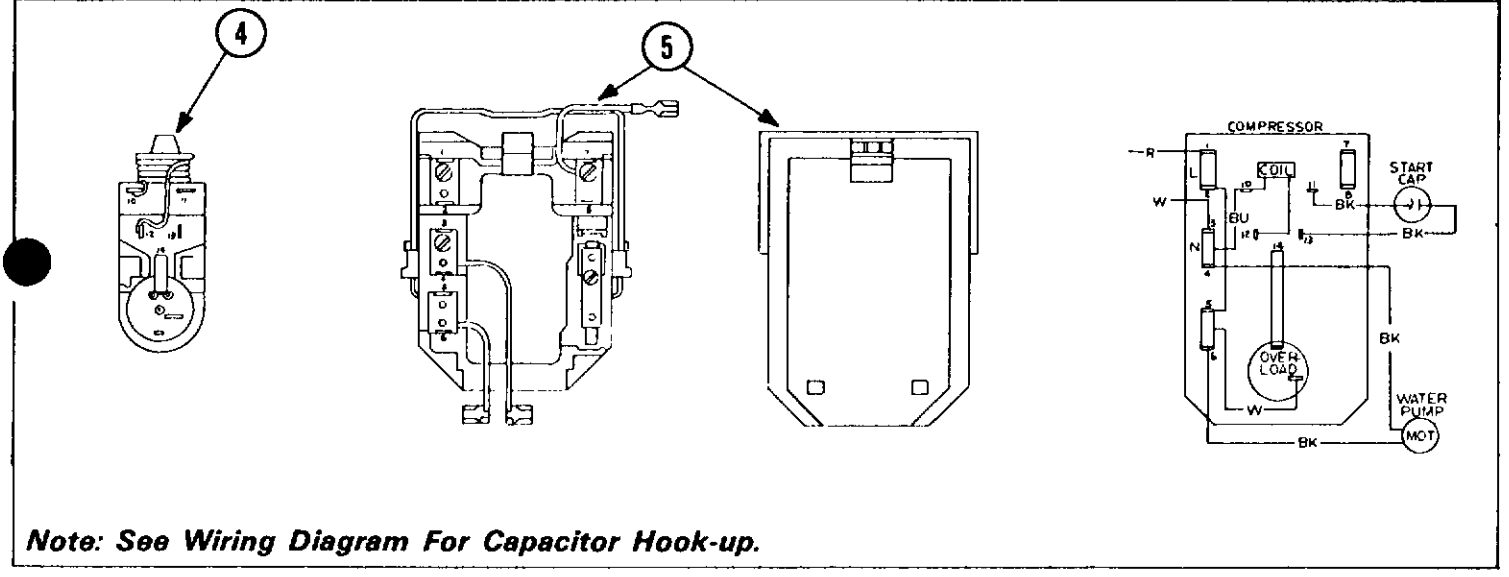

Note: See Wiring Diagram For Capacitor Hook-up.

ITEM NO.	PART NO.	DESCRIPTION
1.	18-2150-21	Starting Device **(Air Cooled Only)**
2.	18-2150-24	Cover **(Air Cooled Only)**
3.	18-2150-07	Junction Box Complete **(Water Cooled Only)**
4.	18-2150-28	Starting Device **(Water Cooled Only)**
5.	18-2150-23	Terminal Board and Cover **(Water Cooled Only)**
6.	18-2151-01	*Capacitor **(Water Cooled Only)**

IMPORTANT:

1. Item Number 3 used up to Serial Number 4B231296. May be used on all **Water Cooled** units.
2. Item Number 4 and 5 used after Serial number 4B231297. Interchangeable with Item Number 3 on all Water Cooled Icemakers produced after 1971.
3. Item Number 1 and 4 are **Not Interchangeble.** Item Number 1 has a jumper wire between terminal 11 and 13. Item Number 4 does not have the jumper wire.

* Not Shown

SM15W-1/SM18W-1/SM18A-1
WATER PUMP ASSEMBLY

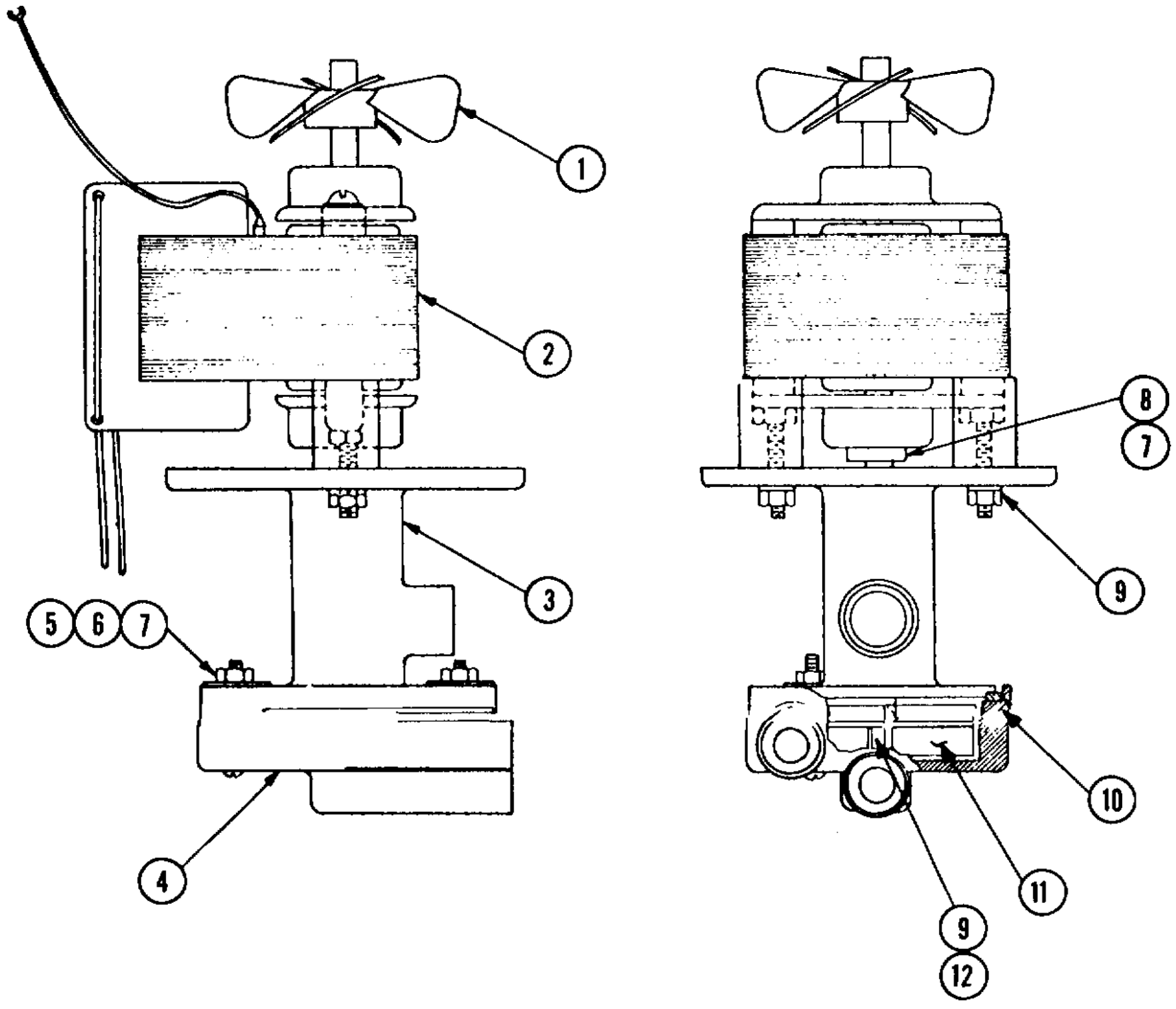

ITEM NO.	PART No.	DESCRIPTION
1.	02-1719-00	Fan Blade
2.	12-1714-01	Motor
3.	02-1711-00	Water Pump Body
4.	02-1710-00	Water Pump Base
5.	03-1403-60	Screw
6.	03-1408-23	Nut
7.	03-1406-02	Washer
8.	13-0690-00	Rubber Washer
9.	03-1417-14	Lock Washer
10.	13-0617-07	O-Ring
11.	02-1712-00	Impeller
12.	03-1403-05	Screw
13.	13-0687-00	Gasket (Installed Between Pump and Bin)
14.	13-0688-01	Water Tube **(Order Number of Feet Required)**
15.	13-0688-02	Water Tube **(Order Number of Feet Required)**
16.	**A22536-021**	**Water Pump Complete.**

SM15W-1/SM18W-1/SM18A-1
WATER PUMP ASSEMBLY

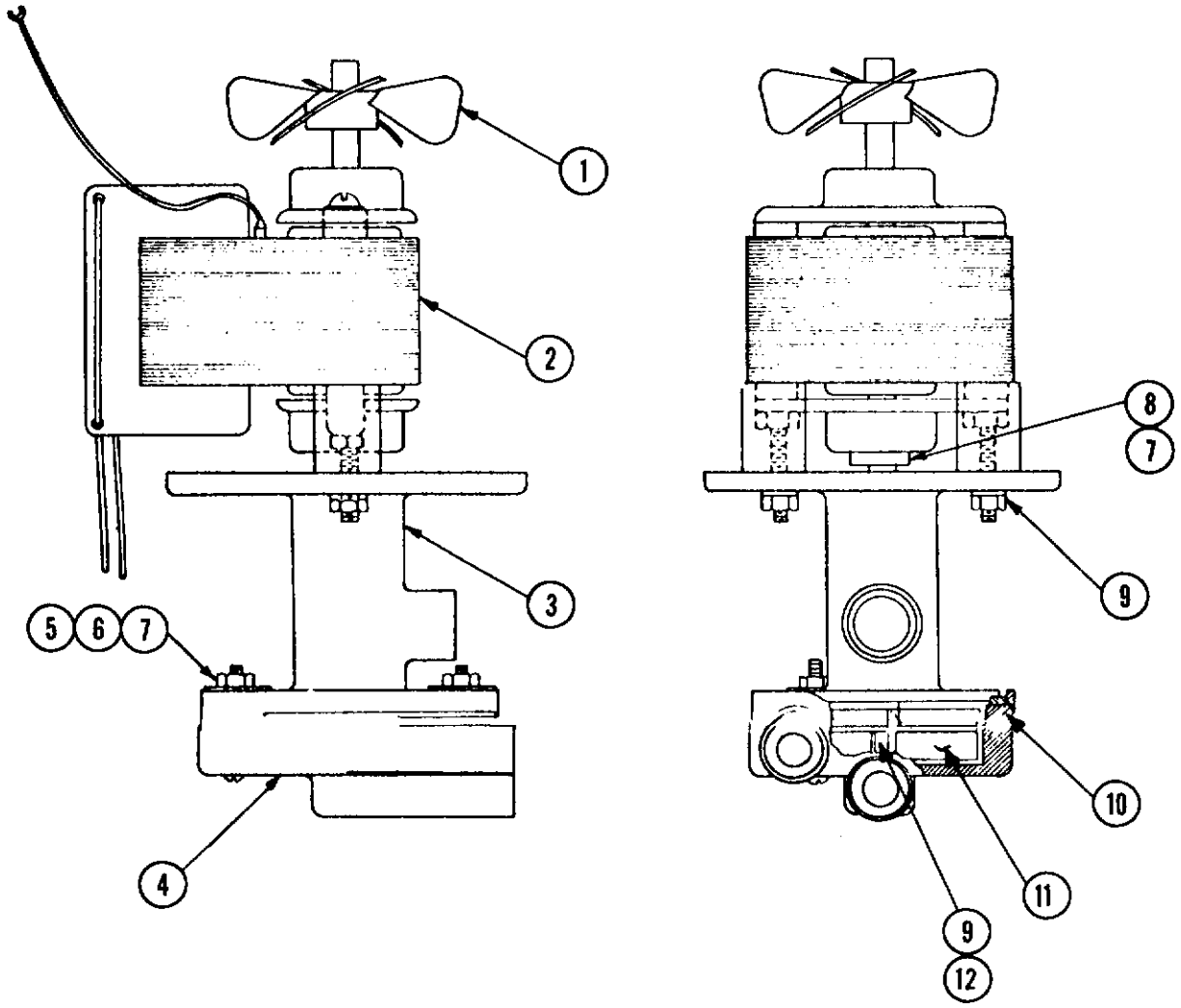

ITEM NO.	PART No.	DESCRIPTION
1.	02-1719-00	Fan Blade
2.	12-1714-01	Motor
3.	02-1711-00	Water Pump Body
4.	02-1710-00	Water Pump Base
5.	03-1403-60	Screw
6.	03-1408-23	Nut
7.	03-1406-02	Washer
8.	13-0690-00	Rubber Washer
9.	03-1417-14	Lock Washer
10.	13-0617-07	O-Ring
11.	02-1712-00	Impeller
12.	03-1403-05	Screw
13.	13-0687-00	Gasket (Installed Between Pump and Bin)
14.	13-0688-01	Water Tube **(Order Number of Feet Required)**
15.	13-0688-02	Water Tube **(Order Number of Feet Required)**
16.	**A22536-021**	**Water Pump Complete.**

SM15W-1/SM18W-1/SM18A-1
WATER PUMP ASSEMBLY

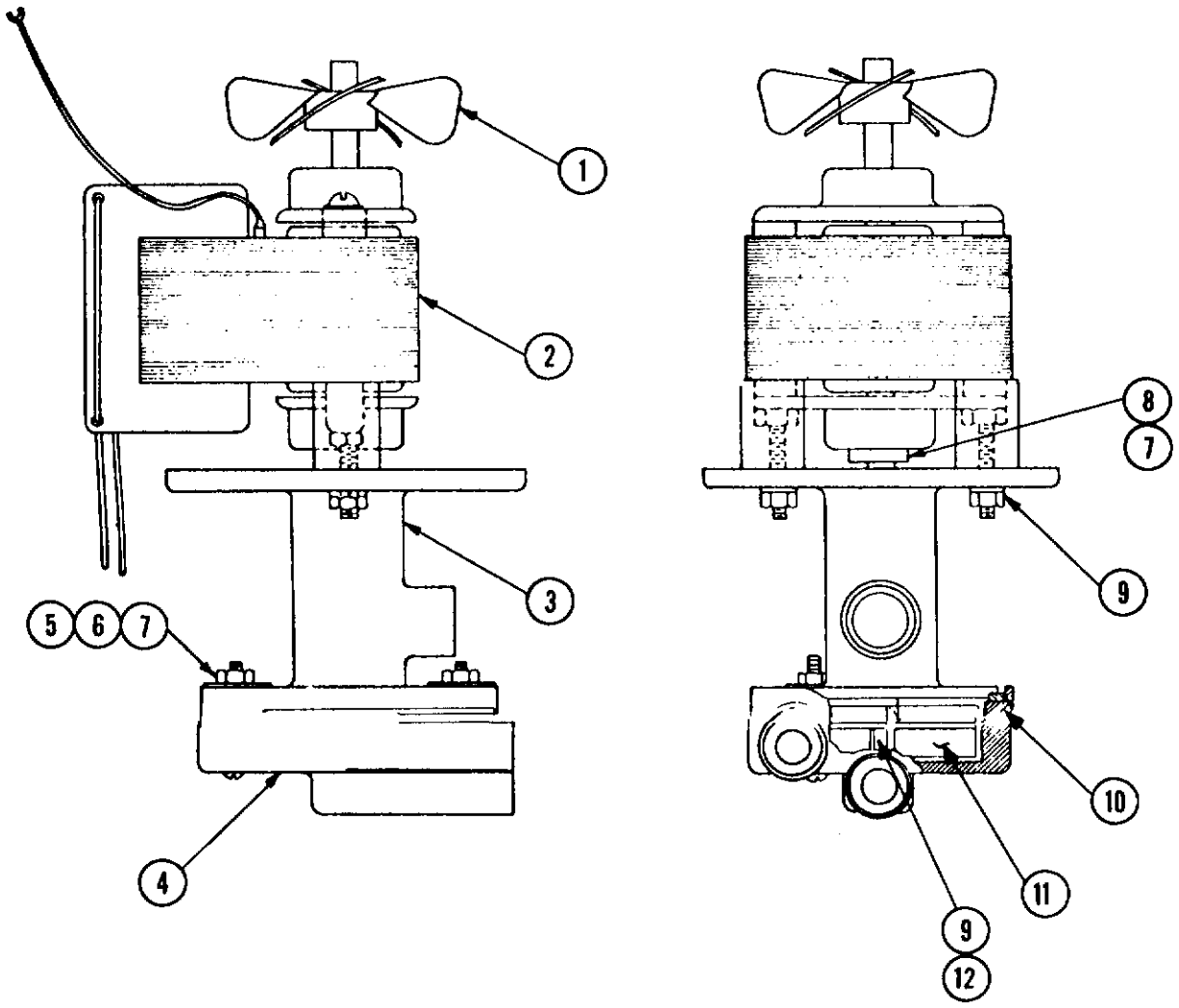

ITEM NO.	PART No.	DESCRIPTION
1.	02-1719-00	Fan Blade
2.	12-1714-01	Motor
3.	02-1711-00	Water Pump Body
4.	02-1710-00	Water Pump Base
5.	03-1403-60	Screw
6.	03-1408-23	Nut
7.	03-1406-02	Washer
8.	13-0690-00	Rubber Washer
9.	03-1417-14	Lock Washer
10.	13-0617-07	O-Ring
11.	02-1712-00	Impeller
12.	03-1403-05	Screw
13.	13-0687-00	Gasket (Installed Between Pump and Bin)
14.	13-0688-01	Water Tube **(Order Number of Feet Required)**
15.	13-0688-02	Water Tube **(Order Number of Feet Required)**
16.	**A22536-021**	**Water Pump Complete.**

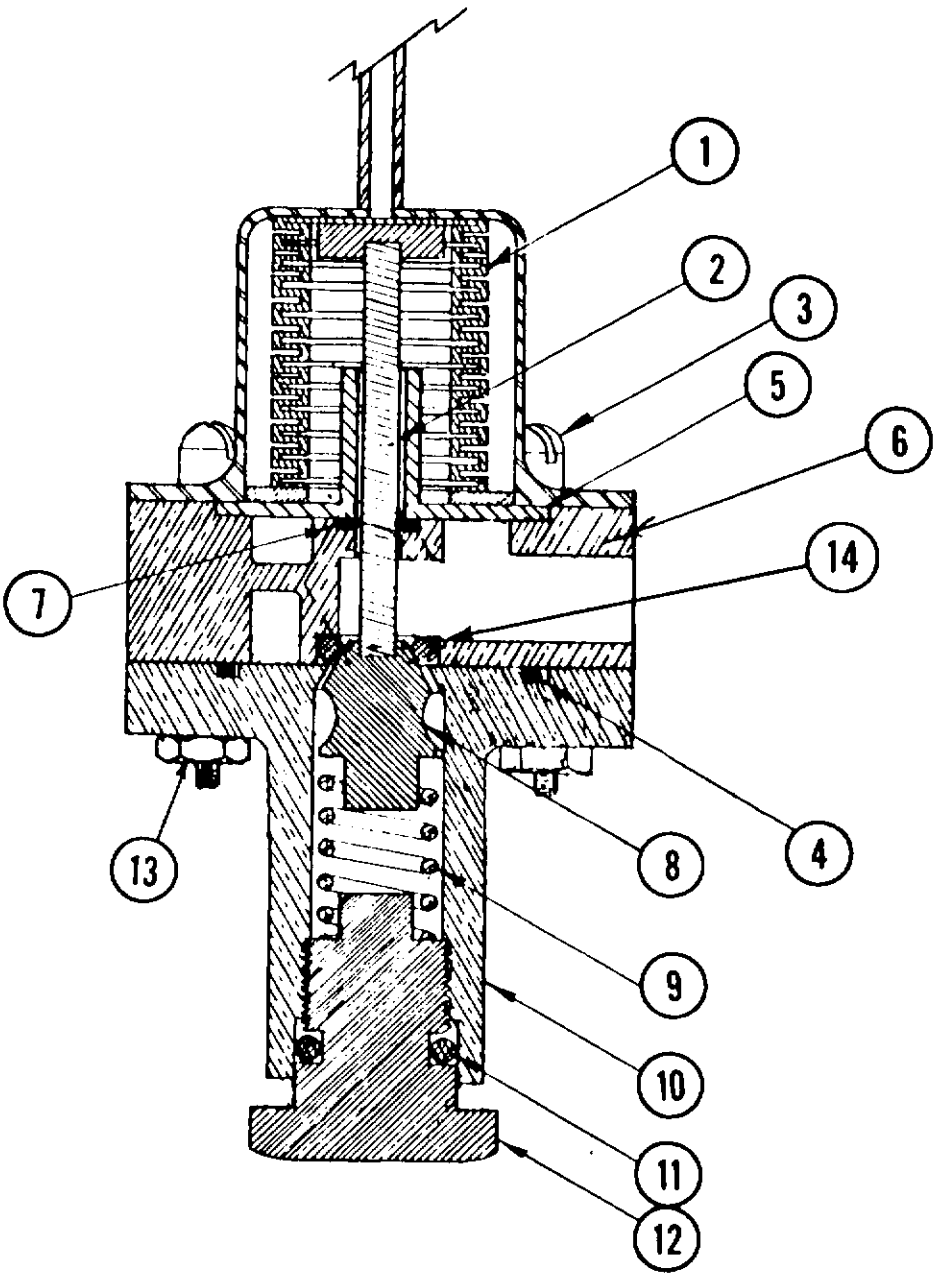

ITEM NO.	PART NO.	DESCRIPTION
1.	A19382-000	Bellows Assembly
2.	A19323-000	Shaft Assembly
3.	03-1403-23	Screw
4.	13-0617-09	O-Ring
5.	02-1876-00	Washer
6.	02-1656-00	Upper Housing
7.	13-0617-14	O-Ring
8.	02-1655-00	Valve Plunger
9.	02-1658-00	Spring
10.	02-1657-00	Lower Housing
11.	13-0617-10	O-Ring
12.	02-1654-00	Adjustment Nut
13.	03-1406-03	Nut
14.	13-0617-21	Teflon O-Ring
15.	**A19180-000**	**Water Flow Valve Complete**

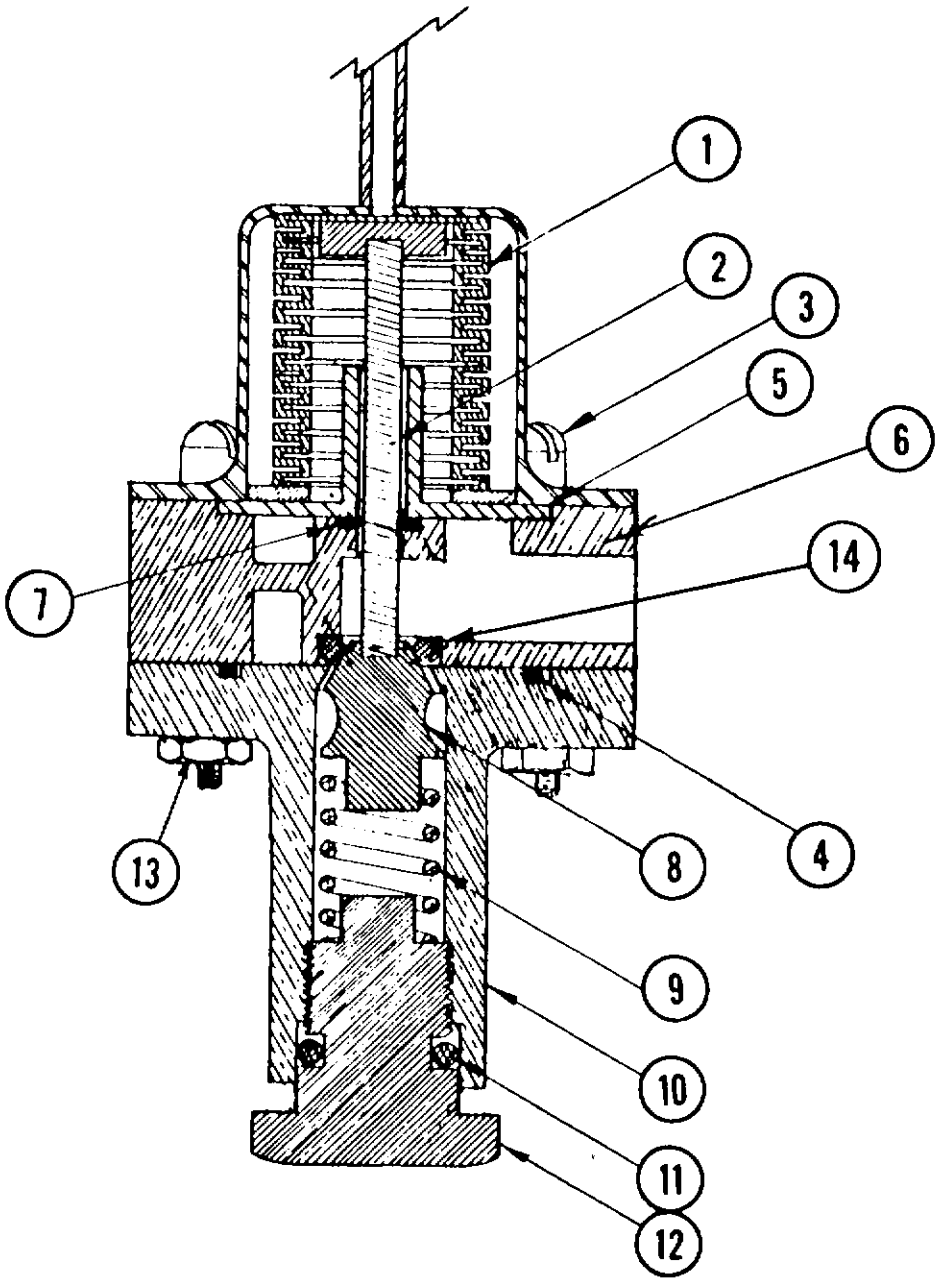

ITEM NO.	PART NO.	DESCRIPTION
1.	A19382-000	Bellows Assembly
2.	A19323-000	Shaft Assembly
3.	03-1403-23	Screw
4.	13-0617-09	O-Ring
5.	02-1876-00	Washer
6.	02-1656-00	Upper Housing
7.	13-0617-14	O-Ring
8.	02-1655-00	Valve Plunger
9.	02-1658-00	Spring
10.	02-1657-00	Lower Housing
11.	13-0617-10	O-Ring
12.	02-1654-00	Adjustment Nut
13.	03-1406-03	Nut
14.	13-0617-21	Teflon O-Ring
15.	**A19180-000**	**Water Flow Valve Complete**

SM15W-1
CABINET PARTS

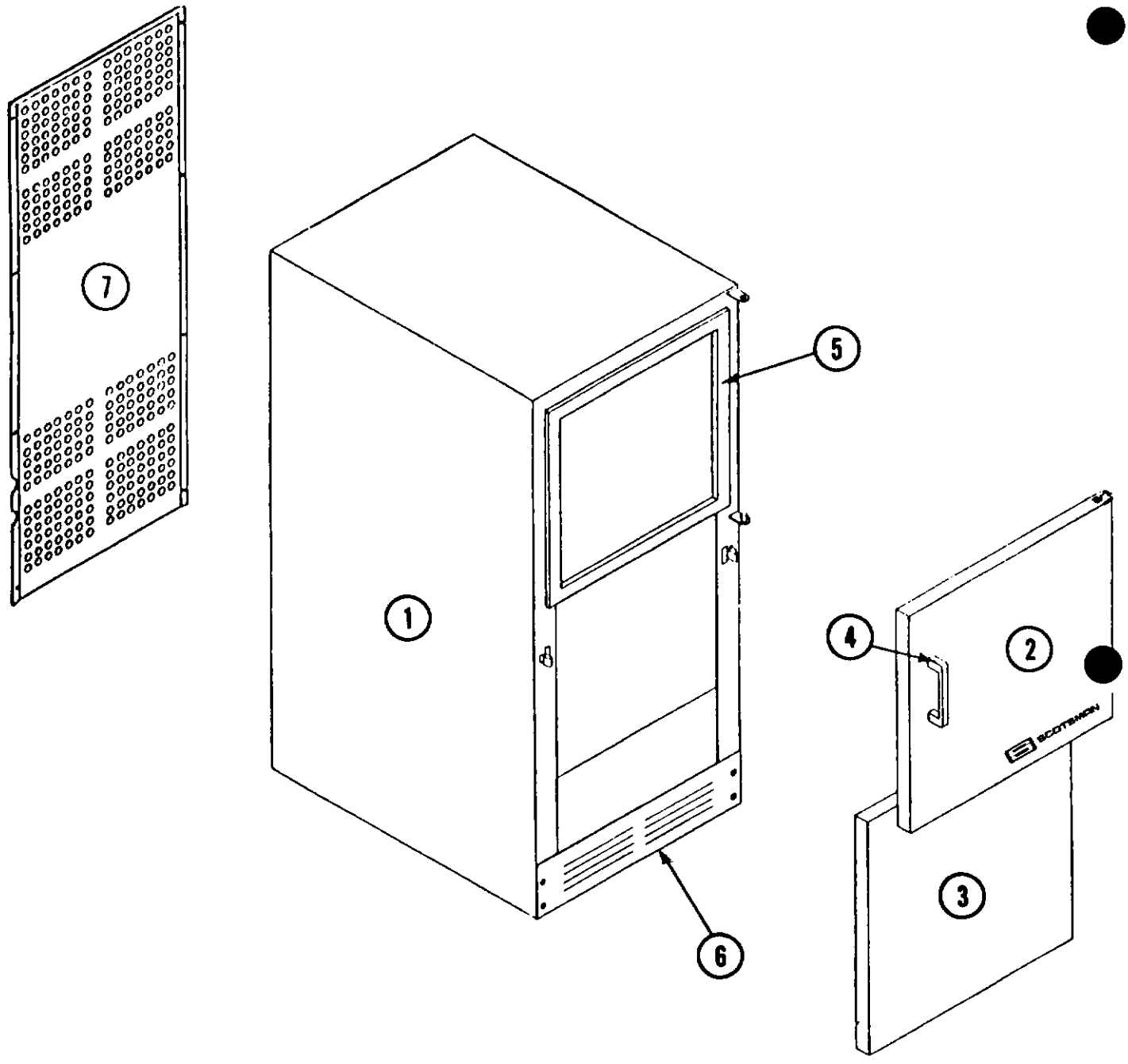

ITEM NO.	PART NO.	DESCRIPTION
1.	A18592-000	Cabinet, **Available in Sandlewood Color Only**
2.		Door, Obsolete **Use A24289-001 and A23586-001**
3.		Door, Obsolete
4.	15-0492-00	Handle
5.	13-0634-00	Door Gasket
6.	A18767-000	Kick Plate
7.	A18595-000	Rear Service Panel
8.	10-0297-00	Harvest Gold Touch Up Spray Paint

SM18W-1 / SM18A-1
Cabinet Parts

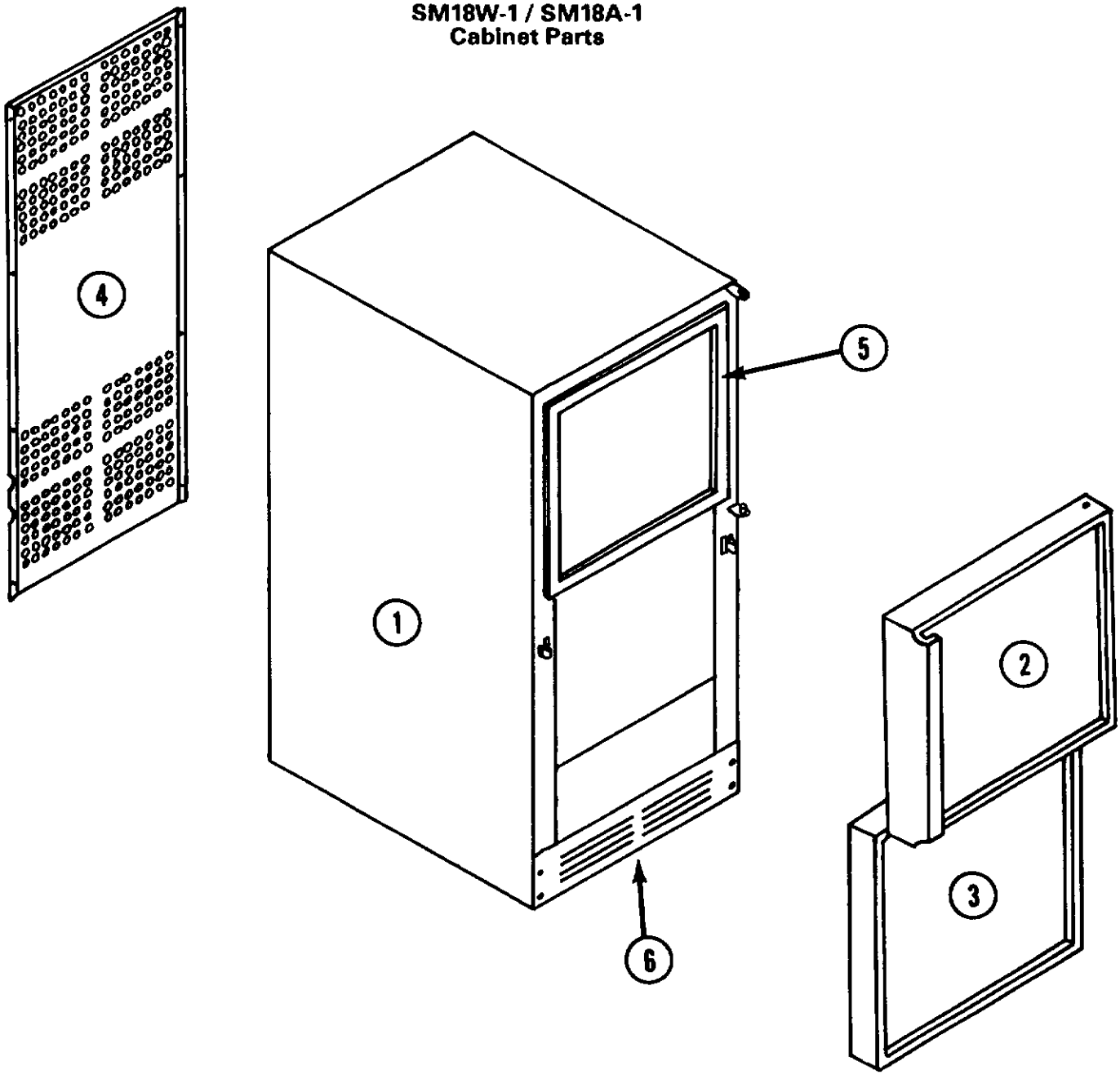

ITEM NO.	PART NO.	DESCRIPTION
1.	A18592-000	Cabinet Assembly
2.	A24289-001	Access Door Complete
3.	A23586-001	Front Service Door
4.	A18595-000	Rear Service Panel
5.	13-0634-00	Gasket (magnetic)
6.	02-2243-01	Kick Plate, **Air Cooled or Water Cooled**
	A18767-000	Kick Plate, **Water Cooled Only**
7.	10-0314-01	Sandlewood Touch Up Spray Paint.

SM18W-1 / SM18A-1
Cabinet Parts

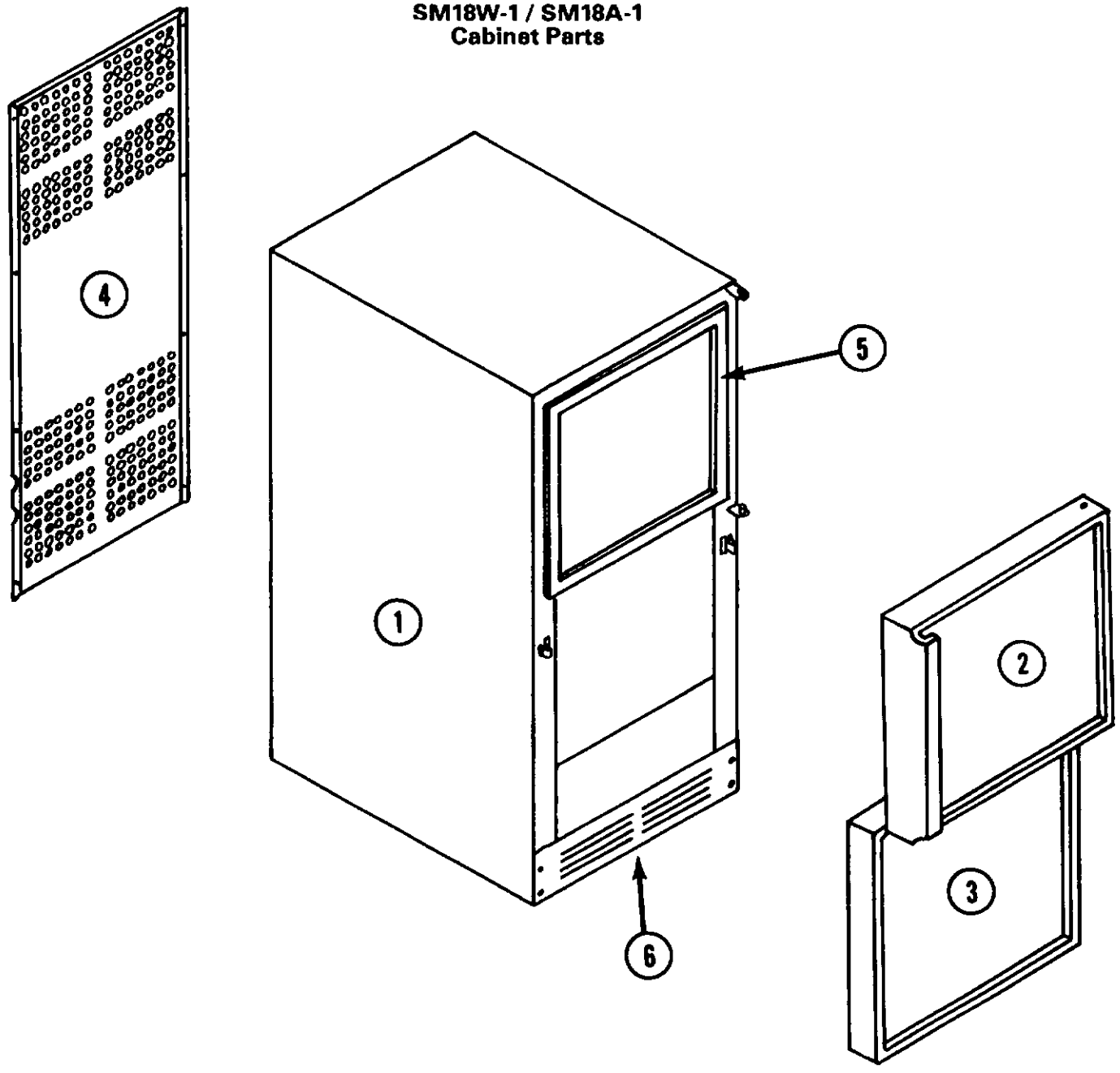

ITEM NO.	PART NO.	DESCRIPTION
1.	A18592-000	Cabinet Assembly
2.	A24289-001	Access Door Complete
3.	A23586-001	Front Service Door
4.	A18595-000	Rear Service Panel
5.	13-0634-00	Gasket (magnetic)
6.	02-2243-01	Kick Plate, **Air Cooled or Water Cooled**
	A18767-000	Kick Plate, **Water Cooled Only**
7.	10-0314-01	Sandlewood Touch Up Spray Paint.

ACCESSORY PARTS AVAILABLE

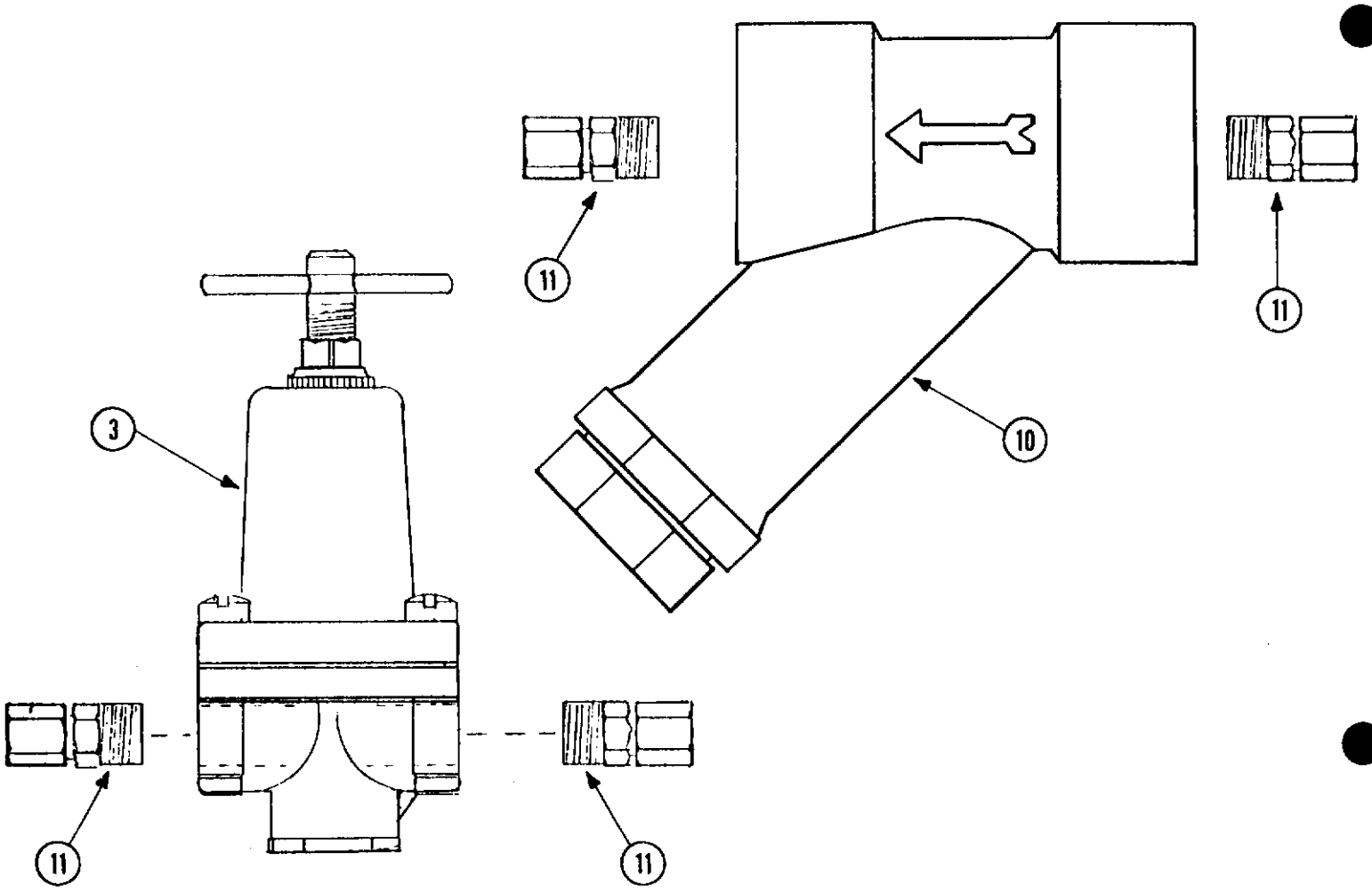

ITEM NO.	PART NO.	DESCRIPTION
1.	10-0297-00	Harvest Gold Touch Up Spray Paint
2.	10-0314-01	Sandlewood Touch Up Spray Paint
3.	11-0200-00	Water Pressure Regulator
4.	13-0674-01	Water Tube, 1/4" I.D. 7/16" O.D. **(Order Number of Feet Required)**
5.	13-0674-04	Water Tube, 1/2" I.D. 11/16" O.D. **(Order Number of Feet Required)**
6.	13-0674-06	Water Tube, 5/8" I.D. 13/16" O.D. **(Order Number of Feet Required)**
7.	13-0674-13	Water Tube, 5/8" I.D. 7/8" O.D. **(Order Number of Feet Required)**
8.	13-0688-01	Water Tube, 1/2" I.D. 5/8" O.D. **(Order Number of Feet Required)**
9.	13-0688-02	Water Tube, 5/8" I.D. 3/4" O.D. **(Order Number of Feet Required)**
10.	16-0162-00	Water Strainer
11.	16-0621-03	Fitting, 1/4" Pipe Thread x 1/4" Compression
12.	17-0965-00	SM15W-1 Service Manual
13.	17-1067-03	SM18W-1 Service Manual
14.	17-1257-01	SM18A-1 Service Manual
15.	17-0998-01	Parts Manual
16.	**19-0343-01**	**Ice Machine Cleaner, Case (24 Each, 8 oz. Bottles)**
17.	**19-0343-06**	**Ice Machine Cleaner, (1 each, 8 oz. Bottle)**

INTERNAL COMPONENTS
(Air Cooled)

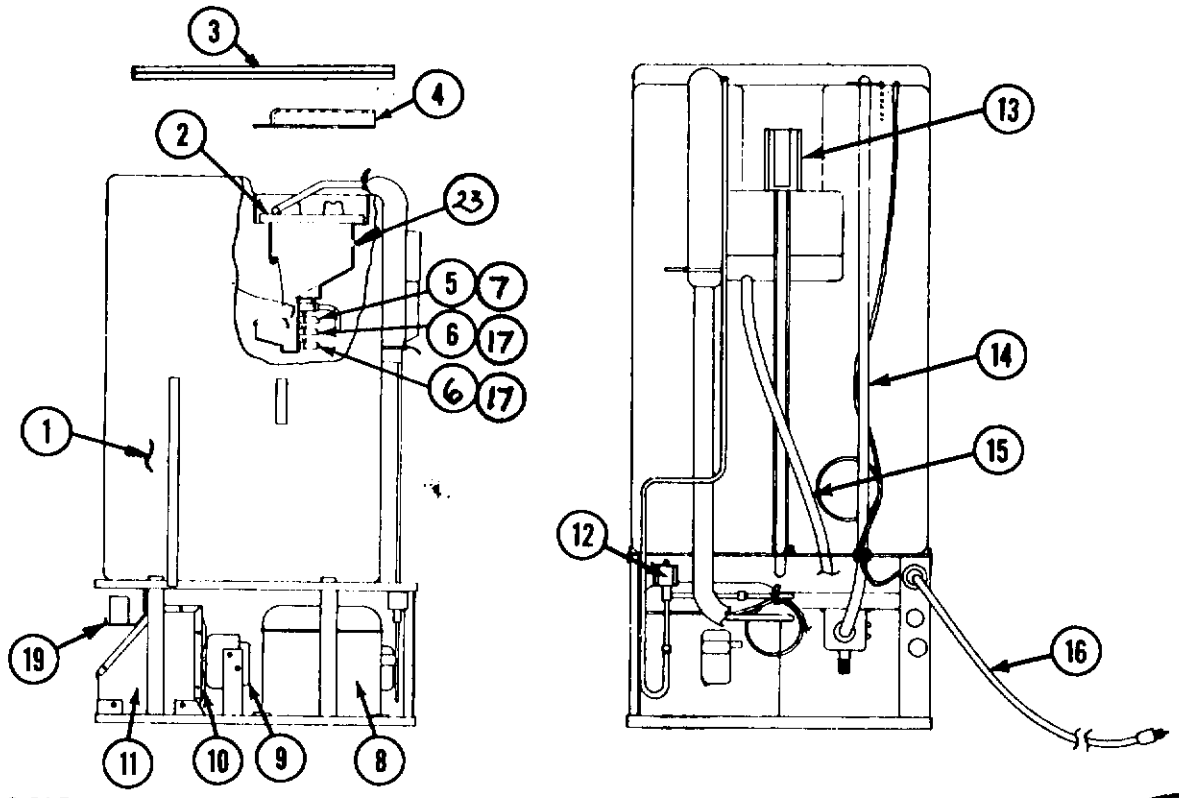

ITEM NO.	PART NO.	DESCRIPTION
1.	02-1634-01	Storage Bin
2.	A26115-020	Evaporator
	A26127-020	Evaporator Assembly Complete
3.	A26787-001	Insulation
4.	02-2274-01	Cover
5.	13-0688-02	Water Tube (Order Number of Feet Required)
6.	13-0688-01	Water Tube (Order Number of Feet Required)
7.	02-1775-02	Clamp (2)
8.	See Page 5	Compressor
9.	12-2015-01	Fan Motor
10.	18-3710-01	Fan Blade
11.	18-3708-01	Condenser
12.	12-2008-01	Hot Gas Valve Coil
	12-2009-01	Hot Gas Valve Clamp
	12-2010-01	Hot Gas Valve Body
13.	See Page 4	Water Pump Assembly
14.	13-0674-01	Water Tube (Order Number of Feet Required)
15.	13-0674-04	Water Tube (Order Number of Feet Required)
16.	12-1638-07	Electrical Cord
17.	02-0534-01	Clamp (4)
18.	02-1918-00	Drier (Not Shown)
19.	See Page 2	Control Box Assembly
20.	02-1751-00	Drain Fitting
21.	13-0617-13	O-Ring
22.	02-1957-00	Drain Tube
23.	See Page 3	Bin Insert

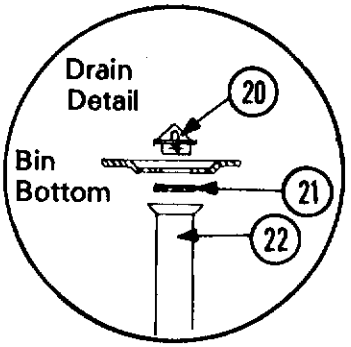

CONTROL BOX

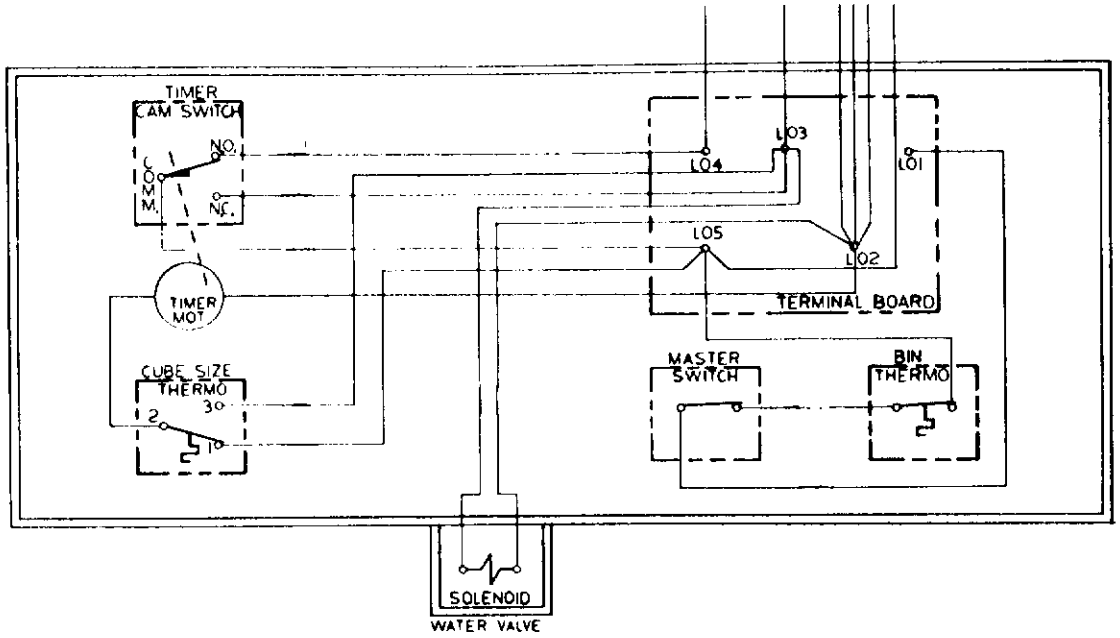

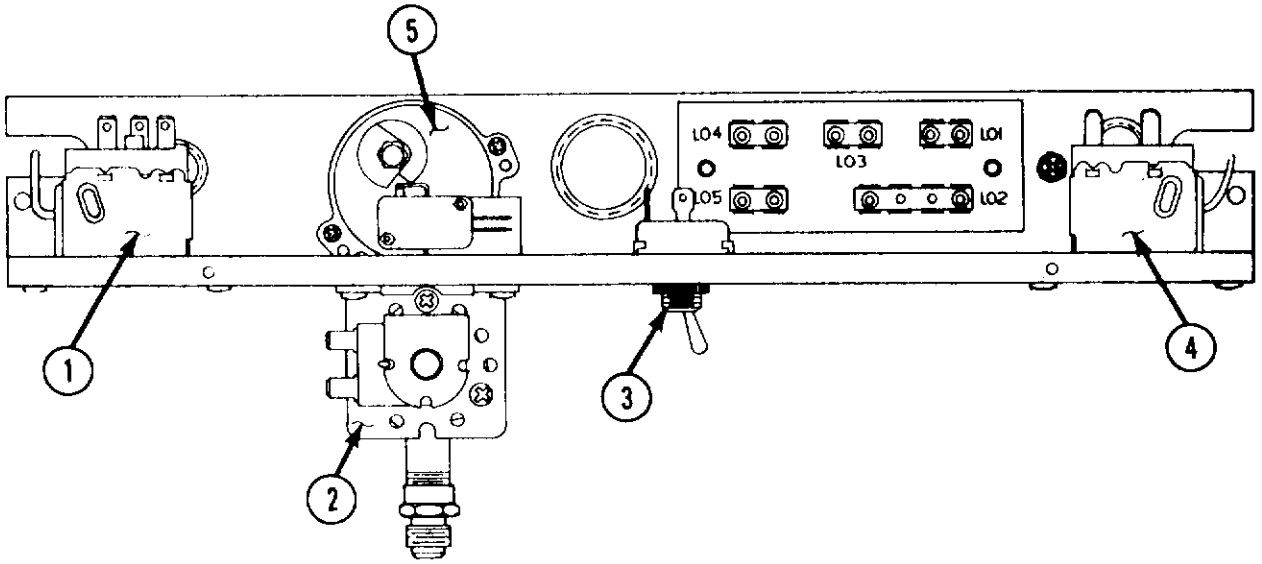

ITEM NO.	PART NO.	DESCRIPTION
1.	11-0395-01	Cube Size Control
2.	12-1646-02	Water Solenoid
3.	12-0426-01	Master Switch
4.	11-0366-00	Bin Thermostat
5.	12-1980-01	Timer
6.	16-0672-01	Nylon Valve Fitting (Not Shown)

NOTE: The bin thermostat (4) is only an automatic "ON" and "OFF" switch. Adjusting this control WILL NOT affect the size or quality of the cubes.

BIN INSERT ASSEMBLY

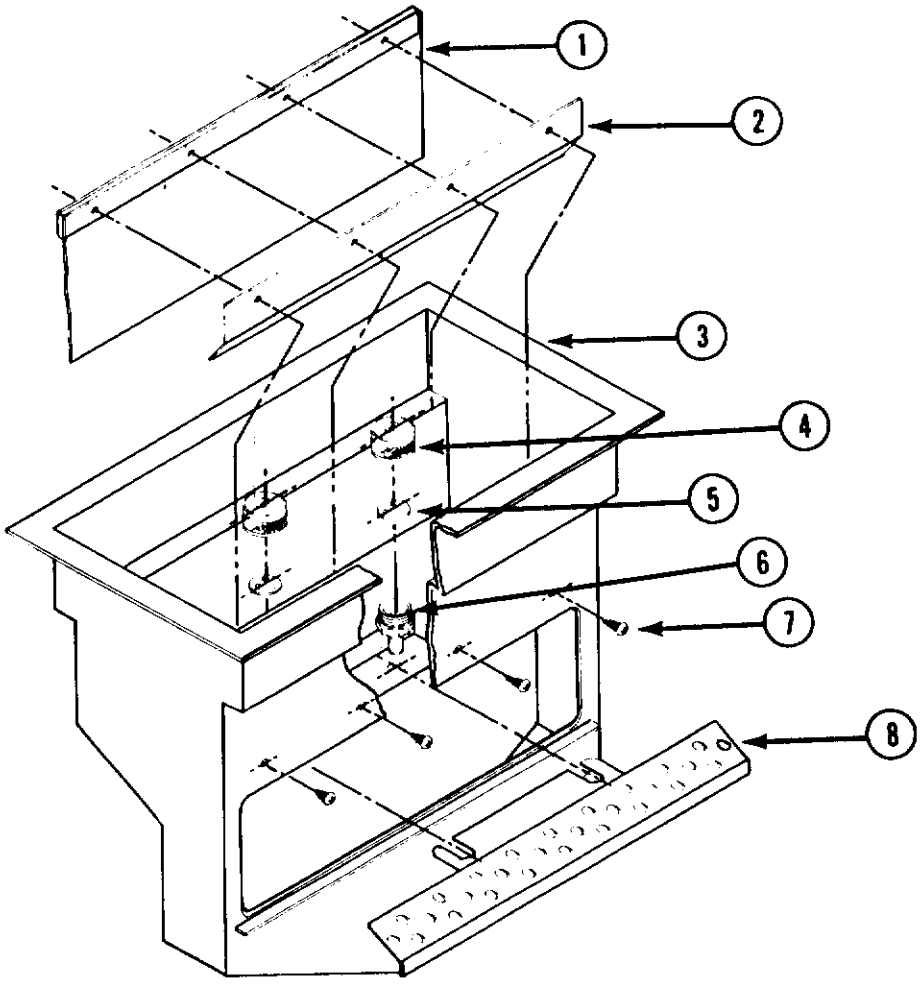

ITEM NO.	PART NO.	DESCRIPTION
1.	02-2053-01	Curtain
2.	A24155-001	Curtain Stiffner
3.	02-1923-00	Bin Insert
4.	02-1841-00	Jet Top (Nozzle)
5.	A09543-000	Spinner
6.	02-1840-00	Spray Jet Base
7.	03-1404-16	Screws
8.	A22518-000	Cube Chute
9.	A19278-000	Spray Bar Assembly (Not Shown)
10.	13-0617-08	O-Ring (Not Shown)
11.	A24230-001	Overflow Tube (Not Shown)
12.	A22532-000	Bin Insert Complete

WARNING: When removing jet top (4), be careful not to drop the small spinner (5). If dropped into the sump, the spinner may damage the water pump.

NOTE: The unit will not make ice properly if the spinners are not in place.

WATER PUMP ASSEMBLY

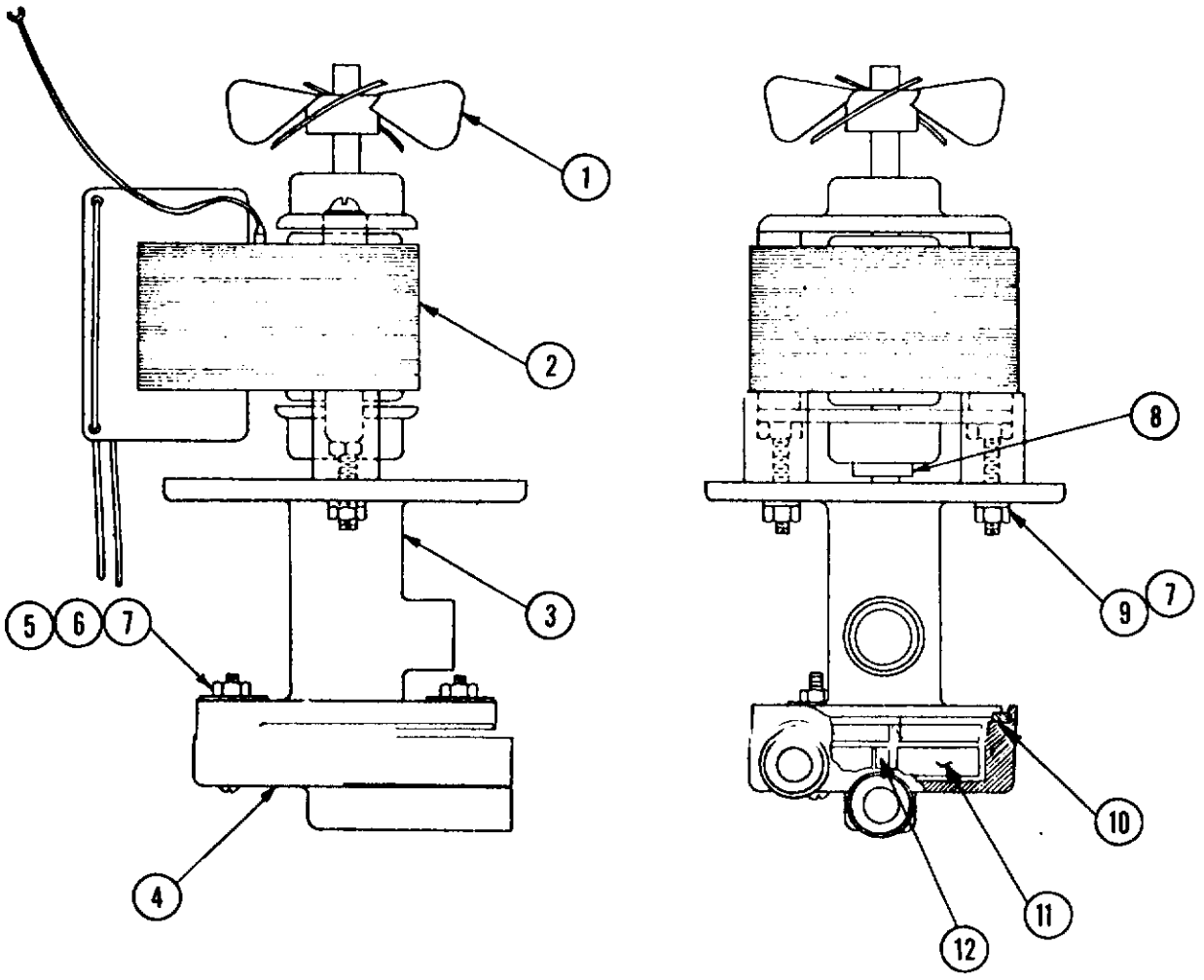

ITEM NO.	PART NO.	DESCRIPTION
1.	02-1719-00	Fan Blade
2.	12-1714-01	Motor
3.	02-1711-00	Water Pump Body
4.	02-1710-00	Water Pump Base
5.	03-1403-60	Screw
6.	03-1408-23	Washer
7.	03-1406-02	Nut
8.	13-0817-01	Rubber Washer
9.	03-1417-14	Lock Washer
10.	13-0617-07	O-Ring
11.	02-1712-00	Impeller
12.	03-1403-05	Screw
13.	13-0687-00	Gasket (Installed Between Pump and Bin)
14.	A22536-021	Water Pump Complete

DANFOSS COMPRESSOR

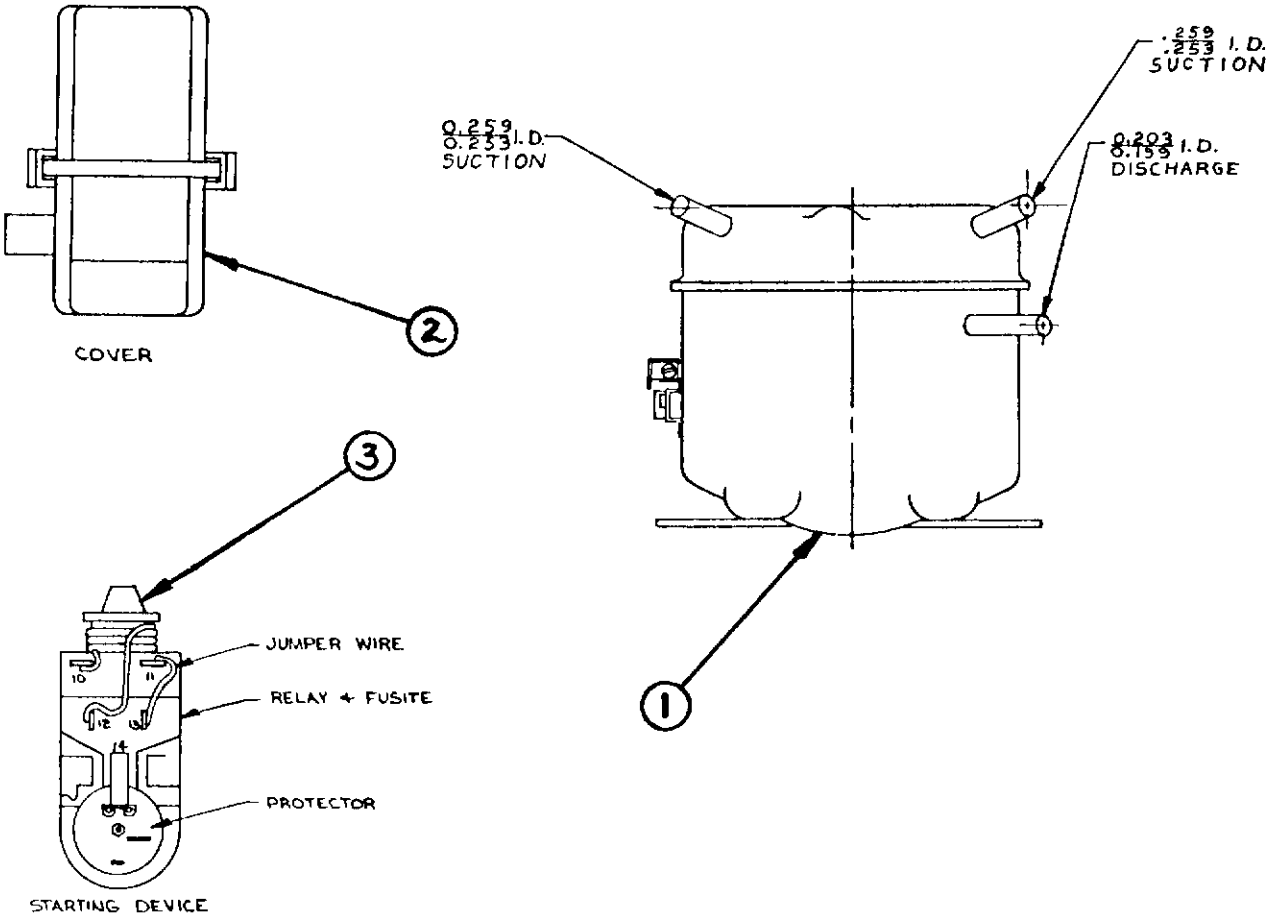

ITEM NO.	PART NO.	DESCRIPTION
1.	18-2150-01	Compressor 115 V 60 cycle
2.	18-2150-24	Cover For Starting Device
3.	18-2150-21	Starting Device, Plug In (Includes Relay, Fusite & Protector

CABINET PARTS

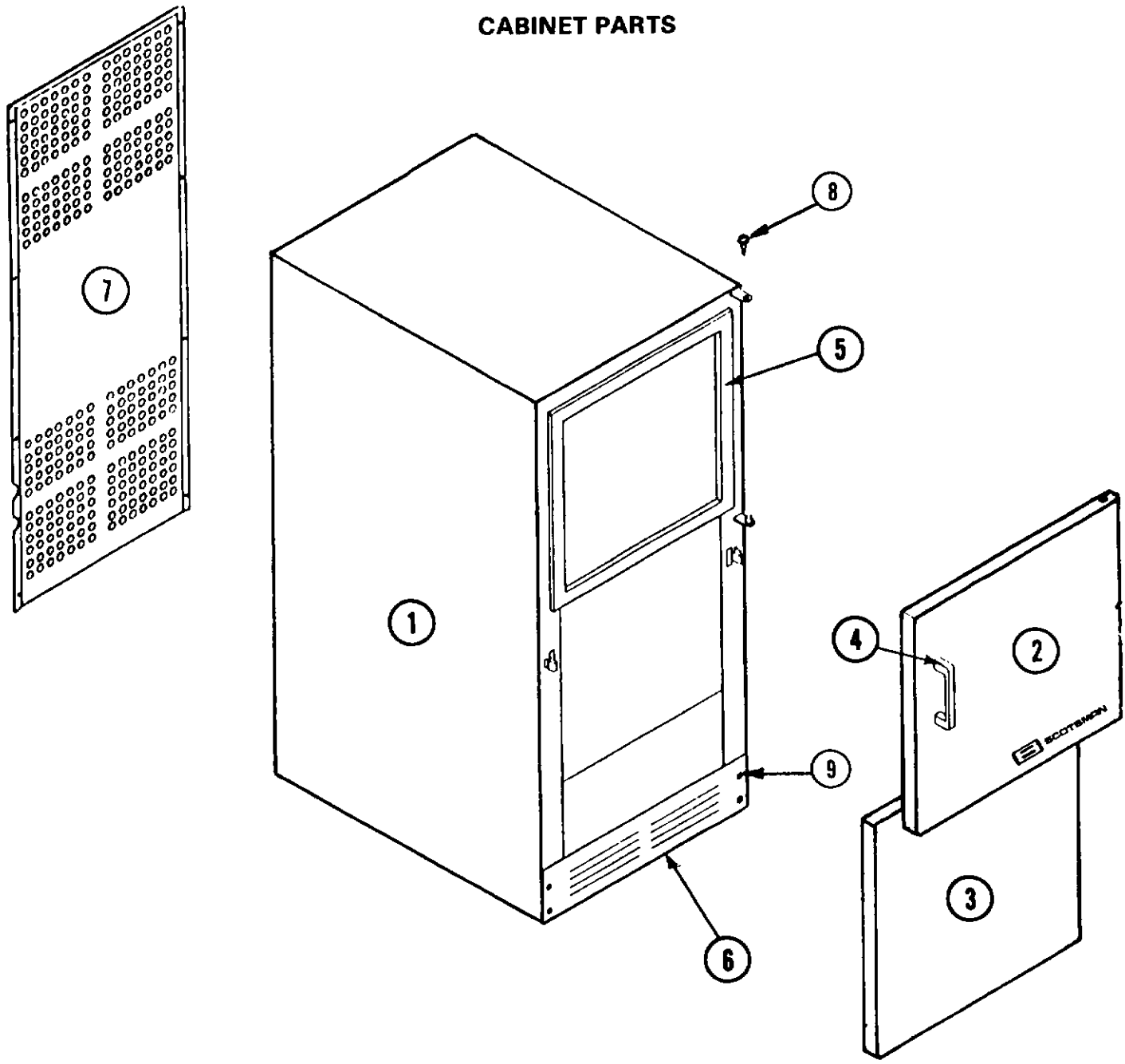

ITEM NO.	PART NO.	DESCRIPTION
1.	A18592-002	Cabinet, S.S. Only
2.	A19901-005	Door W/Handle, Access
3.	A26755-001	Door, Lower
4.	15-0492-00	Handle
5.	13-0634-00	Door Gasket
6.	02-2243-02	Kick Plate
7.	A18595-000	Rear Service Panel
8.	03-1404-07	Screw, Door
9.	A22061-003	Screw, Painted (4)

ACCESSORY PARTS AVAILABLE

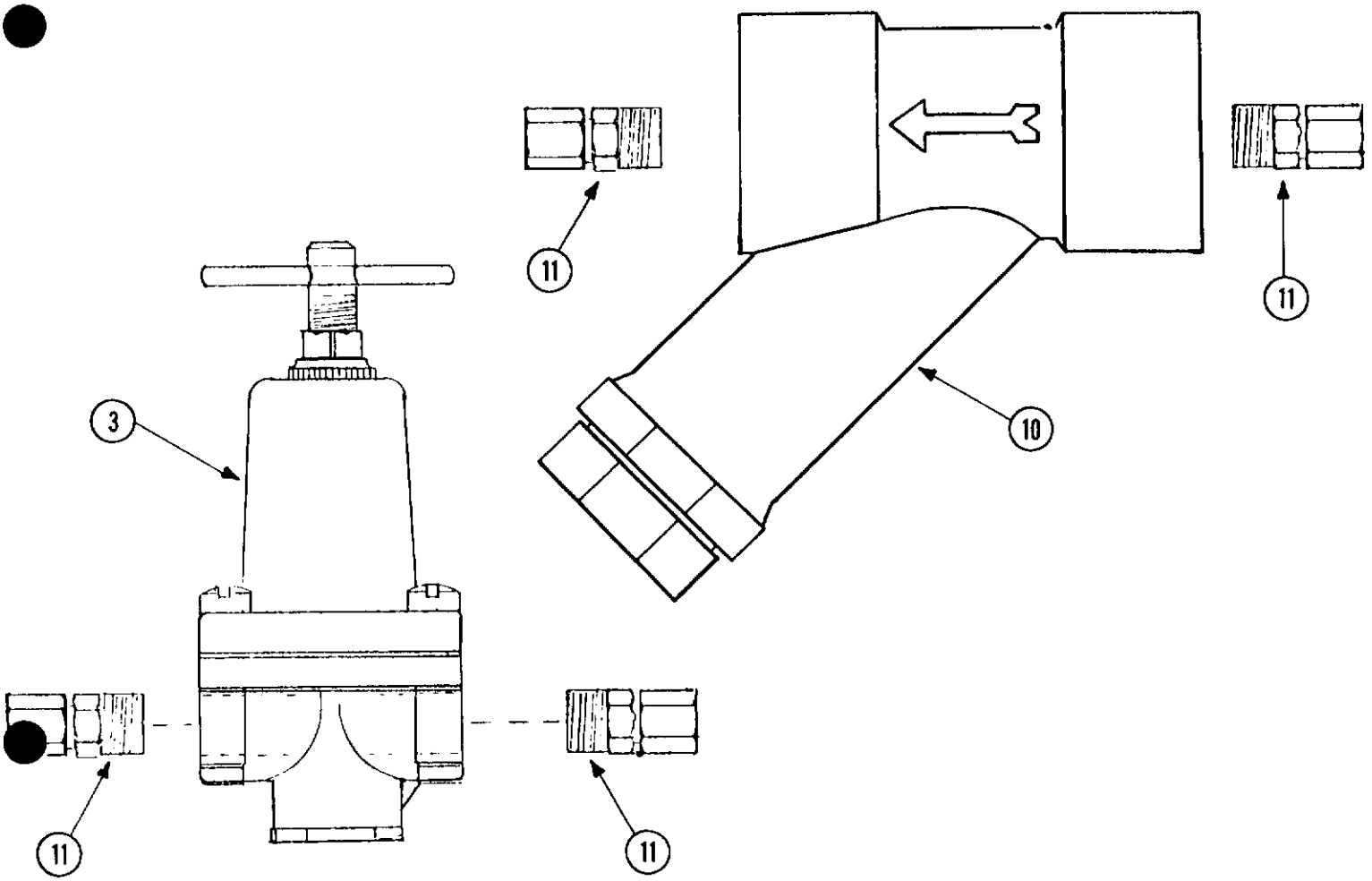

ITEM NO.	PART NO.	DESCRIPTION
1.	19-0343-01	Ice Machine Cleaner (24 Each, 8 Oz. Bottles)
2.	19-0343-06	Ice Machine Cleaner (1 Each, 8 Oz. Bottles
3.	11-0200-00	Water Pressure Regulator
4.	13-0674-01	Water Tube, 1/4" I.D. 7/16" O.D. (Order Number of Feet Required)
5.	13-0674-04	Water Tube, 1/2" I.D. 11/16" O.D. (Order Number of Feet Required)
6.	13-0674-06	Water Tube, 5/8" I.D. 13/16" O.D. (Order Number of Feet Required)
7.	13-0674-13	Water Tube, 5/8" I.D. 7/8" O.D. (Order Number of Feet Required)
8.	13-0688-01	Water Tube, 1/2" I.D. 5/8" O.D. (Order Number of Feet Required)
9.	13-0688-02	Water Tube, 5/8" I.D. 3/4" O.D. (Order Number of Feet Required)
10.	16-0162-00	Water Strainer
11.	16-0621-03	Fitting, 1/4" Pipe Thread x 1/4" Compression
12.	17-1288-01	AC10 Service Manual

CONDENSING UNIT (Air Cooled)

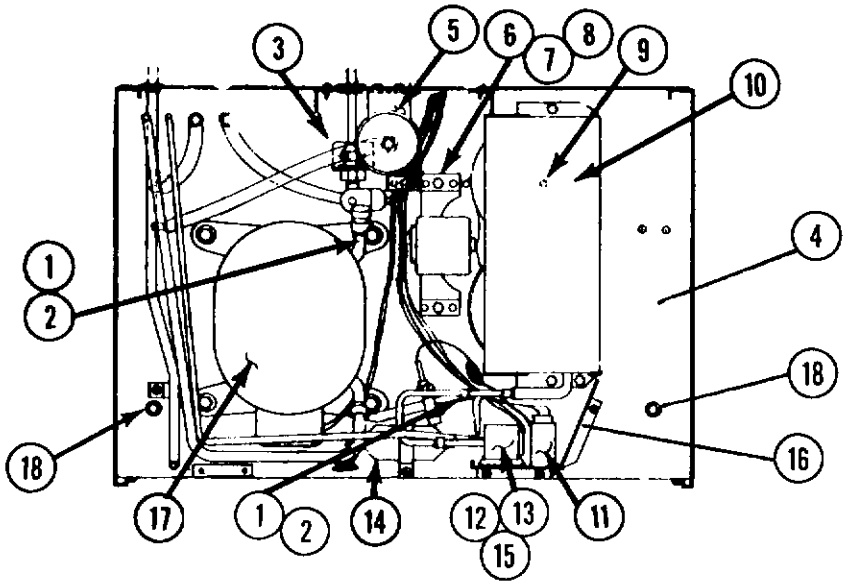

ITEM	PART NO.	DESCRIPTION	ITEM	PART NO.	DESCRIPTION
1.	16-0560-00	Valve Core	10.	A25791-001	Condenser Shroud
2.	16-0563-00	Valve Cap	11.	11-0394-01	Hi Pressure Control
3.	12-1900-05	Water Solenoid	12.	12-2008-01	Coil & Frame Assy.
4.	A25715-001	Unit Base	13.	12-2007-01	Valve Body & Plunger Assy.
5.	02-2248-01	Drain Cup	14.	02-0831-00	Drier
6.	12-1575-01	Fan Motor	15.	12-2009-01	Coil Clamp, Hot Gas
7.	18-3705-01	Motor Bracket	16.	A25790-001	Mounting Bracket & Baffle
8.	18-0420-00	Fan Blade	17.	See Page 7	Compressor 115/60/1
9.	18-3706-01	Condenser	18.	A25721-001	Hinge Guide

CONDENSING UNIT (Water Cooled)

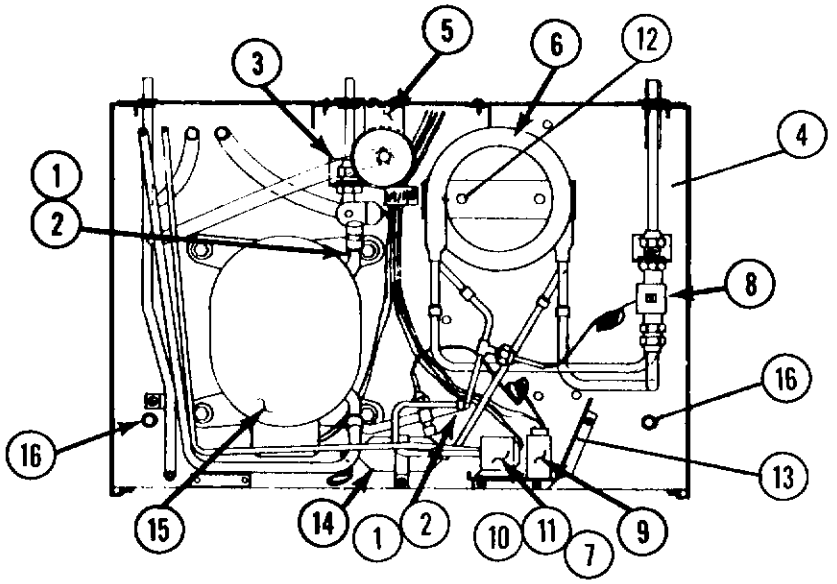

ITEM	PART NO.	DESCRIPTION	ITEM	PART NO.	DESCRIPTION
1.	16-0560-00	Valve Core	9.	11-0388-01	Hi Pressure Cut Out
2.	16-0563-00	Valve Core	10.	12-2008-01	Hot Gas Valve Complete
3.	12-1900-05	Water Solenoid	11.	12-2007-01	Hot Gas Valve, Less Base
4.	A25715-001	Unit Base	12.	03-0571-00	Screw
5.	02-2248-01	Drain Cup	13.	A25790-001	Mounting Bracket & Baffle
6.	18-3707-01	Condenser	14.	02-0831-00	Drier
7.	12-2009-01	Coil Clamp, Hot Gas	15.	See Page 7	Compressor
8.	11-0198-00	Water Regulating Valve	16.	A25721-001	Hinge Guide

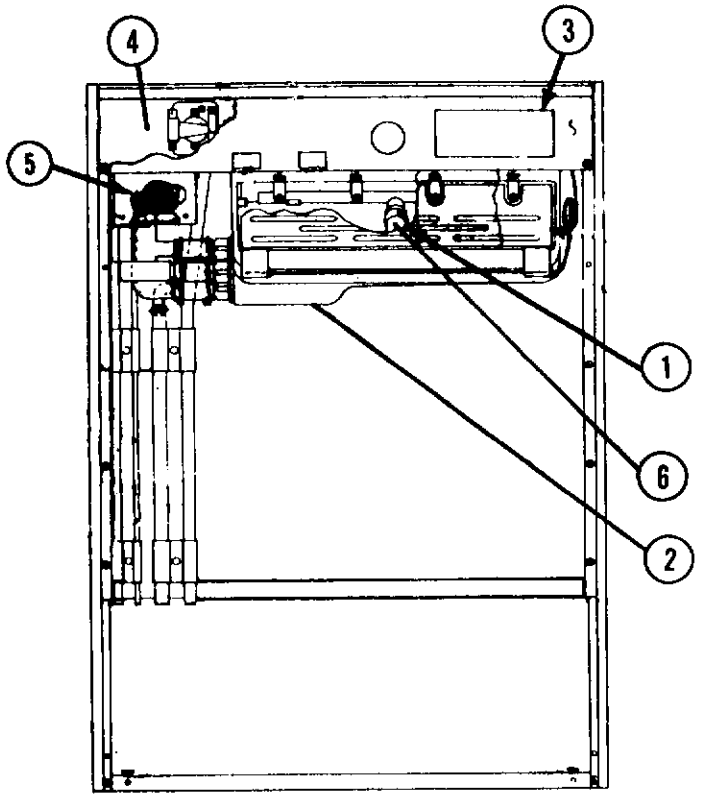

FRONT VIEW - CHASSIS

ITEM	PART NO.	DESCRIPTION
1.	02-2241-01	Curtain Assy.
2.	See Page 3 & 4	Freeze Chamber Parts
3.	A25787-001	Control Box Cover
4.	See Page 6	Control Box Assy.
5.	See Page 5	Water Pump
6.	05-0521-01	Tube, Preformed
7.		
8.		
9.		
10.		
11.		

SIDE VIEW - CHASSIS

ITEM	PART NO.	DESCRIPTION
1.	16-0162-01	Strainer
2.	03-0571-00	Screw (2), Hinge
3.	See Page 9	Lower Door & Bin Assy.
4.	02-2237-01	Heat Retainer, Styrofoam
5.	A25804-001	Heat Retainer Tray
6.		
7.		
8.		
9.		

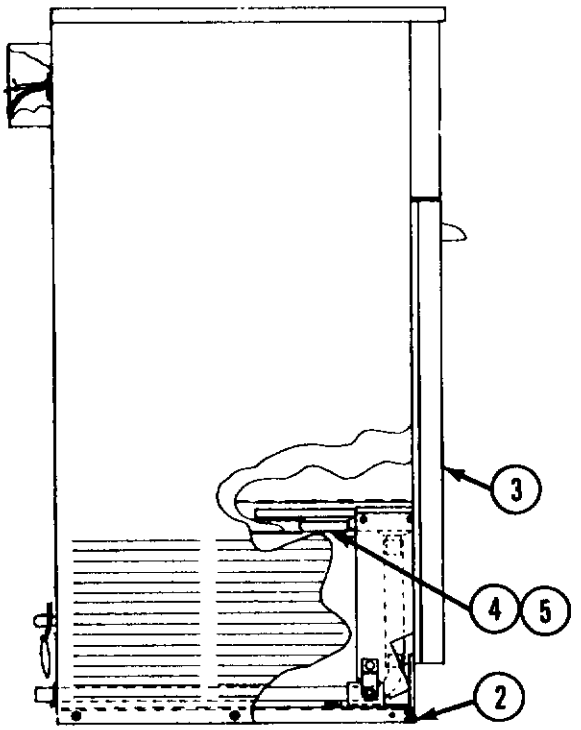

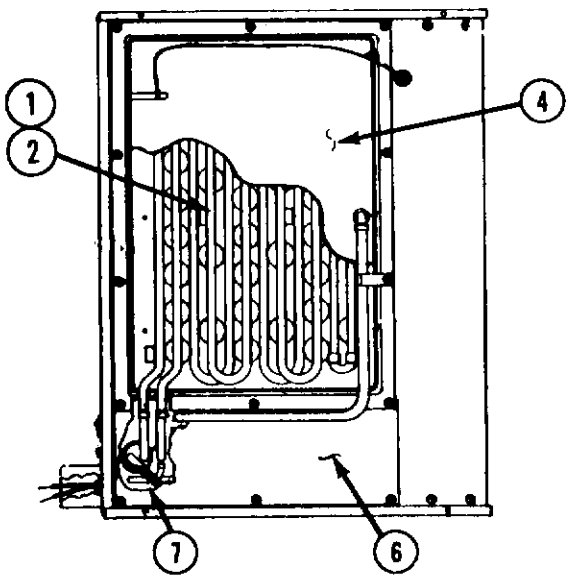

TOP VIEW - CHASSIS

ITEM	PART NO.	DESCRIPTION
1.	A25753-020	Platen-Cup Assy. AC20S
2.	A25748-020	Platen-Cup Assy. AC20M
3.		
4.	A25799-001	Platen Cover -Plastic
5.		
6.	A25789-001	Air Baffle
7.	A25755-001	Suction - Accummulater Line
8.		
9.		

FREEZER CHAMER
SUMP ASSEMBLY

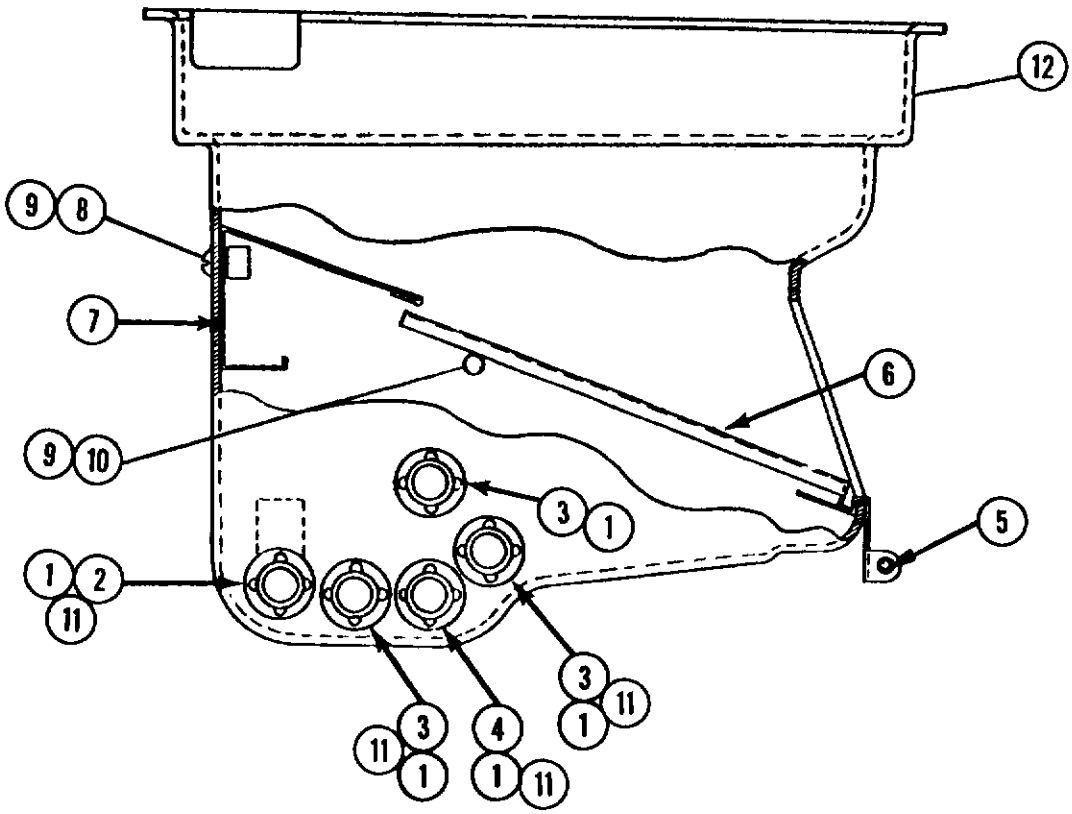

ITEM	PART NO.	DESCRIPTION
1.	13-0617-02	O-Ring
2.	02-2125-01	Stand Pipe, Internal
3.	02-2080-01	Male Tube, Internal
4.	02-2082-01	Pick-up Tube, Internal
5.	13-0600-00	Bin Bulb Holder Grommet 2/Unit
6.	A26800-001	Front Cube Chute W/Bulb Holder (PS-7-76)
7.	A25747-001	Rear Cube Chute
8.	A25743-001	Cube Chute Support, Rear 2/Unit
9.	03-1403-16	Screw
10.	A25742-001	Cube Chute Support, Side 2/Unit
11.	A24379-001	Female Tube, External
12.	02-2226-01	Freezing Chamber

WATER SPRAY SYSTEM

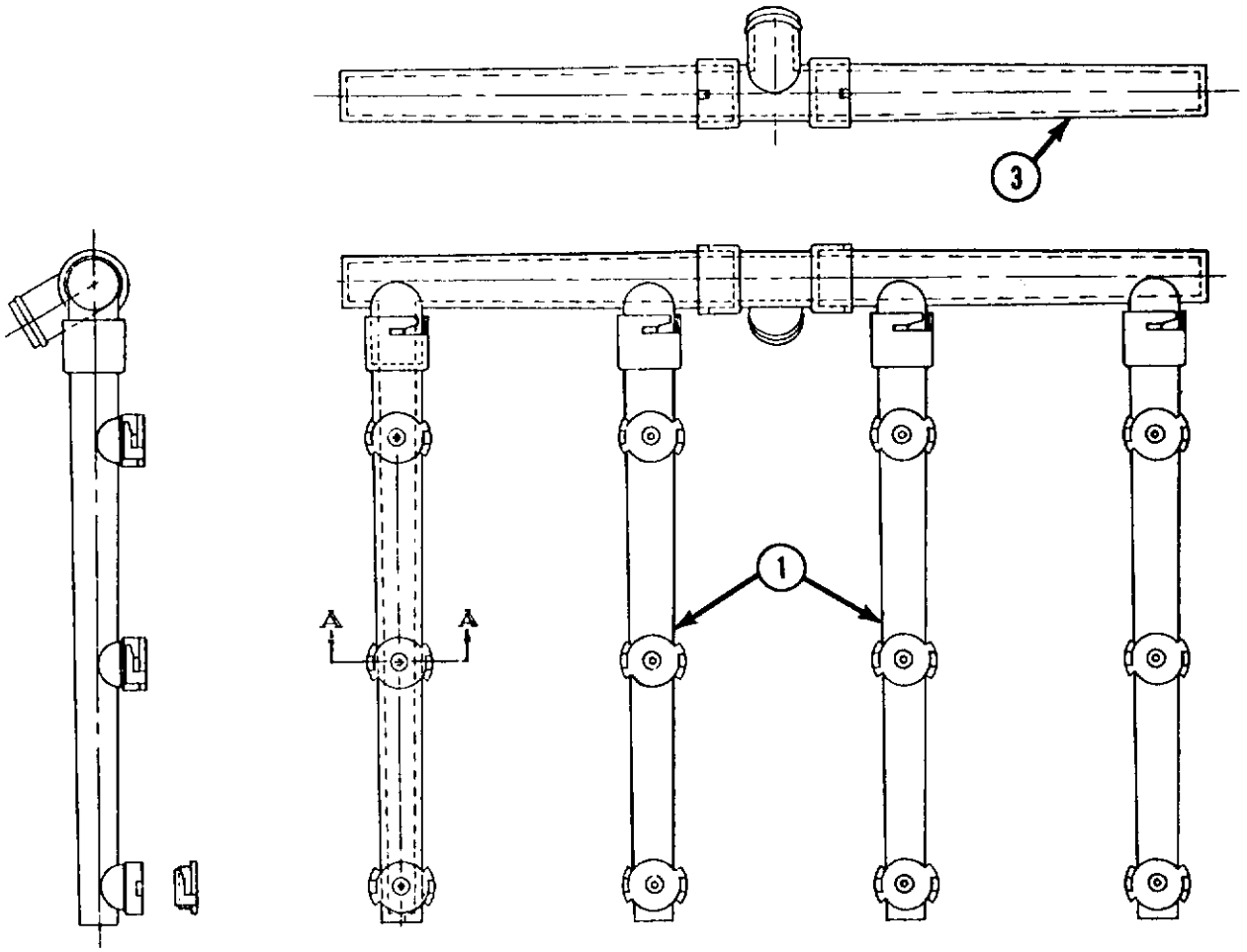

NOTE: Individual spray bars with 3 jets can be removed by turning counter-clockwise one quarter turn. Pull forward.

ITEM	PART NO.	DESCRIPTION
1.	A25801-020	1 Bar with Spinners 4/Unit
2.	A09543-000	Jet Spinner 12/Unit
3.	02-2193-01	Manifold Tube

Section A-A

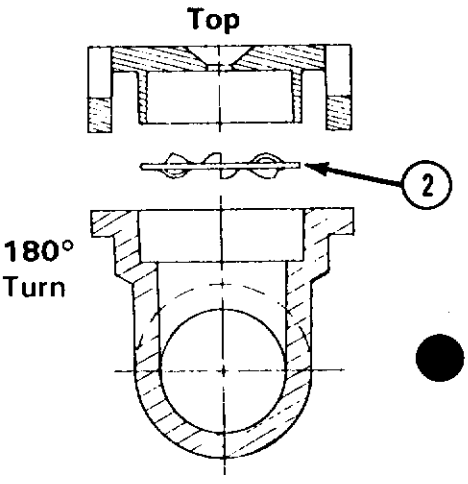

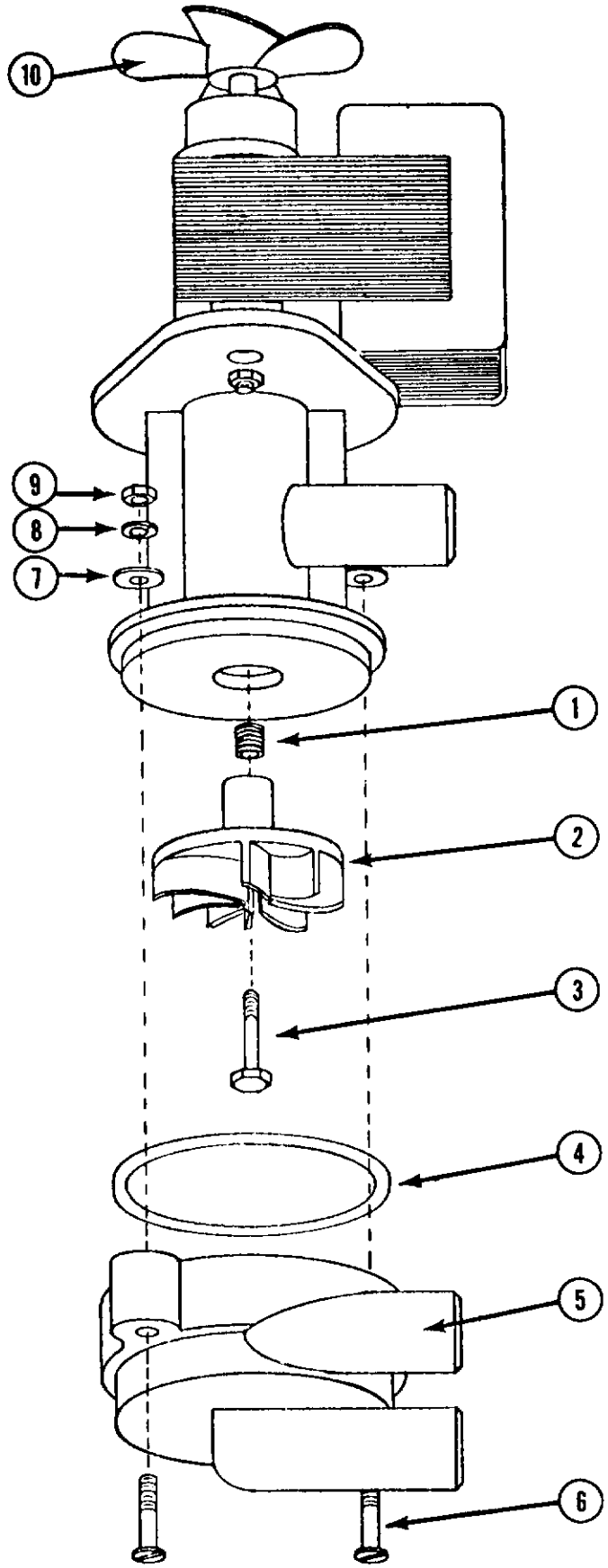

WATER PUMP
Part No. 12-1975-01
115/60/1

ITEM	PART NO.	DESCRIPTION
1.	12-1975-55	Spring
2.	12-1975-53	Impellar
3.	12-1975-54	Bolts
4	12-1849-60	O-Ring
5.	12-1849-61	Intake Housing
6.	03-1403-08	Screw
7.	03-1407-01	Flat Washer
8.	03-1417-01	Lock Washer
9.	03-1406-01	Nut
10.	02-1719-00	Fan Blade

CONTROL BOX
Common Air & Water Cooled

115/60/1

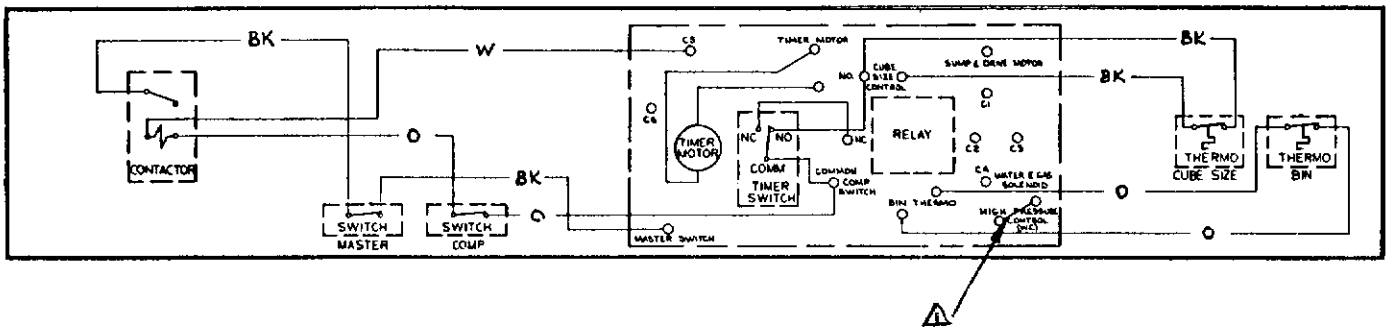

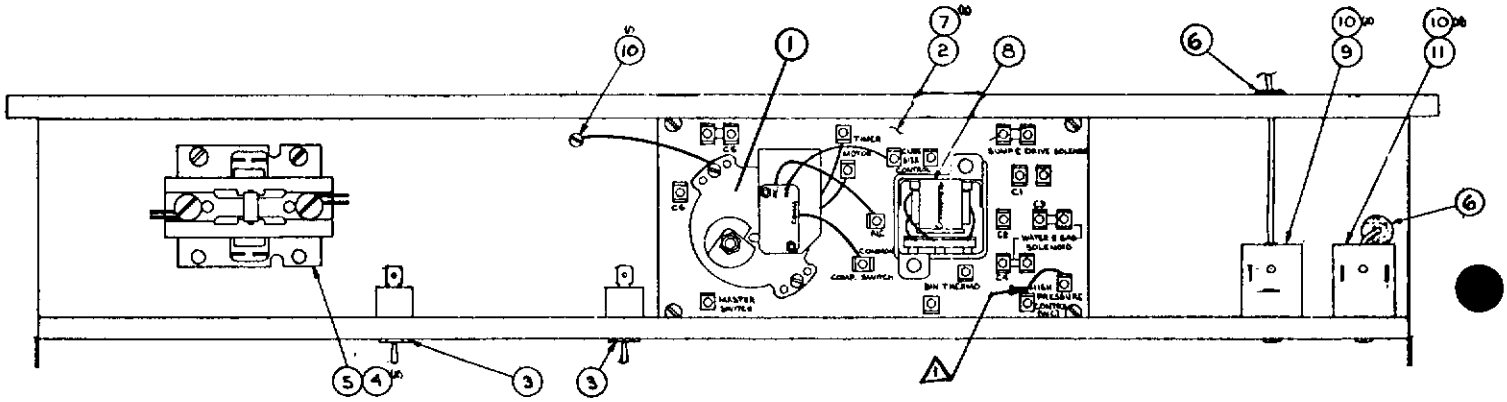

ITEM	PART NO.	DESCRIPTION
1.	12-1980-01	Timer
2.	12-1912-01	Circuit Board
3.	12-0426-01	Switch
4.	03-1403-14	Screw (2)
5.	12-2041-01	Contactor
6.	13-0557-00	Grommet (2)
7.	03-1568-01	Screw (5)
8.	12-1879-02	Relay (3 P.D.T.)
9.	11-0345-02	Cube Size Control
10.	03-1403-15	Screw
11.	03-0353-02	Bin Thermostat

⚠1. **Do Not** use orange jumper wire on Water Cooled Units.

MOTOR COMPRESSOR
115/60/1

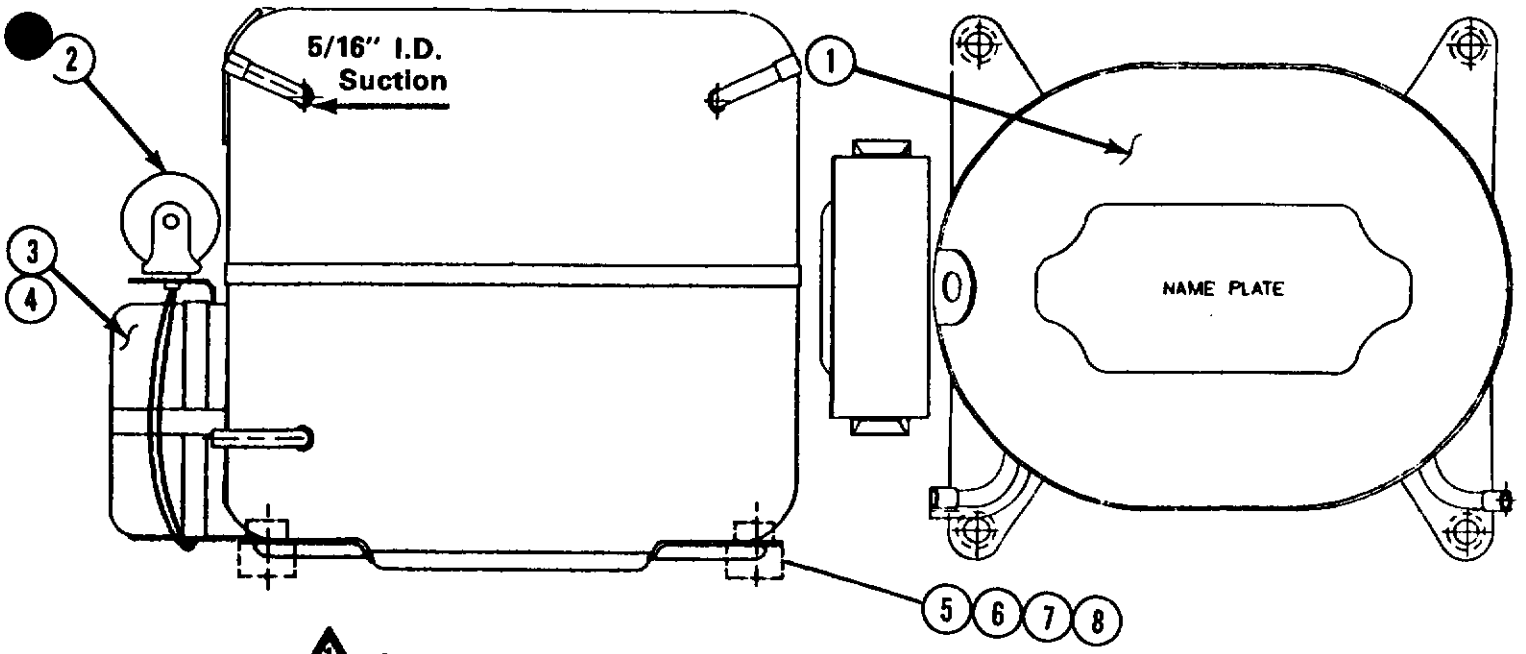

⚠1 Copeland Compressor & Components

ITEM	PART NO.	DESCRIPTION
1.	18-4100-01	Motor Compressor Cope JFHI-0033-1AA
2.	18-4100-42	Relay 040-0090-04
3.	18-4100-43	Start Capacitor 233-380 MFD Cope 014-0032-00
4.	18-4100-41	Thermo Protector Cope 071-0369-15 (MRA-7999-160)
5.	18-2200-28	Mounting Grommet
6.	18-2200-27	Mounting Sleeves
7.	03-1405-20	Bolt
8.	03-1407-07	Washer

⚠1 **NOTE:**
Serial Number Usage of Tecumseh Compressors

6Q302259 thru 302514	256 units
6Q306165 thru 306308	144 units
Total Production	400 units

All manufactured in December 1976

DESCRIPTION	TECUMSEH	
Compressor	18-3600-01	AE234AT-602A4
Relay	18-3600-34	82632
Capacitor-Start	18-3600-30	85657-1
Overload	18-3600-35	8300MRTA78

Complete motor compressors are interchangeable, however for field replacement purposes we suggest replacing failed component with like part, do not mix tecumseh with copeland parts.

Current production of model AC20 cuber, after serial number 6Q306308 again uses Copeland compressor assembly.

NOTE: Please secure all replacement Tecumseh compressors from Scotsman factory only.

CABINET PARTS

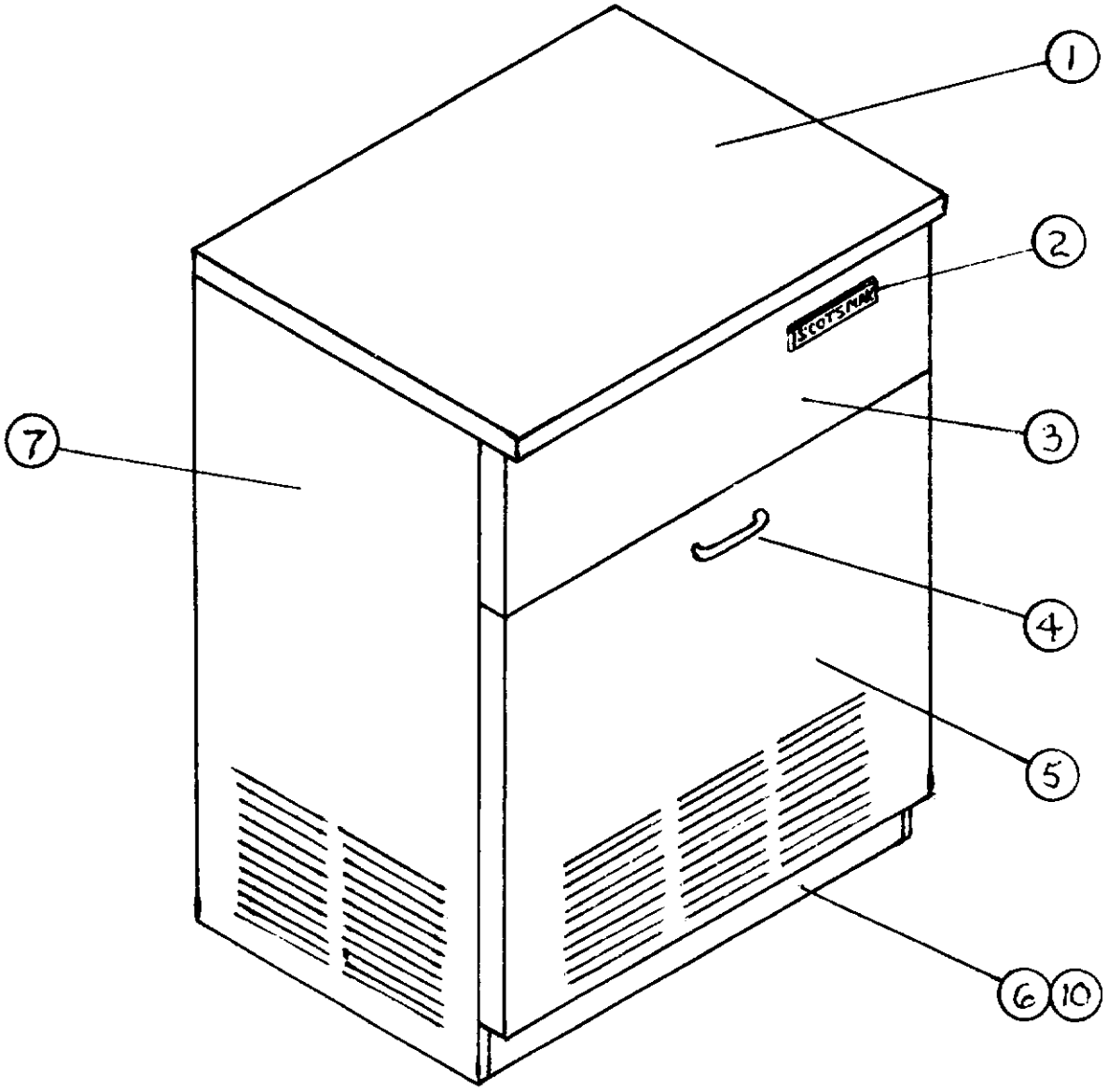

ITEM	CRS PART NO.	S.S. PART NO.	DESCRIPTION
1.	A25704-001	A25704-002	Top Panel
2.	15-0580-01	15-0580-01	Emblem
3.	A25709-001	A25709-002	Front Panel W/Emblem
4.	15-0596-01	15-0596-01	Handle
5.	See Page 9	See Page 9	Lower Door & Bin Assy.
6.	A25708-001	A25708-002	Kick Plate
7.	A25702-001	A25702-002	Left Side Panel
★8.	A25703-001	A25703-002	Right Side Panel
★9.	A25707-001	A25707-002	Back Panel
10.	03-1404-10	03-1404-10	Screw (2), S.S.

★Not Shown

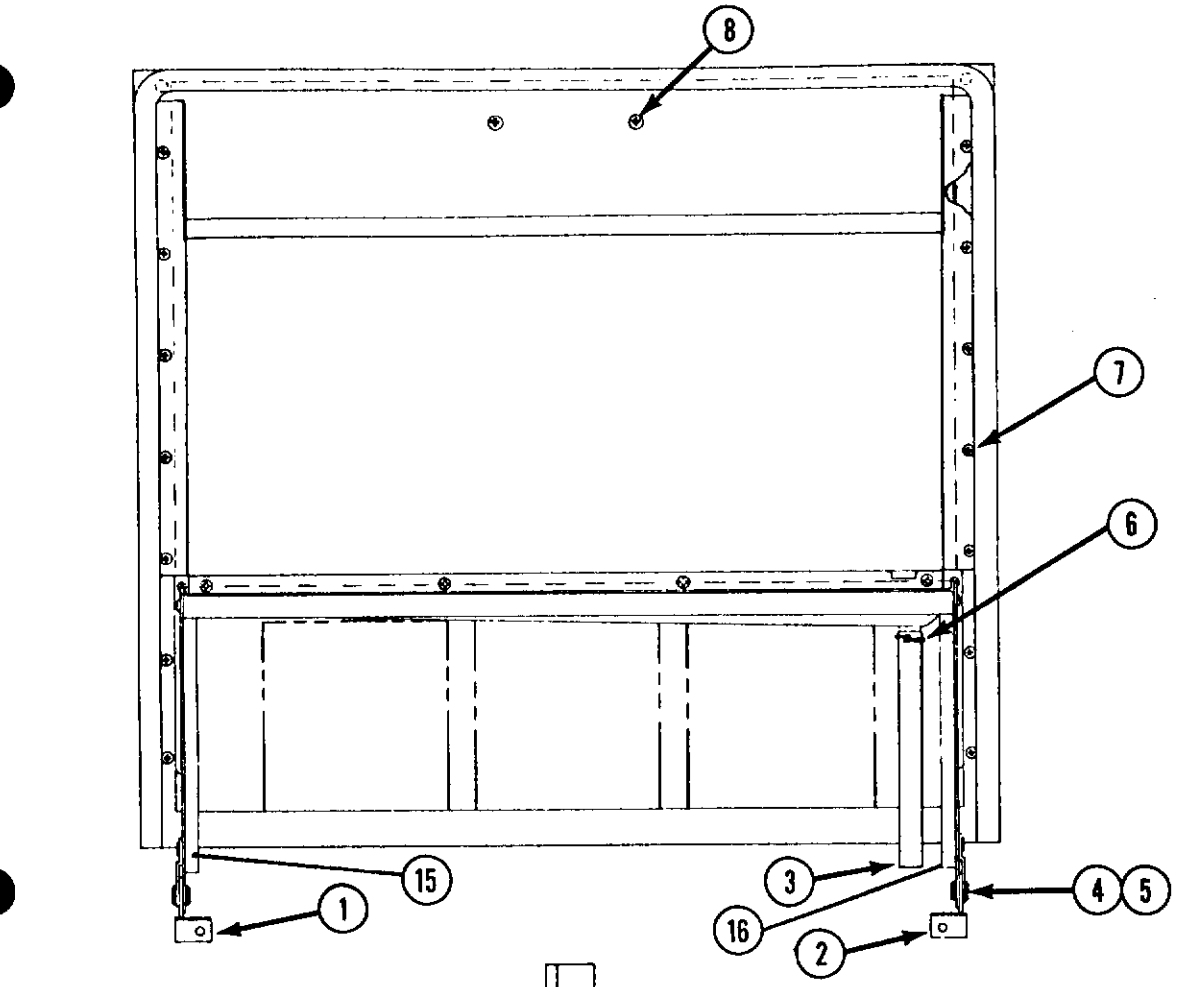

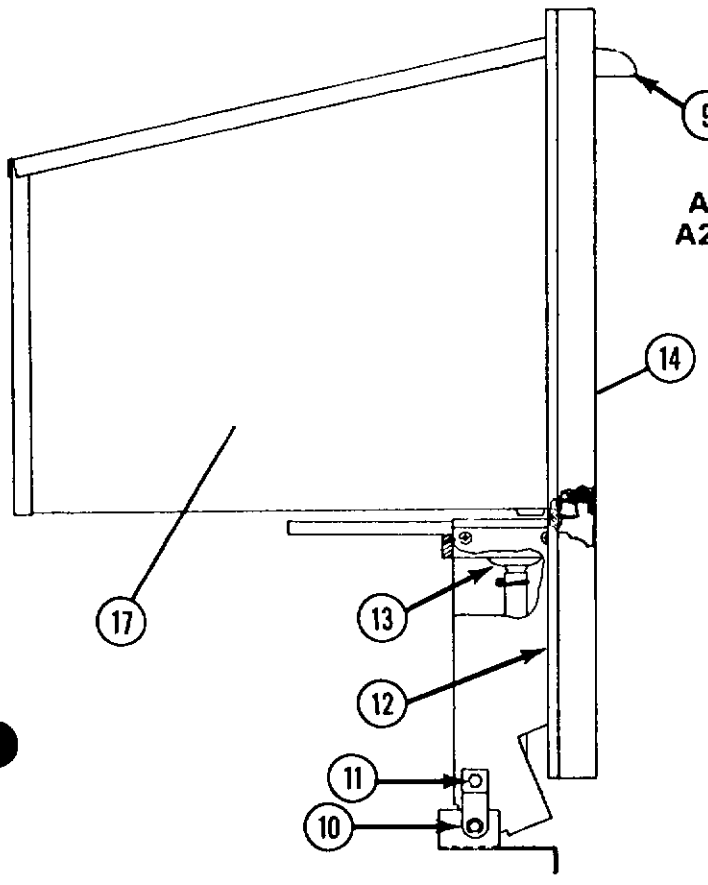

LOWER DOOR BIN ASSEMBLY

A25717-001 Door Bin Assy. Complete CRS Painted
A25717-002 Door Bin Assy. Complete Stainless Steel

ITEM	PART NO.	DESCRIPTION
1.	A25719-002	Hinge Base - Right
2.	A25719-001	Hinge Base - Left
3.	13-0674-06	Tubing (order per ft.)
4.	A25722-001	Hinge Pin
5.	03-1539-08	Retainer Ring
6.	02-1338-00	Hose Clamp
7.	03-1404-10	Screws
8.	03-1403-73	Handle Screws
9.	15-0596-01	Door Handle
10.	A25720-001	Hinge Bracket
11.	03-0571-00	Screw
12.	13-0595-00	Gasket (per foot)
13.	A25725-001	Drip Pan
14.	A25718-001	Door Panel, Painted
	A25718-002	Door Panel, S.S.
15.	A25724-002	Hinge, Rt.
16.	A25724-001	Hinge Lt.
17.	A25729-001	Bin Assy.

CABINET PARTS

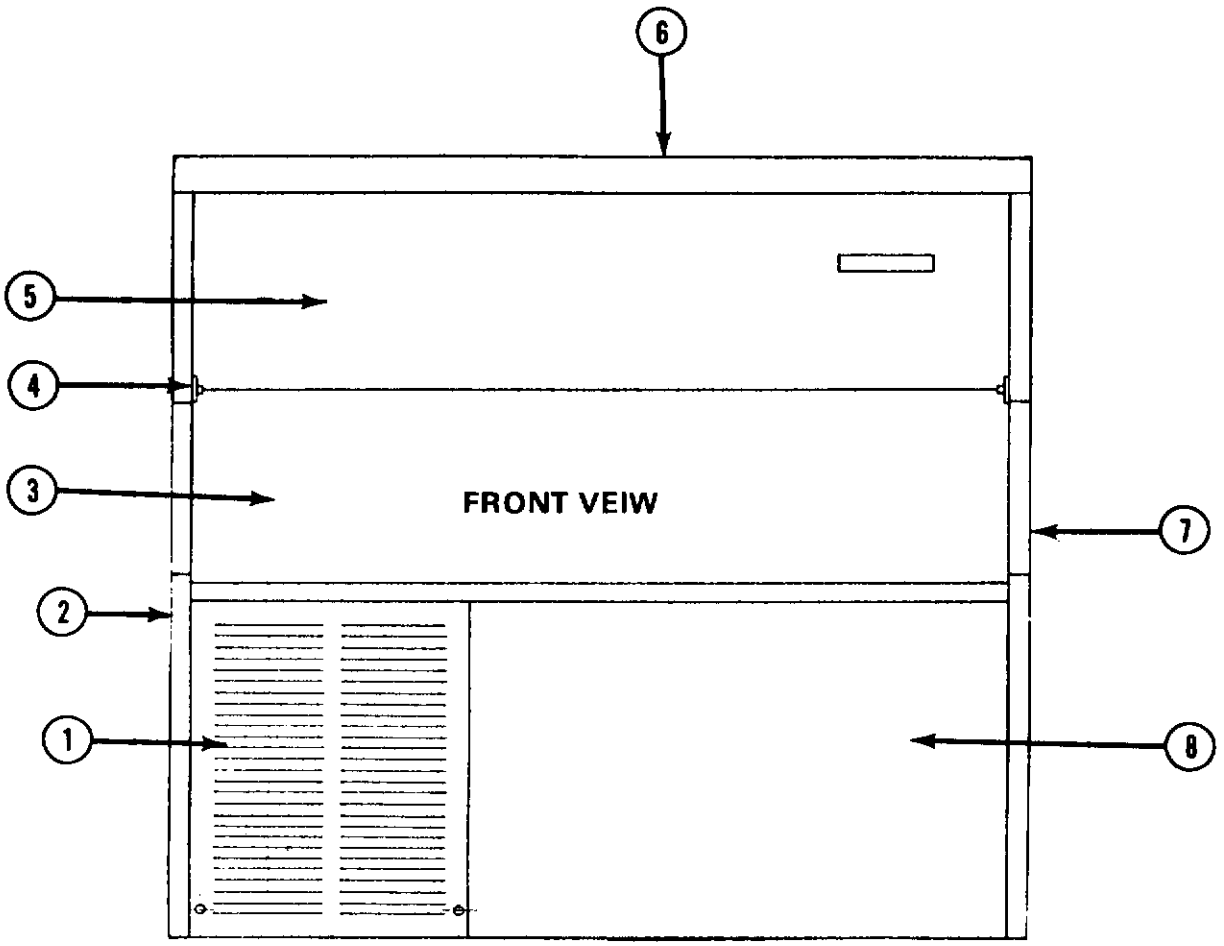

ITEM	DESCRIPTION	PRINTED PART NO.	STAINLESS STEEL PART NO.
1.	Lower Front Panel (Lt. Side)	A26928-001	A26928-002
2.	Panel, Left Side	A26938-001	A26938-002
3.	Ice Access Door	02-2332-01	02-2332-02
4.	Hinge	Molded into door	
5.	Upper Front Panel	A26935-001	A26935-002
6.	Top Panel	A26931-001	A26931-002
7.	Panel, Right Side	A26937-001	A26937-002
8.	Lower Front Panel (R.S.)	A26929-001	A26929-002
9.	Back Panel (Right Rear)	A26927-001	A26927-001
10.	Corner Post (Left Rear)	A27066-001	A27066-002
11.	Back Panel (Left Rear)	A26945-001	A26945-001

CONDENSING UNIT (Air Cooled)

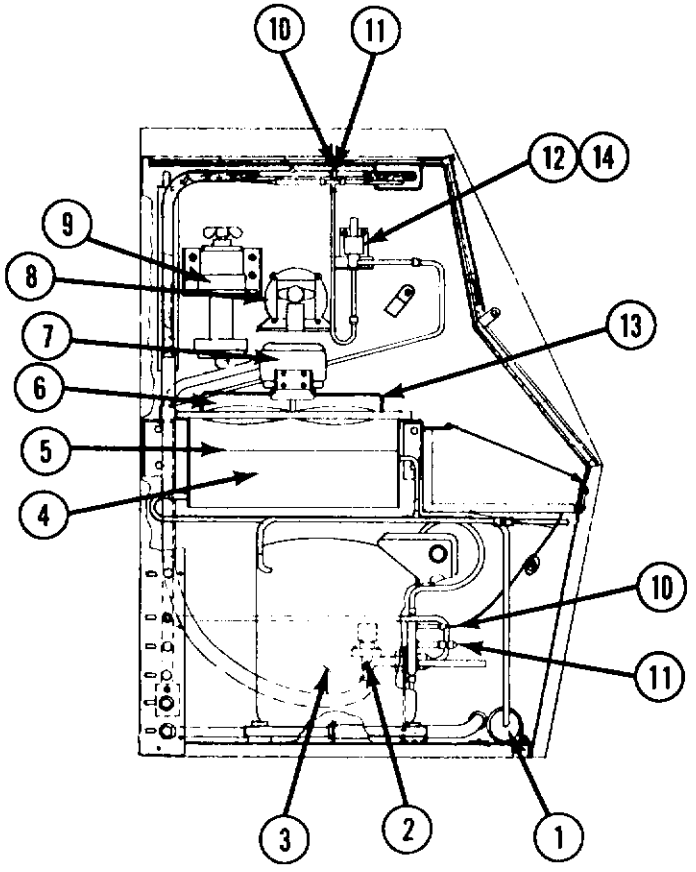

ITEM	PART NO.	DESCRIPTION
1.	02-0831-00	Drier
2.	See Page 7	Water Solenoid Valve
3.	See Page 10	Compressor 115/60/1
4.	18-3716-01	Condensor
5.	A26949-001	Shroud
6.	18-3715-01	Fan Blade
7.	12-2050-01	Fan Motor
8.	See Page 3	Agitator Motor
9.	12-2061-01	Water Pump
10.	16-0560-00	Valve Core
11.	16-0563-00	Valve Cap
12.	12-2008-01	Hot Gas Valve Coil
13.	02-2378-01	Fan Motor Mounting Assy.
14.	12-2007-01	Hot Gas Valve Body

CONDENSING UNIT (Water Cooled)

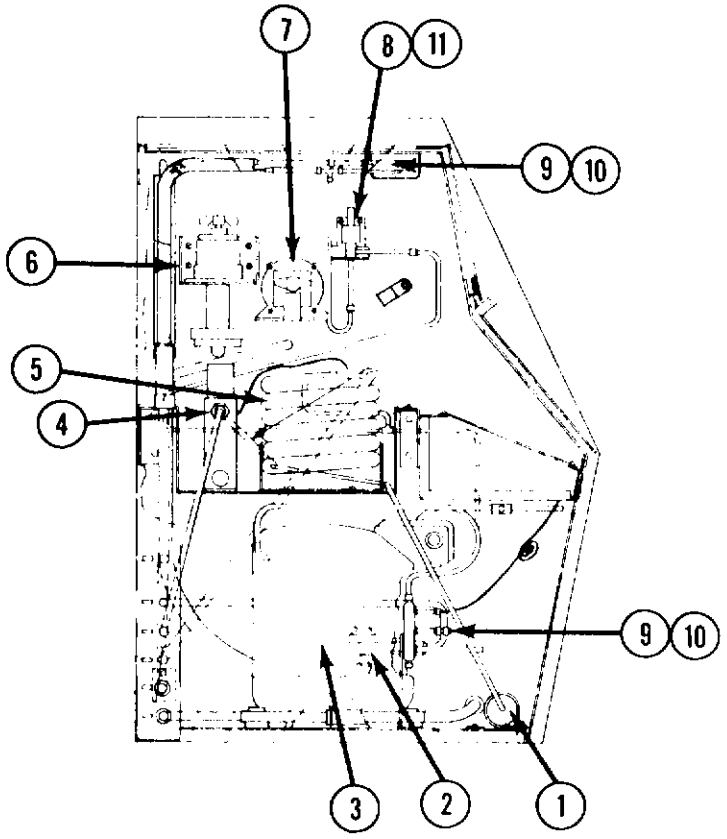

ITEM	PART NO.	DESCRIPTION
1.	02-0831-00	Drier
2.	See Page 7	Water Solenoid Valve
3.	See Page 10	Compressor 115/60/1
4.	11-0198-02	Water Regulating Valve
5.	18-3707-01	Condensor
6.	12-2061-01	Water Pump
7.	See Page 3	Agitator Motor
8.	12-2008-01	Hot Gas Valve Coil
9.	16-0560-00	Valve Core
10.	16-0563-00	Valve Cap
11.	12-2007-01	Hot Gas Valve Body
12.		

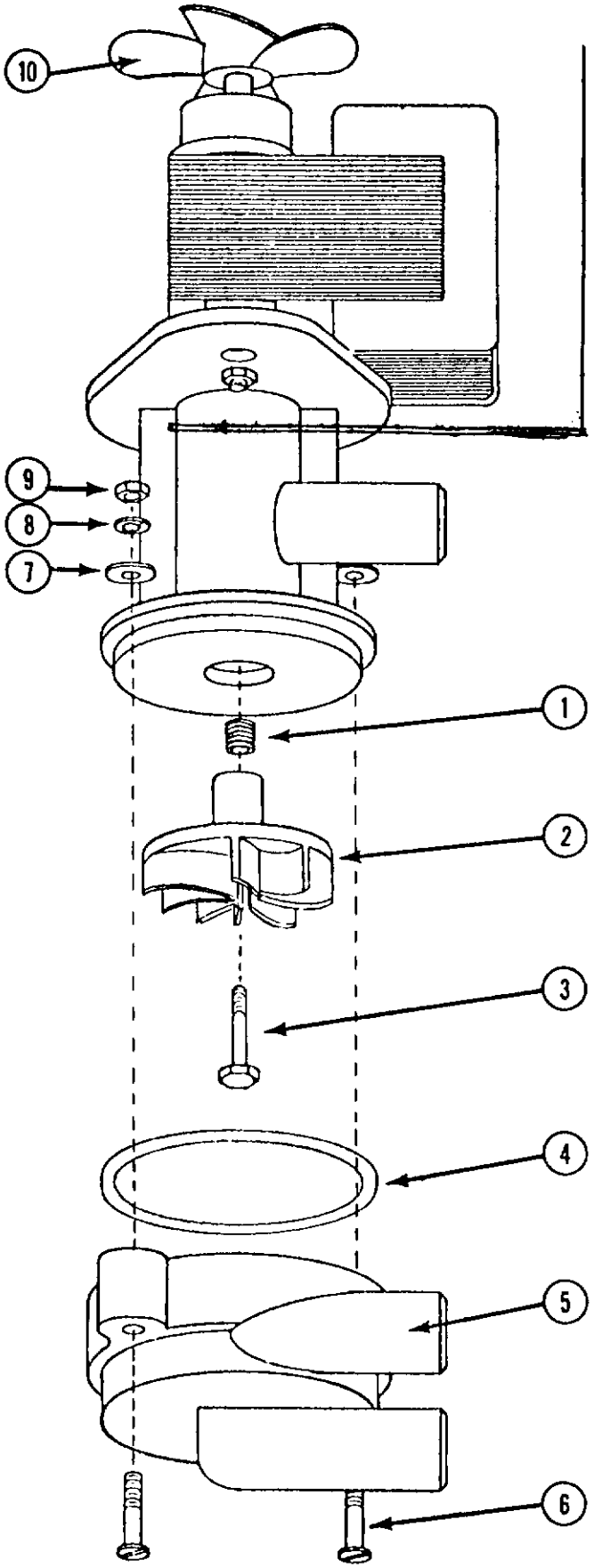

WATER PUMP
Part No. 12-2061-01
115/60/1

ITEM	PART NO.	DESCRIPTION
1.	12-2061-55	Spring
2.	12-2061-53	Impellar
3.	12-2061-54	Bolt
4.	12-1849-60	O-Ring
5.	12-1849-61	Intake Housing
6.	03-1403-08	Screw
7.	03-1407-01	Flat Washer
8.	03-1417-01	Lock Washer
9.	03-1406-01	Nut
10.	02-1719-00	Fan Blade

SPRAY BAR AC25 M
Medium Size Cubes

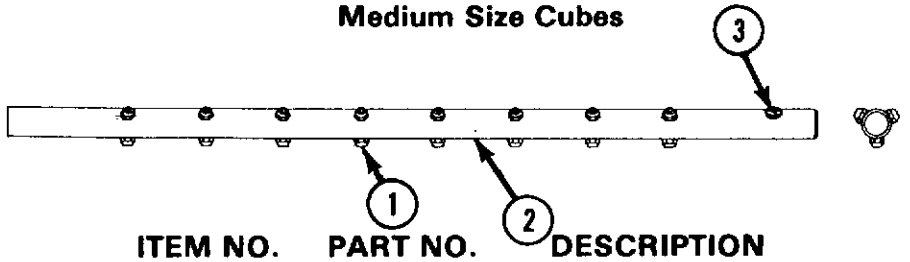

ITEM NO.	PART NO.	DESCRIPTION
1.	02-1803-01	Water Jets (24/Unit)
2.	A-27755-001	Spray Bar Assembly
3.	03-1403-37	Screw (1/Unit)

SPRAY BAR AC25 S
Small Size Cubes

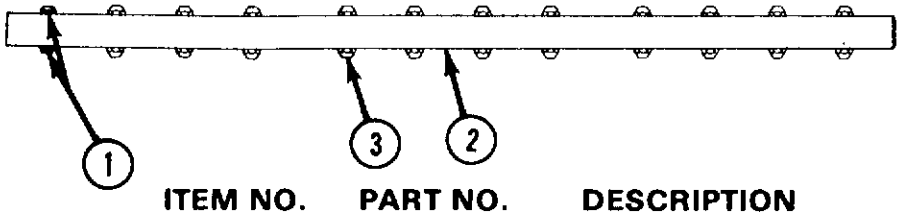

ITEM NO.	PART NO.	DESCRIPTION
1.	02-1803-01	Water Jet 2/Unit
2.	A-27756-001	Spray Bar Assembly
3.	A20852-002	Water Jet 22/Unit

DRIVE SHAFT/HOUSING ASSEMBLY

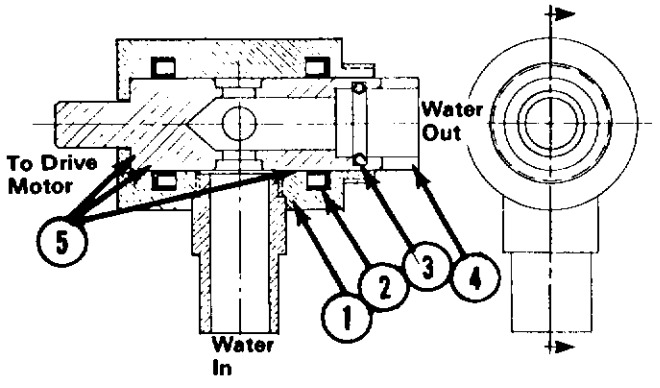

ITEM NO.	PART NO.	DESCRIPTION
1.	A27757-001	Driveshaft/Housing Assembly
2.	13-0819-01	Water Seal 2/Unit
3.	13-0617-30	O-Ring
4.	A27753-001	Drive Journal
5.	19-0569-01	Food Grade Lubricant

SPRAY BAR END PLUG

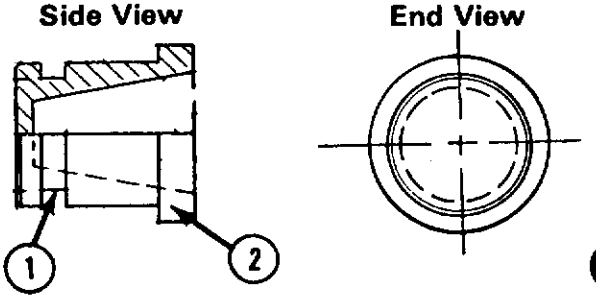

ITEM NO.	PART NO.	DESCRIPTION
1.	13-0617-42	O-Ring
2.	A27748-001	Plug

FREEZER CHAMBER
SUMP ASSEMBLY

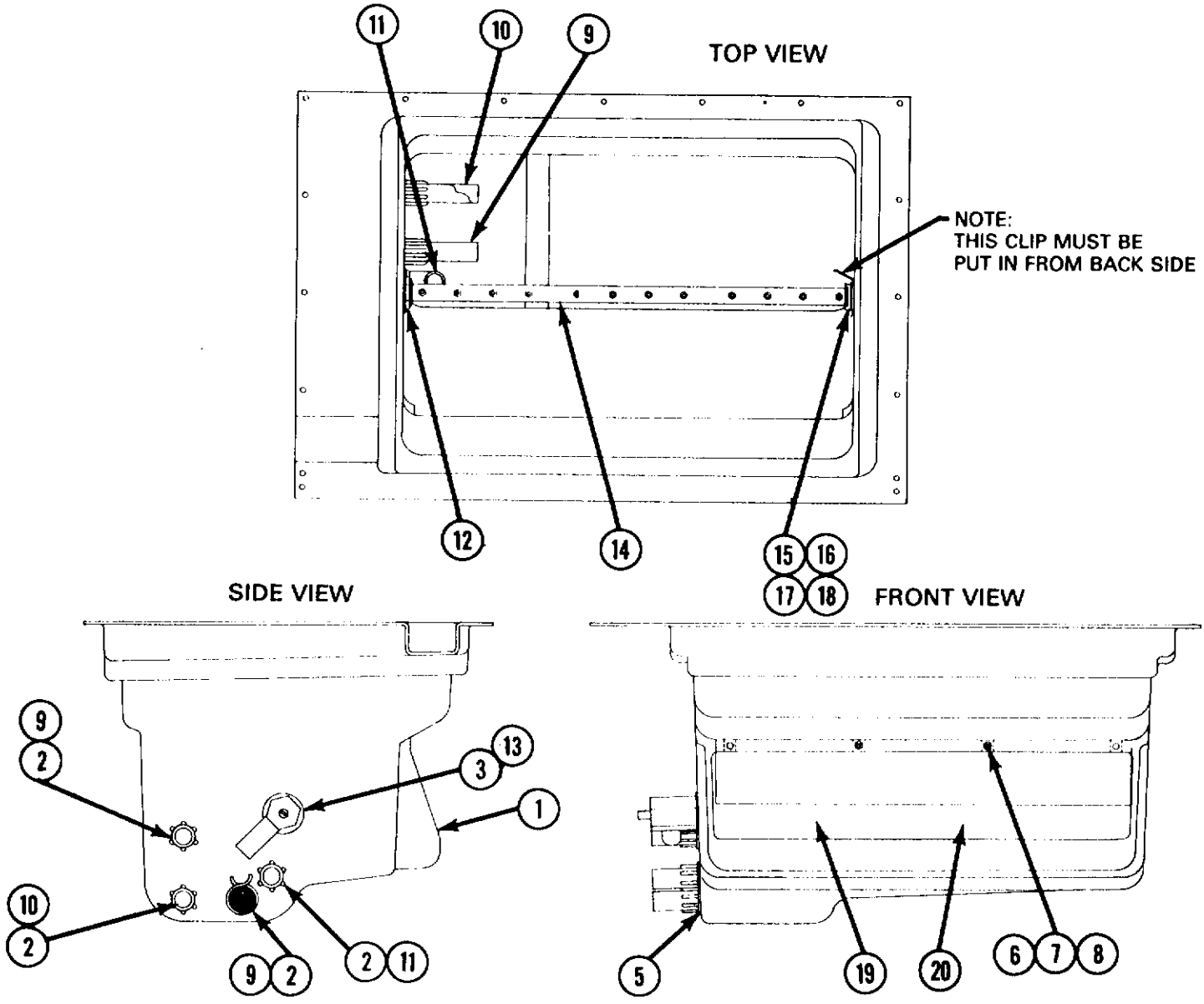

ITEM	PART NO.	DESCRIPTION
1.	02-2331-01	Freezing Chamber
2.	A24379-001	Tube-Female (4 External)
3.	A27757-001	Drive Shaft Housing Assy.
5.	13-0617-02	O-Ring (4)
6.	02-2327-01	Curtain Assembly
7.	03-1404-1-	Screw #8 x 1/2 S.S.
8.	03-1422-04	Speed Clip
9.	02-2080-01	Tube-Male (2 Internal)
10.	02-2082-01	Tube-Pump Pick Up (Internal)
11.	02-2125-01	Stand Pipe

ITEM	PART NO.	DESCRIPTION
12.	A27754-001	
14.	A27756-001	Spray Bar Assy.
	See Page 21	(Sm. Cube)
	A27755-001	Spray Bar Assy.
	See Page 21	(Med. Cube)
15.	A27749-001	Spray Bar End
16.	A27748-001	Spray Bar Plug
17.	A26901-001	Retainer Clip
18.	13-0617-42	O-Ring

PLATEN ASSEMBLY

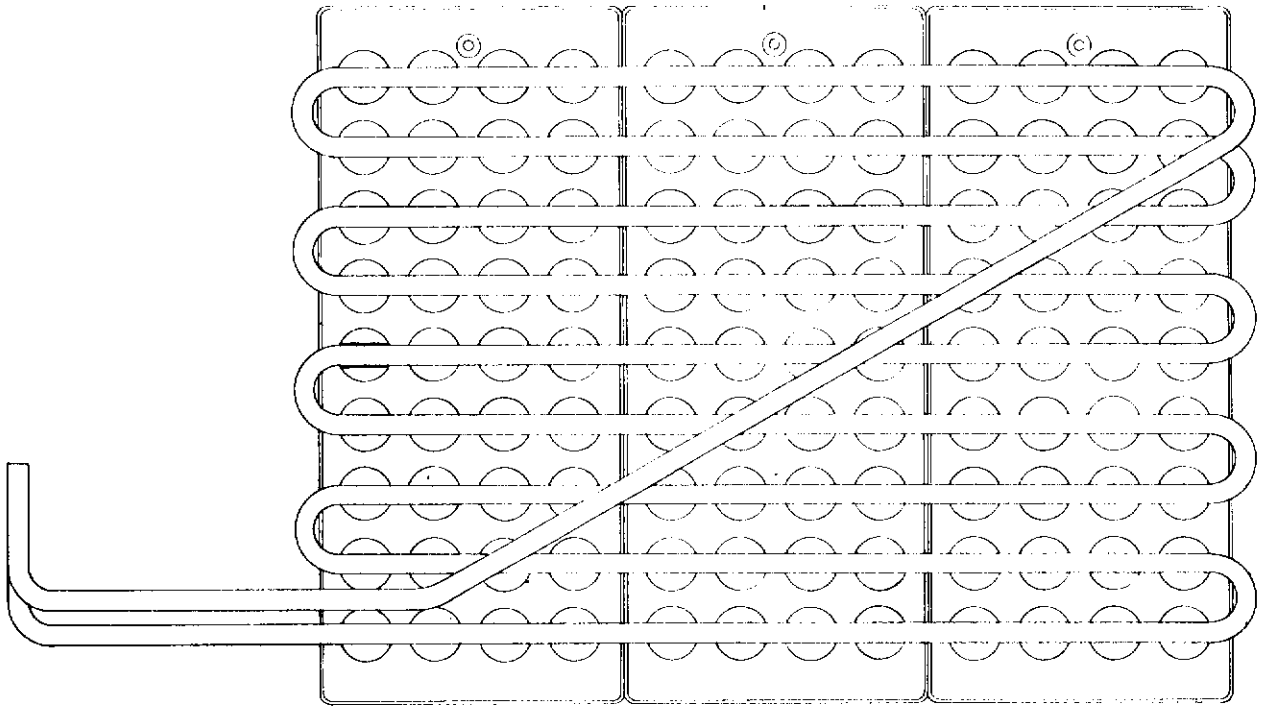

ITEM	PART NO.	DESCRIPTION
1.	A26946-001	Platen Assembly (small cube)
	A27052-001	Platen Assembly (medium cube)
2.	A26992-001	Suction Line-Accumulator (Not Shown)

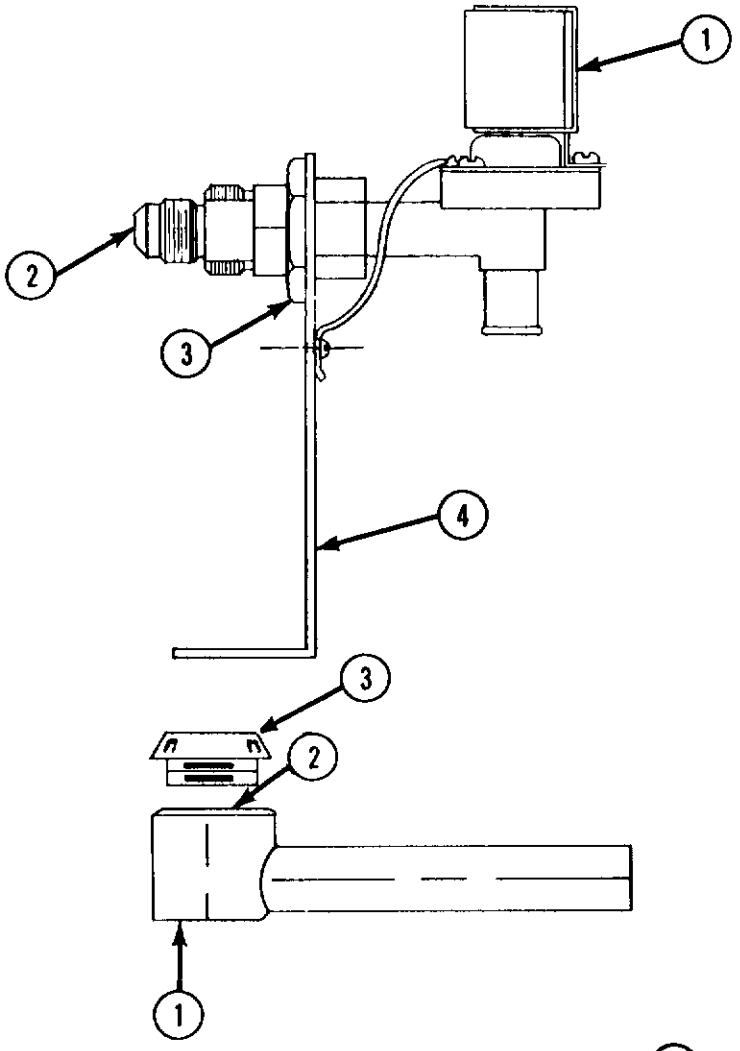

WATER INLET ASSEMBLY

ITEM	PART NO.	DESCRIPTION
1.	12-1900-10	Solenoid Valve
2.	A25969-001	Water Inlet Fitting
3.	03-1394-01	Pal Nut
4.	A25805-001	Mounting Bracket

BIN DRAIN ASS'Y

ITEM	PART NO.	DESCRIPTION
1.	A26957-001	Overflow Fitting
2.	13-0617-11	"O" Ring
3.	02-1741-00	Drain Top

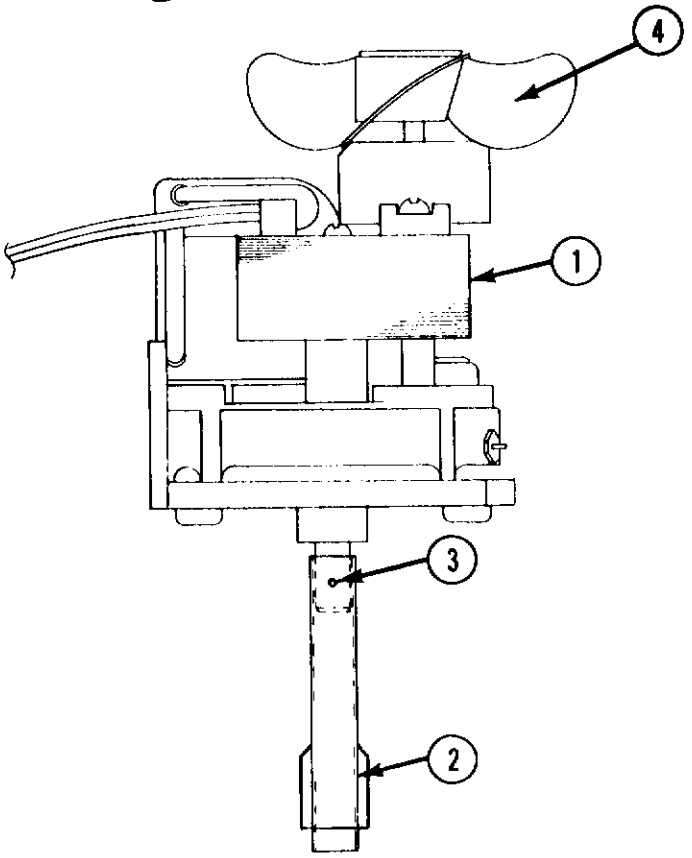

AGITATOR MOTOR ASS'Y.

A27735-001 *

ITEM NO.	PART NO.	DESCRIPTION
1.		Agitator Motor
2.	A27752-001	Drive Tube Assy.
3.	03-0774-08	Pin, Spring
4.	12-0675-25	Fan Blade

*Supplied complete with Items 1 thru 4.

CONTROL BOX
Water Cooled
115/60/1

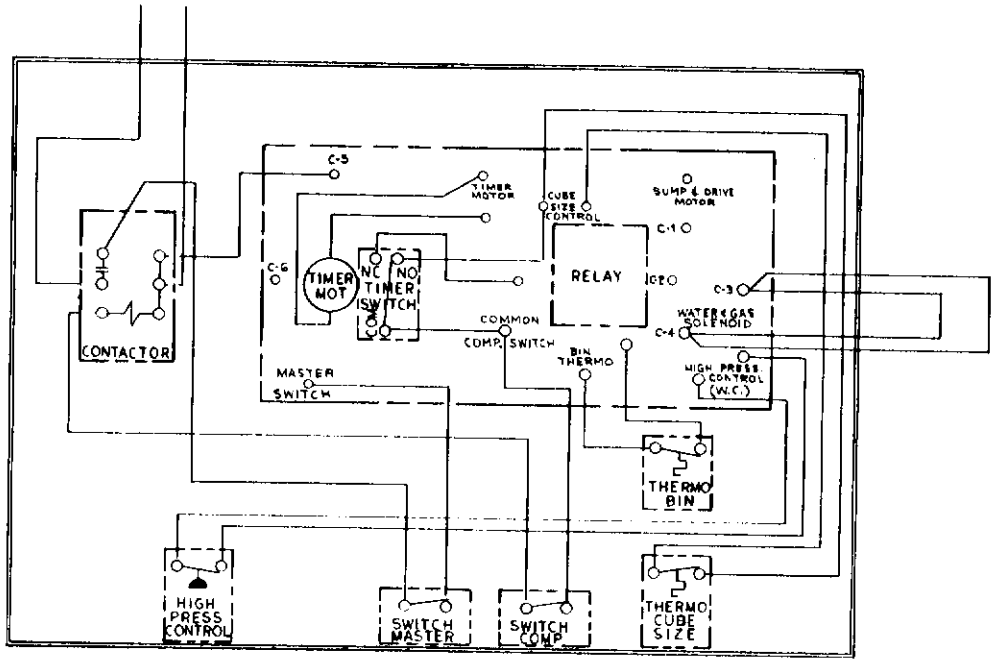

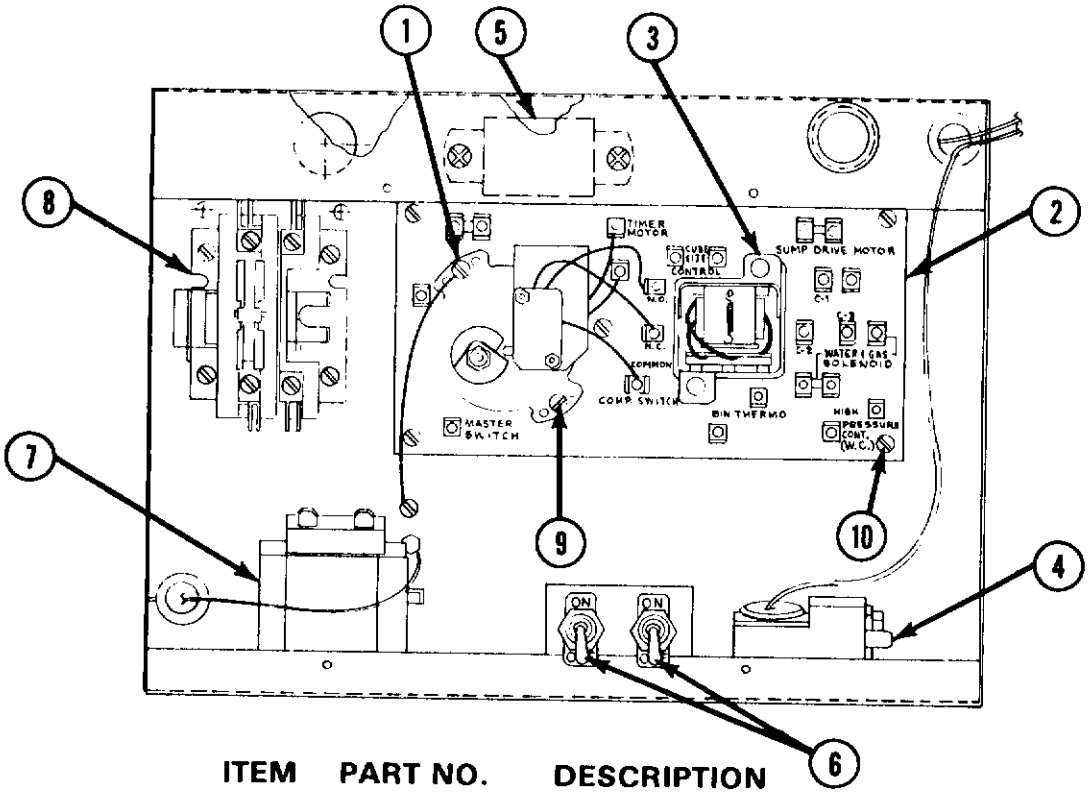

ITEM	PART NO.	DESCRIPTION
1.	12-1980-01	Timer-Switch Assembly
2.	12-1912-01	Curcuit Board
3.	12-1879-02	Relay
4.	11-0345-02	Cube Size Control
5.	11-0353-02	Bin Thermostat
6.	12-0426-01	Compressor On-Off Switches
7.	11-0388-02	Pressure Control
8.	12-2041-01	Contactor
9.	02-2242-01	Stand off - Timer (2)
10.	02-2242-02	Stand off - P.C. Board (5)

CONTROL BOX
Air Cooled
115/60/1

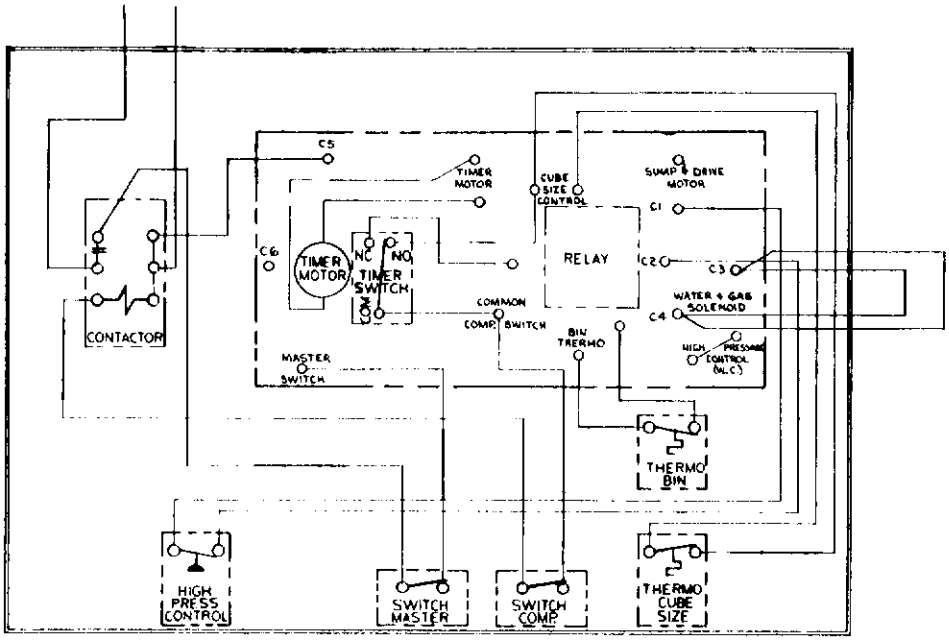

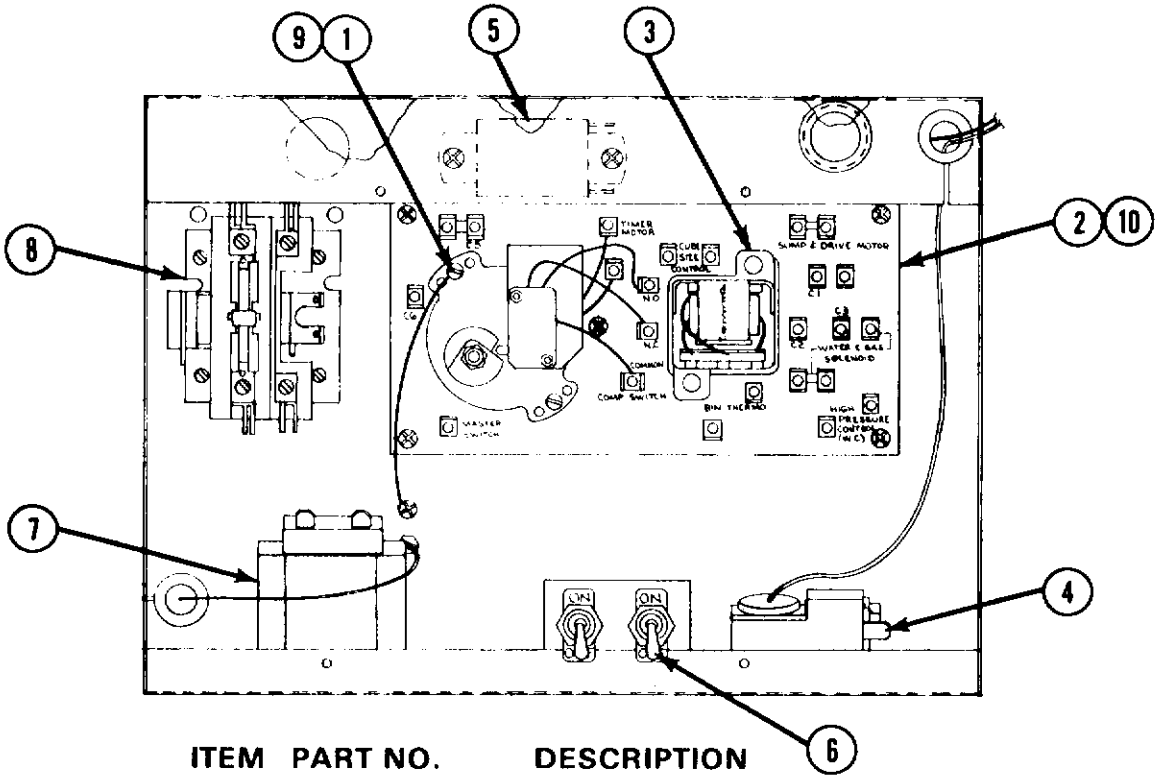

ITEM	PART NO.	DESCRIPTION
1.	12-1980-01	Timer & Switch
2.	12-1912-01	Curcuit Board
3.	12-1879-02	Relay 3PDT
4.	11-0345-03	Cube Size Control
5.	11-0353-02	Bin Thermostat
6.	12-0426-01	Compressor and Master On-Off Switch
7.	11-0389-02	Pressure Control
8.	12-2041-01	Contactor
9.	02-2242-01	Stand off - Timer (2)
10.	02-2242-02	Stand off - P.C. Board (5)

MOTOR COMPRESSOR
115/60/1

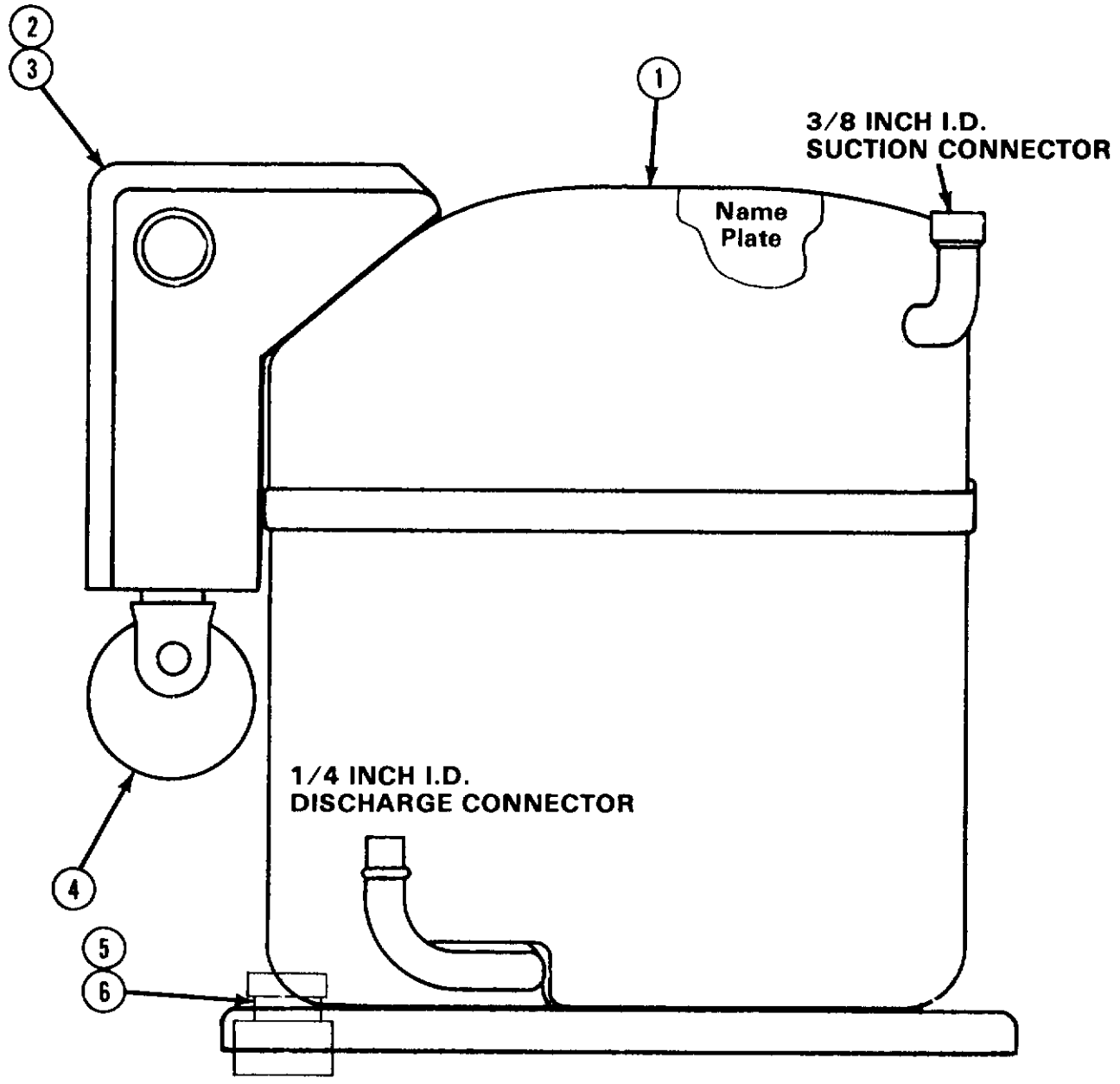

ITEM	PART NO.	DESCRIPTION
1.	18-4500-01	Motor Compressor (Cope #RSF2-0050-1AA)
2.	18-2200-26	Relay (Cope #040-0098-00)
3.	18-2200-25	Overload (Cope #071-0127-34)
4.	18-1901-33	Capacitor (Cope #014-0008-71)
5.	18-2200-27	Metal Sleeve (4)
6.	18-2200-28	Rubber Mount (4)

Chassis Assy.
Air Cooled
Right Side View

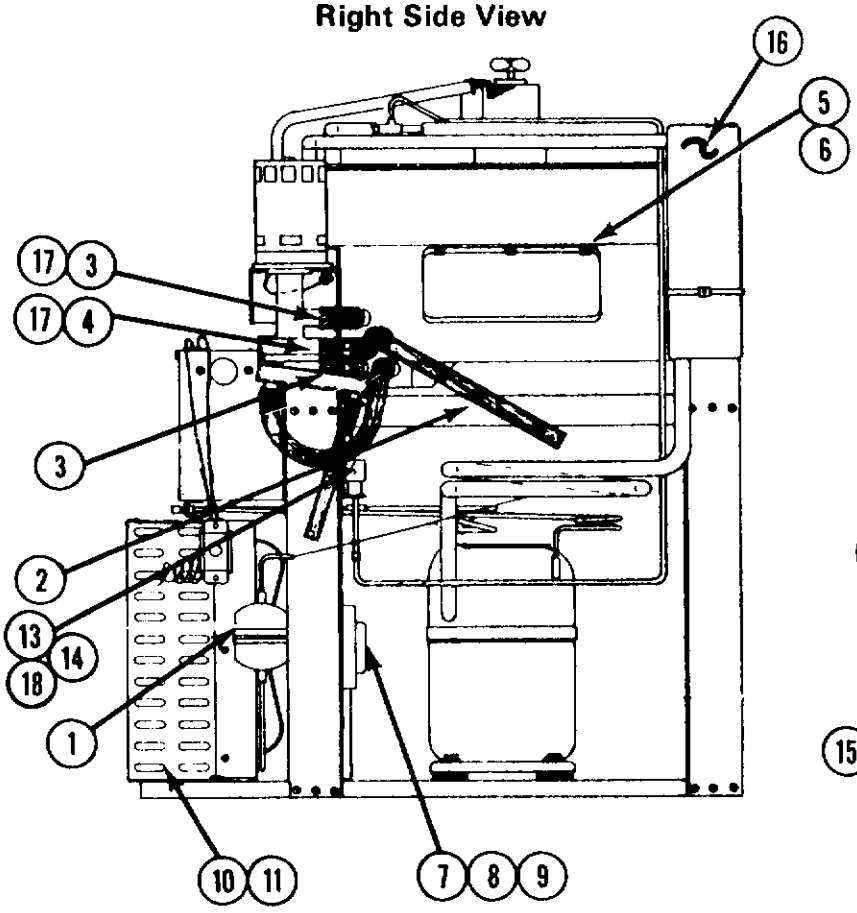

Chassis Assy — Water Cooled
Rear View

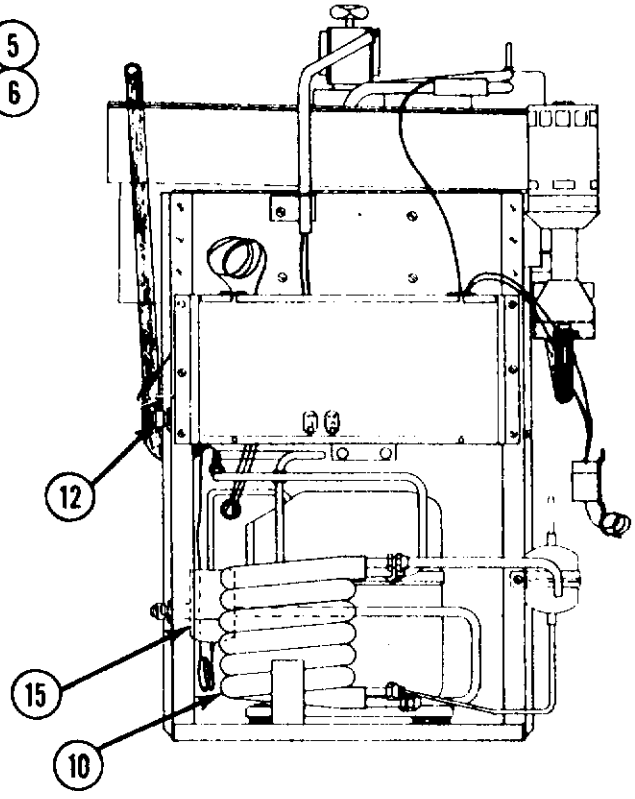

ITEM NO.	PART NO.	DESCRIPTION
1.	02-0544-01	Drier
2.	05-0501-01	Tubing - Preformed
3.	05-0511-01	Tubing - Preformed
4.	05-0511-02	Tubing - Preformed
5.	02-2038-01	Curtain Assy.
6.	03-1526-01	"U" Clip (3 req'd)
7.	12-1681-01	Fan Motor (Air Cooled Only)
8.	A25548-001	Fan Motor Bracket (Air Cooled Only)
9.	18-0625-00	Fan Motor Blade (Air Cooled Only)
10.	18-0396-01	Condenser Air Cooled
	18-3305-02	Condenser Water Cooled
11.	A23825-001	Shroud, Fan (Air Cooled Only)
12.	12-1900-01	Water Solenoid Valve Complete
13.	12-2008-01	Valve Coil & Frame Assy.
14.	12-2009-01	Coil Clamp
15.	11-0198-02	Water Regulating Valve (Water Cooled Only)
16.	A24781-001	Suction Line - Accumulator Assy.
17.	02-1358-00	Clamps (6)
18.	12-1490-01	Wire Assy.

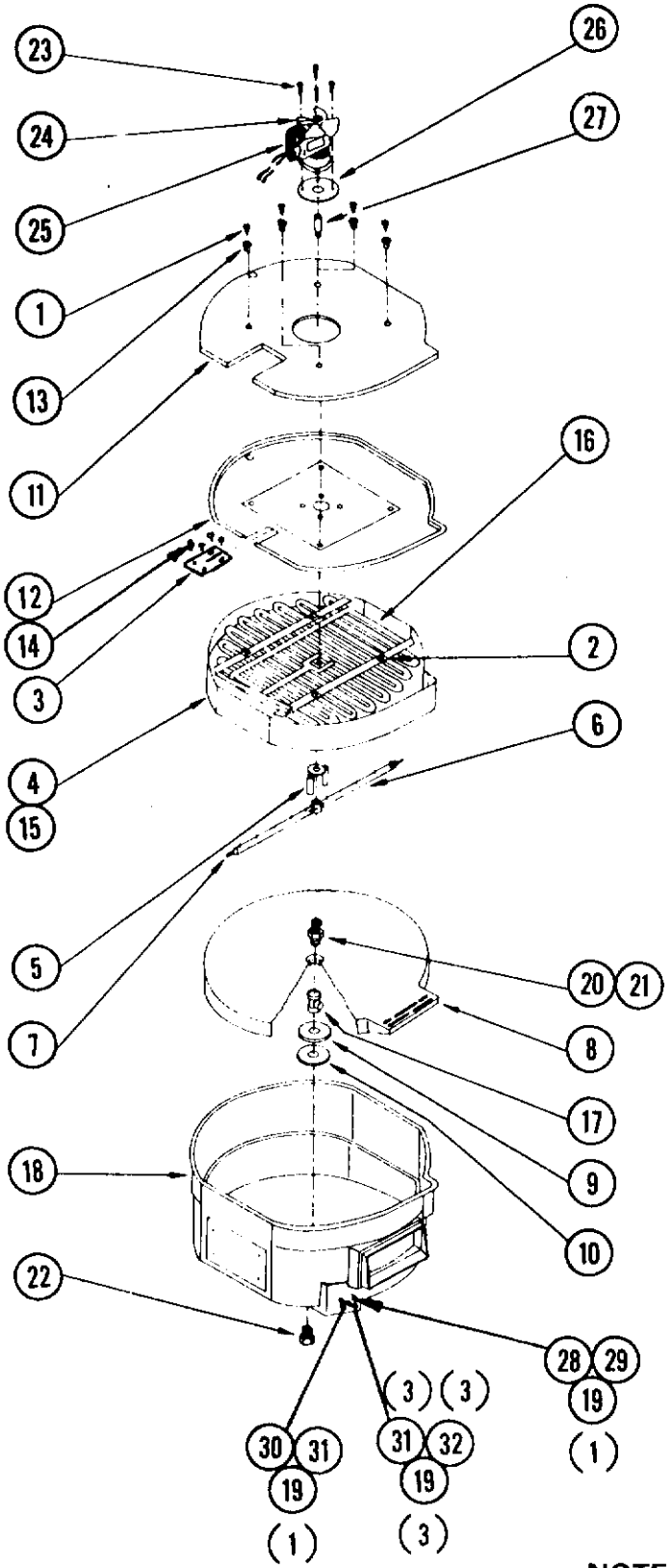

FREEZER ASSEMBLY

ITEM	PART NO.	DESCRIPTION
1.	03-1404-10	Screw
2.	03-1422-04	Speed Clip
3.	02-2129-01	Tuber Spacer
⚠1 4.	13-0757-01	Rubber Cup Holder - Medium
	13-0756-01	Rubber Cup Holder - Small
5.	02-2194-01	Drive Fork
6.	A25480-001	Spray Bar W/Rubber Tips
7.	13-0653-00	Rubber Tips
8.	02-2028-01	Inner Pan
9.	A23827-001	Metal Bottom Plate
10.	03-1409-11	Rubber Washer
11.	02-2124-01	Insulation Cover
12.	A24803-001	Cover Assembly
13.	A24830-001	Centering Washer
14.	02-2065-02	Hole Plug (4)
15.	A23880-002	Rubber Platen Assy. - Medium
	A27217-002	Plastic Platen Assy. - Medium
	A23803-002	Rubber Platen Assy. - Small
	A27218-002	Plastic Platen Assy. - Small
16.	A24198-001	Spray Deflector 2/Unit *
	A24198-003	Spray Deflector 1/Unit
	A24198-004	Spray Deflector 1/Unit
		* Above deflectors on small cube series AC30S only. Not shown.
17.	02-2121-01	Water Inlet Tee
18.	A24819-001	Bottom Pan
19.	13-0617-02	"O" Ring (5)
20.	02-2120-01	Spray Bar Bearing
21.	13-0617-25	O-Ring For 20
22.	02-2122-01	Bottom Plug
23.	03-1404-28	Screws
24.	12-0675-25	Fan Blade
25.	A24656-001	Agitator Motor W/Fan Blade
26.	13-0176-00	Motor Gasket
27.	A23830-001	Drive Shaft
28.	A24379-001	Short Tube - Female
29.	02-2125-01	Stand Pipe - Male
30.	02-2082-01	Pump Pickup - Male
31.	02-2081-01	Tube - Female (4)
32.	02-2080-01	Tube - Male (3)

NOTE:

⚠1 Can be used as a replacement on Rubber Platens only.

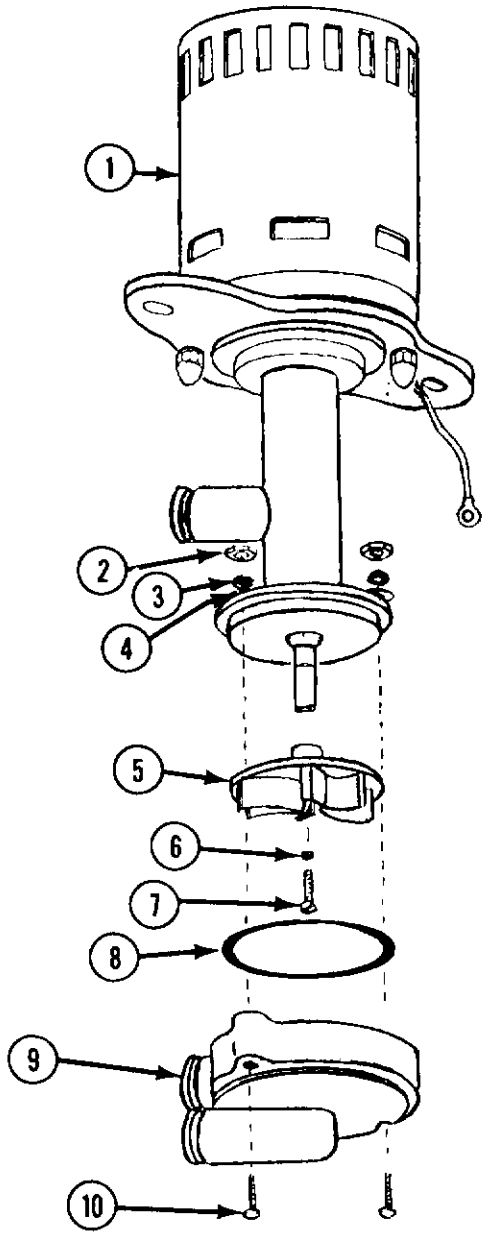

PUMP ASSY.

ITEM NO.	PART NO.	DESCRIPTION
1.	12-1930-01	Pump Assy. Complete
2.	12-1849-54	Nut (Hex)
3.	12-1849-55	Lock Washer
4.	12-1849-56	Washer
5.	12-1849-57	Impeller
6.	12-1849-58	Lockwasher
7.	12-1849-59	Screw
8.	12-1849-60	"O" Ring Seal
9.	12-1849-61	Pump Housing
10.	12-1849-62	Screw

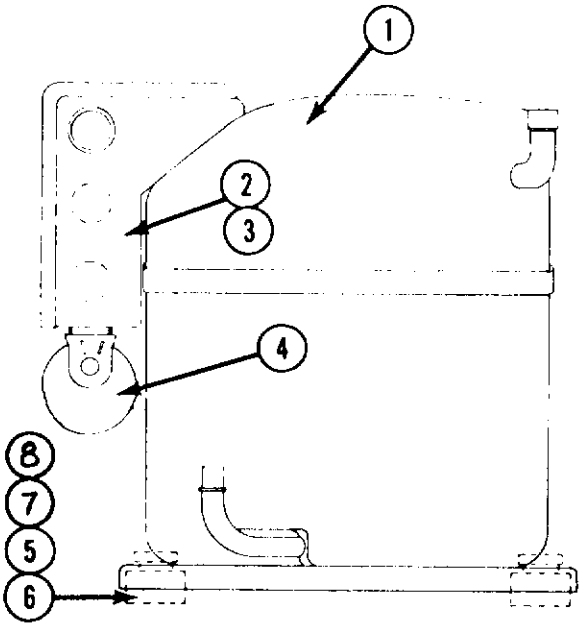

MOTOR COMPRESSOR
Air and Water
3500 RPM — 115/60/1

ITEM NO.	PART NO.	DESCRIPTION
1.	18-3900-01	Compressor Complete Cope. No. RSL2-0075-1AA
2.	18-2400-25	Overload Cope. No. 071-0127-06
3.	18-2410-00	Relay — Start Cope. No. 040-0098-01
4.	18-2420-00	Capacitor — Start Cope. No. 014-0008-69
5.	18-2200-27	Metal Sleeve Cope. No. 027-0072-02
6.	18-2200-28	Rubber Mount Cope. No. 027-0073-00
7.	03-1407-07	Washer
8.	03-1405-20	Screw

CONTROL BOX ASSEMBLY

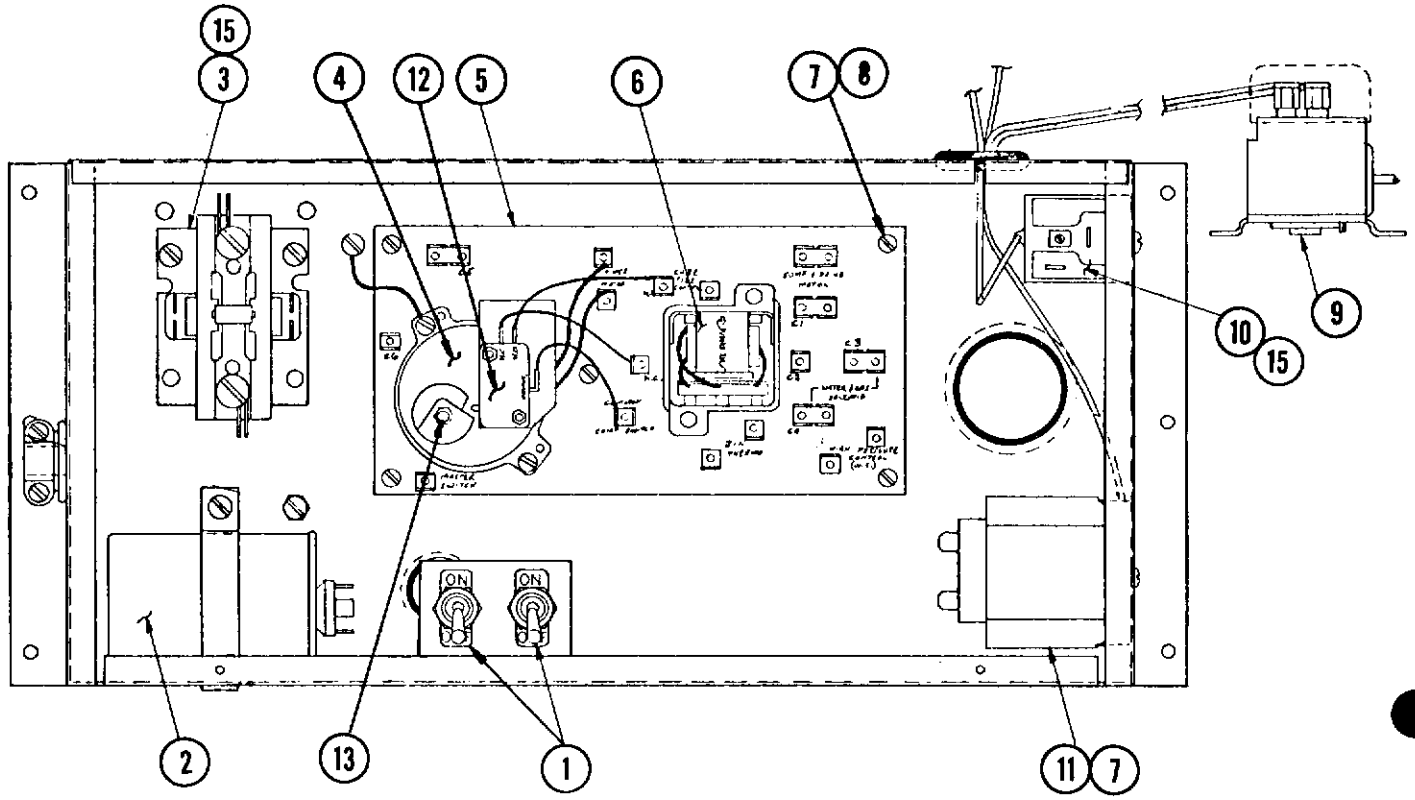

ITEM NO.	PART NO.	DESCRIPTION
1.	12-0426-01	Toggle Switch
2.	18-1902-17	Run Capacitor
3.	12-2041-01	Contactor
4.	12-1979-01	Timer Motor & Switch Assy.
5.	12-1912-01	P.C. Board
6.	12-1879-02	Relay 3 P.D.T.
7.	03-1403-02	Screw
8.	02-2242-01	Stand-Off
9.	11-0353-03	Temperature Control Bin
10.	11-0351-03	Cube Size Control AC30S Only
	11-0345-02	Cube Size Control AC30M & AC30L
11.	11-0389-02	Pressure Control Air Cool Only
	11-0388-02	Pressure Control Water Cool Only
12.	12-1721-50	Switch, If Detachable
13.	12-1721-51	Shaft
14.	A24768-001	Cover, Control Box (Not Shown)
15.	03-1403-14	Screw
16.		

CABINET ASSEMBLY

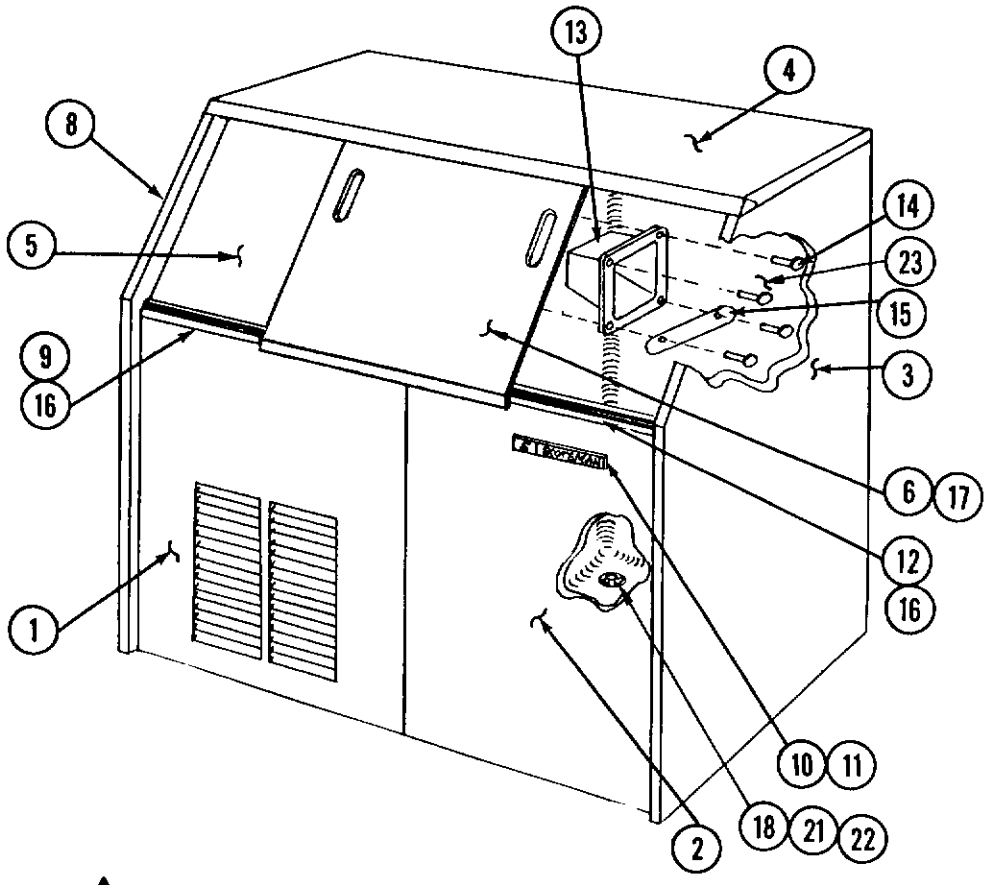

ITEM NO.	PART NO. PAINTED	PART NO. S. STEEL	DESCRIPTION
1.	A24796-001	A24796-002	Lower Left Front Panel
2.	A24794-001	A24794-002	Right Front Panel
3.	A24800-001	A24800-002	Right Side Panel
4.	A24799-001	A24799-002	Top Panel
5.	A24795-001	A24795-002	Upper Left Front Panel
6.	02-2130-01	02-2130-02	Ice Access Door (Plastic)
3 1 7.	A27033-001	A27033-002	Back Panel
3 8.	A27034-001	A27034-002	Left Side Panel

Common To All Units

ITEM NO.	PART NO.	DESCRIPTION
9.	A24939-001	Moulding Strip Left Side
10.	15-0156-00	Scotsman Emblem
11.	03-0271-00	Speed Nuts (2)
12.	15-0620-01	Moulding Strip, Right Side
13.	02-2131-01	Cube Spout
14.	03-0727-04	Thumb Screws (4)
15.	A24828-001	Bulb Holder
2 16.	15-0324-00	Plastic Insert
1 17.	A24790-001	Door Track Assy.
18.	02-1741-00	Drain Top, Bin
1 19.	10-0314-01	Touch Up Spray Paint (Sandlewood)
1 20.	16-0162-01	Water Strainers
1 21.	13-0617-11	Drain "O" Ring
3 1 22.	A24814-001	Drain Bottom, Bin (Prior Units)
	A27018-001	Drain Bottom, Bin
23.	02-2110-02	Foamed Bin

NOTE:

1 Not Shown.

2 Specify length required.

3 Prior units had utility connections thru unit back panel. Current units have utility connections thru unit left side panel. Approximate S.N. Beak is 5Q296540 and took effect November 1976. When these panels are used on prior units—the back panel will require additional utility holes, the left side panel will have holes that are not required.

4 Order complete Stainless Steel Kit from Sales Department.

CONTROL BOX ASSEMBLY

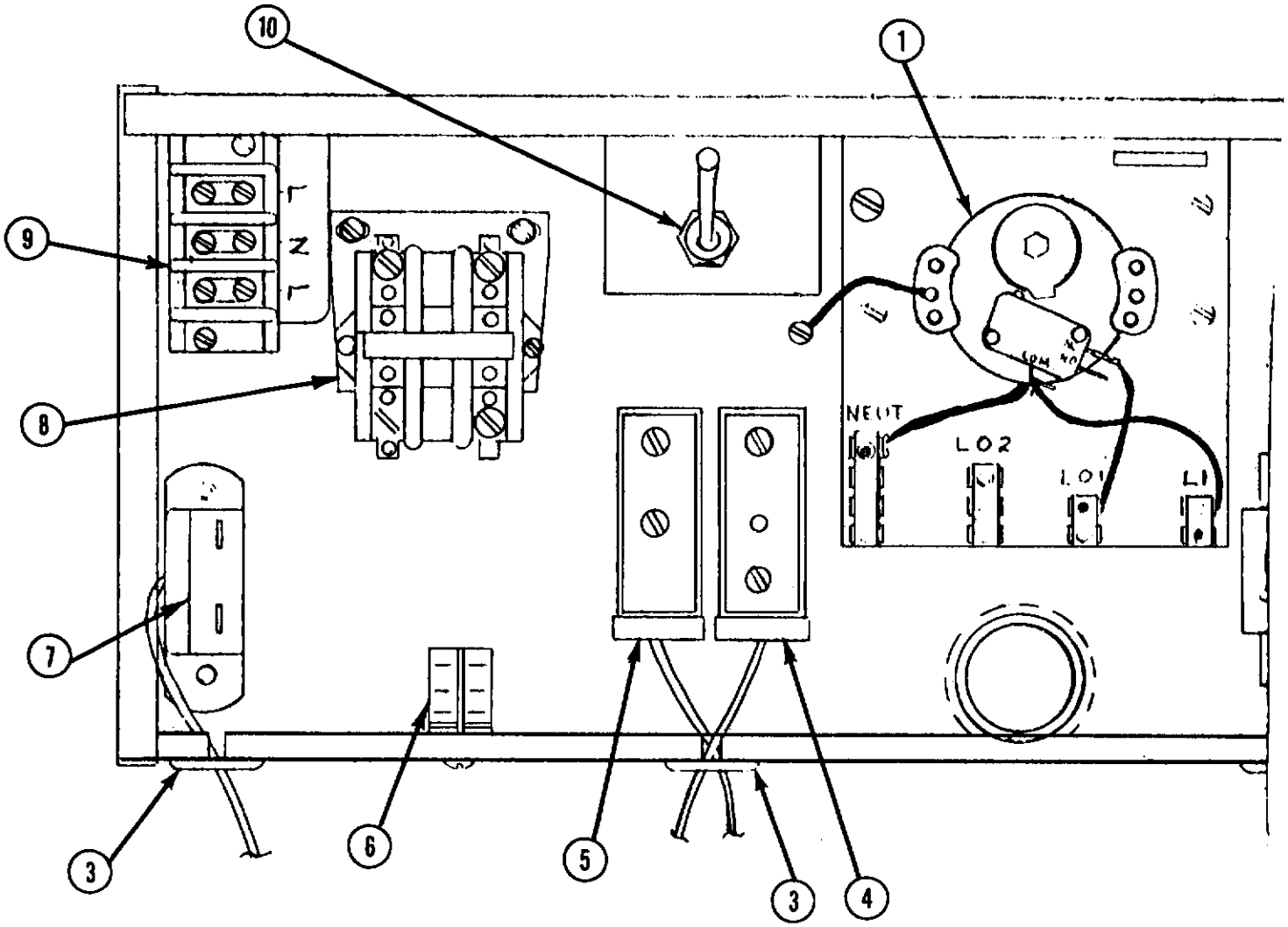

ITEM NO.	PART NO.	DESCRIPTION
1.	A25923-001	Timer Kit (12-1979-01 Timer)
2.	11-0345-00	Temperature Control (cube size)
3.	13-0124-00	Grommet
4.	11-0343-00	Right Fan Control (Air Cooled Only)
5.	11-0342-00	Left Fan Control (Air Cooled Only)
6.	12-1645-00	Relay
7.	11-0353-01	Bin Thermostat
8.	12-0820-01	Contactor (2 Pole)
	12-0739-01	Contactor (3 Pole)
9.	12-0813-00	Terminal Block
10.	12-0426-01	Switch

FRONT VIEW

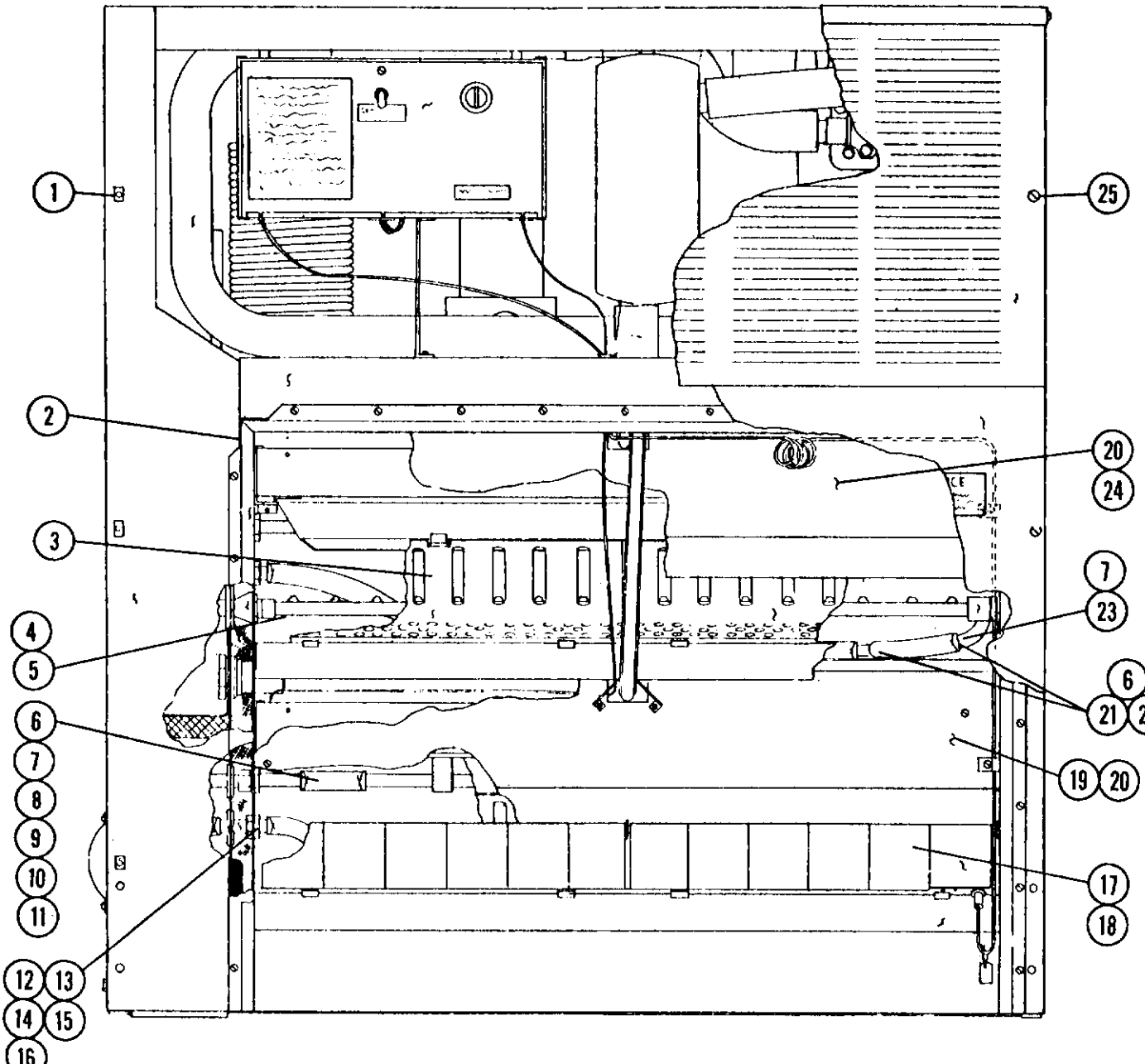

ITEM NO.	PART NO.	DESCRIPTION
1.	03-1029-00	Nut (2 req'd.)
2.	A18165-000	Door Gasket (2 req'd)
3.	A17573-000	Chutes (8 req'd)
4.	A13815-001	Platen & Cup Assy (2 req'd)
5.	13-0314-00	Rubber Cupholder only (2 req'd)
6.	13-0674-07	Tygon 3/4" I.D. Per Foot
7.	02-1358-00	Hose Clamps 3/4"
8.	A18004-000	Inlet Water Assy
9.	13-0617-02	"O" Ring
10.	13-0327-00	Grommet
11.	A13796-000	Inlet, Inner Assy
12.	A18174-000	Inlet, Spray Bar
13.	A18172-000	Nut, Inlet Tube
14.	A18173-000	"O" Ring Nut
15.	13-0617-05	"O" Ring
16.	13-0169-00	Grommet
17.	A17243-000	Curtain Assy (4 reqd)
18.	03-0727-00	Thumb Screw (curtain)
19.	A17604-000	Face Plate, Lower
20.	03-1404-10	S.S. Screws
21.	02-0536-01	Hose Clamps
22.	16-0482-00	Tee
23.	13-0674-06	Tygon Tube 5/8" Per Ft.
24.	A17603-000	Face Plate, Upper
25.	03-1418-22	Screws (12 Reqd.)

IN PACKAGE

A15759-000	Bulb cover
13-0590-00	Gasket
A16108-000	Bulb Holder Buttons

LEFT SIDE VIEW

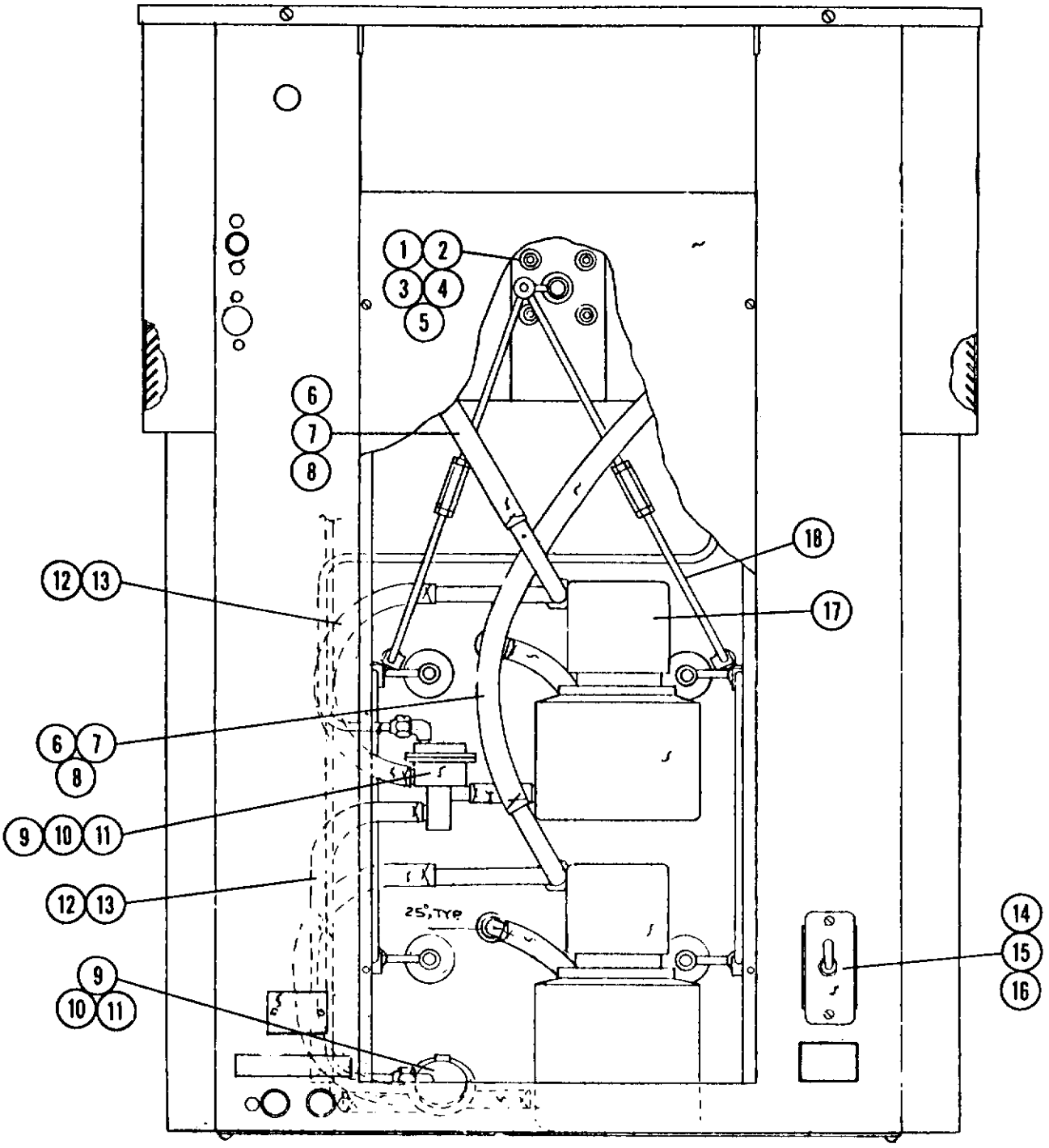

ITEM NO.	PART NO.	DESCRIPTION
1.	A23392-001	Drive Motor
2.	13-0100-00	Grommet (4 reqd)
3.	03-1403-22	Screw (4 reqd)
4.	03-1406-03	Nut (4 reqd)
5.	03-1407-04	Washer (8 reqd)
6.	13-0674-07	Hose 3/8" I.D. per foot
7.	02-1358-01	Hose Clamps 3/4"
8.		Tank Outlet

ITEM NO.	PART NO.	DESCRIPTION
9.	See Page 6	3 way Water Valve
10.	03-1403-28	Screws (4 reqd)
11.	03-1417-05	Lockwashers (4 reqd)
12.	02-0536-00	Hose Clamp
13.	13-0674-10	Tygon Hose 7/16 per foot.
14.	12-0426-01	Switch
15.	A16865-008	Switch Plate
16.	03-1403-17	Screw
17.	See Page 7	Sump Pump
18.	See Page 8	Drive Linkage Complete

AIR COOLED
Top view

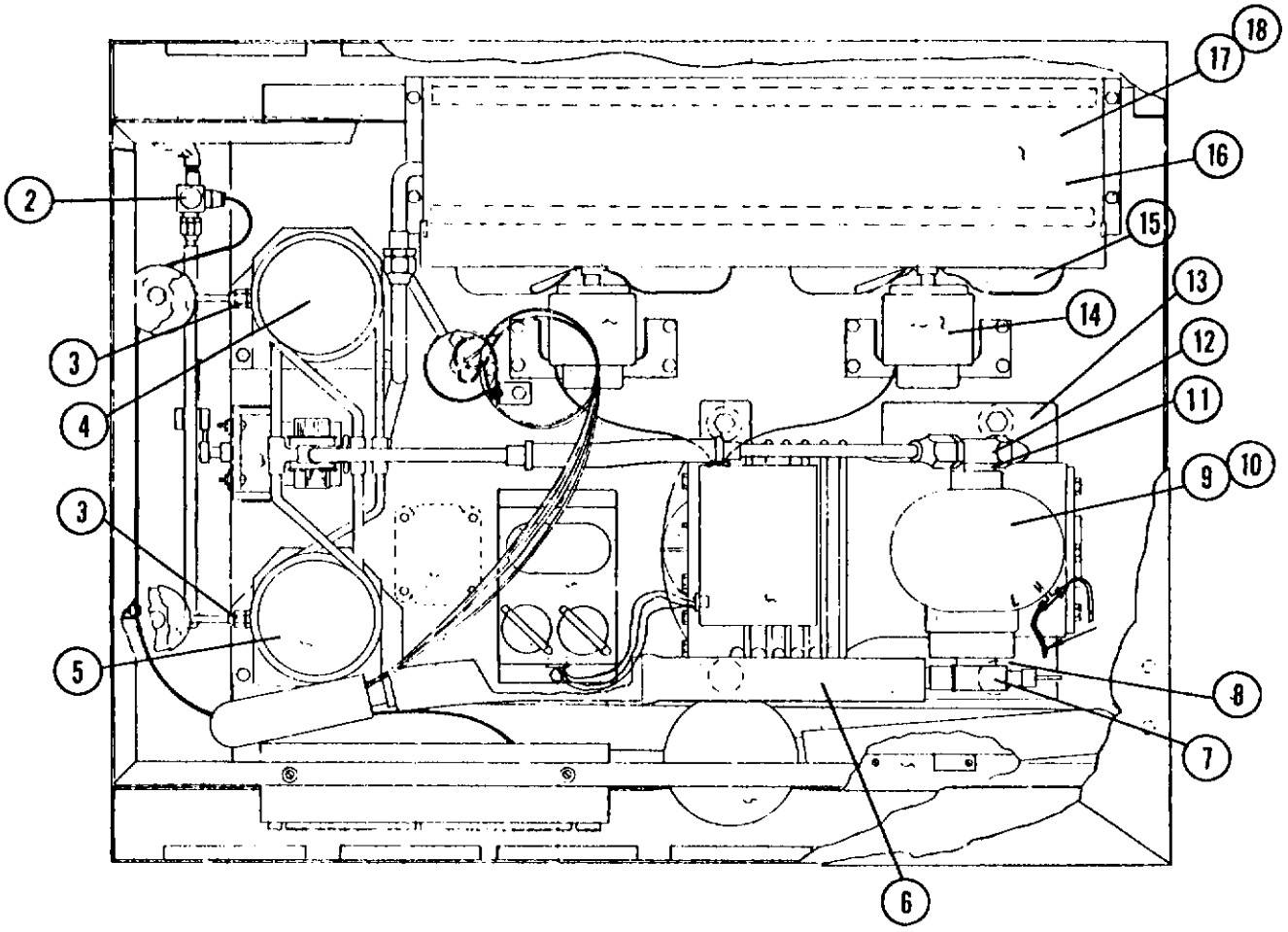

ITEM NO.	PART NO.	DESCRIPTION
1.		Street Elbow
2.	12-0621-G1	Solenoid Valve
3.	A13346-006	Flow Control
4.	A17836-000	Rear Water Tank
5.	A17837-000	Front Water Tank
6.	16-0326-00	Flexible Line
7.	18-1410-00	Suction Serv. Valve
8.	18-0736-00	Suction Serv. Valve Gasket
9.	18-1400-02	Compressor 230 & 208/60/1
	18-1400-03	Compressor 208-220/60/3
10.	18-1415-00	Valve Plate Kit
11.	18-1411-00	Discharge Serv. Valve
12.	18-0242-00	Discharge Valve
13.	18-1929-01	Crank Case Heater*
14.	18-0788-02	Fan Motor
15.	18-0787-00	Fan Blade
16.	18-0309-01	Condenser
17.	A13860-000	Shroud Assy.
18.	03-1404-15	Shroud Fasteners (6)
19.	16-0247-00	Vibrator
20.	18-1405-00	Overload
21.	18-1901-26	Starting Capacitor
22.	18-1902-20	Running Capacitor (2 reqd) 13/52
23.	18-1903-26	Relay
24.	02-0822-00	Dryer

*Not shown

WATER COOLED
Top View

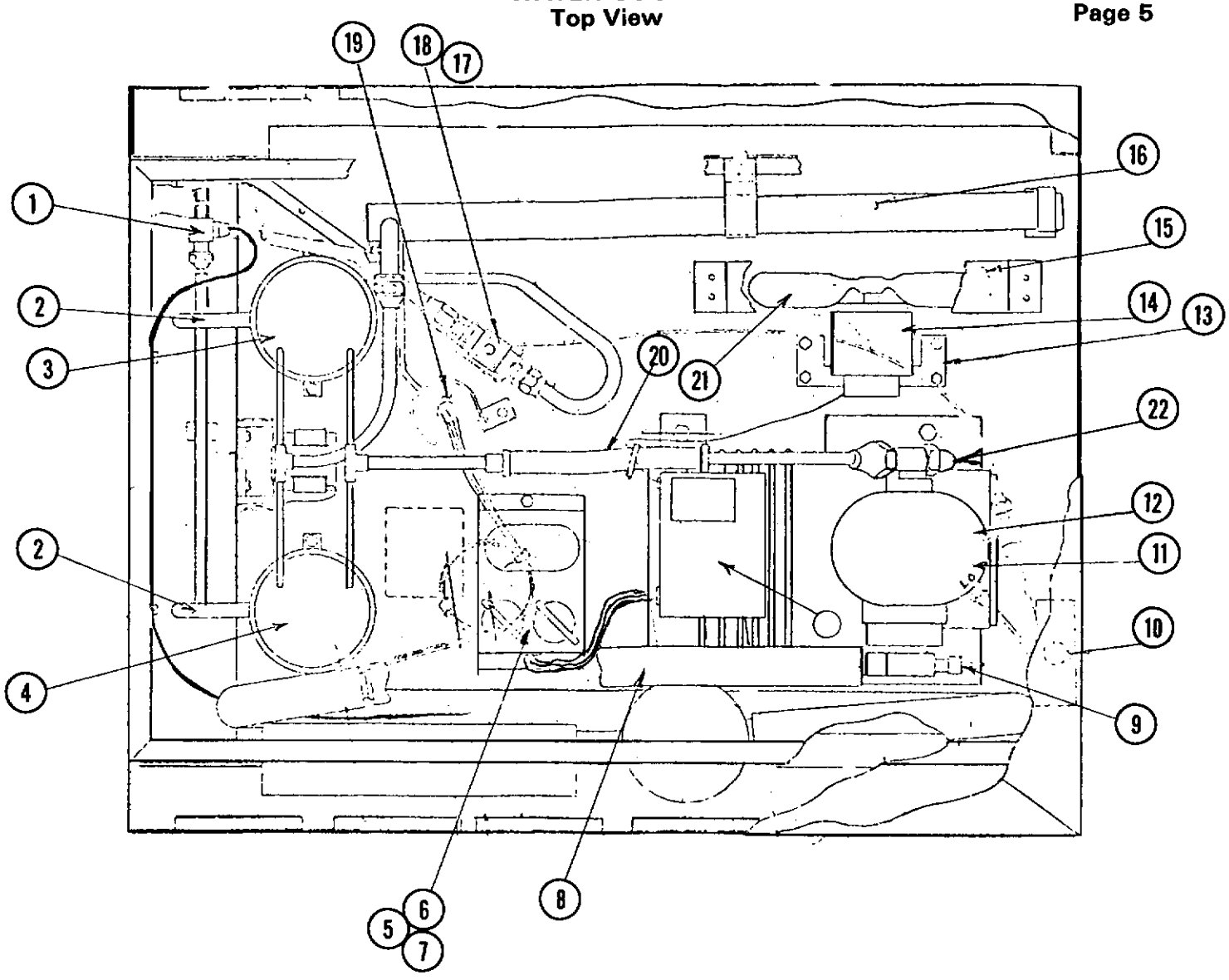

ITEM NO.	PART NO.	DESCRIPTION
1.	12-0621-G1	Solenoid Valve
2.	A13346-006	Flow Control
3.	A17836-000	Rear Water Tank
4.	A17837-000	Front Water Tank
5.	18-1901-27	Starting Capacitor
6.	18-1405-00	Overload
7.	18-1903-26	Relay
8.	16-0326-00	Flexible Line
9.	18-1410-00	Suction Service Valve
10.	11-0286-00	Hi-Lo Press Control
11.	18-1400-02	Compressor 115/230/60/1
	18-1400-03	Compressor 115/208-220/60/3
	18-1400-02	Compressor 115/208/60/1
12.	18-1415-00	Valve Plate Kit
13.	18-1421-00	Fan Bracket
14.	18-0788-02	Fan Motor 115/230/60/1
	18-0788-07	Fan Motor 115/208-220/60/3
15.	A24927-001	Fan Shroud
16.	18-1422-00	Condenser
17.	11-0198-01	Water Regulating Valve
18.	A18500-000	Regulator Bracket
19.	02-0822-00	Dryer
20.	16-0247-00	Vibration Eliminator
21.	18-0787-00	Fan Blade
22.	18-1411-00	Discharge Service Valve

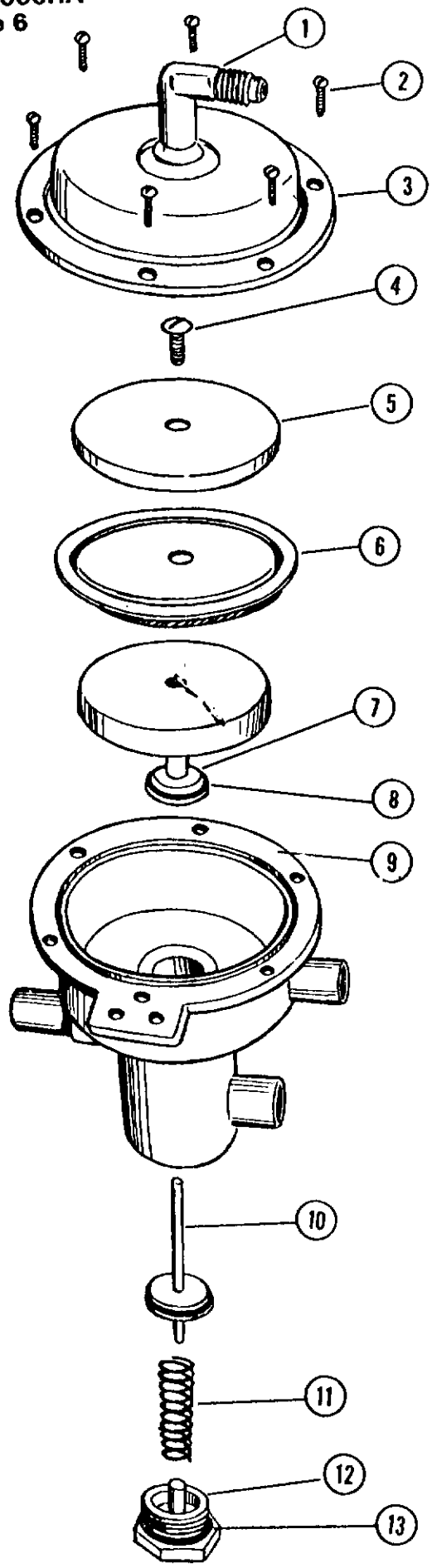

3-WAY WATER VALVE

ITEM NO.	PART NO.	DESCRIPTION
1.	16-0190-00	Elbow
2.	03-1403-06	Screws
3.	A18192-000	Valve Cover
4.	13-1506-01	Screw
5.	A18312-000	Diaphram Cover
6.	13-0606-00	Rolling Diaphram
7.	A17941-000	Plunger Assy.
8.	13-0617-01	"O" Ring
9.	A17947-000	Valve Body
10.	A17942-000	Plunger
11.	02-1545-00	Spring
12.	A17937-000	Valve Cap Bottom
13.	13-0617-02	"O" Ring
	A19722-000	Valve Complete

SUMP PUMP

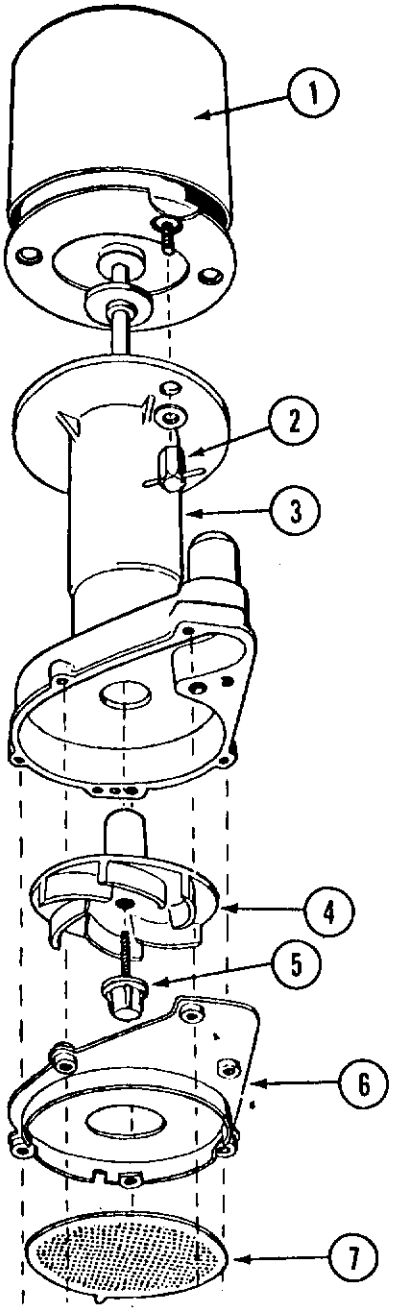

ITEM NO.	PART NO.	DESCRIPTION
1.	12-1701-50	Motor Only
2.	12-1351-32	Wing Hex Nuts
3.		Pump Body
4.	12-1701-24	Impellar
5.	12-1351-31	Impellar Screw and Gasket
6.	12-1701-25	Inlet Plate
7.	12-1701-22	Inlet Screen
	12-1701-02	Complete Pump

LINKAGE ASSEMBLY
A17569-000

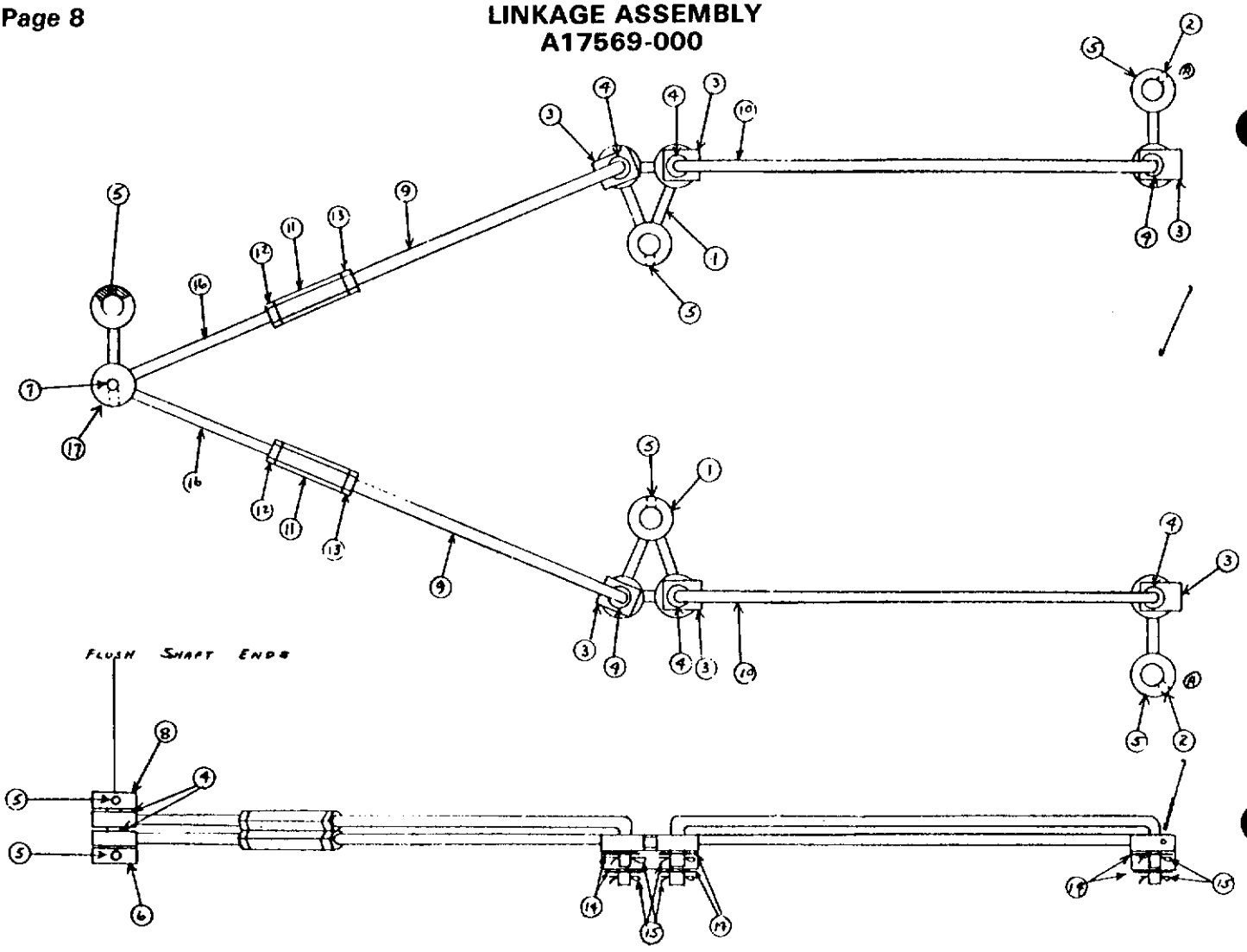

ITEM NO.	PART NO.	DESCRIPTION
1.	A17233-000	Double Drive Arm
2.	A17232-000	Drive Arm
3.	S07558-000	Bearing Clip
4.	02-0654-01	Bearing
5.	03-0431-00	Set Screw
6.	A18948-000	Motor Drive Arm
7.	A13849-000	Shaft
8.	A13848-000	Arm End
9.	S07938-000	Right Linkage
10.	A17568-000	Lower Linkage
11.	S07936-000	Linkage Coupling
12.	S07937-000	Left Linkage Nut
13.	03-1407-05	Washer
14.	03-0396-01	Cotter Pin
15.	A13850-000	Linkage Upper Assy
16.	A18948-000	Motor Drive Arm

SPRAY TUBE AND SPRAY TUBE DRIVE ASSEMBLY

4 Per Unit

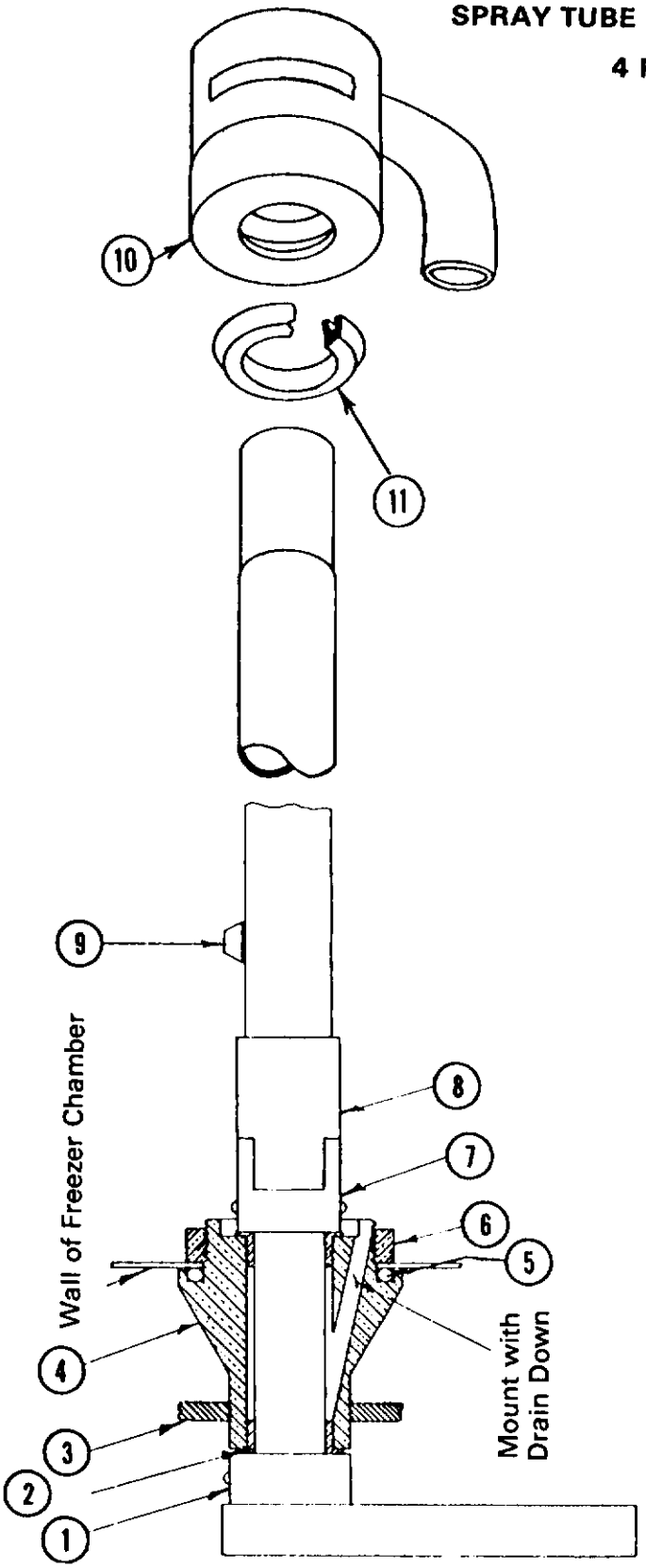

ITEM NO.	PART NO.	DESCRIPTION
1.	S07130-000	Collar
2.	02-0438-00	Flange Bearing
3.	13-0169-00	Grommet
4.	S08887-000	Drive Bearing Support
5.	13-0617-33	"O" Ring
6.	S07635-000	Nut
7.	A13837-000	Driving Journal Assy.
8.	A17563-000	Sprayer Tube
9.	02-1803-01	Jet
10.	A16963-000	End Bearing Assy.
11.	13-0168-00	"U" Cup

CASE PARTS
Air and Water Cooled

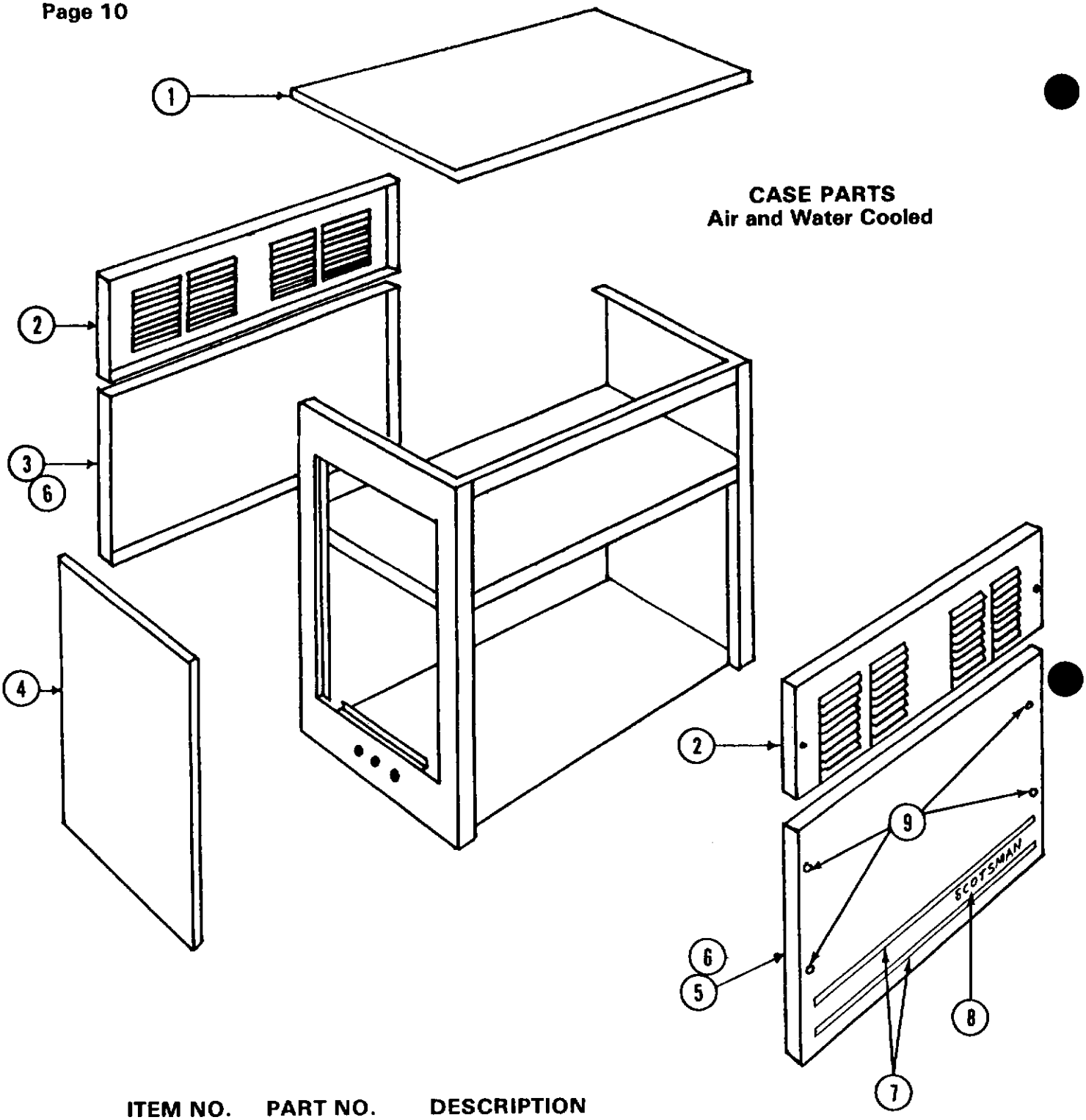

ITEM NO.	PART NO.	DESCRIPTION
1.	A17990-008	Top
2.	A17988-008	Upper Door
3.	A17684-008	Rear Lower Door
4.	A17710-008	Left Door
5.	A17663-008	Front Lower Door
6.	02-1548-00	Plastic Door Liner
7.	15-0474-01	Emblem Decal
8.	03-1418-22	Screws (26 reqd)

FRONT VIEW

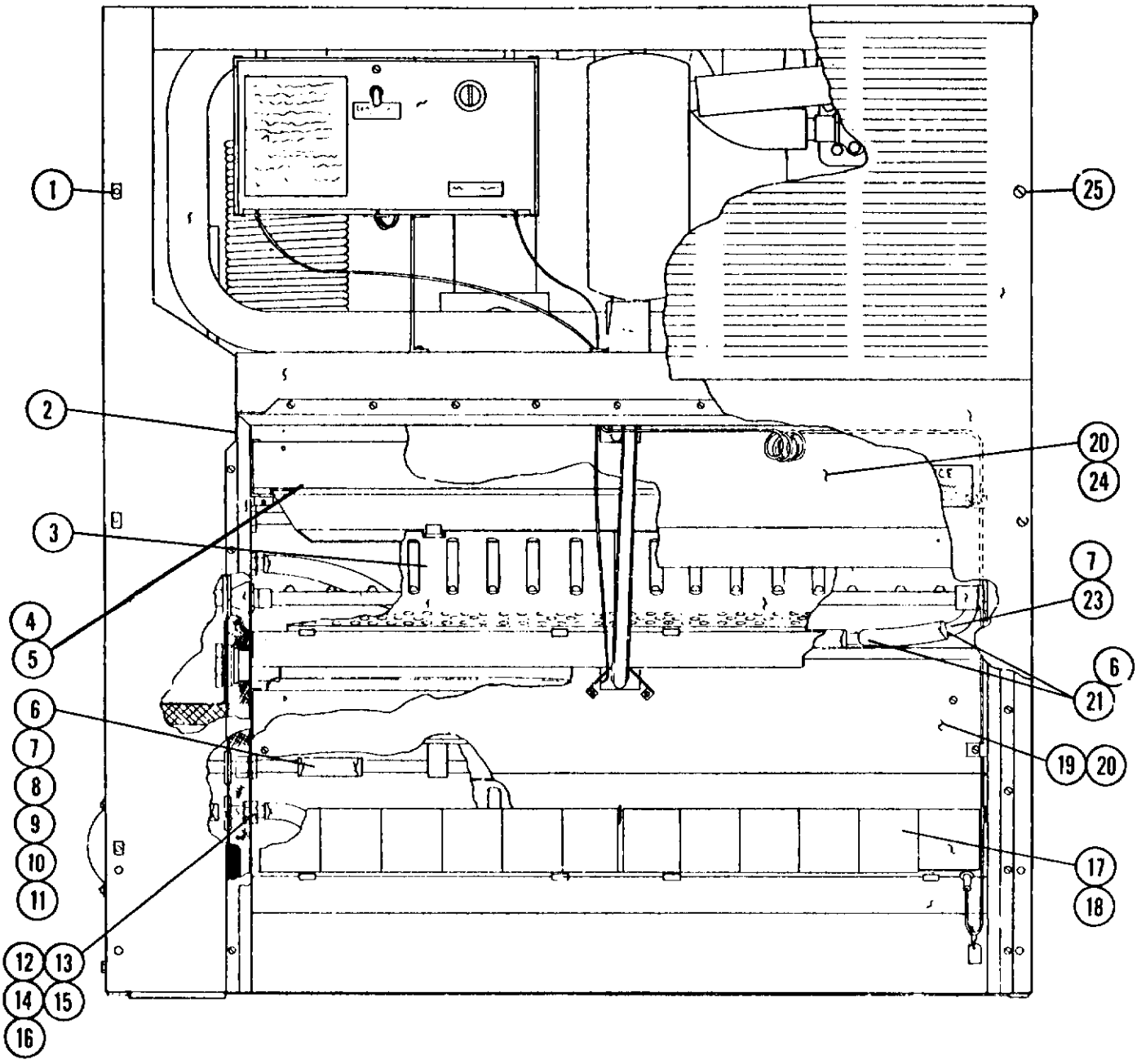

ITEM NO.	PART NO.	DESCRIPTION
1.	03-1029-00	Nut (2 reqd)
2.	A18165-000	Door Gasket (2 reqd)
3.	A21003-000	Chutes (8 reqd)
4.	A20934-000	Platen & Cup Assy (2 reqd)
5.	13-0691-00	Rubber Cupholder only (2 reqd)
6.	13-0674-08	Tygon 3/4" I.D. Per Foot,
7.	02-1358-00	Hose Clamps 3/4"
8.	A18004-000	Inlet Water Assy.
9.	13-0617-02	"O" Ring
10.	13-0327-00	Grommet
11.	A13796-000	Inlet, Inner Assy.
12.	A18174-000	Inlet, Spray Bar
13.	A18172-000	Nut, Inlet Tube
14.	A18173-000	"O" Ring Nut
15.	13-0617-05	"O" Ring

ITEM NO.	PART NO.	DESCRIPTION
16.	13-0169-00	Grommet
17.	A17243-000	Curtain Assy (4 reqd)
18.	03-0727-00	Thumb Screw (curtain)
19.	A17604-000	Face Plate, Lower
20.	03-1404-10	S.S. Screws
21.	02-0536-01	Hose Clamps
23.	13-0674-06	Tygon Tube 5/8" Per Ft.
24.	A17603-000	Face Plate, Upper
25.	03-1418-22	Screws (12 Reqd.)

IN PACKAGE

A19555-000	Bulb Cover
13-0590-00	Gasket
A16108-000	Bulb Holder Buttons

AIR COOLED
Top View

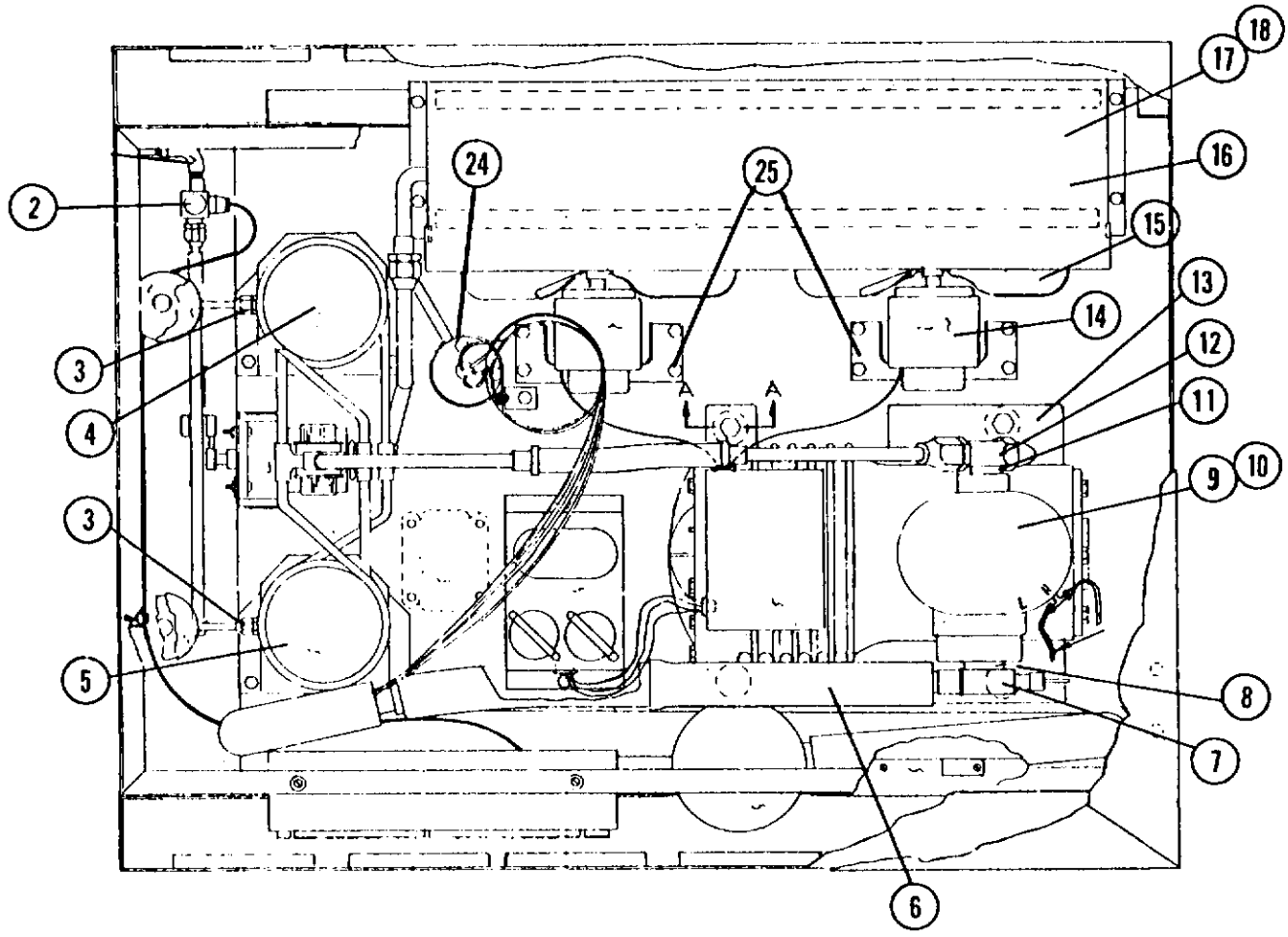

ITEM NO.	PART NO.	DESCRIPTION
1.		Street Elbow
2.	12-0621-G1	Solenoid Valve
3.	A21237-001	Flow Control
4.	A17836-000	Rear Water Tank
5.	A17837-000	Front Water Tank
6.	16-0326-00	Flexible Line
7.	18-1410-00	Suction Serv. Valve
8.	18-0736-00	Suction Serv. Valve Gasket
9.	18-1400-02	Compressor 230 & 208/60/1
	18-1400-03	Compressor 208-230/60/3
10.	18-1415-00	Valve Plate Kit
11.	18-1411-00	Discharge Serv. Valve

ITEM NO.	PART NO.	DESCRIPTION
12.	18-0242-00	Discharge Valve Gasket
13.	18-1929-01	Crank Case Heater*
14.	18-0788-02	Fan Motor
15.	18-0787-00	Fan Blade
16.	18-0399-01	Condenser
17.	A13860-000	Shroud Assy.
18.	03-1404-15	Shroud Fasteners (6)
19.	16-0247-00	Vibrator
20.	18-1405-00	Overload
21.	18-1901-26	Starting Capacitor
22.	18-1902-20	Running Capacitor (2 reqd) 13/52
23.	18-1903-26	Relay
24.	02-0822-00	Dryer
25.	18-1421-00	Fan Motor Bracket

*Not Shown

LEFT SIDE VIEW

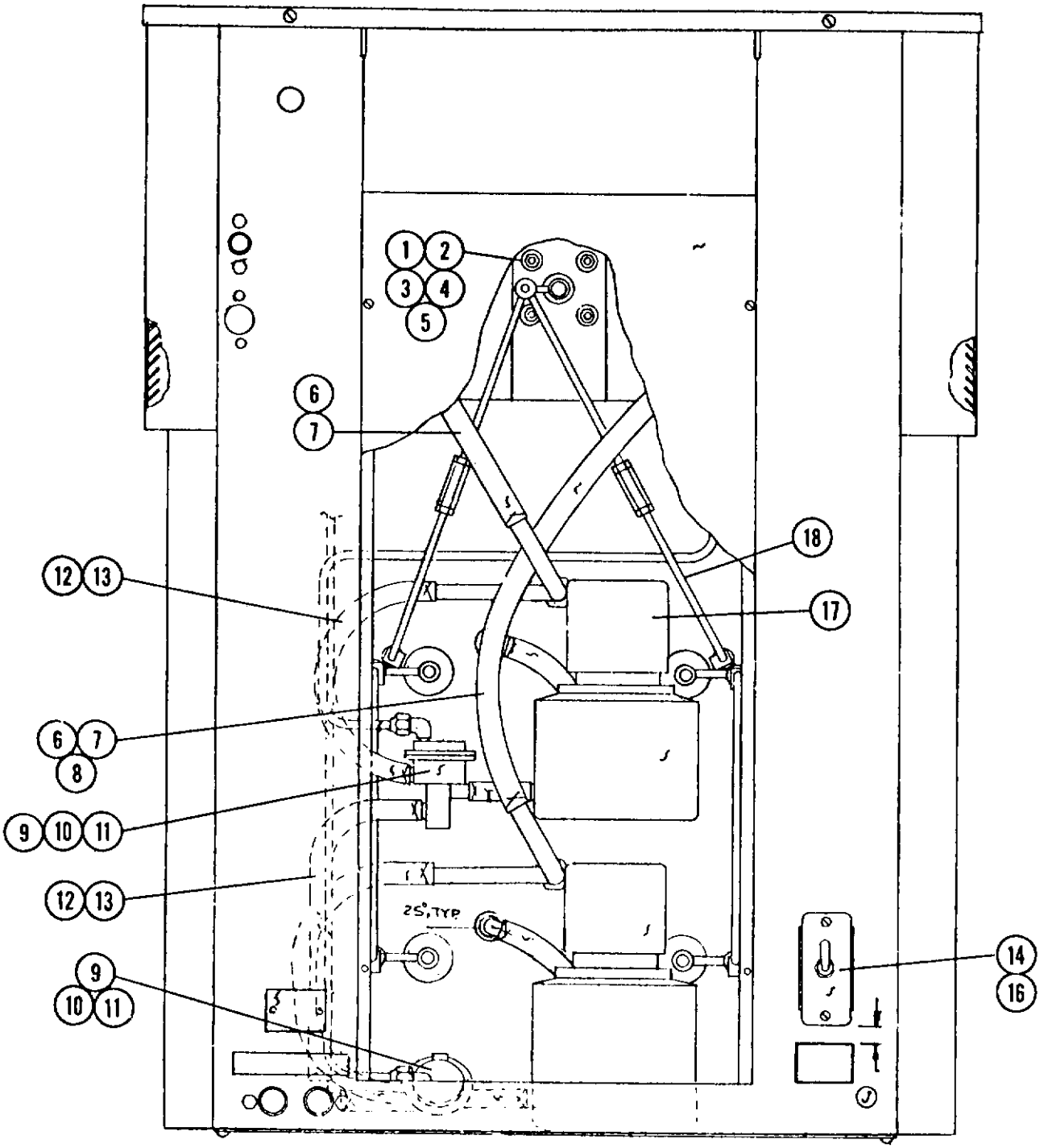

ITEM NO.	PART NO.	DESCRIPTION
1.	A23392-001	Drive Motor
2.	13-0100-00	Grommet (4 reqd)
3.	03-1403-22	Screw (4 reqd)
4.	03-1406-03	Nut (4 reqd)
5.	03-1407-05	Washer (8 reqd)
6.	13-0674-07	Hose 3/8" I.D. per foot
7.	02-1358-01	Hose Clamps 3/4"
8.		Tank Outlet

ITEM NO.	PART NO.	DESCRIPTION
9.	See Page 6	3 way Water Valve
10.	03-1403-28	Screws (4 reqd)
11.	03-1417-05	Lockwashers (4 reqd)
12.	02-0536-00	Hose Clamps
13.	03-0674-10	Tygon Hose 7/16 per ft.
14.	12-0426-01	Switch
16.	03-1403-17	Screw
17.	See Page 7	Sump Pump
18.	A17569-000	Drain Linkage Complete

WATER COOLED
Top View

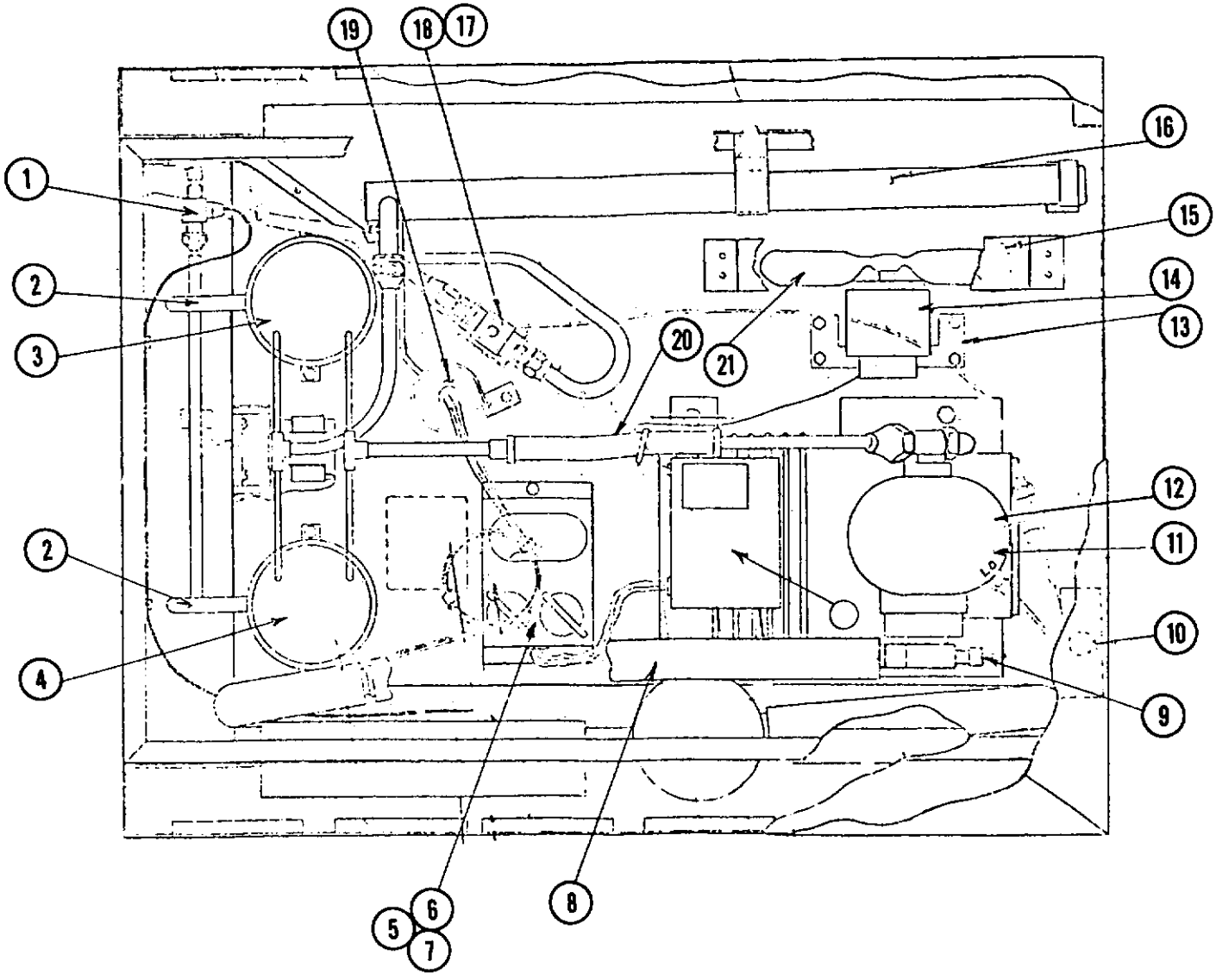

ITEM NO.	PART NO.	DESCRIPTION
1.	12-0621-G1	Solenoid Valve
2.	A21237-001	Flow Control
3.	A17836-000	Rear Water Tank
4.	A17837-000	Front Water Tank
5.	18-1901-27	Starting Capacitor
6.	18-1405-00	Overload
7.	18-1903-26	Relay
8.	16-0326-00	Flexible Line
9.	18-1410-00	Suction Service Valve
10.	11-0286-00	Hi-L Press Control
11.	18-1400-02	Compressor 208-230/60/1
	18-1400-03	Compressor 115/208-220/60/3
12.	18-1415-00	Valve Plate Kit
13.	18-1421-00	Fan Bracket
14.	18-0788-02	Fan Motor 115/230/60/1
	18-0788-07	Fan Motor 115/208-220/60/3
15.	A24927-001	Fan Shroud
16.	18-1422-00	Condenser
17.	11-0198-01	Water Regulating Valve
18.	A18500-000	Regulator Bracket
19.	02-0822-00	Dryer
20.	16-0247-00	Vibration Eliminator
21.	18-0787-00	Fan Blade

CONTROL BOX ASSEMBLY

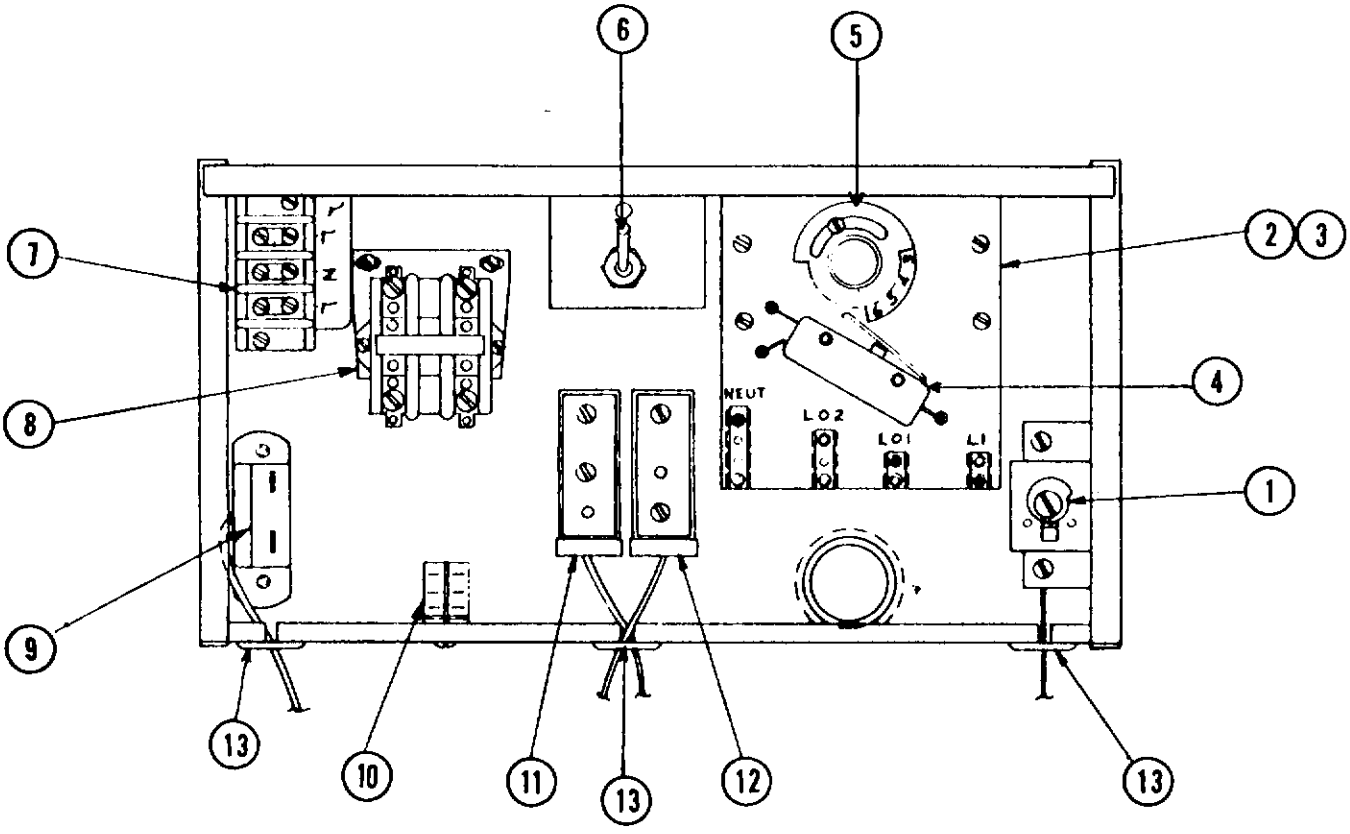

ITEM NO.	PART NO.	DESCRIPTION	
1.	11-0370-00	Cube Size Control	
2.	12-1979-01	Timer Motor Only	
3.	A25923-01	Timer Assembly Complete	
4.	12-1480-00	Micro Switch	
5.	02-1651-00	Cam Assembly	
6.	12-0426-01	Switch	
7.	12-0813-00	Terminal Block	
8.	12-0820-01	Contactor 230 V 60 Cy 1 Ph	
9.	11-0353-01	Bin Thermostat	
10.	12-1645-00	Relay	
11.	11-0342-00	Left Fan Control	Air Cooled
12.	11-0343-00	Right Fan Control	Models Only
13.	13-0124-00	Grommet	
8.	12-0739-01	Contactor 208-220V 60 Cy 3 Ph	

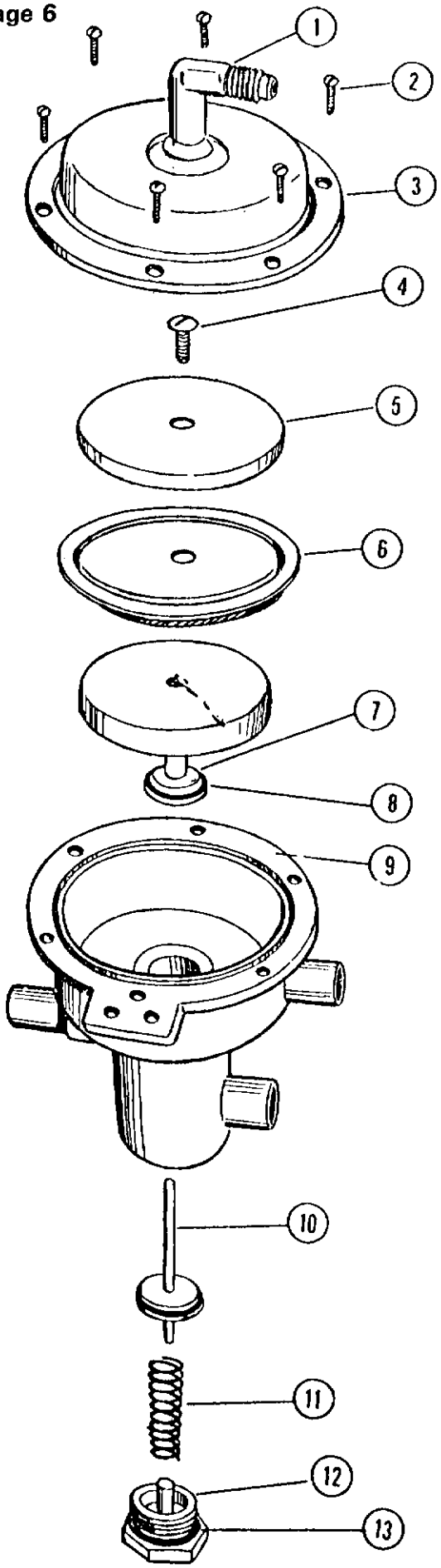

3-WAY WATER VALVE

ITEM NO.	PART NO.	DESCRIPTION
1.	16-0190-00	Elbow
2.	03-1403-06	Screws
3.	A18192-000	Valve Cover
4.	13-1506-01	Screw
5.	A18312-000	Diaphram Cover
6.	13-0606-00	Rolling Diaphram
7.	A17941-000	Plunger Assy.
8.	13-0617-01	"O" Ring
9.	A17947-000	Valve Body
10.	A17942-000	Plunger
11.	02-1545-00	Spring
12.	A17937-000	Valve Cap Bottom
13.	13-0617-02	"O" Ring
	A19722-000	Valve Complete

SUMP PUMP

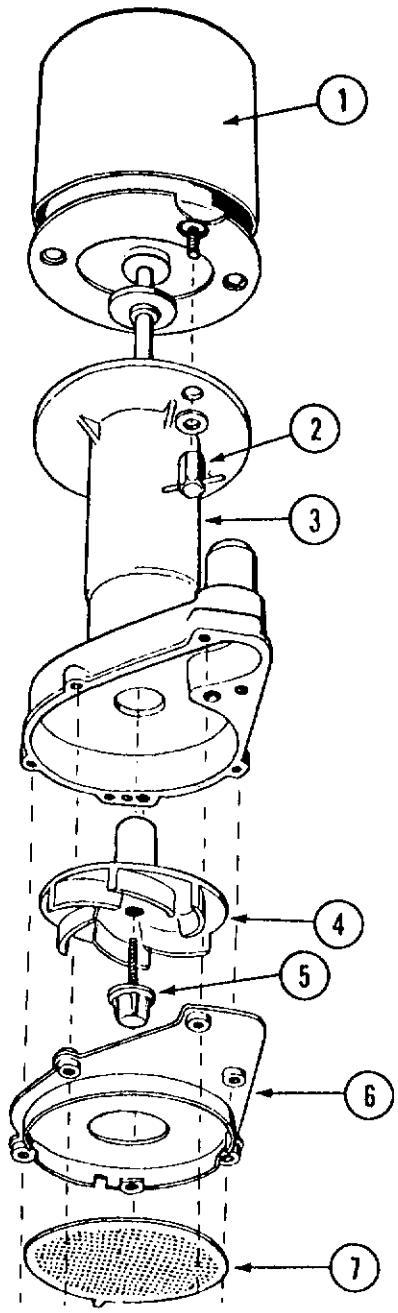

ITEM NO.	PART NO.	DESCRIPTION
1.	12-1701-50	Motor Only
2.	12-1351-32	Wing Hex Nuts
3.		Pump Body
4.	12-1701-24	Impellar
5.	12-1351-31	Impellar Screw and Gasket
6.	12-1701-22	Bottom Inlet Plate
7.	12-1701-22	Inlet Screen
	12-1701-02	Complete Pump

LINKAGE ASSEMBLY
A17569-000

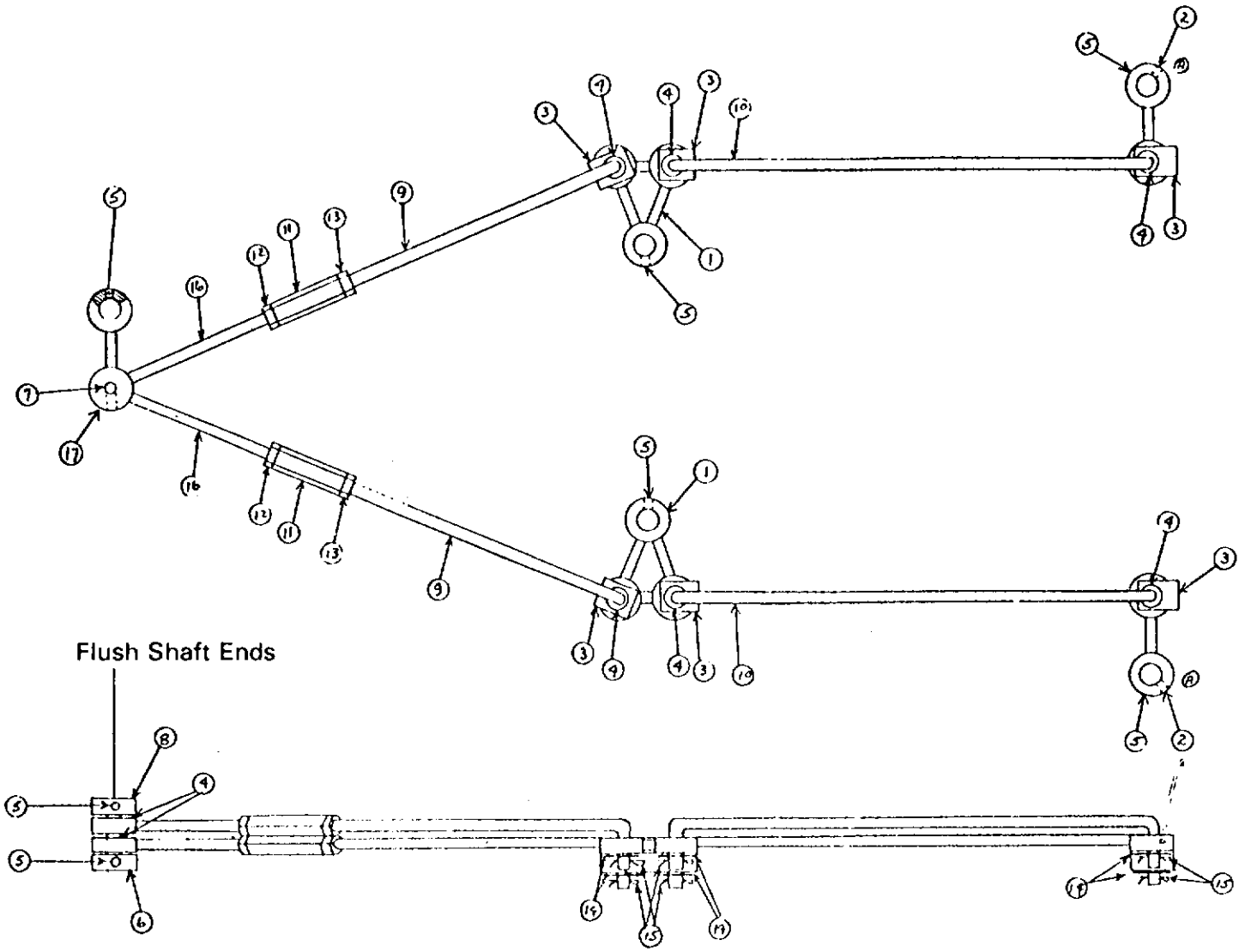

ITEM NO.	PART NO.	DESCRIPTION
1.	A17233-000	Double Drive Arm
2.	A17232-000	Drive Arm
3.	S07558-000	Bearing Clip
4.	02-0654-01	Bearing
5.	03-0431-00	Set Screw
6.	A18948-000	Motor Drive Arm
7.	A13849-000	Shaft
8.	A13848-000	Arm End
9.	S07938-000	Right Linkage
10.	A17568-000	Lower Linkage
11.	S07936-000	Linkage Coupling
12.	S07937-000	Left Linkage Nut
13.	03-1407-05	Washer
14.	03-0396-01	Cotter Pin
15.	A13850-000	Linkage Upper Assy.
16.	A18948-000	Motor Drive Arm

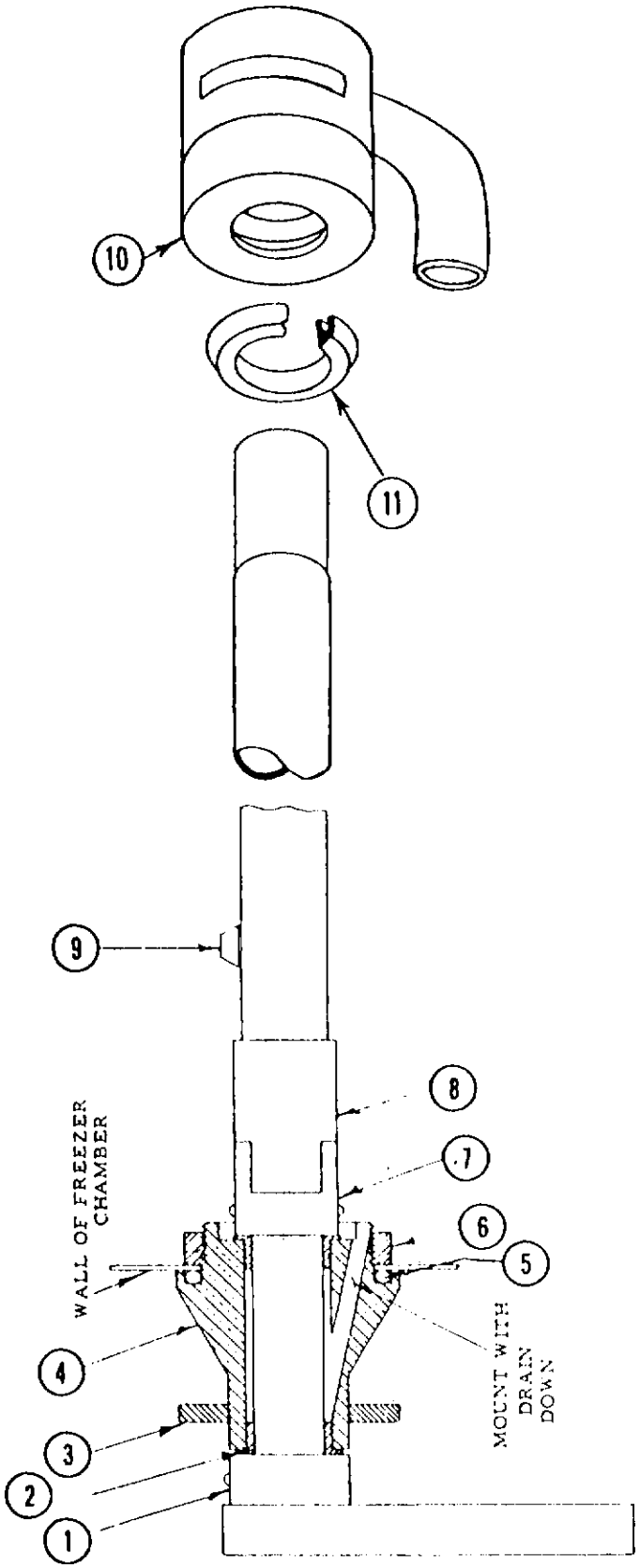

SPRAY TUBE AND SPRAY TUBE DRIVE ASSEMBLY
4 per Unit

ITEM NO.	PART NO.	DESCRIPTION
1.	S07130-000	Collar
2.	02-0438-00	Flange Bearing
3.	13-0169-00	Grommet
4.	S08887-000	Drive Bearing Support
5.	13-0617-33	"O" Ring
6.	S07635-000	Nut
7.	A13837-000	Driving Journal Assy.
8.	A17563-000	Sprayer Tube
9.	02-1803-01	Jet
10.	A16963-000	End Bearing Assy.
11.	13-0168-00	"U" Cup

CASE PARTS
Air and Water Cooled

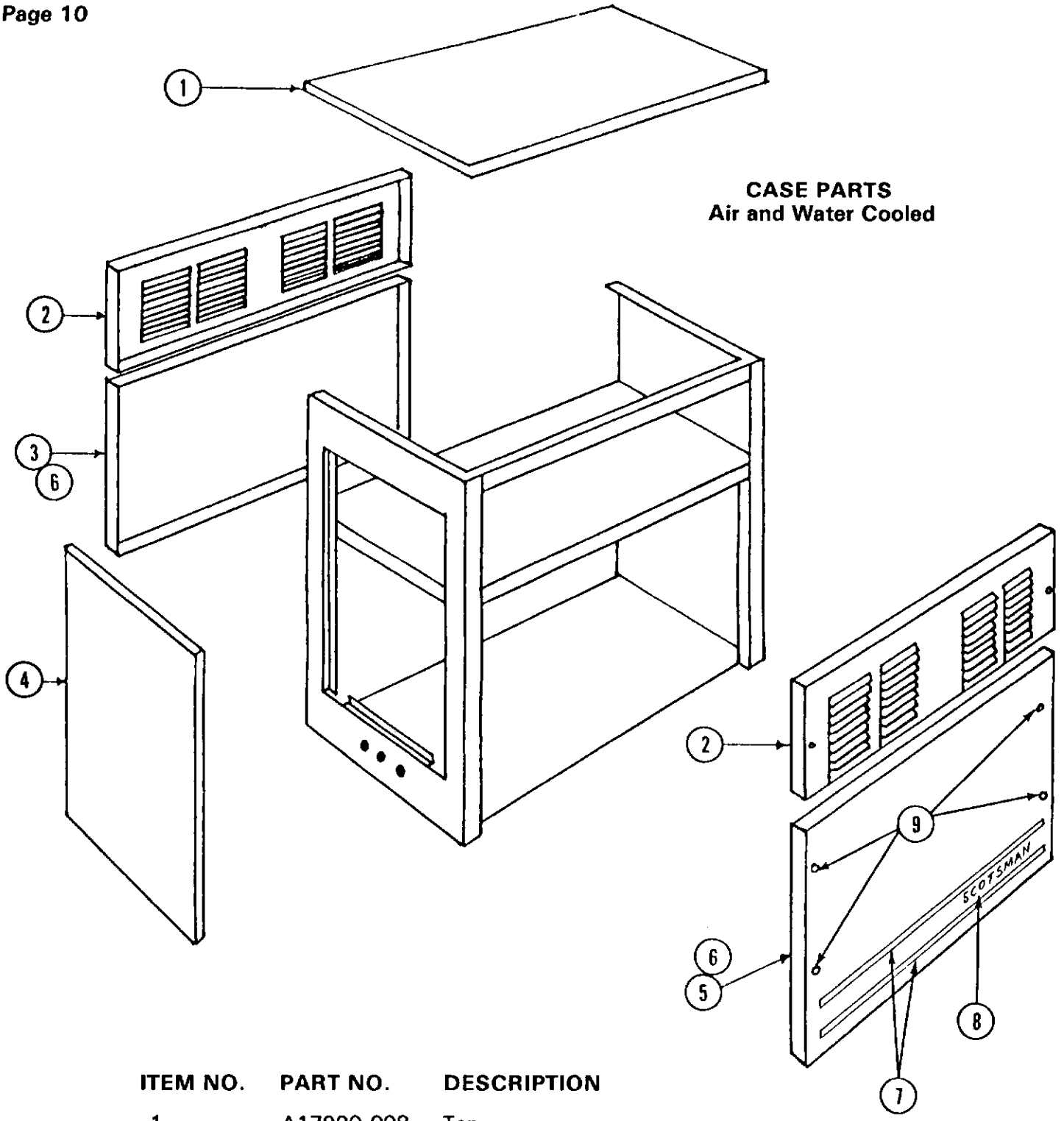

ITEM NO.	PART NO.	DESCRIPTION
1.	A17990-008	Top
2.	A17988-008	Upper Door
3.	A17684-008	Rear Lower
4.	A17710-008	Left Door
5.	A17663-008	Front Lower Door
6.	02-1548-00	Plastic Door Liner
7.	15-0474-01	Emblem Decal
8.	03-1418-22	Screws (26 Reqd)

LEFT SIDE VIEW

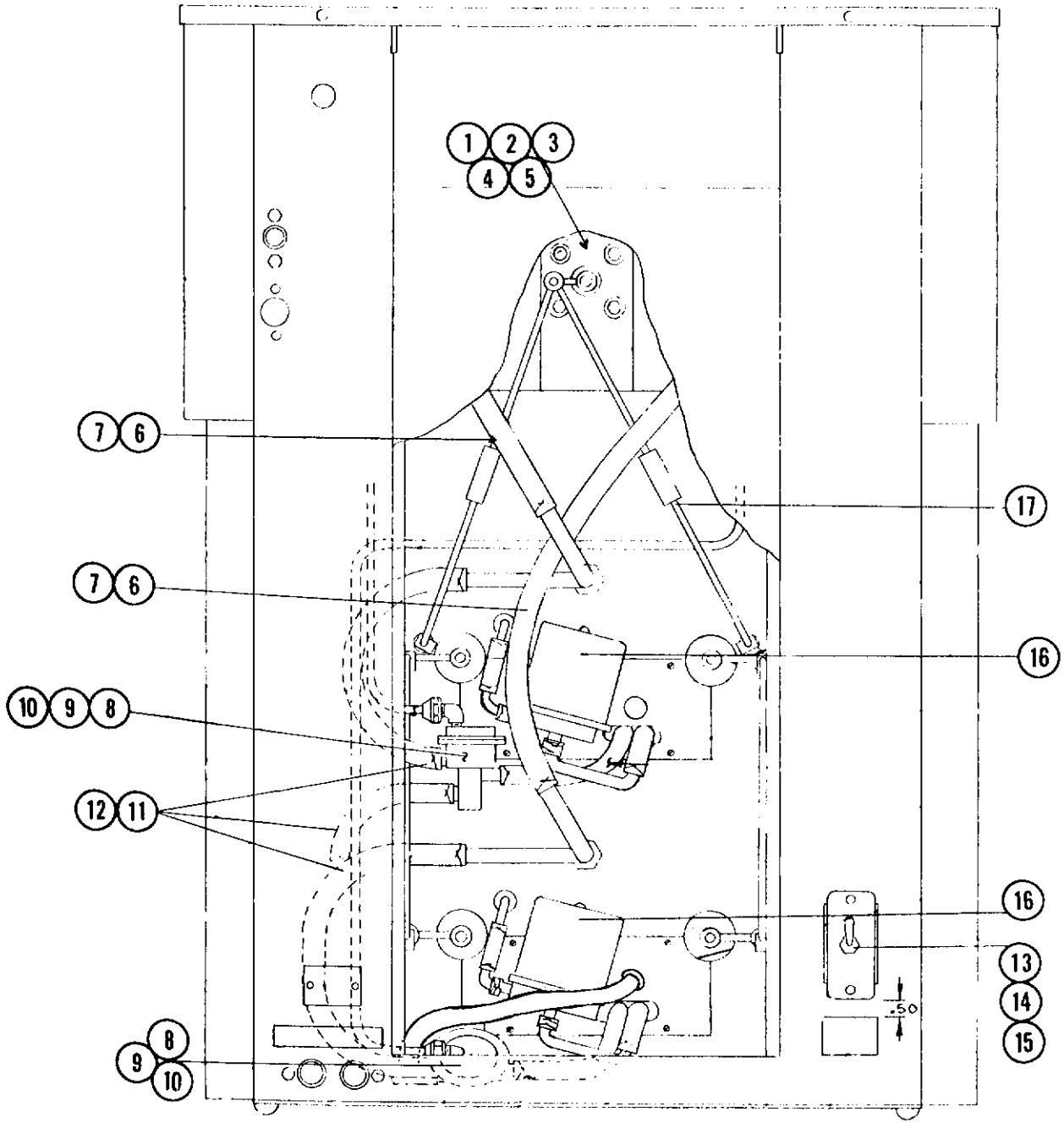

ITEM NO.	PART NO.	DESCRIPTION			
1.	A23392-001	Drive Motor	10.	03-1417-5	Washers (4 reqd)
2.	13-0100-00	Grommet (4 reqd)	11.	13-0674-06	Hose 5/8 I.D. per ft.
3.	03-1403-22	Screw (4 reqd)	12.	02-1338-01	Hose Clamp
4.	03-1406-03	Nut (4 reqd)	13.	12-0426-00	Switch
5.	03-1407-04	Washer (8 reqd)	14.	A16865-008	Switch Plate
6.	13-0674-07	Hose 3/4 I.D. per ft.	15.	03-1403-17	Screw
7.	13-1358-01	Hose Clamps	16.	12-1798-01	Sump Pump
8.	See Page 7	3 way Water Valve	17.	See Page 8	Drive Linkage Complete
9.	03-1403-28	Screws (4 reqd)			

FRONT VIEW

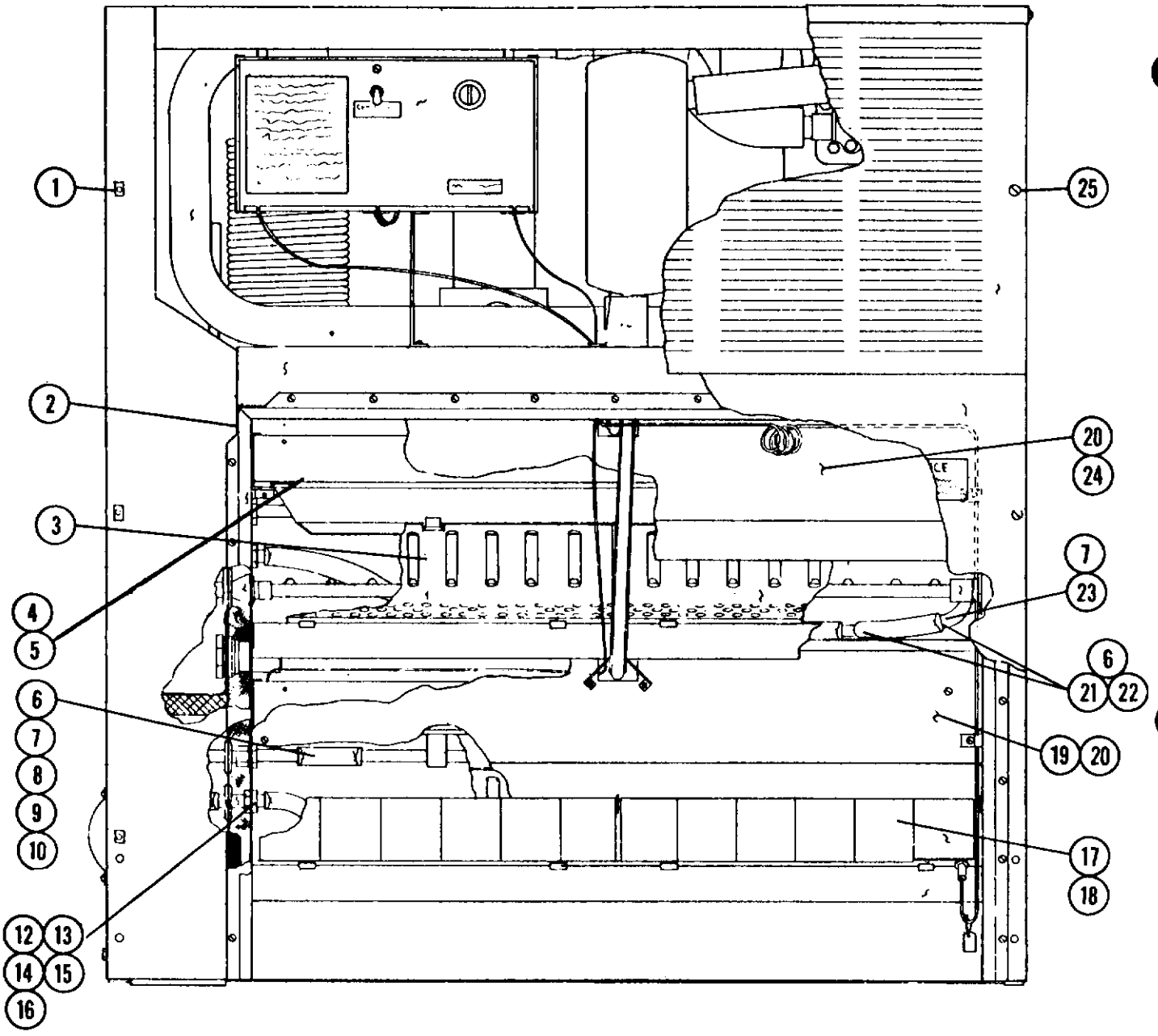

ITEM NO.	PART NO.	DESCRIPTION
1.	03-1029-00	Nut (2 reqd)
2.	A18165-000	Door Gasket (2 reqd)
3.	02-1986-00	Chutes (8 reqd)
4.	See View Pg. 7	Upper Freezer & Cup Assy.
		Lower Freezer & Cup Assy.
5.	13-0573-00	Rubber Cupholder only (8 reqd.)
6.	13-0674-07	Tygon 3/4/" I.D. Per Foot
7.	02-1358-00	Hose Clamps 3/4"
8.	A18004-000	Inlet Water Assy.
9.	13-0617-02	"O" Ring
10.	13-0327-00	Grommet
11.		
12.	A23292-000	Inlet Spray Bar
13.	A18172-000	Nut, Inlet Tube
14.	A18173-000	"O" Ring Nut
15.	13-0617-05	"O" Ring
16.	13-0169-00	Grommet

ITEM NO.	PART NO.	DESCRIPTION
17.	A16541-000	Curtain Assy. (4 reqd)
18.	03-0727-00	Thumb Screw (curtain)
19.	A22995-000	Face Plate, Lower Front
20.	03-1404-10	S.S. Screws
21.	02-0536-01	Hose Clamps
22.		Tee 5/8 x 5/8 x 3/4
23.	13-0674-06	Tygon Tube 5/8" per ft.
24.	A22997-000	Face Plate, Upper Front
25.	03-1418-22	Screws (12 reqd)
		IN PACKAGE
	A19555-000	Bulb Cover
	13-0590-00	Gasket
	A16108-000	Bulb Holder Buttons
		Faceplate, Upper Rear (Not Shown)
		Faceplate, Lower Rear (Not Shown)
		Inlet Assy.

AIR COOLED
Top View

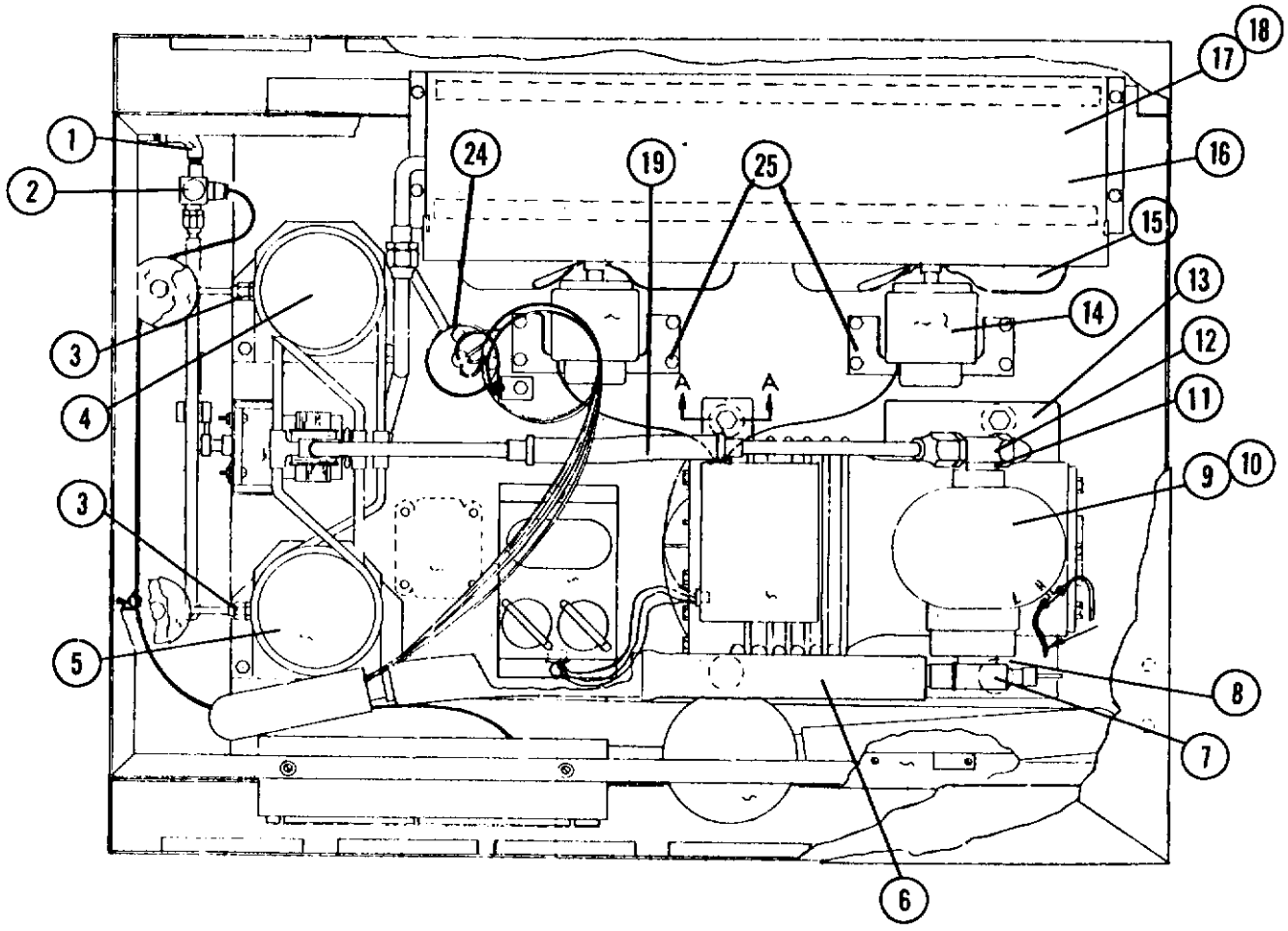

ITEM NO.	PART NO.	DESCRIPTION
1.		Street Elbow
2.	12-0621-G1	Solenoid Valve
3.	A21237-002	Flow Control
4.	A23087-000	Rear Water Tank
5.	A23086-000	Front Water Tank
6.	16-0326-00	Flexible Line
7.	18-1410-00	Suction Serv. Valve
8.	18-0736-00	Suction Serv. Valve Gasket
9.	18-1400-02	Compressor 115/230/60/1
	18-1400-03	Compressor 115/208-220/60/3
	18-1400-02	Compressor 115/208/60/1
10.	18-1415-00	Valve Plate Kit
11.	18-1411-00	Discharge Serv. Valve
12.	18-0242-00	Discharge Valve Gasket
13.	18-1929-01	Crank Case Heater*
14.	18-0788-02	Fan Motor 115/230/60/1
	18-0788-07	Fan Motor 115/208-220/60/30
	18-0788-02	Fan Motor 115/208/60/1

ITEM NO.	PART NO.	DESCRIPTION
15.	18-0787-00	Fan Blade
16.	18-0399-01	Condenser
17.	A13860-000	Shroud Assy.
18.	03-1404-15	Shroud Fasteners
19.	16-0247-00	Vibration Connection
20.	18-1405-00	Overload 115/230/60/1
	18-1406-00	Overload 115/208-229/60/3
	18-1405-00	Overload 115/208/60/1
21.	18-1901-27	Starting Capacitor
22.	18-1902-27	Running Capacitor
23.	18-1903-26	Relay
24.	02-0822-00	Dryer
25.	18-1421-00	Fan Motor Bracket
	*Not Shown	

WATER COOLED
Top View

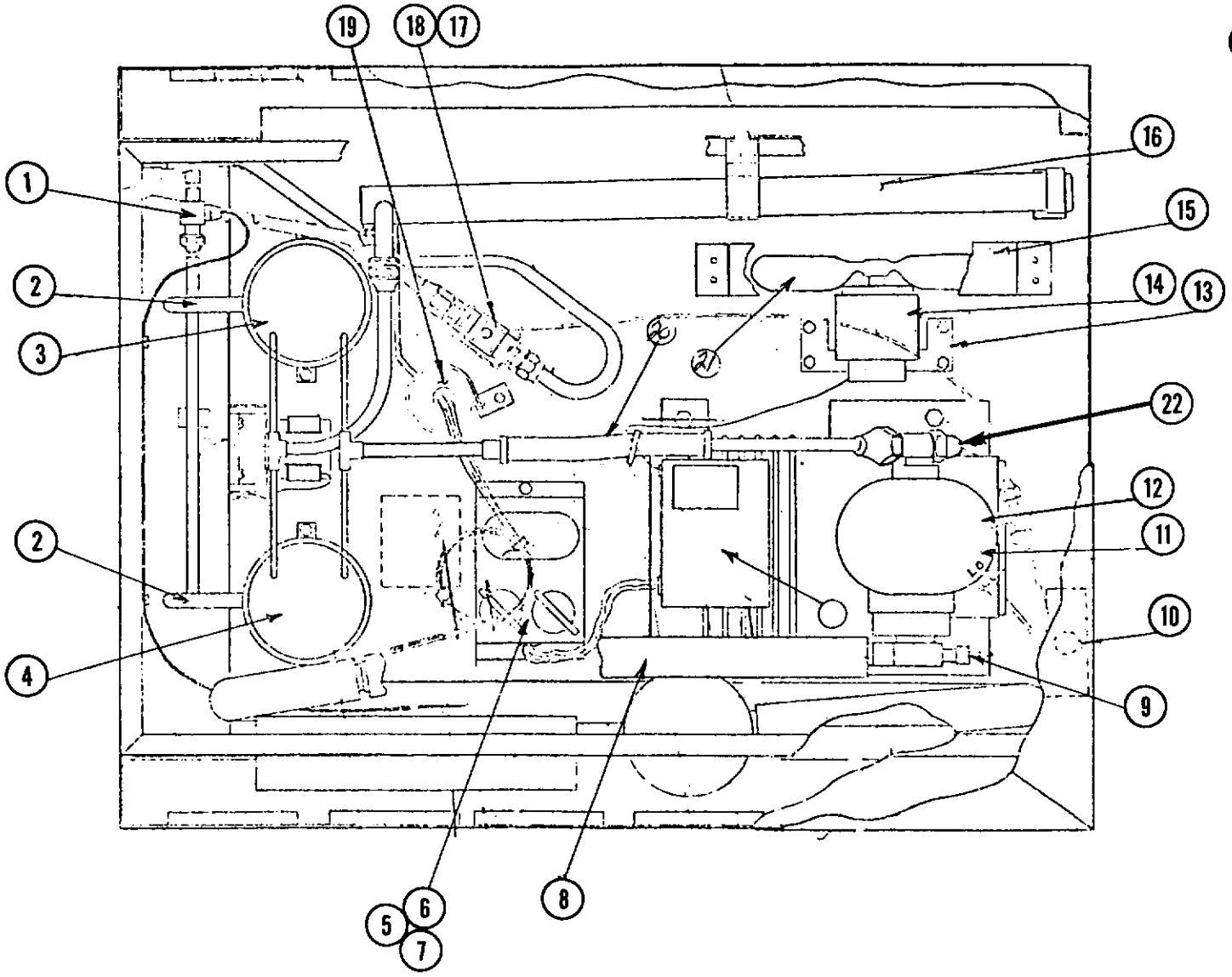

ITEM NO.	PART NO.	DESCRIPTION
1	12-0621-G1	Solenoid Valve
2.	A21237-002	Flow Control
3.	A23087-000	Rear Water Tank
4.	A23086-000	Front Water Tank
5.	18-1901-27	Starting Capacitor
6.	18-1405-00	Overload
7.	18-1903-26	Relay
8.	16-0326-00	Flexible Line
9.	18-1410-00	Suction Service Valve
10.	11-0286-00	Hi-Lo Press Control
11.	18-1400-02	Compressor 115/230/60/1
	18-1400-07	Compressor 115/208-220/60/3
	18-1400-02	Compressor 115/208/60/1
12.	18-1415-00	Valve Plate Kit
13.	18-1421-00	Fan Bracket
14.	18-0788-02	Fan Motor 115/230/60/1
	18-0788-07	Fan Motor 115/208/220/60/3
15.	A24927-001	Fan Shroud
16.	18-1422-00	Conderser
17.	11-0198-01	Water Regulating Valve
18.	A18500-000	Regulator Bracket
19.	02-0822-00	Dryer
20.	16-0247-00	Vibration Eliminator
21.	18-0787-00	Fan Blade
22.	18-1411-00	Discharge Service Valve

HOT WATER TANK ASSEMBLY

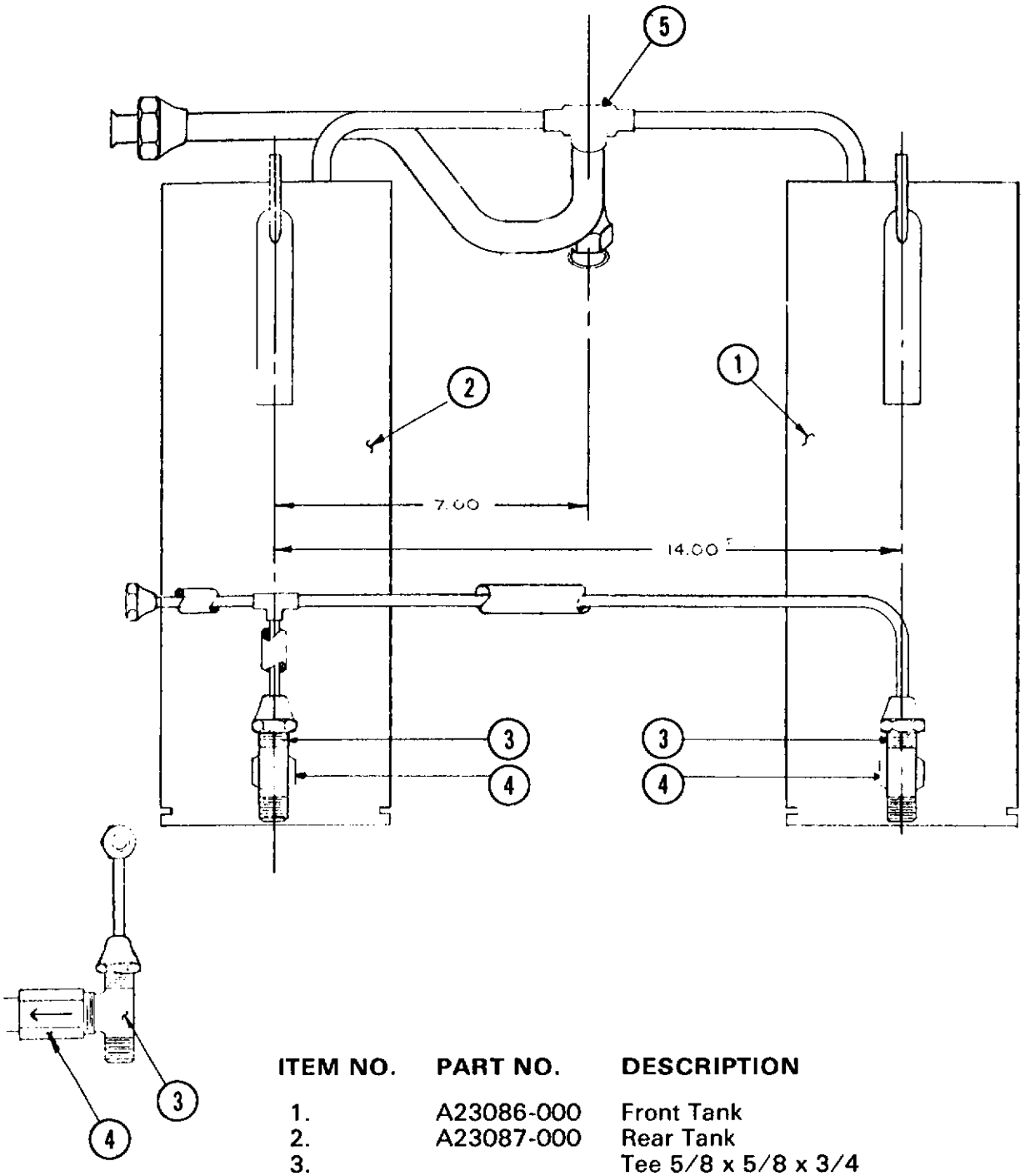

ITEM NO.	PART NO.	DESCRIPTION
1.	A23086-000	Front Tank
2.	A23087-000	Rear Tank
3.		Tee 5/8 x 5/8 x 3/4
4.	A21237-002	Flow Control
5.		Tee
6.	16-0247-00	Vibration Eliminators*

*Not Shown

CONTROL BOX ASSEMBLY

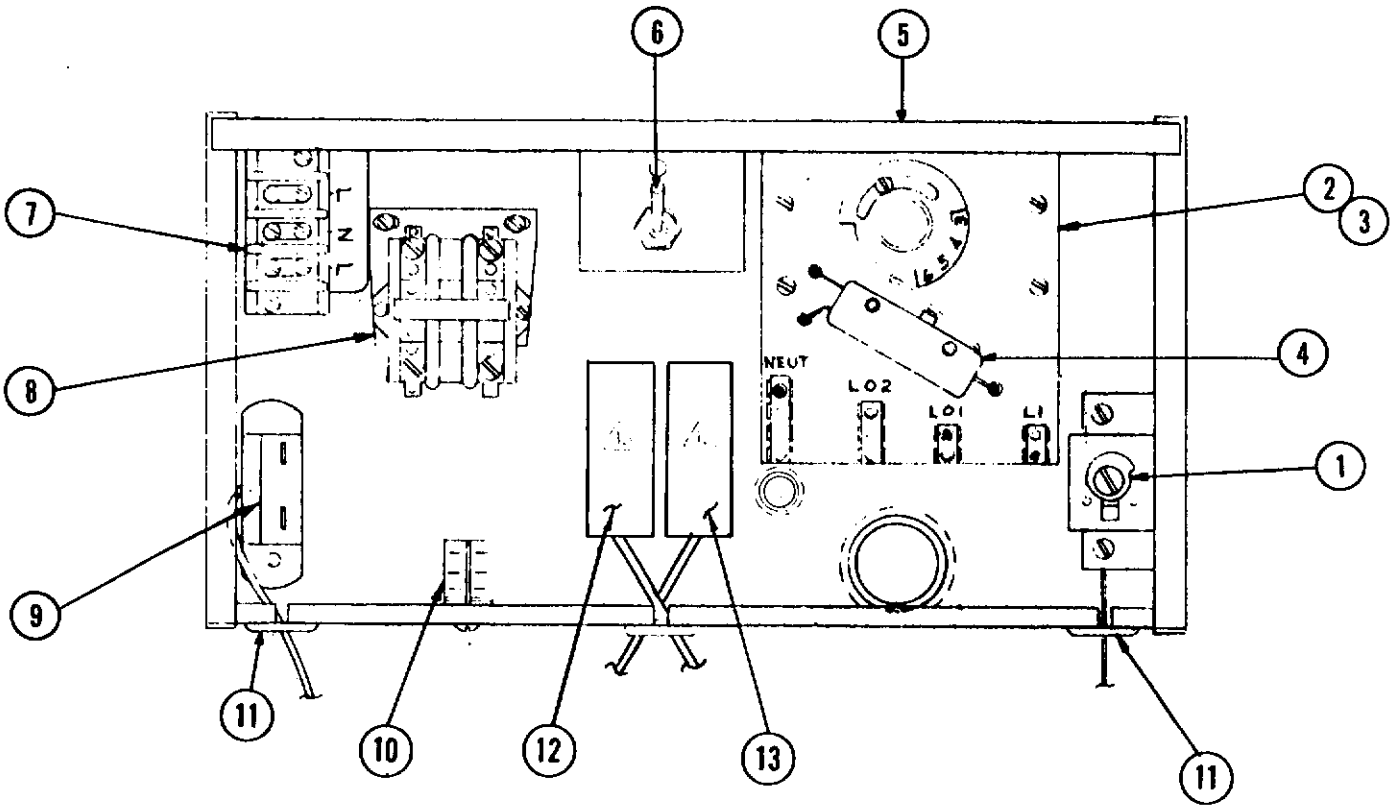

ITEM NO.	PART NO.	DESCRIPTION
1.	11-0345-00	Cube Size Control
2.	A25922-001	Timer Assembly Complete
3.	03-1404-01	Screws
4.	12-1721-50	Micro Switch
5.	12-0481-00	Resistor*
6.	12-0426-01	Switch
7.	12-0813-00	Terminal Block
8.	12-0820-01	Contactor 230 V 60 Cy 1 ph
	12-0739-01	Contactor (3 Pole)
9.	11-0353-01	Bin Thermostat
10.	12-1598-00	Relay
11.	13-0124-00	Grommet
12.	11-0342-00	Left Fan Control
13.	11-0343-00	Right Fan Control

*Not Shown — Air Cooled Models Only.

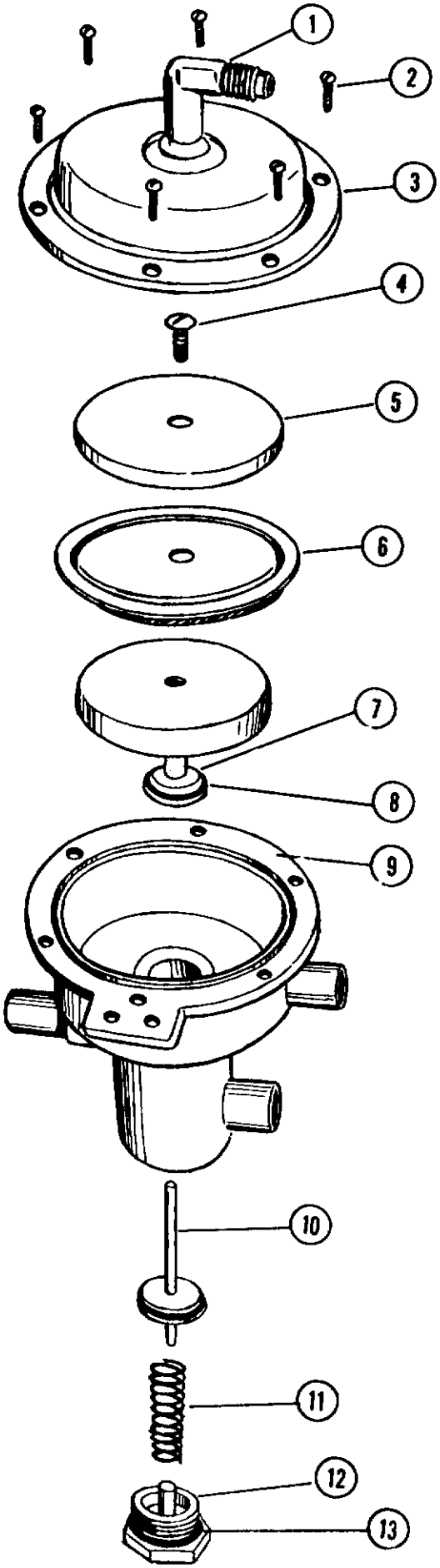

3-WAY WATER VALVE

ITEM NO.	PART NO.	DESCRIPTION
1.	16-0190-00	Elbow
2.	03-1403-06	Screws
3.	A18192-000	Valve Cover
4.	13-1506-01	Screw
5.	A18312-000	Diaphram Cover
6.	13-0606-00	Rolling Diaphram
7.	A17941-000	Plunger Assy.
8.	13-0617-01	"O" Ring
9.	A17947-000	Valve Body
10.	A17942-000	Plunger
11.	02-1545-00	Spring
12.	A17937-000	Valve Cap Bottom
13.	13-0617-02	"O" Ring
	A19722-000	Valve Complete

LINKAGE ASSEMBLY
A17569-000

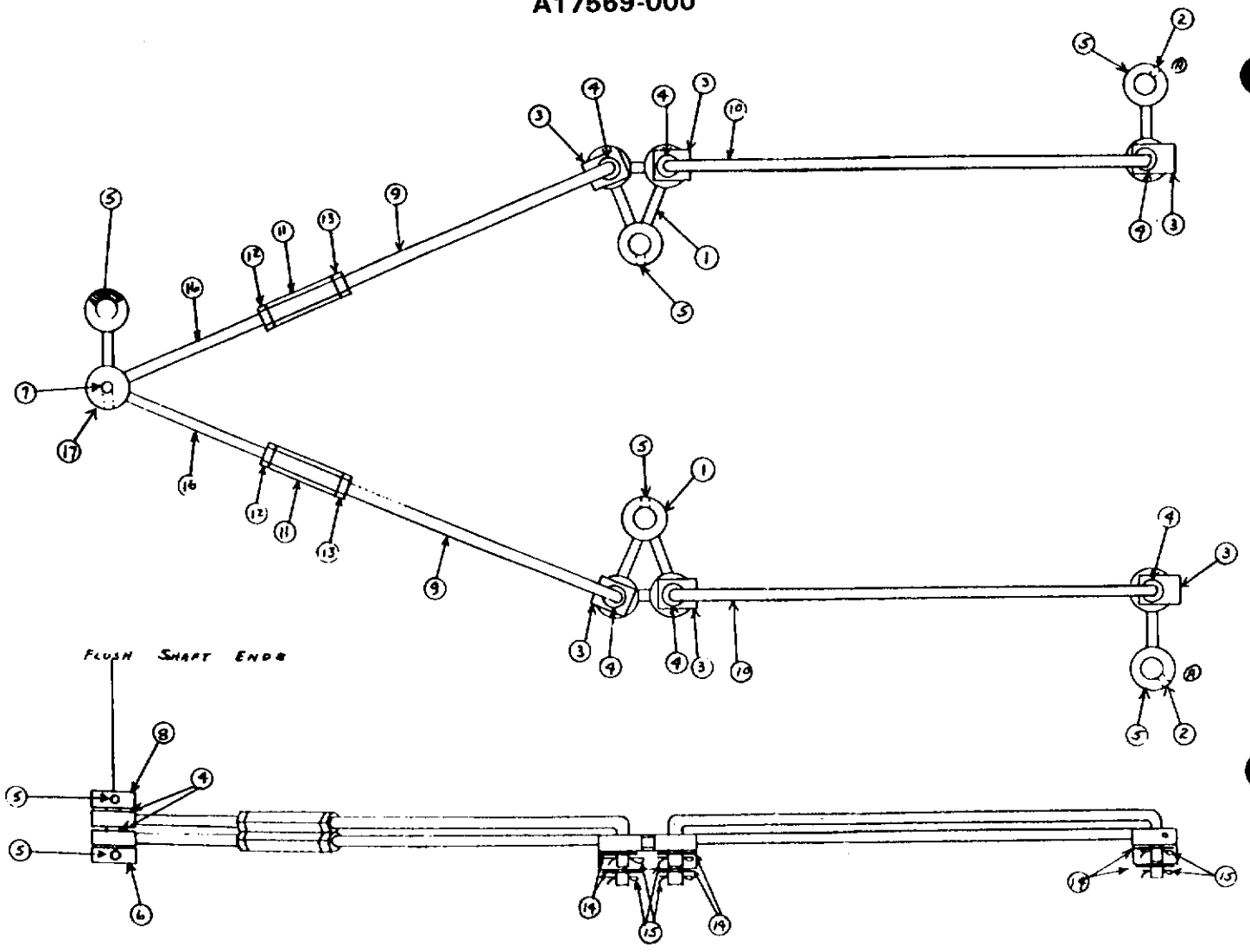

ITEM NO.	PART NO.	DESCRIPTION
1.	A17233-000	Double Drive Arm
2.	A17232-000	Drive Arm
3.	S07558-000	Bearing Clip
4.	02-0654-01	Bearing
5.	03-0431-00	Set Screw
6.	A18948-000	Motor Drive Arm
7.	A13849-000	Shaft
8.	A13848-000	Arm End
9.	S07938-000	Right Linkage
10.	A17568-000	Lower Linkage
11.	S07936-000	Linkage Coupling
12.	S07937-000	Left Linkage Nut
13.	03-1407-05	Washer
14.	03-0396-01	Cotter Pin
15.	A13850-000	Linkage Upper Assy
16.	A18948-000	Motor Drive Arm

WATER PUMP

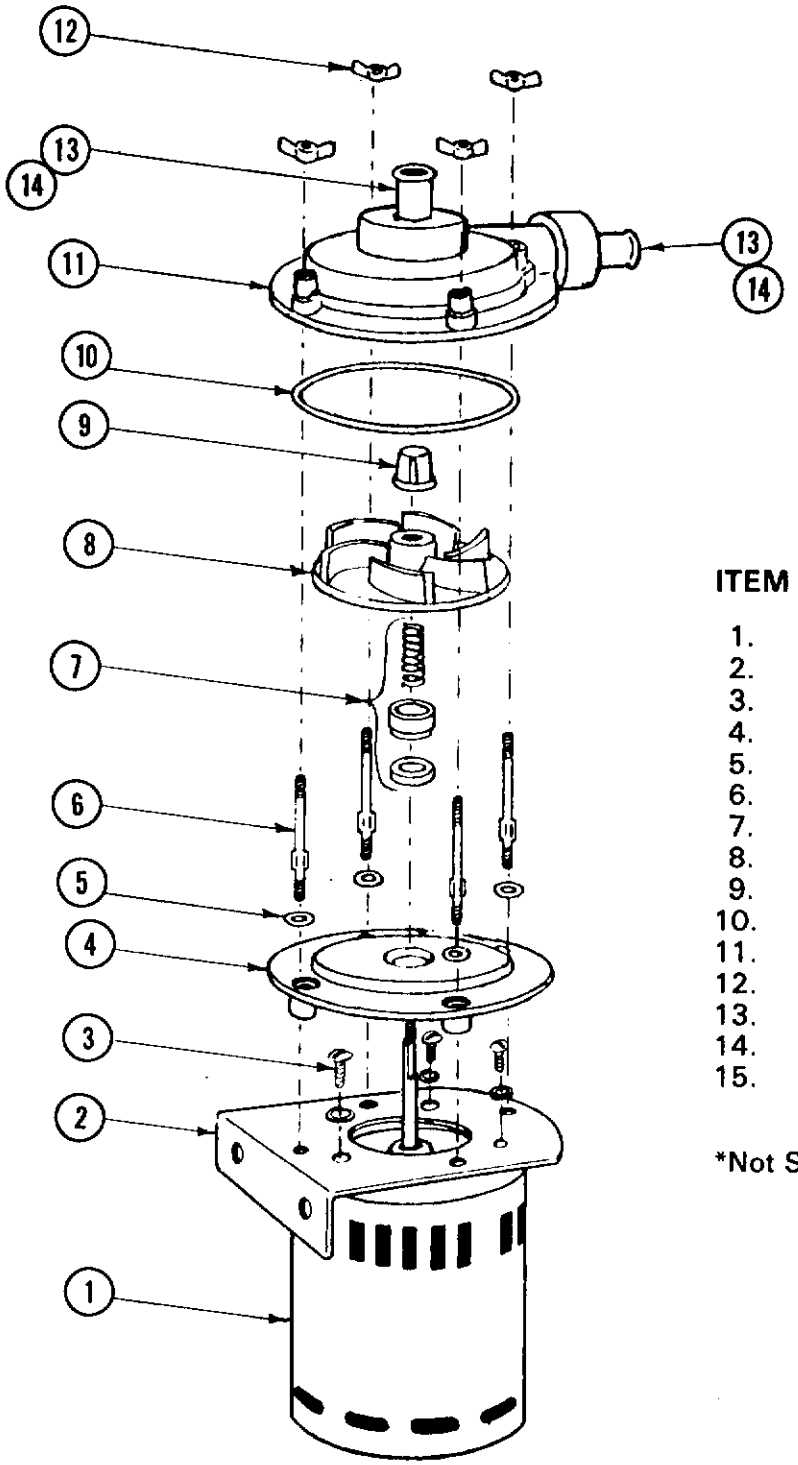

ITEM NO.	PART NO.	DESCRIPTION
1.	12-1798-51	Motor Only
2.		Mounting Bracket
3.		Screws
4.	12-1532-54	Pump Base
5.	12-1532-55	Washer
6.	12-1532-56	Screw
7.	12-1532-57	Seal Assembly
8.		Impeller
9.	12-1532-59	Impeller Cap
10.	12-1532-60	"O" Ring
11.	12-1532-61	Pump Housing
12.	12-1532-62	Wing Nuts
13.	12-1532-63	Gaskets
14.	12-1532-65	Inlet & Outlet Fittings
15.		Capacitor - 4 MF*
	12-1798-01	Pump Complete

*Not Shown

SPRAY TUBE AND SPRAY TUBE DRIVE ASSEMBLY

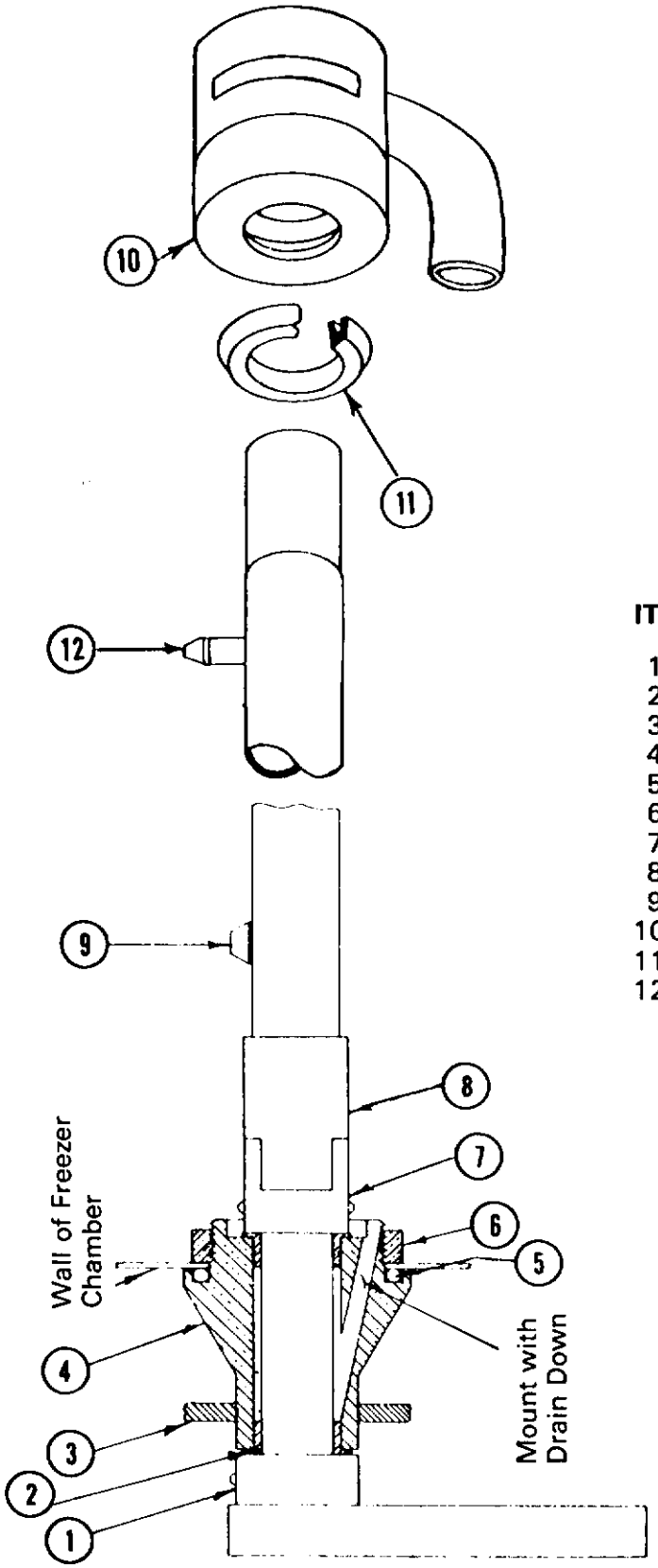

ITEM NO.	PART NO.	DESCRIPTION
1.	S07130-000	Collar
2.	02-0438-00	Flange Bearing
3.	13-0169-00	Grommet
4.	S08887-000	Drive Bearing Support
5.	13-0617-33	"O" Ring
6.	S07635-000	Nut
7.	A13837-000	Driving Journal Assy.
8.	A24048-001	Sprayer Tube Assembly
9.	02-1803-01	Jet 22 per Spray Bar
10.	A24010-001	End Bearing Assy.
11.	13-0168-00	"U" Cup
12.	A20852-002	Jets - 4 per Spray Bar

FREEZER ASSEMBLY

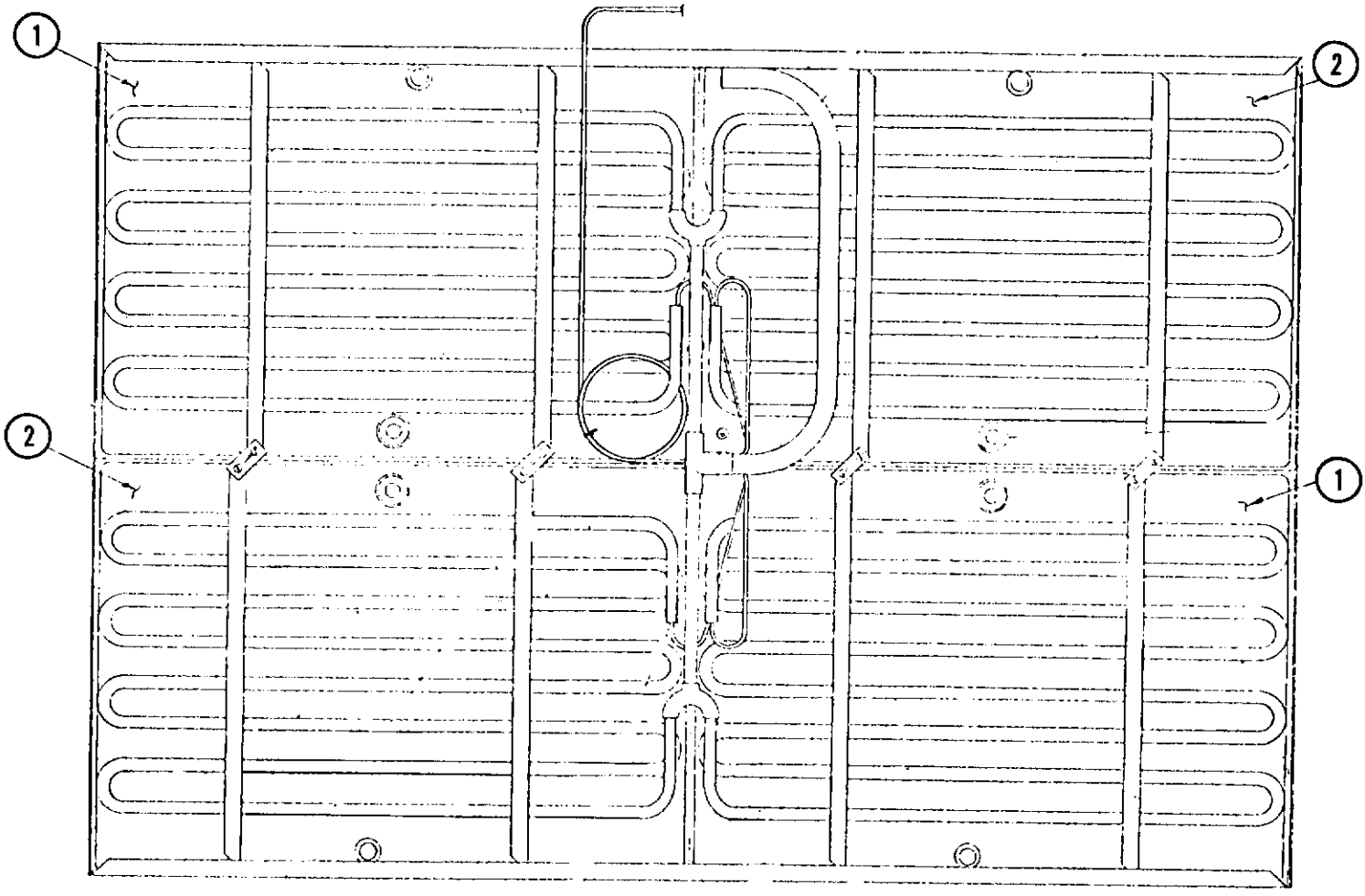

ITEM NO.	PART NO.	DESCRIPTION
1.	A23039-000	Platen Assy Includes Rubber Cup Holder
2.	A23022-000	Platen Assy. Includes Rubber Cup Holder

CASE PARTS
Air and Water Cooled

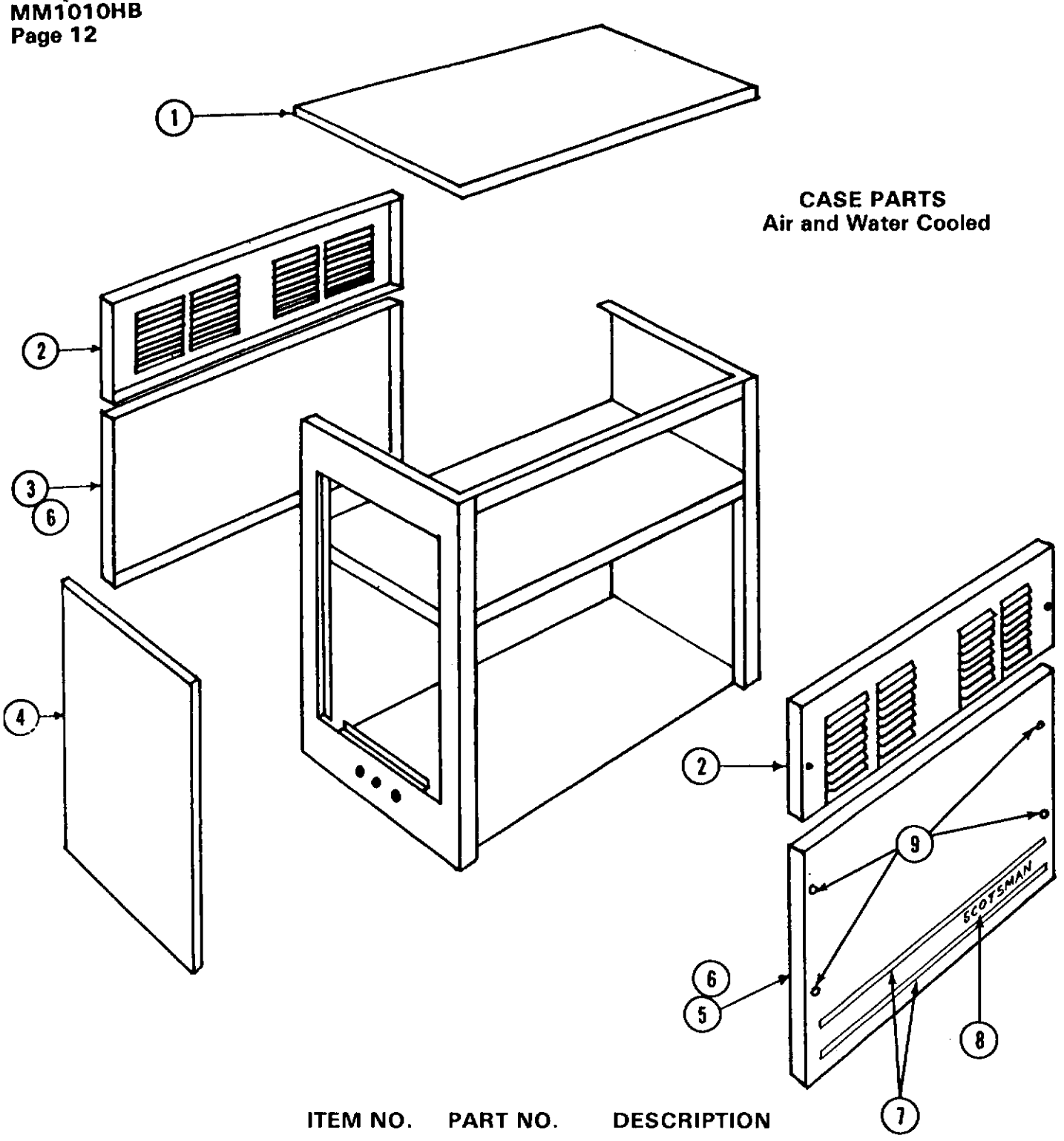

ITEM NO.	PART NO.	DESCRIPTION
1.	A17990-008	Top
2.	A17988-008	Upper Door
3.	A17684-008	Rear Lower Door
4.	A17710-008	Left Door
5.	A17663-008	Front Lower Door
6.	02-1548-00	Plastic Door Liner
7.	15-0474-01	Emblem Decal
8.	03-1418-22	Screws (26 reqd)

CABINET - AIR COOLED

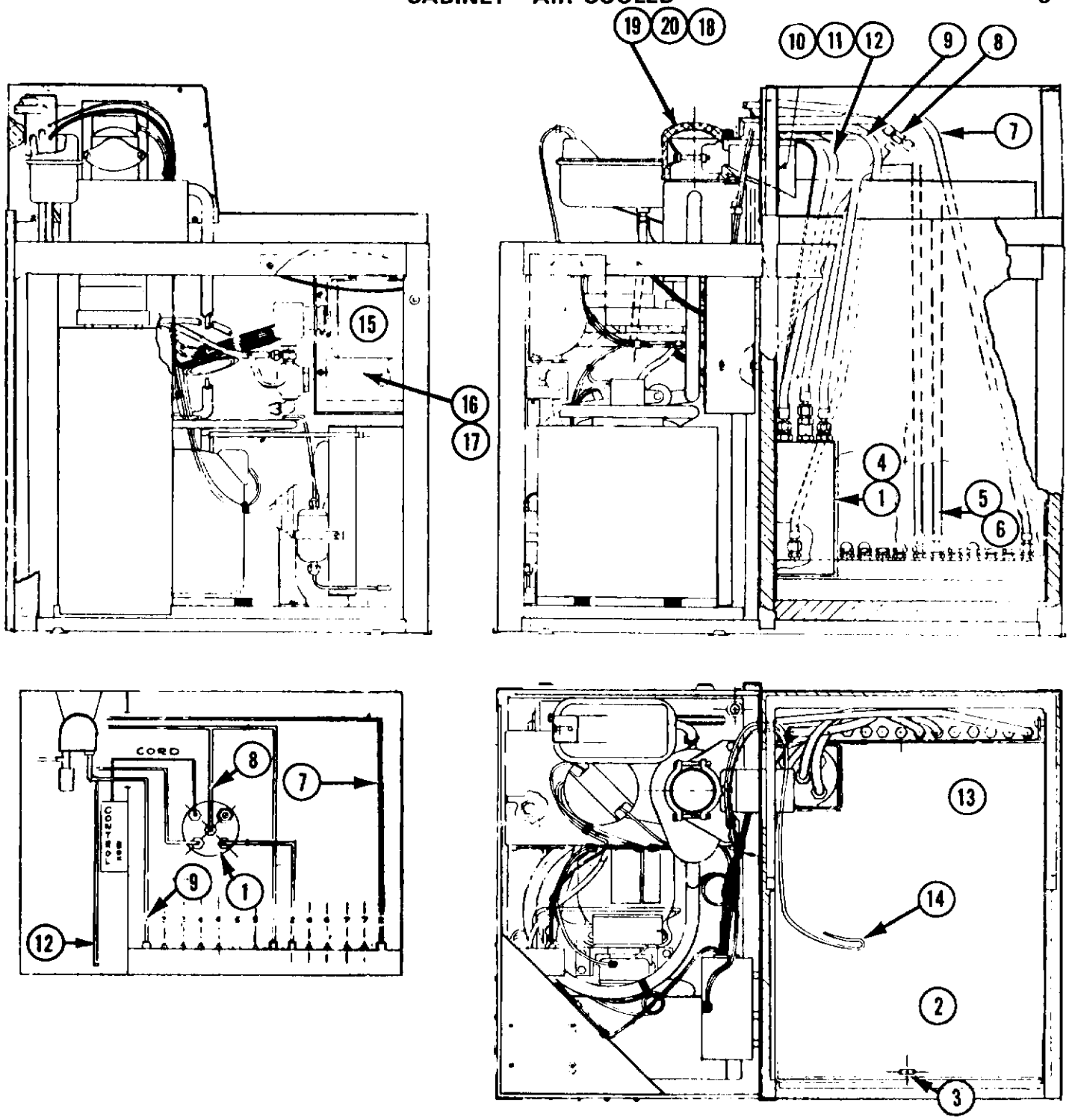

ITEM NO.	PART NO.	DESCRIPTION
1.	See Page 8	Carbonator Tank
	See Page 13 & 14	Liquid Level Control*
2.	A18028-000	Cold Plate Assembly
3.	A22106-000	Eye Bolt
4.	02-1859-00	Tank Bracket
5.	02-1249-00	Washer
6.	A17743-000	Soda Line Assembly
7.	A17743-001	Soda Line Assembly
8.	A17718-000	Water Line Assembly
9.	A17737-000	Flexible Line Assembly
10.	03-1409-04	Washer

ITEM NO.	PART NO.	DESCRIPTION
11.	SO7044-000	Nut
12.	A17732-000	CO2 Line ssembly
13.	A21645-000	Storage Bin Assembly
14.	A21239-000	Control Bulb Holder
15.	See Page 11	Carbonator Pump
16.	A17895-000	Cover, Control Box
17.	See Page 13 & 14	Control Box
18.	A15070-000	Spout Insulation Lt.
19.	A15071-000	Spout Insulation Rt.
20.	A08736-000	Strap (2)

CABINET - WATER COOLED

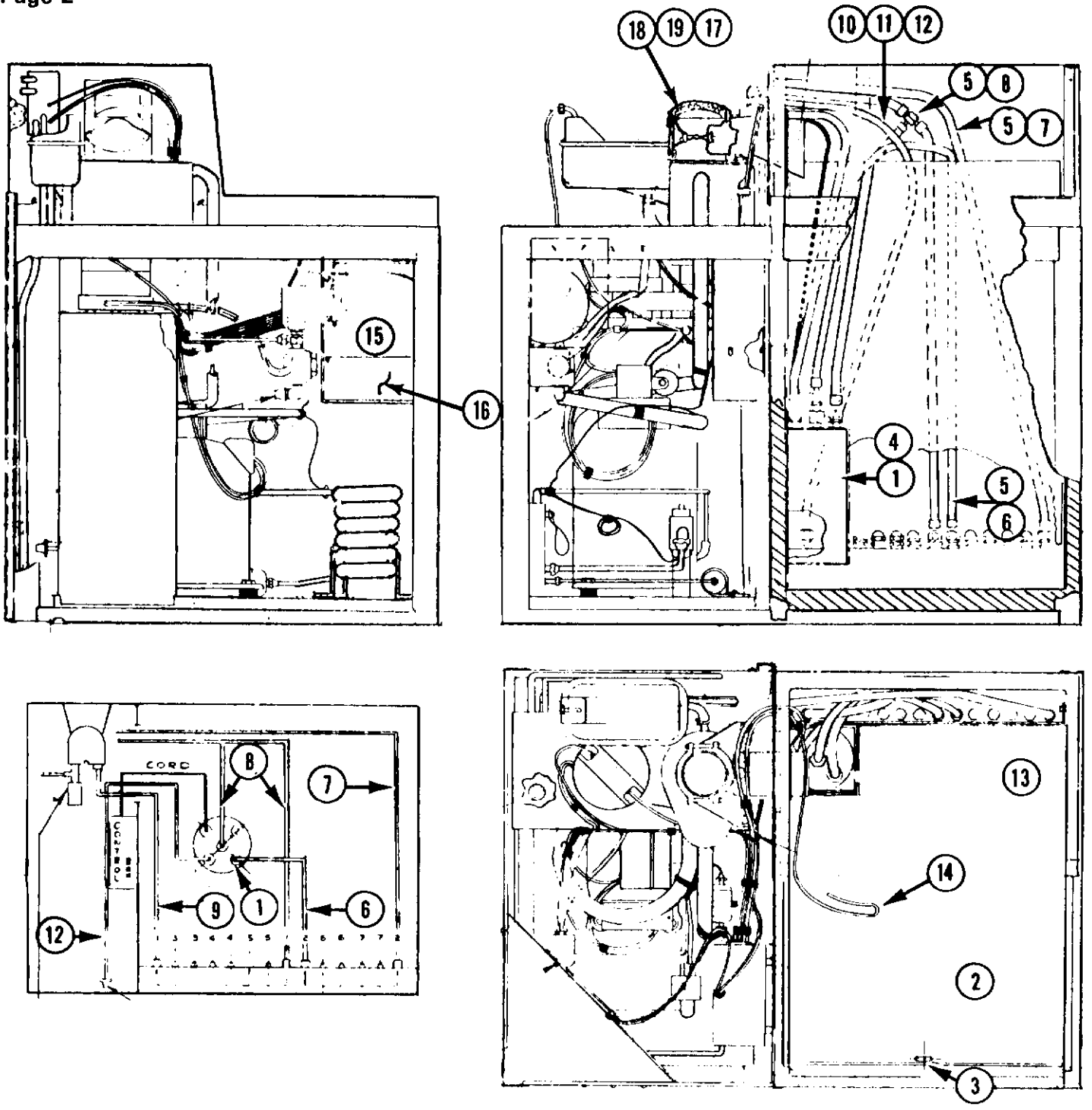

ITEM NO.	PART NO.	DESCRIPTION
1.	See Page 8	Carbonator Tank
	See Page 13 & 14	Liquid Level Control*
2.	A18028-000	Cold Plate Assembly
3.	A22106-000	eye Bolt
4.	02-1859-00	Tank Bracket
5.	02-1249-00	Washer
6.	A17743-000	Soda Line Assembly
7.	A17743-001	Soda Line Assembly
8.	A17718-000	Water Line Assembly
9.	A17737-000	Flexible Line Assembly
10.	03-1409-04	Washer

ITEM NO.	PART NO.	DESCRIPTION
11.	S07044-000	Nut
12.	A17732-000	CO2 Line Assembly
13.	A21645-000	Storage Bin Assembly
14.	A21239-000	Control Bulb Holder
15.	See Page 11	Carbonator Pump
16.	See Page 13 & 14	Control Box
17.	A15070-000	Spout Insulation Left
18.	A15071-000	Spout Insulation Right
19.	A08736-000	Strap (2)

Air Cooled
Chassis Ass'y

Top View

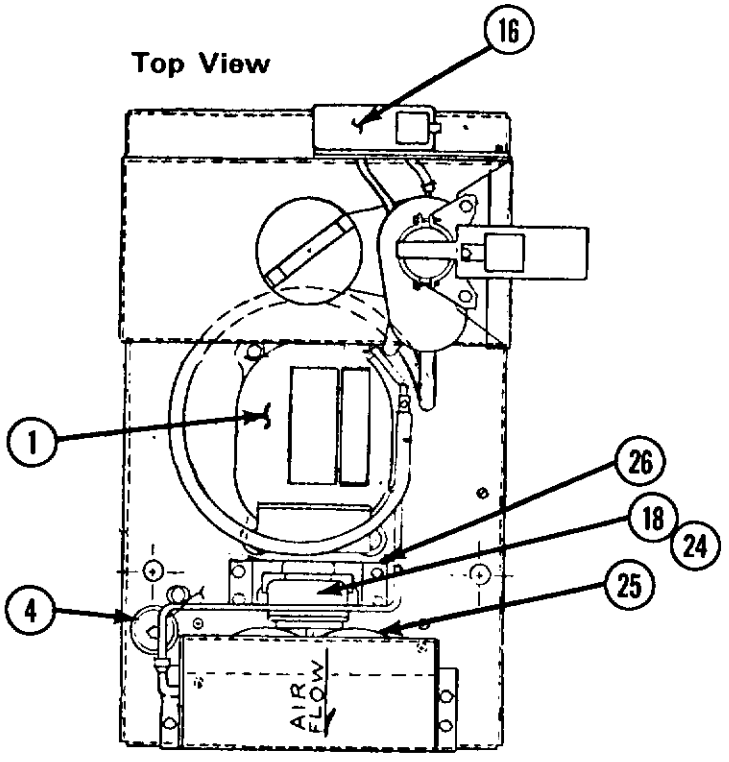

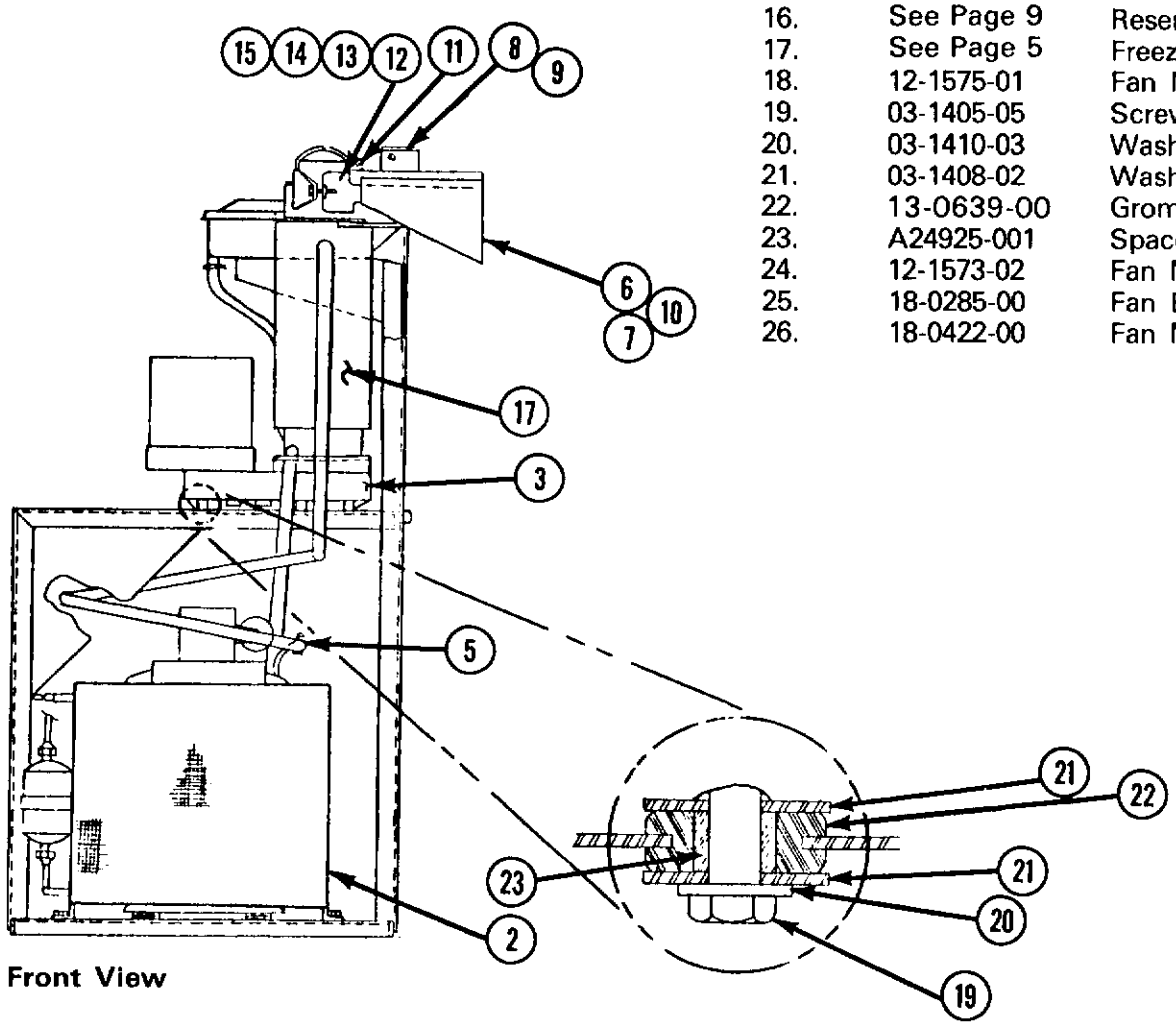

Front View

ITEM NO.	PART NO.	DESCRIPTION
1.	See Page 7	Compressor
2.	18-0234-00	Condenser
3.	See Page 6	Gear Reducer
4.	02-350-00	Drier
5.	11-0393-01	Pressure Switch
6.	A16357-000	Spout Ass'y
7.	A16360-000	Pressure Plate
8.	A14975-000	Limit Box Assy
9.	12-1018-00	Switch only
10.	02-1321-00	Spring Only
11.	A14256-000	Thumb Nut
12.	A14254-000	Spout Casting
13.	13-0679-00	Spout Gasket
14.	03-1403-53	Screw (2)
15.	03-1417-07	Lockwasher (2)
16.	See Page 9	Reservoir
17.	See Page 5	Freezer
18.	12-1575-01	Fan Motor
19.	03-1405-05	Screw (3)
20.	03-1410-03	Washer (3)
21.	03-1408-02	Washer (6)
22.	13-0639-00	Grommet (3)
23.	A24925-001	Spacer (3)
24.	12-1573-02	Fan Motor Lead
25.	18-0285-00	Fan Blade
26.	18-0422-00	Fan Motor Mount

WATER COOLED CHASSIS ASS'Y

Top View

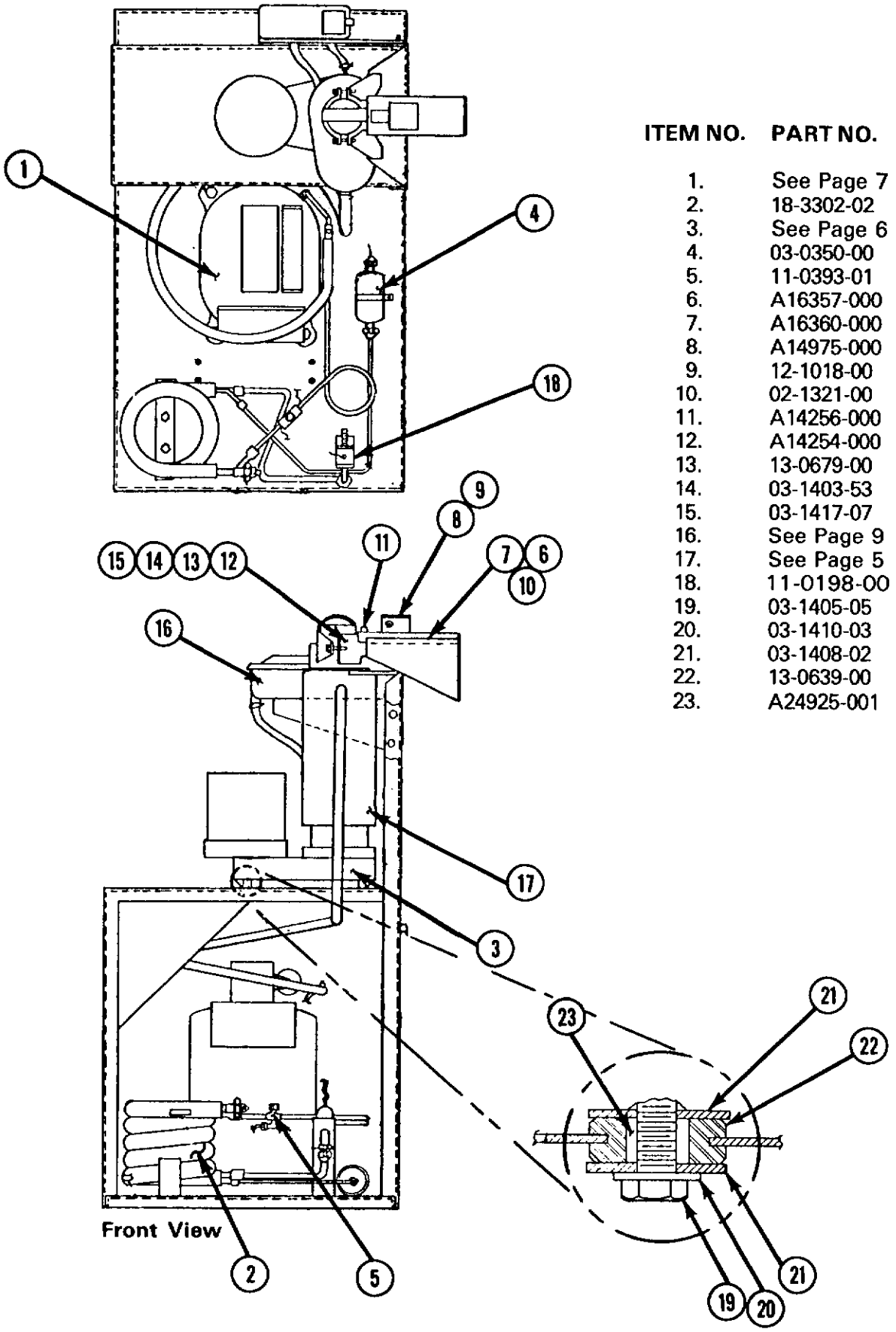

Front View

ITEM NO.	PART NO.	DESCRIPTION
1.	See Page 7	Compressor
2.	18-3302-02	Condenser
3.	See Page 6	Gear Reducer
4.	03-0350-00	Drier
5.	11-0393-01	Pressure Switch
6.	A16357-000	Spout Assy
7.	A16360-000	Pressure Plate
8.	A14975-000	limit Box Assy
9.	12-1018-00	Switch Only
10.	02-1321-00	Spring Only
11.	A14256-000	Thumb Nut
12.	A14254-000	Spout Casting
13.	13-0679-00	Spout Gasket
14.	03-1403-53	Screw (2)
15.	03-1417-07	Lockwasher (2)
16.	See Page 9	Reservoir
17.	See Page 5	Freezer
18.	11-0198-00	Water Regulator
19.	03-1405-05	Screw (3)
20.	03-1410-03	Washer (3)
21.	03-1408-02	Washer (6)
22.	13-0639-00	Grommet (3)
23.	A24925-001	Spacer (3)

FREEZER ASSEMBLY

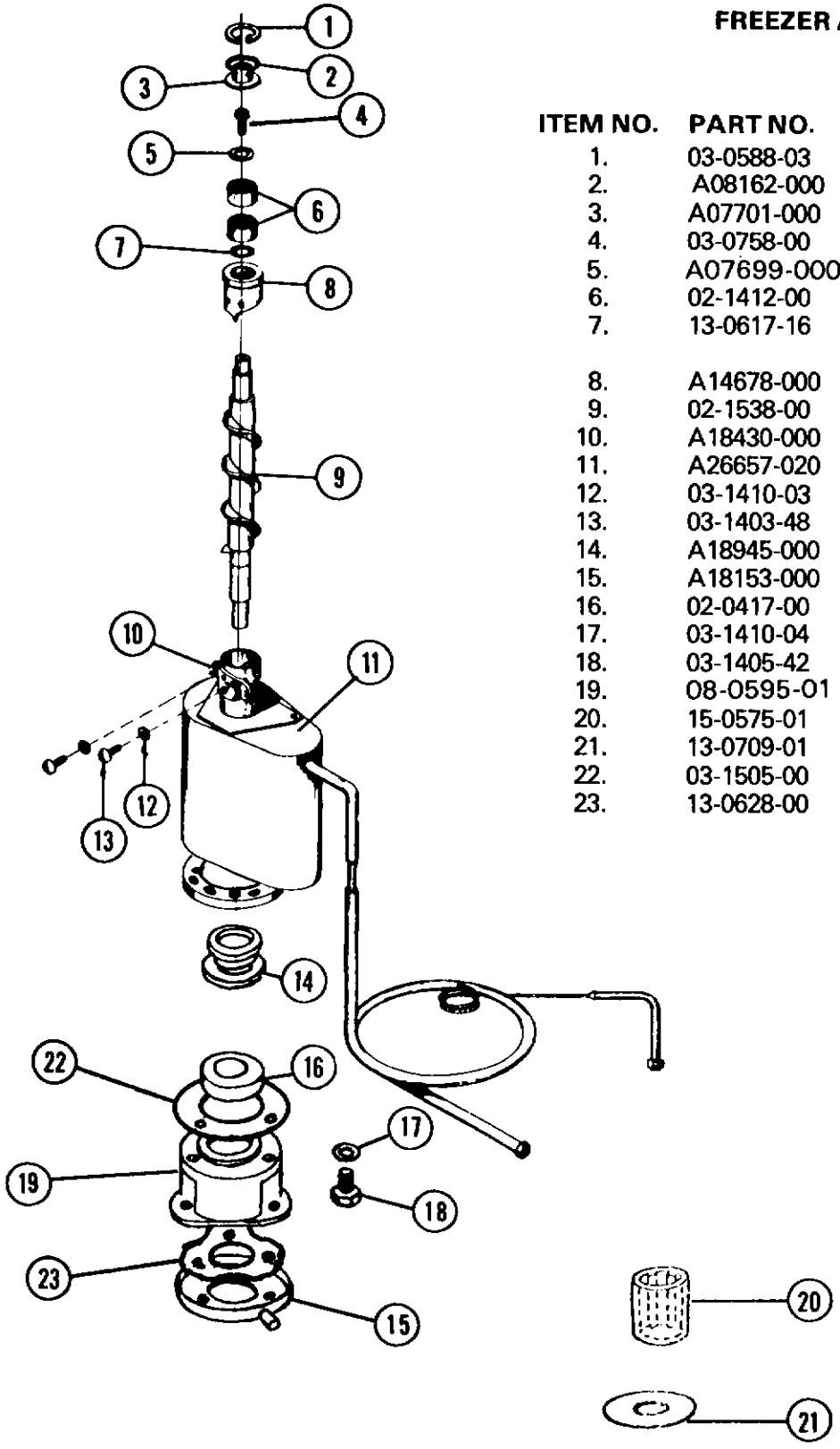

ITEM NO.	PART NO.	DESCRIPTION
1.	03-0588-03	Snap Ring
2.	A08162-000	Cap Hook
3.	A07701-000	Cap
4.	03-0758-00	Cap Screw
5.	A07699-000	Washer
6.	02-1412-00	Bearing
7.	13-0617-16	"O" Ring
8.	A14678-000	Breaker with bearing
9.	02-1538-00	Auger
10.	A18430-000	Spout Plate
11.	A26657-020	Worm Tube—Suction Line
12.	03-1410-03	Washer (2)
13.	03-1403-48	Screws (2)
14.	A18945-000	Water Seal
15.	A18153-000	Dri-p Pan
16.	02-0417-00	Lower Bearing
17.	03-1410-04	Washer
18.	03-1405-42	Screw (3)
19.	08-0595-01	Adapter
20.	15-0575-01	Spline Drive Coupling
21.	13-0709-01	Shaft Drip Shield Rubber
22.	03-1505-00	Gasket
23.	13-0628-00	Gasket

A25995-021
GEAR MOTOR ASSEMBLY
1/10 H.P.
115/60/1

11.5 RPM at output shaft

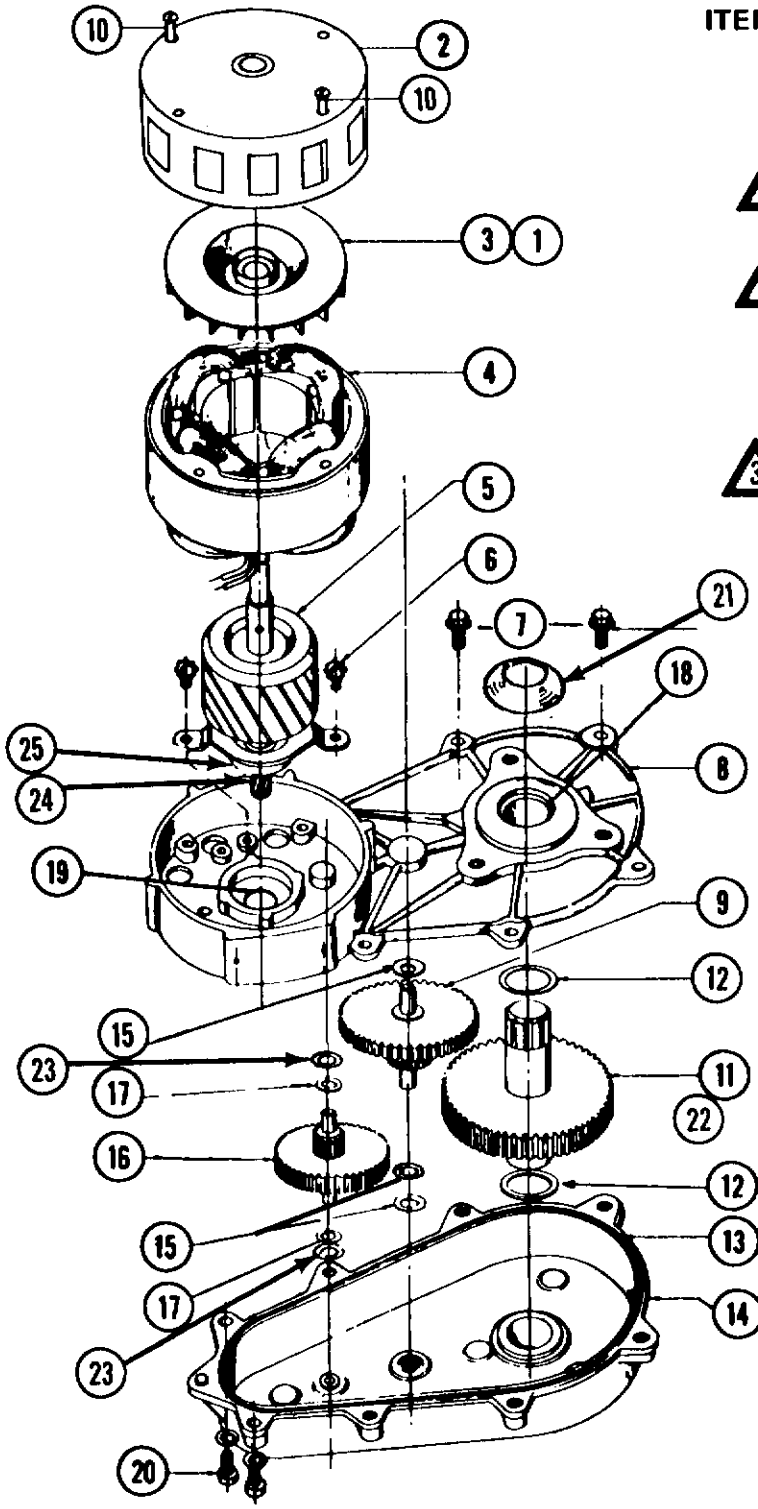

ITEM NO.	PART NO.	DESCRIPTION
1.	03-1246-00	Set Screw (2)
2.	A17047-000	Motor Housing
3.	A16915-000	Cooling Fan
4.	12-1400-01	Stator Assy.
2 5.	A26454-001	Rotor & 1st. Gear Kit
6.	03-1245-00	Screws (2)
7.	03-1251-00	Flange Screws (6)
1 8.	A16920-021	Gear Case Cover
9.	02-1521-00	Gear and Pinion
10.	03-1403-43	Motor Bolts (4)
11.	A26650-001	Gear and Output Shaft
12.	03-1408-21	Washer (2)
3 13.	02-1505-00	"O" Ring
14.	A24184-001	Gear Case Kit
15.	03-1408-06	Washer (3)
16.	02-2224-01	1st Gear and Pinion
17.	03-1408-19	Washer (2)
18.	02-1503-00	Grease Seal
19.	02-1504-00	Grease Seal
20.	03-1252-00	Screw (2)
21.	13-0709-01	Water Shed
22.	03-1475-01	Key
23.	03-1408-20	Washer (2)
24.	13-0617-04	Slinger Ring
25.	02-1501-00	Rotor Bearing

NOTE:

1 Cover comes with grease seals items 18 & 19.

2 Fiber gear (item 16 and rotor bearing (item 25) included in the rotor kit.

3 Includes items: 8, 13, 15, 17, 18, 19, 23 and gear lube.

COPELAWELD COMPRESSOR
3500 RPM

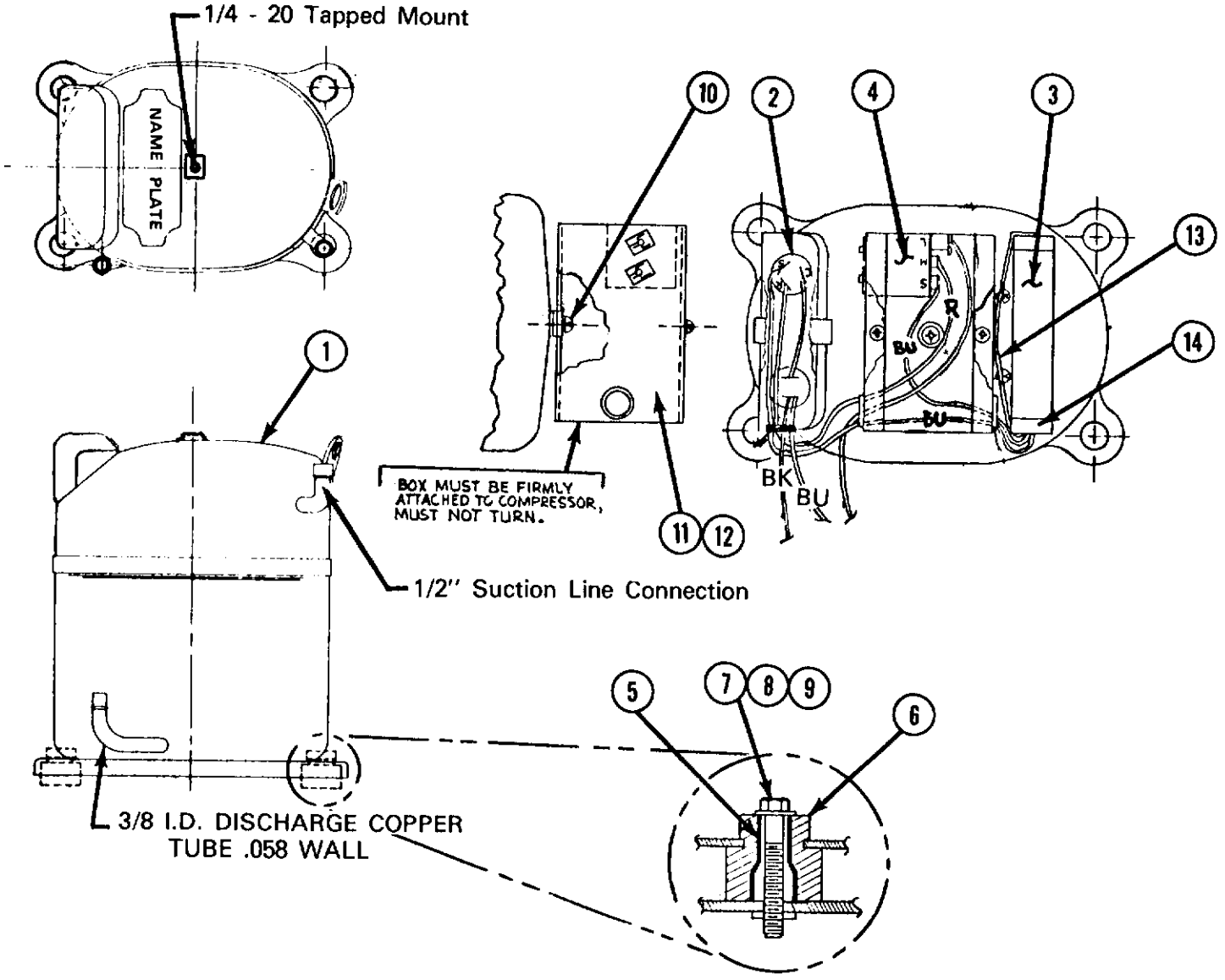

ITEM NO.	PART NO.	DESCRIPTION
1.	18-2200-01	Compressor Cope no. RSF2-0050-1AA
2.	18-2200-25	Compressor Overload Cope. No. 071-0127-34
3.	18-1901-10	Start Capacitor Cope No. 014-0008-61
4.	18-2200-26	Relay Cope. No. 040-0098-00
5.	18-2200-27	Mounting Sleeve
6.	18-2200-28	Mounting Grommet
7.	03-1405-40	Screw
8.	03-1410-04	Lockwasher
9.	03-1407-07	Flat Washer
10.	03-1403-45	Serew
11.	A18740-000	Junction Box
12.	A18739-000	Junction Box Cover
13.	18-2200-39	Capacitor Bracket
14.	18-2200-38	Cap, Start Capacitor

TEMPRITE CARBONATOR TANK

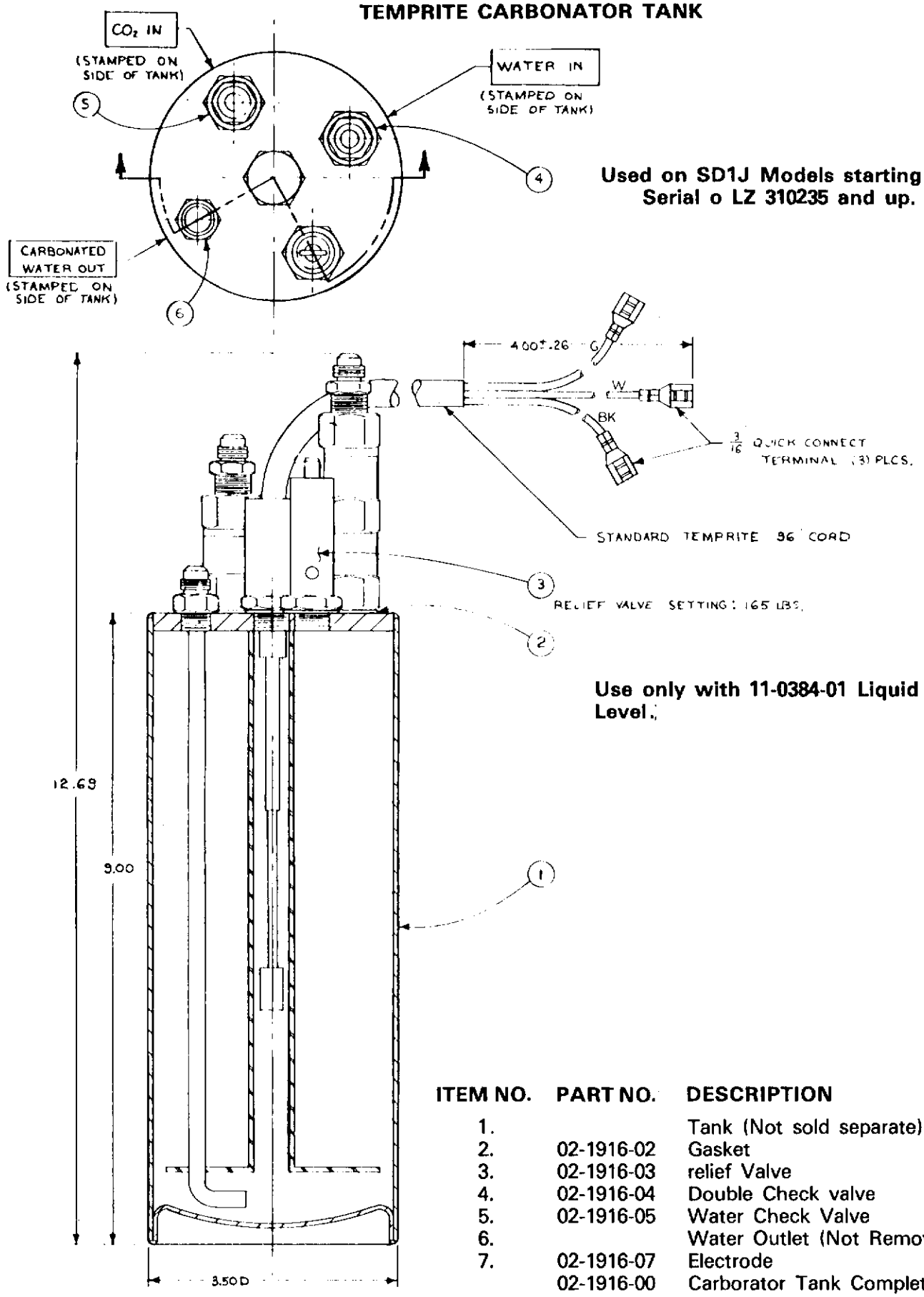

Used on SD1J Models starting with Serial o LZ 310235 and up.

Use only with 11-0384-01 Liquid Level.

ITEM NO.	PART NO.	DESCRIPTION
1.		Tank (Not sold separate)
2.	02-1916-02	Gasket
3.	02-1916-03	relief Valve
4.	02-1916-04	Double Check valve
5.	02-1916-05	Water Check Valve
6.		Water Outlet (Not Removable)
7.	02-1916-07	Electrode
	02-1916-00	Carborator Tank Complete

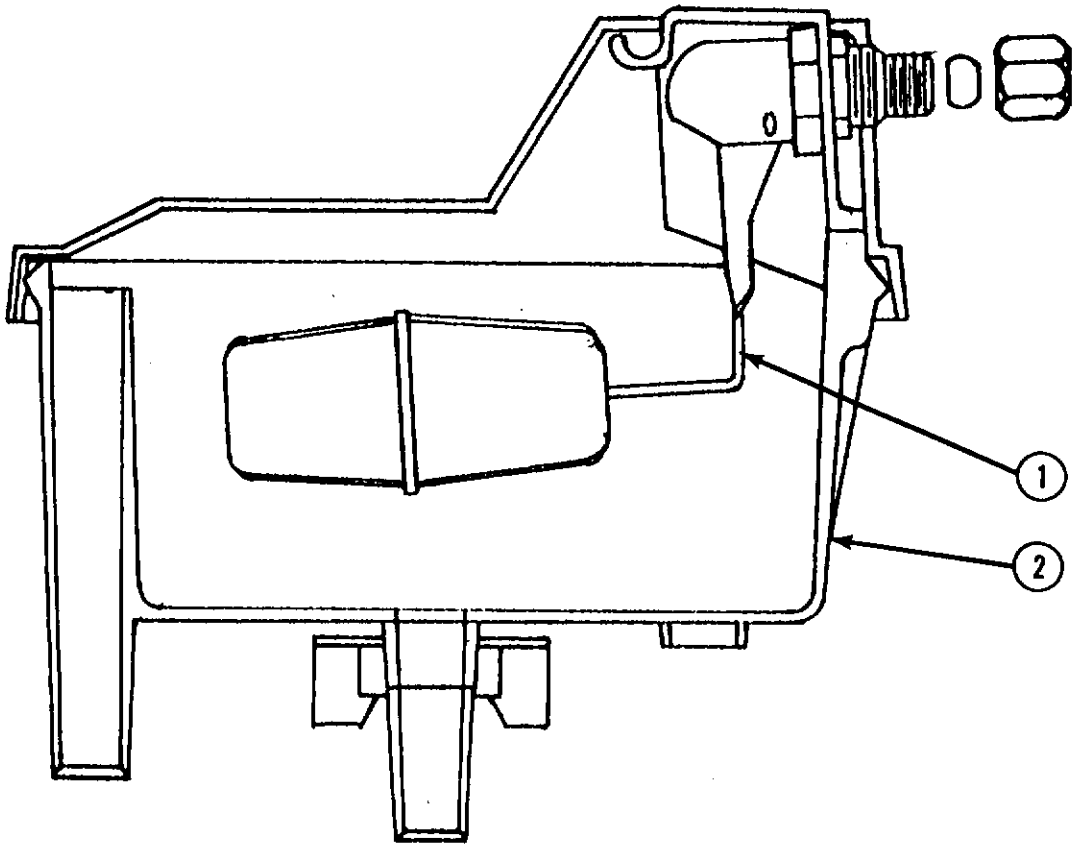

RESERVOIR ASSEMBLY

ITEM NO.	PART NO.	DESCRIPTION
1.	02-2217-02	Valve Assy.
2.	02-2217-01	Reservoir Complete

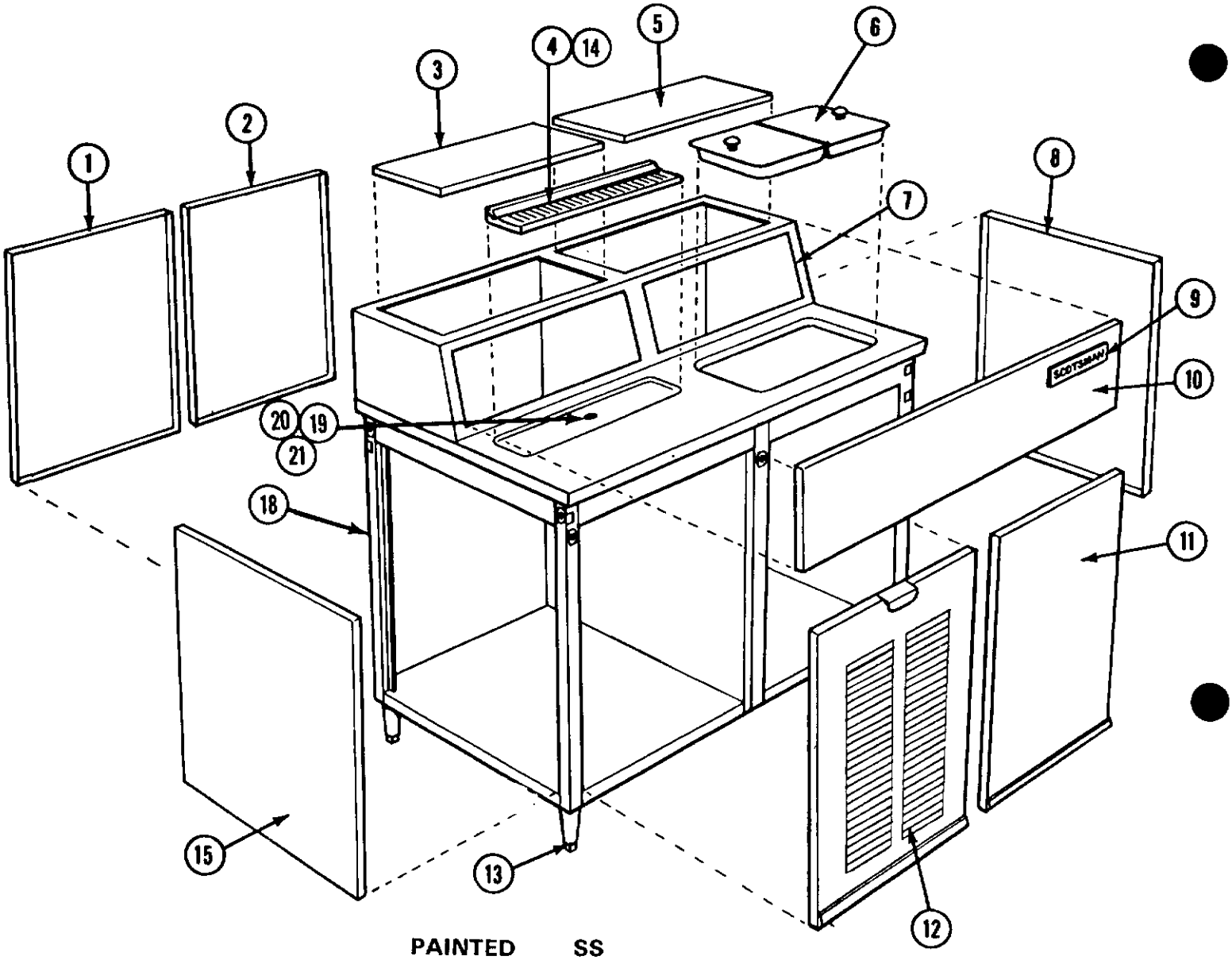

ITEM	PAINTED PART NO.	SS PART NO.	DESCRIPTION
1.	A17754-008	A17754-001	Rear Door
2.	A17753-008	A17753-001	Rear Panel
3.	A17829-000	A17829-000	Lt. Top Panel
4.	02-1955-00	02-1955-00	Grill
5.	A17812-000	A17812-000	Rt. Top Panel
6.	02-1550-00	02-1550-00	Door, Bin Access
7.	A17616-000	A17616-000	Hood Assy
8.	A17750-008	A17750-001	Right Side Panel
9.	15-0156-00	15-0156-00	Emblem
10.	A22280-000	A22280-000	Front Hood Panel
11.	A17755-008	A17755-001	Front Panel
12.	A17667-008	A17667-001	Front Door
13.	KLP2E	KLP2S	Leg Kit (order thru sales dept.)
14.	A23186-001	A23186-001	Splash Panel
15.	A19157-008	A19157-001	Left Side Panel
*16.	02-0836-00	02-0836-00	Cabinet - Panel Catch
*17.	15-0411-00	15-0411-00	Panel - Cabinet Strike
18.	A17696-000	A17696-000	Cabinet Frame Assy
19.	A18102-000	A18102-000	Drain Ass'y
20.	A18090-000	A18090-000	Drain Fitting, Top
21.	13-0617-11	13-0617-11	"O" Ring

*Not Shown

CARBONATOR PUMP ASSEMBLY

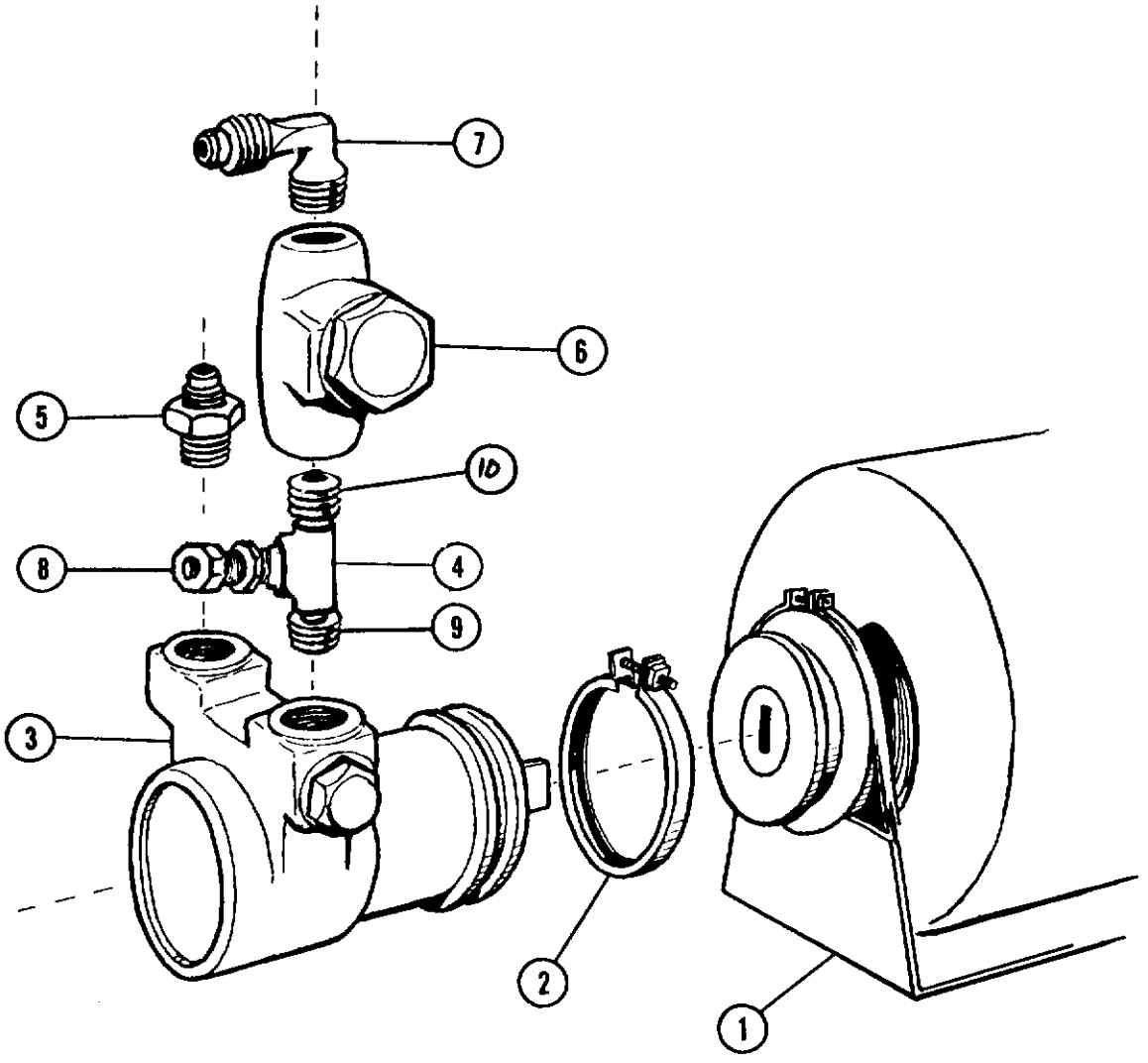

ITEM NO.	PART NO.	DESCRIPTION
1.	12-1339-01	Motor 115/60/1
2.	02-1527-00	Coupling Clamp
3.	02-1526-00	Pump
4.	16-0608-00	Brass Tee 3/8 Fe Pipe x 3/8 Fe Pipe X 1/4 Fe Pipe
5.	16-0355-00	Union 3/8 NPT x 3/8 Flare
7.	16-0162-01	Strainer
8.	16-0401-00	Half Union Elbow
9.	16-0409-00	St. Connector
10.		Nipple, Brass 3/8 pipe x 1"

TOUCH - O - MATIC FAUCET ASSEMBLY

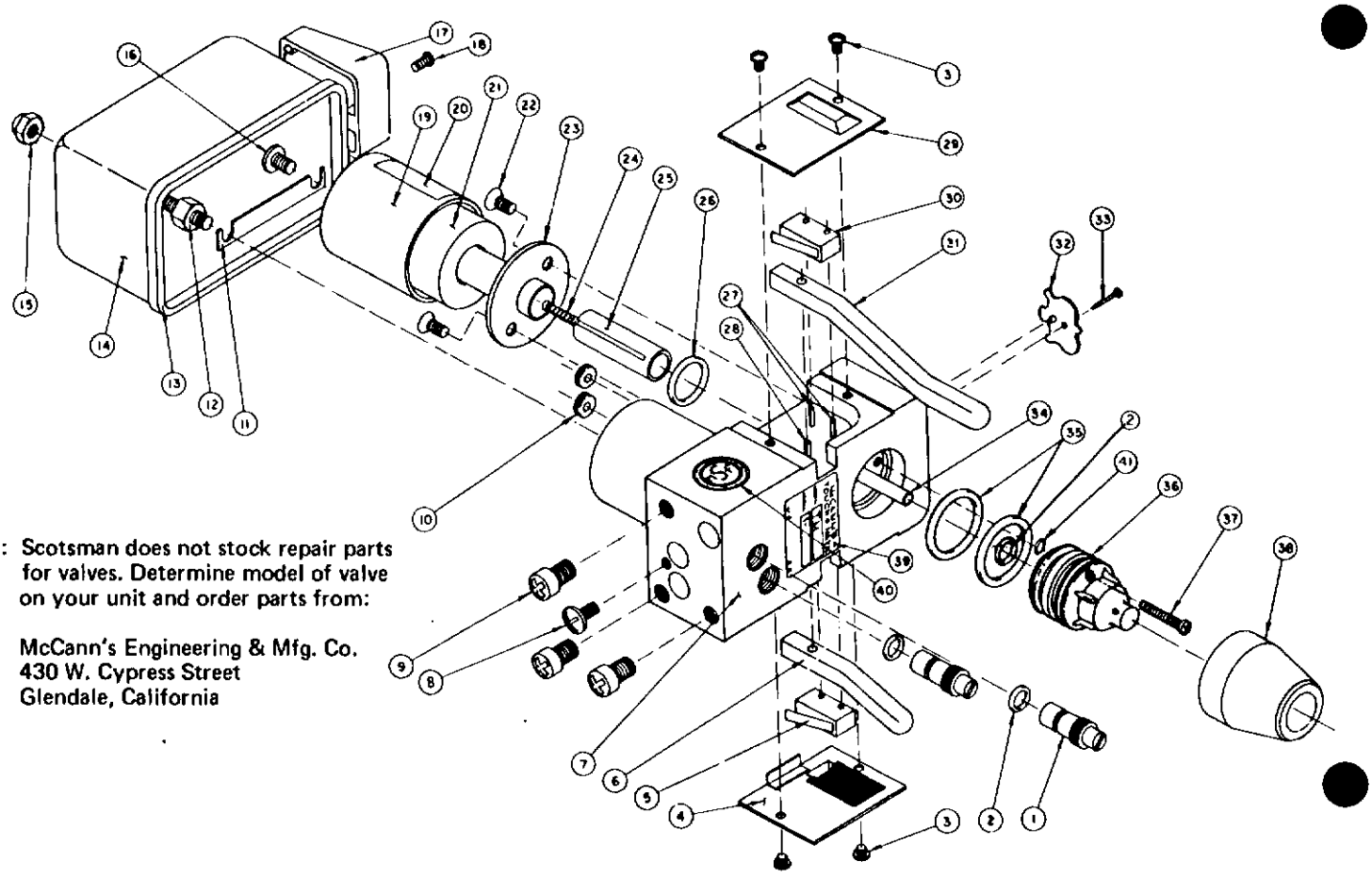

NOTE: Scotsman does not stock repair parts for valves. Determine model of valve on your unit and order parts from:

McCann's Engineering & Mfg. Co.
430 W. Cypress Street
Glendale, California

ITEM NO.	PART NO.	DESCRIPTION
1.	1	Metering Stem
2.	2	"O" Ring, Metering Stem
3.	3	Screw, Side Plate
4.	152	Side Plate (Right Side)
5.	82	Switch Assembly (3 Wires)
6.	160	Lever, short
7.	01-0001	Block,20,1000
7.	01-0002	Block, 20-2000
7.	01-0003	Block, 20-4000
7.	01-0004	Block, 20,1100-20-4100
7.	01-0005	Block, 20-2100-20-3100
8.	5	Screw, Inlet Retainer
9.	6	Screw, Faucet Mounting
10.	7	Grommet, Coil Housing
11.	8	Grounding Strap
11.	1508	Lockwasher in place of Part No. 8 on 12 V.D.C. and 20-4000
12.	9	Stud, Cover Mounting short
13.	10	Gasket Cover
14.	11	Cover (With Medallion Holes)
15.	13	Nut, Cover Retainer
16.	14	Screw, Coil Housing
17.	15	Medallion (Specify Flavor)
18.	16	Screw, Medallion Retainer
19.	17	Coil Cover
20.	20	Label (Specify Voltage) Coil

ITEM NO.	PART NO.	DESCRIPTION
21.	22	Coil (115 V.A.C.)
21.	24	Coil (12 V.A.C.)
21.	29	Coil (12 V.D.C.)
21.	23	Coil (24 V.A.C.)
22.	31	Screw, Plunger Housing Retainer
23.	32	Plunger Housing
24.	38	Spring, Plunger
25.	39	Plunger, Touch -O-Matic
26.	40	"O" Ring Plunger Housing
27.	41	Roll Pin, Switch
28.	42	Roll Pin, Lever
29.	151	Side Plate (Left Side)
30.	137	Switch Assembly, 2 Wires, Standard
30.	138	Switch Assembly, 2 Wires, Special
31.	159	Lever, Long
32.	49	Crest, Mc CANN'S
33.	50	Pin, Crest Ratiner
34.	09-0017	Tube, Syrup
34.	89	Jet Tube
35.	52	"O" Ring Diffuser
36.	09-0018	Diffuser
37.	54	Screw, Diffuser Retainer
38.	09-0013	Pouring Spout, Red
38.	09-0015	Pouring Spout, Black
38.	09-0014	Pouring Spout, Clear
39.	149	Gasket

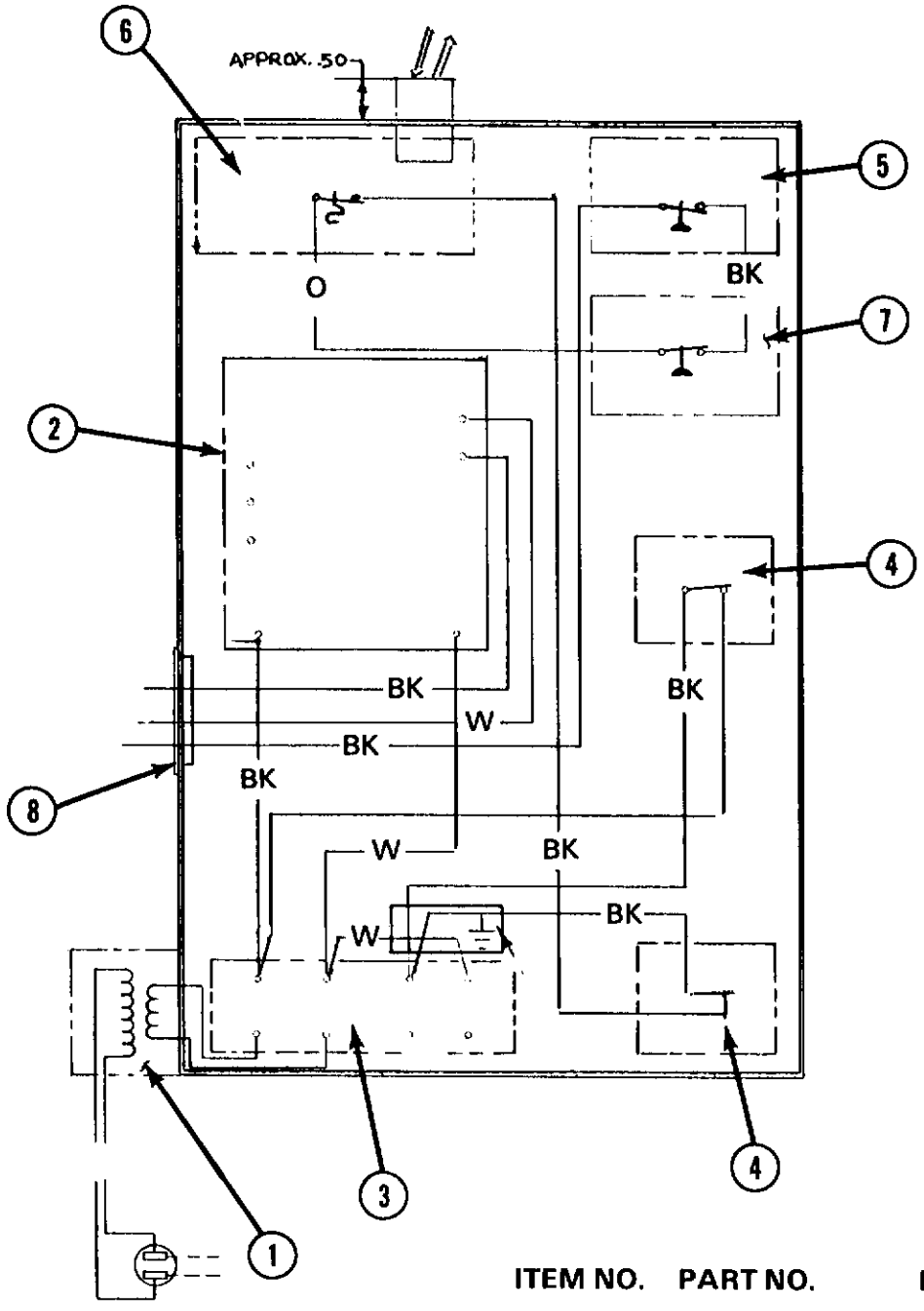

control box
water cooled
115/60/1

ITEM NO.	PART NO.	DESCRIPTION
1.	12-1809-00	Transformer
2.	11-0384-01	Water Level Control
3.	12-0813-01	Terminal Board
4.	12-0426-01	Toggle Switch
5.	11-0358-00	Low Pressure Control
6.	11-0354-00	Temperature Control
7.	11-0388-01	High Pressure Control
8.	12-1213-12	Snap Bushing

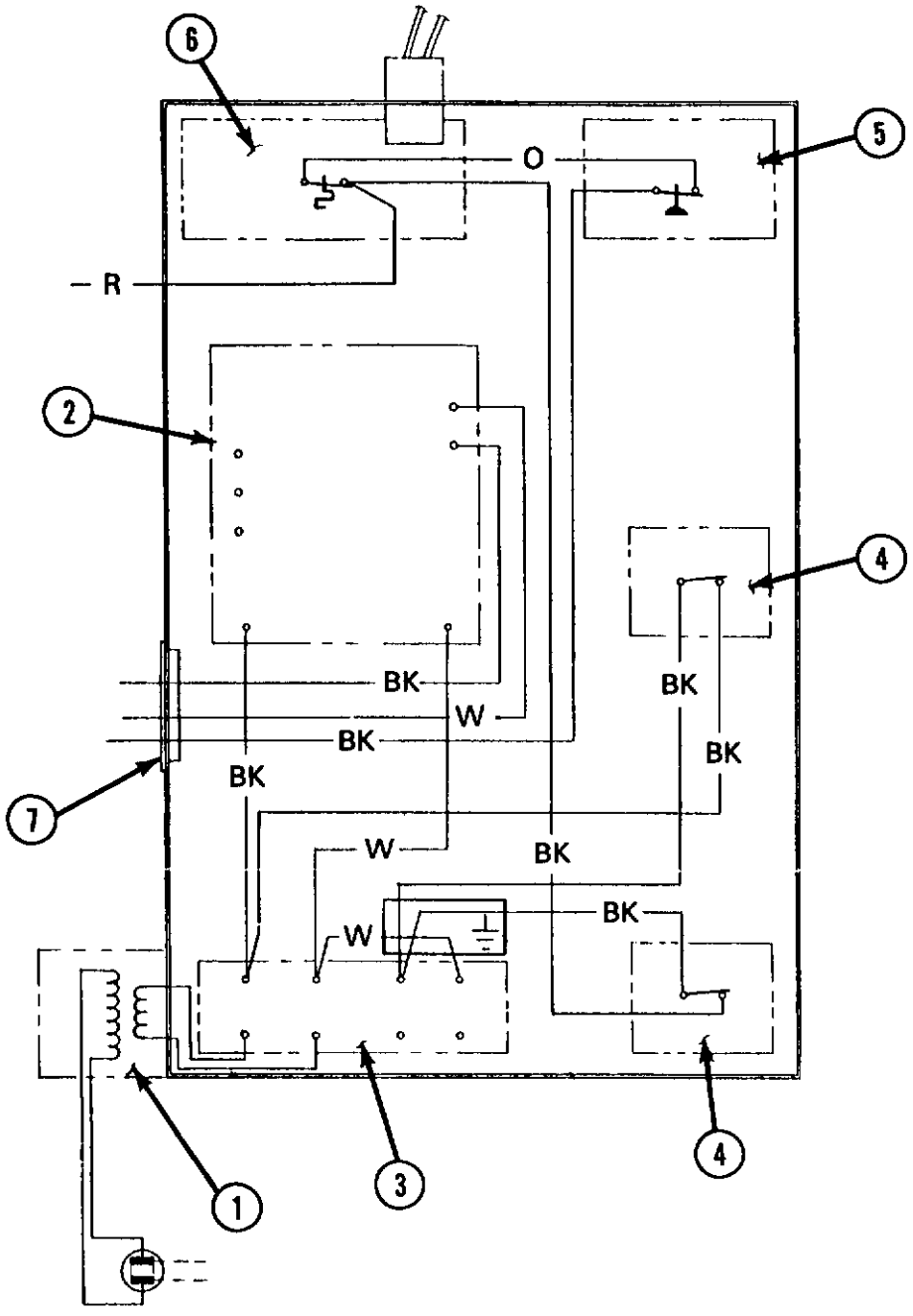

Control Box
Air Cooled
115/60/1

ITEM NO.	PART NO.	DESCRIPTION
1.	12-1809-00	Transformer
2.	11-0384-01	Water Level Control
3.	12-0813-01	Terminal Board
4.	12-1426-01	Switch (2)
5.	11-0358-00	Low Pressure Control
6.	11-0354-00	Temperature Control
7.	12-1213-12	Snap Bushing

CENTRIFUGAL SWITCH

SWITCH ADJUSTMENT

.03 minimum gap between switch lever and mechanism with centrifugal mechanism actuated (motor running). Switch circuit should be closed When motor is stopped and centrifugal mechanism deactivates, the switch circuit should be broken. There should be enough adjustment by loosening the switch mounting screws and tilting switch in direction required. If this fails, a small amount of bending can be done on the switch lever.

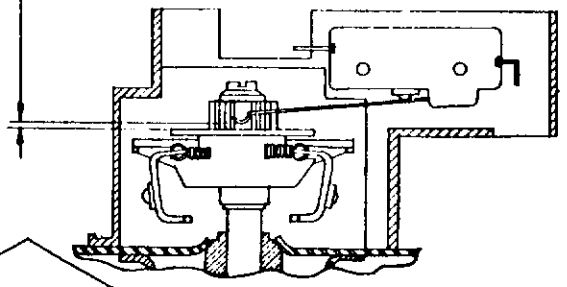

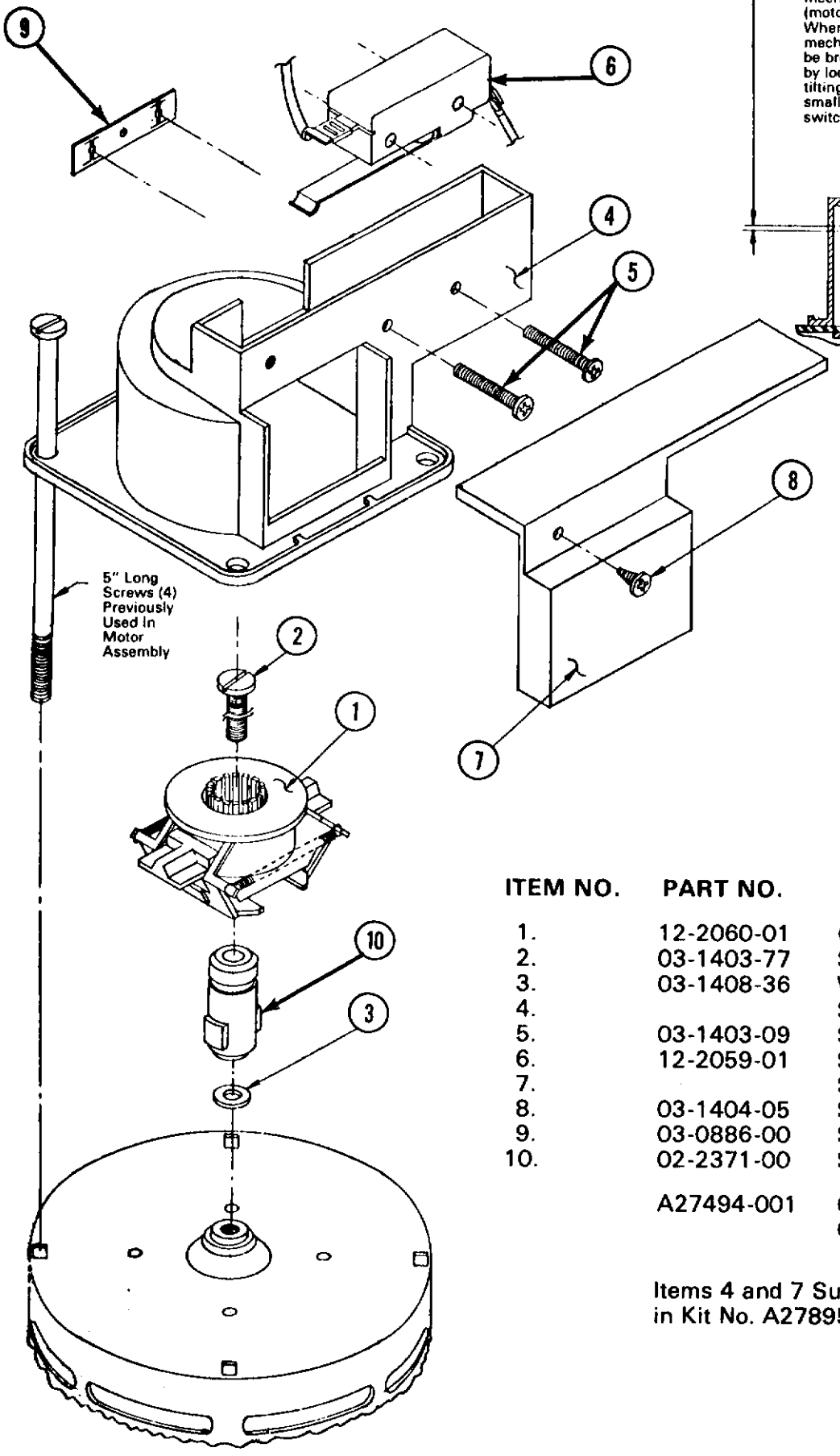

ITEM NO.	PART NO.	DESCRIPTION
1.	12-2060-01	Centrifugal Actuator
2.	03-1403-77	Screw
3.	03-1408-36	Washer
4.		Switch Mounting Case
5.	03-1403-09	Screw (2)
6.	12-2059-01	Switch
7.		Switch Case Cover
8.	03-1404-05	Screw
9.	03-0886-00	Speed Nut
10.	02-2371-00	Shaft Extension
	A27494-001	Centrifugal Switch Kit Complete w/17-1328-01 inst.

Items 4 and 7 Supplied in Kit No. A27895-001

CABINET ASSEMBLY
Air & Water Cooled

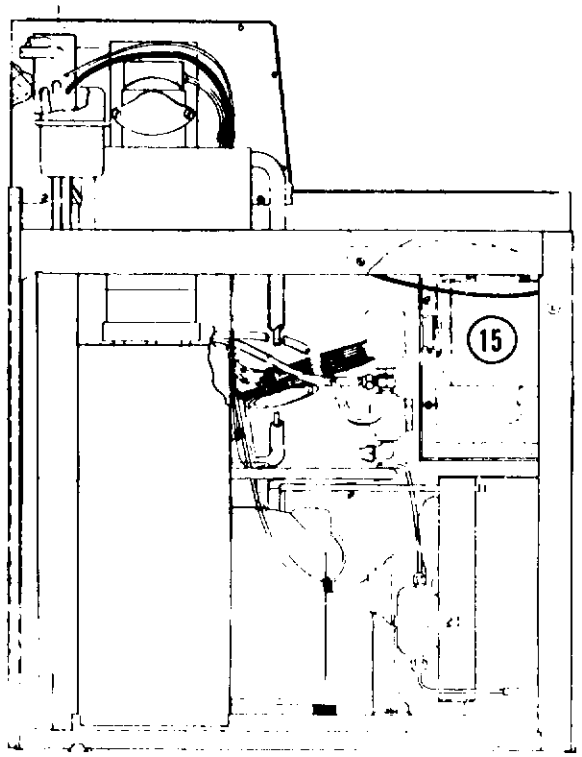

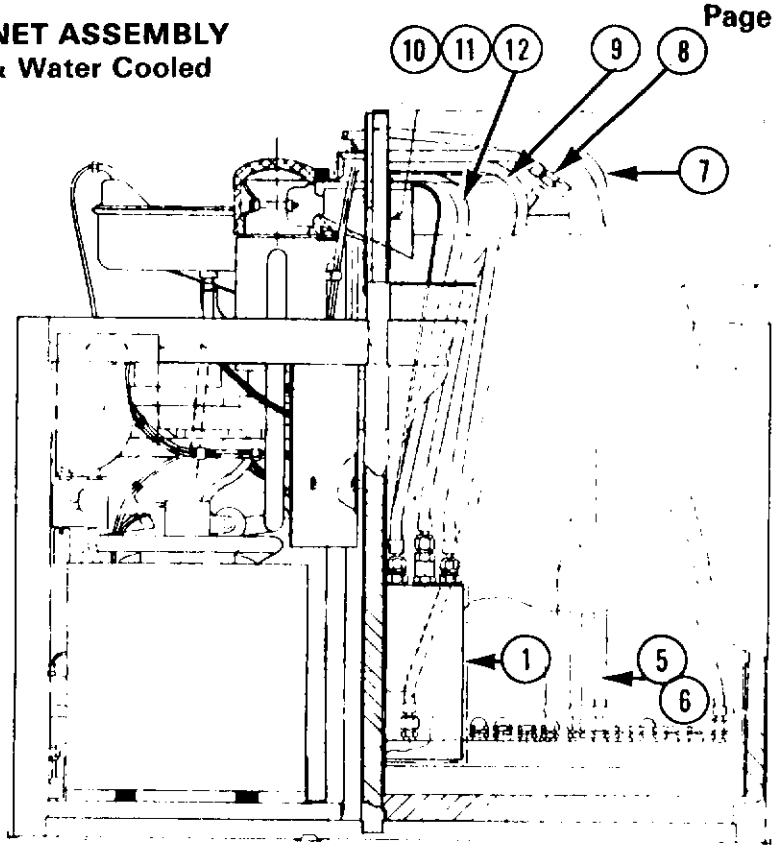

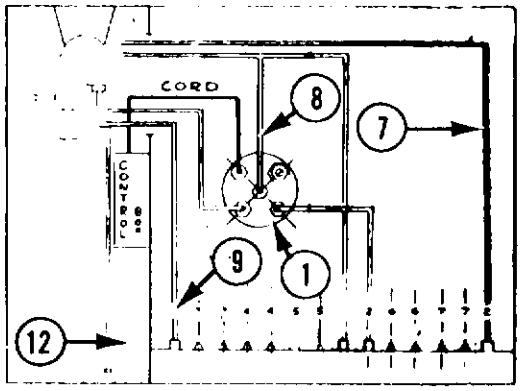

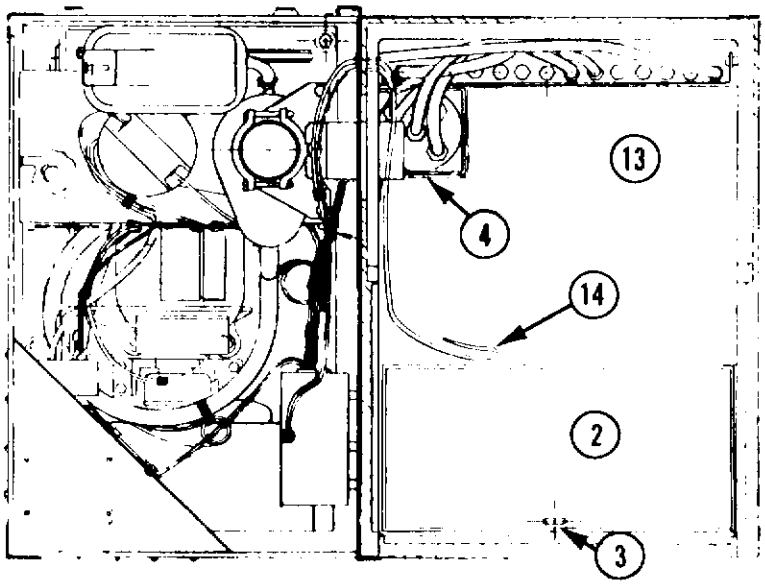

Starting with Serial No. LK283607 a two-piece bin and cold plate assembly is being used on Models SD1 and SD2.

ITEM NO.	PART NO.	DESCRIPTION	ITEM NO.	PART NO.	DESCRIPTION
1.	See Page 2	Temprite Carbonator Tank	8.	A17718-000	Water Line Assembly
	See Page 2	Liquid Level Control*	9.	A17737-000	Flexible Line Assembly
2.	A18028-000	Cold Plate Assembly	10.	03-1409-04	Washer
3.	A22106-000	Eye Bolt	11.	S07044-000	Nut
4.	02-1859-00	Tank Bracket	12.	A17732-000	CO Line Assembly
5.	02-1249-00	Washer	13.	A21645-000	Storage Bin Assembly
6.	A17743-000	Soda Line Assembly	14.	A21239-000	Control Bulb Holder
7.	A17743-001	Soda Line Assembly	15.	See Page 11	Carbonator Pump Complete

TEMPRITE CARBONATOR TANK

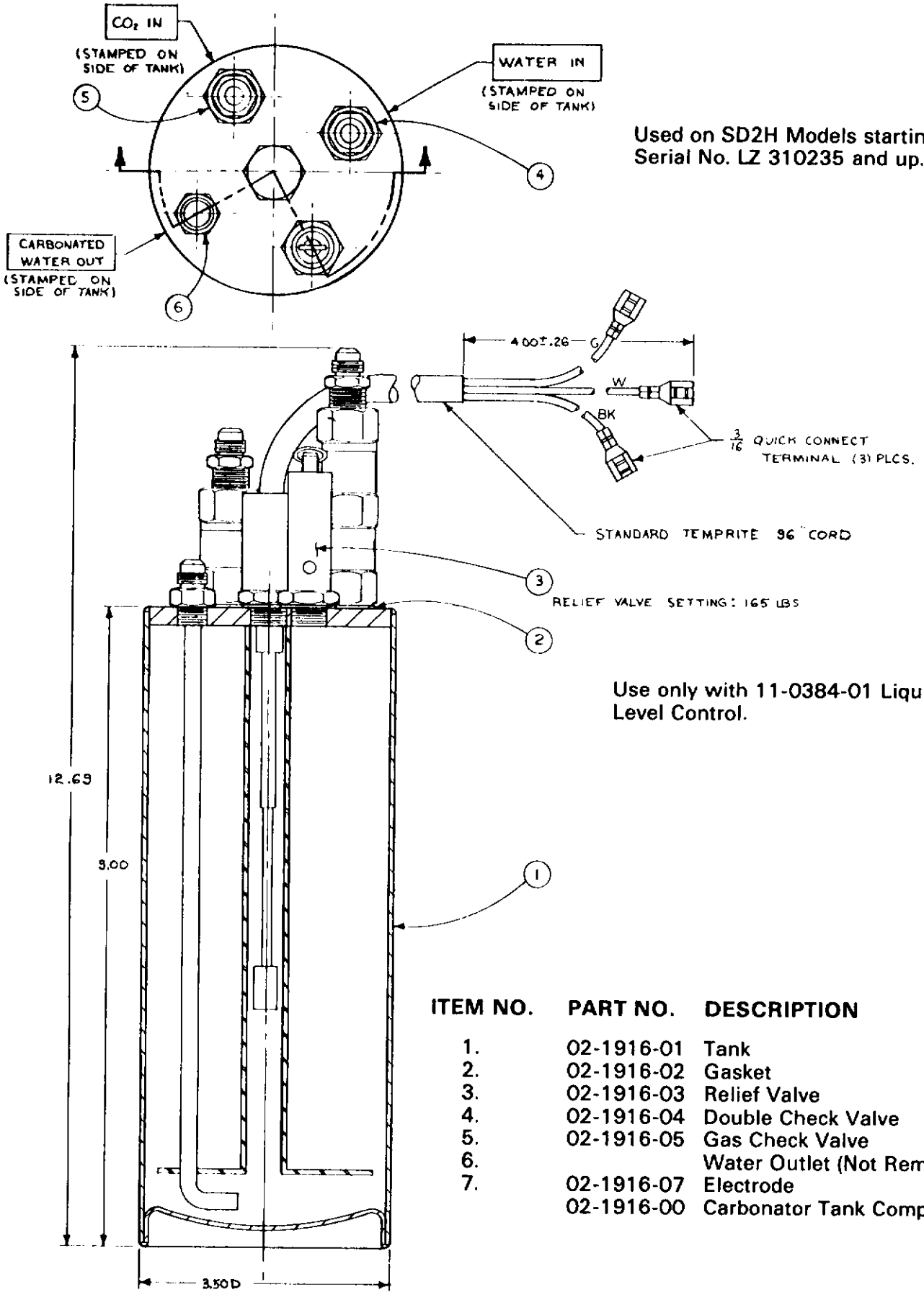

Used on SD2H Models starting with Serial No. LZ 310235 and up.

Use only with 11-0384-01 Liquid Level Control.

ITEM NO.	PART NO.	DESCRIPTION
1.	02-1916-01	Tank
2.	02-1916-02	Gasket
3.	02-1916-03	Relief Valve
4.	02-1916-04	Double Check Valve
5.	02-1916-05	Gas Check Valve
6.		Water Outlet (Not Removeable)
7.	02-1916-07	Electrode
	02-1916-00	Carbonator Tank Complete

CHASSIS ASSEMBLY
Front View

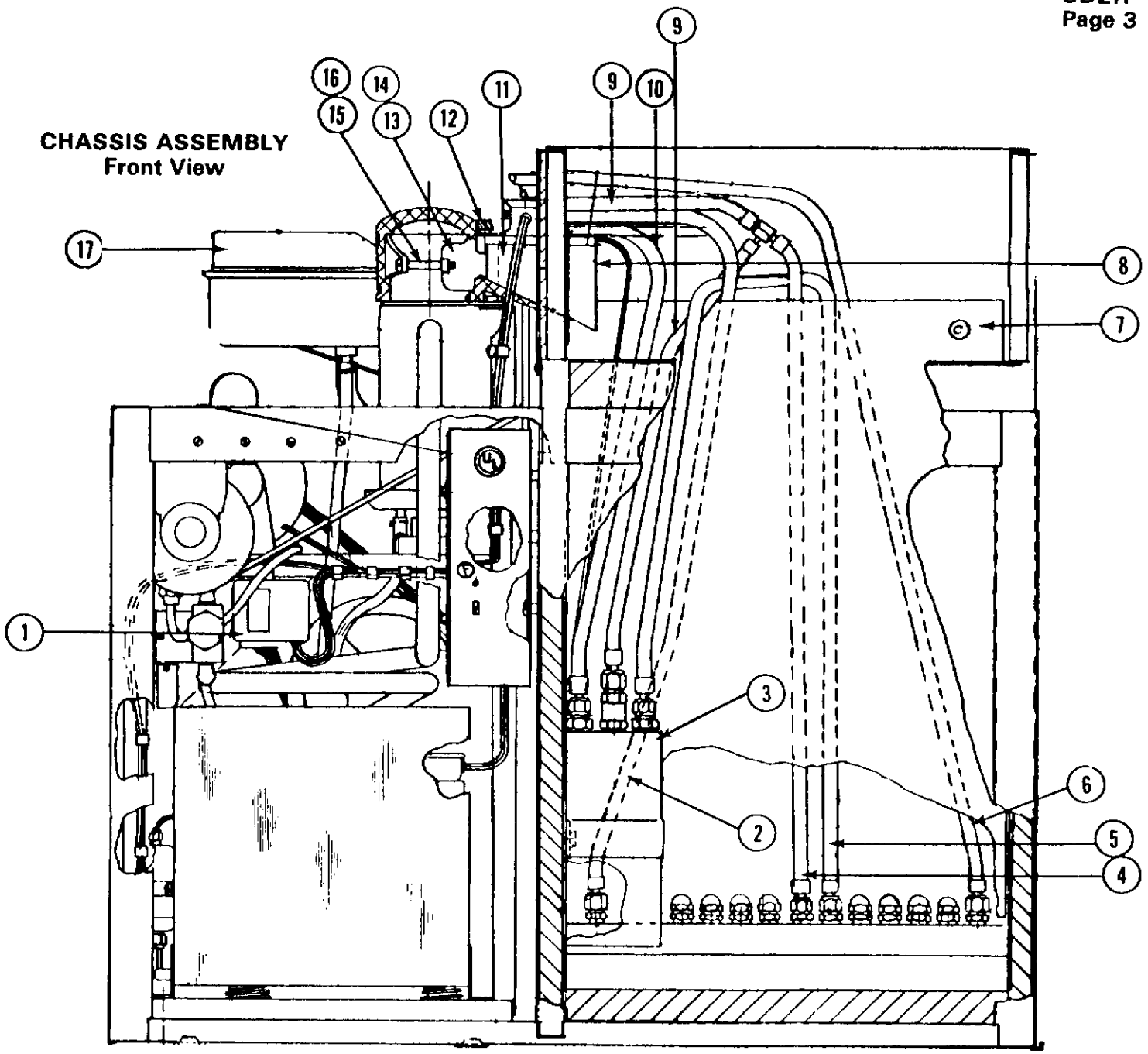

ITEM NO.	PART NO.	DESCRIPTION
1.	11-0273-00	Control A.C.
	11-0286-00	Control W.C.
2.	A17737-000	Flexible Line
3.	See Page 2	Carbonator Tank
4.	A17718-000	Water Line
5.	A17743-000	Soda Line
6.	A17743-001	Soda Line
7.	A18385-000	Tube Cover
8.	A16353-000	Pressure Plate Assembly
9.	A17725-006	Tube
10.	A17732-000	Co 2 Line
11.	A16350-000	Spout
12.	A14256-000	Nut
13.	A14269-000	Casting
14.	02-1437-00	"O" Ring
15.	03-1403-55	Screws
16.	03-1417-07	Washers
17.	See Page 6	Reservoir

CHASSIS ASSEMBLY
Side View

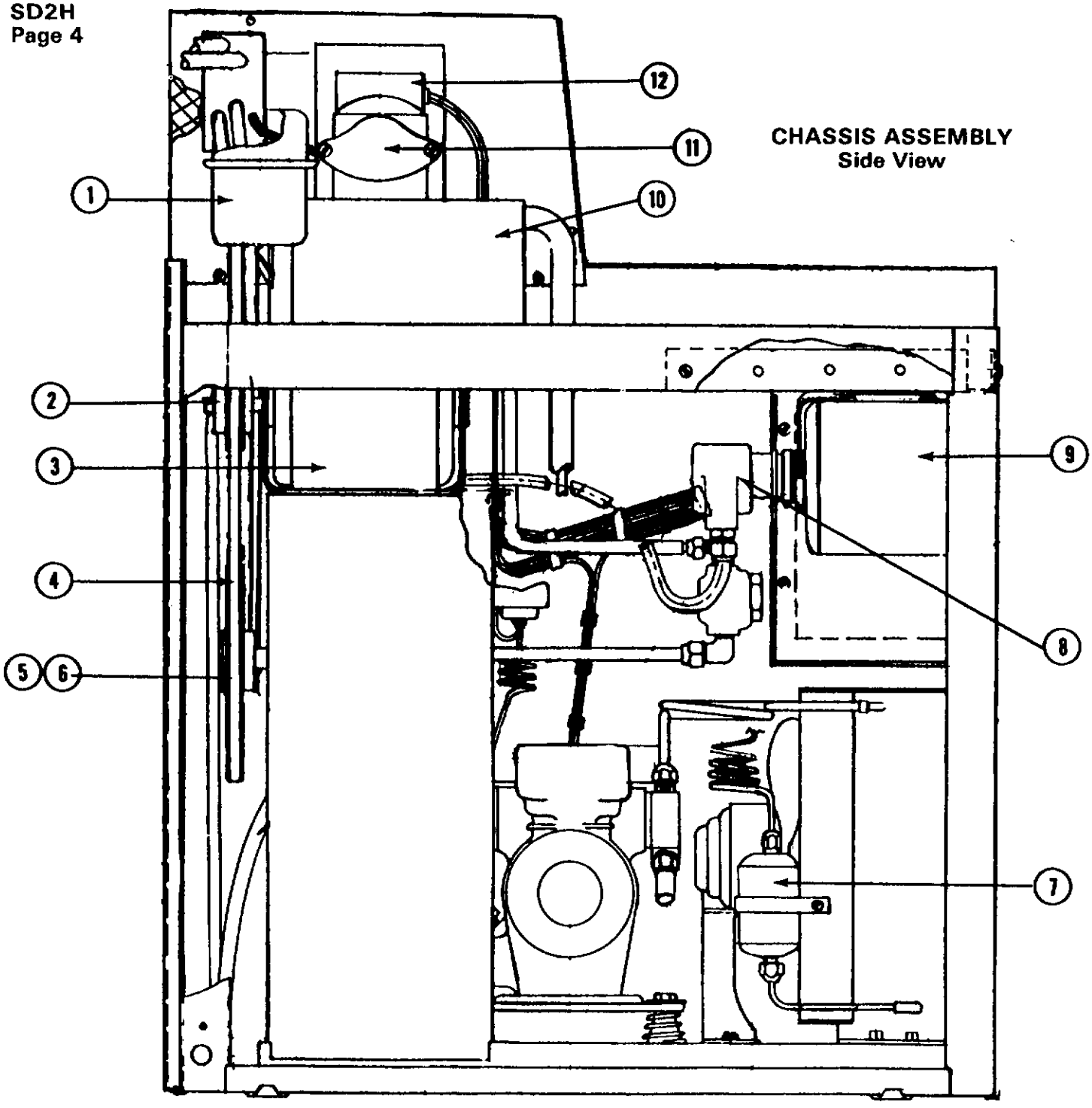

ITEM NO.	PART NO.	DESCRIPTION
1.	See Page 6	Reservoir
2.	02-1462-00	Pulley
3.	A23609-001	Motor 115/60/1
4.	13-0558-00	Belt
5.	See Page 7	Reducer
6.	02-1951-00	Key
7.	02-0544-00	Drier
8.	02-1526-00	Carbonator Pump
9.	12-1339-01	Pump Motor
10.	See Page 5	Freezer
11.	A18431-000	Spout Plate
12.	12-1018-00	Switch

FREEZER ASSEMBLY

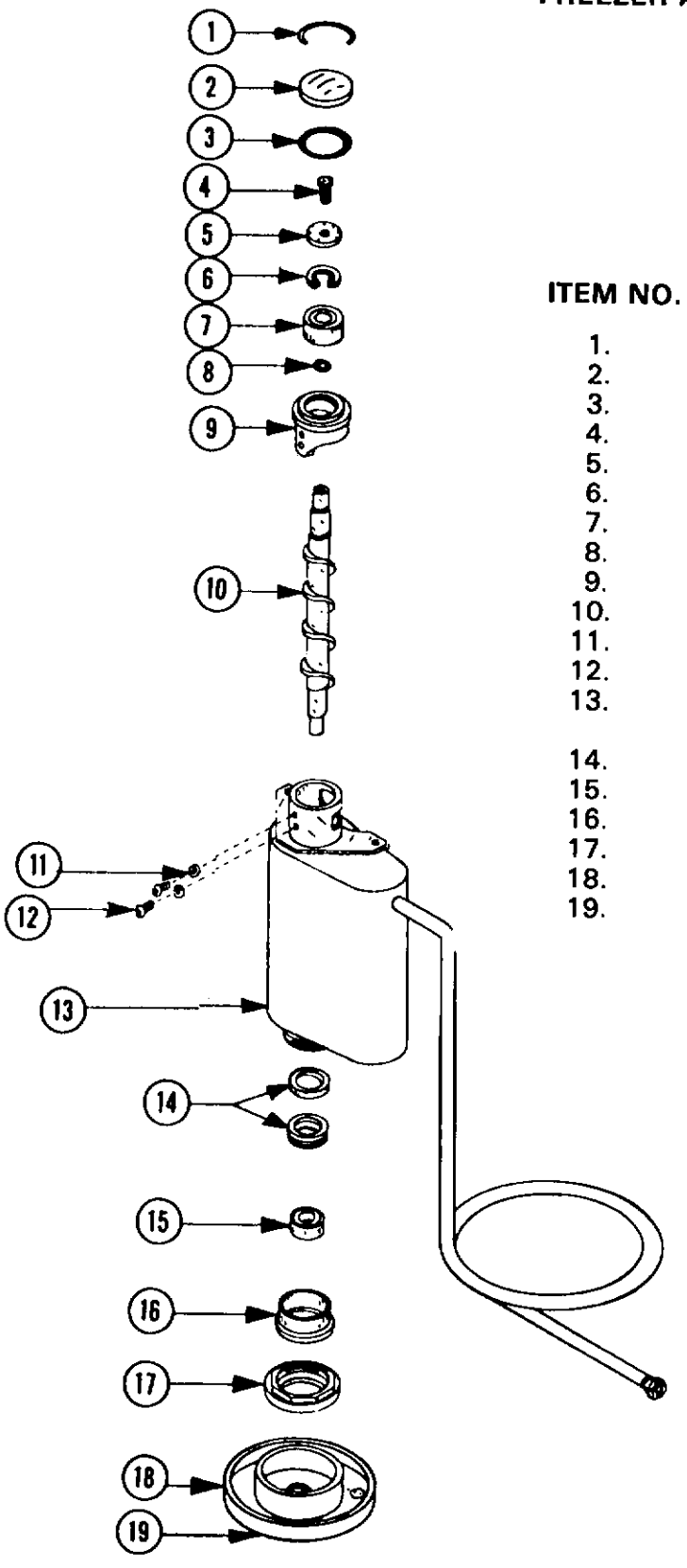

ITEM NO.	PART NO.	DESCRIPTION
1.	A08582-000	Cap Hook
2.	A08581-000	Worm Tube Cap
3.	13-0617-20	"O" Ring
4.	03-1405-36	Cap Screw
5.	A06273-000	Worm Tube Washer
6.	03-1558-04	Snap Ring
7.	02-0646-00	Top Bearing
8.	13-0617-15	"O" Ring
9.	A26704-001	Ice Breaker W/Bearing
10.	02-0617-00	Worm Shaft
11.	03-1410-03	Lock Washers
12.	03-1403-48	Screws (brass 1/4 × 20 × 5/8)
13.	A06382-020	Suction Line, Worm Tube Cap Tube Assembly
14.	A22569-000	Water Seal
15.	02-0619-00	Bearing, lower
16.	A10591-000	Bearing Retainer
17.	A06153-000	Worm Tube Nut
18.	13-0208-00	Rubber Drip Pan
19.	A08002-000	Drain Tube (*)

(*) Not Shown

RESERVOIR ASSEMBLY

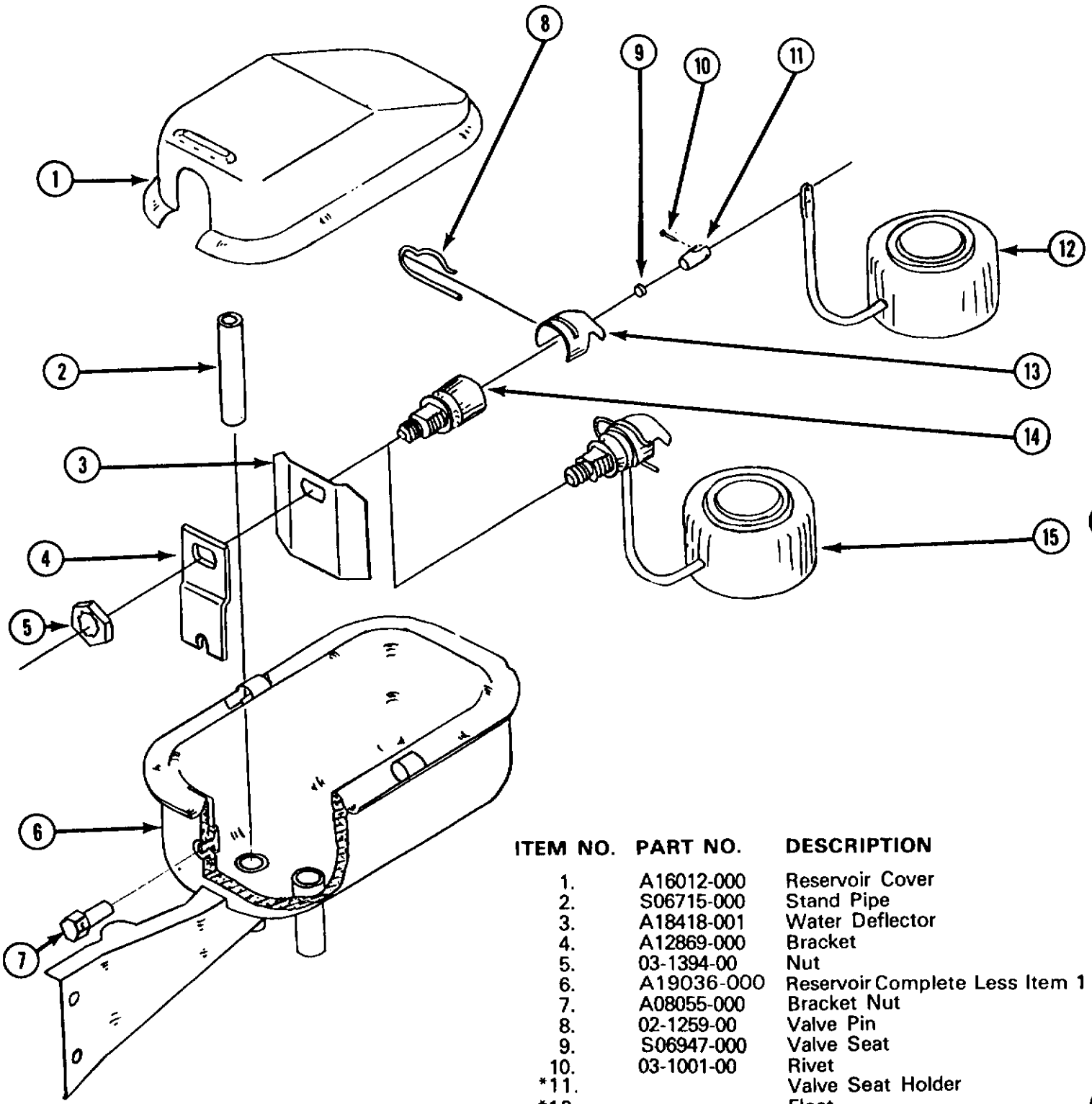

ITEM NO.	PART NO.	DESCRIPTION
1.	A16012-000	Reservoir Cover
2.	S06715-000	Stand Pipe
3.	A18418-001	Water Deflector
4.	A12869-000	Bracket
5.	03-1394-00	Nut
6.	A19036-000	Reservoir Complete Less Item 1 & 2
7.	A08055-000	Bracket Nut
8.	02-1259-00	Valve Pin
9.	S06947-000	Valve Seat
10.	03-1001-00	Rivet
*11.		Valve Seat Holder
*12.		Float
13.	02-1320-00	Deflector
*14.		Inlet Valve
15.	S08138-000	Inlet Valve and Float Assy. Includes Items 8, 9, 10, 11, 12, 13 & 14

GEAR REDUCER
Part No.
Winsmith Part No. (3CTS)

ITEM NO.	PART NO.	DESCRIPTION
1.	02-0580-28	Slow-Speed Gasket (2)
2.	02-0580-24	Slow-SpeedSeal (2)
3.	02-0580-26	Slow-SpeedBearing (2)
4.	02-0337-20	Slow-SpeedGear & Shaft
5.	02-0768-25	High-Speed Gasket (2)
6.	02-0337-23	High-Speed Bearing (2)
7.	02-0768-20	High-Speed Seal
8.	02-0337-21	High-Speed Gear & Shaft (integral)
9.	02-0580-27	Slow-Speed Spacers (2)
	02-0337-00	Complete Reducer

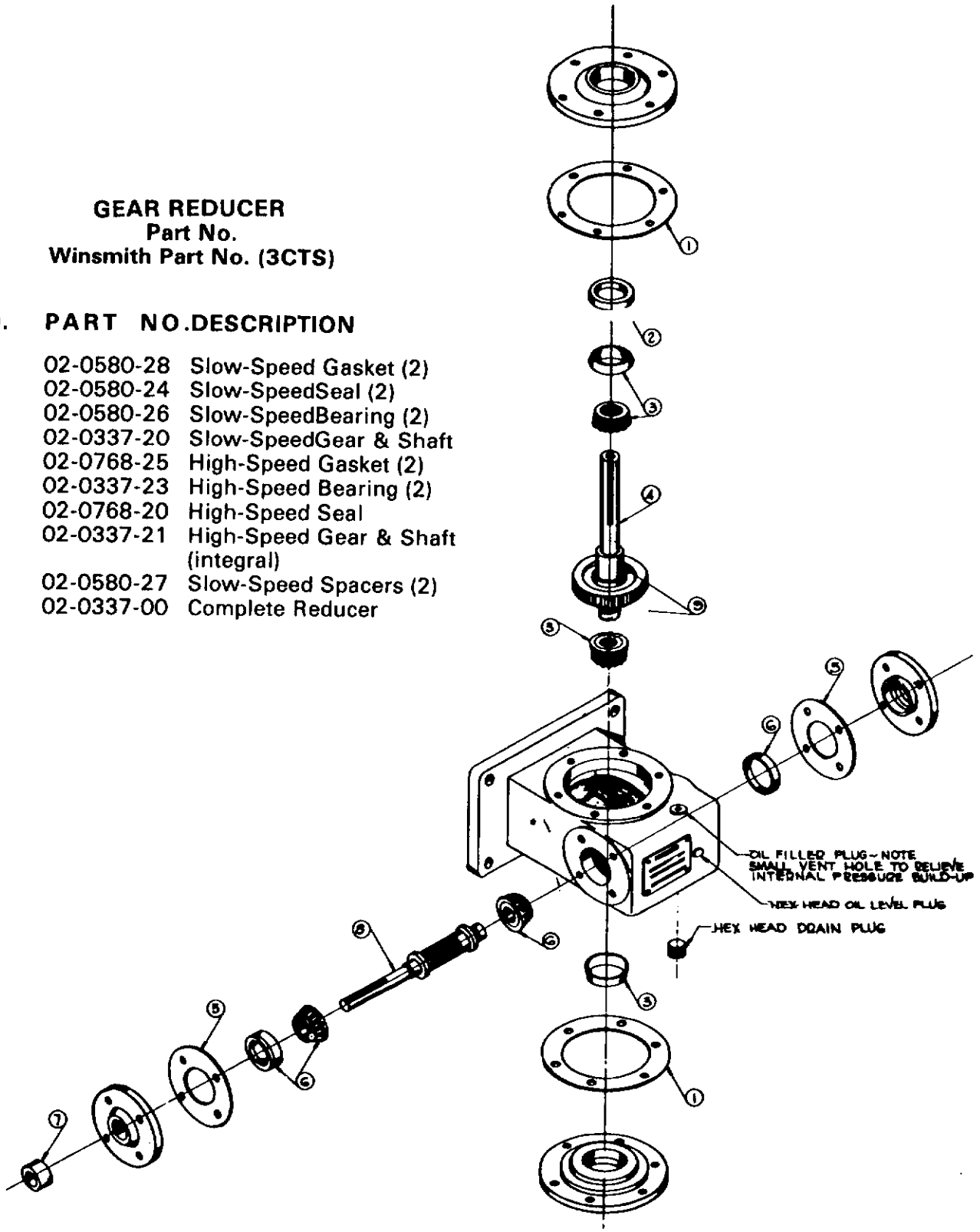

CONDENSING UNIT
1/2 HP Air Cooled, Copeland

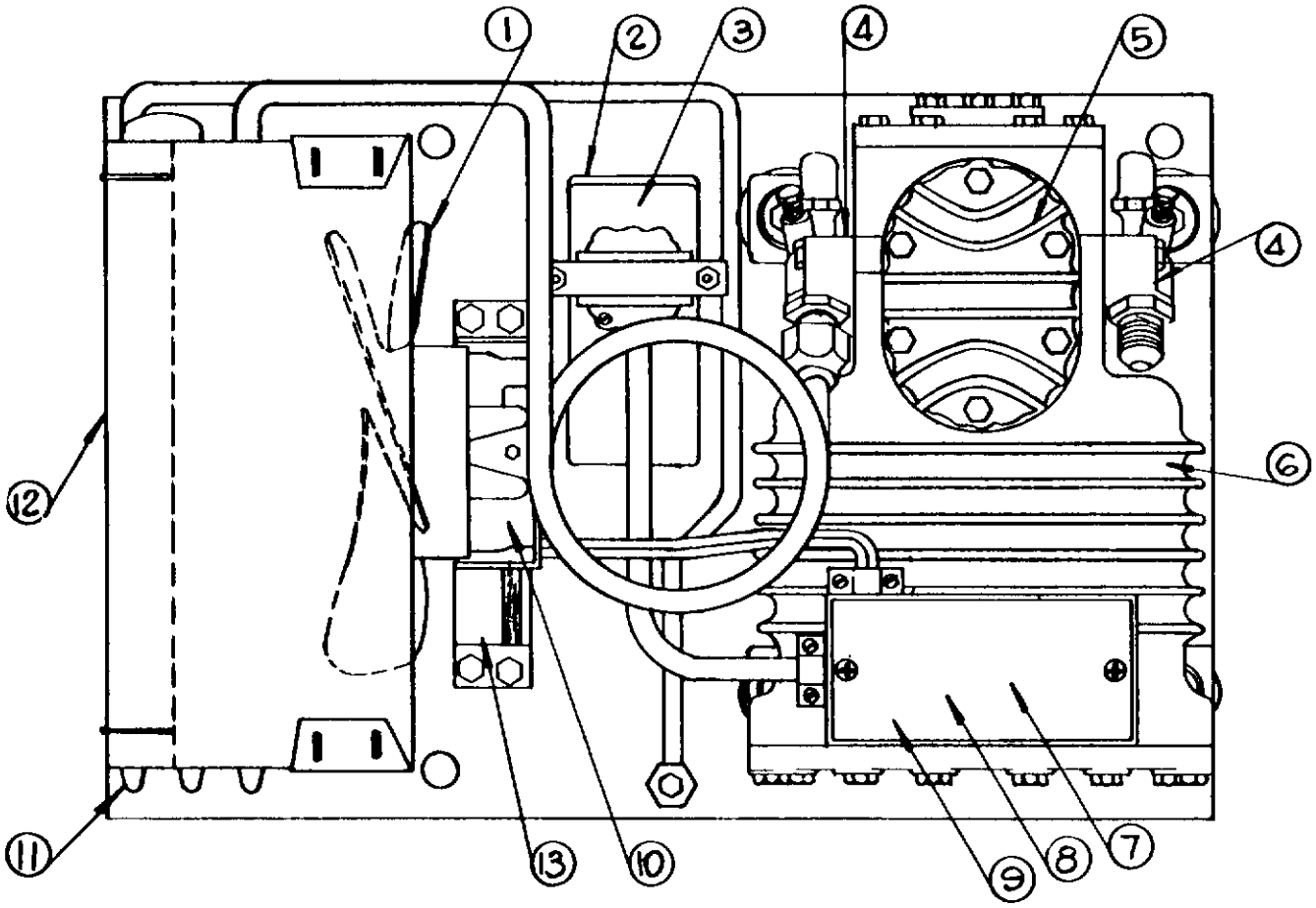

NOTE: Not available as a complete mount assembly.

ITEM NO.	PART NO.	DESCRIPTION
1.	18-0363-00	Fan Blade
2.	18-1901-07	Starting Capacitor
3.	18-1903-04	Relay
4.	18-0337-00	Suction, Service Valve
	18-0237-00	Discharge Valve
5.	18-0326-00	Valve Plate & Gasket Kit Assembly (*)
6.	18-0384-01	Motor Compressor 115/60/1
7.	18-0347-00	Overload Klixon (*)
8.	18-0241-00	Terminal Assembly (*)

NOTE: Not available as a complete mounted ass'y.

ITEM NO.	PART NO.	DESCRIPTION
9.	18-0270-00	Terminal Board (*)
10.	12-1576-01	Fan Motor
	12-1573-01	Cord
11.	18-0396-01	Condenser
12.	A12111-000	Shroud
13.	18-0388-00	Fan Motor Bracket

NOTE: Overload Not Used On Units That Are Inherent Protected. If Possible Use Copeland Part No. When Ordering Capacitors & Relays

(*) Not Shown

Note: Old Style
18-1901-07 Starting Cap.
18-0227-00 Relay

CONDENSING UNIT
1/2 HP Water Cooled, Copeland

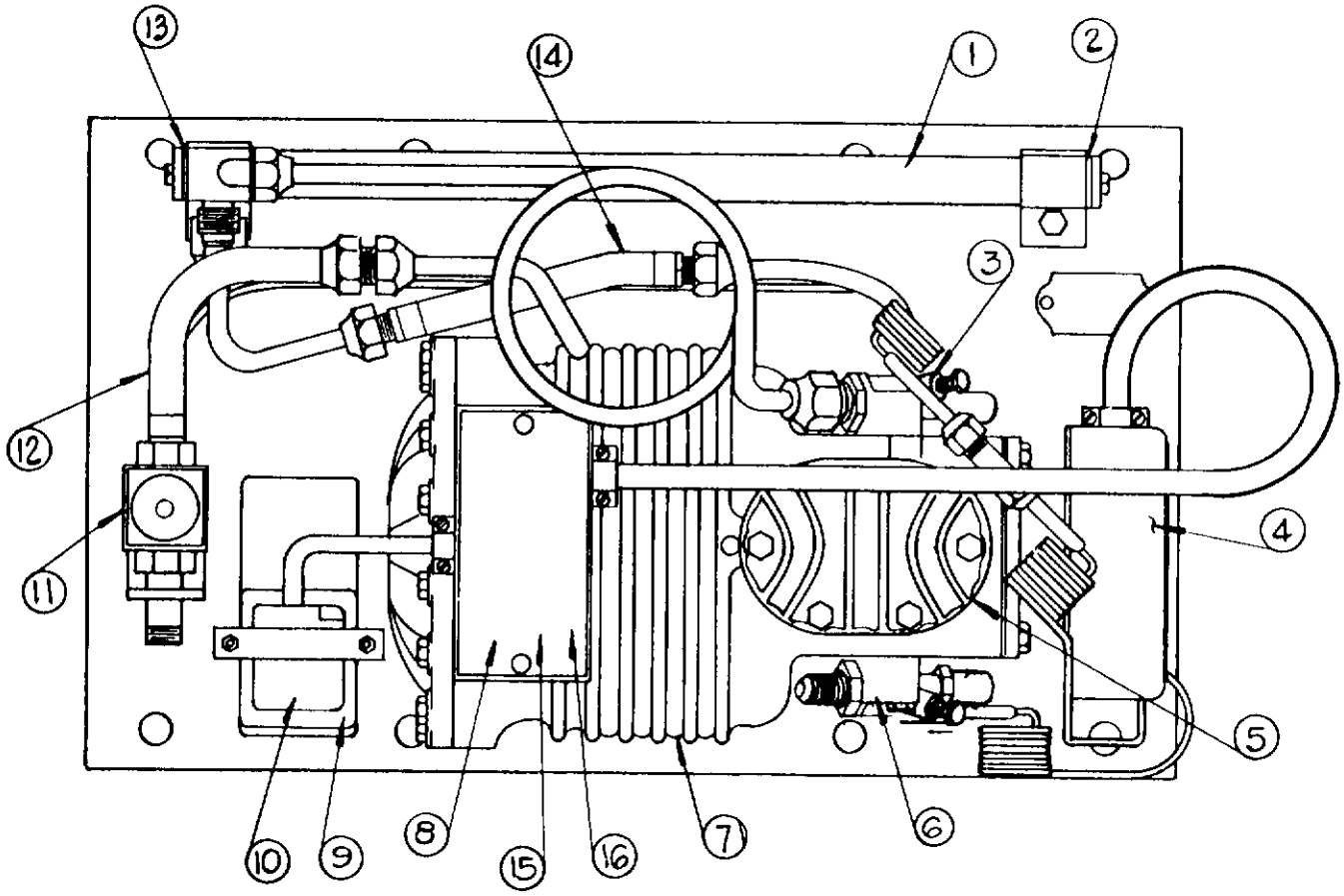

NOTE: Not available as a complete mounted assembly.

ITEM NO.	PART NO.	DESCRIPTION
1.	18-0368-00	Condenser
2.	18-0262-00	Plain Gasket
3.	18-0237-00	Discharge Service Valve
4.	11-0286-00	High Pressure Control
5.	18-0326-00	Valve Plate & Gasket Kit Assembly (*)
6.	18-0337-00	Suction Service Valve
7.	18-0385-01	Motor Compressor 115/60/1
8.	18-0347-00	Klixon Overload (*)
9.	18-1901-07	Starting Capacitor
10.	18-1903-04	Relay
11.	11-0198-00	Water Valve
12.	18-0260-00	Compressor to Valve Water Hose
13.	18-0263-00	Manifold Gasket
14.	18-0261-00	Compressor to Condenser Water Hose
15.	18-0270-00	Terminal Board (*)
16.	18-0241-00	Terminal Assembly (*)

If Possible Use Copeland Part No. When Ordering Capacitors & Relays.

(*) Not Shown

Note: Old Style
18-1901-07 Start Cap.
18-0227-00 Relay

CABINET

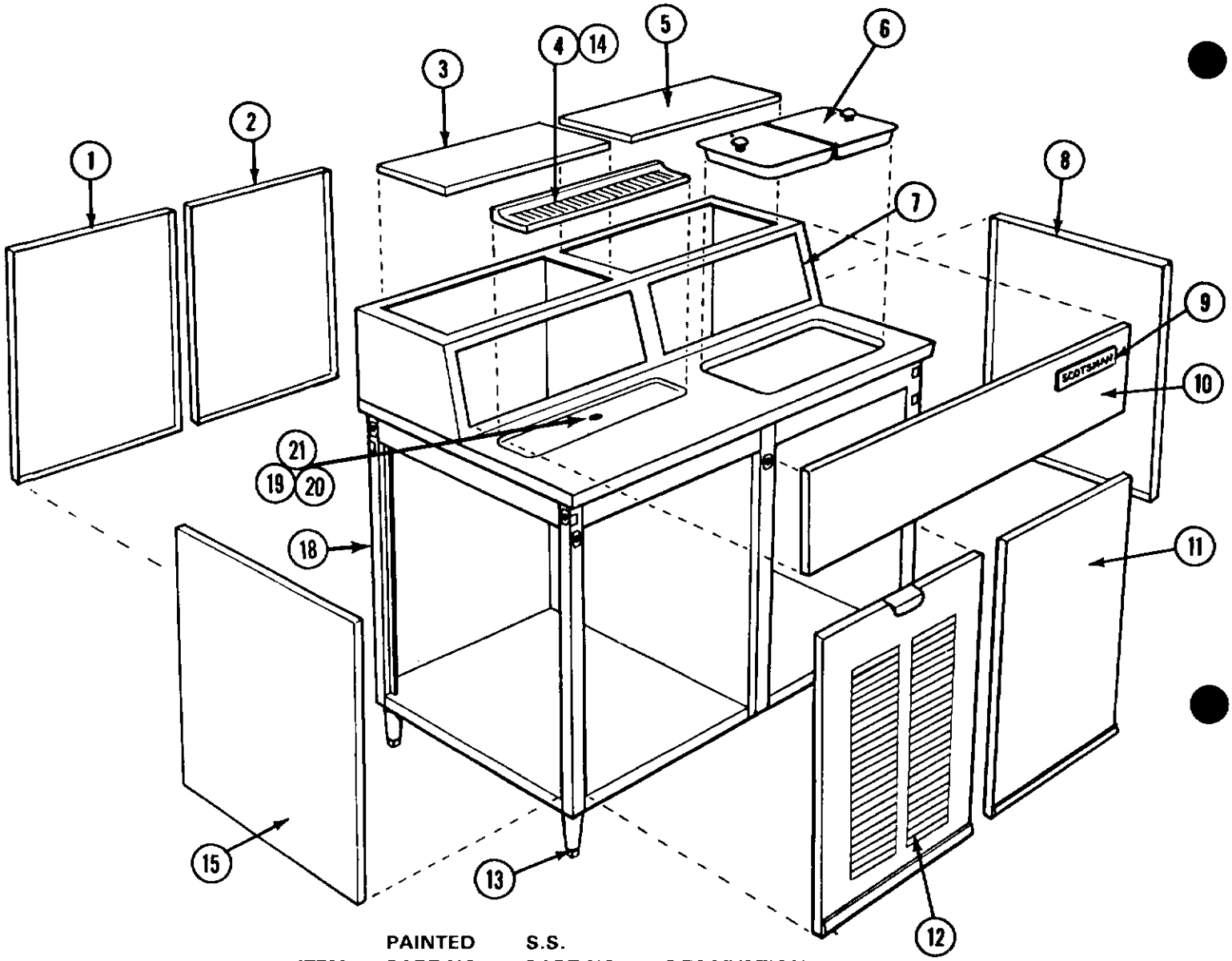

ITEM	PAINTED PART NO.	S.S. PART NO.	DESCRIPTION
1.	A17754-008	A17754-001	Rear Door
2.	A17753-008	A17753-001	Rear Panel
3.	A17829-000	A17829-000	Lt. Top Panel
4.	02-1955-00	02-1955-00	Grill
5.	A17812-000	A17812-000	Rt. Top Panel
6.	02-1550-00	02-1550-00	Door, Bin Access
7.	A17616-000	A17616-000	Hood Assy.
8.	A17750-008	A17750-001	Right Side Panel
9.	15-0156-00	15-0156-00	Emblem
10.	A22280-000	A22280-000	Front Hood Panel
11.	A17755-008	A17755-001	Front Panel
12.	A17667-008	A17667-001	Front Door
13.	KLP2E	KLP2S	Leg Kit (order thru sales dept)
14.	A23186-001	A23186-001	Splash Panel
15.	A19157-008	A1916	Left Side Panel
*16.	02-0836-00	02-0836-00	Cabinet - Panel Catch
*17.	15-0411-00	15-0411-00	Panel - Cabinet Strike
18.	A17696-000	A17696-000	Cabinet Frame Assy.
19.	A18102-000	A18102-000	Drain Assy.
20.	A18090-000	A18090-000	Drain Fitting, Top
21.	13-0617-11	13-0617-11	"O" Ring

*Not Shown

CARBONATOR PUMP ASSEMBLY

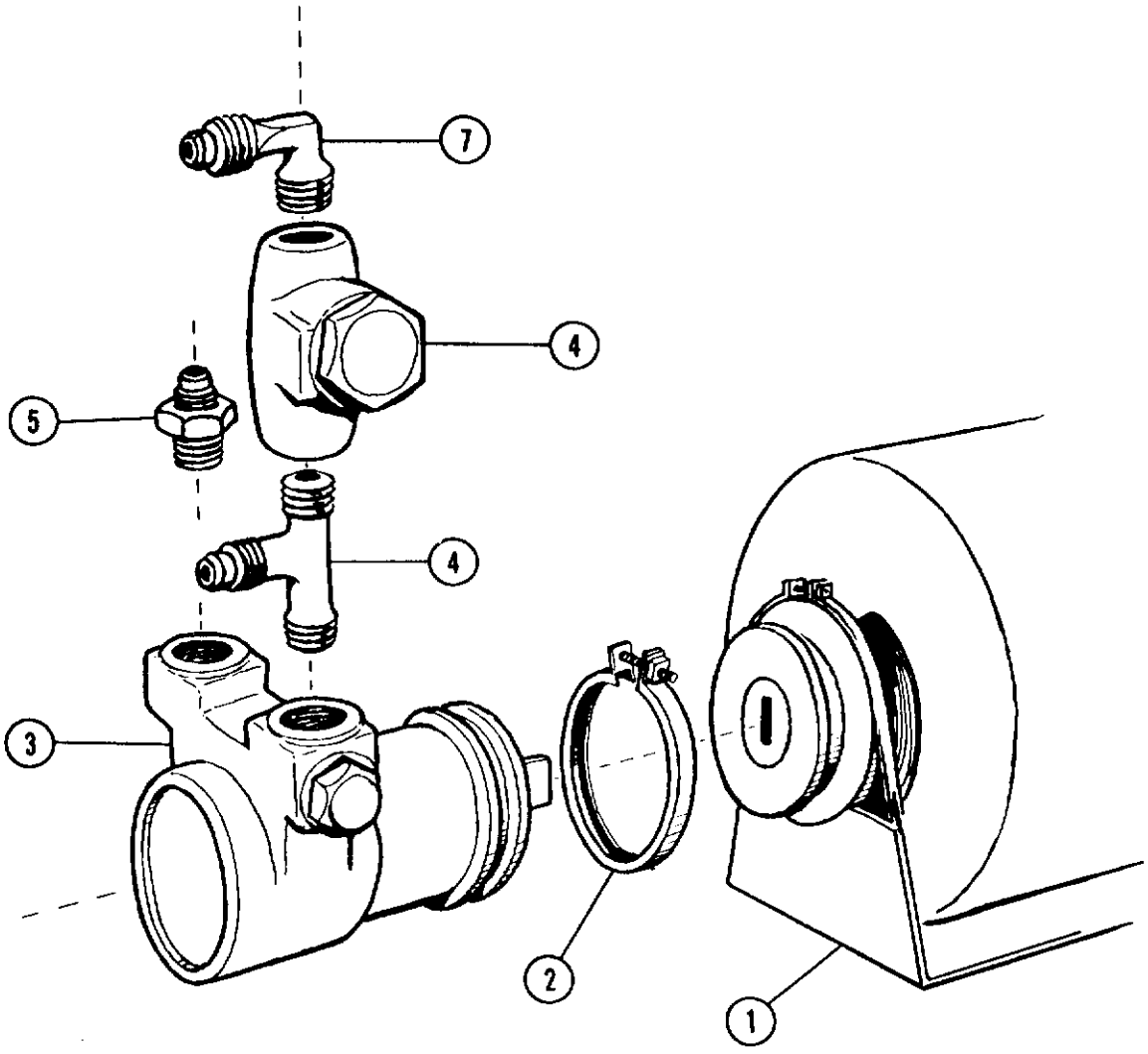

ITEM NO.	PART NO.	DESCRIPTION
1.	12-1339-01	Motor 115/60/1
2.	02-1527-00	Coupling Clamp
3.	02-1526-00	Pump
4.	16-0468-00	Tee 3/8" × 3/8" NPT × 1/4" Flare
5.	16-0355-00	Union 3/8 NPT × 3/8 Flare
6.	16-0162-01	Strainer
7.	16-0401-00	Half Union Elbow

STORAGE BIN TOP ASSEMBLY

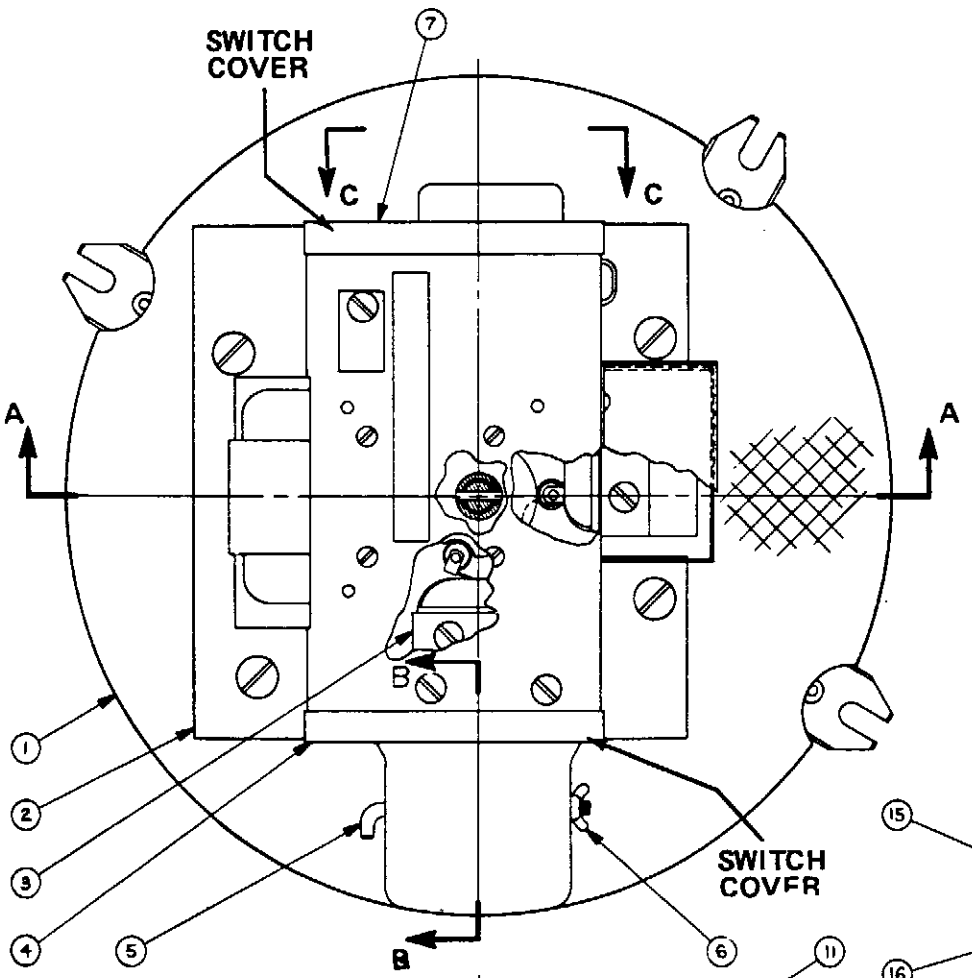

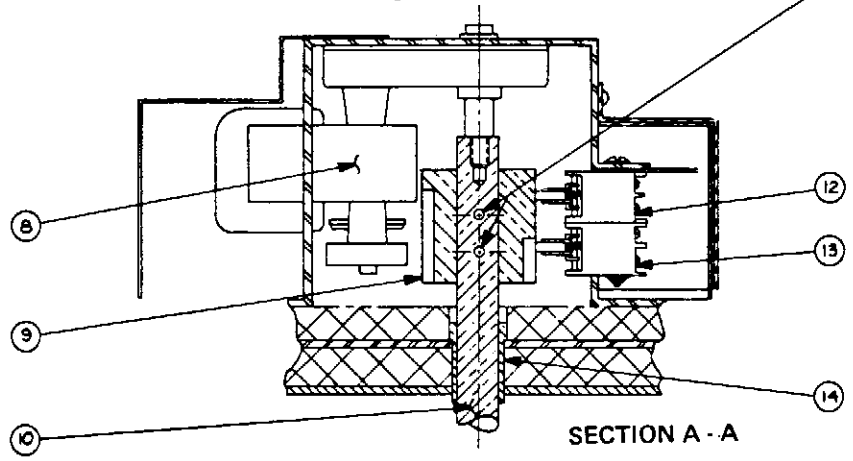

SECTION A - A

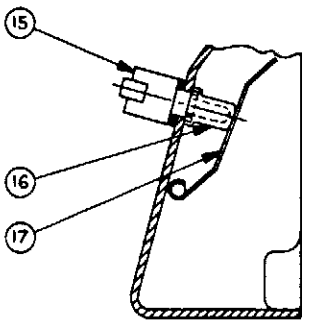

SECTION B - B

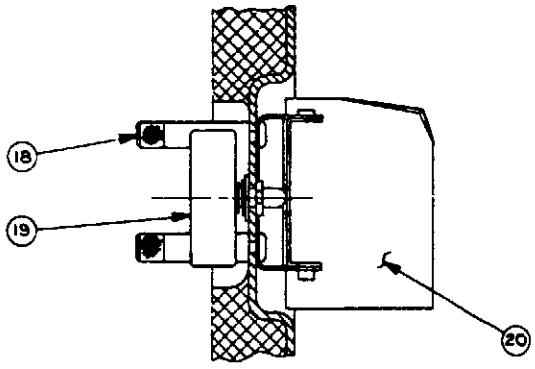

SECTION C - C

ITEM NO.	PART NO.	DESCRIPTION
1.	A21215-000	Storage Bin Top Assembly
2.	A18468-000	Motor Mount
3.	12-0876-00	Positioning Switch (Continuous ice)
4.	A16498-000	Switch Cover
5.	A16104-000	Hinge Pin
6.	03-0255-02	Wing Nut
7.	A16499-000	Switch Cover
8.	12-1610-01	Dispenser Drive Motor
9.	02-1576-00	Cam
10.	A21207-000	Drive Shaft
11.	03-0431-03	Set Screws
12.	12-0876-00	Cam Switch (two ounces ice)
13.	12-0876-00	Cam Switch (one ounce ice)
14.	A16101-000	Cover Bushing
15.	12-1018-01	Spout Switch
16.	12-1643-00	Boot & Bushing
17.	A16010-000	Ice Control Lever
18.	A16495-000	Differential Bracket Nut
19.	12-1018-01	Differential Switch
20.	A19269-000	Differential Paddle

STORAGE BIN AND DISPENSING ASSEMBLY

ITEM NO.	PART NO.	DESCRIPTION
1.	A16098-000	Bin Cover Only
2.	A20912-000	Drive Pin — Top
3.	A16005-000	Tie Bolt Bracket
4.	A21485-000	Outer Bin
5.	03-0255-00	Wing Nut
6.	A15965-000	Shutter Assembly
7.	A22479-000	Storage Bin
8.	A16129-000	Bin Bottom

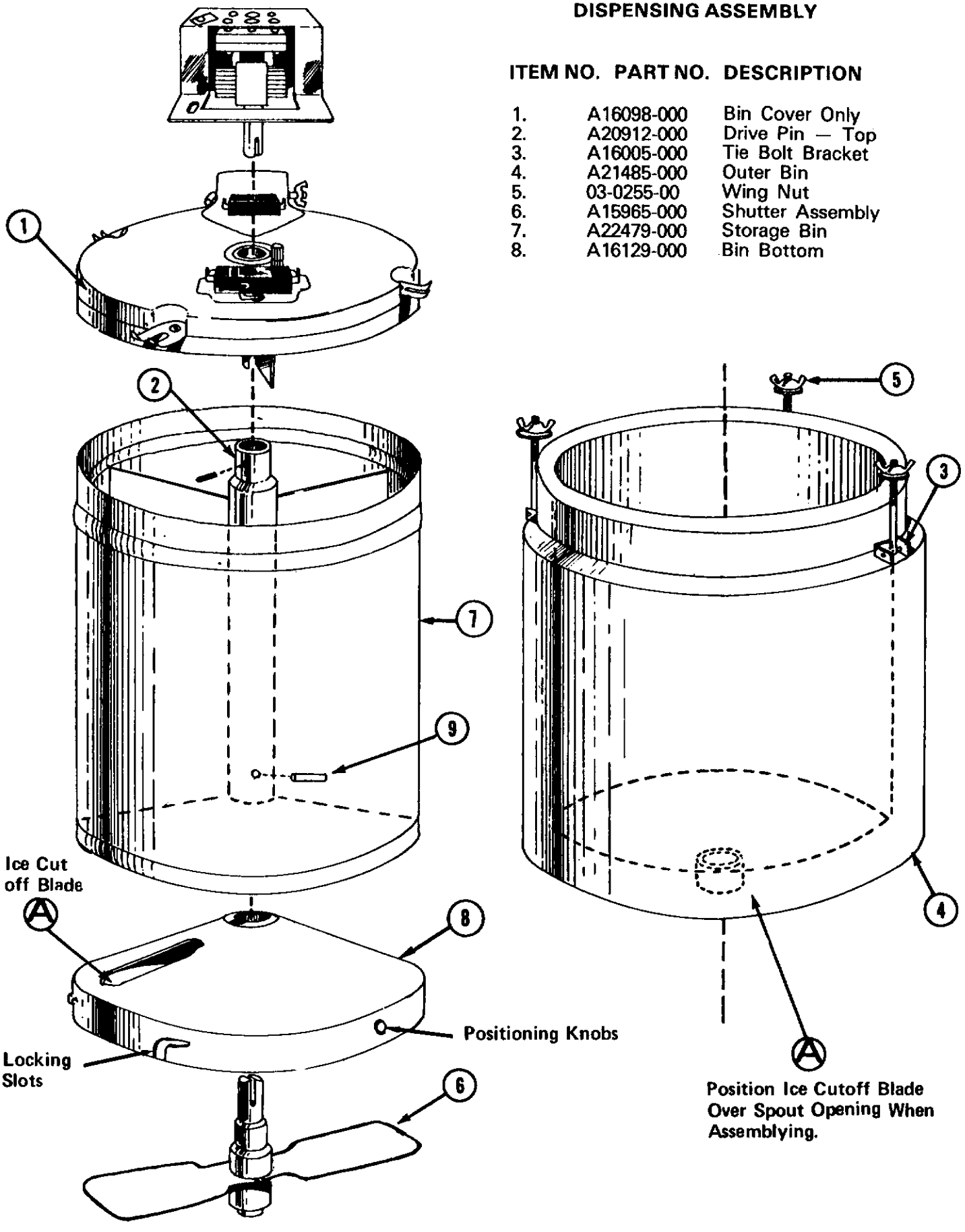

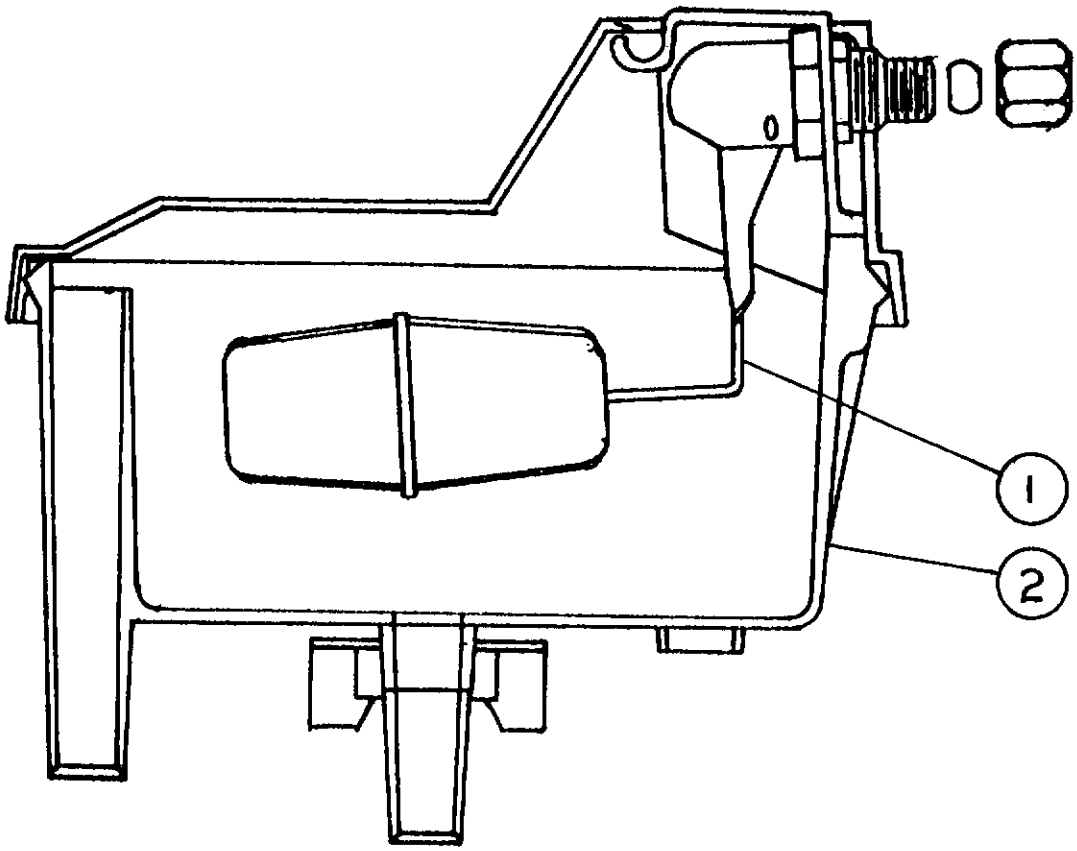

RESERVOIR ASSEMBLY

ITEM NO.	PART NO.	DESCRIPTION
1.	02-2217-02	Valve Assy.
2.	02-2217-01	Reservoir Complete

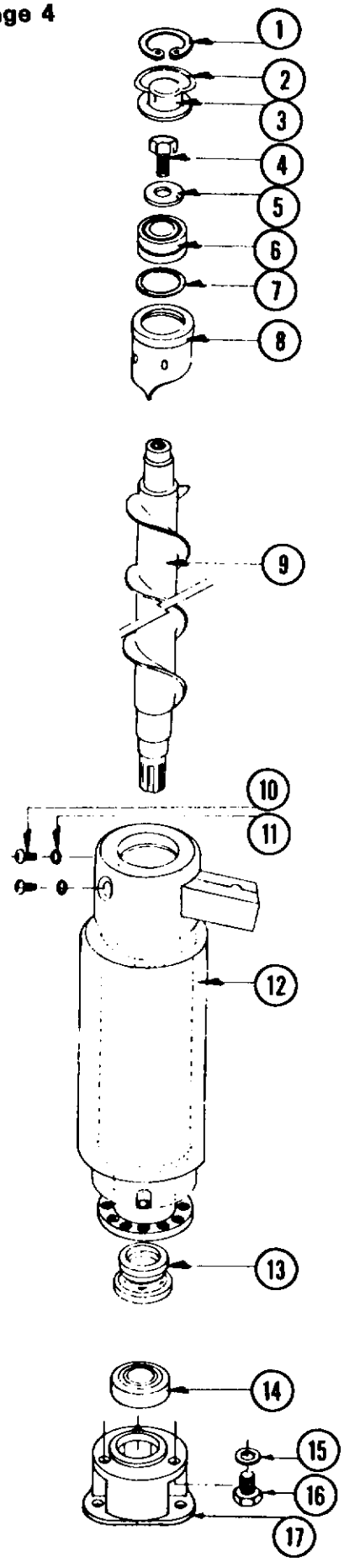

FREEZER ASSEMBLY

ITEM NO.	PART NO.	DESCRIPTION
1.	03-1558-03	Retainer Ring
2.	A08162-000	Cap Hook
3.	A07701-000	Cap
4.	03-0758-00	Screw
5.	A07699-000	Washer
6.	02-0547-00	Top Bearing
7.	13-0617-16	"O" Ring
8.	A26706-001	Breaker Includes Bearing
9.	02-1313-00	Auger
10.	03-1403-46	Screw
11.	03-1417-07	Washer
12.	A26731-020	Evaporator Shell Includes Scution Line
13.	A18945-000	Water Seal
14.	02-0417-00	Bearing, Lower
15.	03-1408-03	Washer (req'd)
16.	03-1405-14	Cap Screw
16.	15-0575-01	Coupling GAsket
17.	03-1505-00	Gasket
17.	08-0595-01	Adapter-Plastic
18.	15-0575-01	Spline Drive Coupling
19.	13-0709-01	Shaft Drip Shield — Rubber
*20.	A18153-000	Drip Pan

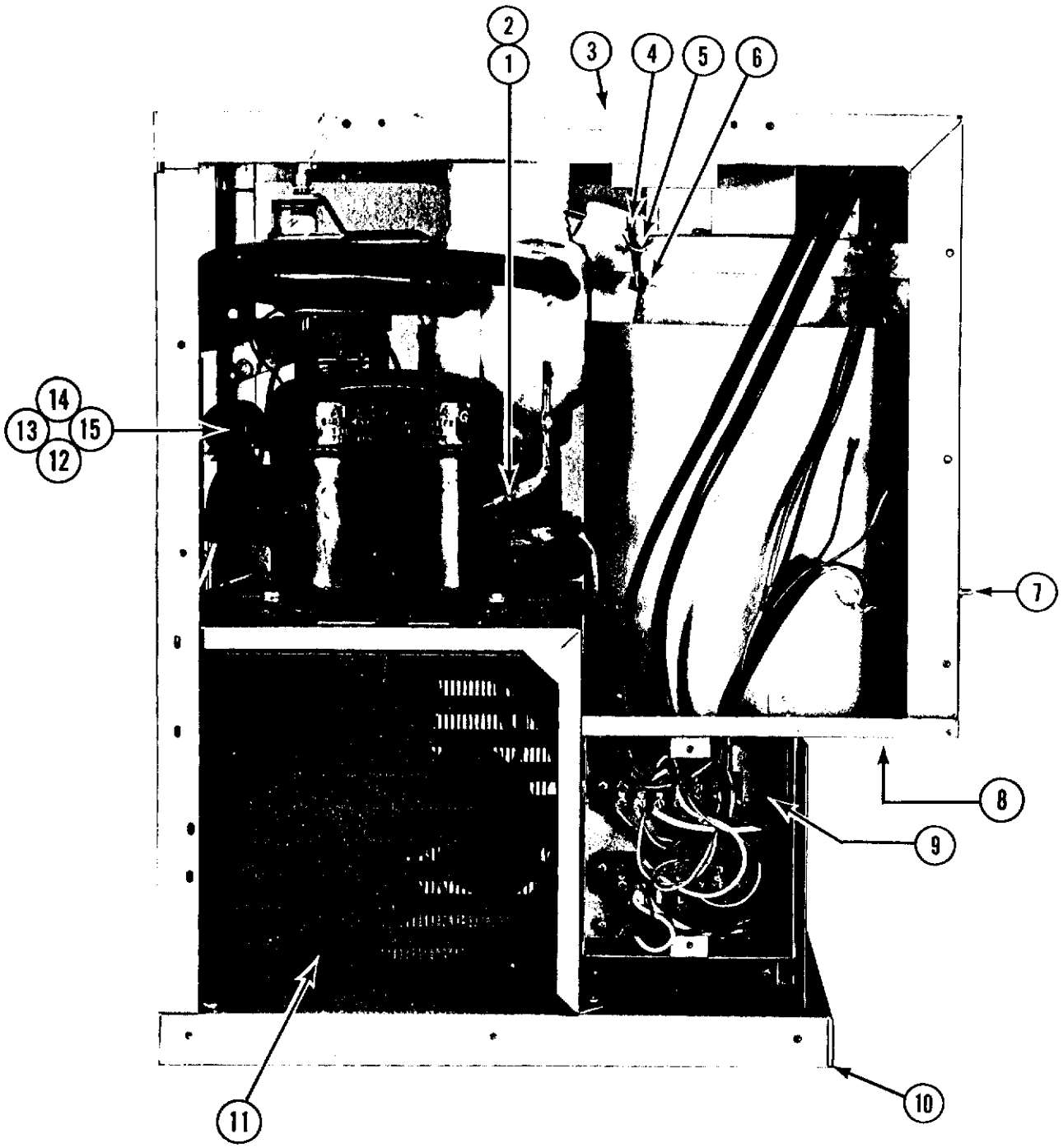

CHASSIS ASSEMBLY

Left Side

ITEM NO.	PART NO.	DESCRIPTION
1.	16-0563-00	Service Valve Cap
2.	16-0560-00	Service Valve Core
3.	12-1570-00	Safety Switch
4.	Not Available	Tie Bolts
5.	03-0255-00	Wing Nuts
6.	03-0396-08	Cotter Pins
7.	12-1540-00	Switch
8.	02-1804-00	Plastic Spout Extension
9.		Wiring Panel Box
10.	13-0566-00	Base Gasket
11.	18-1916-00	Condenser
12.	18-0161-01	Compressor
13.	18-0161-02	Compressor Overload
14.	18-0161-03	Compressor Relay
15.	18-0161-05	Starting Capacitor (189-220)

A25995-021
GEAR MOTOR ASSEMBLY
1/10 H.P.
115/60/1

11.5 RPM at output shaft

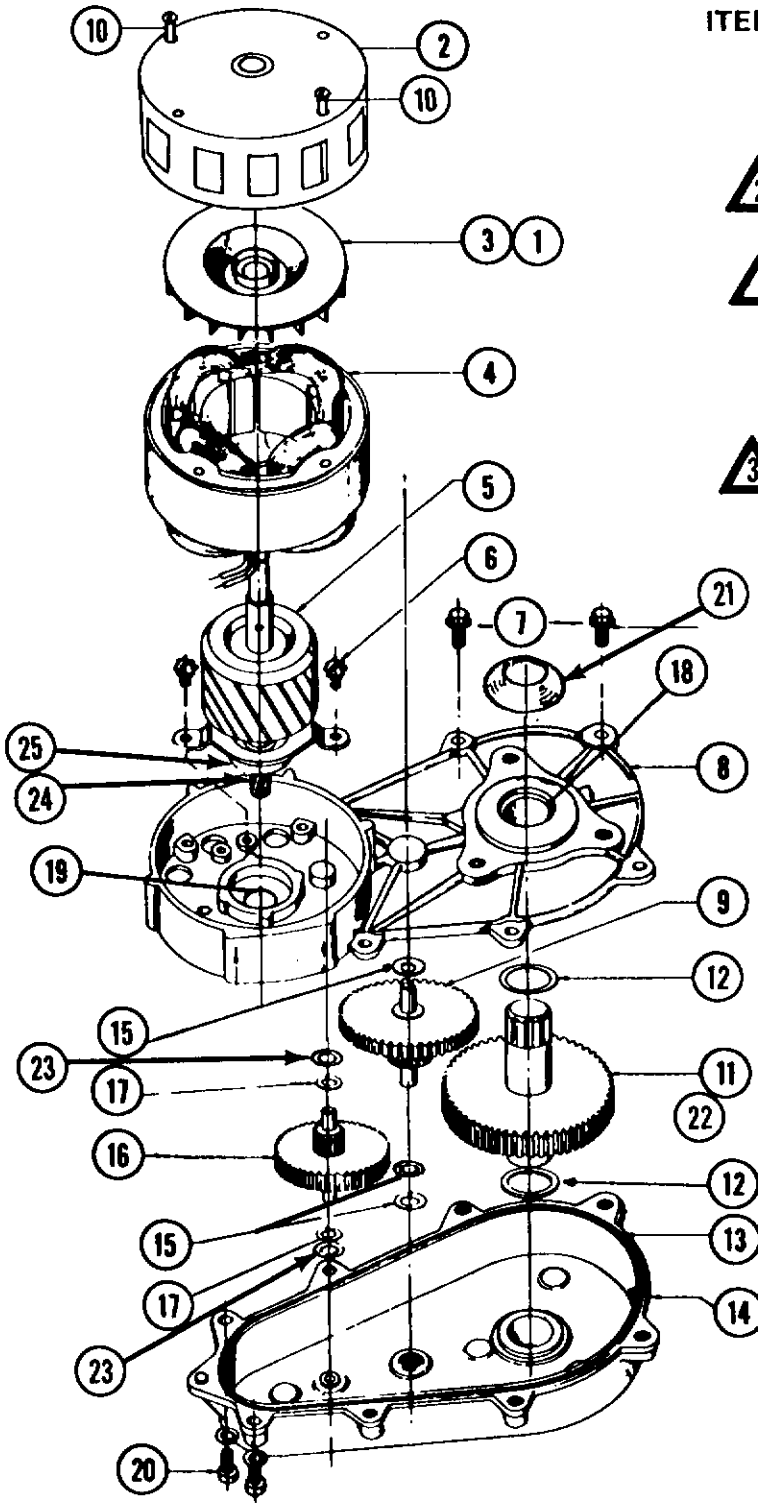

ITEM NO.	PART NO.	DESCRIPTION
1.	03-1246-00	Set Screw (2)
2.	A17047-000	Motor Housing
3.	A16915-000	Cooling Fan
4.	12-1400-01	Stator Assy.
2 5.	A26454-001	Rotor & 1st. Gear Kit
6.	03-1245-00	Screws (2)
7.	03-1251-00	Flange Screws (6)
1 8.	A16920-021	Gear Case Cover
9.	02-1521-00	Gear and Pinion
10.	03-1403-43	Motor Bolts (4)
11.	A26650-001	Gear and Output Shaft
12.	03-1408-21	Washer (2)
13.	02-1505-00	"O" Ring
3 14.	A24184-001	Gear Case Kit
15.	03-1408-06	Washer (3)
16.	02-2224-01	1st Gear and Pinion
17.	03-1408-19	Washer (2)
18.	02-1503-00	Grease Seal
19.	02-1504-00	Grease Seal
20.	03-1252-00	Screw (2)
21.	13-0709-01	Water Shed
22.	03-1475-01	Key
23.	03-1408-20	Washer (2)
24.	13-0617-04	Slinger Ring
25.	02-1501-00	Rotor Bearing

NOTE:

1 Cover comes with grease seals items 18 & 19.

2 Fiber gear (item 16 and rotor bearing (item 25) included in the rotor kit.

3 Includes items: 8, 13, 15, 17, 18, 19, 23 and gear lube.

CABINET PANELS — CHASSIS

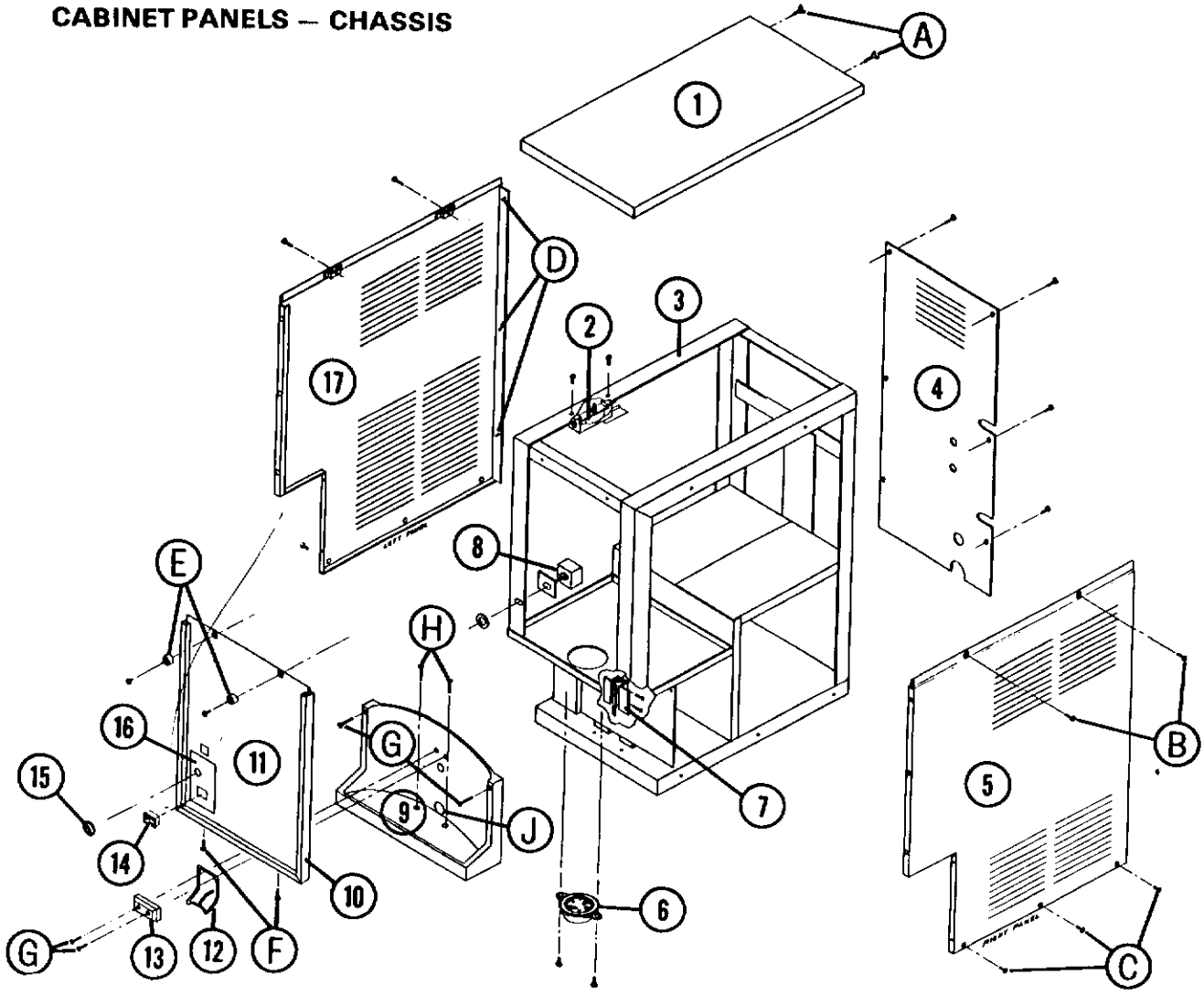

ITEM NO.	PART NO.	DESCRIPTION
1.	A19104-004	Cabinet Top—Painted
1.	A19104-001	Cabinet Top—Stainless Steel
2.	12-1570-00	Master (Interlock) Switch
3.	A21447-000	Frame
4.	A21405-002	Back Panel—Painted
4.	A21405-001	Back Panel—Stainless Steel
5.	A21416-002	Right Side Panel—Painted
5.	A21416-001	Right Side Panel—Stainless Steel
6.	02-1804-00	Spout Extension
7.	12-1641-00	Vend Switch
8.	12-1540-00	Selector Switch
9.	A21429-000	Sink
10.	15-0507-00	Moulding Trim
11.	A21425-002	Cabinet Front—Painted
11.	A21425-001	Cabinet Front—Stainless Steel
12.	A21544-000	Actuator Arm
13.	A22032-000	Actuator Arm Adapter
14.	12-1377-00	Water Switch
15.	12-1566-00	Switch Knob
16.	15-0563-01	Decal
17.	A21415-002	Left Side Panel—Painted
17.	A21415-001	left Side Panel—Stainless Steel

CHASSIS ASSEMBLY

Right Side

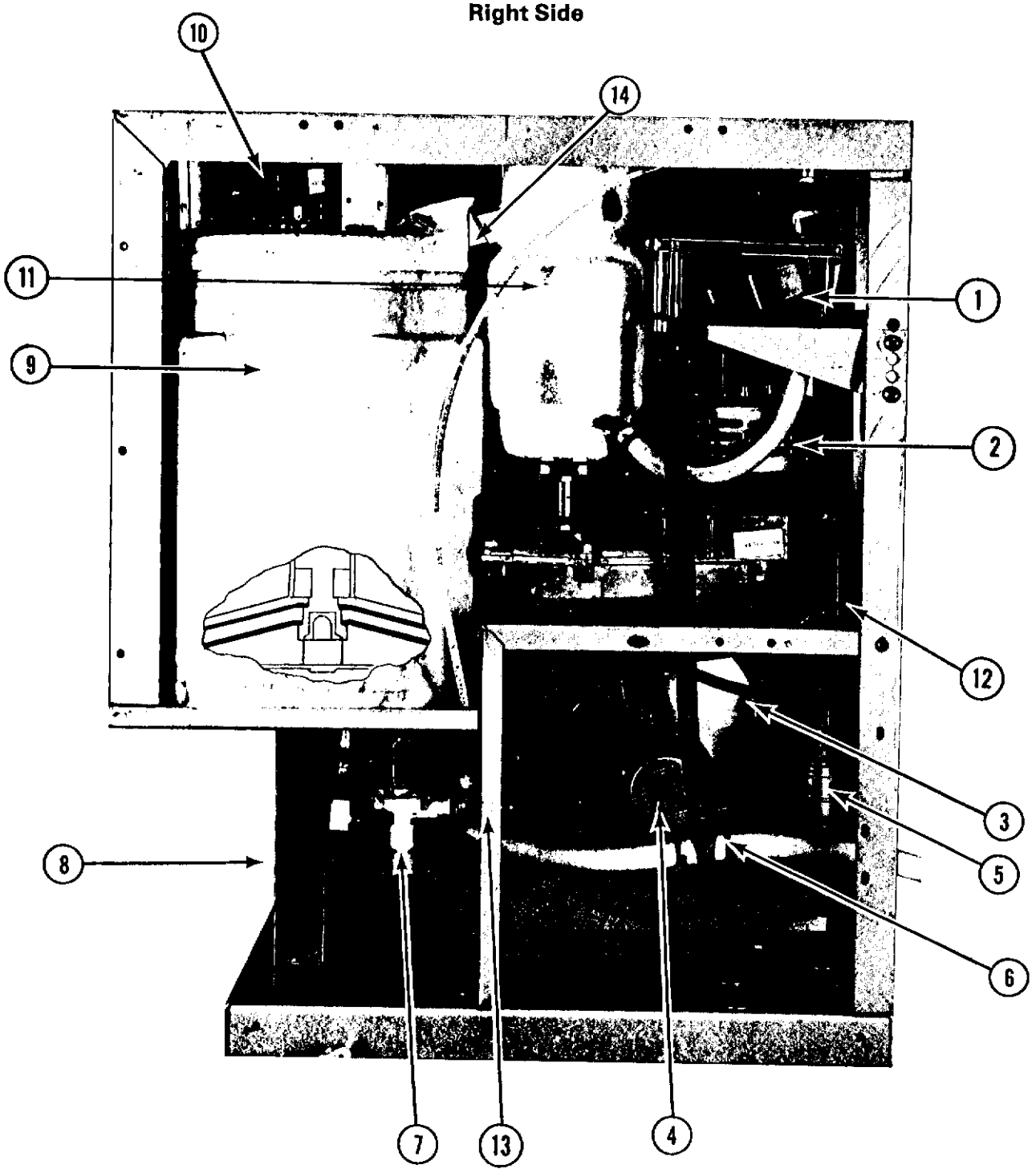

ITEM NO.	PART NO.	DESCRIPTION
1.	See Page 3	Reservoir Assembly
2.	See Page 6	Gear Motor Assembly
3.	18-0137-00	Fan Blade
4.	12-1575-01	Fan Motor
5.	02-0350-00	Drier
6.	02-1338-00	Hose Clamps
7.	12-1434-04	Inlet Water Solenoid
8.	12-1641-00	Vend Switch
9.	See Page 2	Bin Assembly
10.	12-1610-01	Dispensing Drive Motor Use with A21207-000 Drive Shaft
11.	See Page 4	Freezer Assembly
12.		Electrical Hook Up Box
13.		Water Supply Inlet
14.	A16151-000	Spout Extension

CENTRIFUGAL SWITCH

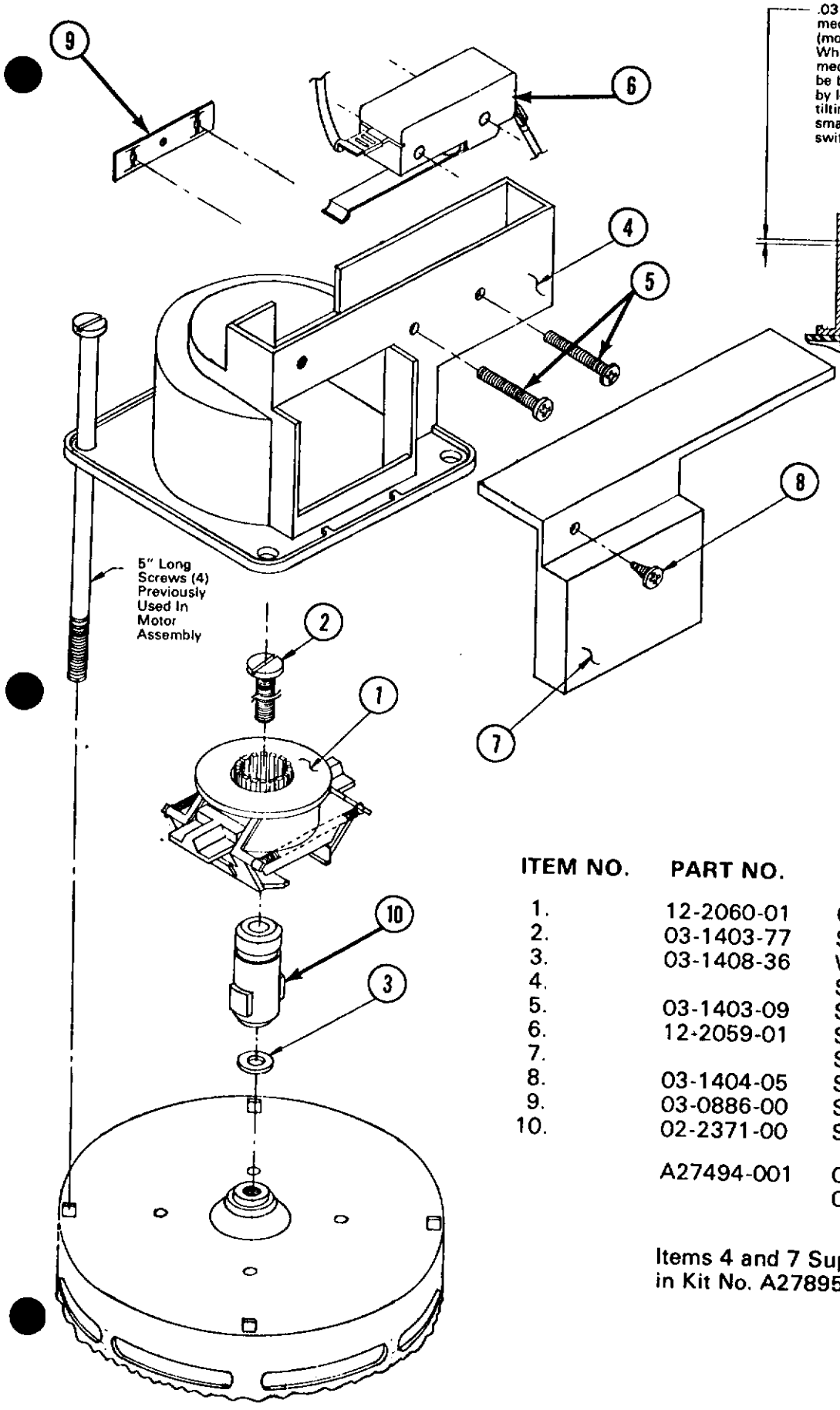

SWITCH ADJUSTMENT

.03 minimum gap between switch lever and mechanism with centrifugal mechanism actuated (motor running). Switch circuit should be closed When motor is stopped and centrifugal mechanism deactivates, the switch circuit should be broken. There should be enough adjustment by loosening the switch mounting screws and tilting switch in direction required. If this fails, a small amount of bending can be done on the switch lever.

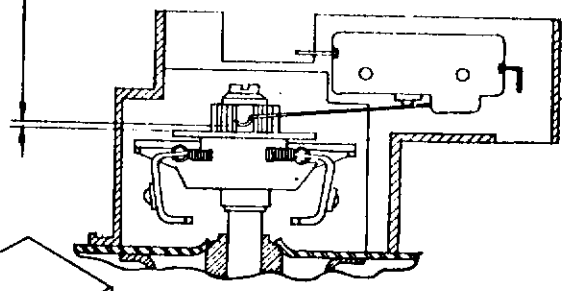

ITEM NO.	PART NO.	DESCRIPTION
1.	12-2060-01	Centrifugal Actuator
2.	03-1403-77	Screw
3.	03-1408-36	Washer
4.		Switch Mounting Case
5.	03-1403-09	Screw (2)
6.	12-2059-01	Switch
7.		Switch Case Cover
8.	03-1404-05	Screw
9.	03-0886-00	Speed Nut
10.	02-2371-00	Shaft Extension
	A27494-001	Centrifugal Switch Kit Complete w/17-1328-01 inst.

Items 4 and 7 Supplied in Kit No. A27895-001

STORAGE BIN TOP ASSEMBLY

ITEM NO.	PART NO.	DESCRIPTION
1.	A21215-000	Storage Bin Top Assembly Complete
2.	A18468-000	Motor Mount
3.	12-0876-00	Positioning Switch (Continuous Ice)
4.	A16498-000	Switch Cover
5.	A16104-000	Hinge Pin
6.	03-0255-02	Wing Nut
7.	A16499-000	Switch Cover
8.	12-1610-01	Dispenser Drive Motor
9.	02-1576-00	Cam
10.	A21207-000	Drive Shaft
11.	03-0431-03	Set Screws
12.	12-0876-00	Cam Switch (two ounces ice)
13.	12-0876-00	Cam Switch (one ounce ice)
14.	A16101-000	Cover Bushing
15.	12-1018-01	Spout Switch
16.	12-1643-00	Boot — Bushing
17.	A16010-000	Ice Control Lever
18.	A16495-000	Differential Bracket Nut
19.	12-1018-01	Differential Switch
20.	A19269-000	Differential Paddle

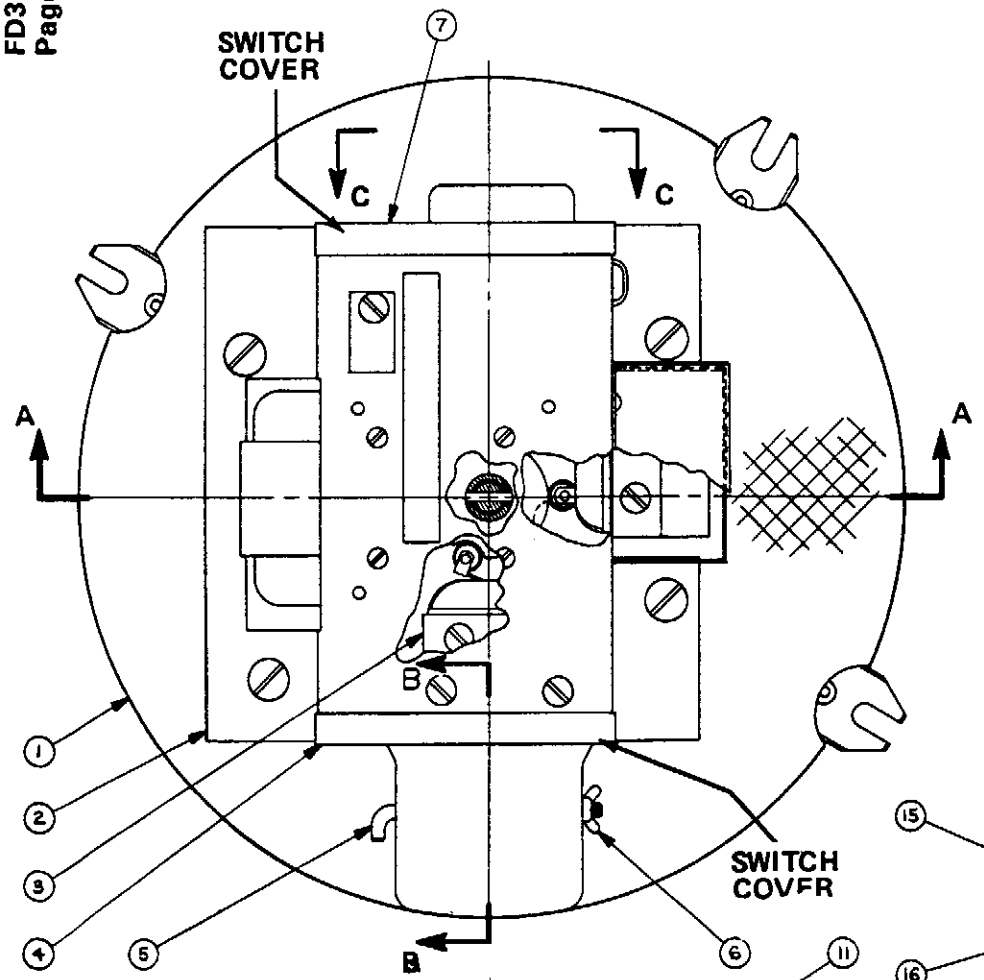

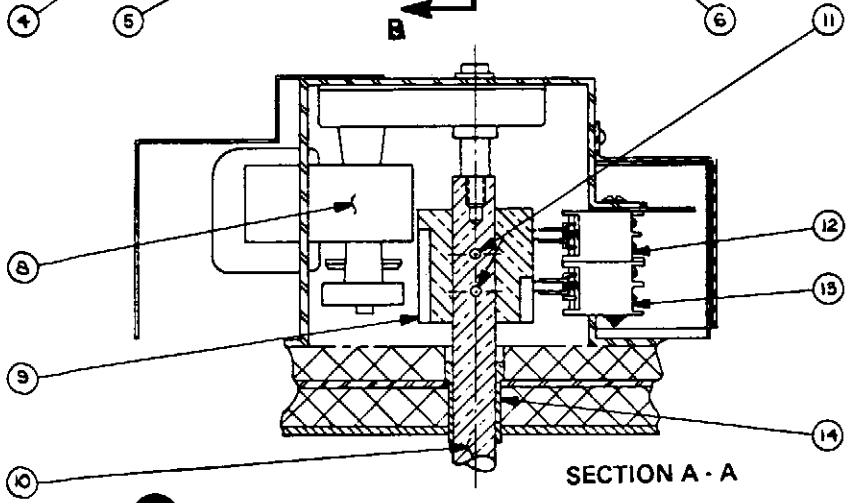

SECTION A - A

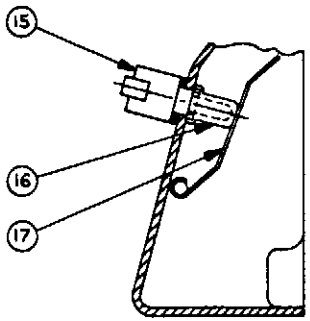

SECTION B - B

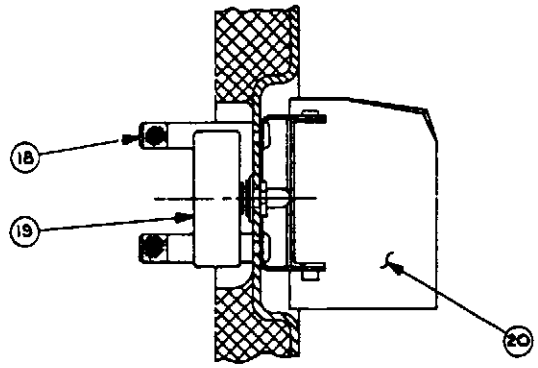

SECTION C - C

STORAGE BIN AND DISPENSING ASSEMBLY

ITEM NO.	PART NO.	DESCRIPTION
1.	A16098-000	Bin Cover Only
2.	A20912-000	Drive Pin — Top
3.	Not Available	Tie Bolt Bracket
4.	A26447-001	Outer Bin
5.	03-0255-00	Wing Nut
6.	A26440-001	Storage Bin
7.	A26445-001	Bin Bottom

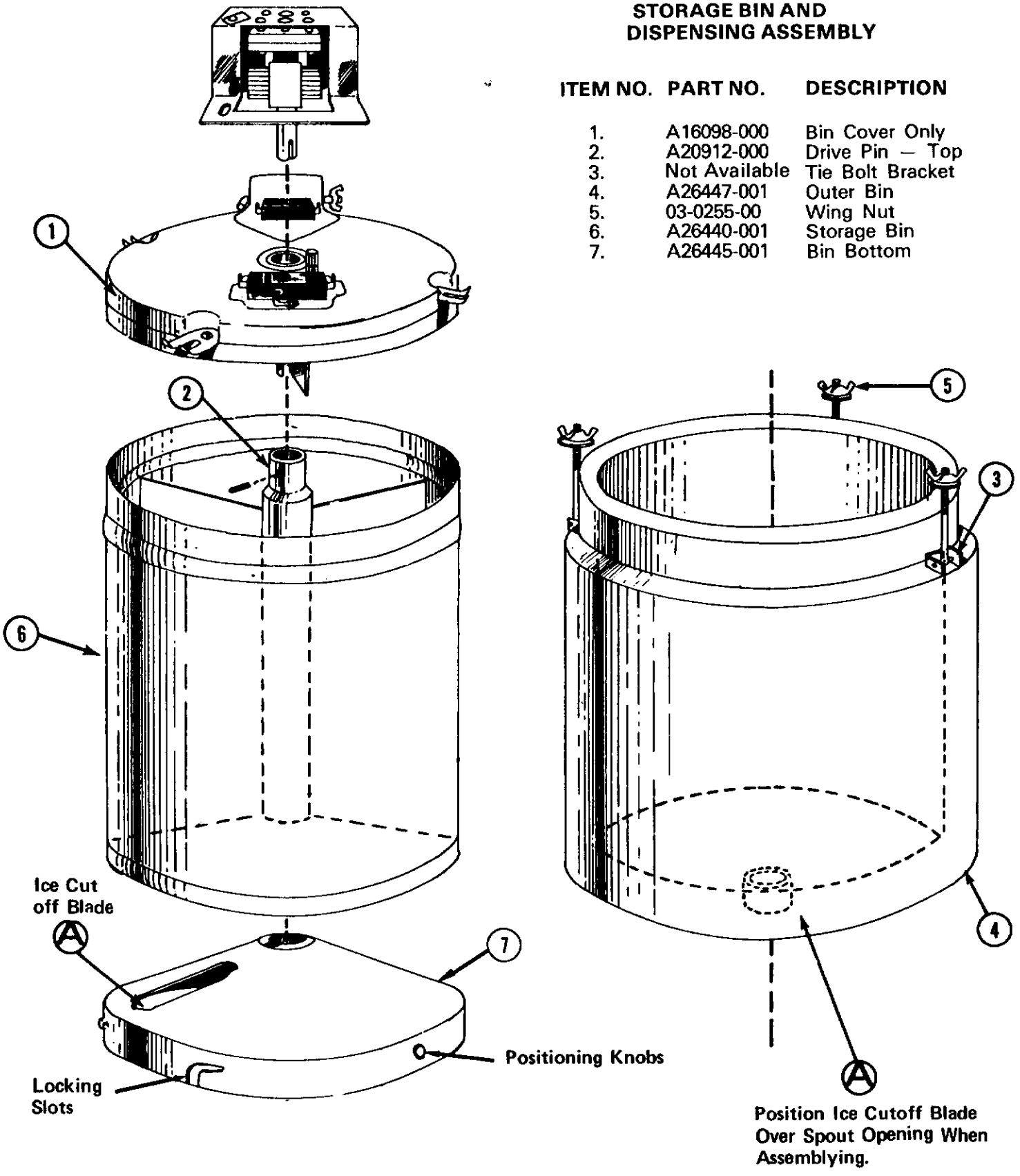

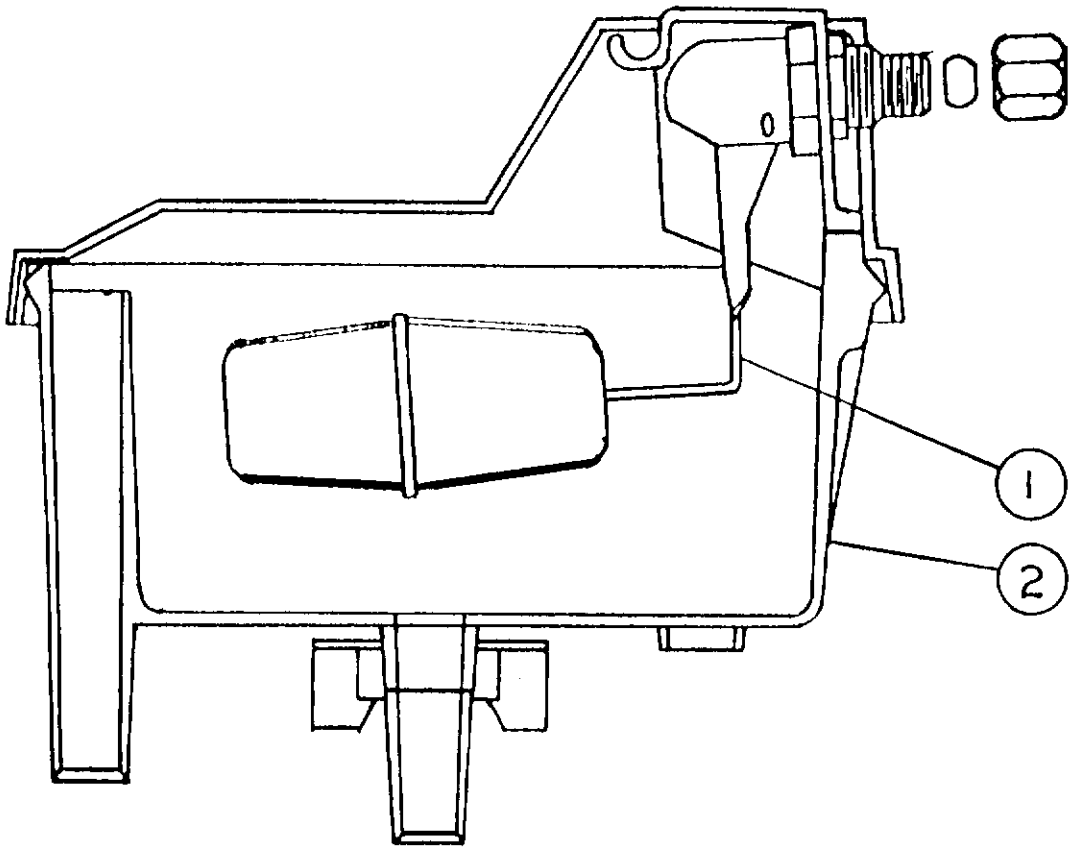

RESERVOIR ASSEMBLY

ITEM NO.	PART NO.	DESCRIPTION
1.	02-2217-02	Valve Assy.
2.	02-2217-01	Reservoir Complete

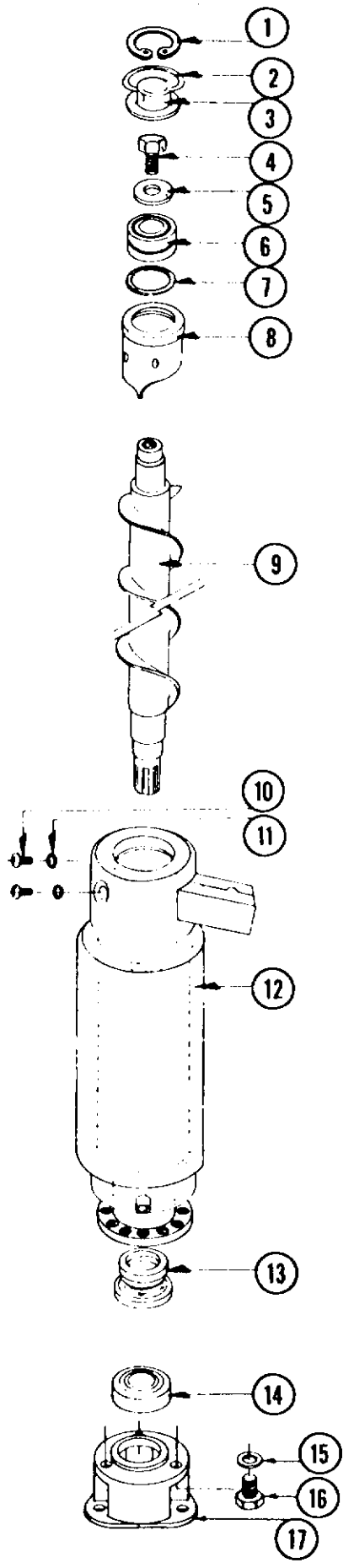

FREEZER ASSY.

ITEM NO.	PART NO.	DESCRIPTION
1.	03-1558-03	Retainer Ring
2.	A08162-000	Cap Hook
3.	A07701-000	Cap
4.	03-0758-00	Screw
5.	A07699-000	Washer
6.	02-0547-00	Top Bearing
7.	13-0617-16	"O" Ring
8.	A26707-001	Breaker Includes Bearing
9.	02-2046-01	Auger
10.	03-1403-46	Screw
11.	03-1417-07	Washer
12.	A26731-020	Evaporator Shell Includes Suction Line
13.	A18945-000	Water Seal
14.	02-0417-00	Bearing, Lower
15.	03-1408-03	Washer (3 req'd)
16.	03-1405-14	Cap Screw
16.	15-0575-01	Coupling Gasket
17.	03-1505-00	Gasket
17.	08-0595-01	Adapter-Plastic
18.	15-0575-01	Spline Drive Coupling
19.	13-0709-01	Shaft Drip Shield — Rubber
*20.	A18153-000	Drip Pan

* Not Shown

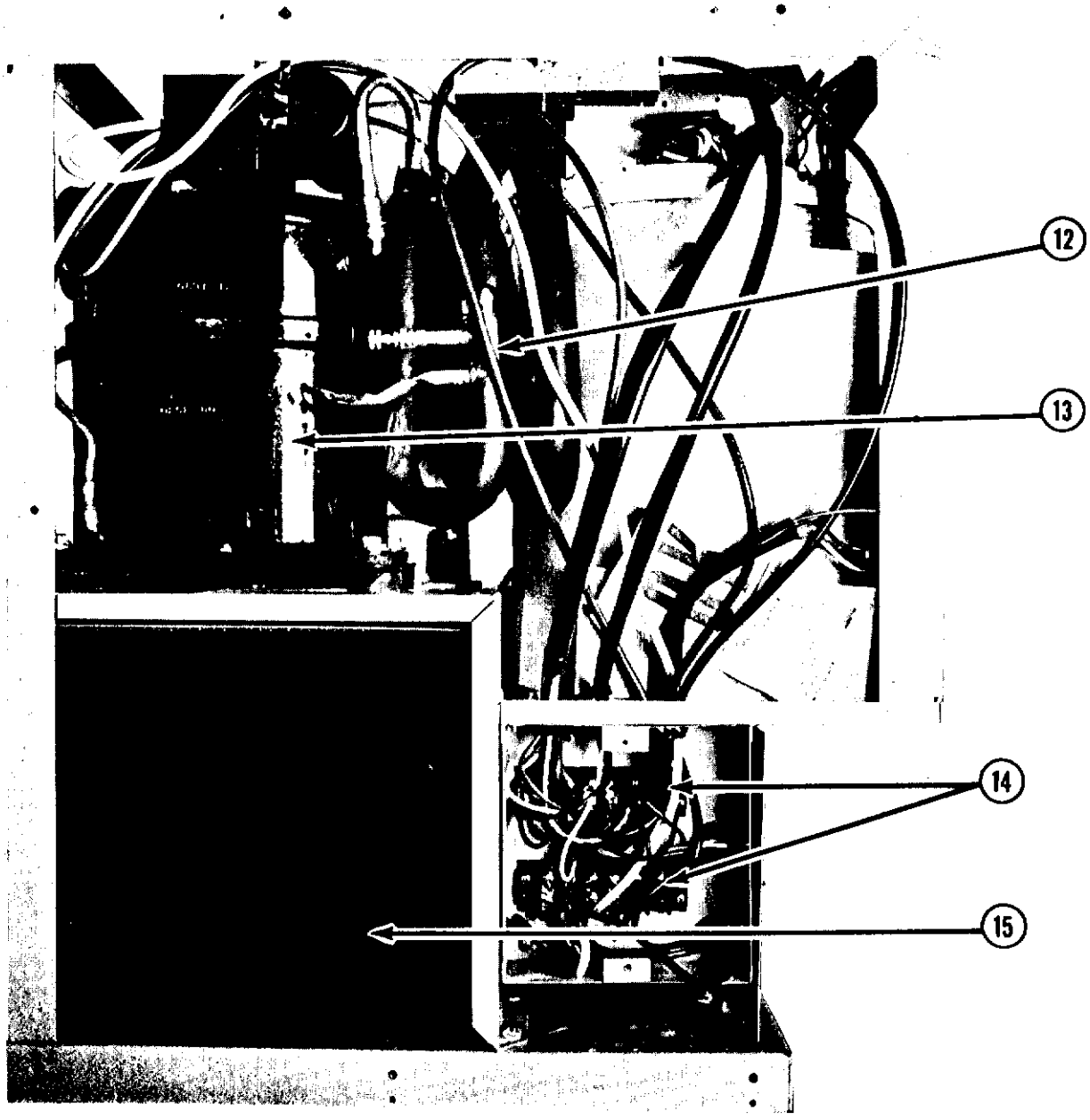

CHASSIS ASSEMBLY

LEFT SIDE

12.	16-0673-18	Process Header — Low Side
13.	180161-01	Compressor
14.	12-0813-04	Terminal Strip
15.	18-1916-00	Condensor — Air Cooled

CHASSIS ASSEMBLY

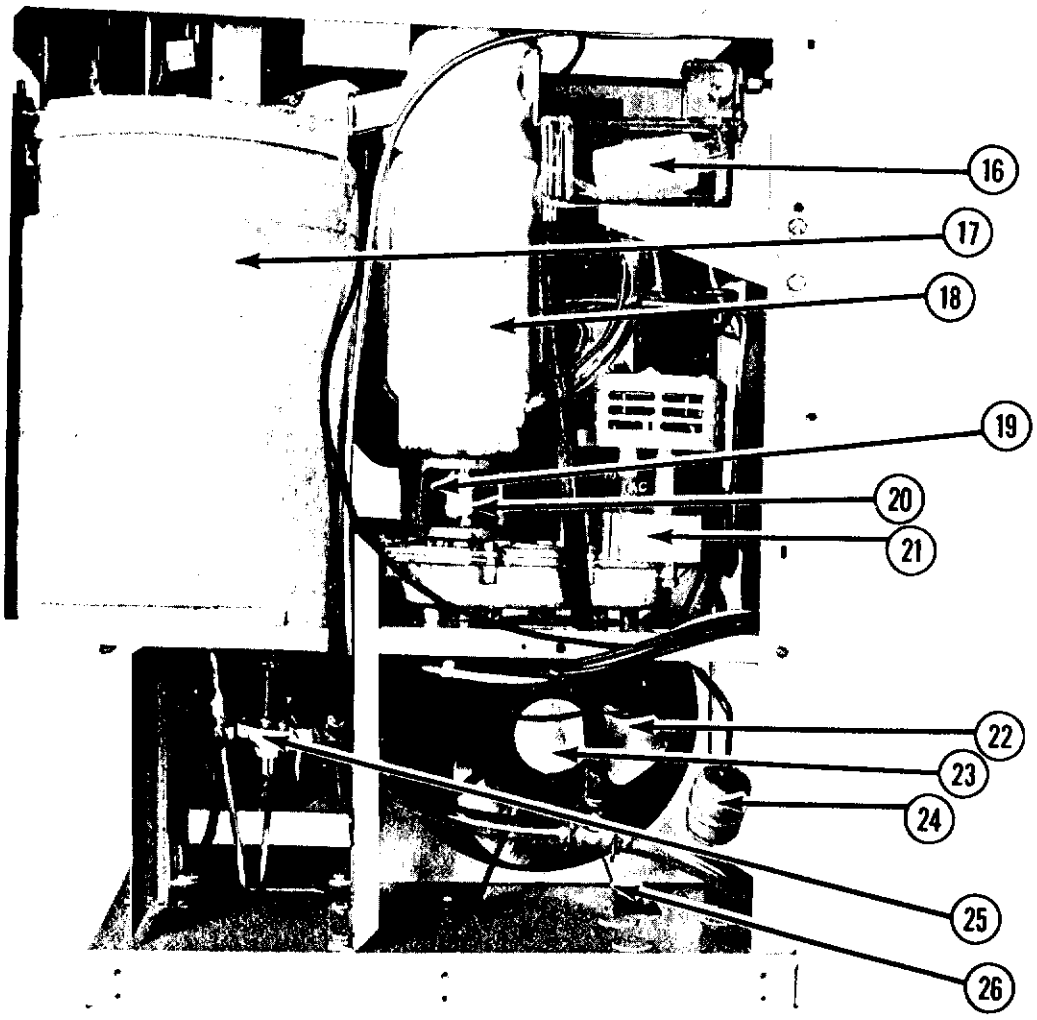

RIGHT SIDE

16.	See Page 3	Reservoir
17.	See Page 2	Storage Bin
18.	See Page 4	Freezer Assembly
19.	15-0575-01	Coupling
20.	08-0595-01	Adapter
21.	See Page 8	Gearmotor
22.	18-0137-01	Fan Blade
23.	12-1576-01	Fan Motor
24.	02-0831-00	Drier
25.	12-1434-04	Inlet Water Solenoid
26.	18-0422-00	Bracket-Fan Motor

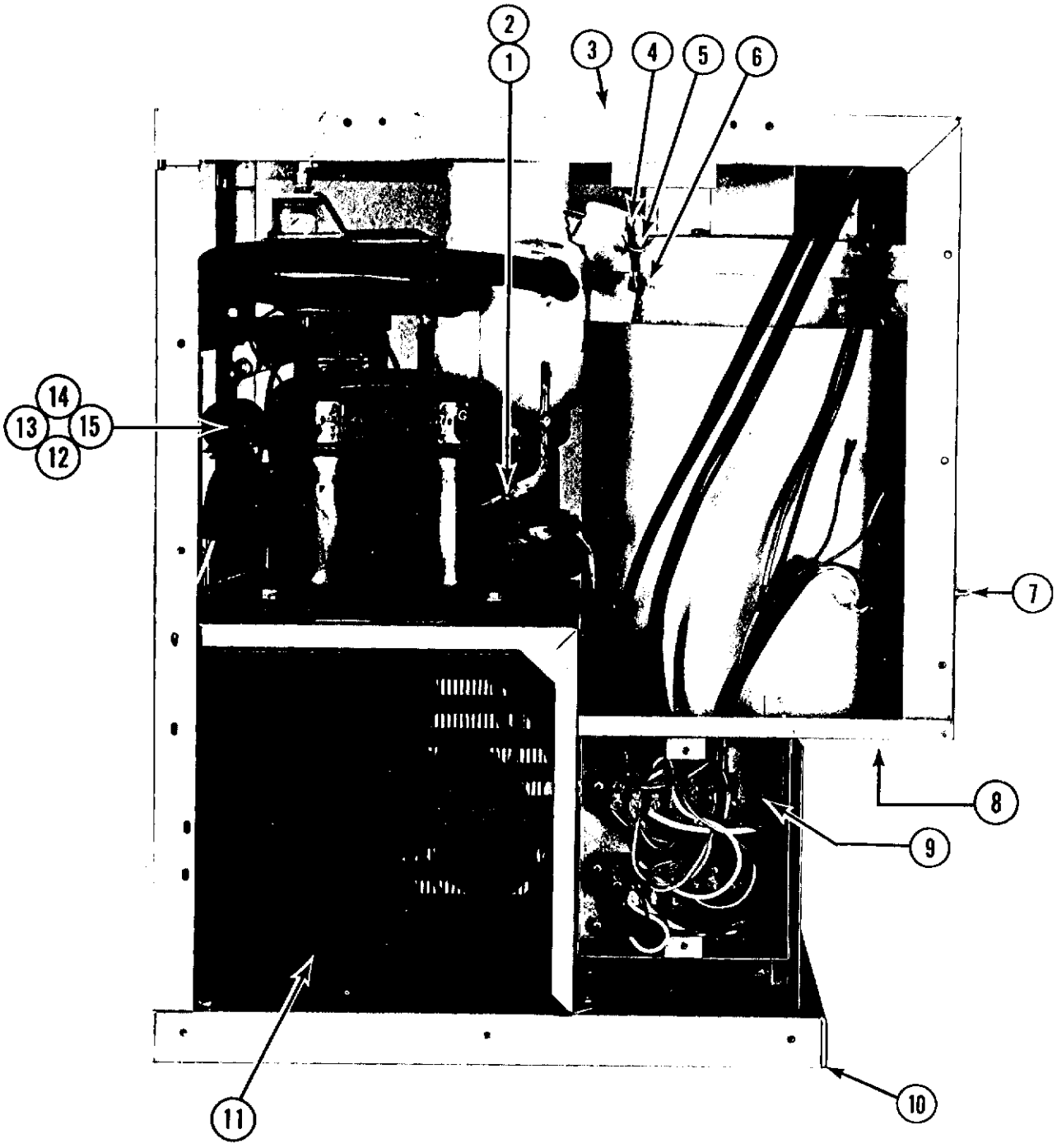

CHASSIS ASSEMBLY

Left Side

ITEM NO.	PART NO.	DESCRIPTION
1.	16-0563-00	Service Valve Cap
2.	16-0560-00	Service Valve Core
3.	12-1570-00	Safety Switch
4.	Not Available	Tie Bolts
5.	03-0255-00	Wing Nuts
6.	03-0396-08	Cotter Pins
7.	12-1540-00	Switch
8.	02-1804-00	Plastic Spout Extension
9.		Wiring Panel Box
10.	13-0566-00	Base Gasket
11.	18-1916-00	Condenser
12.	18-0161-01	Compressor
13.	18-0161-02	Compressor Overload
14.	18-0161-03	Compressor Relay
15.	18-0161-05	Starting Capacitor (189-220)

A25995-021
GEAR MOTOR ASSEMBLY
1/10 H.P.
115/60/1

11.5 RPM at output shaft

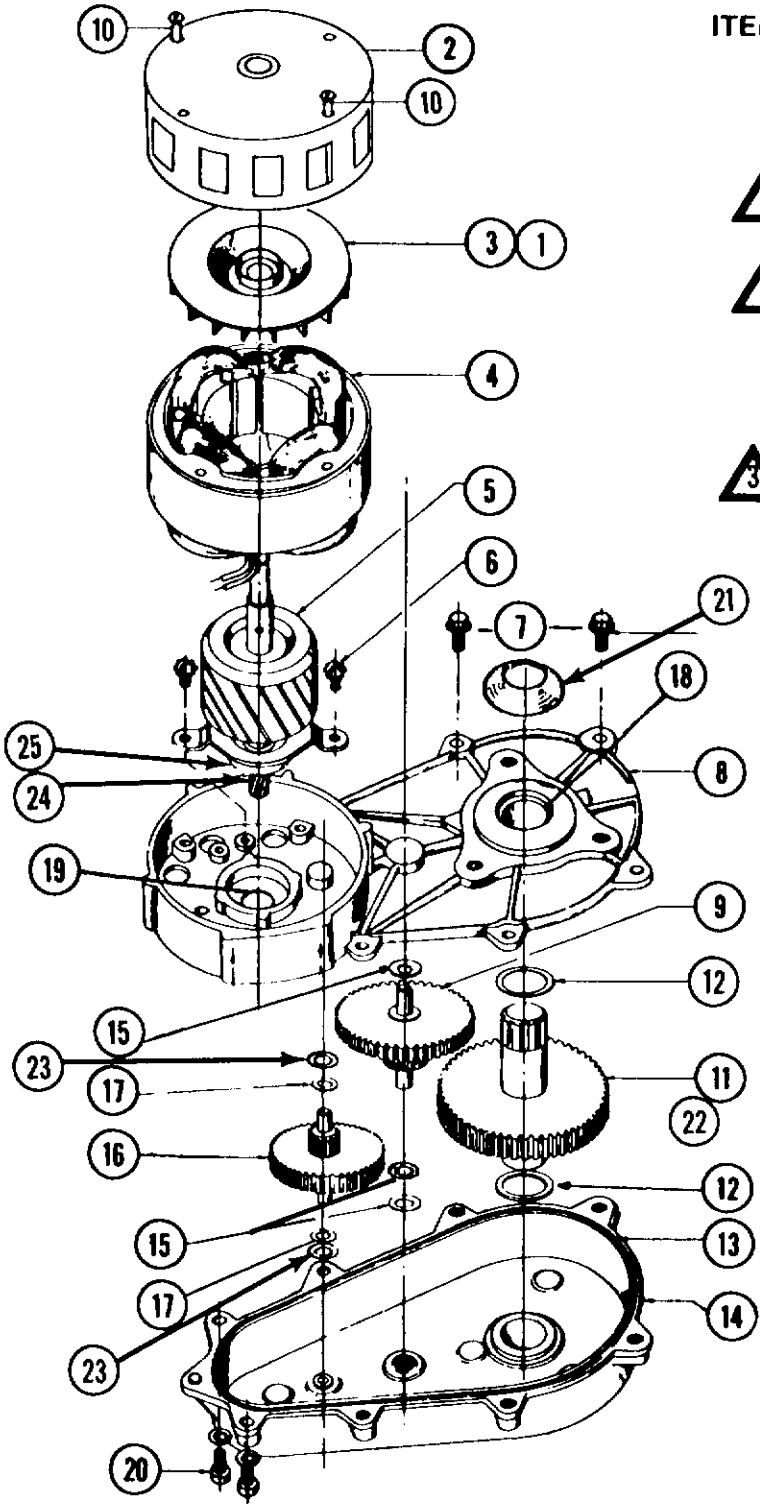

ITEM NO.	PART NO.	DESCRIPTION
1.	03-1246-00	Set Screw (2)
2.	A17047-000	Motor Housing
3.	A16915-000	Cooling Fan
4.	12-1400-01	Stator Assy.
2 5.	A26454-001	Rotor & 1st. Gear Kit
6.	03-1245-00	Screws (2)
1 7.	03-1251-00	Flange Screws (6)
8.	A16920-021	Gear Case Cover
9.	02-1521-00	Gear and Pinion
10.	03-1403-43	Motor Bolts (4)
11.	A26650-001	Gear and Output Shaft
12.	03-1408-21	Washer (2)
3 13.	02-1505-00	"O" Ring
14.	A24184-001	Gear Case Kit
15.	03-1408-06	Washer (3)
16.	02-2224-01	1st Gear and Pinion
17.	03-1408-19	Washer (2)
18.	02-1503-00	Grease Seal
19.	02-1504-00	Grease Seal
20.	03-1252-00	Screw (2)
21.	13-0709-01	Water Shed
22.	03-1475-01	Key
23.	03-1408-20	Washer (2)
24.	13-0617-04	Slinger Ring
25.	02-1501-00	Rotor Bearing

NOTE:

1 Cover comes with grease seals items 18 & 19.

2 Fiber gear (item 16 and rotor bearing (item 25) included in the rotor kit.

3 Includes items: 8, 13, 15, 17, 18, 19, 23 and gear lube.

CABINET PANELS – CHASSIS

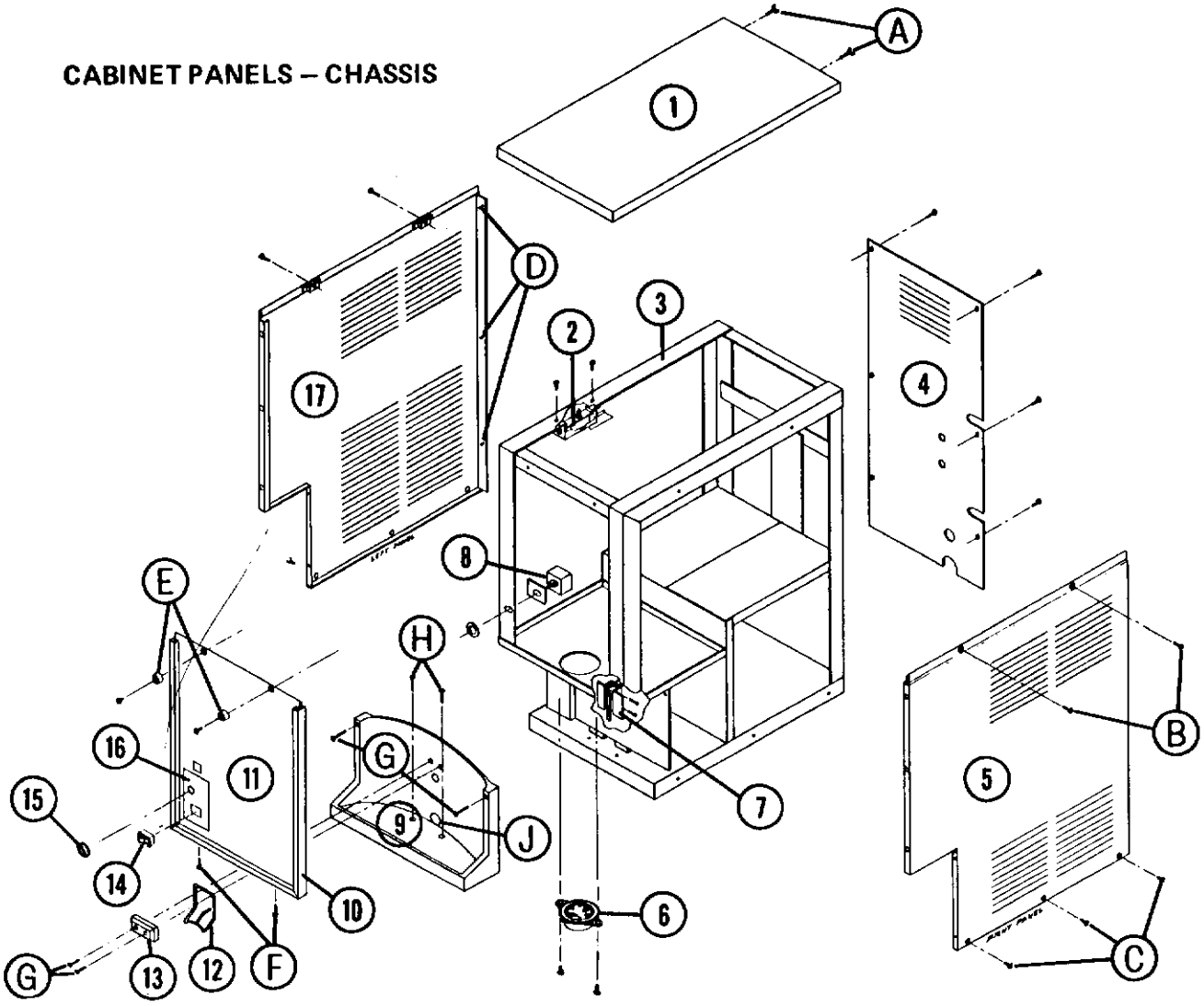

ITEM NO.	PART NO.	DESCRIPTION
1.	A19104-004	Cabinet Top – Painted
1.	A19104-001	Cabinet Top – Stainless Steel
2.	12-1570-00	Mabter (Interlock) Switch
3.	A21447-000	Frame
4.	A21405-002	Back Panel – Painted
4.	A21405-001	Back Panel – Stainless Steel
5.	A21416-002	Right Side Panel – Painted
5.	A21416-001	Right Side Panel – Stainless Steel
6.	02-1804-00	Spout Extension
7.	12-1641-00	Vend Switch
8.	12-1540-00	Selector Switch
9.	A21429-000	Sink
10.	15-0507-00	Moulding Trim
11.	A21425-002	Cabinet Front – Painted
11.	A21425-001	Cabinet Front – Stainless Steel
12.	A21544-000	Actuator Arm
13.	A22032-000	Actuator Arm Adapter
14.	12-1377-00	Water Switch
15.	12-1566-00	Switch Knob
16.	15-0563-01	Decal
17.	A21415-002	Left Side Panel – Painted
17.	A21415-001	Left Side Panel – Stainless Steel
A.	03-1279-00	Wing Screw
B.	03-1418-05	Screw

REMOVING PANELS & SINK

1. To remove either side panel or front, first remove the two wing bolts in the back of cover No. 1, Item (A). Lift the back of the cover upward and push forward to release.
2. Either side panel can be taken off by removing two screws across the top (B) and three across the bottom of the panel. (C) These are the only screws that hold the panel. Pull the panel from in back of sink, then slide backward about 1/2 inch.
   There are no screws in the back of the panel, only pins that slide into holes in the frame. (D)
   The front edge of the panel merely fits under the aluminum trim.
3. The front panel is removed by unscrewing the two rubber bumpers at the top of the panel (E) and two screws under the sink top area. (F)
   The water switch (14) will snap out and the quick connects can be removed from the switch.
   The selector knob (15) just pulls off.
4. The sink (9) can be removed by removing four screws (G) on the front side of the switch and two screws in the bottom of the sink. (H)
   These screws are sealed to eliminate water leaks.
   The drain tube connection (J) is fastened to the sink rear by a hose clamp. To remove the clamp, it is necessary to remove the right side panel.
5. Remove top and left side panel to clean air cooled condenser.

CENTRIFUGAL SWITCH

SWITCH ADJUSTMENT

03 minimum gap between switch lever and mechanism with centrifugal mechanism actuated (motor running). Switch circuit should be closed When motor is stopped and centrifugal mechanism deactivates, the switch circuit should be broken. There should be enough adjustment by loosening the switch mounting screws and tilting switch in direction required. If this fails, a small amount of bending can be done on the switch lever.

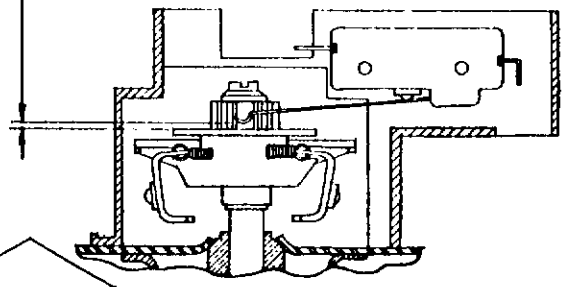

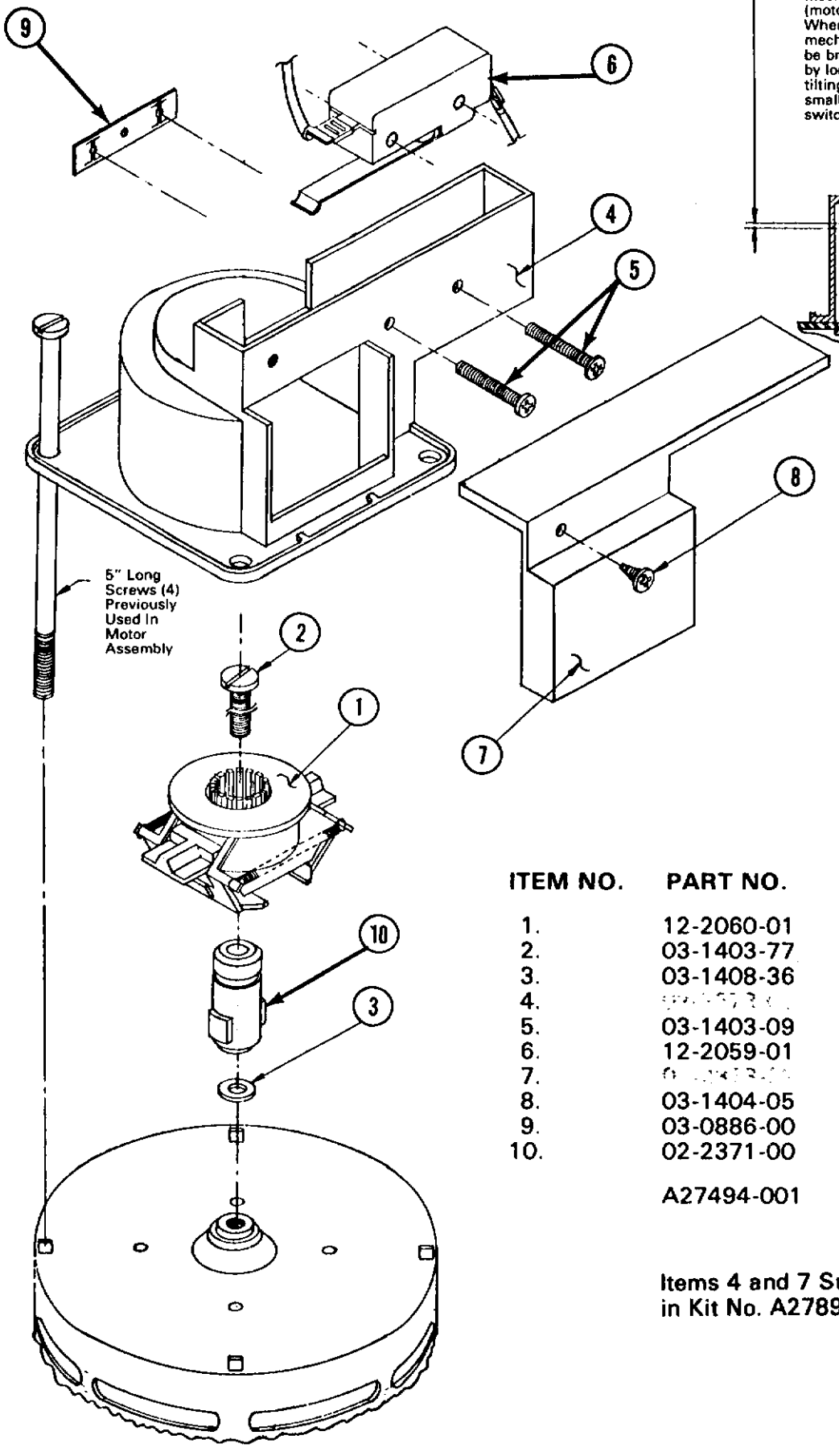

ITEM NO.	PART NO.	DESCRIPTION
1.	12-2060-01	Centrifugal Actuator
2.	03-1403-77	Screw
3.	03-1408-36	Washer
4.	[illegible]	Switch Mounting Case
5.	03-1403-09	Screw (2)
6.	12-2059-01	Switch
7.	[illegible]	Switch Case Cover
8.	03-1404-05	Screw
9.	03-0886-00	Speed Nut
10.	02-2371-00	Shaft Extension
	A27494-001	Centrifugal Switch Kit Complete w/17-1328-01 inst.

Items 4 and 7 Supplied in Kit No. A27895-001

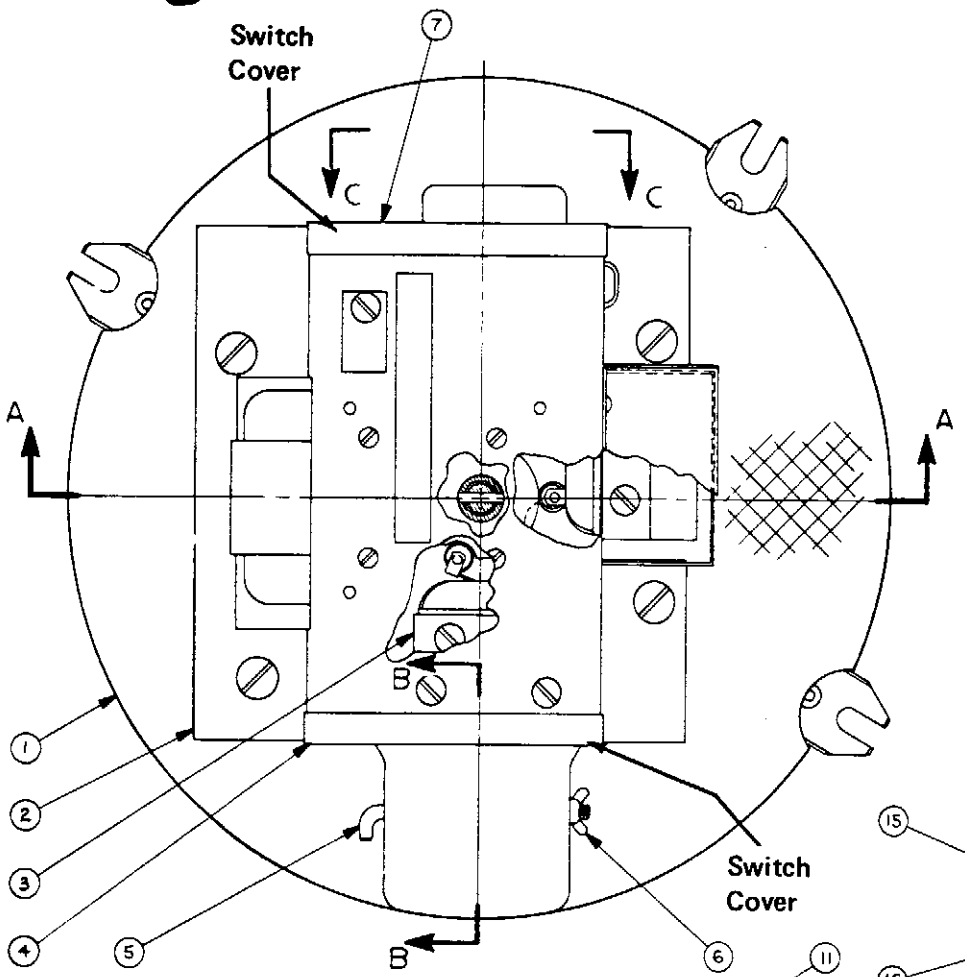

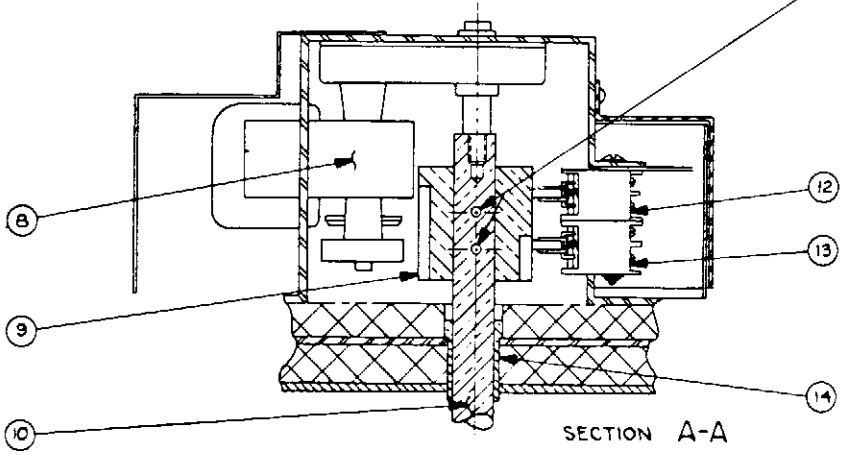

SECTION A-A

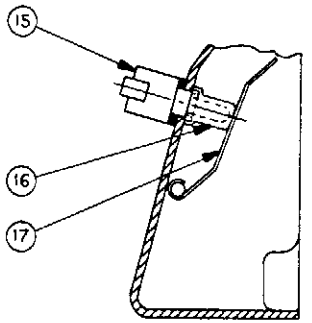

SECTION B-B

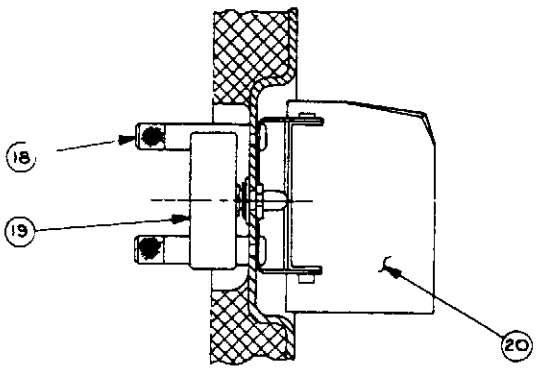

SECTION C-C

ITEM NO.	PART NO.	DESCRIPTION
1.	A21215-002	Storage Bin Top Assembly
2.	A18468-000	Motor Mount
3.	12-0876-00	Positioning Switch (Continuous ice)
4.	A16498-000	Switch Cover
5.	A16104-000	Hinge Pin
6.	03-0255-02	Wing Nut
7.	A16499-000	Switch Cover
8.	12-1610-01	Dispenser Drive Motor
9.	02-1576-00	Switch
10.	A21207-000	Drive Shaft
11.	03-0431-03	Set Screws
12.	12-0876-00	Cam Switch (two ounces ice)
13.	12-0876-00	Cam Switch (one ounce ice)
14.	Not Available	Cover Bushing
15.	12-1018-01	Spout Switch
16.	12-1643-00	Boot & Bushing
17.	A16010-000	Ice Control Lever
18.	A16495-000	Differential Bracket Nut
19.	12-1018-01	Differential Switch
20.	A19269-000	Differential Paddle

STORAGE BIN ASSEMBLY
A-21215-002

STORAGE BIN and DISPENSING ASSEMBLY

ITEM NO.	PART NO.	DESCRIPTION
1.	A16098-000	Bin Cover Only
2.	A20912-000	Drive Pin
3.	Not Available	Tie Bolt Bracket
4.	A21485-000	Outer Bin
5.	03-0255-00	Wing Nut
6.	A22477-000	Shutter Assembly
7.	A22479-000	Storage Bin
8.	A16129-000	Bin Bottom

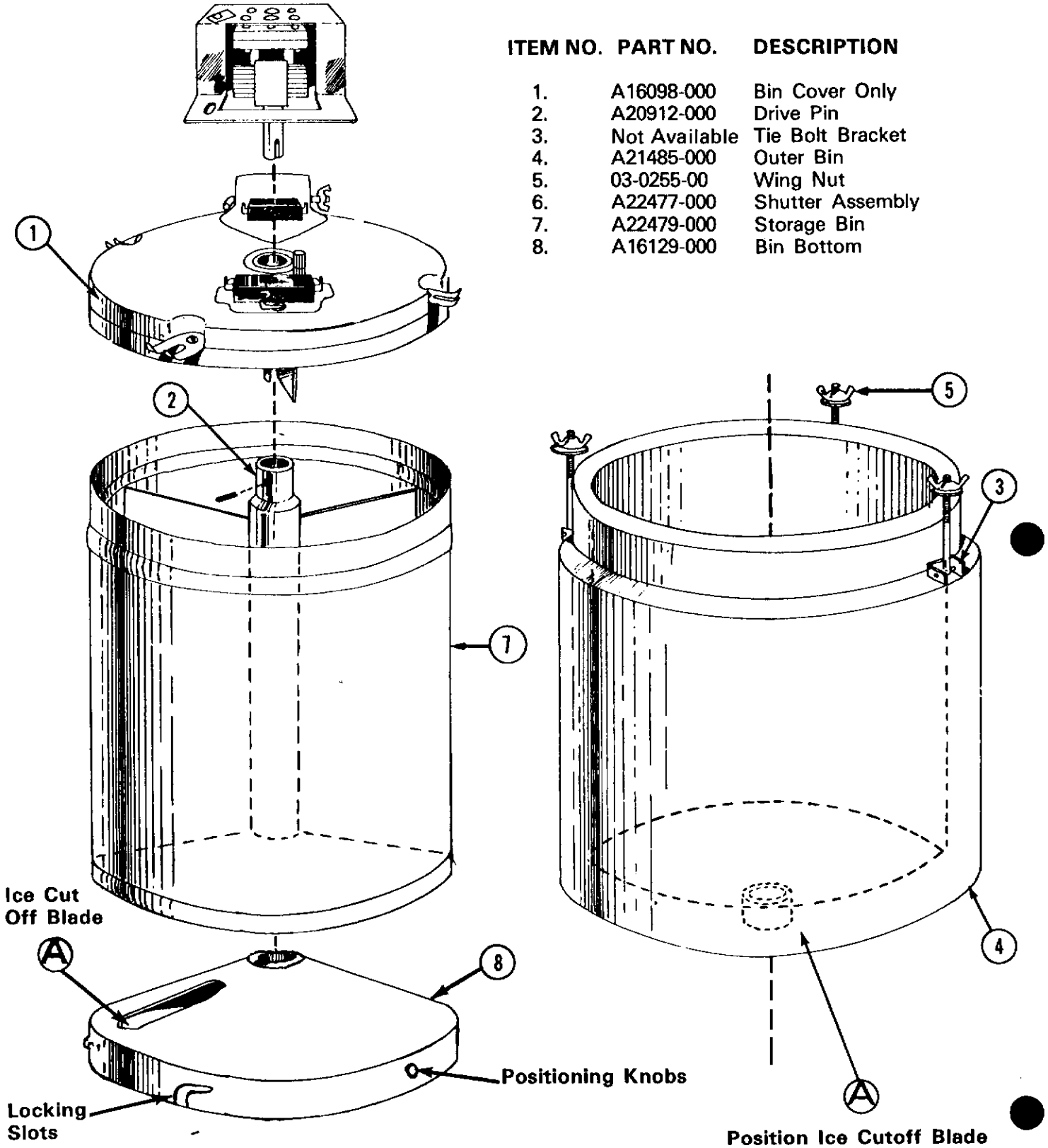

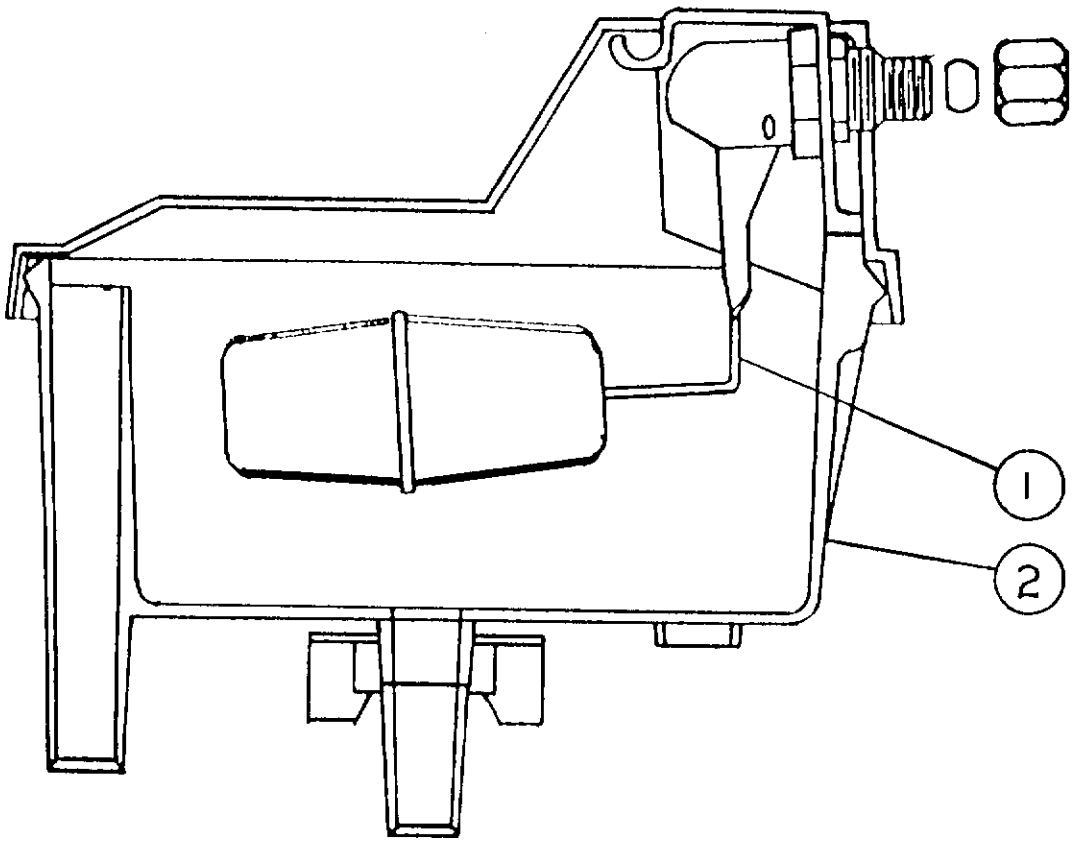

RESERVOIR ASSEMBLY

ITEM NO.	PART NO.	DESCRIPTION
1.	02-2217-02	Valve Assy.
2.	02-2217-01	Reservoir Complete

CABINET PANELS CHASSIS

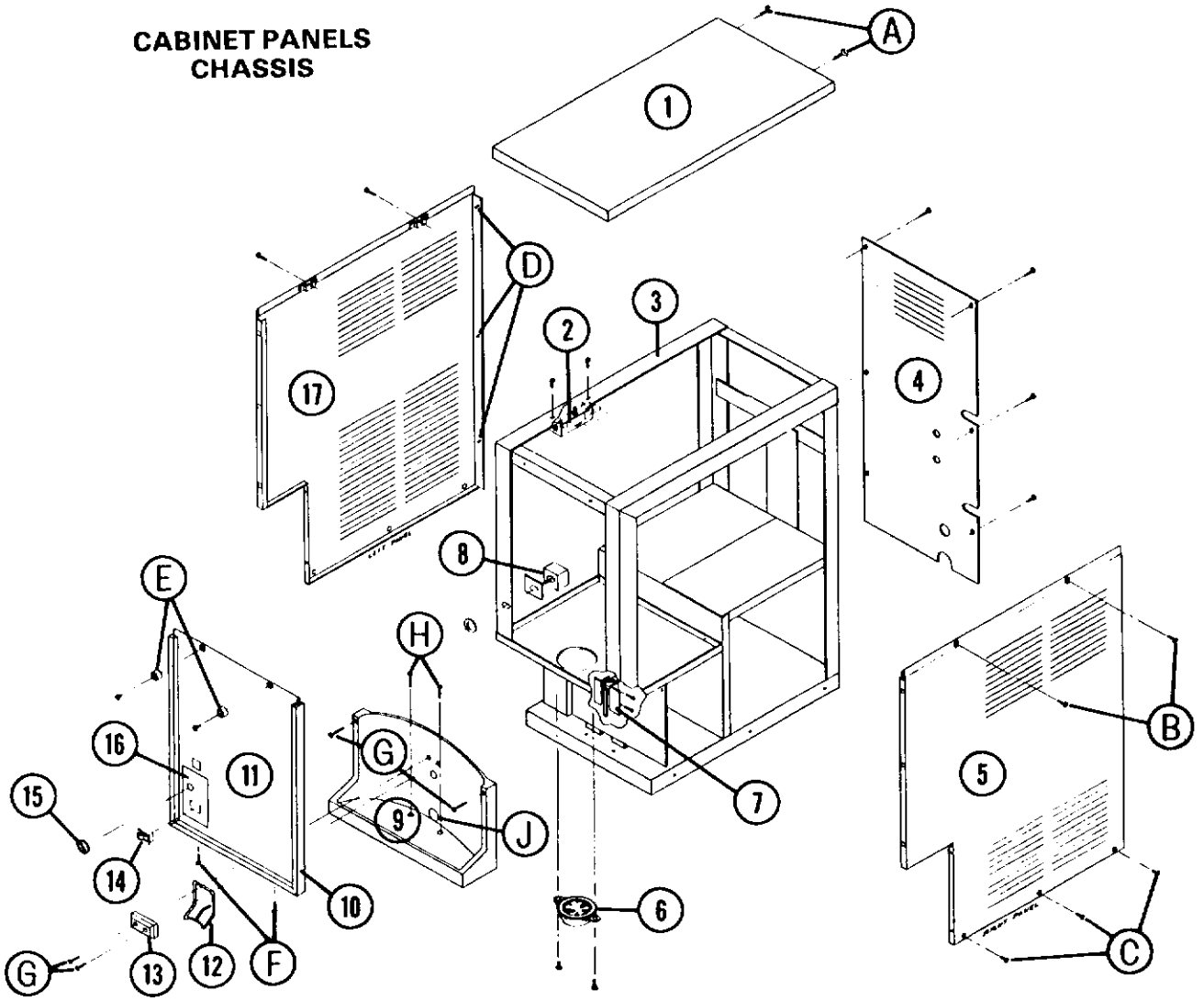

ITEM NO.	PART NO.	DESCRIPTION
1.	A19104-004	Cabinet Top—Painted
1.	A19104-001	Cabinet Top—Stainless Steel
2.	12-1570-00	Master (Interlock) Switch
3.		Frame
4.	A21405-002	Back Panel—Painted
4.	A21405-001	Back Panel—Stainless Steel
5.	A21416-002	Right Side Panel—Painted
5.	A21416-001	Right Side Panel—Stainless Steel
6.	02-1804-00	Spout Extension
7.	12-1641-00	Vend Switch
8.	12-1540-00	Selector Switch
9.	A21429-000	Sink
10.	15-0507-00	Moulding Trim
11.	A21425-002	Cabinet Front—Painted
11.	A21425-001	Cabinet Front—Stainless Steel
12.	A21544-000	Actuator Arm
13.	A22032-000	Actuator Arm Adapter
14.	12-1377-00	Water Switch
15.	12-1566-00	Switch Knob
16.	15-0563-01	Decal
17.	A21415-002	Left Side Panel—Painted
17.	A21415-001	Left Side Panel—Stainless Steel

CHASSIS ASSEMBLY
Right Side

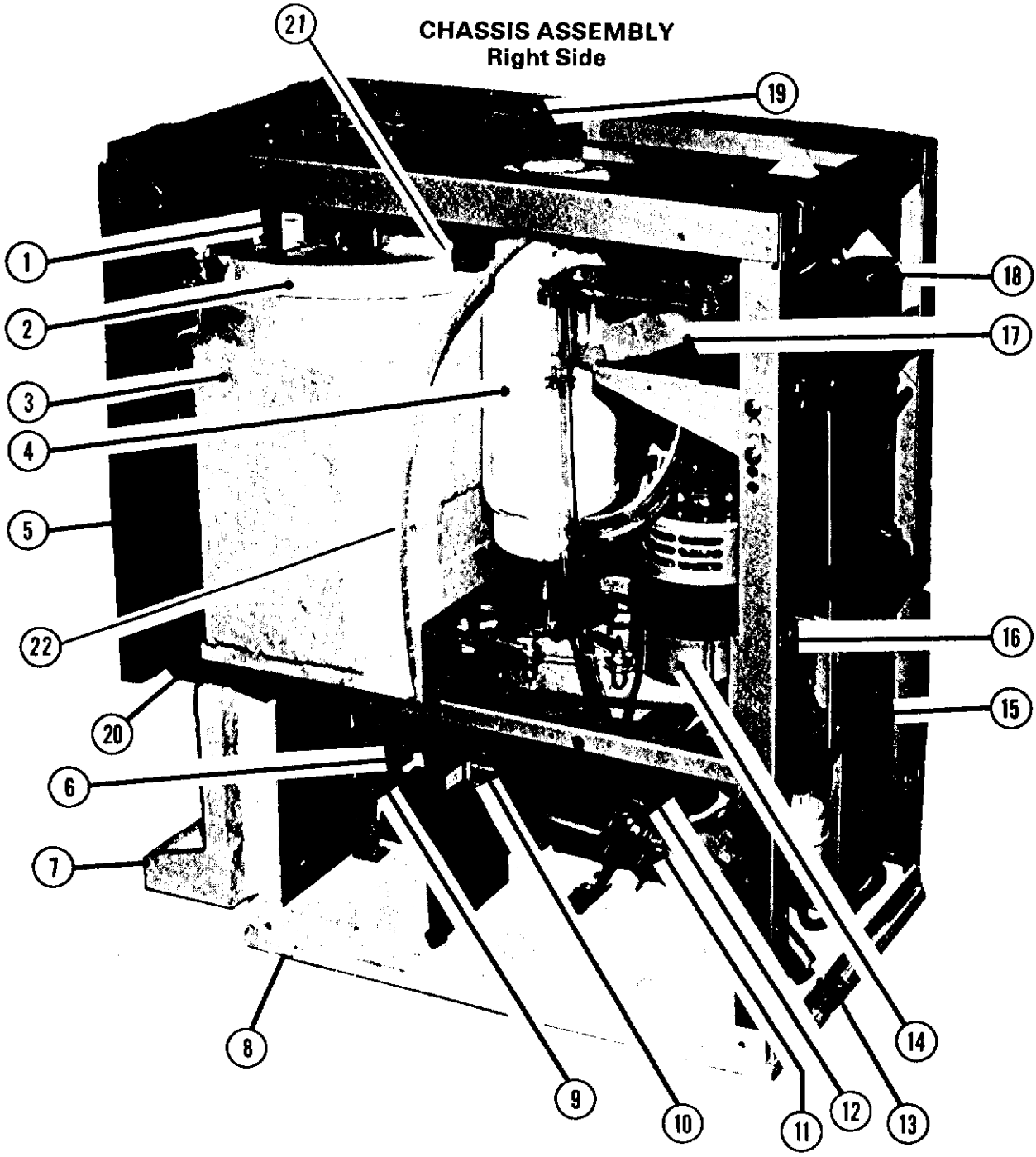

ITEM NO.	PART NO.	DESCRIPTION
1.	12-1610-01	Dispensing Drive Motor
2.	See Page 1	Storage Bin Top
3.	See Page 2	Storage Bin
4.	See Page 7	Freezer Ass'y Complete
5.	15-0507-00	Front Trim
6.	12-1434-04	Water Valve with Solenoid
7.	A21429-000	Sink
8.	13-0566-00	Base Gasket
9.	12-1641-00	Vend Switch
		Inlet Water Connection
10.	02-1338-00	Hose Clamp-Bin-Reservoir Drain
11.	18-0422-00	Fan Motor Bracket
12.	18-0137-01	Blade
12.	12-1573-01	Fan Motor Cord

ITEM NO.	PART NO.	DESCRIPTION
12.	12-1576-01	Fan Motor
13.	13-0674-08	7/8" O.D. Drain Tube/feet
14.	See Page 6	Gear Motor Complete
15.	18-1927-00	Air Cooled Condenser
16.		Junction Box-Electrical Supply
17.	See Page 3	Water Reservoir Complete
18.	18-2200-01	Compressor 115/60/1
18.	18-2200-25	Overload
18.	18-2200-26	Relay
18.	18-1901-10	Capacitor
19.	12-1570-00	Interlock (Master Switch
20.	02-1804-00	Plastic Spout Extension
*21.	A16151-000	Freezer To Bin Spout Extension

* Not Shown

A25995-021
GEAR MOTOR ASSEMBLY
1/10 H.P.
115/60/1

11.5 RPM at output shaft

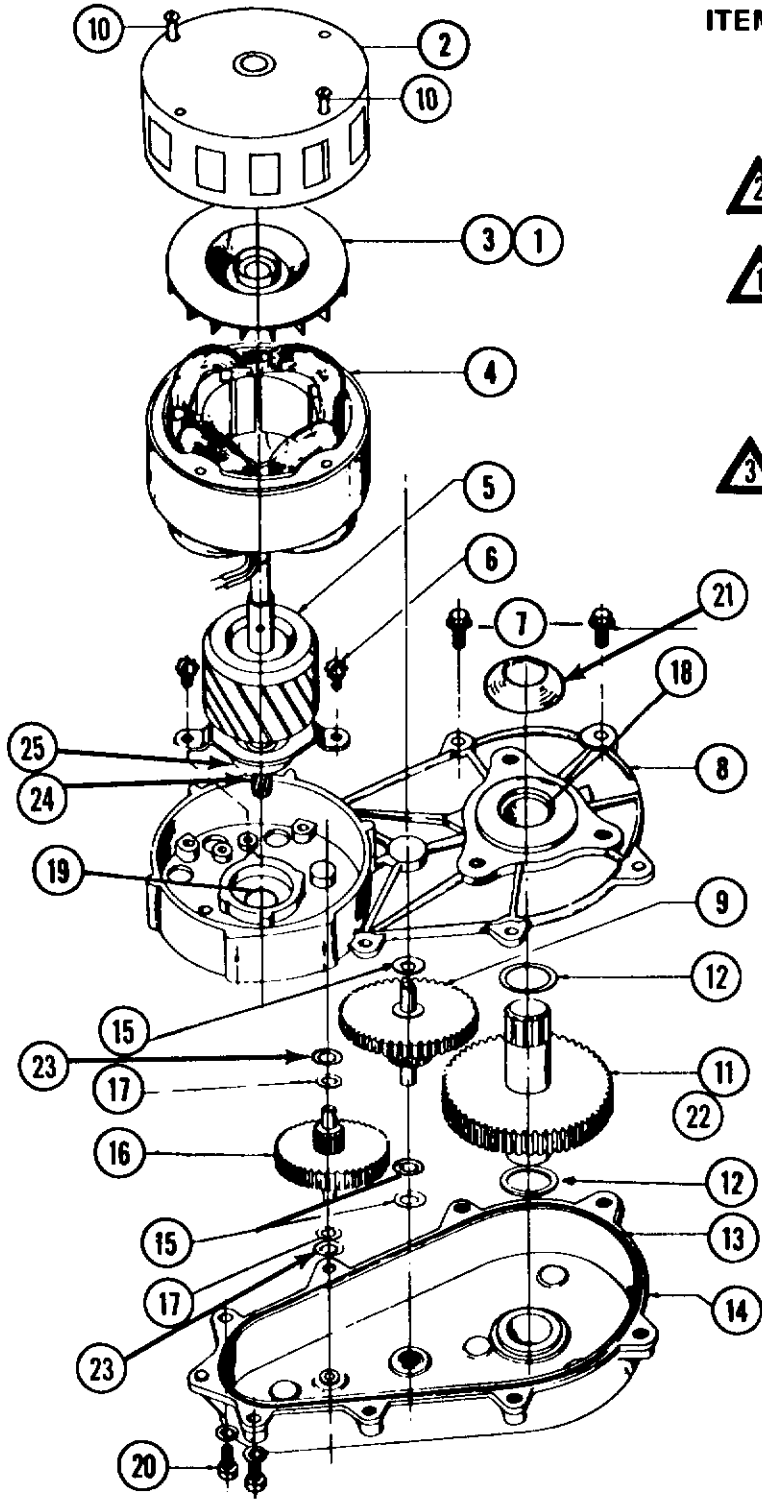

ITEM NO.	PART NO.	DESCRIPTION
1.	03-1246-00	Set Screw (2)
2.	A17047-000	Motor Housing
3.	A16915-000	Cooling Fan
4.	12-1400-01	Stator Assy.
2 5.	A26454-001	Rotor & 1st. Gear Kit
6.	03-1245-00	Screws (2)
1 7.	03-1251-00	Flange Screws (6)
8.	A16920-021	Gear Case Cover
9.	02-1521-00	Gear and Pinion
10.	03-1403-43	Motor Bolts (4)
11.	A26650-001	Gear and Output Shaft
12.	03-1408-21	Washer (2)
3 13.	02-1505-00	"O" Ring
14.	A24184-001	Gear Case Kit
15.	03-1408-06	Washer (3)
16.	02-2224-01	1st Gear and Pinion
17.	03-1408-19	Washer (2)
18.	02-1503-00	Grease Seal
19.	02-1504-00	Grease Seal
20.	03-1252-00	Screw (2)
21.	13-0709-01	Water Shed
22.	03-1475-01	Key
23.	03-1408-20	Washer (2)
24.	13-0617-04	Slinger Ring
25.	02-1501-00	Rotor Bearing

1 Cover comes with grease seals items 18 & 19.

2 Fiber gear (item 16 and rotor bearing (item 25) included in the rotor kit.

3 Includes items: 8, 13, 15, 17, 18, 19, 23 and gear lube.

FREEZER ASSEMBLY

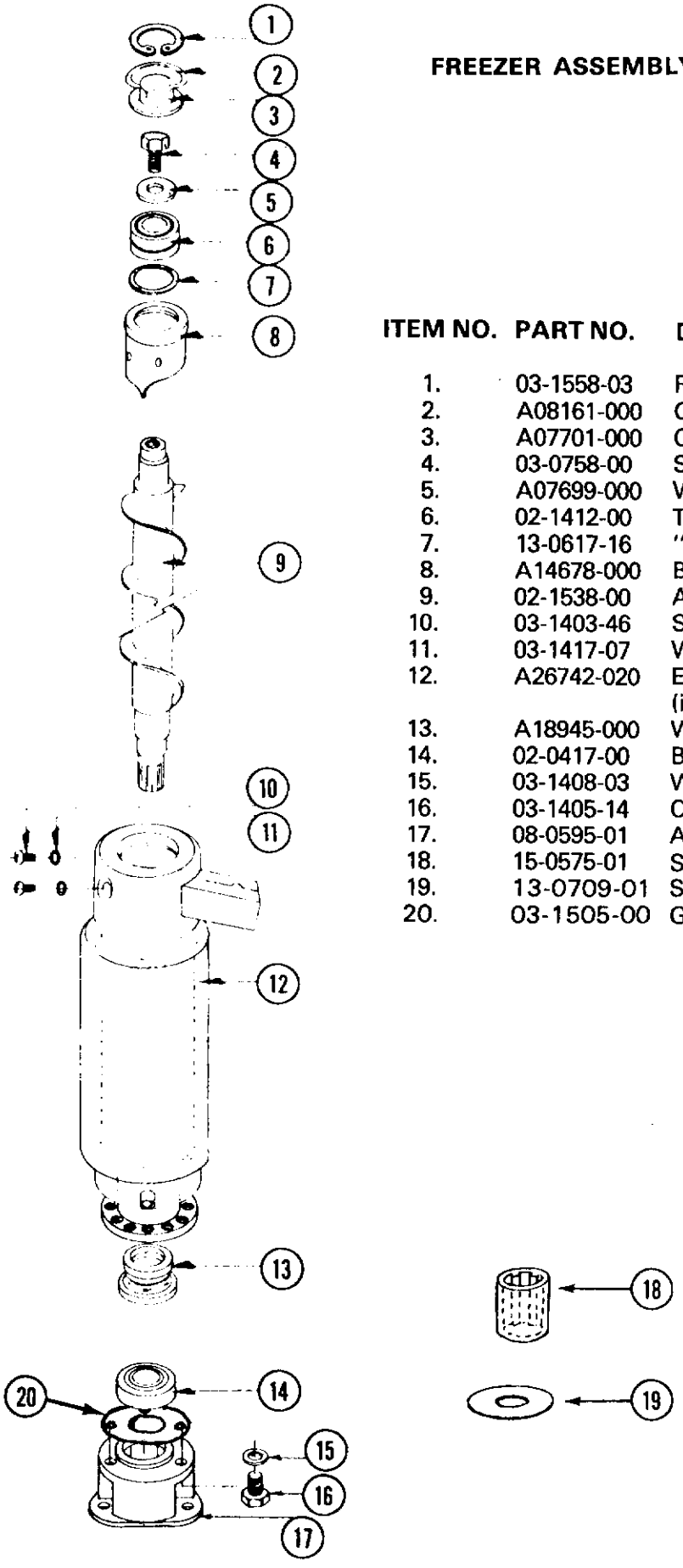

ITEM NO.	PART NO.	DESCRIPTION
1.	03-1558-03	Retainer Ring
2.	A08161-000	Cap Hook
3.	A07701-000	Cap
4.	03-0758-00	Screw
5.	A07699-000	Washer
6.	02-1412-00	Top Bearing-Matched Set, See Page 8 & 9
7.	13-0617-16	"O" Ring
8.	A14678-000	Breaker with Bearing
9.	02-1538-00	Auger
10.	03-1403-46	Screw
11.	03-1417-07	Washer
12.	A26742-020	Evaporator Shell (includes suction line)
13.	A18945-000	Water Seal
14.	02-0417-00	Bearing, Lower
15.	03-1408-03	Washer, (3 req'd)
16.	03-1405-14	Cap Screw, (3 req'd)
17.	08-0595-01	Adapter-Amaloy
18.	15-0575-01	Spline Drive Coupling
19.	13-0709-01	Shaft Drip Shield- Rubber
20.	03-1505-00	Gasket

SUBJECT: INSTRUCTION—ICE BREAKER & BEARING ASSEMBLY

MODELS ACD1-SF1-SD1-FD1-FD4-FD5

The top bearing assembly (part number 02-1412-00) used in the freezer assemblies on the above listed models consists of two single row bearings which are pressed into the ice breaker, one on top of the other.

The bearings are supplied as a matched set, secured together by a holding strap.

These bearings are lifetime lubricated and have shields on the exterior side.

To prevent premature failures, the following instructions must be observed.

1. Bearing must be installed "Right Side Up." (Correct position is illustrated on the next page.)

2. Bearings must be pressed in by the outer race.

3. Apply 20 foot pounds, plus or minus 5 foot pounds, on a torque wrench when tightening the hex cap screw down on the stainless flat washer over the top of the bearing. Excessive pressure on the cap screw will shorten bearing life.
4. Use care in storing and handling bearings. Keep free of dirt, moisture, etc.

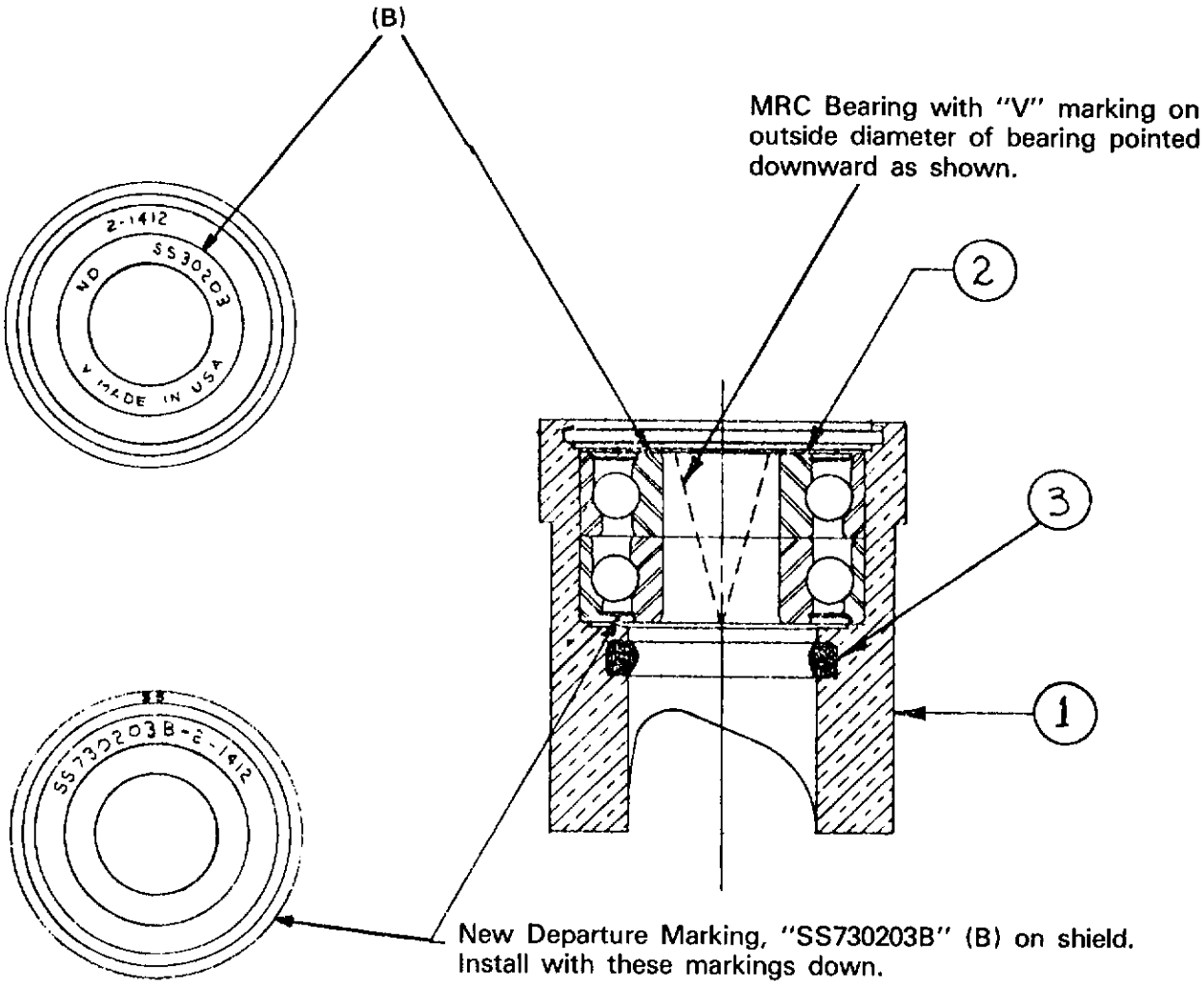

1.	A14678-000	Ice Breaker W/Bearing
2.	02-1412-00	Bearing
3.	13-0617-16	"O" Ring

CENTRIFUGAL SWITCH

SWITCH ADJUSTMENT

.03 minimum gap between switch lever and mechanism with centrifugal mechanism actuated (motor running). Switch circuit should be closed When motor is stopped and centrifugal mechanism deactivates, the switch circuit should be broken. There should be enough adjustment by loosening the switch mounting screws and tilting switch in direction required. If this fails, a small amount of bending can be done on the switch lever.

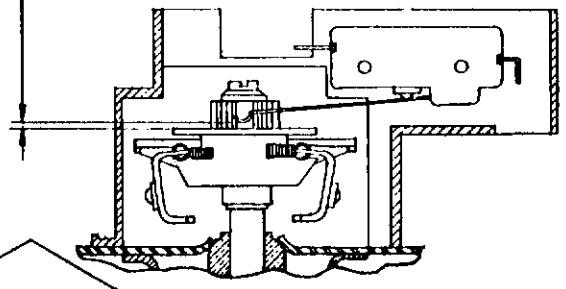

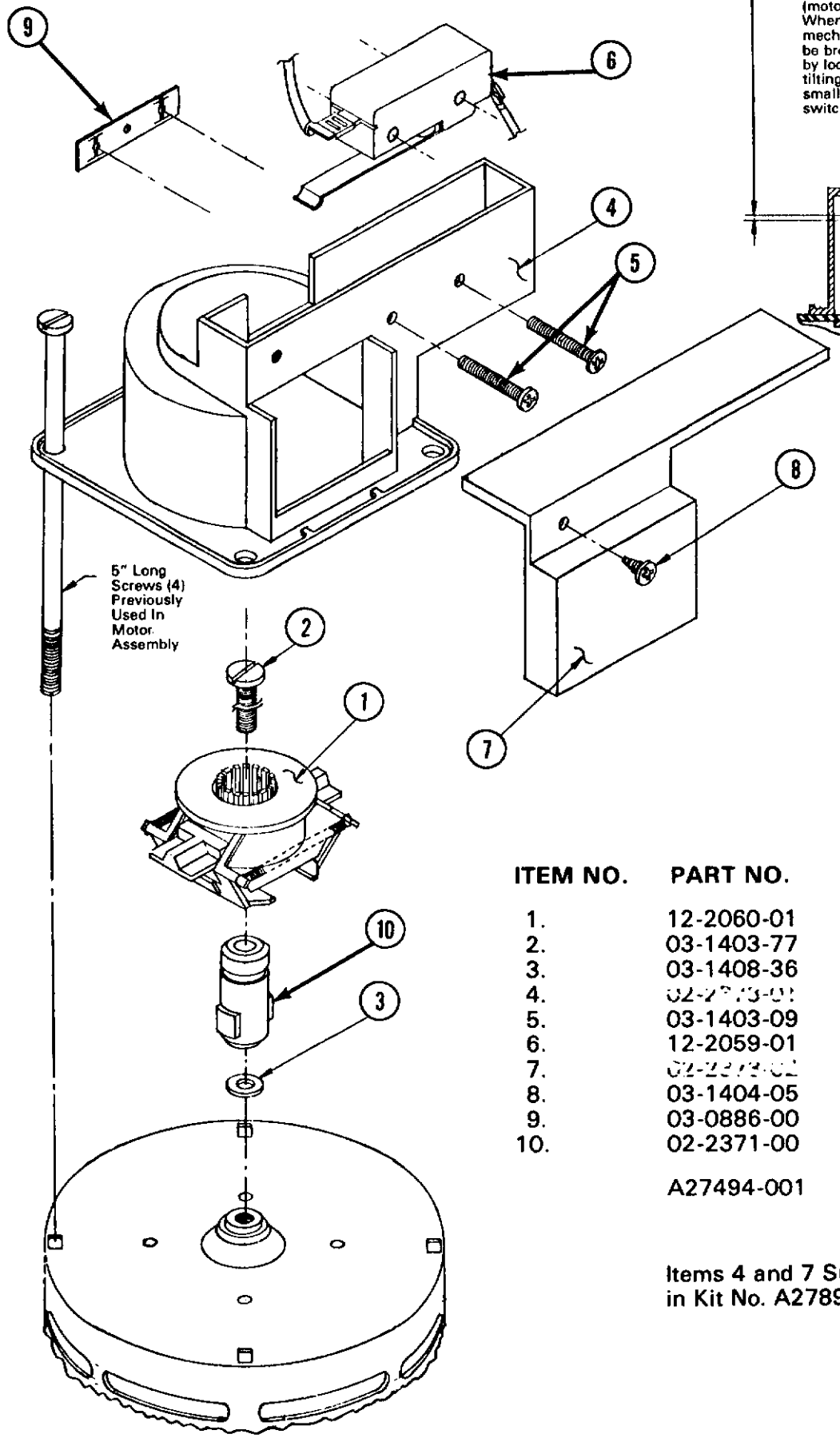

ITEM NO.	PART NO.	DESCRIPTION
1.	12-2060-01	Centrifugal Actuator
2.	03-1403-77	Screw
3.	03-1408-36	Washer
4.	02-2[illegible]-01	Switch Mounting Case
5.	03-1403-09	Screw (2)
6.	12-2059-01	Switch
7.	02-2[illegible]-02	Switch Case Cover
8.	03-1404-05	Screw
9.	03-0886-00	Speed Nut
10.	02-2371-00	Shaft Extension
	A27494-001	Centrifugal Switch Kit Complete w/17-1328-01 inst.

Items 4 and 7 Supplied in Kit No. A27895-001

STORAGE BIN TOP ASSEMBLY

ITEM NO.	PART NO.	DESCRIPTION
1.	A21215-000	Storage Bin Top Assembly Complete
2.	A18468-000	Motor Mount
3.	12-0876-00	Positioning Switch (Continuous Ice)
4.	A16498-000	Switch Cover
5.	A16104-000	Hinge Pin
6.	03-0255-02	Wing Nut
7.	A16499-000	Switch Cover
8.	12-1610-01	Dispenser Drive Motor
9.	02-1576-00	Cam
10.	A21207-000	Drive Shaft
11.	03-0431-03	Set Screws
12.	12-0876-00	Cam Switch (two ounces ice)
13.	12-0876-00	Cam Switch (one ounce ice)
14.		Cover Bushing, Not Available
15.	12-1018-01	Spout Switch
16.	12-1643-00	Boot — Bushing
17.	A16010-000	Ice Control Lever
18.	A16495-000	Differential Bracket Nut
19.	12-1018-01	Differential Switch
20.	A19269-000	Differential Paddle

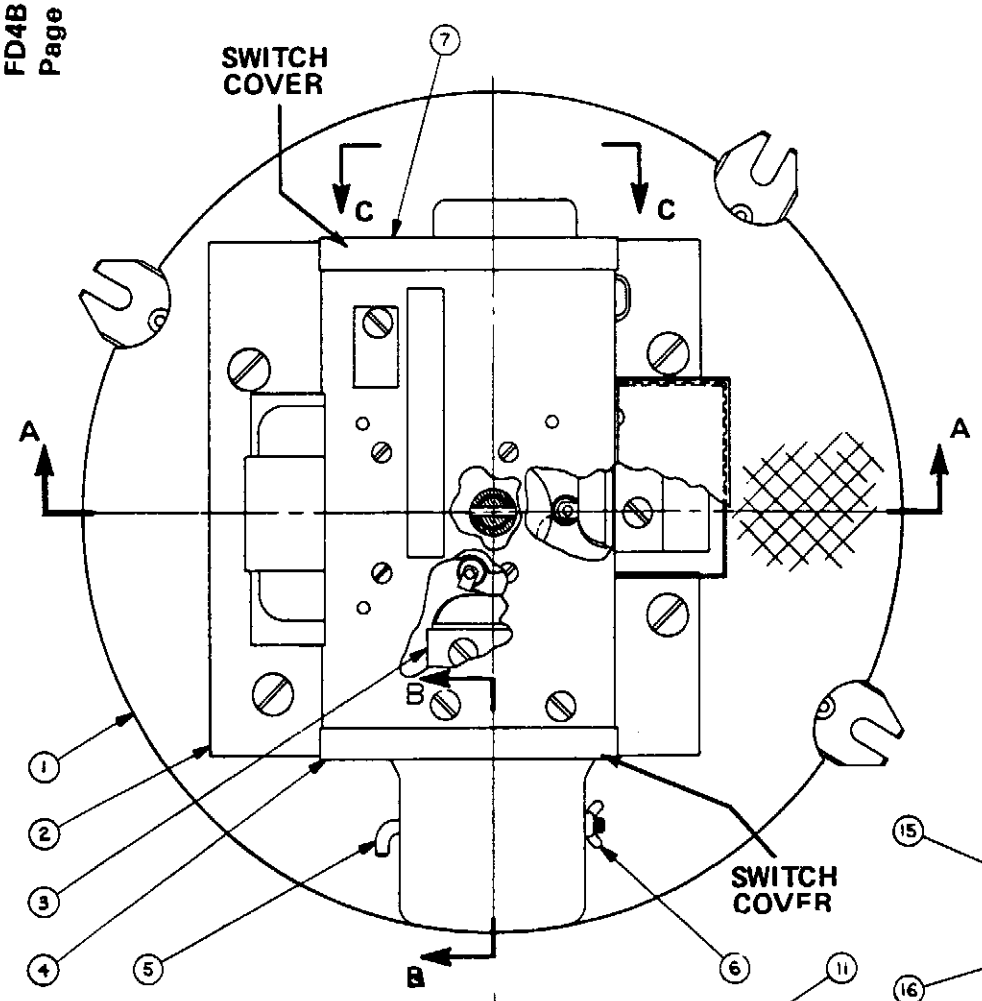

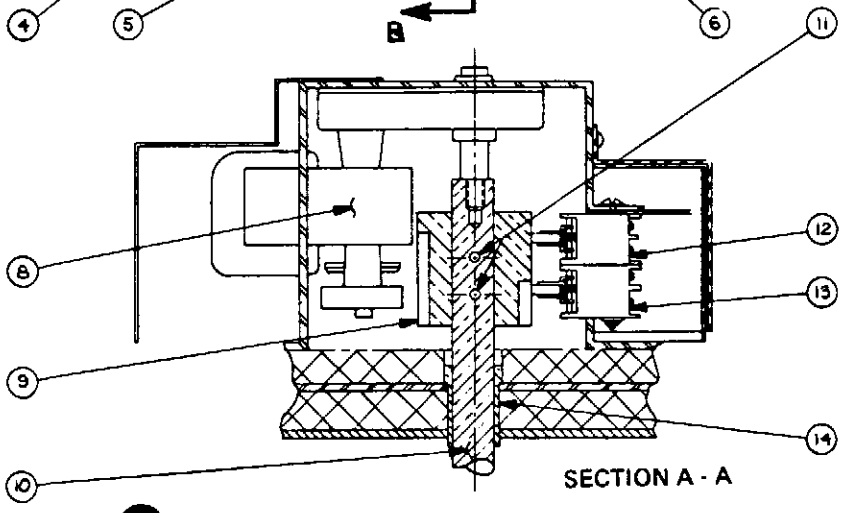

SECTION A - A

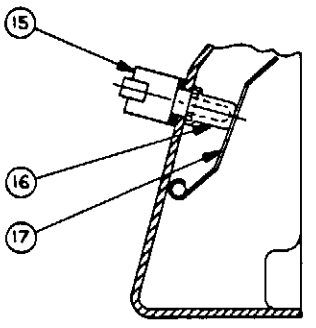

SECTION B - B

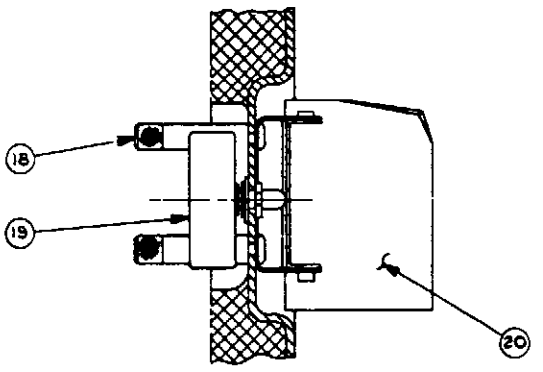

SECTION C - C

STORAGE BIN AND DISPENSING ASSEMBLY

ITEM NO.	PART NO.	DESCRIPTION
1.	A16098-000	Bin Cover Only
2.	A20912-000	Drive Pin — Top
3.	Not Available	Tie Bolt Bracket
4.	A26447-001	Outer Bin
5.	03-0255-00	Wing Nut
6.	A26440-001	Storage Bin
7.	A26445-001	Bin Bottom

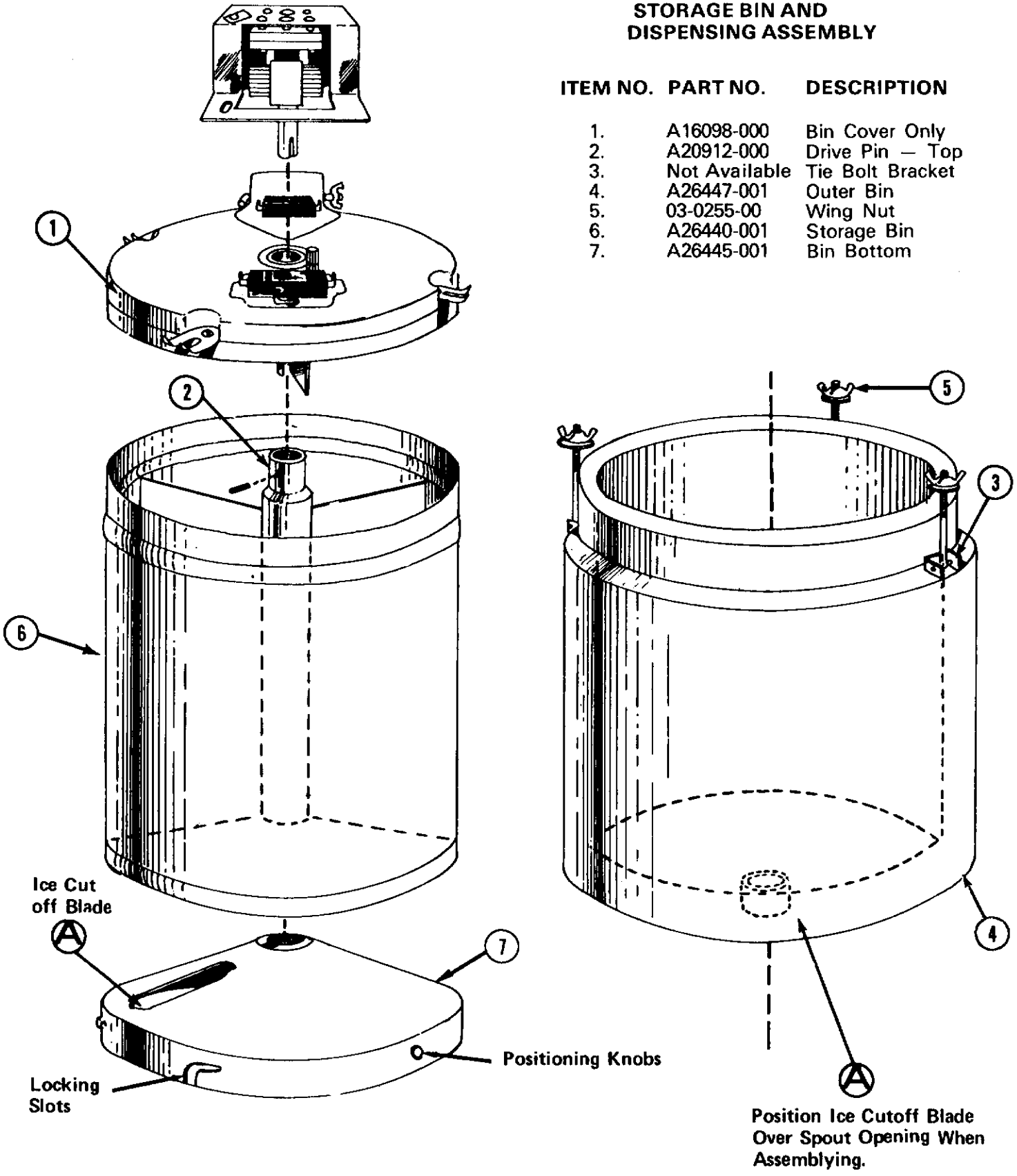

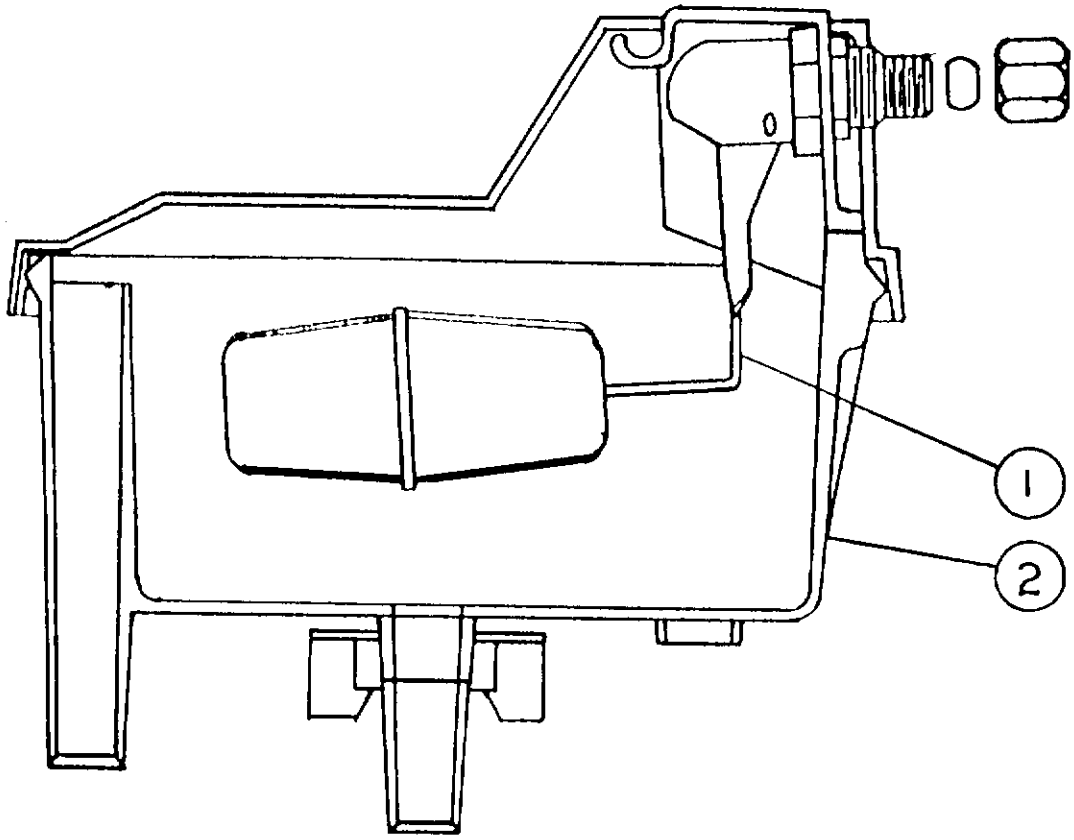

RESERVOIR ASSEMBLY

ITEM NO.	PART NO.	DESCRIPTION
1.	02-2217-02	Valve Assy.
2.	02-2217-01	Reservoir Complete

CABINET PANELS – CHASSIS

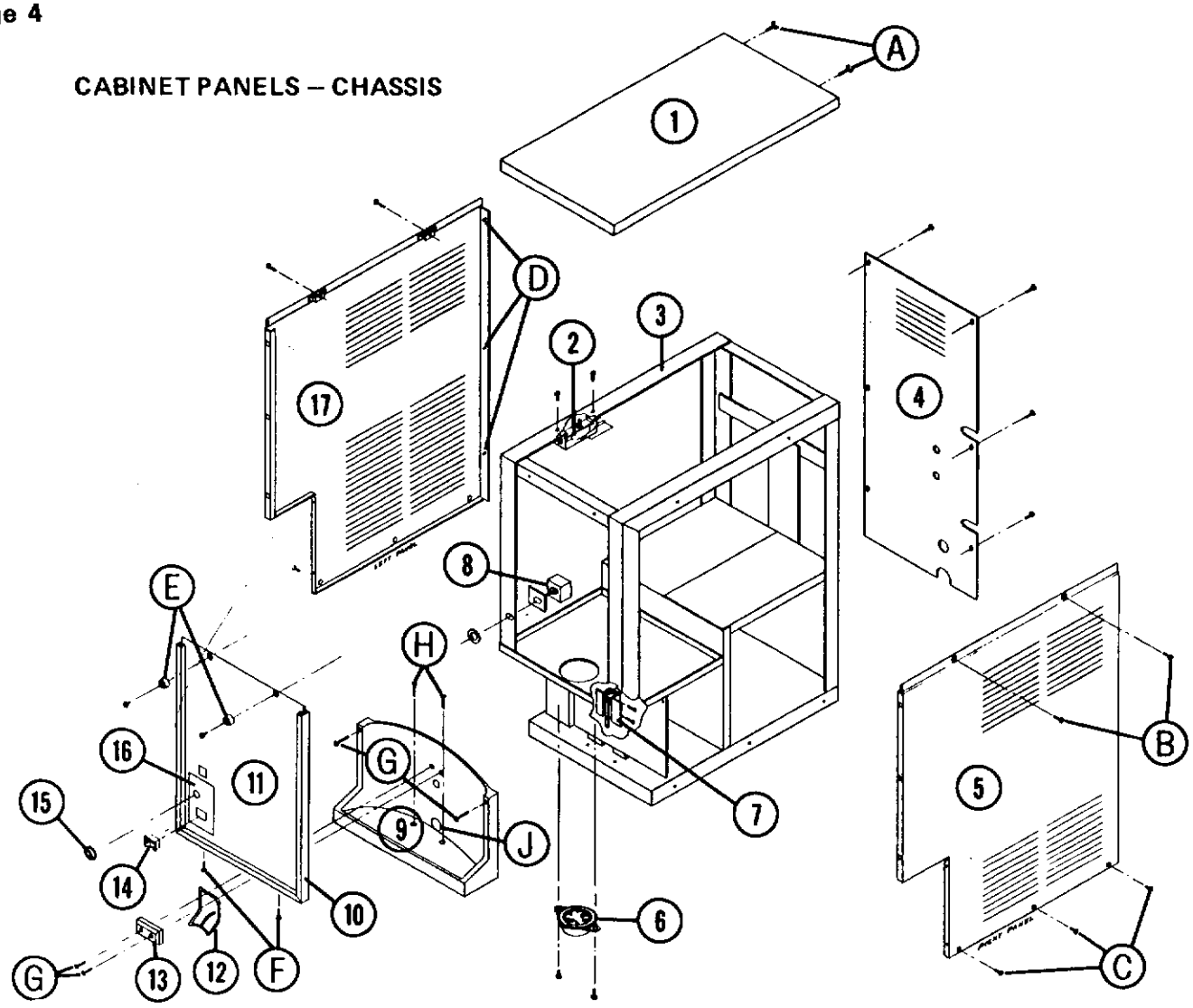

ITEM NO.	PART NO.	DESCRIPTION
1.	A19104-004	Cabinet Top – Painted
1.	A19104-001	Cabinet Top – Stainless Steel
2.	12-1570-00	Mabter (Interlock) Switch
3.	A21447-000	Frame
4.	A21405-002	Back Panel – Painted
4.	A21405-001	Back Panel – Stainless Steel
5.	A21416-002	Right Side Panel – Painted
5.	A21416-001	Right Side Panel – Stainless Steel
6.	02-1804-00	Spout Extension
7.	12-1641-00	Vend Switch
8.	12-1540-00	Selector Switch
9.	A21429-000	Sink
10.	15-0507-00	Moulding Trim
11.	A21425-002	Cabinet Front – Painted
11.	A21425-001	Cabinet Front – Stainless Steel
12.	A21544-000	Actuator Arm
13.	A22032-000	Actuator Arm Adapter
14.	12-1377-00	Water Switch
15.	12-1566-00	Switch Knob
16.	15-0563-01	Decal
17.	A21415-002	Left Side Panel – Painted
17.	A21415-001	Left Side Panel – Stainless Steel
A.	03-1279-00	Wing Screw
B.	03-1418-05	Screw

REMOVING PANELS & SINK

1. To remove either side panel or front, first remove the two wing bolts in the back of cover No. 1, Item (A). Lift the back of the cover upward and push forward to release.
2. Either side panel can be taken off by removing two screws across the top (B) and three across the bottom of the panel. (C) These are the only screws that hold the panel. Pull the panel from in back of sink, then slide backward about 1/2 inch.
   There are no screws in the back of the panel, only pins that slide into holes in the frame. (D)
   The front edge of the panel merely fits under the aluminum trim.
3. The front panel is removed by unscrewing the two rubber bumpers at the top of the panel (E) and two screws under the sink top area. (F)
4. The water switch (14) will snap out and the quick connects can be removed from the switch.
   The selector knob (15) just pulls off.
5. The sink (9) can be removed by removing four screws (G) on the front side of the switch and two screws in the bottom of the sink. (H)
   These screws are sealed to eliminate water leaks.
   The drain tube connection (J) is fastened to the sink rear by a hose clamp. To remove the clamp, it is necessary to remove the right side panel.

   Remove top and left side panel to clean air cooled condenser.

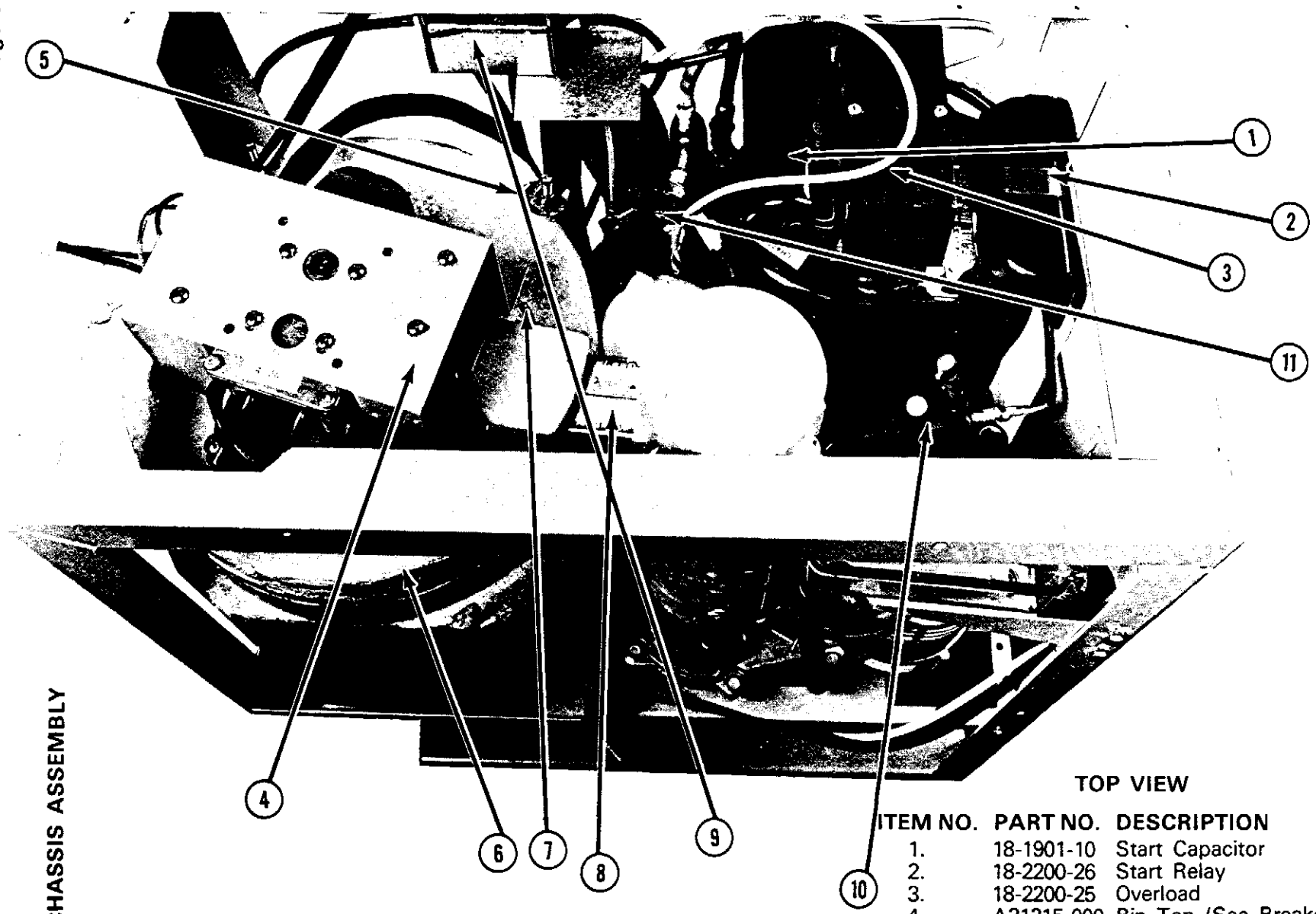

CHASSIS ASSEMBLY

TOP VIEW

ITEM NO.	PART NO.	DESCRIPTION
1.	18-1901-10	Start Capacitor
2.	18-2200-26	Start Relay
3.	18-2200-25	Overload
4.	A21215-000	Bin Top (See Breakdown Page 1)
5.	03-0255-00	Wing Nut
6.	A16098-000	Top, Bin (Cover Only)
7.	A16104-000	Pin
8.	A16151-000	Spout Extension
9.	12-1570-00	Interlock Switch
10.	16-0673-02	Process Header — Hi Side
11.	11-0396-01	Pressure Switch

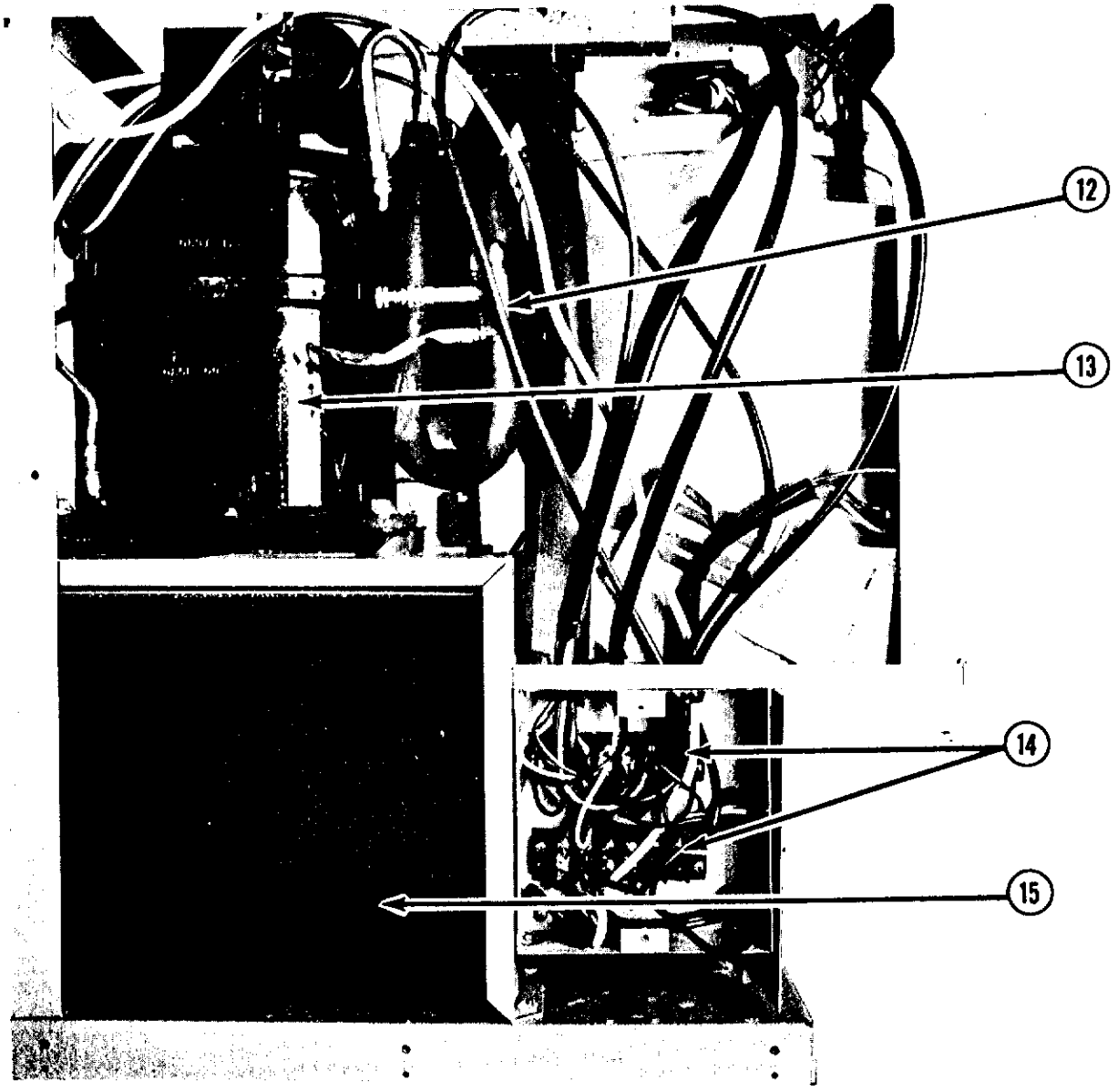

CHASSIS ASSEMBLY

LEFT SIDE

12.	16-0673-18	Process Header — Low Side
13.	18-2200-01	Compressor
14.	12-0813-04	Terminal Strip
15.	18-1916-00	Condensor — Air Cooled

CHASSIS ASSEMBLY

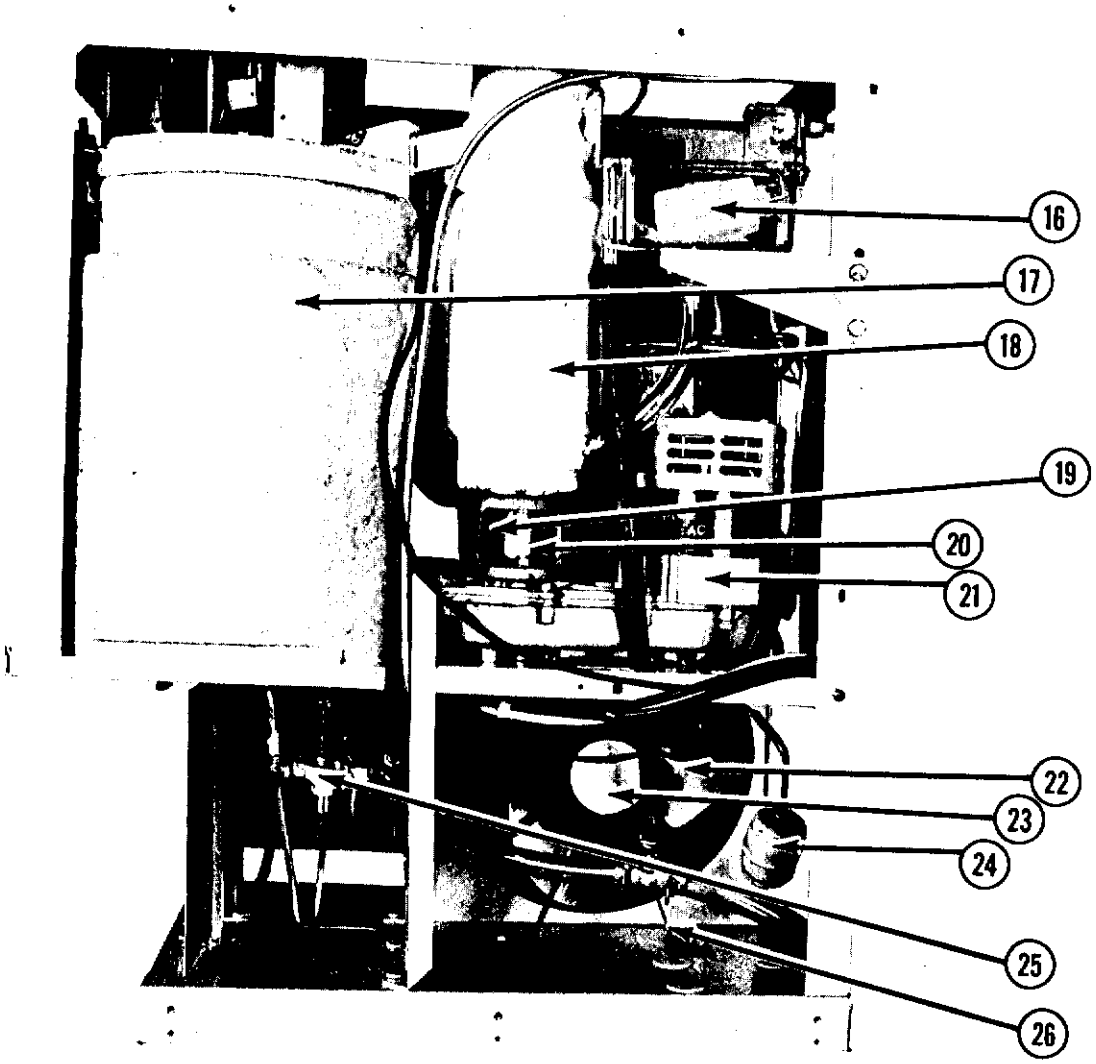

RIGHT SIDE

16.	See Page 3	Reservoir
17.	See Page 2	Storage Bin
18.	See Page 9	Freezer Assembly
19.	15-0575-01	Coupling
20.	08-0595-01	Adapter
21.	See Page 8	Gearmotor
22.	18-0137-01	Fan Blade
23.	12-1576-01	Fan Motor
24.	02-0831-00	Drier
25.	12-1434-04	Inlet Water Solenoid
26.	18-0422-00	Bracket-Fan Motor

A25995-021
GEAR MOTOR ASSEMBLY
1/10 H.P.
115/60/1

11.5 RPM at output shaft

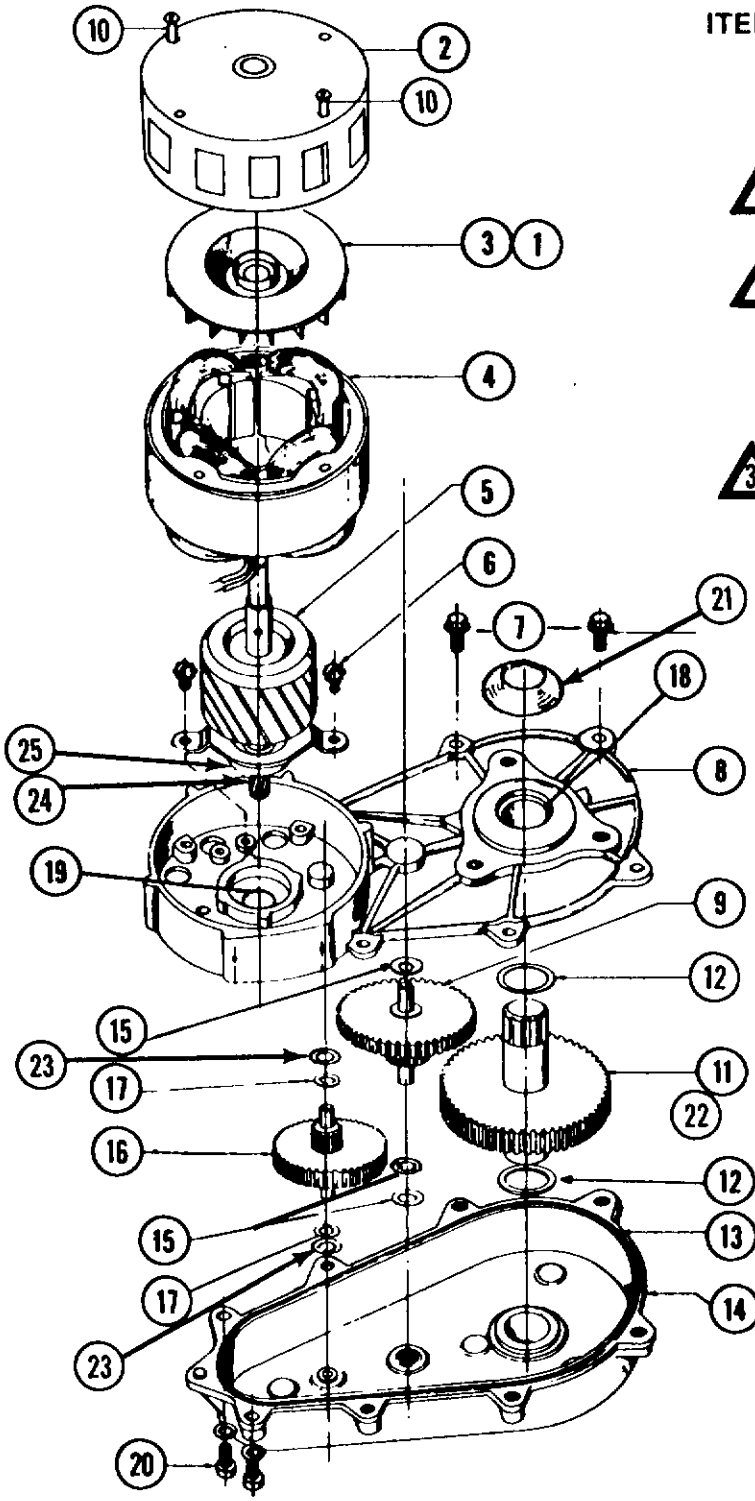

ITEM NO.	PART NO.	DESCRIPTION
1.	03-1246-00	Set Screw (2)
2.	A17047-000	Motor Housing
3.	A16915-000	Cooling Fan
2 4.	12-1400-01	Stator Assy.
2 5.	A26454-001	Rotor & 1st. Gear Kit
6.	03-1245-00	Screws (2)
1 7.	03-1251-00	Flange Screws (6)
1 8.	A16920-021	Gear Case Cover
9.	02-1521-00	Gear and Pinion
10.	03-1403-43	Motor Bolts (4)
11.	A26650-001	Gear and Output Shaft
12.	03-1408-21	Washer (2)
13.	02-1505-00	"O" Ring
3 14.	A24184-001	Gear Case Kit
15.	03-1408-06	Washer (3)
16.	02-2224-01	1st Gear and Pinion
17.	03-1408-19	Washer (2)
18.	02-1503-00	Grease Seal
19.	02-1504-00	Grease Seal
20.	03-1252-00	Screw (2)
21.	13-0709-01	Water Shed
22.	03-1475-01	Key
23.	03-1408-20	Washer (2)
24.	13-0617-04	Slinger Ring
25.	02-1501-00	Rotor Bearing

NOTE:

1 Cover comes with grease seals items 18 & 19.

2 Fiber gear (item 16 and rotor bearing (item 25) included in the rotor kit.

3 Includes items: 8, 13, 15, 17, 18, 19, 23 and gear lube.

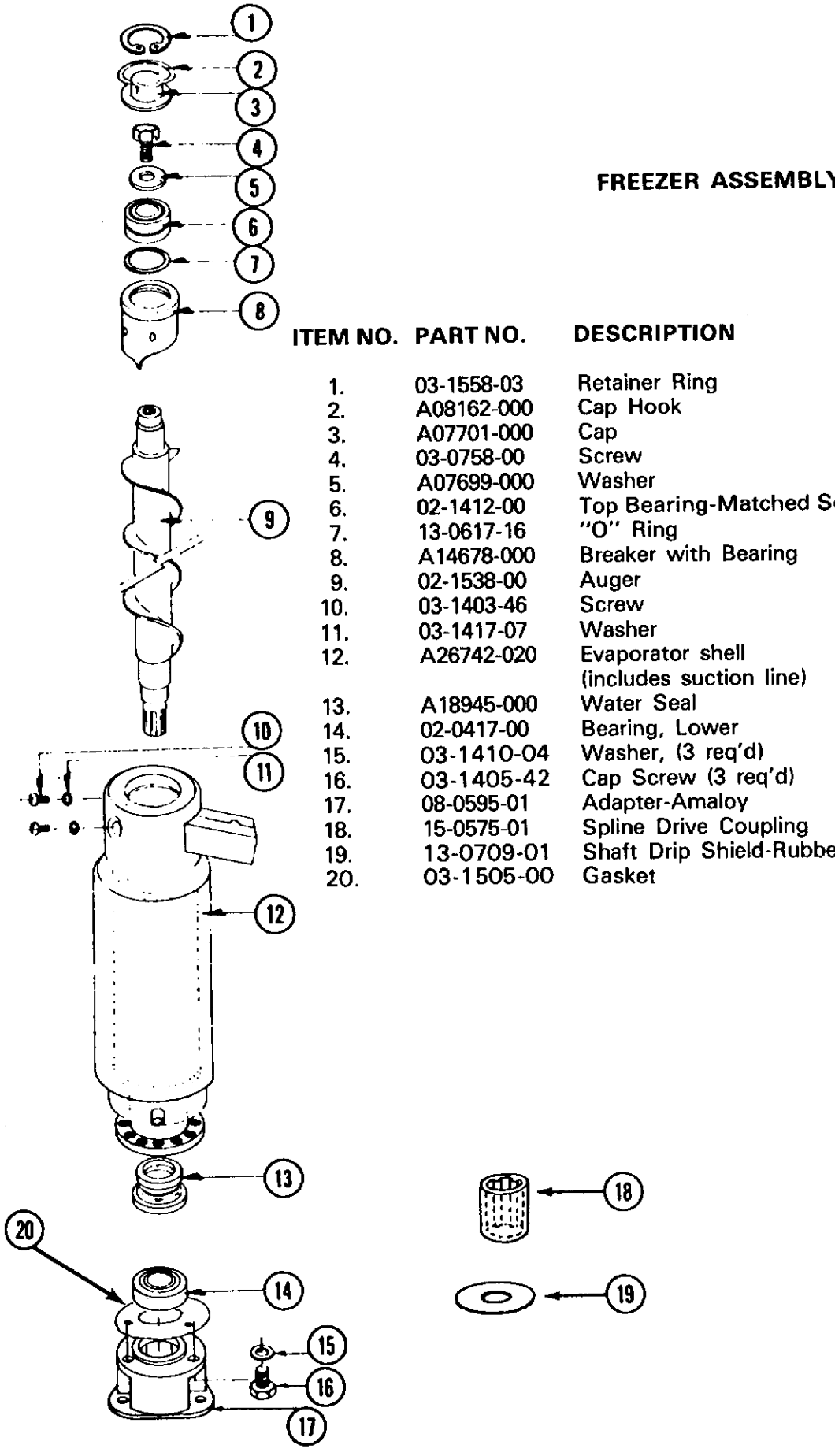

FREEZER ASSEMBLY

ITEM NO.	PART NO.	DESCRIPTION
1.	03-1558-03	Retainer Ring
2.	A08162-000	Cap Hook
3.	A07701-000	Cap
4.	03-0758-00	Screw
5.	A07699-000	Washer
6.	02-1412-00	Top Bearing-Matched Set See Page 10 & 11
7.	13-0617-16	"O" Ring
8.	A14678-000	Breaker with Bearing
9.	02-1538-00	Auger
10.	03-1403-46	Screw
11.	03-1417-07	Washer
12.	A26742-020	Evaporator shell (includes suction line)
13.	A18945-000	Water Seal
14.	02-0417-00	Bearing, Lower
15.	03-1410-04	Washer, (3 req'd)
16.	03-1405-42	Cap Screw (3 req'd)
17.	08-0595-01	Adapter-Amaloy
18.	15-0575-01	Spline Drive Coupling
19.	13-0709-01	Shaft Drip Shield-Rubber
20.	03-1505-00	Gasket

SUBJECT: INSTRUCTIONS—ICE BREAKER & BEARING ASSEMBLY

MODELS ACD1-SF1-SD1-FD1-FD4-FD5

The top bearing assembly (part number 02-1412-00) used in the freezer assemblies on the above listed models consists of two single row bearings which are pressed into the ice breaker, one on top of the other.

The bearings are supplied as a matched set, secured together by a holding strap.

These bearings are lifetime lubricated and have shield on the exterior side.

To prevent premature failures, the following instructions must be observed.

1. Bearing must be installed "Right Side Up." (Correct position is illustrated on the next page.)

2. Bearings must be pressed in by the outer race.

3. Apply 20 foot pounds, plus or minus 5 foot pounds, on a torque wrench when tightening the hex cap screw down on the stainless flat washer over the top of the bearing. Excessive pressure on the cap screw will shorten bearing life.

4. Use care in storing and handling bearings. Keep free of dirt, moisture, etc.

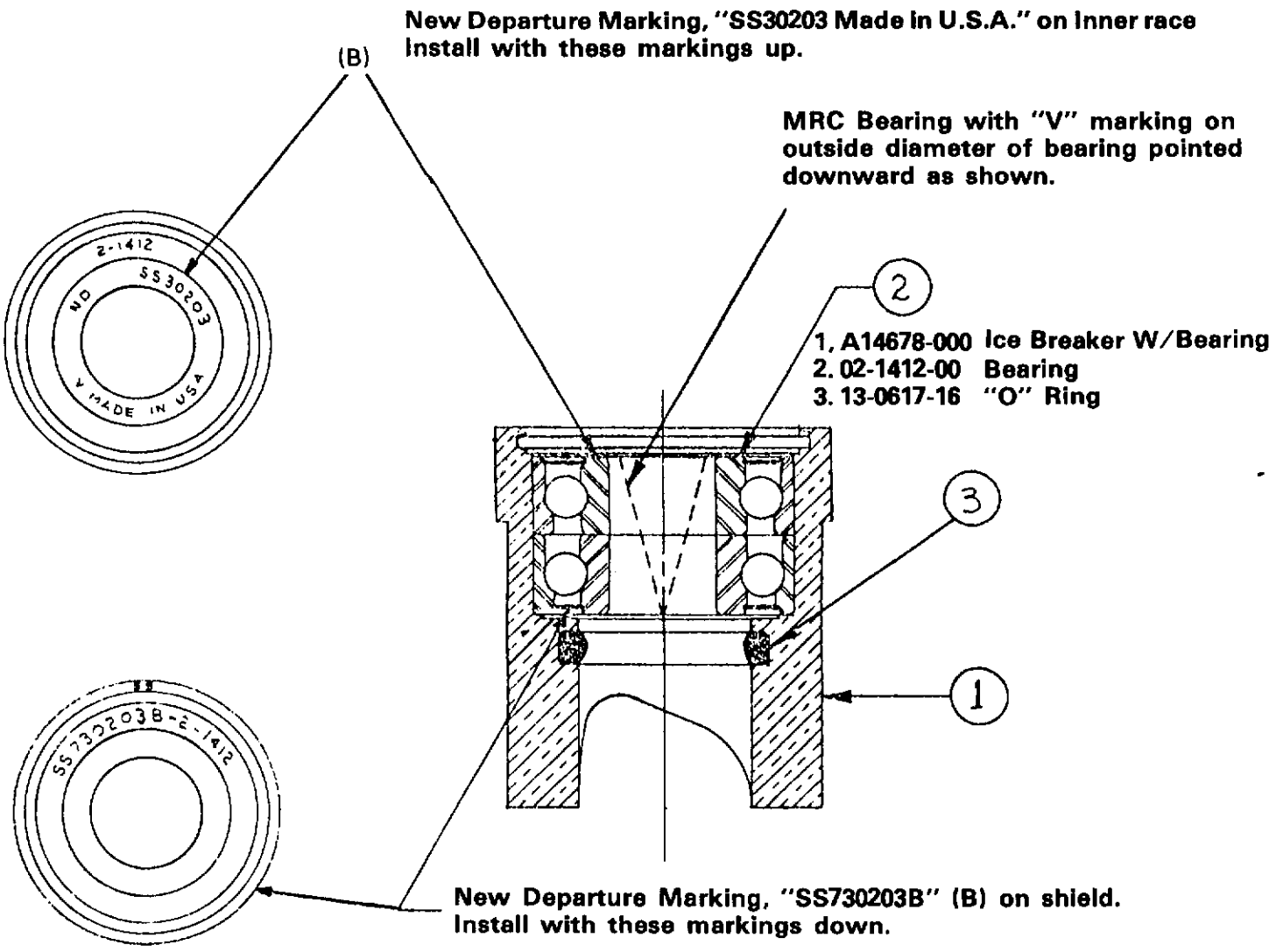

CAUTION:

A. Install MRC BEARINGS with "V" markings pointing downward as shown.

B. Install NEW DEPARTURE BEARINGS with shields on exterior sides and with markings as shown.

CENTRIFUGAL SWITCH

SWITCH ADJUSTMENT

.03 minimum gap between switch lever and mechanism with centrifugal mechanism actuated (motor running). Switch circuit should be closed When motor is stopped and centrifugal mechanism deactivates, the switch circuit should be broken. There should be enough adjustment by loosening the switch mounting screws and tilting switch in direction required. If this fails, a small amount of bending can be done on the switch lever.

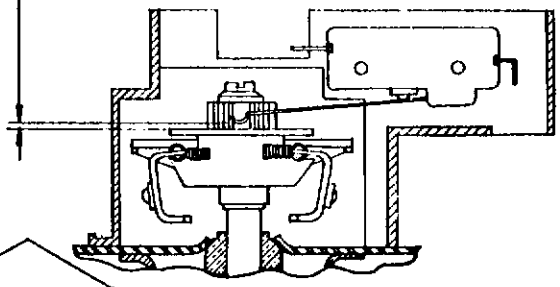

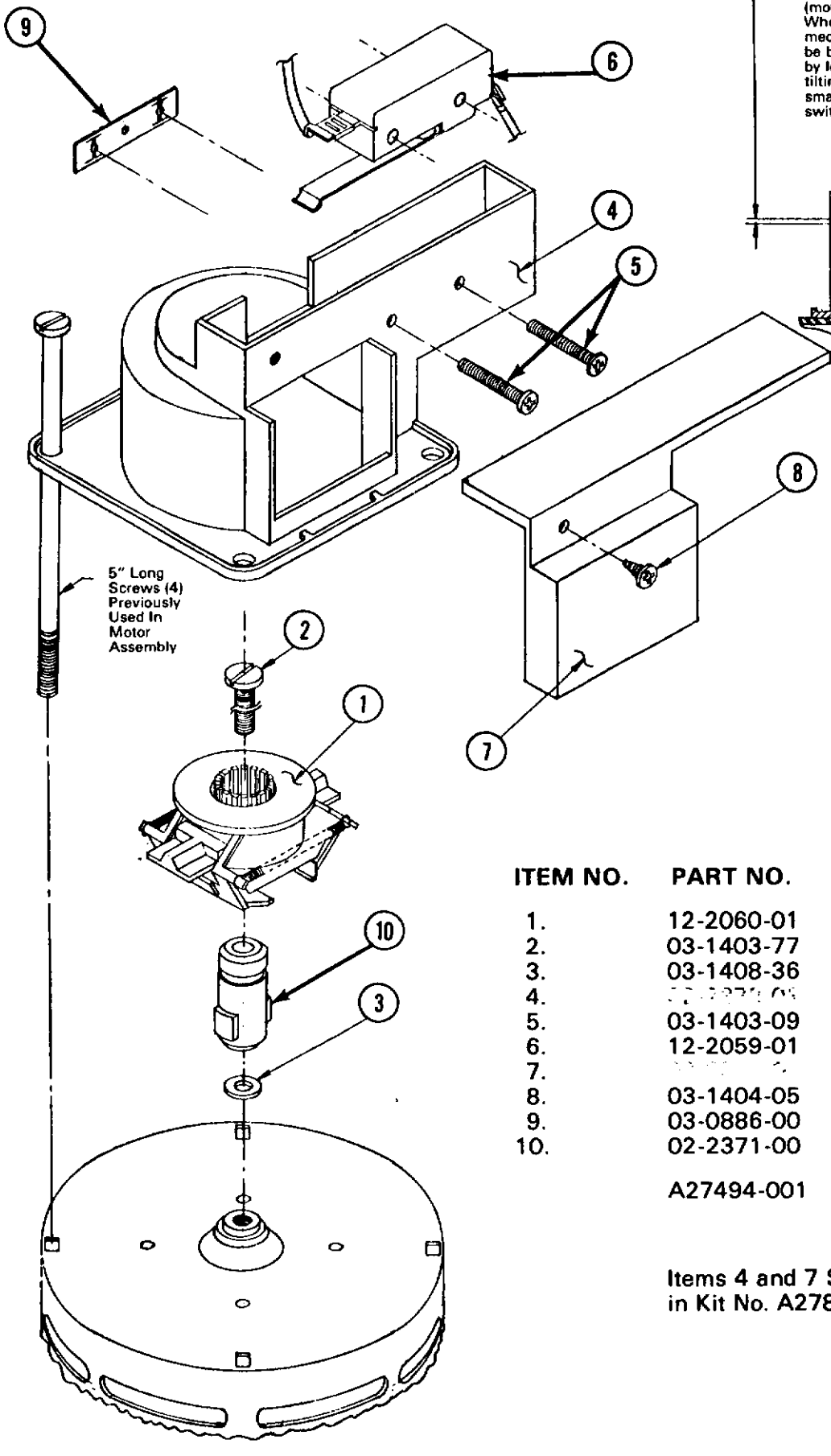

ITEM NO.	PART NO.	DESCRIPTION
1.	12-2060-01	Centrifugal Actuator
2.	03-1403-77	Screw
3.	03-1408-36	Washer
4.	[illegible]	Switch Mounting Case
5.	03-1403-09	Screw (2)
6.	12-2059-01	Switch
7.	[illegible]	Switch Case Cover
8.	03-1404-05	Screw
9.	03-0886-00	Speed Nut
10.	02-2371-00	Shaft Extension
	A27494-001	Centrifugal Switch Kit Complete w/17-1328-01 inst.

Items 4 and 7 Supplied in Kit No. A27895-001

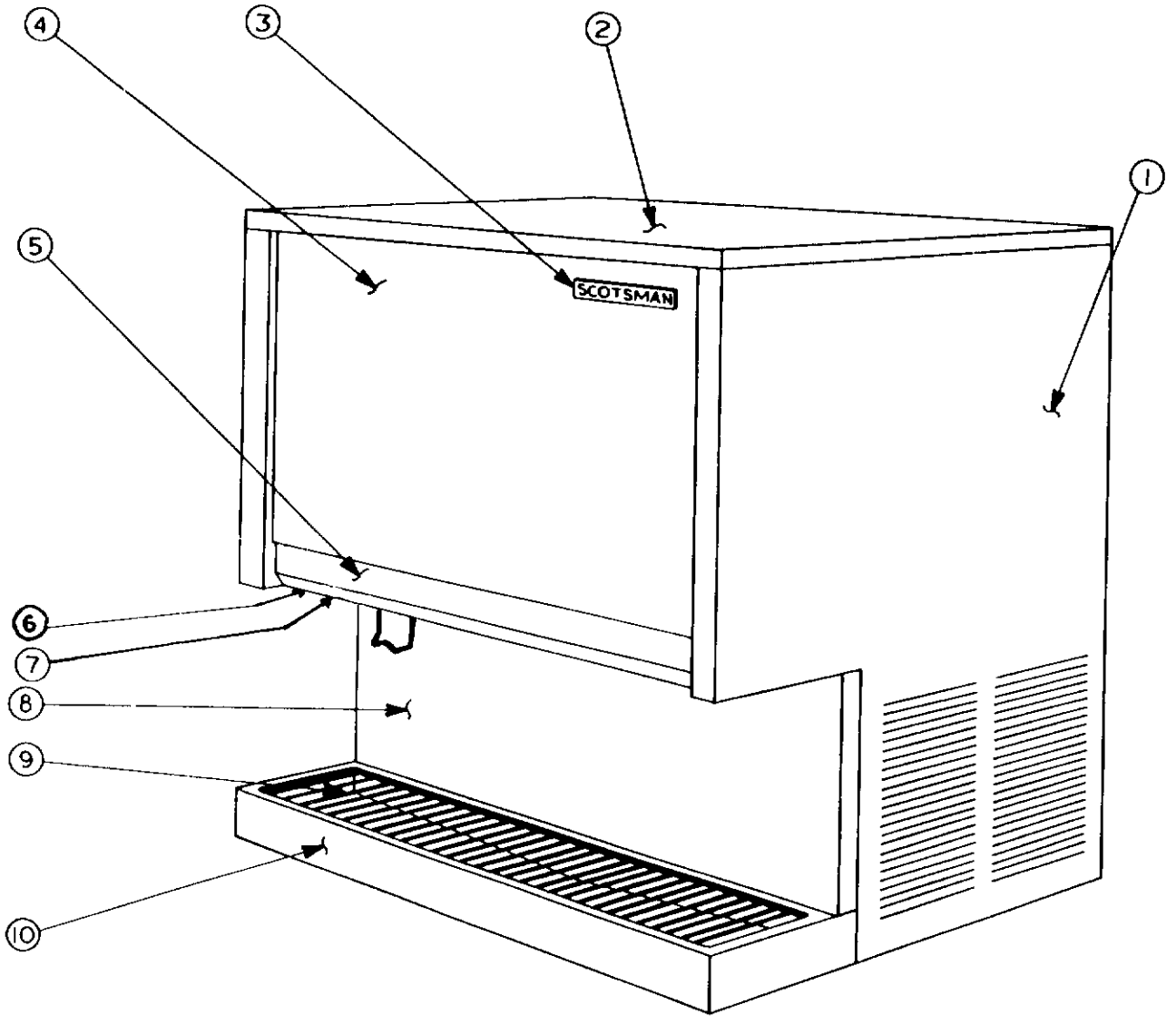

EXTERNAL CABINET PARTS

ITEM NO.	PART NO.	DESCRIPTION
1.	A19945-000	Cabinet Painted
	A19945-001	Cabinet SS
2.	A20192-000	Top Panel Painted
	A20192-001	Top Panel SS
3.	15-0156-00	Emblem Scotsman
	03-0271-00	Speed Nut
4.	A21273-000	Front Panel Wood Grain
	A21273-001	Front Panel SS
5.	A24282-001	Control Panel Painted
	A24282-002	Control Panel SS
6.	12-1557-00	Portion control
	02-1810-00	Knob Portion Control
7.	12-1377-01	Switch Water
8.	A19339-000	Splash Panel
	03-1404-09	Screws Panel
9.	02-1858-00	Grill
10.	A23212-000	Sink

PANEL FASTENERS

15-0411-00	Strike
03-1406-04	Nut
02-0836-00	Catch

INTERNAL PARTS VIEW

Air Cooled

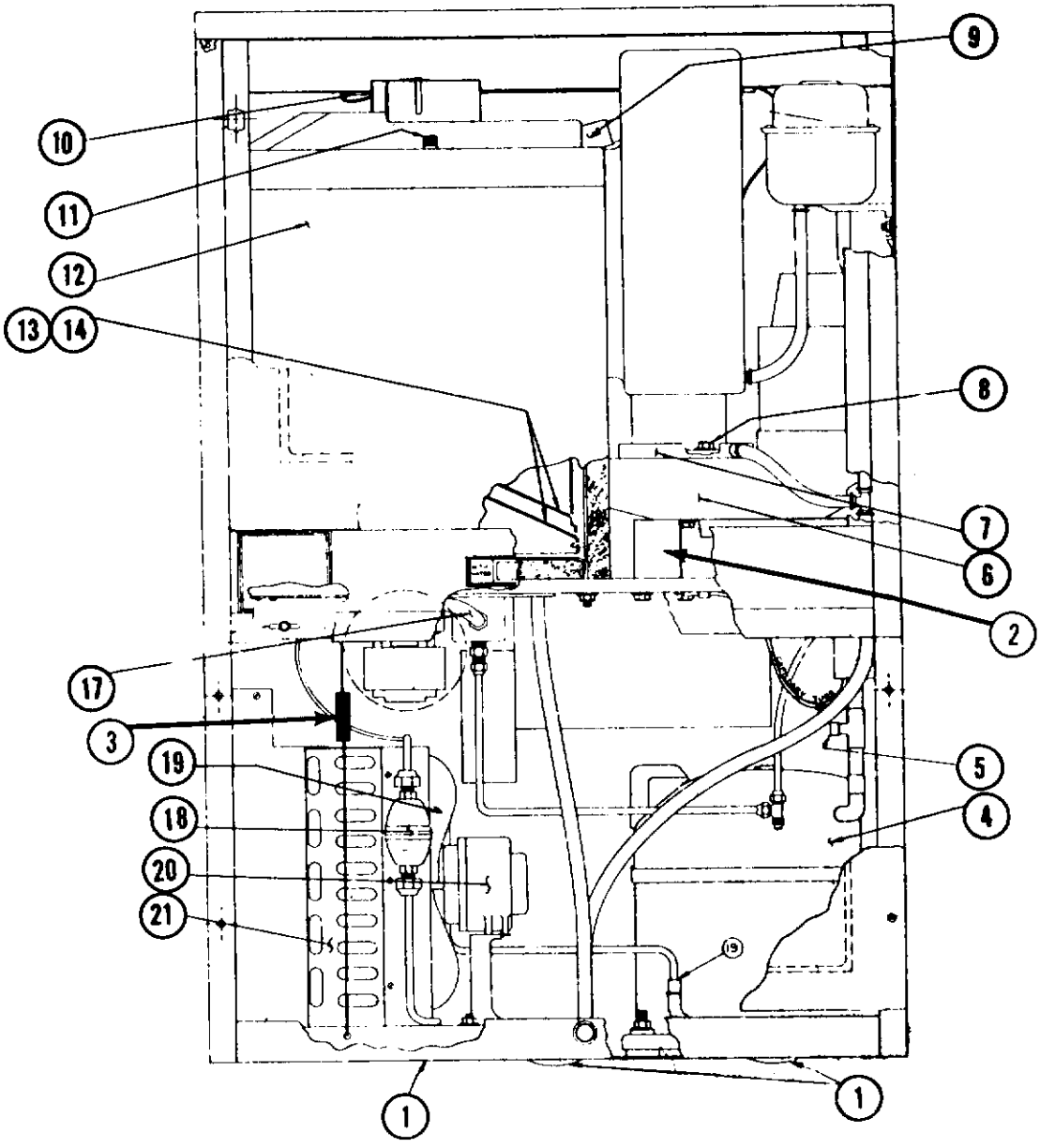

ITEM NO.	PART NO.	DESCRIPTION
1.	A22349-000	Plug button
2.	A20369-000	Gear Mot. Support
3.	02-1827-00	Spring
4.	18-2200-01	Compressor
5.	16-0560-00	Valve Core
5.	16-0563-00	Brass Cap
6.	See Page 7	Gear Motor
7.	A18153-000	Drip an Ass'y
7.	13-0628-00	Gasket
8.	03-1420-04	Screw
8.	03-1417-12	Washer
9.	A16151-000	Spout Extension
10.	03-1230-00	Tin Clip
11.	A21983-000	Nut
12.	See Page 9	Bin Ass'y.
13.	See Page 9	Inner Bin Fab. Ass'y.
14.	See Page 9	Inner Bin Bottom
16.		
17.	12-1434-04	Solenoid Ass'y.
18.	02-0350-00	Filter Drier
19.	18-0137-01	Fan Blade
20.	12-1576-01	Fan Motor
21.	18-1927-00	Condenser

INTERNAL PARTS VIEW

Water Cooled

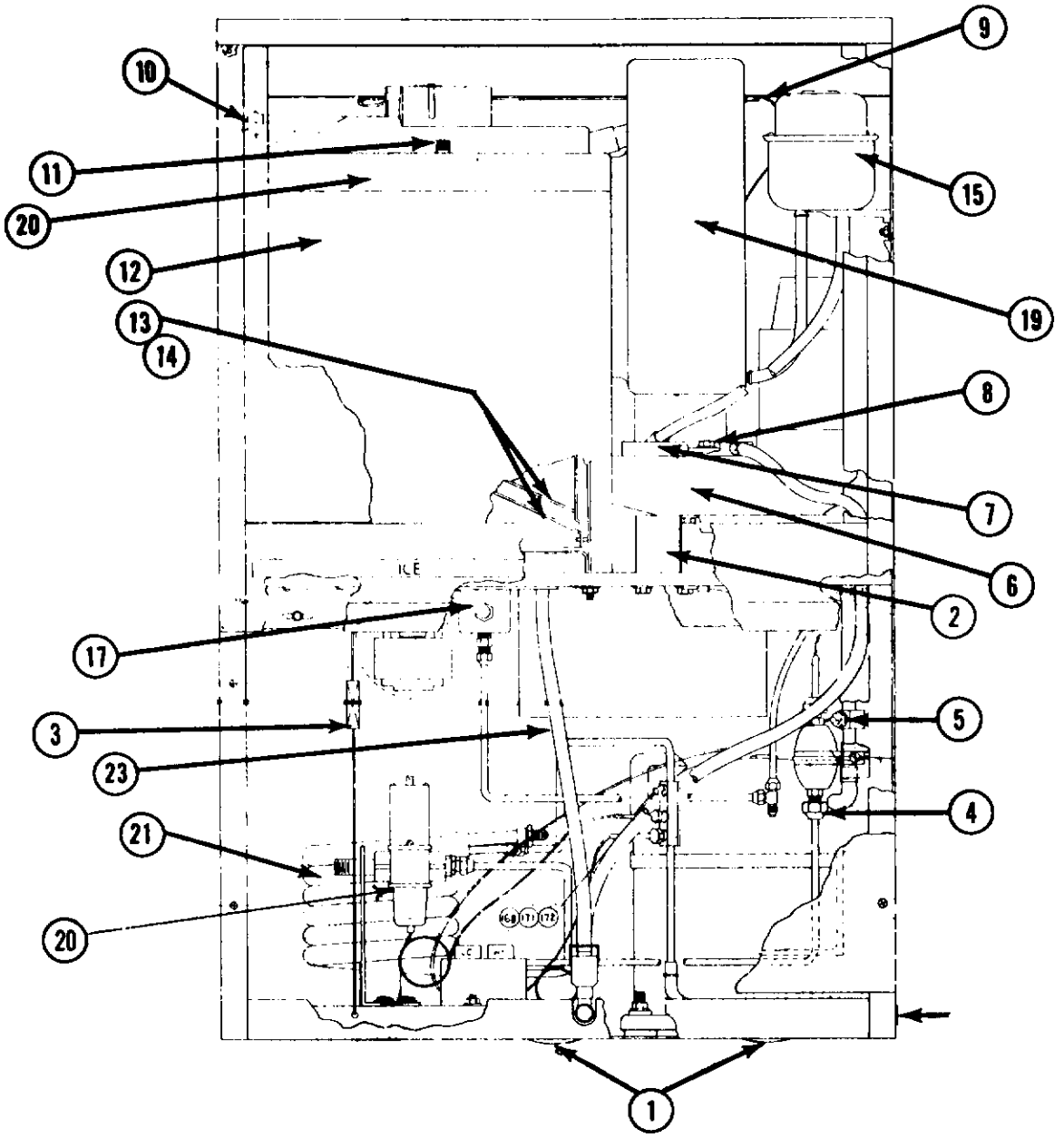

ITEM NO.	PART NO.	DESCRIPTION	ITEM NO.	PART NO.	DESCRIPTION
1.	A22349-000	Plub Button	12.	See Page 9	Bin Assy.
2.	A20369-000	Gear Mot. Support	13.	See Page 9	Inner Bin Fab. Assy.
3.	02-1827-00	Spring	14.	See Page 9	Inner Bin Bottom
4.	18-2200-01	Compressor	15.	See Page 6	Reservoir Assy.
5.	16-0560-00	Valve Core	16.	03-1403-16	Screw
5.	16-0563-00	Brass Cap	17.	12-1434-04	Solenoid Assy.
6.	See Page 7	Gear Motor	18.	02-0350-00	Filter Drier
7.	A18153-000	Drip Pan Assy.	19.	See Page 8	Freezer Assy.
7.	13-0628-00	Gasket	20.	11-0198-02	Water Regulating Valve
8.	03-1420-04	Screw	21.	18-3303-01	Condenser
8.	03-1417-12	Washer	22.		
9.	A16151-000	Spout Extention	23.	13-0079-01	Drain Tube by the Foot
10.	03-1230-00	Tin Clip			
11.	A21983-000	Nut			

BIN DRIVE AND DISPENSING PARTS

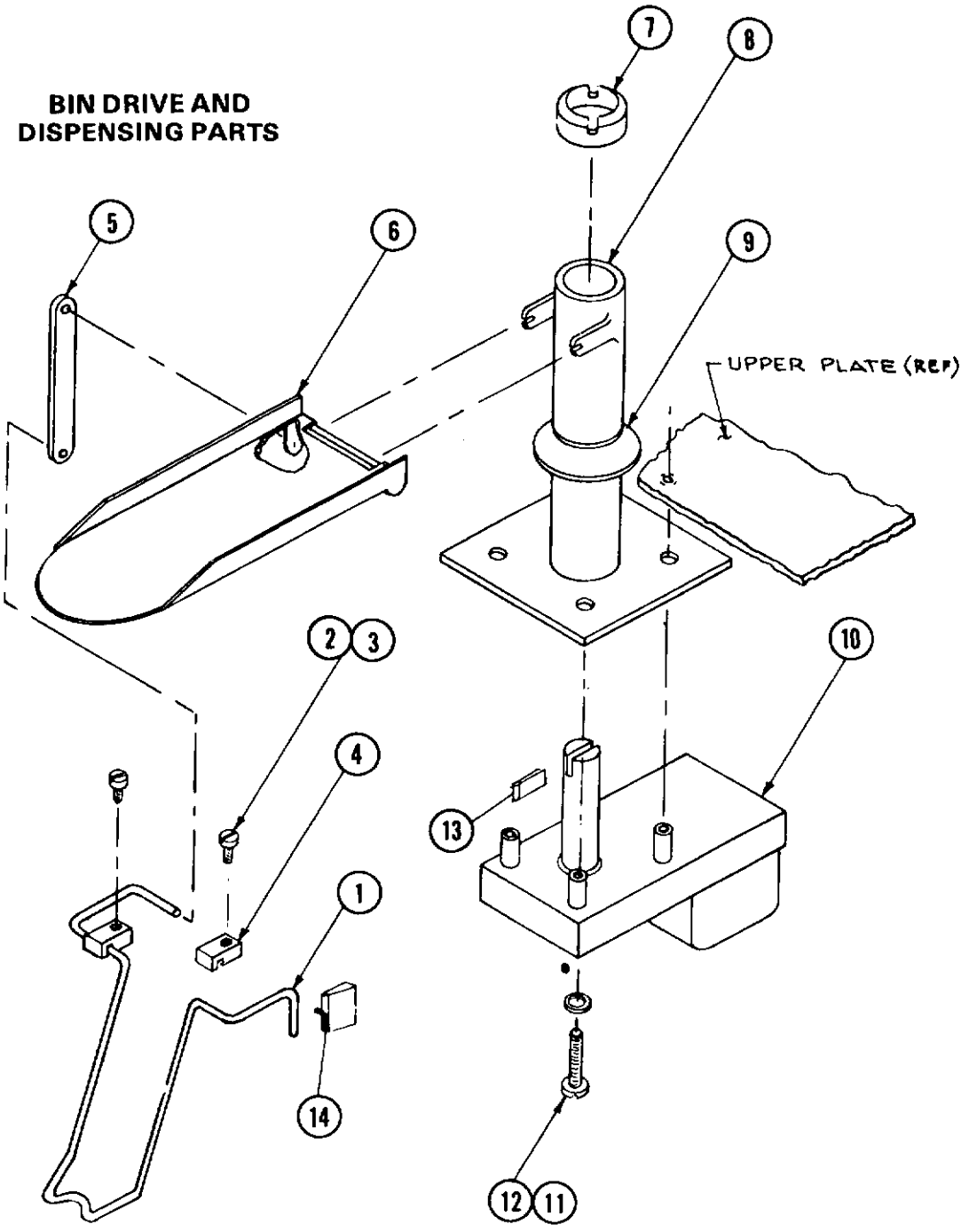

ITEM NO.	PART NO.	DESCRIPTION
1.	02-2076-01	Glass Filler
2.	03-1403-06	Screw
3.	03-1417-01	Lockwasher
4.	02-1969-00	Linkage Clamp
5.	02-1967-00	Linkage Connector
6.	02-1970-00	Ice Chute
7.	02-1976-00	Retaining Collar
8.	02-1971-00	Bracket Gear Motor
9.	13-0747-00	Water Shed
10.	12-1561-01	Gear Motor
11.		Lockwasher
12.	02-1403-36	Screw
13.	A20472-000	Slot Pin
14.	12-1642-00	Vend Switch

BIN TOP PARTS

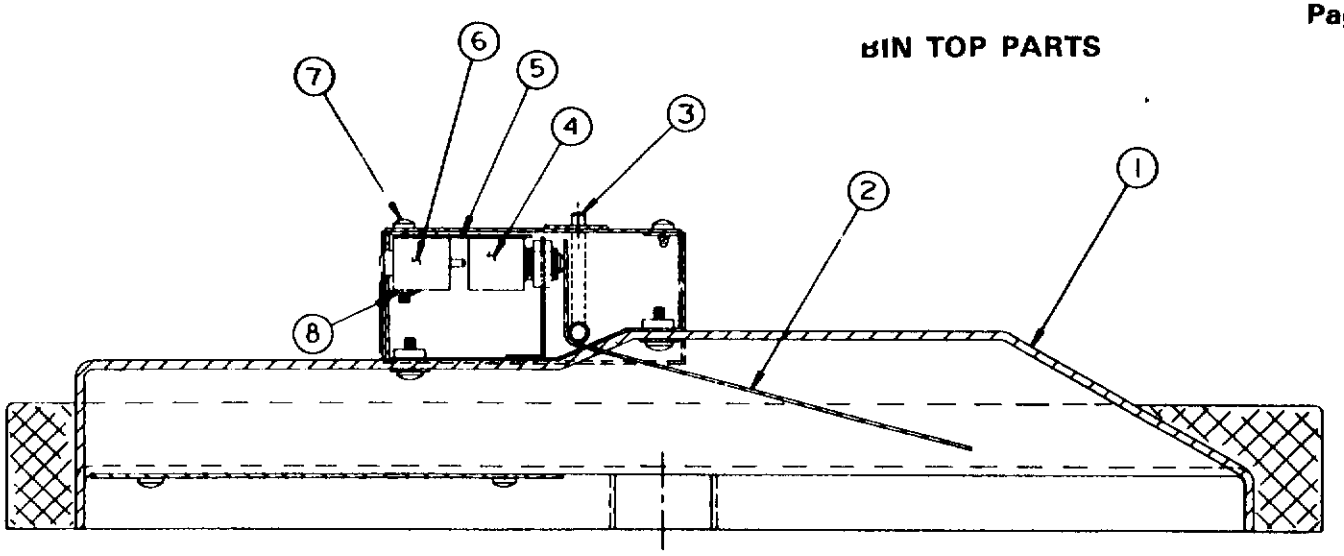

ITEM NO.	PART NO.	DESCRIPTION
1.	A20486-000	Top Foam Assy.
2.	A21995-000	Actuator Arm
3.	A21982-000	Pin
4.	12-1018-02	Bin Full Switch
5.		Electrical Insulation
6.	12-1664-00	Reset Switch
7.	03-1404-07	Screw
8.	03-0886-00	Twin Nut

CONTROL BOX PARTS

CONTROL BOX

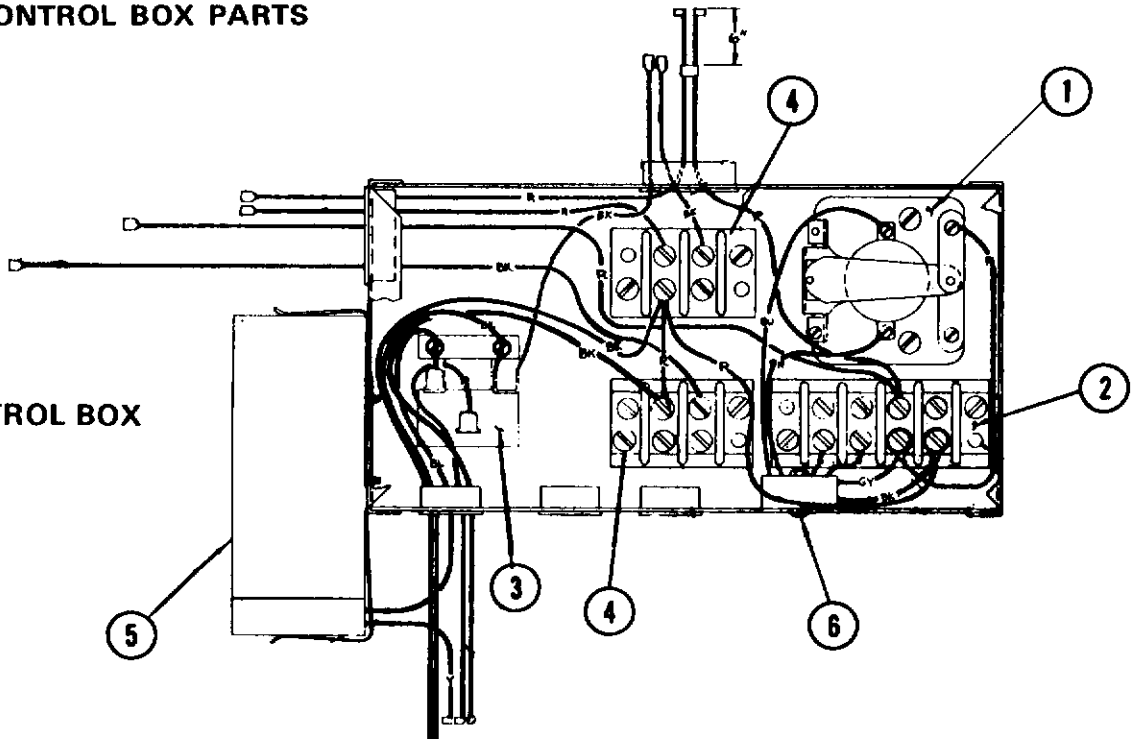

ITEM NO.	PART NO.	DESCRIPTION
1.	12-1558-00	Relay
2.	12-0813-01	Terminal Board
3.	18-2200-26	Compressor Relay
4.	12-0813-04	Terminal Board
5.	18-1901-10	Compressor Capacitor (start)
6.	12-1559-00	Timing Module

⚠1 In mid 1975 Item #1 & #6 were changed and are not interchangeable w/prior units. The new P.N. are #1 12-0419-00 and #6 A26213-001. Ref. Scotsman Bulletin PS-9-75.

RESERVOIR ASSEMBLY

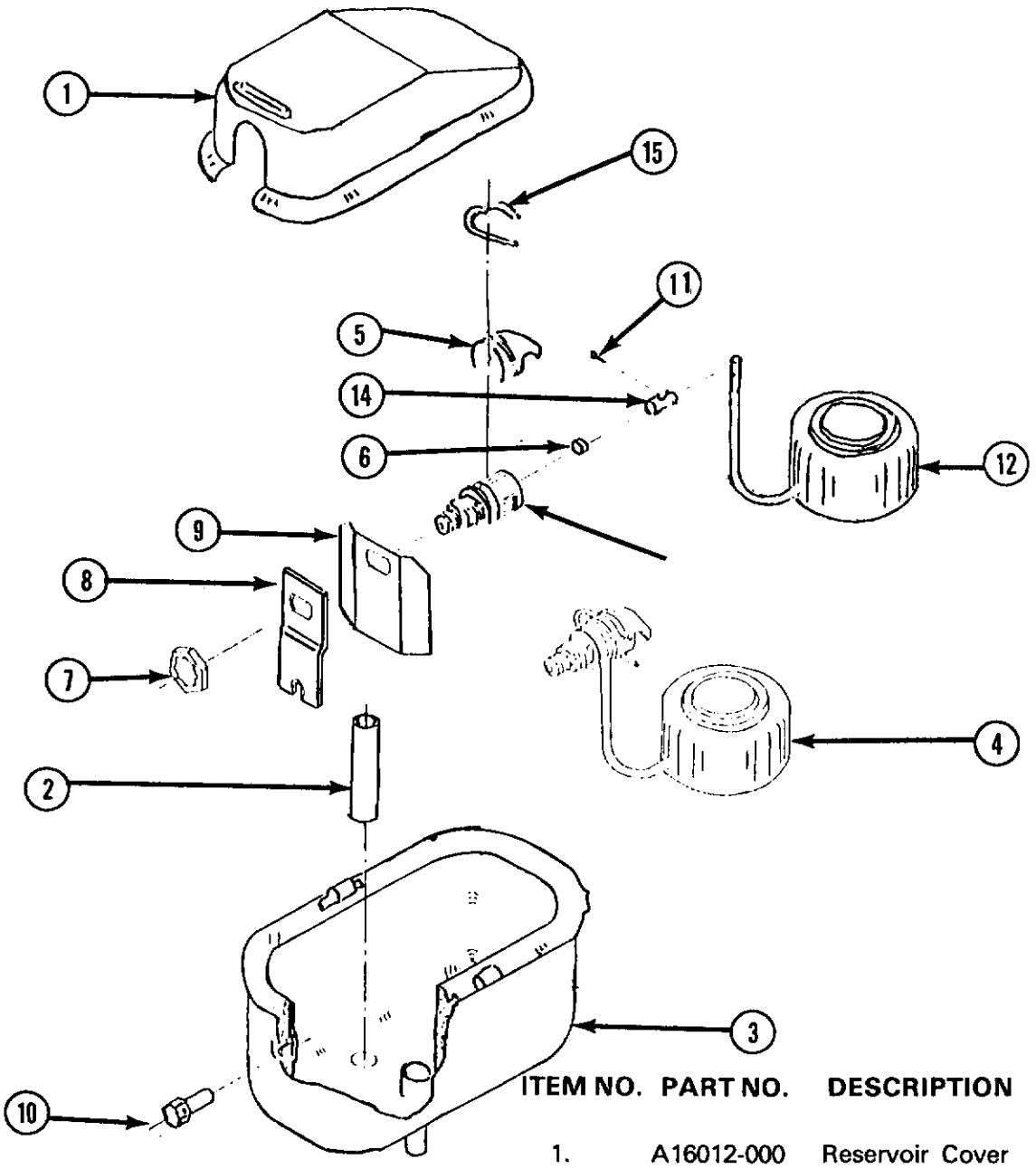

ITEM NO.	PART NO.	DESCRIPTION
1.	A16012-000	Reservoir Cover
2.	S06715-000	Stand Pipe
3.	A08351-000	Reservoir Complete Less Item NO. 1 & 2
4.	S08138-000	Valve Complete Includes Items 5, 6, 11, 12, 13, 14 & 15
5.	02-1320-00	Water Deflector
6.	S06947-000	Valve Seat
7.	03-1394-00	Pal Nut
8.	A12869-000	Bracket
9.	A18418-001	Water Deflector
10.	A08055-000	Bracket Nut
11.	03-1001-00	Rivet
*12.		Float
*13.		Inlet Valve
*14.		Valve Seat Holder
15.	02-1259-00	Valve Pin

NOTE: Use of this reservoir was discontinued about mid 1975. New P.N. 02-2217-01

*Use Item 4

A25995-021
GEAR MOTOR ASSEMBLY
1/10 H.P.
115/60/1

11.5 RPM at output shaft

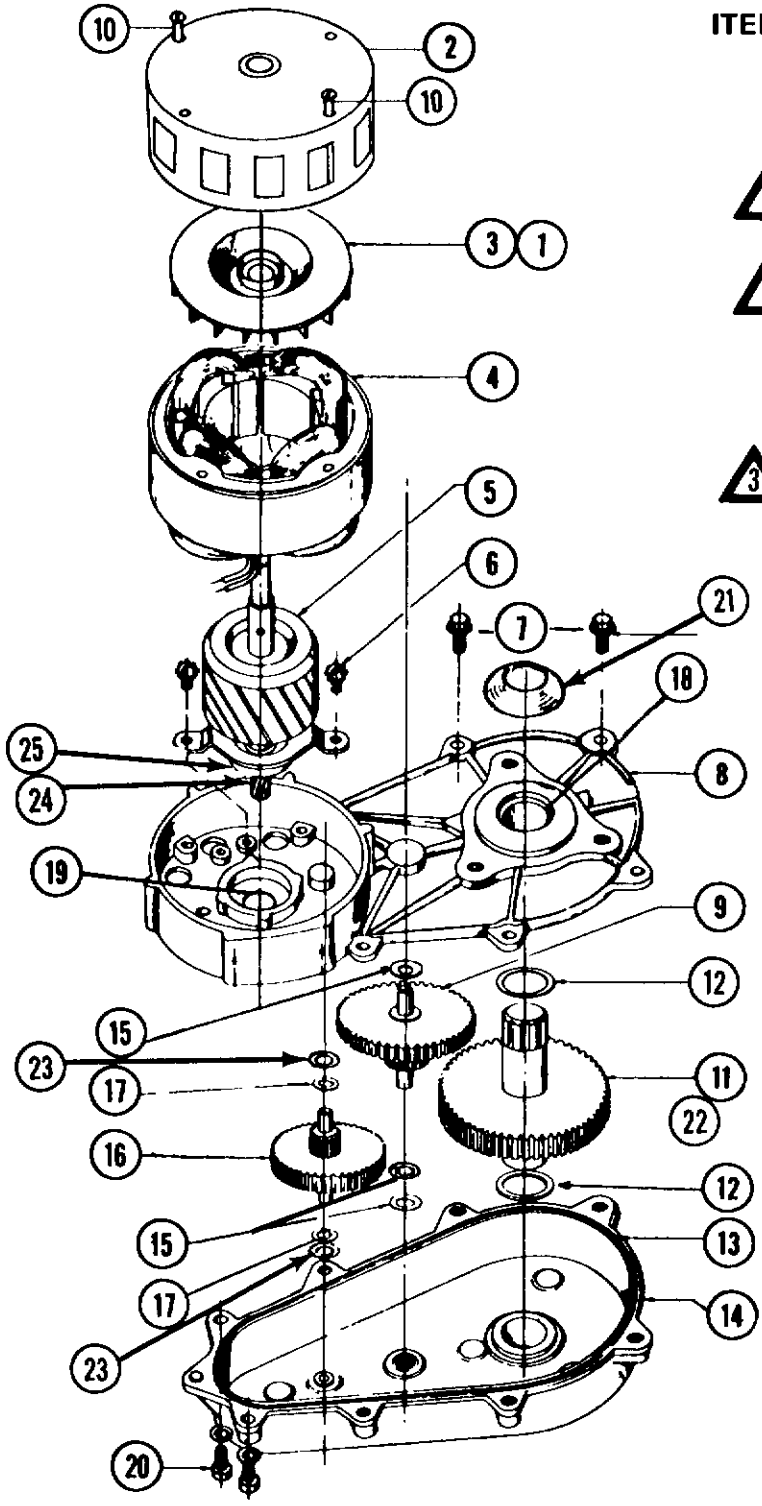

ITEM NO.	PART NO.	DESCRIPTION
1.	03-1246-00	Set Screw (2)
2.	A17047-000	Motor Housing
3.	A16915-000	Cooling Fan
4.	12-1400-01	Stator Assy.
2 5.	A26454-001	Rotor & 1st. Gear Kit
6.	03-1245-00	Screws (2)
1 7.	03-1251-00	Flange Screws (6)
8.	A16920-021	Gear Case Cover
9.	02-1521-00	Gear and Pinion
10.	03-1403-43	Motor Bolts (4)
11.	A26650-001	Gear and Output Shaft
12.	03-1408-21	Washer (2)
13.	02-1505-00	"O" Ring
3 14.	A24184-001	Gear Case Kit
15.	03-1408-06	Washer (3)
16.	02-2224-01	1st Gear and Pinion
17.	03-1408-19	Washer (2)
18.	02-1503-00	Grease Seal
19.	02-1504-00	Grease Seal
20.	03-1252-00	Screw (2)
21.	13-0709-01	Water Shed
22.	03-1475-01	Key
23.	03-1408-20	Washer (2)
24.	13-0617-04	Slinger Ring
25.	02-1501-00	Rotor Bearing

NOTE:

1. Cover comes with grease seals items 18 & 19.
2. Fiber gear (item 16 and rotor bearing (item 25) included in the rotor kit.
3. Includes items: 8, 13, 15, 17, 18, 19, 23 and gear lube.

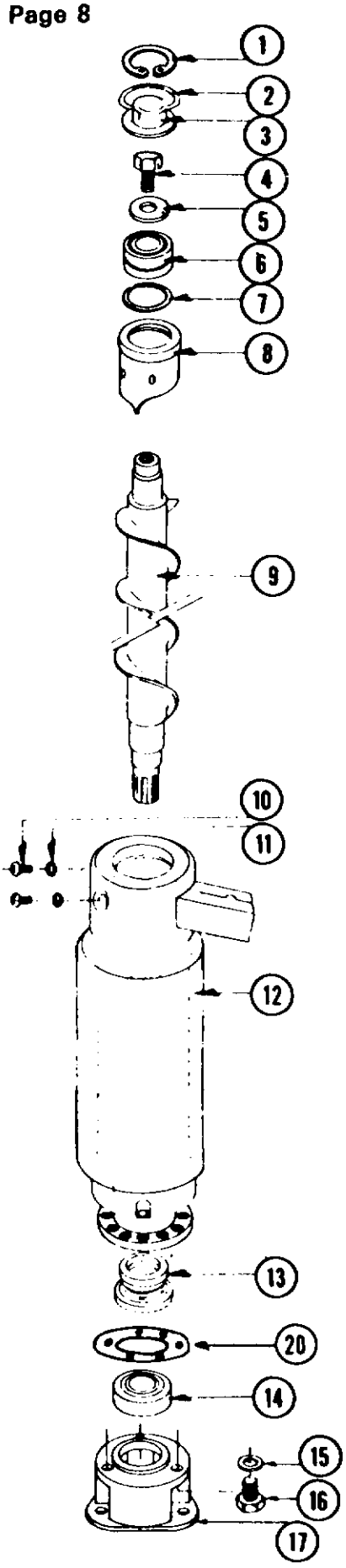

FREEZER ASSEMBLY

ITEM NO.	PART NO.	DESCRIPTION
1.	03-1558-03	Retainer Ring
2.	A08162-000	CapHook
3.	A07701-000	Cap
4.	03-0758-00	Screw
5.	A07699-000	Washer
6.	02-1412-00	top Bearing—Matches Set See Page 10 & 11
7.	13-0617-16	"O" Ring
8.	A14678-000	Breaker with Bearing
9.	02-1538-00	Auger
10.	03-1403-46	Screw
11.	03-1417-07	Washer
12.	A26752-020	Evaporator Shell includes Suction Line, No internal parts.
13.	A18945-000	Water Seal
14.	02-0417-00	Bearing, Lower
15.	03-1408-03	Washer, (3 req'd)
16.	03-1405-42	Cap Screw (3 req'd)
17.	08-0595-01	Adapter-Amaloy
18.	15-0575-01	Spline Drive Coupling
19.	13-0709-01	Shaft Drip Shiled—Rubber
20.	03-1505-00	Gasket

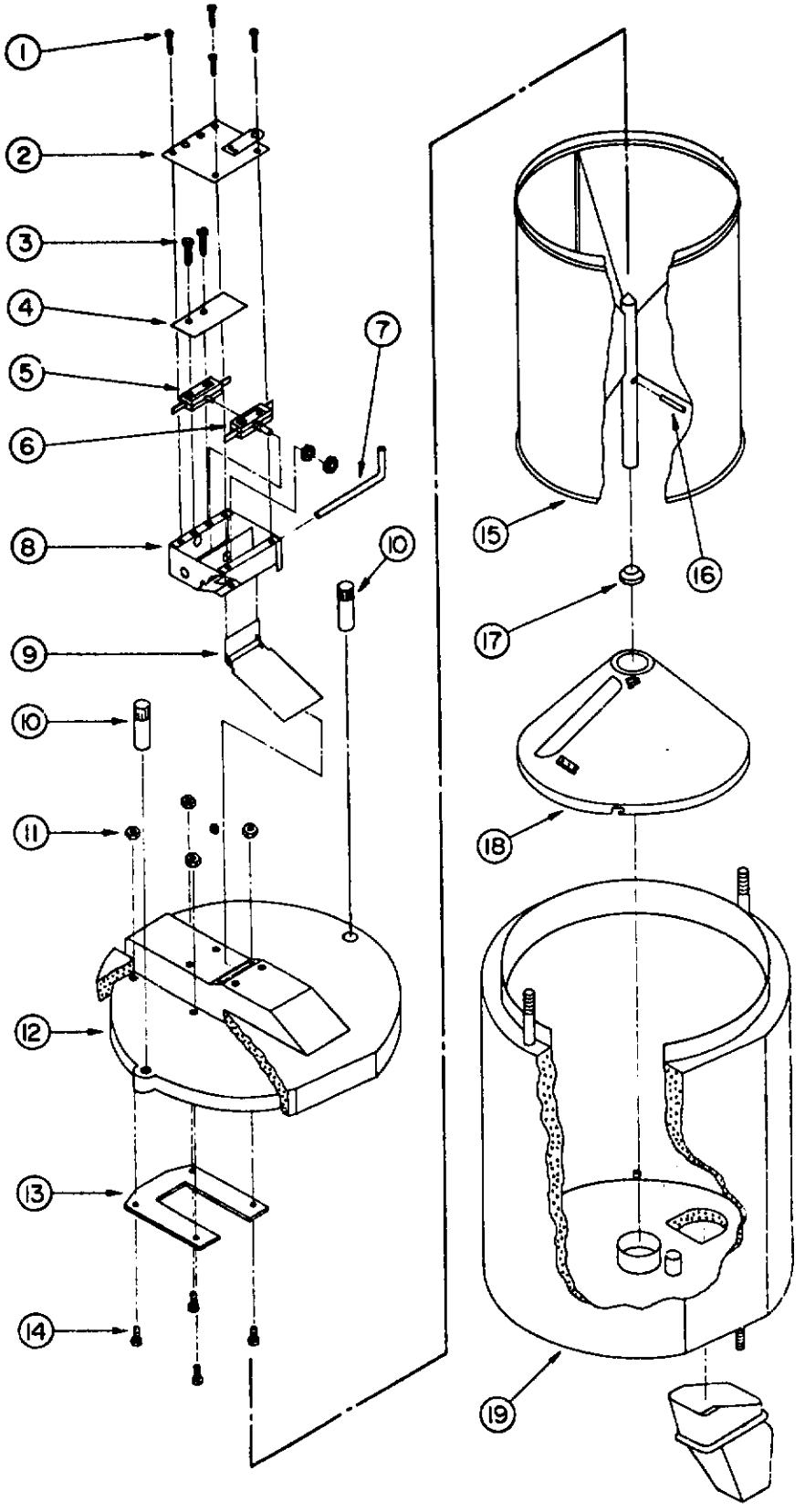

STORAGE BIN

ASSEMBLY

ITEM NO.	PART NO.	DESCRIPTION
1.	03-1404-07	Screw (4 req'd)
2.	A21996-000	Cover Fab. Assy.
3.	03-1403-08	Screw (2 req'd)
4.	03-0886-00	Twin Nut
5.	12-1664-00	Reset Switch
6.	12-1018-02	Switch
7.	A21982-000	Pin
8.	A21992-000	Bin Switch Box
9.	A21995-000	Actuator Arm Fab.
10.	A21983-000	Nut (2 req'd)
11.	03-1406-04	Nut (4 req'd)
12.	A20486-000	Top-Foam Assy.
13.	A21987-000	Bridge Plate
14.	03-0255-02	Screw, Thumb (4 req'd)
15.	A19349-000	Inner Bin Fab. Assy.
16.	A23223-000	Pin
17.	02-1976-00	Reteing Collar
18.	A19343-000	Inner Bin Bottom
19.	A21386-000	Bin Assy.

SUBJECT: INSTRUCTIONS—ICE BREAKER & BEARING ASSEMBLY

MODELS ACD1-SF1-SD1-FD1-FD4-FD5

The top bearing assembly (part number 02-1412-00) used in the freezer assemblies on the above listed models consists of two single row bearings which are pressed into the ice breaker, one on top of the other.

The bearings are supplied as a matched set, secured together by a holding strap.

These bearings are lifetime lubricated and have shields on the exterior side.

To prevent premature failures, the following instructions must be observed.

1. Bearing must be installed "Right Side Up." (Correct position is illustrated on the next page.)

2. Bearings must be pressed in by the outer race.

3. Apply 30 foot pounds, plus or minus 50 foot pounds, on a torque wrench when tightening the hex cap screw down on the stainless flat washer over the top of the bearing. Excessive pressure on the cap screw will shorten bearing life.

4. Use care in storing and handling bearings. Keep free of dirt, moisture, etc.

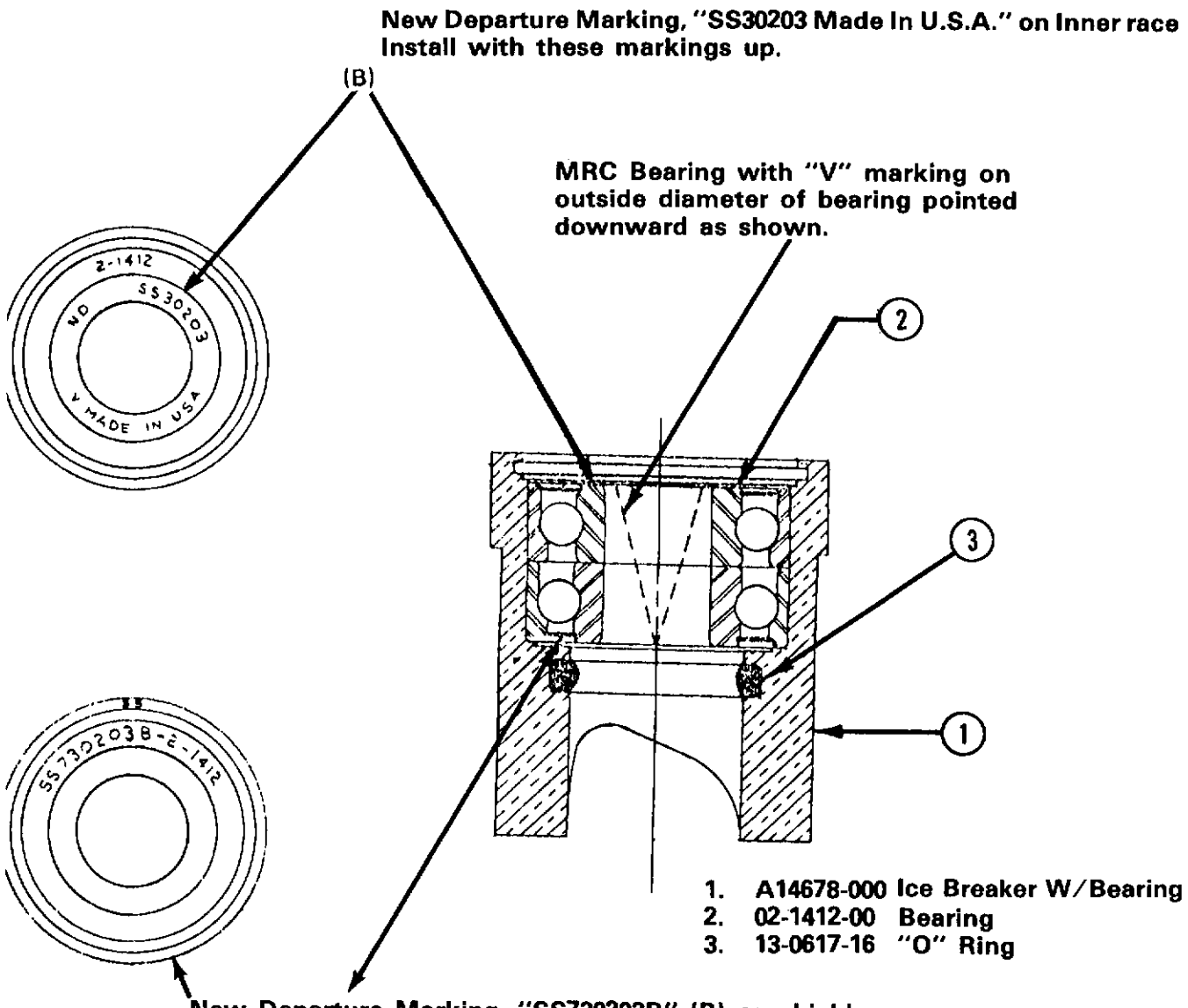

CAUTION:

A. Install mrc bearings with "V" markings pointing downward as shown.

B. Install NEW DEPARTURE BEARINGS with shields on exterior sides and with markings as shown.

CENTRIFUGAL SWITCH

SWITCH ADJUSTMENT

.03 minimum gap between switch lever and mechanism with centrifugal mechanism actuated (motor running). Switch circuit should be closed When motor is stopped and centrifugal mechanism deactivates, the switch circuit should be broken. There should be enough adjustment by loosening the switch mounting screws and tilting switch in direction required. If this fails, a small amount of bending can be done on the switch lever.

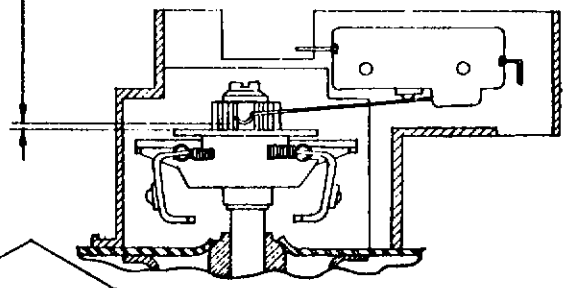

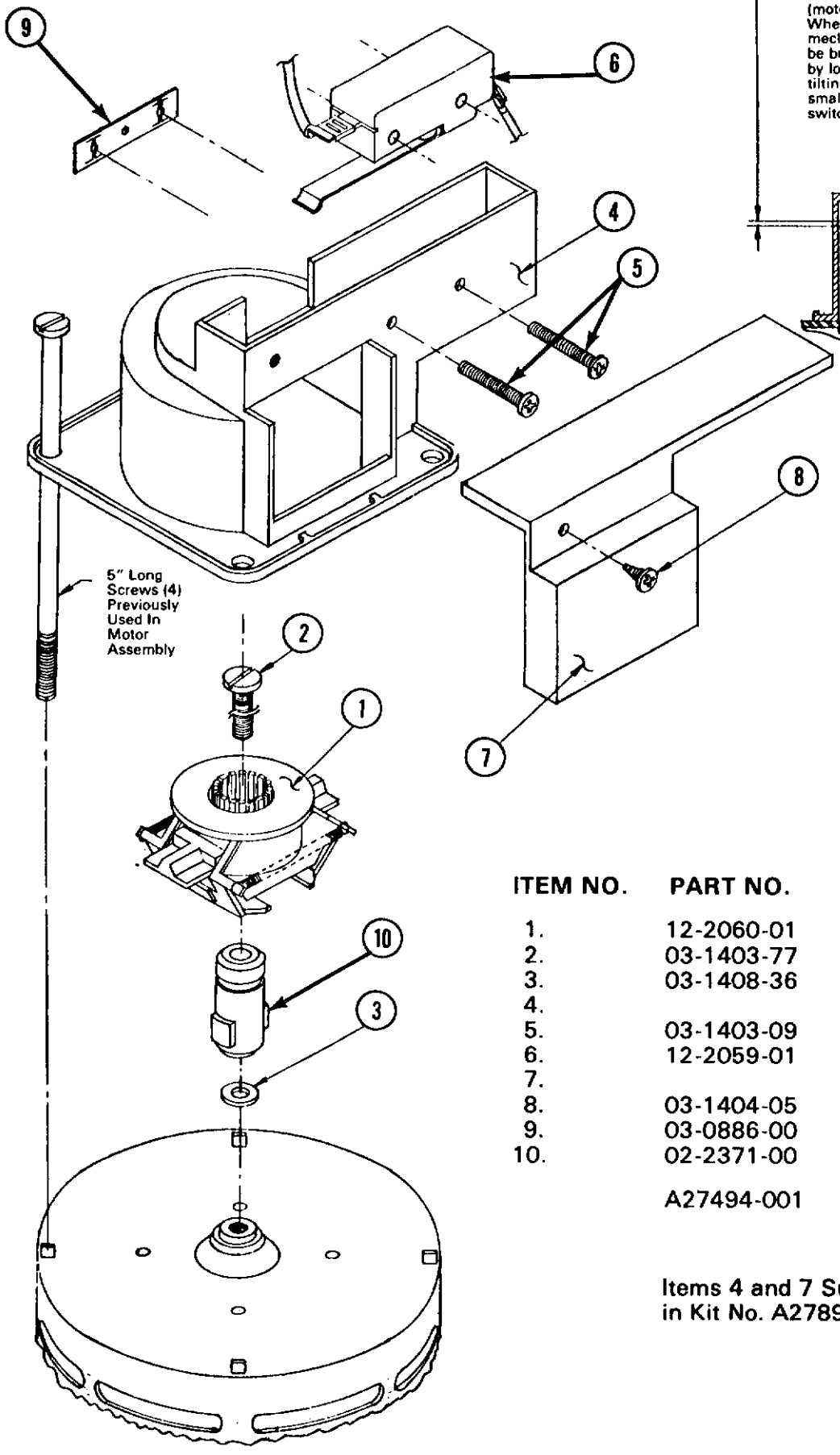

ITEM NO.	PART NO.	DESCRIPTION
1.	12-2060-01	Centrifugal Actuator
2.	03-1403-77	Screw
3.	03-1408-36	Washer
4.		Switch Mounting Case
5.	03-1403-09	Screw (2)
6.	12-2059-01	Switch
7.		Switch Case Cover
8.	03-1404-05	Screw
9.	03-0886-00	Speed Nut
10.	02-2371-00	Shaft Extension
	A27494-001	Centrifugal Switch Kit Complete w/17-1328-01 inst.

Items 4 and 7 Supplied in Kit No. A27895-001

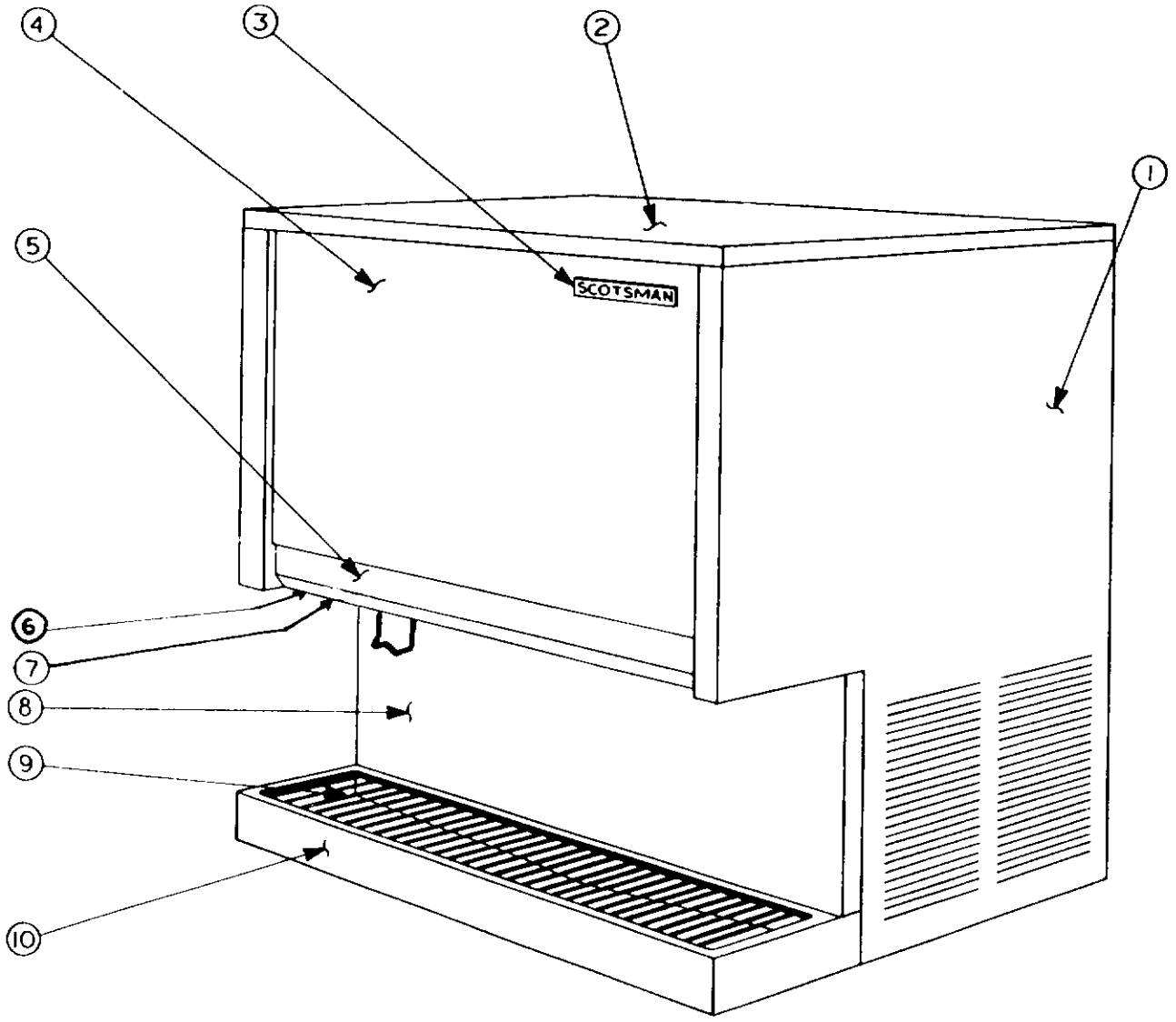

EXTERNAL CABINET PARTS

ITEM NO.	PART NO.	DESCRIPTION
1.	A19945-000	Cabinet Painted
	A19945-001	Cabinet SS
2.	A20192-000	Top Panel Painted
	A20192-001	Top Panel SS
3.	15-0156-00	Emblem Scotsman
	03-0271-00	Speed Nut
4.	A21273-000	Front Panel Wood Grain
	A21273-001	Front Panel SS
5.	A24282-001	Control Panel Painted
	A24282-002	Control Panel SS
6.	12-1557-00	Portion control
	02-1810-00	Knob Portion Control
7.	12-1377-01	Switch Water
8.	A19339-000	Splash Panel
	03-1404-09	Screws Panel
9.	02-1858-00	Grill
10.	A23212-000	Sink

PANEL FASTENERS

15-0411-00	Strike
03-1406-04	Nut
02-0836-00	Catch

INTERNAL PARTS VIEW

Air Cooled

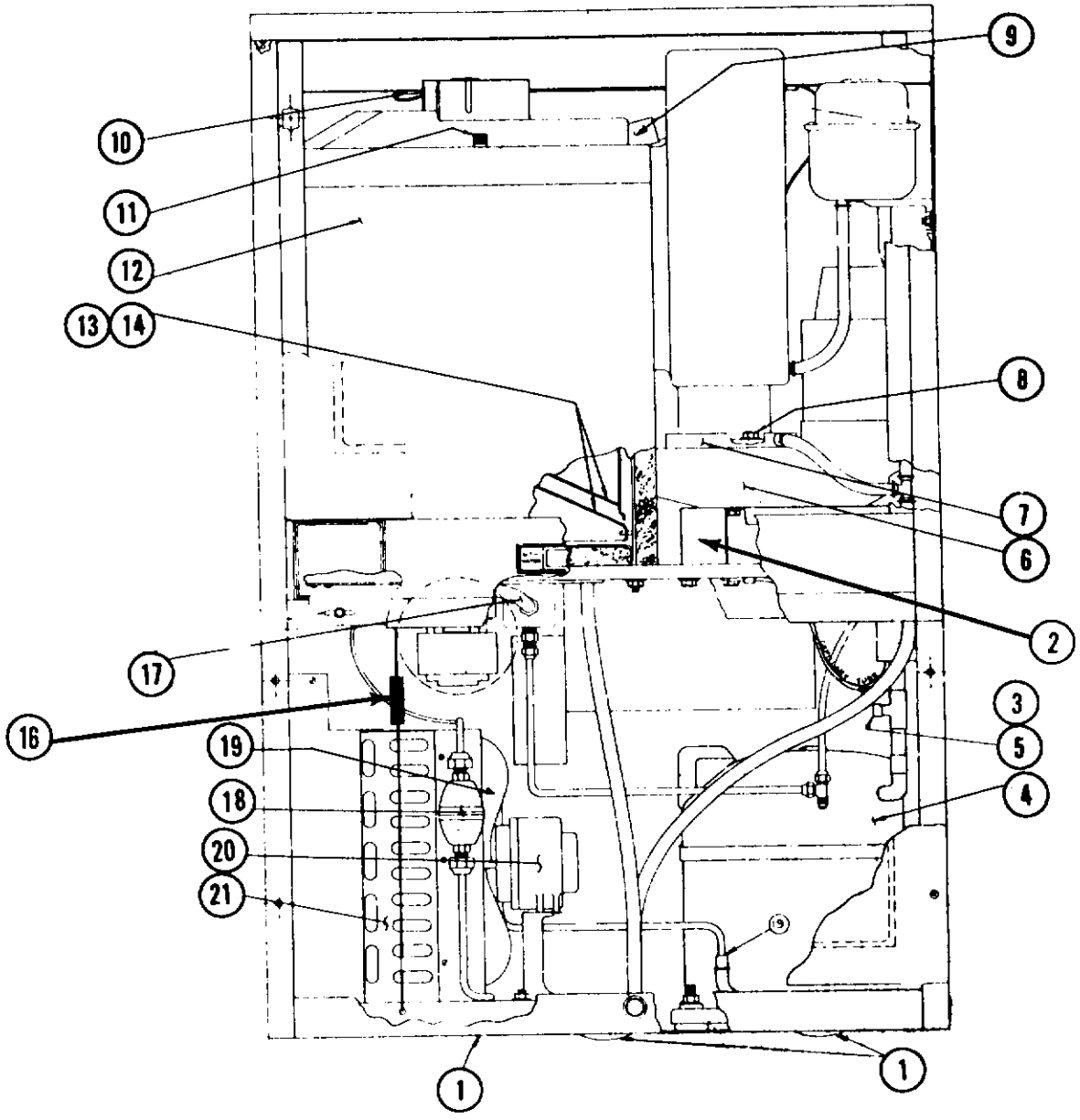

ITEM NO.	PART NO.	DESCRIPTION
1.	A22349-000	Plug button
2.	A20369-000	Gear Motor Support
3.	11-0396-01	Pressure Switch
4.	18-2200-01	Compressor
5.	16-0560-00	Valve Core
5.	16-0563-00	Brass Cap
6.	See Page 6	Gear Motor
7.	A18153-000	Drip an Ass'y
7.	13-0628-00	Gasket
8.	03-1420-04	Screw
8.	03-1417-12	Washer
9.	A16151-000	Spout Extension

ITEM NO.	PART NO.	DESCRIPTION
10.	03-1230-00	Tin Clip
11.	A21983-000	Nut
12.	See Page 9	Bin Ass'y.
13.	See Page 9	Inner Bin Fab. Ass'y.
14.	See Page 9	Inner Bin Bottom
16.	02-1827-00	Spring
17.	12-1434-04	Solenoid Ass'y.
18.	02-0831-00	Filter Drier
19.	18-0137-01	Fan Blade
20.	12-1576-01	Fan Motor
21.	18-1927-00	Condenser

WATER COOLED

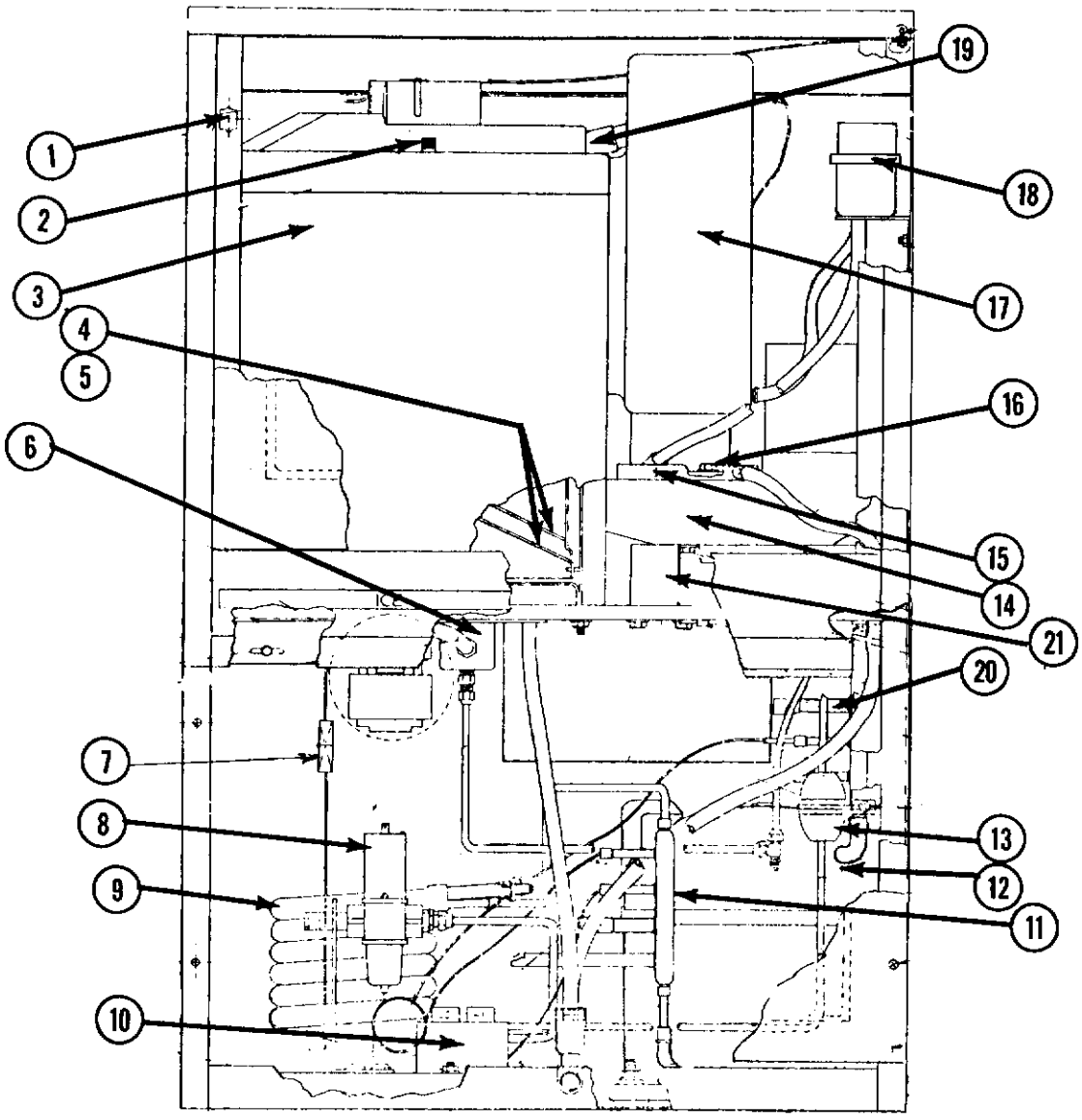

ITEM NO.	PART NO.	DESCRIPTION
1.	02-0836-00	Catch Cabinet
2.	A21983-000	Nut Bin Top
3.	See Page 9	Bin Assy.
4.	See Page 9	Inner Bin Bottom
5.	See Page 9	Inner Bin
6.	12-1434-04	Solenoid - Water
7.	02-1827-00	Spring
8.	11-0198-02	Water Regulating Valve
9.	18-3303-02	Condenser - Water Cooled
10.	11-0385-02	Pressure Control

ITEM NO.	PART NO.	DESCRIPTION
11.	16-0673-06	Process Header - High Side
12.	18-2200-01	Compressor
13.	02-0831-00	Drier
14.	See Page 6	Gear Motor
15.	A18753-000	Drip Pan
16.	03-1420-04	Hex Nut
17.	See Page 8	Freezer
18.	See Page 7	Reservoir
19.	A16151-000	Spout Extension
20.	16-0673-08	Process Header
21.	A20369-000	Gear Motor Support

BIN DRIVE AND DISPENSING PARTS

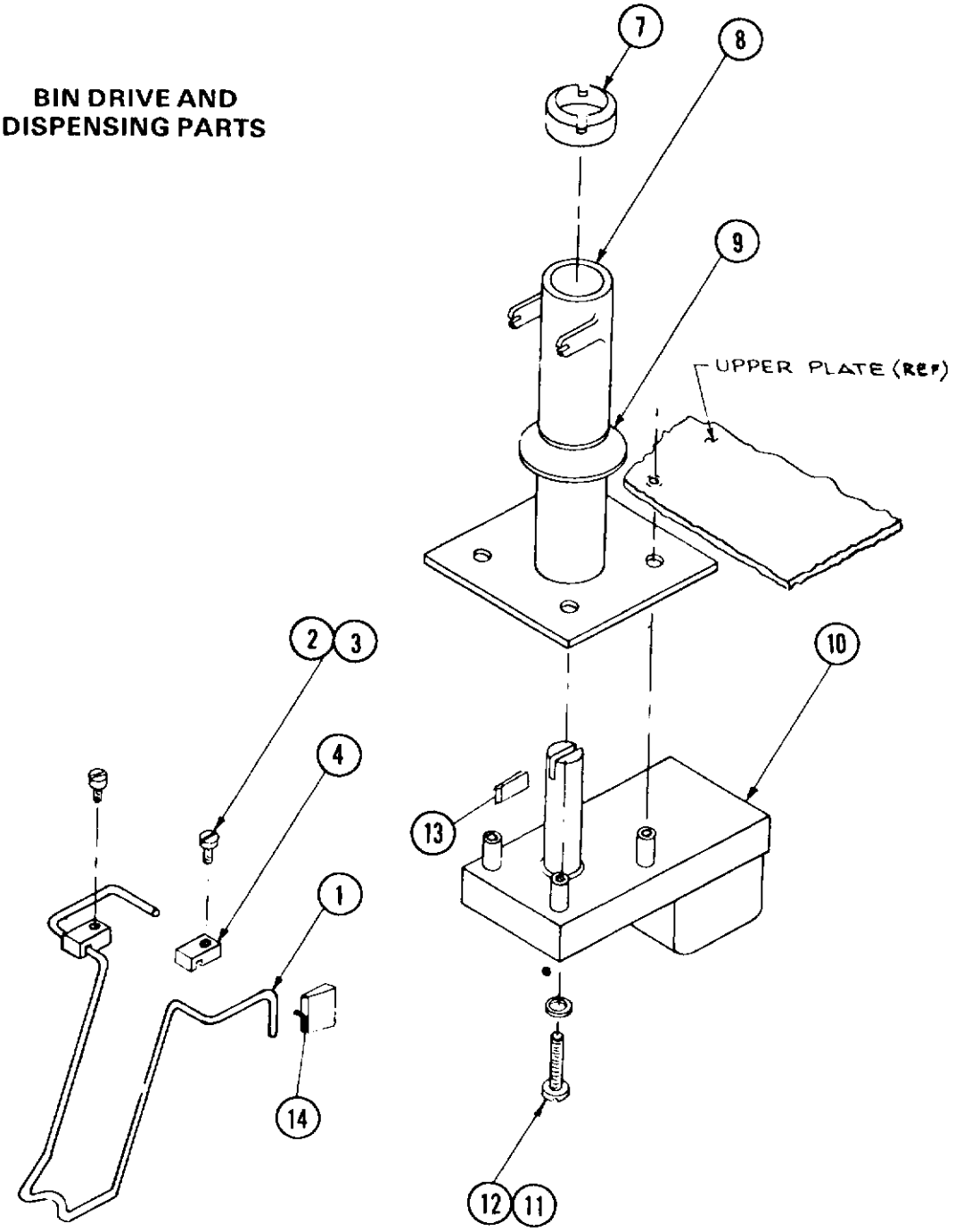

ITEM NO.	PART NO.	DESCRIPTION
1.	02-2076-01	Glass Filler
2.	03-1403-06	Screw
3.	03-1417-01	Lockwasher
4.	02-1969-00	Linkage Clamp
5.		
6.		
7.	02-1976-00	Retaining Collar
8.	02-1971-00	Bracket Gear Motor
9.	13-0747-00	Water Shed
10.	12-1561-01	Gear Motor
11.		Lockwasher
12.	02-1403-36	Screw
13.	A20472-000	Slot Pin
14.	12-1642-00	Vend Switch

BIN TOP PARTS

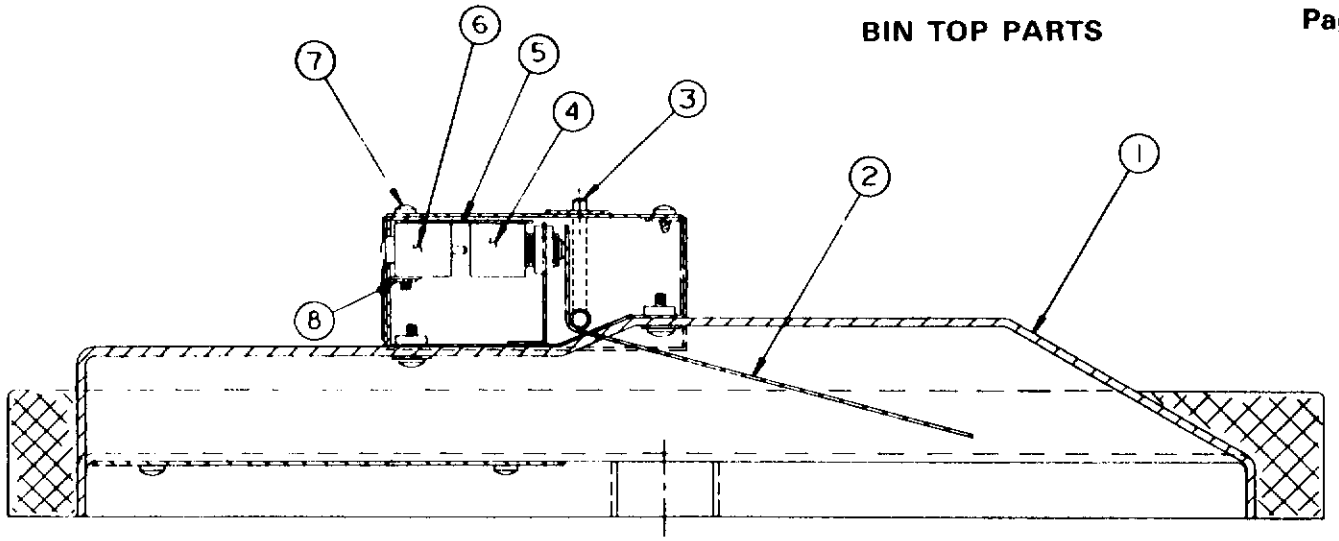

ITEM NO.	PART NO.	DESCRIPTION	ITEM NO.	PART NO.	DESCRIPTION
1.	A20486-000	Top Foam Assy.	5.		Electrical Insulation
2.	A21995-000	Actuator Arm	6.	12-1664-00	Reset Switch
3.	A21982-000	Pin	7.	03-1404-07	Screw
4.	12-1018-02	Bin Full Switch	8.	03-0886-00	Twin Nut

CONTROL BOX PARTS

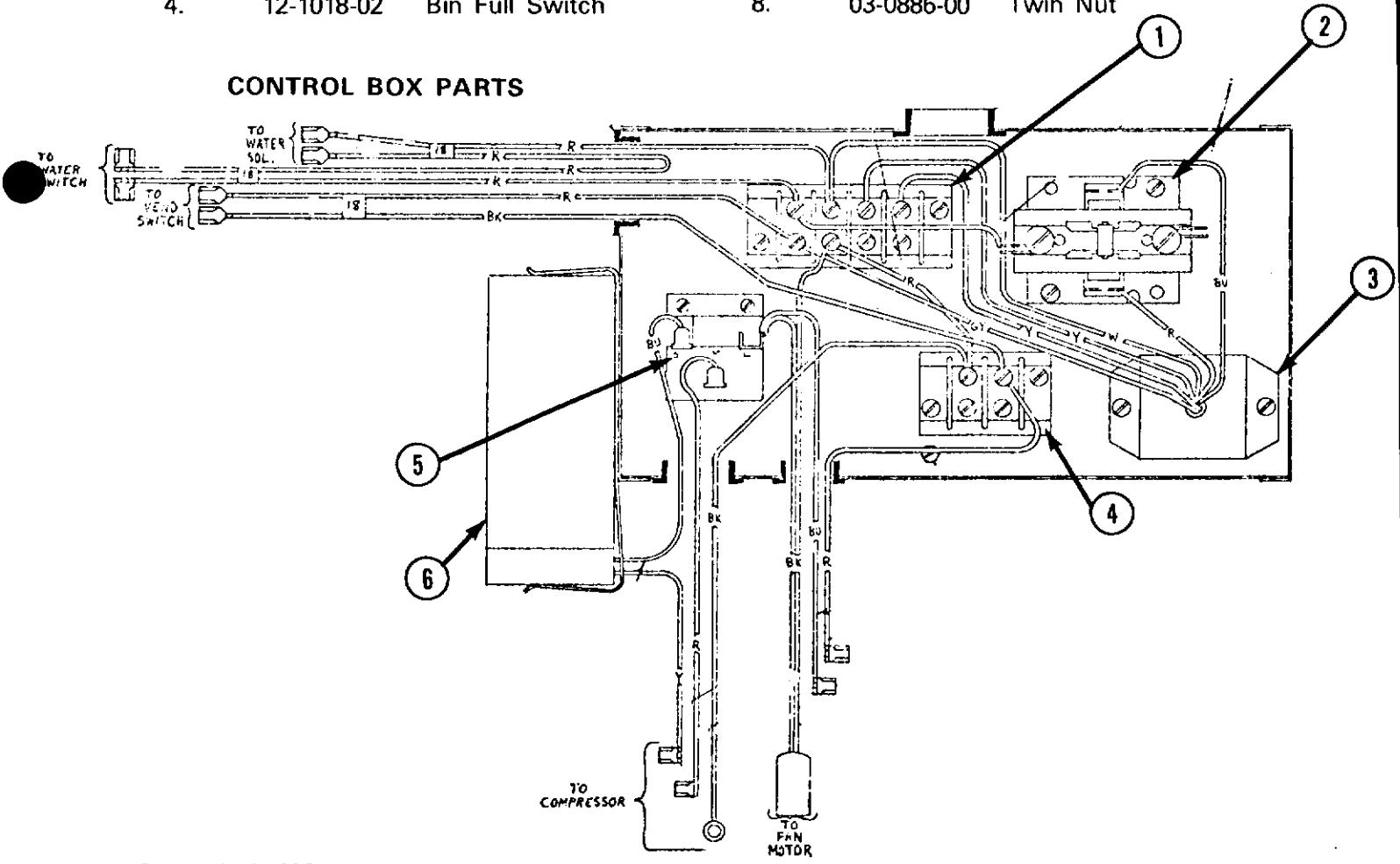

ITEM NO.	PART NO.	DESCRIPTION	ITEM NO.	PART NO.	DESCRIPTION
1.	12-0813-01	Terminal Board	4.	12-0813-04	Terminal Board
2.	12-2041-01	Contactor	5.	18-2200-26	Compressor Relay
3.	A26213-001	Time Delay Relay	6.	18-1901-33	Compressor Capacitor

A25995-021
GEAR MOTOR ASSEMBLY
1/10 H.P.
115/60/1

11.5 RPM at output shaft

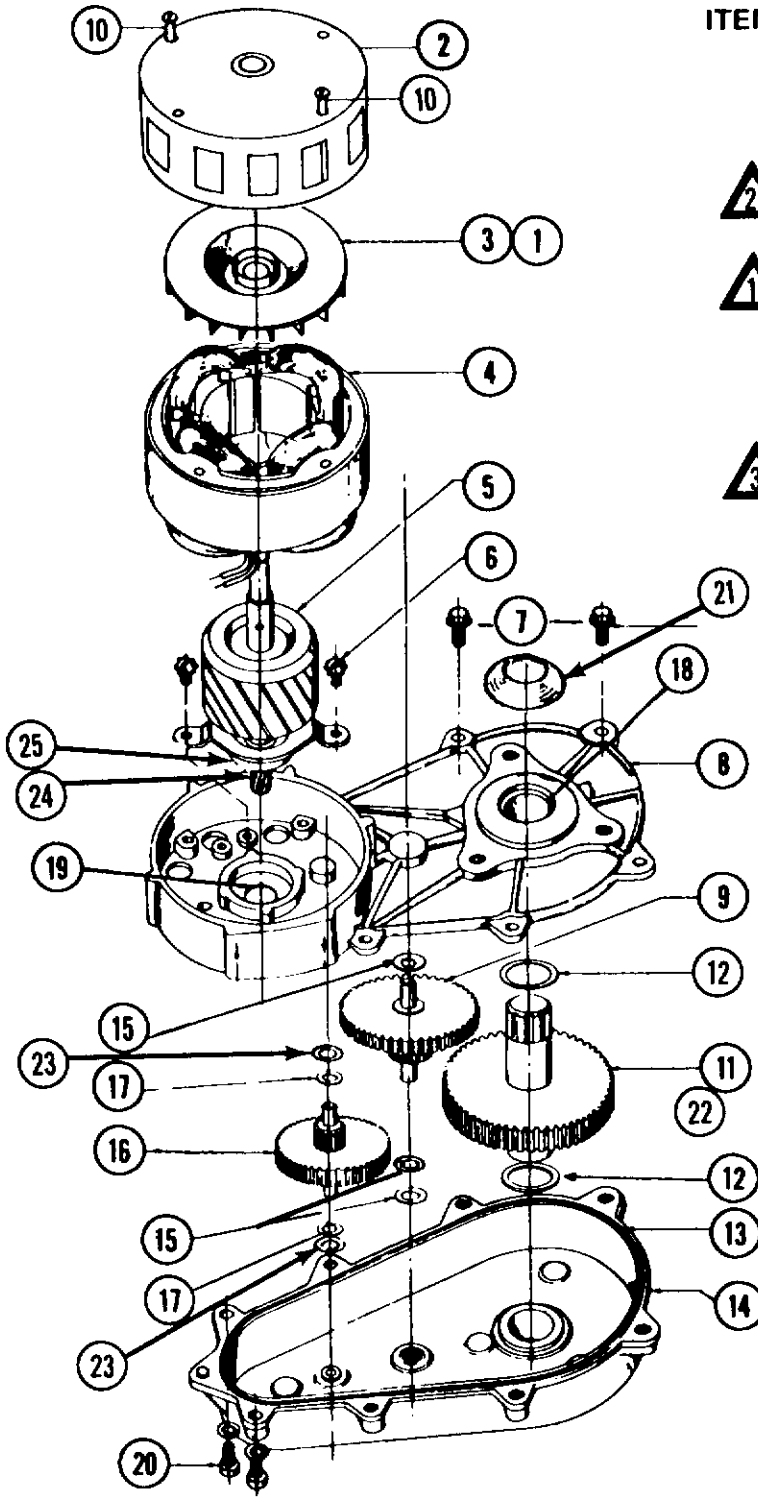

ITEM NO.	PART NO.	DESCRIPTION
1.	03-1246-00	Set Screw (2)
2.	A17047-000	Motor Housing
3.	A16915-000	Cooling Fan
4.	12-1400-01	Stator Assy.
2 5.	A26454-001	Rotor & 1st. Gear Kit
6.	03-1245-00	Screws (2)
7.	03-1251-00	Flange Screws (6)
1 8.	A16920-021	Gear Case Cover
9.	02-1521-00	Gear and Pinion
10.	03-1403-43	Motor Bolts (4)
11.	A26650-001	Gear and Output Shaft
12.	03-1408-21	Washer (2)
13.	02-1505-00	"O" Ring
3 14.	A24184-001	Gear Case Kit
15.	03-1408-06	Washer (3)
16.	02-2224-01	1st Gear and Pinion
17.	03-1408-19	Washer (2)
18.	02-1503-00	Grease Seal
19.	02-1504-00	Grease Seal
20.	03-1252-00	Screw (2)
21.	13-0709-01	Water Shed
22.	03-1475-01	Key
23.	03-1408-20	Washer (2)
24.	13-0617-04	Slinger Ring
25.	02-1501-00	Rotor Bearing

NOTE:

1. Cover comes with grease seals items 18 & 19.

2. Fiber gear (item 16 and rotor bearing (item 25) included in the rotor kit.

3. Includes items: 8, 13, 15, 17, 18, 19, 23 and gear lube.

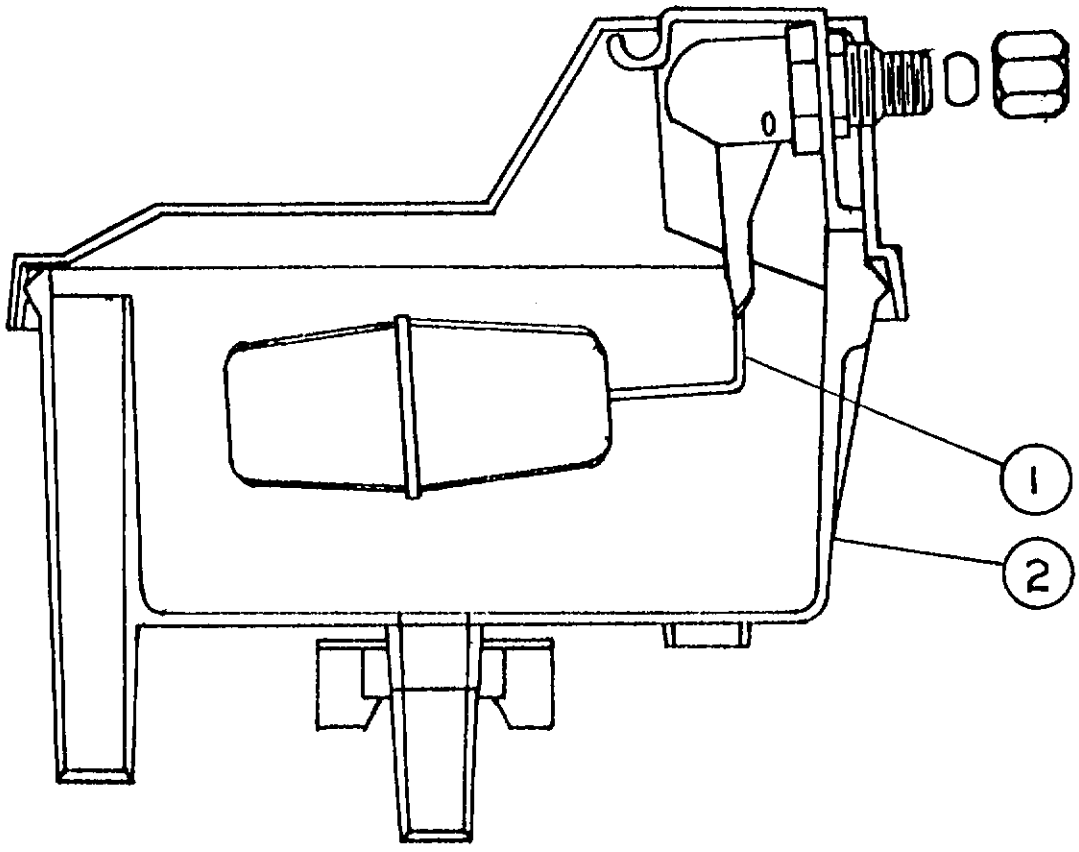

RESERVOIR ASSEMBLY

ITEM NO.	PART NO.	DESCRIPTION
1.	02-2217-02	Valve Assy.
2.	02-2217-01	Reservoir Complete

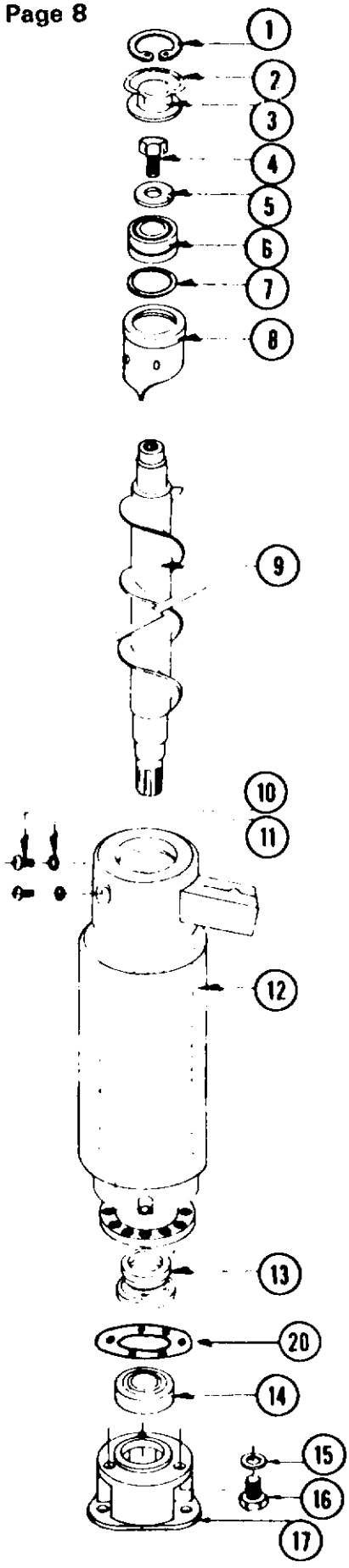

FREEZER ASSEMBLY

ITEM NO.	PART NO.	DESCRIPTION
1.	03-1558-03	Retainer Ring
2.	A08162-000	CapHook
3.	A07701-000	Cap
4.	03-0758-00	Screw
5.	A07699-000	Washer
6.	02-1412-00	top Bearing—Matches Set See Page 10 & 11
7.	13-0617-16	"O" Ring
8.	A14678-000	Breaker with Bearing
9.	02-1538-00	Auger
10.	03-1403-46	Screw
11.	03-1417-07	Washer
12.	A26752-020	Evaporator Shell includes Suction Line, No internal parts.
13.	A18945-000	Water Seal
14.	02-0417-00	Bearing, Lower
15.	03-1408-03	Washer, (3 req'd)
16.	03-1405-42	Cap Screw (3 req'd)
17.	08-0595-01	Adapter-Amaloy
18.	15-0575-01	Spline Drive Coupling
19.	13-0709-01	Shaft Drip Shiled—Rubber
20.	03-1505-00	Gasket

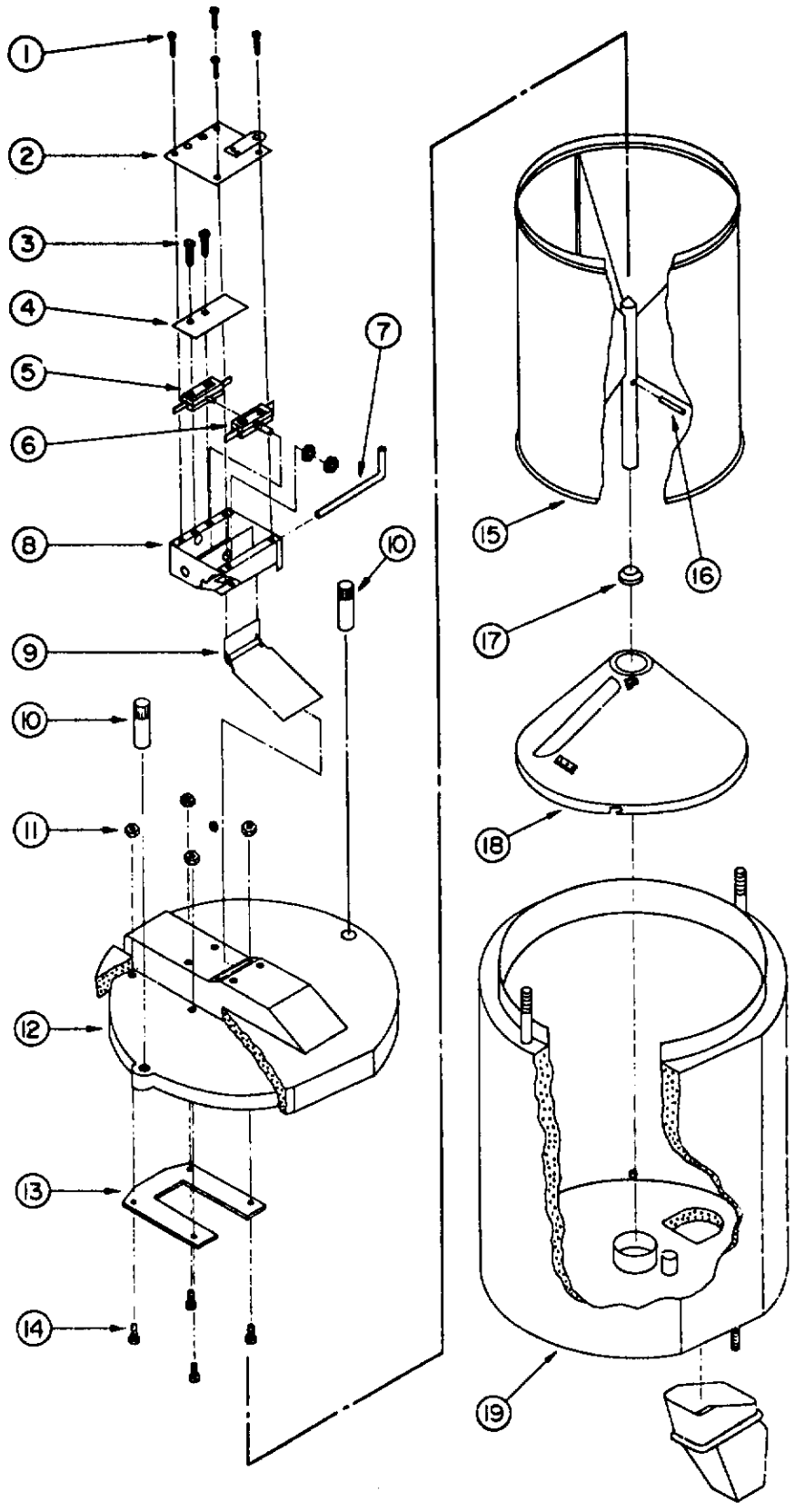

STORAGE BIN

ASSEMBLY

ITEM NO.	PART NO.	DESCRIPTION
1.	03-1404-07	Screw (4 req'd)
2.	A21996-000	Cover Fab. Assy.
3.	03-1403-08	Screw (2 req'd)
4.	03-0886-00	Twin Nut
5.	12-1664-00	Reset Switch
6.	12-1018-02	Switch
7.	A21982-000	Pin
8.	A21992-000	Bin Switch Box
9.	A21995-000	Actuator Arm Fab.
10.	A21983-000	Nut (2 req'd)
11.	03-1406-04	Nut (4 req'd)
12.	A20486-000	Top-Foam Assy.
13.	A21987-000	Bridge Plate
14.	03-0255-02	Screw, Thumb (4 req'd)
15.	A19349-000	Inner Bin Fab. Assy.
16.	A23223-000	Pin
17.	02-1976-00	Retaining Collar
18.	A19343-000	Inner Bin Bottom
19.	A21386-000	Bin Assy.

SUBJECT: INSTRUCTIONS—ICE BREAKER & BEARING ASSEMBLY

MODELS ACD1-SF1-SD1-FD1-FD4-FD5

The top bearing assembly (part number 02-1412-00) used in the freezer assemblies on the above listed models consists of two single row bearings which are pressed into the ice breaker, one on top of the other.

The bearings are supplied as a matched set, secured together by a holding strap.

These bearings are lifetime lubricated and have shields on the exterior side.

To prevent premature failures, the following instructions must be observed.

1. Bearing must be installed "Right Side Up." (Correct position is illustrated on the next page.)

2. Bearings must be pressed in by the outer race.

3. Apply 30 foot pounds, plus or minus 5 foot pounds, on a torque wrench when tightening the hex cap screw down on the stainless flat washer over the top of the bearing. Excessive pressure on the cap screw will shorten bearing life.

4. Use care in storing and handling bearings. Keep free of dirt, moisture, etc.

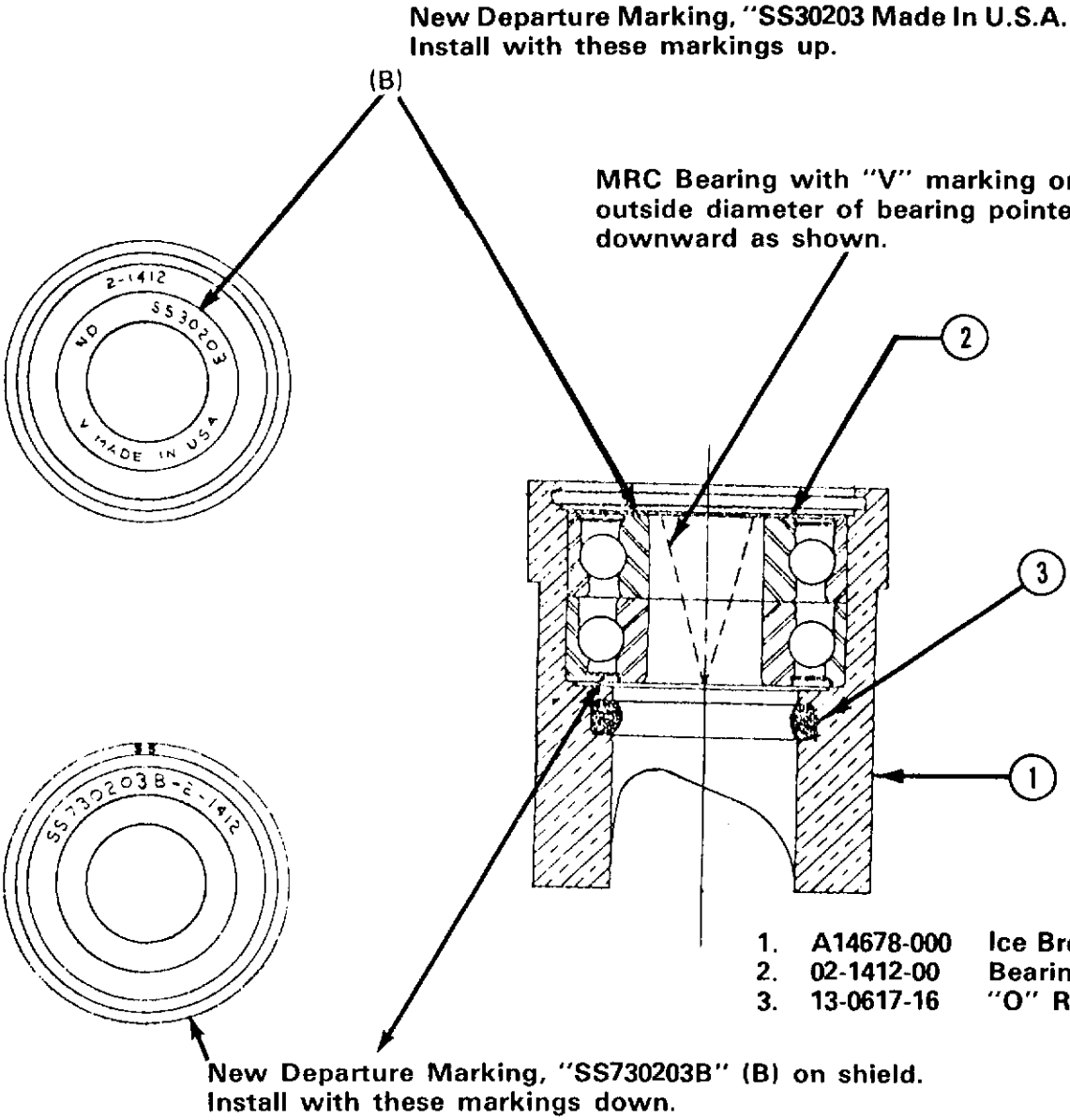

CAUTION:

A. Install mrc bearings with "V" markings pointing downward as shown.

B. Install NEW DEPARTURE BEARINGS with shields on exterior sides and with markings as shown.

CENTRIFUGAL SWITCH

SWITCH ADJUSTMENT

.03 minimum gap between switch lever and mechanism with centrifugal mechanism actuated (motor running). Switch circuit should be closed When motor is stopped and centrifugal mechanism deactivates, the switch circuit should be broken. There should be enough adjustment by loosening the switch mounting screws and tilting switch in direction required. If this fails, a small amount of bending can be done on the switch lever.

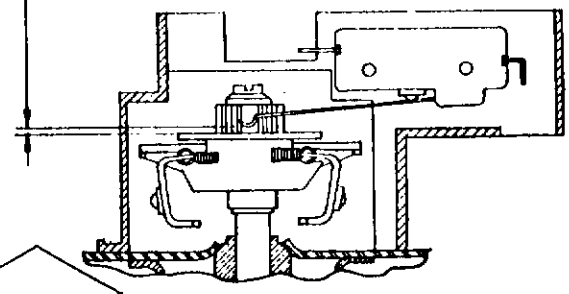

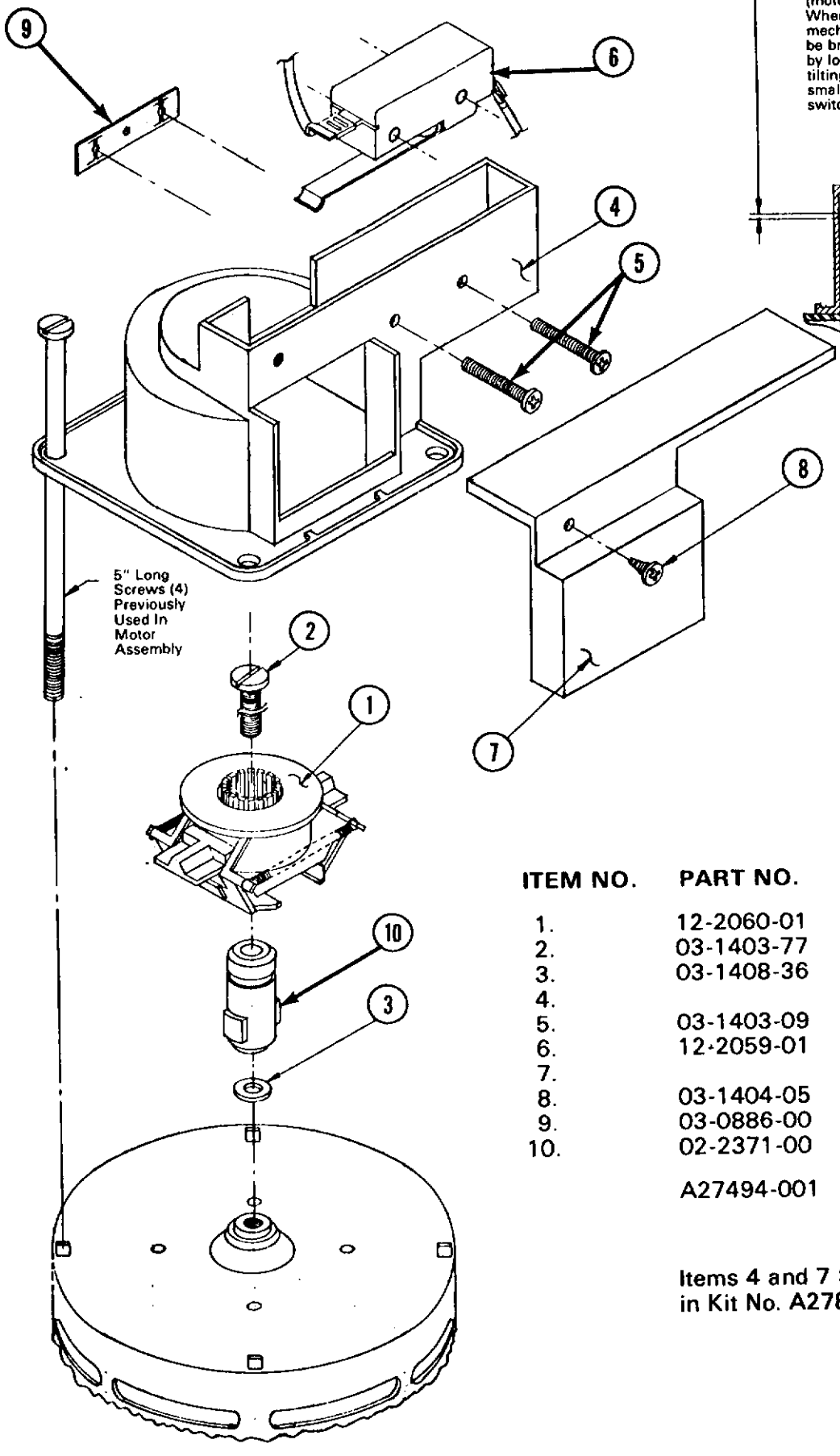

ITEM NO.	PART NO.	DESCRIPTION
1.	12-2060-01	Centrifugal Actuator
2.	03-1403-77	Screw
3.	03-1408-36	Washer
4.		Switch Mounting Case
5.	03-1403-09	Screw (2)
6.	12-2059-01	Switch
7.		Switch Case Cover
8.	03-1404-05	Screw
9.	03-0886-00	Speed Nut
10.	02-2371-00	Shaft Extension
	A27494-001	Centrifugal Switch Kit Complete w/17-1328-01 inst.

Items 4 and 7 Supplied in Kit No. A27895-001

EXTERNAL CABINET PARTS

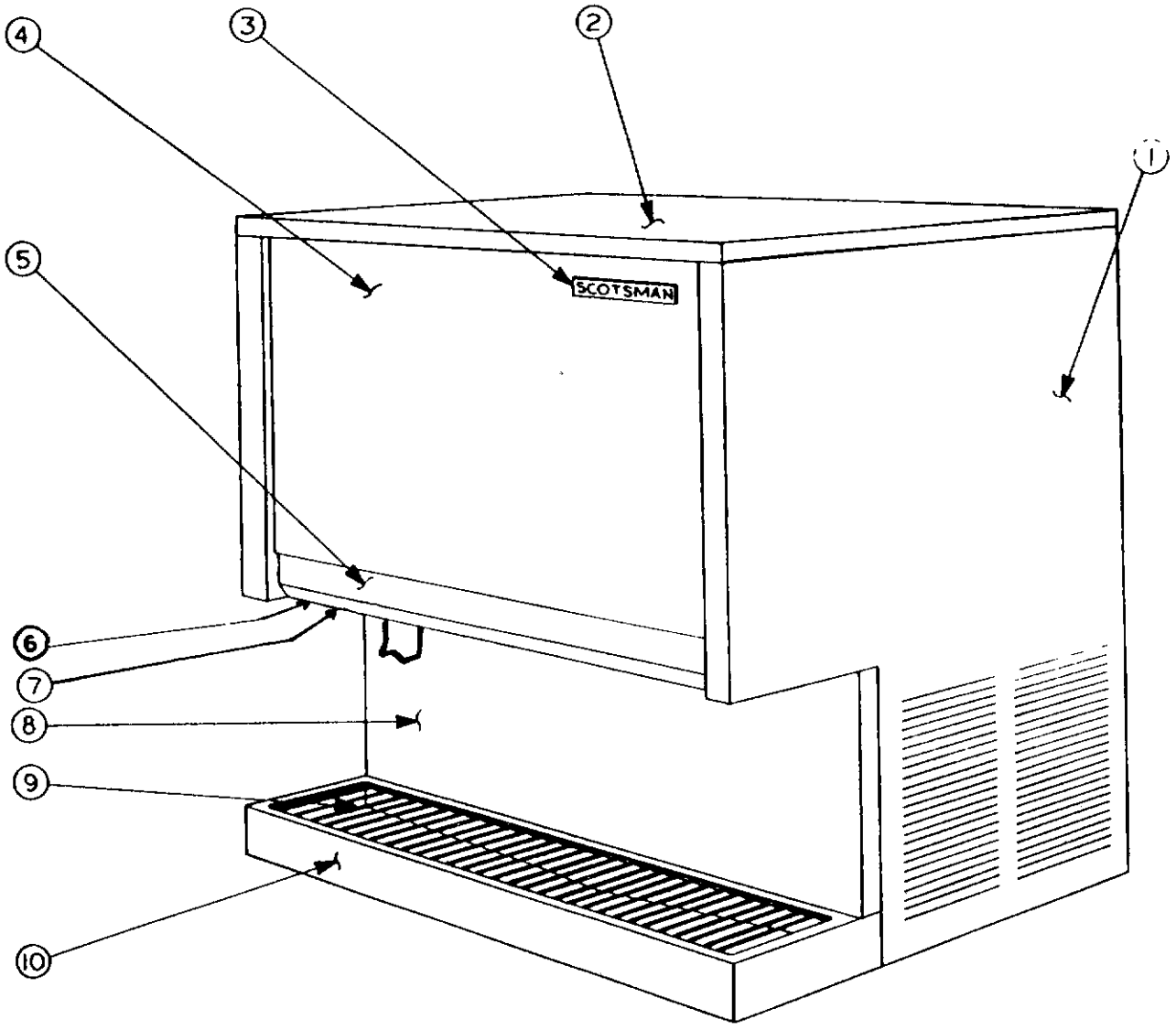

ITEM NO.	PART NO.	DESCRIPTION
1.	A23431-001	Cabinet Painted
	A23431-002	Cabinet SS
2.	A20192-000	Top Panel Painted
	A20192-001	Top Panel SS
3.	15-0156-00	Emblem Scotsman
	03-0271-00	Speed Nut
4.	A23443-001	Front Panel Wood Grain
	A23443-002	Front Panel SS
5.	A24282-001	Control Panel Painted
	A24282-002	Control Panel SS
6.	15-0561-00	Decal Portion Control
	12-1557-00	Portion Control
	02-1810-00	Knob Portion Control
7.	12-1377-01	Switch Water
8.	A19339-000	Splash Panel
	03-1404-09	Screws Panel
9.	02-1858-00	Grill
10.	A23212-000	Sink

PANEL FASTENERS

15-0411-00	Strike
03-1406-04	Nut
02-0836-00	Catch

AIR COOLED

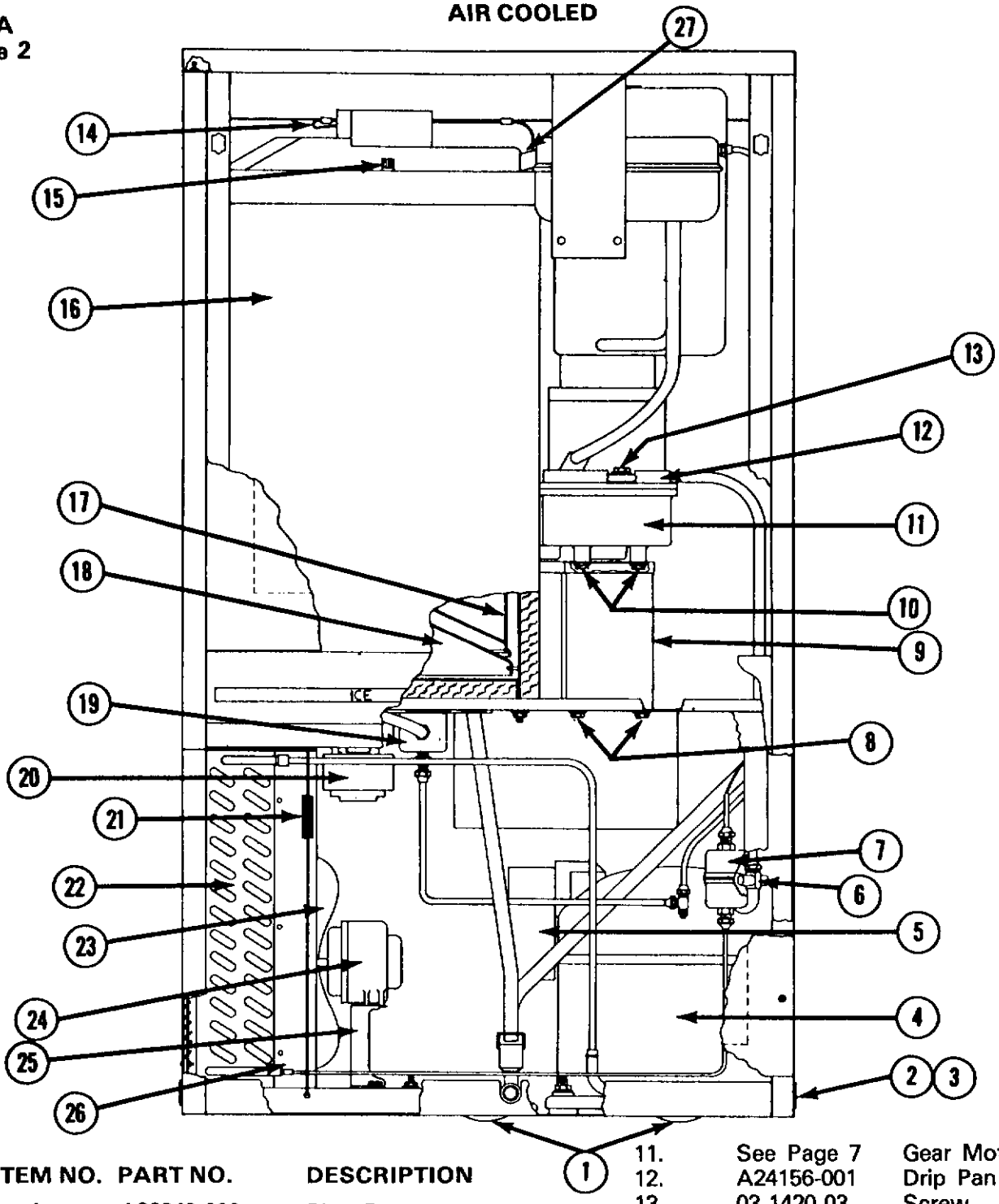

ITEM NO.	PART NO.	DESCRIPTION
1.	A22349-000	Plug Button
2.		
3.		
4.	18-3500-01	Compressor
5.	18-2200-25	Overload
	18-2200-26	Relay
	18-1901-33	Capacitor
6.	18-2201-30	Rotor-Lock Valve
	18-2300-29	Valve Seal
7.	02-0544-00	Drier
8.	03-1405-03	Screw
	03-1410-03	Lock Washer
9.	A23497-001	Motor Support
10.	03-1405-17	Screw
	03-1410-04	Lock Washer
11.	See Page 7	Gear Motor
12.	A24156-001	Drip Pan
13.	03-1420-03	Screw
	03-1408-03	Washer
14.	03-1230-00	Tin Clip
15.	A21983-000	Nut
16.	See Page 9	Bin Assembly
17.	See Page 9	Inner Bin
18.	See Page 9	Inner Bin Bottom
19.	12-1434-04	Solenoid Valve
20.	12-1561-01	Bin Drive Motor
21.	02-1827-00	Spring
22.	18-3304-01	Condenser
23.	18-0137-02	Fan Blade
24.	12-1576-01	Fan Motor
25.	18-0422-00	Motor Bracket
26.	A24082-001	Condenser Shroud
27.	A24876-001	Spout Extension

WATER COOLED

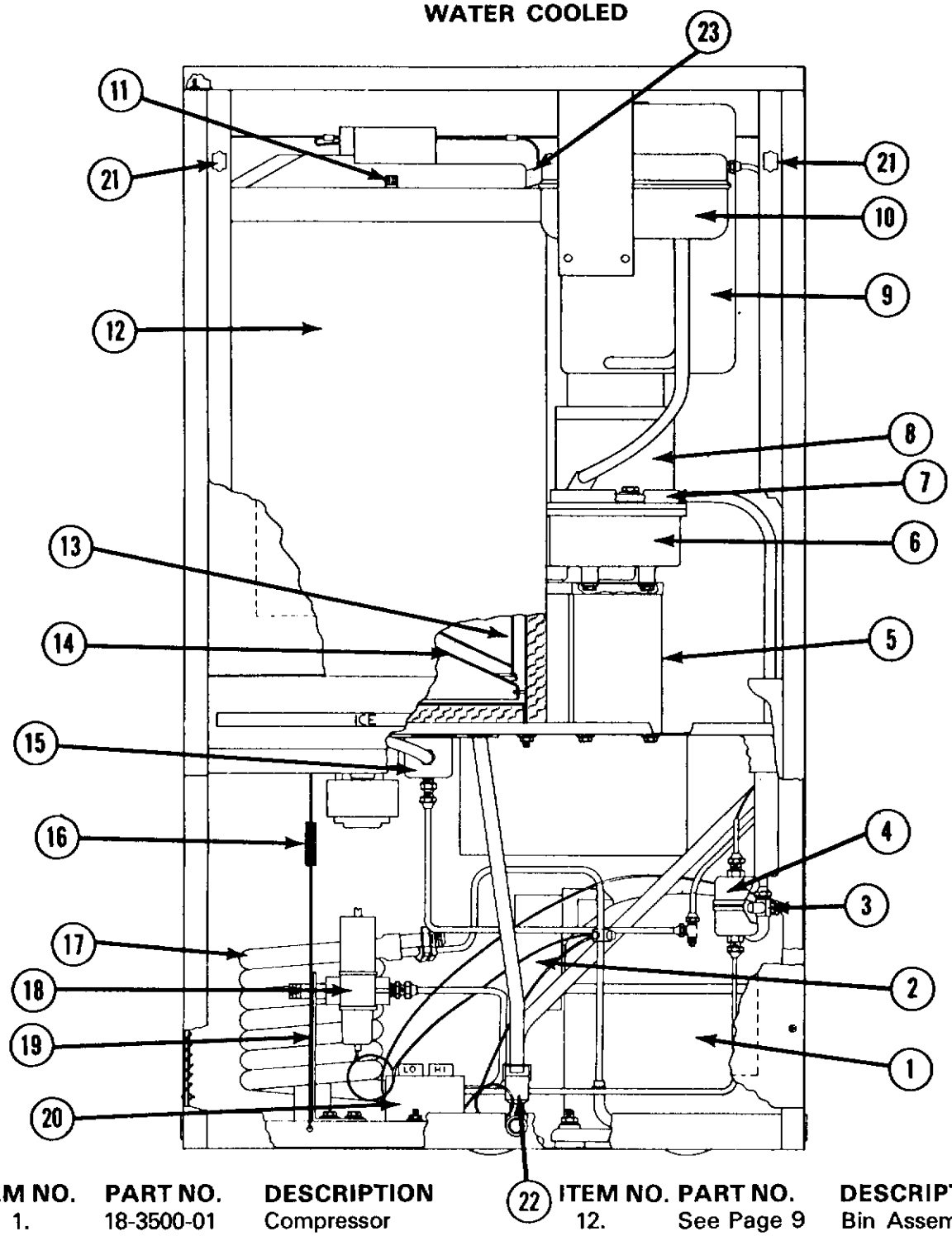

ITEM NO.	PART NO.	DESCRIPTION
1.	18-3500-01	Compressor
2.	18-2200-25	Overload
	18-2200-26	Relay
	18-1901-33	Capacitor
3.	18-2201-30	Roto-Lock Valve
	18-2300-29	Valve Seal
4.	02-0544-00	Drier
5.	A23497-001	Motor Support
6.	See Page 7	Gear Motor 115/60/1
7.	A24156-001	Drip Pan
8.	02-1629-00	Base Adapter
9.	See Page 8	Freezer Assembly
10.	See Page 6	Reservoir
11.	A21983-000	Nut
12.	See Page 9	Bin Assembly
13.	See Page 9	Inner Bin
14.	See Page 9	Inner Bin Bottom
15.	12-1646-01	Solenoid Valve
16.	02-1827-00	Spring
17.	18-3305-02	Condenser W.C.
18.	11-0198-00	WaterRegulator
19.	A20200-000	Control Box Cover
20.	11-0385-01	Hi-Lo Pressure Control
21.	02-0836-00	Catch
22.	A21532-000	Drain Tee
23.	A24876-001	Spout Extension

BIN DRIVE AND DISPENSING PARTS

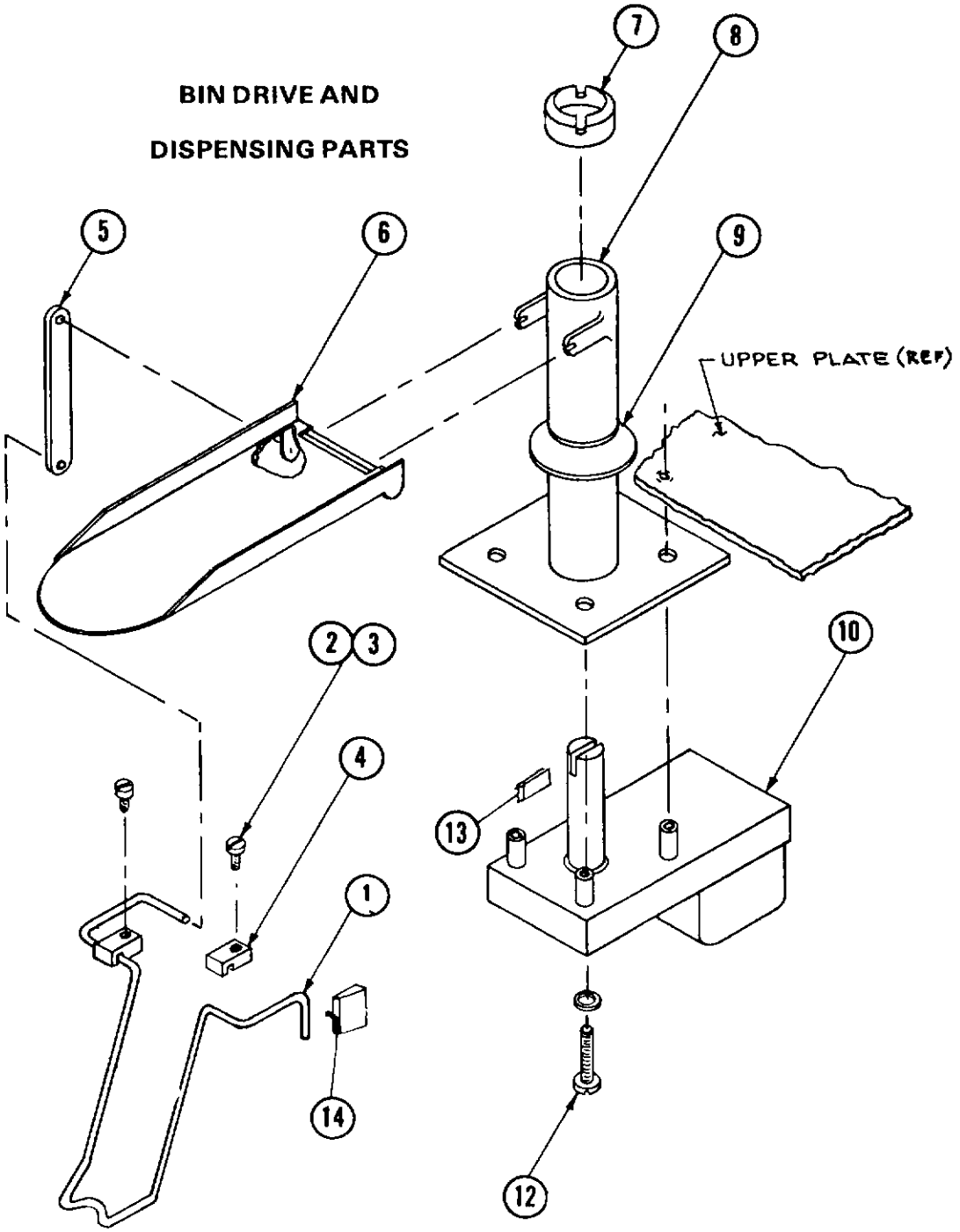

ITEM NO.	PART NO.	DESCRIPTION
1.	02-2076-01	Glass Filler
2.	03-1403-06	Screw
3.	03-1417-01	Lockwasher
4.	02-1969-00	Linkage Clamp
5.	02-1967-00	Linkage Connector
6.	02-1970-00	Ice Chute
7.	02-1976-00	Retaining Collar
8.	02-1971-00	Bracket Gear Motor
9.	13-0747-00	Water Shed
10.	12-1561-01	Gear Motor
11.		
12.	03-1403-36	Screw
13.	A20472-000	Slot Pin
14.	12-1642-00	Vend Switch

BIN TOP PARTS

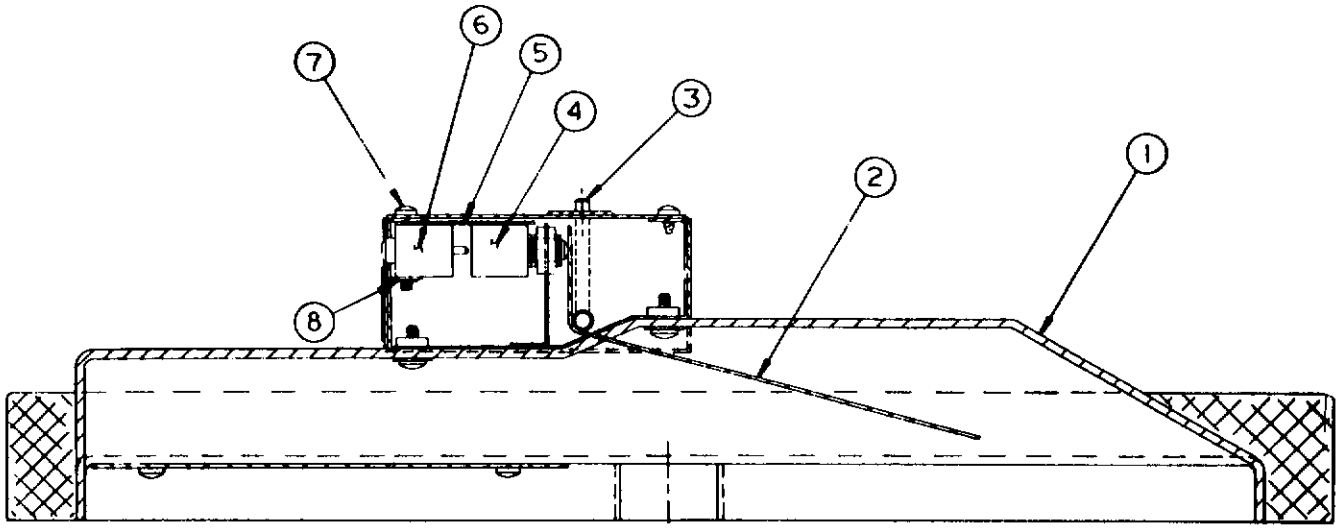

ITEM NO.	PART NO.	DESCRIPTION
1.	A23493-001	Top Foam Assy.
2.	A21995-000	Actuator Arm
3.	A21982-000	Pin
4.	12-1018-02	Bin Full Switch
5.		
6.	12-1664-00	Reset Switch
7.	03-1404-07	Screw
8.	03-0886-00	Twin Nut

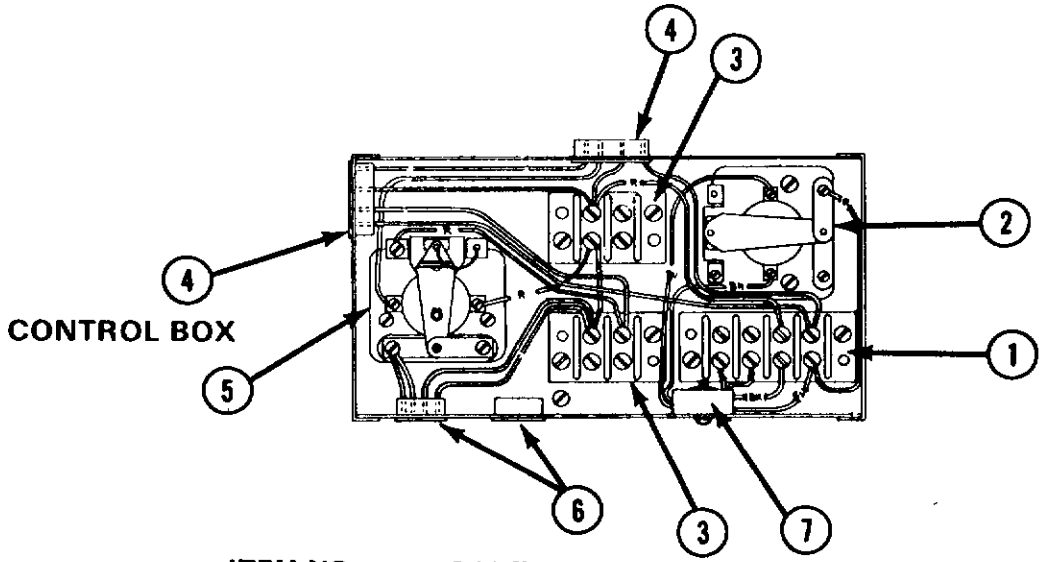

ITEM NO.	PART NO.	DESCRIPTION
⚠1.	12-0813-01	Terminal Board
⚠2.	12-1558-00	Relay
3.	12-0813-04	Terminal Board
4.	12-1213-12	Snap Bushing
5.	12-0419-00	Relay
⚠6.	12-1213-10	Snap Bushing
⚠7.	12-1559-00	Timing Module

⚠1 In mid 1975 items 2 & 7 were changed are not interchangeable w/prior units. The new P.N. are #2 12-0419-00 and #7 A26213-001. Ref. Scotsman Bulletin PS-9-75.

RESERVOIR ASSEMBLY

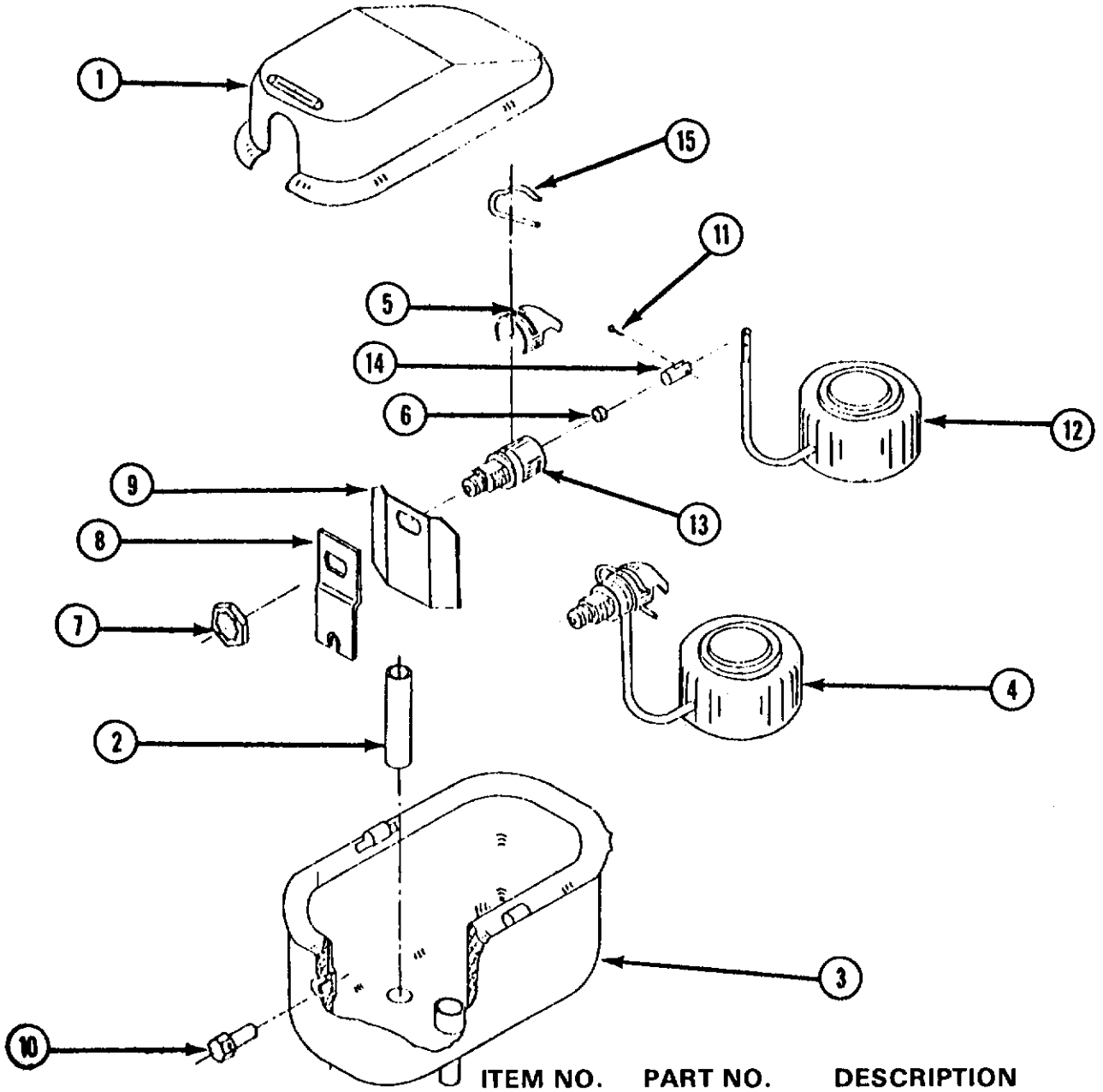

ITEM NO.	PART NO.	DESCRIPTION
1.	A16012-000	Reservoir Cover
2.	S06715-000	Stand Pipe
3.	A23532-001	Reservoir Complete
	A08351-000	Less Item No: 1 & 2
4.	S08138-000	Valve Complete Includes Items 5, 6, 11, 12, 13, 14 & 15
5.	02-1320-00	Water Deflector
6.	S06947-000	Valve Seat
7.	03-1394-00	Pal Nut
8.	A12869-000	Bracket
9.	A18418-001	Water Deflector
10.	A08055-000	Bracket Nut
11.	03-1001-00	Rivet
*12.		Float
*13.		Inlet Valve
*14.		Valve Seat Holder
15.	02-1259-00	Valve Pin

NOTE: Use of this reservoir was discontinued about mid 1975. Current units use the reservoir P.N. 02-2217-01

***Use Item #4**

GEAR MOTOR ASSEMBLY

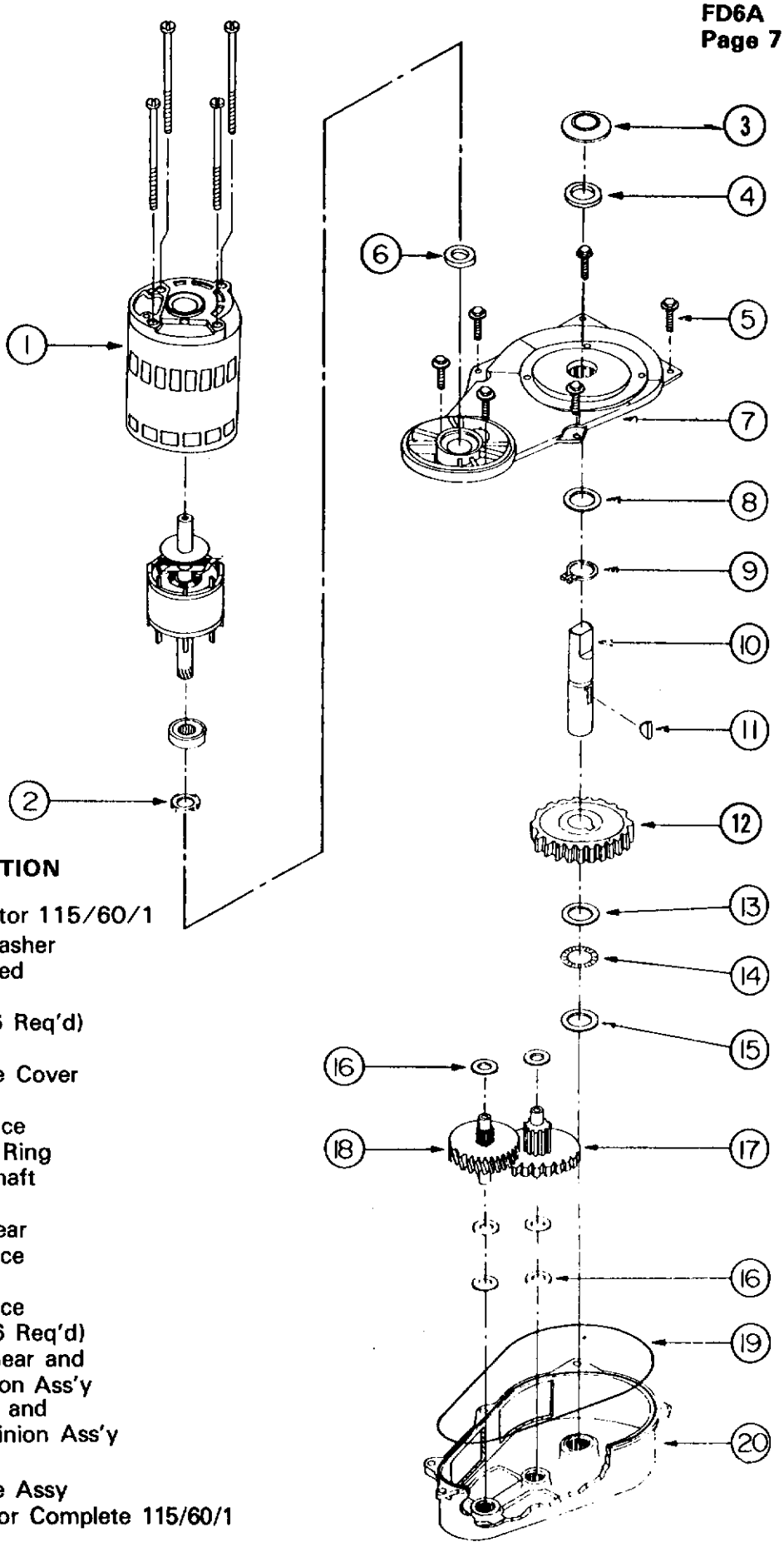

ITEM	PART NO.	DESCRIPTION
1.	A26455-001	Drive Motor 115/60/1
2.	03-1426-00	Spring Washer
3.	13-0709-02	Water Shed
4.	02-1607-00	Oil Seal
5.	03-1251-01	Screws (6 Req'd)
6.	02-1606-00	Oil Seal
7.	A22200-000	Gear Case Cover Assembly
8.	02-1681-00	Thrust Race
9.	03-1363-00	Retaining Ring
10.	02-1652-00	Output Shaft
11.	03-1364-00	Key
12.	02-1653-00	Output Gear
13.	02-1681-00	Thrust Race
14.	02-1680-00	Bearing
15.	02-1679-00	Thrust Race
16.	03-1408-24	Washer (6 Req'd)
17.	02-1604-00	Second Gear and Third Pinion Ass'y
18.	02-1603-00	First Gear and Second Pinion Ass'y
19.	A26103-001	"O" Ring
20.	A22199-000	Gear Case Assy
	A22750-021	Gear Motor Complete 115/60/1

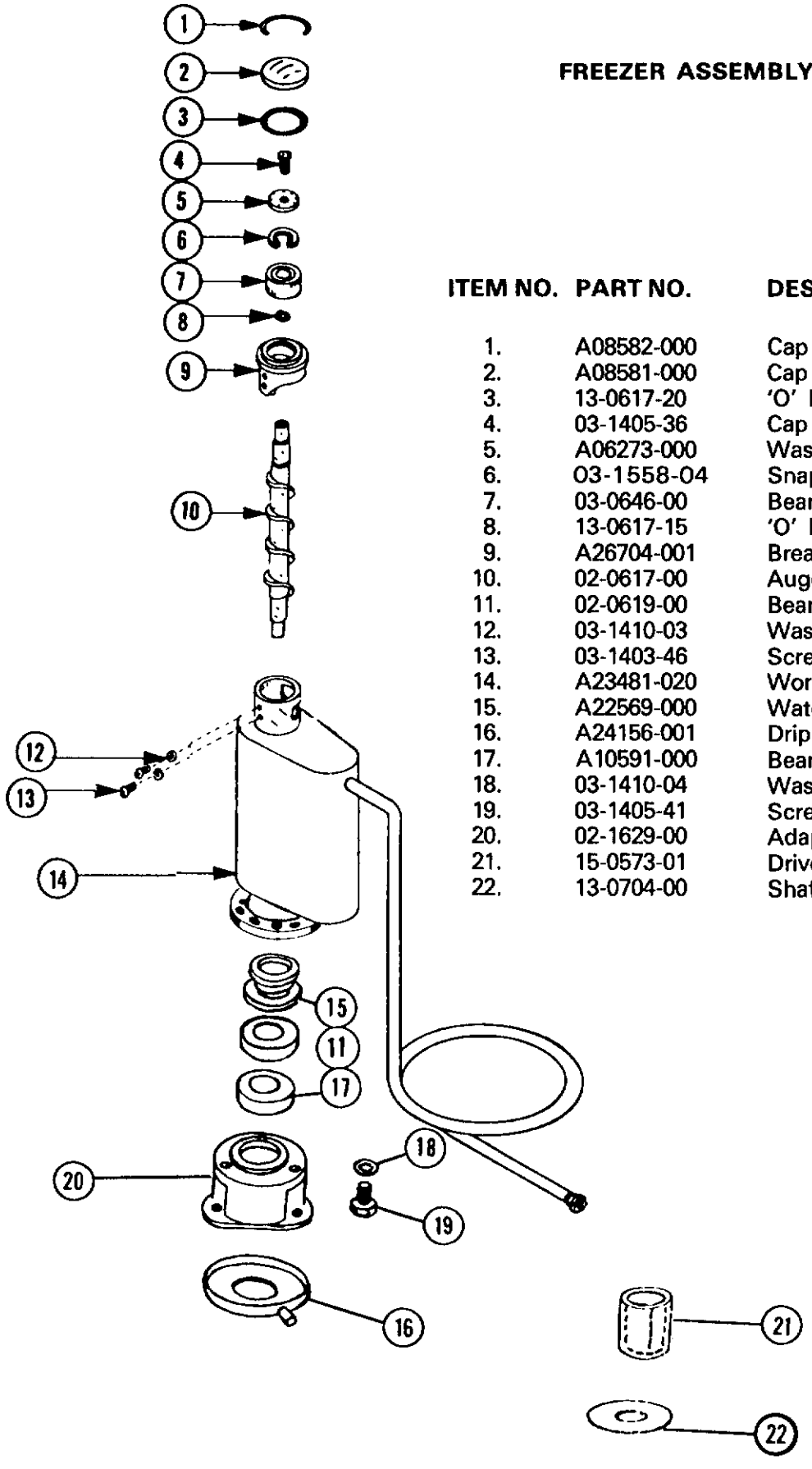

FREEZER ASSEMBLY

ITEM NO.	PART NO.	DESCRIPTION
1.	A08582-000	Cap Hook
2.	A08581-000	Cap
3.	13-0617-20	'O' Ring
4.	03-1405-36	Cap Screw
5.	A06273-000	Washer
6.	03-1558-04	Snap Ring
7.	03-0646-00	Bearing
8.	13-0617-15	'O' Ring
9.	A26704-001	Breaker
10.	02-0617-00	Auger
11.	02-0619-00	Bearing
12.	03-1410-03	Washer
13.	03-1403-46	Screw
14.	A23481-020	Worm Tube—Suction Line
15.	A22569-000	Water Seal
16.	A24156-001	Drip Pan
17.	A10591-000	Bearing Retainer
18.	03-1410-04	Washer
19.	03-1405-41	Screw
20.	02-1629-00	Adapter
21.	15-0573-01	Drive Coupling
22.	13-0704-00	Shaft Drip Shield Rubber

STORAGE BIN ASSEMBLY

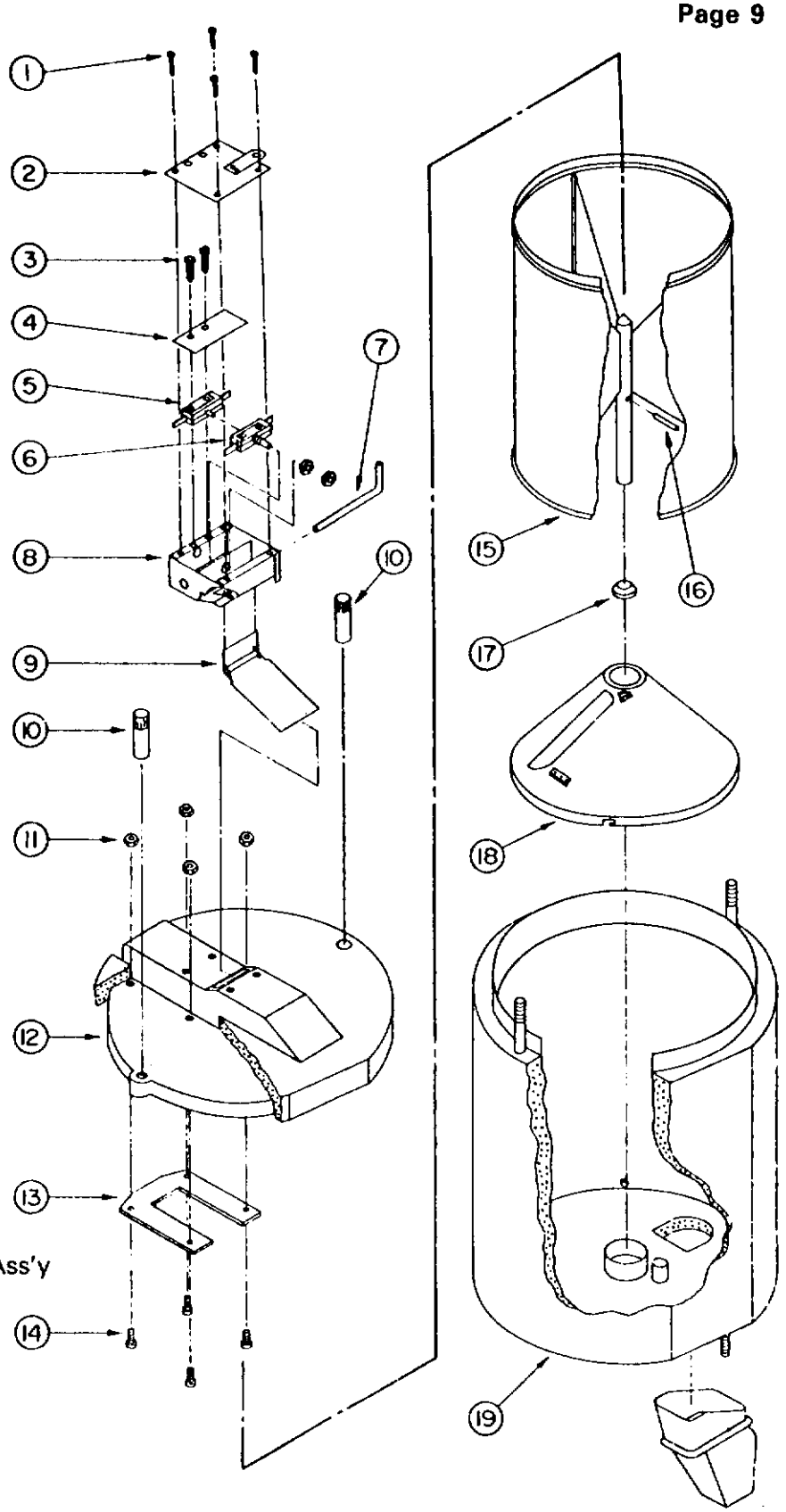

ITEM	PART NO.	DESCRIPTION
1.	03-1404-07	Screw (4 req'd)
2.	A21996-000	Cover Fab. Ass'y
3.	03-1403-08	Screw (2 req'd)
4.	03-0886-00	Twin Nut
5.	12-1664-00	Reset Switch
6.	12-1018-02	Seitch
7.	A21982-000	Pin
8.	A21992-000	Bin Switch Box
9.	A21995-000	Actuator Arm Fab.
10.	A21983-000	Nut (2 req'd)
11.	03-1406-04	Nut (4 req'd)
12.	A20486-000	Top-Foam Ass'y.
13.	A21987-000	Bridge Plate
14.	03-1279-00	Screw, Thumb (4 req'd)
15.	A23247-001	Inner Bin Fab. Ass'y.
16.	A23223-000	Pin-Inner Bin
17.	02-1976-00	Collar
18.	A19343-000	Inner Bin Bottom Fab Ass'y
19.	A23250-001	Bin Ass'y

EXTERNAL CABINET PARTS

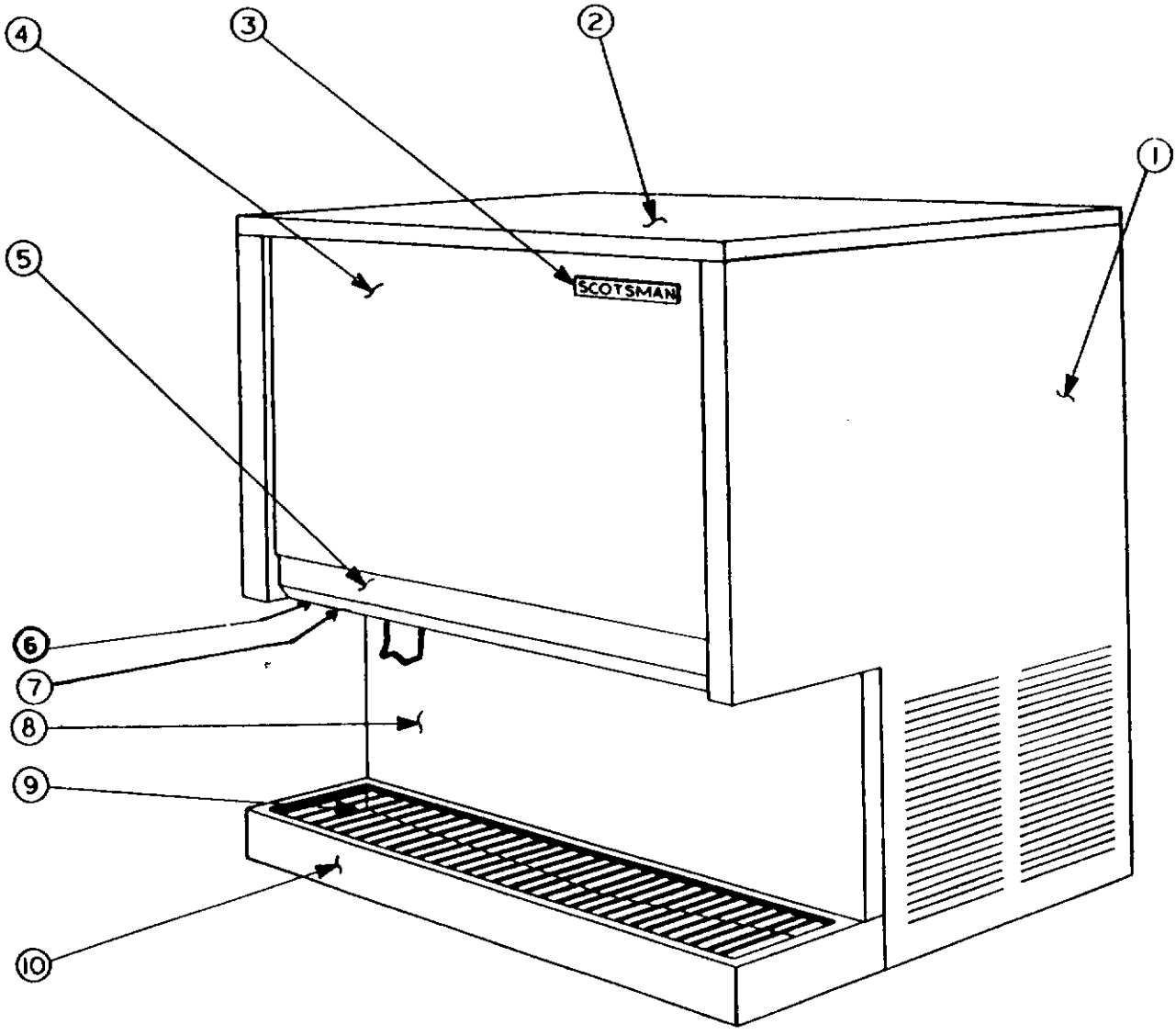

ITEM NO.	PART NO.	DESCRIPTION
1.	A23431-001	Cabinet Painted
	A23431-002	Cabinet SS
2.	A20192-000	Top Panel Painted
	A20192-001	Top Panel SS
3.	15-0156-00	Emblem Scotsman
	03-0271-00	Speed Nut
	A23443-001	Front Panel Wood Grain
	A23443-002	Front Panel SS
5.	A24282-001	Control Panel Painted
	A24282-002	Control Panel SS
6.	15-0561-00	Decal Portion Control
	12-1557-00	Portion Control
	02-1810-00	Knob Portion Control
7.	12-1377-01	Switch Water
8.	A19339-000	Splash Panel
	03-1404-09	Screws Panel
9.	02-1858-00	Grill
10.	A23212-000	Sink

PANEL FASTENERS

15-0411-00	Strike
03-1406-04	Nut
02-0836-00	Catch

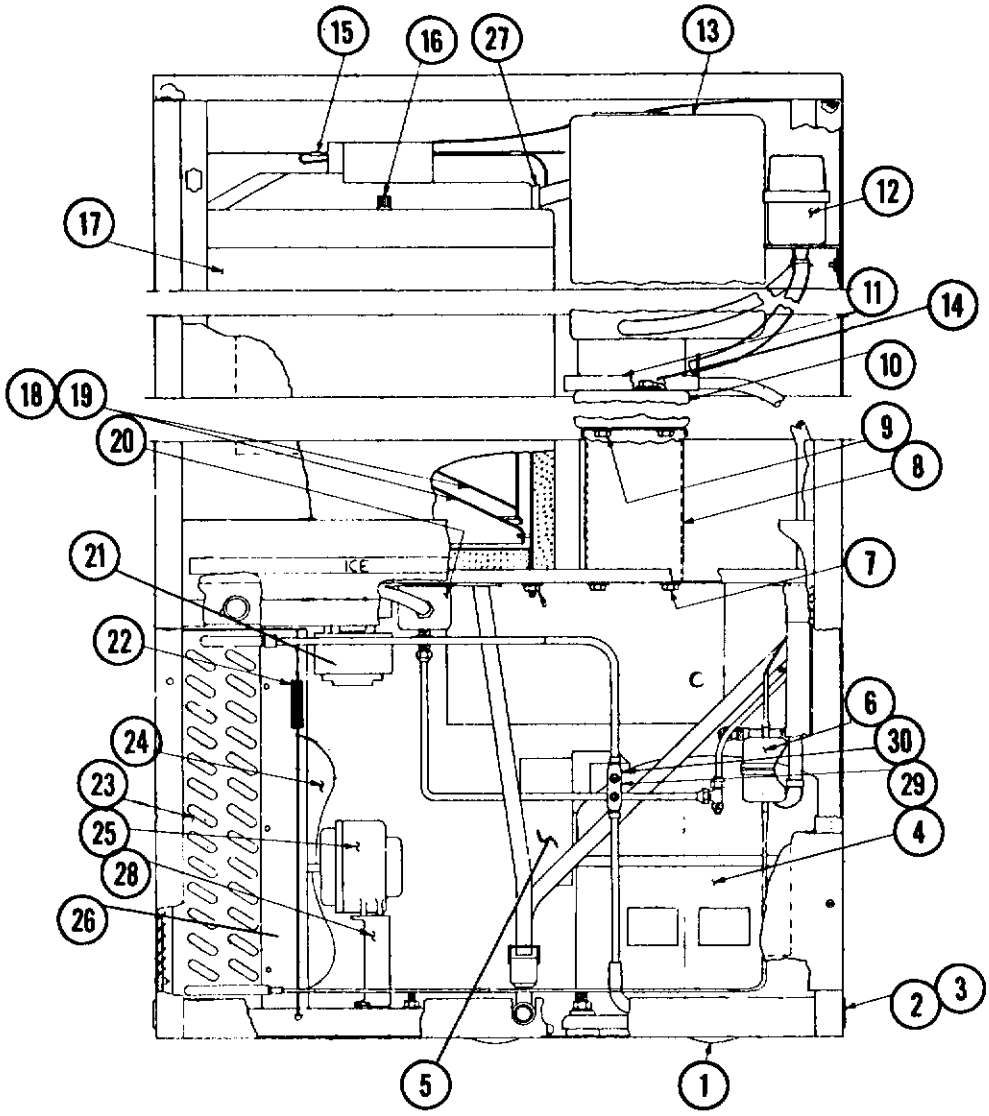

AIR COOLED

Item No.	Part No.	Description	Item No.	Part No.	Description
1.	A22349-000	Plug Button	14.	03-1408-03	Washer
2.			15.	03-1230-00	Tin Clip
3.			16.	A21983-000	Nut
4.	18-4600-01	Compressor	17.	A23250-001	Bin Assy
5.	18-2200-25	Overload	18.	A23247-001	Inner Bin
	18-2200-26	Relay	19.	A19343-000	Inner Bin Bottom
	18-1901-33	Capacitor	20.	12-1646-01	Solenoid Valve
6.	02-0544-01	Drier	21.	12-1561-01	Bin Drive Motor
7.	03-1405-03	Screw	22.	02-1827-00	Spring
	03-1417-09	Washer	23.	18-3304-01	Condenser
8.	A23497-001	Motor Support	24.	18-0137-02	Fan Blade
9.	03-1405-17	Screw	25.	12-1576-01	Fan Motor
	03-1417-12	Lock Washer	26.	A24082-001	Condenser Shoud
10.	See Page 8	Gear Motor	27.	A24876-001	Spout Extension
11.	A24156-001	Drip Pan	28.	18-0422-00	Motor Bracket
12.	See Page 7	Reservoir Assy	29.	16-0560-00	Valve Core
13.	See Page 9	Freezer Assy		16-0563-00	Brass Cap
14.	03-1420-03	Screw	30.	16-0673-18	Process Header.

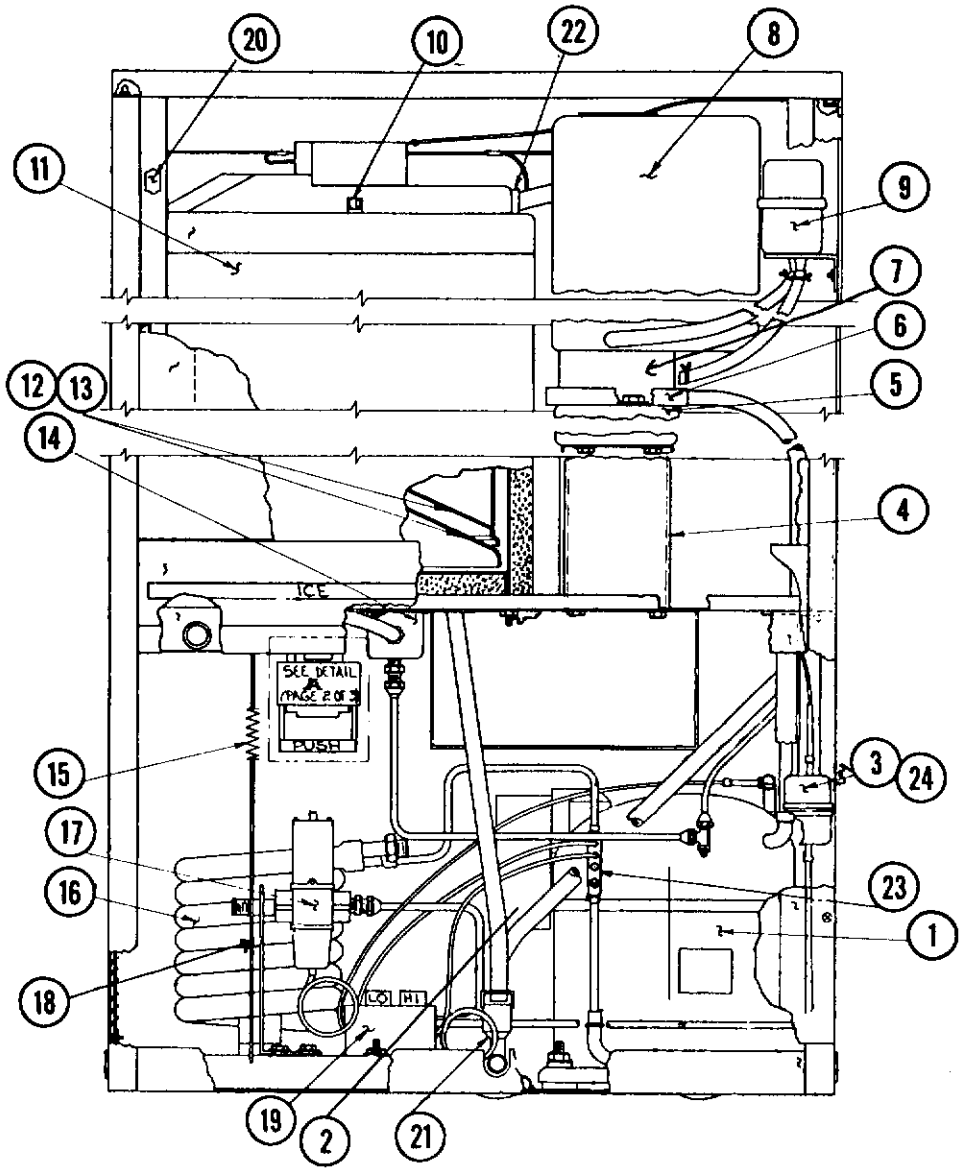

Water Cooled

ITEM NO.	PART NO.	DESCRIPTION	ITEM NO.	PART NO.	DESCRIPTION
1.	18-4600-01	Compressor	15.	02-1827-00	Spring
2.	18-2200-25	Overload	16.	18-3305-02	Condenser W. C.
	18-2200-26	Relay	17.	11-0198-02	Water Regulator
	18-1901-33	Cap Ocitor	18.	A15924-000	Bracket
3.	02-0544-01	Drier	19.	11-0385-01	Hi-Lo Pressure Control
4.	A23497-001	Motor Support	20.	02-0836-00	Catch
5.	See Page 8	Gearmotor 115/60/1	21.	A21532-000	Drain Tee
6.	A24156-001	Drip Pan	22.	A24876-001	Spout Extension
7.	02-1629-00	Base Adapter	23.	16-0673-08	Process Header
8.	See Page 9	Freezer Assy	24.	16-0560-00	Valve Core
9.	See Page 7	Reservoir Assy		16-0563-00	Brass Cap
10.	A21983-000	Nut			
11.	A23250-001	Bin Assembly			
12.	A23247-001	Inner Bin			
13.	A19343-000	Inner Bin Bottom			
14.	12-1646-01	Solenoid Valve			

BIN DRIVE
AND
Dispensing Components

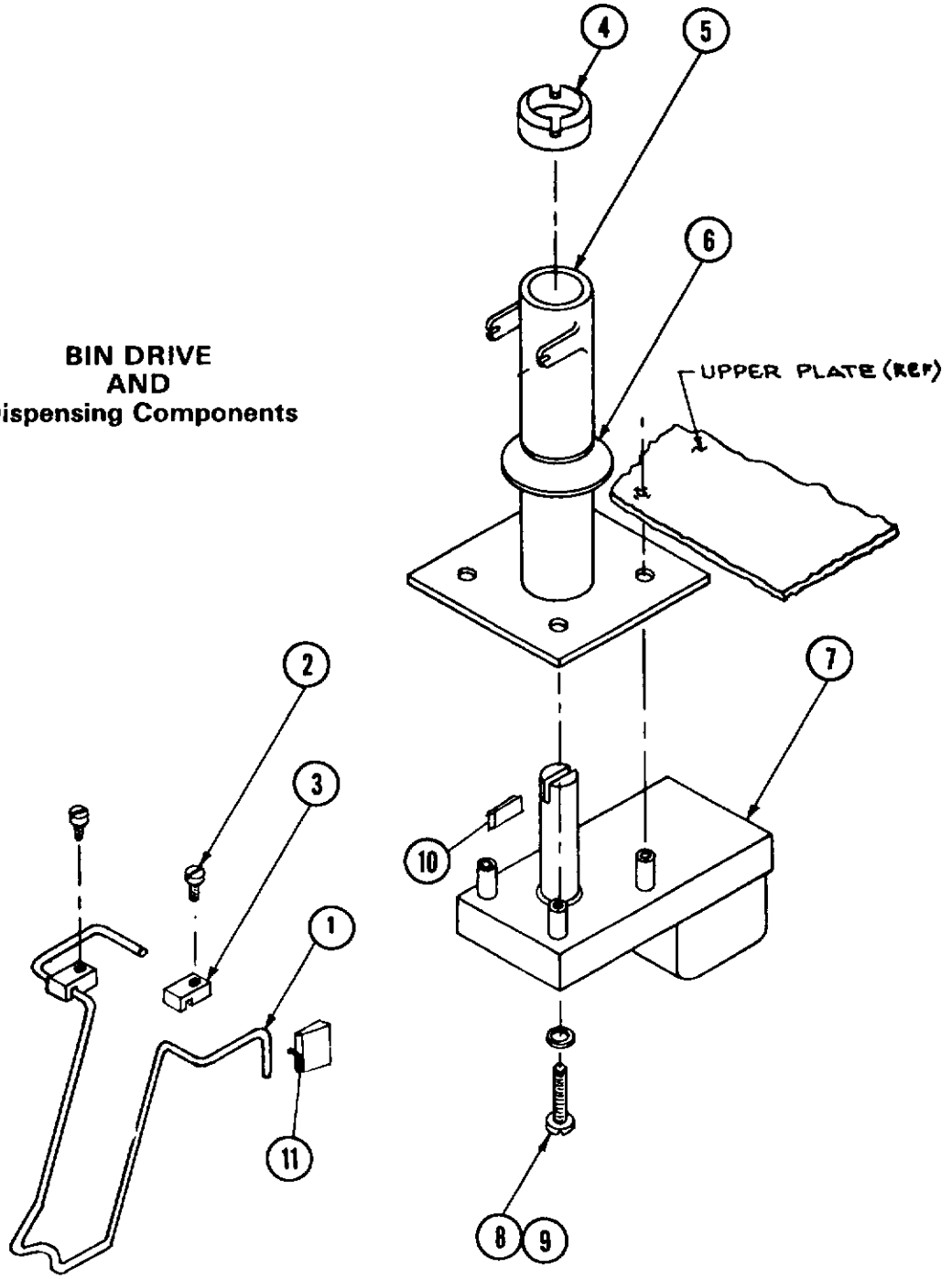

ITEM NO.	PART NO.	DESCRIPTION
1.	02-2076-01	Glass Filler
2.	03-1403-06	Screw
3.	02-1969-00	Linkage Clamp
4.	02-1976-00	Retaining Collar
5.	02-1971-00	Bracket Gear Motor
6.	13-0747-00	Water Shed
7.	12-1561-01	Gear Motor
8.		Lockwasher
9.	03-1403-36	Screw
10.	A20472-000	Slot Pin
11.	12-1642-00	Vend Switch

BIN TOP PARTS

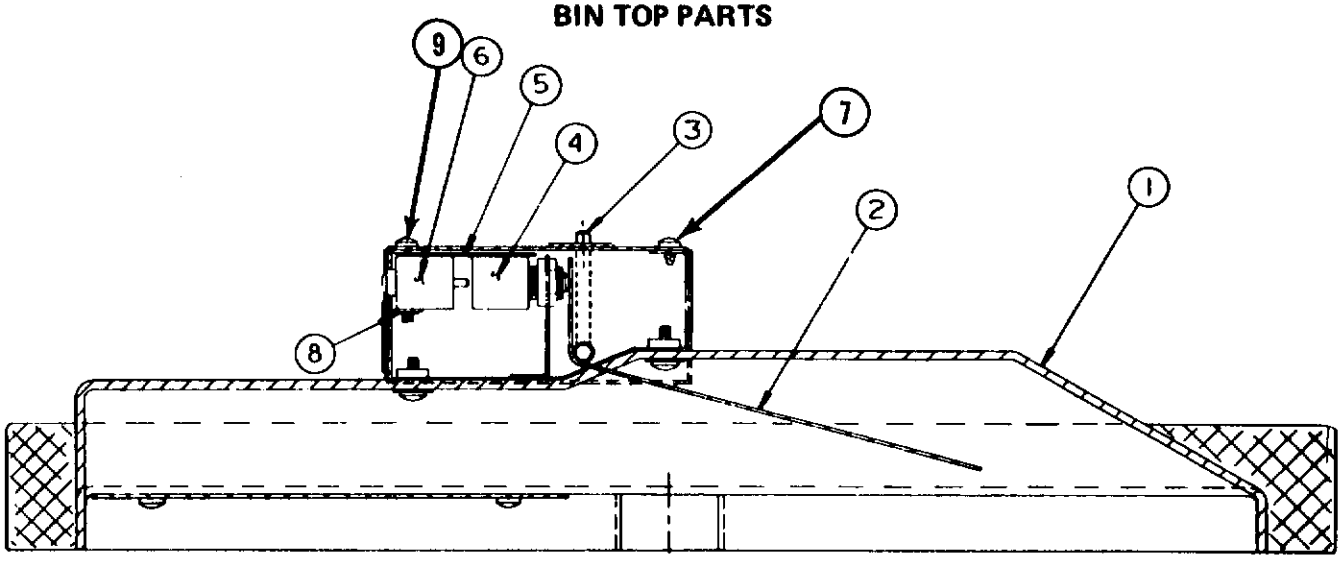

ITEM NO.	PART NO.	DESCRIPTION
1.	A23493-001	Top Foam Assy
2.	A21995-000	Actuator Arm
3.	A21982-000	Pin
4.	12-1018-02	Bin Full Switch
5.		Electrical Insulation
6.	12-1664-00	Reset Switch
7.	03-1404-04	Screw (4)
8.	03-0886-00	Twin Nut
9.	03-1403-10	Screw (2)

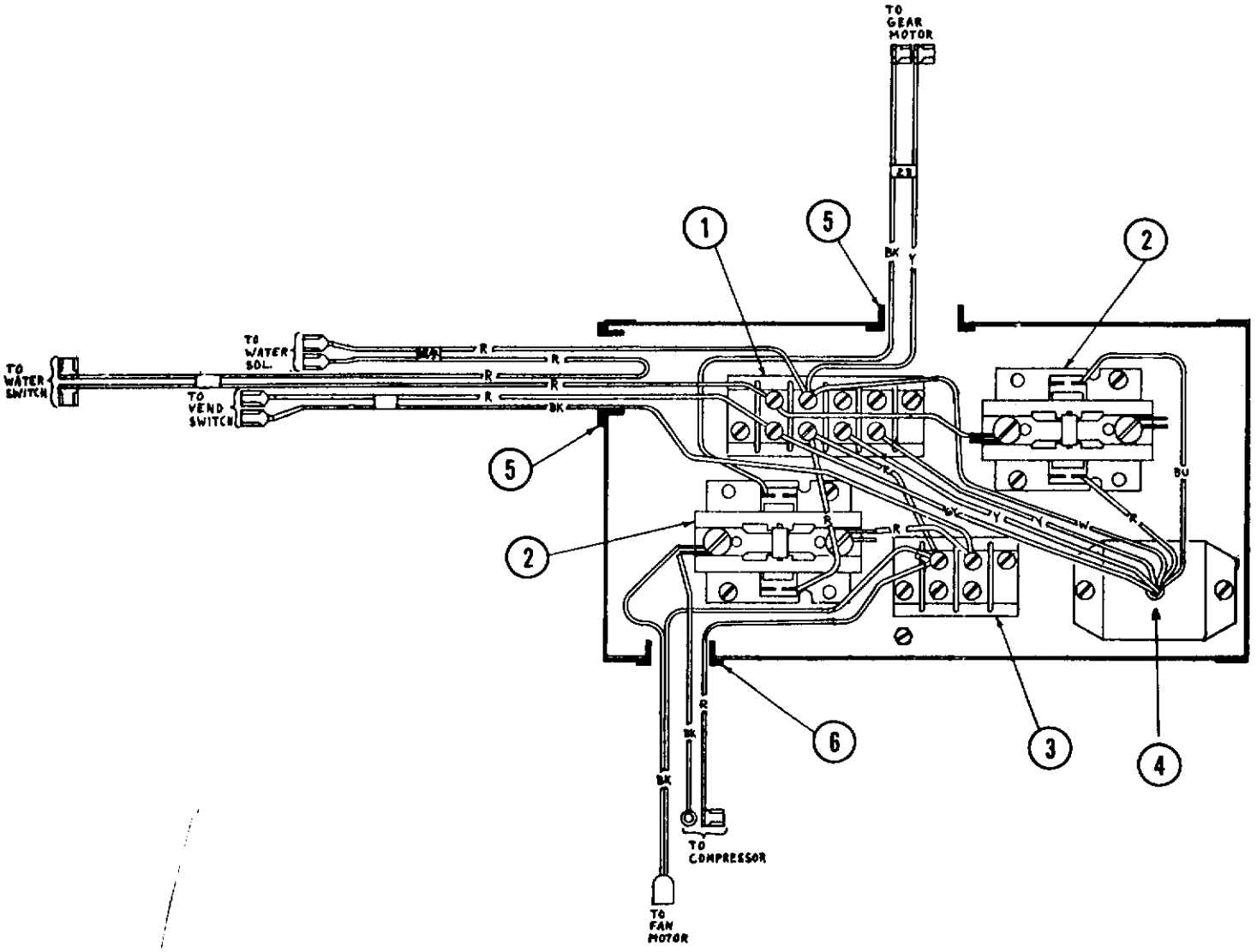

CONTROL BOX - AIR COOLED

ITEM NO.	PART NO.	DESCRIPTION
1.	12-0813-01	Terminal Board
2.	12-2041-01	Contactor
3.	12-0813-04	Teminal Board
4.	A26213-001	Relay - Time Delay
5.	12-1213-12	Snap Bushing
6.	12-1213-11	Snap Bushing

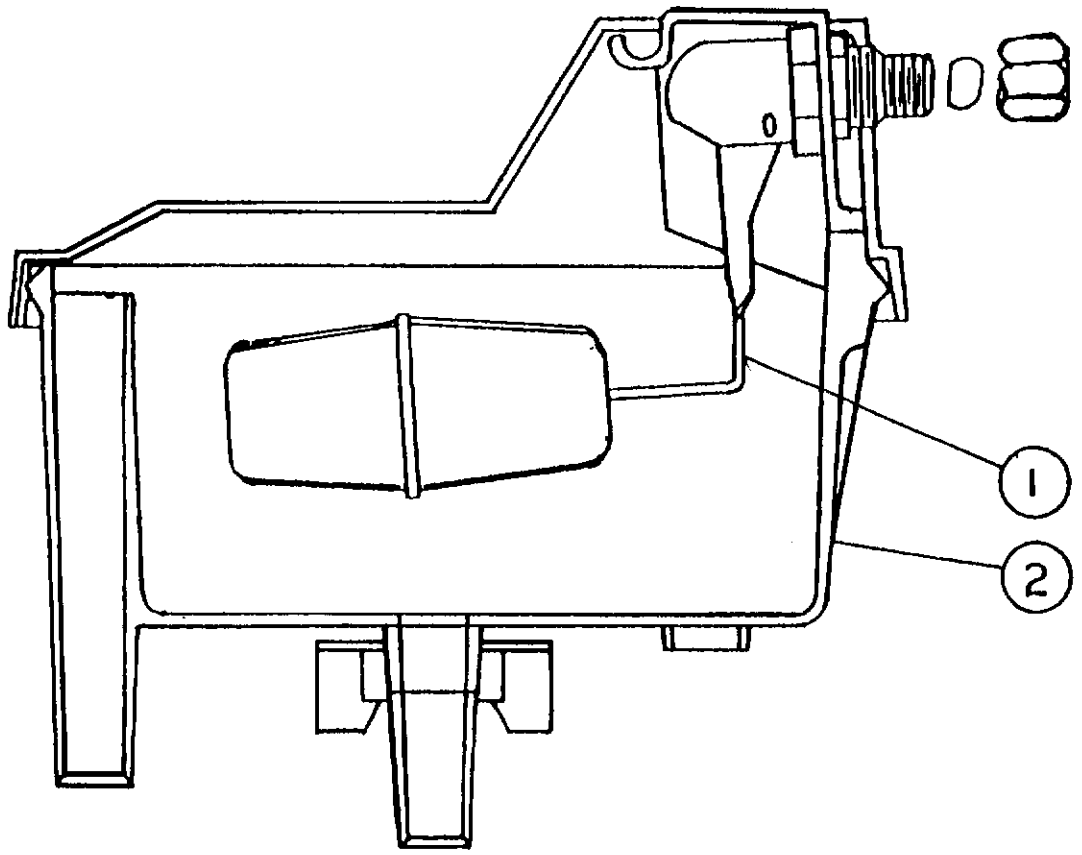

RESERVOIR ASSEMBLY

ITEM NO.	PART NO.	DESCRIPTION
1.	02-2217-02	Valve Assy.
2.	02-2217-01	Reservoir Complete

GEAR MOTOR ASSEMBLY

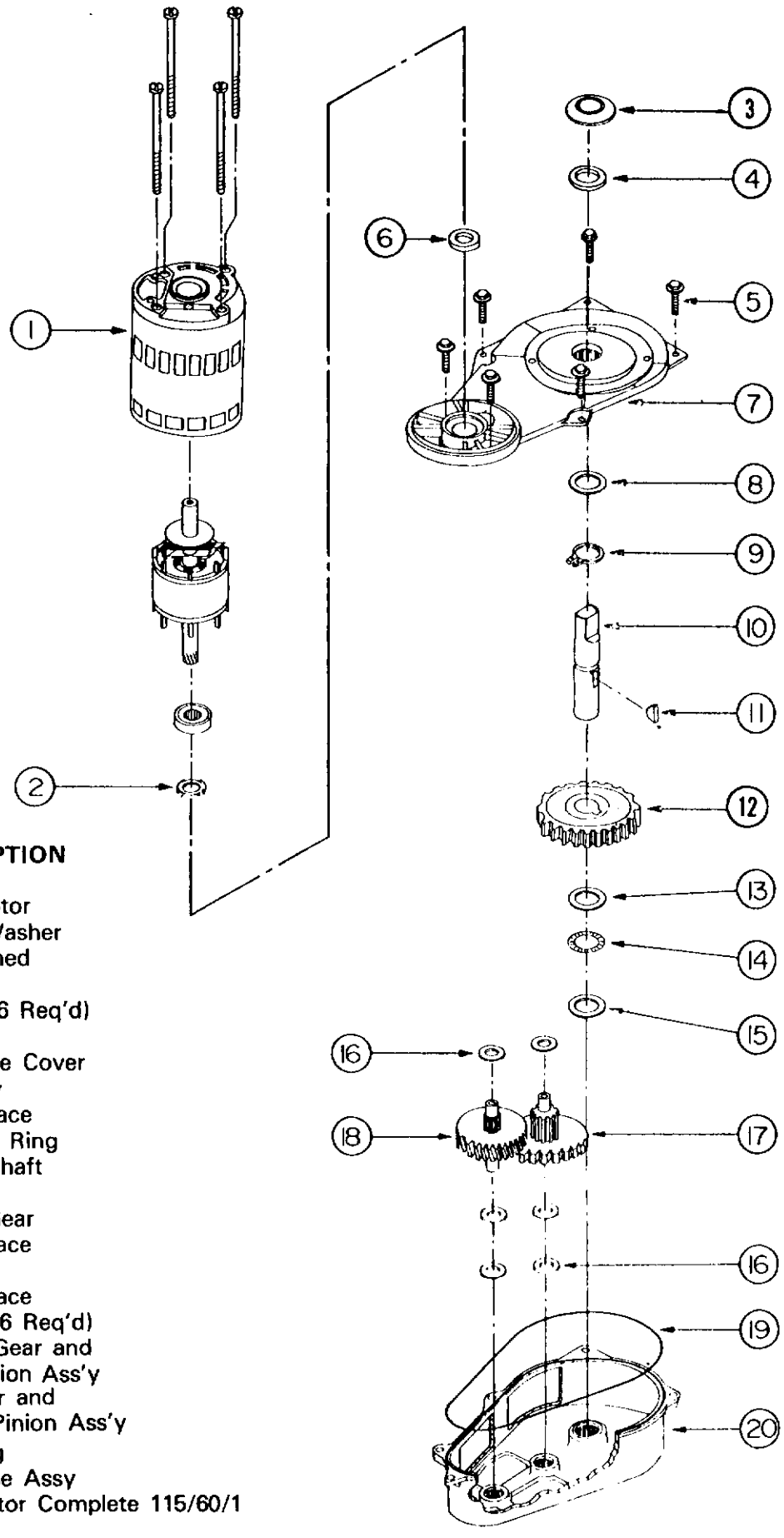

ITEM	PART NO.	DESCRIPTION
1.	A26455-001	Drive Motor
2.	03-1426-00	Spring Washer
3.	13-0709-02	Water Shed
4.	02-1607-00	Oil Seal
5.	03-1251-01	Screws (6 Req'd)
6.	02-1606-00	Oil Seal
7.	A22200-000	Gear Case Cover Assembly
8.	02-1681-00	Thrust Race
9.	03-1363-00	Retaining Ring
10.	02-1652-00	Output Shaft
11.	03-1364-00	Key
12.	02-1653-00	Output Gear
13.	02-1681-00	Thrust Race
14.	02-1680-00	Bearing
15.	02-1679-00	Thrust Race
16.	03-1408-24	Washer (6 Req'd)
17.	02-1604-00	Second Gear and Third Pinion Ass'y
18.	02-1603-00	First Gear and Second Pinion Ass'y
19.	A26103-001	"O" Ring
20.	A22199-000	Gear Case Assy
	A22750-021	Gear Motor Complete 115/60/1

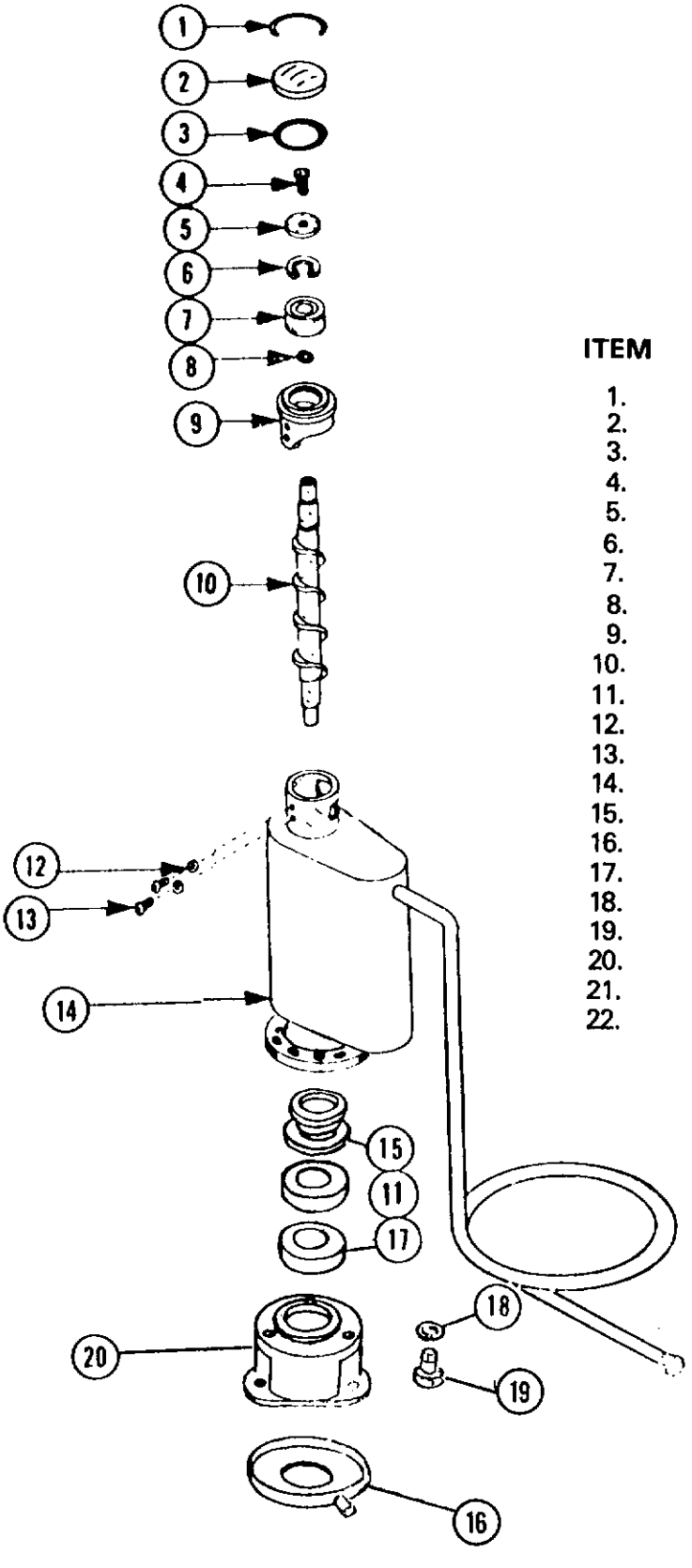

FREEZER BREAKDOWN

ITEM	PART NO.	DESCRIPTION
1.	A08582-000	Cap Hook
2.	A08581-000	Cap
3.	13-0617-20	"O" Ring
4.	03-1405-36	Cap Screw
5.	A06273-000	Washer
6.	03-1558-04	Snap Ring
7.	02-0646-00	Bearing
8.	13-0617-15	"O" Ring
9.	A26704-001	Breaker With Bearings
10.	02-0617-00	Auger
11.	02-0619-00	Bearing
12.	03-1410-03	Washer
13.	03-1403-46	Screw
14.	A27169-020	Worm Tube — Suction Line
15.	A22569-000	Water Seal
16.	A24156-001	Drip Pan
17.	A10591-000	Bearing Retainer
18.	03-1410-04	Washer
19.	03-1405-41	Screw
20.	02-1629-00	Adapter
21.	15-0573-01	Drive Coupling
22.	13-0709-02	Shaft Drip Shield Rubber

STORAGE BIN ASSEMBLY

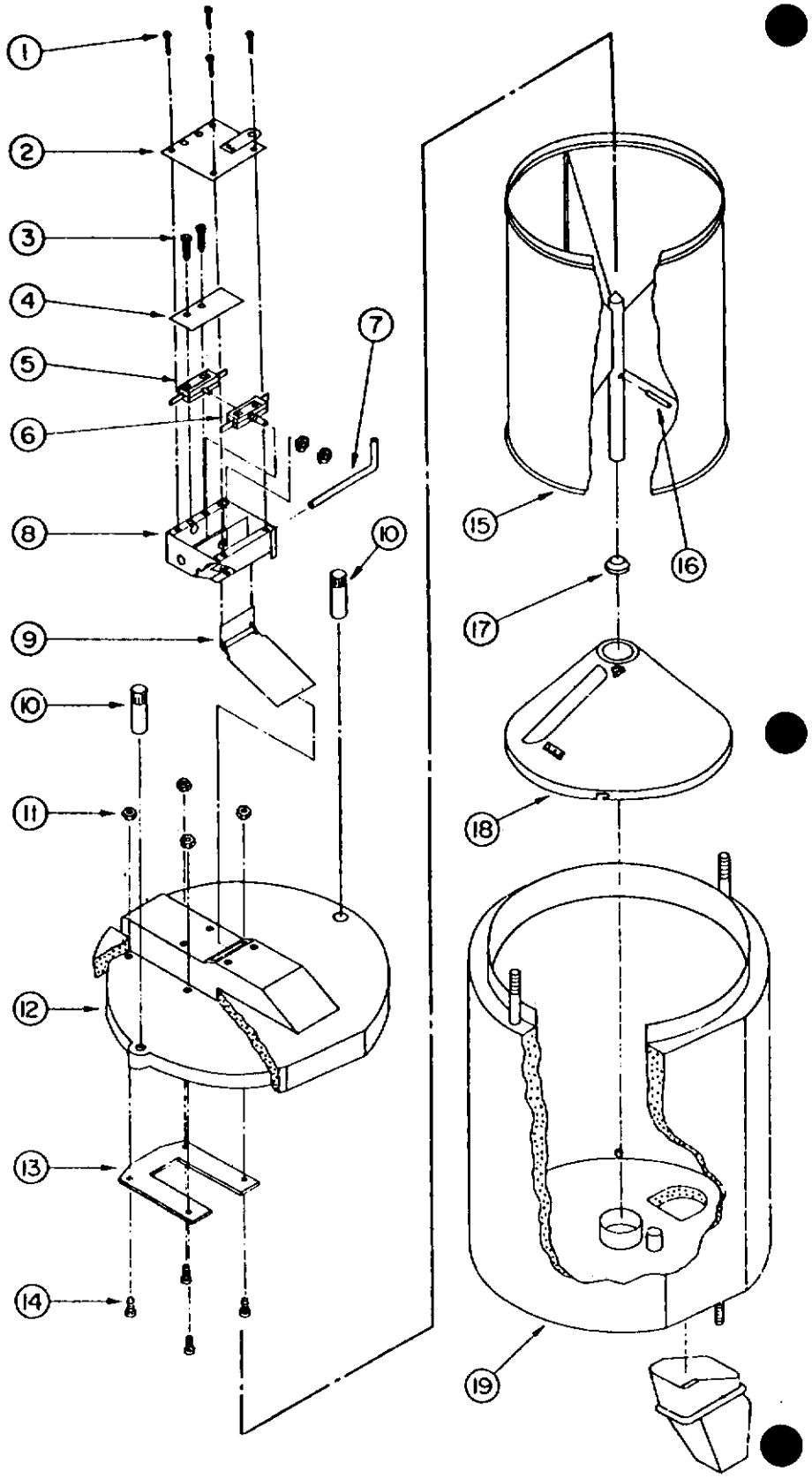

ITEM	PART NO.	DESCRIPTION
1.	03-1404-04	Screw (4 reqc)
2.	A21996-000	Cover Fab. Assy
3.	03-1403-10	Screw (2 reqd)
4.	03-0886-00	Twin Nut
5.	12-1664-00	Reset Switch
6.	12-1018-02	Switch
7.	A21982-000	Pin
8.	A21992-000	Bin Switch Box
9.	A21995-000	Actuator Arm Fab.
10.	A21983-000	Nut (2 reqc)
11.	03-1406-04	Nut (4 reqd)
12.	A23493-001	Top-Foam Assy
13.	A21987-000	Bridge Plate
14.	03-1279-000	Screw, Thumb (4 reqd)
15.	A23247-001	Inner Bin Fab. Assy
16.	A23223-000	Pin-Inner Bin
17.	02-1976-00	Collar
18.	A19343-000	Inner Bin Bottom Fab. Assy
19.	A23250-001	Bin Assy

FRONT VIEW
(Air Cooled)

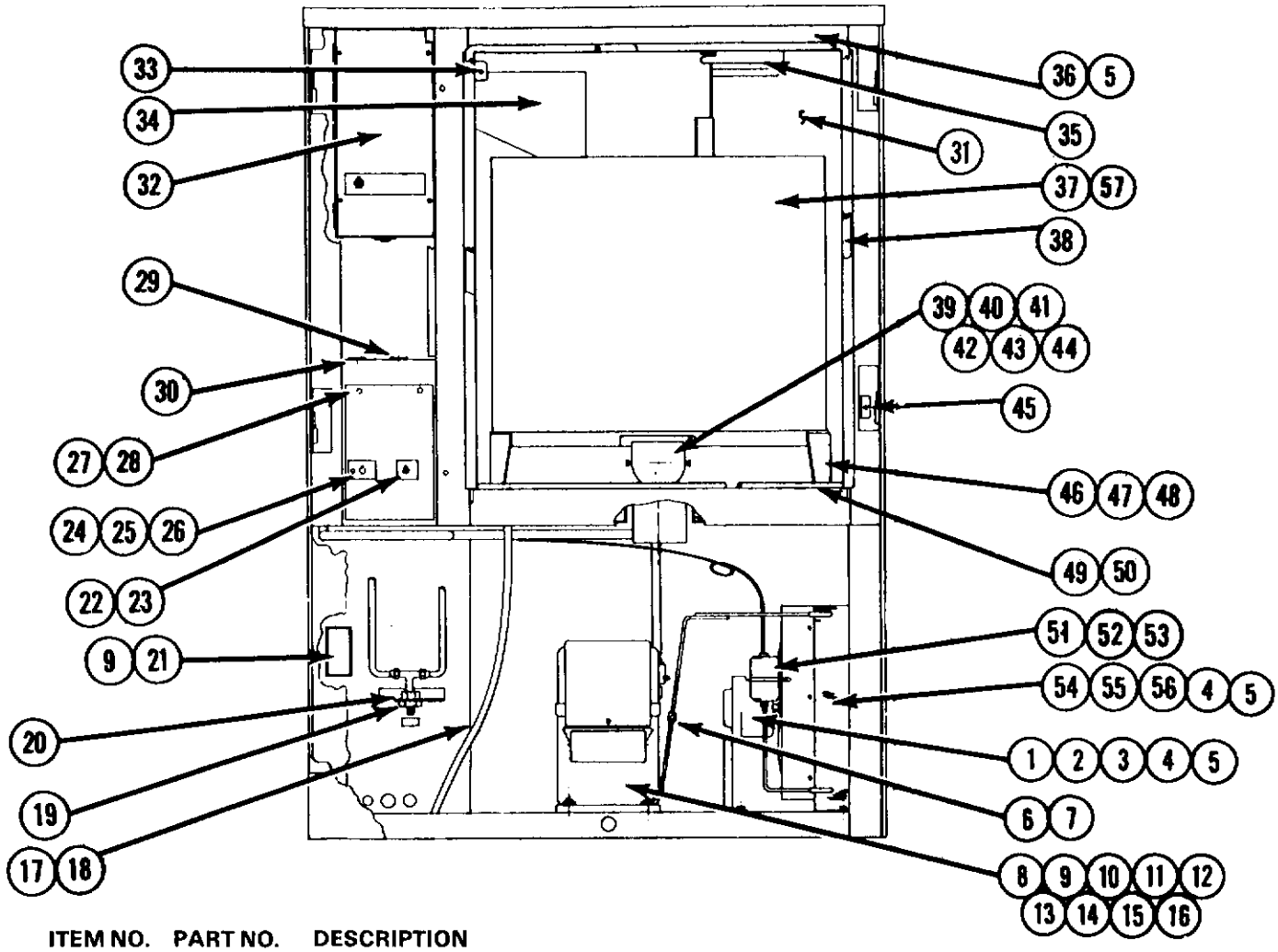

ITEM NO.	PART NO.	DESCRIPTION
1.	18-0363-00	Blade, Fan
2.	A25548-001	Bracket, Fan
3.	12-1576-01	Fan Motor
4.	03-1405-03	Screw
5.	03-1417-09	Washer
6.	16-0563-00	Cap, Brass
7.	16-0560-00	Valve Core
8.	18-2400-01	Compressor
8.	18-2200-25	Overload
8.	18-2200-26	Relay
8.	18-1901-33	Capacitor
9.	12-1213-10	Snap Bushing
10.	18-2200-27	Sleeve
11.	18-2200-28	Grommet
12.	18-2201-30	Valve, Suction, Rotolock
13.	18-2300-29	Seal, Valve
14.	03-1417-12	Washer
15.	03-1405-20	Screw
16.	03-1408-02	Washer
17.	13-0079-01	Drain Tube By FT
18.	02-1338-00	Clamp
19.	03-1394-01	Nut
20.	A24625-001	Water Inlet Ass'y
21.	12-0901-00	Cover
22.	15-0556-01	Water Decal
23.	12-0426-01	Toggle Switch
24.	15-0555-01	Ice Decal
25.	02-1810-00	Potentiometner Knob
26.	12-1557-00	Potentiometer
27.	03-1404-09	Screw
28.	A24259-001	Switch Mount
29.	12-1213-13	Snap Bushing
30.	12-1213-15	Snap Bushing
31.	A23589-020	Upper Compartment
32.	A23769-001	Cover, Control Box
33.	A14926-000	Locking Pin, Spout
34.	See Page 8	Spout Ass'y
35.	See Page 14	Switch Assy
36.	03-1403-57	Screw
37.	A14945-000	Storage Bin
38.	A24624-001	Gasket
39.	03-1409-12	Washer
40.	A14932-000	Chute Lock
41.	A16766-000	Ice Auger Ass'y
42.	A14933-000	End Plate Ass'y
43.	03-1408-09	Washer
44.	03-1129-00	Cap nut
45.	12-1276-00	Interlock Switch
46.	See page 6	Drive Unit
47.	A24294-001	Stationary Bottom
48.	03-0255-03	Wing Nut
49.	13-0765-01	Gasket
50.	A24350-001	Trim Channel
51.	02-0544-00	Drier
52.		Drace, Drier
53.	03-1404-15	Screw
54.	18-0396-01	Condenser
55.	A23825-001	Shroud
56.	03-1404-03	Screw
*57.	02-1587-00	Bin Locking Cap

*Not Shown

FRONT VIEW (Air Cooled)

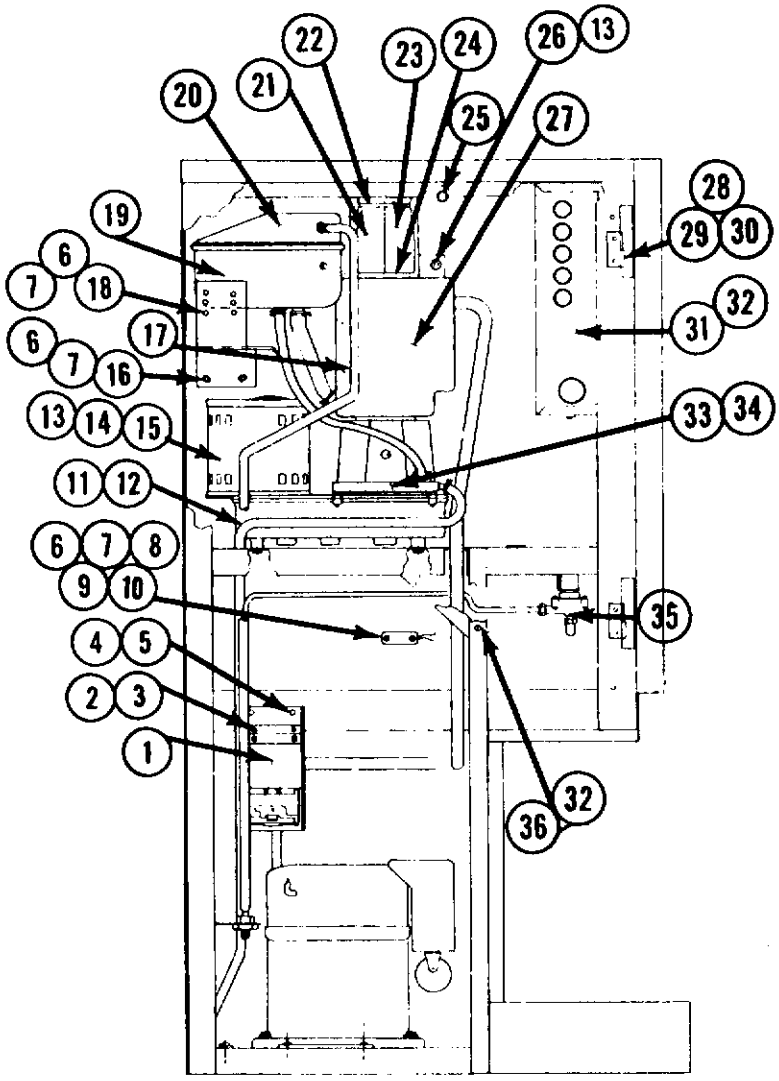

ITEM NO.	PART NO.	DESCRIPTION
1.	See Page 9	Shutter Actuator Assy.
2.	03-1404-05	Screw
3.		Cover
4.	03-1417-09	Washer
5.	03-1403-47	Screw
6.	03-1403-28	Screw
7.	03-1417-05	Washer
8.		Splice cap
9.		Junction Box Ass'y
10.	12-0901-00	Cover
11.	13-0079-03	Drain Tube B/FT
12.	02-0534-00	Clamp
13.	03-1410-04	Washer
14.	03-1405-18	Screw
15.	See Page 5	Gear Motor
16.		Reservoir Mount
17.		Water Line
18.	03-1406-06	Nut
19.	See Page 10	Reservoir Ass'y
20.		Cover
21.	A15080;000	Insulation, Spout, Lt.
22.	A08733-000	Strap, Insulation
23.	A15081-000	Insulation, Spout, Rt.

ITEM NO.	PART NO.	DESCRIPTION
24.	02-1428-00	Clip, Insulation
25.	12-1213-04	Snap Bushing
16.	03-1406-10	Nut
27.	See Page 4	Freezer Ass'y
28.	03-1407-04	Washer
29.	15-0543-03	hinge, Rt
29.	15-0543-01	Hinge, Left
30.	03-1403-25	Screw
31.	See Page 11	Control Box, Air Cooled
	See Page 12	Control box, Water Cooled
32.	03-1403-17	Screw
33.	03-1420-03	Screw
34.	03-1408-03	Washer
35.	12-1434-07	Solenoid
36.	03-1417-03	Washer

FRONT VIEW (Water Cooled)

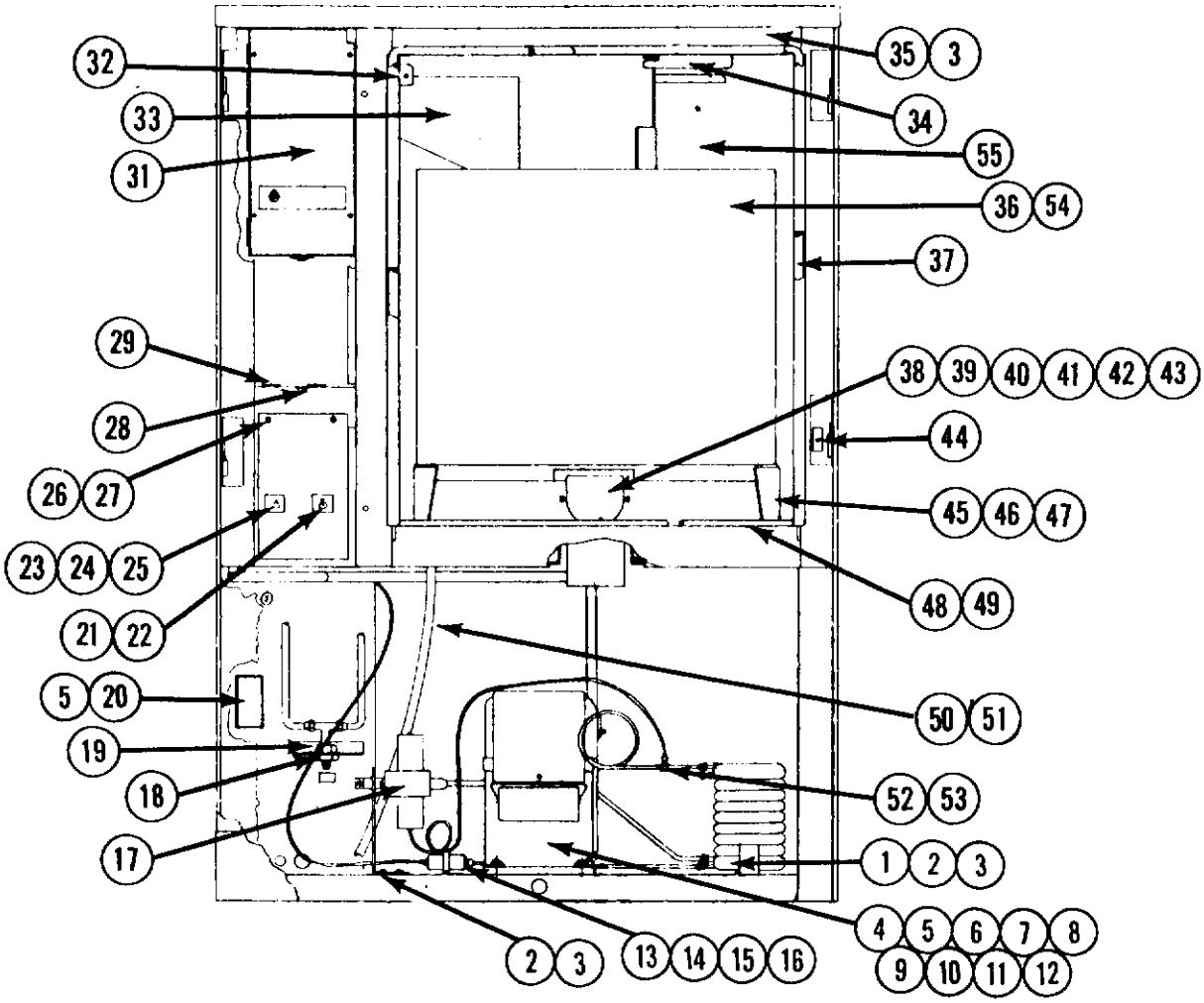

ITEM NO.	PART NO.	DESCRIPTION
1.	18-3305-02	Condenser
2.	03-1405-03	Screw
3.	03-1417-09	Washer
4.	18-2400-01	Compressor
4.	.8-2202-25	Overload
4.	18-2200-26	Relay
4.	18-1901-33	Capacitor
5.	12-1213-10	Bushing
6.	18-2200-27	Sleeve
7.	18-2200-28	Grommet
8.	18-2201-30	Valve, Suction Rotolock
9.	18-2300-29	Seal, Valve
10.	03-1417-12	Washer
11.	03-1405-20	Screw
12.	03-1408-02	Washer
13.		Brace, Drier
14.	02-0544-00	Drier
15.	03-1405-03	Screw
16.	03-1417-09	Washer
17.	11-0198-00	Water Regulattor
18.	03-1394-00	Nut
19.	A24625-001	Water Inlet Ass'y
20.		Cover
21.	15-0556;01	Water Decal
22.	12-0426-01	Toggle Switch
23.	15-0555-01	Ice Decal
24.	02-1810-00	Potentiometer Knob
25.	12-1557-00	Potentiometer
26.	A24259-001	Switch Mount
27.	02-1404-09	Screw
28.	12-1213-13	Snap Bushing
29.	12-1213-15	Snap Bushing
30.		
31.	A23769-001	Cover, Control Box
32.	A14926-000	Locking Pin, Spout
33.	Page 8	Spout Ass'y
34.	Page 14	Switch Ass'y
35.	03-1403-47	Screw
36.	A14945-000	Storage Bin
37.	A24624-001	Gasket
38.	03-1409-12	Washer
39.	A14932-000	Chute Lock
40.	A16766-000	Ice Auger Ass'y
41.	A14933-000	End Plate Ass'y
42.	03-1408-09	washer
43.	03-1129-00	Cap Nut
44.	12-1276-00	Switch
45.	Page 6	Drive Unit Ass'y
46.	A24294-001	Stationary Bottom
47.	03-0255-03	Wing Nut
48.	A24350-001	Trim Channel
49.	13-0765-01	Gasket
50.	13-0079-01	Drain Tube
51.	02-1338-00	Clamp
52.	16-0563-00	Brass Cap
53.	16-0560-00	Valve Core
*54.	02-1587-00	Bin Locking Cap
55.	A23589-020	Upper Compartment (Insert)

*Not Shown

FREEZER ASSEMBLY
A23518-020

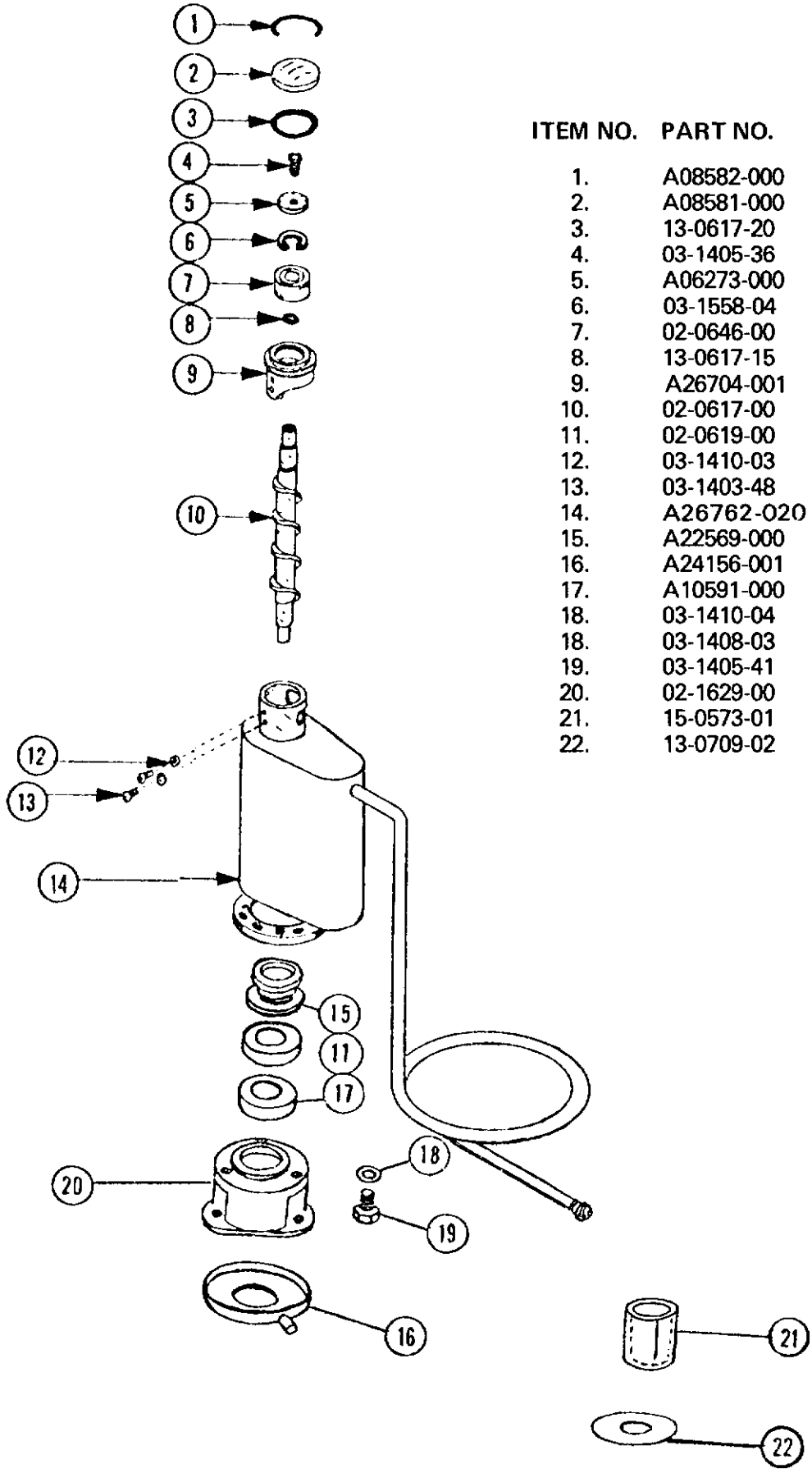

ITEM NO.	PART NO.	DESCRIPTION
1.	A08582-000	Cap Hook
2.	A08581-000	Cap
3.	13-0617-20	"O" Ring
4.	03-1405-36	Cap Screw
5.	A06273-000	Washer
6.	03-1558-04	Snap Ring
7.	02-0646-00	Bearing
8.	13-0617-15	"O" Ring
9.	A26704-001	Breaker W/Bearing
10.	02-0617-00	Auger
11.	02-0619-00	Bearing
12.	03-1410-03	Washer (2)
13.	03-1403-48	Screw (2)
14.	A26762-020	Freezer W/Suction Line
15.	A22569-000	Water Seal
16.	A24156-001	Drip Pan
17.	A10591-000	Bearing Retainer
18.	03-1410-04	Lockwasher
18.	03-1408-03	Washer
19.	03-1405-41	Screw
20.	02-1629-00	Adapter
21.	15-0573-01	Drive Coupling
22.	13-0709-02	Shaft Drip Shield Rubber

GEAR MOTOR ASSEMBLY A22750-021 115/60/1

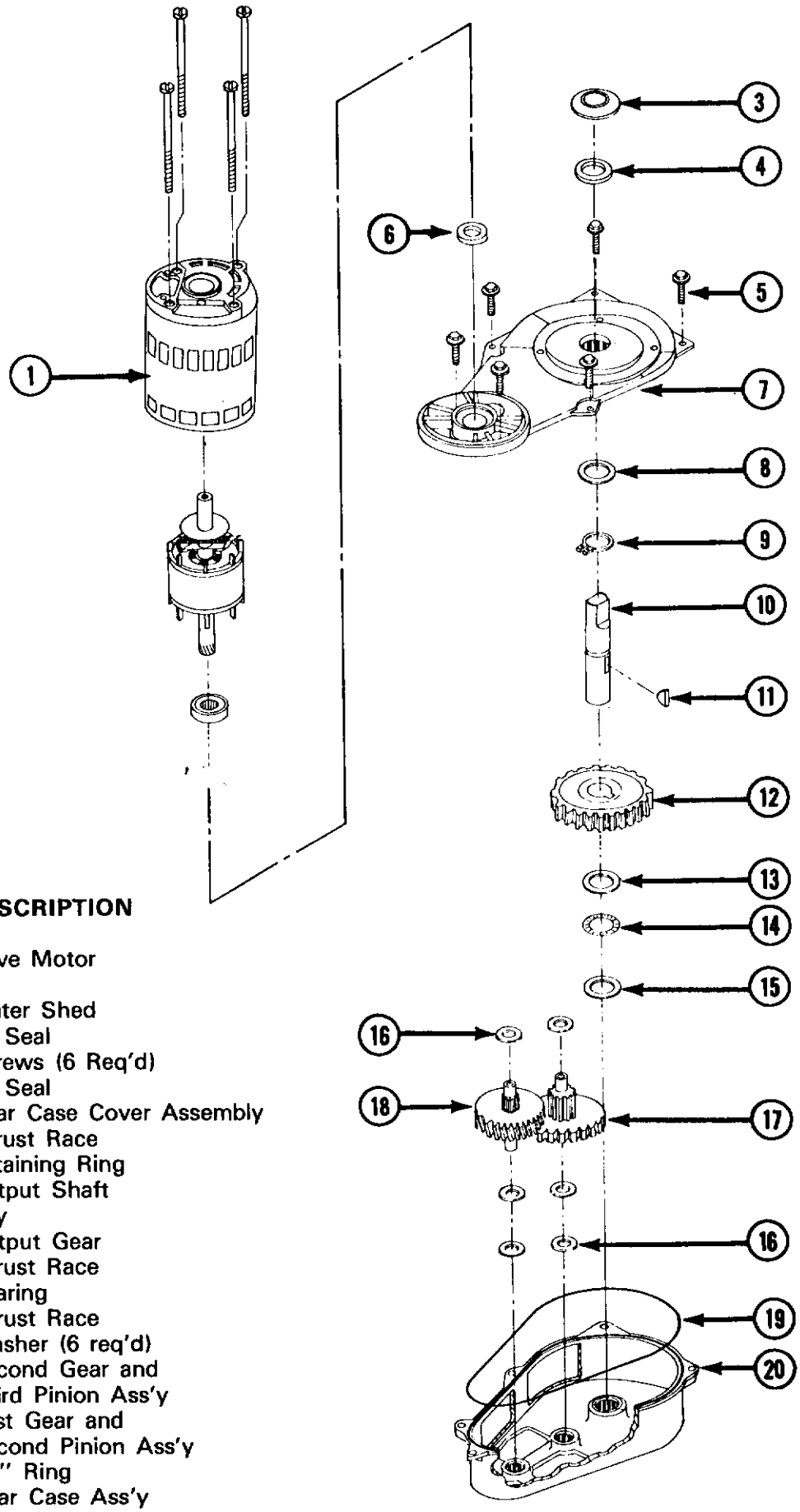

ITEM NO.	PART NO.	DESCRIPTION
1.	A26455-001	Drive Motor
2.		
3.	13-0709-02	Water Shed
4.	02-1607-00	Oil Seal
5.	03-1251-00	Screws (6 Req'd)
6.	02-1606-00	Oil Seal
7.	A22200-000	Gear Case Cover Assembly
8.	02-1681-00	Thrust Race
9.	03-1363-00	Retaining Ring
10.	02-1652-00	Output Shaft
11.	03-1364-00	Key
12.	02-1653-00	Output Gear
13.	02-1681-00	Thrust Race
14.	02-1680-00	Bearing
15.	02-1679-00	Thrust Race
16.	03-1408-24	Washer (6 req'd)
17.	02-1604-00	Second Gear and Third Pinion Ass'y
18.	02-1603-00	First Gear and Second Pinion Ass'y
19.	A26103-001	"O" Ring
20.	A22199-000	Gear Case Ass'y

DRIVE UNIT ASSEMBLY
A24095-001

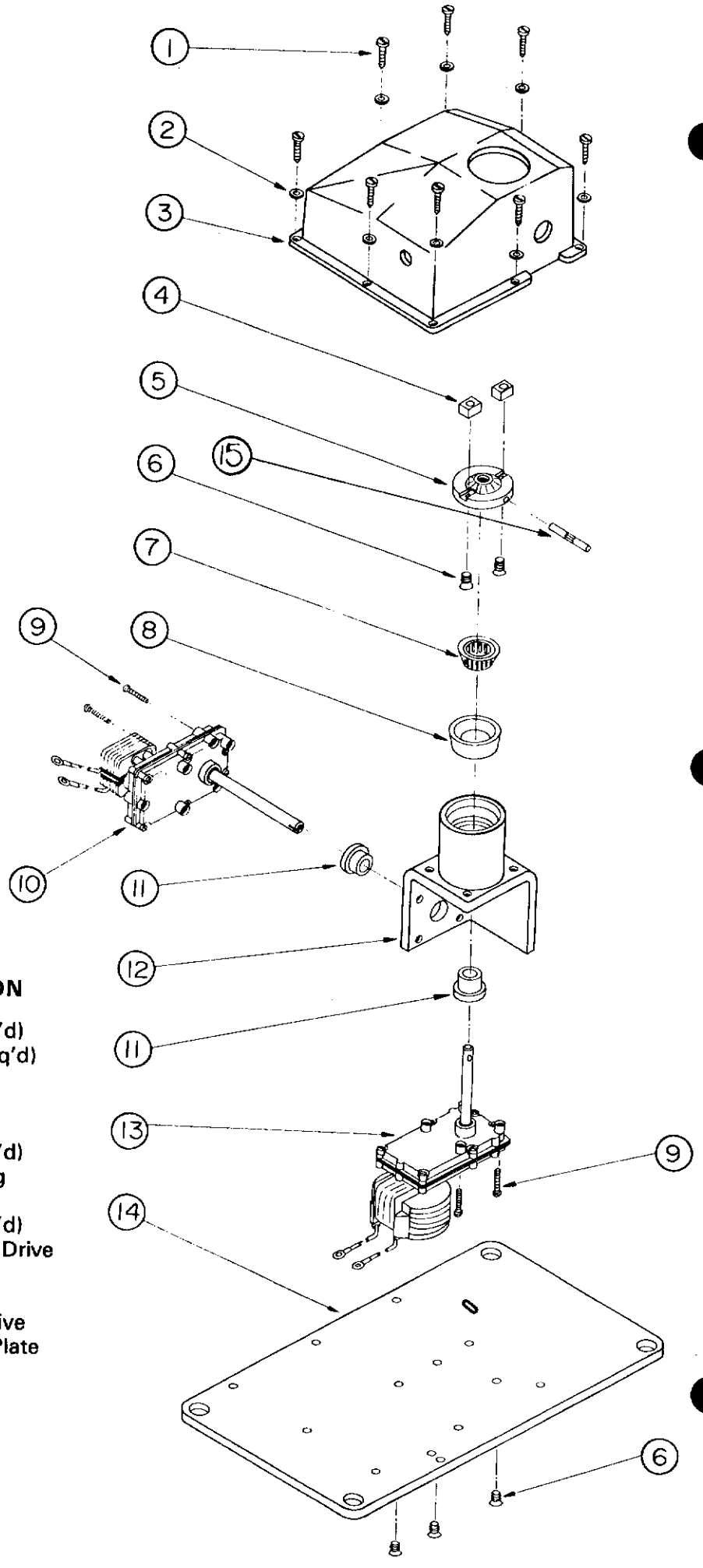

ITEM NO.	PART NO.	DESCRIPTION
1.	03-1403-15	Screw (8 req'd)
2.	03-1407-02	Washer (8 req'd)
3.	02-2049-01	Motor Cover
4.	A17482-000	Key
5.	A24089-001	Hub Drive
6.	03-1418-13	Screw (5 req'd)
7.	02-2186-01	Roller Bearing
8.	02-2186-02	Insert
9.	03-1403-36	Screw (8 req'd)
10.	12-1851-01	Motor-Auger Drive
11.	02-1461-00	Bearing
12.	A24087-001	Bin Support
13.	12-1850-01	Motor-Bin Drive
14.	A23841-001	Motor Mtg. Plate
15.	A24094-001	Pin

BIN COMPONENTS

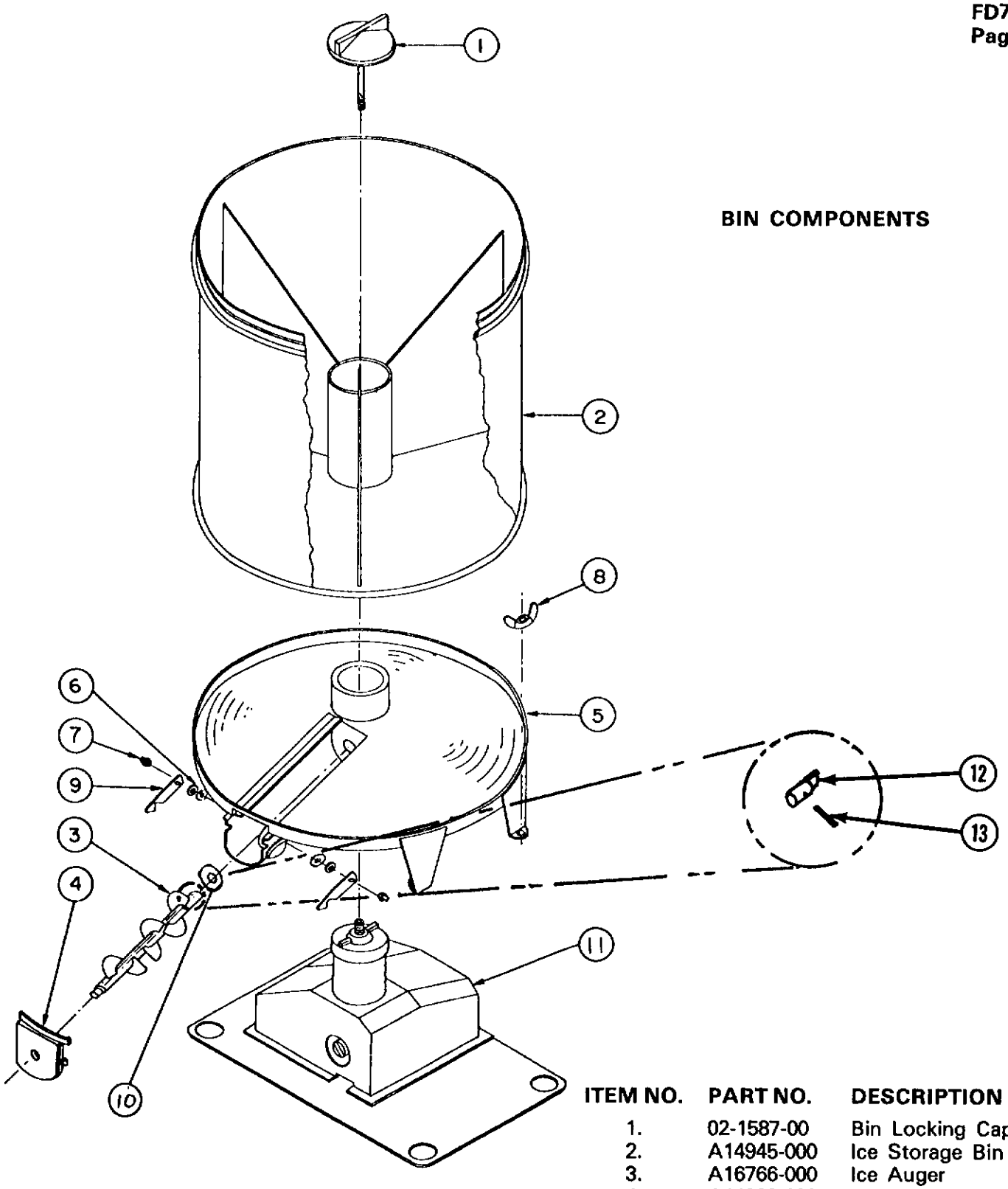

ITEM NO.	PART NO.	DESCRIPTION
1.	02-1587-00	Bin Locking Cap
2.	A14945-000	Ice Storage Bin
3.	A16766-000	Ice Auger
4.	A14933-000	End Plate
5.	A24294-001	Stationary Bottom
6.	03-1408-09	Special Washer
7.	03-1129-00	Cap Nut
8.	03-0255-03	Wing Nut
9.	A14932-000	Chute Lock
10.	03-1409-12	Rubber Seal
11.	Page 6	Drive Unit Assy.
12.	A14573-000	Drive End, Auger
13.	03-1552-01	Groove Pin

SPOUT ASSEMBLY

A21655-000

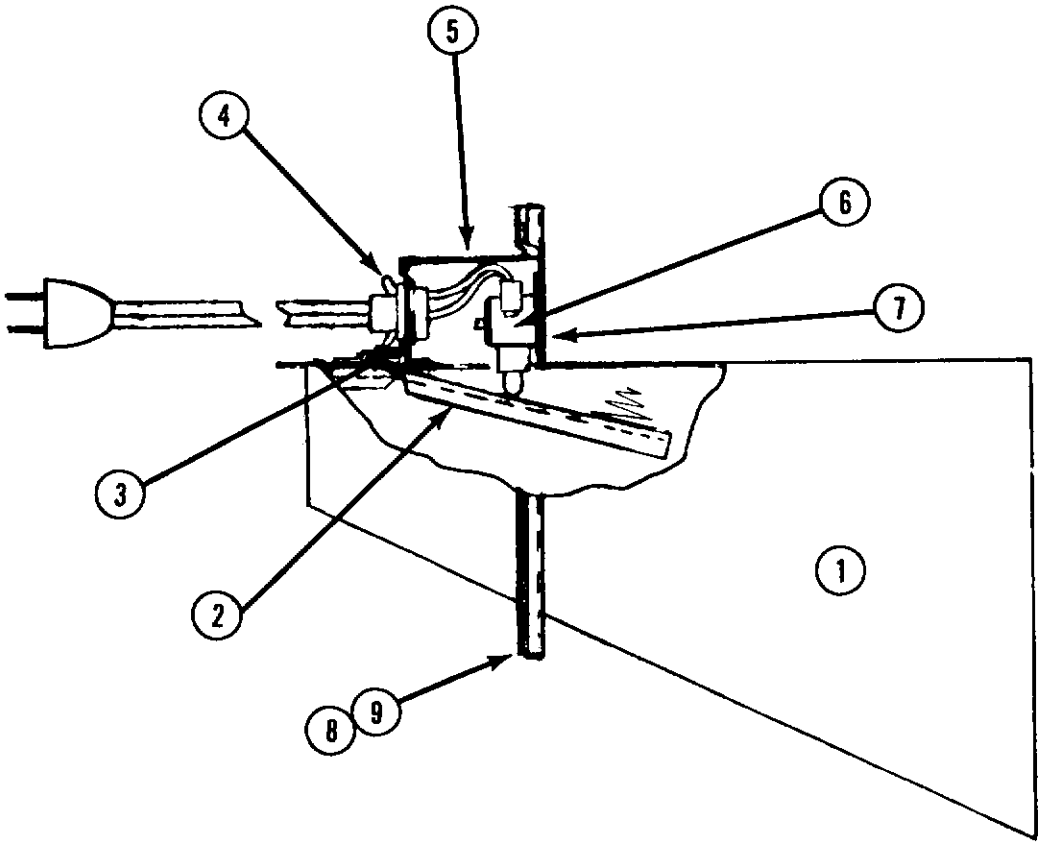

* Not Shown

ITEM NO.	PART NO.	DESCRIPTION
1.	A21656-000	Spout Fab. Ass'y
2.	A16353-000	Spout Pressure Plate
3.	A21654-000	Plate Stop
4.	03-0255-02	Wing Nut
5.	A24463-001	Limit Box Ass'y
6.	12-1018-00	Micro Switch
7.	03-1403-08	Screw
8.	13-0624-02	Gasket
9.	13-0624-01	Gasket
*10	A14926-000	Locking Pin Spout

SHUTTER ACTUATOR ASSEMBLY

A23738-001

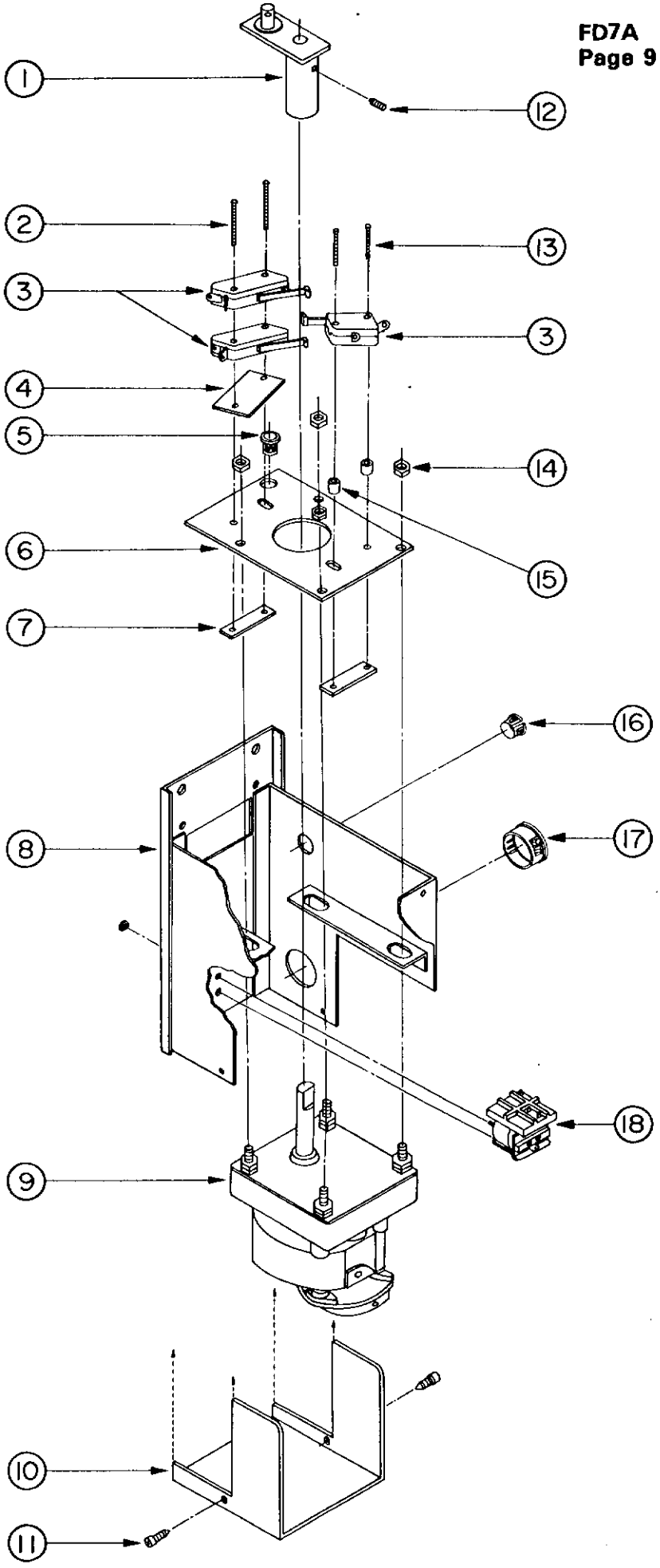

ITEM NO.	PART NO.	DESCRIPTION
1.	A24356-001	Cam Fab. Ass'y
2.	03-1403-63	Screw (2 Req'd.)
2.	12-1614-00	Switch (3 Req'd.)
4.	A21814-000	Fish Paper
5.	12-1213-02	Snap Bushing
6.		Plate, Comp. M.T.G.
7.	A22053-000	Twin Nut (2 Req'd.)
8.	A21220-000	Motor Mounting Fab. Assembly
9.	12-1613-00	Motor, Gear
10.	A21783-000	Shutter Cover
11.	03-1404-05	Screw
12.	03-0431-08	Set Screw
13.	03-1403-62	Screw (2 Req'd.)
14.	03-1406-05	Nut (4 Req'd.)
15.	02-1820-00	Spacer (2 Req's.)
16.	12-1213-04	Snap Bushing
17.		Snap Bushing
18.	12-1467-00	Relay

RESERVOIR ASSEMBLY

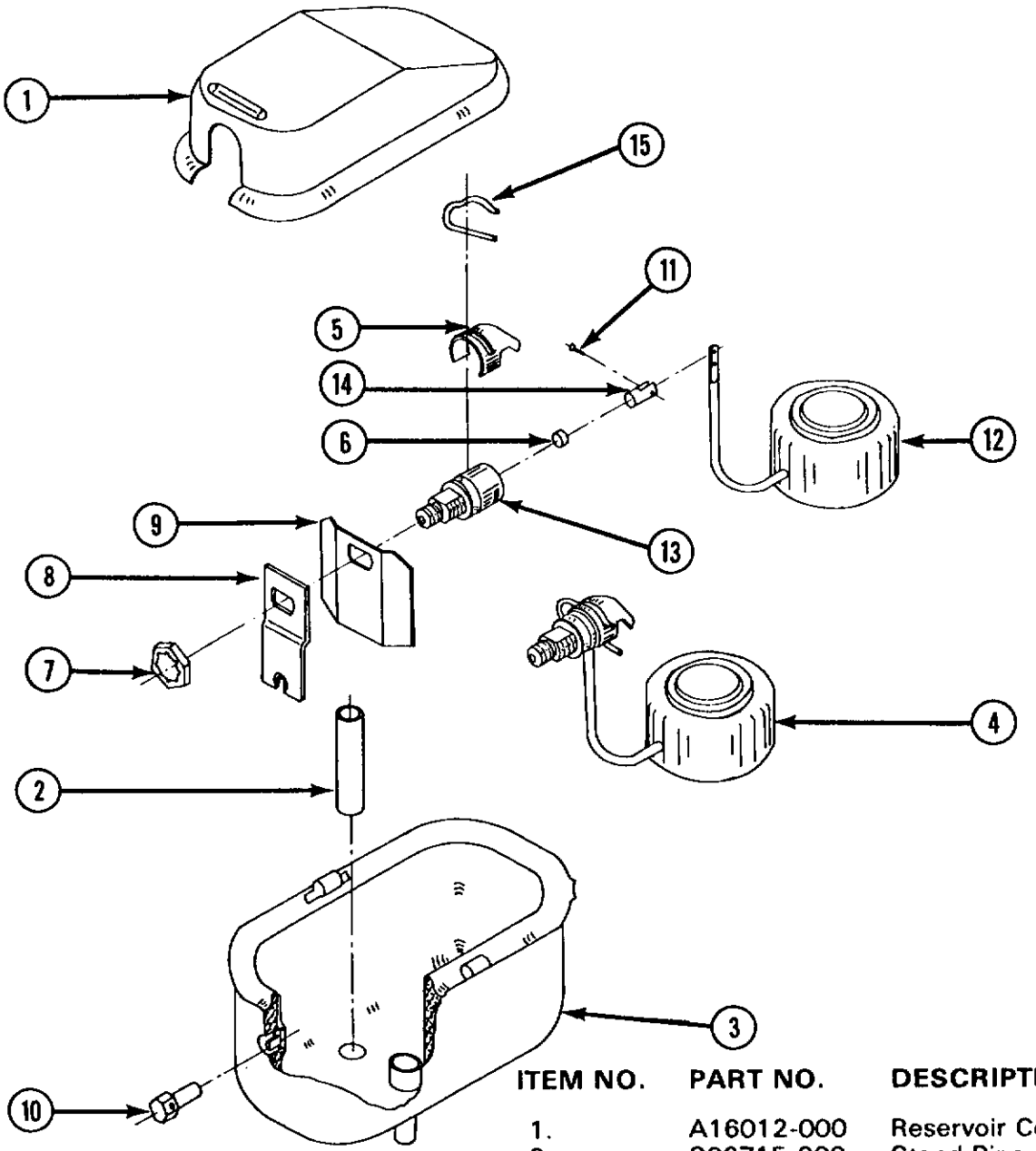

ITEM NO.	PART NO.	DESCRIPTION
1.	A16012-000	Reservoir Cover
2.	S06715-000	Stand Pipe
3.	A23532-001	Reservoir Complete Less Item No: 1 & 2
4.	S08138-000	Valve Complete Includes Items 5, 6, 11, 12, 13, 14 & 15
5.	02-1320-00	Water Deflector
6.	S06947-000	Valve Seat
7.	03-1394-00	Pal Nut
8.	A12869-000	Bracket
9.	A18418-001	Water Deflector
10.	A08055-000	Bracket Nut
11.	03-1001-00	Rivet
*12.		Float
*13.		Inlet Valve
*14.		Valve Seat Holder
15.	02-1259-00	Valve Pin

NOTE: Use of this reservoir was discontinued about mid 1975. Current units use reservoir P.N. 02-2217-01.

***Use Item #4**

CONTROL BOX
Air Cooled

ITEM NO.	PART NO.	DESCRIPTION
1.	A23696-001	Control Box Fab Ass'y
2.	12-1809-00	Transformer
3.	03-1403-04	Screw
4.	12-0419-01	Relay
5.	03-1403-20	Screw
6.	11-0358-00	Pressure Control
7.	03-1403-02	Screw
8.		Grommet
9.	12-0994-00	Socket
10.	03-1406-01	Nut
11.	12-1213-12	Snap Bushing
12.	03-1403-21	Screw
13.	12-1861-01	Terminal Block
14.	12-0537-00	Toggle Switch
15.	03-1403-17	Screw
16.	A24272-001	Relay Sub Ass'y
17.	12-1213-10	Snap Bushing
18.	03-1417-03	Washer
19.	12-1860-01	Terminal Block

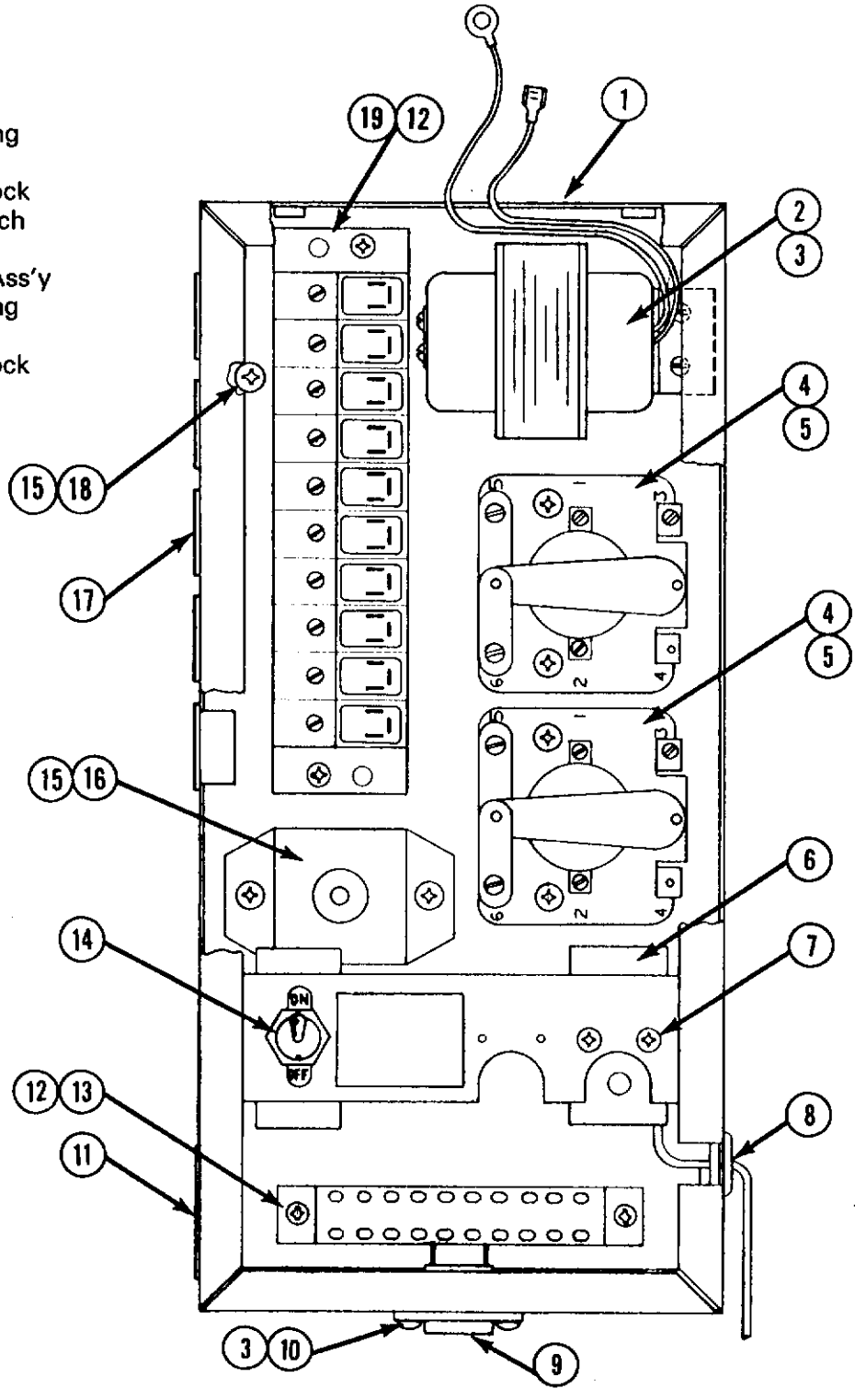

CONTROL BOX
Water Cooled

ITEM NO.	PART NO.	DESCRIPTION
1.	A23696-001	Control Box Fab Ass'y
2.	12-1809-00	Transformer
3.	03-1403-04	Screw
4.	12-0419-01	Relay
5.	03-1403-20	Scre2
6.	11-0358-00	Pressure Control
7.	03-1403-02	Screw
8.	11-0357-02	Pressure Control
9.		Grommet
10.	12-0994;00	Socket
11.	03-1406-01	Nut
12.	12-1213-12	Snap Bushing
13.	03-1403-21	Screw
14.	12-1861-01	Terminal Block
15.	12-0537-00	Toggle Switch
16.	03-1403-17	Screw
17.	A24272-001	Relay Sub Ass'y
18.	12-1213-10	Snap Bushing
19.	03-1417-03	Washer
20.	12-1860-01	Terminal Block

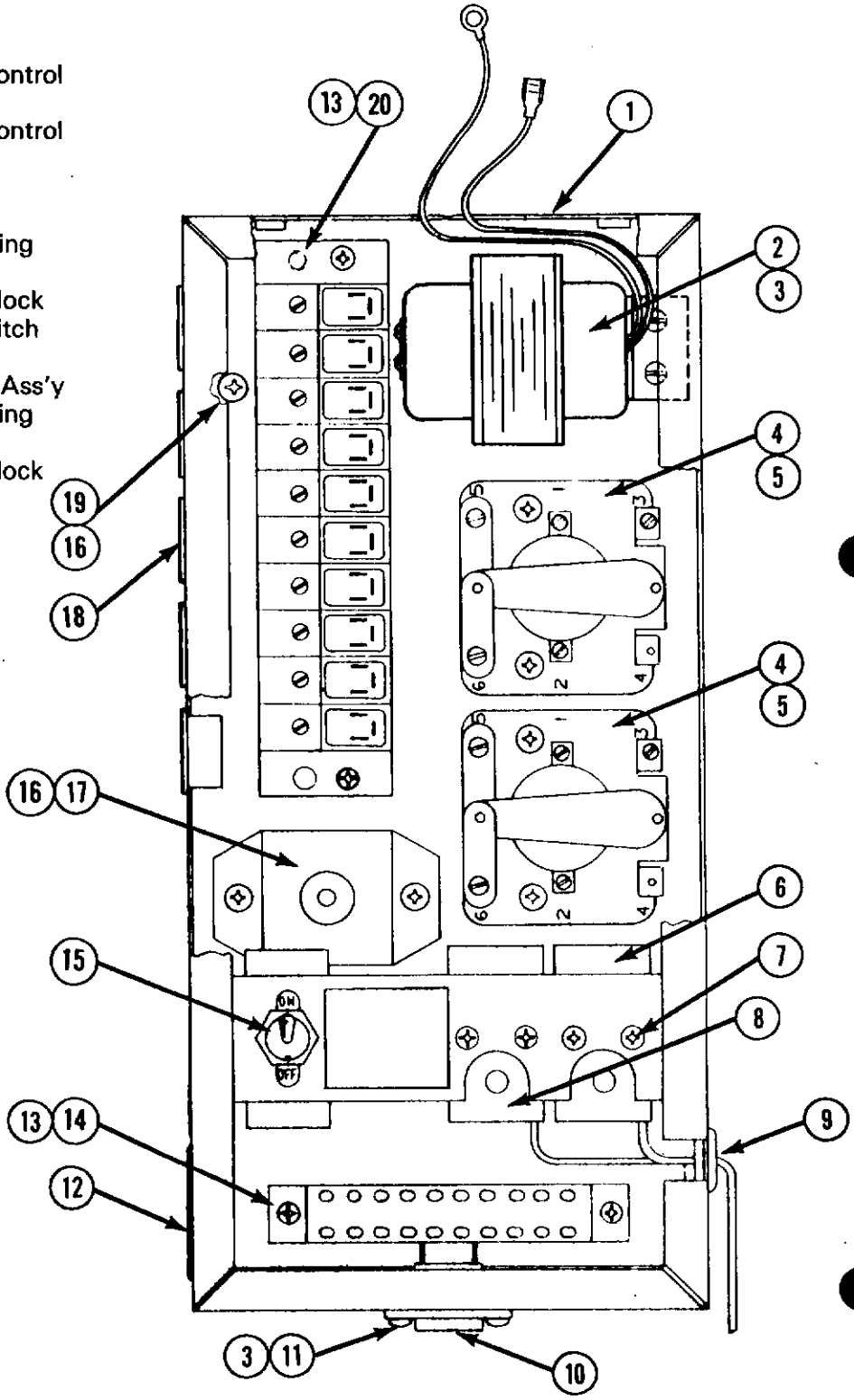

CABINET PARTS

ITEM	PART NO.	DESCRIPTION
1.	03-1404-09	Screw
2.	A24243-001	Hole Plate
3.	03-1403-47	Screw
4.	03-1417-09	Washer
5.	03-1403-17	Screw
6.	02-1471-04	
7.	03-1418-07	Screw
8.	03-1422-06	Speed Nut
9.	03-1418-11	Screw
10.	03-1403-19	Screw
11.	A23572-001	Back Panel, Painted
12.	A23574-001	Top Panel, Painted
13.	A24853-001	Side Panel, Left, Painted
14.	A24837-001	Side Panel, Lower Left, Painted
15.	A23702-001	Front Panel Ass'y, Painted
16.	A23523-001	Door Ass'y Painted
17.	A23575-002	Control Panel, Painted
18.	A24852-001	Side Panel, Right, Painted
19.	A24837-002	Side Panel, Lower Right, Painted
20.	A23572-002	Back Panel, SS
21.	A23574-002	Top Panel, SS
22.	A24853-002	Side Panel, Left,
23.	A24837-003	Side Panel, Lower Left, SS
24.	A23702-002	Front Panel Ass'y,SS
25.	A23523-002	Door Ass'y, SS
26.	A23575-002	Control Panel, SS
27.	A24852-002	Side Panel, Right, SS
28.	A24837-004	Side Panel, Lower Right,SS
29.	A23857-001	Backsplash Assy
30.	02-2021-01	Grill
31.	A24207-001	Sink Fab Ass'y
32.	02-0932-00	Clamp
33.	13-0617-11	"O" Ring
34.	02-1992-01	Plastic Door Liner
35.	02-1741-00	Drain Top
36.	02-1742-00	Drain Bottom
37.	A23704-001	Sink Support
38.	A23704-002	Sink Support
39.	A23969-001	Hinge, Lt. Front Door
40.	A23525-001	Hinge, Rt. Front Door

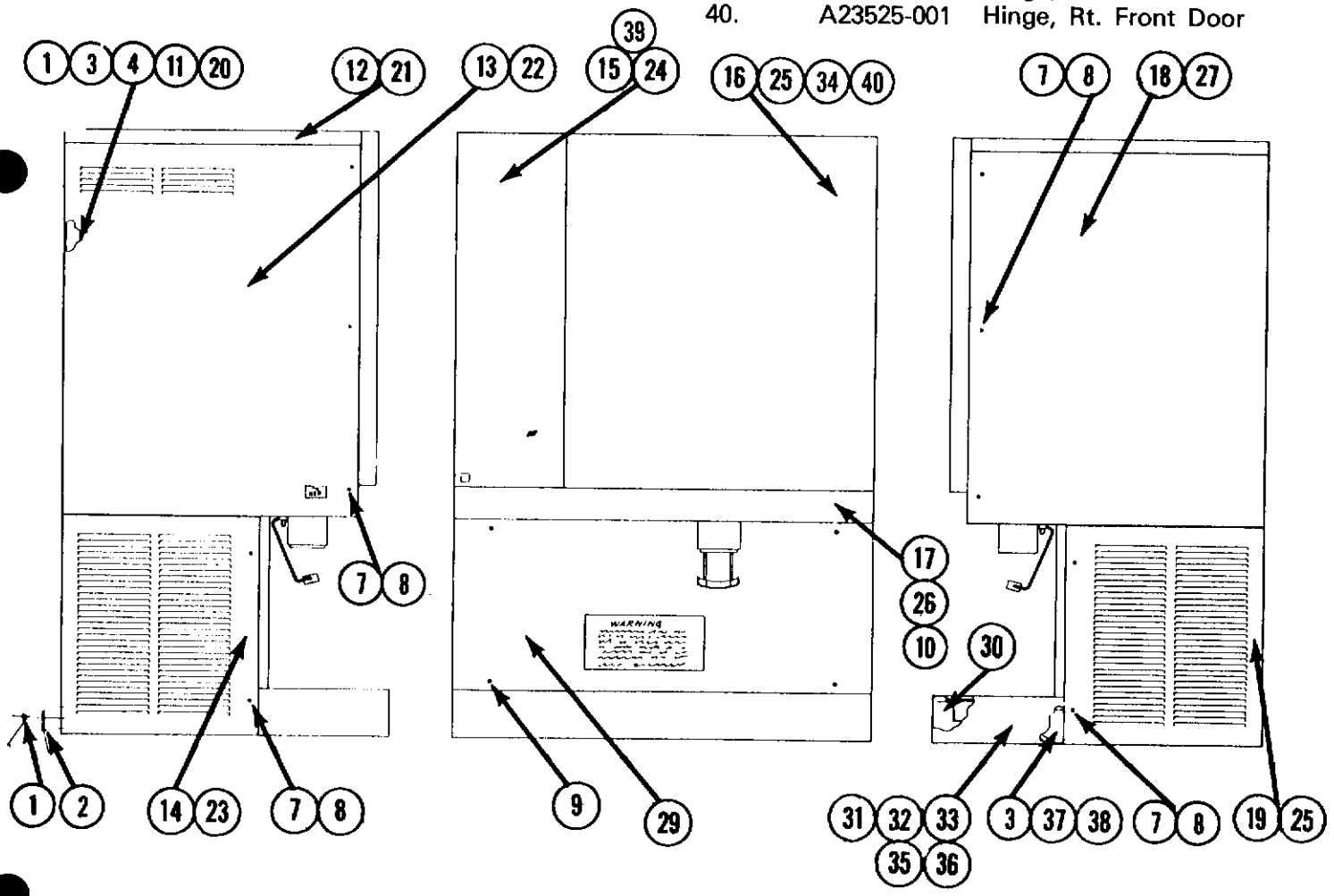

NOTE:
Door Assy. comes complete w/(2) 03-1451-01 Wing Screw & (2) 03-1543-01 Lockwasher.

SHUTTER ACTUATOR ROD ASSEMBLY

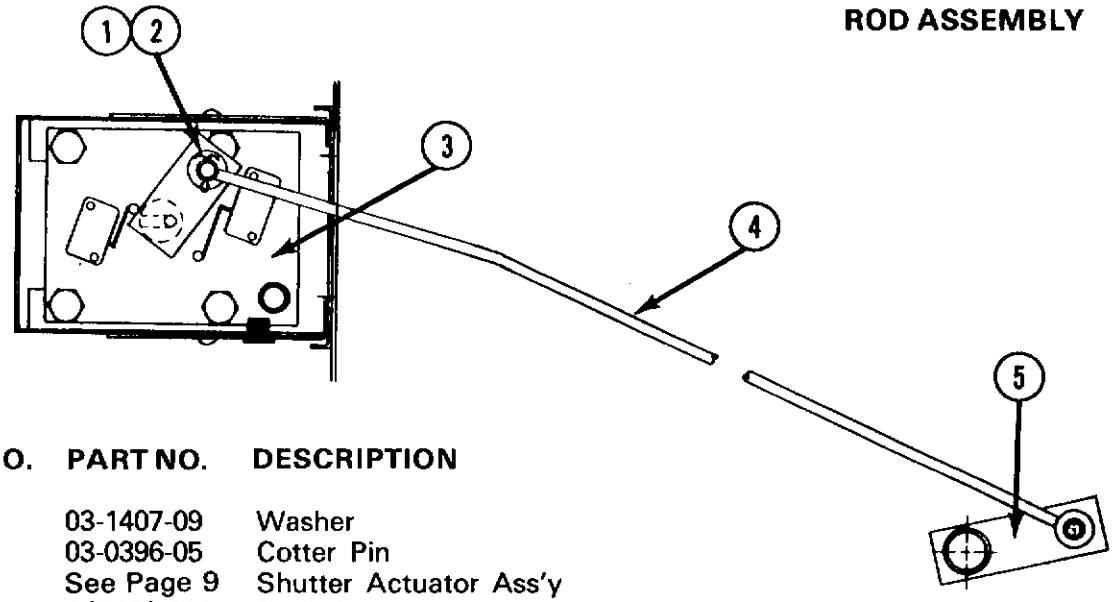

ITEM NO.	PART NO.	DESCRIPTION
1.	03-1407-09	Washer
2.	03-0396-05	Cotter Pin
3.	See Page 9	Shutter Actuator Ass'y
4.	A23692-001	Rod, Actuator
5.	A23740-001	Arm, Actuator
*	A25180-001	Ice Shutter Plate
*	A16835-000	Bearing Nut, Ice Shut Off
*	A16857-000	Pin, Ice Shut Off
*	03-1539-01	E-Ring, Ice Shut Off

*Part Not Shown

BIN FULL SWITCH ASSEMBLY

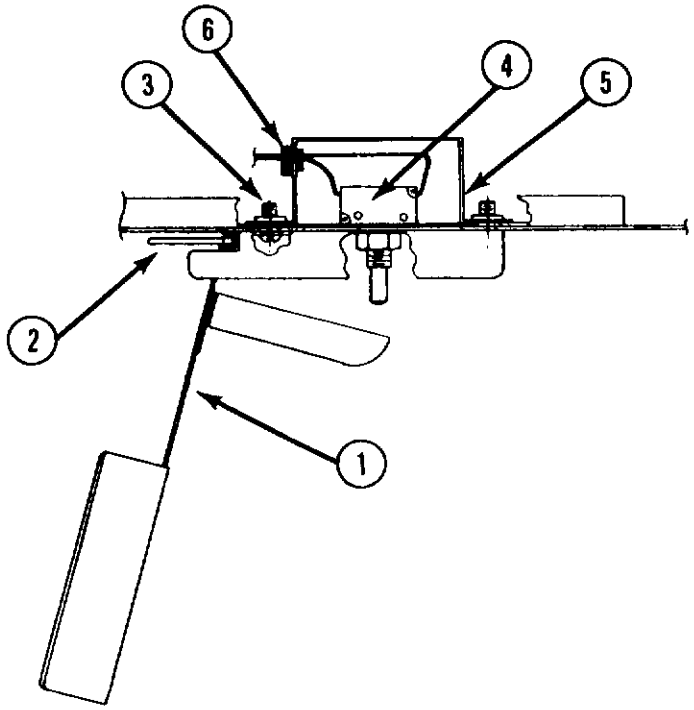

ITEM NO.	PART NO.	DESCRIPTION
1.	A16883-000	Bottom inge Ass'y
2.	A16885-000	Pin, Hinge
3.	03-1403-27	Screw
4.	12-1018-01	Switch
5.	A16880-000	Cover Ass'y
6.	12-0629-03	Snap Bushing

ICE DISCHARGE SPOUT ASSEMBLY

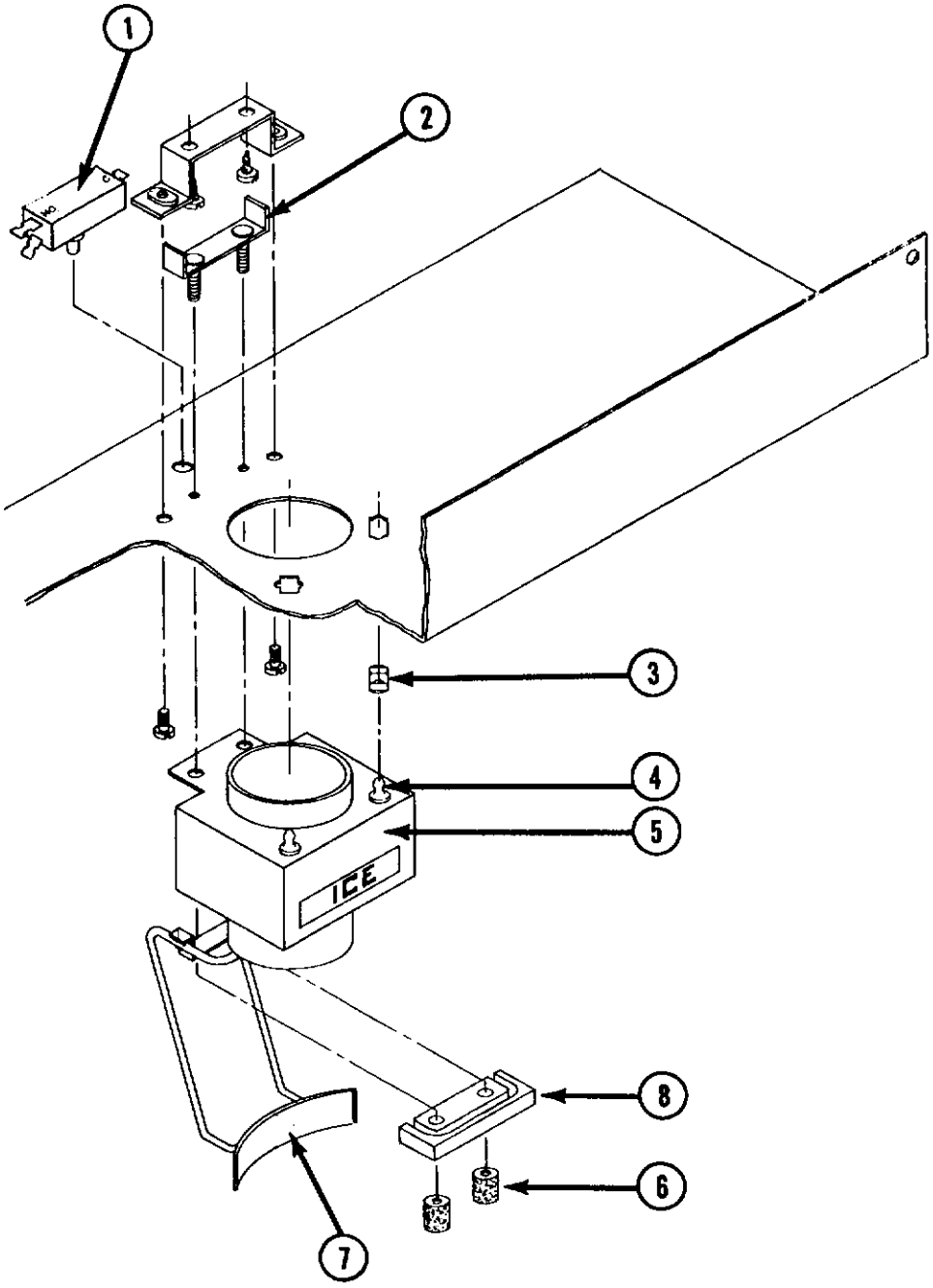

ITEM NO.	PART NO.	DESCRIPTION
1.	12-1570-00	Micro Switch
2.	A24084-001	Bracket Adapter
3.	02-0836-00	Catch, Cabinet
4.	15-0411-00	Strike
5.	A23844-001	Spout Cover
6.	A22031-000	Thumb Nut
7.	02-2090-01	Actuator Arm
8.	A22032-000	Adapter

CABINET — CHASSIS
Rear View

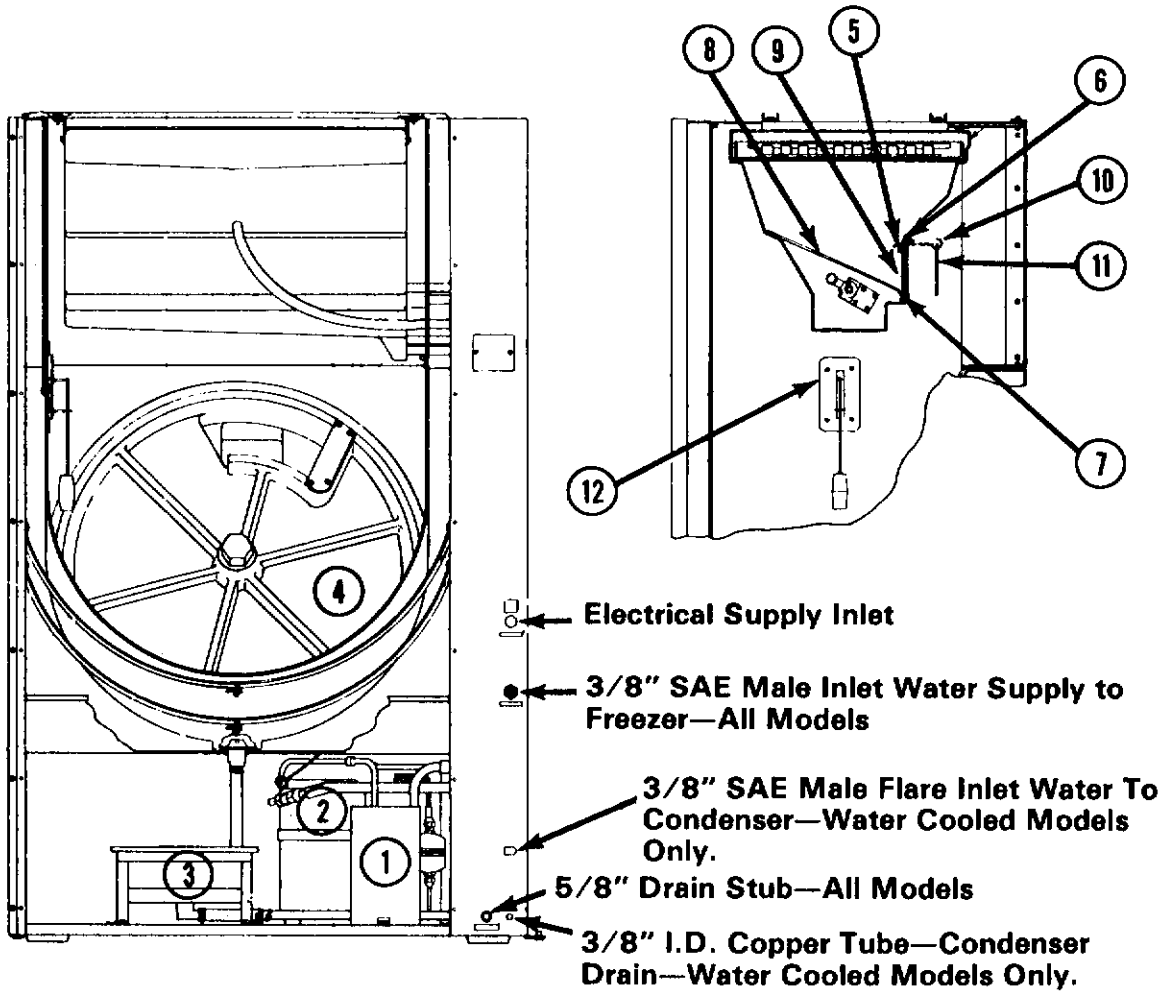

ITEM NO.	PART NO.	DESCRIPTION
1.	A23638-001	Hot Water Tank
2.	See Page 10	Compressor
3.	02-2309-02	Ice Pan
4.	A25368-001	Rotor
5.	A24544-001	Drip Lip
6.	A26661-001	Chamber Stiffener
7.	02-2137-01	Clip,Chute (2)
8.	02-1982-01	cube Chute
9.	A24541-001	Curtain Assembly
10.	02-2136-01	Deflector Hangar
⚠1 11.	02-2207-02	Cube Deflector
⚠1 12.	See Page 8	Ice Level Sensor

⚠1

Note:
See Scotsman service Bulletin's PS-8-76 & PS-17-76 for converting over to an automatic reset bin thermostat.

CHASSIS
AIR COOLED

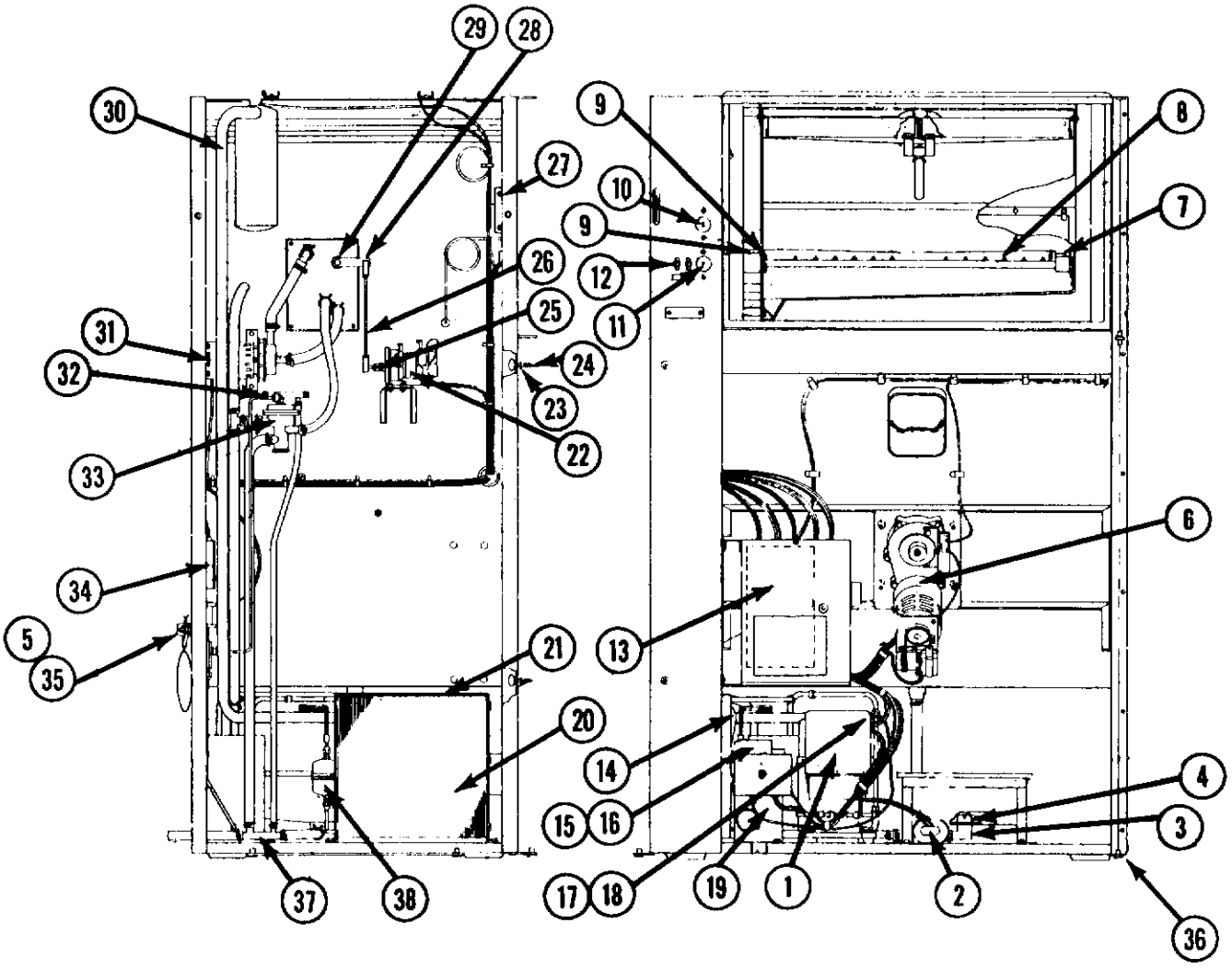

ITEM NO.	PART NO.	DESCRIPTION	ITEM NO.	PART NO.	DESCRIPTION
1.	See Page 10	Compressor	20.	18-3703-01	Air Cooled Condenser
2.	18-1902-17	Run Capacitor	21.	A23825-001	Shroud
3.	02-1742-00	Drain Bottom	22.	A24743-001	Agitator Motor
4.	02-1741-00	Drain Strainer Nut	23.	03-1541-02	Wing Screw
5.	16-0162-01	Water Strainer	24.	03-1543-01	Retaining Washer
6.	See Page 4	Gear Motor	25.	A23694-001	Linkage Arm
7.	A16963-000	End Bearing	26.	A23163-002	Linkage Rod
8.	A23402-001	Spray Bar	27.	02-2092-01	Dual Lock
9.	S07635-000	Nut	28.	A23884-001	Linkage Arm
1 10.	11-0390-01	Manual Re-Set Thermostat	29.	A24600-001	Drive Journal
11.	11-0345-01	Cube Size Thermostat	30.	A23664-001	Suction Line - Accumulator Ass'y
12.	12-0426-01	Toggle Switches	31.	See Page 11	Water Pump
13.	See Page 9	Control Box Assembly	32.	A24490-001	Drip Pan
14.	18-0625-00	Fan Blade	33.	See Page 12	Water Valve
15.	12-1681-01	Fan Motor	34.		Electrical Supply
16.	18-0388-00	Fan Motor Mount	35.	12-1434-01	Inlet Water Solenoid
17.	16-0560-00	Core - Service Port	36.	A25959-001	Hinge, Lower
2 18.	16-0563-00	Cap - Service Port	37.	A24672-001	Double Tee
19.	A24900-051	Fan Control Ass'y	38.	02-0544-00	Refrigerant Drier

Note:

1 **See Scotsman Service Bulletin's PS-8-76 & PS-17-76 for converting over to an Automatic Reset bin thermostat.**

2 **See Scotsman Service Bulletin PS-9-76 for converting to an 11-0365-00 fan control.**

CHASSIS
WATER COOLED

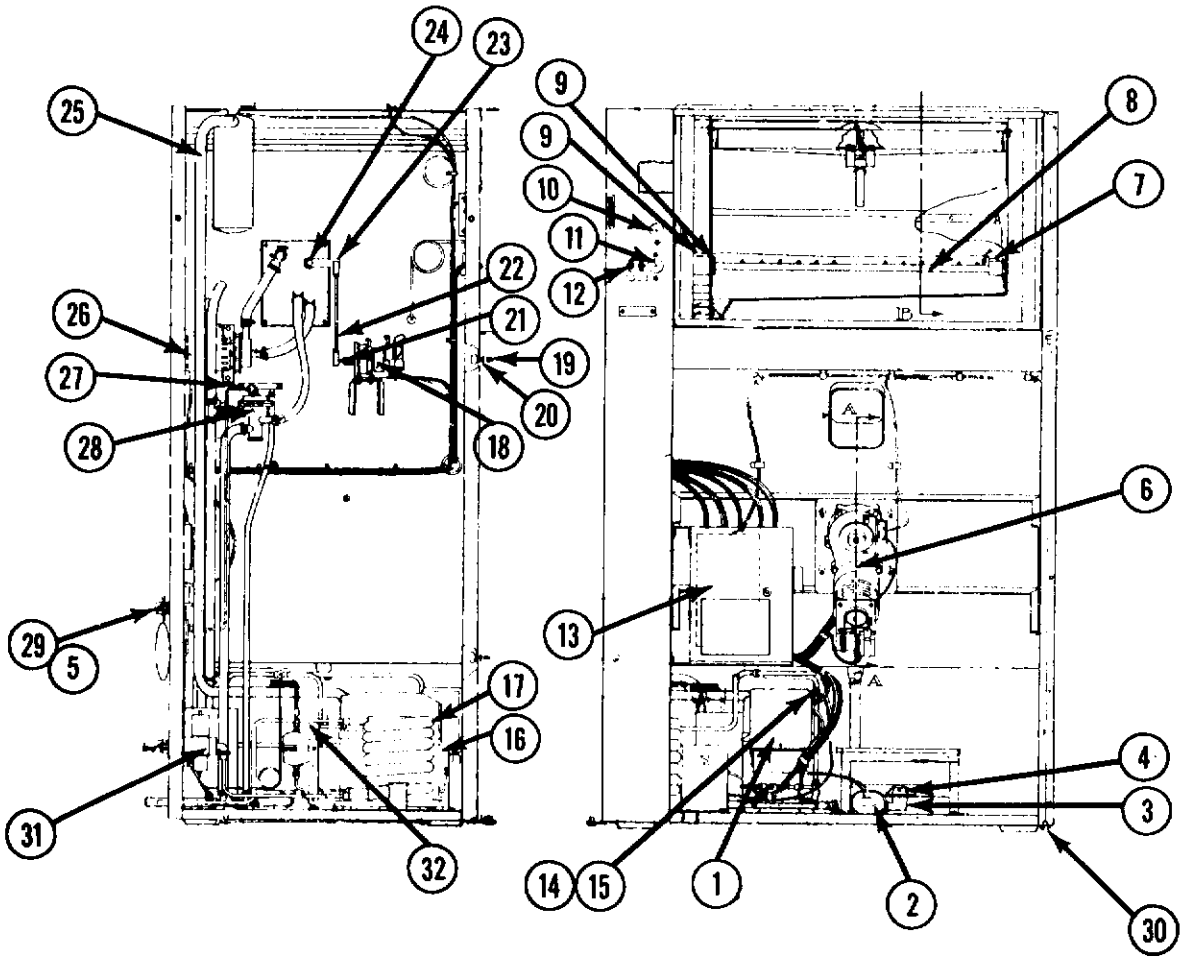

ITEM NO.	PART NO.	DESCRIPTION	ITEM NO.	PART NO.	DESCRIPTION
1.	See Page 10	Compressor	17.	18-3305-01	Water Cooled Condenser
2.	18-1902-17	Run Capacitor	18.	A24743-001	Agitator Motor
3.	02-1742-00	Drain Bottom	19.	03-1541-02	Wing Screw
4.	02-1741-00	Drain Strainer Nut	20.	03-1543-01	Retaining Washer
5.	16-0162-01	Water Strainer	21.	A23694-001	Linkage Arm
6.	See Page 4	Gear Motor	22.	A23163-002	Linkage Rod
7.	A16963-000	End Bearing	23.	A23884-001	Linkage Arm
8.	A23402-001	Spray Bar	24.	A24600-001	Drive Journal
9.	S07635-000	Nut	25.	A23664-001	Suction Line-Accumulator Ass'y
⚠ 10.	11-0390-01	Manual Re-Set Thermostat	26.	See Page 11	Water Pump
11.	11-0345-01	Cube Size Thermostat	27.	A24490-001	Drip Pan
12.	12-0426-01	Toggle Switches	28.	See Page 12	Water Valve, 3-Way
13.	See Page 9	Control Box Assy.	29.	12-1434-01	Inlet Water Solenoid
14.	16-0560-00	Service Port Core	30.	A25959-001	Hinge, Lower
15.	16-0563-00	Service Port Cap	31.	11-0198-00	Water Regulating Valve
16.	11-0357-01	Hi Pressure Control	32.	02-0544-00	Refrigerant Drier

⚠ **NOTE:**

See Scotsman service Bulletin's PS-8-76 & PS-17-76 for converting over to an Automatic Reset Bin Thermostat.

Gear-Motor Drive
115/60/1

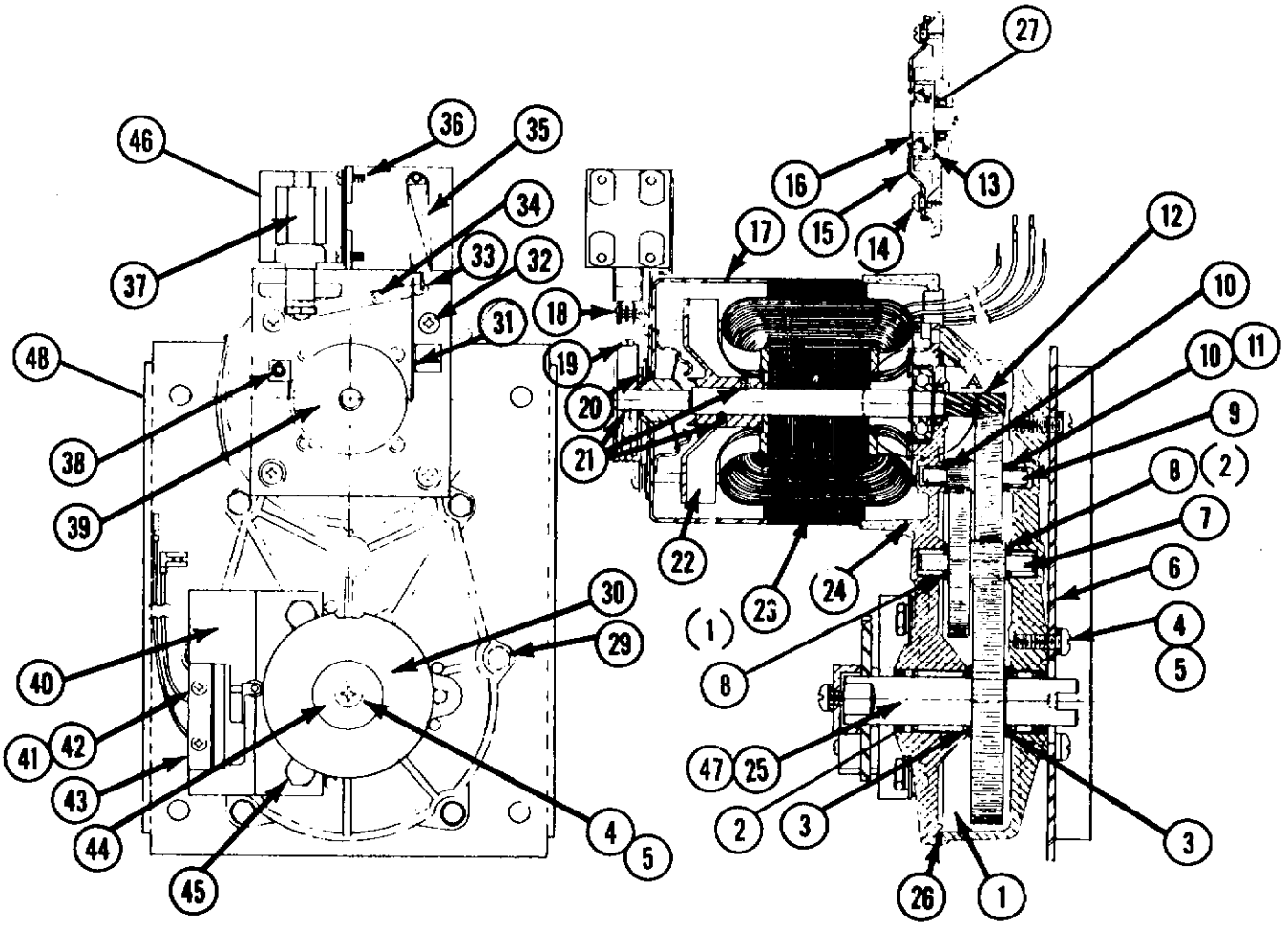

ITEM NO.	PART NO.	DESCRIPTION
⚠1 1.	A26398-021	Gearmotor (Less Items*)
2.	02-1503-00	Oil Seal
3.	03-1408-21	Spacer Washers 2/Unit
4.	03-1405-03	Screw 5/Unit
5.	03-1410-03	Washer 5/Unit
6.	A23418-001	Gear Case Bottom
7.	02-1510-00	Gear & Pinion
8.	03-1408-06	Spacer Washer 3/Unit
9.	02-1511-00	Gear & Pinion
10.	03-1408-19	Washer
11.	03-1408-20	Washer
12.	A19884-003	Rotor Assembly W/Bearing
13.	02-1501-00	Ball Bearing
14.	03-1245-00	Screws 2/Unit
15.	A19871-000	Bearing Retainer
16.	03-1408-08	Spacer Washer
17.	A17047-000	Housing
*18.	03-0396-02	Cotter Key
*19.	03-0617-03	O-Rings 2/Unit
*20.	03-1407-03	Washers
21.	03-1246-00	Set Screws
22.	A16915-000	Cooling Fan
23.	12-2036-01	Stator

ITEM NO.	PART NO.	DESCRIPTION
24.	A16920-021	Gear Case Cover
⚠1 25.	A26411-001	Gear-Output Shaft Kit
26.	02-1505-00	O-Ring
27.	02-1504-00	Grease Seal
28.		
29.	03-1251-00	Flange Screw 6/Unit
30.	A23344-001	Cam
*31.	A24588-001	Brake Band
32.	03-1403-43	Screws 4/Unit
*33.	A24457-001	Linkage Arm
*34.	03-1403-01	Screw
*35.	02-2091-01	Spring
*36.	03-1403-04	Screws 4/Unit
*37.	12-0627-01	Solenoid
*38.	03-1539-07	Retaining Ring
*39.	A24456-001	Brake Wheel
*40.	A24459-001	Bracket - Cam
*41.	03-1403-09	Screws
*42.	03-0886-00	Twin Speed Nut
*43.	12-0876-00	Switch
*44.	A24458-001	Cam Cover
*45.	03-1405-15	Screws 2/Unit
46.	A24464-001	Brake Braket
47.	03-1475-01	Key
48.	A23336-001	Adapter Plate

⚠1 If unit has been converted to spline drive see parts list for CD20.

GEARMOTOR ROTOR DRIVE

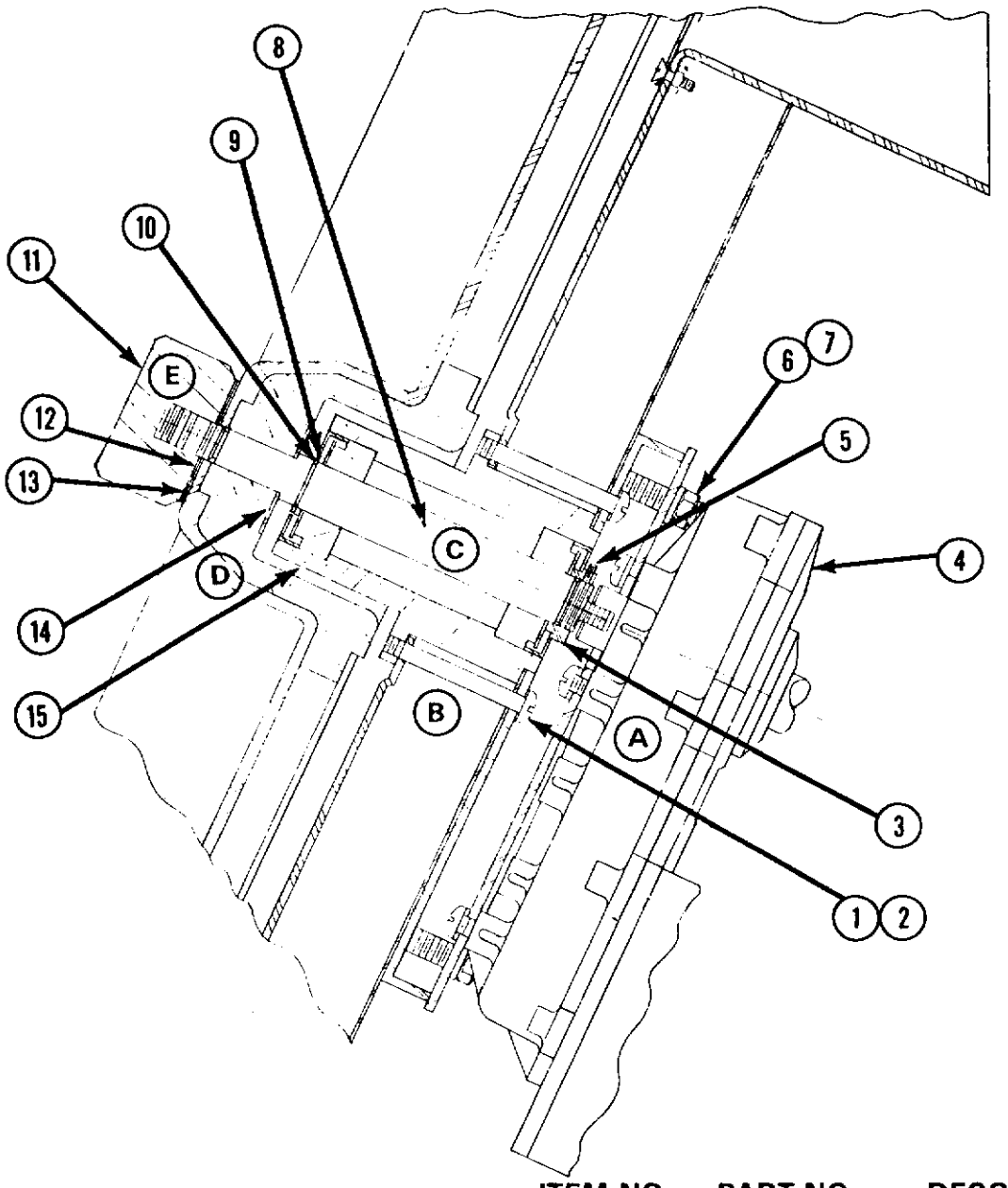

A. Gearmotor Drive
B. Stationary Front Panel
C. Drive Shaft
D. Movable Ice Rotor
E. Rotor Lock Nut

NOTES:

⚠1 If unit has been converted to spline drive see parts list for CD20.

ITEM NO.	PART NO.	DESCRIPTION
1.	03-1403-72	Screws 6/Unit
2.	03-1417-08	Lockwashers
3.	A23686-001	Retainer Nut
4.	See Page 4	Gear Motor
5.	03-0431-07	Set Screw
6.	03-1410-05	Lockwasher
7.	03-1406-12	Nuts
⚠1 8.	A26411-001	Rotor Drive Shaft Kit
9.	03-1408-27	Special Washer
10.	03-1516-01	Retainer Ring
11.	A23408-001	Rotor Lock Nut
12.	03-1408-26	Special Washer
13.	03-1409-16	Non-Metallic Washer
14.	A23685-001	Support Washer
15.	See Item 8 & ⚠1	Support Housing

LOWER FRONT DOOR
Front & Side Views

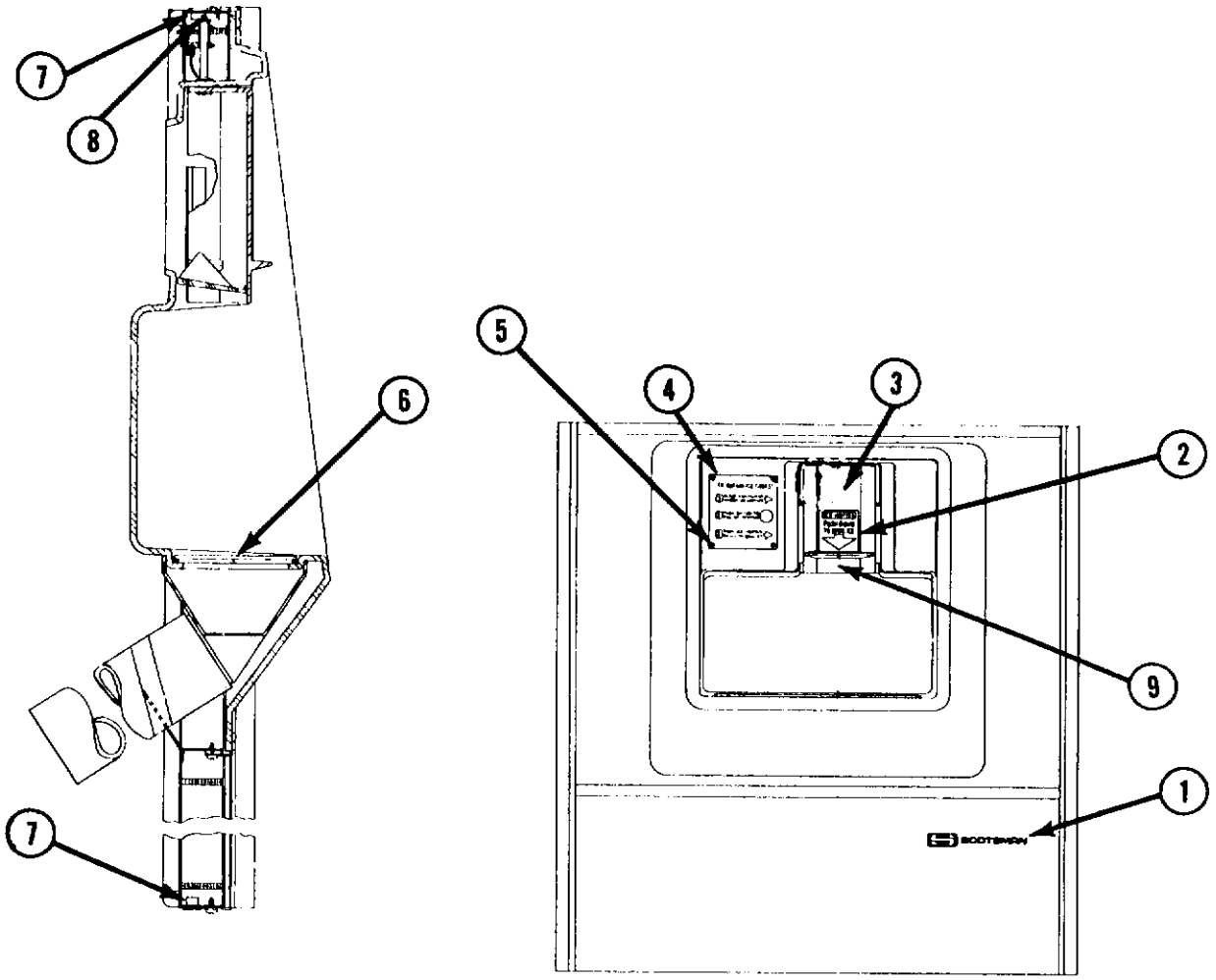

ITEM NO.	PART NO.	DESCRIPTION
1.	15-0156-00	Emblem
2.	15-0583-01	Decal — Ice Chute
3.	02-1994-01	Hood For Ice Chute
4.	02-2115-01	Instruction Plate
5.	03-1418-03	Screw 4/Unit
6.	02-1998-01	Grille
7.	02-2012-01	Bushings 2/Door
8.	03-1539-03	Retainer Ring
9.	02-1995-01	Flap-Closure

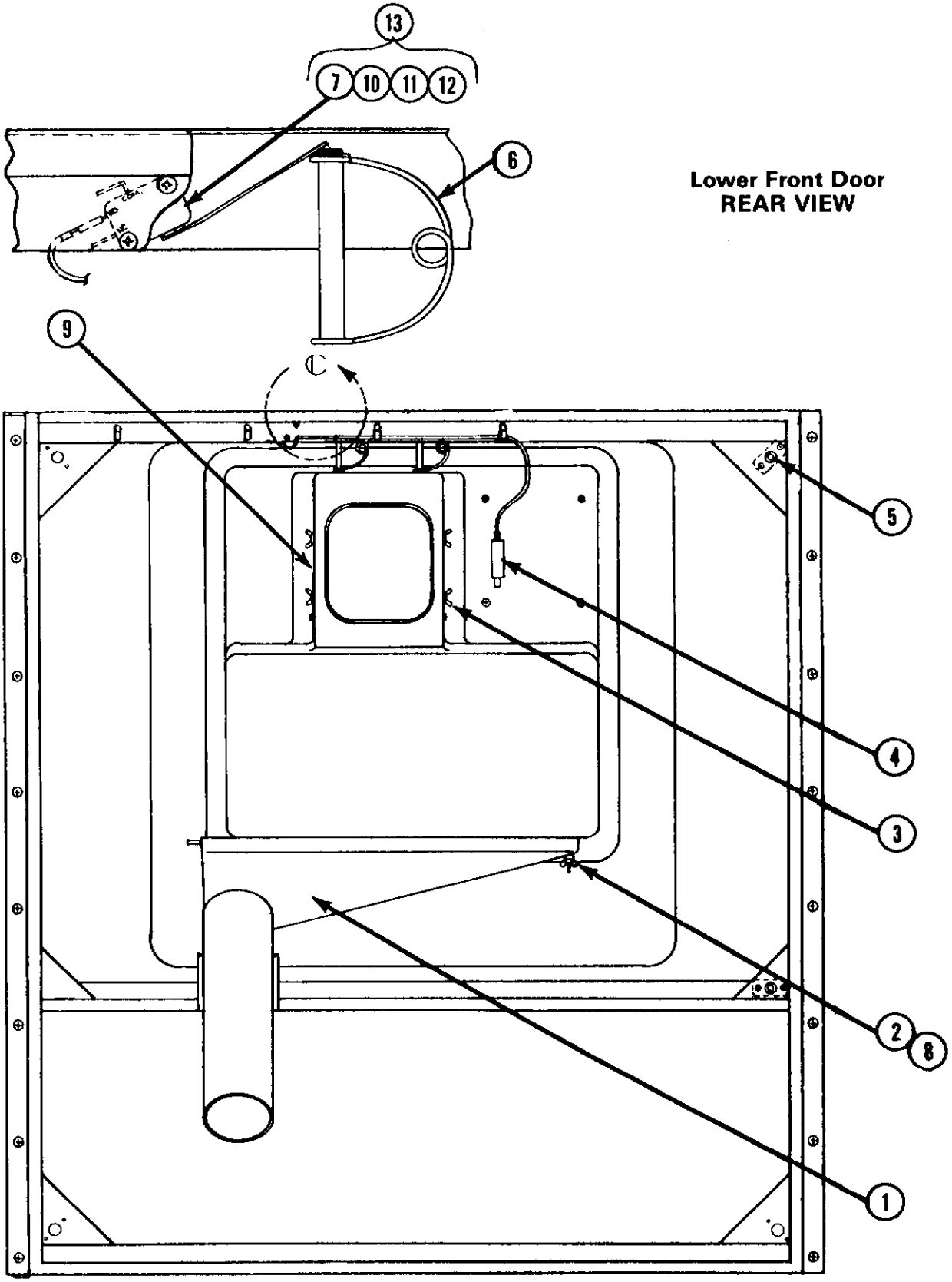

Lower Front Door
REAR VIEW

ITEM NO.	PART NO.	DESCRIPTION
1.	A24523-001	Drain Tray Ass'y
2.	03-0255-02	Wing Nuts
3.	03-1279-01	Wing Nuts
4.	12-1878-01	Push Button Switch
5.	03-1542-01	Retainer — Nut
6.	02-2097-01	Torsion Spring
7.	A25545-001	Safety Switch
8.	A24655-001	Spacer
9.	A25065-001	Door Track (2)
10.	A24051-005	Switch Spacer (2)
11.	03-1406-14	Nut (2)
12.	03-1403-63	Screw (2)
13.	A26095-001	Kit, Includes #7, #10, #11, #12

NOTE: Item 6-7 are safety items whereby no one can operate this dispensing unit until the plastic cube chute is fully closed in uppermost position.

A24967-001
ICE LEVEL SENSOR

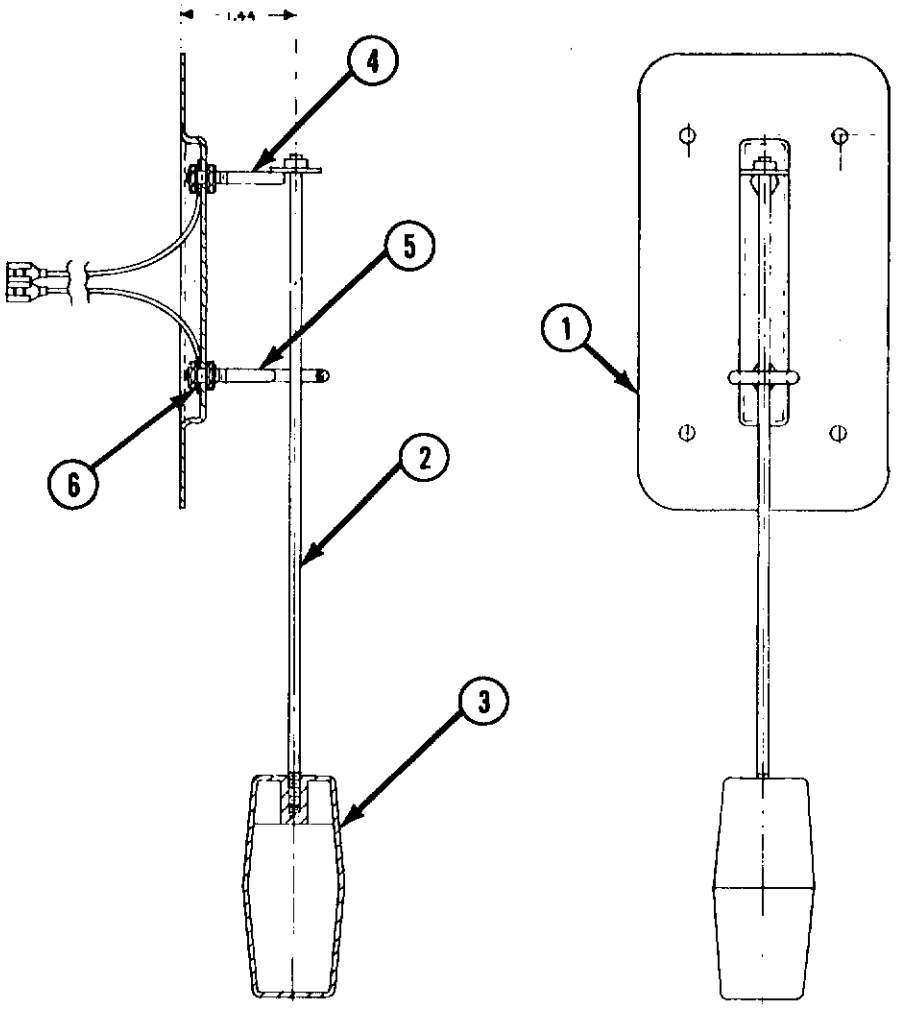

ITEM NO.	PART NO.	DESCRIPTION
1.	02-2159-01	Plate
2.	A25322-002	Rod
3.	02-2161-01	Float
4.	A25320-001	Top Rod
5.	A25318-001	Bottom Eye Rod
6.	03-1406-02	Nut

Note:
See Scotsman Service Bullletin's PS-8-76 & PS-17-76 for converting over to an automatic reset bin thermostat.

CONTROL BOX ASSEMBLY
Common To:
Air Cooled & Water Cooled

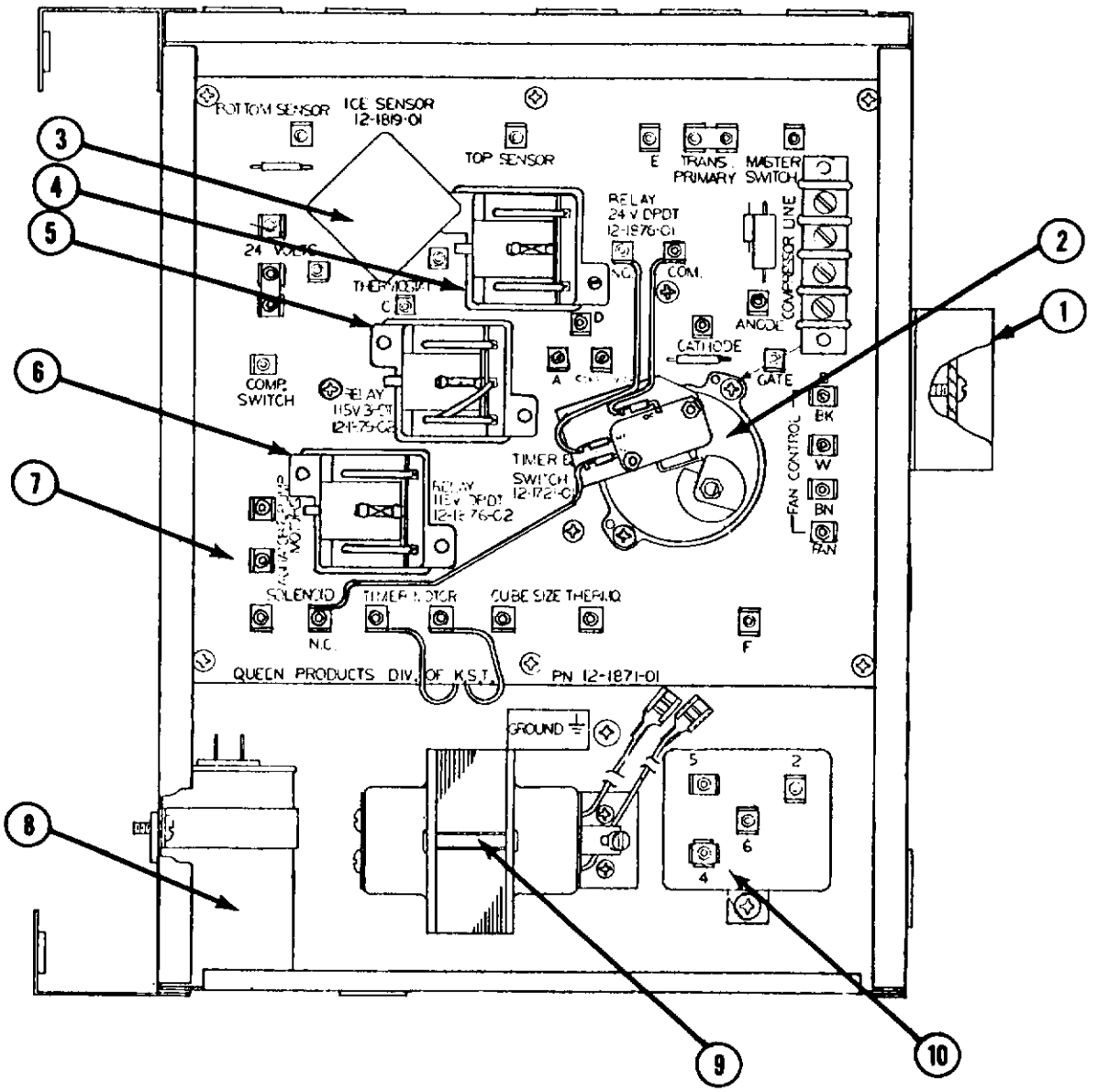

ITEM NO.	PART NO.	DESCRIPTION
1.	A26045-001	Triac W/Wires
2.	A25923-001	Timer
3.	12-1986-01	Ice Level Control
4.	12-1876-01	Relay
5.	12-1879-02	Relay
6.	12-1876-02	Relay
7.	12-1871-01	Circuit Board
8.	18-3701-01	Run Capacitor
9.	12-1809-00	Transformer
10.	12-1873-01	Relay

MOTOR COMPRESSOR
Air and Water
115/60/1 3500 RPM

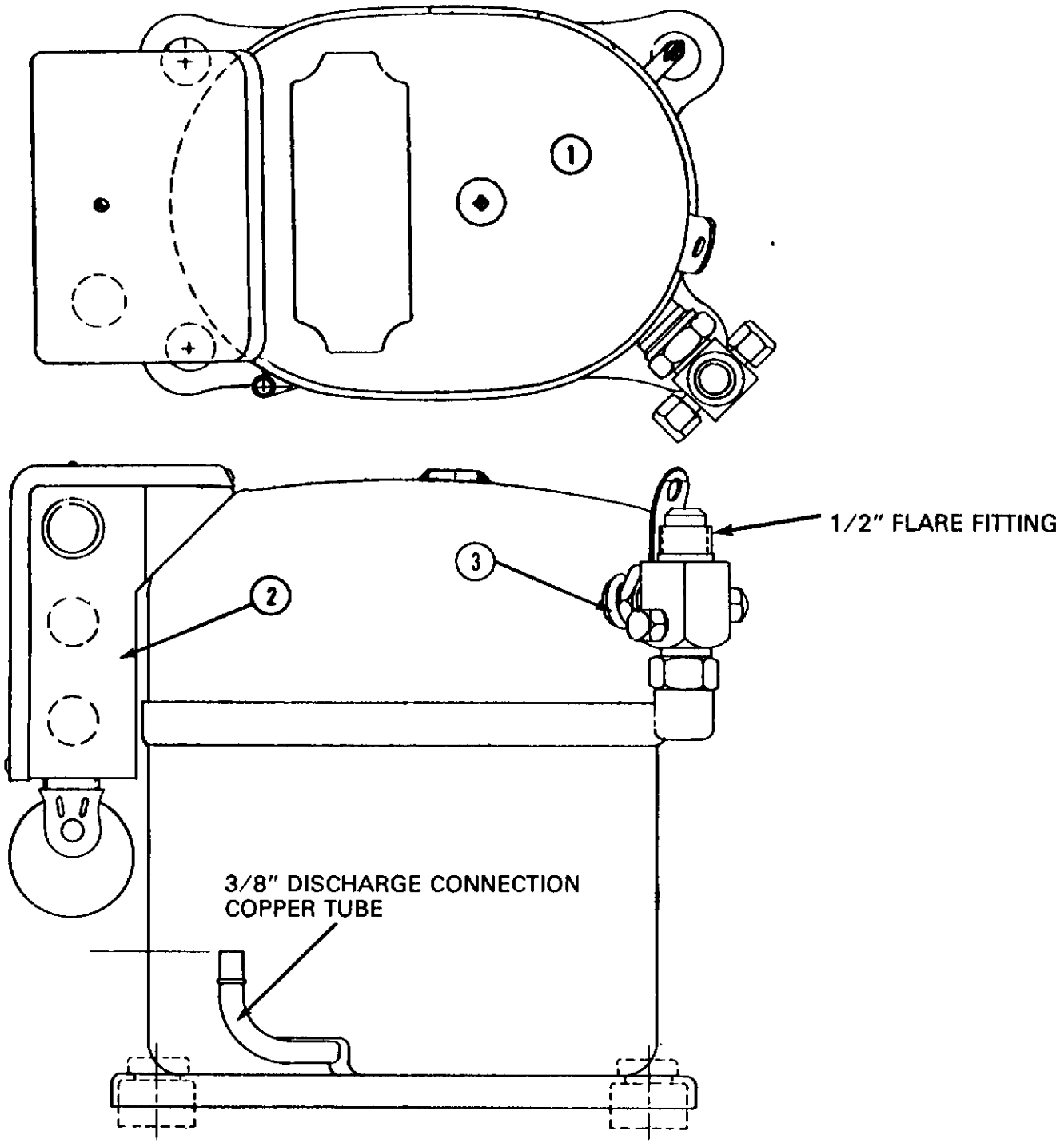

ITEM NO.	PART NO.	DESCRIPTION
1.	18-2400-01	Compressor Only Copelaweld Model RSL2-0075-1AA
2.	18-2400-25	Compressor Overload Cope. No. 071-0127-06
	18-2410-00	Relay, Start Cope No. 040-0098-01
	18-2420-00	Capacitor - Start Cope. No. 014-0008-69
3.	18-2201-30	Suction Valve

WATER PUMP
115/60/1
12-1869-01

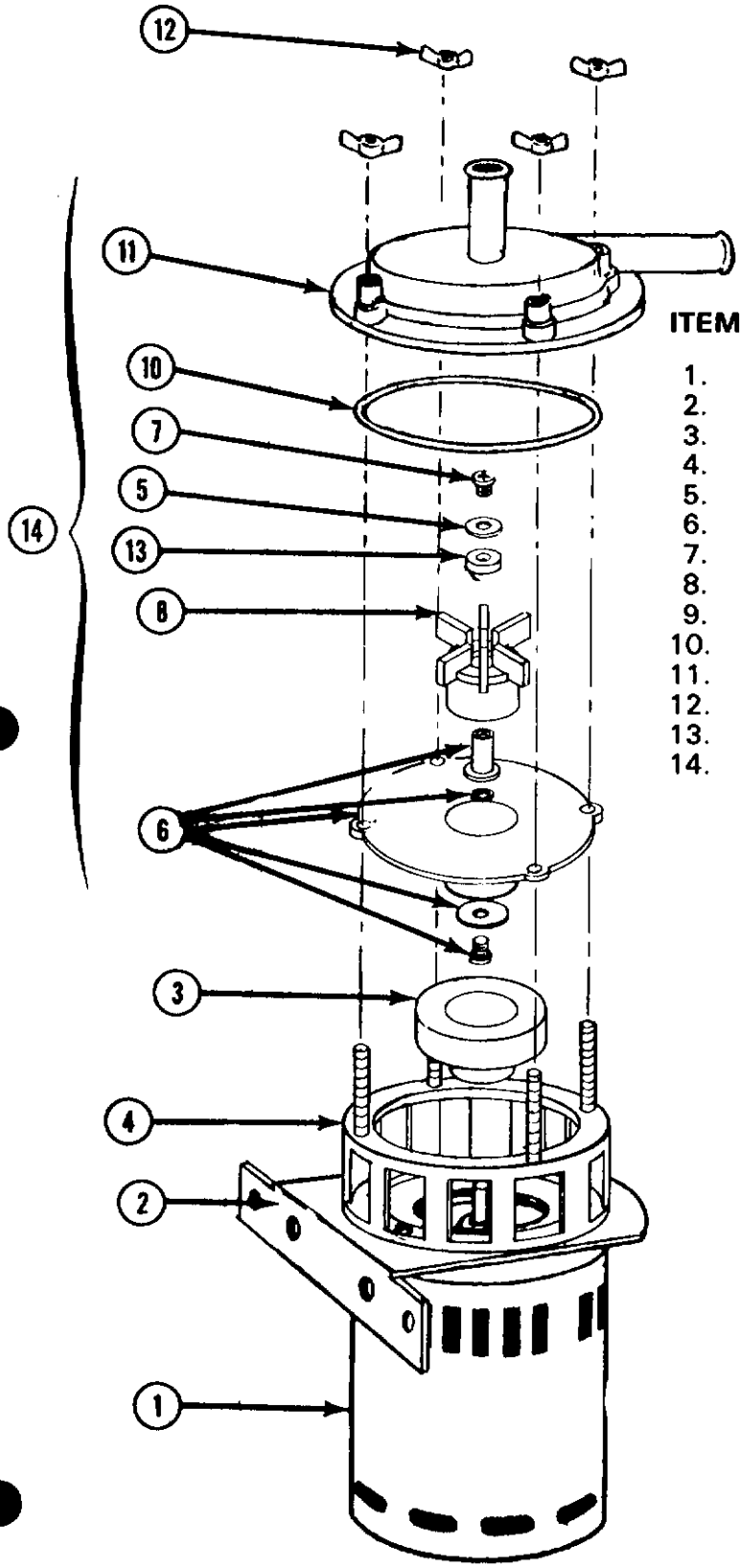

ITEM NO.	PART NO.	DESCRIPTION
1.		Motor (115/50-60/1)
2.		Mounting Bracket
3.		Drive Magnet Assy.
4.		Motor Brkt & Screws A.
5.		Washer
6.		Housing & Shaft A.
7.		Screw
8.		Impeller & Magnet A.
9.		
10.		O-Ring Seal
11.		Pump Housing
12.		Wing Nuts
13.		Washer
14.	12-1869-65	Pump Repair Kit Includes items: 5, 6, 7, 8,10, 11, & 13

Important Note:
This pump is a Magnetic Drive and uses no water seals. As such it is susceptable to burn outs if run without water over 30 seconds.

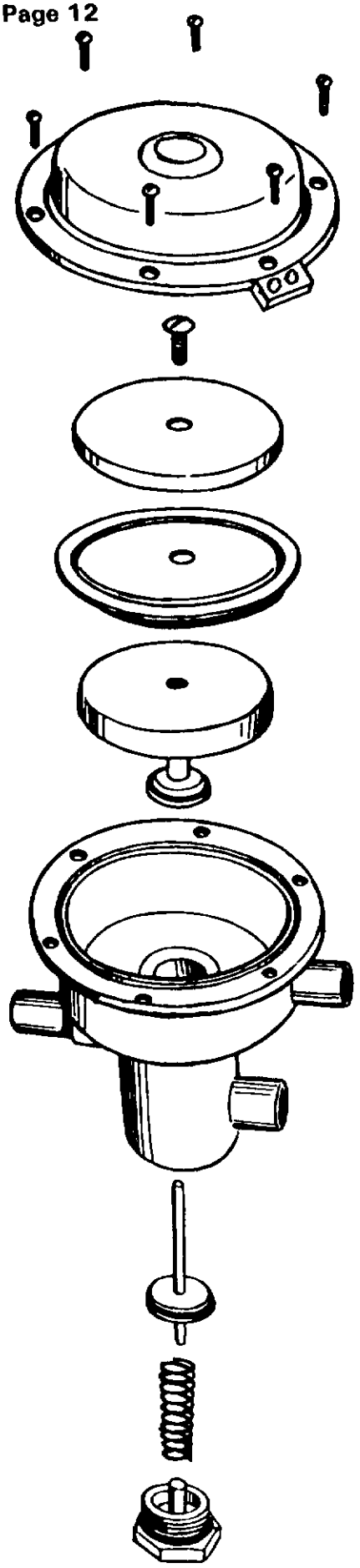

A19722-000
WATER VALVE ASSEMBLY

ITEM NO.	PART NO.	DESCRIPTION
1.	13-0617-02	O-Ring
2.	A17937-000	Valve Cap Bottom
3.	02-1545-00	Spring
4.	13-0617-01	O-Ring
5.	A17942-000	Lower Pluger Rod
6.	03-1403-06	Screws (6)
7.	A18192-000	Valve Top Cover
8.	03-1506-01	Screw
9.	A17941-000	Upper Plunger
10.	13-0606-00	Upper Diaphragm
11.	A18312-000	Diaphragm Cover
12.	A17947-000	Valve Body

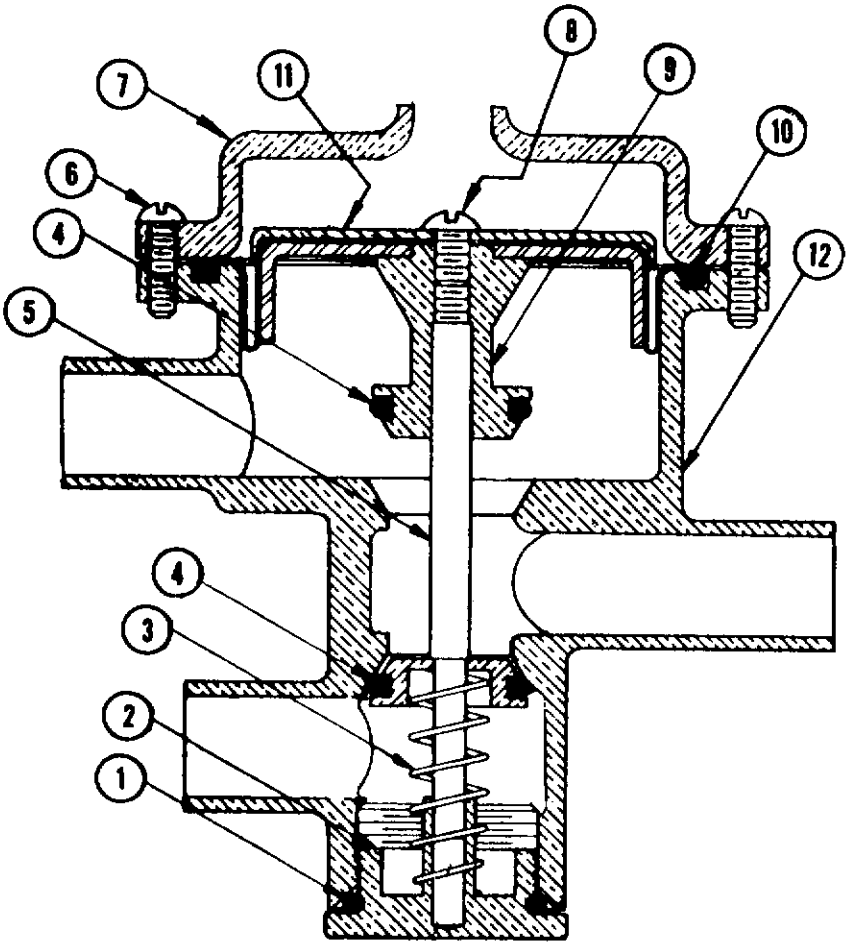

CHASSIS
Air Cooled

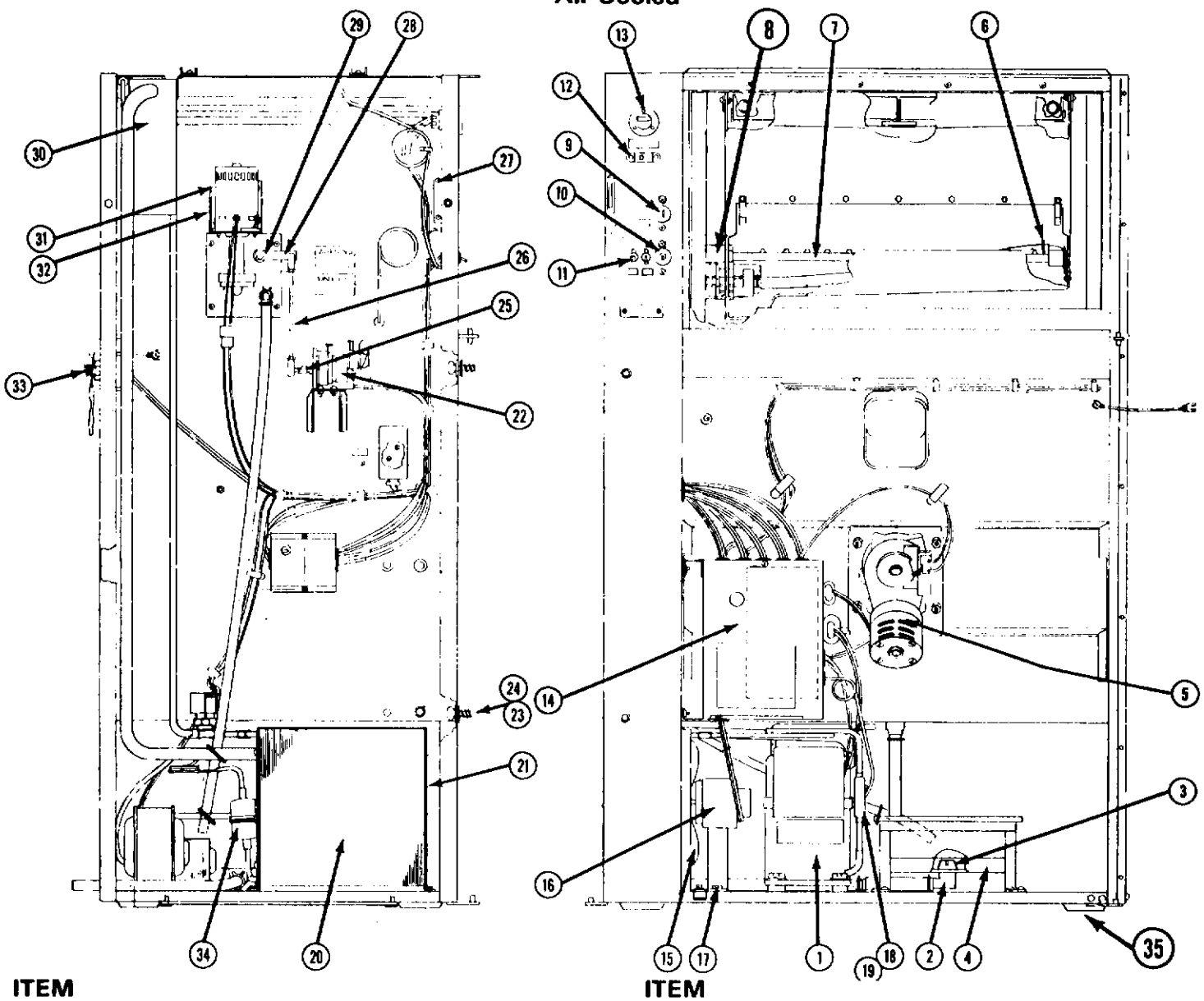

ITEM NO.	PART NO.	DESCRIPTION
1.	See Page 8	Compressor
2.	02-1742-00	Drain Bottom
3.	02-1741-00	Drain Stainer Nut
4.	02-2309-02	Drain Pan
5.	See Page 5 & 6	Gear Motor
6.	A16963-000	End Bearing
7.	A27288-001	Spray Bar
8.	A24512-001	Drive Bearing Support
9.	11-0399-01	Bin Thermostat
10.	11-0345-01	Cube Size Control
11.	12-0426-01	Toggle Switch (2)
12.	12-2054-01	Switch
13.	12-1993-01	Elapse Time Indicator
14.	See Page 9	Control Box
15.	18-0625-00	Fan Blade
16.	12-1681-01	Fan Motor
17.	A25548-001	Fan Motor Mount

ITEM NO.	PART NO.	DESCRIPTION
18.	16-0560-00	Core — Service Port
19.	16-0563-00	Cap — Service Port
20.	18-3703-01	Air Cooled Condenser
21.	A23825-001	Shroud
22.	A24743-001	Agitator Motor
23.	03-1541-02	Wing Screw
24.	03-1543-01	Retaining Washer
25.	A23694-001	Linkage Arm
26.	A23163-002	Linkage Rod
27.	02-2092-01	Dual Lock
28.	A23884-001	Linkage Arm Spray Bar
29.	A27286-001	Drive Journal
30.	A26193-001	Suction - Accum. Assy.
31.	See Page 8	Water Pump
32.	A26218-001	Pump Bracket
33.	12-1434-01	Inlet Water Solenoid
34.	02-0544-01	Refrigerant Drier
35.	A25959-001	Replacement Hinge
36.		

CHASSIS
Water Cooled

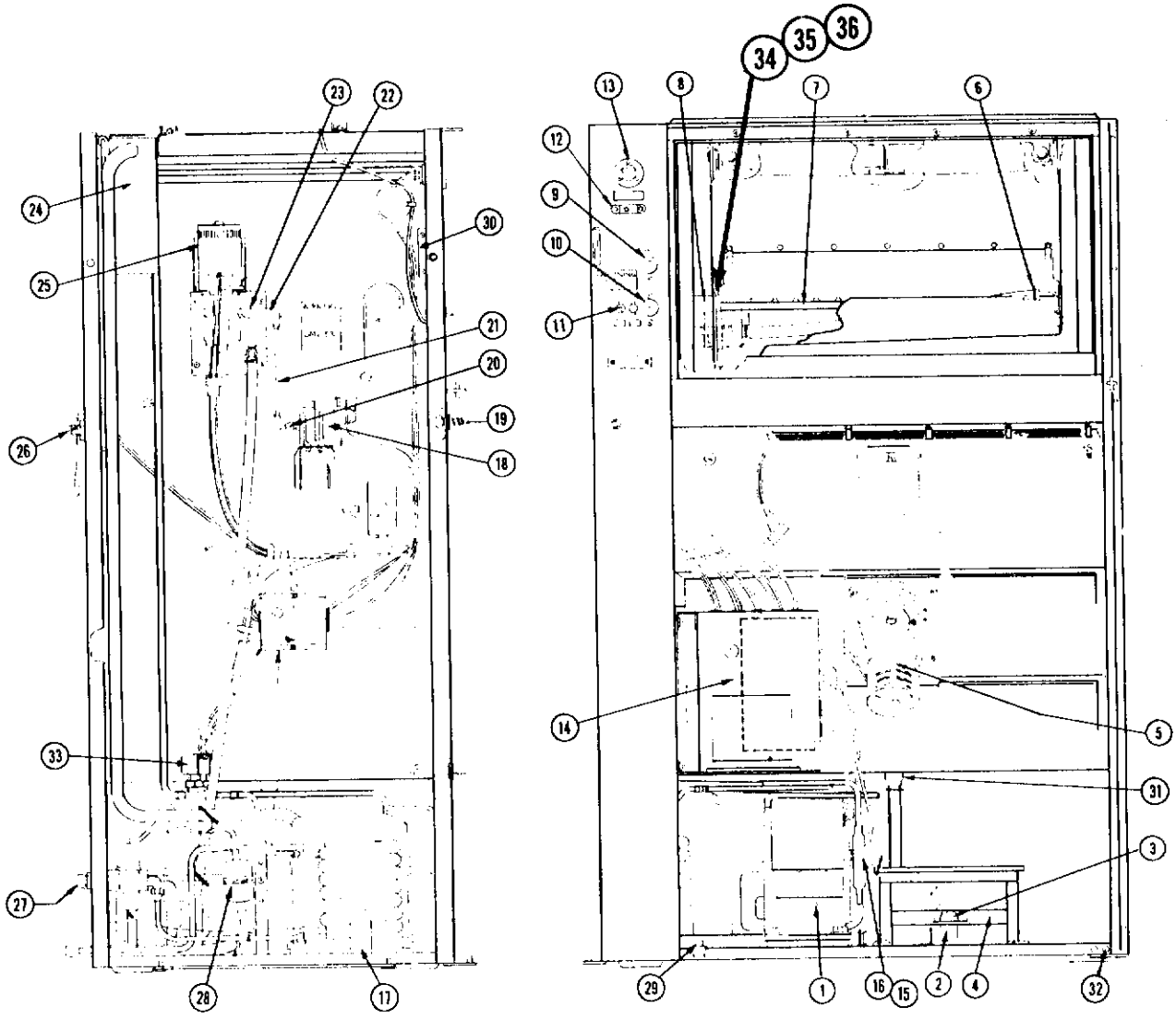

ITEM NO.	PART NO.	DESCRIPTION
1.	See Page 8	Compressor
2.	02-1742-00	Drain Bottom
3.	02-1741-00	Drain Strainer Nut
4.	02-2309-02	Drain Pan
5.	See Page 5 & 6	Gear Motor
6.	A16963-000	End Bearing
7.	A27288-001	Spray Bar
8.	A24512-001	Drive Bearing Support
9.	11-0399-01	Bin Thermostat
10.	11-0345-01	Cube Size Control
11.	12-0426-01	Toggle Switches (2)
12.	12-2054-01	Switch
13.	12-1993-01	Elapse Time Indicator
14.	See Page 10	Control Box Assy.
15.	16-0560-00	Valve Core
16.	16-0563-00	Brass Cap
17.	18-3305-02	Water Cooled Condenser
18.	A24743-001	Agitator Motor
19.	03-1541-02	Wing Screw
20.	A23694-001	Linkage Arm
21.	A23163-002	Linkage Rod
22.	A23884-001	Linkage Arm Spray Bar
23.	A27286-001	Drive Journal
24.	A26193-001	Suction Accum. Assy.
25.	See Page 8	Water Pump
26.	12-1434-01	Inlet Water Solenoid
27.	11-0198-02	Water Regulating Valve
28.	02-0544-01	Refrigerant Drier
29.	A25549-001	Door Support
30.	02-2092-01	Dual Lock
31.	A24584-001	Bin Drain
32.	A25959-001	Bracket—Door
33.	12-2023-03	Hot Gas Valve
34.	03-1408-34	Washer
35.	03-1539-11	Retaining Ring
36.	03-1580-01	Pin

CABINET CHASSIS
Rear View

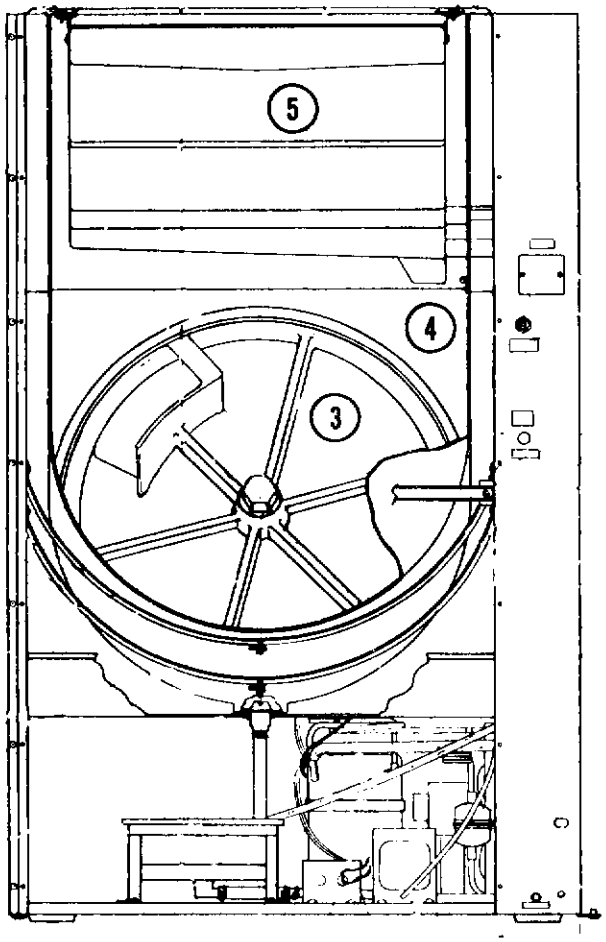

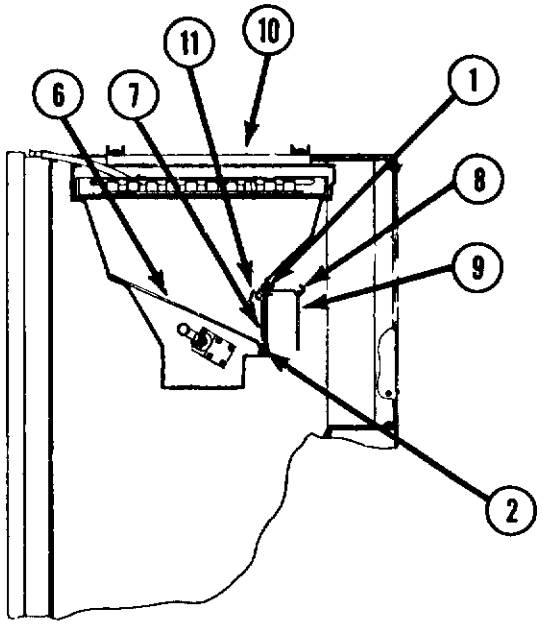

ITEM NO.	PART NO.	DESCRIPTION
1.	A26661-001	Chamber Stiffener
2.	02-2137-01	Clip, Chute (2)
3.	A25368-001	Rotor Assy.
4.	02-2207-01	Bin
5.	02-2309-01	Freezing Chamber
6.	02-1982-01	Cube Chute
7.	A24541-001	Curtain Assy.
8.	02-2136-01	Deflector Hangar
9.	02-2207-02	Cube Deflector
10.	A23661-001 (2)	Rubber Platen & Cup Assy.
	13-0638-00	Rubber Cup Holder (2)
11.	A24544-001	Hanger-Drip Lip

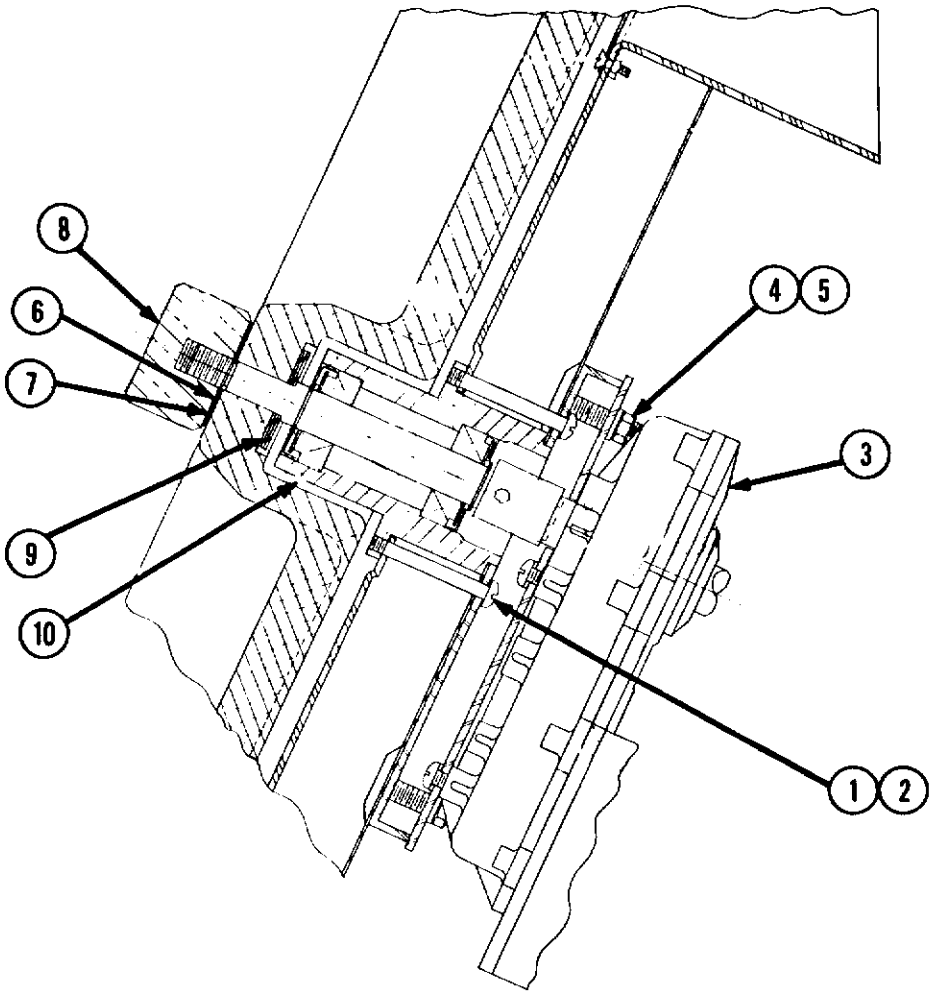

ITEM NO.	PART NO.	DESCRIPTION
1.	03-1403-72	Screws 6/Unit
2.	03-1417-08	Lockwasher 6/Unit
3.	See page 5 & 6	Gear Motor
4.	03-1410-05	Lockwasher
5.	03-1406-12	Nuts
6.	03-1408-26	Special Washer
7.	03-1409-16	Non-Metalic Washer
8.	A23408-001	Cap Nut
9.	A23685-001	Support Washer
10.	See Page 7	Bearing Housing Assy.

* A26398-021
GEAR MOTOR — DRIVE
115/60/1

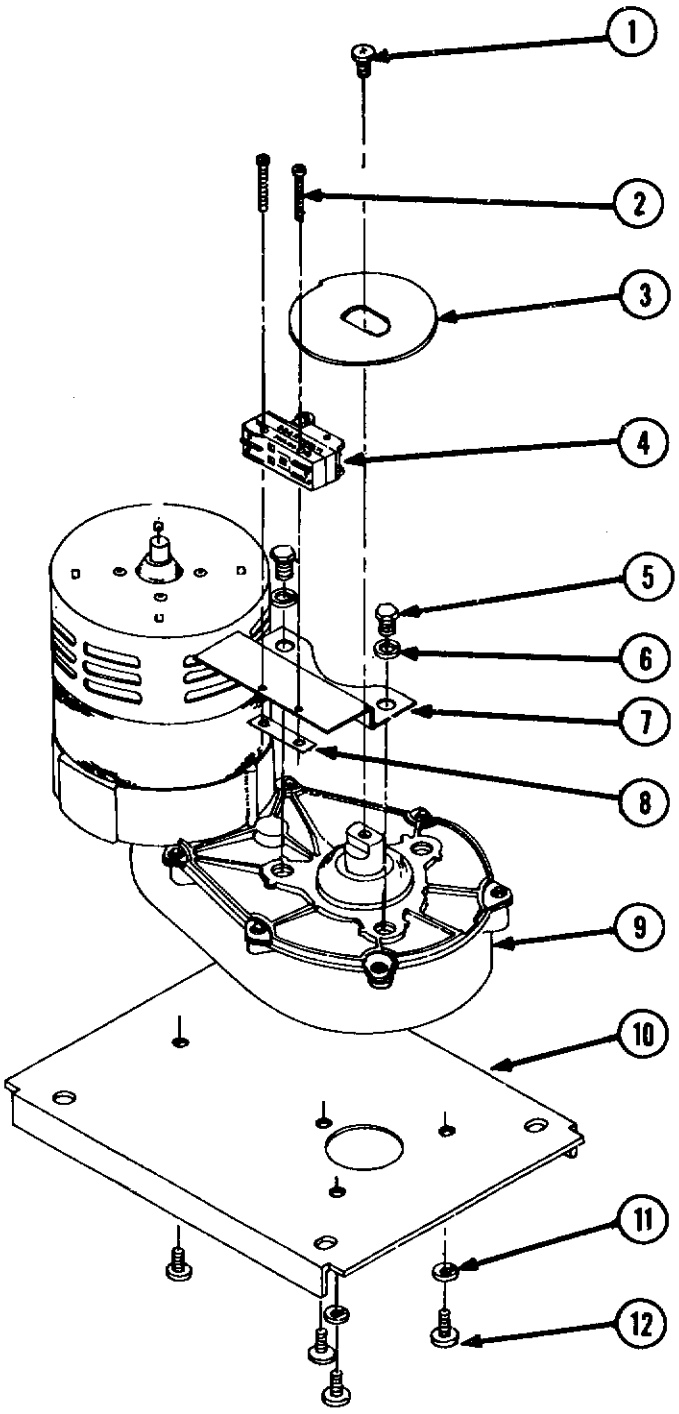

ITEM NO.	PART NO.	DESCRIPTION
1.	03-1405-03	Screw
	03-1410-03	Lock Washer
*2.	03-1403-09	Screw
3.	A26686-001	Cam
*4.	12-0876-00	Cam Switch
*5.	03-1405-15	Screws
*6.	03-1410-04	Lock Washer
*7.	A24459-001	Bracket Cam Switch
*8.	03-0886-00	Twin Speed Nut
9.	See Page 6	Gear Motor
10.	A23336-001	Motor Mount
11.	03-1410-03	Lock Washer
12.	03-1405-03	Screw

Note:

* Items 2, 4, 5, 6, 7, & 8 are not included with Gear-Motor Assy A26398-021

Gear Motor Parts Breakdown

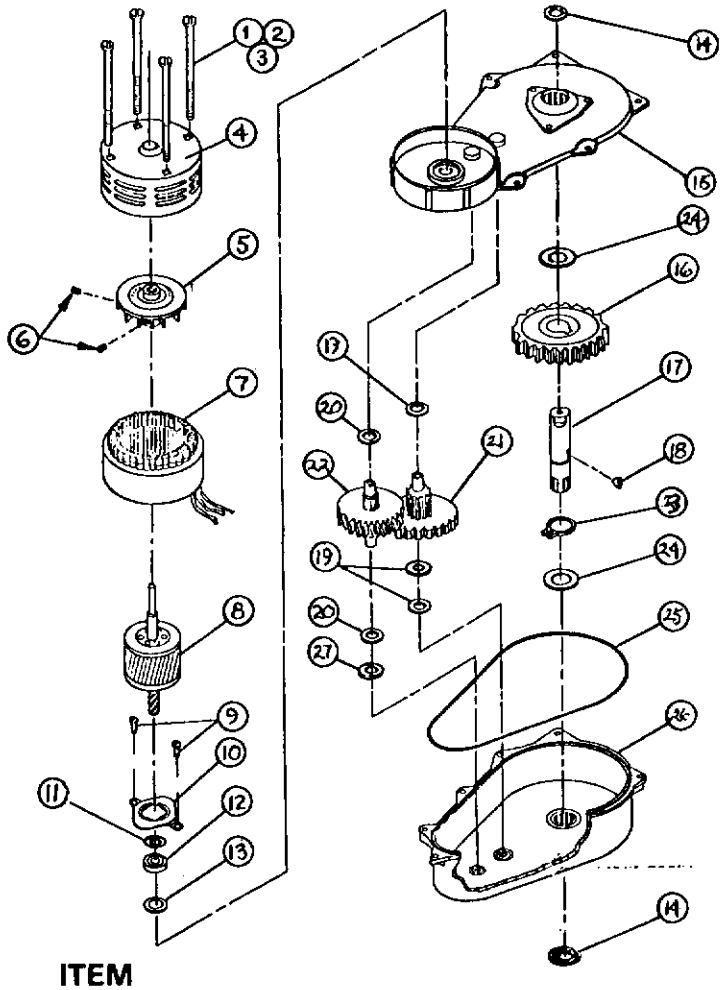

ITEM NO.	PART NO.	DESCRIPTION
1.	03-1403-74	Screw (4)
2.	03-1417-04	Star Washer (1)
3.	03-1410-02	Lockwasher (3)
4.	A17047-000	Housing W/Bearing
5.	A16915-000	Cooling Fan
6.	03-1246-00	Set Screws (2)
7.	12-2036-01	Stator
8.	A19884-003	Rotor W/Bearing & Retainer
9.	03-1245-00	Sem Screw (2)
10.	A19871-000	Bearing Retainer
11.	03-1408-08	Washer
12.	02-1501-00	Bearing only
13.	02-1504-00	Oil Seal - Input Shaft
14.	02-1503-00	Oil Seal - Output Shaft
15.	A16920-021	Gear Case Top W/Bearings & Seals
16.	02-2098-01	Output Gear
17.	02-2311-01	Output Shaft
18.	03-1475-01	Key
19.	03-1408-06	Washer (3)
20.	03-1408-19	Washer (2)
21.	02-1510-00	2nd Gear & 3rd Pinion
22.	02-1511-00	1st Gear & 2nd Pinion
23.	03-1515-03	Snap Ring
24.	03-1408-21	Washer (2)
25.	02-1505-00	O-Ring
26.	A23418-001	Gear Case Bottom W/Bearings & Seals
27.	03-1408-20	Washer

BEARING HOUSING ASSY.
A26108-001

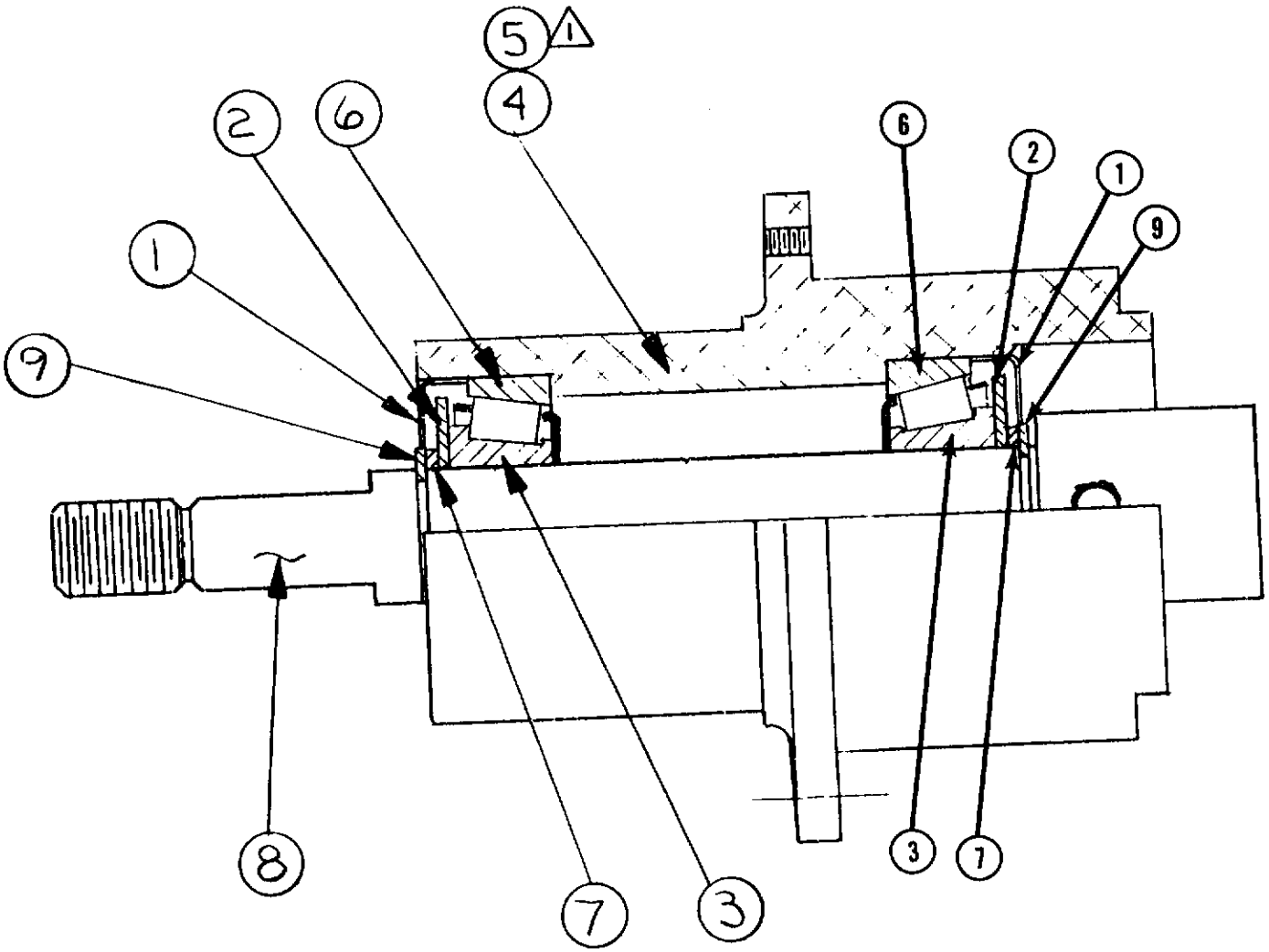

ITEM NO.	PART NO.	DESCRIPTION
1.	02-2026-01	Cup Closure
2.	02-2027-01	Flinger
3.	02-2186-02	Cone
4.	A26108-001	Bearing Housing-Complete Assy.
5.	19-0309-01	Grease
6.	02-2186-01	Cup
7.	03-1408-27	Washer
8.	A26105-001	Bin Shaft Assy.
9.	03-1516-01	Retaining Ring

NOTE:

1 Pack item #3 with item#5 before reinstalling in housing.

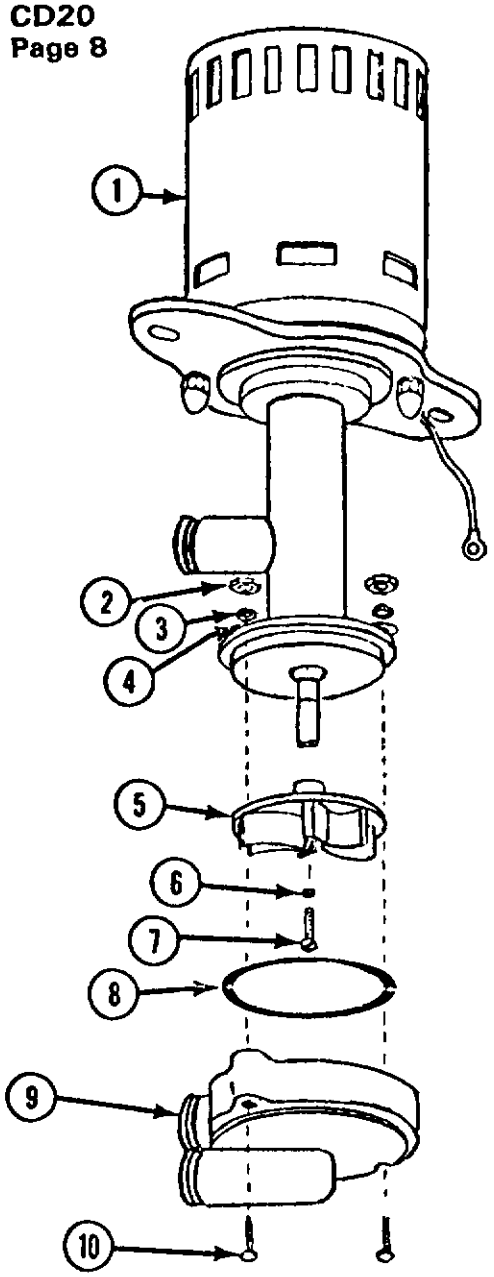

Pump Assy.

ITEM NO.	PART NO.	DESCRIPTION
1.	12-1930-01	Pump Assy. Complete
2.	12-1849-54	Nut (Hex)
3.	12-1849-55	Lock Washer
4.	12-1849-56	Washer
5.	12-1849-57	Impeller
6.	12-1849-58	Lock Washer
7.	12-1849-59	Screw
8.	12-1849-60	O-Ring Seal
9.	12-1849-61	Pump Housing
10.	12-1849-62	Screw

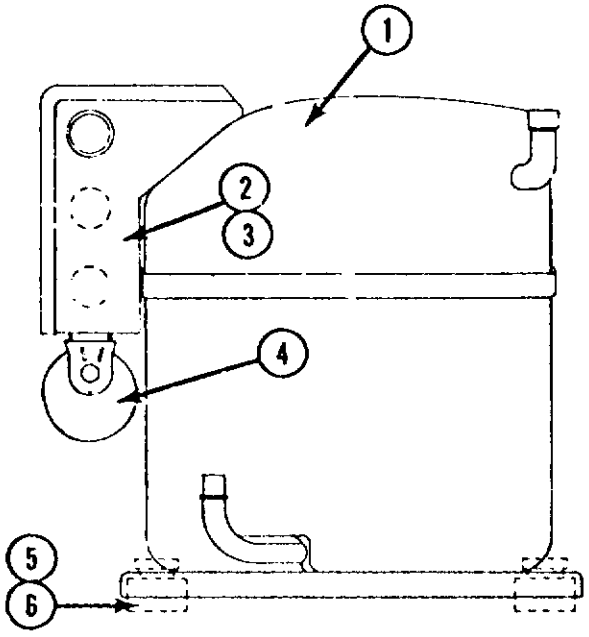

MOTOR COMPRESSOR
Air and Water
3500 RPM — 115/60/1

ITEM NO.	PART NO.	DESCRIPTION
1.	18-3900-01	Compressor Complete Cope. No. RSL2-0075-1AA-233
2.	18-2400-25	Overload Cope. No. 071-0127-06
3.	18-2410-00	Relay — Start Cope. No. 040-0098-01
4.	18-2420-00	Capacitor — Start Cope. No. 014-0008-69
5.	18-2200-27	Metal Sleeve Cope No. 027-0072-02
6.	18-2200-28	Rubber Mount Cope. No. 027-0073-00

CONTROL BOX ASSY.
Air Cooled

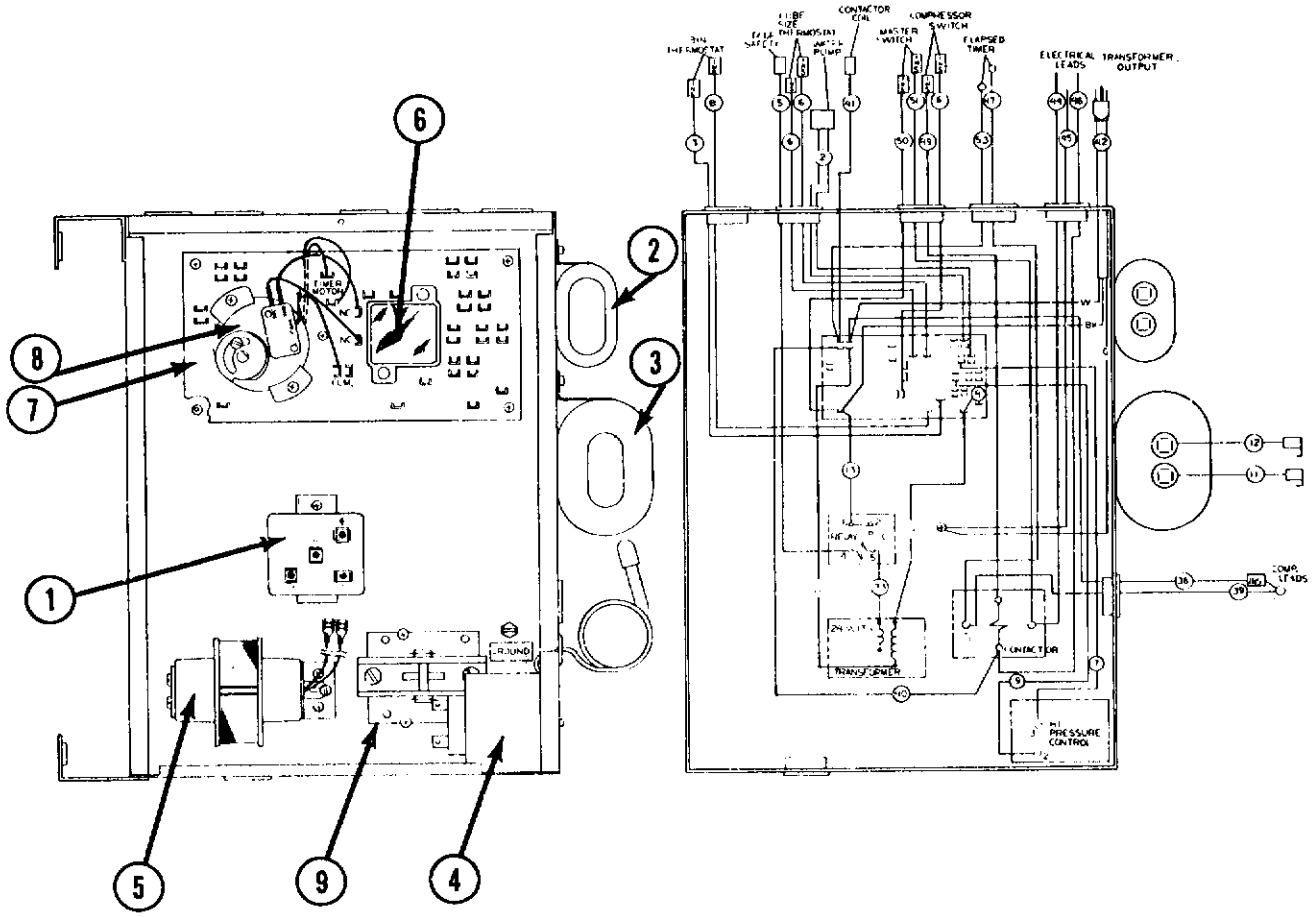

ITEM NO.	PART NO.	DESCRIPTION
1.	12-1873-01	Relay
2.	18-3701-01	Capacitor
3.	18-1902-17	Capacitor
4.	11-0352-01	Pressure Control
5.	12-1809-00	Transformer
6.	12-1879-02	Relay 3 P.D.T.
7.	12-1912-01	Circuit Board
8.	12-1979-31	Timer
9.	12-2041-01	Contactor

CONTROL BOX ASSY.
Water Cooled

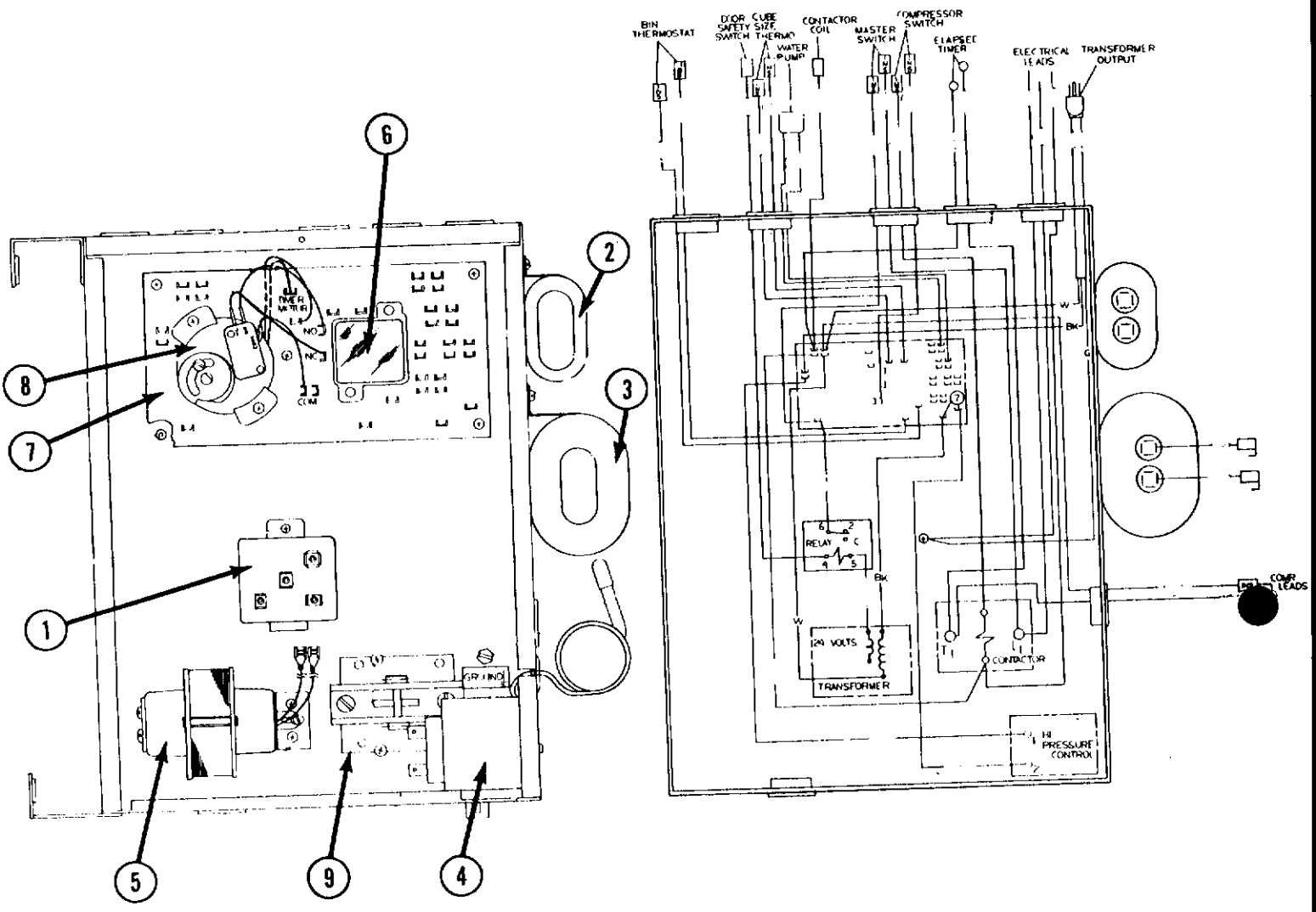

ITEM NO.	PART NO.	DESCRIPTION
1.	12-1873-01	Relay
2.	18-3701-01	Capacitor
3.	18-1902-17	Capacitor
4.	11-0357-03	Pressure Control
5.	12-1809-00	Transformer
6.	12-1879-02	Relay 3 PDT
7.	12-1912-01	Circuit Board
8.	12-1979-31	Timer
9.	12-2041-01	Contactor

CABINET PARTS

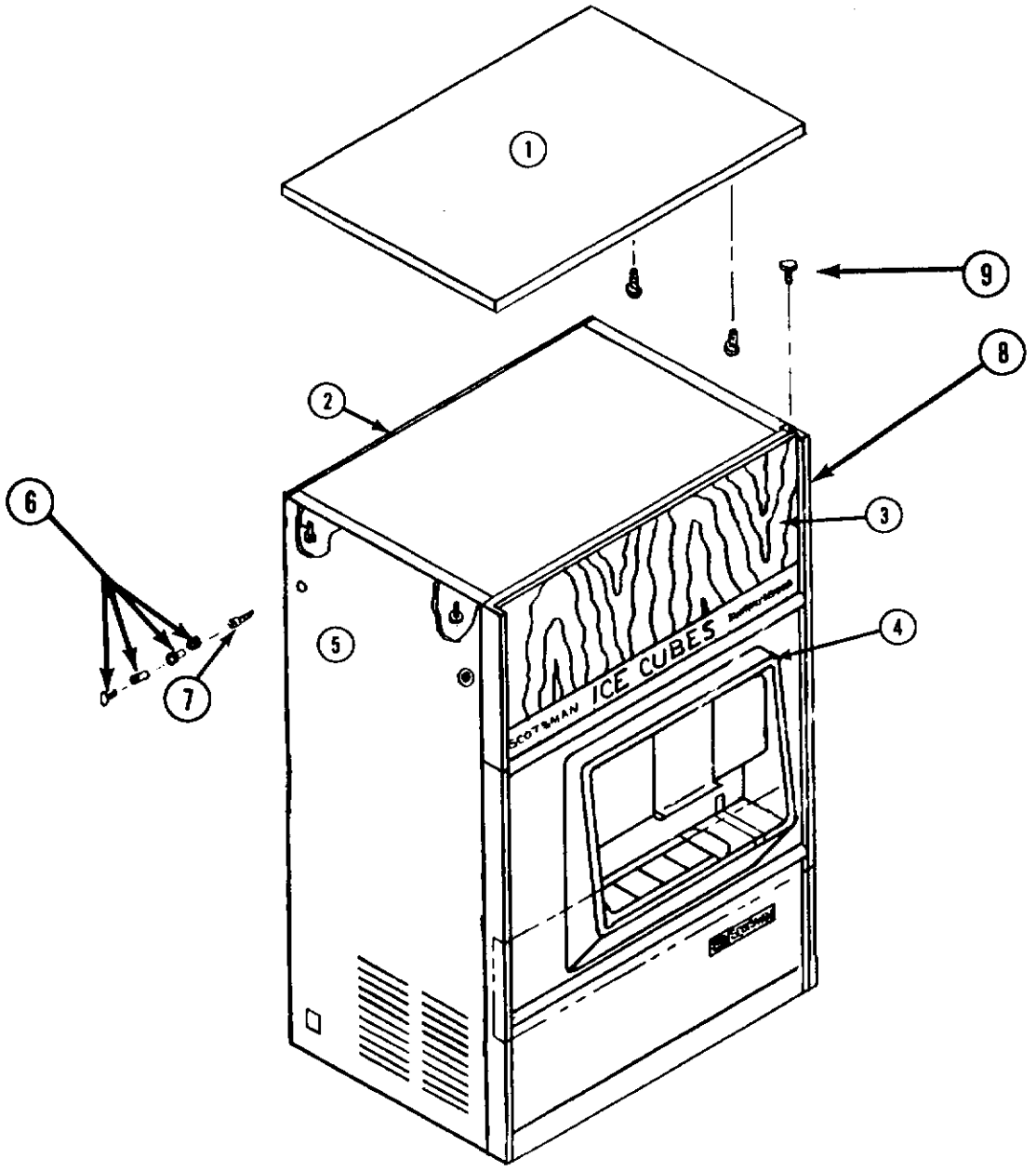

ITEM NO.	PART NO.	DESCRIPTION
1.	A23368-001	Top Panel
2.	A23335-001	Back Panel
3.	A25997-001	Upper Door
4.	A26001-001	Lower Door
5.	A23349-001	Left Side Panel
6.	02-2094-01	Lock Plug (2)
7.	03-1544-01	Hex Socket Screw
8.	A23334-001	Right Side Panel
9.	03-1512-02	Top Hinge Pin

LOWER FRONT DOOR
Front & Side Views

A Clear plastic delivery chute. Fills with cubes during a vend. Customer pulls down, bottom of chute opens, dropping cubes into ice bucket. Chute is spring loaded and at its uppermost position, engages a safety micro switch in back of panel. This switch when open or disengaged, will not permit a dispensing disengaged, will not permit a dispensing operation. Chute must be entirely closed (uppermost position) before dispensing section will operate.

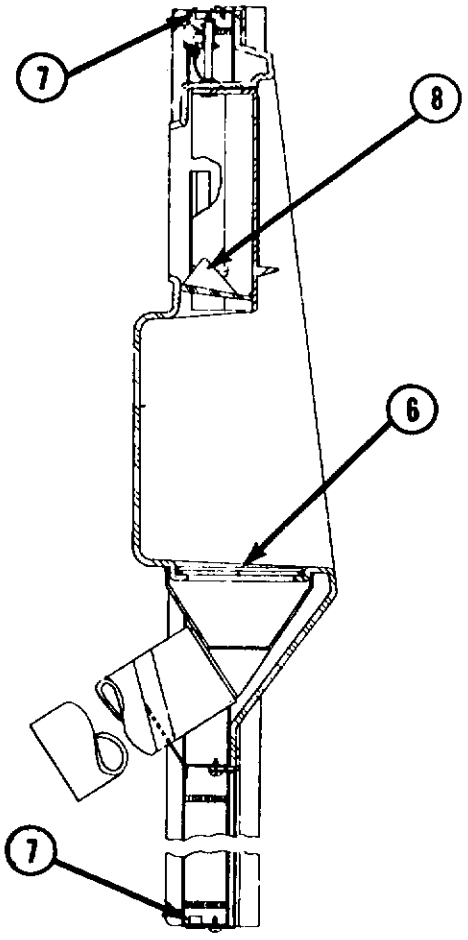

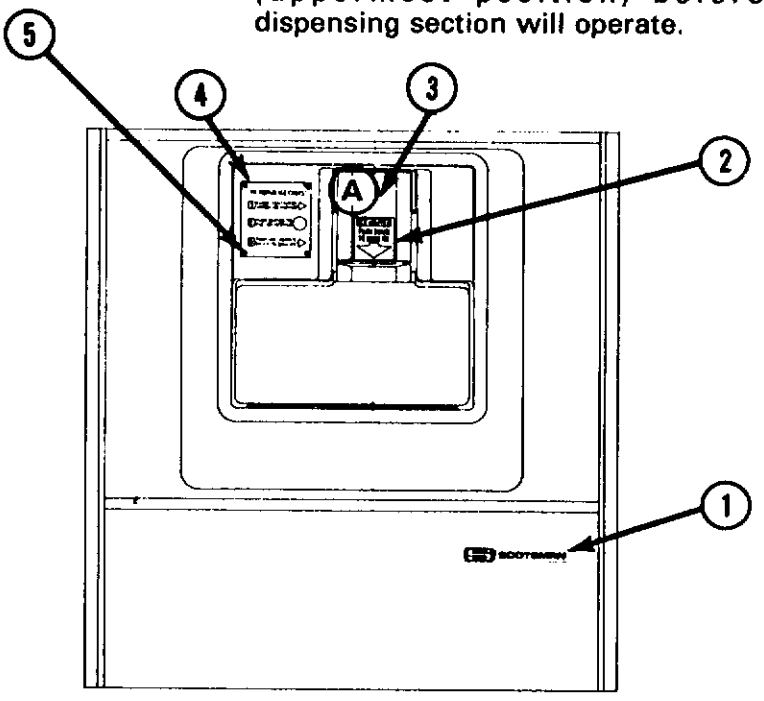

ITEM NO.	PART NO.	DESCRIPTION
1.	15-0156-00	Emblem
2.	15-0583-01	Decal — Ice Chute
3.	02-1994-01	Hood For Ice Chute
4.	See Page 14	Instruction Plate
5.	03-1581-01	Screw 4/Unit
6.	02-1998-01	Grille
7.	02-2012-01	Bushings 2/Door
8.	02-1995-01	Ice Chute

LOWER FRONT DOOR
Rear & Side Views

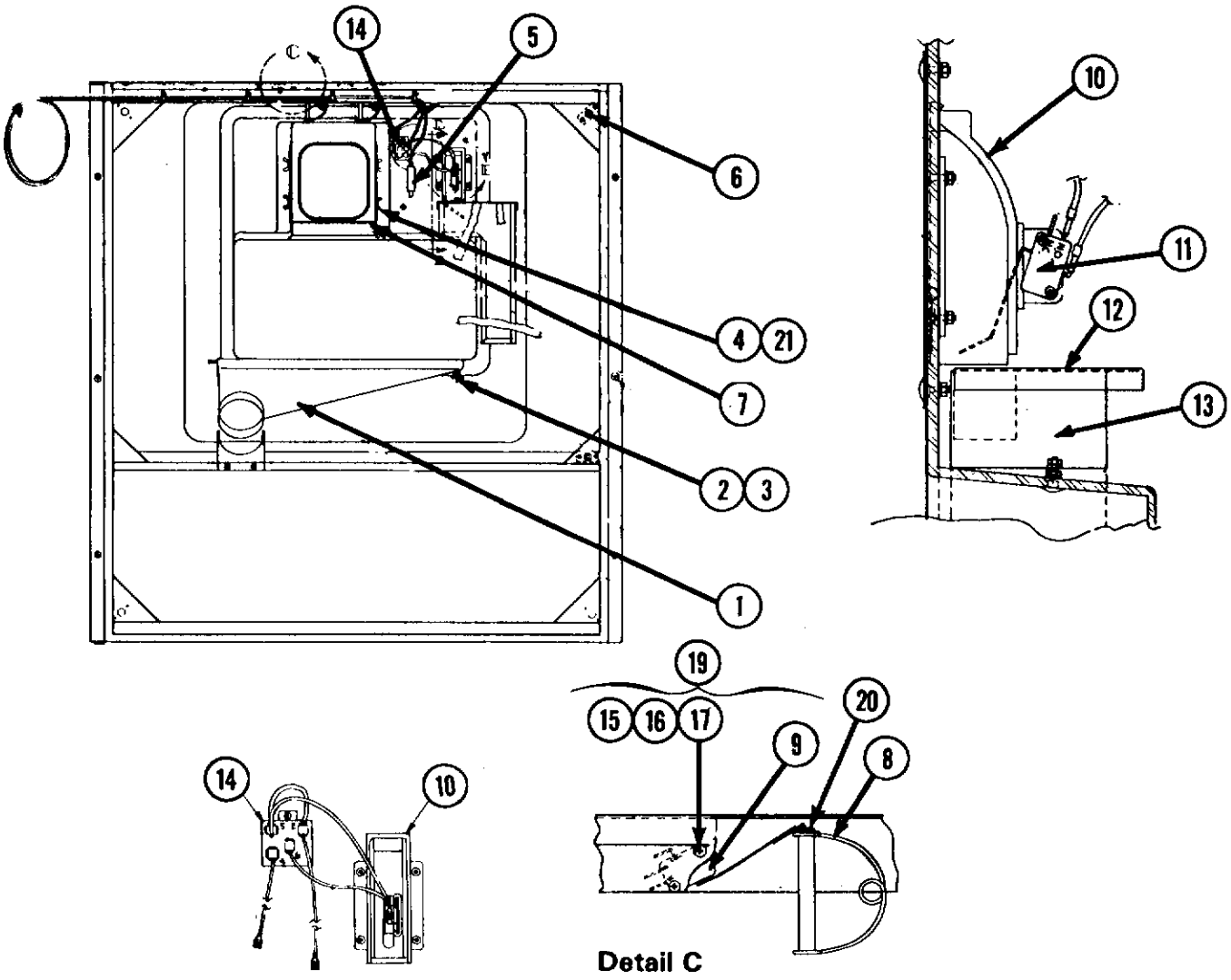

Detail C

ITEM	PART NO.	DESCRIPTION
1.	A24523-001	Drain Tray Assy. w/drain tube
2.	03-0255-02	Wing Nuts
3.	A24655-001	Spacers
4.	03-1279-01	Thumb Screw (4)
5.	12-1878-01	Push Button Switch
6.	03-1542-01	Retainer Nut
7.	A25377-001	Shield
8.	02-2097-01	Torsion Spring
9.	A25545-001	Safety Switch
10.	A27101-001	Body Coin Mech.
11.	12-2046-01	Switch Lever
12.	A26838-001	Coin Box Cover
13.	A26826-001	Coin Box Assy.
14.	12-1873-01	Relay
15.	A24051-005	Spacer (2)
16.	03-1406-14	Nut (2)
17.	03-1403-63	Screw (2)
19.	A26095-00	Kit, Includes Items 9, 15, 16 & 17
20.	03-1539-03	Retainer Ring (2)
21.	A25065-001	Track (2), Ice Hood

15-0609-01

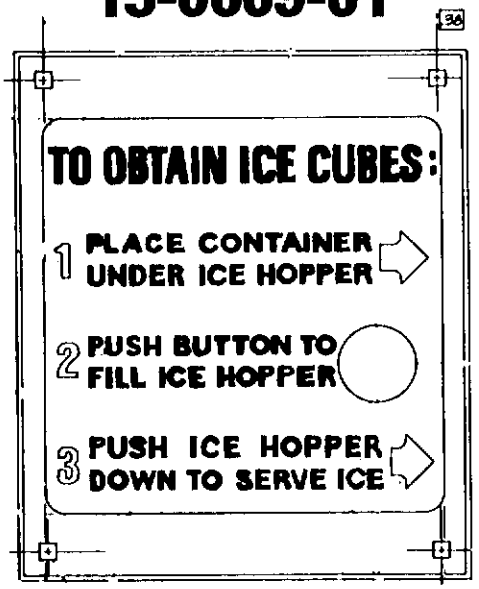

PUSH BUTTON OPERATION

15-0609-02

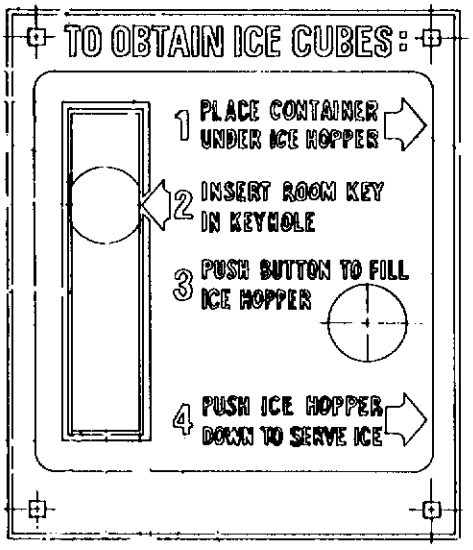

FOR KEY OPERATION

15-0609-03

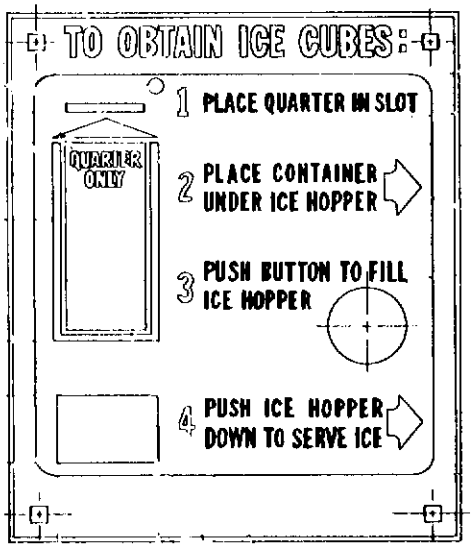

FOR COIN OPERATION

C1B Cabinet Assy

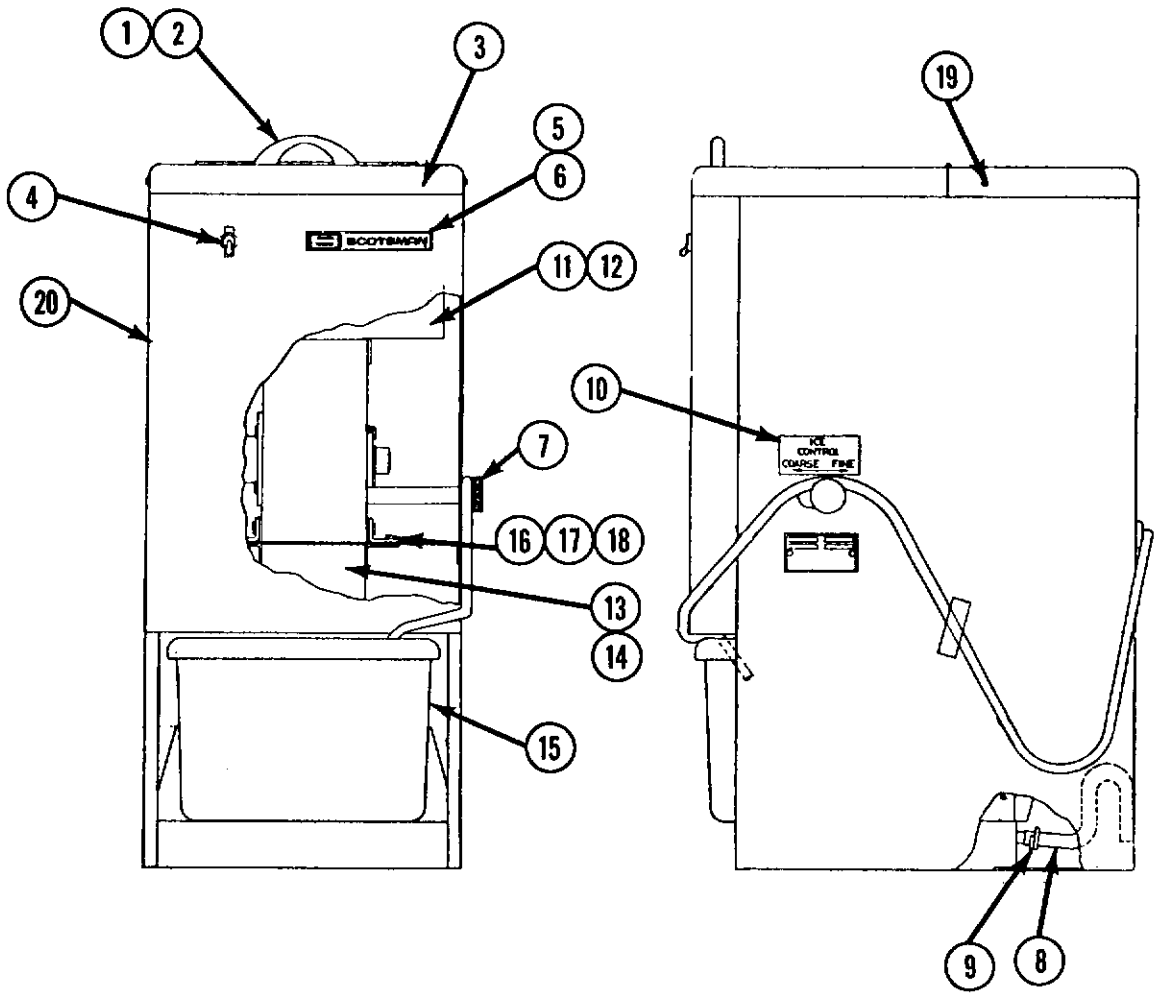

ITEM	PART NO.	DESCRIPTION
1.	15-0189-01	Handle
2.	03-1403-17	Screws (2)
3.	A08695-008	Top Assy (includes handle)
4.	12-0426-01	On-Off Switch
5.	15-0156-00	Emblem
6.	03-0271-00	Speed Nut (2)
7.	A23571-001	Knob Assy
8.	13-0674-03	Tygon Tubing (order per ft.)
9.	02-0534-00	Hose Clamp
10.	15-0515-00	Sticker, Ice Control
11.	A09391-000	Funnel Assy
12.	03-1404-10	Screw (6)
13.	A08801-000	Front Bottom Spout
14.	A24304-001	Bottom Spout F.A.
15.	02-0759-00	Plastic Pan
16.	03-1417-09	Lockwasher (4)
17.	03-1405-03	Screw (4)
18.	03-1407-05	Washer (4)
19.	03-1404-05	Screw (2)
20.	A08681-008	Frame Assy

C1B CRUSHER

A design change has been made in the Crusher Assembly of the C1B. The use of this new Crusher Assembly started with Serial Number GV-402312. Parts are not interchangeable with the previous model.

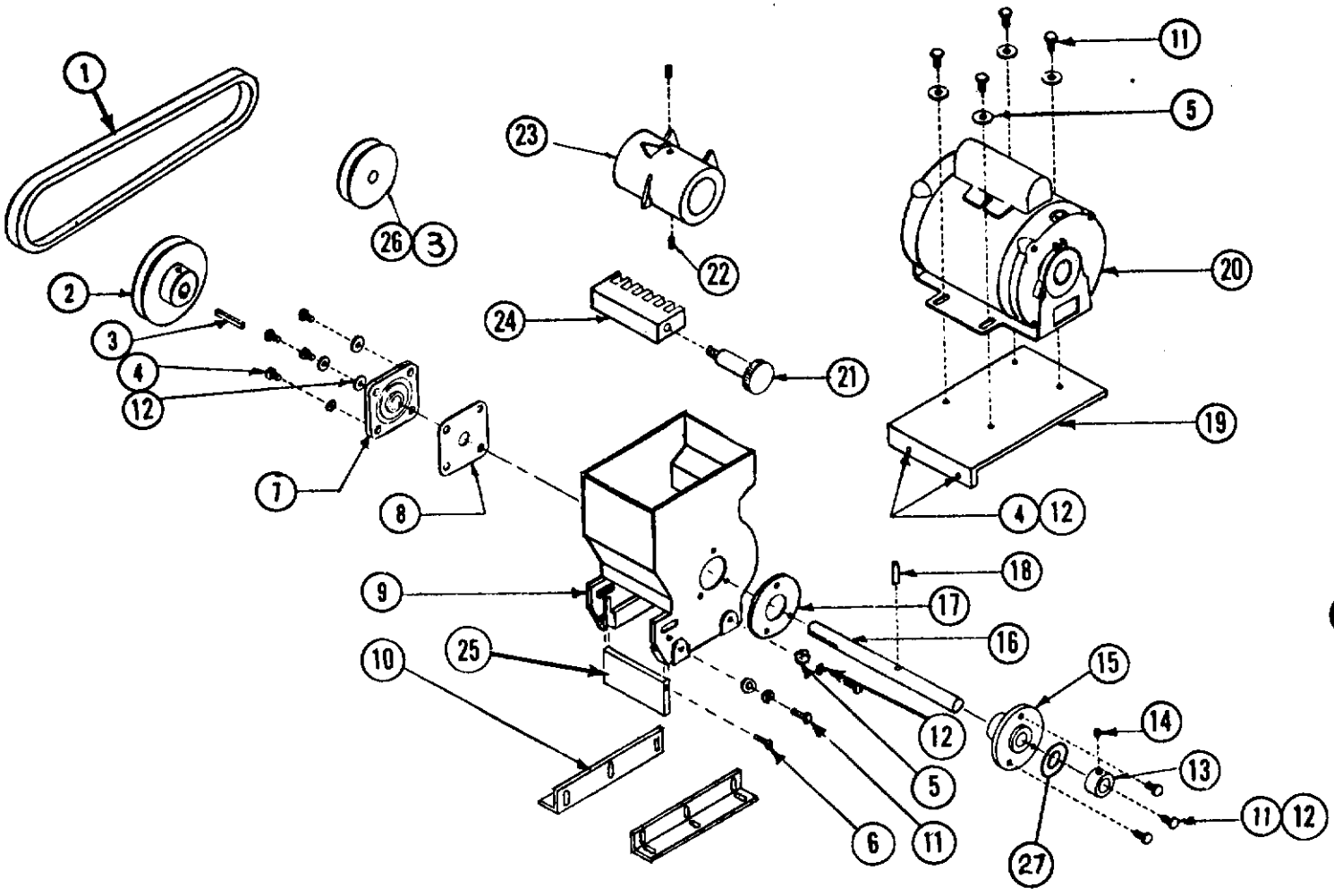

ITEM	PART NO.	DESCRIPTION
1.	13-0225-00	'V' Belt
2.	02-0757-00	Pulley
3.	02-1951-00	Keys
4.	03-1405-06	Screws
5.	03-1407-05	Washers
6.	03-1403-05	Screws
7.	02-0755-00	Pillow Block
8.	13-0649-00	Rubber Gasket
9.	A24086-001	Chopper Body w/block off
10.	A08700-000	Bottom Clamps
11.	03-1405-03	Screws
12.	03-1417-09	Lockwashers
13.	A08652-000	Collar
14.	03-0431-00	Set Screw

ITEM	PART NO.	DESCRIPTION
15.	A08646-000	Front Bearings & Support
16.	A08644-000	Drive Shaft
17.	13-0648-00	Rubber Gasket
18.	A08645-000	Shaft Pin
19.	A08659-000	Motor Plate
20.	12-0643-01	Motor 115/60/1
21.	A23571-001	Knob Assy
22.	03-0431-09	Set Screw
23.	A08643-000	Chopper Drum
24.	A23597-001	Adjustable Cutter
25.	A23972-001	Block Off
26.	02-1462-00	Pulley
27.	A08651-000	Washer

CABINET ASSEMBLY

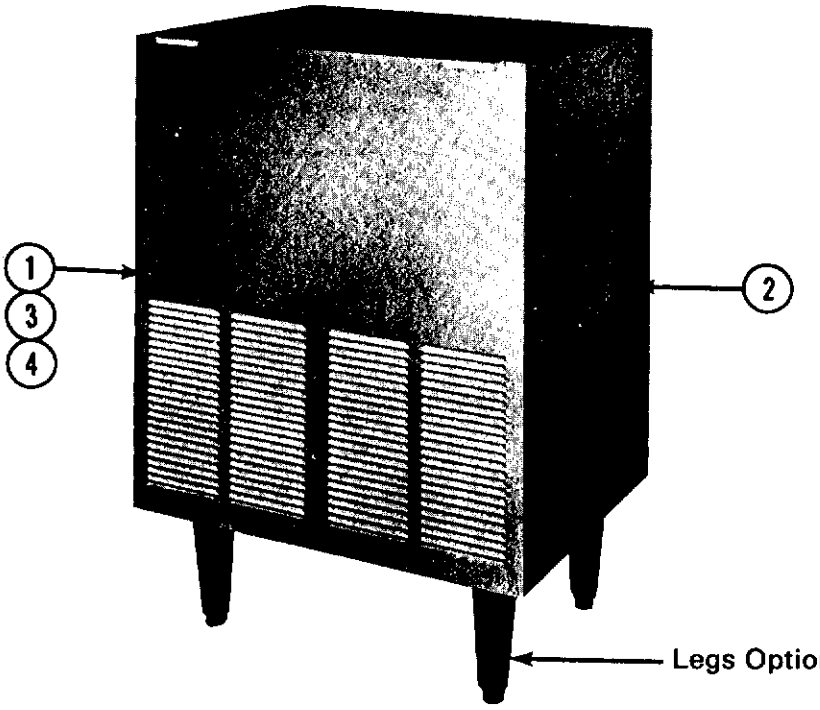

ITEM NO.	DESCRIPTION	PAINTED PART NO.	S.S. PART NO.
1.	Front Panel	A20048-000	A20048-001
2.	Side Panels	A20050-000	A20050-001
3.	Panel Strike	15-0411-00	15-0411-00
4.	Cabinet Catch	02-0836-00	02-0836-00

CONTROL BOX ASSEMBLY

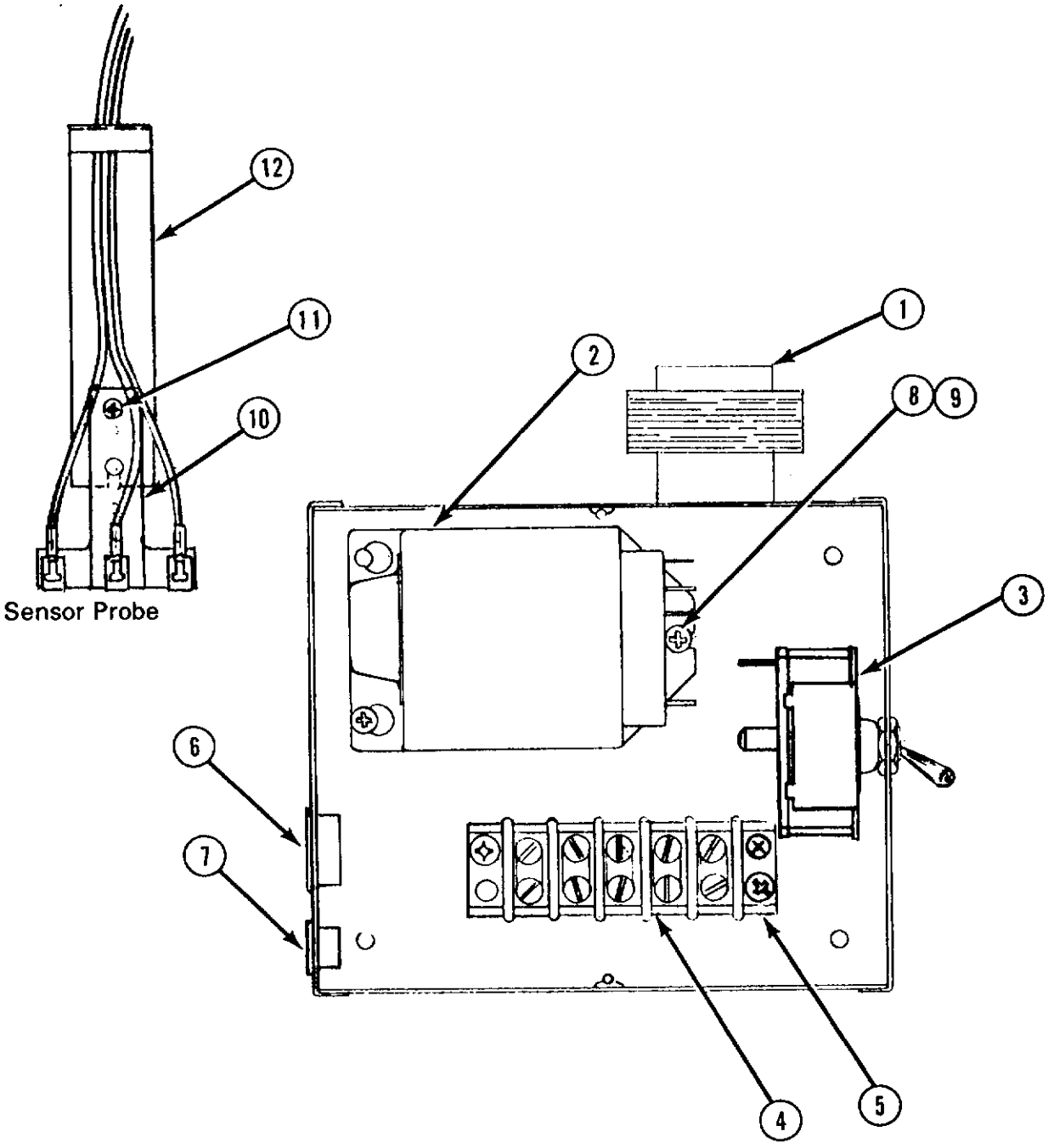

ITEM NO.	PART NO.	DESCRIPTION
1.	12-1809-01	Transformer
2.	11-0368-01	Ice Differential Control
3.	12-0426-01	Switch
4.	12-0813-07	Terminal Board
5.	03-1403-31	Screw
6.	12-1213-10	Bushing
7.	12-1213-06	Bushing
8.	03-1403-17	Screw
9.	03-1407-02	Washer
10.	11-0368-00	Sensor Probe
11.	03-1404-07	Screw
12.	A20506-000	Sensor Probe Brkt.

MACHINE ASSEMBLY

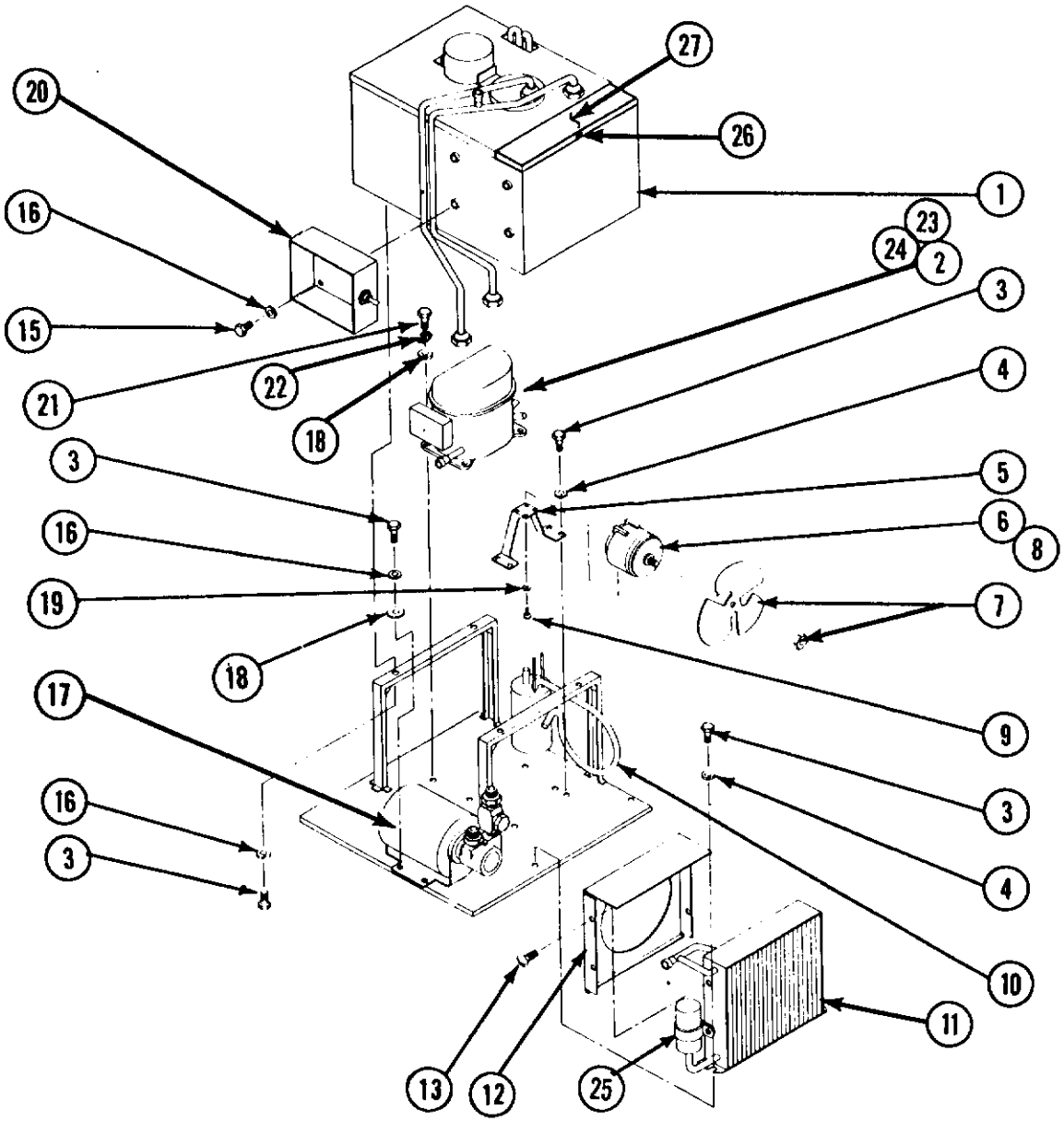

ITEM NO.	PART NO.	DESCRIPTION			
1.	A23128-000	Evaporator Case	16.	03-1410-03	Lockwasher
2.	18-0161-01	Compressor	17.	See Page 6	Pump Motor Assy.
3.	03-1405-03	Screw	18.	03-1407-05	Washer
4.	03-1417-09	Lockwasher	19.	03-1417-03	Lockwasher
5.	18-0422-00	Mounting Bracket	20.	See Page 2	Control Box
6.	12-1575-01	Fan Motor	21.	03-1405-18	Screw
7.	18-0231-00	Fan Blade and Nut	22.	03-1417-12	Lockwasher
*8.	12-1573-07	Fan Motor Wire	23.	18-0161-20	Grommet
9.	03-1403-17	Machine Screw	24.	18-0161-21	Sleeve
10.	A20449-000	Accumulator Assy.	25.	02-0831-00	Drier
11.	18-0140-00	Condensor	26.	03-1279-00	Wing Screw
12.	A15621-001	Shroud	27.	A22115-000	Ice Bank Lid
13.	03-1404-15	Screw (4)	*28.	18-0161-02	Overload
14.			*29.	18-0161-03	Relay
15.	03-1403-45	Screw	*30.	18-0161-05	Compositor

*Not Shown

ICE BANK ASSEMBLY

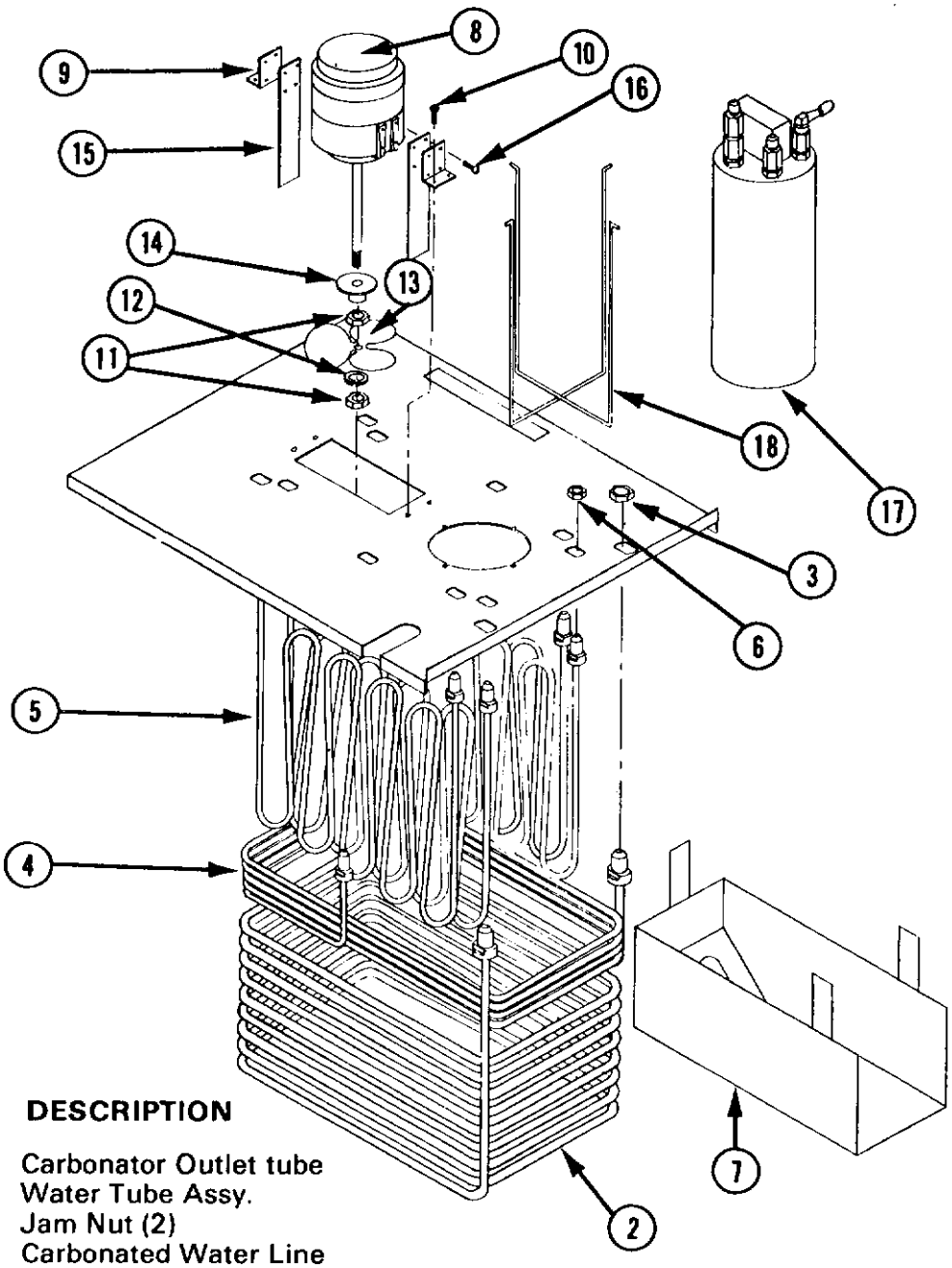

ITEM NO.	PART NO.	DESCRIPTION
*1.	A20540-000	Carbonator Outlet tube
2.	A20070-000	Water Tube Assy.
3.	A21510-002	Jam Nut (2)
4.	A20418-000	Carbonated Water Line
5.	A20073-000	Syrup Coil Fab
6.	A21510-001	Jam Nut (10)
7.	A20415-000	Water Baffle Fab
8.	12-1563-01	Agitator Motor
9.	A20526-000	Motor Brace
10.	03-1404-10	Screws
11.	03-1470-00	Hex Nuts SS
12.	03-1471-00	Lock Washer
13.	A23423-000	Agitator Propeller
14.	13-0724-00	Water Slinger
15.	A22178-000	Cooling Plate, Motor
16.	03-1404-16	Screws
17.	See Page 5	Carbonator Tank
18.	A20065-000	Tank Bracket Fab Assy.
*19.	02-1249-00	Nylon Flare Washer use (2) W/Item #1

*Not Shown

CARBONATION TANK - KENCO NO. KK-901C

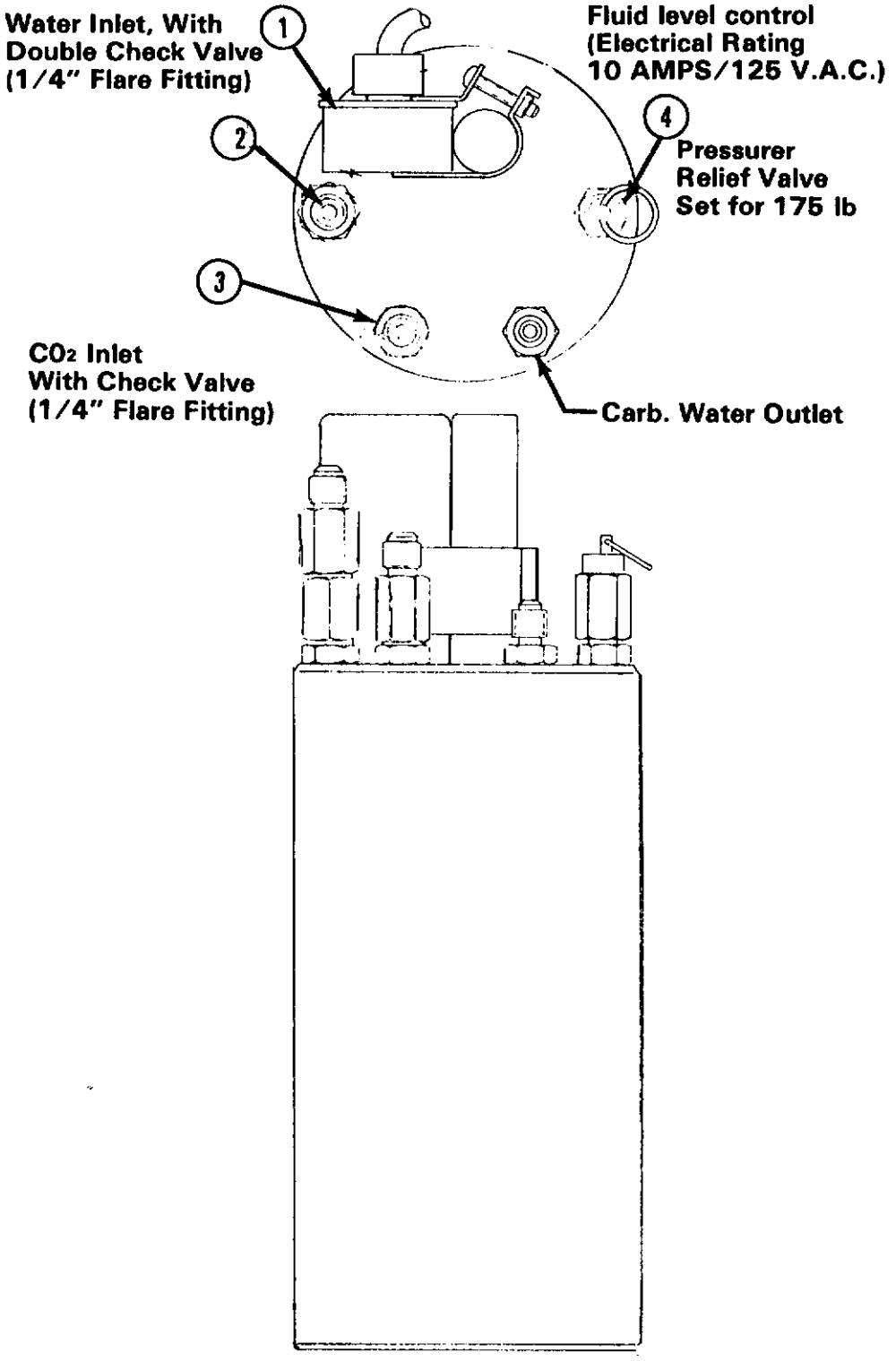

ITEM NO.	PART NO.	DESCRIPTION
1.	02-1975-50	Switch Assembly
2.	02-1975-51	Check Valve - Water
3.	02-1975-52	Check Valve - Gas
4.	02-1975-53	Relief Valve
5.	02-1975-00	Tank Complete

CARBONATOR PUMP ASSEMBLY

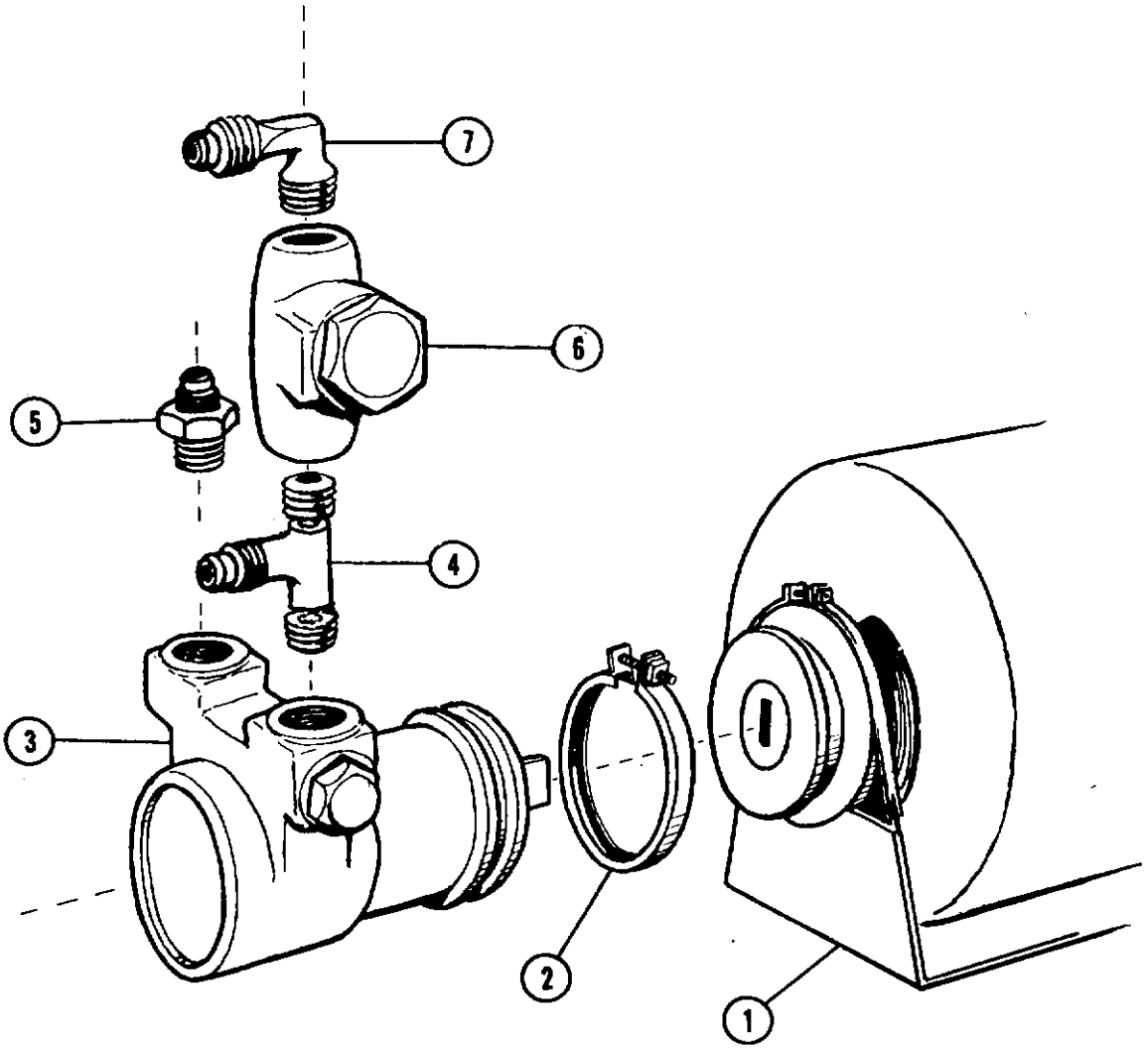

ITEM NO.	PART NO.	DESCRIPTION
1.	12-1339-01	Motor 115/60/1
2.	02-1527-00	Coupling Clamp
3.	02-1526-00	Pump
4.	16-0608-00	Tee 3/8" x 3/8" FNPT x 1/4" Fe Flare
5.	16-0355-00	Union 3/8 NPT x 3/8 Flare
6.	16-0162-01	Strainer
7.	16-0401-01	Half Union Elbow

TOUCH-O-MATIC FAUCET ASSEMBLY

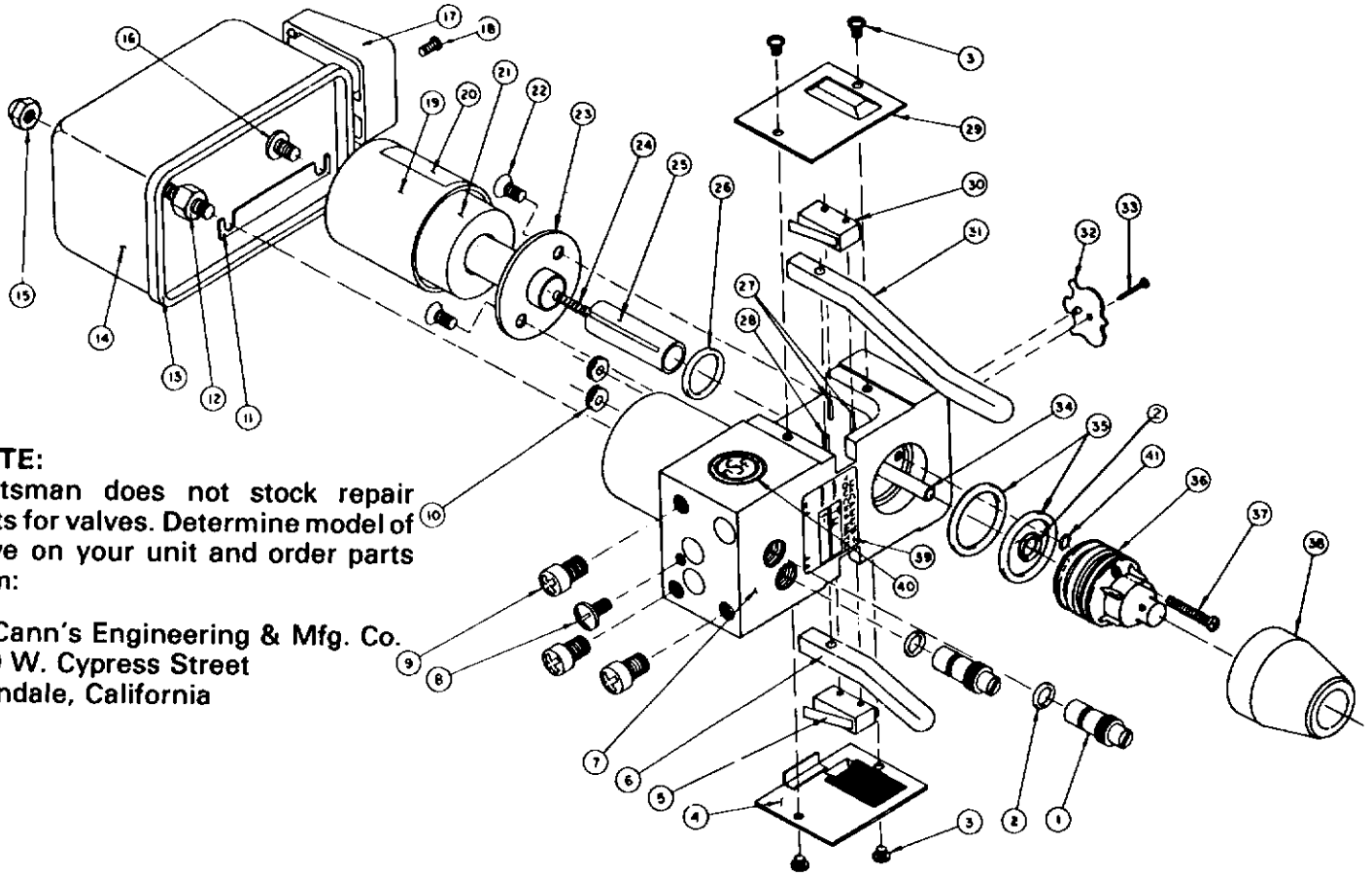

NOTE:
Scotsman does not stock repair parts for valves. Determine model of valve on your unit and order parts from:

McCann's Engineering & Mfg. Co.
430 W. Cypress Street
Glendale, California

ITEM NO.	PART NO.	DESCRIPTION
1.	1	Metering Stem
2.	2	"O" Ring, Metering Stem
3.	3	Screw, Side Plate
4.	152	Side Plate (Right Side)
5.	82	Switch Assembly (3 Wires)
6.	160	Lever, short
7.	01-0001	Block, 20-1000
7.	01-0002	Block, 20-2000
7.	01-0003	Block, 20-4000
7.	01-0004	Block, 20-1100-20-4100
7.	01-0005	Block, 20-2100-20-3100
8.	5	Screw, Inlet Retainer
9.	6	Screw, Faucet Mounting
10.	7	Grommet, Coil Housing
11.	8	Grounding Strap
11.	1508	Lockwasher in place of Part No. 8 on 12 V.D.C. and 20-4000
12.	9	Stud, Cover Mounting short
13.	10	Gasket Cover
14.	11	Cover (With Medallion Holes)
15.	13	Nut, Cover Retainer
16.	14	Screw, Coil Housing
17.	15	Medallion (Specify Flavor)
18.	16	Screw, Medallion Retainer
19.	17	Coil Cover
20.	20	Label (Specify Voltage) Coil

ITEM NO.	PART NO.	DESCRIPTION
21.	22	Coil (115 V.A.C.)
21.	24	Coil (12 V.A.C.)
21.	29	Coil (12 V.D.C.)
21.	23	Coil (24 V.A.C.)
22.	31	Screw, Plunger Housing Retainer
23.	32	Plunger Housing
24.	38	Spring, Plunger
25.	39	Plunger, Tough-O-Matic
26.	40	"O" Ring Plunger Housing
27.	41	Roll Pin, Switch
28.	42	Roll Pin, Lever
29.	151	Side Plate (Left Side)
30.	137	Switch Assembly, 2 Wires, Standard
30.	138	Switch Assembly, 2 Wires, Special
31.	159	Lever, Long
32.	49	Crest, McCANN'S
33.	50	Pin, Crest Retainer
34.	09-0017	Tube, Syrup
34.	89	Jet Tube
35.	52	"O" Ring Diffuser
36.	09-0018	Diffuser
37.	54	Screw, Diffuser Retainer
38.	09-0013	Pouring Spout, Red
38.	09-0015	Pouring Spout, Black
38.	09-0014	Pouring Spout, Clear
39.	149	Gasket

KV5E-30A VALVE KIT ASSEMBLY

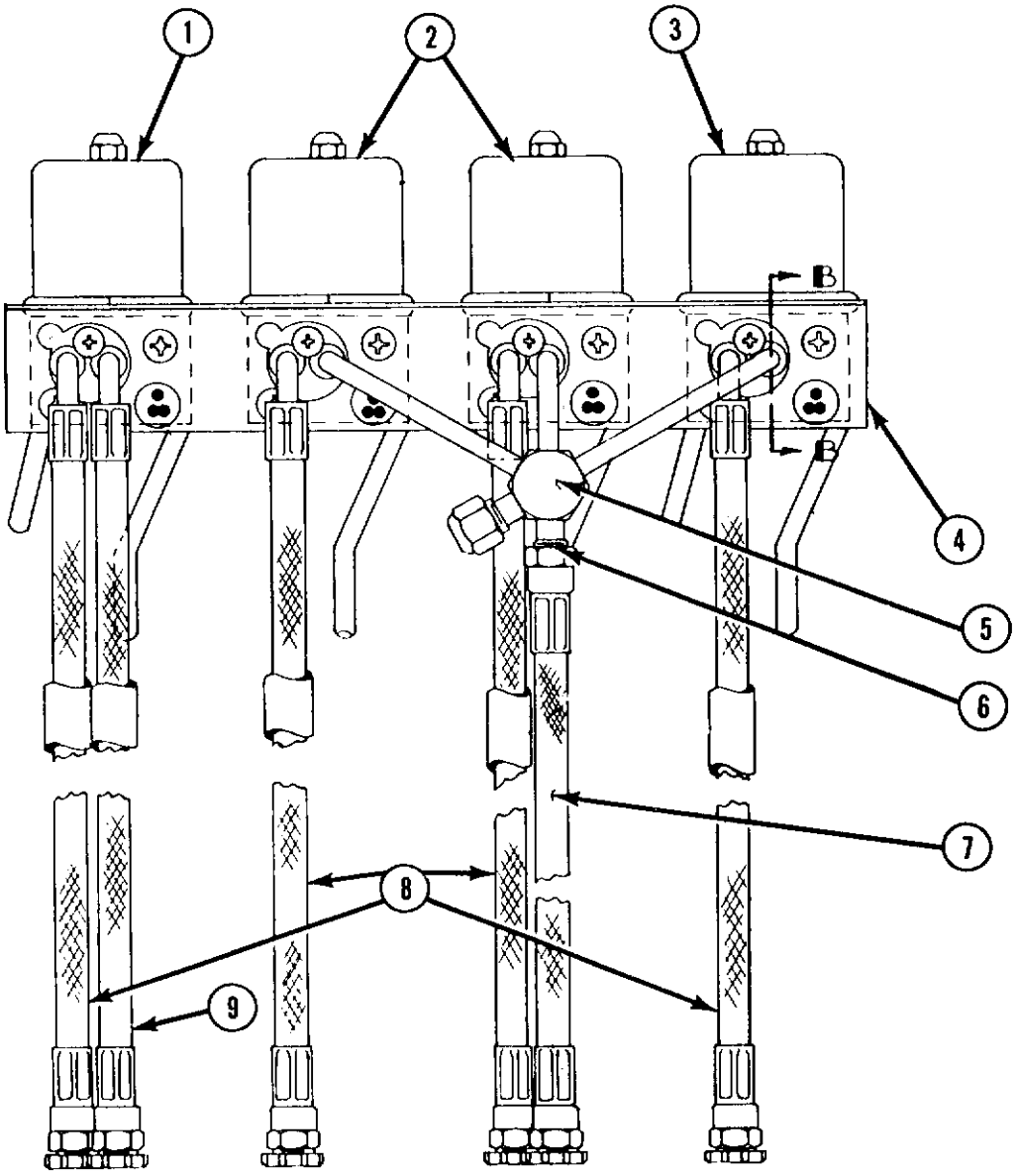

ITEM NO.	PART NO.	DESCRIPTION
1.	02-1205-19	Valve, two lever, non-carbonated
2.	02-1205-16	Valve, single lever, carbonated flavor
3.	02-1205-17	Valve, two lever, carbonated flavor & soda
4.	A20368-000	Valve Bracket
5.	02-2128-01	Carbonated Water Manifold
	13-0617-32	"O" Ring (3 required)
6.	02-1249-00	Washer (10 required)
7.	A20547-000	Carbonated Water Line
8.	A20546-000	Syrup Line

CHASSIS - FRONT

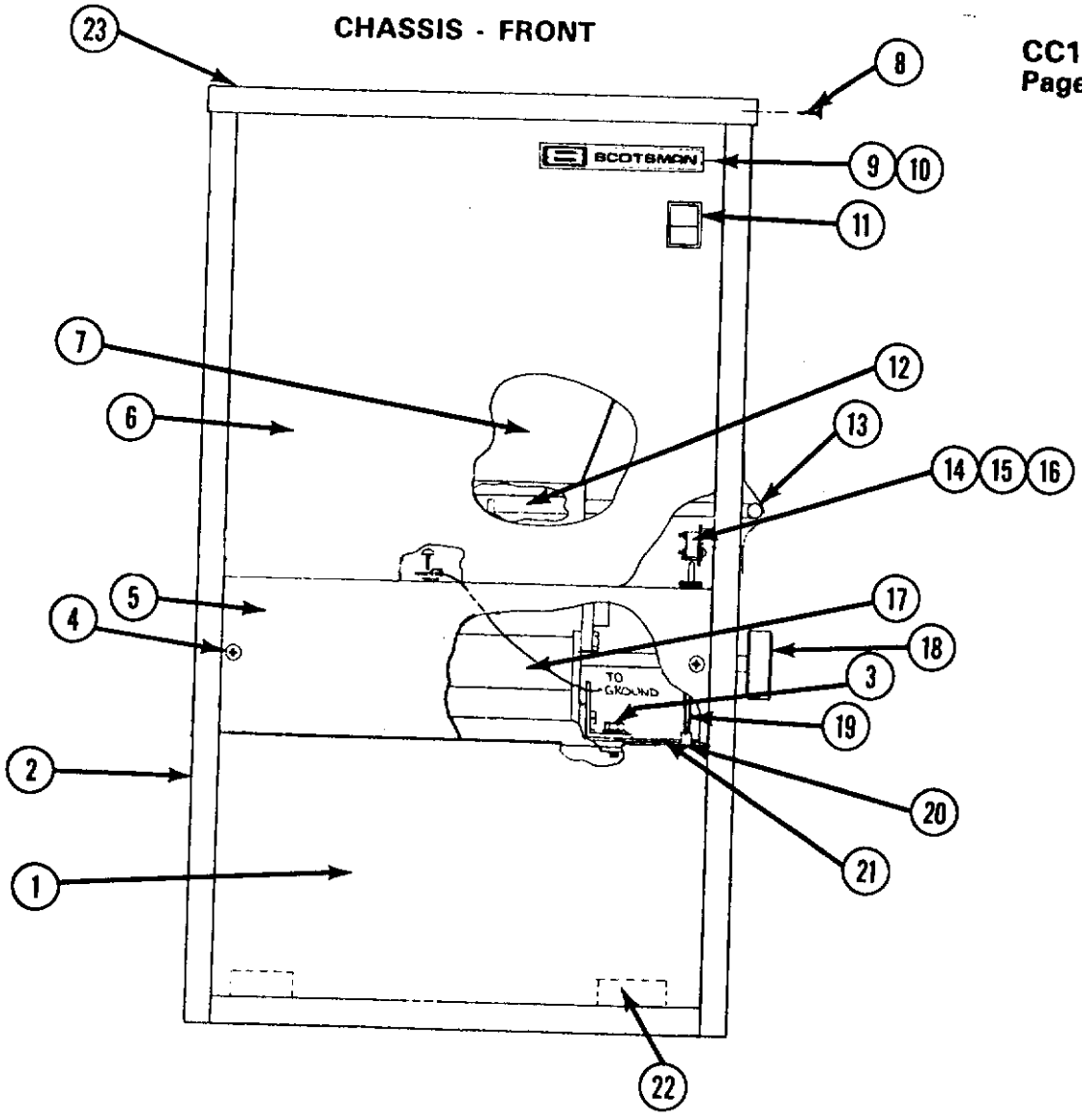

ITEM	PART NO.	DESCRIPTION
1.	A25686-001	Door Bottom Assy.
2.	A25671-001	Cabinet Assy.
3.	03-0571-01	Screw 4 ea.
4.	03-1419-09	Screw 2 ea.
5.	A25672-001	Panel Lower
6.	A26572-001	Panel Upper
7.	A25864-001	Bin Assy.
8.	03-1419-11	Screw 4 ea.
9.	15-0156-00	Emblem
10.	03-0271-00	Speed Nut 2 ea.
11.	12-1983-01	Switch
12.	A25870-001	Tube Spacer
13.	A25869-001	Agitator Handle
14.	03-1403-62	Screw 2 ea.
15.	03-1406-14	Hex Nut 2 ea.
16.	12-2022-01	Switch
17.	See Page 9	Crusher Assy
18.	A23571-001	Knob
19.	A25694-001	Push Rod
20.	12-1213-01	Bushing
21.	A25682-001	Divider Tray
22.	13-0781-01	Door Gasket (order per ft.)
23.	A25687-001	Cover Assy.

CHASSIS - SIDE

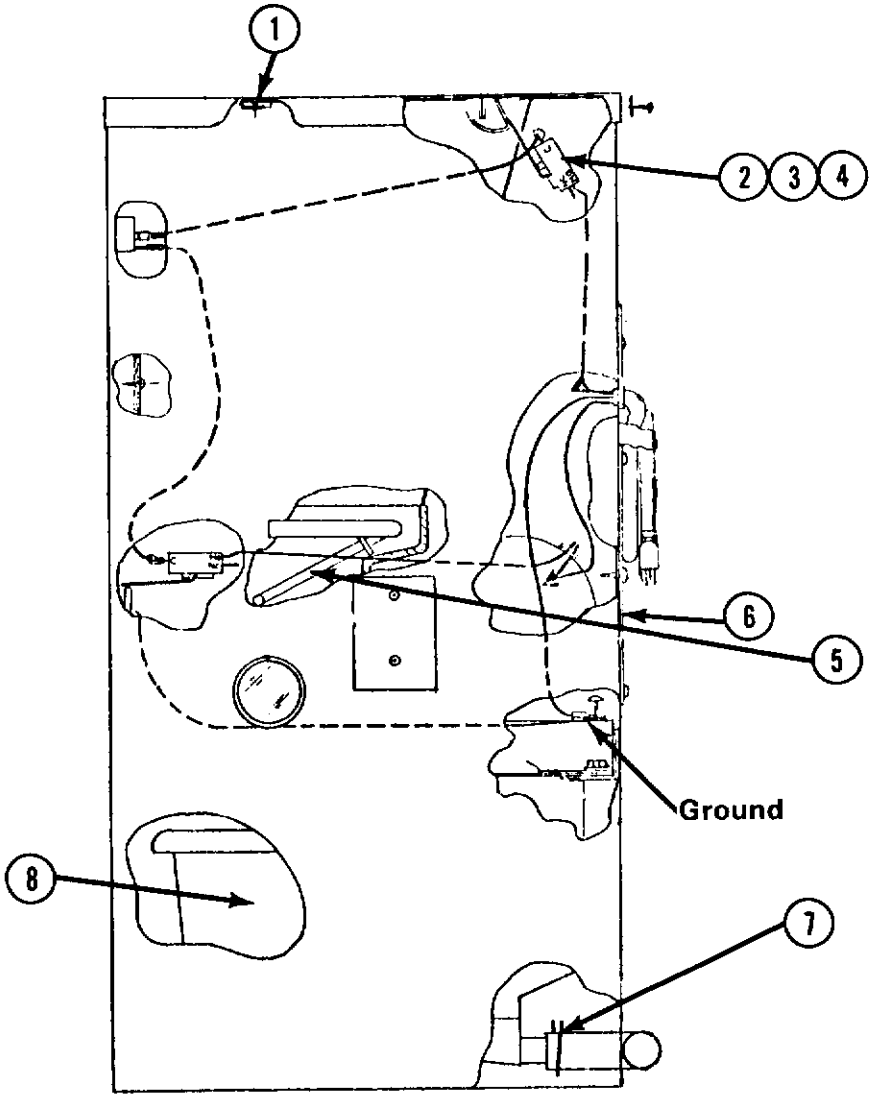

ITEM	PART NO.	DESCRIPTION
1.	03-1419-08	Screw 6 ea.
2.	12-2022-01	Switch Top
3.	03-1403-62	Screw 2 ea.
4.	03-1406-14	Nut 2 ea.
5.	A25868-001	Agitator Fab Assy.
6.	A26766-001	Plate, Access
7.	02-1338-00	Clamp
8.	02-0759-00	Plastic Pan

CRUSHER ASSEMBLY

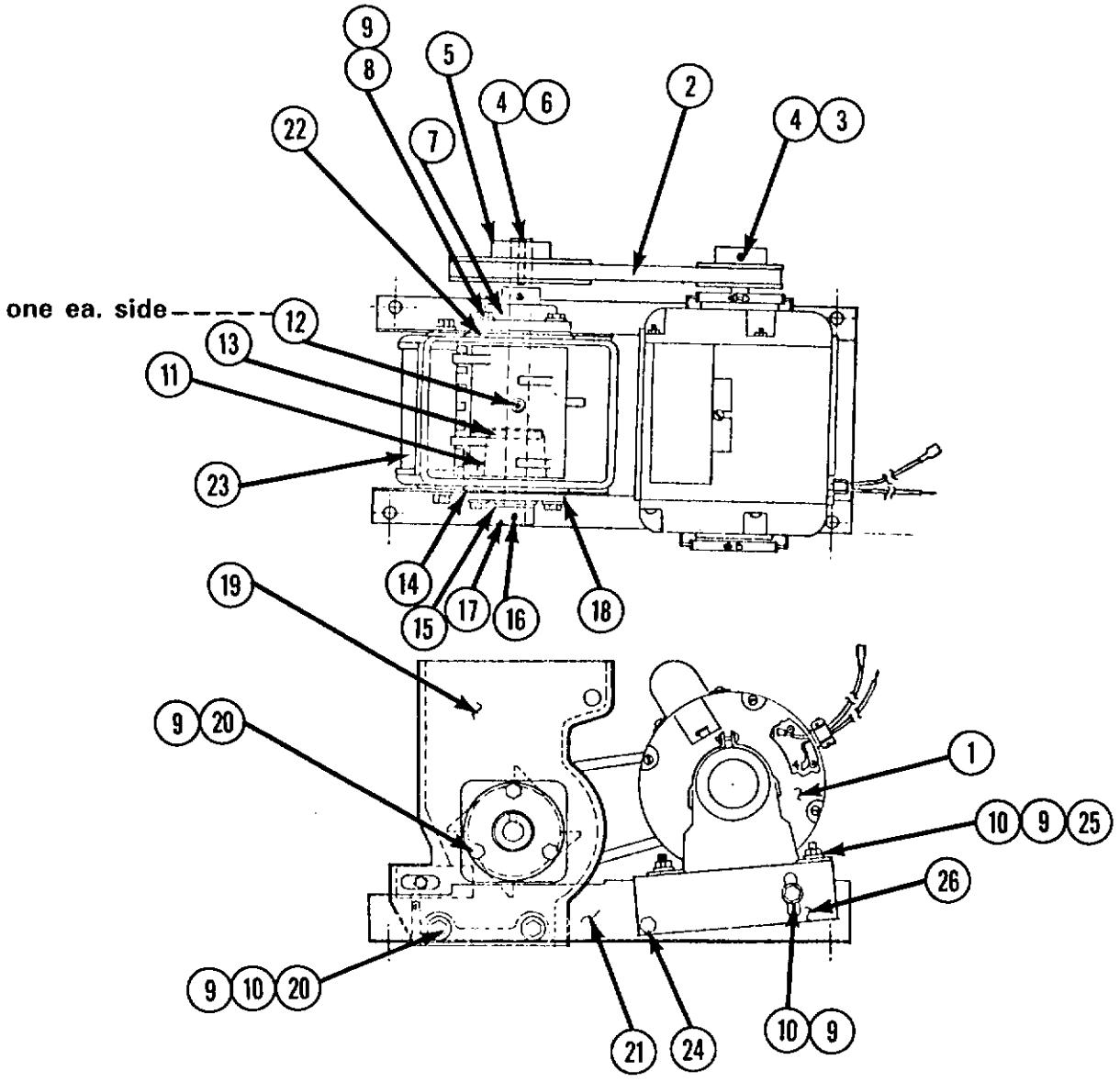

ITEM	PART NO.	DESCRIPTION	ITEM	PART NO.	DESCRIPTION
1.	12-0643-01	Motor 115/60/1	14.	13-0648-00	Rubber Gasket
	12-0643-06	Motor 230/50/1	15.	A08651-000	Washer
2.	13-0225-00	Belt	16.	03-0431-03	Set Screw
3.	02-1462-00	Pulley, Motor	17.	A08652-000	Collar
4.	02-1951-00	Key, Pulley	18.	A08646-000	Bearing Assy
5.	02-0757-00	Pulley, Chopper	19.	A25987-001	Chopper Block
6.	A08644-000	Shaft, Drive	20.	03-1405-04	Screw
7.	02-0755-00	Bearing, Pillow Block	21.	A25683-001	Motor Plate
8.	03-1405-07	Screw	22.	13-0649-00	Rubber Gasket
9.	03-1417-09	Lockwasher	23.	A23597-001	Stationary Cutter
10.	03-1407-05	Washer	24.	03-1405-03	Screw
11.	A08643-000	Chopper Drum	25.	03-1406-08	Nut
12.	03-0431-09	Set Screws	26.	A26768-001	Hinge Plate, Motor
13.	A08645-000	Pin			

B20 Storage Bin

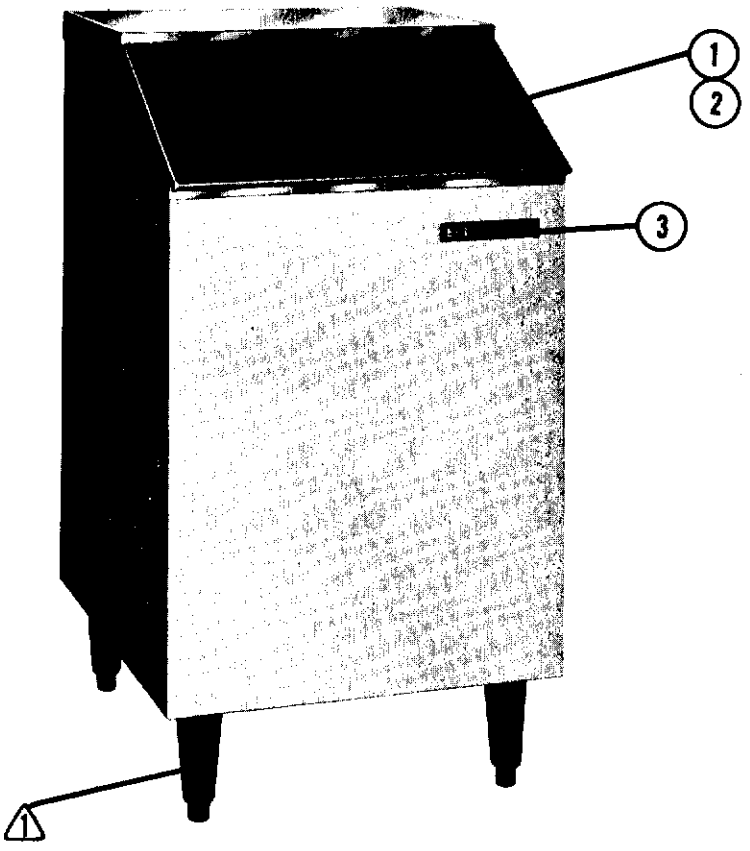

ITEM	PART NO.	DESCRIPTION
1.	02-2118-01	Bin Door
2.	03-0727-03	Screws, Door Stop (2)
3.	15-0156-00	Emblem
4.	13-0786-01	Grommet (Not Shown)

⚠1 Leg Kit Optional

B40 and B60 Storage Bin

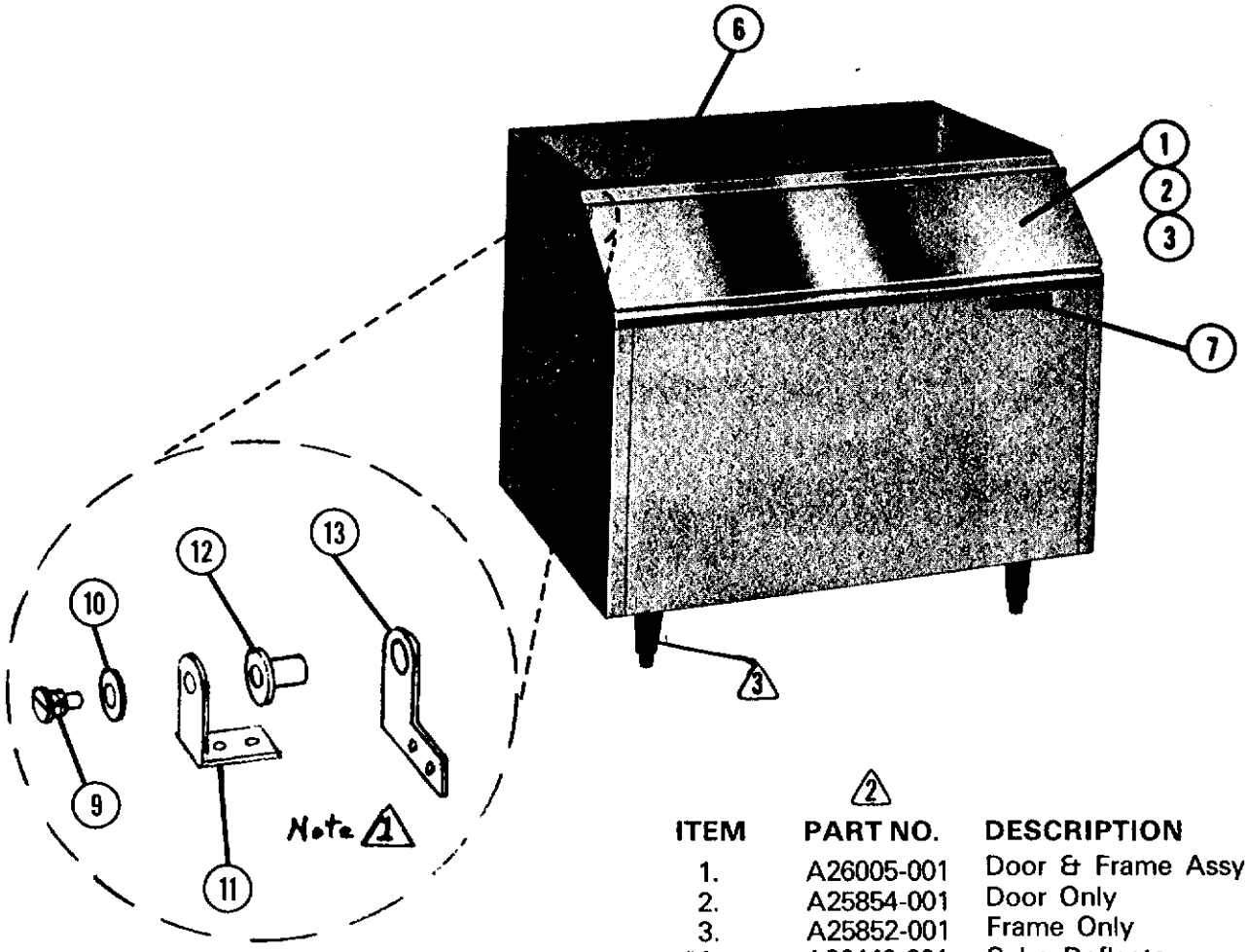

ITEM	PART NO.	DESCRIPTION
1.	A26005-001	Door & Frame Assy
2.	A25854-001	Door Only
3.	A25852-001	Frame Only
*4.	A26449-001	Cube Deflector
*5.	03-0115-00	Deflector Grommets (4 reqd)
6.	19-0503-04	Bin Gasket (order per ft.)
7.	15-0156-00	Emblem
*8.	02-1741-00	Drain Top
9.	A25345-001	Shoulder Screw
10.	A25664-001	Spacer
11.	A25259-001	Hinge, Door Member
12.	A25346-001	Spacer
13.	A25258-001	Hinge, Door Member
14.	13-0595-00	Door Gasket (order per ft.)

*Not Shown

Note 1 Prior units utilized a continuous plastic hinge for the door. These may be replaced using the stainless steel piano hinge kit P.N. A26693-001

Note 2 All the part numbers are common to CRS painted (EB40 & EB60) & S.S. (SB40 & SB60)

Note 3 This unit shown with optional leg kit.

B-80 Storage Bin

High-volume unit of the Scotsman Modular Bin System . . . provides an ice storage capacity of 590 lbs. The MC25 and MC35 Series cuber models or MF3, MF4, MF5 or MF6 Series flakers can be mounted on top. Increase ice storage capacity by adding bin extensions on top of the B80 Bin.

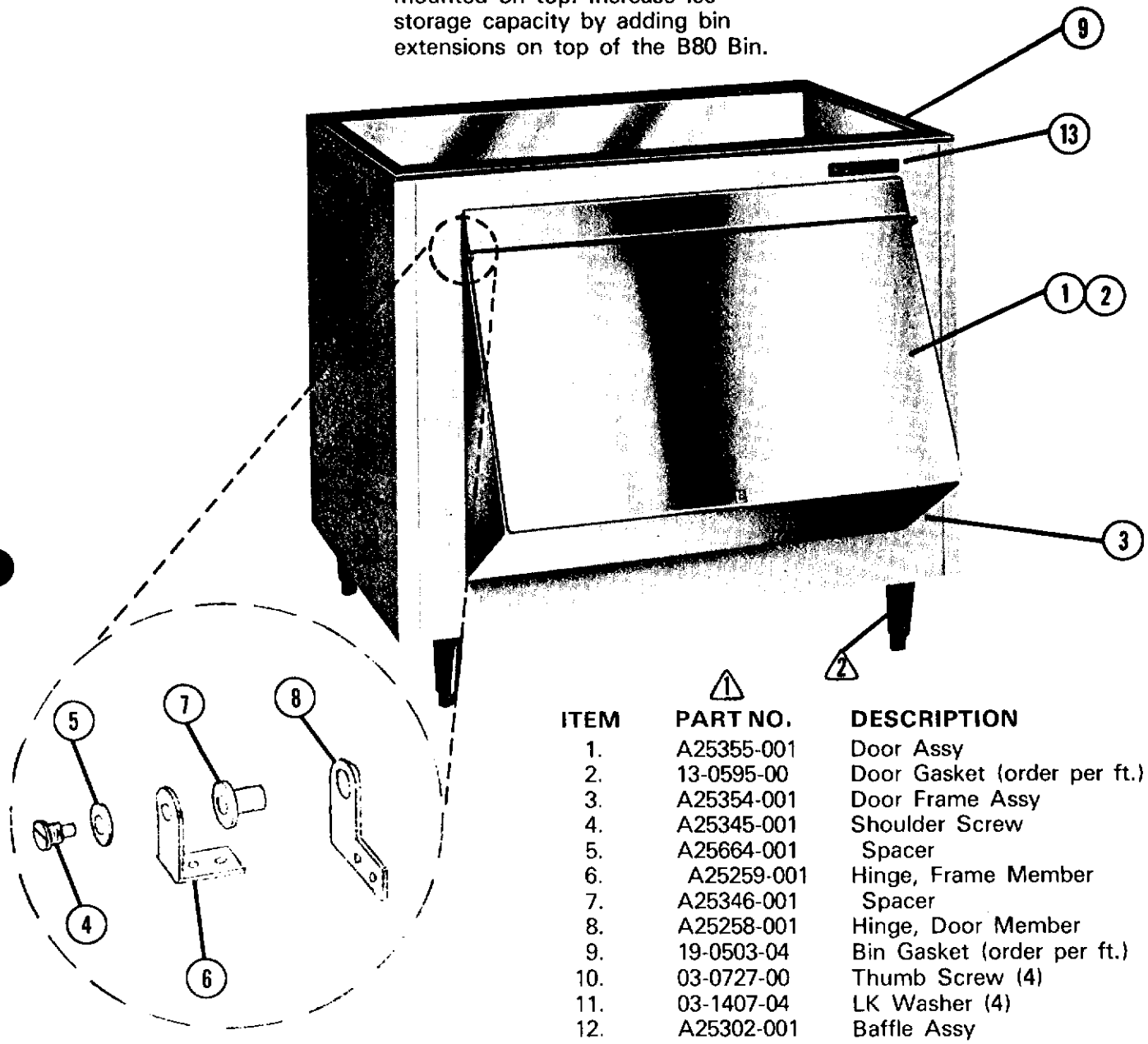

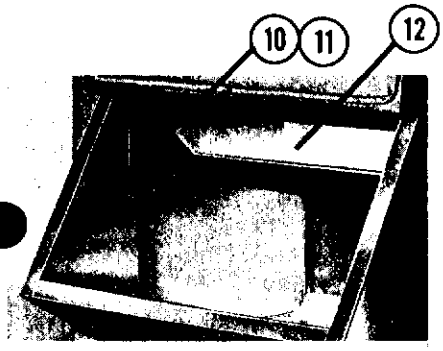

BIN LINER
Sanitary bin liner is constructed of all stainless steel with smooth inside seams. Inside baffle above door prevents ice from falling out when bin is full and door is open.

ITEM	PART NO. ①	DESCRIPTION
1.	A25355-001	Door Assy
2.	13-0595-00	Door Gasket (order per ft.)
3.	A25354-001	Door Frame Assy
4.	A25345-001	Shoulder Screw
5.	A25664-001	Spacer
6.	A25259-001	Hinge, Frame Member
7.	A25346-001	Spacer
8.	A25258-001	Hinge, Door Member
9.	19-0503-04	Bin Gasket (order per ft.)
10.	03-0727-00	Thumb Screw (4)
11.	03-1407-04	LK Washer (4)
12.	A25302-001	Baffle Assy
13.	15-0156-00	Emblem
*14.	A26449-001	Cube Deflector
*15.	13-0115-00	Deflector Grommets (4 reqd)

*Not Shown

Note ① All the part numbers are common to CRS painted (EB80) & S.S. (SV80)

Note ② This unit shown with optional leg kit.

B90 Storage Bin

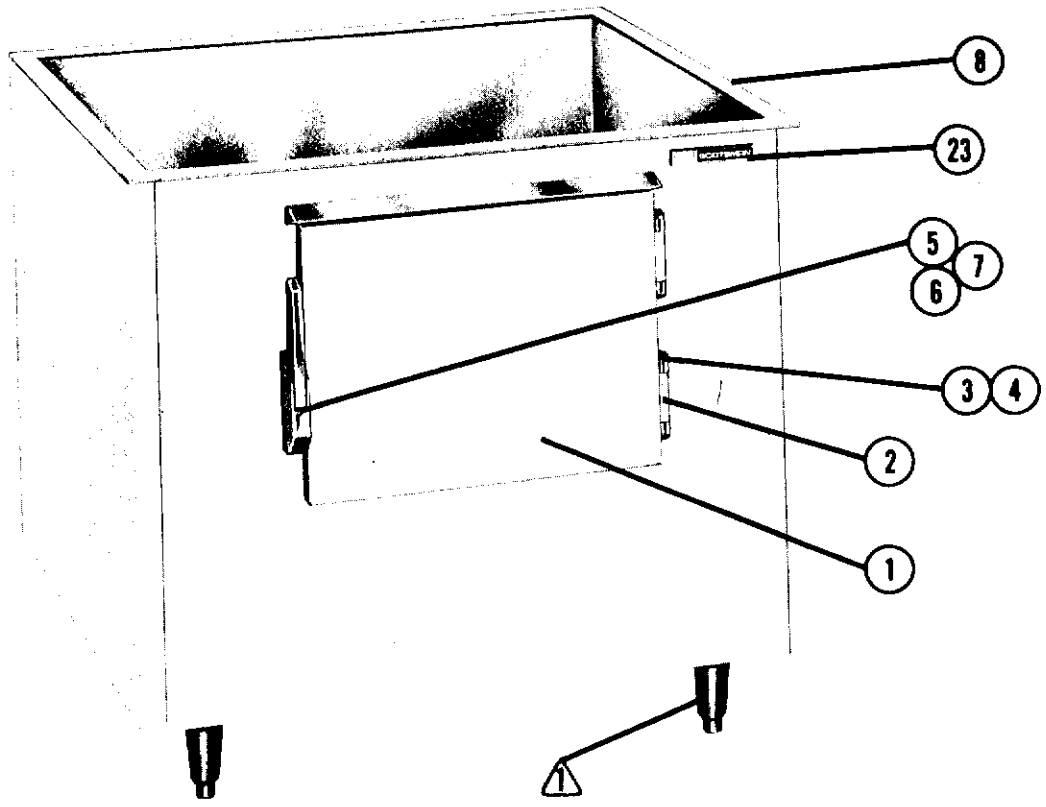

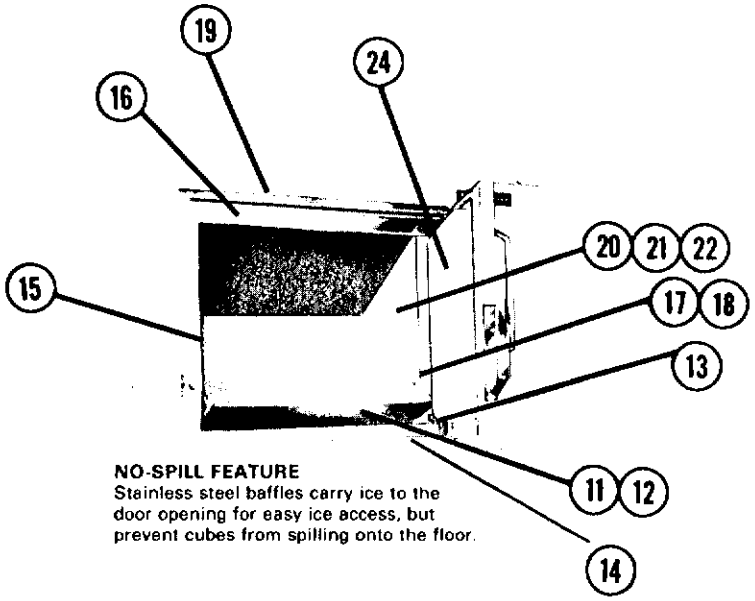

NO-SPILL FEATURE
Stainless steel baffles carry ice to the door opening for easy ice access, but prevent cubes from spilling onto the floor.

ITEM	PART NO.	DESCRIPTION
1.	A18300-010	Door, Painted
	A18300-002	Door, S.S.
2.	02-1569-01	Hinge Cover
3.	02-1569-00	Hinge
4.	03-1285-00	Hinge Screw
5.	02-1568-00	Latch
6.	02-1568-20	Strike Assy.
7.	02-1568-21	Shim
8.	19-0503-04	Bin Gasket (order per ft.)
*9.	A26449-001	Cube Deflector
*10.	13-0115-00	Deflector Grommet (4 reqd.)
11.	A17342-000	Spill Door
12.	A25929-001	Spill Door Brkt. (2)
13.	A25931-001	Door Trim Rt. Side
14.	A25932-001	Door Trim Bottom
15.	A25930-001	Door Trim Lt. Side
16.	A26420-001	Door Trim Top
17.	A17302-000	Button, Storage
18.	03-1403-16	Screw
19.	A16937-002	Awning, Painted
	A16937-001	Awning, S.S.
20.	A15114-000	Baffle Assy.
21.	A25928-001	Button, Baffle (4)
22.	03-1419-12	Screw, Button (4)
23.	15-0156-00	Emblem
24.	02-1000-00	Plastic Door Liner

*Not Shown

⚠1 Unit shown with optional leg kit.

BX 85 Bin Extension

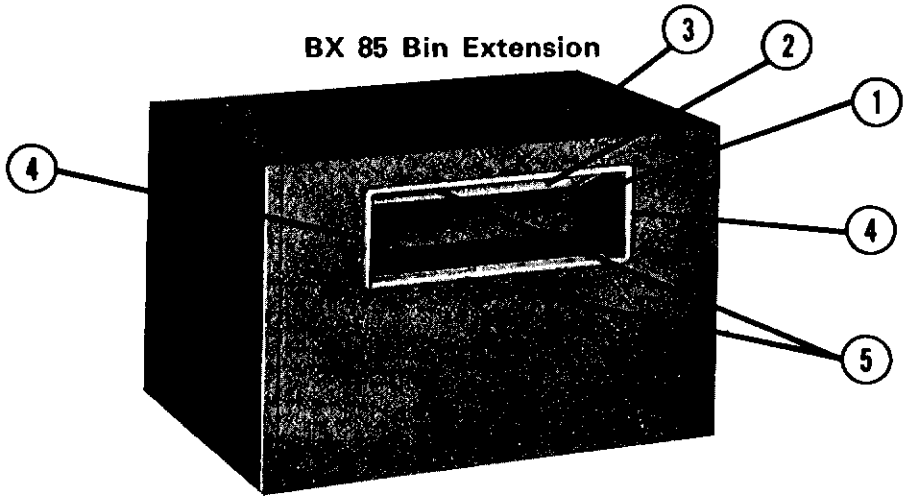

ITEM	PART NO.	DESCRIPTION
1.	02-2172-01	Plex Door
2.	A25270-001	Baffle Assy.
3.	19-0503-04	Bin Gasket (order per ft.)
4.	02-2176-01	Door Trim
5.	02-2163-01	Door Track

EBX85
Bin Extension
28" high, increases storage capacity by 400 lbs.
Plexiglass door on access port.
(SBX85 Stainless)
Ship. Wt:
88 lbs.

EBX87
Bin Extension
28" high, increases storage capacity by 400 lbs.
Same door as on B90 Bin.
(SBX87 Stainless)
Ship. Wt:
117 lbs.

BX 87 Bin Extension

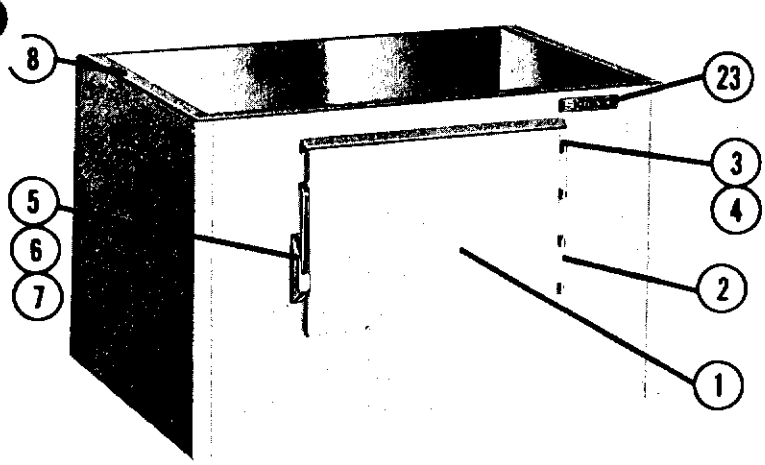

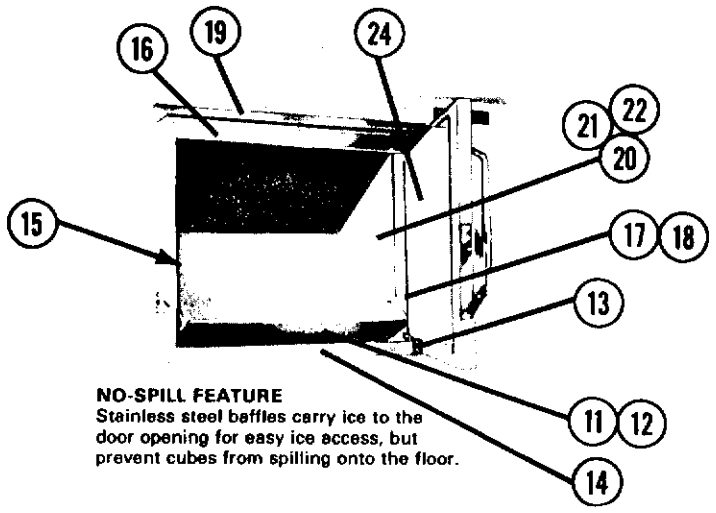

NO-SPILL FEATURE
Stainless steel baffles carry ice to the door opening for easy ice access, but prevent cubes from spilling onto the floor.

ITEM	PART NO.	DESCRIPTION
1.	A18300-010	Door, Painted
	A18300-002	Door, S.S.
2.	02-1569-01	Hinge Cover
3.	02-1569-00	Hinge
4.	03-1285-00	Hinge Screw
5.	02-1568-00	Latch
6.	02-1568-20	Strike Assy
7.	02-1568-21	Shim
8.	19-0503-04	Bin Gasket (order per ft.)
*9.	A26449-001	Cube Deflector
*10.	13-0115-00	Deflector Grommet (4 reqd)
11.	A17342-000	Spill Door
12.	A25929-001	Spill Door Brkt. (2)
13.	A25931-001	Door Trim Rt. Side
14.	A25932-001	Door Trim Bottom
15.	A25930-001	Door Trim Lt. Side
16.	A26420-001	Door Trim Top
17.	A17302-000	Button, Storage
18.	03-1403-16	Screw
19.	A16937-002	Awning, Painted
	A16937-001	Awning, S.S.
20.	A15114-000	Baffle Assy
21.	A25928-001	Button, Baffle (4)
22.	03-1419-12	Screw, Button (4)
23.	15-0156-00	Emblem
24.	02-1000-00	Plastic Door Liner

*Not Shown

B700 Storage Bin

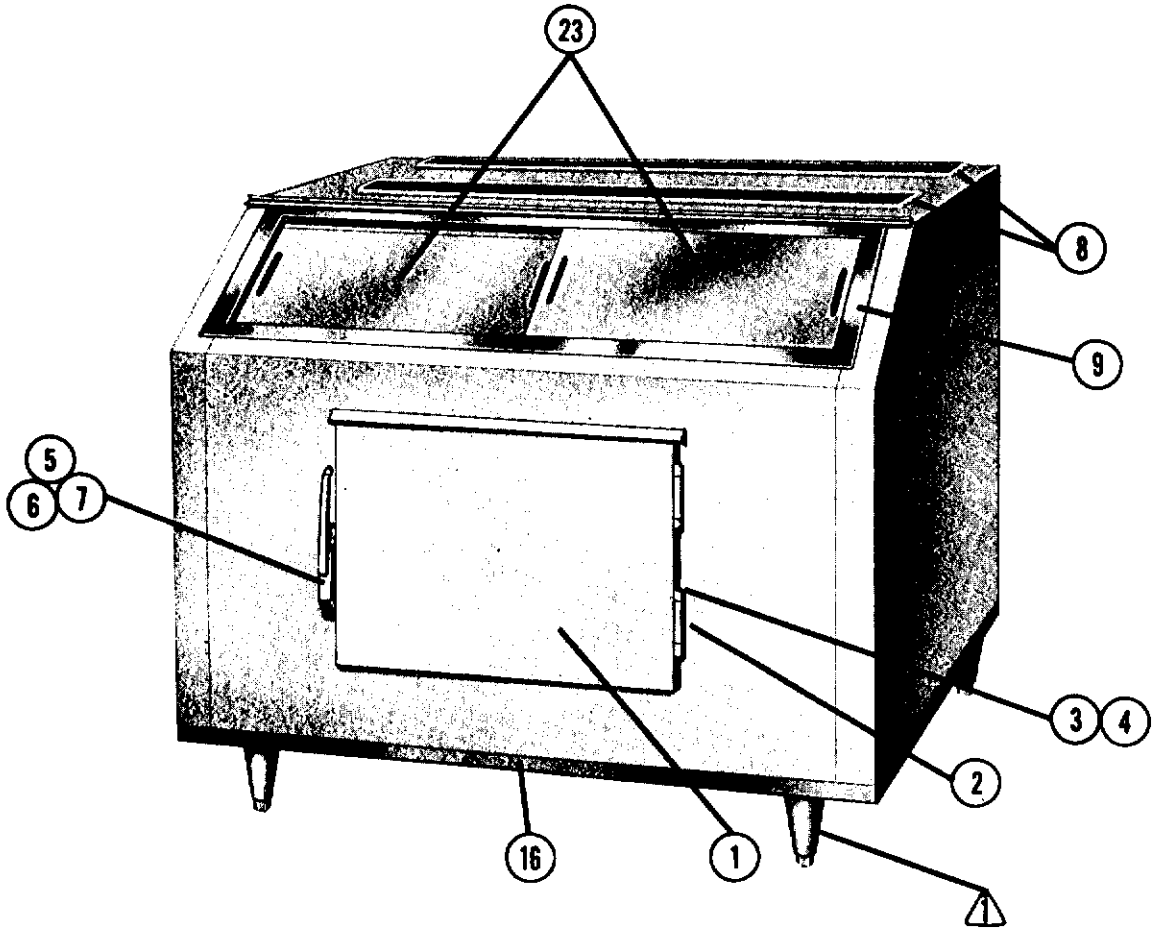

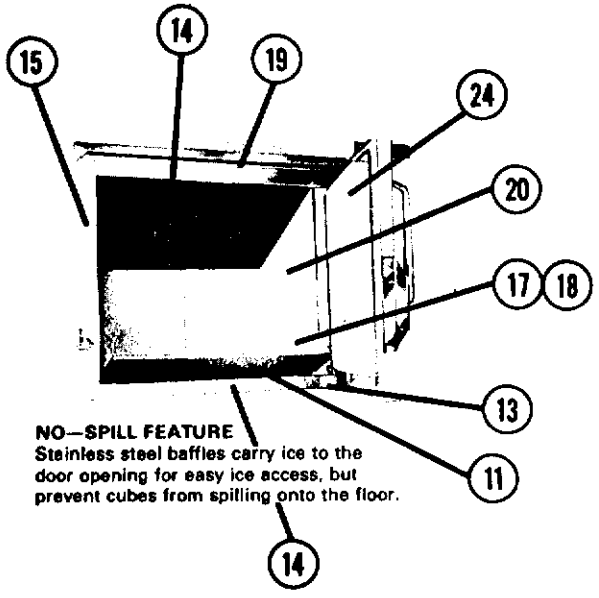

NO—SPILL FEATURE
Stainless steel baffles carry ice to the door opening for easy ice access, but prevent cubes from spilling onto the floor.

⚠1 Unit shown with optional leg kit

ITEM	PART NO.	DESCRIPTION
1.	A18300-010	Door, Painted
	A18300-002	Door, S.S.
2.	02-1569-01	Hinge Cover
3.	02-1569-00	Hinge
4.	03-1285-00	Hinge Screw
5.	02-1568-00	Latch
6.	02-1568-20	Strike Assy
7.	02-1568-21	Shim
8.	02-1544-00	Bin Gasket
9.	A17278-000	Frame, Door
*10.	A17084-000	Bin Drain - Bottom
11.	A17342-000	Spill Door
12.	A25929-001	Spill Door Brkt. (2)
13.	A17261-000	Door Trim Rt. Side
14.	A10805-000	Door Trim Bottom & Top
15.	A17262-000	Door Trim Lt. Side
16.	A09681-004	Trim
17.	A17302-000	Button, Storage
18.	03-1418-24	Screw
19.	A16937-002	Awning, Painted
19.	A16937-001	Awning . S.S.
20.	A15114-000	Baffle Assy
*21.	A18090-000	Drain Ftg - Top
*22.	A06448-000	Drain Strainer
23.	02-1529-02	Door, Plastic
23.	A18770-000	Door, S.S.
24.	02-1000-00	Plastic Door Liner

* Not Shown

STORAGE BINS (Upright Type)

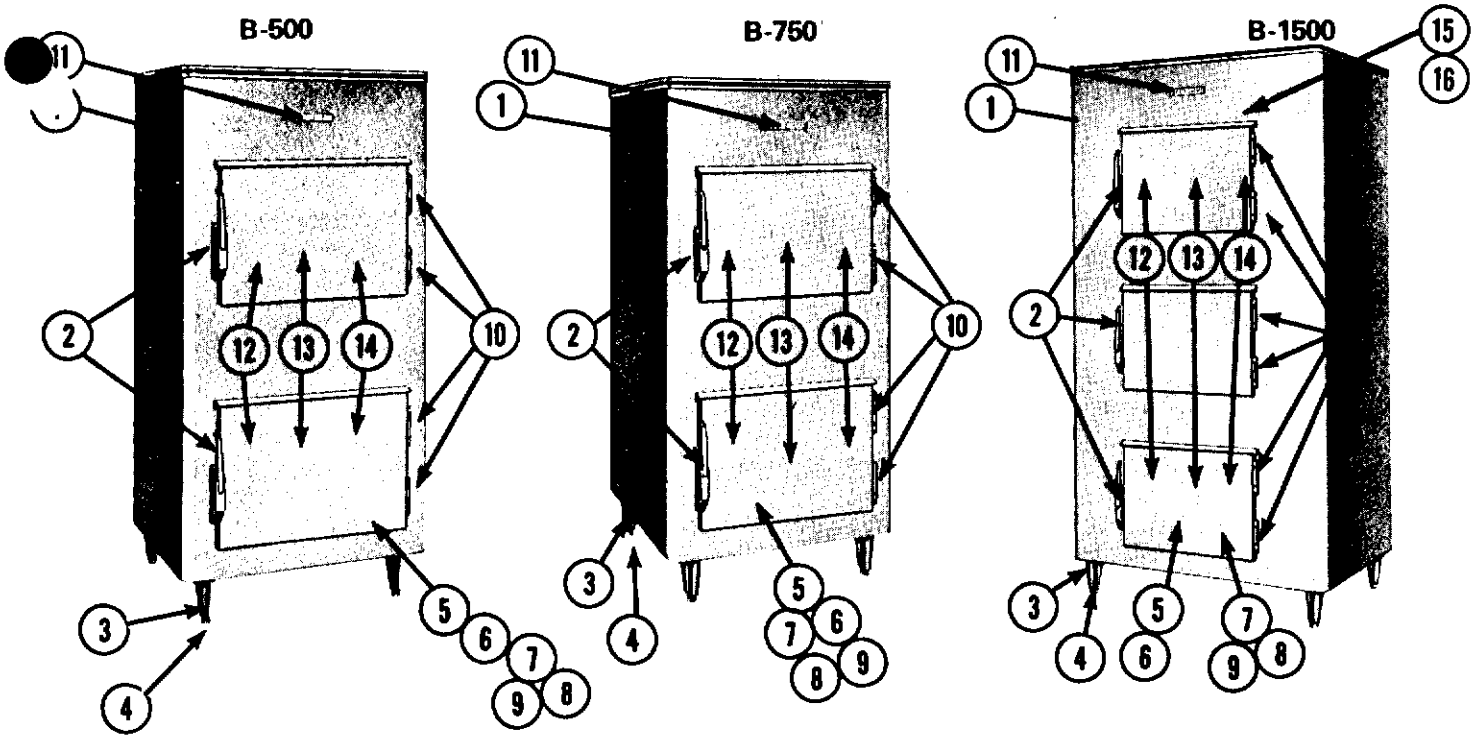

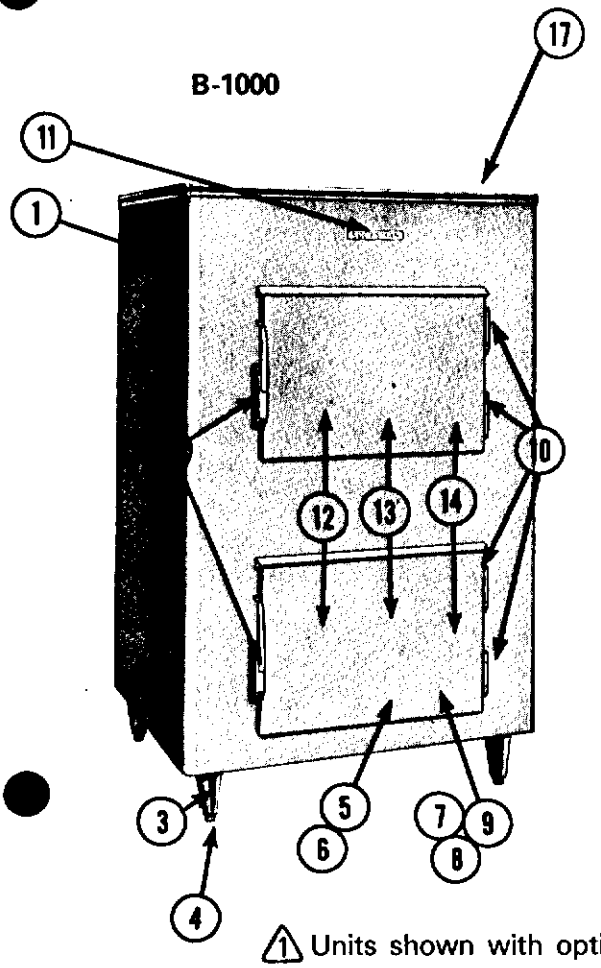

ITEM	PART NO.	DESCRIPTION
1.	13-0611-00	Rubber Shield
2.	02-1568-00	Latch and Strike
3.	Optional	Leg Package - Painted
4.	Optional	Leg Package - St. Steel
5.	A15114-000	Ice Baffle
6.	03-1212-00	Thermostat Bulb Holder
7.	A17680-000	Fitting Drain (Female)
8.	A18090-000	Fitting Drain (Male)
9.	A06448-000	Drain Strainer
10.	02-1569-00	Hinge
	03-1285-00	Hinge Screw
	02-1569-01	Hinge Covers
11.	15-0156-00	Scotsman Emblem
12.	A18300-005	Cabinet Door - Painted
13.	A18300-002	Cabinet Door - St. Steel
	02-1000-00	Cabinet Door - Liner
14.	13-0264-00	Cabinet Door - Gasket
15.		Awning Gasket
16.	A16937-002	Awning - Painted
	A6937-001	Awning - St. Steel
17.	13-0613-00	Bin Top Grommet - Round

⚠1 Units shown with optional leg kit

MACHINE STAND MODELS

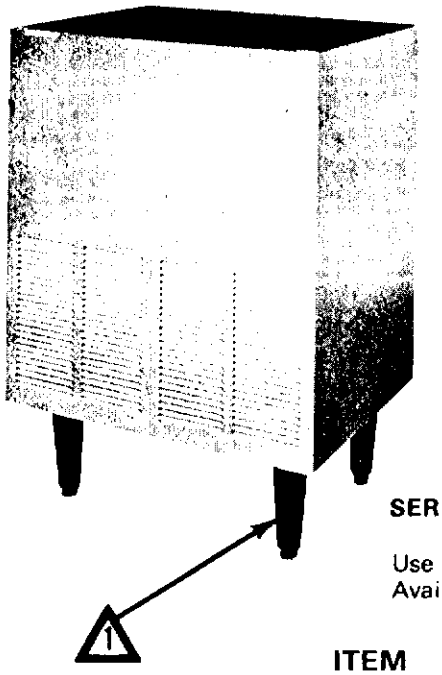

SERIES DMS20

Use the icemaker-dispenser FD5 and FD6 series. Available in painted finish or stainless steel.

ITEM NO.	PART NO.	DESCRIPTION
1.	02-0836-00	Cabinet Catch
2.	15-0411-00	Panel Strike
3.	A20048-000	Door Painted
	A20048-001	Door, S.S.
4.	A20050-000	Panel, Painted
	A20050-001	Panel, S.S.

Lock protrudes additional ¾" in unlocked position.

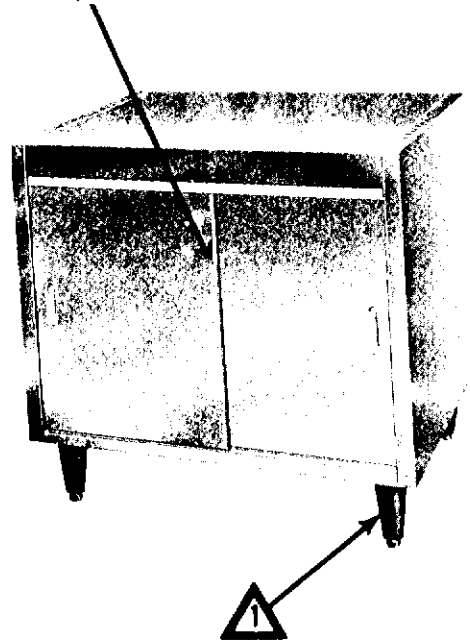

SERIES DMS30

Use with icemaker-dispenser FD7 series. Available in stainless steel only: Internal stainless shelves for sanitary storage.

ITEM NO.	PART NO.	DESCRIPTION
1.	A24163-001	Shelf, Painted
	A24163-002	Shelf, S.S.
2.	A24167-001	Door, R.H. Painted
	A24167-002	Door, R.H. S.S.
3.	A24172-001	Door, L.H. Painted
	A24172-002	Door, L.H. S.S.
4.	02-2054-05	Lock Assy.

Units Shown With Optional Leg Kit

FD5
THE PARTS ILLUSTRATIONS AND PARTS LISTS

GENERAL

This section contains the Parts Illustrations and the Parts List for each of the major assemblies in the Model FD5 Flaked Icemaker/Dispenser.

A *No Number* designation, when used in the Part Number Column indicates the unit is not available from SCOTSMAN as an assembly. This designation is used only for the convenience and clarity of division in cataloging.

HOW TO ORDER PARTS OR ASSEMBLIES

When ordering parts or assemblies, to avoid costly delays and errors in shipment, give the part number, the complete description shown in the list, and the quantities of each part or assembly required. Also include the Model name, the serial number of the icemaker for which the part is required, and for parts which require color matching, the color of the Cabinet.

All Part Numbers have TEN DIGITS (spaces), required for use in the Computer System. BE SURE to fill in ALL SPACES in the CATALOG NUMBER column, on the Parts Order form.

Enter the QUANTITY of the Parts ordered, in the last digit column under the QUANTITY column heading, the one under the small 55 number, for parts from 1 thru 9. For 10 or more parts use two columns.

To be sure you receive the proper parts in the proper quantities, ALWAYS use the PART NUMBERS and DESCRIPTIONS given in the Parts Manuals.

Write an order for the Part. (Use SCOTSMAN Parts Order Form (DN103). Be sure to include:

- ☐ Distributor Name.
- ☐ (Use for DROP-SHIP order ONLY.)
- ☐ Distributor Purchase Order Number.
- ☐ Carrier.
- ☐ How shipped (Truck, Rail, UPS, etc.)
- ☐ Date ordered.
- ☐ Part Catalog Number. (Use full TEN digits (spaces) listed in Parts Manual, including dashes between numbers.)
- ☐ Description - as listed in Parts Manual.
- ☐ Quantity - number of parts ordered. (Use far right column.)

WIRING DIAGRAMS

This section is provided as an aid in understanding the electrical circuitry of the Flaked Icemaker/Dispenser.

The wiring diagrams in this Section are:
FD5AE-1C 115/60/1 Air-Cooled
FD5WE-1C 115/60/1 Water-Cooled

WARNING

When conducting a continuity check of the modular cuber:

1. **Disconnect the main power source.**
2. **DO NOT use an incandescent lamp or jumper wire, conduct all tests with a volt-ohm-meter.**

FD5
THE PARTS ILLUSTRATION AND PARTS LISTINGS

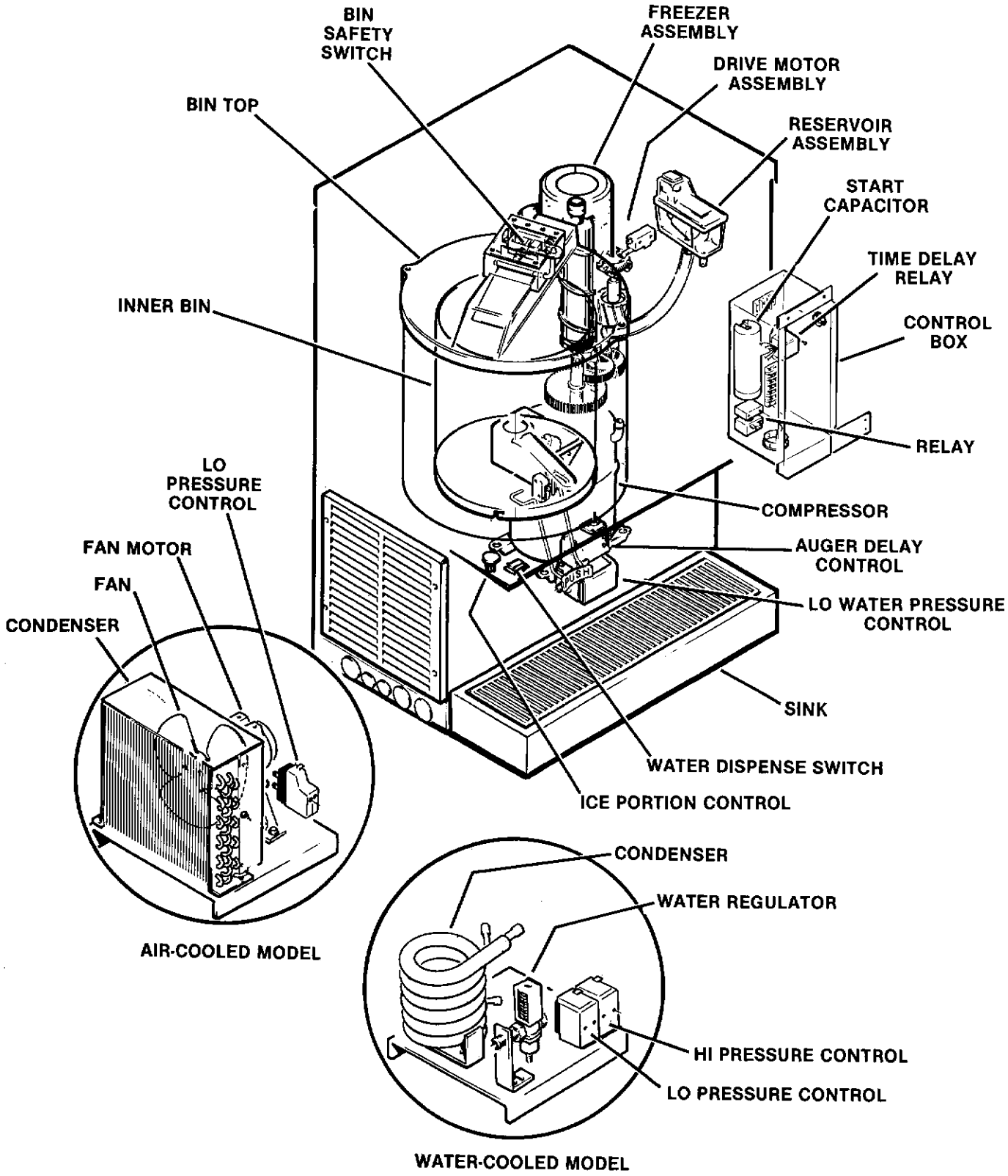

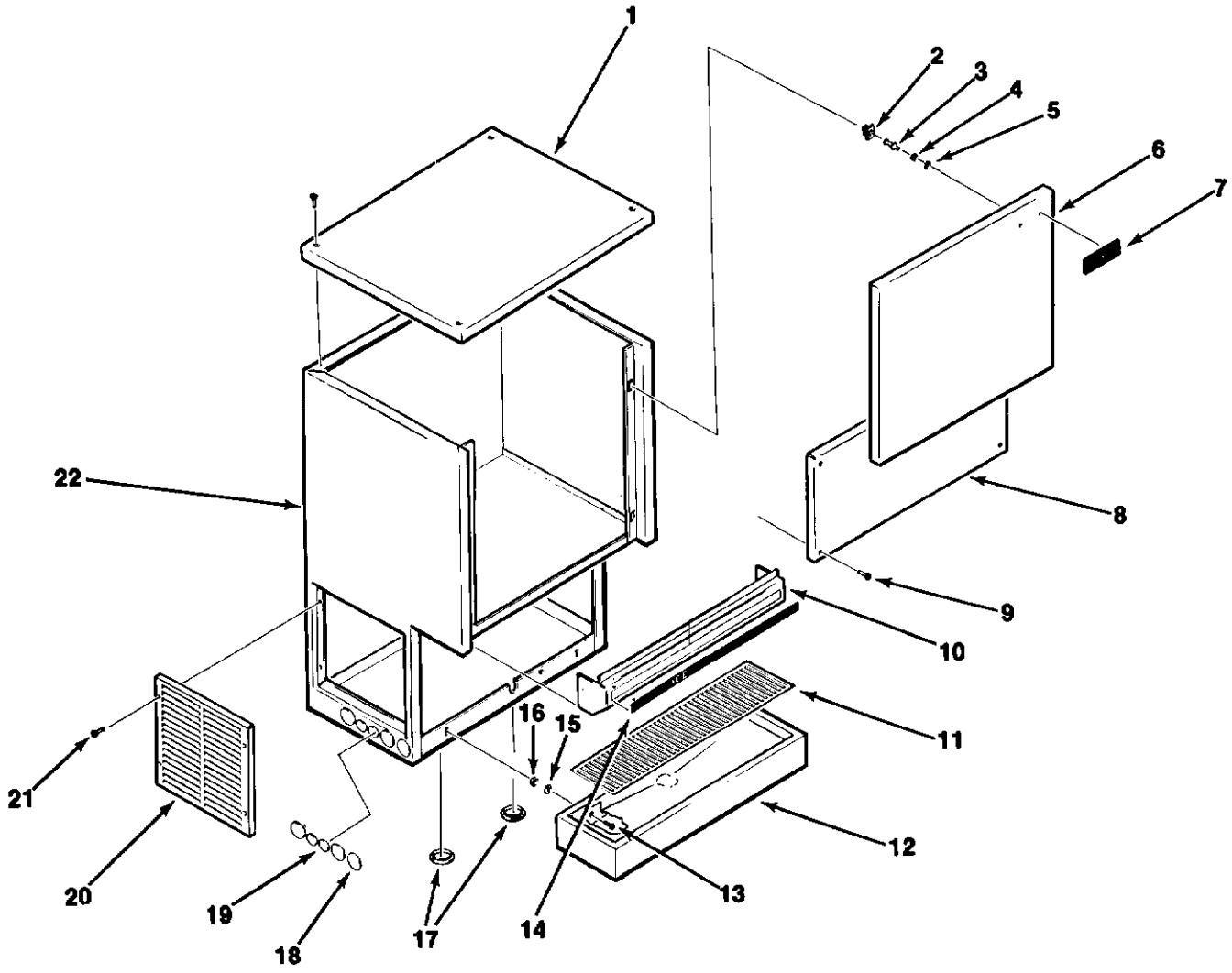

CABINET ASSEMBLY

ITEM NUMBER	PART NUMBER	DESCRIPTION
1	A20192-003	Cabinet Top, Enamel
	A20192-001	Cabinet Top, Stainless Steel
2	02-0836-00	Catch (8 required)
3	15-0411-00	Strike (8 required)
4	03-1406-03	Nut, No. 8-32 Hex
5	03-1417-03	Lockwasher, No. 8 External Tooth
6	A20192-002	Upper Front Panel, Enamel
	A20192-001	Upper Front Panel, Stainless Steel
7	15-0681-01	Scotsman Emblem
8	A19339-000	Splash Panel, Stainless Steel
9	03-1419-09	Screw, No. 8 x 1-1/4
10	A21273-000	Panel, Control, Enamel
	A21273-001	Panel, Control, Stainless Steel
11	02-1858-00	Grill
12	A23212-000	Sink Assembly
13	03-1405-05	Screw, 1/4-20 x 5/8
14	15-0560-01	Decal
15	03-1410-03	Lockwasher, 1/4
16	03-1406-09	Nut, 1/4-20
17	*No Number*	Plug Button
18	*No Number*	Hole Plug
19	*No Number*	Hole Plug
20	A24140-004	Panel - Cond. Access, Enamel
	A24140-002	Panel - Cond. Access, Stainless Steel
21	15-0411-00	Strike (8 required)
22	A19945-003	Cabinet Frame, Enamel
	A19945-001	Cabinet Frame, Stainless Steel

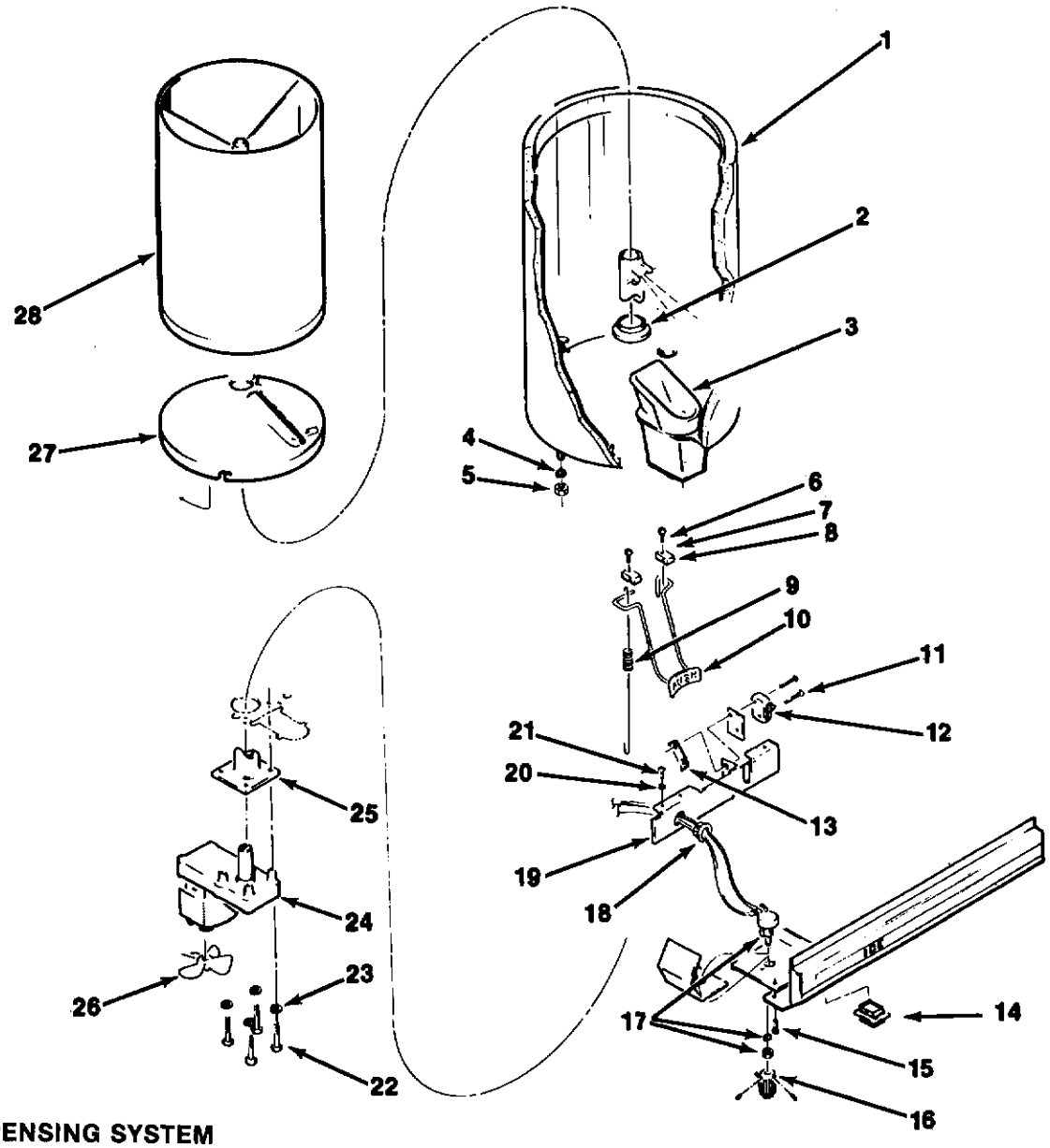

ICE DISPENSING SYSTEM

ITEM NUMBER	PART NUMBER	DESCRIPTION
1	A21386-001	Bin Assembly, Insulation
2	13-0747-00	Water Shed
3	02-1726-00	Rubber Spout
4	03-1410-03	Lockwasher
5	03-1406-09	Hex Nut
6	03-1403-06	Panhead Machine Screw
7	03-1417-14	Lockwasher
8	02-1969-00	Arm Clamp
9	02-1827-00	Spring
10	02-2076-01	Glass Filler Lever
11	03-1403-62	Screw, 4-40 x 7/8
12	12-1642-00	Switch
13	A22053-000	Speed Nut, Twin
14	12-1377-01	Switch
15	03-1404-09	Screw, No. 8 x 1/2
16	02-1810-00	Knob, Pointer
17	12-1557-00	Potentiometer
18	12-1213-10	Snap Bushing
19	A24325-001	Switch Plate Assembly
20	03-1417-03	Lockwasher
21	03-1403-16	Panhead Machine Screw
22	03-1403-36	Panhead Machine Screw
23	03-1410-02	Lockwasher
24	12-1561-01	Bin Drivemotor
25	02-1971-00	Gear Motor, Bracket
26	12-0675-25	Fan Blade
27	A30289-001	Inner Bin Bottom Assembly
28	A19349-001	Inner Bin Fab. Assembly

POTABLE WATER AND DRAINAGE SYSTEM

ITEM NUMBER	PART NUMBER	DESCRIPTION
1	02-2217-01	Reservoir Assembly
2	02-2217-02	Valve and Float Reservoir
3	A20959-000	Bracket, Reservoir
4	03-1410-02	Lockwasher, No. 10
5	03-1406-06	Nut, No. 10-24 Hex
6	02-0694-00	Clamp
7	02-0534-00	Clamp
8	13-0674-09	Tube (to freezer) 7" (order per ft.)
9	13-0079-03	Tube (overflow to drain) 38" (order per ft.)
10	11-0402-01	Auger Delay
11	11-0296-00	Pressure Control
12	*No Number*	Washer, Rubber
13	*No Number*	Bracket, Water Pressure
14	*No Number*	Water Line Assembly
15	*No Number*	Ground Clip
16	*No Number*	Screw
17	02-1338-00	Clamp
18	A21532-000	Double Tee
19	02-0534-00	Clamp
20	12-0350-00	Connector, Straight
21	*No Number*	Tee
22	03-1417-09	Lockwasher, 1/4
23	03-1406-09	Nut, 1/4-20 Hex
24	12-1646-01	Solenoid Assembly

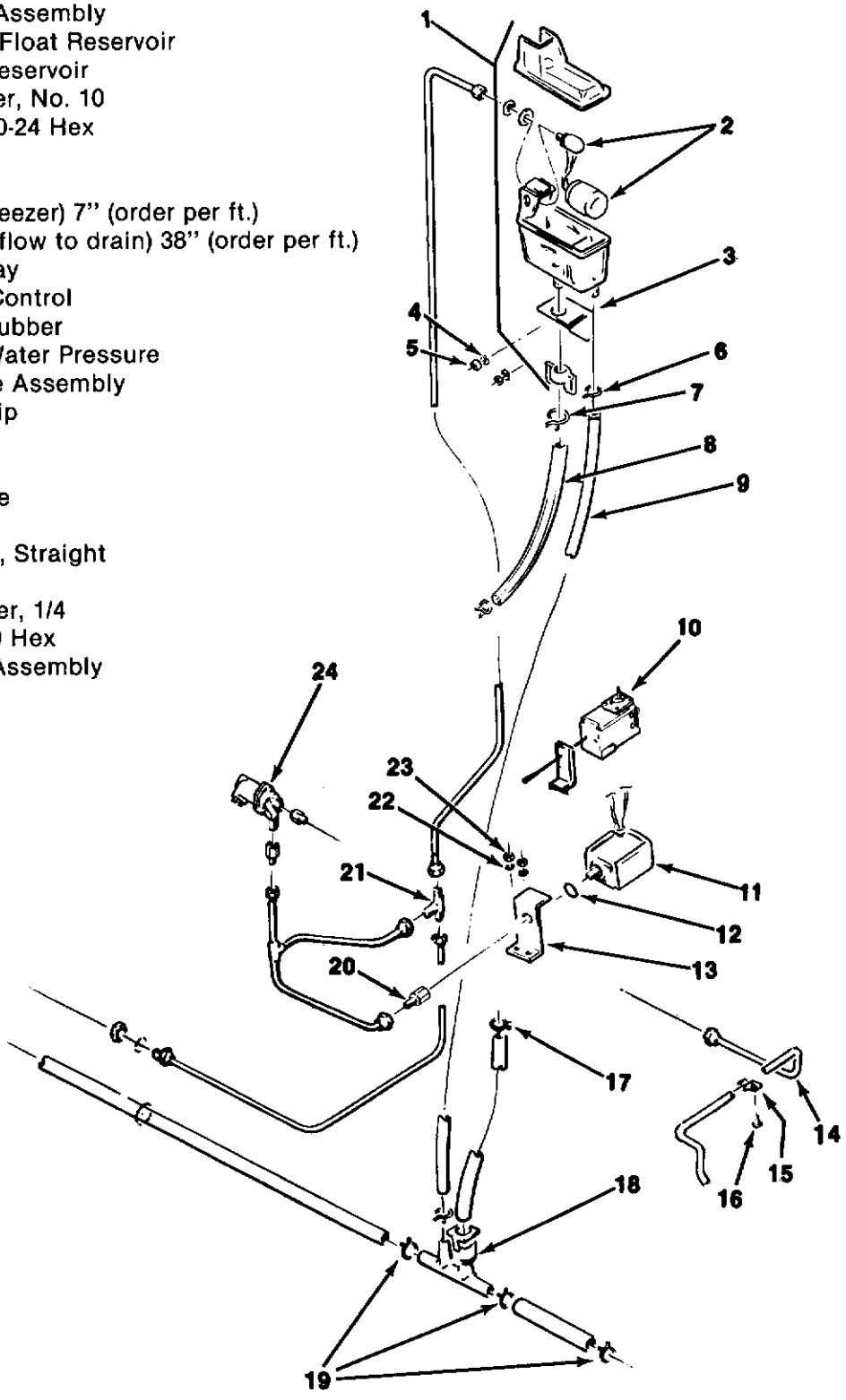

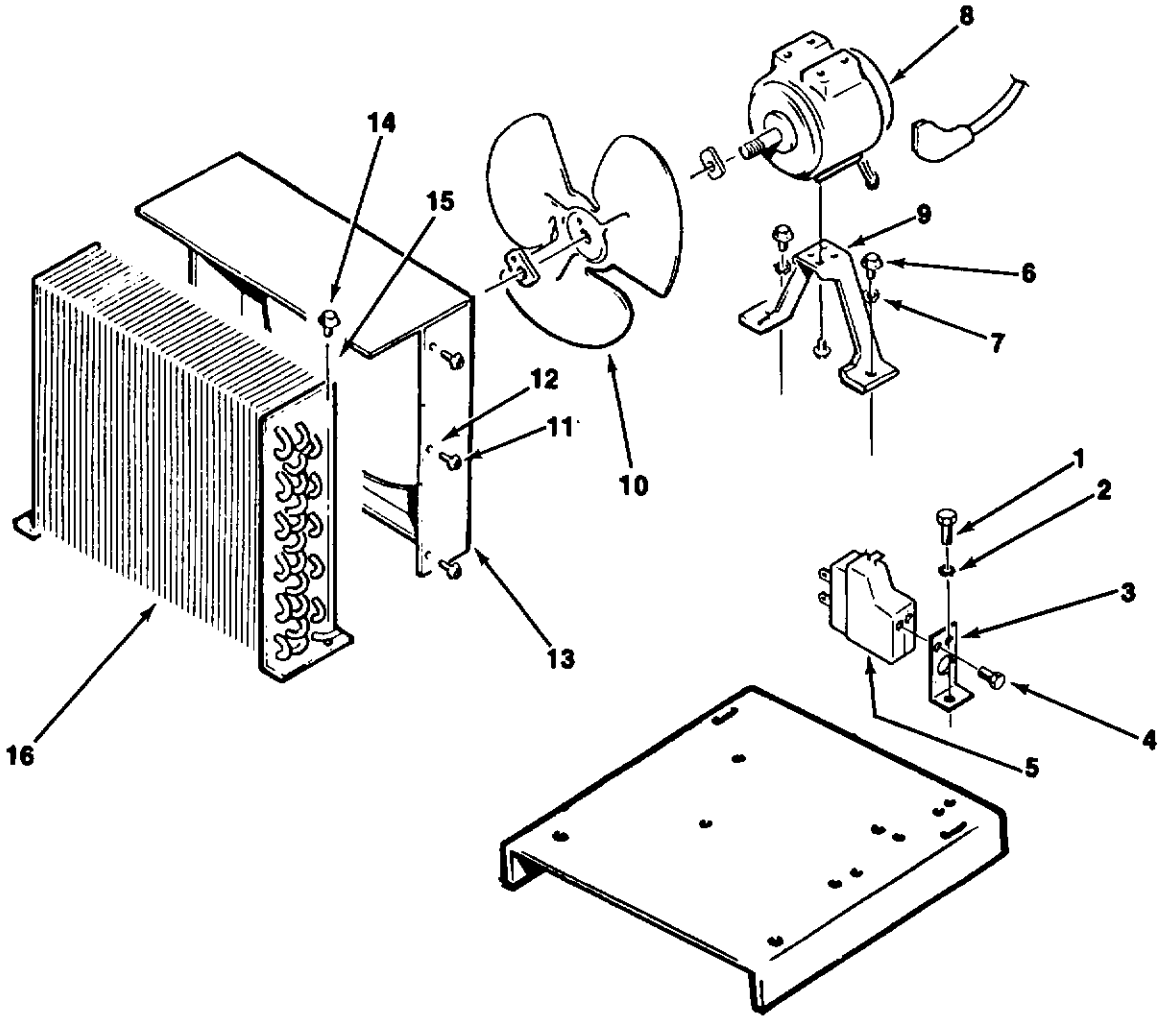

AIR-COOLED CONDENSER ASSEMBLY

ITEM NUMBER	PART NUMBER	DESCRIPTION
1	03-0571-00	Screw, No. 1/4-20 x 1/2 T/C Hex Cap
2	03-1417-09	Lockwasher, 1/4 External Tooth
3	*No Number*	Bracket Pressure Control
4	03-1403-02	Screw, No. 6-32 x 1/4 Phil Recess Pan HD
5	11-0420-01	Pressure Control, Low
6	03-0571-00	Screw, No. 1/4-20 x 1/2 T/C Hex Cap
7	03-1410-03	Lockwasher, 1/4 Helical Spring
8	12-1576-01	Fan Motor
9	18-0422-00	Fan Bracket
10	18-0137-02	Fan Blade
11	03-1404-15	Phil Recess Pan HD
12	03-1407-04	Washer, No. 10 Flat
13	A20550-000	Shroud, Condenser
14	03-1405-03	Screw, 1/4-20 x 1/2 Hex Cap
15	03-1417-09	Lockwasher, No. 1/4 External Tooth
16	18-1927-00	Condenser

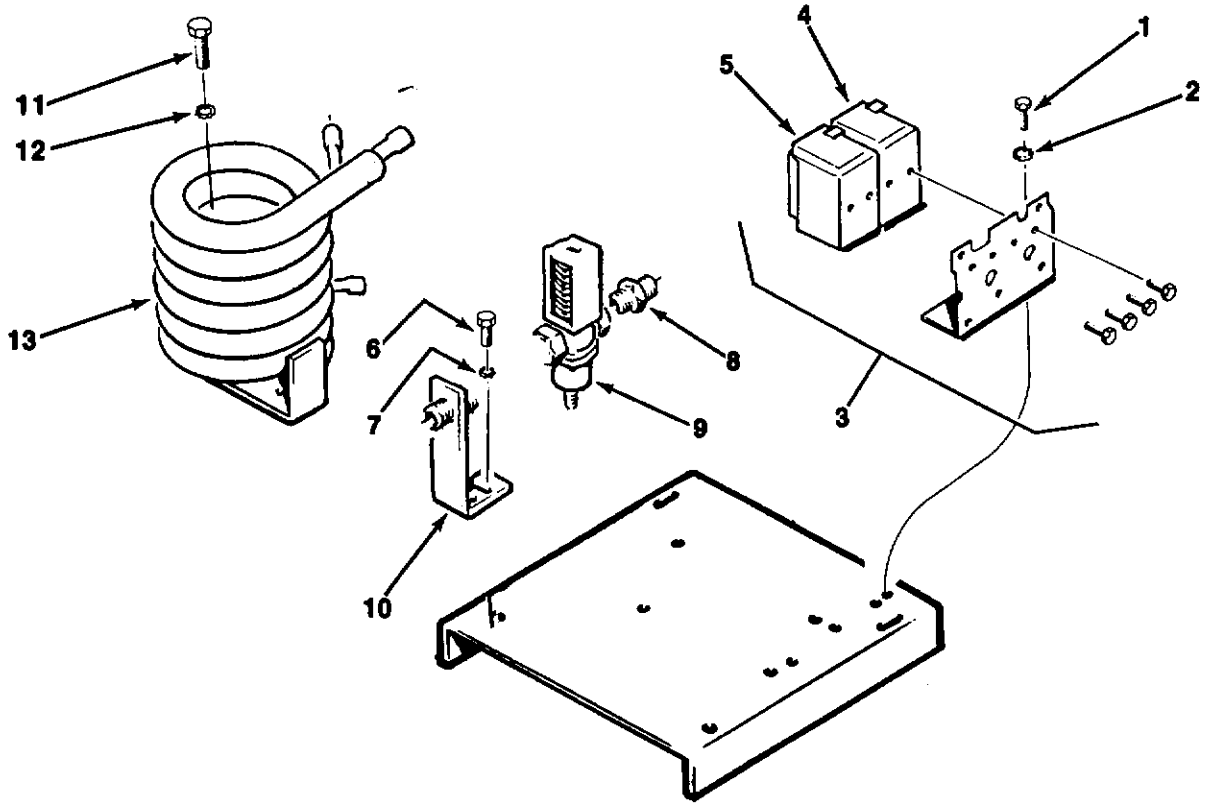

WATER-COOLED CONDENSER ASSEMBLY

ITEM NUMBER	PART NUMBER	DESCRIPTION
1	03-1404-08	Screw, No. 8 x 3/8 T/F Tap
2	03-1417-03	Lockwasher No. 8 External Tooth
3	11-0421-01	Pressure Control Assembly (Not Sold Separately)
4	*No Number*	Pressure Control, Hi
5	*No Number*	Pressure Control, Lo
6	03-0571-00	Screw, 1/4-20 x 1/2 T/C Hex Cap
7	13-1410-03	Lockwasher, 1/4 Helical Spring
8	A24487-003	Coupling
9	11-0198-02	Water Regulator
10	A15924-000	Pipe Nipple Assembly
11	03-0571-00	Screw, 1/4-20 x 1/4 T/C Hex Cap
12	03-1417-05	Lockwasher, 1/4 External Tooth
13	18-3303-02	Condenser Assembly (Water-Cooled)

FREEZER ASSEMBLY

ITEM NUMBER	PART NUMBER	DESCRIPTION
1	03-1558-03	Retainer Ring
2	A08162-000	Cap Hook
3	A07701-000	Cap
4	03-0758-00	Screw
5	A07699-000	Washer
6	02-1412-00	Top Bearing—Matched Set
7	13-0617-16	"O" Ring
8	A14678-020	Breaker with Bearing includes # 6-7-8
9	A29669-001	Auger
10	03-1403-46	Screw
11	03-1417-07	Washer
12	A26752-020	Evaporator Shell includes Suction Line, No internal parts.
13	02-1300-01	Water Seal
14	02-0417-00	Bearing, Lower
15	03-1410-04	Washer, (3 Req'd)
16	03-1405-42	Cap Screw (3 Req'd)
17	08-0595-01	Adapter
18	A29915-002	Spline Drive Coupling
19	13-0709-01	Shaft Drip Shield - Rubber
20	03-1505-00	Gasket

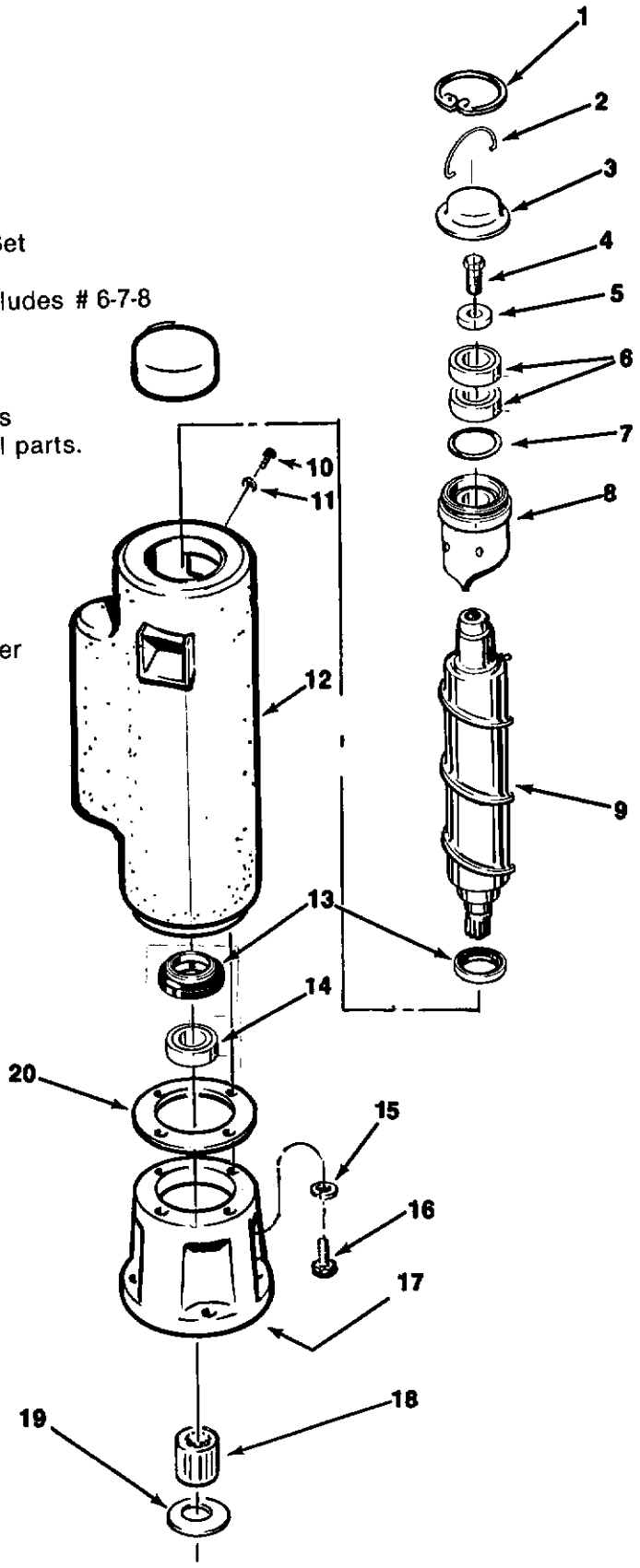

THE PARTS ILLUSTRATION AND PARTS LISTINGS

DRIVEMOTOR ASSEMBLY

ITEM NUMBER	PART NUMBER	DESCRIPTION
1	A27494-001	Centrifugal Switch Kit
2	A27895-001	Housing
3	12-2059-01	Switch
4	03-1408-36	Washer
5	A30579-001	Shaft and Actuator
6	03-1403-77	Screw
7	A17047-001	Motor Housing
8	A28168-001	Cooling Fan
9	12-1400-01	Stator 115/60/1
10	A28160-001	Rotor Assembly
11	03-1408-08	Washer
12	02-1501-00	Bearing
13	02-1504-00	Grease Seal (2 ea.)
14	02-1503-00	Grease Seal (2 ea.)
15	03-1408-41	Washer
16	03-1408-38	Washer
17	02-2438-01	1st Gear/2nd Pinion
18	03-1408-39	Washer
19	03-1408-40	Washer Shim
20	02-2439-01	2nd Gear & 3rd Pinion
21	03-1408-21	Washer
22	03-1408-04	Washer
23	03-1602-01	Woodruff Key
24	03-1515-03	Retaining Ring
25	02-2444-01	Output Gear

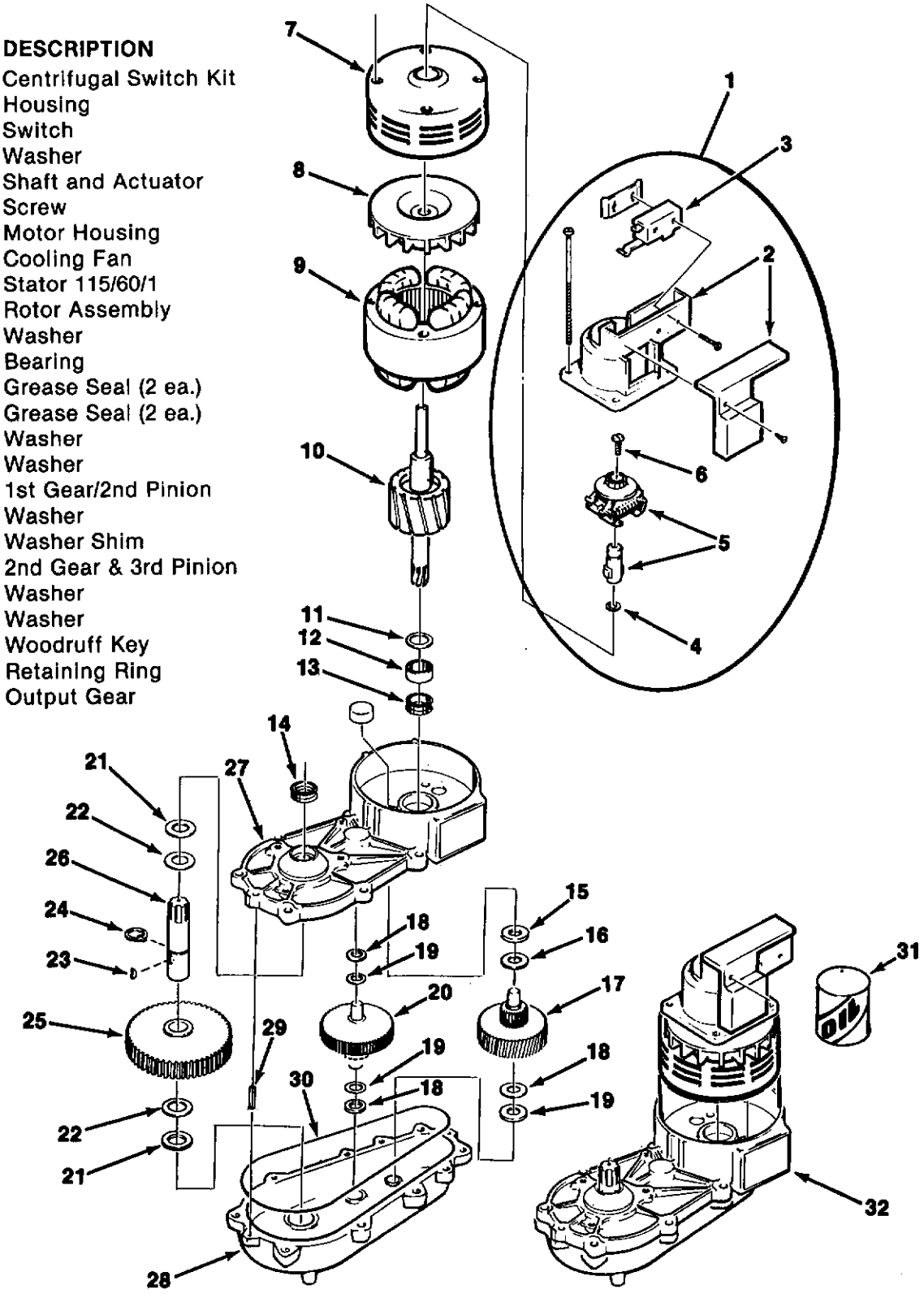

26	02-2445-01	Output Shaft
27	A28165-021	Gear Box Cover
28	A28166-001	Gear Case Assy
29	03-0774-11	Roll Pin
30	02-1505-00	O-Ring
31	A25835-001	Gear Case Oil (1) Pint
32	A28151-021	Gear Reducer (Complete)

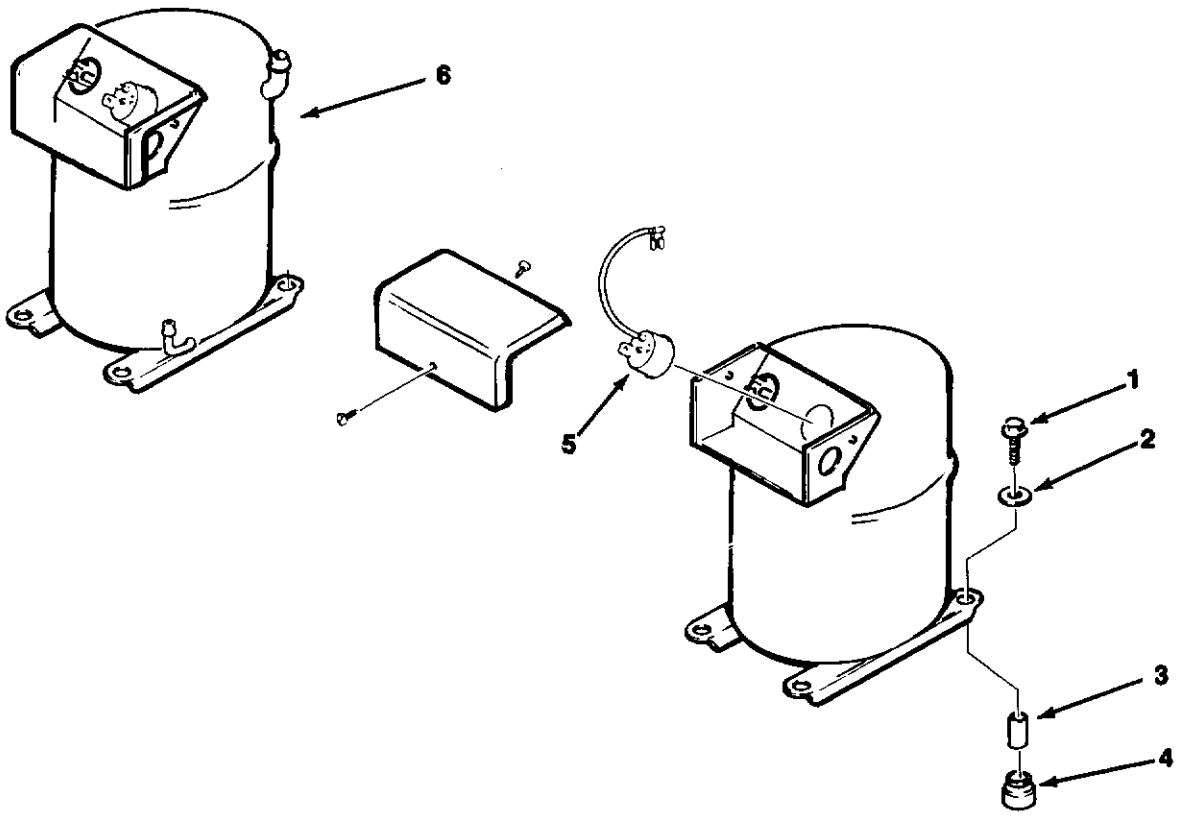

COMPRESSOR ASSEMBLY

ITEM NUMBER	PART NUMBER	DESCRIPTION
1	03-1406-10	Hex Nut
2	03-1407-07	Plain Washer
3	18-2200-27	Mounting Sleeve
4	18-2200-28	Mounting Grommet
5	18-2200-25	Overload
6	18-2200-01	Compressor (Complete)

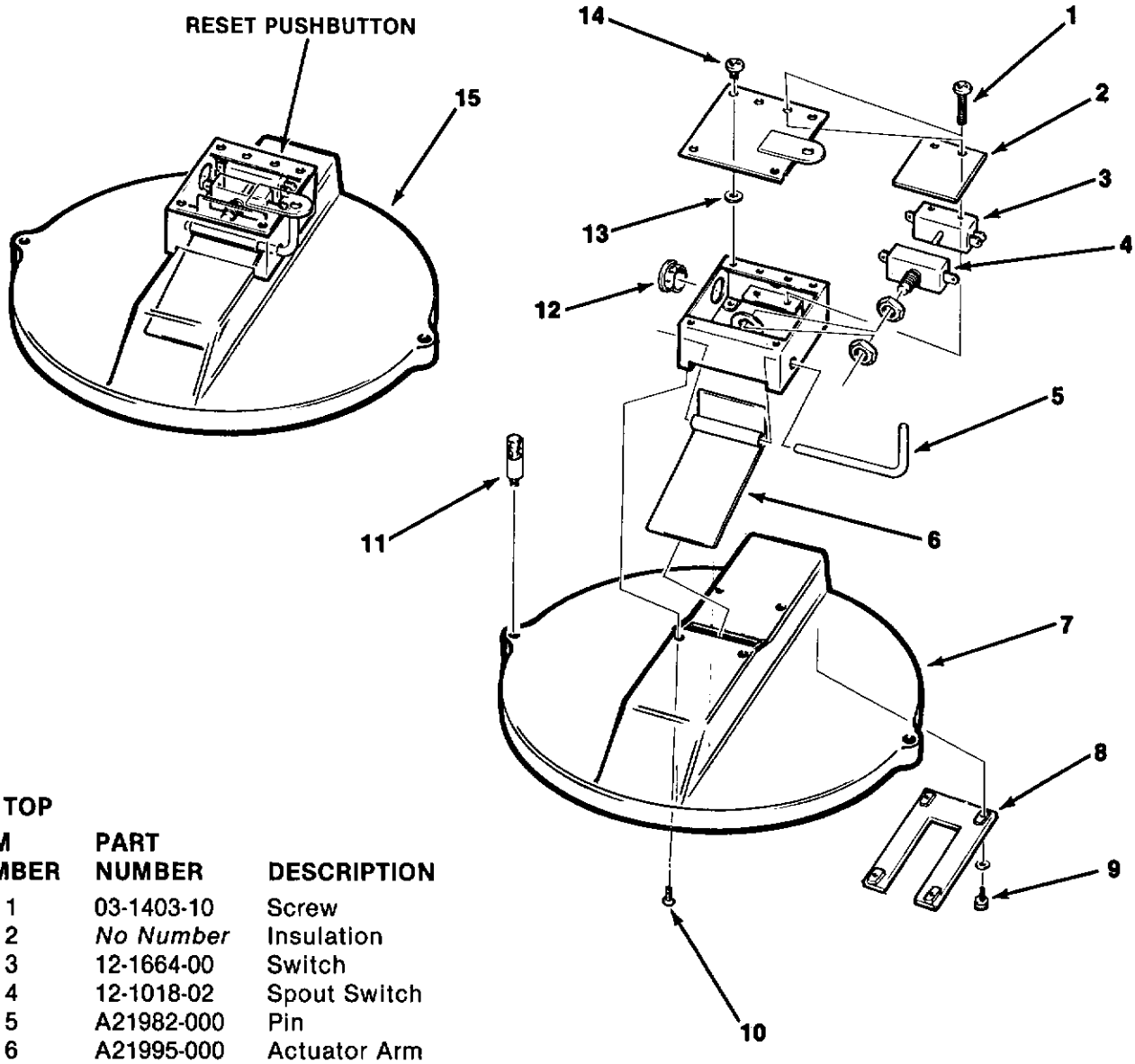

BIN TOP

ITEM NUMBER	PART NUMBER	DESCRIPTION
1	03-1403-10	Screw
2	*No Number*	Insulation
3	12-1664-00	Switch
4	12-1018-02	Spout Switch
5	A21982-000	Pin
6	A21995-000	Actuator Arm
7	02-1757-00	Bin Top
8	A21987-000	Bridge Plate
9	03-0727-05	Thumb Screw
10	03-1403-27	Screw
11	A21983-000	Nut, Bin Top
12	12-1213-07	Snap Bushing
13	03-1417-03	Lockwasher
14	03-1403-10	Screw
15	A22025-001	Bin top, Complete

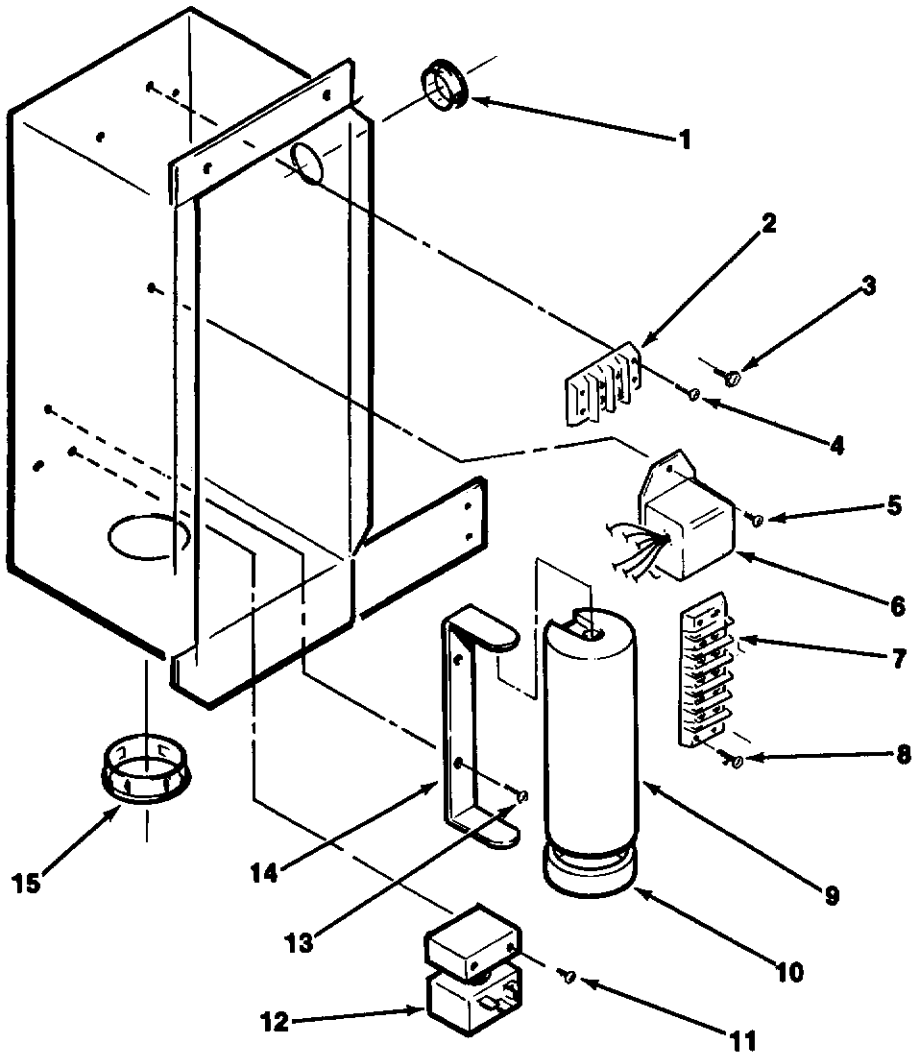

CONTROL BOX ASSEMBLY

ITEM NUMBER	PART NUMBER	DESCRIPTION
1	12-1213-10	Bushing
2	12-0813-04	Terminal Board
3	03-1578-01	Ground Screw
	03-1629-01	Cup Washer
4	03-1403-21	Screw, No. 8-32 x 3/4
5	03-1403-17	Screw, No. 8-32 x 3/8
6	A27857-001	Time Delay Relay
7	12-0813-07	Terminal Board
8	03-1403-21	Screw, No. 8-32 x 3/4
9	18-1901-33	Start Cap
10	18-3724-01	Capacitor Cap
11	03-1403-10	Screw, No. 6-32 x 1-1/4
12	18-2200-26	Relay
13	03-1418-30	Screw, No. 8-32 x 1/2
14	18-2200-39	Capacitor Bracket
15	12-1213-14	Bushing

FD5
WIRING DIAGRAM

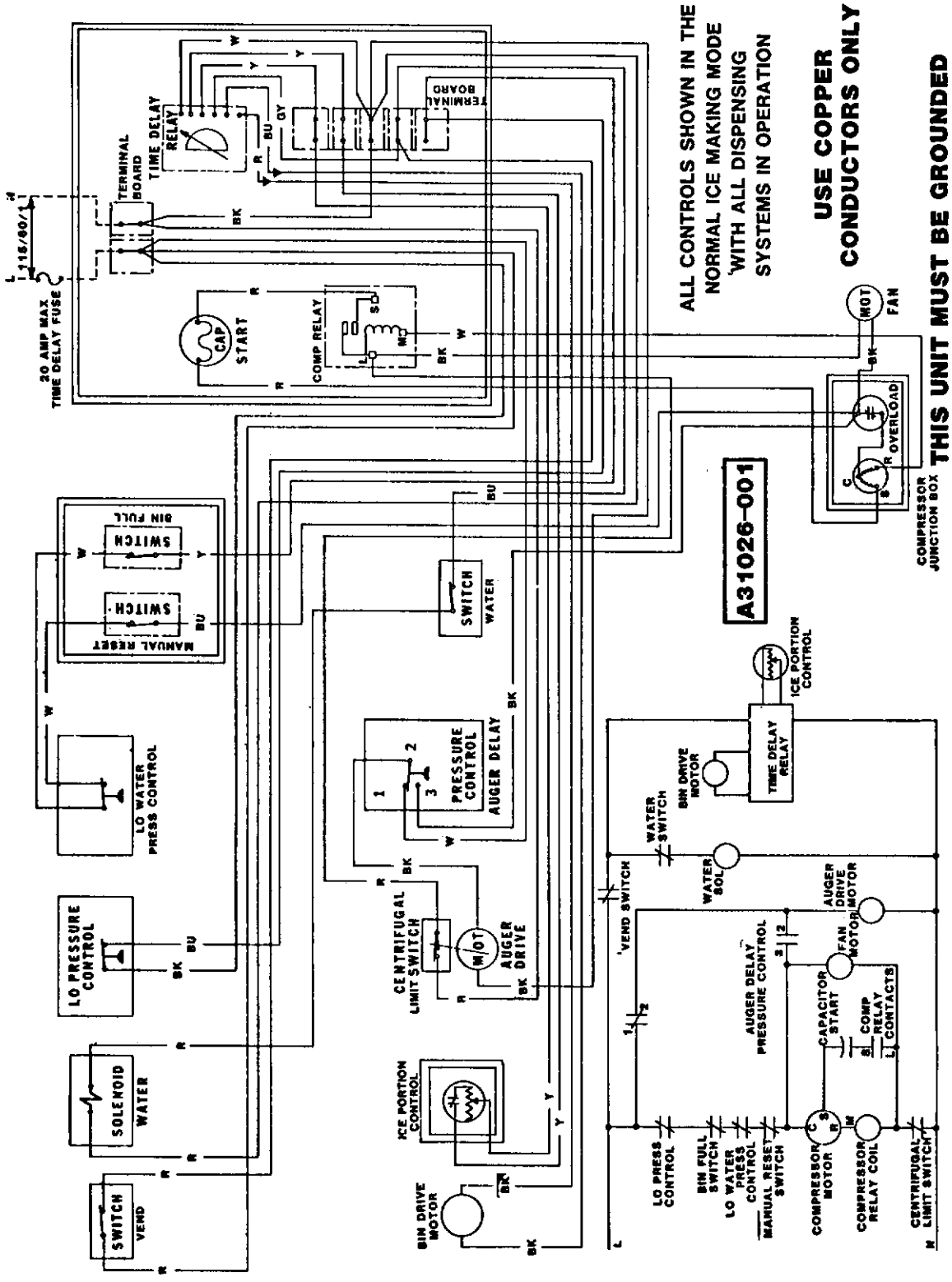

Wiring Diagram, FD5AE-1C (115/60/1) Air-Cooled

FD5
WIRING DIAGRAM

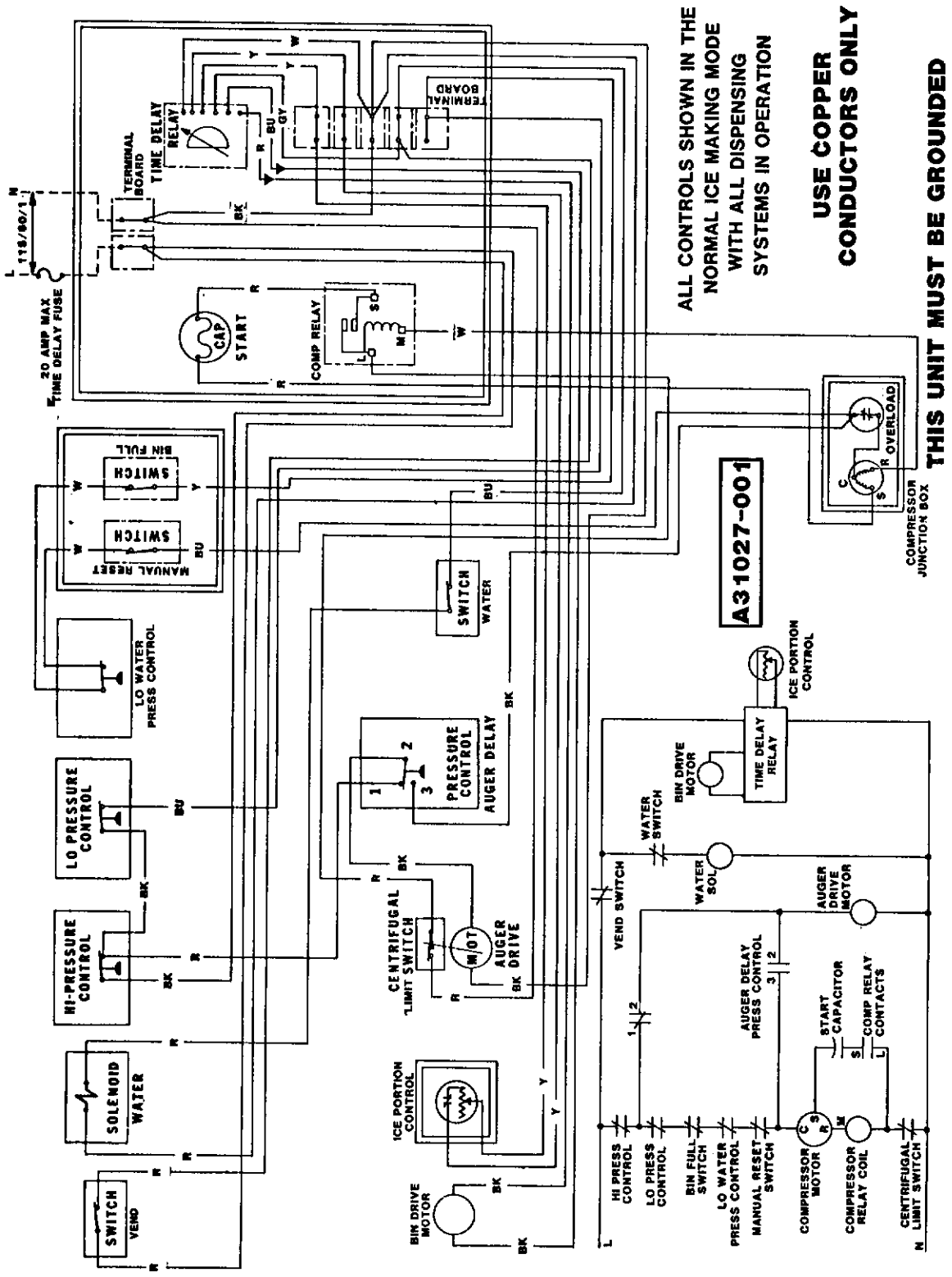

Wiring Diagram, FD5WE-1C (115/60/1) Water-Cooled

THE PARTS ILLUSTRATIONS AND PARTS LISTS

GENERAL

This section contains the Parts Illustrations and the Parts List for each of the major assemblies in the Model CHW5 Modular Cuber.

A *No Number* designation, when used in the Part Number Column indicates the unit is not available from SCOTSMAN as an assembly. This designation is used only for the convenience and clarity of division in cataloging.

HOW TO ORDER PARTS OR ASSEMBLIES

When ordering parts or assemblies, to avoid costly delays and errors in shipment, give the part number, the complete description shown in the list, and the quantities of each part or assembly required. Also include the Model name, the serial number of the icemaker for which the part is required, and for parts which require color matching, the color of the Cabinet.

All Part Numbers have TEN DIGITS (spaces), required for use in the Computer System. BE SURE to fill in ALL SPACES in the CATALOG NUMBER column, on the Parts Order form.

Enter the QUANTITY of the Parts ordered, in the last digit column under the QUANTITY column heading, the one under the small 55 number, for parts from 1 thru 9. For 10 or more parts use two columns.

To be sure you receive the proper parts in the proper quantities, ALWAYS use the PART NUMBERS and DESCRIPTIONS given in the Parts Manuals.

Write an order for the Part. (Use SCOTSMAN Parts Order Form (DN103). Be sure to include:

- ☐ Distributor Name.
- ☐ (Use for DROP-SHIP order ONLY.)
- ☐ Distributor Purchase Order Number.
- ☐ Carrier.
- ☐ How shipped (Truck, Rail, UPS, etc.)
- ☐ Date ordered.
- ☐ Part Catalog Number. (Use full TEN digits (spaces) listed in Parts Manual, including dashes between numbers.)
- ☐ Description - as listed in Parts Manual.
- ☐ Quantity - number of parts ordered. (Use far right column.)

WIRING DIAGRAMS

This section is provided as an aid in understanding the electrical circuitry of the modular cuber:

WARNING

When conducting a continuity check of the modular cuber:

1. **Disconnect the main power source.**
2. **DO NOT use an incandescent lamp or jumper wire, conduct all tests with a volt-ohm-meter.**

The wiring diagram in this Section is:

CHW5 115/60/1 Air & Water-Cooled

CHW5
THE PARTS ILLUSTRATION AND PARTS LISTS

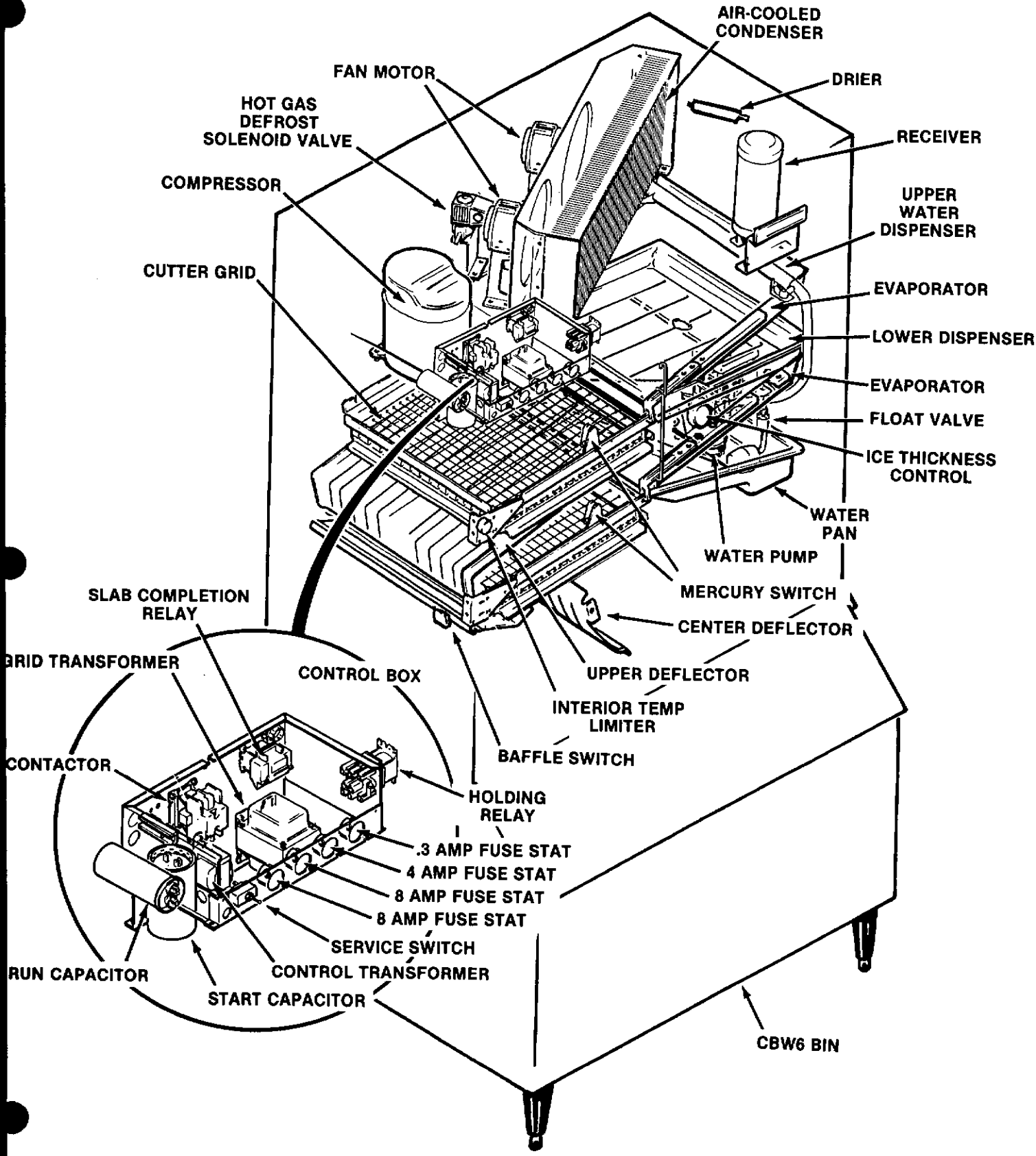

CHW5
THE PARTS ILLUSTRATION AND PARTS LISTS

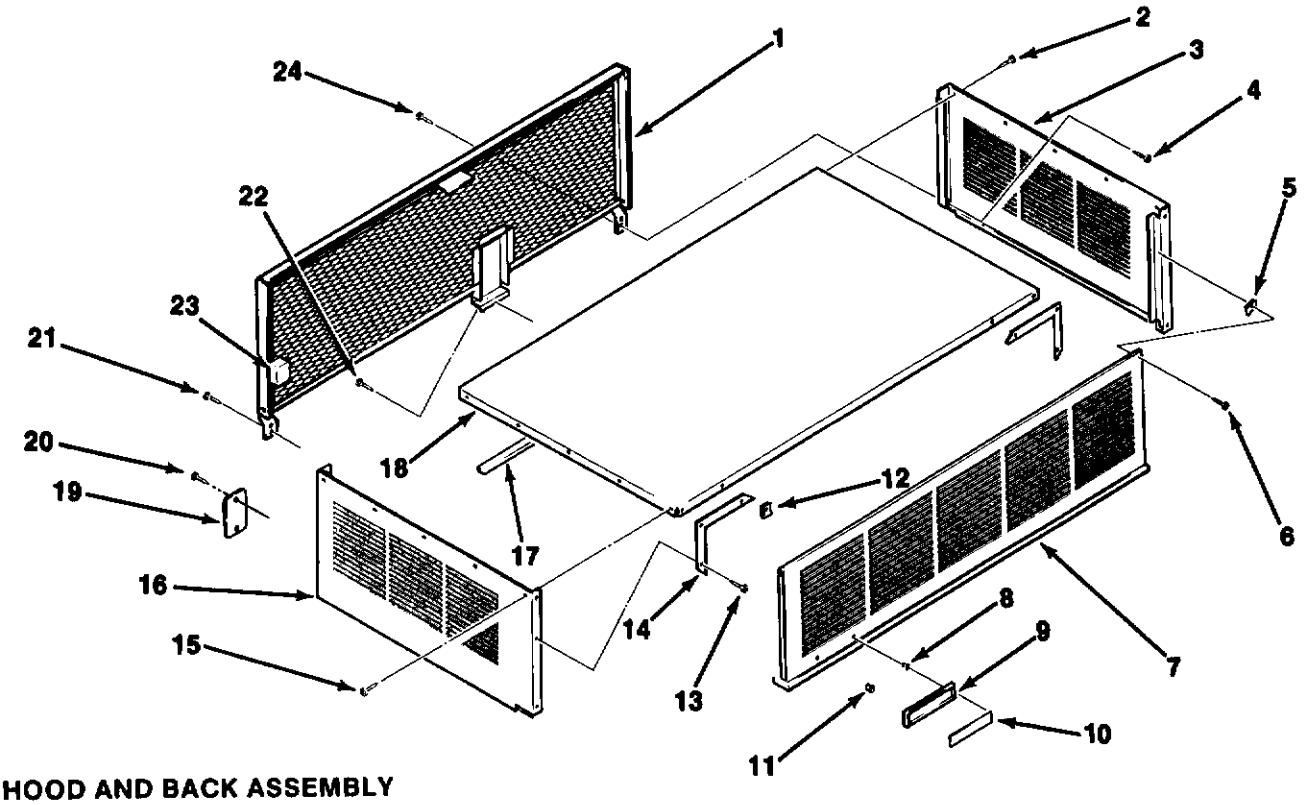

HOOD AND BACK ASSEMBLY

ITEM NUMBER	PART NUMBER	DESCRIPTION
1	0751044	Panel, Back CHW5 (Air-Cooled)
	0751530	Panel, Back CHW5 (Water-Cooled)
2	03-1531-01	Screw
3	0757189	Panel, Hood R.S. CHW5 (Air-Cooled and Water-Cooled)
4	0487735	Nut
5	0681626	Pushnut
6	0681615	Screw
7	0757193	Panel, Hood Front CHW5 (Air-Cooled and Water-Cooled)
8	0654068	Clip, Small
9	0837577	Escutcheon, Nameplate
10	0780003	Insert, Nameplate
11	0654067	Clip, Large
12	0681608	Nut, #10 "U" Spring
13	03-1531-01	Screw
14	0757089	Gusset (4)
15	03-1531-01	Screw
16	0757185	Panel, Hood L.S. CHW5 (Air-Cooled and Water-Cooled)
17	13-0781-01	Gasket, Hood 48" (Order Per Foot)
18	0757065	Top, Hood CHW5 (Air-Cooled and Water-Cooled)
19	0616016	Cover, Junction Box
20	0681187	Screw, #10-32 x 3/8
21	0681299	Screw, #8-32 x 3/4
22	0681299	Screw, #8-32 x 3/4
23	*No Number*	Junction Box
24	0680933	Screw, #10-32 x 1/2

CHW5
THE PARTS ILLUSTRATION AND PARTS LISTS

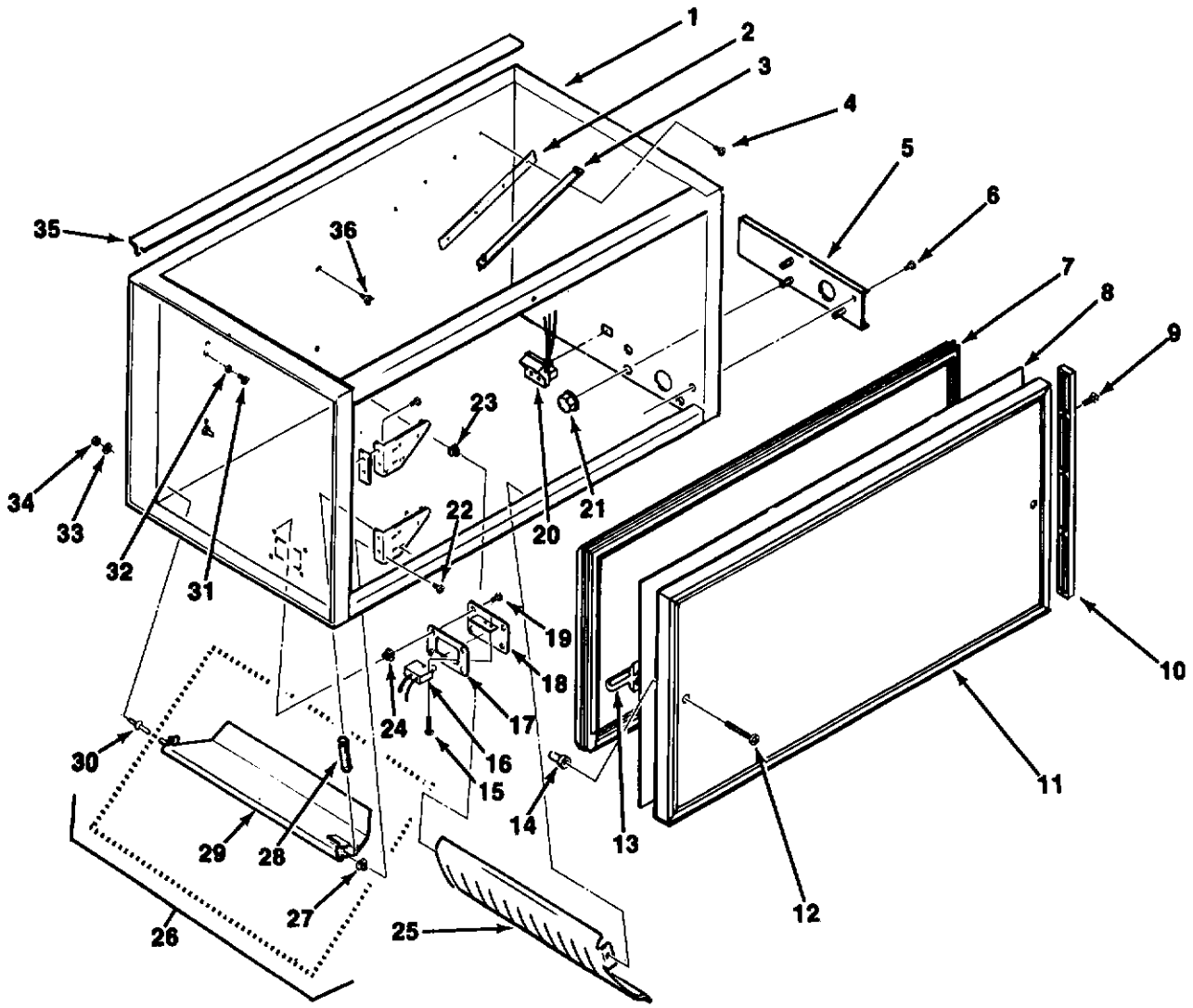

CABINET ASSEMBLY

ITEM NUMBER	PART NUMBER	DESCRIPTION
1	*No Number*	Cabinet
2	0751076	Gasket, Support
3	*No Number*	Support
4	0681421	Screw, #8-18 x 5/8 (10)
5	0758274	Support
6	0681555	Screw, #10-32 x 1/2
7	0751117	Gasket, Panel
8	0751105	Panel, Inner
9	0681148	Screw (8)
10	0780070	Cap, End (2) CHW5 (Air-Cooled and Water-Cooled)
11	0755061	Panel, Front CHW5 (Air-Cooled and Water-Cooled)
12	03-1403-53	Screw, 1/4-20 x 1/2 (2)
13	0751319	Gasket, Drip
14	0755795	Sleeve
15	0680770	Screw, #4-40 x 5/8 (2)
16	0751632	Switch, Baffle
17	0751192	Gasket, Plate
18	0751189	Plate, Switch
19	0681414	Screw, #10AB x 1/2 (4)
20	0757989	Harness, Pump
21	0681432	Nut, Cap
22	0757063	Screw, Pivot
23	0596332	Stud, Deflector
24	0596672	Grommet,Screw
25	0599614	Deflector, Center
26	0757499	Deflector Assembly
27	0595291	Rivnut
28	0599608	Spring
29	0757525	Deflector
30	0596004	Stud
31	0681421	Screw, #8-18 x 5/8 (10)
32	0751332	Support, Grid (2)
33	0596331	Washer, Fiber
34	0681493	Nut
35	0755804	Gasket, Angle
36	0680930	Thumbscrew, #10-32 x 5/8 (4)

CHW5
THE PARTS ILLUSTRATION AND PARTS LISTS

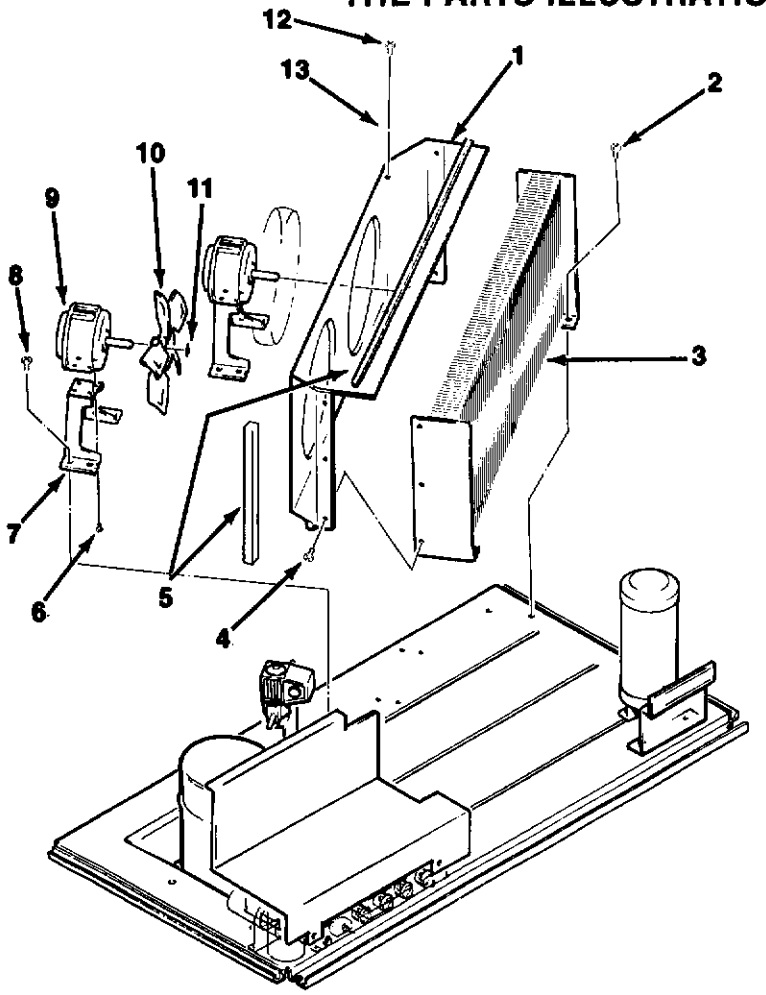

AIR-COOLED ASSEMBLY

ITEM NUMBER	PART NUMBER	DESCRIPTION
1	0751174	Shroud, Condenser
2	03-0571-00	Screw, 1/4 (8)
3	0757231	Condenser
4	0681167	Screw, #8-32 x 3/8 (6)
5	13-0781-01	Block Air (Order Per Foot)
6	0680439	Screw, #8-32 x 1/2 (8)
7	0560817	Bracket, Motor (2)
8	0583647	Motor, Fan
9	0561731	Blade, Fan (2)
10	0595380	Speed Nut (2)
11	0680439	Screw, #8-32 x 1/2
12	0596620	Clamp

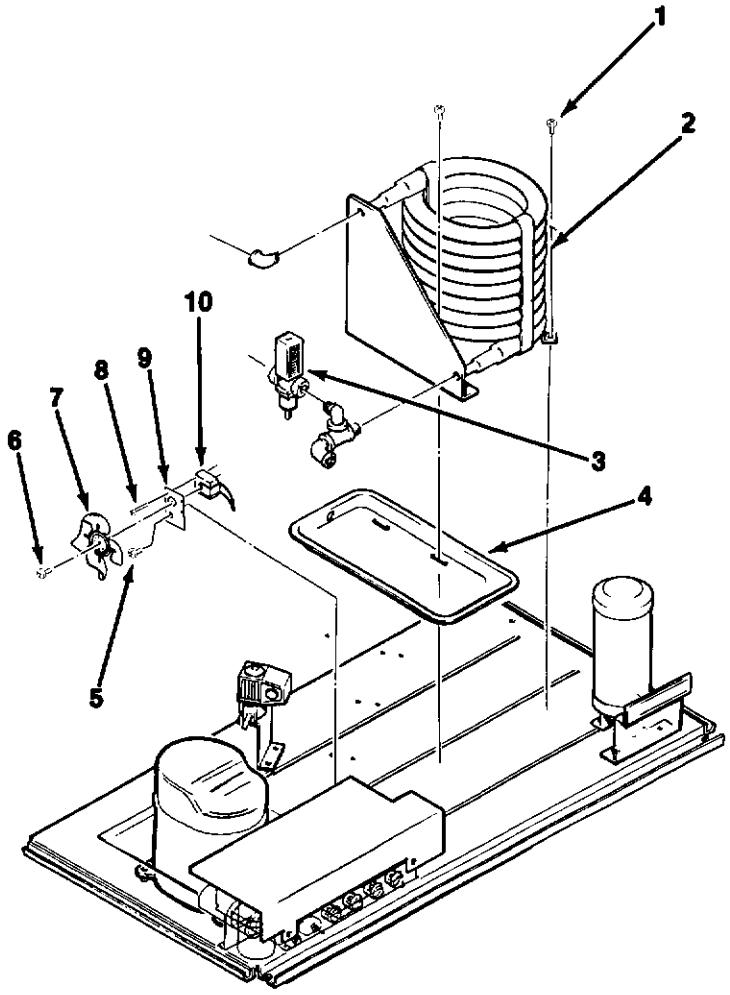

WATER-COOLED ASSEMBLY

ITEM NUMBER	PART NUMBER	DESCRIPTION
1	03-0571-00	Screw, 1/4 (8)
2	0557238	Condenser, Water
3	0585386	Valve, Water
4	0751543	Pan, Condenser
5	0596416	Bushing
6	0487887	Screw (2)
7	0513964	Blade, Fan
8	0680722	Screw (4)
9	0755337	Bracket Motor
10	0755182	Motor, Fan

CHW5
THE PARTS ILLUSTRATION AND PARTS LISTS

MAJOR COMPONENTS

ITEM NUMBER	PART NUMBER	DESCRIPTION
1	0591710	Drier
2	0757229	Receiver
3	0681467	Lockwasher
4	0680929	Screw, #10-32 x 1/2 (3)
5	0681087	Screw (5)
6	0681432	Nut, Cap (10-32)
7	0595172	Nut
8	0562036	Valve, Check (2)
9	0756772	Valve, Expansion (2)
10	0593496	Clip, Capillary Bulb (2)
11	0751162	Hanger Grid (Upper)
	0751163	Hanger Grid (Lower)
12	0595181	Nut, Cap (10)
13	0751166	Gusset R.S.
14	0681528	Screw, #10-32 x 1/2
15	0751161	Support, Grid
16	0780103	Evaporator
17	0583625	Grommet (4)
18	0583536	Sleeve, Grommet (4)
19	0681342	Screw (4)
20	0561955	Valve, Body
21	0561958	Core, Valve
22	0561957	Cap, Valve
23	0751149	Bracket. Valve
24	0757239	Hot Gas Valve Complete
25	0702368	Hot Gas Valve Coil (Only)
26	*No Number*	Hot Gas Valve (Must Purchase Complete)
27	030571-00	Screw 1/4
28	0780080	Compressor, Service
29	0561858	Strap, Bale
30	0751181	Cover, Terminal
31	0561857	Gasket Cover

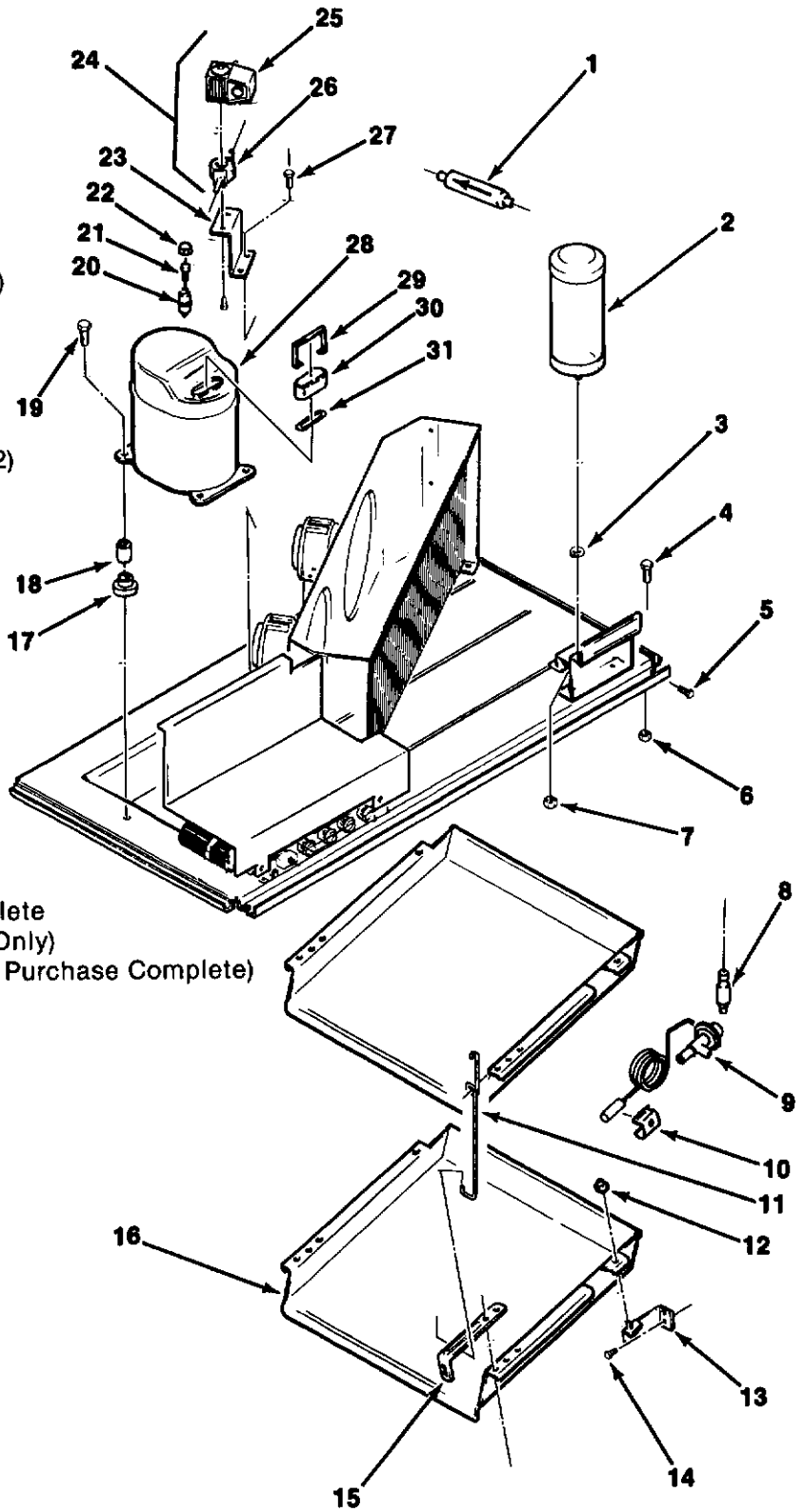

WATER SYSTEM

ITEM NUMBER	PART NUMBER	DESCRIPTION
1	0487735	Nut
2	0751640	Strap, Tube
3	0681194	Screw, #10-32 x 1-5/8 (2)
4	0681584	Nut, Wing (8-32) (2)
5	0680396	Washer (2)
6	0751081	Gasket, Gusset R.S.
7	0751166	Gusset R.S.
8	0681528	Screw, #10-32 x 1/2
9	0756275	Hose Dispenser
10	0569434	Plug Water Pump
11	0756339	Valve, Assembly Float
12	0758277	Bracket, Water Pan Support
13	0757444	Pan, Water
14	0757456	Hose, Drain
15	0681528	Screw, #10-32 x 1/2
16	0757300-20	Water Pump Assembly (Complete)
17	0757836	Deflector (Upper)
18	0757460	Dispenser, Water (Lower)
19	0583459	Dispenser, Water (Upper)
20	0583481	Seal, Dispenser

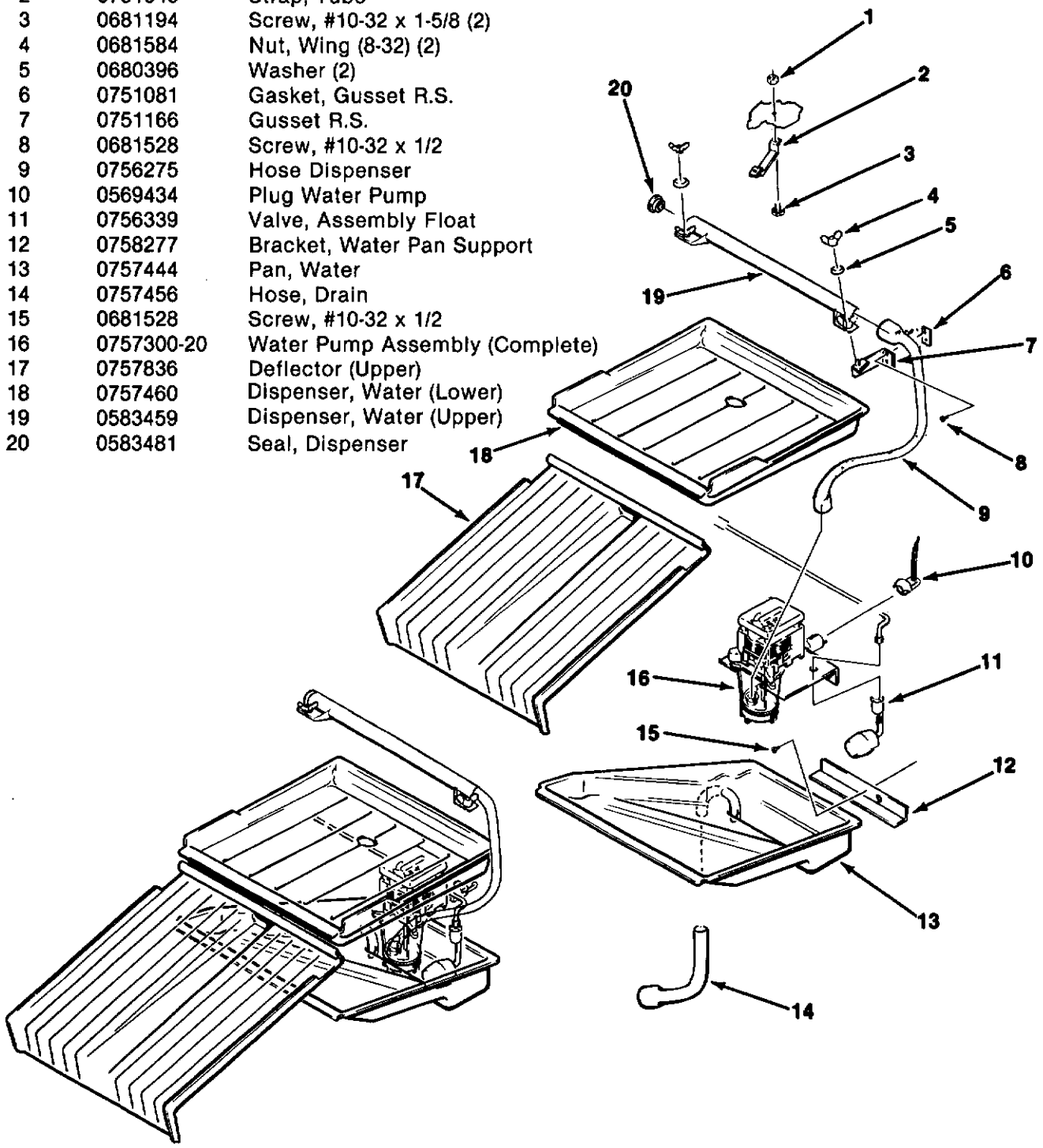

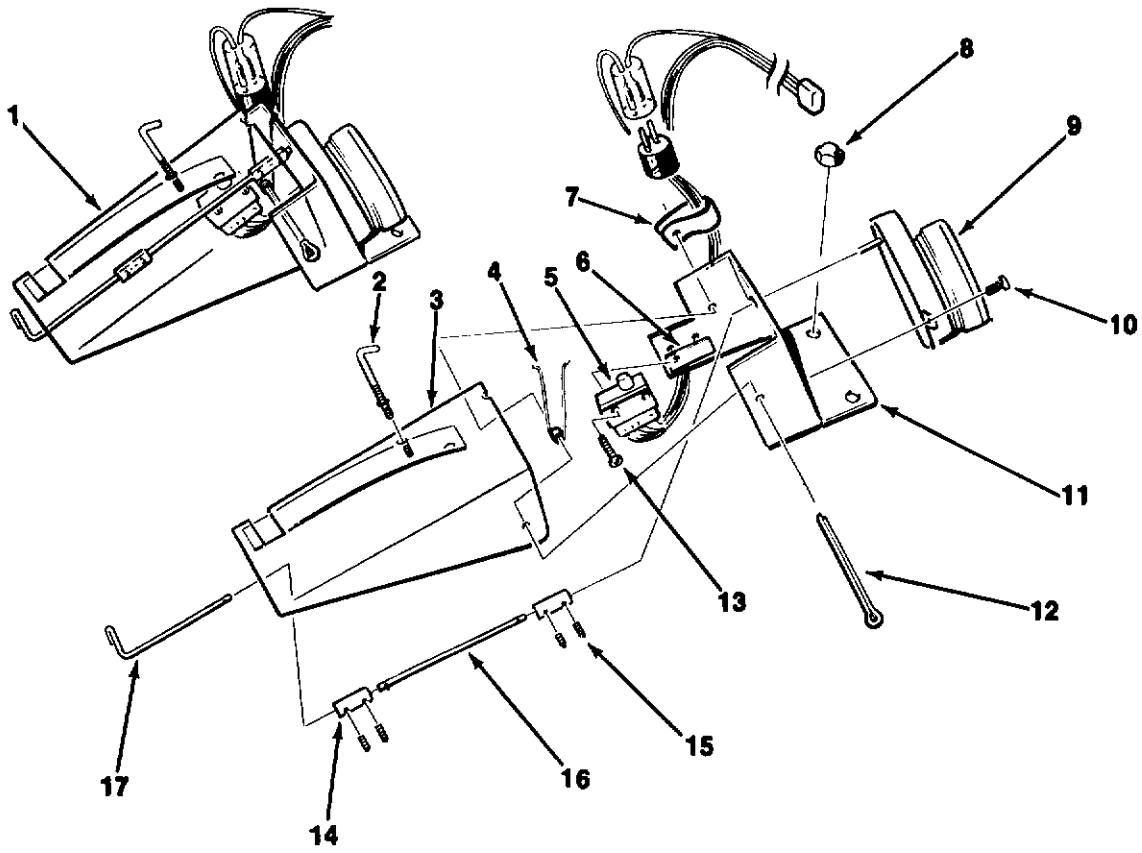

ICE THICKNESS CONTROL ASSEMBLY

ITEM NUMBER	PART NUMBER	DESCRIPTION
1	0587513	Control, Ice Thickness (Complete)
2	0751991	Screw, Adjusting
3	0587293	Bracket, Shaft
4	0560861	Spring, Hold Down
5	0587888	Harness, Switch
6	0587996	Spacer
7	0596679	Clamp, Wire
8	0595181	Nut, Cap (2)
9	0577540	Motor, Control
10	0680854	Screw, 4-40 x 3/8 (2)
11	0607811	Bracket, Motor
12	0680668	Cotter, Pin
13	0681433	Screw, 4-40 x 3/4 (2)
14	0572489	Coupling, (2)
15	0595330	Setscrew, 6-32 x 3/16 (4)
16	0607816	Shaft, Flexible
17	0585507	Shaft, Formed End

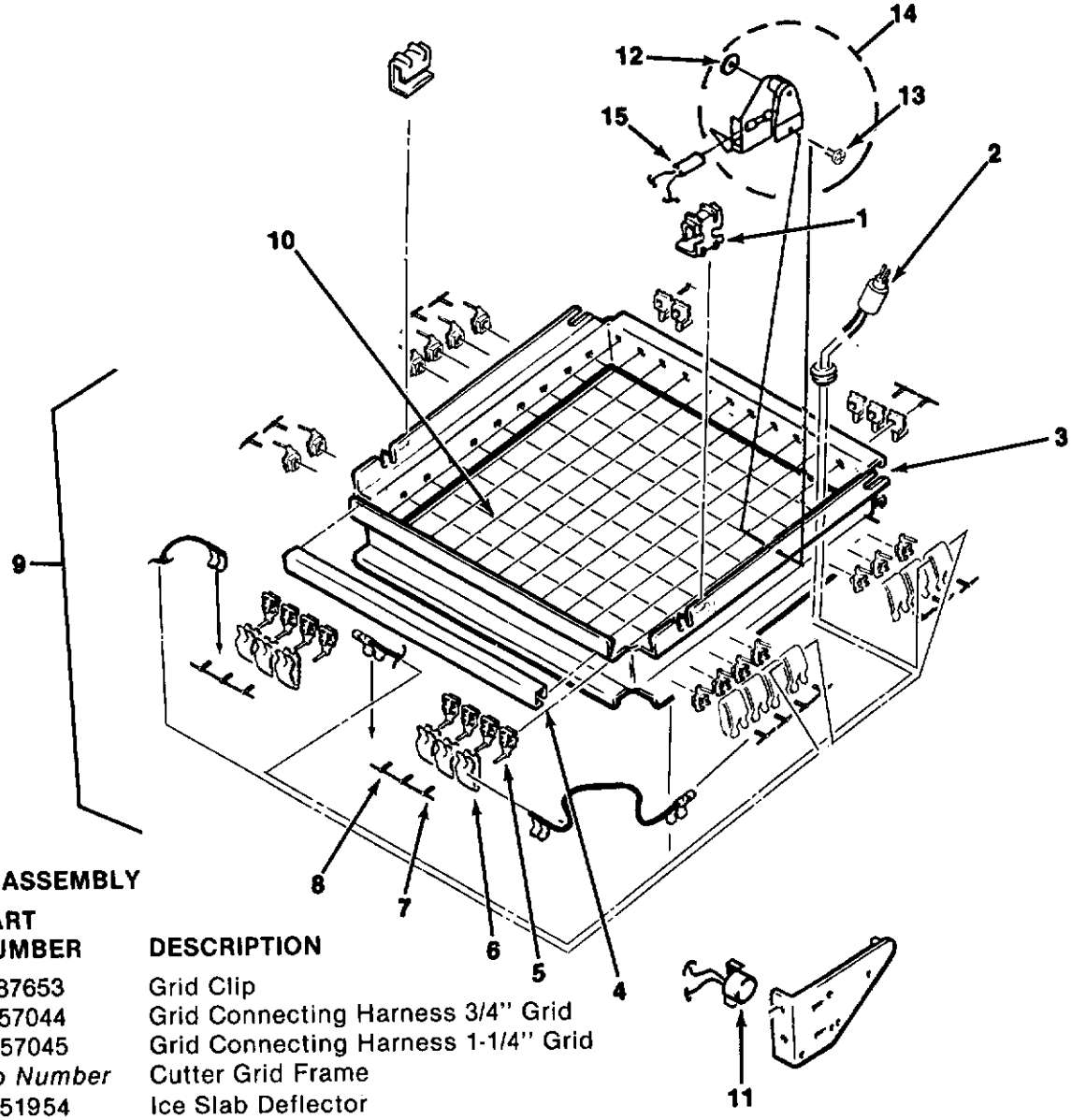

CUTTER GRID ASSEMBLY

ITEM NUMBER	PART NUMBER	DESCRIPTION
1	0587653	Grid Clip
2	0757044	Grid Connecting Harness 3/4" Grid
	0757045	Grid Connecting Harness 1-1/4" Grid
3	*No Number*	Cutter Grid Frame
4	0751954	Ice Slab Deflector
5	0598277	Grid Insulator 3/4" Grid (90)
		Grid Insulator 1-1/4" Grid (48)
6	0564072	Tension Clip 3/4" Grid (45)
		Tension Clip 1-1/4" Grid (24)
7	0587112	Cutter Wire Pin (4)
	0587111	Cutter Pin Wire, 3/4" Grid (43)
8	0587424	Cutter Pin Wire, 1-1/4" Grid (13)
9	0587423	Cutter Pin Wire, 1-1/2" Grid (9)
	CCK152CG	Grid Assembly Complete 3/4" x 3/4"
	CCK151SG	Grid Assembly Complete 1-1/2" x 1-1/4"
10	0569969	Grid Cutter Wire Kit 3/4" Grid
	0569968	Grid Cutter Wire Kit 1-1/4" Grid
11	0757255	Interior Temperature Limiter
12	0681489	Nut, Spring
13	0681450	Screw
14	0593206	Bracket Assembly
15	0569864	Mercury Switch (Only)

CHW5
THE PARTS ILLUSTRATION AND PARTS LISTS

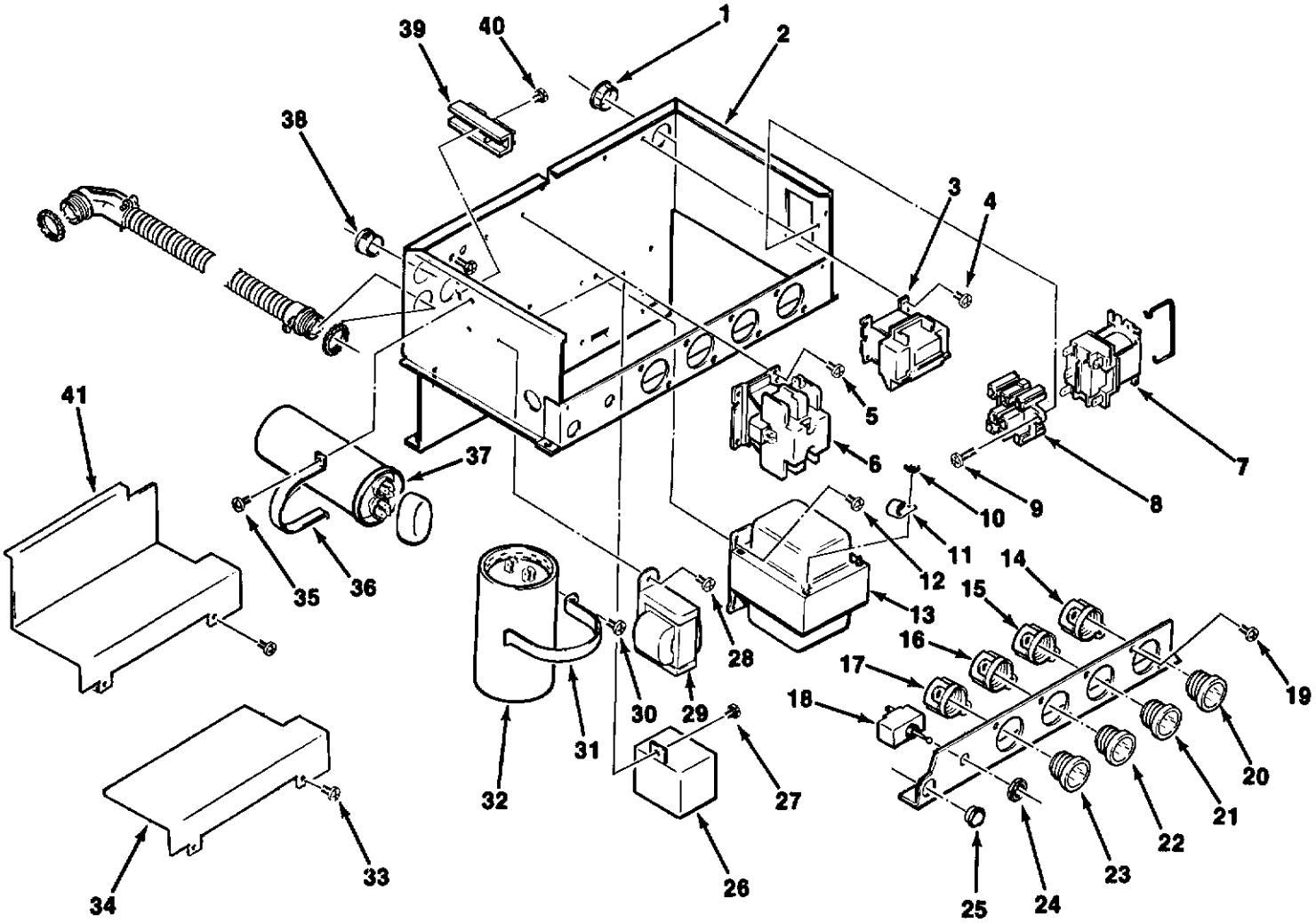

ELECTRICAL COMPONENTS

ITEM NUMBER	PART NUMBER	DESCRIPTION
1	*No Number*	Snap Bushing
2	*No Number*	Box, Electrical
3	0583099	Relay, Slab Completion
4	0681167	Screw, #8-32 x 3/8
5	0681167	Screw, #8-32 x 3/8
6	0751134	Contactor
7	0756231	Relay, Holding
8	0751333	Base, Relay
9	0681528	Screw, #10-32 x 1/2 (2)
10	0595176	Nut
11	0596679	Clamp, Wire
12	0681620	Screw, Machine
13	0751948	Transformer, Grid (15.6 Volt)
14	12-2275-01	Receptacle .3 Amp
15	12-2275-03	Receptacle 4 Amp
16	12-2275-04	Receptacle, Fustat
17	12-2275-04	Receptacle, Fustat
18	0560940	Switch, Service
19	0595154	Screw, #10-32 x 1/2 (6)
20	12-2276-05	Fustat .3 Amp
21	12-2276-01	Fustat 4 Amp
22	12-2276-07	Fustat, 8 Amp
23	12-2276-07	Fustat, 8 Amp
24	0596021	Nut (2)
25	0596416	Bushing, Snap (2)
26	0751616	Relay, Compressor Start
27	0680968	Screw, #8-18 x 3/8
28	0595154	Screw, #10-32 x 1/2 (6)
29	0587314	Transformer, Control (14 Volt)
30	0681167	Screw, #8-32 x 3/8
31	0755123	Bracket, Capacitor
32	0577959	Capacitor, Start
33	0681167	Screw, #8-32 x 3/8
34	0755147	Cover, Electrical Box (W.C.)
35	0681167	Screw, #8-32 x 3/8
36	0757241	Clamp, Capacitor
37	0757244	Capacitor, Run
38	0596380	Bushing, Snap
39	0751127	Board, Terminal
40	0680603	Screw, #8-32 x 5/8
41	0757274	Cover Electrical Box (A.C.)

CHW5
WIRING DIAGRAM

USE COPPER CONDUCTORS ONLY

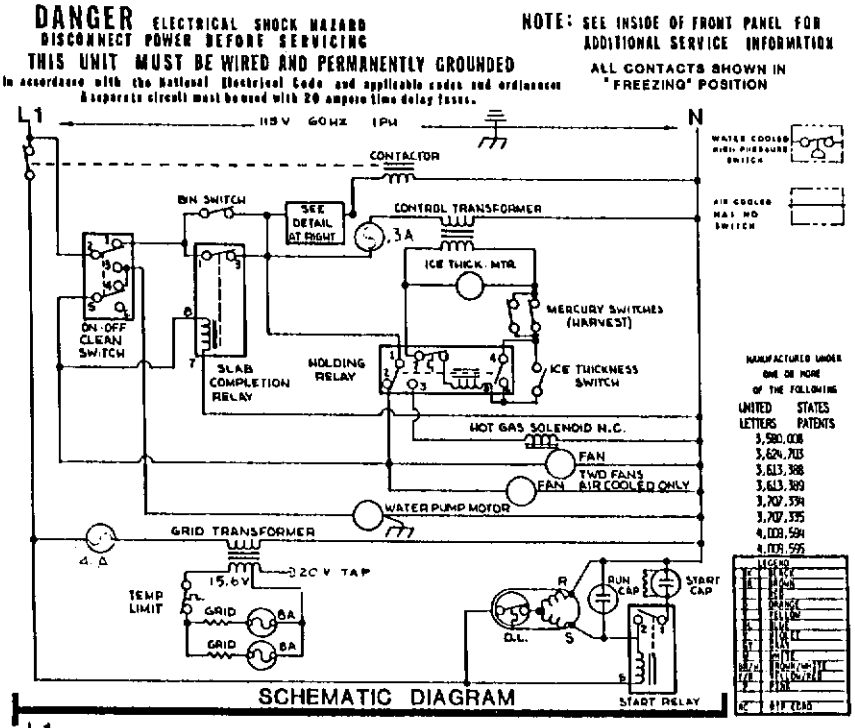

Wiring Diagram CHW5 115/60/1

BIN PARTS CBW6E

ITEM NUMBER	PART NUMBER	DESCRIPTION
1	0681581	Screw, Stainless Steel 1/4-20 x 1/2 (2)
2	0588717	Nut, Drain
3	0751387	Fitting, Drain
4	0755099	Plate, Tap
5	0756777	Panel, Interior
6	0756221	Gasket, Panel (2)
7	0681148	Screw, #6-32 x 1/2 (4)
8	0780021	Cap, End
9	0756162	Shield, Panel
10	0681347	Screw
11	03-1403-53	Screw, 1/4-20 x 1/2 (2)
12	0780027	Door Assembly, Complete
13	0756061	Gasket, Door
14	0587640	Plate, Backing
15	0512312	Magnet
16	0681567	Screw, #6 x 1-1/4 (2)
17	0780025	Cover, Magnet
18	0654067	Clip, Sealing (Large)
	0654068	Clip, Sealing (Small)
19	0837577	Escutcheon, Nameplate
20	0780003	Insert, Nameplate
21	0756428	Collar Assembly
22	0756129	Bearing, Door
23	0681410	Screw (20)
24	0756134	Hinge, Door
25	0751369	Elbow, Drain
26	02-0540-00	Scoop, Ice
27	0681496	Screw, 12-14 x 3/4
28	0751260	Drain, Bin
29	0751258	Gasket, Drain
30	0681610	Washer, Nylon
31	0681612	Screw
32	0755059	Panel, Exterior
33	0755795	Sleeve, Panel
34	0780028	Top Panel Assembly, Complete
35	0780055	Collar
36	0751507	Deflector, Ice
37	0598531	Leg (4)

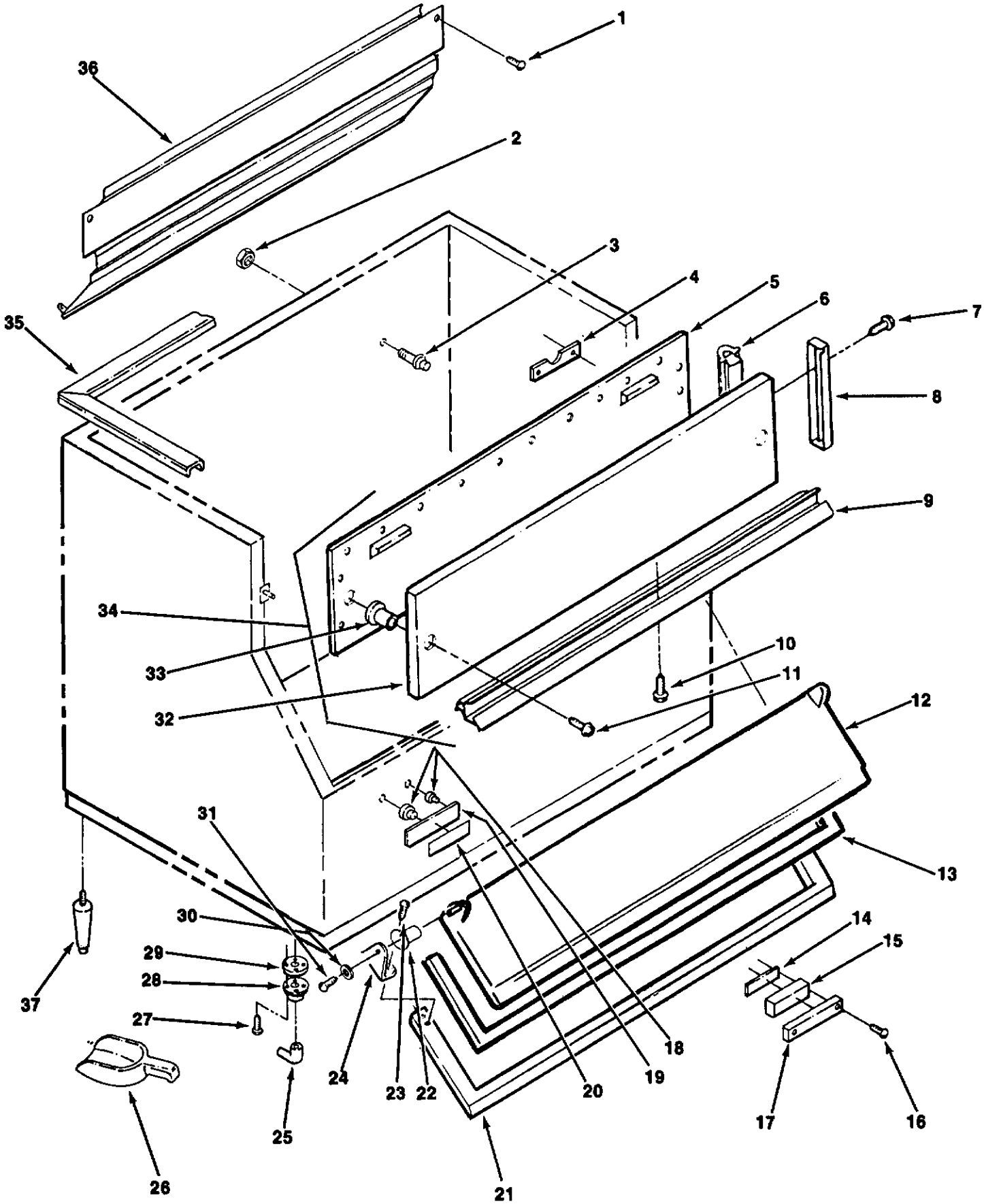
1
36
2
3
4
5
6
7
35
8
9
34
33
32
10
11
12
31
13
30
14
29
15
28
37
27
18
24
23
22
20
19
17
16
25
26
21

HOOD AND BACK ASSEMBLY

ITEM NUMBER	PART NUMBER	DESCRIPTION
1	0751044	Panel, Back CHW7 (Air-Cooled)
	0751530	Panel, Back CHW7 (Water-Cooled)
2	0681590	Screw
3	0757189	Panel, Hood R.S. CHW7 (Air-Cooled and Water-Cooled)
4	0487735	Nut
5	0681626	Pushnut
6	0681615	Screw
7	0757193	Panel, Hood Front CHW7 (Air-Cooled and Water-Cooled)
8	0654068	Clip, Small
9	0837577	Escutcheon, Nameplate
10	0780003	Insert, Nameplate
11	0654067	Clip, Large
12	0681608	Nut, #10 "U" Spring
13	0681590	Screw
14	0757089	Gusset (4)
15	0681590	Screw
16	0757185	Panel, Hood L.S. CHW7 (Air-Cooled and Water-Cooled)
17	13-0781-01	Gasket, Hood 48" (Order Per Foot)
18	0757065	Top, Hood CHW7 (Air-Cooled and Water-Cooled)
19	0616016	Cover, Junction Box
20	0681187	Screw, #10-32 x 3/8
21	0681299	Screw, #8-32 x 3/4
22	0681299	Screw, #8-32 x 3/4
23	*No Number*	Junction Box
24	0680933	Screw, #10-32 x 1/2

CHW7
THE PARTS ILLUSTRATIONS AND PARTS LISTS

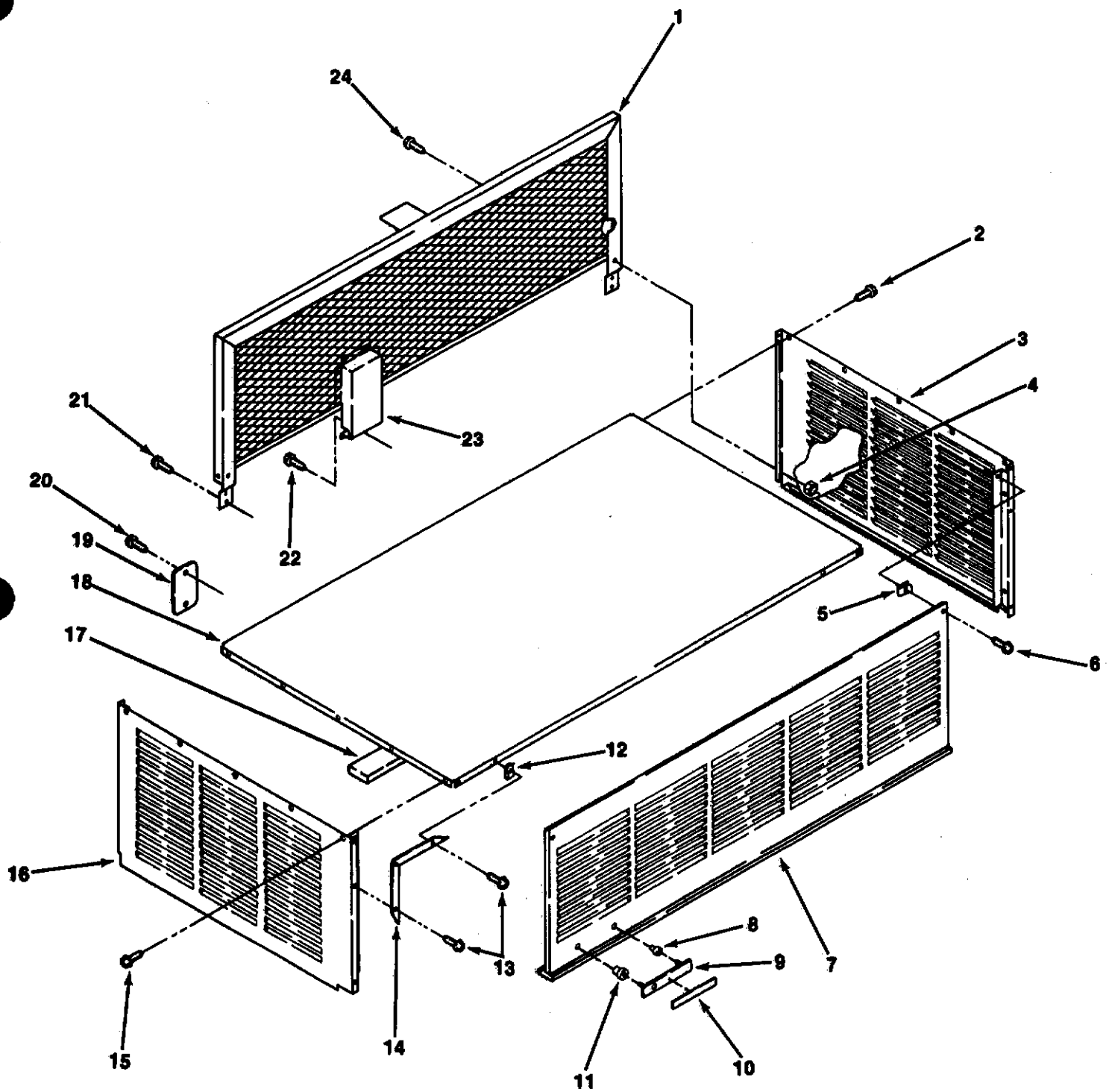

CABINET ASSEMBLY

ITEM NUMBER	PART NUMBER	DESCRIPTION
1	*No Number*	Cabinet
2	0681421	Screw, #8-18 x 5/8 (10)
3	0758274	Support
4	0681555	Screw, #10-32 x 1/2
5	0751117	Gasket, Panel
6	0751105	Panel, Inner
7	0681148	Screw (8)
8	0780070	Cap, End (2) CHW7 (Air-Cooled and Water-Cooled)
9	0755061	Panel, Front CHW7 (Air-Cooled and Water-Cooled)
10	0681581	Screw, 1/4-20 x 1/2 (2)
11	0751319	Gasket, Drip
12	0755795	Sleeve
13	0599614	Deflector, Center
14	0595291	Rivnut
15	0757063	Screw, Pivot
16	0599608	Spring
17	0757499	Deflector Assembly
18	0757525	Deflector
19	0681432	Nut, Cap
20	0757989	Harness, Pump
21	0680930	Thumbscrew, #10-32 x 5/8 (4)
22	0681414	Screw, #10AB x 1/2 (4)
23	0751189	Plate, Switch
24	0751192	Gasket, Plate
25	0751632	Switch, Baffle
26	0680770	Screw, #4-40 x 5/8 (2)
27	0596332	Stud, Deflector
28	0596672	Grommet, Screw
29	0596004	Stud
30	0681421	Screw, #8-18 x 5/8 (10)
31	0751332	Support, Grid (2)
32	0596331	Washer, Fibre
33	0681493	Nut
34	0755804	Gasket, Angle
35	0751076	Gasket, Support
36	*No Number*	Support

CHW7
THE PARTS ILLUSTRATIONS AND PARTS LISTS

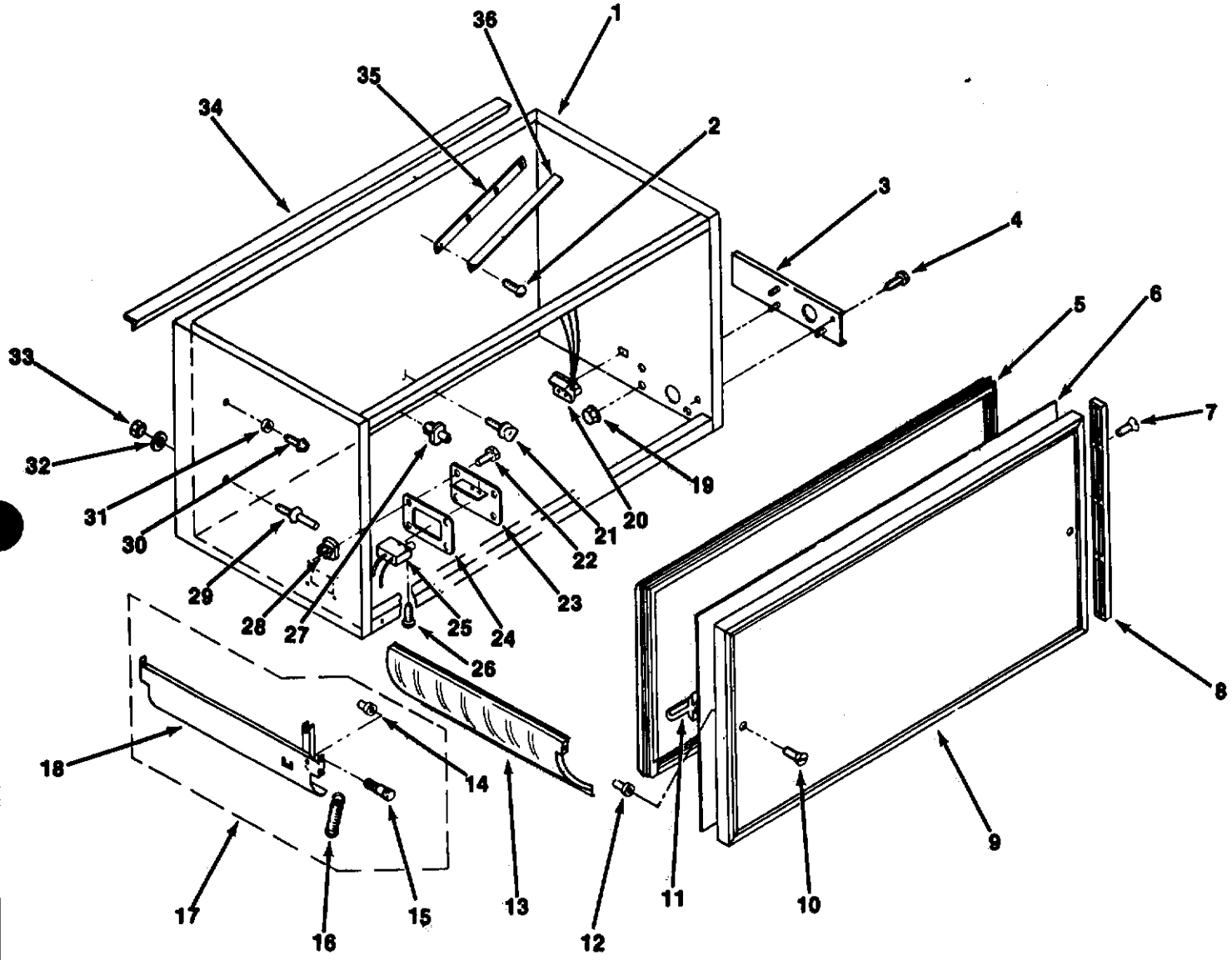

EVAPORATOR ASSEMBLY

ITEM NUMBER	PART NUMBER	DESCRIPTION
1	0780103	Evaporator
2	0562036	Valve, Check (2)
3	0757005	Valve, Expansion (2)
4	0593496	Clip, Capillary Bulb
5	0680924	Screw, #8-32 x 1/4 (4)
6	0595181	Nut, Cap (10)
7	0751161	Support, Grid
8	*No Number*	Frame, Grid Assembly
9	0751335	Clip, Wiring Harness
10	0587653	Clip, Grid
11	0587112	Pin, Cutter Wire 3/4" Cube (4)
12	0598277	Insulator, Grid 3/4" Cube (90)
13	0751163	Hanger, Grid (Lower)
14	0757044	Harness, Grid 3/4" Cube
15	0757836	Deflector (Upper)
16	0587111	Pin, Cutter Wire 3/4" Cube (43) 1-1/4" Cube (18)
17	0564072	Clip, Tension 3/4" Cube (45) 1-1/4" Cube (20)
18	0751079	Gasket, Gusset L.S.
19	0751077	Gusset L.S.
20	0681528	Screw, #10-32 x 1/2
21	0596702	Tie, Wire
22	0751954	Deflector, Ice Slab
23	0569968	Kit, Cutter Wire 1-1/4" Cube
	0569969	Kit, Cutter Wire 3/4" Cube
24	0596756	Tie, Cable
25	0593206	Bracket Assembly
26	0681489	Nut, Spring
27	0681450	Screw
28	0751162	Hanger, Grid (Upper)
29	0562336	Washer, Cup (4)
30	0569864	Mercury Switch (Only)
31	CCK152CG	Grid Assembly, Complete 3/4" x 3/4"
	CCK151SG	Grid Assembly, Complete 1-1/2" x 1-1/4"

CHW7
THE PARTS ILLUSTRATIONS AND PARTS LISTS

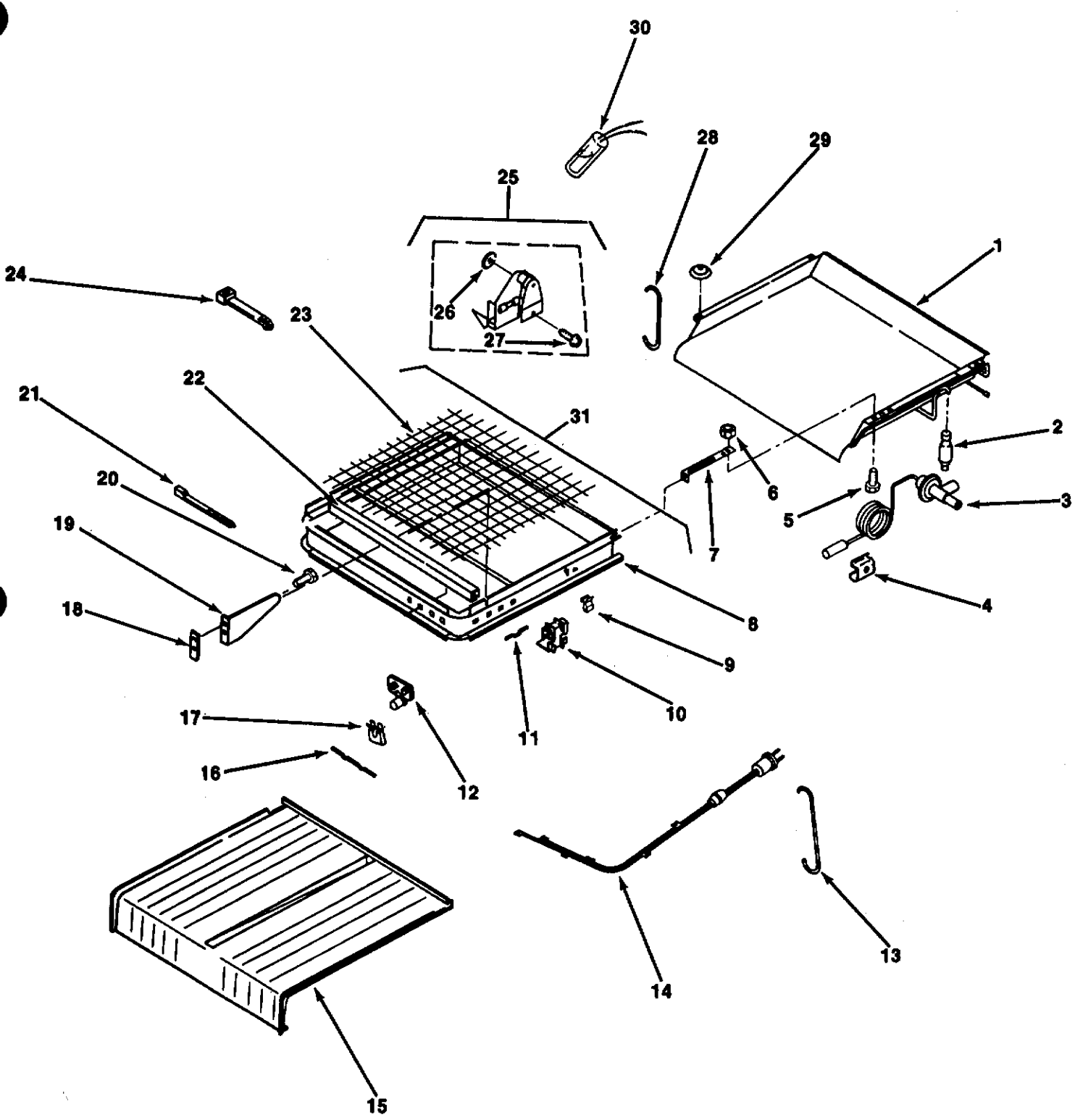

WATER SYSTEM

ITEM NUMBER	PART NUMBER	DESCRIPTION
1	0751640	Strap, Tube
2	0681194	Screw, #10-32 x 1-5/8 (2)
3	0680396	Washer (2)
4	0751081	Gasket, Gusset R.S.
5	0751166	Gusset R.S.
6	0681528	Screw, #10-32 x 1/2
7	0757460	Dispenser (Lower)
8	0758277	Bracket, Water Pan Support
9	0757444	Pan, Water
10	0756339	Valve, Assembly Float
11	0757456	Hose, Drain
12	0681528	Screw, #10-32 x 1/2
13	0756275	Hose, Dispenser
14	0681584	Nut, Wing (8-32) (2)
15	0583459	Dispenser, Water
16	0583481	Seal, Dispenser
17	0487735	Nut

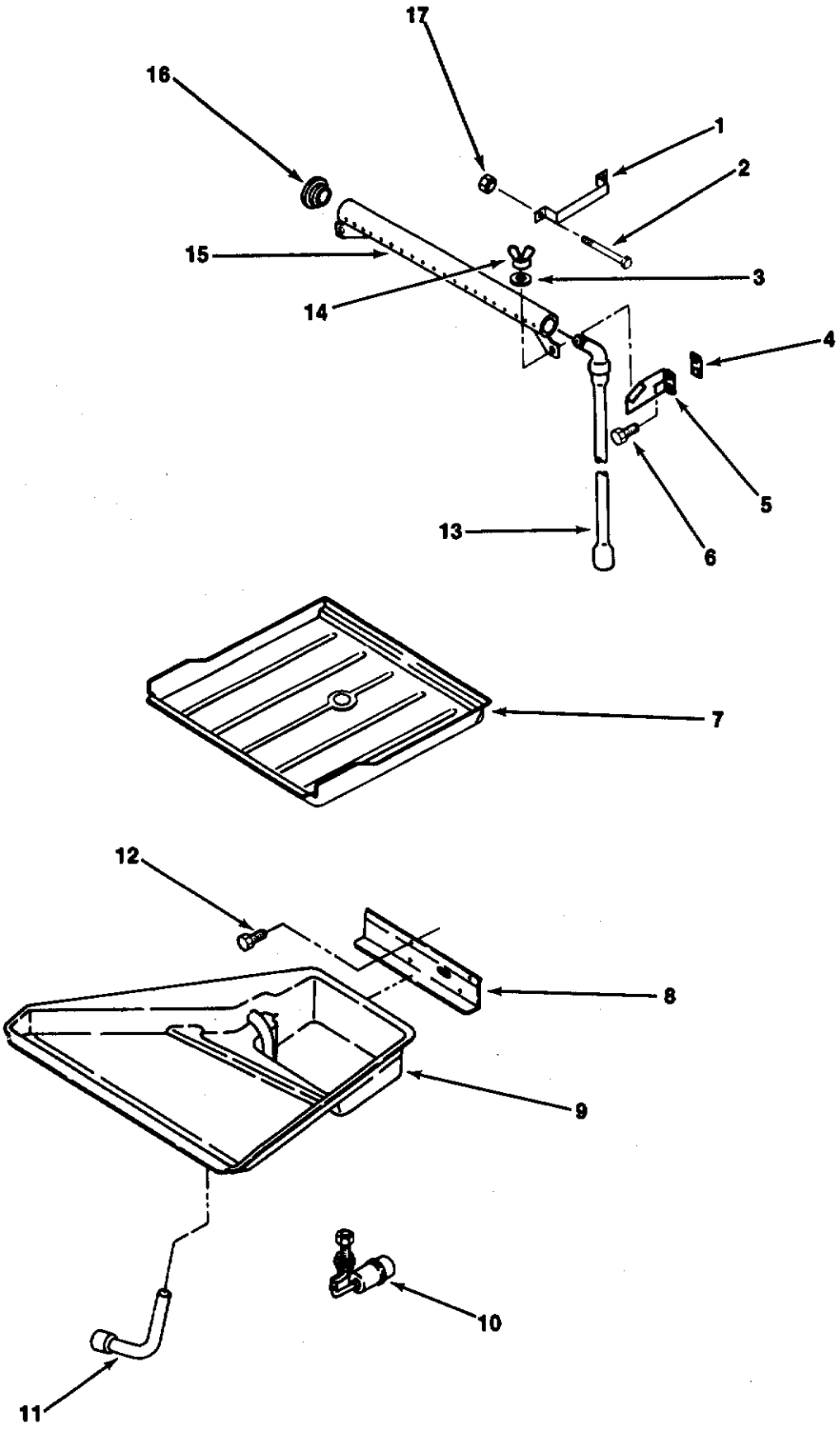
17
16
1
2
15
3
14
4
5
13
6
7
12
8
9
10
11

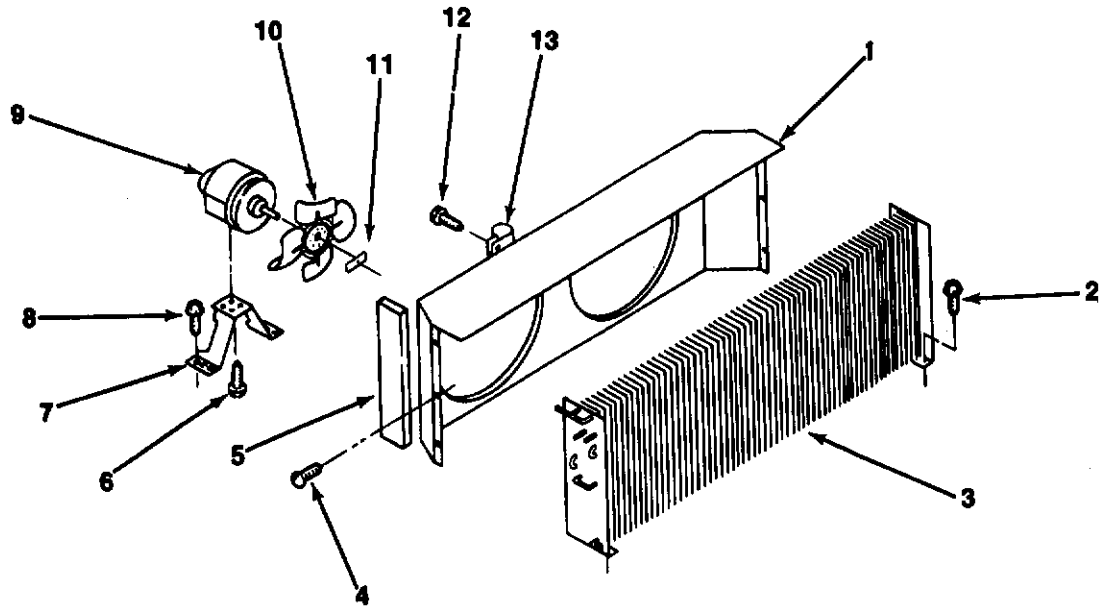

AIR-COOLED ASSEMBLY

ITEM NUMBER	PART NUMBER	DESCRIPTION
1	0751174	Shroud, Condenser
2	0681601	Screw, 1/4
3	0757243	Condenser
4	0681167	Screw, #8-32 x 3/8
5	13-0781-01	Block Air (Order Per Foot)
6	0680439	Screw, #8-32 x 1/2
7	0755339	Bracket, Motor (2)
8	0681601	Screw, 1/4
9	0599607	Motor, Fan
10	0755136	Blade, Fan (2)
11	0595380	Speed Nut
12	0680439	Screw, #8-32 x 1/2
13	0596620	Clamp

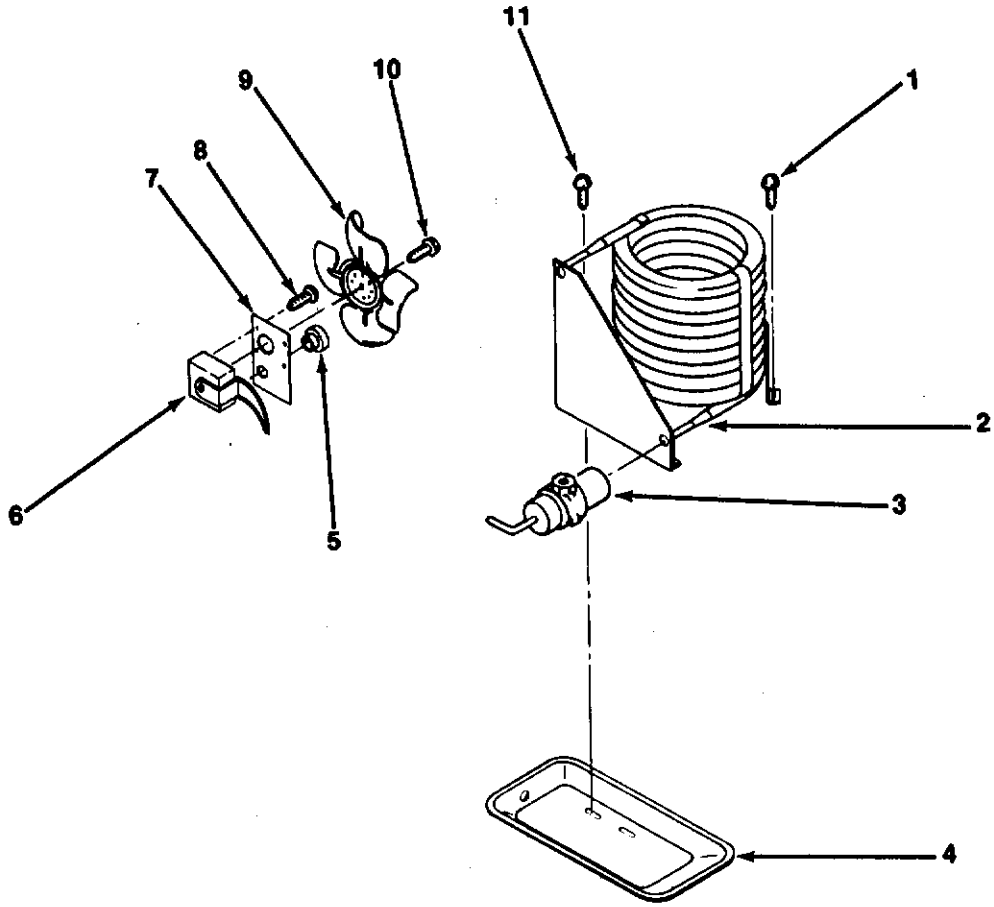

WATER-COOLED ASSEMBLY

ITEM NUMBER	PART NUMBER	DESCRIPTION
1	0681601	Screw, 1/4
2	0587014	Condenser, Water
3	0585386	Valve, Water
4	0751543	Pan, Condenser
5	0596416	Bushing
6	0755182	Motor, Fan
7	0755337	Bracket, Motor
8	0680722	Screw (4)
9	0513964	Blade, Fan
10	0487887	Screw (2)
11	0681601	Screw 1/4

MAJOR COMPONENTS

ITEM NUMBER	PART NUMBER	DESCRIPTION
1	0591710	Drier
2	0757229	Receiver
3	0680929	Screw, #10-32 x 1/2 (3)
4	0681087	Screw (5)
5	0681432	Nut, Cap (10-32)
6	0595172	Nut
7	0755893	Hose, Drain
8	0596411	Button, Plug
9	0583625	Grommet (4)
10	0780088	Compressor, Service
11	0561955	Valve, Body
12	0561958	Core, Valve
13	0561957	Cap, Valve
14	0561858	Strap, Bale
15	0751181	Cover, Terminal
16	0561857	Gasket Cover
17	0681342	Screw (4)
18	0583536	Sleeve, Grommet (4)
19	0596744	Retainer, Wire
20	0595395	Screw, #8-32 x 1/4 (2)
21	0751149	Bracket, Valve
22	0757239	Hot Gas Valve Complete
23	0681601	Screw 1/4
24	0681467	Lockwasher
25	0569434	Plug Water Pump
26	757300-20	Water Pump Assembly (Complete)
27	0702368	Hot Gas Valve Coil (Only)

CHW7
THE PARTS ILLUSTRATIONS AND PARTS LISTS

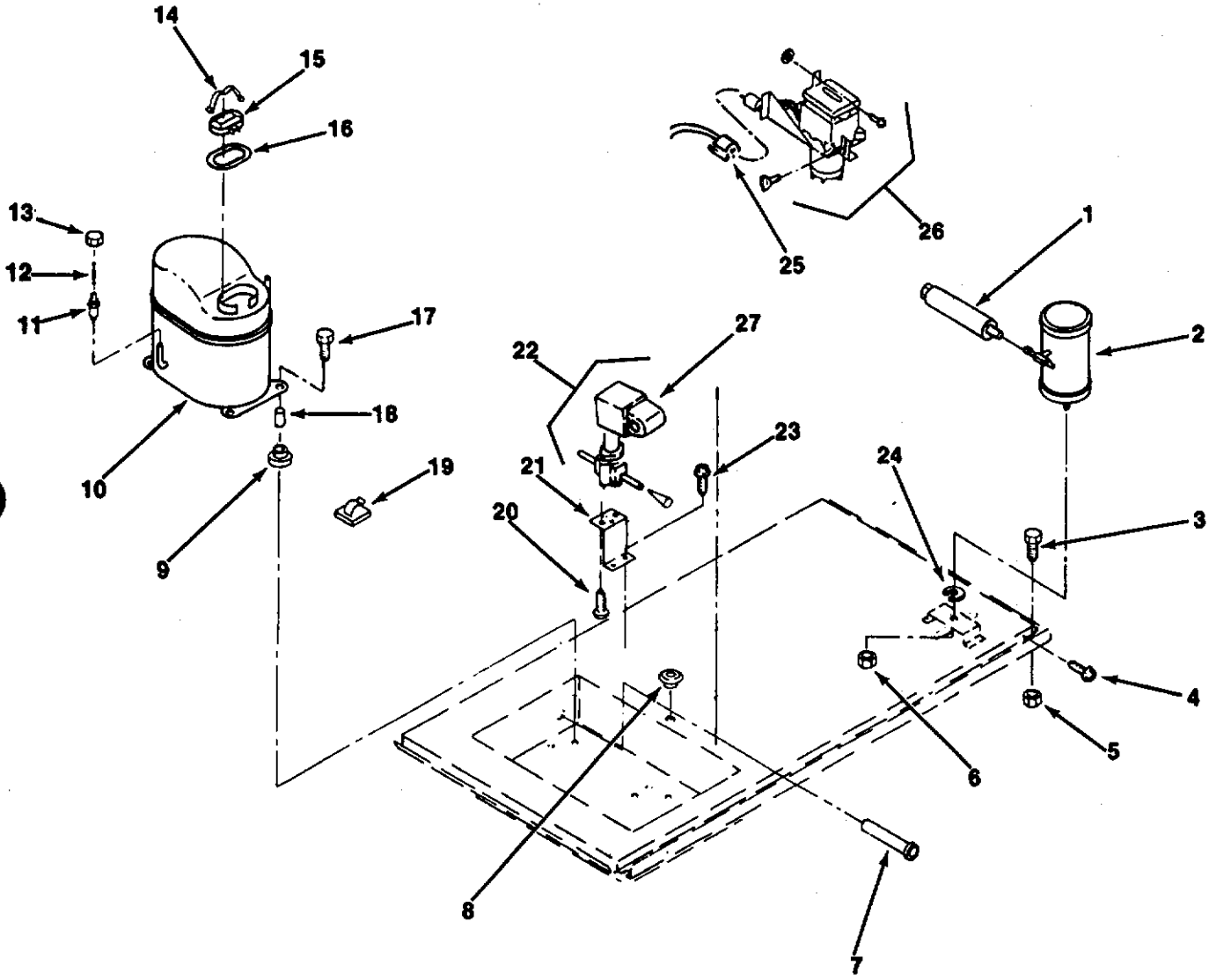

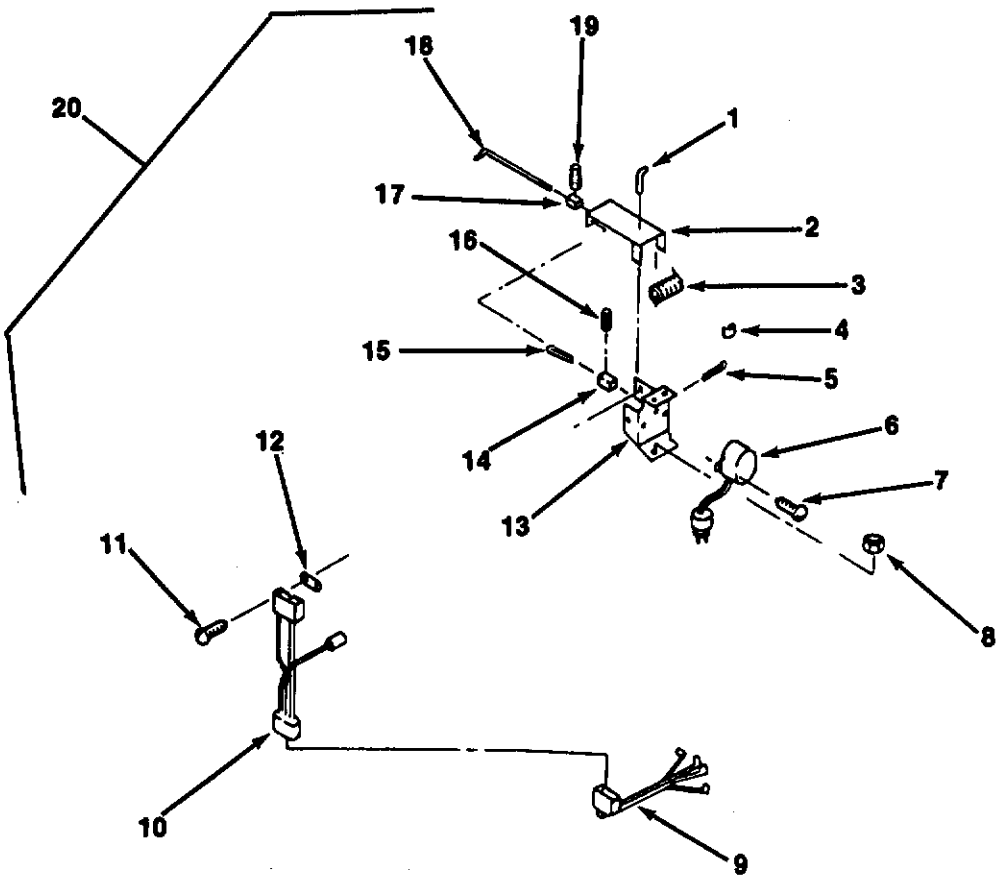

ICE THICKNESS CONTROL ASSEMBLY

ITEM NUMBER	PART NUMBER	DESCRIPTION
1	0751991	Screw, Adjusting
2	0587293	Bracket, Shaft
3	0585506	Spring, Holddown
4	0596679	Clamp, Wire
5	0680668	Pin, Cotter
6	0577540	Motor, Control
7	0680854	Screw, #4-40 x 3/8 (2)
8	0595181	Nut, Cap
9	0751137	Plug, Control Motor
10	0587888	Harness Micro Switch
11	0681433	Screw, #4-40 x 3/4 (2)
12	0587996	Spacer
13	0607811	Bracket, Motor
14	0572489	Coupling Shaft
15	0607816	Shaft, Flexible
16	0595330	Setscrew, #6-32 x 3/16 (4)
17	0572489	Coupling, Shaft (2)
18	0607815	Shaft, Formed End
19	0595330	Setscrew, #6-32 x 3/16 (4)
20	0587513	Ice Thickness Control Assembly, Complete

ELECTRICAL COMPONENTS — WATER-COOLED

ITEM NUMBER	PART NUMBER	DESCRIPTION
1	12-2275-01	Receptacle .3 Amp
2	12-2275-03	Receptacle 4 Amp
3	12-2276-05	Fustat .3 Amp
4	12-2276-01	Fustat 4 Amp
5	*No Number*	Box, Electrical
6	12-2275-04	Receptacle, Fustat (2)
7	12-2276-07	Fustat, 8 Amp (2)
8	0595176	Nut
9	0751948	Transformer, Grid (20 Volt)
10	0681620	Screw, Machine
11	0755147	Cover, Electrical Box
12	0681167	Screw, #8-32 x 3/8
13	0596679	Clamp, Wire
14	0595154	Screw, #10-32 x 1/2 (6)
15	0587314	Transformer, Control (14 Volt)
16	0681167	Screw, #8-32 x 3/8
17	0751134	Contactor
18	0595154	Screw, #10-32 x 1/2 (6)
19	0596021	Nut (2)
20	0596416	Bushing, Snap (2)
21	0681167	Screw, #8-32 x 3/8
22	0751227	Bracket, Capacitor
23	0751239	Cover, Capacitor
24	0591510	Capacitor, Start
25	0755123	Clamp, Capacitor
26	0681167	Screw, #8-32 x 3/8
27	0757245	Capacitor, Run
28	0595154	Screw, #10-32 x 1/2 (6)
29	0596380	Bushing, Snap
30	0681503	Clip, Wire
31	0591509	Relay, Compressor Start
32	0680968	Screw, #8-18 x 3/8
33	0751127	Board, Terminal
34	0680603	Screw, #8-32 x 5/8
35	0560940	Switch, Service
36	0681167	Screw, #8-32 x 3/8
37	0583099	Relay, Slab Completion
38	0681528	Screw, #10-32 x 1/2 (2)
39	0756013	Control, High Pressure
40	0751333	Base, Relay
41	0756231	Relay, Holding

CHW7
THE PARTS ILLUSTRATIONS AND PARTS LISTS

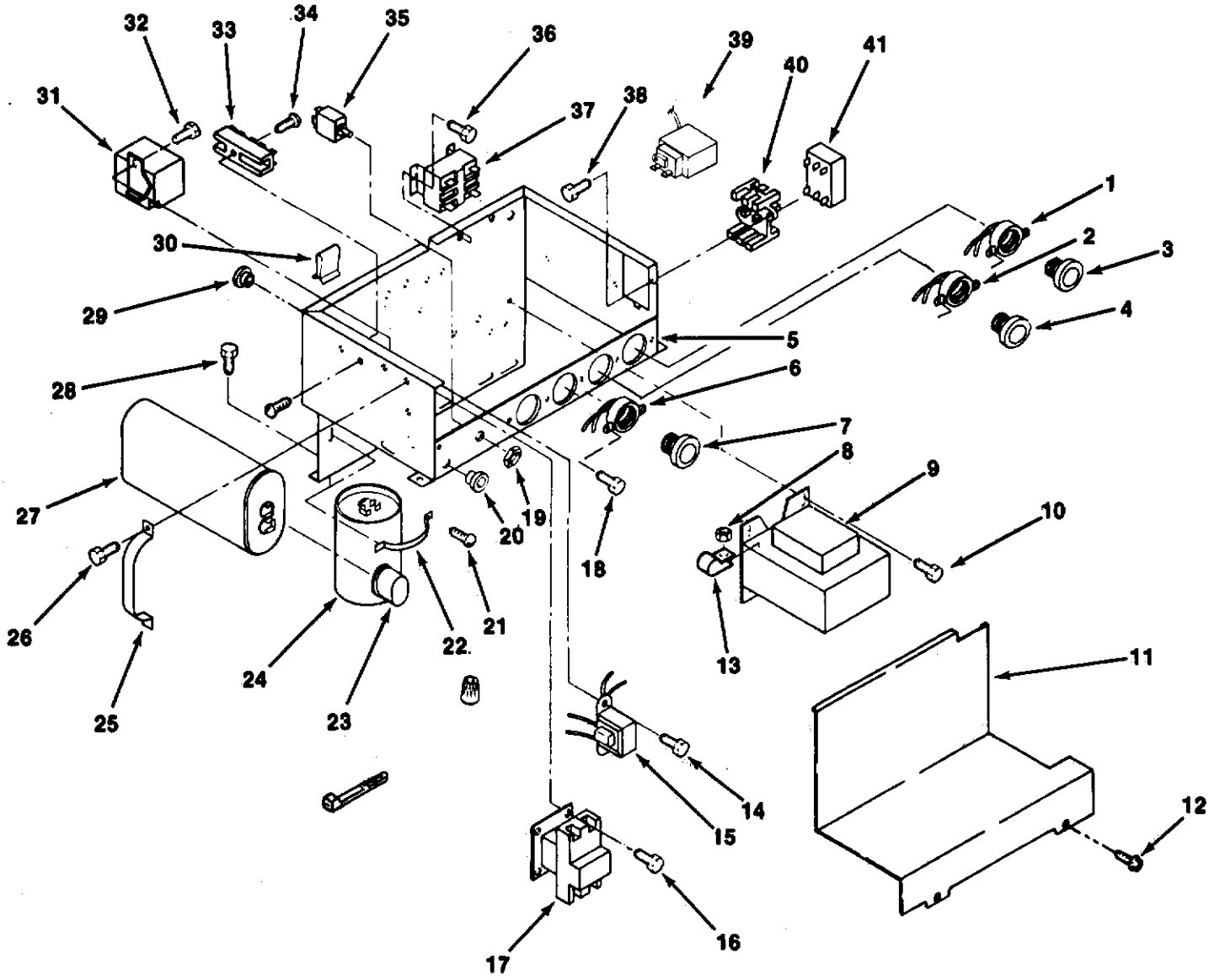

ELECTRICAL COMPONENTS — AIR-COOLED

ITEM NUMBER	PART NUMBER	DESCRIPTION
1	12-2275-01	Receptacle .3 Amp
2	12-2275-03	Receptacle 4 Amp
3	12-2276-05	Fustat .3 Amp
4	12-2276-01	Fustat 4 Amp
5	*No Number*	Box, Electrical
6	12-2275-04	Receptacle, Fustat (3)
7	12-2276-07	Fustat, 8 Amp (2)
8	0595176	Nut
9	0751948	Transformer, Grid (20V)
10	0681620	Screw, Machine
11	0757274	Cover, Electrical Box
12	0681167	Screw, #8-32 x 3/8 (10)
13	0596679	Clamp, Wire
14	0595154	Screw, #10-32 x 1/2 (7)
15	0587314	Tranformer, Control (14V)
16	0681167	Screw, #8-32 x 3/8 (10)
17	0751134	Contactor
18	0595154	Screw, #10-32 x 1/2 (7)
19	0596702	Tie, Cable
20	0596021	Nut (2)
21	0596416	Bushing, Snap (2)
22	0681167	Screw, #8-32 x 3/8 (10)
23	0751227	Clamp, Capacitor
24	0751239	Cover, Capacitor
25	0591510	Capacitor, Start
26	0755123	Clamp, Capacitor Run
27	0681167	Screw, #8-32 x 3/8 (10)
28	0757245	Capacitor, Run
29	0680603	Screw, #8-32 x 5/8
30	0595154	Screw, #10-32 x 1/2 (7)
31	0596380	Bushing, Snap
32	0681503	Clip
33	0591509	Relay, Compressor Start
34	0680968	Screw, #8-18 x 3/8
35	0751127	Board, Terminal
36	0680603	Screw, #8-32 x 5/8
37	0560940	Switch, Service
38	0681167	Screw, #8-32 x 3/8 (10)
39	0583099	Relay, Slab Completion
40	0681528	Screw, #10-32 x 5/8 (2)
41	0751333	Base, Relay
42	0756231	Relay, Holding

CHW7
THE PARTS ILLUSTRATIONS AND PARTS LISTS

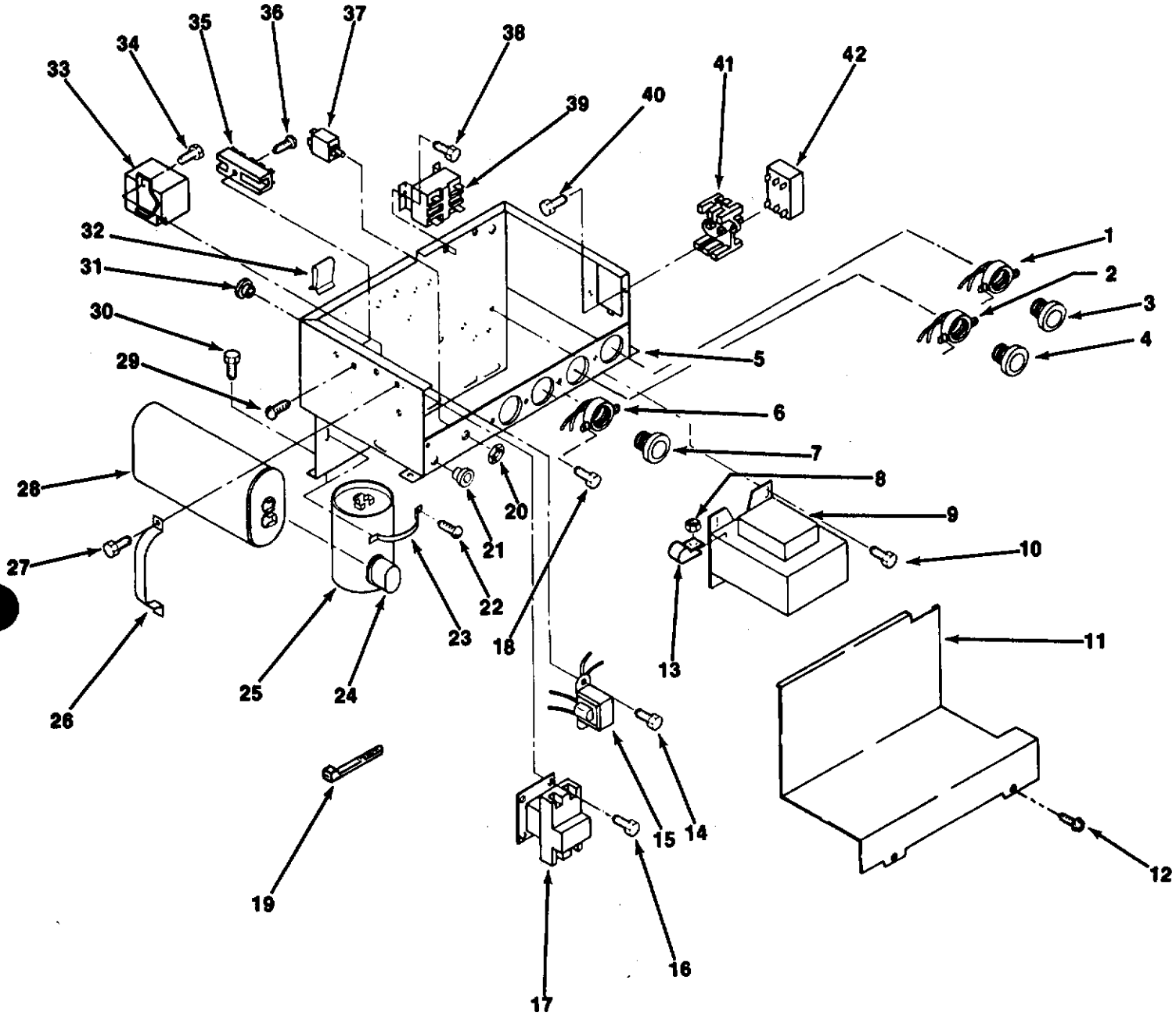

BIN PARTS CBW6E

ITEM NUMBER	PART NUMBER	DESCRIPTION
1	0681581	Screw, Stainless Steel 1/4-20 x 1/2 (2)
2	0588717	Nut, Drain
3	0751387	Fitting, Drain
4	0755099	Plate, Tap
5	0756777	Panel, Interior
6	0756221	Gasket, Panel (2)
7	0681148	Screw, #6-32 x 1/2 (4)
8	0780021	Cap, End
9	0756162	Shield, Panel
10	0681347	Screw
11	0681581	Screw, 1/4-20 x 1/2 (2)
12	0780027	Door Assembly, Complete
13	0756061	Gasket, Door
14	0587640	Plate, Backing
15	0512312	Magnet
16	0681567	Screw, #6 x 1-1/4 (2)
17	0780025	Cover, Magnet
18	0654067	Clip, Sealing (Large)
	0654068	Clip, Sealing (Small)
19	0837577	Escutcheon, Nameplate
20	0780003	Insert, Nameplate
21	0756428	Collar Assembly
22	0756129	Bearing, Door
23	0681410	Screw (20)
24	0756134	Hinge, Door
25	0751369	Elbow, Drain
26	02-0540-00	Scoop, Ice
27	0681496	Screw, 12-14 x 3/4
28	0751260	Drain, Bin
29	0751258	Gasket, Drain
30	0681610	Washer, Nylon
31	0681612	Screw
32	0755059	Panel, Exterior
33	0755795	Sleeve, Panel
34	0780028	Top Panel Assembly, Complete
35	0780055	Collar
36	0751507	Deflector, Ice

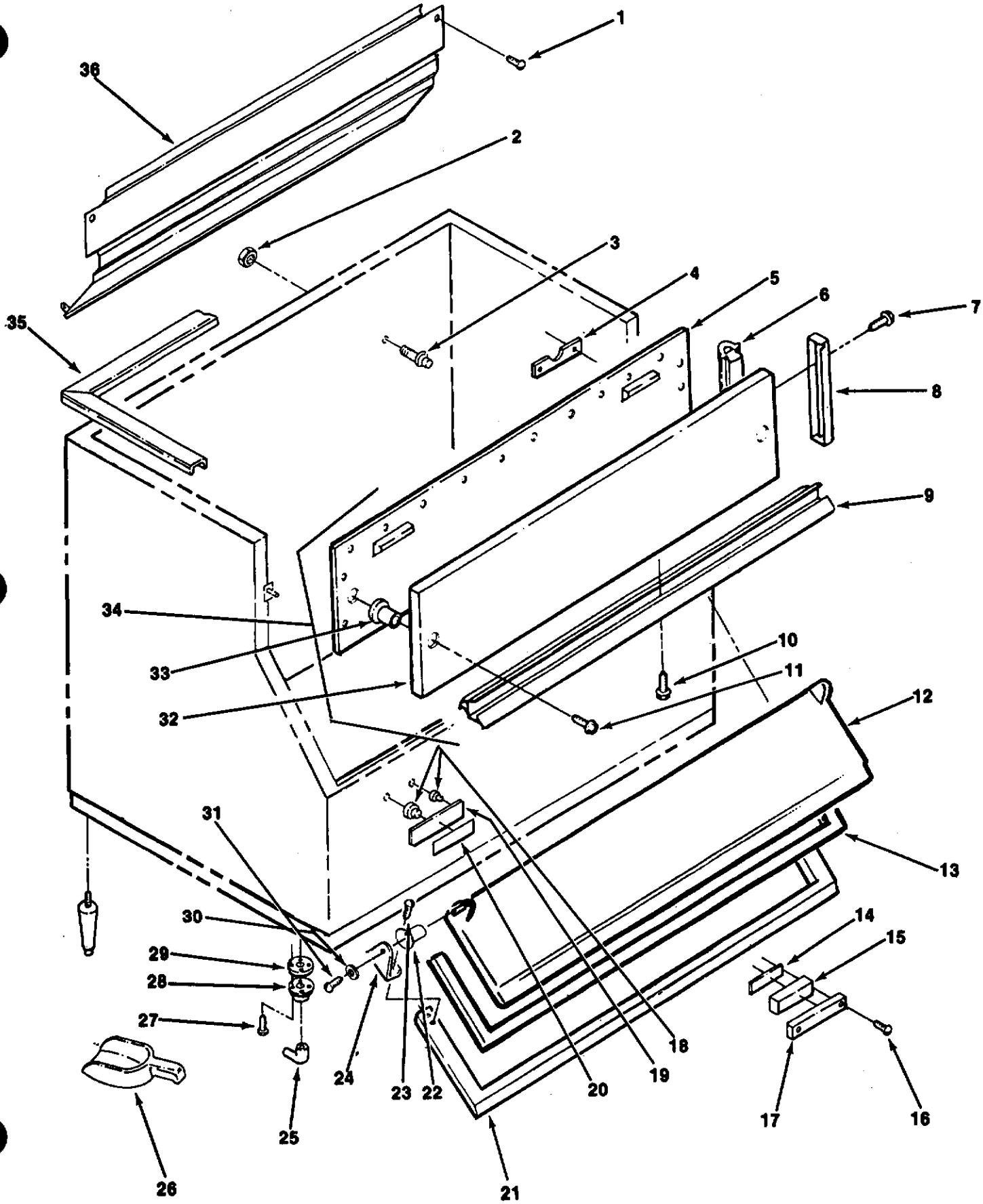
1
36
2
3
4
5
6
7
35
8
9
34
33
32
10
11
12
31
13
30
14
29
15
28
27
18
24
23
22
20
19
17
16
25
26
21

USE COPPER CONDUCTORS ONLY

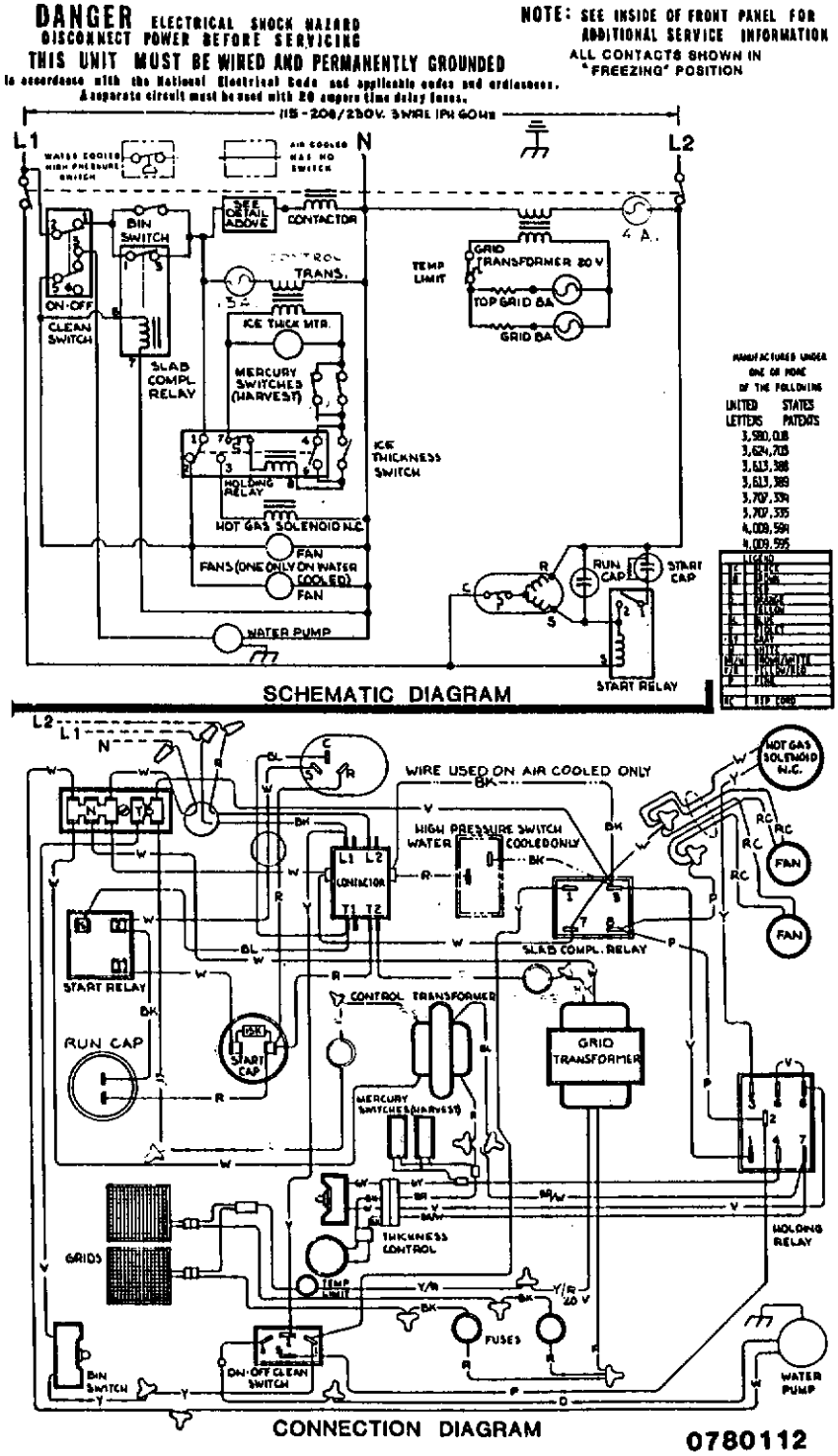

Wiring Diagram CHW7 115-208/230/60/1

TABLE OF CONTENTS

	Table of Contents	i
	List of Illustrations	ii
	Specifications	iv
SECTION I. -	GENERAL INFORMATION & INSTALLATION	1-1
I.	Introduction	1-1
II.	Unpacking and Inspection	1-1
III.	Location and Leveling	1-2
IV.	Electrical Connections	1-2
V.	Water Supply and Drain Connections	1-2
VI.	Final Check List	1-4
SECTION II. -	OPERATING INSTRUCTIONS	2-1
I.	Start-Up	2-1
SECTION III. -	PRINCIPLES OF OPERATION - How It Works	3-1
I.	Icemaker	3-1
II.	Electrical/Refrigeration	3-2
SECTION IV. -	ADJUSTMENT AND REMOVAL AND REPLACEMENT	4-1
I.	Adjustment of the Bin Thermostat Control	4-1
II.	Adjustment of the Drink Dispenser Valve	4-1
III.	Adjustment of the Water Regulator Assembly - Water-Cooled Models	4-2
IV.	Adjustment of the Water Reservoir Float	4-2
V.	Removal & Replacement of the Auger, Water Seal, Bearings and Coupling	4-2
VI.	Removal & Replacement of the Cold Plate Bin Assembly	4-3
VII.	Removal & Replacement of the Compressor Assembly	4-3
VIII.	Removal & Replacement of the Condenser - Air-Cooled Models	4-4
IX.	Removal & Replacement of the Condenser - Water-Cooled Models	4-4
X.	Removal & Replacement of the Drier	4-4
XI.	Removal & Replacement of the Drivemotor Assembly	4-5
XII.	Removal & Replacement of the Fan Motor Assembly - Air-Cooled Models	4-5
XIII.	Removal & Replacement of the Freezer Assembly	4-5
XIV.	Removal and Replacement of the Limit Box Assembly	4-6
XV.	Removal and Replacement of the Pressure Plate Assembly, Spout Assembly and Spout Casting	4-6
XVI.	Removal & Replacement of the Dispensing Valve	4-7
XVII.	Removal & Replacement of the Water Regulator Assembly - Water-Cooled Models	4-8
XVIII.	Removal & Replacement of the Water Reservoir Assembly	4-8
SECTION V. -	MAINTENANCE & CLEANING INSTRUCTIONS	5-1
I.	General	5-1
II.	Icemaker	5-1
III.	CLEANING - Icemaker	5-2

TABLE OF CONTENTS (CONT'D.)

IV. CLEANING - Faucet Assembly 5-2
V. Sanitizing 5-3

SECTION VI. - SERVICE DIAGNOSIS 6-1
I. Icemaking - Refrigeration System 6-1

SECTION VII. - WIRING DIAGRAMS 7-1
SECTION VIII. - THE PARTS ILLUSTRATIONS AND PARTS LISTS 8-1
I. General 8-1
II. How to Use the Illustration and Parts List 8-1
III. How to Order Parts or Assemblies 8-1

LIST OF ILLUSTRATIONS

Specifications - Models PMF450 & PMF650 iv
Figure 1-1. Installation Practice 1-3
Figure 2-1. Water Schematic 2-1
Figure 3-1. Refrigeration Cycle 3-1
Figure 4-1. Adjustment of the Temperature Control 4-1
Figure 4-2. Removal of the Freezer Assembly 4-5
Figure 4-3. Removal of the Limit Switch, Pressure Plate, Spout and Spout Casting 4-6
Figure 4-4. Removal of the Dispensing Valve 4-7
Figure 4-5. Removal of the Water Reservoir Assembly 4-8
Figure 5-1. Removal of the Faucet Parts for Cleaning 5-3
Figure 7-1. Wiring Diagram PMF450 - Air-Cooled 7-2
Figure 7-2. Wiring Diagram PMF450 - Water-Cooled 7-3
Figure 7-3. Wiring Diagram PMF650 - Air-Cooled 7-4
Figure 7-4. Wiring Diagram PMF650 - Water-Cooled 7-5
Figure 8-A. Model PMF450/PMF650 Premix Flaker Drink System Flow Chart 8-2
Figure 8-1. Model PMF450/PMF650 Cabinet 8-3
Figure 8-2. Major Assemblies - Air-Cooled Models 8-7
Figure 8-3. Major Assemblies - Water-Cooled Models 8-11
Figure 8-4. Compressor Assembly - PMF450 8-15
Figure 8-5. Compressor Assembly - PMF650 8-16
Figure 8-6. Freezer Assembly - PMF450 8-17
Figure 8-7. Freezer Assembly - PMF650 8-19
Figure 8-8. Drivemotor Assembly - PMF450 1/10 H.P. 8-22
Figure 8-9. Drivemotor Assembly - PMF650 1/4 H.P. 8-26
Figure 8-10. Control Box Assembly - PMF450 8-29
Figure 8-11. Control Box Assembly - PMF650 8-31
Figure 8-12. Dispensing Tower Assembly 8-34
Figure 8-00. How to Use the Illustrated Parts List 8-35

SPECIFICATIONS
MODELS PMF450 & PMF650

TOP VIEW

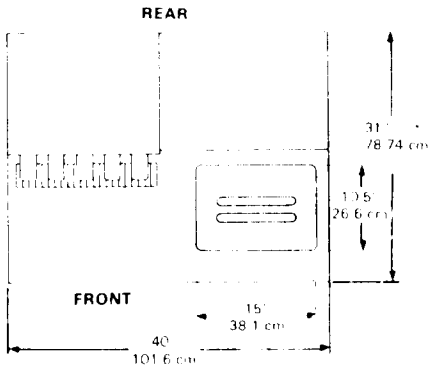

OPTIONAL OPENING FOR UTILITY LINES

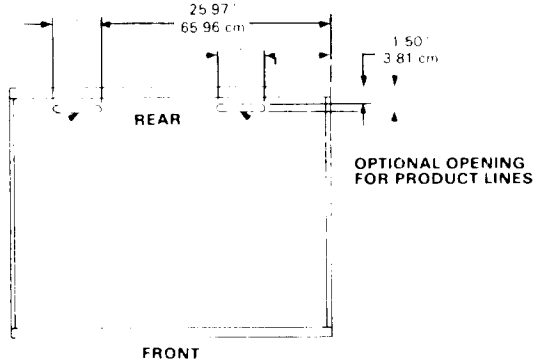

OPTIONAL OPENING FOR PRODUCT LINES

BOTTOM VIEW

FIVE SYRUP PRODUCT LINES w/1/4 S.S. FLARE SWIVELNUT ENDS

FIVE FLAVORED DRINK DISPENSING VALVES

A)1.44" (3.66 cm)
B)4.38" (11.11 cm)
C)6.38" (16.20 cm)
D)8.38" (21.28 cm)
E)10.38" (26.36 cm)
F)12.38" (31.44 cm)
G)14.38" (36.52 cm)
H)16.38" (41.60 cm)
I)18.38" (46.68 cm)
J)20.38" (51.76 cm)
K)22.38" (56.84 cm)
L)24.38" (61.92 cm)

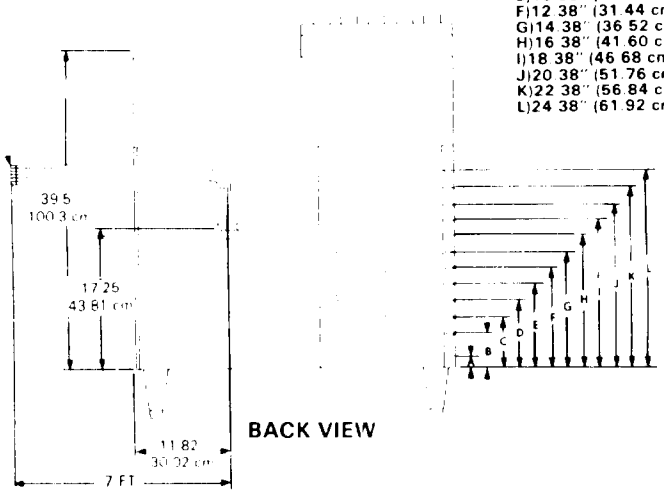

BACK VIEW

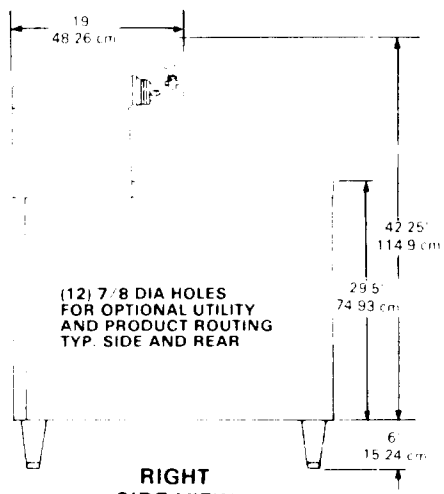

RIGHT SIDE VIEW

SPECIFICATIONS (CONT'D)

MODEL PMF450

Bin Storage: 215 lbs. SS Bin*
Air-Cooled: Model PMF450AE-1
Water-Cooled: Model PMF450WE-1
Electrical: 115/60/1
Est. Ship Wt.: 470 lbs.

MODEL PMF650

Bin Storage: 215 lbs. SS Bin*
Air-Cooled: Model PMF650AE-1
Water-Cooled: Model PMF650WE-1
Electrical: 115/60/1
Est. Ship Wt.: 510 lbs.

FEATURES ON BOTH MODELS

DRINK HEADS

Five Cornelius Pre-Mix Valves

SANITARY COLD PLATE

Sealed Cold Plate System
Solid Aluminum Cold Plate Construction
Five-Circuit Cold Plate cools five syrups

QUICK-DISCONNECT LINES

Five service lines at back of cabinet, connect quickly to syrup tanks. Lines are seven feet long.

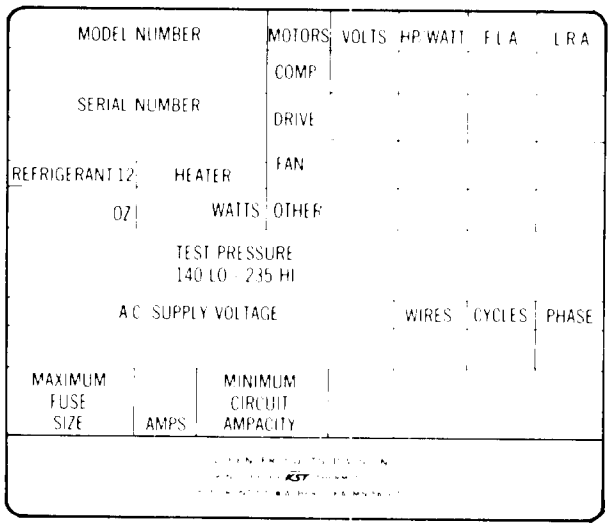

TWO YEAR PARTS WARRANTY

FRONT SERVICE ACCESS PANEL

OPTIONAL LEG KIT

KLP2E - 6-inch metal legs, Black Enamel
KLP2S - 6-inch metal legs, Nickel Plated

OPTIONAL PANEL KITS

SPKDSF50 - Stainless Steel Panels for use with PMF450 and PMF650.

FINISH

Charcoal Brown Enamel Base, Stainless Steel Tops and Console.

SEE NAMEPLATE, shown at left for electrical and refrigeration specifications. NAMEPLATE located on left rear upright mounting bracket of Chassis, seen with Left Side Panel removed.

Remove Left Front Door to locate Model/Serial Number plate, shown below, on the upper front frame, near the Control Box.

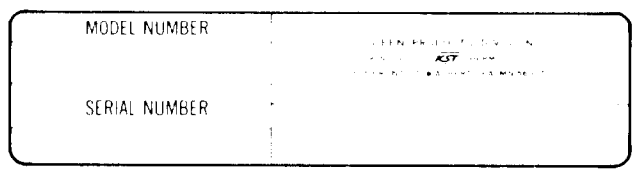

*Storage based on 90-percent of total volume x 34 lb. average density of ice. A.R.I. Standard.

We reserve the right to make product improvements at any time. Specifications and design are subject to change without notice



This icemaker has been engineered to our own rigid safety and performance standards. The National Sanitation Foundation (NSF) seal, signifies that it is listed with the NSF and that it complies with the materials and construction standards of the NSF. In addition, the Underwriters Laboratories, Inc., (UL) Listing Mark and the Canadian Standards Association (CSA) Monogram, both signify that its construction and design have been inspected and tested by them. NSF, UL and CSA inspectors also periodically examine production icemakers at the factory, to assure continued compliance.

To retain the safety and performance built into this icemaker, it is important that installation and maintenance be conducted in the manner outlined in this manual.

SECTION I

GENERAL INFORMATION & INSTALLATION

I. INTRODUCTION

This manual provides the specifications and the step-by-step procedures for the installation, start-up, operation, and the maintenance and cleaning for the SCOTSMAN Models PMF450 and PMF650 Icemaker/Drink Dispensers: Separate sections detail more specifically: General Information & Installation; Start Up Operation; Principles of Operation; Adjustment and Removal and Replacement Procedures; Maintenance and Cleaning Instructions; Service Diagnosis; Wiring Diagrams; and, the Illustrated Assemblies and Parts Lists.

Because both Models of these pre-mix Icemaker/Drink Dispensers are identical in physical size and dimensions; equipment, except Freezer and Drivemotor; and, in operation, except production capacities as noted, all instructions and procedures apply equally to both Models, with a very few exceptions. In the few instances where there are vital technical differences between the two Models, separate well identified procedures and data are detailed, so there should be no confusion or error, in following instructions in any section of this manual.

The Models PMF450 and PMF650 Icemaker/Drink Dispensers are quality designed, engineered and constructed, and thoroughly tested icemaking and pre-mix dispensing systems, providing the utmost in flexibility to fit the needs of a particular user.

A removable Dispensing Panel on the front of the Dispensing Tower, allows use of various dispensing heads to be mounted on the Panel.

A five circuit Cold Plate, designed and constructed as the integral bottom of the Bin, allows use of five syrup flavors.

All internal lines are connected prior to shipment from the factory. Five flexible tube assemblies are provided for connections to five syrup tanks.

DESCRIPTION

An attractive compact cabinet of Charcoal Brown enamel base, up-to-date styling with removable panels and doors for easy access to internal lines, connections and mechanical parts and assemblies. A Hood Assembly of stainless steel, attractively designed for front or back counter installation.

SEALED REFRIGERATION SYSTEM

To provide quiet efficient operation of the Icemaker, the Compressor motor is internally spring-mounted. The Compressor motor is covered by a five year parts warranty.

SELF-CONTAINED STORAGE BIN

These Icemaker/Drink Dispensers store their own ice supply in a heavily insulated, stainless steel ice storage Bin, with a handy Ice Access Door opening in the Hood Counter.

STANDARD OVERALL DIMENSIONS

The standard overall dimensions of the Cabinet depth, counter top height, etc., allows the automatic Icemaker/Drink Dispensers to be installed in harmony with the existing counter equipment.

II. UNPACKING AND INSPECTION

1. Call your authorized SCOTSMAN Distributor or Dealer, for proper installation. He's listed under ICE MAKING EQUIPMENT and MACHINERY in the yellow pages of the telephone book.
2. Visually inspect the exterior of the shipping container and skid and any severe damage noted should be reported to the delivering carrier; and, a concealed damage claim filed subject to internal inspection, with carrier representative present.
3. Using nail puller remove nails driven through the sides of the crate into the bottom skid.
4. BEFORE removal of any panels or packing, carefully lay the Cabinet on its back and remove shipping bolts and the shipping base or skid.
5. When ordered, install the optional legs in the Cabinet base sockets, then return the Cabinet to upright position.
6. Remove screws and shipping tape and all panels and doors from the Cabinet and inspect for any concealed damage. Notify carrier of any concealed damage claims, as stated in step 2, above.
7. Check that refrigerant lines do not rub or touch lines or other surfaces, and that fan blades, if any, move freely.
8. Check that the Compressor is snug on all mounting pads.
9. Remove Water Strainer from shipping envelope, for installation in water supply line.

10. Use clean damp cloth or disposable paper wiper to wipe clean the interior surfaces of the ice storage Bin and the exterior surfaces of the Cabinet.
11. SEE NAMEPLATE on the lower part of the left rear upright mounting bracket of the Chassis, and check that the location source voltage corresponds with the voltage specified on the nameplate.

CAUTION

Improper voltage supplied to the Icemaker/Drink Dispenser will void your parts replacement program.

12. Remove the Manufacturer's Registration Card from the front of the User's Manual and fill in all spaces including: Model Number and Serial Number taken from the NAMEPLATE. Forward the completed, self-addressed, registration card to the SCOTSMAN factory.

III. LOCATION AND LEVELING

WARNING

This Icemaker/Drink Dispenser is NOT designed for outdoor installations where air temperatures are below 50-degrees F., or above 100-degrees F., and water temperature is below 40-degrees F. or above 100-degrees F. Extended periods of operation at temperatures exceeding these limitations will constitute misuse, under the terms of the SCOTSMAN Manufacturer's limited warranty, resulting in LOSS of warranty coverage.

1. Position the Cabinet in the selected permanent location.

NOTE

Prior consideration for location site shall include:

1. *Minimum room temperature 50-degrees F. and maximum room temperature 100-degrees F.*
2. *Water inlet temperatures; Minimum 40-degrees F. and Maximum 100-degrees F.*
3. *Well ventilated location for Air-Cooled model, advising user to frequently clean Condenser, located directly behind the front service door.*
4. *CONVENIENCE: Placed for practical, efficient use in a back bar or front bar location; or, fit into a standard soda fountain line up, or as an individual counter unit, with double function providing flaked ice, as well as carbonated beverages.*
5. *SERVICE ACCESS: Adequate space for all service connections, located at the left rear corner post of the Cabinet. A six-inch minimum clearance at rear and front louvered doors, for routing cooling air drawn into and exhausted out of the compartment to maintain proper condensing operation on Air-Cooled Models.*

2. Level the Cabinet in both the left-to-right and front-to-rear directions. The optional leveling legs can be adjusted with an open end wrench.

IV. ELECTRICAL CONNECTIONS

SEE NAMEPLATE for current requirements to determine wire size to be used for electrical hookup. The PMF450 and PMF650 Icemaker/Drink Dispensers require a solid earth ground wire. See wiring diagram.

Be certain the Icemaker/Drink Dispenser is connected to its own electrical circuit and individually fused. The maximum allowable voltage variation should not exceed ten percent of the nameplate rating, even under starting conditions. Low voltages can cause erratic operations and may be responsible for serious damage to the overload switch and motor windings.

All external wiring should conform to the national, state and local electrical permit and services for a licensed electrician will be required.

V. WATER SUPPLY AND DRAIN CONNECTIONS

A. AIR-COOLED MODELS: The recommended water supply line is a 1/4-inch O.D. copper tubing. A 1/4-inch flare fitting is provided at the water inlet. Connect to cold water supply line with standard plumbing fittings, with a shutoff valve installed in an accessible place between the water supply and the Cabinet.

A wire mesh strainer is provided and must be installed with the clean out plug down. Locate the strainer in the water supply next to the Cabinet with the arrow on the strainer, in the direction of the water flow. The strainer protects against large particles of rust, scale, etc., which may be loosened in the water supply pipe, at the time of installation.

In some cases, a plumbing permit and services of a licensed plumber will be required.

WARNING

To prevent damage to the freezer mechanism, DO NOT operate this unit when the water supply is OFF, or is below the recommended water pressure. Position the master switch to the OFF position, until proper water supply is resumed.

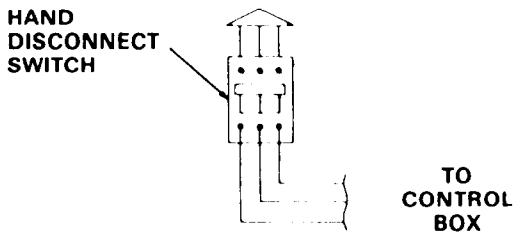

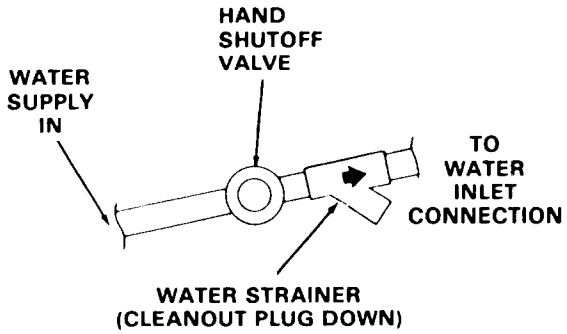

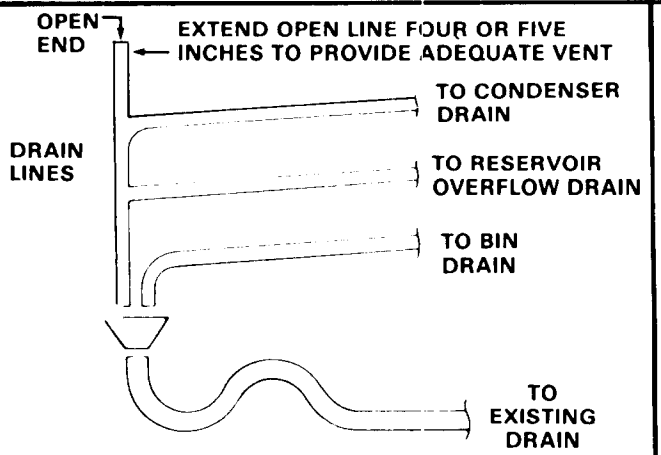

OPEN, TRAPPED OR VENTED DRAIN. RECOMMENDED 1/4-INCH FALL PER FOOT OF RUN ON DRAIN LINES.

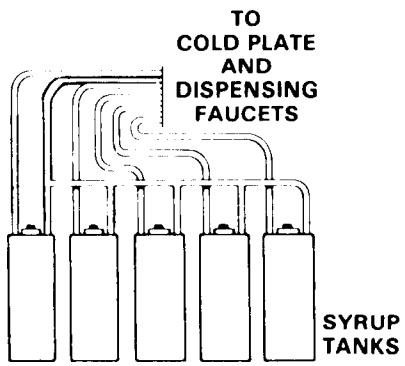

WARNING

THIS ICEMAKER IS NOT DESIGNED FOR OUTSIDE INSTALLATION AND WILL NOT OPERATE IN AMBIENT TEMPERATURES BELOW 50-DEGREES F., NOR ABOVE 100-DEGREES F.

THIS ICEMAKER WILL NOT OPERATE WHEN WATER TEMPERATURES ARE BELOW 40-DEGREES F., NOR ABOVE 100 DEGREES F.

77-1168

Figure 1-1. Installation Practice.

The icemaker in this Cabinet will not operate properly when water supply temperatures are below 40-degrees F, or above 100-degrees F.

B. WATER-COOLED MODELS: On Water-Cooled models a spearate connection to the Condenser is required. A 3/8-inch O.D. copper tubing is provided for a separate water inlet line to be connected and a separate drain line to be connected.

NOTE

The WARNING in the text above for the Air-Cooled models equally applies for the Water-Cooled models. In both type installations, water supply must be installed to confrom with the local plumbing codes. In some cases, a plumbing permit and services of a licensed plumber will be required.

C. DRAIN CONNECTION: All drains are gravity type and must be 1/4-inch fall per foot on horizontal runs. The drains to be installed to conform with local code. The drain receptacle should be an open, trapped or vented construction. See Figure 1-1, to be properly informed on venting.

Recommended bin drain in 5/8-inch O.D. copper tubing and should be vented and run separately. Connect a 7/16-inch I.D. tube from the Reservoir overflow and a drain tube from the Water-Cooled Condenser, on Water-Cooled models.

VI. FINAL CHECK LIST

1. Is the Cabinet Level? (IMPORTANT)
2. Have all electrical and piping connections been made?
3. Has the voltage been tested and checked against the nameplate rating?
4. Is the water supply line shutoff valve installed and electrical wiring properly connected?
5. Have the Bin and Cabinet been wiped clean?
6. Have the Compressor hold-down nuts been checked to be sure the Compressor is snug on the mounting pads?
7. Has the owner/user been given the User Manual and instructed on how to operate the Icemaker/Drink Dispenser?
8. Has the Manufacturer's Registration Card been properly filled out? Check for correct Model and Serial numbers from Serial nameplate, then mail the completed card to the SCOTSMAN factory.
9. Check all refrigerant lines and conduit lines, to guard against vibration or rubbing and possible failure.
10. Is there at least six inches clearance behind and around the Cabinet for proper air circulation?
11. Is the Cabinet in a room where ambient temperatures are a minimum of 50-degrees F. all year around?
12. Has water supply pressure been checked to insure a minimum of 20 PSIG?
13. Has the owner been given the name and telephone number of the authorized SCOTSMAN Distributor or Service Agency serving him?

SECTION II
OPERATING INSTRUCTIONS

I. START UP

1. Remove screws and the Left Front Door, Left Side Panel, Left Rear Door, Ice Access Door, and pull and unsnap the Hood Panel.
2. OPEN the water supply line shutoff valve.
3. Observe the water filling operation: (See Figure 2-1)
   a. Water flows into Water Reservoir.
   b. Float moves up as water rises.
   c. Water flows through water feed line to bottom of Freezer Assembly.
   d. Float stops water flow, when water level reaches 3/8-inch below the molded horizontal line on the body of the Water Reservoir.
4. Connect all lines from the Cold Plate, at the bottom rear of the Cabinet, to the proper fittings on the syrup tanks.
5. CLOSE the water supply line shutoff valve.
6. Check all syrup line fittings to Cold Plate, Dispensing Faucet connections, etc., with bubble soap and correct any leaks.
7. OPEN the water supply line shutoff valve.
8. Check all internal water connections for leaks.
9. Move the manual ON-OFF toggle switch, on the front of the Control Box to the ON position to start the automatic icemaker operation.
10. After two or three minutes of operation, observe that flaked ice begins dropping off the Auger and out the Ice Spout.

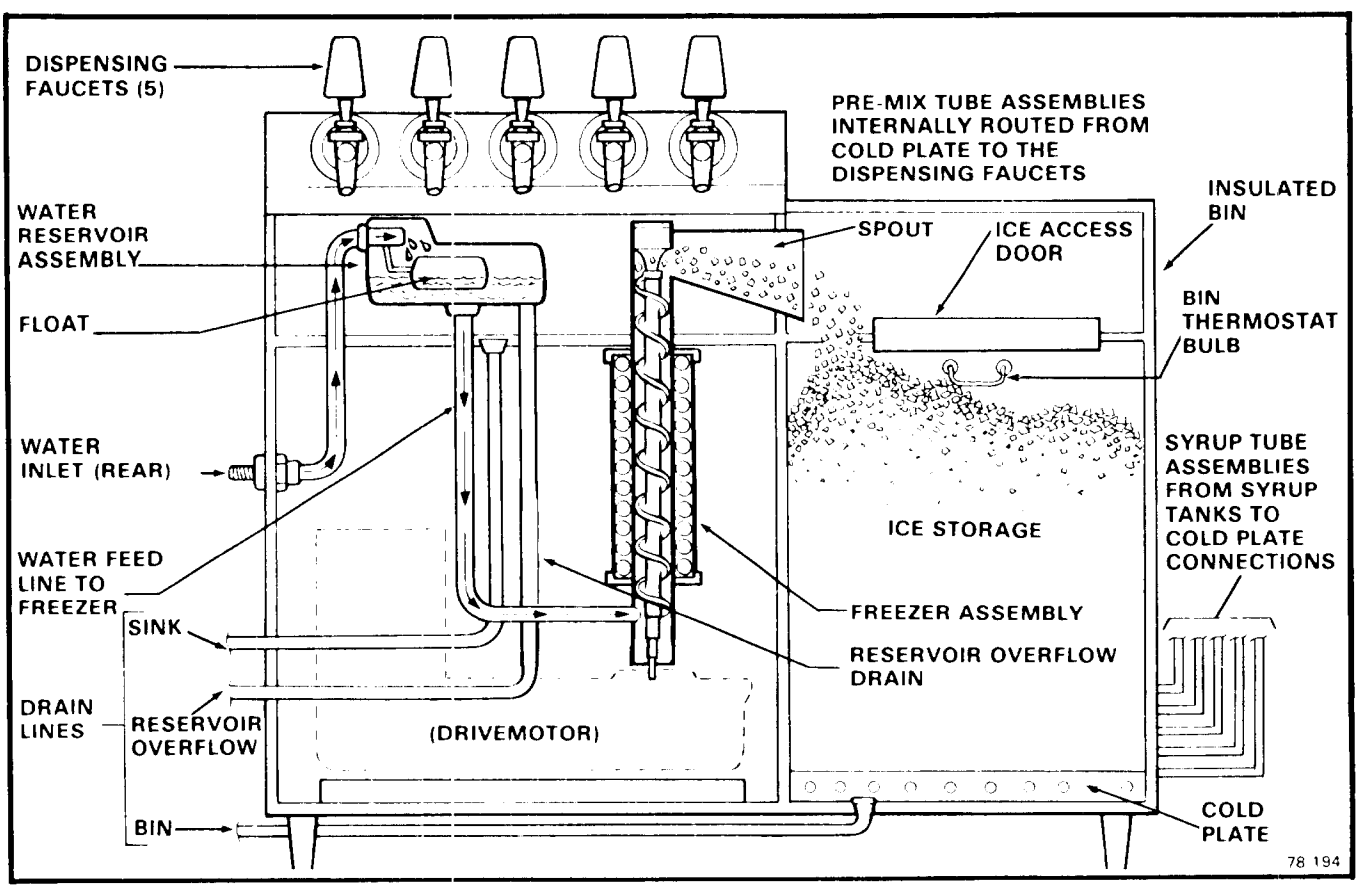

Figure 2-1. Water Schematic

11. Let the system operate for about 30 minutes or until ice covers the Bin bottom. Check for any excess noise in Icemaker, beyond normal Compressor noises.
    a. Fan noises, when Air-Cooled: Blades touch other surfaces; Blades bent out-of-balance.
    b. Vibrating type, from touching lines.
    c. Chattering: Lack of water in Freezer. Lack of water in Pump.
    d. Compressor loose at one or more hold-down bolts.

WARNING

DO NOT operate this Icemaker when the water supply is shut OFF, or is BELOW the recommended 20 PSI water pressure. Move the manual ON-OFF toggle switch on the front of the Control Box to the OFF position immediately.

12. Hold a handful of ice around the Ice Storage Bin Thermostat Control Bulb to test shutoff. Less than one minute is about normal for Bulb shutoff function to cause the Compressor to stop.

NOTE

Within minutes after the ice is removed from the sensing bulb, the bulb will warm up and cause the Icemaker to restart. This control is factory set and should not be reset until testing is performed. Normal setting: about 35-degrees F. CUT-OUT and 45-degrees F. CUT-IN, to prevent short cycling.

13. Check manual reset Low Pressure Control setting.

NOTE

This safety device, inside the Control Box, is set at zero to four PSIG, to prevent cutting off when the Compressor first starts up and still provide safety in case of interruption in water supply, shortage of refrigerant, low ambient temperature, or any other cause of abnormal low suction pressures.

14. Thoroughly explain to the owner, the significant specifications of the dispenser, the start up and operation, going through the procedures in the User Manual operating instructions. Answer all questions about the Dispenser, by the owner; and, inform the owner of the name and telephone of the authorized SCOTSMAN Service Agency serving him.

SECTION III
PRINCIPLES OF OPERATION
How It Works

I. ICEMAKER

The water supply flows from the building source through the inline water strainer, enters at the Cabinet fitting and on to the Water Reservoir. The Water Reservoir functions to maintain a constant water level inside the Freezer Assembly. Water from the Water Reservoir enters at the bottom of the Freezer Assembly and is changed into ice by low temperatures inside the Freezer.

A stainless steel Auger within the Freezer is powered by the Drivemotor Assembly, a direct-drive gearmotor, and the rotating Auger carries the ice upward to the flared end of the Auger, see Figure 3-1, where excess water is pressed out of the ice, as it is extruded or flaked out through the Ice Spout and into the Ice Storage Bin.

Moving the manual ON-OFF toggle switch, on the front of the Control Box, to the ON position starts the automatic and continuous icemaking process. When the Ice Storage Bin has been filled with ice, up to the level of the Thermostat Control Bulb, the sensing bulb shuts off the icemaking process.

As the ice is removed from the Ice Storage Bin, the Thermostat Control Bulb warms up restarting the automatic icemaking process.

Factory settings are 35-degrees F. CUT-OUT and 45-degrees F. CUT-IN.

Altitude adjustment should ONLY be performed on Icemakers installed at 2000-feet level locations and ABOVE, and adjust only in increments of one-fourth turn of screw at a time.

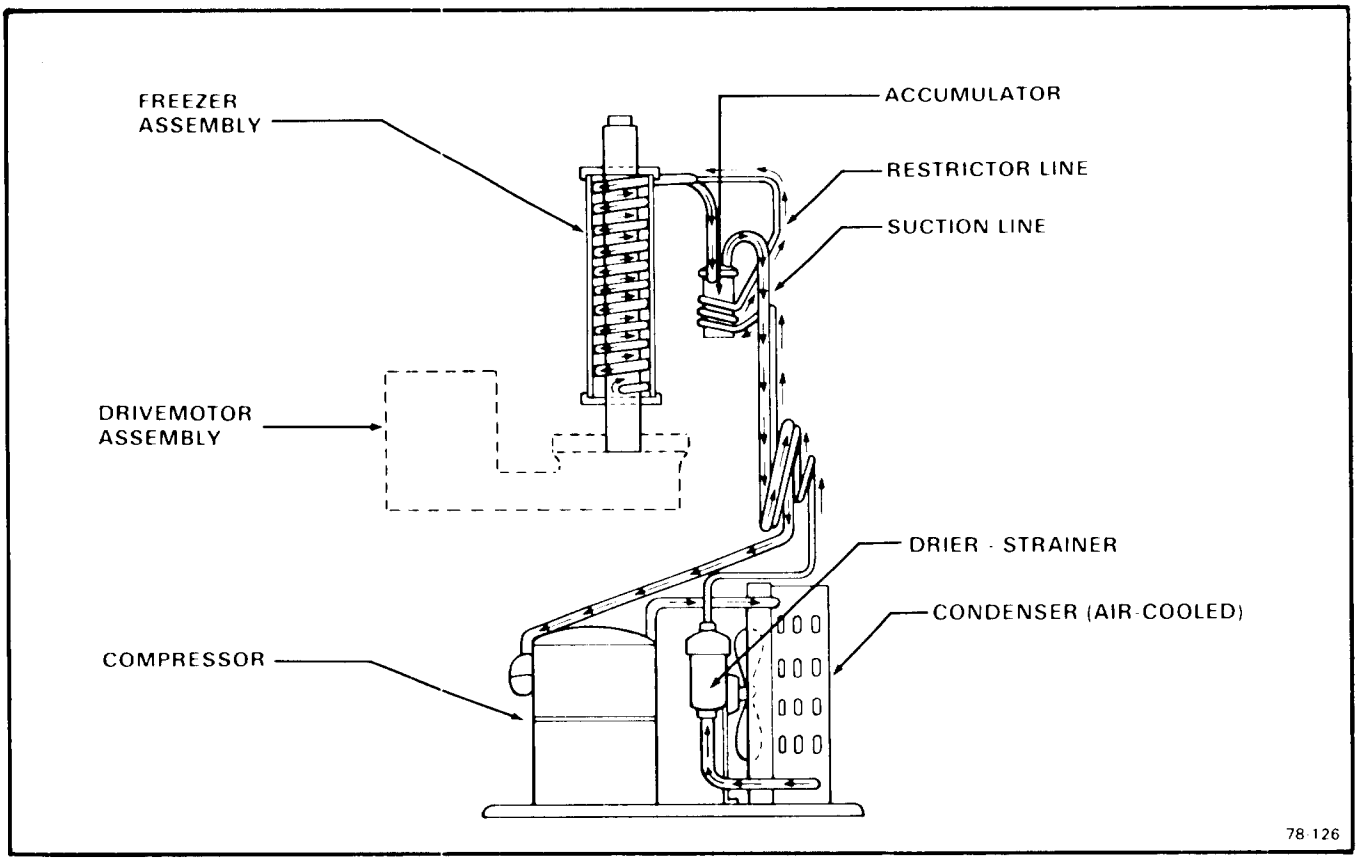

Figure 3-1. Refrigeration Cycle

II. ELECTRICAL/REFRIGERATION

The PMF450 and PMF650 Icemaker/Drink Dispensers are designed to operate on standard electrical supply 115 volts, 60 Hertz, single phase. Other voltage requirements are available on special order. Therefore, always CHECK NAMEPLATE for electrical information BEFORE proceeding with electrical wiring connections to the Icemaker.

Cold ambient temperatures and interruptions in water supply are conditions that can cause excessively hard ice and overloads within the Freezer Assembly, which is directly transmitted to the Drivemotor; and in turn, will cause speed reduction or ultimate freezeup.

When the Drivemotor is slowed to a predetermined RPM, a sensing switch mounted on top of the motor is designed to open the electrical circuit to the Compressor. The Compressor stops operating, no more ice is produced, and the Drivemotor continues to operate rotating the Auger to clear the overload and gradually build up to full speed.

At a pre-determined higher RPM Drivemotor speed, the speed sensing switch closes the electrical circuit to the Compressor, causing the normal icemaking process to resume. Refer to specific details in paragraph V-II-9, on centrifugal sensing switch operation.

A Limit Switch Assembly is mounted on top of the Ice Spout and is actuated by movement of the spring-operated Pressure Plate inside the Ice Spout. The Limit Switch acts as a backup safety switch, should the Thermostat Control Bulb fail and cause ice to jam up in the Ice Spout, and the microswitch will shutoff the condensing unit only, when operated.

There are three safety controls in the Control Box on the Water-Cooled models and two safety controls in the Control Box for the Air-Cooled models. The Low Pressure Control, a manual reset, non-adjustment control, is used on both models and is set to electrically open at zero to four PSIG to stop the entire icemaker. The Auger Delay Switch, a single-pole double-throw (SPDT) switch, used on all models, functions as a control device to allow the gearmotor to rotate the auger to clear the Freezing Chamber while the compressor circuit is OFF.

Refer to the appropriate Wiring Diagram and trace circuitry and control functions, as described in the following paragraph.

As shown on all SCOTSMAN wiring diagrams, the controls are in the ICEMAKING MODE.

Thus, the 1-2 contacts are CLOSED. At STARTUP, the 1-2 contacts are OPEN and the 3-2 contacts are CLOSED. As the icemaker begins to operate, the low side pressure starts to decrease from the stabilized or at-rest pressure. As soon as the pressure is reduced to 20 PSIG, the 3-2 contacts OPEN and the 1-2 contacts CLOSE.

This removes the operating controls, such as the Bin Thermostat, from the gearmotor circuit. If one of the operating controls OPENS, it will SHUT OFF the compressor circuit. The gearmotor will operate until the low side pressure increases to 32 PSIG.

Then, the 1-2 contacts, OPEN and SHUTS OFF the gearmotor, usually within one to two minutes, depending upon ambient conditions. This brief period of time allows the Auger to transport all the ice out of the Freezing Chamber. Consequently, when called on to STARTUP again, there is no ice load to start up against. Again, on STARTUP, the 1-2 contacts are OPEN and the 3-2 contacts are CLOSED.

On all models, a low-water pressure switch functions to discontinue the icemaking process whenever incoming water pressure is reduced to below five PSIG. The Switch will automatically restart the Icemaking process when the water pressure is increased to 20 PSIG.

The head pressure is normal about 130 PSIG, however, it will vary depending upon ambient air temperature.

Suction pressure should be 15 PSIG with proper refrigerant charge and the frost line should extend out from the Accumulator to within no closer than eight to twelve inches of the Compressor. Suction pressure will vary about two PSIG plus or minus, depending upon ambient temperatures and incoming water supply temperatures to the Freezer Assembly.

When charging the system with refrigerant, always CHECK NAMEPLATE for specific refrigeration charge for individual Flaker, and charge with refrigerant so the frost line extends out of the Accumulator to within no closer than eight ot twelve inches of the Compressor, after 15 minutes of operation, for best capacity and performance.

MODEL	PMF-450 Refrig. Chg.
Air-Cooled	20 oz. R-12 (approx.)
Water-Cooled	18 oz. R-12 (approx.)

MODEL	PMF-650 Refrig Chg.
Air-Cooled	27 oz. R-12 (approx.)
Water-Cooled	23 oz. R-12 (approx.)

SECTION IV

ADJUSTMENT AND REMOVAL AND REPLACEMENT

The procedures provided in this Section are arranged in alphabetical order, to make specific Adjustment and Removal and Replacement information easy to locate.

Read the instructions thoroughly before performing any Adjustment or Removal and Replacement Procedures.

I. ADJUSTMENT OF THE BIN THERMOSTAT CONTROL

The control for the Bin Thermostat is the Temperature Control, located on the upper part of the Control Box Assembly.

See Figure 4-1 for location and direction of rotation, clockwise (CW) or counterclockwise (CCW), of the adjusting screws on the Temperature Control, in the particular Control Box the adjustment is to be performed

WARNING

The adjusting screws on the Temperature Control device have very sensitive response to adjustment. DO NOT attempt to adjust the screw until after thoroughly reading and understanding the following instructions and illustrations. Over-adjusting or erratic guessing, can foul the instrument and cause ultimate delay and part replacement, WHICH COULD HAVE BEEN PREVENTED.

II. ADJUSTMENT OF THE DRINK DISPENSER VALVE

Each Drink Dispensing Valve, of the type installed on production model Dispensers, has a single slotted adjustment screw, located on the right side of the valve head, on the flange just

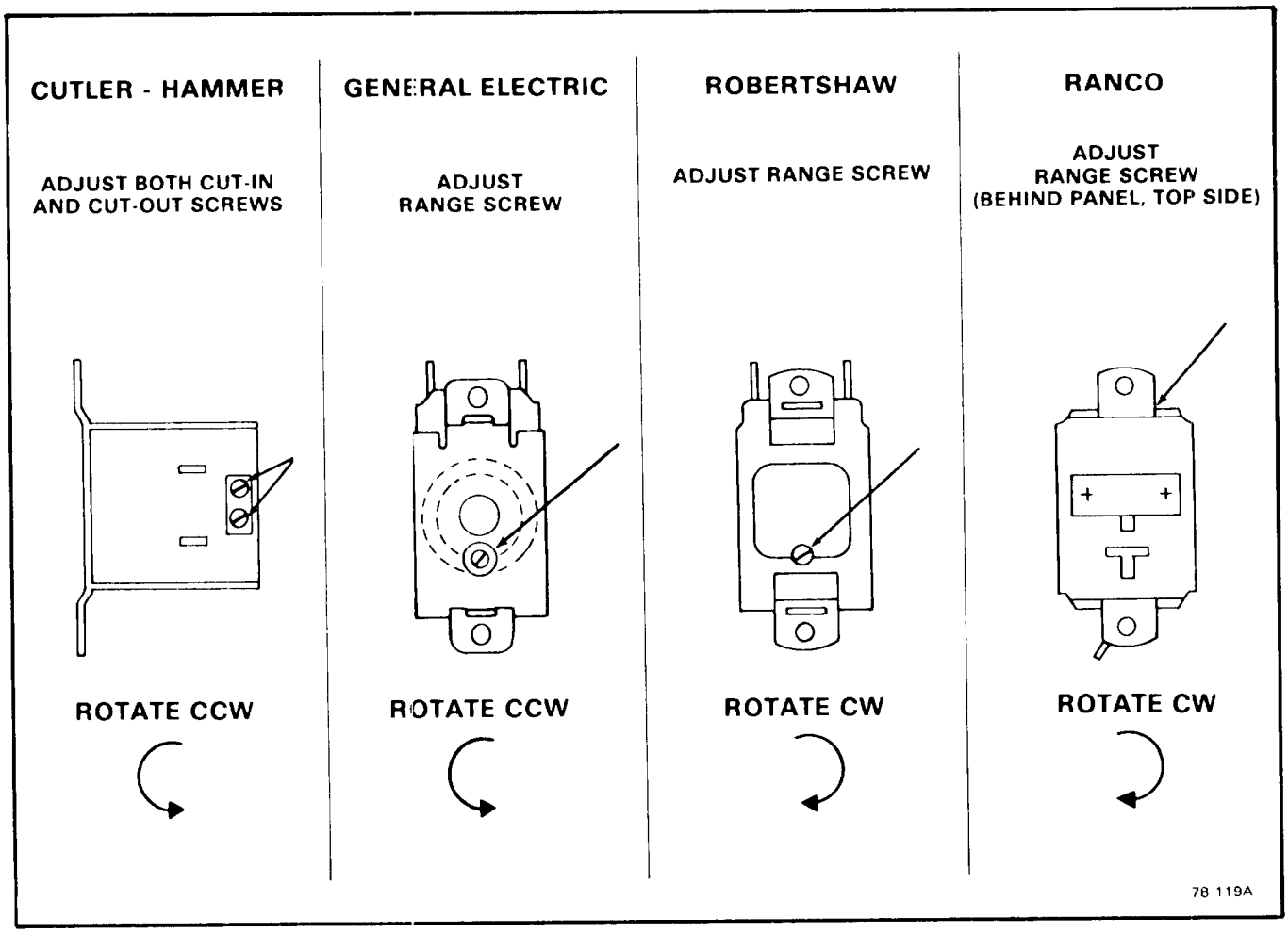

Figure 4-1. Adjustment of the Temperature Control.

behind the nozzle. Adjust to INCREASE or DECREASE the rate of flow of the premix drink as follows:

A. To INCREASE Flow: Rotate screw COUNTERCLOCKWISE, one-eighth turn.

B. To DECREASE Flow: Rotate screw CLOCKWISE, one-eighth turn.

C. Operate the adjusted valve, to test adjusted flow rate; and, repeat step A or B as necessary, to achieve desired flow rate.

III. ADJUSTMENT OF THE WATER REGULATOR ASSEMBLY — WATER-COOLED MODELS

The correct Compressor head pressure on Water-Cooled Models is 135 PSIG. Adjusting the Water Regulator Valve increases or decreases the rate of flow of water, through the Water-Cooled Condenser, which increases or decreases the affected temperature/pressure of the Compressor head pressure. INCREASED water flow, results in DECREASED or LOWER head pressure; while, DECREASED water flow, results in INCREASED or HIGHER head pressure.

To Adjust the Water Regulator Assembly:

A. To INCREASE the Head Pressure: Rotate the adjusting screw IN, or CLOCKWISE.

B. To DECREASE the Head Pressure: Rotate the adjusting screw OUT, or COUNTERCLOCKWISE.

C. Check change in Compressor head pressure, and repeat step A or B as necessary, to achieve desired operating head pressure.

IV. ADJUSTMENT OF THE WATER RESERVOIR FLOAT

The correct water level in the Water Reservoir should be 3/8-inch below the raised molded line, on the side of the body of the Water Reservoir. When the water line level is above or below the raised molded line, adjustment can be performed to raise or lower the water level by bending the metal arm of the Float, inside the Water Reservoir.

To Adjust the Water Reservoir Float:

A. To RAISE the Water Level: Hold one end of the metal arm of the Float and slightly bend the Float UP.

B. To LOWER the Water Level: Hold one end of the metal arm of the Float and slightly bend the Float DOWN.

C. To Perform MAJOR Adjustment:

When repair or replacement has been performed and the water level line between the Water Reservoir and the Spout Opening on top of the Freezer Assembly has been substantially altered:

1. Remove the two Screws and Lockwashers which attach the Reservoir Bracket and Water Reservoir to the vertical upright panel of the Chassis.
2. Move the Reservoir Bracket UP or DOWN, to align with the appropriate set of holes in the panel, that will properly position the Water Reservoir at the correct water line level, even with one-inch below the Spout opening.
3. Attach the Reservoir Bracket and Water Reservoir to the Panel, with the Screws and Lockwashers removed in step 1.

WARNING

Be sure the electrical power supply and the water supply are OFF, before starting any of the following REMOVAL AND REPLACEMENT procedures, as a precaution to prevent possible personal injury or damage to equipment.

V. REMOVAL AND REPLACEMENT OF THE AUGER, WATER SEAL, BEARINGS AND COUPLING.

A. To remove the Auger, Water Seal, Bearings, and Coupling:

1. Remove screws and the Left Side Panel and the Left Rear Door.
2. Pull to unsnap each end of the Hood Panel from the Hood Assembly.
3. Remove three screws, located behind the upper part of the left side opening of the Hood Assembly, which attach the Dispensing Tower to the Hood Assembly.
4. Slide the Dispensing Tower toward the rear, about one-half inch, to disengage the slots; then lift the Dispensing Tower off of the Hood Assembly and lay the Tower, with product lines attached, over the back of the Hood Assembly, out of the way.
5. Remove the Insulation Strap, the Insulation Clip and separate the two-piece Insulation from the top of the Freezer Assembly.
6. Perform the steps in procedures IV-XIV and IV-XV to remove the Limit Box, Pressure Plate Assembly, Spout Assembly and Spout Casting.
7. Remove two Screws, Washers and the Spout Plate from Ice Breaker.
8. Grasp the wire Cap Hook at the top of the Freezer Assembly and pull out the Auger and attached Cap, Ice Breaker, upper Bearing and O-Rings, at the top of the Auger; and, the top half of the Water Seal at the bottom of the Auger.

NOTE

When the Auger cannot be pulled out, proceed to step 16 and 17, to gain access to the bottom of the Auger. Then, with a rawhide mallet or placing a piece of wood on the bottom end of the Auger, tap the bottom of the Auger to break it loose and pull the Auger out, as in step 8 above.

9. Remove the Cap Hook from the Ice Breaker.
10. Remove the Retaining Ring and the Cap.
11. Remove the Cap Screw and Washer and remove the Ice Breaker from the Auger.
12. Clean away the old grease from the top of the Auger, the Ice Breaker, Cap, Cap Screw and Washer, and the O-Ring and Retaining Ring.
13. Inspect the O-Ring at the top of the Ice Breaker and the O-Ring at the bottom inside of the Ice Breaker, for cuts, tears and general worn condition to determine replacement.
14. Inspect the Bearing pressed into the top of the Ice Breaker; and, if it is to be replaced, remove the Retaining Ring and press the Bearing out of the Ice Breaker.
15. Slide the upper half of the Water Seal off of the bottom of the Auger.

NOTE

1. *Any time the Auger is removed for replacement, or for the inspection and replacement of the Bearings or Coupling, use extra care in handling the Water Seal parts, so no dirt or foreign matter are deposited on the surfaces of the Seal.*
2. *If there is any doubt about the effectiveness of Water Seal or O-Ring, REPLACE THEM. A dirty, worn or faulty Water Seal or O-Ring will cause a leak and ultimately require a second, time consuming removal and replacement procedure to be performed, that COULD HAVE BEEN PREVENTED.*

16. Remove four screws and lockwashers which attach the Freezer Assembly to the Adaptor on the Drivemotor Assembly.
17. Raise the Freezer Assembly off of the Adaptor, to gain access to the Bearing and Retainer; then, temporarily secure the Freezer Assembly out of the way to allow room to work. Be careful not to damage the gasket.
18. Using a suitable length and size wooden dowel or stick inserted through the top of the open Freezer Assembly, tap the lower half of the Water Seal and the lower Bearing in the Retainer, out the bottom of the Freezer Assembly.
19. Inspect the lower half of the Water Seal. If reusable, use care to protect it from dirt, etc. prior to replacement procedure.
20. Inspect the lower Bearing in the Retainer; and, if the Bearing is to be replaced, press the Bearing out of the Retainer.
21. Reach through the Adaptor and remove the Coupling on the Drive motor for inspection.
22. Check the Coupling for cracks, chipping and excessive wear.

B. To replace the Auger, Water Seal, Bearings, and Coupling, reverse the removal procedures.

NOTE

1. *When installing the Retainer assembled with Bearing, in the bottom of the Freezer Assembly, some Retainers will insert as a slip fit, and some will have to be forced into place because of very tight fit. Carefully tap a piece of wood positioned across the bottom of the Retainer, to evenly seat the Retainer in the chamber of the Freezer.*
2. *After assembling the parts on the upper end of the Auger and BEFORE installing the Cap and Cap Hook, apply an ample coating of Shell Alvania 3 grease, P/N A29123-001 to the upper part of the Ice Breaker, to cover the Retaining Ring and the Cap Screw and Washer. Then install the Cap and Cap Hook in place.*

VI. REMOVAL AND REPLACEMENT OF THE COLD PLATE BIN ASSEMBLY

A. To remove the Cold Plate Bin Assembly:

1. Remove screws and all side, front and rear doors and panels.
2. Tag and disconnect all product lines connected at the rear of the Cold Plate.
3. Remove 29 screws and lift away from the Dispenser Chassis, the entire Hood Assembly and Dispensing Tower, with product lines attached.
4. Carefully lift the Cold Plate Bin Assembly straight up until the front bottom edge just clears the top of the Chassis; then, tilt the top of the Bin toward the rear, moving the bottom of the Bin slightly forward and lift out of the Chassis.

B. To replace the Cold Plate Bin Assembly, reverse the removal procedure.

VII. REMOVAL AND REPLACEMENT OF THE COMPRESSOR ASSEMBLY

NOTE

Always install a replacement Drier, any time the sealed refrigeration system is opened. Do not replace the Drier until all other repair or replacement has been completed.

A. To remove the Compressor Assembly:

1. Remove screws and the Left Side Panel and the Left Rear Door.

2. Remove two screws and the Cover from the Compressor Junction Box.
3. Disconnect the electrical leads at the Compressor Junction Box, that originate in the Control Box.
4. Unsolder the suction line and the discharge line from the Compressor.
5. Unsolder the process header tube from the Compressor and retain for installation on the replacement Compressor.
6. Remove four bolts, lockwashers and washers which secure the Compressor to the Chassis mounting base.
7. Slide the Compressor and remove through the left side opening of the Cabinet.

NOTE

Thoroughly evacuate the system to remove moisture and non-condensables.

B. To replace the Compressor Assembly, reverse the removal procedure.

VIII. REMOVAL AND REPLACEMENT OF THE CONDENSER — AIR-COOLED MODELS

NOTE

Always install a replacement Drier, any time the sealed refrigeration system is opened. Do not replace the Drier until all other repair or replacement has been completed.

A. To remove the Condenser:

1. Remove screws and the Left Front Door and the Left Side Panel.
2. Bleed off or blow the refrigerant charge through the Schrader valve.
3. Remove one screw and disconnect the Drier Brace and Drier from the Condenser Shroud.
4. Unsolder and disconnect the refrigerant inlet and outlet lines from the Condenser.
5. Remove three screws, lockwashers and washers securing the Condenser to the Chassis Base.
6. Remove the Condenser out through the front opening of the Cabinet.

NOTE

Thoroughly evacuate the system to remove moisture and non-condensables.

B. To replace the Condenser, reverse the removal procedure.

IX. REMOVAL AND REPLACEMENT OF THE CONDENSER — WATER-COOLED MODELS

NOTE

Always install a replacement Drier, any time the sealed refrigeration system is opened. Do not replace the Drier until all other repair or replacement has been completed.

A. To remove the Condenser:

1. Remove screws and the Left Front Door and the Left Side Panel.
2. Bleed off or blow the refrigerant charge through the Schrader valve.
3. Unsolder and disconnect the refrigerant inlet and outlet lines from the Condenser.
4. Remove two screws, lockwashers and washers which secure the Condenser to the Chassis mounting base.
5. Remove the Condenser from the Cabinet.

NOTE

Thoroughly evacuate the system to remove moisture and non-condensables.

B. To replace the Condenser, reverse the removal procedure.

X. REMOVAL AND REPLACEMENT OF THE DRIER

NOTE

Always install a replacement Drier, any time the sealed refrigeration system is opened. Do not replace the Drier until all other repair or replacement has been completed.

A. To remove the Drier:

1. Remove screws and the Left Front Door and the Left Side Panel.
2. Remove screw and Drier Brace attaching the Drier to the Condenser shroud on Air-Cooled models; and, the Chassis base on Water-Cooled models.
3. Bleed off or blow the refrigerant charge through the Schrader valve.
4. Unsolder refrigeration lines at top and bottom of Drier, remove the Drier and separate the Drier from the Drier Brace.

B. To replace the Drier:

CAUTION

1. If the factory seal is broken on the replacement Drier, exposing it to the atmosphere more than a few minutes, the Drier will absorb moisture from the atmosphere and lose substantial ability for moisture removal.

2. Be sure the replacement Drier is installed with the arrow positioned in the direction of the refrigerant flow.

---

1. Remove the factory seals from the replacement Drier and install the Drier in the refrigerant lines with the arrow positioned in the direction of the refrigerant flow.
2. Install the Drier Brace on the Drier.
3. Solder the Drier into the lines, two places.
4. Purge the system and check for leaks.
5. Thoroughly evacuate the system to remove moisture and non-condensables.
6. Charge the system with refrigerant, by weight. SEE NAMEPLATE.
7. Replace the Left Front Door and the Left Side Panel and attach both with screws removed earlier.

XI. REMOVAL AND REPLACEMENT OF THE DRIVEMOTOR ASSEMBLY

1. To remove the Drivemotor Assembly:
   1. Perform all steps in procedure IV-XIII to gain access for removal of the Drivemotor Assembly.
   2. Remove two bolts, lockwashers and washers which attach the Drivemotor to the horizontal mounting bracket at the rear of the Chassis.
   3. Lift the Drivemotor from the bracket and out the rear of the Dispenser.

B. To replace the Drivemotor Assembly, reverse the removal procedure.

XII. REMOVAL AND REPLACEMENT OF THE FAN MOTOR ASSEMBLY — AIR-COOLED MODELS

NOTE

Before beginning this procedure, observe the Fan Blade position on the shaft of the Fan Motor and mark the Fan Blade so it will be correctly positioned during reassembly. Direction of air flow should be toward the Fan Motor.

A. To remove the Fan Motor Assembly:
   1. Remove screws and the Left Front door and the Left Side Panel.
   2. Disconnect the electrical lead from the Fan Motor.
   3. Remove two screws securing the Motor Bracket to the Chassis Base and remove the Fan Motor and Motor Bracket out through the left side opening of the Chassis.
   4. Remove the nut from the end of the Fan Motor shaft and remove the Fan Blade.
   5. Remove four screws securing the Fan Motor to the Motor Bracket and separate the Motor from the Bracket.

B. To replace the Fan Motor Assembly, reverse the removal procedure.

XIII. REMOVAL AND REPLACEMENT OF THE FREEZER ASSEMBLY

NOTE

1. *The Cabinet may have to be removed from its permanent location, especially if located in a corner, in order to have access to the left side and rear of the Chassis.*
2. *In addition to shutting OFF electrical power and inlet water to the Dispenser, be sure to disconnect the inlet water line BEFORE moving the Dispenser from the permanent location.*
3. *Always install a replacement Drier, any time the sealed refrigeration system is opened. Do not replace the Drier until all other repair or replacement has been completed.*

A. To remove the Freezer Assembly, see Figure 4-2:
   1. Remove screws and all side, front and rear doors and panels.

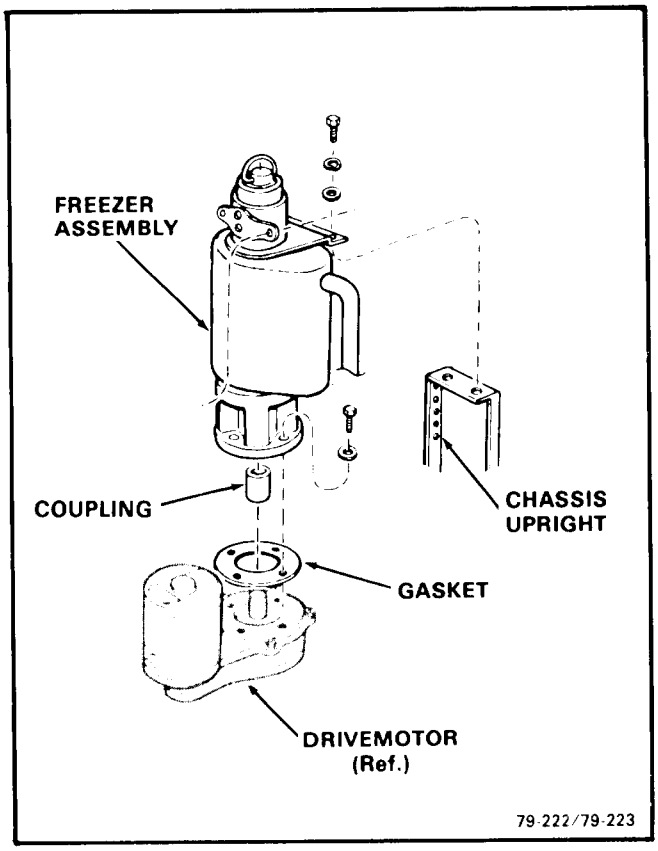

Figure 4-2. Removal of the Freezer Assembly

2. Tag and disconnect all lines at the rear of the Cold Plate that connect to the Dispensing Tower.
3. Remove 29 screws and lift away from the Dispenser Chassis, the entire Hood Assembly and Dispensing Tower, with product lines attached.
4. Refer to procedures IV-XIV and IV-XV and remove the Limit Box Assembly, Pressure Plate Assembly, Spout Assembly, and the Spout Casting.
5. Remove Corbin clamp and Tygon tube from the Freezer Assembly that connects to the Water Reservoir Assembly.
6. Bleed off or blow the refrigerant charge through the Schrader valve.
7. Unsolder the suction line from the Compressor.
8. Unsolder the capillary line at the Drier.
9. Remove two screws and lockwashers which attach the Freezer Assembly to the upper framework of the Chassis, just below area of the Spout Casting location.
10. Remove four screws, lockwashers and washers which attach the bottom of the Freezer Assembly to the Adaptor on the Drivemotor Assembly.
11. Lift the Freezer Assembly up and off of the Adaptor and Drivemotor Assembly.

B. To replace the Freezer Assembly, reverse the removal procedure.

NOTE

Thoroughly evacuate the system to remove moisture and non-condensables.

XIV. REMOVAL AND REPLACEMENT OF THE LIMIT BOX ASSEMBLY

A. To remove the Limit Box Assembly, see Figure 4-3:

1. Pull to unsnap each end of the Hood Panel and remove the Panel from the Hood Assembly.
2. Remove three screws, located behind the upper part of the left side opening of the Hood Assembly, which attach the Dispensing Tower to the Hood Assembly.
3. Slide the Dispensing Tower toward the rear, about one-half inch, to disengage the slots; then lift the Dispensing Tower off of the Hood Assembly and lay the Tower, with product lines attached, on the front apron of the Dispenser.
4. Remove the Insulation Strap, the Insulation Clip and the two-piece Insulation at the top of the Freezer Assembly.

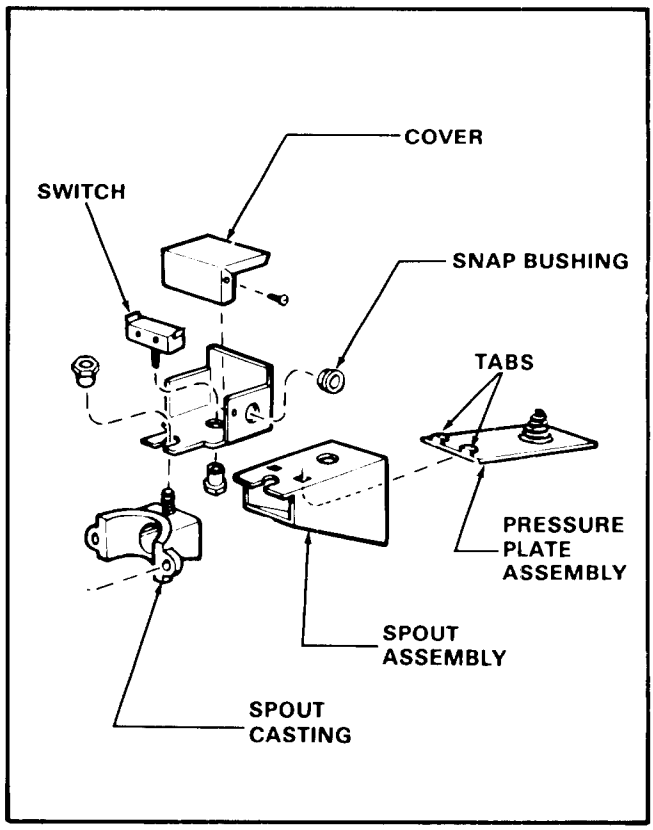

Figure 4-3. Removal of the Limit Switch, Pressure Plate, Spout and Spout Casting.

5. Remove the nut that attaches the Limit Box to the Spout Casting and slide the Limit Box away from the Freezer to disengage from the two tabs, part of the Pressure Plate Assembly.
6. Remove two screws and the Cover from the Limit Box.
7. Disconnect two electrical leads from terminals inside the Limit Box and remove the Limit Box from the Spout Casting.

B. To replace the Limit Box Assembly, reverse the removal procedure.

XV. REMOVAL AND REPLACEMENT OF THE PRESSURE PLATE ASSEMBLY, SPOUT ASSEMBLY AND SPOUT CASTING.

A. To remove the Pressure Plate Assembly, Spout Assembly and Spout Casting, see Figure 4-3:

1. Perform steps 1 through 5 of procedure IV-XIV-A above.
2. Reach through the right side opening of the Hood Assembly and into the Spout and remove the Pressure Plate Assembly.
3. Grasp the Spout Assembly and work back and forth slightly and pull the Spout Assembly off of the Spout Casting and out through the inner wall of the Ice Storage Bin.

4. Remove two screws and lockwashers and separate the Spout Casting and Spout Grommet from the Freezer. Retain the Grommet for replacement procedure.

B. To replace the Pressure Plate Assembly, Spout Assembly and Spout Casting, reverse the removal procedure.

XVI. REMOVAL AND REPLACEMENT OF THE DISPENSING VALVE

CAUTION

SCOTSMAN Parts Department DOES NOT stock repair parts for soda valves. Prevent delay and problems by ordering spare valves, see Figure 8-12, or ordering replacement internal valve parts from the manufacturer:

THE CORNELIUS COMPANY
2727 North Ferry Street
Anoka, Minnesota 55303

A. To remove the Dispensing Valve:

1. Temporarily disconnect syrup line at syrup tank, or otherwise release CO^2 gas pressure to the Dispensing Valve or Faucet to be replaced or repaired.
2. Pull to unsnap each end of the Hood Panel and remove the Hood Panel from the Hood Assembly.
3. Remove three screws, located behind the upper part of the left side opening of the Hood Assembly, which attach the Dispensing Tower to the Hood Assembly.
4. Slide the Dispensing Tower toward the rear, about one-half inch, to disengage the slots; then, lift the Dispensing Tower off of the Hood Assembly and lay the Tower, with product lines attached, on the front apron of the Dispenser for work access to the Valve to be removed.
5. Disconnect the Tube Assembly from the adaptor at the rear of the Dispensing Valve. See Figure 4-4.
6. Unscrew the Shank Nut on the threaded sleeve of the Dispensing Valve, behind the Dispensing Panel; then, remove the Shank Nut, Shank Seal Washer and Shank Seal.
7. Remove the Dispensing Valve from the front of the Dispensing Panel on the Dispensing Tower Assembly, using care to prevent damage to threads.
8. Disassemble and inspect all parts of the Valve for replacement, as necessary.

B. To replace the Dispensing Valve, reverse the removal procedure.

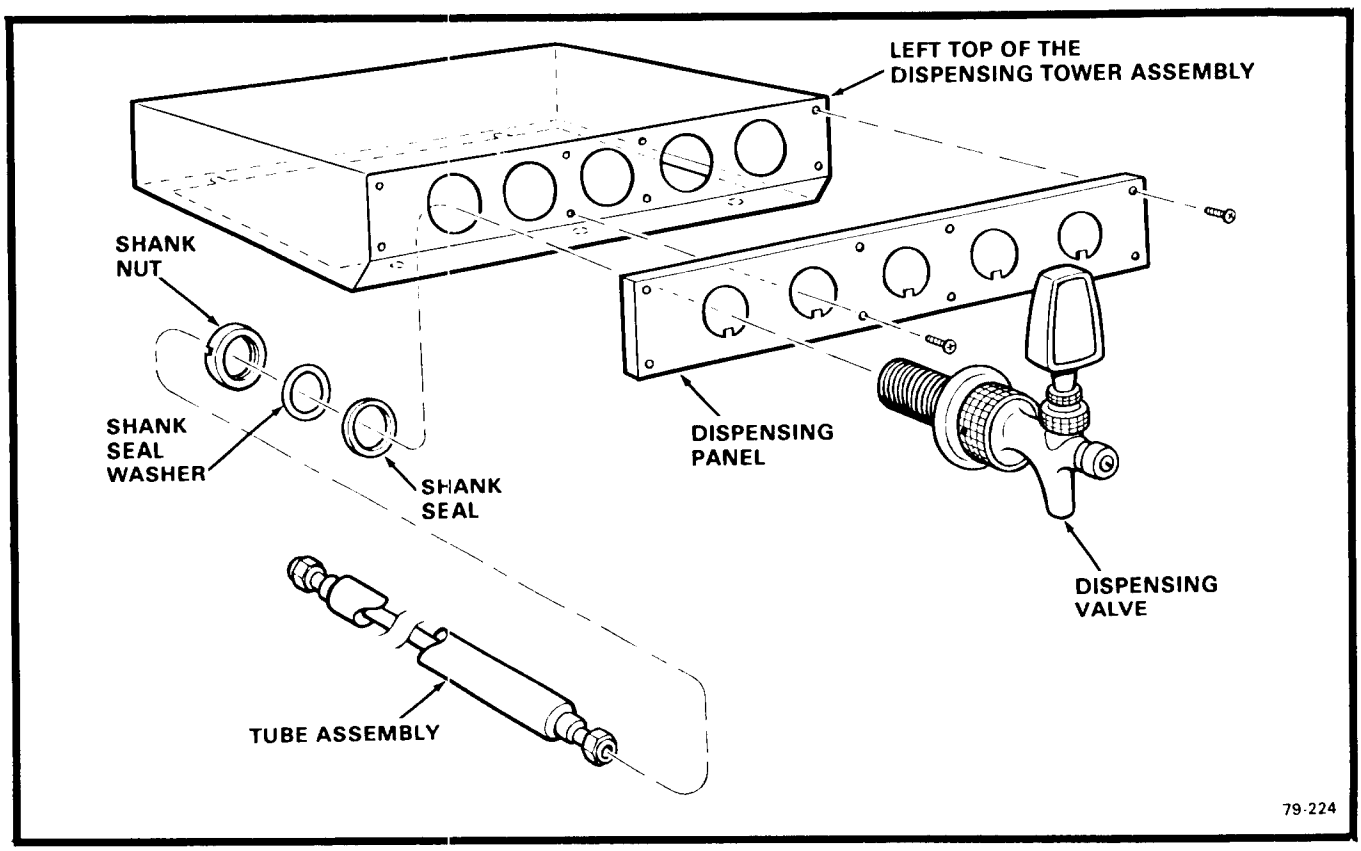

Figure 4-4. Removal of the Dispensing Valve.

XVII. REMOVAL AND REPLACEMENT OF THE WATER REGULATOR ASSEMBLY—WATER-COOLED MODELS.

A. To remove the Water Regulator Assembly:

NOTE

Always install a replacement Drier, any time the sealed refrigeration system is opened. Do not replace the Drier until all other repair or replacement has been completed.

1. Remove screws and lift off the Left Front Door.
2. Bleed off or blow the refrigerant charge through the Schrader valve.
3. Unsolder the Capillary line from the Water Regulator Assembly, where connected at the process header.
4. Disconnect the water inlet line at the rear of the Water Regulator.
5. Disconnect the Condenser water inlet tube at the front of the Water Regulator.
6. Remove two screws, lockwashers and washers which attach the Water Regulator Assembly bracket to the Chassis base and remove the Water Regulator Assembly and bracket.

NOTE

Thoroughly evacuate the system to remove moisture and non-condensables.

B. To replace the Water Regulator Assembly, reverse the removal procedure.

XVIII. REMOVAL AND REPLACEMENT OF THE WATER RESERVOIR ASSEMBLY

A. To remove the Water Reservoir Assembly, see Figure 4-5:

1. Pull to unsnap each end of the Hood Panel and remove the Hood Panel from the Hood Assembly.
2. Remove three screws, located behind the upper part of the left side opening of the Hood Assembly, which attach the Dispensing Tower to the Hood Assembly.
3. Slide the Dispensing Tower toward the rear, about one-half inch, to disengage the slots; then, lift the Dispensing Tower off of the Hood Assembly and lay the Tower, with product lines attached, on the front apron of the Dispenser.

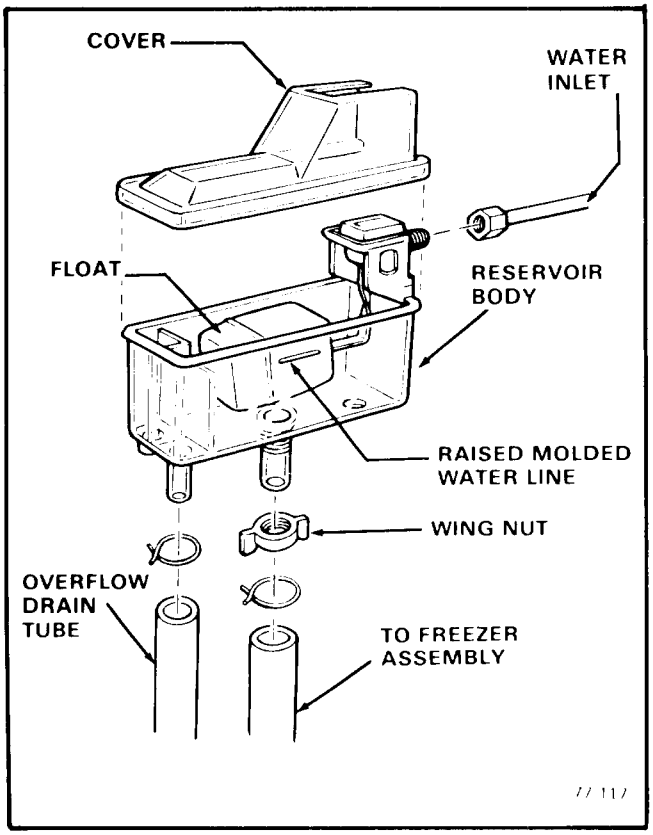

Figure 4-5.

Removal of the Water Reservoir Assembly.

NOTE

Be prepared with container or rags, to catch water left in lines, when lines are disconnected in next steps, to prevent draining water on parts, components, electrical lines, etc.

4. Disconnect the water inlet tube from the Water Reservoir Assembly.
5. Remove two Corbin clamps and two tubes from the bottom of the Water Reservoir Assembly.
6. Unscrew and remove the wing nut from the bottom of the Water Reservoir Assembly.
7. Lift and remove the Water Reservoir Assembly from the mounting bracket.

B. To replace the Water Reservoir Assembly, reverse the removal procedue.

NOTE

Check that the installed replacement Water Reservoir Assembly float moves freely. Bend metal arm of float to adjust, as necessary. The correct water level in the Water Reservoir is 3/8-inch below the raised molded line, on the side of the body of the Water Reservoir.

SECTION V

MAINTENANCE & CLEANING INSTRUCTIONS

I. GENERAL

The periods and procedures for maintenance and cleaning are given as guides and are not to be construed as absolute or invariable. Cleaning especially will vary, depending upon local water conditions and the ice volume produced and dispensed; and, the dispensing of syrup and carbonated drinks must always be considered. Each Icemaker/Drink Dispenser must be maintained individually, in accordance with its own particular location requirements.

II. ICEMAKER

THE FOLLOWING MAINTENANCE SHOULD BE SCHEDULED AT LEAST TWO TIMES PER YEAR ON THIS ICE-MAKER/DRINK DISPENSER. CALL YOUR AUTHORIZED SCOTSMAN SERVICE AGENCY.

1. Check and clean water line Strainers
2. Remove cover from Water Reservoir and depress the float to ensure that a full stream of water enters the Reservoir.
2. Check that the Icemaker/Drink Dispenser cabinet is level, in side-to-side and front-to-rear directions.
4. Check that the water level in the Water Reservoir is below the overflow, but high enough that it does not run out of the spout opening.

NOTE

It is not abnormal for some water to emerge from the Ice Spout with flaked ice during normal ice production.

5. Clean the Water Reservoir and interior of the Freezer Assembly, using a solution of SCOTSMAN Ice Machine Cleaner. Refer to procedure V-III, CLEANING-Icemaker.

NOTE

Cleaning requirements vary according to local water conditions and individual user operation. Visual inspection of the Auger before and after cleaning will indicate frequency and procedure to be followed in local areas.

6. When doubtful about refrigerant charge, install refrigerant gauges on Schrader valves and perform steps 6 and 7. Check gauge for Compressor head Pressure:

   AIR-COOLED MODELS: Varies between 130 and 145 PSIG.

   WATER-COOLED MODELS: Set at 135 PSIG. Adjust screw on top of Water Regulator Valve to raise or lower head pressure.

7. Check gauge for Suction line pressure:

   Varies between 12 to 16 PSIG, depending upon inlet water temperature and ambient air temperature.

8. Check Drivemotor operation:

   Normal operating temperatures are about 160-degrees F., which is hot to touch.

9. Check operation of the centrifugal sensing switch:

   PMF-450: 1/10 HP Motor.
   Switch will OPEN between 400-600 RPM and the Compressor STOPS, with the Drivemotor operating. Switch will CLOSE between 1300-1400 RPM and the Compressor will RESTART, with Drivemotor building back up to normal operating speed.

   PMF-650: 1/4 HP Motor:
   Switch will OPEN between 850-950 RPM and the Compressor STOPS, with the Drivemotor operating. Switch will CLOSE between 1100-1250 RPM and the Compressor will RESTART, with Drivemotor building back up to normal operating speed.

10. Remove the Insulation Strap and Clip, the Right and Left Spout Insulation pieces, the Retaining Ring and the Hook and Cap from the top of the Freezer Assembly.

11. Inspect the Top Bearing. If moisture is around Bearing, wipe clean of all grease and apply a coating of Shell Alvania 3 Grease, Scotsman P/N A29123-001. Replace parts removed in step 10.

NOTE

BEFORE next step, move the manual ON-OFF toggle switch, on the front of the Control Box, to the OFF position to stop the Fan Motor and Icemaker.

12. Clean the Air-Cooled Condenser, using vacuum cleaner, whisk broom or brush. Instruct customer to clean frequently and to be sure Icemaker and Fan Motor are OFF.

13. Check that Fan Blades move freely, are not touching any surfaces and are not bent or out of balance.

14. Check for refrigerant leaks and for proper frost line, which should frost out of Ac-

cumulator to within no closer than eight to twelve inches of the Compressor.

15. Check for water leaks. Tighten drain line connections. Pour water down Bin drain to be sure that drain line is open and clear.
16. Check the quality of ice. Ice flakes should be wet when formed, but will cure rapidly to normal hardness in the Bin.
17. Check the Bin Thermostat Ice Control Bulb and the Pressure Plate and Limit Switch cutoff in the Ice Spout.

NOTE

The Limit Switch only shuts off the Compressor. The Bin Thermostat is factory set at 10-degrees F. differential and should keep the entire Icemaker system shut off at least 10 minutes in high ambient temperatures, longer in low ambient temperatures, during normal operation. Settings are 35-degrees F. CUT-OUT and 45-degrees F. CUT-IN.

III. CLEANING - Icemaker

1. Remove screws and the Left Front Door.
2. Move both manual ON-OFF toggle switches, on the front of the Control Box, to the OFF position.
3. Remove the Ice Access Door and all ice from the ice Storage Bin.
4. CLOSE the water supply shutoff valve; or, block the float in the Water Reservoir.
5. Disconnect the tube between the Water Reservoir and the bottom of the Freezer Assembly and drain all water from the Reservoir and tube. Reconnect the tube.

WARNING

SCOTSMAN Ice Machine Cleaner contains Phosphoric and Hydroxyacetic acids. These compounds are corrosive and may cause burns. If swallowed, DO NOT induce vomiting. Give large amounts of water or milk. Call Physician immediately. In case of external contact flush with water. KEEP OUT OF THE REACH OF CHILDREN.

6. Prepare cleaning solution: Mix six ounces of SCOTSMAN Ice Machine Cleaner with one and one-half quarts of hot water.
7. Remove the Cover to the Water Reservoir.
8. Slowly pour the cleaning solution into the Water Reservoir.
9. Move the lower, manual ON-OFF toggle switch, on the front of the Control Box, to the ON position.
10. Continue to slowly pour the cleaning solution into the Water Reservoir, maintain level just below the Reservoir overflow.
11. Continue icemaking, using the cleaning solution, until all of the solution is used up and the Water Reservoir is almost empty. DO NOT allow the icemaker to operate with empty Reservoir.
12. Move the lower, manual ON-OFF toggle switch, on the front of the Control Box, to the OFF position.
13. Wash and rinse the Water Reservoir.
14. OPEN the water supply shutoff valve; or, remove the block from the float in the Water Reservoir.
15. Move the lower, Manual ON-OFF toggle switch, on the front of the Control Box, to the ON position.
16. Continue icemaking for at least 15 minutes, to flush out any cleaning solution. Check ice for acid taste - continue icemaking until ice tastes sweet.
17. Move the lower, manual ON-OFF toggle switch, on the front of the Control Box, to the OFF position.

CAUTION

DO NOT use ice produced from the cleaning solution. Be sure none remains in the bin.

18. Remove all ice from the ice storage Bin.
19. Add hot water to the ice storage Bin and thoroughly wash and rinse all surfaces within the Bin.
20. Clean all parts removed from the Bin, the Ice Access Door, Splash Panel and Grill in accordance with the regulations of the local Health Authorities.
21. Pour hot water into drip pan each day, to keep drains open from slime build up.
22. Clean and sanitize the ice storage Bin each week. Refer to SANITIZING procedure V-V.

IV. CLEANING - Faucet Assembly

The Faucet Assembly need not be completely disassembled for the cleaning procedure. A special spanner or valve wrench, is shipped with the Icemaker/Drink Dispenser for use in removing the Faucet body and lever assembly for the cleaning procedure.

To remove and clean:
(See Figure 5-1)

1. Temporarily disconnect syrup line at syrup tank, or otherwise release CO^2 gas pressure to the Faucet to be cleaned.
2. Fit the tang at the large curved end of the valve wrench, into a hole in the round nut and unscrew, clockwise, to loosen the nut behind the Faucet.

3. Unscrew the nut and remove the Faucet body and lever assembly and the plastic Compensator from the Faucet sleeve and nut assembly.

WARNING

SCOTSMAN Ice Machine Cleaner contains Phosphoric and Hydroxyacetic acids. These compounds are corrosive and may cause burns. If swallowed, DO NOT induce vomiting. Give large amounts of water or milk. Call Physician immediately. In case of external contact flush with water. KEEP OUT OF THE REACH OF CHILDREN.

4. Prepare cleaning solution: Mix six ounces of SCOTSMAN Ice Machine Cleaner with one and one-half quarts of hot water.

   DO NOT USE SOAP AND WATER FOR FAUCET CLEANING.

5. Immerse the removed parts in the cleaning solution, thoroughly washing solution over all surfaces and scrub surfaces with a brush.
6. Rinse all parts with clear hot water, to flush away all cleaning solution. Drain parts.
7. Repeat all steps, except step 4, for remaining Faucets; then, pour remainder of the hot cleaning solution into the Sink and Grill, to flush out any slime and keep drain open. Rinse with clear hot water.
8. Sanitize all removed Faucet parts. Refer to SANITIZING procedure V-V.
9. Replace cleaned and sanitized Faucet parts in the reverse order of the removal procedure.

V. SANITIZING

Sanitizing is an important phase of the ice-making and dispensing operation. The following sanitizing procedure should be performed after every repair or replacement of parts in the Icemaker/Drink Dispenser, in or through which ice made, stored, water is drained and syrup flows, is dispensed and any drippage is drained. Additional requirements for performing the sanitizing procedure should be followed in accordance with the requirements of the local Health Authorities.

NOTE

Contact your Local Health Authorities and obtain their approval of the sanitizer you intend to use when sanitizing the Icemaker/Drink Dispenser.

Prior to performing the sanitizing procedure, it is assumed the cleaning procedure has been performed.

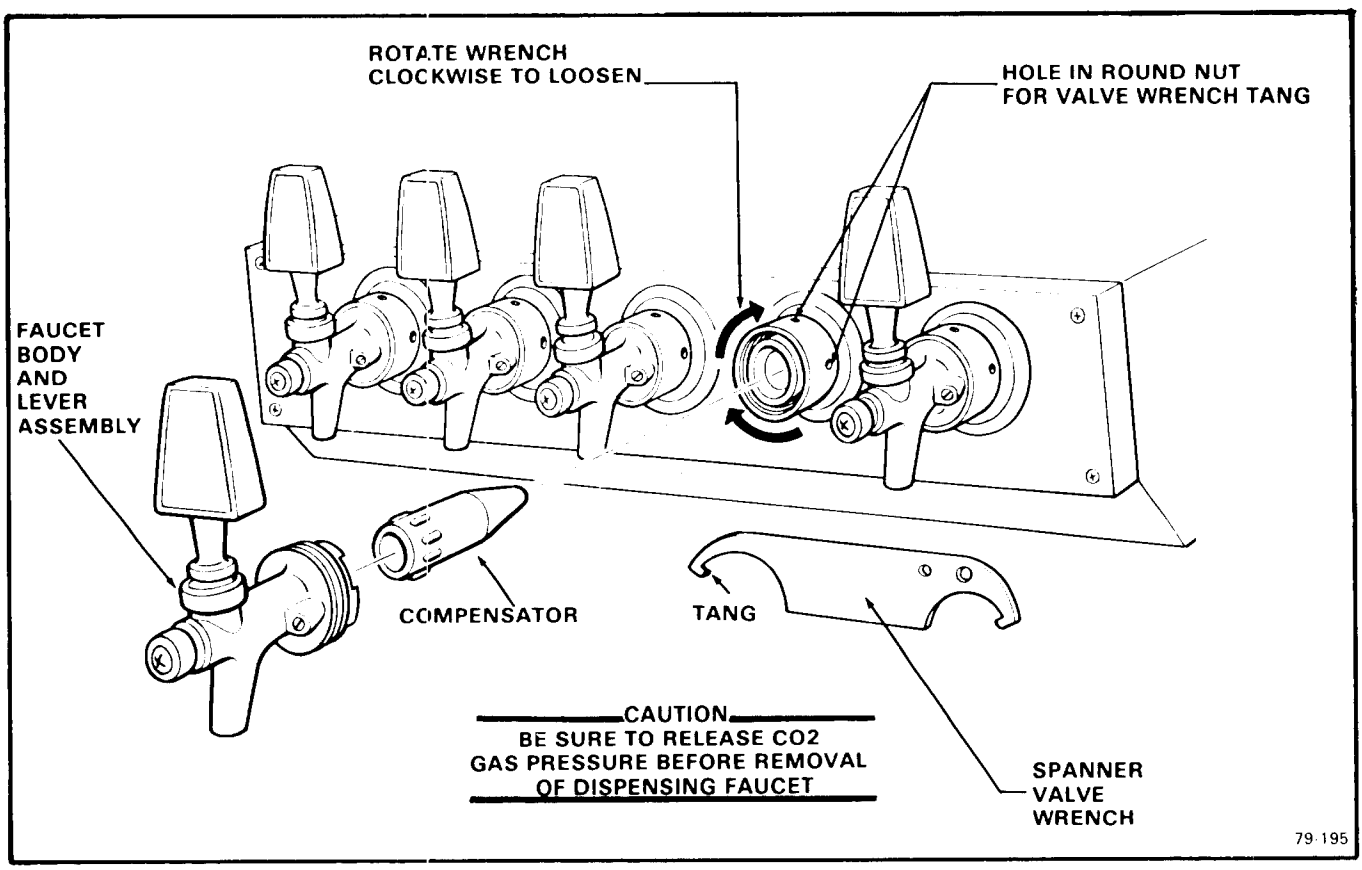

Figure 5-1. Removal of Faucet Parts for Cleaning

WARNING

Read WARNING thoroughly BEFORE preparing sanitizing solution, in next step.

1. STERILEX 3-Q SANITIZING TABLETS

DANGER: KEEP OUT OF REACH OF CHILDREN. Tablets may be harmful or fatal if swallowed. May cause skin irritation or eye damage. Avoid prolonged skin contact. Do not get in eyes. In case of contact, flush with plenty of water. If irritation persists get medical attention. Avoid contamination of food.

FIRST AID: If tablets are swallowed, drink promptly a large quantity of milk, egg whites or gelatin solution. Avoid Alcohol.

NOTE TO PHYSICIAN: Probable mucosal damage may contraindicate the use of gastric lavage. Measures against circulatory shock, respiratory depression and convulsion may be needed. Rinse empty carton container thoroughly with water and discard. Always follow your health department regulations.

2. MIKRO-QUAT

DANGER: Causes high damage and skin irritation. Do not get in eyes, on skin, or on clothing. Protect eyes when handling concentrated product. Harmful if swallowed. Avoid contamination of food.

FIRST AID: In case of contact, immediately flush eyes or skin with plenty of water for at least 15 minutes. For eyes, call a physician. Remove and wash contaminated clothing before reuse. If swallowed, drink promptly a large quantity of milk, egg whites or gelatin solution or if these are not available, drink a large quantity of water. Call a physician immediately.

1. Prepare a sanitizing solution using a quaternary ammonium sanitizing compound.

NOTE

1. *Carefully follow directions and observe all precautions on the sanitizing compound container.*
2. *One *Sterilex 3-Q sanitizing tablet per three quarts of water yields 200 ppm active quaternary; or, one-third ounce of *Mikro-Quat to one gallon of water yields 235 ppm active quaternary.*
3. *The taste of ice and water will not be affected by the sanitizing of parts using the above mixed sanitizing solutions. Rinsing of parts is not required with this relatively mild solution, but air drying of the parts is suggested before reassembly.*

2. Immerse all parts, earlier removed and cleaned, in the sanitizing solution; or, if too large for the container of sanitizing solution, thoroughly wash the solution over all surfaces of all parts.
3. Drain all parts and allow to air dry.
4. Pour some of the sanitizing solution into the Bin drain and the Sink Assembly drain.
5. Reassemble all air-dried parts in the Icemaker/Drink Dispenser.
6. Restore electrical power ON, water pressure ON, and pre-mix syrup and CO^2 pressure ON.
7. Replace all covers, doors and panels earlier removed.
8. Clean and sanitize the Faucet Assemblies and the Bin interior and surfaces each week.

**Sterilex 3-Q sanitizing tablets are distributed by Pittsburgh Chemical Laboratory, Inc., Pittsburgh, PA 15222, and may be obtained through most restaurant supply houses.*

**Mikro-Quat, is manufactured by Economics Laboratory, Inc., Osborn Building, St. Paul MN 55102, and may be obtained from them through their Magnus Division, The Klenzade Division, or from restaurant supply houses.*

SECTION VI
SERVICE DIAGNOSIS

The Service Diagnosis Section is for use in aiding the serviceman in diagnosing a particular problem for pin-pointing the area in which the problem lies, thus an ever available reference for proper corrective action.

The following charts lists corrective actions for the causes of known symptoms of certain problems that can occur.

I. ICEMAKING - REFRIGERATION SYSTEM

SYMPTOM	POSSIBLE CAUSE	CORRECTION
Water Leaks.	Defective water seal.	Replace Seal.
	Gravity feed line leaking.	Check hose clamps.
	Water level in reservoir too high.	Adjust water level to 3/8-inch below reservoir overflow, then raise reservoir until water flows out freezer spout, then lower reservoir 3/4-inch.
	Storage bin drain and connecting fittings.	Check and repair.
Excessive noise or chattering.	Mineral or scale deposit on auger and inner freezing chamber walls.	For severe deposit, remove and manually polish auger, sand inner chamber walls of freezer barrel.
		For lighter concentration, use Scotsman Ice Machine Cleaner periodically.
	Intermittent water supply.	Check and clean water strainer. Check gravity feed line for air lock.
		Remove air lock.
	Water level in reservoir too low.	See CORRECTION for Water Leaks above.
	Gear Reducer loose on frame.	Tighten Gear Reducer.
	Motor compressor not solid on rubber mounts.	Repair or replace rubber mounts.
	Gearmotor end-play or worn bearing.	Repair or replace bearing.
Making wet ice. (Ice melts too quickly, is not cold enough to properly cure in the Bin.)	Surrounding air temperature to high.	Correct or move cabinet.
	Under or over-charge of refrigerant.	Recharge with proper amount.
		Should frost out of accumulator at least 8-inches. See nameplate for correct charge. See CORRECTION for Water Leaks above.

ICEMAKING - REFRIGERATION SYSTEM (Cont'd)

SYMPTOM	POSSIBLE CAUSE	CORRECTION
Making wet ice (Cont'd)	Back pressure too high.	Overcharge of refrigerant, Faulty compressor or high head pressure. Lower pressure as indicated.
	Faulty compressor or valve plate.	Repair or replace compressor or valve plate.
Low ice production.	Loss of refrigerant. Under or over-charge of refrigerant.	Check and recharge. See NAMEPLATE for correction charge.
	Drivemotor weak.	Replace Drivemotor.
	Dirty or plugged condenser.	Clean condenser.
	Low water level in water reservoir.	See CORRECTION for Water leaks above.
	Partial restriction in capillary tube or drier.	Moisture in system. Overcharge of oil in system. Remove charge by blowing back through cap tube.
		Replace drier and recharge.
	Inlet water strainer partially plugged.	Remove screen and clean.
	Corroded or stained auger due to water condition.	Remove auger and clean, or use Scotsman Ice Machine Cleaner. See Maintenance Section.
Gearmotor noise.	Low on oil.	Remove case cover to check for proper oil level. Top of gears should be covered. Use: Sun Oil Company Prestige 50-EP
Icemaker will not operate.	Blown fuse in line.	Replace fuse and check for cause of blown fuse.
	Bin thermostat set too high.	Adjust thermostat. Set at 35-degrees cut-out, 45-degrees cut-in.
	Loose electrical connection.	Check wiring.
	Switch in OFF position.	Set switch to ON position.
	Inoperative master switch.	Replace switch or thermal overload.
	Off on manual-reset pressure control.	Reset.
Icemaker continues to operate with full storage bin.	Bin thermostat not properly set or is defective.	Re-set or replace bin thermostat. Re-set to 35-degrees cut-out, 45-degrees cut-in.
Compressor cycles intermittently.	Low voltage.	Check for overloading.
	Dirty condenser.	Clean condenser.

ICEMAKING - REFRIGERATION SYSTEM (Cont'd)

SYMPTOM	POSSIBLE CAUSE	CORRECTION
Compressor Cycles intermittently (cont'd)	Air circulation blocked.	Remove cause or move unit.
	Inoperative condenser fan motor.	Replace motor.
	Non-condensable gases in system.	Check for gas leaks, evacuate and recharge.
	Bin thermostat differential too small causing short cycling.	Widen differential 35-degrees cut-out, 45-degrees cut in.
	Cycling on ice spout microswitch.	Set or replace Bin thermostat.
Icemaker operates but makes no ice.	Loss or undercharge of refrigerant.	Check for leaks and recharge. See NAMEPLATE for correct charge.
	Water not entering freezing chamber.	Plugged strainer or supply line. Check and clean. Air lock in gravity feed line. Check and remove air lock.
	Moisture in system.	Check, evacuate, replace drier.
		Recharge. See NAMEPLATE for correct charge.
	Water seal leaking.	Replace seal.
	Water turned off while unit was operating.	Freezer inlet water line froze shut. Unit must be turned off and defrosted.
	Drivemotor or drive coupling stripped.	Repair or replace drivemotor or drive coupling.

SECTION VII
WIRING DIAGRAMS

This Section is provided as an aid in understanding the electrical circuitry of the Icemaker/Drink Dispenser.

WARNING

When conducting a continuity check of the Icemaker/Drink Dispenser:

1. **Disconnect the main power source.**
2. **DO NOT use an incandescent lamp or jumper wire, conduct all tests with a volt-ohm-meter.**

The Wiring Diagrams in this Section are:

Figure 7-1. Wiring Diagram PMF-450 Air-Cooled

Figure 7-2. Wiring Diagram PMF-450 Water Cooled.

Figure 7-3. Wiring Diagram PMF-650 Air-Cooled

Figure 7-4. Wiring Diagram PMF-650 Water Cooled.

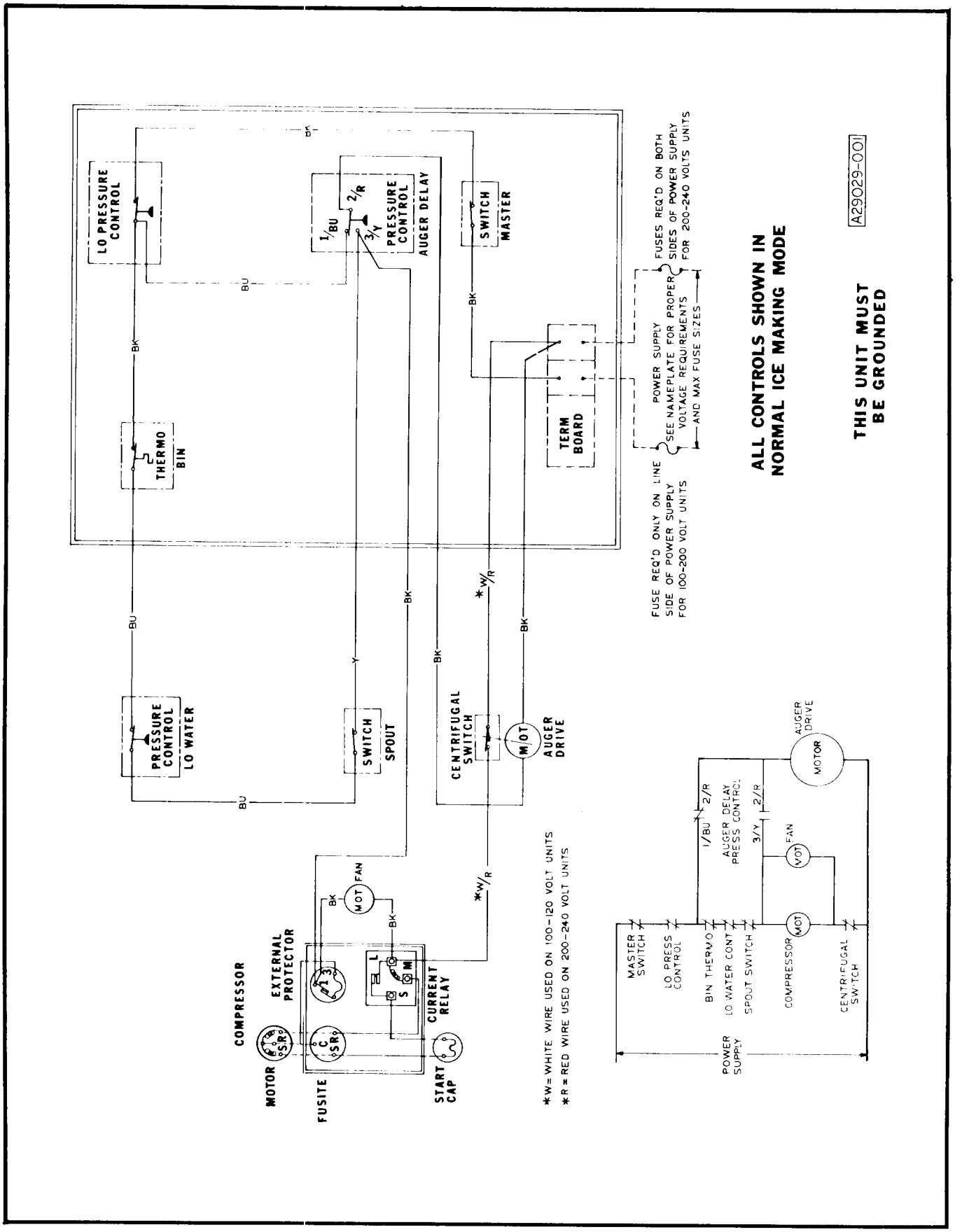

Figure 7-1. Wiring Diagram PMF450 - Air-Cooled

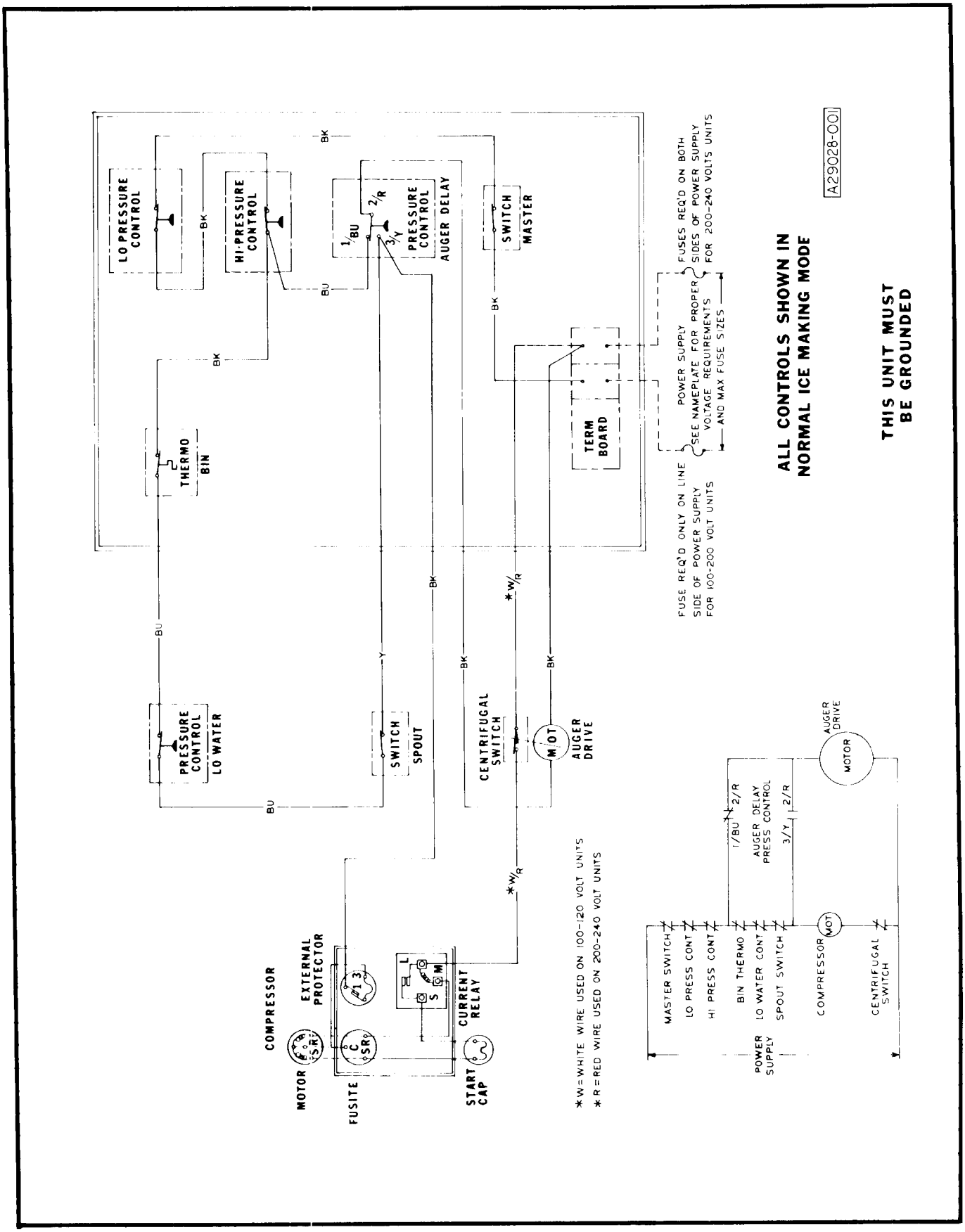

Figure 7-2. Wiring Diagram PMF450 - Water-Cooled

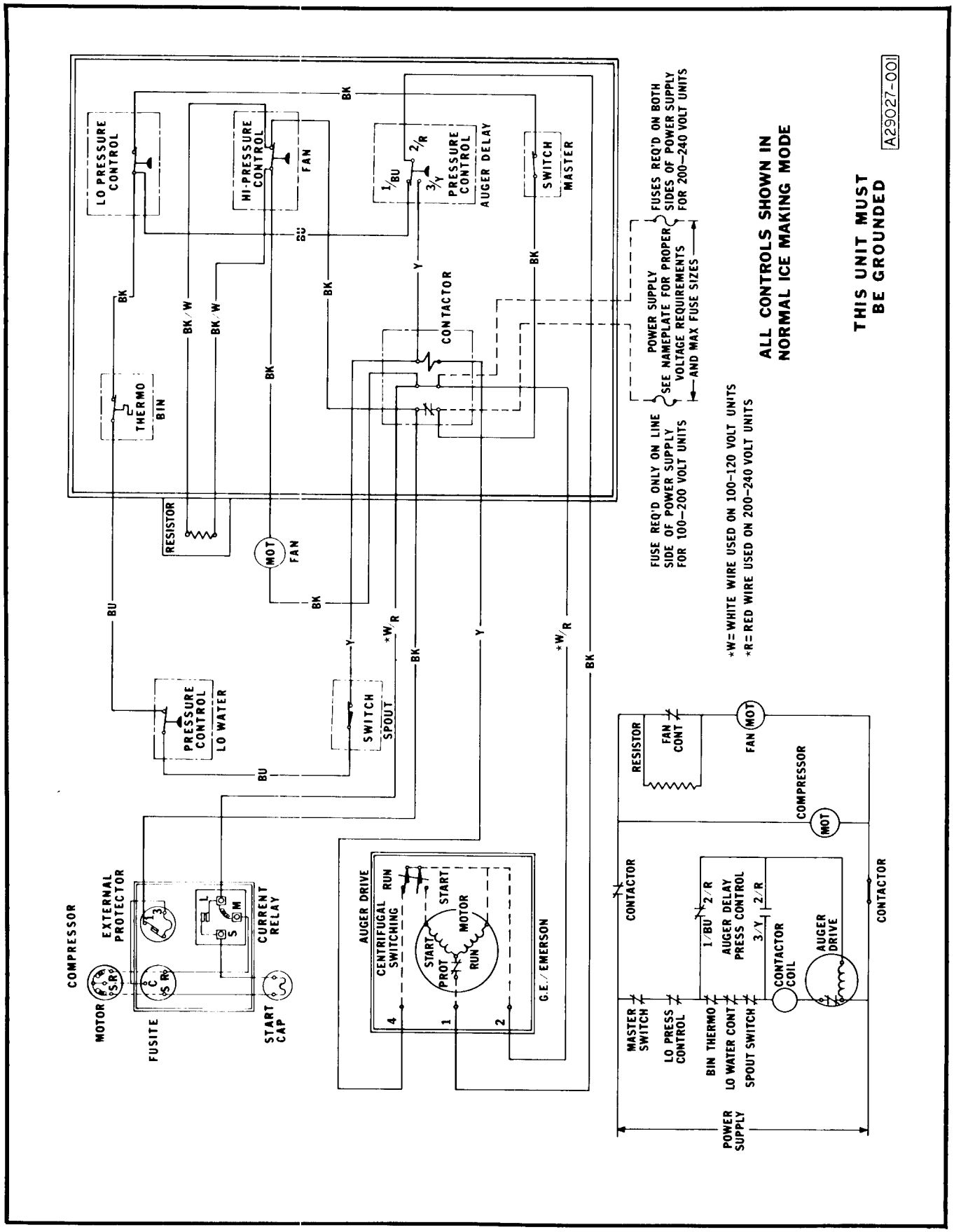

Figure 7-3. Wiring Diagram PMF650 - Air-Cooled

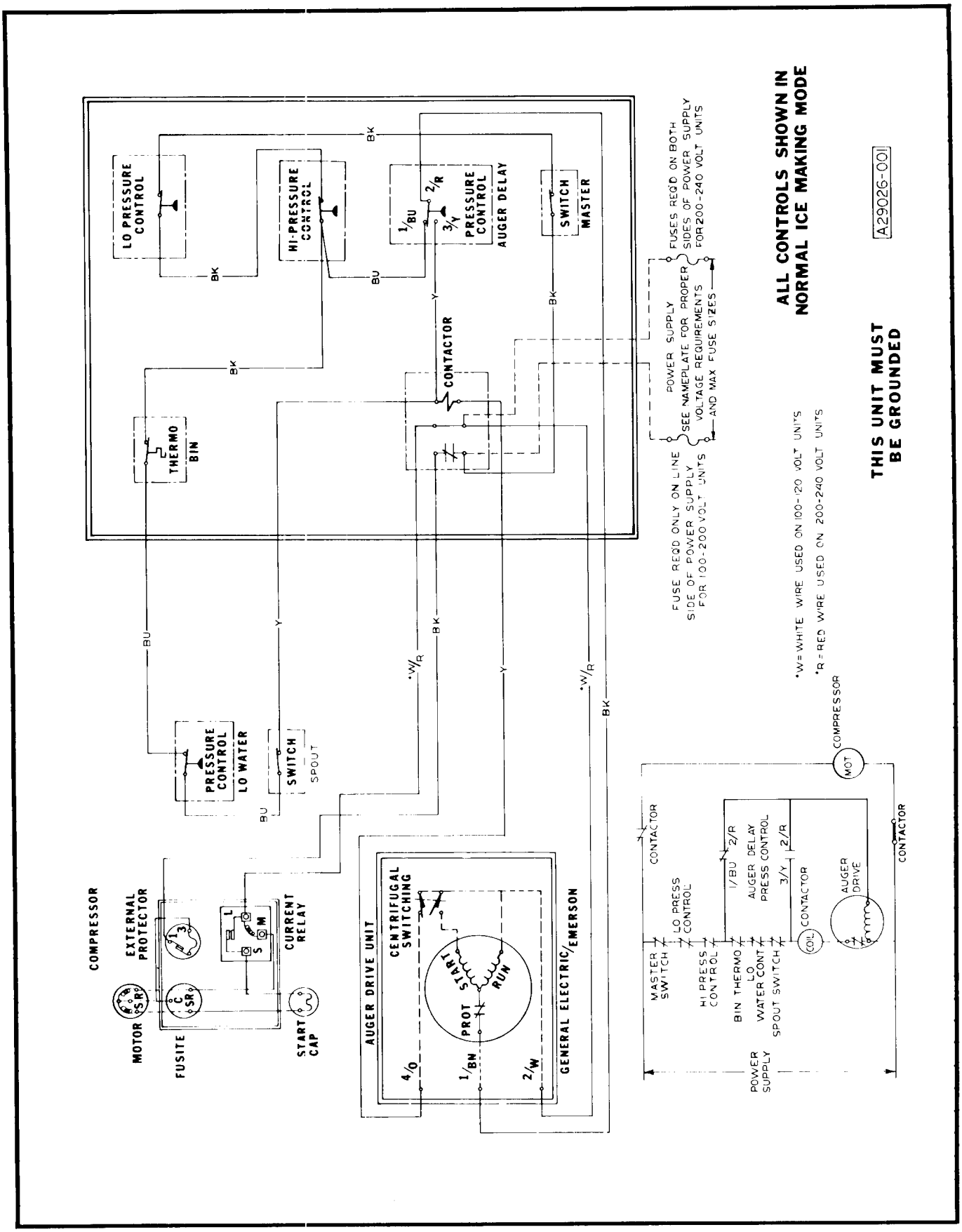

Figure 7-4. Wiring Diagram PMF650 - Water-Cooled

SECTION VIII

THE PARTS ILLUSTRATIONS AND PARTS LIST

I. GENERAL

This section contains the Parts Illustrations and the Parts List for each of the major assemblies in the PMF450/PMF650 Icemaker/Drink Dispenser.

Each Parts Illustration shows an assembly as an exploded view, with an Index Number for each part or sub-assembly, given in disassembly order. These Index Numbers key with the Parts List for the assembly and are found in the Parts ist Column headed Index Number. The Description Column gives the identifying nomenclature for the item indexed. The Part Number Column gives the number of item. The Number Required Column gives the number of items required per assembly, but not necessarily the total number of parts required per Dispenser.

All assemblies are cross-referenced both from the major assembly listing where they first appear in the Parts Listing to their break-down listing, and from the break-down listing, back to the major assembly (next higher assembly) listing.

A *No Number* designation, when used in the Part Number Column indicates the unit is not available from SCOTSMAN as an assembly. This designation is only for the convenience and clarity of division in cataloging.

When an Index Number is followed by a letter (e.g. 4a, 4b.), the letter indicates the part listed is part of the assembly indexed by the basic Index Number. The number required of the part indexed by the number and letter combination is only one of the assemblies indexed by the basic Index Number and not necessarily the total number or parts used in the Dispenser. Where the notation *Ref* occurs in the Number Required Column the number of the assemblies or parts required for use in the Dispenser will be found under previous Index Number or in the next higher listing Figure/Index number is shown in the Description Column immediately following the items description.

II. HOW TO USE THE ILLUSTRATION AND PARTS LIST

To find the part number of a required part or assembly, turn to the List of Illustrations and find the page number of the Parts Illustration of the major or sub-assembly containing the part. Turn to the indicated page and locate the part and its Index Number on the specific illustration. Find the Index Number on the required part in the Parts List to determine the complete description of the parts.

III. HOW TO ORDER PARTS OR ASSEMBLIES

When ordering parts or assemblies, to avoid costly delays and errors in shipment, give the part number, the complete description shown in the list, and the quantities of each part or assembly required. Also include the Model name, the serial number of the Dispenser for which the part is required, and for parts which require color matching, the color of the Cabinet. See Figure 8-00, at the end of this section for detailed ordering information.

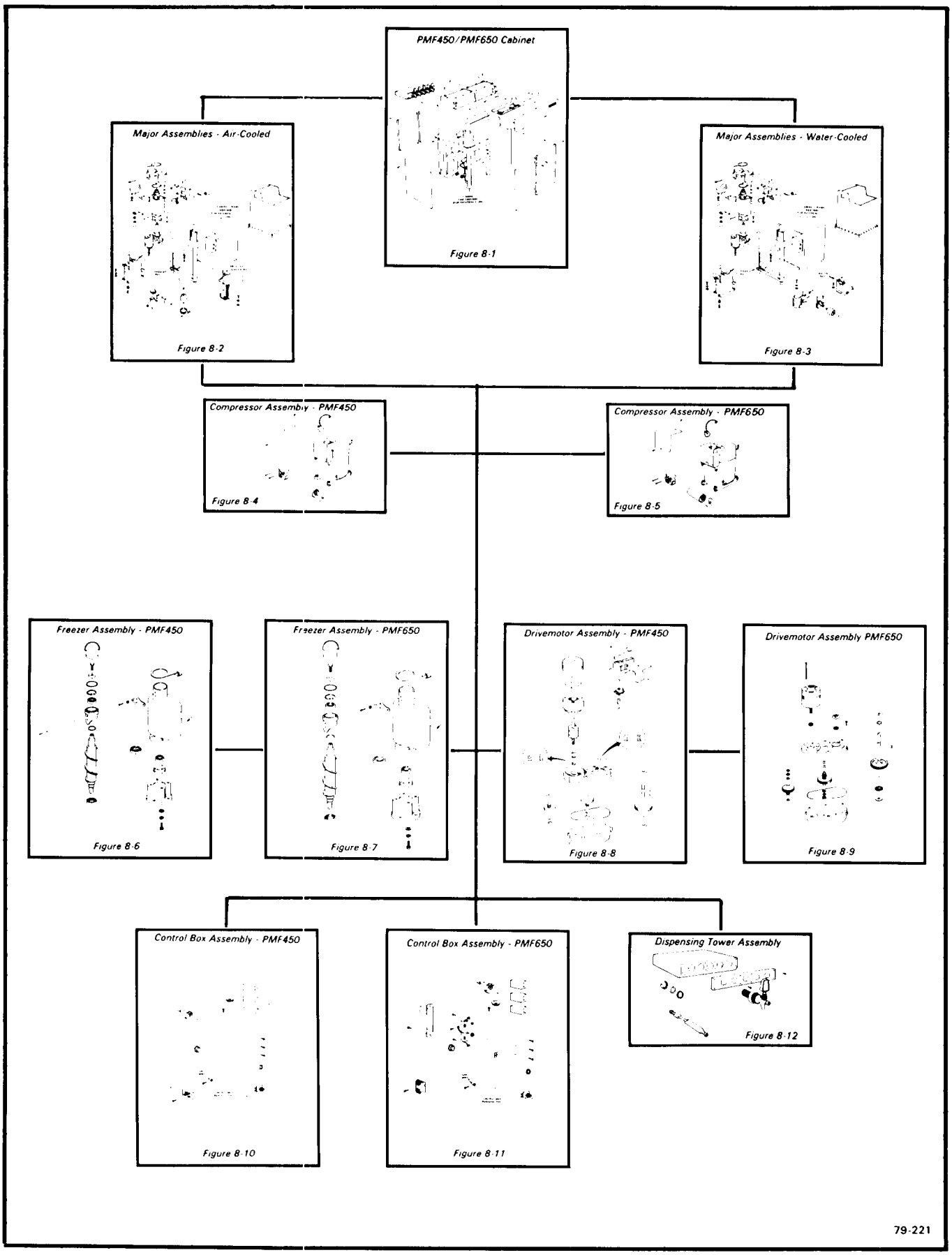

Figure 8-A. PMF450/PMF650 Premix Flaker Drink System Flow Chart

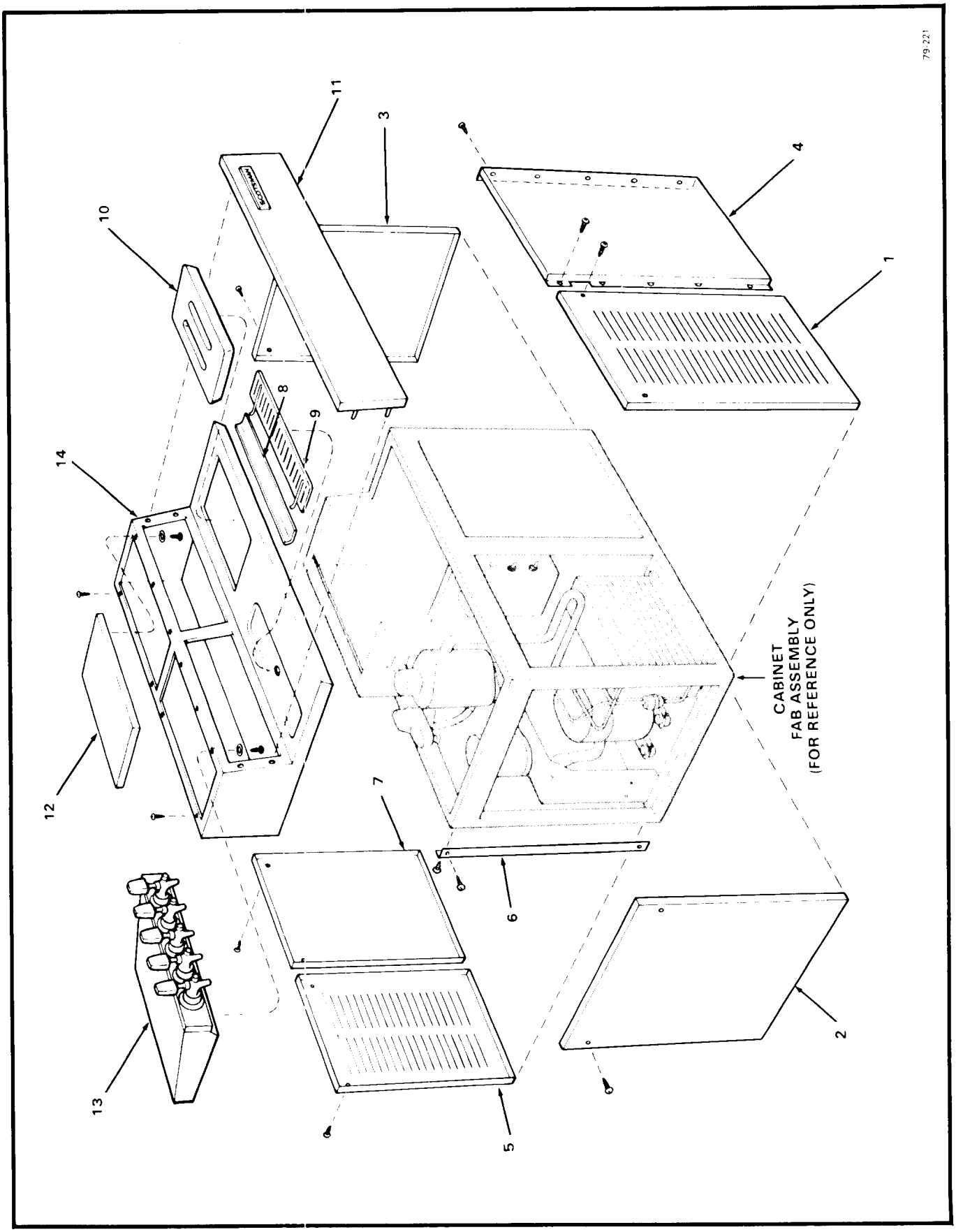

Figure 8-1. Model PMF450/PMF650 Cabinet.

Figure 8-1. PMF450/PMF650 Cabinet

INDEX NO.	DESCRIPTION	PART NUMBER	REQ'D NUMBER
	PMF450/PMF650 Cabinet	No Number	1
	* * *		
1	Door, Front - (CRS Painted)	A27729-003	1
	Door, Front - (Stainless Steel)	A27729-002	1
	Door, Front - (Coca Cola)	A27729-004	1
	attaching parts, Index 1		
	Screw, No. 8 x 1-1/4 S/T Flat Hd	03-1419-09	2
	Speed Nut, No. 8 J-type	03-1423-06	2
	* * *		
2	Panel, Left Side - (CRS Painted)	A27728-003	1
	Panel, Left Side - (Stainless Steel)	A27728-002	1
	Panel, Left Side - (Coca Cola)	A27728-004	1
	attaching parts, Index 2		
	Screw, No. 8 x 1-1/4 S/T Flat Hd	03-1419-09	2
	Speed Nut, No. 8 J-Type	03-1423-06	2
	* * *		
3	Panel, Right Side - (CRS Painted)	A27727-003	1
	Panel, Right Side - (Stainless Steel)	A27727-002	1
	Panel, Right Side - (Coca Cola)	A27727-004	1
	attaching parts, Index 3		
	Screw, No. 8 x 1-1/4 S/T Flat Hd	03-1419-09	2
	Speed Nut, No. 8 J-Type	03-1423-06	2
	* * *		
4	Panel, Front - (CRS Painted)	A17755-010	1
	Panel, Front - (Stainless Steel)	A17755-001	1
	Panel, Front - (Coca Cola)	A17755-011	1
	attaching parts, Index 4		
	Screw, No. 8 x 1/2 T/F Tap	03-1404-09	10
	* * *		
5	Door, Rear - (CRS Painted)	A17754-010	1
	Door, Rear - (Stainless Steel)	A17754-001	1
	Door, Rear - (Coca Cola)	A17754-011	1
	attaching parts, Index 5		
	Screw, No. 1/4-20 x 1 Phil Recess Pan Hd	03-1403-57	2
	* * *		
6	Plate, Corner Post Dress - (CRS Painted)	A19154-010	1
	Plate, Corner Post Dress - (Stainless Steel)	A19154-001	1
	Plate, Corner Past Dress - (Coca Cola)	A19154-011	1
	attaching parts, Index 6		

Figure 8-1. PMF-450/PMF650 Cabinet (Cont'd)

INDEX NO.	DESCRIPTION	PART NUMBER	REQ'D NUMBER
	Screw, No. 8 x 1/2 T/F Tap	03-1404-09	6
	* * *		
7	Panel, Rear - (CRS Painted)	A27730-003	1
	Panel, Rear - (Stainless Steel)	A27730-002	1
	Panel, Rear - (Coca Cola)	A27730-004	1
	attaching parts, Index 7		
	Screw, No. 8 x 1 T/F Tap	03-1404-13	2
	Speed Nut, No. 8 J-Type	03-1423-06	2
	* * *		
8	Panel, Splash - (CRS Painted)	A23186-001	1
	Panel, Splash - (Stainless Steel)	A23186-000	1
	Panel, Splash - (Coca Cola)	A23186-000	1
	* * *		
9	Grill - (CRS Painted)	02-1955-01	1
	Grill -(Stainless Steel)	02-1955-00	1
	Grill - (Coca Cola)	02-1955-00	1
	* * *		
10	Door, Ice Access - (CRS Painted)	02-2381-01	1
	Door, Ice Access - (Stainless Steel)	02-2381-02	1
	Door, Ice Access - (Coca Cola)	02-2381-02	1
	* * *		
11	Panel Assembly, Hood	A22280-000	1
	* * *		
12	Top, Right	A17812-000	1
	attaching parts, Index 12		
	Lockwasher, No. 10 External Tooth	03-1417-04	3
	Screw, No. 10-24 x 3/8 Pan Hd	03-1403-27	3
	Screw, No. 1/4-20 x 3/8 Hex Cap	03-1405-01	2
	* * *		
13	Tower Assembly, Dispensing	A29035-001	1
	(See Figure 8-12)		
	attaching parts, Index 13		
	Lockwasher, No. 10 External Tooth	03-1417-04	3
	Screw, No. 10-24 x 3/8 Pan Hd	03-1403-27	3
	Screw, No. 1/4-20 x 3/8 Hex Cap	03-1405-01	2
	* * *		
14	Hood Assembly	A17616-000	1
	attaching parts, Index 14		

Figure 8-1. PMF-450/PMF650 Cabinet (Cont'd)

INDEX NO.	DESCRIPTION	PART NUMBER	REQ'D NUMBER
	Screw, No. 8 x 1/2 T/F Tap * * * **NOTE:** There are five 96-inch Tube Assemblies that connect to the Cold Plate at one end and to five individual premix syrup tanks at the other end. These tube assemblies are not shown in the illustration. Order P/N A27737-003, for one Tube Assembly, 96-inches long.	03-1404-09	24

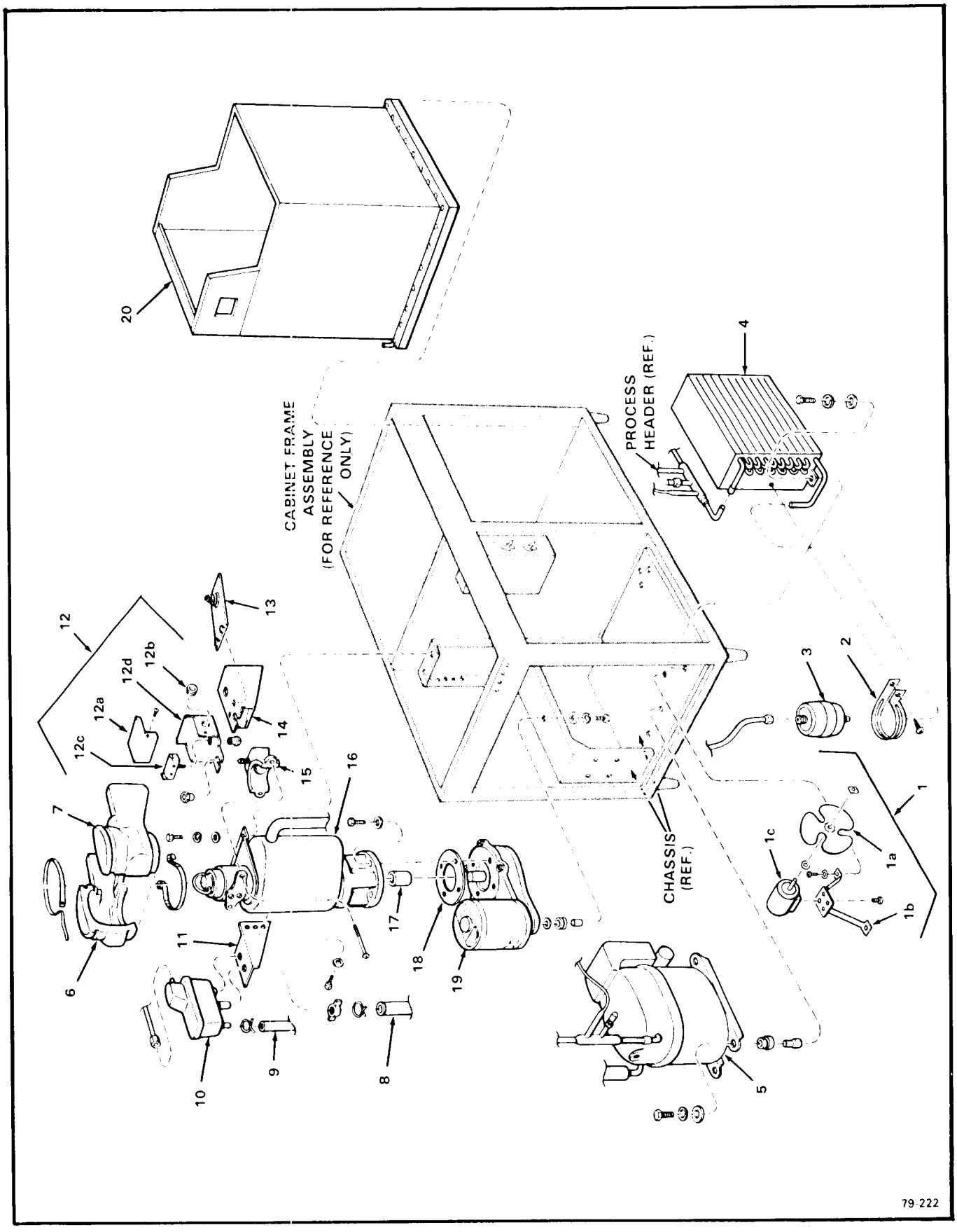

Figure 8-2. Major Assemblies - Air-Cooled Models

Figure 8-2. Major Assemblies - Air-Cooled Models

INDEX NO.	DESCRIPTION	PART NUMBER	REQ'D NUMBER
	Major Assemblies - Air-Cooled Models	No Number	Ref.
	* * *		
1	Fan Motor & Mounting Bracket Assembly	No Number	1
1a	Blade, Fan - (PMF450)	18-0285-01	1
	Blade, Fan - (PMF650)	18-0363-00	1
	Pad, Vibration (p/o Fan Motor)	No Number	1
	Nut, Fan Mounting (p/o Fan Motor)	No Number	1
1b	Bracket, Fan Mounting - (PMF450)	18-0422-00	1
	Bracket, Fan Mounting - (PMF650)	A25548-001	1
1c	Motor, Fan - (PMF450)	12-1575-01	1
	Motor, Fan - (PMF650)	12-1576-01	1
	attaching parts, Index 1c to 1b		
	Screw, No. 8-36 (p/o Fan Motor)	No Number	4
	attaching parts, Index 1 to Chassis Base		
	Lockwasher, No. 1/4 External Tooth	03-1417-09	2
	Screw, No. 1/4-20 x 1/2 T/C Hex Hd	03-0571-00	2
	* * *		
2	Brace, Drier - (PMF450)	A09386-000	1
	Brace, Drier - (PMF650)	A09388-001	1
3	Drier - (PMF450)	03-2426-01	1
	Drier - (PMF650)	02-0544-01	1
	attaching parts, Index 2 & 3		
	Screw, No. 10 x 3/8 T/F Tap	03-1404-15	1
	* * *		
4	Condenser - Air-Cooled (PMF450)	18-0234-00	1
	Condenser - Air-Cooled (PMF650)	18-0396-01	1
	attaching parts, Index 4		
	Lockwasher, No. 1/4 External Tooth	03-1417-09	2
	Screw, No. 1/4-20 x 1/2 T/C Hex Hd	03-0571-00	2
	* * *		
5	Compressor - (PMF450) (See Figure 8-4)	18-4500-01	1
	Compressor - (PMF650) (See Figure 8-5)	18-3900-01	1
	attaching parts, Index 5		
	Grommet	18-2200-28	4
	Sleeve, Mounting	18-2200-27	4
	Washer, Special	03-1408-29	4
	Lockwasher, No. 5/16 Helical Spring	03-1410-04	4
	Screw, No. 5/16-18 x 1-3/4 Hex Cap	03-1405-40	4
	* * *		

Figure 8-2. Major Assemblies - Air-Cooled Models (Cont'd)

INDEX NO.	DESCRIPTION	PART NUMBER	REQ'D NUMBER
6	Insulation, Spout - Left (PMF450)	A15070-000	1
	Insulation, Spout - Left (PMF650)	A15081-000	1
7	Insulation, Spout - Right (PMF450)	A15071-000	1
	Insulation, Spout - Right (PMF650)	A15080-000	1
	attaching parts, Index 6 & 7		
	Strap, Insulation (PMF450)	A08736-000	2
	Strap, Insulation - (PMF650)	A08733-000	1
	Clip, Insulation - (PMF650 only)	02-1438-00	1
	* * *		
8	Tube, Potable Water (Reservoir to Freezer Inlet) (6-1/2 in/lg) (Order by the foot)	13-0674-09	1
9	Tubing (Reservoir overflow To Drain Tee) (28 in/lg) (Order by the foot)	13-0079-03	1
	attaching parts, Index 8 & 9		
	Clamp (use with Index 8)	02-0694-00	2
	Clamp (use with Index 9)	02-0535-00	2
	* * *		
10	Reservoir	02-2217-01	1
	Valve Assembly - (Float, not shown)	02-2217-02	1
	attaching part, Index 10		
	Wing Nut (plastic, p/o Reservoir)	No Number	1
	* * *		
11	Bracket, Reservoir	A21418-000	1
	attaching parts, Index 11		
	Lockwasher, No. 1/4 External Tooth	03-1417-09	2
	Screw, No. 1/4-20 x 1/2 T/C Hex Hd	03-0571-00	2
	* * *		
12	Box Assembly, Limit	No Number	1
	attaching part, Index 10		
	Nut, No. 1/4-20	A14256-000	1
	* * *		
12a	Cover, Limit Box	A14241-000	1
12b	Bushing, Snap	12-1213-10	1
12c	Switch, w/Nut	12-1018-00	1
12d	Box, Limit w/Switch	A14975-000	1
	attaching parts, 12a to 12d		
	Screw, No. 4 x 3/8 T/F Tap	03-1404-01	2
	* * *		

Figure 8-2. Major Assemblies - Air-Cooled Models (Cont'd)

INDEX NO.	DESCRIPTION	PART NUMBER	REQ'D NUMBER
13	Plate Assembly, Pressure	A16353-000	1
	* * *		
14	Spout Assembly	A16350-000	1
	* * *		
15	Casting, Spout	A14269-000	1
	attaching parts, Index 15		
	Lockwasher, No. 1/4 Internal Tooth	03-1417-07	2
	Screw, No. 1/4-20 x 2-1/2 Pan Hd	03-1403-55	2
	* * *		
16	Freezer Assembly	No Number	1
	(See Figures 8-6 & 8-7)		
	attaching parts, Index 16		
	Washer, Plain	03-1407-05	2
	Lockwasher, No. 1/4 External Tooth	03-1417-09	2
	Screw, No. 1/4-20 x 1/2 T/C Hex Hd	03-0571-00	2
	(attaches to upper Chassis)		
	Washer, Special	03-1408-03	4
	Screw, No. 5/16 x 1-1/4 Hex Cap	03-1420-03	4
	(attaches to Drivemotor Assembly)		
	* * *		
17	Coupling - (PMF450)	15-0575-01	1
	Coupling - (PMF650)	15-0573-01	1
	* * *		
18	Gasket - (PMF450)	13-0628-00	1
	Gasket - (PMF650)	13-0704-00	1
	* * *		
19	Drivemotor Assembly	No Number	1
	(See Figures 8-8 & 8-9)		
	attaching parts, Index 19		
	Grommet	13-0639-00	3
	Spacer	A24925-002	3
	Washer, Special	03-1408-02	6
	Lockwasher, No. 5/16 Helical Spring	03-1410-04	3
	Screw, No. 5/16-18 x 1 Hex Cap	03-1405-18	3
	* * *		
20	Bin Assembly, Cold Plate	A27680-022	1
	* * *		
	NOTE: See Figure 8-10 & 8-11 for replacement parts within the Control Box Assembly.		

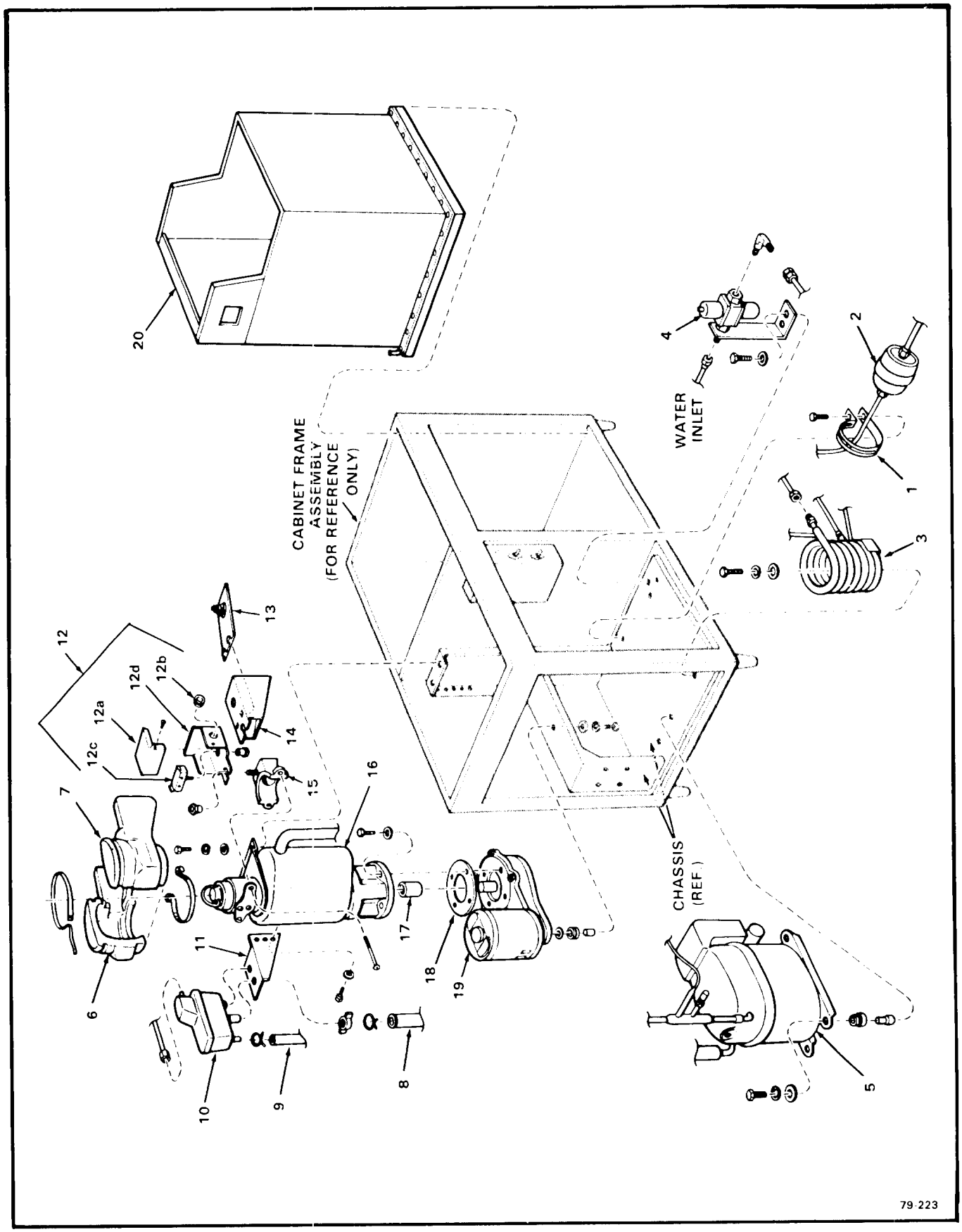

Figure 8-3. Major Assemblies - Water-Cooled Models

Figure 8-3. Major Assemblies - Water-Cooled Models

INDEX NO.	DESCRIPTION	PART NUMBER	REQ'D NUMBER
	Major Assemblies - Water-Cooled Models	No Number	Ref.
	* * *		
1	Brace, Drier - (PMF450)	A09386-000	1
	Brace, Drier - (PMF650)	A09388-001	1
2	Drier - (PMF450)	02-2426-01	1
	Drier - (PMF650)	02-0544-01	1
	attaching parts, Index 1 & 2		
	Screw, No. 10 x 3/8 T/F Tap	03-1404-15	1
	* * *		
3	Condenser - Water-Cooled (PMF450)	18-3303-02	1
	Condenser - Water-Cooled (PMF650)	18-3305-02	1
	attaching parts, Index 3		
	Lockwasher, No. 1/4 External Tooth	03-1417-09	2
	Screw, No. 1/4-20 x 1/2 T/C Hex Hd	03-0571-00	2
	* * *		
4	Regulator Assembly, Water	No Number	1
	attaching parts, Index 4		
	Lockwasher, No. 1/4 External Tooth	03-1417-09	2
	Screw, No. 1/4-20 x 1/2 T/C Hex Hd	03-0571-00	2
4a	Elbow - 3/8 NPT x 3/8 Flare Brass	16-0401-00	1
4b	Nipple Assembly, Pipe (w/Bracket)	A15924-000	1
4c	Valve, Water Regulator	11-0198-02	1
	* * *		
5	Compressor - (PMF450)	18-4500-01	1
	(See Figure 8-4)		
	Compressor - (PMF650)	18-3900-01	1
	(See Figure 8-5)		
	attaching parts, Index 5		
	Grommet	18-2200-38	4
	Sleeve, Mounting	18-2200-27	4
	Washer, Special	03-1408-29	4
	Lockwasher, No. 5/16 Helical Spring	03-1410-04	4
	Screw, No. 5/16-18 x 1-3/4 Hex Cap	03-1405-40	4
	* * *		
6	Insulation, Spout - Left (PMF450)	A15070-000	1
	Insulation, Spout - Left (PMF650)	A15081-000	1
7	Insulation, Spout - Right (PMF450)	A15071-000	1
	Insulation, Spout - Right (PMF650)	A15080-000	1
	attaching parts, Index 6 & 7		

Figure 8-3. Major Assemblies - Water-Cooled Models (Cont'd.)

INDEX NO.	DESCRIPTION	PART NUMBER	REQ'D NUMBER
	Strap, Insulation - (PMF450)	A08736-000	2
	Strap, Insulation - (PMF650)	A08733-000	1
	Clip, Insulation - (PMF650 only)	02-1438-00	1
	* * *		
8	Tube, Potable Water (Reservoir to Freezer Inlet) (5-1/2 in/lg)	13-0674-09	1
	(Order by the foot)		
9	Tubing (Reservoir overflow to Drain Tee) (28-in/lg)	13-0079-03	1
	(Order by the foot)		
	attaching parts, Index 8 & 9		
	Clamp (use with Index 8)	02-0694-00	2
	Clamp (use with Index 9)	02-0535-00	2
	* * *		
10	Reservoir	02-2217-01	1
	Valve Assembly - (Float, not shown)	02-2217-02	1
	attaching part, Index 10		
	Wing Nut (plastic, p/o Reservoir)	No Number	1
	* * *		
11	Bracket, Reservoir	A21418-000	1
	attaching parts, Index 11		
	Lockwasher, No. 1/4 External Tooth	03-1417-09	2
	Screw, No. 1/4-20 x 1/2 T/C Hex Hd	03-0571-00	2
	* * *		
12	Box, Assembly, Limit	No Number	1
	attaching part, Index 10		
	Nut, No. 1/4-20	A14256-000	1
	* * *		
12a	Cover, Limit Box	A14241-000	1
12b	Bushing, Snap	12-1213-10	1
12c	Switch, w/Nut	12-1018-00	1
12d	Box, Limit w/Switch	A14975-000	1
	attaching parts, 12a to 12d		
	Screw, No. 4 x 3/8 T/F Tap	03-1404-01	2
	* * *		
13	Plate Assembly, Pressure	A16353-000	1
	* * *		
14	Spout Assembly	A16350-000	1
	* * *		

Figure 8-3. Major Assemblies - Water-Cooled Models (Cont'd)

INDEX NO.	DESCRIPTION	PART NUMBER	REQ'D NUMBER
15	Casting, Spout	A14269-000	1
	attaching parts, Index 15		
	Lockwasher, No. 1/4 Internal Tooth	03-1417-07	2
	Screw, No. 1/4-20 x 2-1/2 Pan Hd	03-1403-55	2
	* * *		
16	Freezer Assembly	No Number	1
	(See Figures 8-6 & 8-7)		
	attaching parts, Index 16		
	Washer, Plain	03-1407-05	2
	Lockwasher, No. 1/4 External Tooth	03-1417-09	2
	Screw, No. 1/4-20 x 1/2 T/C Hex Hd	03-0571-00	2
	(attaches to upper Chassis)		
	Washer, Special	03-1408-03	4
	Screw, No. 5/16-18 x 1-1/4 Hex Cap	03-1420-03	4
	(attaches to Drivemotor Assembly)		
	* * *		
17	Coupling - (PMF450)	15-0575-01	1
	Coupling - (PMF650)	15-0573-01	1
	* * *		
18	Gasket - (PMF450)	13-0628-00	1
	Gasket - (PMF650)	13-0704-00	1
	* * *		
19	Drivemotor Assembly	No Number	1
	(See Figures 8-8 & 8-9)		
	attaching parts, Index 19		
	Grommet	13-0639-00	3
	Spacer	A24925-002	3
	Washer, Special	03-1408-02	6
	Lockwasher, No. 5/16 Helical Spring	03-1410-04	3
	Screw, No. 5/16-18 x 1 Hex Cap	03-1405-18	3
	* * *		
20	Bin Assembly, Cold Plate	A27680-022	1
	* * *		
	NOTE: See Figure 8-10 & 8-11 for replacement parts within the Control Box Assembly.		

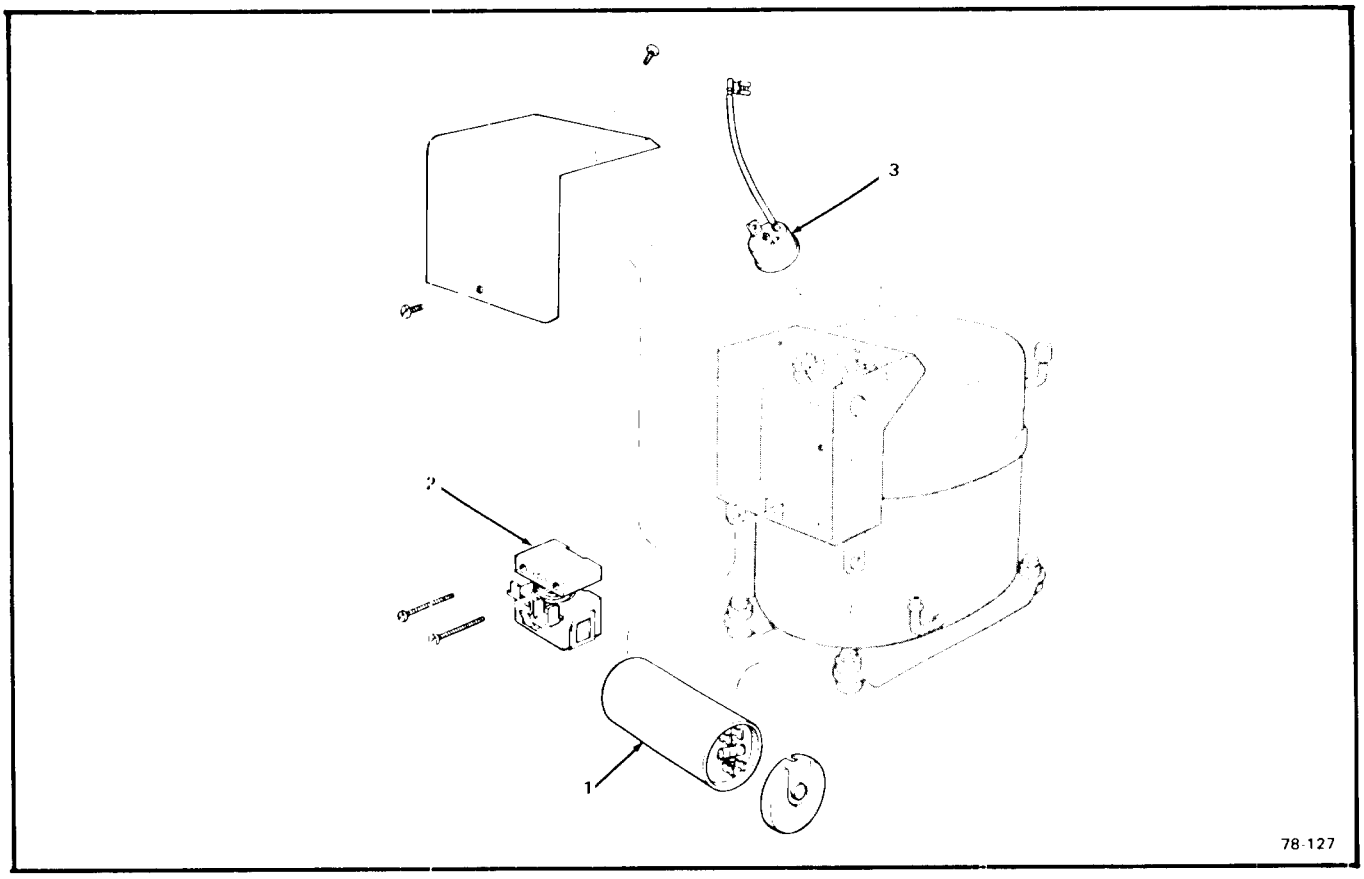

Figure 8-4. Compressor Assembly - PMF450

INDEX NO.	DESCRIPTION	PART NUMBER	REQ'D NUMBER
	Compressor Assembly - PMF450 (See Figure/Index 8-2/5 and 8-3/5 for next higher Assembly) * * *	18-4500-01	Ref.
1	Capacitor - w/cap * * *	18-1901-33	1
2	Relay * * *	18-2200-26	1
3	Overload * * *	18-2200-25	1

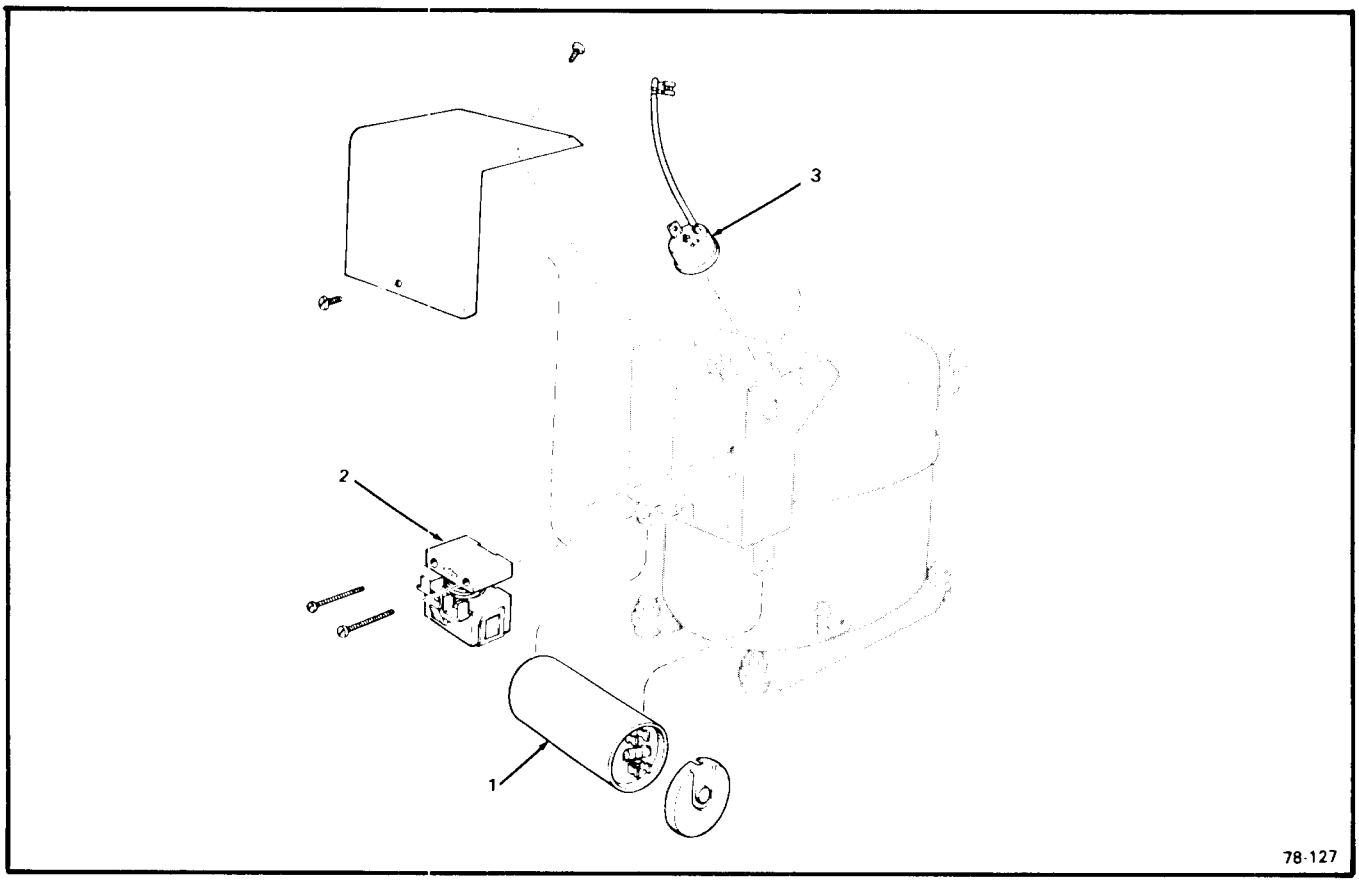

Figure 8-5. Compressor Assembly. - PMF650

INDEX NO.	DESCRIPTION	PART NUMBER	REQ'D NUMBER
	Compressor Assembly - PMF650 (See Figure/Index 8-2/5 and 8-3/5 for next higher Assembly) * * *	18-3900-01	Ref.
1	Capacitor w/cap * * *	18-2420-00	1
2	Relay * * *	18-2410-00	1
3	Overload * * *	18-2400-25	1

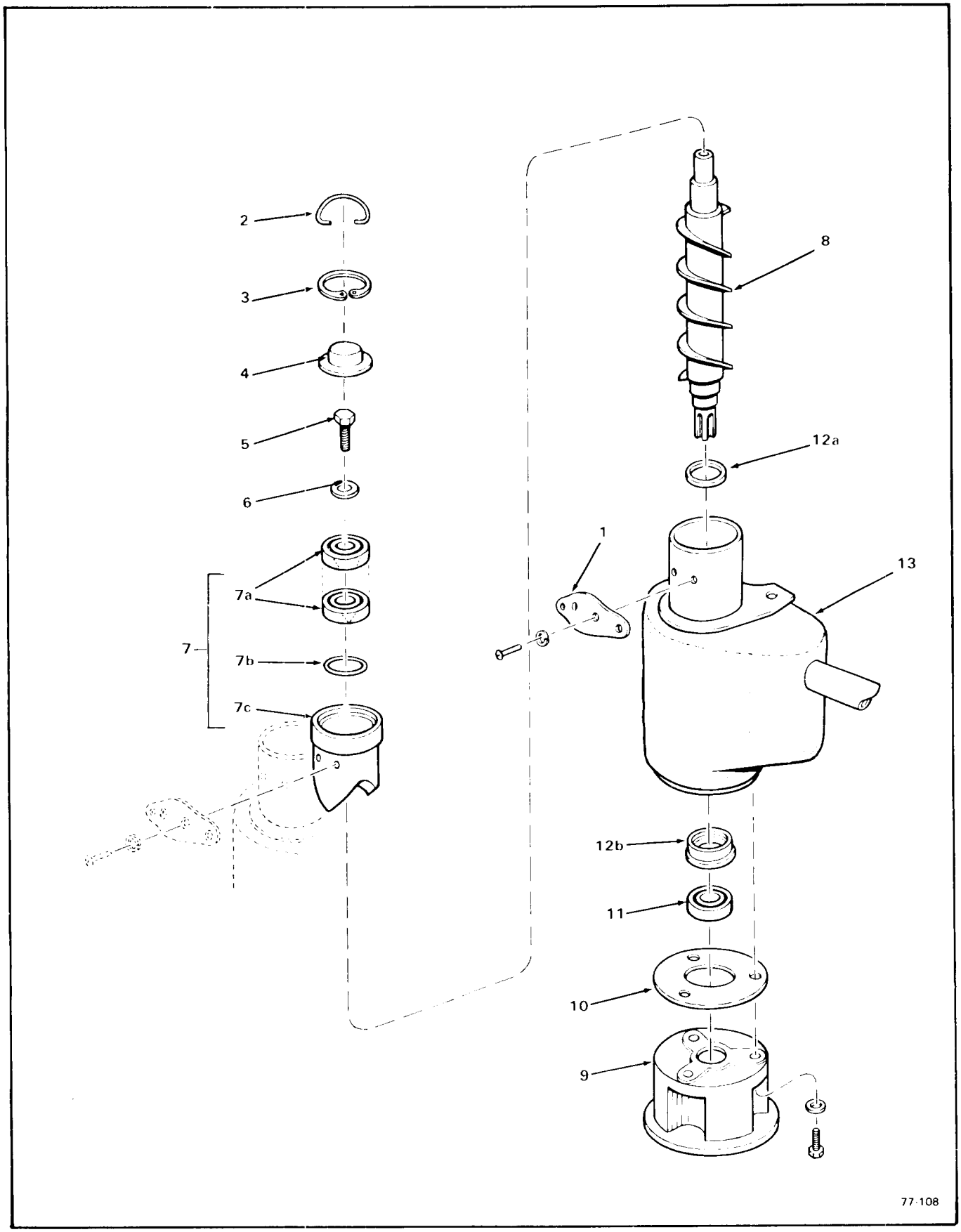

Figure 8-6. Freezer Assembly - PMF-450

Figure 8-6. Freezer Assembly - PMF-450

INDEX NO.	DESCRIPTION	PART NUMBER	REQ'D NUMBER
	Freezer Assembly - PMF-450	No Number	Ref.
	(See Figure/Index 8-2/16 and 8-3/16		
	for next higher Assembly)		
	* * *		
1	Plate, Casting	A18430-000	1
	attaching parts, Index 1, 7 & 13		
	Lockwasher, No. 1/4 Helical Spring	03-1410-03	2
	Screw, No. 1/4-20 x 1/2 Pan Hd		
	* * *		
2	Hook, Cap	A08162-000	1
	* * *		
3	Ring, Lock	03-1558-03	1
	* * *		
4	Cap	A07701-000	1
	* * *		
5	Screw, Cap	03-0758-00	1
6	Washer	A07699-000	1
	* * *		
7	Bearing Assembly, Breaker and	A14678-001	1
7a	Bearing (matched set of two)	02-1412-00	1
7b	O-Ring	13-0617-16	1
7c	Breaker, Ice (Order P/N A14678-001)	No Number	Ref.
	* * *		
8	Auger	02-1538-00	1
	* * *		
9	Adaptor	08-0595-01	1
	Lockwasher, No. 5/16 Helical Spring	03-1410-04	3
	Screw, No. 5/16-18 x 7/8 Hex Cap	03-1405-42	3
	* * *		
10	Gasket	03-1505-00	1
	* * *		
11	Bearing	02-0417-00	1
	* * *		
12	Seal, Water	A18945-000	1
12a	Seal, Upper (Fits on Index 8)	No Number	Ref.
12b	Seal, Lower (Fits on top of Index 11)	No Number	Ref.
	* * *		
13	Freezer - (Repair Assembly)	A27827-020	1
	* * *		

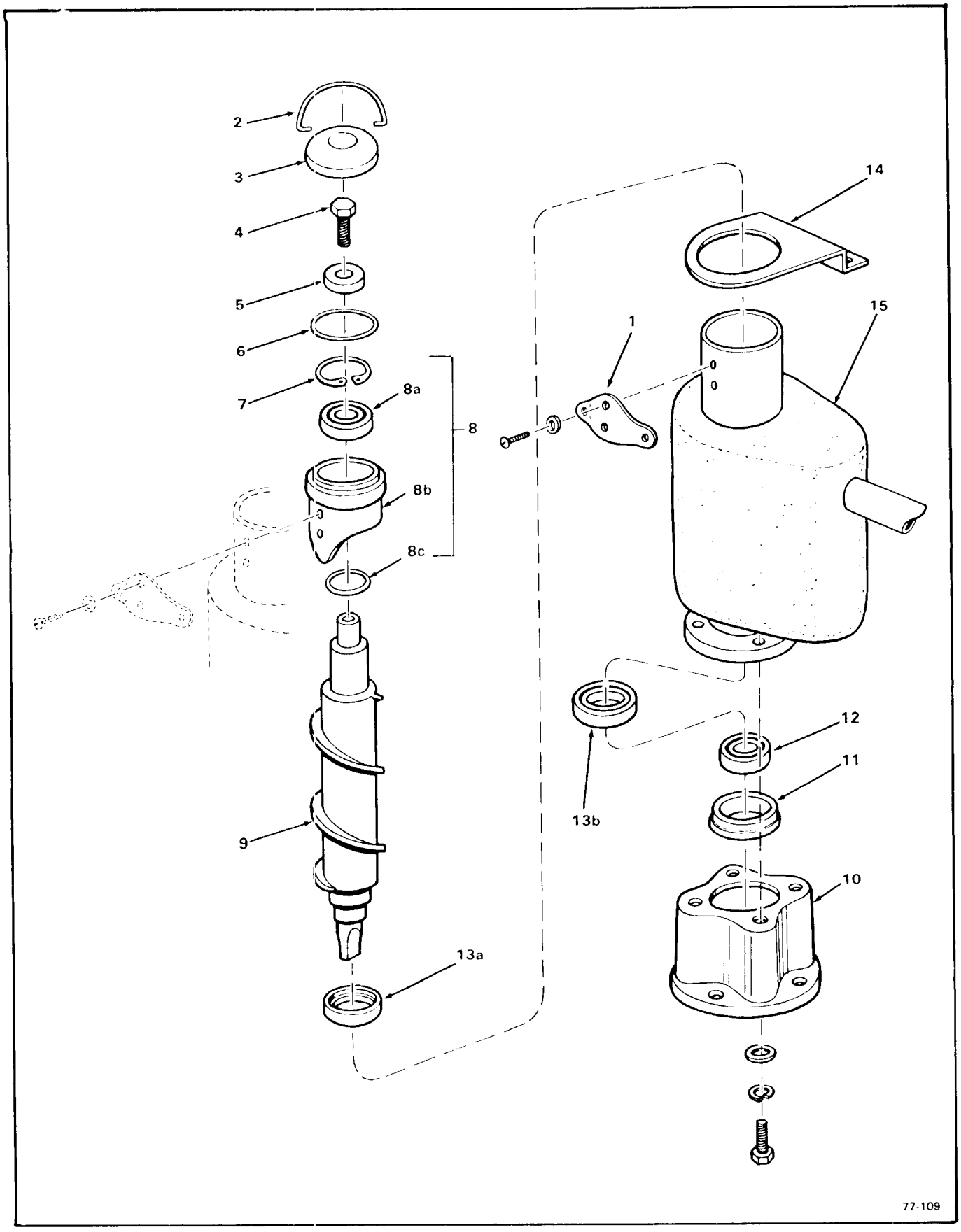

Figure 8-7. Freezer Assembly - PMF-650

Figure 8-7. Freezer Assembly - PMF-650

INDEX NO.	DESCRIPTION	PART NUMBER	REQ'D NUMBER
	Freezer Assembly - PMF-650	No Number	Ref.
	(See Figure/Index 8-2/16 and 8-3/16		
	for next higher Assembly)		
	* * *		
1	Plate, Spout	A18431-001	1
	attaching parts, Index 1, 9 & 15		
	Lockwasher, No. 1/4 Helical Spring	03-1410-03	2
	Screw, No. 1/4-20 x 1/2 Pan Hd	03-1403-48	2
	* * *		
2	Hook	A08582-000	1
	* * *		
3	Cap	A08581-000	1
	* * *		
4	Screw, No. 1/2-20 x 1 Hex Cap	03-1405-36	1
5	Washer, Brass 17/32 I.D. x 1-5/8 O.D. x 5/16	A06273-000	1
	* * *		
6	O-Ring (Fits into outside groove, Index 8)	13-0617-20	1
	* * *		
7	Ring, Internal Retaining	03-1558-04	1
	* * *		
8	Breaker Assembly, Ice	A26704-001	1
8a	Bearing (Top)	02-0646-00	1
8b	O-Ring	13-0617-15	
8c	Breaker, Ice (Order P/N A26704-001)	No Number	Ref.
	* * *		
9	Auger	02-0617-00	1
	* * *		
10	Adaptor	02-1620-00	1
	attaching parts, Index 10, 11, 12, 13 to 15		
	Lockwasher, No. 5/16 Helical Spring	03-1410-04	4
	Washer, Special	03-1408-03	4
	Screw, No. 5/16-18 x 1-1/4 Hex Cap	03-1405-41	4
	* * *		
11	Retainer, Bearing	A10591-000	1
	* * *		
12	Bearing (Lower)	02-0619-00	1
	* * *		
13	Seal, Water	A22569-000	2

Figure 8-7. Freezer Assembly - PMF-650 (Cont'd)

INDEX NO.	DESCRIPTION	PART NUMBER	REQ'D NUMBER
13a	Seal, Upper (Fits on Index 9)	No Number	Ref.
13b	Seal, Lower (Fits on top of Index 11 & 12)	No Number	Ref.
	* * *		
14	Support, Freezer	A20987-000	1
	* * *		
15	Freezer - (Repair Assembly)	A27659-020	1
	* * *		

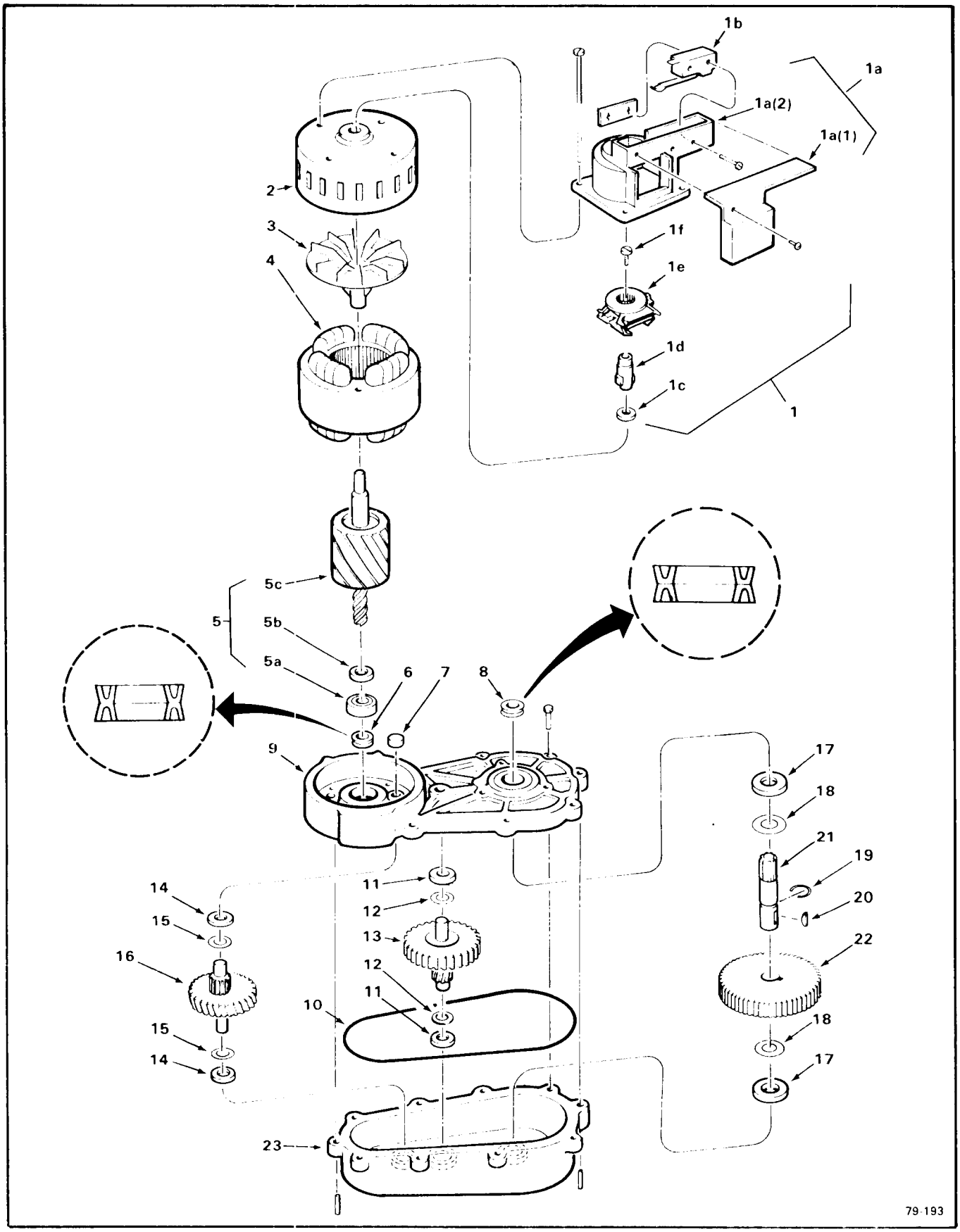

Figure 8-8. Drivemotor Assembly - PMF450 1/10 H.P.

Figure 8-8. Drivemotor Assembly - PMF450 1/10 H.P.

INDEX NO.	DESCRIPTION	PART NUMBER	REQ'D NUMBER
	Drivemotor Assembly (1/10 H.P.) (11.53 RPM) (See Figure/Index 8-2/19 & 8-3/19 for next higher Assembly)	A28151-021	Ref.
	* * *		
1	Kit, Centrifugal Switch	A27494-001	1
	attaching parts, Index 1,2 4 to 11		
	Screw, Motor - No. 10-32 x 5-1/4 Phil Recess Pan Hd	03-1403-82	4
	* * *		
1a	Kit, Centrifugal Switch Housing	A27895-001	1
1a(1)	Cover, Switch Case	No Number	1
1a(2)	Case, Switch Mounting	No Number	1
	attaching parts, Index 1a(1) to 1a(2)		
	Screw, No. 6-32 x 1 Pan Hd	03-1403-09	2
	* * *		
1b	Switch	12-2059-01	1
	attaching parts, Index 1b to 1a(2)		
	Screw, No. 6-32 x 1 Pan Hd	03-1403-09	2
	Nut, Speed	03-0886-00	2
	* * *		
1c	Washer, Special	03-1408-36	1
	* * *		
1d	Extension, Shaft	02-2371-00	1
	* * *		
1e	Actuator, Centrifugal	12-2060-01	1
	attaching parts, Index 1d to 1e		
	* * *		
1f	Screw, No. 10-32 x 1-5/8 Pan Hd	03-1403-77	1
	* * *		
2	Housing Assembly - Motor	A17047-001	1
	* * *		
3	Fan, Boring	A28168-001	1
	attaching parts, Index 3 to 4		
	Setscrew	03-1246-00	2
	* * *		
4	Stator Assembly (115/60/1)	12-1400-01	1
	* * *		
5	Rotor Assembly	A28160-001	1
5a	Bearing	02-1501-00	1

Figure 8-8. Drivemotor Assembly - PMF450 1/10 H.P. (Cont'd)

INDEX NO.	DESCRIPTION	PART NUMBER	REQ'D NUMBER
5b	Washer, Special	03-1408-08	1
5c	Rotor (Order P/N A28160-001)	No Number	1
	* * *		
6	Seal, Grease (Install back-to-back)	02-1504-00	2
	* * *		
7	Cap, Insulating	02-2459-01	1
	* * *		
8	Seal, Grease (Install back-to-back)	02-1503-00	2
	* * *		
9	Cover Assembly, Gear Case	A28165-001	1
	attaching parts, Index 9 to 23		
	Pin, Roll	03-0774-11	2
	Screw, No. 1/4-20 x 3/4 Flange	03-1252-00	2
	Screw, No. 1/4-20 x 5/8 Flange	03-1251-00	6
	* * *		
10	O-Ring	02-1505-00	1
	* * *		
11	Washer, Special (Thick)	03-1408-39	2
	* * *		
12	Washer, Special (Thin/Shim)	03-1408-40	A/R
	* * *		
13	Third Pinion Assembly, Second Gear and	02-2439-01	1
	* * *		
14	Washer, Special (Thick)	03-1408-41	2
	* * *		
15	Washer, Special (Thin/Shim)	03-1408-38	A/R
	* * *		
16	Second Pinion Assembly, First Gear and	02-2438-01	1
	* * *		
17	Washer, Special (Thick)	03-1408-21	2
	* * *		
18	Washer, Special (Thin/Shim)	03-1408-04	A/R
	* * *		
19	Ring, Retaining	03-1515-03	1
	* * *		
20	Key, Woodruff	03-1602-01	1
	* * *		
21	Shaft, Output	02-2445-01	1

Figure 8-8. Drivemotor Assembly - PMF450 1/10 H.P. (Cont'd)

INDEX NO.	DESCRIPTION	PART NUMBER	REQ'D NUMBER
	* * *		
22	Gear, Output	02-2444-01	1
	* * *		
23	Case Assembly, Gear	A28166-001	1
	* * *		

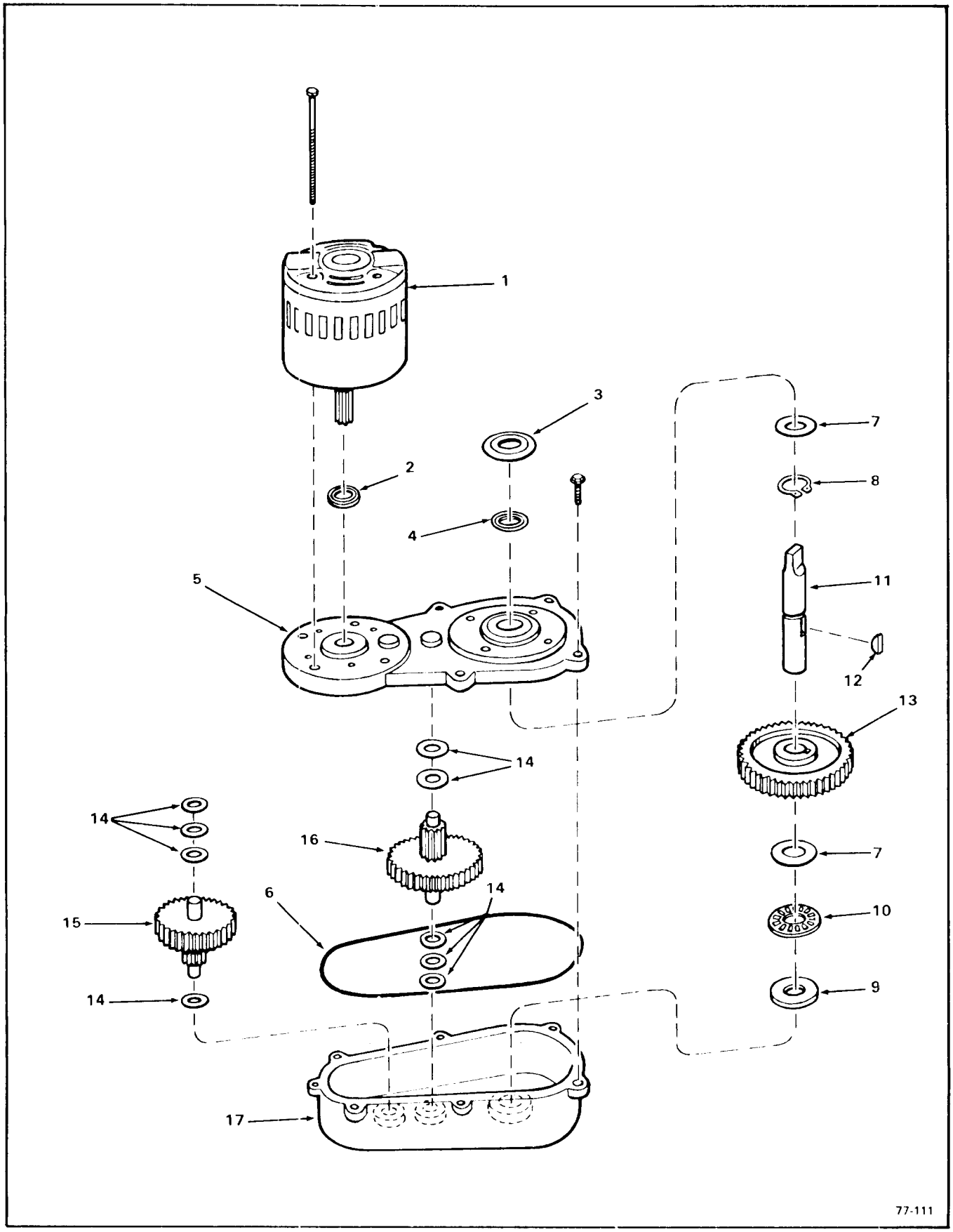

Figure 8-9. Drivemotor Assembly - PMF650 1/4 H.P.

Figure 8-9. Drivemotor Assembly - PMF650 1/4 H.P.

INDEX NO.	DESCRIPTION	PART NUMBER	REQ'D NUMBER
	Drivemotor Assembly - PMF-650 (1/4 H.P.) (10.1 RPM) (See Figure/Index 8-2/19 and 8-3/19 for next higher Assembly * * *	A22750-021	Ref.
1	Motor, Drive 115/60/1 (1/4 H.P. Split Phase) attaching part, Index 1 to 5 Screw, Motor (p/o Index 1) * * *	A26455-001 No Number	1 4
2	Seal, Oil * * *	02-1606-00	1
3	Shed, Water * * *	13-0709-02	1
4	Seal, Oil * * *	02-1607-00	1
5	Cover Assembly, Gear Case attaching parts, Index 5 to 17 Screw, No. 5/16 x 1 Flange * * *	A22200-000 03-1251-01	1 6
6	O-Ring * * *	A26103-001	1
7	Race, Thrust * * *	02-1681-00	2
8	Ring, Retaining * * *	03-1363-00	1
9	Race, Thrust * * *	02-1679-00	1
10	Bearing * * *	02-1680-00	1
11	Shaft, Output attaching part, Index 11 to 13	02-1652-00	1
12	Key (No. 91 Woodruff, Nickel Steel) * * *	03-1364-00	1
13	Gear, Output * * *	02-1653-00	1
14	Washer, Special (.515 I.D. x 875 O.D. x .028 Steel) * * *	03-1408-24	9
15	Second Pinion Assembly, First Gear and * * *	02-1603-00	1

Figure 8-9. Drivemotor Assembly - PMF650 1/4 H.P. (Cont'd)

INDEX NO.	DESCRIPTION	PART NUMBER	REQ'D NUMBER
16	Third Pinion Assembly, Second Gear and * * *	02-1604-00	1
17	Case Assembly, Gear * * *	A22199-000	1

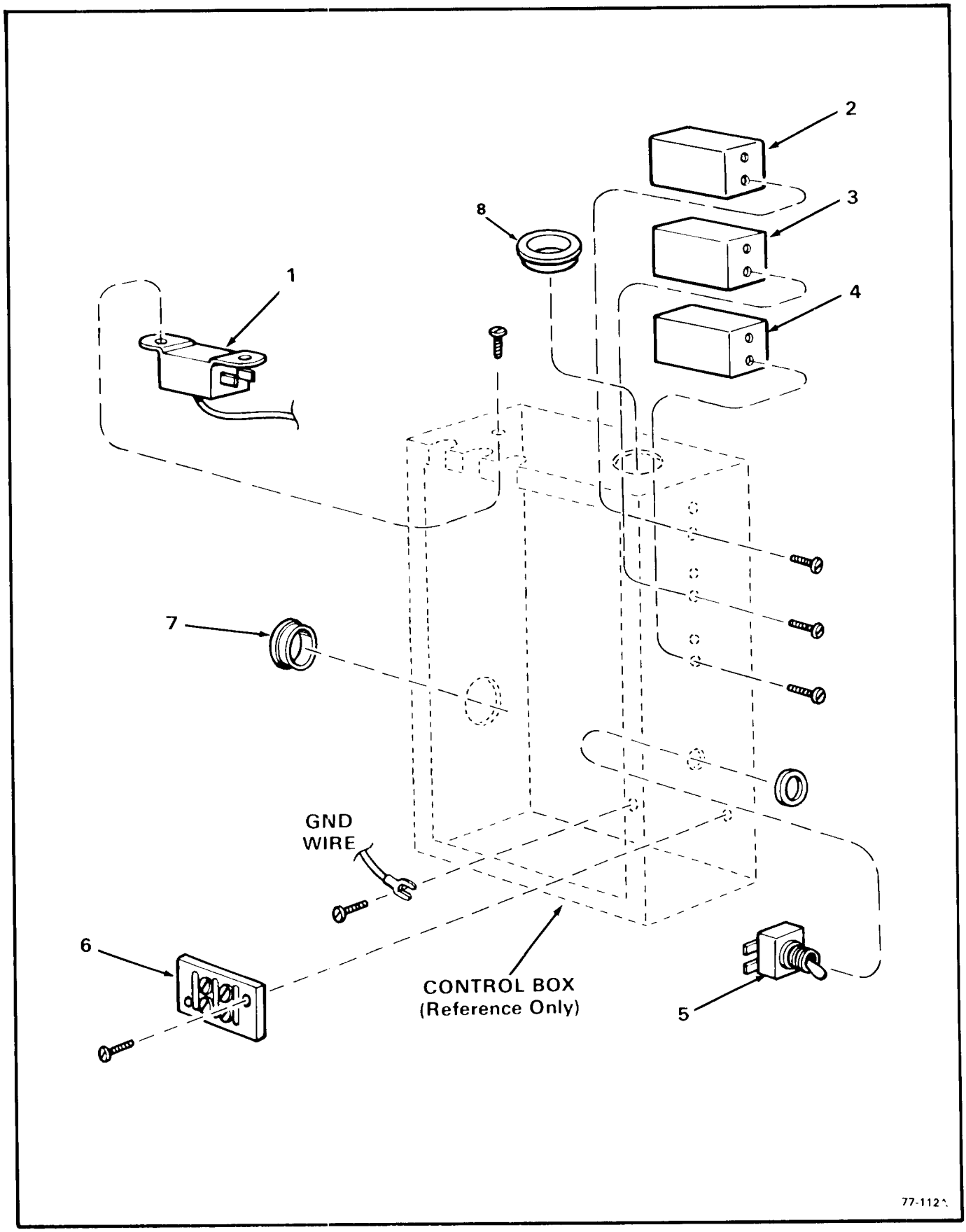

Figure 8-10. Control Box Assembly - PMF450

Figure 8-10. Control Box Assembly - PMF450

INDEX NO.	DESCRIPTION	PART NUMBER	REQ'D NUMBER
	Control Box Assembly-PMF450 (See Figure 8-2 and 8-3 for next higher Assembly) * * *	No Number	1
1	Control, Temperature	11-0354-00	1
	attaching parts, Index 1		
	Screw, No. 8-32 x 3/8 Pan Hd * * *	13-1403-17	2
2	Control, Lo-Pressure	11-0358-01	1
	attaching parts, Index 2		
	Screw, No. 6-32 x 1/4 Pan Hd * * *	03-1403-02	2
3	Switch, Pressure (Air-Cooled Model)	11-0402-01	1
	Control, Hi Pressure (Water-Cooled Model)	11-0388-02	1
	attaching parts, Index 3		
	Screw, No. 6-32 x 1/4 Pan Hd * * *	03-1403-02	2
4	Switch, Pressure (Water-Cooled Model)	11-0402-01	1
	attaching parts, Index 4		
	Screw, No. 6-32 x 1/4 Pan Hd * * *	03-1403-02	2
5	Switch, Toggle * * *	12-0426-01	1
6	Board, Terminal	12-0813-04	1
	attaching part, Index		
	Screw, No. 10-24 x 3/4 Pan Hd * * *	03-1403-31	2
7	Bushing, Snap * * *	12-1213-12	1
8	Bushing, Snap * * *	12-1213-10	1

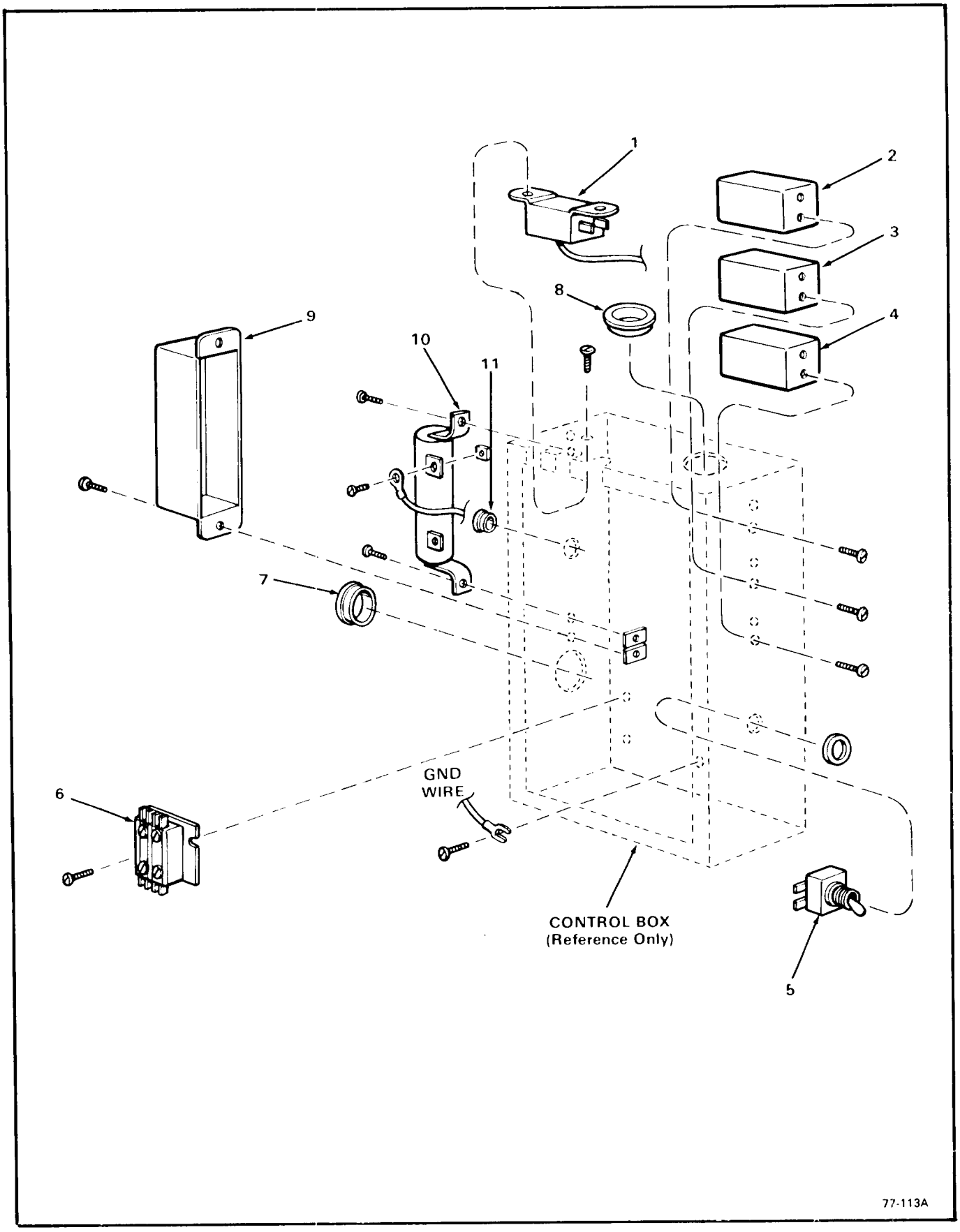

Figure 8-11. Control Box Assembly - PMF-650

Figure 8-11. Control Box Assembly - PMF-650

INDEX NO.	DESCRIPTION	PART NUMBER	REQ'D NUMBER
	Control Box Assembly - PMF650	No Number	1
	(See Figure 8-2 and 8-3		
	for next higher Assembly)		
	* * *		
1	Control, Temperature	11-0354-00	1
	attaching parts, Index 1		
	Screw, No. 8-32 x 3/8 Pan Hd	13-1403-17	2
	* * *		
2	Control, Lo-Pressure	11-0358-01	1
	attaching parts, Index 2		
	Screw, No. 6-32 x 1/4 Pan Hd	03-1403-02	2
	* * *		
3	Control, Fan Pressure (Air-Cooled Model)	11-0362-01	1
	Control, Hi-Pressure (Water-Cooled Model)	11-0388-02	1
	attaching parts, Index 2		
	Screw, No. 6-32 x 1/4 Pan Hd	03-1403-02	2
	* * *		
4	Switch, Pressure	11-0402-01	1
	attaching parts, Index 3		
	Screw, No. 6-32 x 1/4 Pan Hd	03-1403-02	2
	* * *		
5	Switch, Toggle	12-0426-01	1
	* * *		
6	Contactor	12-2037-01	1
	attaching parts, Index 6		
	Screw, No. 8-32 x 1/2 Pan Hd	03-1403-18	2
	* * *		
7	Bushing, Snap	12-1213-12	1
	* * *		
8	Bushing, Snap	12-1213-10	1
	* * *		
9	Cover, Resistor (Air-Cooled Model)	A14384-000	1
	attaching parts, Index 9		
	Screw, No. 8 x 3/8 T/F Tap	03-1404-08	2
	* * *		
10	Resistor - 30 Watt (Air-Cooled Model)	12-0474-00	1
	attaching parts, Index 10		
	Screw, No. 8-32 x 3/8 Pan Hd	03-1403-17	2

Figure 8-11. Control Box Assembly - PMF-650 (Cont'd)

INDEX NO.	DESCRIPTION	PART NUMBER	REQ'D NUMBER
	Speed Nut, No. 8-32	03-1421-02	2
	attaching parts, (electrical leads to Index 10 terminals)		
	Screw, No. 6-32 x 3/8 Pan Hd	03-1403-04	2
	Speed Nut, No. 6-32	03-1421-02	2
	* * *		
11	Bushing, Snap (Air-Cooled Model)	12-1213-04	1
	* * *		

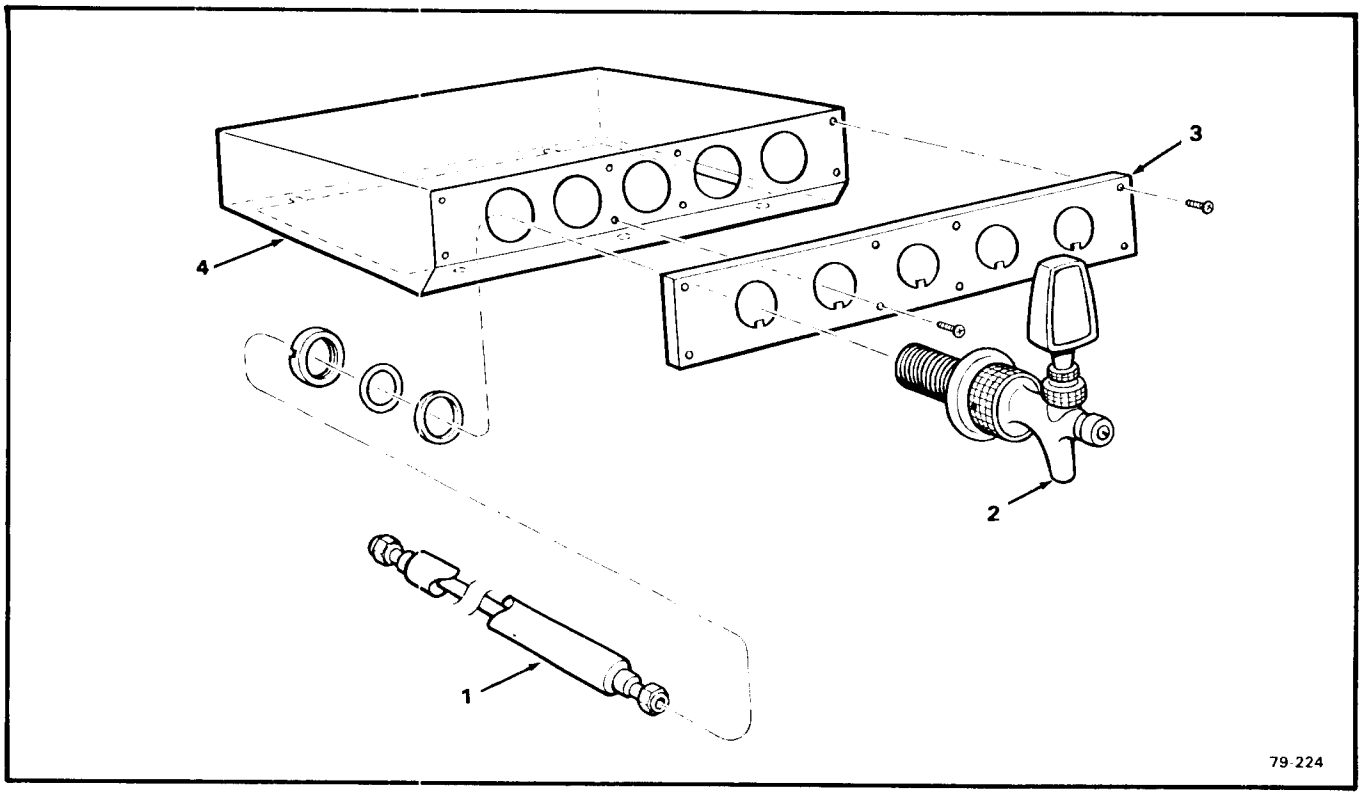

Figure 8-12. Dispensing Tower Assembly

INDEX NO.	DESCRIPTION	PART NUMBER	REQ'D NUMBER
	Dispensing Tower Assembly (See Figure 8-1/13 for next higher Assembly * * *	A29035-001	Ref.
1	Tube Assembly (54 in/lg) * * *	A27737-006	5
2	Valve, Premix Dispensing	02-2486-01	5
	attaching parts, Index 2		
	Seal, Shank (p/o Valve)	No Number	1 (5)
	Washer, Shank Seal (p/o Valve)	No Number	1 (5)
	Nut, Shank (p/o Valve) * * *	No Number	1 (5)
3	Panel, Dispensing	A29024-001	1
	attaching parts, Index 3 to 4		
	Screw, No. 8 x 3/4 T/F Tap * * *	03-1404-12	8
4	Top, Left * * *	A17827-002	1

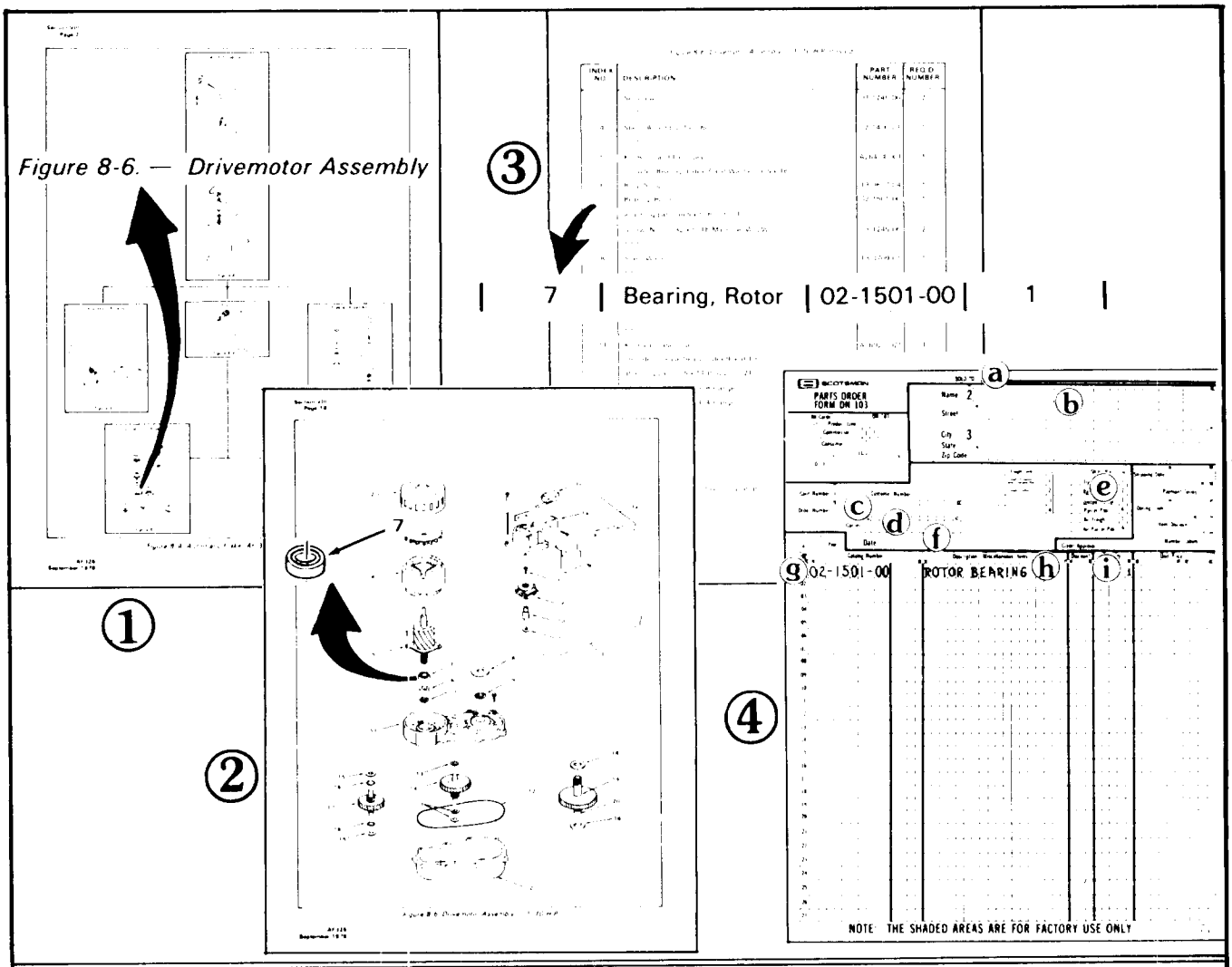

HOW TO USE A SCOTSMAN PARTS MANUAL WHEN ORDERING PARTS FOR ICE SYSTEMS PRODUCTS

IMPORTANT A. All Part Numbers have TEN DIGITS (spaces), required for use in the Computer System. BE SURE to fill in **ALL SPACES** in the CATALOG NUMBER column, on the Parts Order form as shown above.

B. Enter the QUANTITY of the Parts ordered, in the last digit column under the QUANTITY column heading, the one under the small 55 number, for parts from 1 thru 9. For 10 or more parts use two columns.

To be sure you receive the proper parts in the proper quantities, ALWAYS use the PART NUMBERS and DESCRIPTIONS given in the Parts Manuals.

The figures above illustrate the way a Parts Manual would be used, if the Part being ordered were the ROTOR BEARING that is used in the DRIVEMOTOR ASSEMBLY of an AF325 Automatic Flaker for example.

PROCEDURE:

1. At the beginning of Section VIII, THE PARTS ILLUSTRATIONS AND PARTS LISTS, in each Parts and Service Manual, is Figure 8-A; which, is a flow chart prepared from exploded views in Section VIII. Use the flow chart to quickly determine which Figure contains the Assembly, Component or Part.

FIGURE 1: Since the Part required in the above example is in the DRIVEMOTOR ASSEMBLY, shown as FIGURE 8-6.

2. Open the Manual to page showing FIGURE 8-6.

3. Locate the PART and its INDEX NUMBER on the exploded view illustration.

FIGURE 2: The INDEX NUMBER for the PART is 7.

4. Check the numerical sequence in the associated Parts List following the illustration.

5. LOCATE the INDEX NUMBER 7, in the INDEX NO. column, the first column on the left side of the Parts List page.

FIGURE 3: INDEX NO. 7 is listed as a BEARING, ROTOR in the DESCRIPTION column. The Part Number for the Rotor Bearing is 02-1501-00 as listed in the PART NUMBER column on the right side of the Parts List page. And, one Rotor Bearing is listed in the REQ'D NUMBER column, or that ONLY one of those parts is required for one Drivemotor Assembly.

6. Write an order for the Part. (Use SCOTSMAN Parts Order Form DN103)

FIGURE 4: a. Distributor Name.
b. (Use for DROP-SHIP order ONLY).
c. Distributor Purchase Order Number.
d. Carrier
e. How shipped (Truck, Rail, UPS, etc.)
f. Date ordered
g. Part Catalog Number
(use full TEN digits (spaces) listed in Parts Manual, including dashes between numbers.
h. Description - as listed in Parts Manual.
i. Quantity - number of parts ordered.
(use far right column)

Figure 8-00. How To Use The Illustrated Parts List.

PO760

TABLE OF CONTENTS

GENERAL INFORMATION & INSTALLATION
- Introduction 2
- For the Installer 4
- For the Electrician 10
- For the Plumber 11
- Final Checklist 12

OPERATING INSTRUCTIONS
- Start-Up — Carbonation System 13
- Start-Up — Icemaker 14
- Operation/Icemaker 15
- Electrical/Refrigeration 15
- Carbonation 17
- Carbonator Tank 17
- Liquid Level Control 17
- Facts About CO^2 18

COMPONENT DESCRIPTION 22

MAINTENANCE & CLEANING INSTRUCTIONS
- Icemaker 27
- Cleaning/Icemaker 29
- Sanitizing 31

SERVICE DIAGNOSIS 32

ADJUSTMENT PROCEDURES
- Bin Thermostat Control 39
- Leg Levelers 39
- Water Regulator Assembly 39
- Water Reservoir Float 39
- CO^2 Gas Pressure 40
- Drink Tower Faucets 40

REMOVAL AND REPLACEMENT PROCEDURES 41
- Slide-Out Chassis 41
- Auger, Water Seal, O-Ring, Ice Breaker Assembly and Freezer Assembly 42
- Elbow and Switch Assembly 46
- Carbonator Pump and Motor 47
- Carbonator Pump 48
- Carbonator Tank Assembly 48
- CO^2 Gas Cylinder (Drum) 49
- Compressor Assembly 50
- Condenser — Air-Cooled 50
- Condenser — Water-Cooled 50
- Liquid Line Drier 51
- Gear Motor 50
- Gear Motor Assembly 52
- Fan Motor Assembly — Air-Cooled 54
- Water Regulator Valve Assembly Water-Cooled 54
- Safety Controls, High Pressure, Low Pressure and Auger Delay 54
- Water Reservoir Assembly 55

LIST OF ILLUSTRATIONS

- Specifications 3
- PO760 — Component Location 4
- Post-Mix Drink System 5
- Location and Leveling 7
- Drink Tower Installation 9
- Electrical Connections 10
- Water and Drain Connections 11
- Final Checklist 12
- Start-Up — Carbonation System 13
- Water Schematic 14
- Post-Mix Dispenser System Schematic 16
- Effect of Temperature Chart 20
- Effect of Pressure Chart 20
- Component Description 22
- Maintenance and Cleaning 28
- Removal and Replacement 41-53

PARTS LIST AND WIRING DIAGRAMS 1
(Printed in Yellow)

PARTS LIST:
- Cabinet Assembly (Part I) 4
- Cabinet Assembly (Part II) 5
- Air-Cooled Assemblies 6
- Water-Cooled Assemblies 7
- Water and Drainage System 8
- Freezer Assembly (A, B & C Models) 9
- Elbow and Switch Assembly 10
- Drivemotor Assembly 11
- Compressor Assembly 12
- Post-Mix Soda Valves for KDT1 Dispense Tower 13
- Control Box Assembly, Air-Cooled 14
- Control Box Assembly, Water-Cooled 15
- Carbonator Tank (Original) 16
- Carbonator Tank (New Design) 16
- Carbonator Pump Assembly 16
- Carbonator Control Box Assembly 17

WIRING DIAGRAMS:
- Carbonation System 17
- PO760AE-1A (115/60/1) 18
- PO760WE-1A (115/60/1) 19
- PO760AE-1C (115/60/1) 20
- PO760WE-1C (115/60/1) 21

THIS PAGE
INTENTIONALLY
LEFT BLANK

PO760 FOR THE INSTALLER

INTRODUCTION

This manual provides the specifications and the step-by-step procedures for the installation, start-up, operation, maintenance and cleaning of the SCOTSMAN Model PO760 Automatic Nugget Icemaker/Drink Dispensers.

The Model PO760 Icemaker/Dispensers are quality designed, engineered and constructed, and thoroughly tested icemaking and post-mix dispensing systems, providing the utmost in flexibility to fit the needs of a particular user.

A seven circuit cold plate, designated and constructed as the integral bottom of the Bin, allows use of five syrup flavors, plus cold sweet water and carbonated water circuits.

A complete built-in carbonated water system, includes a carbonator pump and carbonator tank with line connections to the cold plate.

All internal lines are connected prior to shipment from the factory. Six flexible tube assemblies are provided, five for connections to five syrup tanks and one for connections to the CO_2 tank.

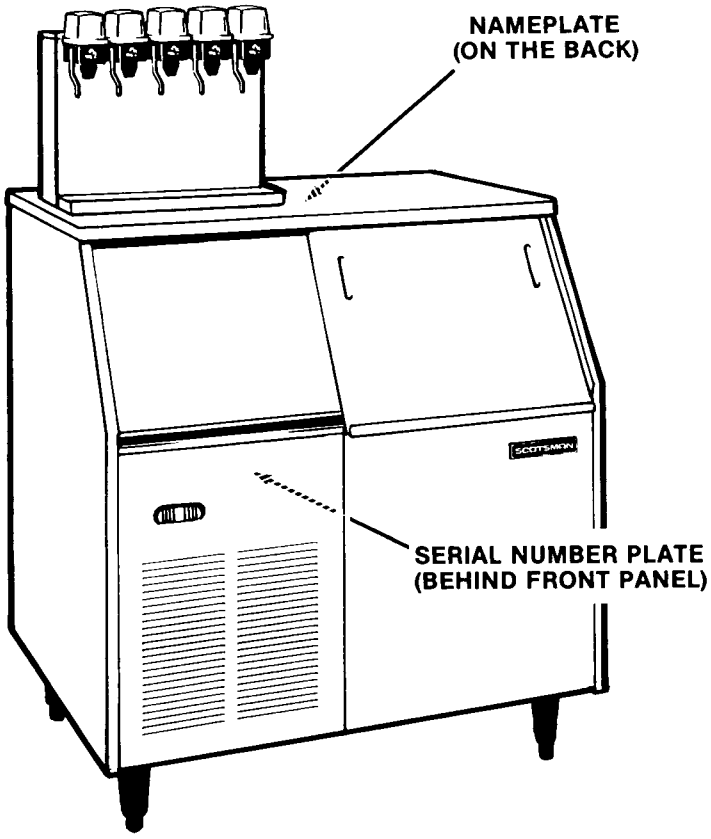

NAME PLATE

MODEL NUMBER
SERIAL NUMBER
A.C. SUPPLY VOLTAGE
MINIMUM CIRCUIT AMPACITY WIRES
MAXIMUM FUSE SIZE * HERTZ
HEATER WATTS PHASE
REFRIGERANT CHARGE OZ.

MOTORS	VOLTS	R.L.A./F.L.A.	W/HP.	L.R.A.
COMPRESSOR				
FAN				
DRIVE				
OTHER				

DESIGN PRESSURE LOW HIGH
* OR HACR TYPE CIRCUIT BREAKER

SCOTSMAN A HOUSEHOLD INTERNATIONAL COMPANY
ALBERT LEA, MINNESOTA U.S.A.

SERIAL NUMBER PLATE

MODEL NUMBER
SERIAL NUMBER
VOLTS/HERTZ/PHASE
MAXIMUM FUSE SIZE
REFRIGERANT CHARGE OZ.

This icemaker has been engineered to our own rigid safety and performance standards. The National Sanitation Foundation (NSF) seal, signifies that it is listed with NSF and that it complies with the materials and construction standards of NSF. In addition, the Underwriters Laboratories, Inc., (UL) Listing Mark and the Canadian Standards Association (CSA) Monogram, both signify that its construction and design have been inspected and tested by them. NSF, UL and CSA inspectors also periodically examine production icemakers at the factory, to assure continued compliance.

To retain the safety and performance built into this icemaker, it is important that installation and maintenance be conducted in the manner outlined in this manual.

PO760 SYSTEM SPECIFICATIONS

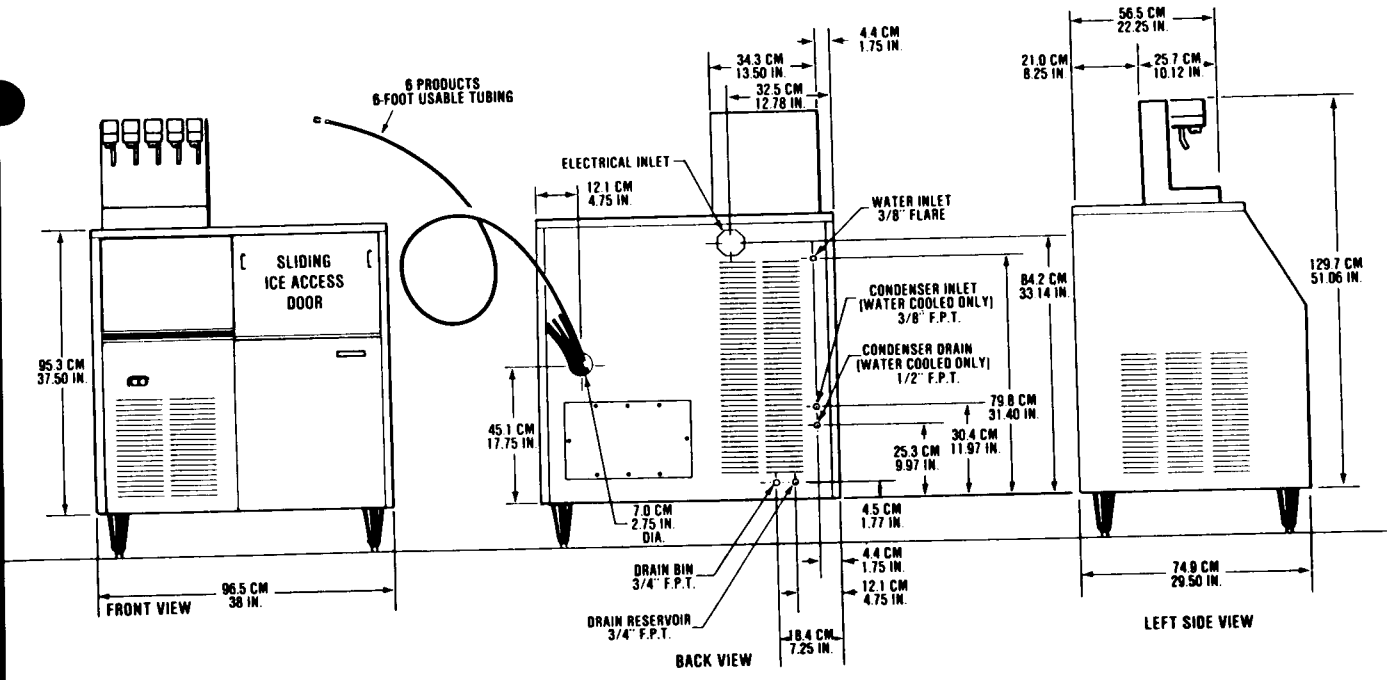

We reserve the right to make product improvements at any time. Specifications and design are subject to change without notice.

SPECIFICATIONS

Model Number	(Height - w/o Legs) (or Tower) Dimensions H" x W" x D"	Bin Cap.	Cube Size	Cond. Unit	Finish **	Basic Electrical	Comp. H.P.	No. of Wires	Min. Circuit Ampacity †	★ Max. Fuse Size	Ship. Wt. lbs./kg.
PO760AE-1C	37½ x 38 x 29½	255 lbs.	Nugget	Air	ES	115/60/1	3/4	2	24.3	30	425/193
PO760WE-1C	37½ x 38 x 29½	255 lbs.	Nugget	Water	ES	115/60/1	3/4	2	21.0	25	425/195

**ES Sandalwood high-gloss, baked enamel finish on leathergrain embossed steel.

†Use this value to determine minimum wire size as per National Electric Code Standards.

★ Or HACR type circuit breakers.

IMPORTANT OPERATING REQUIREMENTS

	MINIMUM	MAXIMUM
Air Temperatures	50°F (10.0°C)	100°F (38°C)
Water Temperatures	40°F (4.4°C)	100°F (38°C)
Water Pressures	20 lbs. gauge	120 lbs. gauge
Electrical Voltage Variations Voltage rating specified on nameplate	-10%	10%

Extended periods of operation exceeding these limitations constitutes misuse under the terms of Scotsman Manufacturer's Limited Warranty, resulting in a loss of warranty coverage.

PO760's have been manufactured in "A" and "C" Models (as in model PO760AE-1A vs. PO760AE-1C.) This manual is primarily intended for the "C" model, but applies as well to the prior models.

OPTIONAL PANEL KITS

SPKPR760 stainless steel panel kit for use with PO760.

SEE NAMEPLATE, for electrical and refrigeration specifications.

NAMEPLATE is located on the rear panel.

Remove left panel to locate Model/Serial Number plate, on the top of the control box.

OPTIONAL DRINK TOWERS

KDT1

McCann's stainless steel tower assembled with five McCann's break-away valves.

PO760 FOR THE INSTALLER

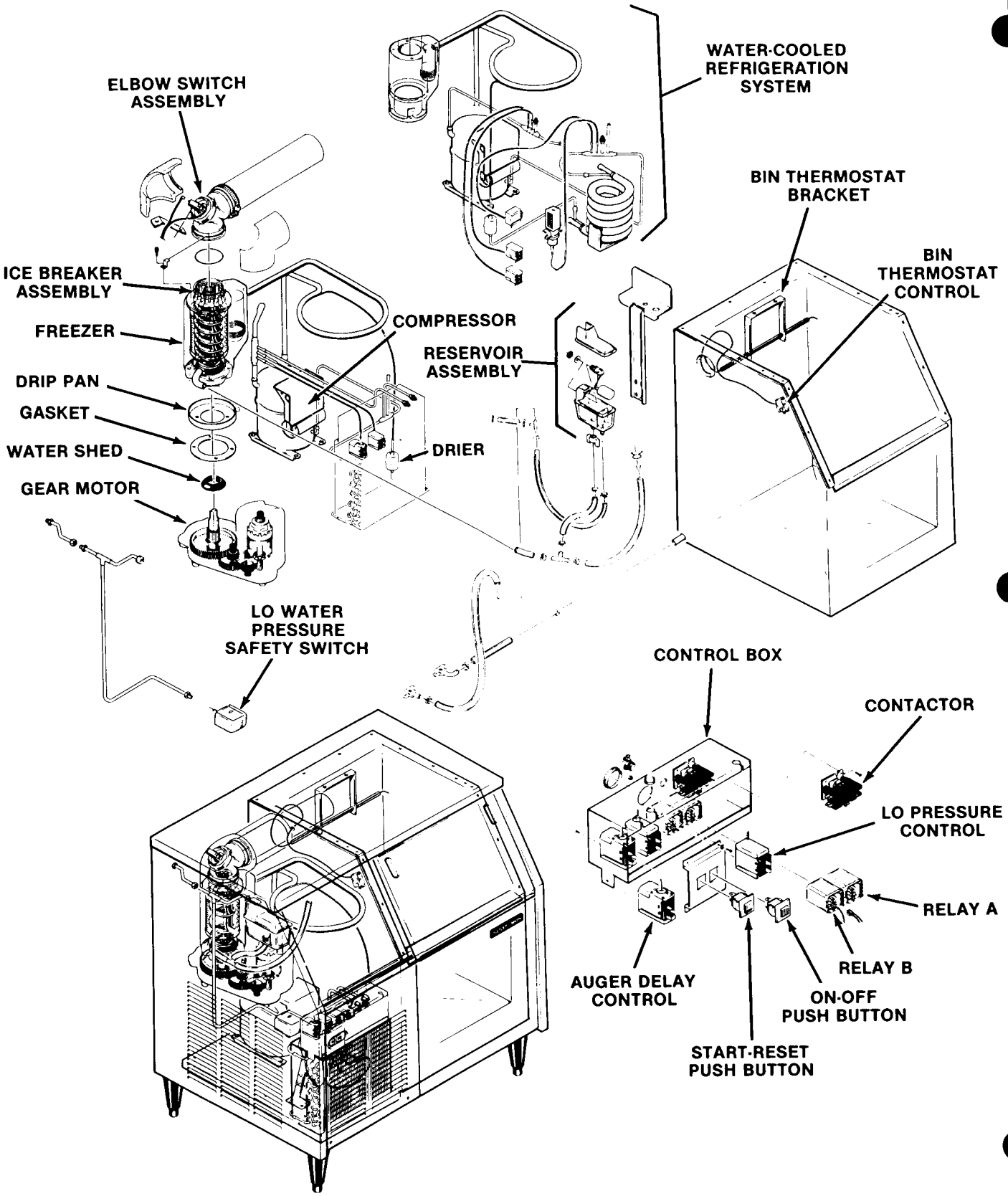

PO760 FOR THE INSTALLER

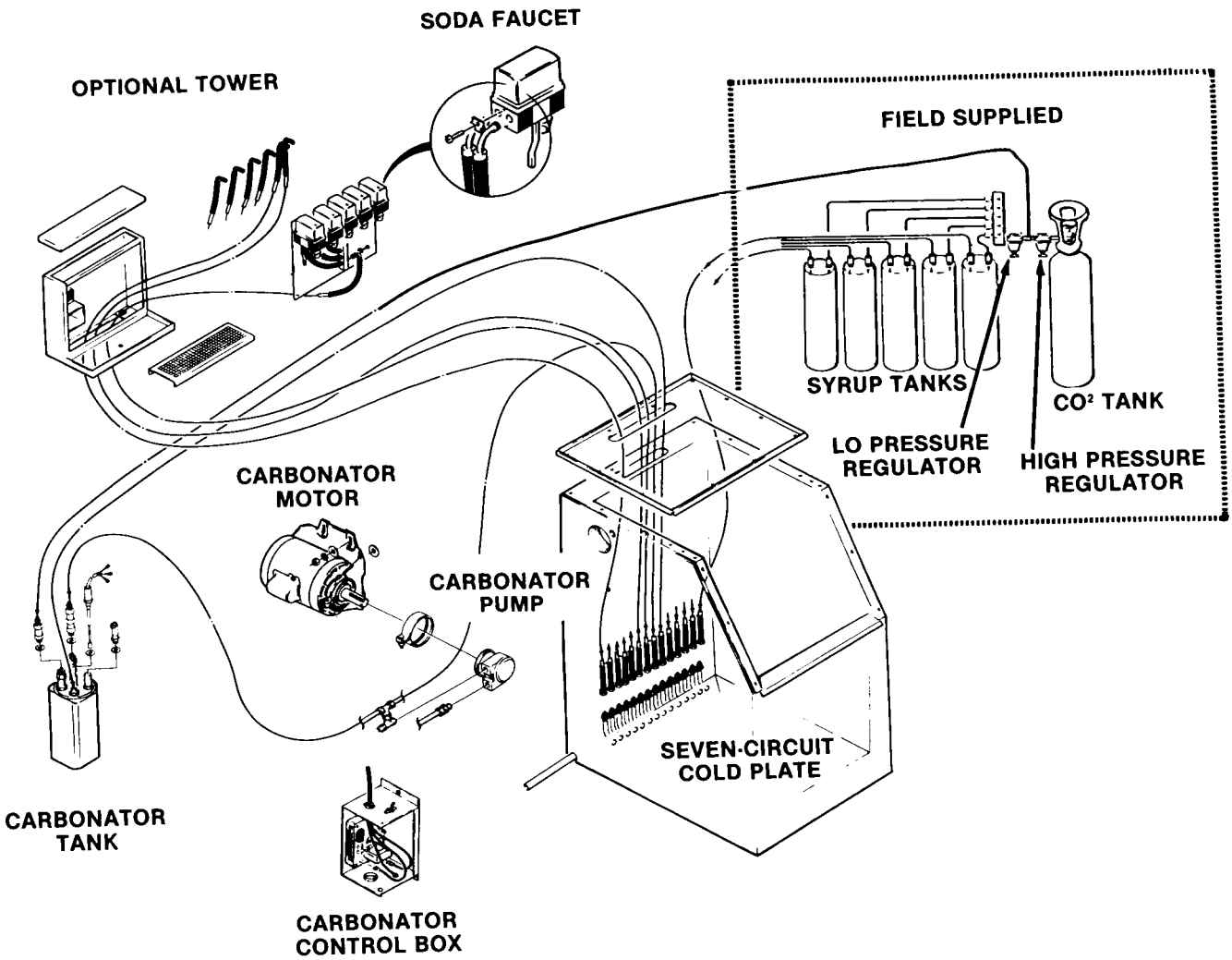

PO760 FOR THE INSTALLER

LOCATION AND LEVELING

////////////////////// CAUTION //////////////////////

This icemaker is NOT designed for outdoor installations or where air temperatures are below 50-degrees F. or above 100-degrees F. and water temperature is below 40-degrees F. or above 100-degrees F. Extended periods of operation at temperatures exceeding these limitations will constitute misuse, under the terms of the SCOTSMAN manufacturer's limited warranty, resulting in LOSS of warranty coverage.

//

1. Position the cabinet in the selected permanent location and install legs.

Select a well-ventilated location for the air-cooled model, advising the user to frequently clean the air-cooled condenser, located directly behind the lower front service panel.

SERVICE ACCESS: Adequate space is required for all service connections, located at the back of the cabinet. A six-inch minimum clearance at back and left side panels, for routing cooling air drawn into and exhausted out of the compartment to maintain proper condensing operating on air-cooled models.

2. Install legs, packed in the ice storage bin. When tilting the unit to install legs, DO NOT HANDLE BY THE SODA TOWER.
3. Level the cabinet in both the left-to-right and front-to-back directions. The leveling legs can be adjusted with an open end wrench. (See adjustment of leg levelers.)

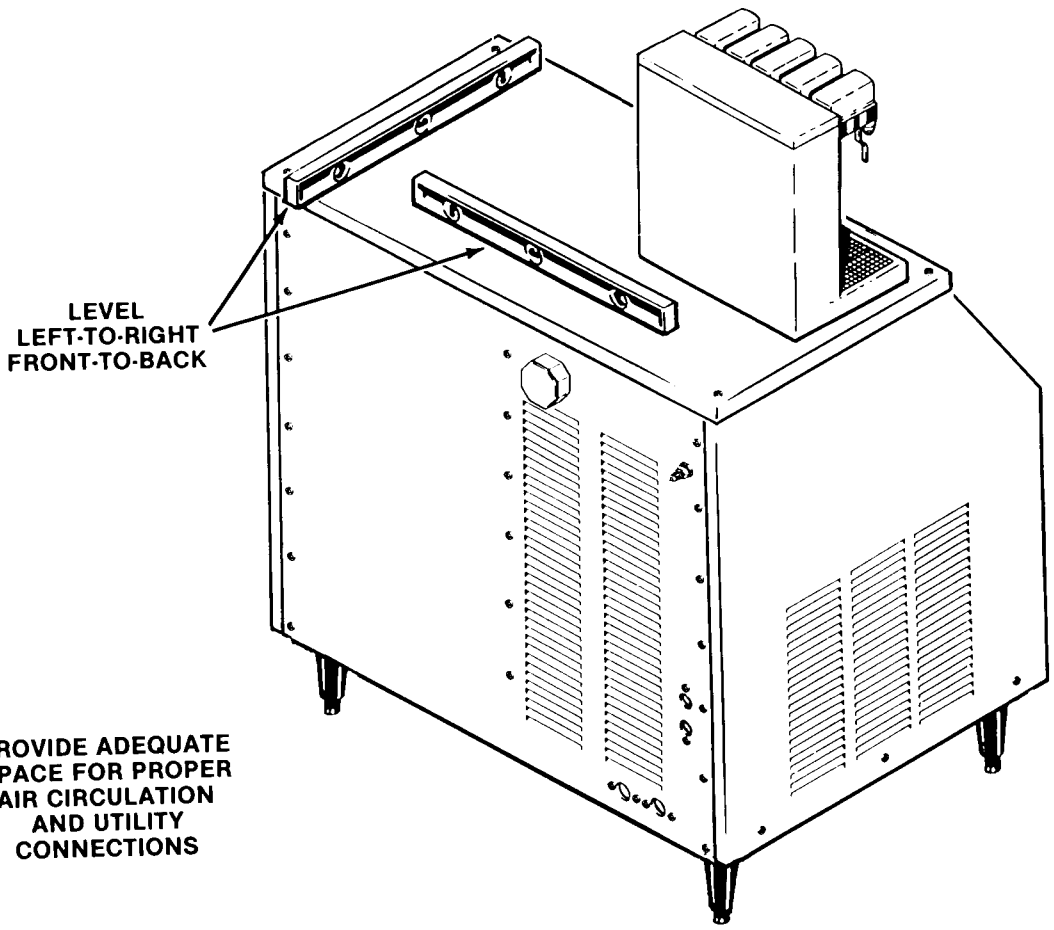

PO760 FOR THE INSTALLER

DRINK TOWER INSTALLATION

CAUTION

Any soda lines and/or drains should be routed AWAY from the ice machine control box. Syrup in the control box can cause SEVERE DAMAGE and will result in a LOSS of warranty coverage.

1. Remove two screws and the lower left front panel.
2. Remove trim, screws, left front bracket and upper left front panel.
3. Remove screws and lift the drink tower top panel and separate the front panel with faucets from the drink tower assembly.
4. Apply the sponge rubber adhesive tape supplied with the drink tower kit to the outside edge of the tower base.
5. Route the sink drain tube up through the icemaker top panel and attach to the sink drain fitting.
6. Attach the drink tower to the PO760 Icemaker as follows:

   Mount the drink tower to the icemaker top panel with four hex head bolts up through the top panel into the drink tower base weld nuts.
7. Pull syrup, plain water and carbonated water lines up through the PO760 top panel and drink tower base and attach to drink faucets as follows:

   Connect syrup lines 1 through 5 at the back of the drink faucets connections 1 through 5.

   Connect plain water line routed from the cold plate to faucet number 5.

   Connect carbonated water line routed from the cold plate to the drink tower manifold.
8. Remove screws and the carbonator control box cover to gain access.
9. Route the drink tower electrical cord down through the icemaker top panel into the carbonator control box top through the connector. Refer to wiring diagram on the installation instruction sheet and connect drink tower electrically to the icemaker carbonator control box terminals. Connect the black wire to AC 1 terminal and white wire to AC 2 terminal on the carbonator control circuit board. Connect the green wire to the green ground screw in the carbonator control box assembly.

When the icemaker and drink tower installation are complete, operate carbonation system and check for proper operation and leaks. Refer to drink valve SERVICE TIPS supplied with the drink tower kit for correct brix and adjustment information and procedures.

10. Connect all lines from the cold plate to the proper fittings on the syrup tanks. Connect the CO_2 lines to the carbonator tank and syrup tank. See post mix dispenser system schematic.

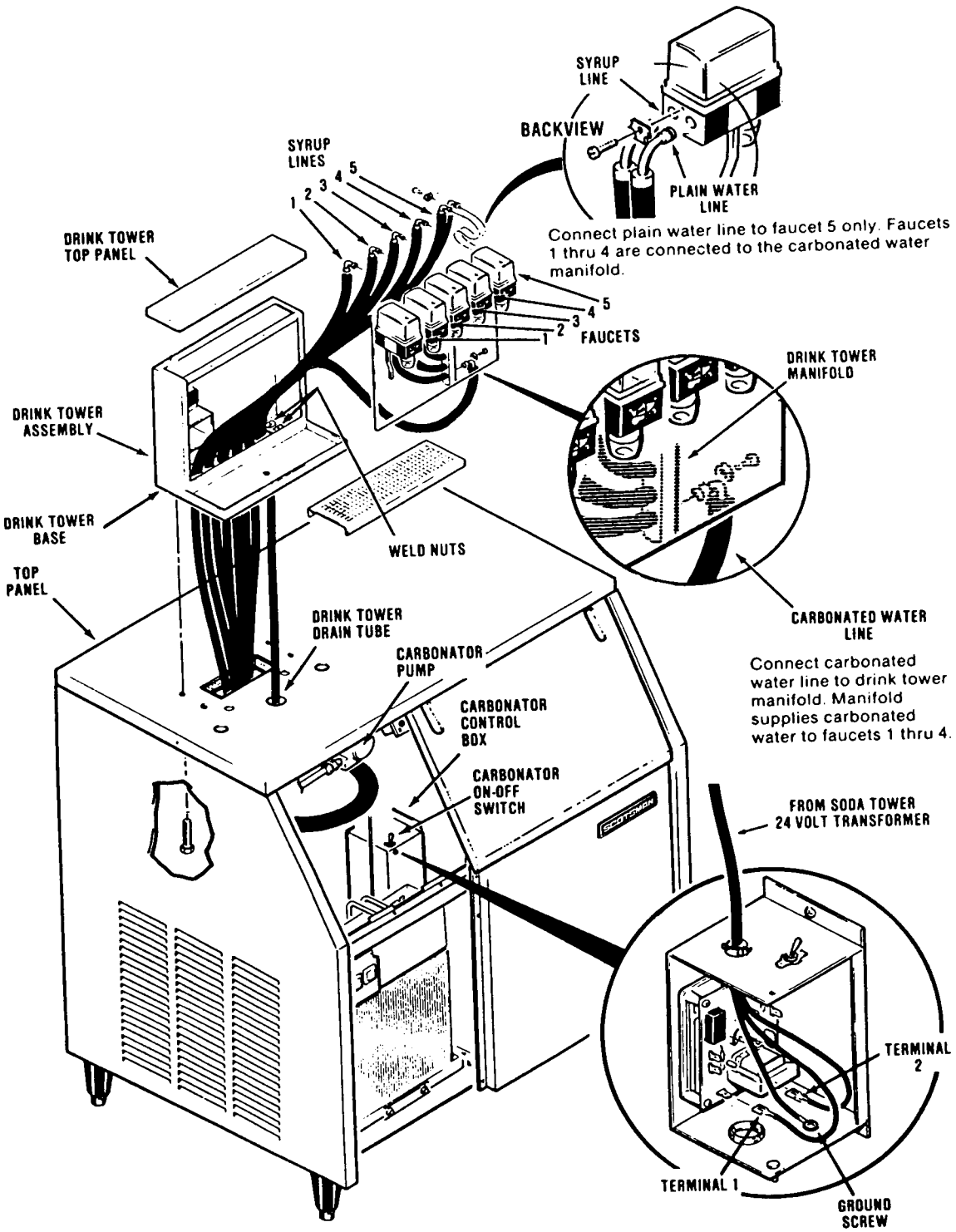
SYRUP LINE
BACKVIEW
PLAIN WATER LINE
SYRUP LINES
1 2 3 4 5
DRINK TOWER TOP PANEL
Connect plain water line to faucet 5 only. Faucets 1 thru 4 are connected to the carbonated water manifold.
5 4 3 2 1
FAUCETS
DRINK TOWER MANIFOLD
DRINK TOWER ASSEMBLY
DRINK TOWER BASE
WELD NUTS
TOP PANEL
DRINK TOWER DRAIN TUBE
CARBONATOR PUMP
CARBONATOR CONTROL BOX
CARBONATOR ON-OFF SWITCH
CARBONATED WATER LINE
Connect carbonated water line to drink tower manifold. Manifold supplies carbonated water to faucets 1 thru 4.
FROM SODA TOWER 24 VOLT TRANSFORMER
TERMINAL 2
TERMINAL 1
GROUND SCREW

PO760 FOR THE ELECTRICIAN

ELECTRICAL CONNECTIONS

SEE NAMEPLATE for current requirements to determine wire size to be used for electrical hookup. The PO760 Icemaker requires a solid earth ground wire. See wiring diagram.

Be certain the icemaker is connected to its own electrical circuit and individually fused. The maximum allowable voltage variation should not exceed ten percent of the nameplate rating, even under starting conditions. Low voltages can cause erratic operation and may be responsible for serious damage to the overload switch and motor windings.

All external wiring should conform to the national, state and local electrical codes. A permit and services of a licensed electrician will be required.

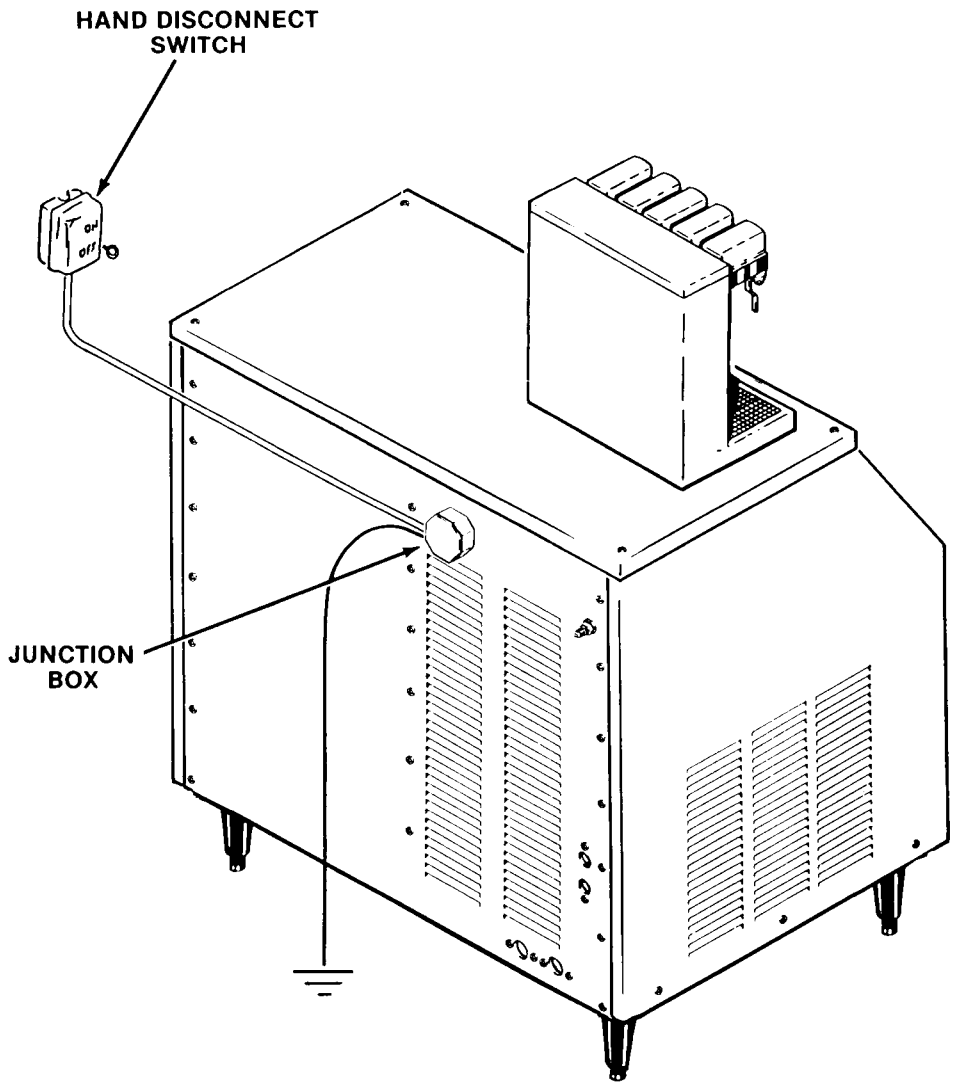

PO760 FOR THE PLUMBER

WATER SUPPLY AND DRAIN CONNECTIONS

AIR-COOLED MODELS: The recommended water supply line is a 3/8-inch O.D. copper tubing with a minimum pressure of 20 PSIG. A 3/8-inch flare fitting is provided at the water inlet. Connect to cold water supply line with standard plumbing fittings, with a shut off valve installed in an accessible place between the water supply and the cabinet.

In come cases, a plumbing permit and services of a licensed plumber will be required.

CAUTION

This icemaker is equipped with a low water pressure safety device, which in the event of interruptions or low water pressure, the icemaker will automatically stop to prevent damage. It will restart automatically after water pressure is restored.

The icemaker in this cabinet will not operate properly when water supply temperatures are below 40-degrees F. or above 100-degrees F.

WATER-COOLED MODELS: On water-cooled models a separate connection to the condenser is required. 3/8-inch O.D. copper tubing is recommended for the separate water inlet line and a separate drain line must be connected.

NOTE

The CAUTION in the text for the air-cooled models equally applies for the water-cooled models. In both type installations, water supply must be installed to conform with the local plumbing codes. In some cases a plumbing permit and services of a licensed plumber will be required.

Local water conditions may require the use of water filtration and/or water treatment equipment. Consult your local SCOTSMAN Distributor for advice. Untreated or unfiltered water may adversely affect the operation of any icemaker.

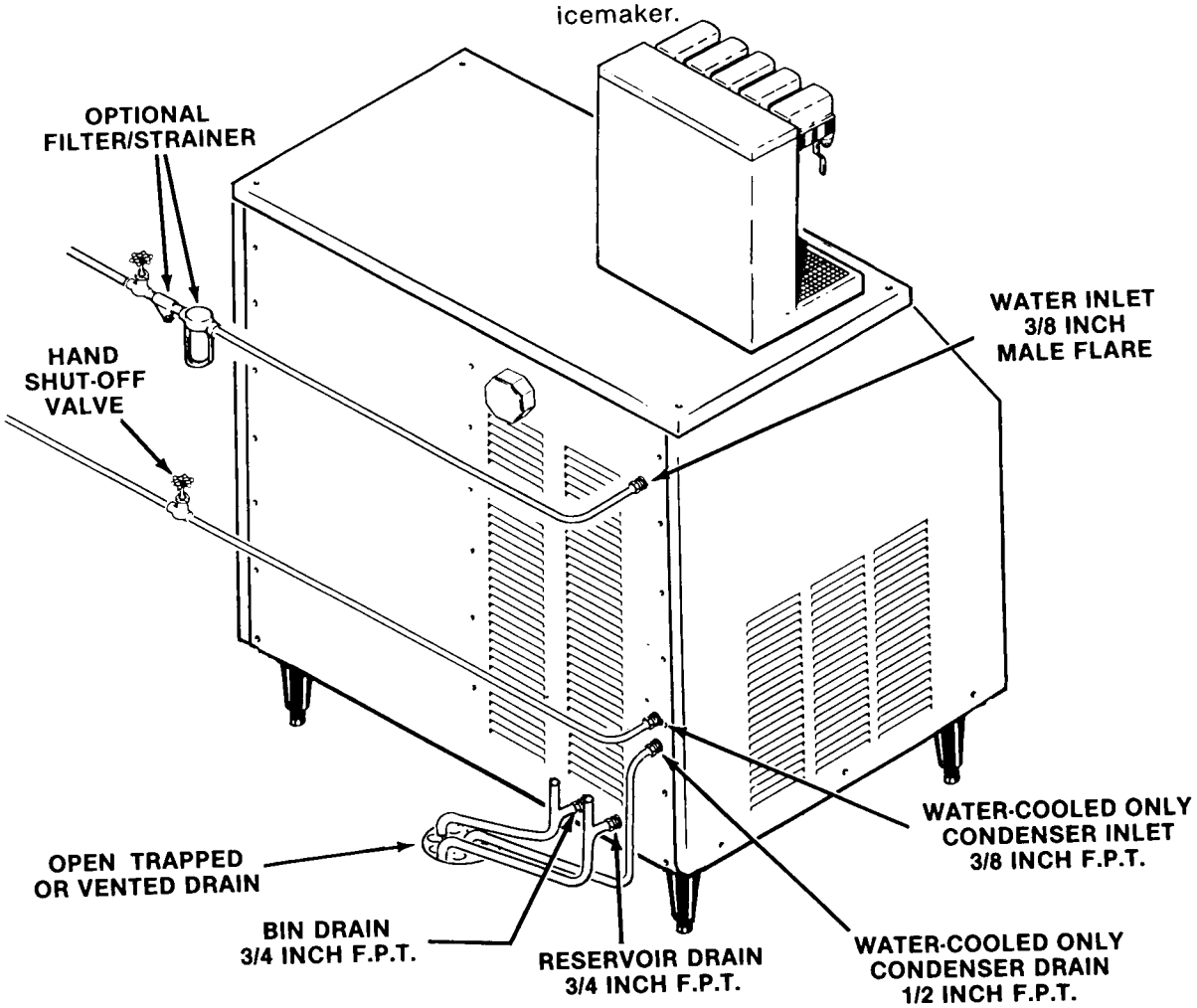

PO760 FOR THE INSTALLER

FINAL CHECK LIST

1. Is the cabinet in a room where ambient temperatures are within the minimum and maximum temperatures specified?
2. Is there at least six inches clearance at the left side and rear of the cabinets for proper air circulation?
3. Has water supply pressure been checked to insure a minimum of 20 PSIG and a maximum of 120 PSIG operating pressure?
4. Is the cabinet level?
5. Have all electrical and piping connections been made and the water supply line shut-off valve installed and electrical wiring properly connected?
6. Have the compressor hold-down nuts been checked to be sure the compressor is snug on the mounting pads?
7. Check all refrigerant lines and conduit lines, to guard against vibration or rubbing and possible failure.
8. Have the bin and cabinet been wiped clean?
9. Has the Manufacturer's Registration Card been properly filled out? Check for correct model and serial numbers from Serial nameplate, then mail the completed card to the SCOTSMAN factory.
10. Has the owner/user been given the Service Manual and instructed how to operate and maintain the icemaker?
11. Has the owner been given the name and telephone number of the authorized SCOTSMAN Service Agency serving him?

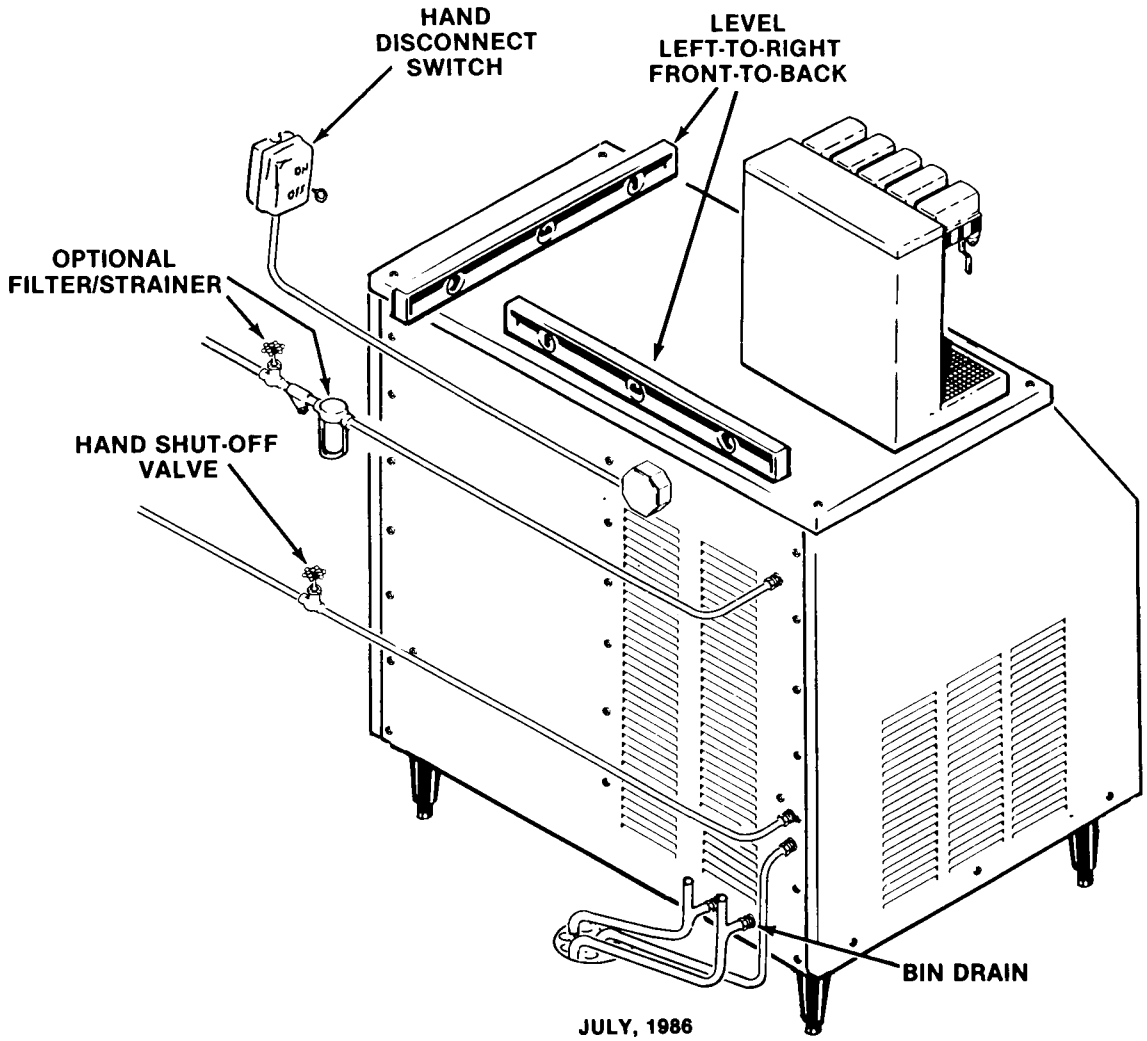

PO760 START-UP

START UP - CARBONATION SYSTEM

1. Remove screws and remove trim strip. Remove screws and the upper left front panel.
2. OPEN the water supply line shutoff valve.
3. Observe the water filling operation, see water schematic.
   a. Water flows into water reservoir.
   b. Water flows through water feed line to bottom of freezer assembly.
   c. Float moves up as water rises.
   d. Float stops water flow, when water level reaches the molded horizontal line, on the body of the water reservoir.
4. Check all internal water connections for leaks.
5. Connect electrical power from the building source to the icemaker and check voltage.
5. OPEN the soda water valve for one-half minute to blow all air out of the carbonator.
6. CLOSE the faucet.
7. Adjust the CO_2 high pressure regulator and set at 80 PSIG.
8. Slowly open the CO_2 low pressure regulator and set about 15 to 20 PSIG.
9. Check all syrup line fittings to cold plate, dispensing valve connections, etc., with bubble soap and correct any leaks.
10. Move the manual ON-OFF toggle switch, on the top of the carbonator control box, to the ON position. OPEN the soda water valve to start the carbonator pump motor.
11. When the pump starts, CLOSE the soda water valve.
12. Draw several glasses of water and observe the carbonator pump operation. Hold each of the valves open until a full stream of water is obtained.
13. Adjust dispenser drink heads to give correct proportions of dispensed syrup and carbonated water. Refer to the valve instruction sheet for proper adjustment.

NOTE

The pump will operate after about 14 ounces of carbonated water has been drawn. The carbonator will operate satisfactorily on CO_2 gas pressures from 80 to 120 PSIG. For maximum CO_2 gas economy, set the high pressure regulator gauge at 80 PSIG; or, adjust to suit requirements of the faucets used.

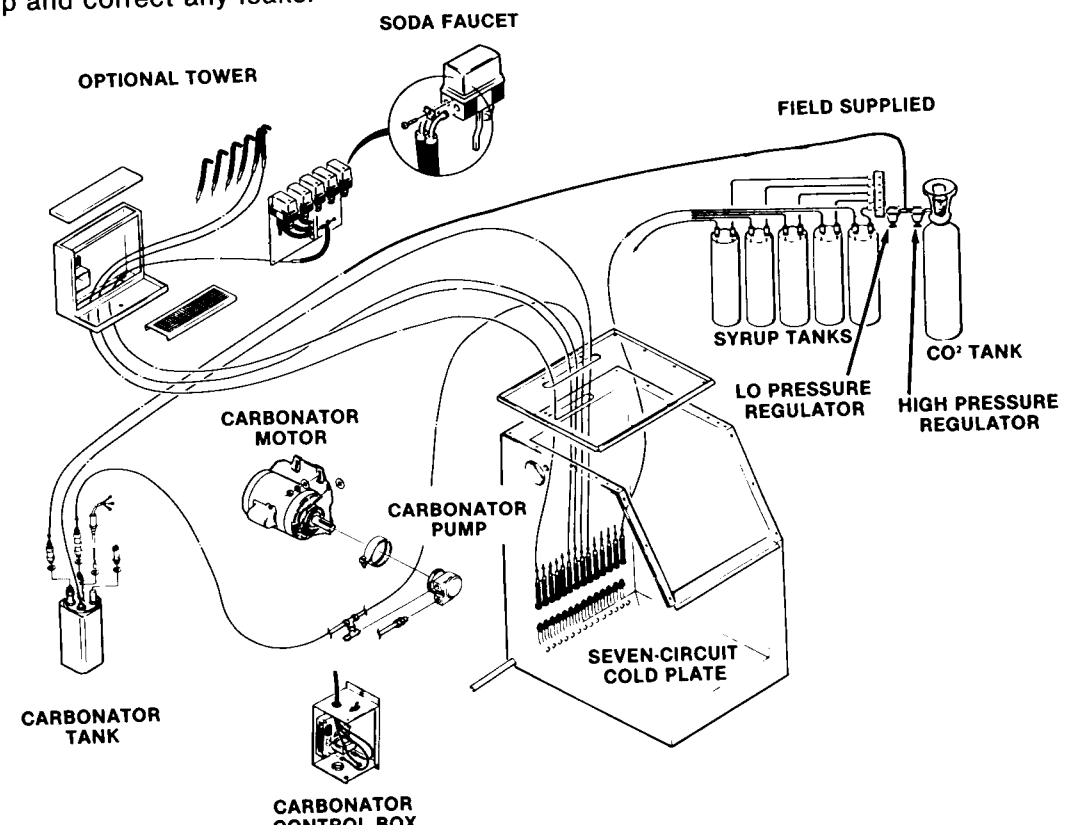

PO760 START-UP

START UP - ICEMAKER

1. Press the Master ON-OFF pushbutton and the START-RESET to ON position to start the automatic icemaker operation.

CAUTION

BE ALERT that momentary LOSS OF POWER, such as a brief power outage, will cause the RED light of the START-RESET pushbutton to turn ON. It must be PRESSED, to reset and restart the Icemaker.

Repeated need to PRESS the START-RESET pushbutton, requires checking for:

1. **Faulty bin thermostat control.**
2. **Need to clear jammed ice tube.**
3. **Loose wiring connections.**

2. Observe that ice begins dropping into the ice storage bin.
3. Let the system operate until ice covers the bottom of the bin. Check for any excess noises beyond normal compressor noise:
   a. Fan noises, when air-cooled: blades touch other surfaces; blades bent, out-of-balance, or loose on shaft.
   b. Vibrating type, from touching lines.
   c. Chattering: Lack of water in freezer.
   d. Compressor loose at one or more hold-down bolts.

CAUTION

This Icemaker is equipped with a low water pressure safety device, which in the event of interruptions or low water pressure, the Icemaker will automatically stop to prevent damage. It will restart automatically after the water pressure is restored.

4. Check Lo side pressure. Should be 10 ± 2 PSIG.
5. Check on Water-Cooled only, High side pressure - adjust if necessary to 135 PSIG.
6. Shut off water to test water safety switch. Compressor should stop. Turn water back on, compressor should start.
7. Check amp draw, compare to Nameplate.
8. Place ice on the ice storage bin thermostat control bulb, to test shut-off.

NOTE

Within minutes after the ice is removed from the sensing bulb, the bulb will warm up and cause the icemaker to restart. This control is factory set and should not be reset until testing is performed. Normal setting is 35-degrees F. CUT-OUT and 45-degrees F. CUT-IN, to prevent short cycling.

9. Thoroughly explain to the owner/user the significant specifications of the icemaker, the start up and operation, going through the procedures for the operating instructions. Answer all questions about the icemaker, by the owner; and, inform the owner of the name and telephone number of the authorized SCOTSMAN Distributor or Service Agency serving him.

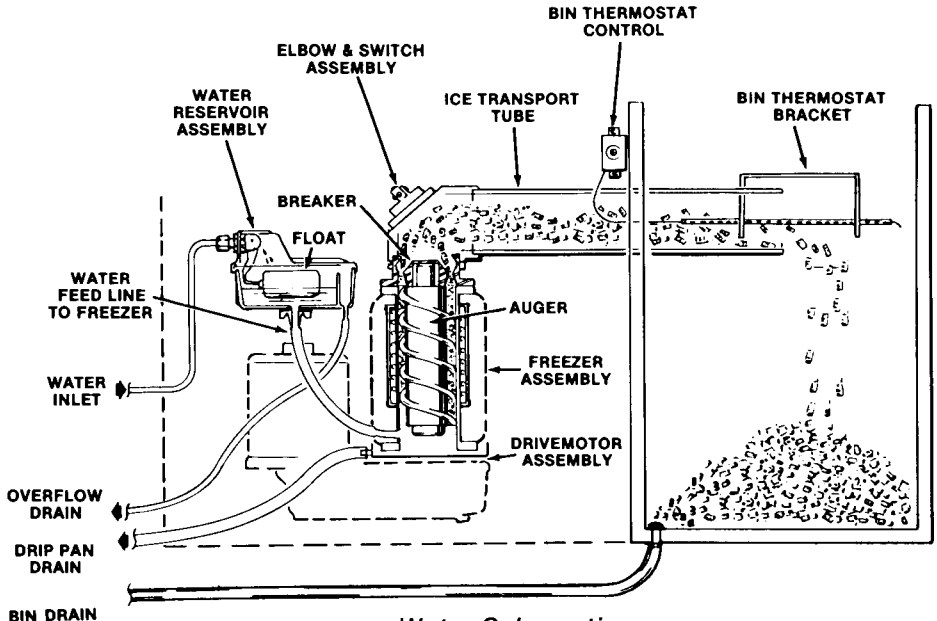

Water Schematic

PO760 OPERATION

OPERATION

ICEMAKER

The water supply flows from the building source through the inline water strainer, enters at the unit fitting and on to the water reservoir. The water reservoir functions to maintain a constant water level inside the freezer assembly. Water from the water reservoir enters at the bottom of the freezer assembly and is changed into ice by low temperatures inside the freezer.

A stainless steel auger within the freezer is powered by the drivemotor assembly, a direct-drive gear-motor, and the rotating auger carries the ice upward to the end of the auger. See Water Schematic, where excess water is pressed out of the ice, as it is extruded and broken into random length chunks of ice and pushed out through the ice transport tube and into the ice storage bin.

Pressing the Master ON-OFF pushbutton to ON, starts the automatic and continuous icemaking process. When the ice storage bin has been filled with ice, up to the level of the bin thermostat control capillary bulb, the icemaking process shuts OFF.

As ice is removed from the ice storage bin, the bulb warms up, restarting the automatic icemaking process.

Factory settings for the bin thermostat are 35-degrees F. CUT-OUT and 45-degrees F. CUT-IN.

Altitude adjustment should ONLY be performed on icemakers installed at 2000-feet level locations and ABOVE, and adjust only in increments of one-fourth turn of screw at a time.

ELECTRICAL/REFRIGERATION

The Model PO760 icemakers are designed to operate on standard electrical supply 115 volts, 60 Hertz, single phase. Other voltage requirements are available on special order. Therefore, always CHECK NAMEPLATE for electrical information BEFORE proceeding with electrical wiring connections to the icemaker.

Cold ambient temperatures and interruptions in water supply are conditions that can cause excessively hard ice and overloads within the freezer assembly, which is directly transmitted to the drivemotor; and in turn, will cause speed reduction or ultimate freezeup.

When the drivemotor is slowed to a pre-determined RPM, a sensing switch mounted on top of the motor is designed to open the electrical circuit to the compressor. The compressor stops operating, no more ice is produced, and the drivemotor continues to operate rotating the auger to clear the overload and gradually build up to full speed.

At a pre-determined higher RPM drivemotor speed, the speed sensing switch closes the electrical circuit to the compressor, causing the normal icemaking process to resume.

The elbow & switch assembly is mounted on top of the freezer assembly and movement of ice against the rubber diaphragm inside the elbow, actuates the switch. The switch acts as a backup safety switch, should the bin thermostat control fail, and cause ice to jam up the ice transport tube. This safety switch will shut off the icemaker when actuated; or, as stated earlier, when there may occur a momentary loss of power, such as a brief power outage, there will be an immediate and complete shutdown of the icemaker. Pressing the START-RESET pushbutton will of course reset the circuit for RESTART, when the Master ON-OFF pushbutton is ON.

There are three safety controls in the control box on the water-cooled models and two safety controls in the control box for the air-cooled models. The low pressure control, an automatic reset, nonadjustable control, is used on both models and is set to open at zero to four PSIG to stop the compressor. The auger delay switch, a single-pole double-throw (SPDT) switch, functions as a control device to allow the drivemotor to rotate the auger to clear the freezing chamber while the compressor circuit is OFF.

Refer to the appropriate wiring diagram and trace circuitry and control functions, as described in the following paragraph.

As shown on all SCOTSMAN wiring diagrams, the controls are in the ICEMAKING MODE. Thus, the 1-2 contacts are CLOSED. At START-UP, the 1-2 contacts are OPEN and the 3-2 contacts are CLOSED. As the icemaker begins to operate, the low side pressure starts to decrease from the stabilized or at-rest pressure. As soon as the pressure is reduced to 20 PSIG, the 3-2 contacts OPEN and the 1-2 contacts CLOSE.

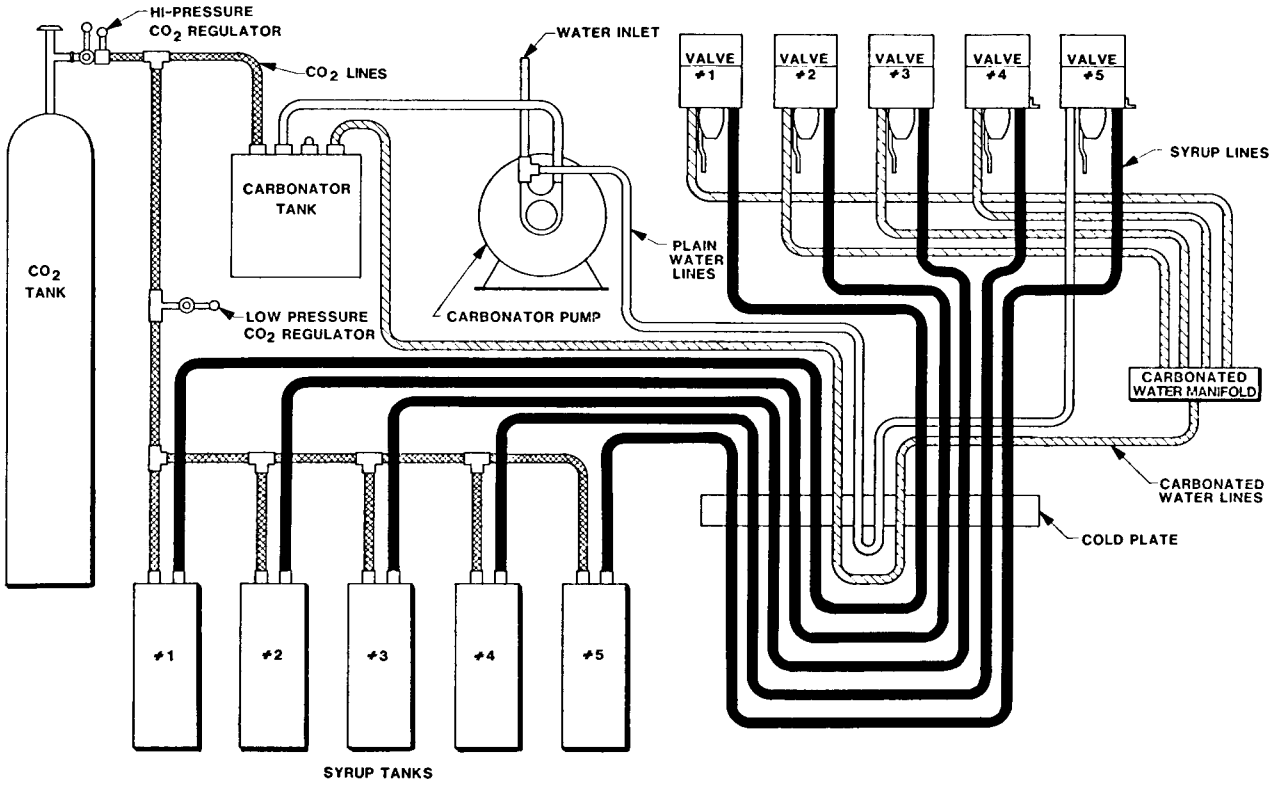

Post-Mix Dispenser System Schematic

PO760 OPERATION

CARBONATION

In these SCOTSMAN Dispensers, CO_2 gas pressure is supplied by the CO_2 gas cylinder and is present throughout the system to the carbonator tank and keeps the water carbonated. Without adequate cooling, however, carbonation escapes rapidly after the water leaves the carbonator tank. In order to retain the proper level of carbonation, soft drinks should be dispensed at 40° F. or colder. The ice/cold plate combination in this SCOTSMAN icemaker can provide the proper cooling without danger of freezing the lines.

CARBONATOR TANK

From the carbonator pump the water is pumped to the carbonator tank at high pressure. The water inlet to the carbonator tank is a check valve; therefore, the water enters the tank only when the pump is operating and the water pressure is above CO_2 pressure in the carbonator tank. A water jet breaks up the water into fine spray, as it enters the tank. The CO_2 atmosphere inside the tank mixes with the water to produce carbonated water. The CO_2 gas from the CO_2 cylinder enters the tank through the check valve.

The carbonated water leaves the carbonator tank and is chilled in the stainless steel coils in the cold plate prior to being delivered to the dispensing faucets for use as carbonated water or mixing with syrup as carbonated drinks.

Co_2 gas from the Co_2cylinder is routed to two places. First, to the carbonator tank where it is mixed with water to produce soda or carbonated water. Second, it is routed to each of the syrup tanks, where the CO_2 gas pressure is used to force the syrup in the tanks through the syrup lines, the stainless steel syrup cooling coils in the cold plate and on to the dispensing faucets, where it is mixed with the carbonated water to provide carbonated soft drinks.

LIQUID LEVEL CONTROL

The pump operation and carbonator tank water level are controlled by the liquid level control.

The solid state control supplies a low voltage circuit to the carbonator tank probe. The prober is highly sensitive and will operate with very pure water, even distilled water.

At start up, the pump motor contacts in the liquid level control are closed and the pump is in operation. As the water rises in the carbonator tank, it comes in contact with the low-level electrode. Nothing happens, since the wire from the electrode connects to an open switch or contact in the liquid level control. As the water continues to rise, it contacts the high-level electrode.

At this instant, an electrical circuit is completed from the common electrode, the body of the tank, through the water to the high-level electrode, through the electrode control and back to the common electrode. This completion of this circuit indirectly energizes the contacts which opens the pump motor circuit and closes a circuit to the electrode. Now as carbonated water is used and the water level drops and breaks contact with the high-level electrode, the pump will remain OFF, since the relay electrode contacts provide a circuit between the high-level and low-level electrodes. As the carbonated water level continues to drop, it breaks contact with the low-level electrode, which indirectly de-energizes the contacts and the pump operates and begins filling the carbonator tank. This cycle continues over and over again, always maintaining a carbonated water level, between the tips of the two electrodes.

Pressure type Dispensing Systems require a CO_2 high pressure regulator gauge to control pressure to the carbonator tank and a CO_2 low pressure regulator gauge to control pressure to the syrup tanks forcing syrup through lines, via the cold plate, to the dispensing heads. Normal low pressure setting is 15 to 20 PSIG.

PO760 OPERATION

The system is automatic in operation and requires no attention except maintaining the Co_2 supply and periodic servicing of water supply line filter.

CAUTION

1. **Insufficient water supply will cause noisy operation and eventual damage to the pump. If the strainer and filter are clear and the water supply line valves open, a noisy pump operation indicates insufficient water supply.**
2. **To prevent water line freeze up, should the installation be idle and exposed to freezing temperatures, disconnect the water supply line and blow all water out of the carbonation system.**

FACTS ABOUT CO_2

CHEMICAL GAS: Carbonic Anhydride, Carbonic Gas, or Carbon Dioxide, as it is variously termed, has the chemical symbol CO_2. It is under normal conditions, a colorless, pungent gas, one and one-half times heavier than air. Chemically, it is the combustion product of the element carbon. It occurs in nature as the result of all types of combustion.

Carbonated water has been found in natural springs in many parts of the world. Such springs have been known for centuries and have been highly regarded for beverage purposes.

Many of the desirable characteristics of carbonated beverages are due to the carbonic gas contained in them. It is therefore, most important to determine the proper amount of carbonation such beverages should contain, and to provide the necessary control to ensure the product carbonation levels.

GOVERNING FACTORS: Carbonated water is largely a mechanical mixture of CO_2 and water and the term, carbonated water, is usually understood to mean water that contains gas to its capacity.

This capacity varies with pressure and temperature. The amount of gas water will absorb increases as the temperature decreases.

Therefore, any measure of the actual gas content of carbonated water will depend on the two factors — pressure and temperature.

The unit of measure that has been adopted as standard is: the volume.

One volume is the amount of gas that water will absorb at atmospheric pressure and at 60 degrees fahrenheit. A volume of gas occupies the same space as does the water by which it is absorbed.

EFFECT OF TEMPERATURE: The Effect of Temperature Chart shows the effect of temperature change on the amount of gas water will absorb.

The pressure is constant, namely, atmospheric or zero pounds gauge. As the temperature of the water is lowered, the amount of gas it will absorb increases, until at 60-degrees F. it is one volume (See the Effect of Temperature Chart). Note that from 60-degrees F. to 150-degrees F. the slope of the curve changes gradually. However, from 60-degrees F. to 32-degrees F. the curve changes more abruptly. At 32-degrees F., or slightly above the freezing point, 1.7 volumes of gas are absorbed by the water at atmospheric pressure. From this curve, it will be apparent that the cooler the water is, the more gas it will absorb.

EFFECT OF PRESSURE: The Effect of Pressure Chart shows the effect of increasing pressures on the amount of gas that water will absorb (temperature being constant). Note that the chart is a straight line, of the same slope throughout, indicating that as the pressure is increased, the gas volumes increase. Furthermore, the gas volume increase is directly proportional to the pressure.

To illustrate: at zero pounds gauge and 60 degrees F., water will absorb one additional volume of gas. If the temperature of the water is 45-degrees F., then, for every 15 pounds increase in pressure, the water will absorb 1.3 volumes of gas.

FOR UNIFORM BEVERAGE — Control Carbonation: Carbonation is an important taste ingredient of your beverage. One of the vital attributes of any beverage is uniform taste, drink after drink. There are four elements that influence the taste of a beverage:

1. FLAVOR
2. SWEETNESS
3. CARBONATION
4. TEMPERATURE

PO760 OPERATION

All but the final temperature of your drink are susceptible to direct control at your location. Flavor and sweetness standards should be and probably are definitely established by means of exact formulas.

Carbonation standards should also be established for each flavor in your line — Sparkling water, ginger ales, and other mixers should be in the high carbonation bracket — the ideal to be sought for is the highest carbonation practically available.

Cola drinks, root beer and other low acid drinks are in the next bracket, usually carbonated to three or three and one-half volumes.

Some bottlers prefer fruit drinks, especially orange, at a lower carbonation. Determine a standard of carbonation for each flavor that you consider best for your market.

Set up definite instructions for maintaining these standards, just as you maintain standard formulas for the sugar flavor, acid and other ingredients.

Having determined the carbonation standards, it is important that all concerned know how to control the factors that will enable you to maintain them.

HOW TO PRODUCE UNIFORM BEVERAGES: Bottlers know the importance of developing the proper formula for a beverage. They fully realize that for any bottled beverage to achieve popular favor, it must be right in flavor, in taste and in gas content.

The development of the proper formula for a beverage is, of course, an essential step in establishing that beverage in popular favor. To keep its popularity, the beverage must be the same from day-to-day and month-to-month. The formula must be followed exactly and the beverage produced in just the same manner.

This means that perfect control of variable factors is necessary to assure uniformity.

The number of volumes of gas in a finished beverage has a definite relationship to the taste of the beverage. Correct carbonation means a sparkling pungent, thirst-quenching beverage that completely satisfies the consumer. Low carbonation leaves the beverage with a flat, insipid taste which is unsatisfactory. Finished beverages should be checked at frequent intervals to assure proper carbonation in the drink.

The amount of sugar in a beverage determines, with a given acid content, its sweetness. The sugar also has another important function in the beverage. Sugar makes the body of the beverage and body is a necessary background for any flavor. A change in the body changes the taste of the beverage even though the same flavor is used. High quality extracts are, of course, a necessity.

Control of sugar content of the beverage is very important. It depends on the Beaume of syrup used and the throw used. Variation in syrup density changes the finished beverage if the throw remains the same. Variation in the throw will also change the beverage if the syrup density is unchanged. By checking the Beaume of the finished beverage a control is established where it does the most good.

Uniform finished beverages can be made only by positive control over such variable factors in beverage production.

Check the density of your syrup with a Beaume scale.

Check the actual throw in the dispensed drink by measuring individual sample drinks.

Check the final result by using the finished drink tester on the complete beverage.

Check the carbonation in the finished beverage.

KNOW YOUR WATER: Water that is satisfactory for drinking purposes is generally satisfactory for carbonating. There are very few exceptions to this rule.

The water used for carbonating must be clean. That means free from suspended matter of all kinds, including water organisms which may be too small to see, except under a microscope.

All water should be properly filtered and it is advisable to use an activated carbon unit after the filter. The ideal set up is to follow the activated carbon unit with a paper filter. This will prevent particles of the carbon passing through with the water.

Chemical composition of the water does not affect carbonation within the limits of potable water. If enough material were in the solution to interfere with carbonation, it would not be possible to use the water for drinking purposes.

Organic matter in solution can cause trouble if present in excessive quantities, but this trouble is removed by activated carbon.

It may be necessary to treat water chemically in some cases. Hardness can be removed by chemical treatment and that is sometimes advisable to prevent scale formation on machinery, particularly on soaker parts. Alkalinity can be reduced by chemical treatment and that is advisable if the alkalinity is high enough to affect the taste of the water, or if it is sufficient to neutralize too much of the acid in the beverage. If objectionable material is present in the raw water, that may require chemical treatment.

Such treatment, properly handled, does not affect carbonation and it does not change the necessity for proper filtration. Chemical treatment should be followed by filtration.

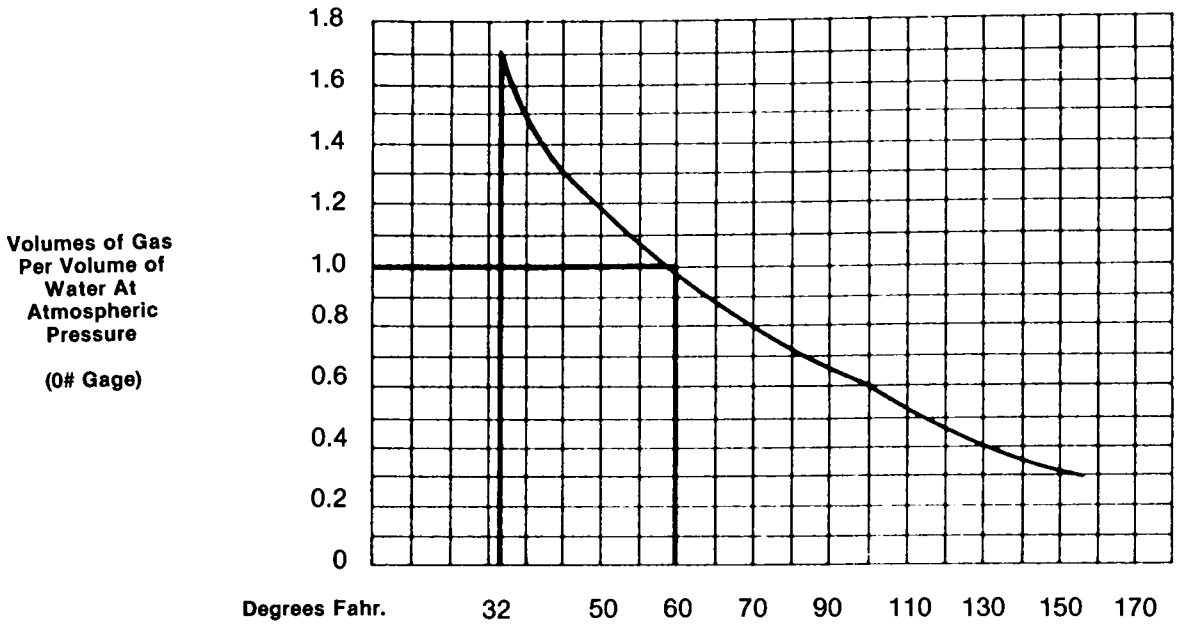

Chart shows the effect of temperature change on the amount of gas water will absorb.

Effect of Temperature

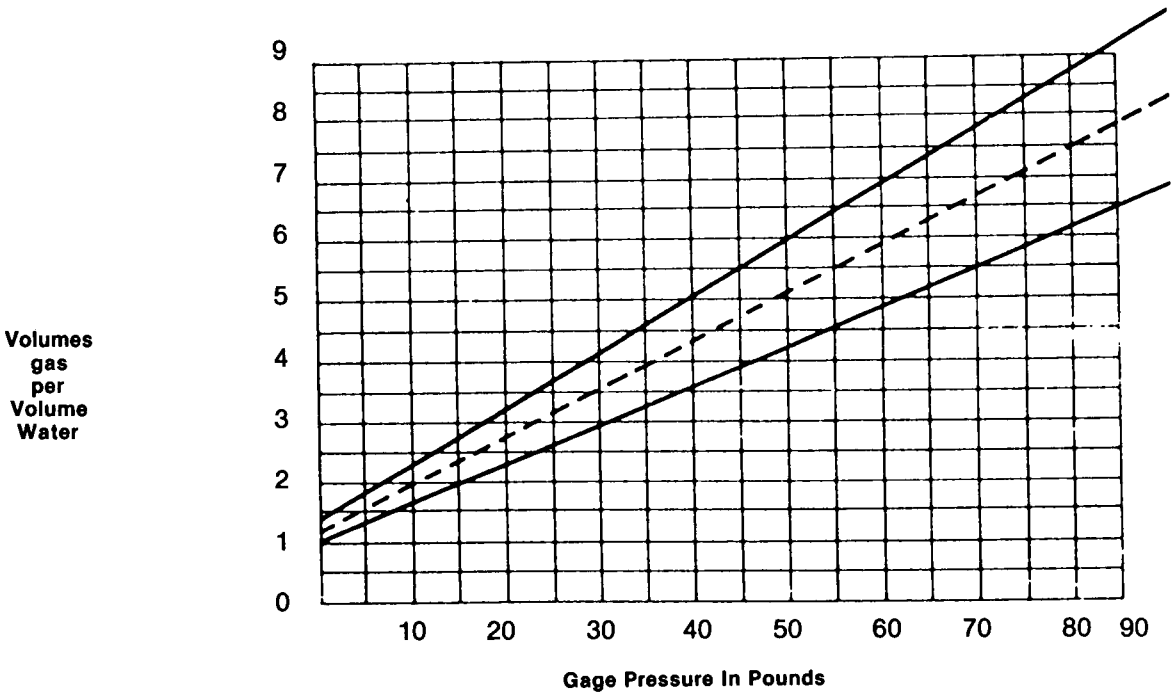

Effect of Pressure

AIR — FOE TO CARBONATION AND HOW TO COMBAT IT: Too much air in the water interferes with proper carbonation and also causes the CO_2 gas to leave the water more quickly when the bottle of finished beverage is opened. It is, therefore, important to reduce the amount of air present to the minimum.

Some air is present in the raw water supply. More may be added in the mechanical handling of the water. When such water reaches the carbonator, the CO_2 gas tends to drive it out of the water. If steps are not taken to remove it, this air will accumulate in the carbonator and much of it will be carried through in the water and into the finished beverage. That is why all liquid carbonators have an automatic air snift.

PRESSURE AND COOLING CONDITIONS: Two conditions must be maintained in order to induce and hold carbonic gas in water. They are:

1. Pressure
2. Adequate refrigeration or cooling

Most of the cold drinks served at a soda fountain are carbonated. Therefore, nothing is more important to the successful operation of a fountain than cold, properly carbonated water to make drinks sparkling, full flavored and fully satisfying in quality.

Water is carbonated by combining it with carbonic acid gas, CO_2. This is done in a sealed chamber by forcing gas from a drum through a pressure regulating valve into the water in this chamber. As the carbonated water is used from this chamber, it is replaced by a high pressure water pump. The operation of this pump is controlled by an automatic switch device which senses the water level.

CO_2 GAS DRUMS: Drums, also called tanks, for carbonic acid gas are made of drawn steel tubing and are built to withstand great pressure. As delivered, they contain liquid gas reduced to liquid form by tremendous compression.

Each drum or tank is equipped with a safety valve set to blow out before internal pressure can explode the drum itself. Once this valve pops off, the contents of a drum will escape. Drums, therefore, should always be stored in a cool place to keep the liquid from expanding and increasing pressure inside the gas drum.

Drums are classified by weight. As a rule, drums are of two sizes: 20-lb. drums and 50-lb. drums. These weights refer to the compressed liquid contents and are in addition to the weight, usually indicated on the head of each drum.

PO760 COMPONENT DESCRIPTION

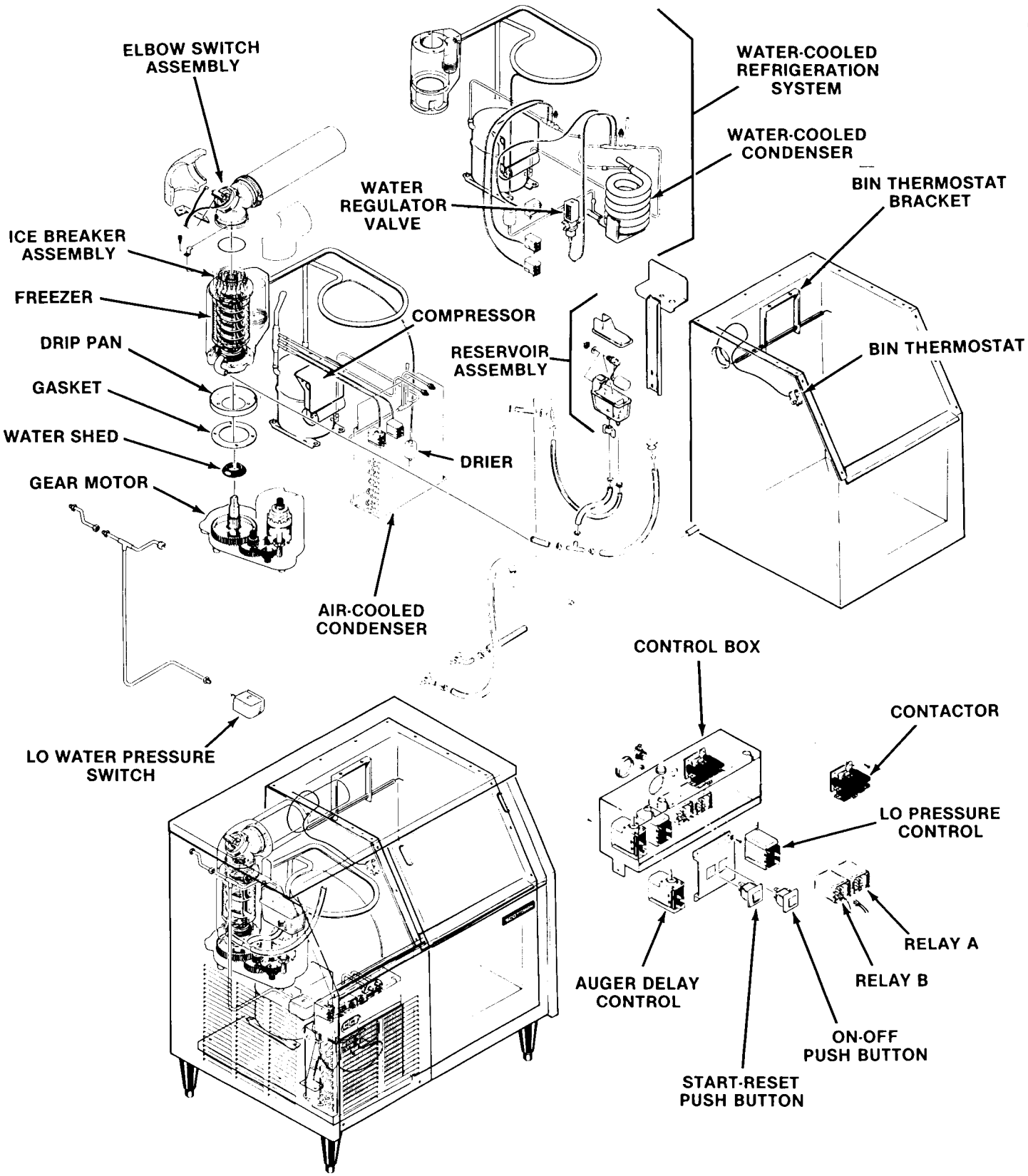

PO760 COMPONENT DESCRIPTION

ELBOW SAFETY SWITCH

The elbow safety switch is an ON-OFF switch that shuts off the compressor when an ice jam presses against the rubber diaphragm depressing the switch and opening the circuit. Melting action relieves pressure closing the circuit, lighting the start-reset pushbutton. The start-reset switch must then be pressed to start the automatic icemaking process.

ICE BREAKER ASSEMBLY

The ice breaker assembly, bolted to the top of the freezer, contains the bearing and seal for the top of the auger. Flaked ice created by the freezer is carried by the auger to the ice breaker assembly and the flaked ice is pushed by the auger through the tapered holes in the ice breaker. Flaked ice is compressed by auger pressure as it is pushed through the ice breaker assembly and the shafts of compressed ice are broken into random lengths of Ice Nuggets by the taper on the top of the ice breaker.

DRIVEMOTOR

The drivemotor assembly rotates the auger through a series of reduction gears from the electric motor to the freezer assembly. Cold ambient temperatures and interruptions in water supply are conditions that can cause excessively hard ice and overloads within the freezer assembly which is directly transmitted to the drivemotor; and in turn, will cause speed reduction or ultimate freezeup.

When the drivemotor is slowed to a pre-determined RPM, a sensing switch in the motor is designed to open the electrical circuit to the compressor. The compressor stops operating, no more ice is produced and the drivemotor continues to operate rotating the auger to clear the overload and gradually build up to full speed.

At a pre-determined higher RPM drivemotor speed, the speed sensing switch closes the electrical circuit to the compressor causing the normal icemaking process to resume.

WATER PRESSURE SAFETY SWITCH installed in the potable water inlet line is set to electrically open at 10 PSIG and stop the compressor. This AUTOMATIC RESET switch will restart the icemaking process when water pressure rises to 20 PSIG.

WATER REGULATOR VALVE
WATER-COOLED MODELS

The water regulator valve functions to maintain a constant head pressure, by regulating the amount of incoming water flow through the condenser, on water-cooled models. The valve operates through the refrigerant system high side pressure. Rotating the adjusting screw, located on top of the valve, can INCREASE or DECREASE the operating head pressure. 135 PSIG is the normal discharge pressure.

WATER RESERVOIR

The water reservoir, with a float valve assembly, maintains a consistant water supply within the freezer assembly. The water level in the reservoir is the same water level as in the freezer and the correct water level in the freezer is level with the top of the auger flights. The water level in the freezer can be adjusted by raising or lowering the water reservoir with the bracket.

BIN THERMOSTAT BRACKET

The bin thermostat bracket is the bin full ice contact point of the bin thermostat capillary tube.

PO760 COMPONENT DESCRIPTION

AIR-COOLED CONTROL BOX ASSEMBLY

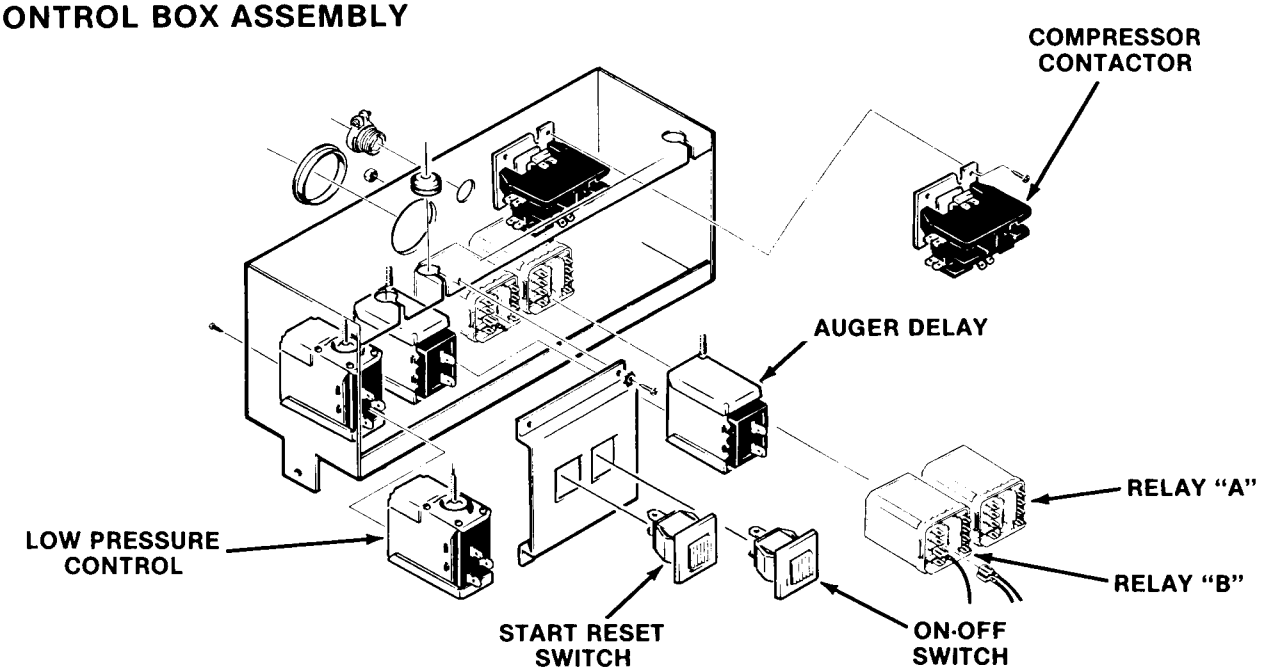

WATER-COOLED CONTROL BOX ASSEMBLY

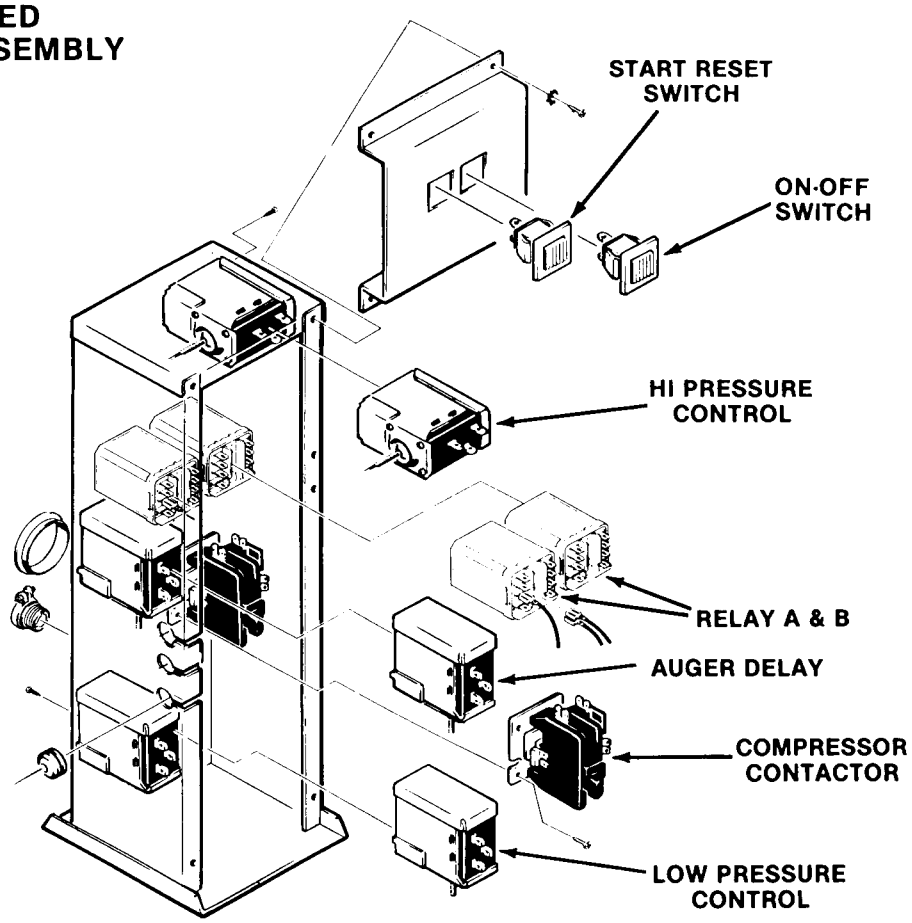

PO760 COMPONENT DESCRIPTION

ON-OFF PUSHBUTTON (AMBER)

When pushed completes the electrical circuit through the icemaker electrical components. The ON-OFF PUSHBUTTON is illuminated whenever it is ON (and electrical power is ON).

START-RESET SWITCH (RED)

Must be pushed to initially start unit. Also it's illuminated when bin overfills and spout switch opens to stop the machine, or in the event of a power interruption to the unit.

REFRIGERANT LO PRESSURE CONTROL is factory set to automatically SHUT DOWN the icemaker if the low-side pressure drops below 4 PSIG. This is an AUTOMATIC RESET control.

AUGER DELAY SWITCH, a single-pole double throw (SPDT) switch, allows the gearmotor to rotate the Auger and clear the freezing chamber after the bin ice level switch circuit to compressor is OFF. When the icemaker restarts, the gearmotor starts in a no load condition, preventing excessive loading of gearmotor and bearings.

HI PRESSURE CONTROL (WATER-COOLED ONLY)

This manual reset control shuts off the ice machine should the high side refrigeration pressure exceed 250 PSIG. This may happen when the cooling water to the condenser is interrupted.

COMPRESSOR CONTACTOR (IN CONTROL BOX)

A single-pole contactor is used to supply current to the compressor; and, is wired so any control in the pilot circuit, such as the bin thermostat and high pressure control, etc., will cause the contactor coil to be de-energized, when the control contact OPENS, thereby breaking the circuit to the compressor through the contactor points.

COMPRESSOR START RELAY (ON COMPRESSOR)

The compressor start relay completes the circuit to the compressor from the start capacitor to provide enough energy to start the compressor. When the compressor motor has reached the proper RPM's, the compressor relay opens and removes the start capacitor from the circuit.

ELBOW SAFETY SWITCH RELAY "A"

The elbow safety switch relay "A" maintains a circuit through the elbow safety switch until the elbow safety switch opens and switches the current through the lamp of the start reset pushbutton, which must be pushed and reset to restart the automatic icemaking process.

RELAY "B"

Relay "B" protects the compressor contactor from chattering during operation of the icemaking system.

PO760 COMPONENT DESCRIPTION

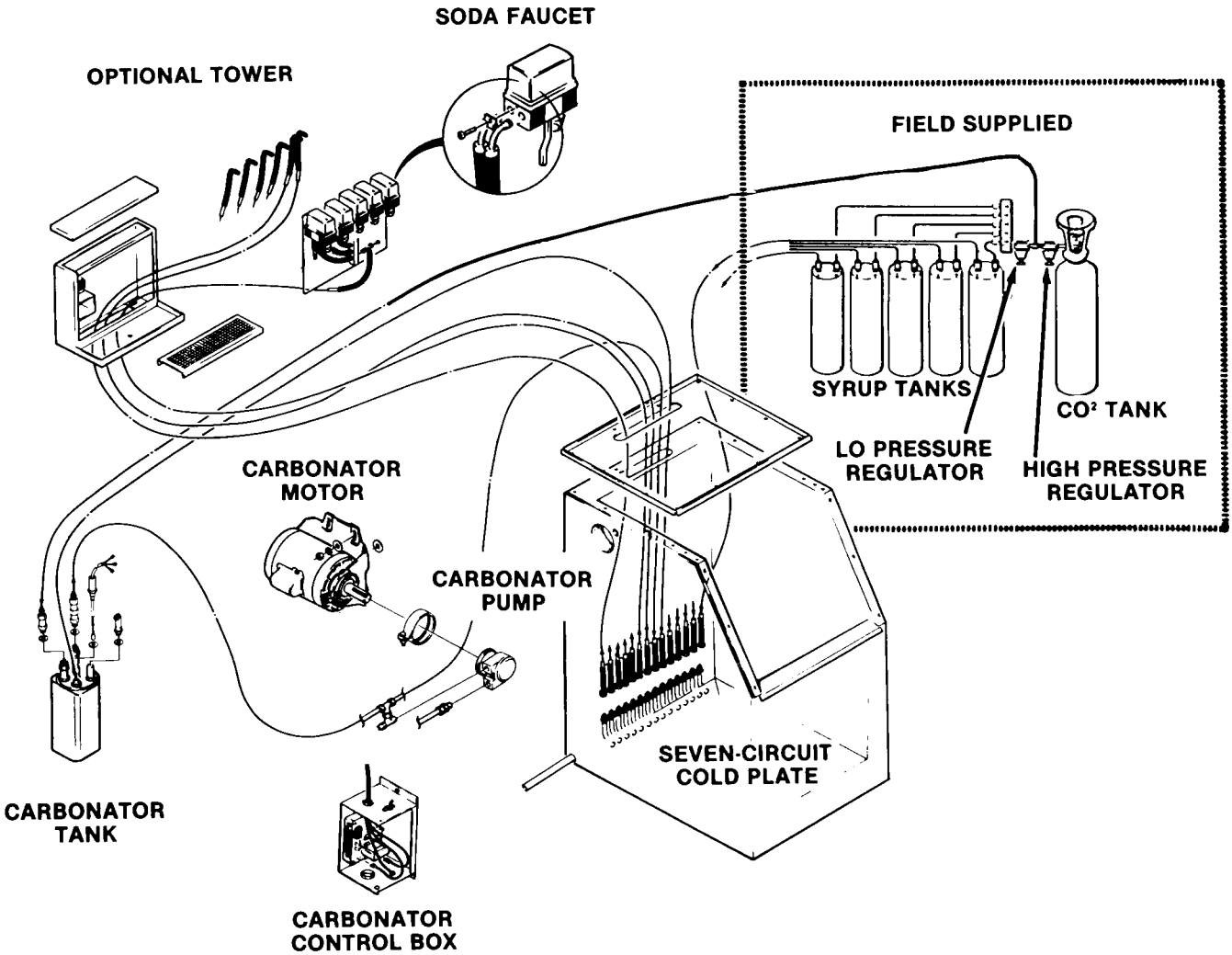

PO760 MAINTENANCE & CLEANING INSTRUCTIONS

A Scotsman Ice System represents a sizable investment of time and money in any company's business. In order to receive the best return for that investment, it MUST receive periodic maintenance.

It is the USER'S RESPONSIBILITY to see that the unit is properly maintained. It is always preferable; and less costly in the long run, to avoid possible down time by keeping it clean, adjusting it as needed and by replacing worn parts before they can cause failure. The following is a list of recommended maintenance that will help keep your machine running with a minimum of problems.

Maintenance and Cleaning should be scheduled at a MINIMUM of twice per year.

ICEMAKER

THE FOLLOWING MAINTENANCE SHOULD BE SCHEDULED AT LEAST TWO TIMES PER YEAR ON THIS ICEMAKER. CALL YOUR AUTHORIZED SCOTSMAN SERVICE AGENCY.

1. Check and clean water line strainers.
2. Check that the water level in the water reservoir is at the water level on the side of the float.
3. Remove cover from water reservoir and depress the float to insure that a full stream of water enters the reservoir.
4. Check that the icemaker cabinet is level, in side-to-side and front-to-back directions.
5. Clean the water reservoir and interior of the freezer assembly, using a solution of SCOTSMAN Ice Machine Cleaner. Refer to CLEANING-Icemaker.
6. When doubtful about refrigerant charge, install refrigerant gauges on Schrader valves and perform steps 6 and 7. Check gauge for compressor head pressure:

   AIR-COOLED MODELS: Varies between 130 and 145 PSIG.

   WATER-COOLED MODELS: Set at 135 PSIG. Adjust screw on top of water regulator valve to raise or lower head pressure.
7. Check gauge for suction line pressure:

   Varies between 8 and 12 PSIG, depending upon inlet water temperature and ambient air temperature.

AFTER SERVICING REFRIGERATION SYSTEM:

TORQUE REFRIGERATION ACCESS VALVE CAPS TO 60-75 INCH POUNDS.

8. Check drivemotor operation:

   Normal operating temperatures are about 160-degrees F., which is hot to touch. Oil motor once per year. Compressor should not start until this motor is up to full speed.

WARNING

Disconnect electrical power supply before removal procedures.

9. Check the elbow safety switch by removing the insulation halves, twisting the locking ring 90° and pulling out the switch assembly. The switch action can then be tested.

NOTE

The elbow safety switch is an ON-OFF switch that shuts off the compressor when an ice jam presses against the rubber diaphragm depressing the switch and opening the circuit. Melting action relieves pressure closing the circuit, lighting the start-reset pushbutton. The start-reset switch must then be pressed to start the automatic icemaking process.

10. Clean the air-cooled condenser, using vacuum cleaner, whisk broom or brush. Instruct customer to clean frequently and to be sure icemaker and fan motor are OFF.
11. Check that fan blades move freely, are not touching any surfaces and are not bent or out of balance.
12. Check for water leaks. Pour water down bin drain to be sure that drain line is open and clear.
13. Check the bin thermostat control bulb for position and function.

NOTE

The bin thermostat is factory set at 10-degrees F. differential and should keep the entire icemaker shut off at least 20 minutes in high ambient temperatures, longer in low ambient temperature during normal operation. Settings are 35-degrees F. CUT-OUT and 45-degrees F. CUT-IN.

PO760 MAINTENANCE & CLEANING INSTRUCTIONS

NOTE

If the unit being serviced is equipped with a STEEL NEEDLE bearing, the breaker assembly should be REPLACED. Contact your local Scotsman Distributor for further information. Breakers with a NON-METALLIC bearing should be cleaned and the seal replaced ONCE PER YEAR. If the type of breaker bearing is not known, the breaker should be inspected. All A and B models were equipped with steel needle bearings. Most C Models have the non-metallic bearings.

1. Remove elbow insulation and remove three Allen head screws and spout retaining brackets from the freezer assembly end of the elbow and switch assembly.
2. Remove three Allen head screws and spout retaining brackets from the freezer assembly end of the elbow and switch assembly.

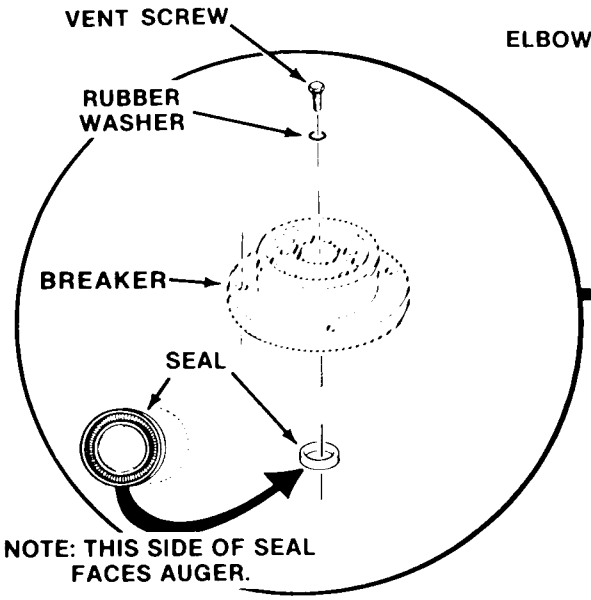

NOTE

In order to accomplish removal of the elbow and switch assembly in the next step, it may be necessary to further remove panels and disassemble the ice transport tube.

3. Lift the elbow and switch assembly and set aside to gain access to the top of the freezer assembly.
4. Remove four capscrews, lockwashers and the ice breaker assembly from the top of the freezer assembly for inspection.
5. Retain the O-ring for replacement during reassembly. Inspect the O-ring for cuts, tears or excessive wear, causes for replacement.
6. Replace the lip seal and inspect the top bearing seated in the ice breaker, wipe clean of mineral build up. Remove auger. Check seal and check auger for stains.

CAUTION

DO NOT force the auger and breaker together without having the vent hole open because pushing the breaker on with no air relief will cause the internal air pressure to force the grease seal away from the breaker.

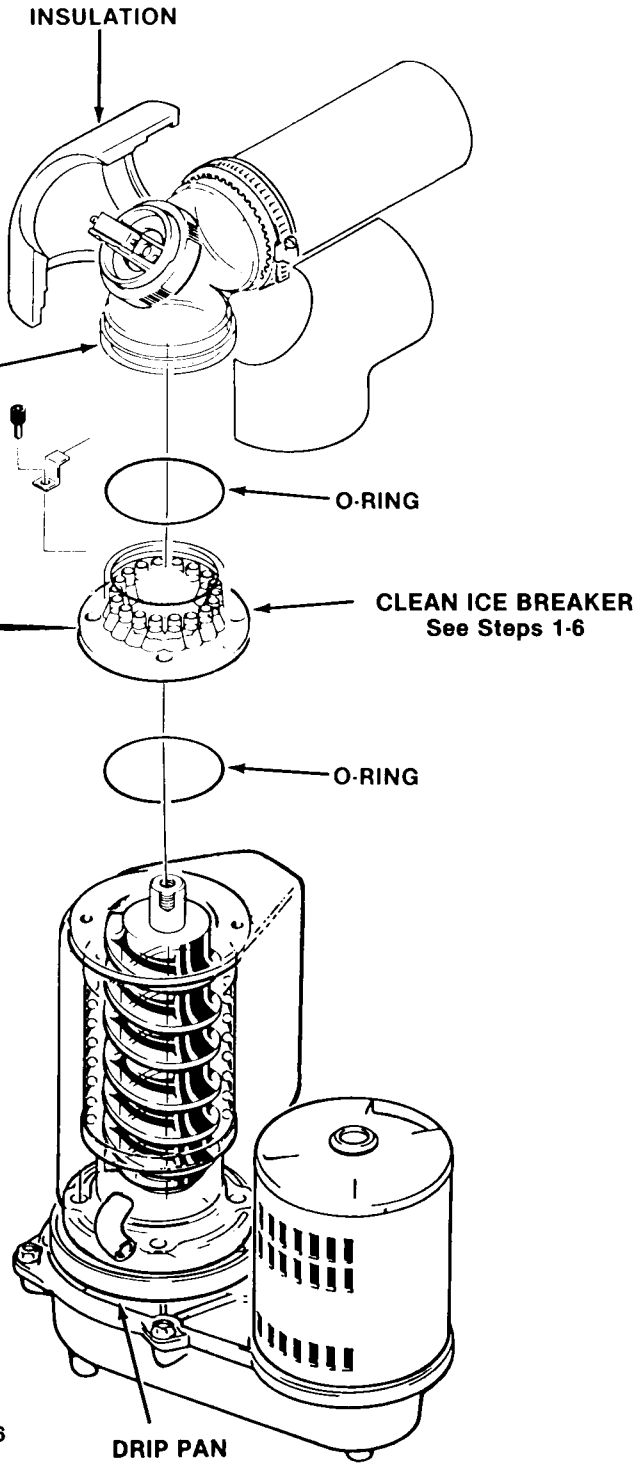

PO760 MAINTENANCE & CLEANING INSTRUCTIONS

CLEANING — Icemaker

1. PRESS the master ON-OFF pushbutton to OFF.
2. Remove the top and front panels.
3. Remove all ice from the ice storage bin.
4. Block the float up in the water reservoir.
5. Use drain hose provided in the water feed tube and drain the reservoir, re-plug drain hose.

WARNING

SCOTSMAN Ice Machine Cleaner contains Phosphoric and Hydroxyacetic acids. These compounds are corrosive and may cause burns. If swallowed, DO NOT induce vomiting. Give large amounts of water or milk. Call Physician immediately. In case of external contact flush with water. KEEP OUT OF THE REACH OF CHILDREN.

6. Prepare cleaning solution: Mix six ounces of SCOTSMAN Ice Machine Cleaner with one and one-half quarts of hot water.
7. Slowly pour the cleaning solution into the water reservoir.
8. PRESS the master ON-OFF pushbutton to ON.
9. Continue to slowly pour the cleaning solution into the water reservoir, maintain level just below the reservoir overflow.
10. Continue icemaking, using the cleaning solution, until all the solution is used up and the water reservoir is almost empty. DO NOT allow the icemaker to operate with empty reservoir.
11. PRESS the master ON-OFF pushbutton to OFF.
12. Wash and rinse the water reservoir cover.
13. Remove the block from the float in the water reservoir.
14. PRESS the master ON-OFF pushbutton to ON.
15. Continue icemaking for at least 15 minutes, to flush out any cleaning solution. Check ice for acid taste - continue icemaking until ice tastes sweet.
16. PRESS the master ON-OFF pushbutton to OFF.

WARNING

DO NOT use ice produced from the cleaning solution. Be sure none remains in the bin.

17. Remove all ice from the ice storage bin.
18. Add warm water to the ice storage bin and thoroughly wash and rinse all surfaces within the bin.
19. Clean and sanitize the ice storage bin each week.

NOTE

Cleaning requirements vary according to local water conditions and individual user operation. Visual inspection of the auger before and after cleaning will indicate frequency and procedure to be followed in local areas.

When doubtful about the clean condition of the auger, refer to the removal and replacement of the auger, water seal, o-ring, ice breaker assembly and freezer assembly to inspect the auger condition and the water seal condition.

PO760 MAINTENANCE & CLEANING INSTRUCTIONS

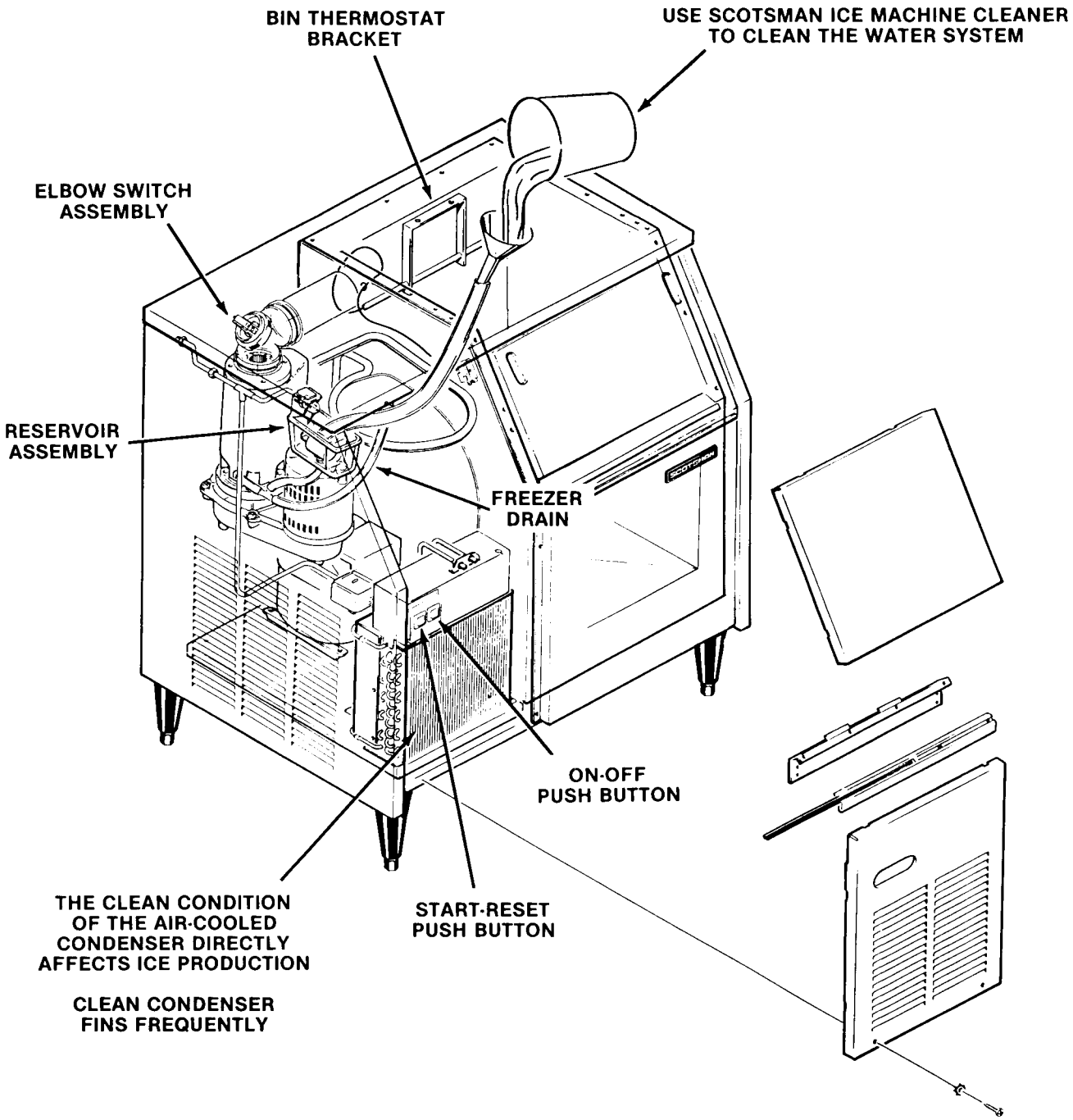

PO760 MAINTENANCE & CLEANING INSTRUCTIONS

WARNING

SCOTSMAN Ice Machine Cleaner contains Phosphoric and Hydroxyacetic acids. These compounds are corrosive and may cause burns. If swallowed, DO NOT induce vomiting. Give large amounts of water or milk. Call Physician immediately. In case of external contact flush with water. KEEP OUT OF THE REACH OF CHILDREN.

SANITIZING

Sanitizing is an important phase of the icemaking and dispensing operation. The following sanitizing procedure should be performed after every repair or replacement of parts in the Icemaker/Drink Dispenser. Additional requirements for performing the sanitizing procedure should be followed in accordance with the requirements of the local Health Authorities.

WARNING

Read WARNING thoroughly BEFORE preparing sanitizing solution, in next step.

1. **STERILEX 3-Q SANITIZING TABLETS**

   DANGER: KEEP OUT OF REACH OF CHILDREN. Tablets may be skin irritation or eye damage. Avoid prolonged skin contact. Do not get in eyes. In case of contact, flush with plenty of water. If irritation persists get medical attention. Avoid contamination of food.

   FIRST AID: If tablets are swallowed, drink promptly a large quantity of milk, egg whites or gelatin solution. Avoid alcohol.

   NOTE TO PHYSICIAN: Probable mucosal damage may contraindicate the use gastric lavage. Measures against circulatory shock, respiratory depression and convulsion may be needed. Rinse empty carton container thoroughly with water and discard. Always follow your health department regulations.

2. **MIKRO-QUAT**

   DANGER: Causes high damage and skin irritation. Do not get in eyes, or skin, or on clothing. Protect eyes when handling concentrated product. Harmful if swallowed. Avoid contamination of food.

   FIRST AID: In case of contact, immediately flush eyes or skin with plenty of water for at least 15 minutes. For eyes, call a physician. Remove and wash contaminated clothing before reuse. If swallowed, drink promptly a large quantity of milk, egg whites or gelatin solution or if these are not available, drink a large quantity of water. Call a physician immediately.

**Sterilex 3-Q sanitizing tablets are distributed by Pittsburgh Chemical Laboratory, Inc., Pittsburgh, PA 15222, and may be obtained through most restaurant supply houses.*

NOTE

Contact your Local Health Authorities and obtain their approval of the sanitizer you intend to use when sanitizing the Icemaker/Drink Dispenser.

Prior to performing the sanitizing procedure, it is assumed the cleaning procedure has been performed.

1. Prepare a sanitizing solution using a quaternary ammonium sanitizing compound.

NOTE

Carefully follow directions and observe all precautions on the sanitizing and compound container.

*One *Sterilex 3-Q sanitizing tablet per three quarts of water yields 200 ppm active quarternary; or, one-third ounce of *Mikro-Quat to one gallon of water yields 235 ppm active quarternary.*

The taste of ice and water will not be affected by the sanitizing of parts using the above mixed sanitizing solutions. Rinsing of part is not required with this relatively mild solution, but air drying of the parts is suggested before reassembly.

2. Immerse all parts, earlier removed and cleaned, in the sanitizing solution; or, if too large for the container of sanitizing solution, thoroughly wash the solution over all surfaces of all parts.
3. Drain all parts and allow to air dry.
4. Pour some of the sanitizing solution into the bin drain and the sink assembly drain.
5. Reassemble all air-dried parts in the Icemaker/Drink Dispenser.
6. Restore electrical power ON, water pressure ON, and pre-mix syrup and CO_2 pressure ON.
7. Replace all covers, doors and panels earlier removed.
8. Clean and sanitize the faucet assemblies and the bin interior and surfaces each week.

**Mikro-Quat, is manufactured by Economics Laboroatory, Inc., Osborn Building, St. Paul, MN 55102, and may be obtained from them through their Magnus Division, The Klenzade Division, or from restaurant supply houses.*

PO760 SERVICE DIAGNOSIS

The following charts list corrective actions for the causes of known symptoms of certain problems that can occur.

INTRODUCTION

SYMPTOM	POSSIBLE CAUSE	CORRECTION
Water Leaks.	Defective water seal.	Replace seal.
	Gravity feed line leaking.	Check hose clamp.
	Water level in reservoir too high.	Adjust water level to molded line on the float assembly.
	Storage bin drain and connecting fittings.	Check and repair.
Excessive noise or chattering.	Mineral or scale deposit on auger and inner freezing chamber walls.	For severe deposit, remove and manually polish auger, sand inner chamber walls of freezer barrel.
		For lighter concentration, use Scotsman Ice Machine Cleaner periodically.
	Intermittent water supply.	Check and clean water strainer.
		Check gravity feed line for air lock.
		Check to be sure float orifice is not restricted
		Check incoming water supply.
		Remove air lock.
	Water level in reservoir too low.	See CORRECTION for Water Leaks above.
	Gear reducer loose on frame.	Tighten gear reducer.
	Motor compressor not solid on rubber mounts.	Repair or replace rubber mounts.
	Gearmotor thrust bearing worn.	Check/replace bearing.
	Top bearing worn.	Check/replace breaker.
	Water interruption.	Check for frozen water inlet to freezer.
Drivemotor makes high pitched noise.	Rotor bearing dry or worn.	Replace motor or bearing.
	Dry grease seal under rotor bearing.	Grease seal.

PO760 SERVICE DIAGNOSIS

SYMPTOM	POSSIBLE CAUSE	CORRECTION
Making wet ice	Back pressure too high.	Overcharge of refrigerant, faulty compressor or high head pressure. Lower pressure as indicated.
	Faulty compressor.	Replace compressor.
Low ice production.	Loss of refrigerant. Under or over-charge of refrigerant.	Check and recharge. See NAMEPLATE for charge correction.
	Dirty or plugged condenser.	Clean condenser.
	Low water level in water reservoir.	See CORRECTION for water leaks above.
	Partial restriction in capillary tube or drier.	Moisture in system. Overcharge of oil in system. Remove charge by blowing back through cap tube.
		Replace drier evacuate and recharge.
	Inlet water strainer partially plugged.	Remove screen and clean.
	Corroded or stained auger due to water condition.	Remove auger and clean, or use Scotsman Ice Machine Cleaner. See Maintenance Section.
Gearmotor noise.	Low on oil.	Remove case cover to check for proper oil level.
		See Removal and Replacement Section for gear motor.
Icemaker will not operate.	Blown fuse in line.	Replace fuse and check for cause of blown fuse.
	Bin thermostat set too high.	Replace thermostat.
	Loose electrical connection.	Check wiring.
	Switch in OFF position.	Set switch to ON position.
	Inoperative master switch.	Replace switch.
	Off on manual-reset pressure control. (Water-Cooled)	Reset. Check for water interruption.
	Low supply water pressure.	Restore water pressure.

PO760 SERVICE DIAGNOSIS

SYMPTOM	POSSIBLE CAUSE	CORRECTION
Icemaker continues to operate with full storage bin.	Bin thermostat not properly set or is defective.	Re-set or replace bin thermostat. Re-set to 35-degrees cut-out, 45-degrees cut-in.
Compressor cycles intermittently.	Low voltage.	Check for overloading.
	Dirty condenser.	Clean condenser.
	Air circulation blocked.	Remove cause or move unit.
	Inoperative condenser fan motor.	Replace motor.
	Non-condensable gases in system.	Check for gas leaks, evacuate and recharge.
	Bin thermostat differential too small causing short cycling.	Replace bin thermostat.
	Low on refrigerant causing low pressure control to cycle.	Check for leaks.
Icemaker operates but makes no ice.	Loss of undercharge of refrigerant.	Check for leaks and recharge. See NAMEPLATE for correct charge.
	Water not entering freezing chamber.	Plugged strainer or supply line. Check and clean. Air lock in gravity feed line. Check and remove air lock. Water interruption, freezer inlet frozen shut.
	Moisture in system.	Check, evacuate, replace drier. Recharge, See NAMEPLATE for correct charge.
	Water seal leaking.	Replace seal.
	Drivemotor stripped.	Repair or replace drivemotor

PO760 SERVICE DIAGNOSIS

CARBONATION SYSTEM

SYMPTOM	POSSIBLE CAUSE	CORRECTION
No carbonated water, pump does not operate.	Check voltage.	Restore voltage.
	Motor burnt out.	Replace pump.
	Liquid level control.	Check wiring.
	Bad bearings causing pump to stop.	Repair or replace motor.
	Tank electrode shorted.	Repair or replace electrode.
	Pump jammed.	Check for foreign particles in pump housing, clean or replace pump.
No carbonated water (pump operates)	Check CO_2 Cylinder empty.	Replace Cylinder.
	Pump rotating backwards.	Reverse wiring inside motor.
	Open in transformer, relay coil, on high level electrode.	Repair or replace faulty part.
	Worn pump.	Replace pump.
	Pump check valve leaks.	Clean or replace check valve.
	Pump bypass valve opens too soon.	Clean, valve is adjustable, set higher; or replace bypass valve.
	Clogged filter or inlet screen.	Clean or replace filter or screen.
	Water line blocked.	Check for defective washer at fittings or plugged check valve on tank.
Flat carbonated water.	CO_2 Gas drum empty or low.	Replace CO_2 drum.
	CO_2 Gas turned OFF.	Turn CO_2 gas ON.
	Regulator set too low.	Increase pressure.
	CO_2 Gas line plugged by swollen washer.	Replace washer.
	Water pressure too high.	Adjust if possible or install water pressure regulator.
Metallic taste in Carbonated water.	Carbonated water backing up into city water line.	Clean water back-pressure check valve, replace washer.
	Carbonated water line connect by mistake to brass or copper lines.	Make proper connection using approved tubing. Use proper beverage tubings.
Carbonated water off taste.	Oil, dirt or grease inside carbonator.	Clean carbonator.
	Oil or pipe dope in water lines.	Clean and flush water lines.
	Tainted CO_2 gas.	Sniff CO_2 gas at drum head to determine if CO_2 drum should be replace.
	Water filter needed or filter element bad.	Install a good waste filter or replace filter element.

PO760 SERVICE DIAGNOSIS

CARBONATION SYSTEM (Continued)

SYMPTOM	POSSIBLE CAUSE	CORRECTION
Gas only flows from dispenser valve.	Water Valve CLOSED.	OPEN water valve.
	Pump motor not cutting on.	Check liquid level control. Check carbonator tank electrode.
Carbonator fills with water.	Water pressure too high.	Adjust if possible, or install pressure reducer.
	CO_2 gas pressure too low.	Set regulator key to deliver proper gas pressure.
	CO_2 gas drum empty.	Replace CO_2 drum.
	Open in transformer, relay coil, or high level electrode.	Repair or replace defective part.
Carbonatred water backs up into city water line.	Dirty or worn back-pressure check valve.	Clean or replace valve seats.
Excessive pumping.	Closed water supply valve.	Open valve.
	Water supply (building or city) shut off.	Re-establish source.
	Automatic switch out of order.	Check switch, replace if necessary.
	Water inlet screen clogged.	Remove and clean screen.
	Pump inlet or check valve out of order.	Repair or replace.
	Swollen washers in hose couplings obstruct flow of water.	Replace washers.
	Tank electrode shorted.	Repair or replace.
Carbonator pump pounds, water running in spurts.	Air in pump.	Vent pump.
	Water valve CLOSED.	OPEN wate valve.
	Filter or strainer plugged.	Clean or replace filter-strainer.
	Inlet line too small.	Replace with 3/8-inch or larger copper line.
Milky carbonated water.	Air in carbonator.	Vent carbonator.
	Pump sucking air.	Check for loose fittings. Replace pump.

PO760 SERVICE DIAGNOSIS

DISPENSING SYSTEM (Continued)

SYMPTOM	POSSIBLE CAUSE	CORRECTION
Drink not sweet enough, excessive soda or water to syrup ratio (light drink).	Syrup solenoid coil defective.	Replace coil.
	Defective syrup solenoid coil connection.	Check and correct connection.
	Carbonator pressure too high.	Check and correct pressure.
	Obstruction in syrup line.	Check transparent block to see if there is any obvious obstruction.
		Back flush.
		Remove and clean syrup plunger and solenoid coil housing.
	Water pressure too high. Drink will also have low carbonation.	Add regulator in water inlet line.
Foaming of finished drink.	Over carbonation of soda.	Reduce CO_2 pressure on carbonator.
	Carbonation of syrup.	Reduce CO_2 pressure on syrup. Some root beers will foam when their CO_2 pressures are above 15 psi.
		Larger sized syrup may be required for long runs.
	Dirty lines, valves, etc.	Backflush.
		Remove and clean syrup plunger and solenoid coil housing.
	Super cooled ice in drink.	Use ice at about 32 degrees F.
	Product temperature too high.	Product temperature must be below 42-degrees F.
	Pressure too high.	Reduce CO_2 pressure to recommended setting.
Drink too sweet, insufficient soda or water to syrup ratio (heavy drink)	Soda solenoid coil defective.	Replace coil.
	Defective soda solenoid coil connection.	Check and correct connection.
	A non-carbonated faucet may be in a high carbonated faucet application.	Replace with correct faucet.
	Insufficient soda flow due to low carbonator pressure.	Check CO_2 supply pressure and replace tank if CO_2 pressure is low and/or reset regulator as required.
	Obstruction in water and/or soda line.	Check out line.
	Water shut-off valve partially closed.	Check and open freely.
	Syrup pressure too high.	Check and reset low pressure regulator.

PO760 SERVICE DIAGNOSIS

DISPENSING SYSTEM

SYMPTOM	POSSIBLE CAUSE	CORRECTION
Syrup or water drips through spout.	Foreign matter on plunger seat.	Operate faucet several times to flush out. Remove plunger from solenoid valve and clean valve port and plunger seat. Back flush valve.
	Nick or cut on plunger seat.	Remove plunger and replace.
	Broken or defective plunger spring.	Remove spring and replace.
Faucet continues to dispense even when lever is not actuated.	Lever is sticking.	Clean syrup from lever and lubricate with petroleum jelly.
	Electric switch defective.	Replace switch.
	Plunger stuck.	Replace spring and/or clean solenoid housing.
		Back flush valve.
Noisy solenoid valve.	Dirt or particles in back of plunger.	Operate faucet several times to flush out.
		Back flush.
		Remove and clean plunger and solenoid housing.
Actuation of lever results in no flow.	Defective switch.	Replace switch.
	Bad solenoid coil and connection.	Check and correct connection.
	Power OFF.	Check circuit and fuse for power ON.
	Low voltage.	Voltage at coil should be 100 volts on 115 VAC line.
		If voltmeter not available, turn off all lights and other electrically operated devices to check under best conditions at that location.
Inconsistent brixing.	Dirty lines, valves, etc.	Backflush.
		Remove and clean syrup plunger and solenoid coil housing.
	CO_2 supply low.	Renew CO_2 cylinder.
	Leak in CO_2 line.	Locate and correct.

NOTE: In new installations, objectionable taste or odor, foaming and inconsistent brixing may be the result of contaminants such as oils or pipe sealing compounds. Thoroughly clean all lines prior to installing and back flush are required.

PO760 ADJUSTMENT PROCEDURES

ADJUSTMENT OF THE BIN THERMOSTAT CONTROL

(Installations 2,000 feet above sea level only)

The control for the bin thermostat is the temperature control, located on the upper part of the retainer wall.

ALTITUDE CORRECTION
(ROBERTSHAW ONLY)

ALTITUDE	TURNS C.W.
2,000	40°
4,000	78°
6,000	115°
8,000	148°
10,000	180°

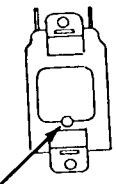

TURN RANGE SCREW

CAUTION

The adjusting screw on the temperature control device has a very sensitive response to adjustment. DO NOT attempt to adjust the screw until after thoroughly reading and understanding the instructions and illustrations. Over-adjusting or erratic guessing, can foul the instrument and cause ultimate delay and part replacement, WHICH COULD HAVE BEEN PREVENTED.

ADJUSTMENT OF THE LEG LEVELERS

When the Icemaker is installed with legs, the legs must be adjusted to level the cabinet. The cabinet must be leveled in the front-to-back and side-to-side directions. This adjustment should be performed during initial installation of the cabinet and anytime the cabinet is moved from the original location to another site.

1. Using a 1-1/8″ open-end wrench, and a carpenter's bubble level, rotate the threaded leveler in each leg to RAISE or LOWER the cabinet until the cabinet is level in the front-to-back direction.
2. Repeat step A, for leveling in the side-to-side direction.
3. Recheck both the front-to-back and the side-to-side leveling and repeat adjustments, as necessary.

ADJUSTMENT OF THE WATER REGULATOR ASSEMBLY

The correct head pressure on water-cooled models is 135 PSIG. Adjustments can be performed on the water regulator assembly to increase or decrease the head pressure.

To adjust the water regulator assembly:

1. To INCREASE the head pressures: Rotate the adjusting screw, on the water regulator assembly COUNTER-CLOCKWISE.
2. To DECREASE the head pressure: Rotate the adjusting screw, on the water regulator assembly CLOCKWISE.

ADJUSTMENT OF THE WATER RESERVOIR FLOAT

The correct water level in the water reservoir should be at the level of the raised molded line, on the side of the body of the water reservoir. When the water line level is above or below the raised molded line, adjustment can be performed to raise or lower the water level by bending the metal arm of the float inside the water reservoir.

To adjust the water reservoir float:

1. To RAISE the water level:
   Hold one end of the metal arm of the float and slightly bend the float up.
2. To LOWER the water level:
   Hold one end of the metal arm of the float and slightly bend the float DOWN.
3. To perform MAJOR adjustment:
   When repair or replacement has been performed and the water level line betweeen the water reservoir and the freezer assembly has been substantially altered:
   a. Loosen the three screws and lockwashers which attach the reservoir bracket and water reservoir to the freezer mount.
   b. Move the reservoir bracket UP or DOWN to properly position the water line level within the freezer. The proper water level within the freezer is 1/2″ - 3/4″ below the top of the auger.
   c. When proper water level within the freezer is adjusted, re-tighten screws attaching the water reservoir bracket to the freezer mount.

PO760 ADJUSTMENT PROCEDURES

ADJUSTMENT OF CO_2 GAS PRESSURE

Two areas of CO_2 gas pressure require checks and adjustments to properly maintain the correct amounts and pressures for best soda dispensing operation, the CO_2 high pressure, through the CO_2 high pressure regulator, for the carbonator tank operation, and the CO_2 low pressure regulator for the CO_2 gas pressure, used to force syrup from syrup tanks to the dispensing faucet. When either pressures are above or below normal operating pressures, adjust as detailed in the following procedures.

To adjust the CO_2 Gas Pressure:

A. CO_2 High Pressure — TO INCREASE:

Rotate the adjusting key on the CO_2 high pressure regulator CLOCKWISE, and observe the indicator needle on the gauge moving to an increased pressure indication.

NOTE

CO_2 gas pressures from 80 to 120 PSIG will provide satisfactory carbonator operation. If rotating the adjusting key does not increase pressure, rotate the regulator outlet valve COUNTERCLOCKWISE to OPEN, and observe the indicator needle on the gauge moving to an increased pressure indication. When no increase in pressure occurs with this adjustment, the CO_2 gas cylinder must be EMPTY. Replace the empty CO_2 gas cylinder with a FULL CO_2 gas cylinder.

B. CO_2 High Pressure — TO DECREASE:

Reverse the TO INCREASE procedure above.

C. CO_2 Low Pressure — TO INCREASE:

Rotate the adjusting key on the CO_2 low pressure regulator CLOCKWISE, and observe the indicator needle on the gauge moving to an increased pressure indication.

NOTE

CO_2 gas pressures from 15 to 20 PSIG will provide satisfactory pressures to force syrup from the syrup tanks to the dispensing faucet. If rotating the adjusting key does not increase pressure, rotate the regulator outlet valve COUNTERCLOCKWISE to OPEN, and observe the indicator needle on the gauge moving to an increased pressure indication. When no increase in pressure occurs with this adjustment, the CO_2 gas cylinder must be EMPTY. Replace the empty Co_2 with a FULL CO_2 gas cylinder.

D. CO_2 Low Pressure — TO DECREASE:
Reverse the TO INCREASE procedure above.

ADJUSTMENT OF THE DRINK TOWER FAUCETS

The metering screws for syrup and water are located on the rear underside of the faucet, behind the pouring spout. The metering screw for WATER is located on the LEFT, and is marked W. The metering screw for SYRUP is located on the RIGHT, and is marked S.

The metering screws have sensitive adjustment, therefore rotate no more than one-eighth of a turn at a time.

To Adjust the Drink Dispenser Faucet:

A. To INCREASE Flow: Rotate appropriate metering screw OUT or COUNTERCLOCKWISE, one-eighth of a turn.

B. To DECREASE Flow: Rotate appropriate metering screw IN or CLOCKWISE, one-eighth of a turn.

PO760 REMOVAL AND REPLACEMENT PROCEDURES

SLIDE OUT CHASSIS PROCEDURE

1. Disconnect the electrical supply to the icemaker at the circuit breaker or fuse box.

////////////////////// WARNING //////////////////////

Be sure the electrical power supply to the icemaker is OFF before proceeding with removal procedures.

//

2. Close the inlet water valve to the icemaker.
3. Remove two screws and the lower left front panel.
4. Remove plastic trim, screws, aluminum trim.
5. Remove screws and left front bracket. Remove upper front left panel. Disconnect the water inlet line. Point A.
6. Remove screws and control box cover to gain access and disconnect and remove from the control box the building source electrical connections.
7. Loosen the screw on the screw clamp and U-channel securing the ice transport tube to the elbow and safety switch and separate the ice transport tube from the elbow.
8. Remove wire leads from the bin thermostat. Point B.
9. Water-cooled models must be disconnected at the water-cooled condenser inlet and outlet connections. (Inside cabinet).
10. Remove Corbin clamp and remove reservoir overflow drain tubing from the reservoir and drip pan. Point C.
11. For partial chassis removal, remove two screws and remove base to base bracket located on the lower chassis front and pull chassis out to service. For complete removal, remove chassis stop. Point D.

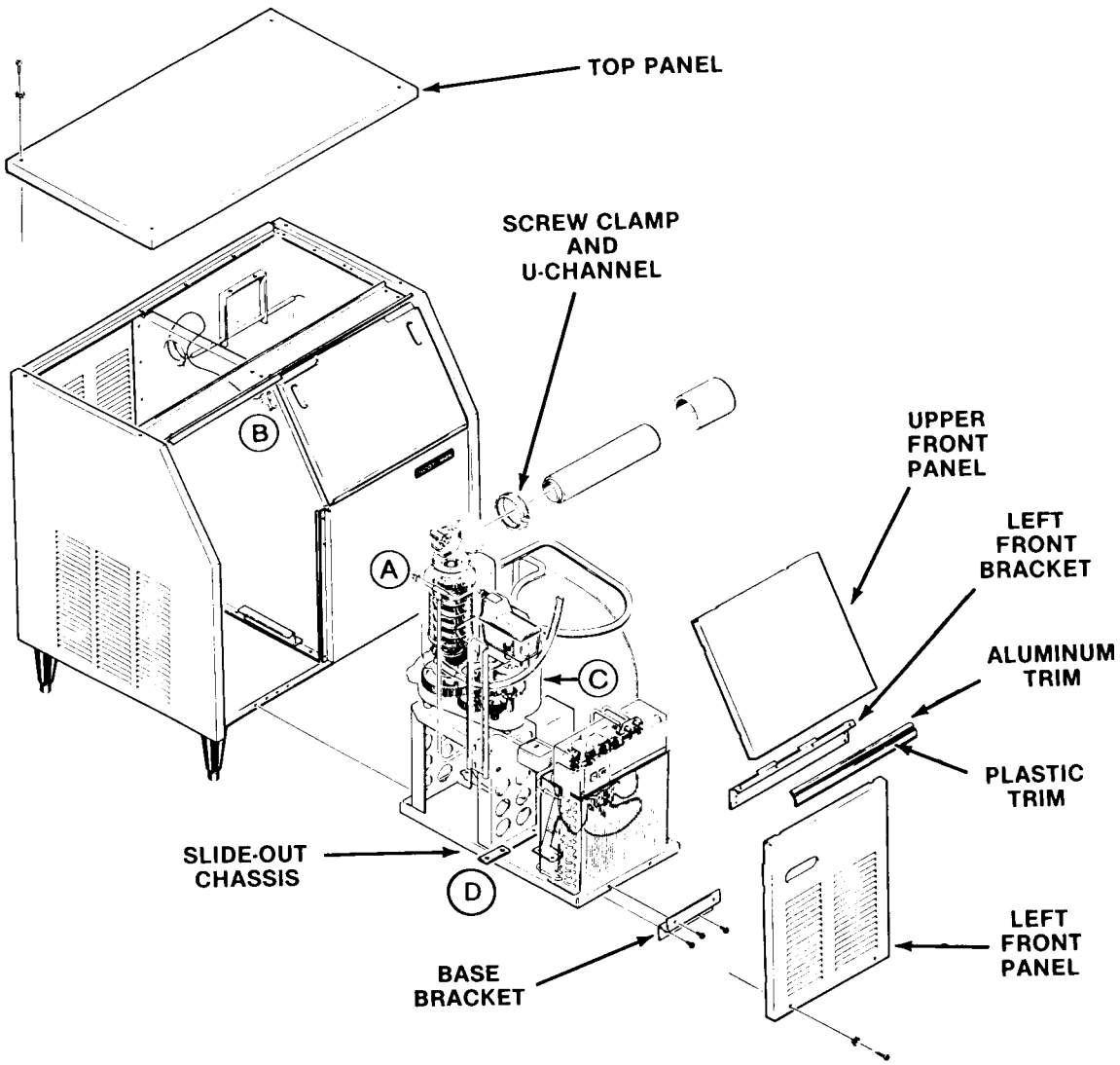

PO760 REMOVAL AND REPLACEMENT PROCEDURES

PO760's have been manufactured in "A", "B" and "C" Models (as in model PO760AE-1A vs. PO760AE-1C.) The following instructions are designated for either "A", "B" or "C" models. Be certain to check your model number and refer to the appropriate steps.

Read the instructions thoroughly before performing any Adjustment or Removal and Replacement Procedures.

//////////////////// WARNING ////////////////////

Be sure the electrical power supply and the water supply are OFF, BEFORE starting any of the following REMOVAL AND REPLACEMENT procedures as a precaution to prevent possible personal injury or damage to equipment.

//

REMOVAL AND REPLACEMENT OF THE AUGER, WATER SEAL, O-RING, ICE BREAKER ASSEMBLY AND FREEZER ASSEMBLY (A, B and C MODELS)

To remove the auger, water seal, o-ring and ice breaker assembly:

1. Shut off water supply to the icemaker/dispenser at the building source.
2. Disconnect or shut-off electrical power to the icemaker at the building source.
3. Perform steps from slide-out chassis procedure page and pull the chassis out for servicing.
4. Remove three socket head screws and spout retaining brackets from the end of the spout assembly at the top of the freezer assembly.
5. Lift the elbow safety switch and spout UP, off of the freezer assembly.
6. Retain the o-ring for replacement during reassembly. Inspect for cuts, tears or excessive wear, causes for replacement.
7. Remove four capscrews, lockwashers and the ice breaker assembly from the top of the freezer assembly.

NOTE: *To service icebreaker only, go to steps 21-24.*

8. Retain the o-ring for replacement during reassembly. Inspect for cuts, tears or excessive wear, causes for replacement.
9. Remove hose clamp and disconnect the water feeder tube from the reservoir, at the freezer to drain the reservoir and freezer of water.
10. Remove the auger. If necessary a bolt can be threaded into the top end of the auger from the freezer and a hand tool used to pull on the bolt to remove the auger.

To remove Water Seal only, omit steps 12, 13, and 14.

TO REMOVE FREEZER ASSEMBLY:

11. Pull back permagum around freezer base mounting bolts and remove four screws and flatwashers. Separate the freeezer assembly, gasket and adapters, from the drivemotor assembly.
12. Bleed off or blow the refrigerant charge through the Schrader valve.
13. Unsolder and disconnect the refrigerant suction line at the compressor, and the associated capillary line at the drier.
14. Remove the freezer assembly from the chassis.

A and B MODELS

15. Using a suitable length and size wooden dowel or stick inserted through the top of the open freezer assembly, tap the stationary piece water seal out the bottom of the freezer assembly.

C MODEL

15. Remove snap ring from inside bottom of evaporator assembly. Using a suitable length and size of wooden dowel or punch inserted through the top of the open freezer assembly, tap the stationary portion of the water seal out the bottom of the freezer assembly.

16. Replace the water seal any time it has been removed.

//////////////////// CAUTION ////////////////////

The lower two-part water seal is a precise seal and fitting. Any damage or wear will cause a failure. It is recommended that the lower two-part water seal be replaced any time there is a question of condition.

//

PO760 REMOVAL AND REPLACEMENT PROCEDURES

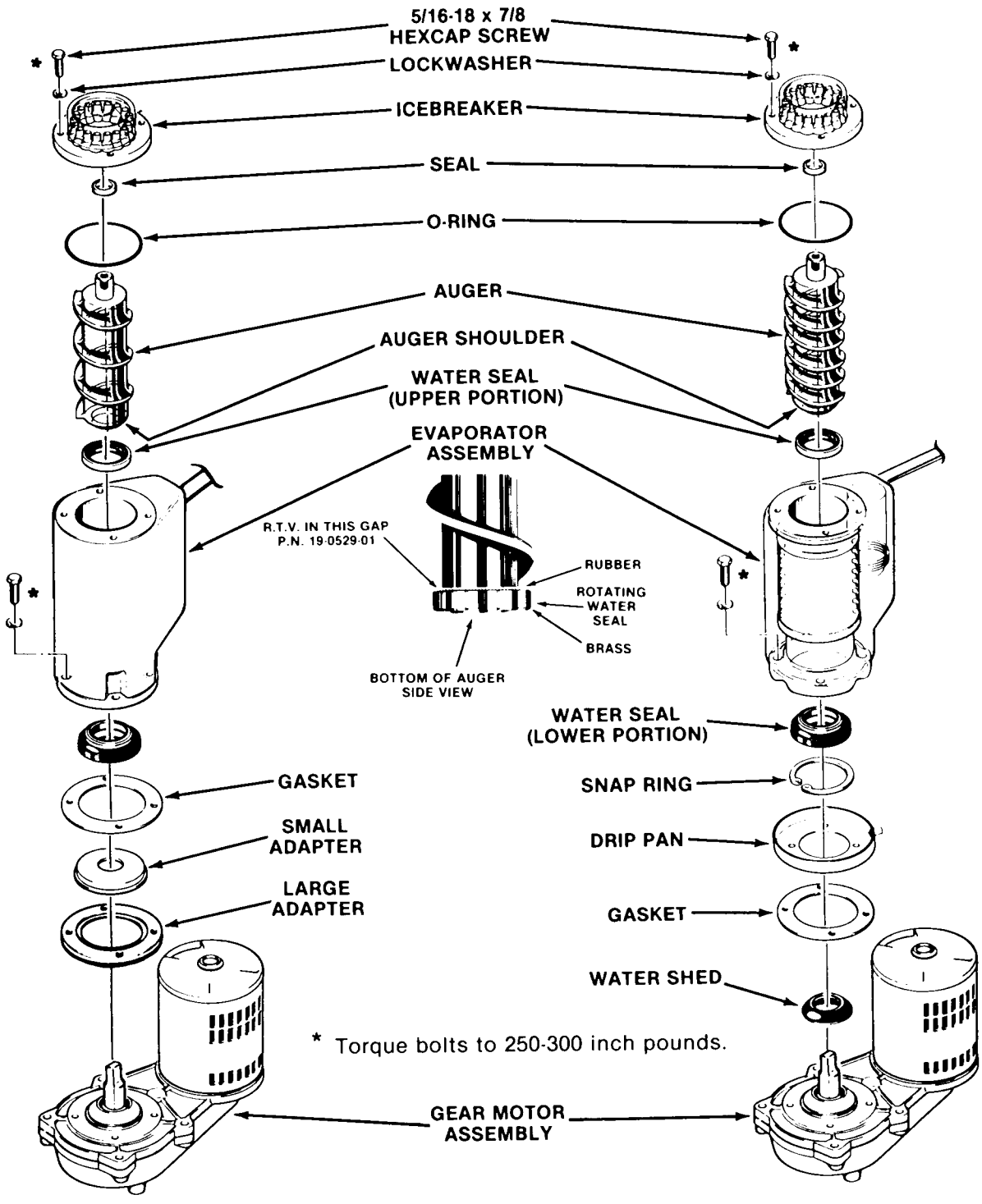

PO760 REMOVAL AND REPLACEMENT PROCEDURES

A and B MODELS

17. Replace the parts starting with the stationary part of the water seal. Carefully inspect it prior to assembly. Insert this half of the water seal into the bottom of the freezer. Then insert the brass freezer adapter into the bottom of the freezer tube and push it in as far as it will go.

C MODEL - OR REPLACEMENT FREEZER

17. Replace the new stationary portion of the two-part water seal in the bottom of the freezer assembly and press in far enough to install the snap ring. **IMPORTANT:** pull water seal back down against snap ring all the way around the freezer.

A and B MODELS

18. Mount the freezer and gasket to the gear motor case. Be certain that the gearmotor is in good working condition and that the large plastic adapter is in place on the gearbox.

C MODEL - OR REPLACEMENT FREEZER

18. Mount the freezer, drip pan and gasket to the gearmotor case. Check to be sure the gearmotor is in good condition and the water shed is in place around the output shaft.
19. Apply Scotsman part number 19-0529-01 RTV silicone rubber to the auger shoulder before pushing on the water seal. Place just enough silicone on to the auger, so that when the water seal is placed on the auger, the gap between the auger shoulder and water seal is completely filled with silicone.

    The silicone must be allowed to "set-up" or dry on the surface before any water can be added to the freezer.

CAUTION

If any silicone gets onto the mating surfaces of the water seal, the seal is ruined, and cannot be used.

20. Install auger.
21. Remove vent screw from brass plug to provide pressure relief during assembly and carefully place the breaker bearing assembly onto the auger. This new seal fits the auger shaft very tightly and it will go onto the auger with some resistance. Be very careful to push it straight onto the auger as tipping or angling of the breaker could damage the seal lip.
22. Install the vent screw with rubber washer into the breaker plug. Use a small drop of Loctite 680 on the screw threads.
23. Bolt the breaker back onto the freezer assembly and test the unit.
24. Reassemble ice transport tube, insulation, and bin top assembly in reverse order of disassembly.

CAUTION

DO NOT force the auger and breaker together without having the vent hole open because pushing the breaker on with no air relief will cause the internal air pressure to force the grease seal away from the breaker.

PO760 REMOVAL AND REPLACEMENT PROCEDURES

CAUTION

DO NOT force the auger and breaker together without having the vent hole open because pushing the breaker on with no air relief will cause the internal air pressure to force the grease seal away from the breaker.

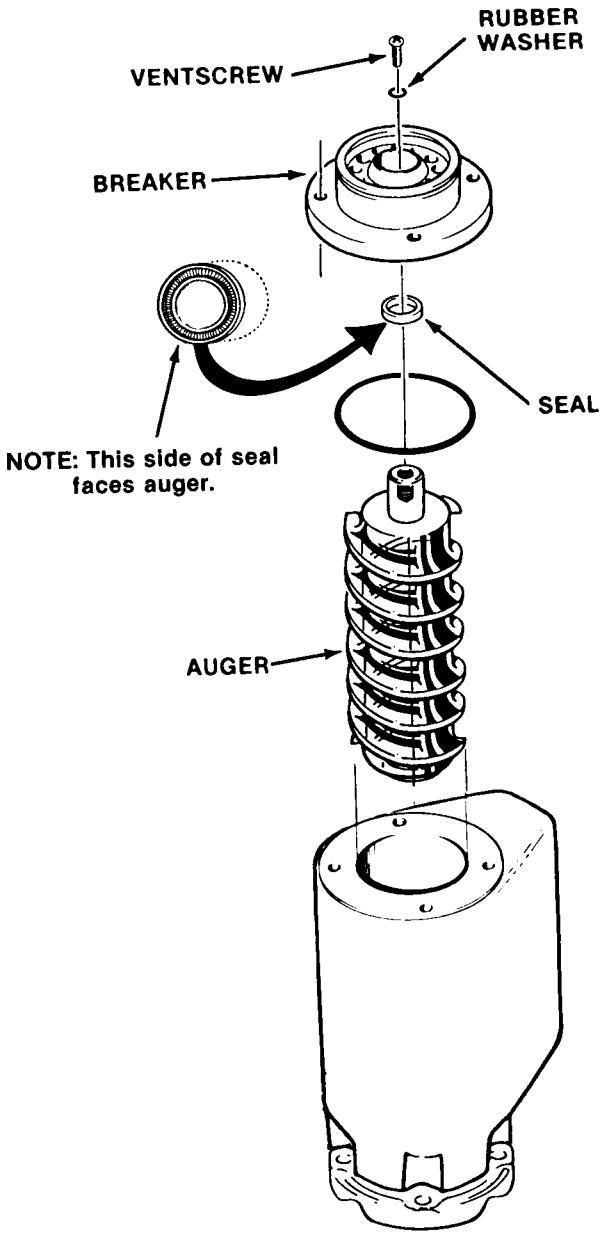

PO760 REMOVAL AND REPLACEMENT PROCEDURES

REMOVAL AND REPLACEMENT OF THE ELBOW AND SWITCH ASSEMBLY

To remove the elbow and switch assembly:

1. Disconnect the electrical supply to the icemaker at the circuit breaker or fuse box.

//////////////////// WARNING ////////////////////

Be sure the electrical power supply to the icemaker is OFF before proceeding with removal procedures.

//

2. Remove screws and remove top panel.
3. Remove insulation halves from the elbow switch assembly.
4. Loosen the screw on the screw clamp and U-channel securing the ice transport tube to the elbow and safety switch.
5. Separate the ice transport tube from the elbow.
6. Remove bolt and washer and remove switch support from the ice breaker.
7. Remove three Allen head screws and spout retaining brackets from the freezer assembly and elbow and switch assembly.
8. Lift the elbow and switch assembly UP to clear the top of the freezer assembly.
9. Remove screws and the switch from the switch actuator housing.
10. Rotate the retainer ring 90-degrees to unlock the retainer ring and the switch actuator housing from the elbow assembly and separate the parts from the elbow.
11. Inspect the rubber diaphragm for cuts, tearing or excessive wear.

To replace the elbow and switch assembly, reverse the removal procedure.

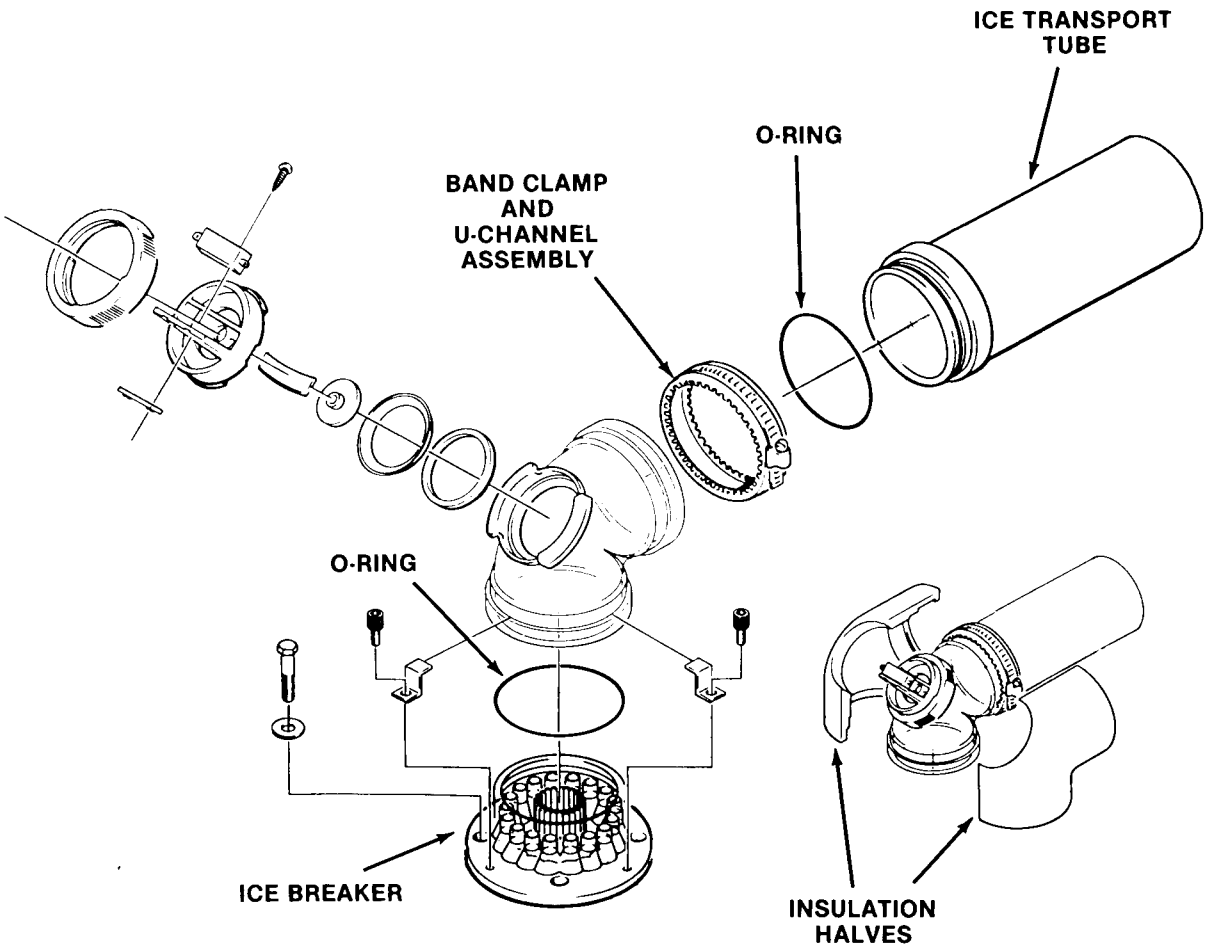

PO760 REMOVAL AND REPLACEMENT PROCEDURES

WARNING

Be sure the electrical power supply to the icemaker is OFF before proceeding with removal procedures.

REMOVAL AND REPLACEMENT OF THE CARBONATOR PUMP AND MOTOR

To remove the carbonator pump and motor assembly:

1. Disconnect the electrical supply to the icemaker at the circuit breaker or fuse box.
2. Close the inlet water valve to the icemaker.
3. Remove two screws and the lower left front panel.
4. Remove trim, screws and left front bracket. Remove upper left panel.
5. Close CO_2 tank valve and release pressure at the relief valve located on the top of the carbonator tank.

CAUTION

BEFORE removing the three water lines in the next stop, SLOWLY unscrew the connection of the line from the pump to the carbonator tank, which is under pressure, and carefully bleed off the water pressure.

6. Disconnect the three water lines connected to the pump.

CAUTION

BEFORE the next step, be prepared to support the pump and motor, and the mounting bracket, or have an assistant helping during the removal, to prevent dropping the motor and causing possible personal injury or damage to the equipment.

7. Remove hex nuts, lockwashers and remove pump motor and pump from the cabinet.
8. Loosen two screws on the cover plate to the electrical connections, located on the end of the motor toward the back of the chassis. Rotate the cover plate to OPEN.
9. Disconnect the two electrical leads from terminals on the motor.

To replace the carbonator pump and motor assembly, reverse the removal procedure.

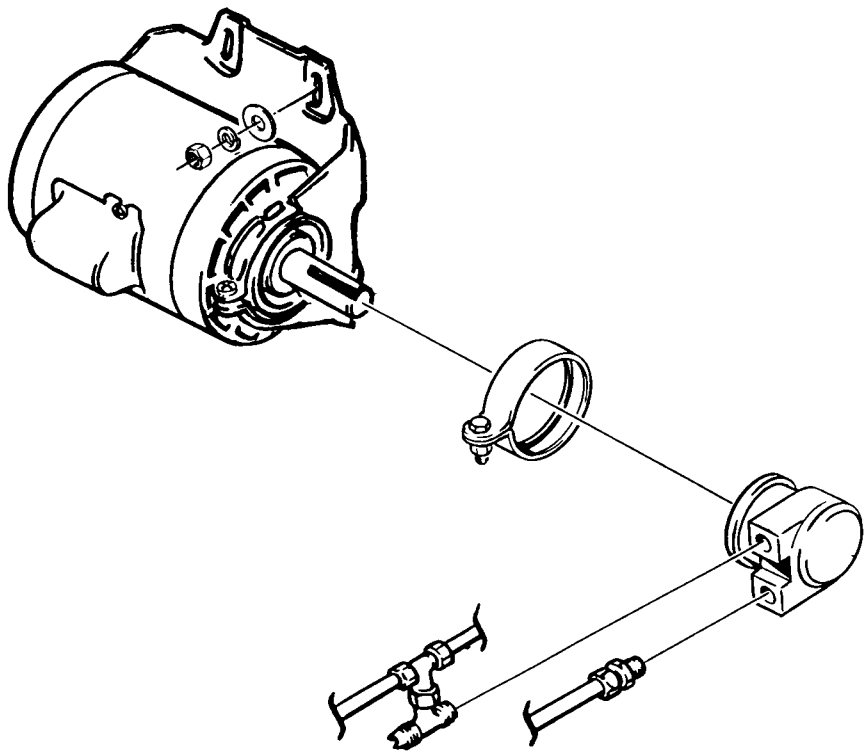

PO760 REMOVAL AND REPLACEMENT PROCEDURES

WARNING

Be sure the electrical power supply to the icemaker is OFF before proceeding with removal procedures.

REMOVAL AND REPLACEMENT OF THE CARBONATOR PUMP

To remove the carbonator pump:

1. Disconnect the electrical supply to the icemaker at the circuit breaker or fuse box.
2. Close the inlet water valve to the icemaker.
3. Remove two screws and the lower left front panel.
4. Remove plastic trim.
5. Remove trim, screws and left front bracket. Remove upper front left panel.

CAUTION

BEFORE removing the three water lines in the next step, SLOWLY unscrew the connection of the line from the pump to the carbonator tank, which is under pressure and carefully bleed off the water pressure.

6. Disconnect the three water lines connected to the pump.
7. Remove the screw and the coupling clamp and separate the pump from the motor.
8. Remove the elbow and the tee from the pump.

To replace the pump:

1. Using teflon tape, wrap the threaded end of the connection fittings to be connected to the pump.
2. Install the connection fittings in the pump in the original openings and positions.
3. Fit the coupling clamp over the end of the pump.
4. Insert the shaft of the pump into the slot in the motor to install the pump on the motor.

NOTE

When securing the pump to the motor with the coupling clamp:

Fit the clamp on the ridges on the pump and motor bodies.

Be sure the screw holes in the clamp are on top.

With the thumb and forefinger of one hand, cup the bottom of the clamp and force the clamp up and around the bodies of the pump and motor, for a close fit toward the top of the clamp.

Tighten the clamp screw with a screwdriver, by hand. Tighten only until tight enough that the pump CANNOT be rotated by hand, on the motor. DO NOT USE POWER OR AIR TOOLS.

A small 3/16-inch wide bladed screwdriver is large enough. Further tightening may cause loud squealing noises from the pump or motor during operation.

5. Connect the three water lines to the pump.
6. Replace the panels and trim.

REMOVAL AND REPLACEMENT OF THE CARBONATOR TANK ASSEMBLY

1. Disconnect the electrical supply to the icemaker at the circuit breaker or fuse box.
2. Close the inlet water valve to the icemaker, and shut off the CO_2 supply tank.
3. Remove two screws and the lower left front panel.
4. Remove plastic trim.
5. Remove trim, screws and left front bracket. Remove upper front left panel, slide chassis assembly out. The top may be loosened to gain access to the carbonator tank also. Remove the four screws and turn the top panel to expose the carbonator tank.
6. Slowly pull the ring and lift the body of the relief valve, on the top of the carbonator tank and bleed off CO_2 gas pressure.
7. Tag and disconnect the three product lines at the top of the carbonator tank assembly.
8. Tag or identify for replacement, then disconnect three electrical leads from the carbonator electrode that are attached to terminals on the liquid level control inside of the control box.
9. Remove the strap that holds the carbonator tank to the bracket. Remove the carbonator tank from the cabinet.

To replace the carbonator tank assembly, reverse the removal procedure.

PO760 REMOVAL AND REPLACEMENT PROCEDURES

REMOVAL AND REPLACEMENT OF A CO_2 GAS CYLINDER (DRUM)

To remove a CO_2 gas cylinder (Empty):

1. CLOSE CO_2 gas cylinder head valve.
2. CLOSE CO_2 regulator outlet valve.
3. Disconnect CO_2 regulator from the CO_2 gas cylinder. Gauge should drop to ZERO.
4. Install outlet cap on threaded outlet of the CO_2 gas cylinder.
5. Remove EMPTY CO_2 gas cylinder.

To replace a CO_2 gas cylinder (Full):

1. Install FULL, replacement CO_2 gas cylinder in place of the removed EMPTY cylinder.
2. Check that head valve of replacement CO_2 gas cylinder is thightly CLOSED.
3. Remove outlet cap from outlet to the replacement CO_2 cylinder.
4. Install a new fiber washer and attach the CO_2 regulator coupling nut to the threaded outlet of the replacement CO_2 gas cylinder.
5. SLOWLY open the CO_2 gas cylinder head valve.
6. SLOWLY open the CO_2 regulator valve and observe increasing pressure on gauge, stopping at desired working high pressure: 80 to 120 PSIG.
7. Perform checks:
   a. CO_2 regulator coupling nut is tightly connected to CO_2 gas cylinder.
   b. New fiber washer used.
   c. Water back-pressure check valve is functioning properly.
   d. When in doubt, apply soap lather to check connections for gas leaks.
   e. If leak occurs at either end of a hose, first replace plastic washer. If leak still occurs, cut off the defective end and re-fasten hose with clamps. Otherwise, REPLACE HOSE.

Keep CO_2 gas supply ON at all times to ensure uniform well-carbonated water.

PO760 REMOVAL AND REPLACEMENT PROCEDURES

WARNING

Be sure the electrical power supply to the Icemaker is OFF before proceeding with removal procedures.

REMOVAL AND REPLACEMENT OF THE COMPRESSOR ASSEMBLY

To remove compressor refer to SLIDE-OUT CHASSIS PROCEDURE and remove chassis from cabinet.

1. Remove two screws and the cover from the compressor junction box.
2. Disconnect the electrical leads at the compressor junction box, that originate in the control box and fan motor.
3. Bleed off or blow the refrigerant charge through the Schrader valve.
4. Unsolder the suction line from the compressor.
5. Unsolder the discharge line from the compressor.
6. Unsolder the process header tube from the compressor and retain for installation on the replacement compressor.
7. Remove four bolts, lockwashers and washers which secure the compressor to the chassis mounting base.
8. Remove the compressor from the chassis.
9. To replace the compressor assembly, reverse the removal procedures.
10. When recharging the system with refrigerant, always check the nameplate for the specified refrigerant charge.

REMOVAL AND REPLACEMENT OF THE CONDENSER — AIR-COOLED MODELS

To remove the condenser refer to SLIDE OUT CHASSIS PROCEDURES and complete all steps.

1. Bleed off or blow the refrigerant charge through the Schrader valve.
2. Remove one screw and disconnect the drier brace and drier from the condenser shroud.
3. Unsolder and disconnect the condenser inlet tube at the condenser.
4. Unsolder and disconnect the condenser outlet tube at the condenser.
5. Remove three screws, lockwashers and washers securing the condenser to the chassis base.
6. Remove four screws and attach the control box to the condenser.
7. Remove the condenser from the chassis base.
8. To replace the condenser, reverse the removal procedure.
9. When recharging the system with refrigerant always check nameplate for the specified refrigerant charge.

REMOVAL AND REPLACEMENT OF THE CONDENSER — WATER-COOLED MODELS

To remove the water-cooled condenser:

1. Remove two screws and cabinet left front panel.
2. Bleed or blow the refrigerant charge through the Schrader valve.
3. Unsolder the refrigerant inlet and outlet lines from the condenser.
4. Disconnect the water inlet and outlet lines from the condenser.
5. Remove two bolts, lockwashers and washers which secure the condenser to the chassis mounting base.
6. Remove the condenser from the cabinet.
7. To replace the condenser, reverse the removal procedure.
8. When recharging the system with refrigerant always check nameplate for the specified refrigerant charge.

NOTE

Always install a replacement drier, anytime the sealed refrigeration system is opened. Do not replace the drier until all other repair or replacement has been completed.

Thoroughly evacuate the system to remove moisture and non-condensables.

PO760 REMOVAL AND REPLACEMENT PROCEDURES

REMOVAL AND REPLACEMENT OF THE LIQUID LINE DRIER

To remove the drier refer to SLIDE OUT CHASSIS PROCEDURES and complete all steps.

1. Remove screw and drier brace attaching the drier to the condenser shroud on air-cooled models; and, the chassis base on water-cooled models.
2. Bleed off or blow the refrigerant charge through the Schrader valve.
3. Unsolder refrigerant lines at top and bottom of drier, remove the drier and separate the drier from the drier brace.

To replace the drier:

1. Remove the factory seals from the replacement drier and install the drier in the refrigerant lines with the arrow positioned in the direction of the refrigerant flow.

CAUTION

If the factory seal is broken on the replacement drier, exposing it to the atmosphere more than a few minutes, the drier will absorb moisture from atmosphere and lose substantial ability for moisture removal.

Be sure the replacement drier is installed with the arrow positioned in the direction of the refrigerant flow.

2. Install the drier brace on the drier.
3. Solder the drier into the lines, two places.
4. Purge the system and check for leaks.
5. Thoroughly evacuate the system to remove moisture and non-condensables.
6. Charge the system with refrigerant by weight SEE NAMEPLATE for specifications.
7. Leak test the system.

PO760 REMOVAL AND REPLACEMENT PROCEDURES

REMOVAL AND REPLACEMENT OF THE GEAR MOTOR

////////////////// WARNING //////////////////

Be sure the electrical power supply to the icemaker is OFF before proceeding with removal procedures.

//

To remove the gear motor refer to SLIDE OUT CHASSIS PROCEDURES and complete all steps.

To remove the auger drivemotor:

1. Disconnect electrical power leads from the motor.
2. Unscrew four capscrews securing motor to gearcase.
3. Lift off motor winding from the gear reducer.
4. Use a pry bar to remove rotor and rotor bearing from the gearcase.
5. Examine grease seal in gearcase. Replace if worn. Add grease to seal and bearing housing before re-assembly.

To replace, reverse the removal procedures.

NOTE

Motors must be exchanged complete. DO NOT mix rotors, housings or windings.

REMOVAL AND REPLACEMENT OF THE GEAR MOTOR ASSEMBLY

////////////////// WARNING //////////////////

Be sure the electrical power supply to the icemaker is OFF before proceeding with removal procedures.

//

////////////////// CAUTION //////////////////

SHUT OFF water supply to icemaker.

//

To remove the gear motor assembly:

1. Refer to Removal and Replacement of the Elbow & Switch Assembly and perform steps to gain access to the freezer assembly.
2. Thread suitable length bolts, having No. 5/16-18 UNC-2B threads, into thread hold in the top of the auger. Grasp bolt head with hand tool and pull auger out.
3. Unbolt freezer from gear motor assembly, lift up and off gear motor.
4. Remove the drivemotor cover and disconnect the three electrical wire leads.
5. Remove bolts holding gear motor plate to the machine base.
6. Lift the gear motor from the machine base.

To replace the gear motor assembly, reverse the removal procedure.

*Torque bolts to 250-300 inch pounds.

REPAIR OF THE GEAR MOTOR ASSEMBLY

1. Remove (6) cap screws to prepare to open gearcase.
2. Pry the two cases apart. Inspect the internal parts, look for:
   -Condition and quality of lubricant. (The proper oil level is flush with the top of the output (biggest) gear.)
   -Gear and gear shaft condition Woodruff key between output gear and shaft
   -Grease seals, back to back
   -Vent hole open
   -Thrust bearing intact.

   Be sure to count and retain the spacer washers as they come out of the gearbox.

   Replace the parts as required, using the part numbers found in the parts list section of this manual. Replace the gears into a CLEAN bottom gearcase, replacing the spacer washers in the same quantity as they were upon disassembly. If no count was kept, refer to the parts illustration.

NOTE: Some bearing grease should be placed in all bearings before assembly to insure proper lubrication upon start-up.

To reassemble:

1. Set top gearcase on gears and spacers and oil. Output gear when installed must be assembled with the flush, machined side DOWN and the protruding bossed center UP. Be sure O-ring is in place.
2. Replace gearcase cover. Drive in alignment pins before tightening cap screws and torque at 250-300 inch pounds.
3. Bench test the gearmotor assembly.

   Test for noise, amp draw (must not be in excess of icemaker nameplate for gearmotor) and oil leaks.

   Return gearbox to the unit. Be certain all mounting surfaces are clean and reassemble gearbox to chassis and freezer assembly.

   If the freezer water seal begins to leak, removal of the auger is required in order to replace the top bearing and water seal. AT THE SAME TIME, it would be recommended to remove the gearmotor assembly, open it up and inspect it.

PO760 REMOVAL AND REPLACEMENT PROCEDURES

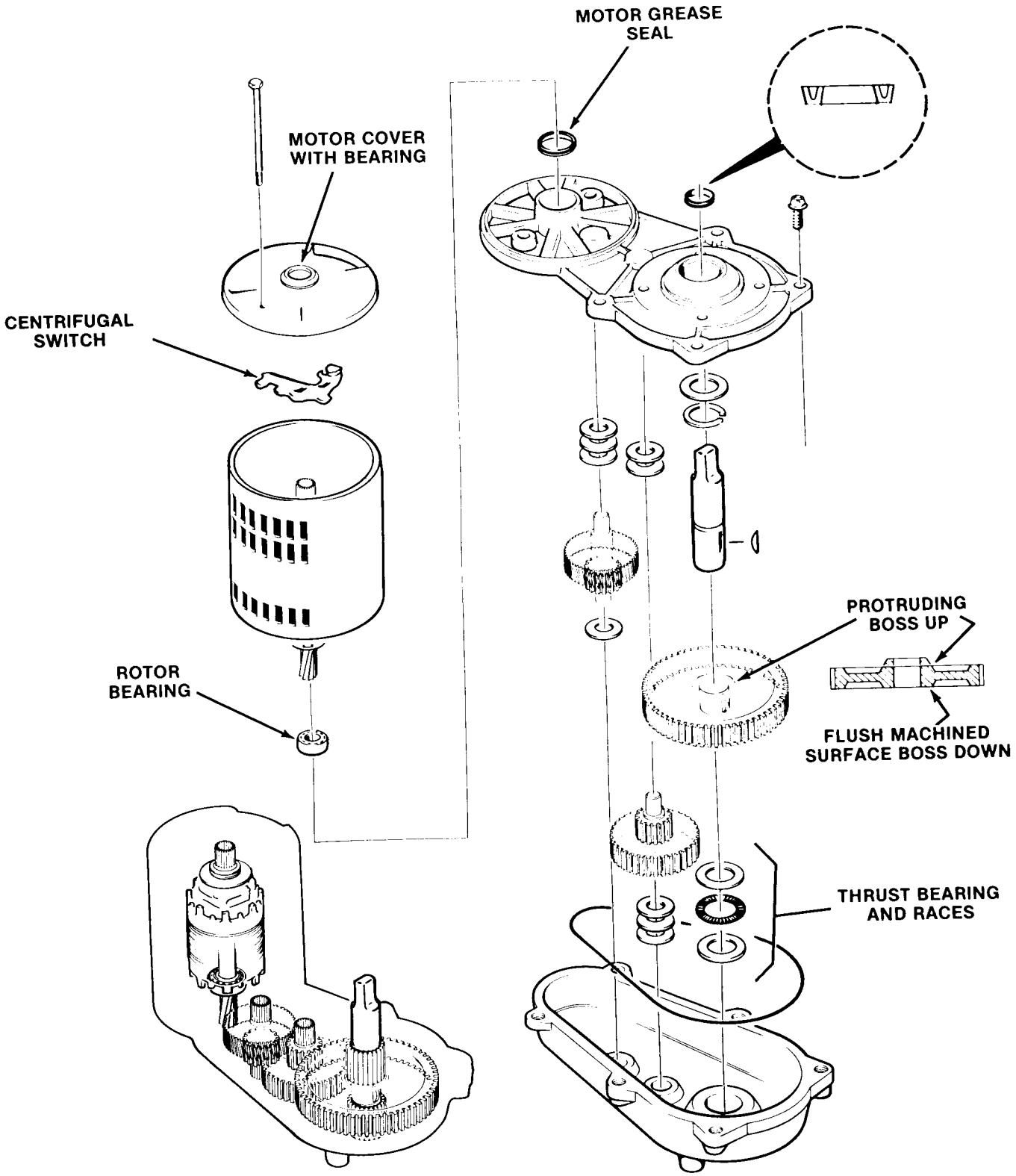

PO760 REMOVAL AND REPLACEMENT PROCEDURES

WARNING

Be sure the electrical power supply to the icemaker is OFF before proceeding with removal procedures.

REMOVAL AND REPLACEMENT OF THE FAN MOTOR ASSEMBLY — AIR-COOLED MODELS

NOTE

Before beginning this procedure, observe the fan blade position on the shaft of the fan motor and mark the fan blades so it will be correctly positioned during reassembly. Direction of air flow should be toward the fan motor.

To remove the fan motor assembly:

1. Disconnect the electrical supply to the icemaker at the circuit breaker or fuse box.
2. Remove two screws and the lower left front panel.
3. Remove plastic trim, screws, and aluminum trim.
4. Remove screws and left front bracket. Remove upper front left panel.
5. Disconnect the electrical lead from the fan motor at the compressor control box.
6. Remove two screws securing the motor bracket to the chassis base and remove the fan motor and motor bracket from the chassis.
7. Remove the nut from the end of the fan motor shaft and remove the fan blade.
8. Remove four screws securing the fan motor to the motor bracket and separate the motor from the bracket.

To replace the fan motor assembly, reverse the removal procedure.

REMOVAL AND REPLACEMENT OF THE WATER REGULATOR VALVE ASSEMBLY — WATER-COOLED MODELS

To remove the water regulator assembly refer to slide out chassis procedure and complete all steps.

1. Close the inlet water valve to the icemaker.
2. Bleed off or blow the refrigerant charge through the Schrader valve.
3. Unsolder capillary tube from the discharge line process header.
4. Disconnect the water inlet and outlet lines from the water regulator valve.
5. Remove the two screws from the valve bracket to the machine base and remove the water regulator valve.
6. To replace the water regulator assembly, reverse the removal procedure.

REMOVAL AND REPLACEMENT OF THE SAFETY CONTROLS, HIGH PRESSURE, LOW PRESSURE, AND AUGER DELAY

To remove the controls, refer to the slide-out chassis procedure and complete all steps.

1. Bleed off or blow the refrigerant charge through the Schrader valve.
2. Unsolder the control capillary tube from its corresponding process header.
3. Replace the control and solder the capillary tube to its corresponding process header.
4. Follow the Removal and Replacement Procedure of the liquid line drier.

NOTE

Always install a replacement drier, anytime the sealed refrigeration system is opened. Do not replace the drier until all other repair or replacement has been completed.

Thoroughly evacuate the system to remove moisture and non-condensables.

PO760 REMOVAL AND REPLACEMENT PROCEDURES

WARNING

Be sure the electrical power supply to the icemaker is OFF before proceeding with removal procedures.

NOTE

Be prepared with container to catch water left in lines disconnected in next steps, to prevent draining water on parts, components, electrical lines, etc.

REMOVAL AND REPLACEMENT OF THE WATER RESERVOIR ASSEMBLY

To remove the water reservoir assembly refer to slide out chassis procedure and complete all steps.

1. Close the inlet water valve to the icemaker.
2. Disconnect the water inlet tube from the water reservoir assembly.
3. Remove two Corbin clamps and two tubes from the bottom of the water reservoir assembly.
4. Unscrew and remove the wing nut from the bottom of the water reservoir assembly.
5. Lift and remove the water reservoir assembly from the mounting bracket.

To replace the water reservoir assembly, reverse the removal procedure.

NOTE

Check that the installed replacement water reservoir assembly float moves freely. Bend metal arm of float to adjust, as necessary. The correct water level in the water reservoir is the point of the raised molded line, on the side of the body of the water reservoir.

PR760

TABLE OF CONTENTS

GENERAL INFORMATION & INSTALLATION
- Introduction 2
- For the Installer 4
- For the Electrician 7
- For the Plumber 8
- Final Checklist 10

OPERATING INSTRUCTIONS
- Start-Up 12
- Operation/Icemaker 14
- Electrical/Refrigeration 14

COMPONENT DESCRIPTION 17

MAINTENANCE & CLEANING INSTRUCTIONS
- Icemaker 25
- Cleaning/Icemaker 27
- Cleaning — Faucet Assembly 29
- Sanitizing 30

SERVICE DIAGNOSIS 31

ADJUSTMENT PROCEDURES
- Bin Thermostat Control 34
- Drink Dispenser Valve 34
- Leg Levelers 34
- Water Regulator Assembly 34
- Water Reservoir Float 35

REMOVAL AND REPLACEMENT PROCEDURES
- Slide-Out Chassis 36
- Auger, Water Seal, O-Ring, Ice Breaker Assembly and Freezer Assembly 38
- Elbow and Switch Assembly 42
- Compressor Assembly 43
- Condenser — Air-Cooled 43
- Condenser — Water-Cooled 43
- Liquid Line Drier 44
- Dispensing Valve 44
- Gear Motor 45
- Gear Motor Assembly 45
- Fan Motor Assembly — Air-Cooled 47
- Water Regulator Valve Assembly Water-Cooled 47
- Water Reservoir Assembly 48
- Safety Controls, High Pressure, Low Pressure, Auger Delay 48

LIST OF ILLUSTRATIONS

- Specifications 3
- PR760 — Component Location 4
- Pre-Mix Drink System 5
- Location and Leveling 6
- Electrical Connections 7
- Water and Drain Connections 8
- Dispenser Drain Connections 9
- Final Checklist 10
- Water Schematic 13
- Component Description 16
- Maintenance and Cleaning 26
- Cleaning — Faucet Assembly 29
- Adjustment Procedures 34
- Removal and Replacement 36-46

PARTS LIST AND WIRING DIAGRAMS 1
(Printed in Yellow)

PARTS LIST:
- Cabinet Assembly (Part I) 4
- Cabinet Assembly (Part II) 5
- Air-Cooled Assemblies 6
- Water-Cooled Assemblies 7
- Water and Drainage System 8
- Freezer Assembly (A, B & C Models) 9
- Elbow and Switch Assembly 10
- Drivemotor Assembly 11
- Dispensing Tower Assembly 12
- Compressor Assembly 13
- Control Box Assembly, Air-Cooled 14
- Control Box Assembly, Water-Cooled 15

WIRING DIAGRAMS:
- PR760AE-1A (115/60/1) 16
- PR760WE-1A (115/60/1) 17
- PR760AE-1C (115/60/1) 18
- PR760WE-1C (115/60/2) 19

THIS PAGE
INTENTIONALLY
LEFT BLANK

PR760 FOR THE INSTALLER

INTRODUCTION

This manual provides the specifications and the step-by-step procedures for the installation, start-up, operation, maintenance and cleaning of the SCOTSMAN Model PR760 Automatic Nugget Icemaker/Drink Dispensers.

The Model PR760 Icemaker/Drink Dispensers are quality designed, engineered and constructed, and thoroughly tested icemaking and pre-mix dispensing systems, providing the utmost in flexibility to fit the needs of a particular user.

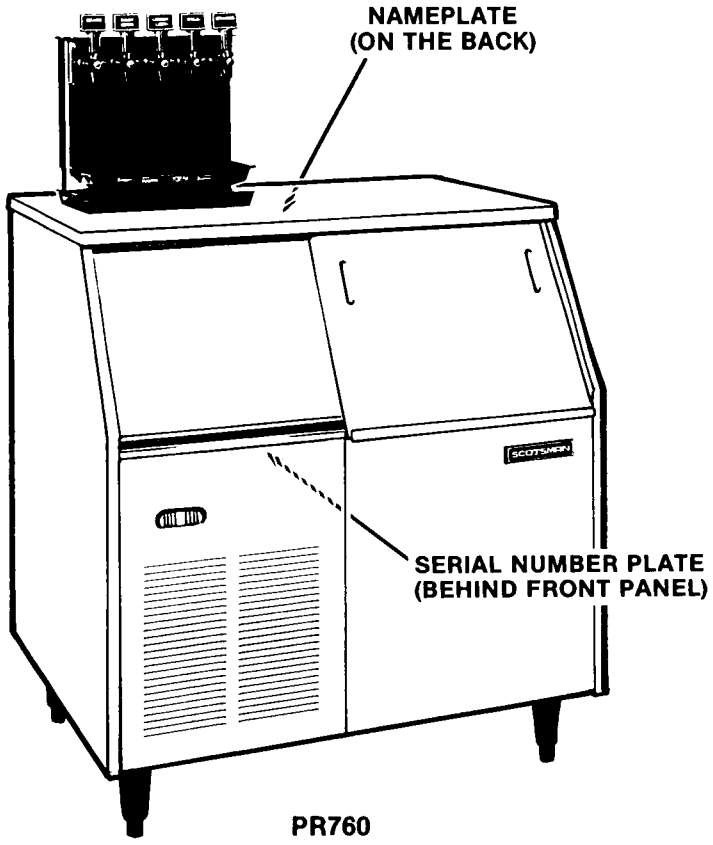

PR760

A five circuit cold plate, designed and constructed as the integral bottom of the bin, allows use of five products.

All internal lines are connected prior to shipment from the factory. Five flexible tube assemblies are provided for connection to product tanks.

NAME PLATE

MODEL NUMBER
SERIAL NUMBER
A.C. SUPPLY VOLTAGE
MINIMUM CIRCUIT AMPACITY — WIRES
MAXIMUM FUSE SIZE * — HERTZ
HEATER WATTS — PHASE
REFRIGERANT — CHARGE — OZ

	VOLTS	R.L.A./F.L.A.	W/H.P.	L.R.A.
MOTORS				
COMPRESSOR				
FAN				
DRIVE				
OTHER				

DESIGN PRESSURE — LOW — HIGH
* OR HACR TYPE CIRCUIT BREAKER

SCOTSMAN A HOUSEHOLD INTERNATIONAL COMPANY
ALBERT LEA, MINNESOTA U.S.A.

SERIAL NUMBER PLATE

MODEL NUMBER
SERIAL NUMBER
VOLTS/HERTZ/PHASE
MAXIMUM FUSE SIZE
REFRIGERANT — CHARGE — OZ

This product qualifies for the following listings:

This icemaker has been engineered to our own rigid safety and performance standards. The National Sanitation Foundation (NSF) seal, signifies that it is listed with NSF and that it complies with the materials and construction standards of NSF. In addition, the Underwriters Laboratories, Inc., (UL) Listing Mark and the Canadian Standards Association (CSA) Monogram, both signify that its construction and design have been inspected and tested by them. NSF, UL and CSA inspectors also periodically examine production icemakers at the factory, to assure continued compliance.

To retain the safety and performance built into this icemaker, it is important that installation and maintenance be conducted in the manner outlined in this manual.

PR760 SYSTEM SPECIFICATIONS

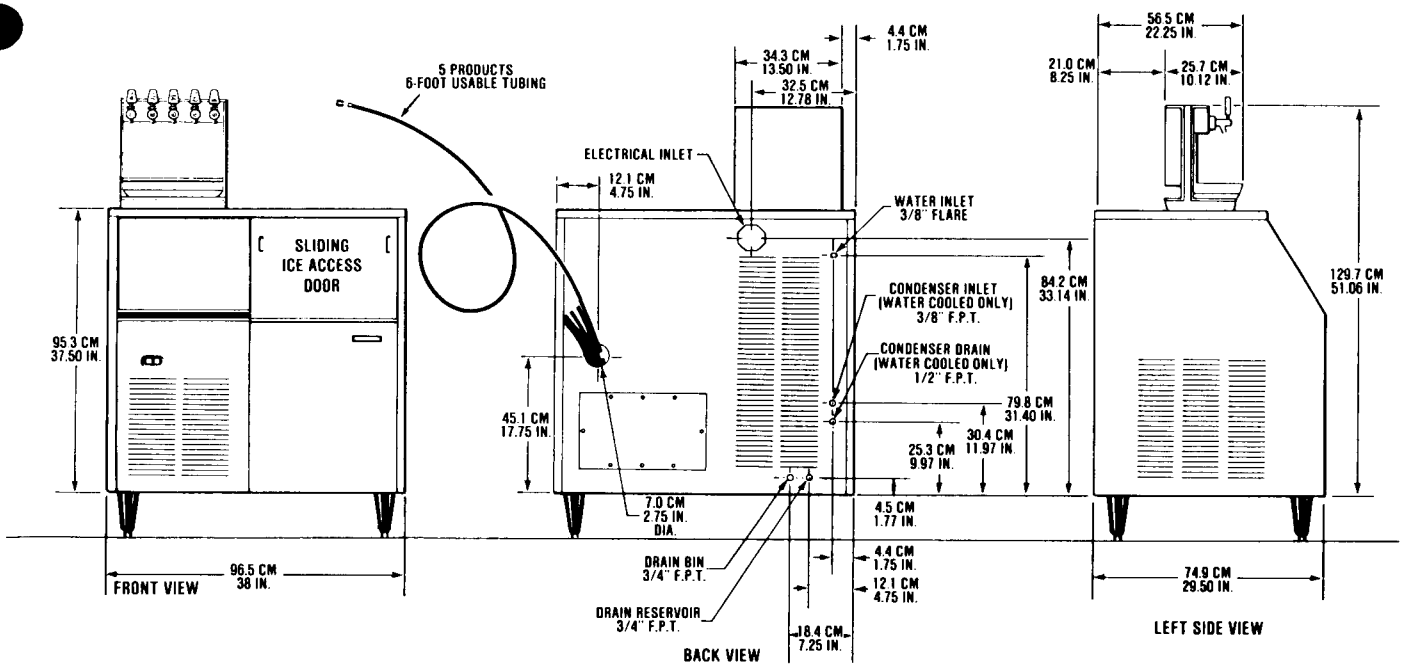

SPECIFICATIONS

Model Number	(Height - w/o Legs) Dimensions H" x W" x D"	Bin Cap.	Cube Size	Cond. Unit	Finish **	Basic Electrical	Comp. H.P.	No. of Wires	Min. Circuit Ampacity †	★ Max. Fuse Size	Ship. Wt. lbs./kg.
PR760AE-1C	51 1/16 x 38 x 29 1/2	255 lbs.	Nugget	Air	ES	115/60/1	3/4	2	19.3	30	436/198
PR760WE-1C	51 1/16 x 38 x 29 1/2	255 lbs.	Nugget	Water	ES	115/60/1	3/4	2	16.0	25	436/198

**ES Sandalwood high-gloss, baked enamel finish on leathergrain embossed steel.

† Use this value to determine minimum wire size as per National Electric Code Standards.

★ Or HACR type circuit breakers.

IMPORTANT OPERATING REQUIREMENTS

	MINIMUM	MAXIMUM
Air Temperatures	50° F (10.0° C)	100° F (38° C)
Water Temperatures ...	40° F (4.4° C)	100° F (38° C)
Water Pressures	20 lbs. gauge	120 lbs. gauge
Electrical Voltage Variation Voltage rating specified on nameplate	-10%	+10%

Extended periods of operation exceeding these limitations constitutes misuse under the terms of Scotsman Manufacturer's Limited Warranty, resulting in a loss of warranty coverage.

PR760's have been manufactured in "A" and "C" Models (as in model PR760AE-1A vs. PR760AE-1C.) This manual is primarily intended for the "C" models but applies as well to the prior models.

OPTIONAL PANEL KITS

SPKPR760 stainless steel panel kit for use with PR760.

SEE NAMEPLATE, for electrical and refrigeration specifications.

NAMEPLATE is located on the left of the cabinet back.

Remove left front panel to locate Model/Serial Number plate. Complete **NAMEPLATE** on rear panel.

Storage Bin:	Stainless Steel with sealed in Cold Plate.
Air-Cooled:	Model PR760AE
Water-Cooled:	Model PR760WE

DRINK HEAD

Five Pre-Mix Valves

SANITARY COLD PLATE

Sealed Cold Plate System. Solid Aluminum Cold Plate Construction. Five-Circuit Cold Plate cools five flavors of product. Five service lines at back of cabinet, connect to syrup tanks. Six feet of usable lines.

PR760 FOR THE INSTALLER

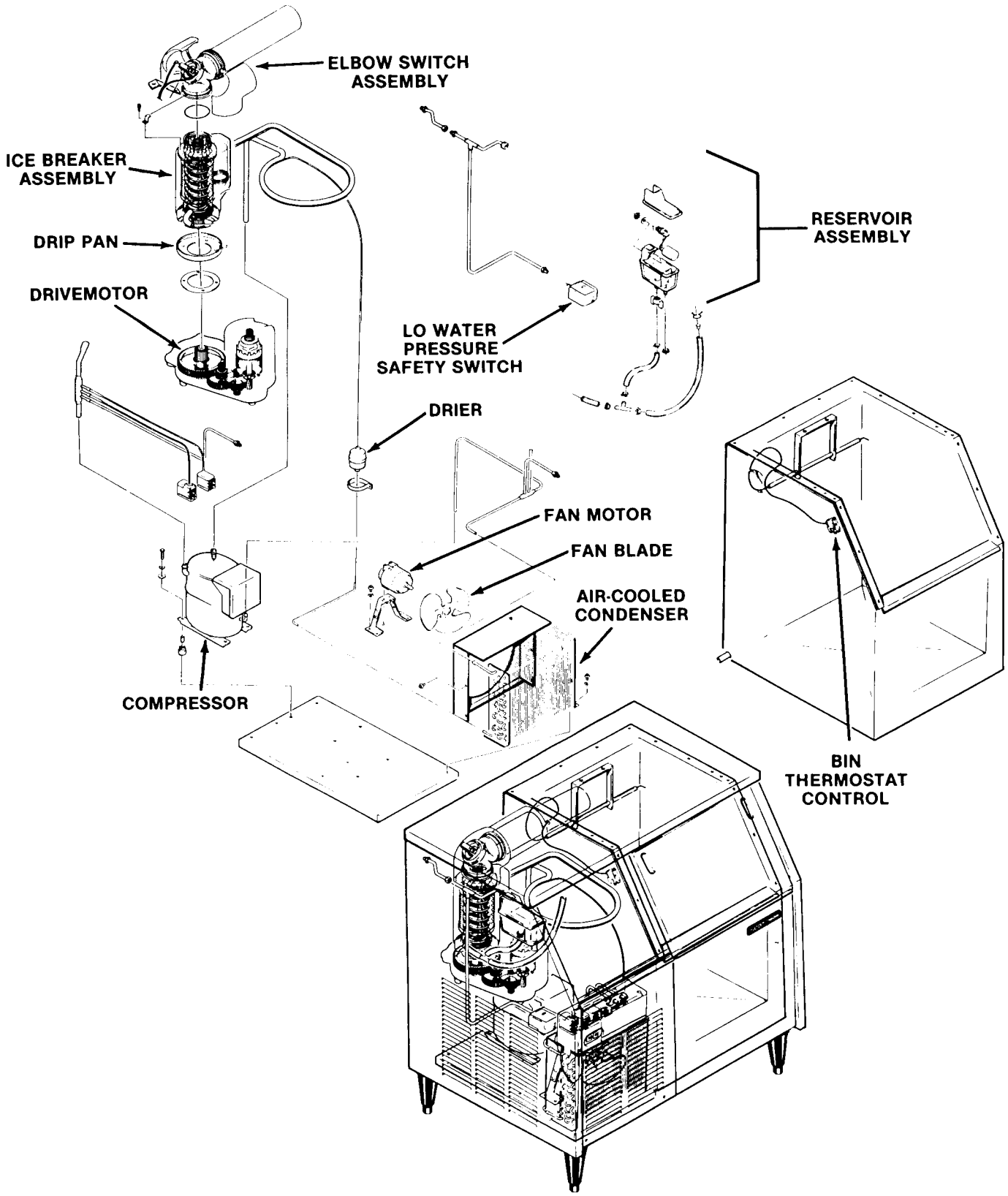

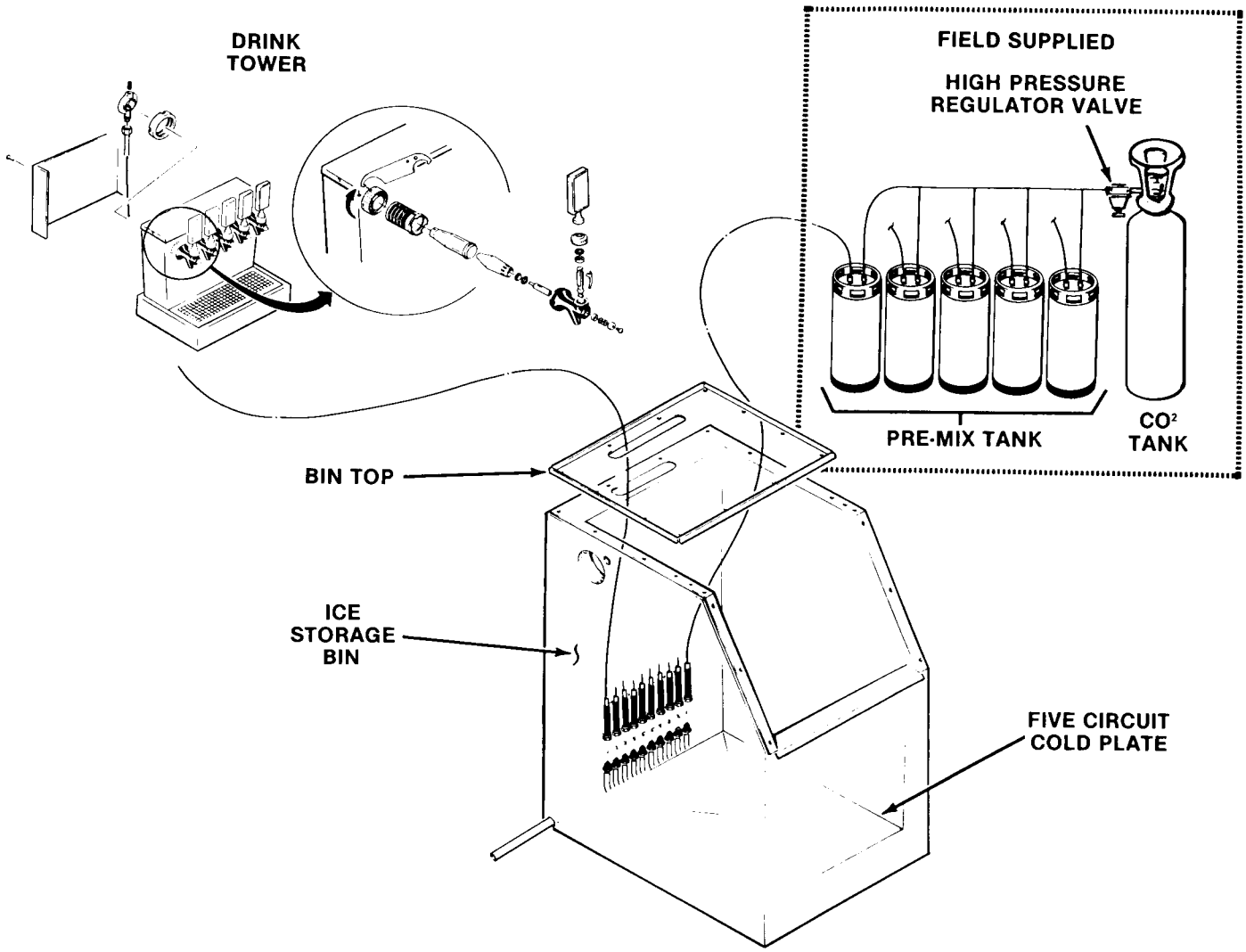

Pre-Mix Drink System

PR760 FOR THE INSTALLER

LOCATION AND LEVELING

CAUTION

This Icemaker is NOT designed for outdoor installations where air temperatures are below 50-degrees F. or above 100-degrees F. and water temperature is below 40-degrees F. or above 100-degrees F. Extended periods of operation at temperatures exceeding these limitations will constitute misuse, under the terms of the SCOTSMAN manufacturer's limited warranty, resulting in LOSS of warranty coverage.

1. Position the cabinet in the selected permanent location.

NOTE

Prior consideration for location site shall include:

Minimum room temperature 50-degrees F.
Maximum room termperature 100-degrees F.

Water inlet temperatures:
Minimum 40-degrees F.
Maximum 100-degrees F.

Select a well-ventilated location for the air-cooled model, advising user to frequently clean air-cooled condenser, located directly behind the lower front service panel.

CONVENIENCE: Placed for practical, efficient use in a back bar or front bar location; or as an individual counter unit, providing hard, nugget ice.

SERVICE ACCESS: Adequate space for all service connections, located at the back left side of the cabinet. A six-inch minimum clearance at back and left side panel, for routing cooling air drawn into and exhausted out of the compartment to maintain proper condensing operating on air-cooled models.

2. Install legs, packed in the ice storage bin. When tilting the unit to install legs, DO NOT HANDLE BY THE SODA TOWER.
3. Level the cabinet in both the left-to-right and front-to-back directions. The leveling legs can be adjusted with an open end wrench. (See adjustment of leg levelers.)

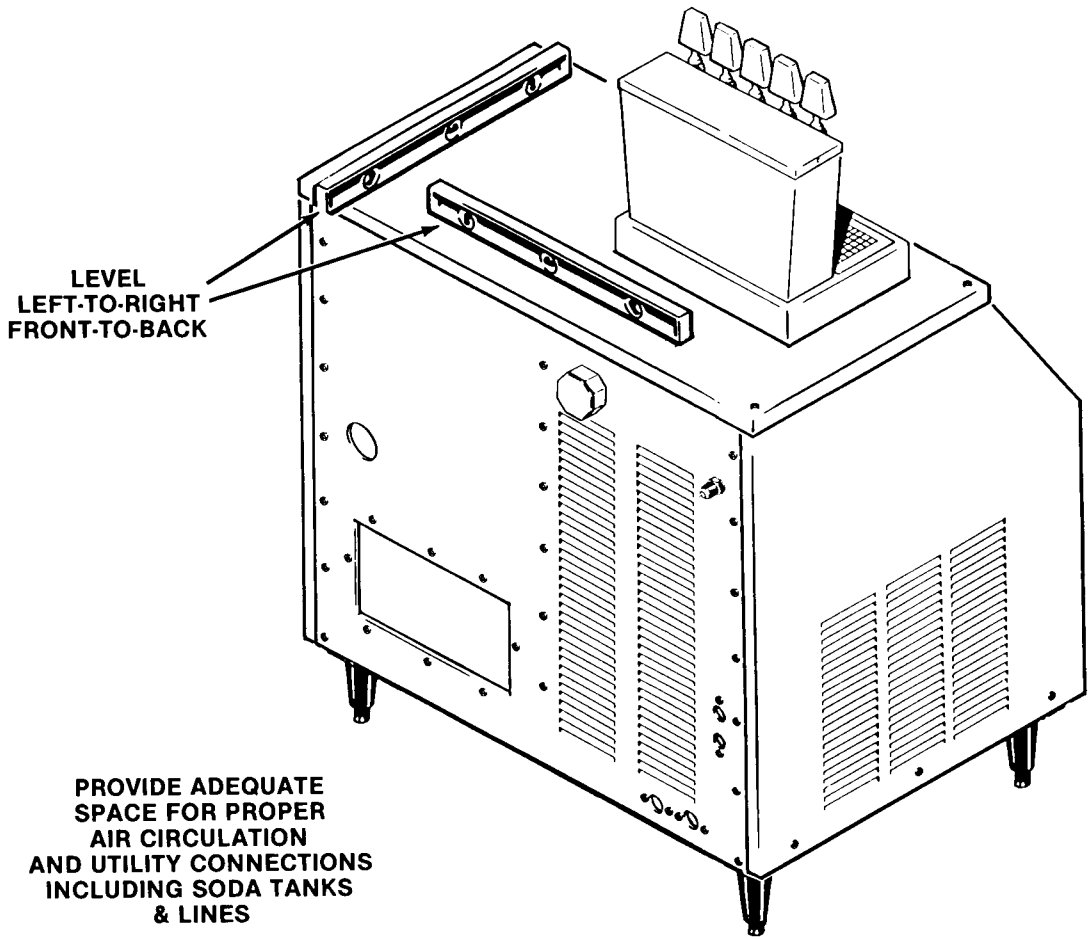

PR760 FOR THE ELECTRICIAN

ELECTRICAL CONNECTIONS

SEE NAMEPLATE for current requirements to determine wire size to be used for electrical hookup. The PR760 Icemaker requires a solid earth ground wire. See wiring diagram.

Be certain the icemaker is connected to its own electrical circuit and individually fused. The maximum allowable voltage variation should not exceed ten percent of the nameplate rating, even under starting conditions. Low voltages can cause erratic operation and may be responsible for serious damage to the overload switch and motor windings.

All external wiring should conform to the national, state and local electrical codes. A permit and services of a licensed electrician will be required.

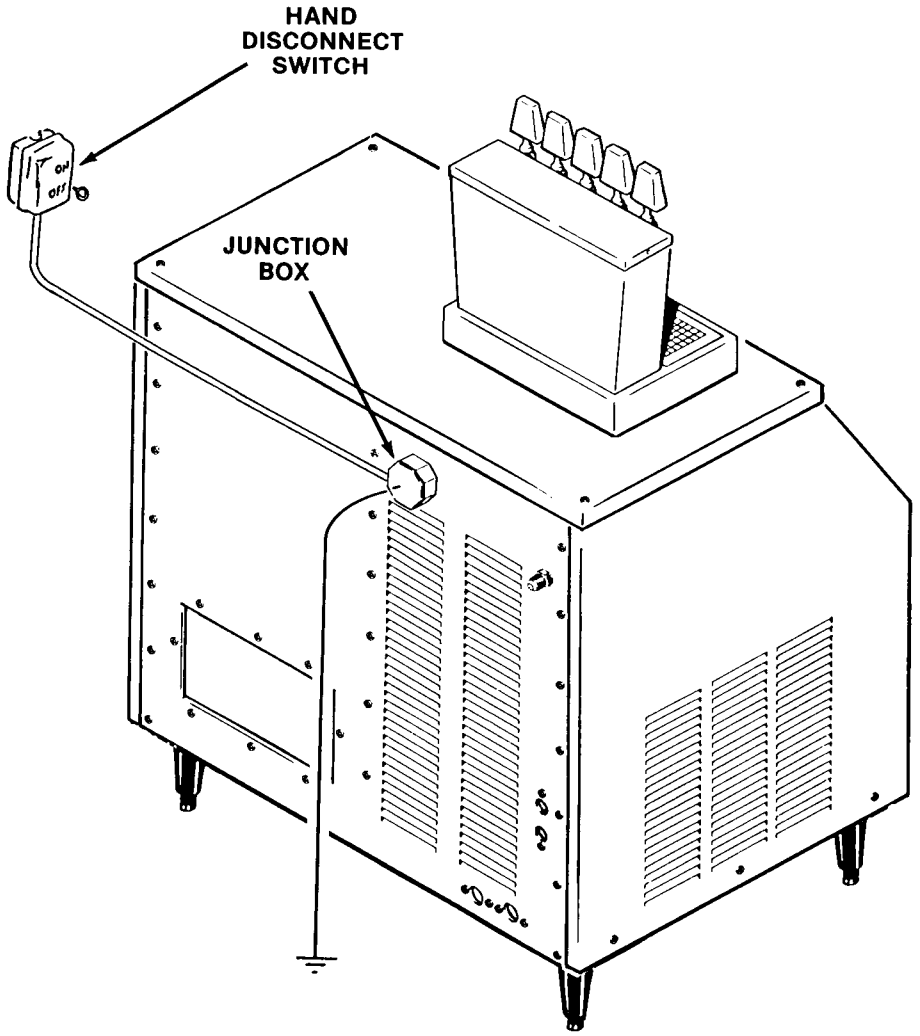

PR760 FOR THE PLUMBER

WATER SUPPLY AND DRAIN CONNECTIONS

AIR-COOLED MODELS: The recommended water supply line is a 1/4-inch O.D. copper tubing with a minimum pressure of 20 PSIG. A 3/8-inch flare fitting is provided at the water inlet. Connect to cold water supply line with standard plumbing fittings, with a shut off valve installed in an accessible place between the water supply and the cabinet.

In come cases, a plumbing permit and services of a licensed plumber will be required.

CAUTION

This icemaker is equipped with a low water pressure safety device, which in the event of interruptions or low water pressure, the icemaker will automatically stop to prevent damage. It will restart automatically after water pressure is restored.

The icemaker in this cabinet will not operate properly when water supply temperatures are below 40-degrees F. or above 100-degrees F.

WATER-COOLED MODELS: On water-cooled models a separate connection to the condenser is required. A 3/8-inch F.P.T. fitting is provided for a separate water inlet line to be connected and a separate drain line to be connected to the 1/2-inch F.P.T.

NOTE

The CAUTION for the air-cooled models equally applies for the water-cooled models. In both type installations, water supply must be installed to conform with the local plumbing codes. In some cases a plumbing permit and services of a licensed plumber will be required.

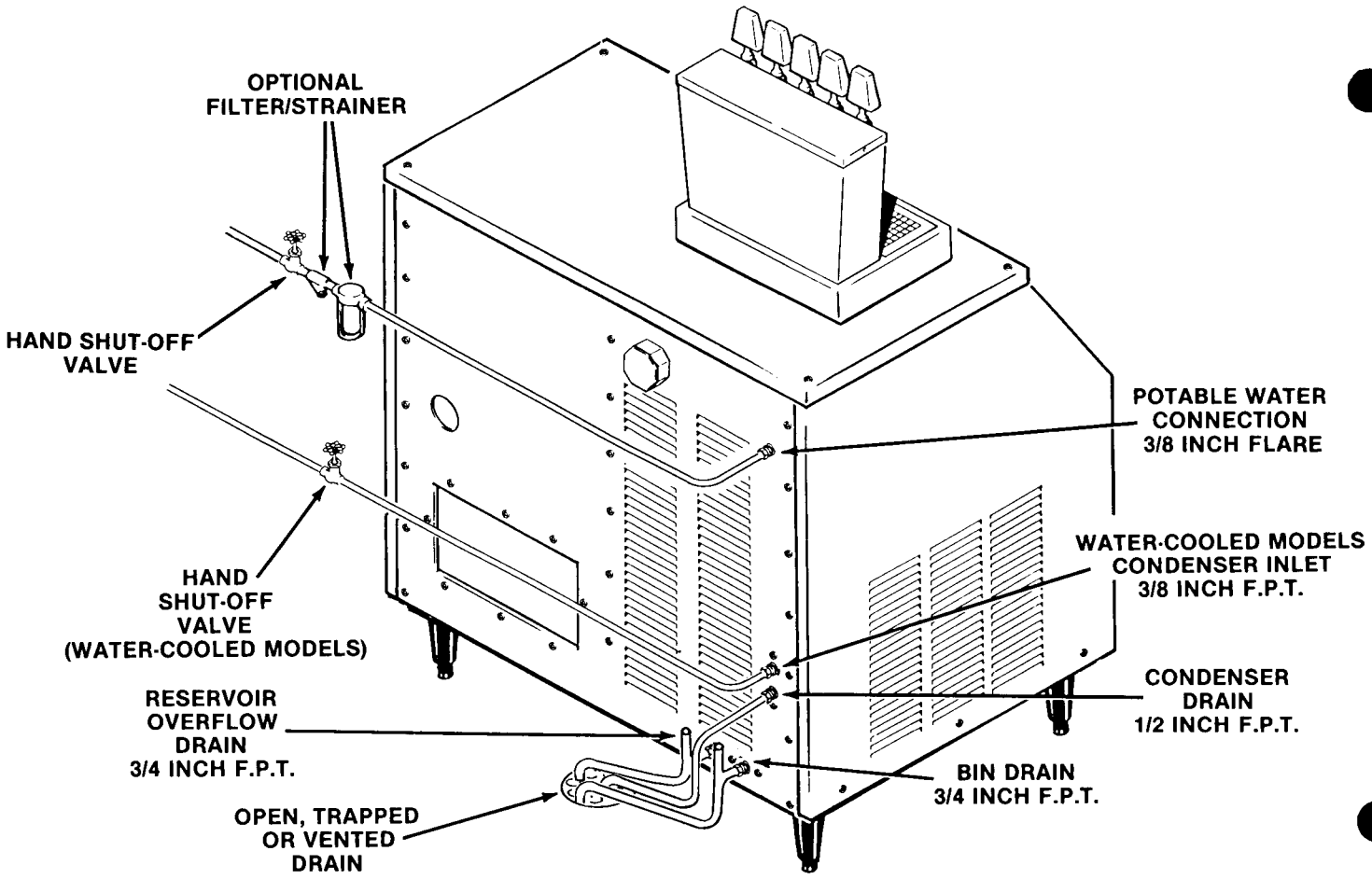

PR760 FOR THE INSTALLER

DISPENSER DRAIN CONNECTIONS

The dispenser sink drain is shipped from the factory plugged and may be emptied by removal and dumping. As an alternate method to manual dumping, the dispenser sink may be unplugged and drained through a drain line provided.

The drain line should be routed so that the chassis can be slid out for service.

1. Connect all lines from the cold plate, at the rear of the cabinet to the product lines. Open CO_2 valve at the supply tank.
2. Check all syrup line fittings to cold plate, dispensing faucet connections.
3. Install faucet knobs onto faucet stems.

CAUTION

Any soda lines and/or drains should be routed AWAY from the ice machine control box. Syrup in the control box can cause SEVERE DAMAGE and will result in a LOSS of warranty coverage.

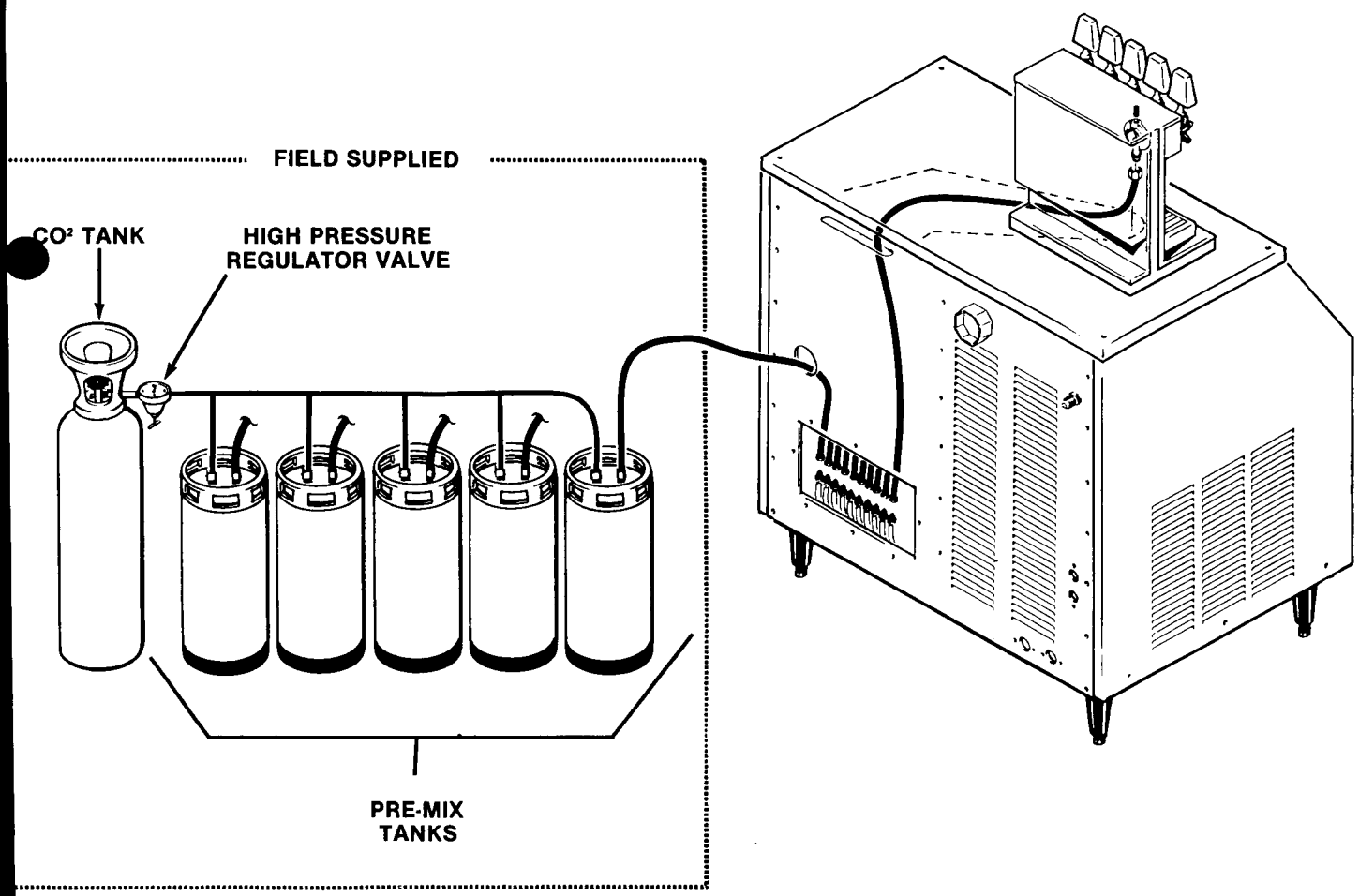

PR760 FOR THE INSTALLER

FINAL CHECK LIST

1. Is the cabinet in a room where ambient temperatures are within the minimum and maximum temperatures specified?
2. Is there at least six inches clearance at the left side of the cabinet for proper air circulation? (Air-Cooled Models.)
3. Has water supply pressure been checked to insure a minimum of 20 PSIG and a maximum of 120 PSIG operating pressure?
4. Is the cabinet level?
5. Is the water supply line shut-off valve installed and electrical wiring properly connected?
6. Have the compressor hold-down nuts been checked to be sure the compressor is snug on the mounting pads.
7. Check all refrigerant lines and conduit lines, to guard against vibration or rubbing and possible failure.
8. Have the bin and cabinet been wiped clean?
9. Has the Manufacturer's Registration Card been properly filled out? Check for correct model and serial numbers from Serial nameplate, then mail the completed card to the SCOTSMAN factory.
10. Has the owner/user been given the Service Manual and instructed how to operate and maintain the icemaker?
11. Has the owner been given the name and telephone number of the authorized SCOTSMAN Service Agency serving him?

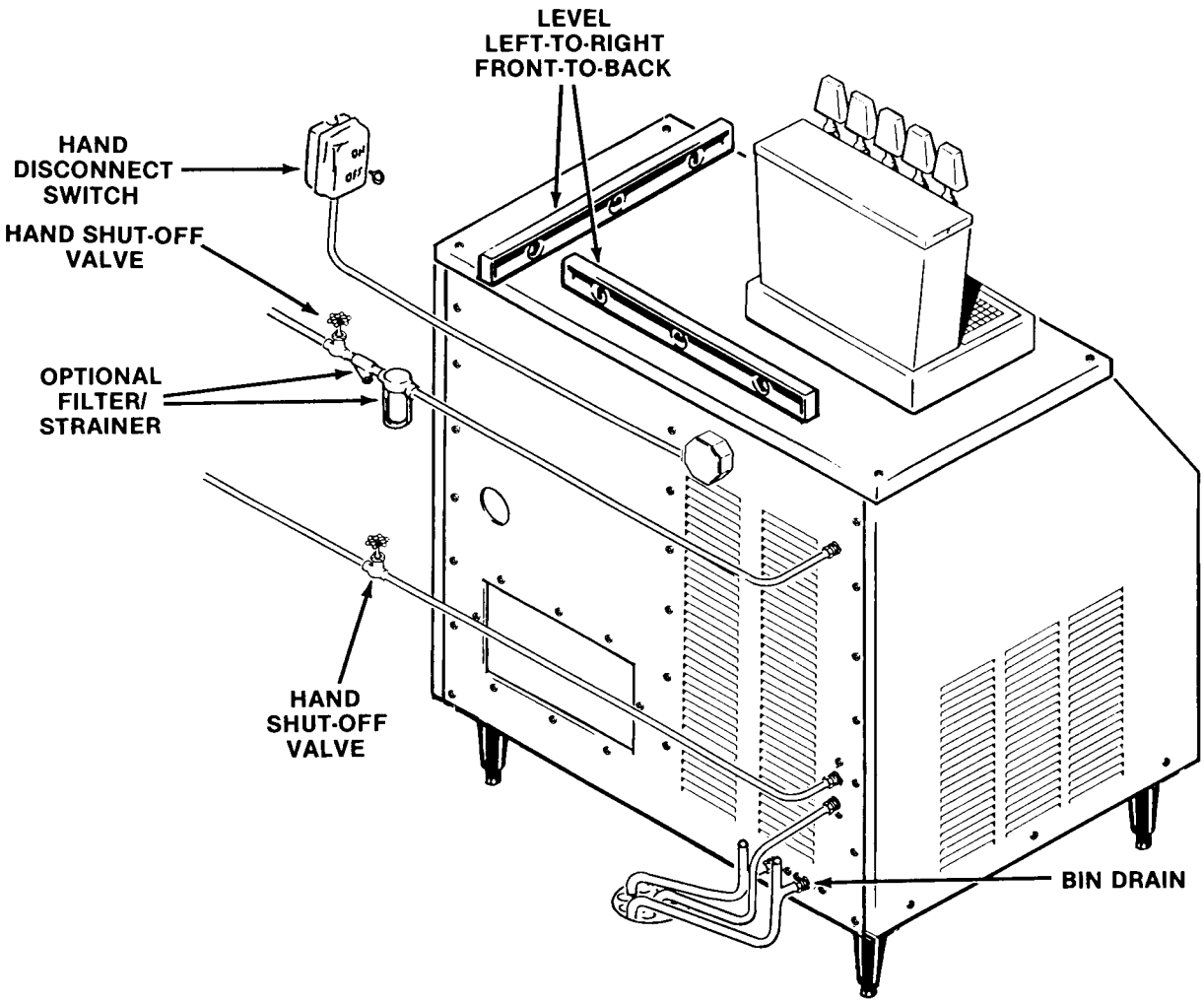

PR760 START-UP CHECKLIST

START UP

1. Remove screws and remove trim strip. Remove screws and the upper left front panel.
2. OPEN the water supply line shutoff valve.
3. Observe the water filling operation, see water schematic.
   a. Water flows into water reservoir.
   b. Water flows through water feed line to bottom of freezer assembly.
   c. Float moves up as water rises.
   d. Float stops water flow, when water level reaches the molded horizontal line, on the body of the water reservoir.
4. Check all internal water connections for leaks.
5. Connect electrical power from the building source to the icemaker and check voltage.
6. Press the Master ON-OFF pushbutton and the START—RESET to ON position to start the automatic icemaker operation.

CAUTION

BE ALERT that momentary LOSS OF POWER, such as a brief power outage, will cause the RED light of the START-RESET pushbutton to turn ON. It must be PRESSED, to reset and restart the Icemaker.

Repeated need to PRESS the START-RESET pushbutton, requires checking for:

1. **Faulty bin thermostat control.**
2. **Need to clear jammed ice tube.**
3. **Loose wiring connections.**

7. Observe that ice begins dropping into the ice storage bin.
8. Let the system operate until ice covers the bottom of the bin. Check for any excess noises beyond normal compressor noise:
   a. Fan noises, when air-cooled: blades touch other surfaces; blades bent, out-of-balance, or loose on shaft.
   b. Vibrating type, from touching lines.
   c. Chattering: Lack of water in freezer.
   d. Compressor loose at one or more hold-down bolts.

CAUTION

This Icemaker is equipped with a low water pressure safety device, which in the event of interruptions or low water pressure, the Icemaker will automatically stop to prevent damage. It will restart automatically after the water pressure in restored.

9. Check Lo side pressure. Should be 10 ± 2 PSIG.
10. Check on Water-Cooled only, High side pressure - adjust if necessary to 135 PSIG.
11. Shut off water to test water safety switch. Compressor should stop. Turn water back on, compressor should start.
12. Check amp draw, compare to Nameplate.
13. Place ice on the ice storage bin thermostat control bulb, to test shut-off.

NOTE

Within minutes after the ice is removed from the sensing bulb, the bulb will warm up and cause the icemaker to restart. This control is factory set and should not be reset until testing is performed. Normal setting is 35-degrees F. CUT-OUT and 45-degrees F. CUT-IN, to prevent short cycling.

14. Thoroughly explain to the owner/user the significant specifications of the icemaker, the start up and operation, going through the procedures for the operating instructions. Answer all questions about the icemaker, by the owner; and, inform the owner of the name and telephone number of the authorized SCOTSMAN Distributor or Service Agency serving him.

PR760 START-UP

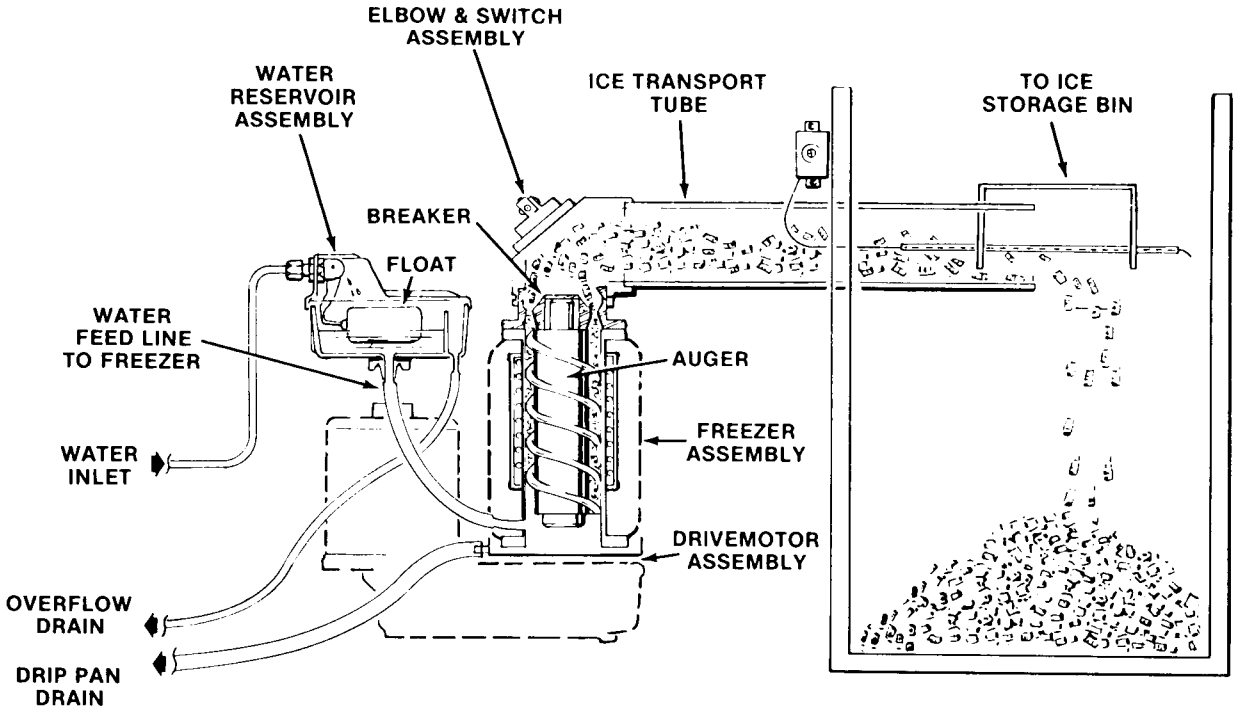

Water Schematic

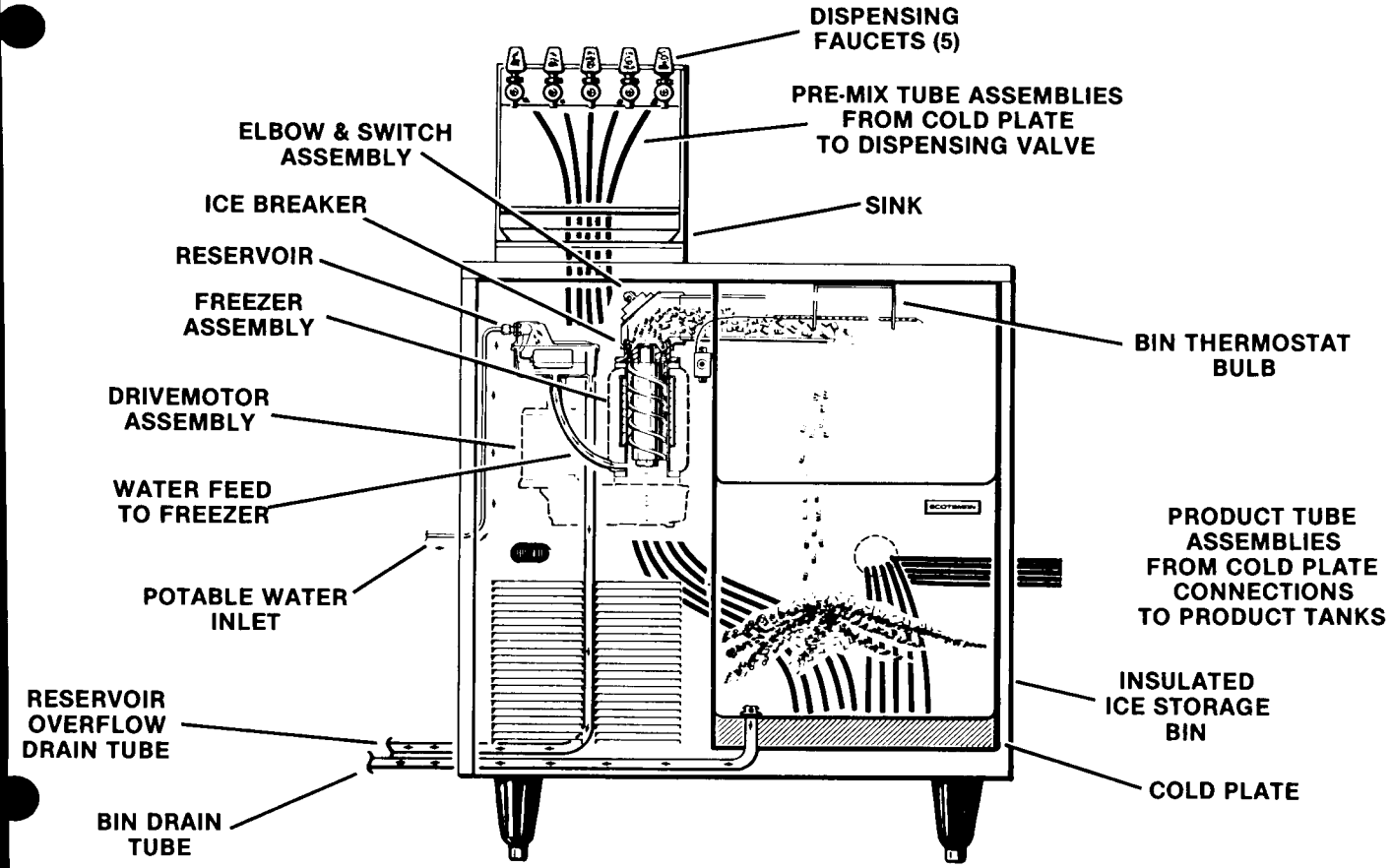

PR760 OPERATION

OPERATION

ICEMAKER

The water supply flows from the building source through the inline water strainer, enters at the unit fitting and on to the water reservoir. The water reservoir functions to maintain a constant water level inside the freezer assembly. Water from the water reservoir enters at the bottom of the freezer assembly and is changed into ice by low temperatures inside the freezer.

A stainless steel auger within the freezer is powered by the drivemotor assembly, a direct-drive gear-motor, and the rotating auger carries the ice upward to the end of the auger. See Water Schematic, where excess water is pressed out of the ice, as it is extruded and broken into random length chunks of ice and pushed out through the ice transport tube and into the ice storage bin.

Pressing the Master ON-OFF pushbutton to ON, starts the automatic and continuous icemaking process. When the ice storage bin has been filled with ice, up to the level of the bin thermostat control capillary bulb, the icemaking process shuts OFF.

As ice is removed from the ice storage bin, the bulb warms up, restarting the automatic icemaking process.

Factory settings for the bin thermostat are 35-degrees F. CUT-OUT and 45-degrees F. CUT-IN.

Altitude adjustment should ONLY be performed on icemakers installed at 2000-feet level locations and ABOVE, and adjust only in increments of one-fourth turn of screw at a time.

ELECTRICAL/REFRIGERATION

The Model PR760 icemakers are designed to operate on standard electrical supply 115 volts, 60 Hertz, single phase. Other voltage requirements are available on special order. Therefore, always CHECK NAMEPLATE for electrical information BEFORE proceeding with electrical wiring connections to the icemaker.

Cold ambient temperatures and interruptions in water supply are conditions that can cause excessively hard ice and overloads within the freezer assembly, which is directly transmitted to the drivemotor; and in turn, will cause speed reduction or ultimate freezeup.

When the drivemotor is slowed to a pre-determined RPM, a sensing switch mounted on top of the motor is designed to open the electrical circuit to the compressor. The compressor stops operating, no more ice is produced, and the drivemotor continues to operate rotating the auger to clear the overload and gradually build up to full speed.

At a pre-determined higher RPM drivemotor speed, the speed sensing switch closes the electrical circuit to the compressor, causing the normal icemaking process to resume.

The elbow & switch assembly is mounted on top of the freezer assembly and movement against the rubber diaphragm inside the elbow, actuates the switch. The switch acts as a backup safety switch, should the bin thermostat control fail, and cause ice to jam up, the ice transport tube. This safety switch will shut off the icemaker when actuated; or, as stated earlier, when there may occur a momentary loss of power, such as a brief power outage, there will be an immediate and complete shutdown of the icemaker. Pressing the START-RESET pushbutton will of course reset the circuit for RESTART, when the Master ON-OFF pushbutton is ON.

There are three safety controls in the control box on the water-cooled models and two safety controls in the control box for the air-cooled models. The low pressure control, an automatic reset, nonadjustable control, is used on both models and is set to open at zero to four PSIG to stop the compressor. The auger delay switch, a single-pole double-throw (SPDT) switch, functions as a control device to allow the drivemotor to rotate the auger to clear the freezing chamber while the compressor circuit is OFF.

Refer to the appropriate wiring diagram and trace circuitry and control functions, as described in the following paragraph.

As shown on all SCOTSMAN wiring diagrams, the controls are in the ICEMAKING MODE. Thus, the 1-2 contacts are CLOSED. At START-UP, the 1-2 contacts are OPEN and the 3-2 contacts are CLOSED. As the icemaker begins to operate, the low side pressure starts to decrease from the stabilized or at-rest pressure. As soon as the pressure is reduced to 20 PSIG, the 3-2 contacts OPEN and the 1-2 contacts CLOSE.

PR760 OPERATION

This removes the operating controls, such as the bin thermostat, from the drivemotor circuit. If one of the operating controls OPENS, it will SHUT OFF the compressor circuit. The drivemotor will operate until the low side pressure increases to 32 PSIG. Then, the 1-2 contacts OPEN and SHUTS OFF the drivemotor, usually within one to two minutes, depending upon ambient conditions. This brief period of time allows the auger to transport all the ice out of the freezing chamber. Consequently, when called on to START-UP again, there is no ice load to start up against. Again, on START-UP, the 1-2 contacts are OPEN and the 3-2 contacts are CLOSED.

On the water-cooled models only, a manual reset, high head pressure control is factory set to stop the entire icemaker should the head pressure reach 250 PSIG.

On the water-cooled models, correct head pressure is 135 PSIG. Adjustments can be made on the water regulator assembly valve. On air-cooled models, the head pressure is normal cooled models, the head pressure is normal about 130 PSIG, however it will vary depending upon ambient air temperature.

Suction pressure should be 10 PSIG with proper refrigerant charge. Suction pressure will vary about two PSIG plus or minus, depending upon ambient temperatures and inlet water supply temperatures to the freezer assembly.

When charging the system with refrigerant, always CHECK NAMEPLATE for specific refrigeration charge for individual icemaker.

The procedures provided in this section are arranged in alphabetical order, to make specific adjustment and removal and replacement information easy to locate.

Read the instructions thoroughly before performing any adjustment or removal and replacement procedures.

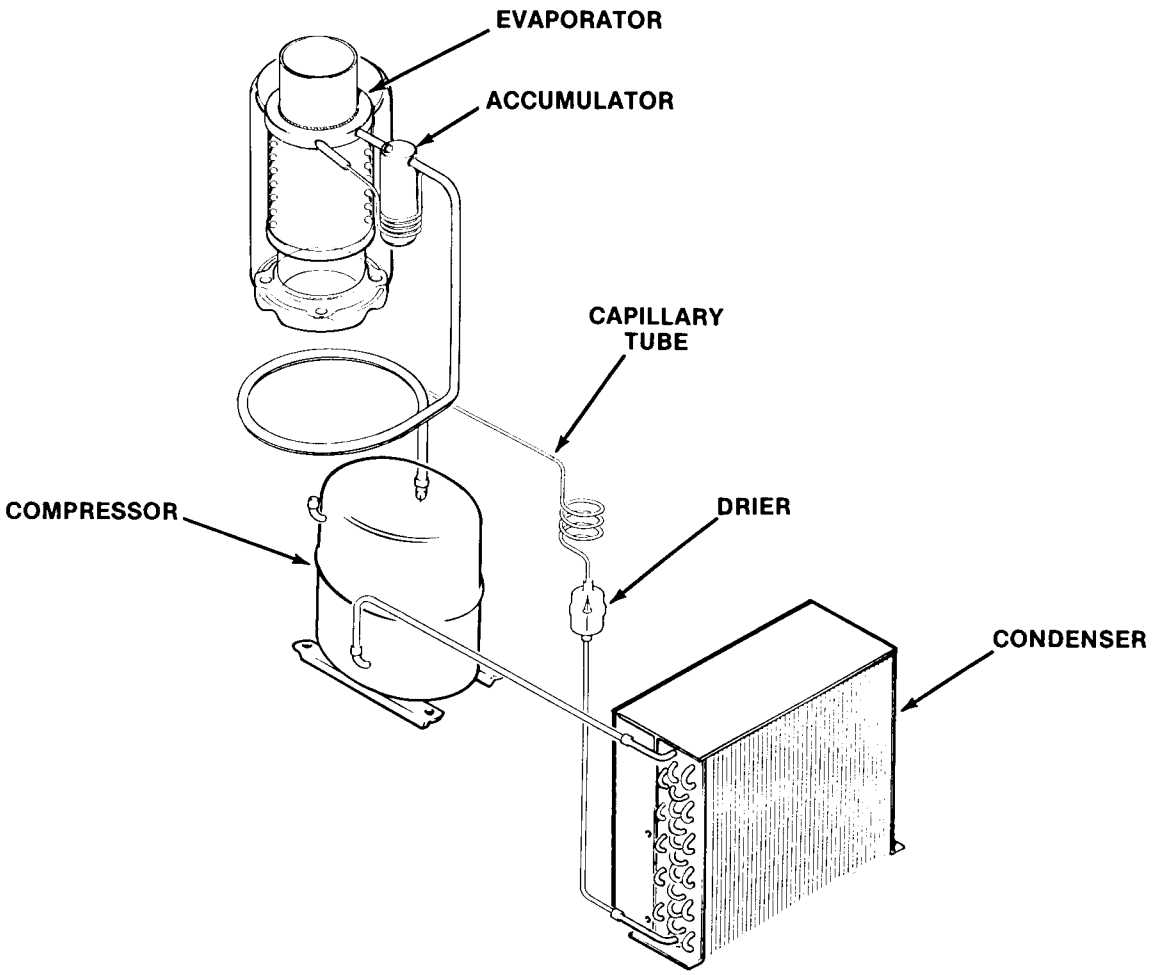

PR760 COMPONENT DESCRIPTION

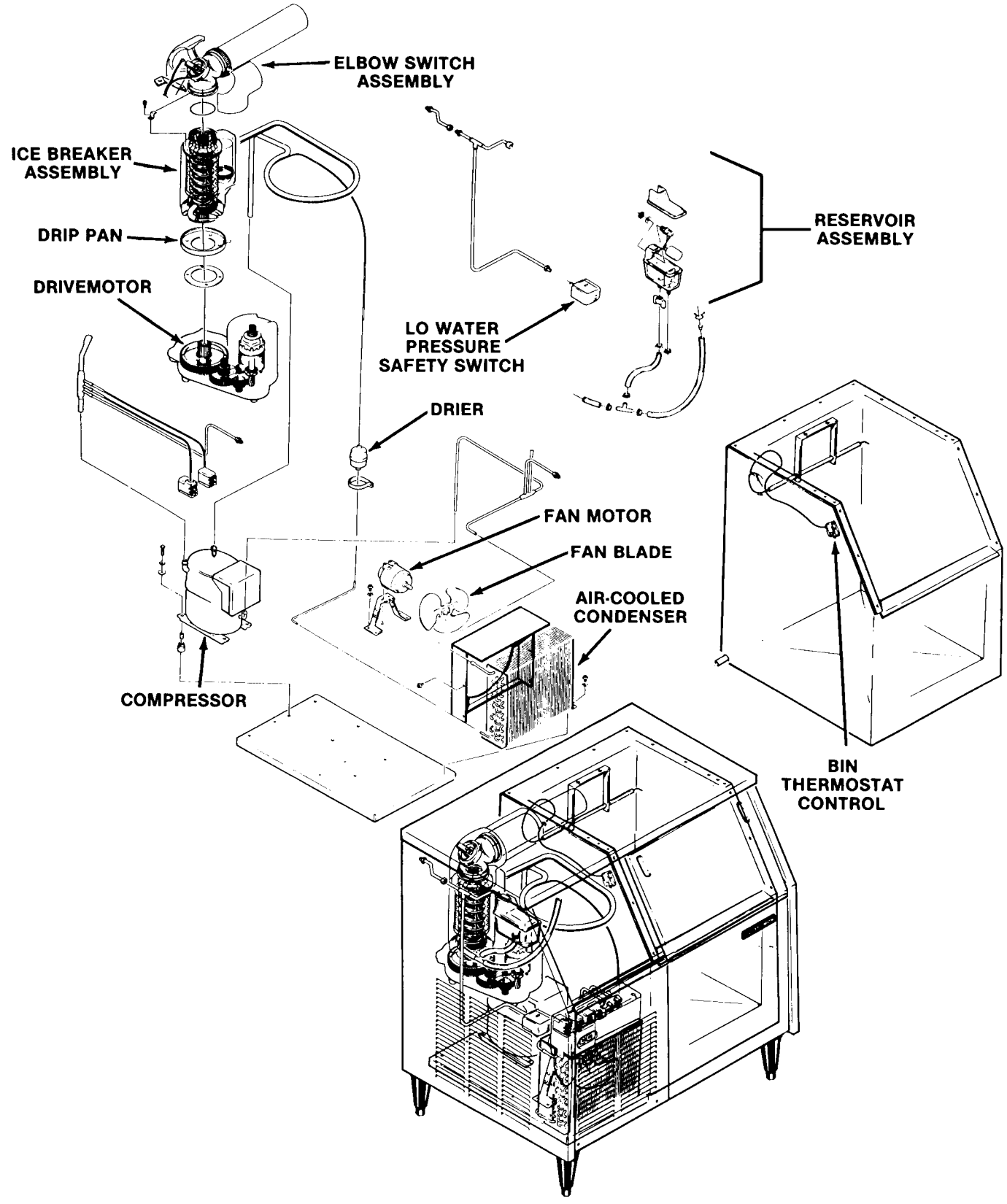

PR760 COMPONENT DESCRIPTION

ELBOW SAFETY SWITCH

The elbow safety switch is an ON-OFF switch that shuts off the compressor when an ice jam presses against the rubber diaphragm depressing the switch and opening the circuit. Melting action relieves pressure closing the circuit, lighting the start-reset pushbutton. The start-reset switch must then be pressed to start the automatic icemaking process.

ICE BREAKER ASSEMBLY

The ice breaker assembly, bolted to the top of the freezer, contains the bearing and seal for the top of the auger. Flaked ice created by the freezer is carried by the auger to the ice breaker assembly and the flaked ice is pushed by the auger through the tapered holes in the ice breaker. Flaked ice is compressed by auger pressure as it is pushed through the ice breaker assembly and the shafts of compressed ice are broken into random lengths of Ice Nuggets by the taper on the top of the ice breaker.

DRIVEMOTOR

The drivemotor assembly rotates the auger through a series of reduction gears from the electric motor to the freezer assembly. Cold ambient temperatures and interruptions in water supply are conditions that can cause excessively hard ice and overloads within the freezer assembly which is directly transmitted to the drivemotor; and in turn, will cause speed reduction or ultimate **freezeup.**

When the drivemotor is slowed to a pre-determined RPM, a sensing switch in the motor is designed to open the electrical circuit to the compressor. The compressor stops operating, no more ice is produced and the drivemotor continues to operate rotating the auger to clear the overload and gradually build up to full speed.

At a pre-determined higher RPM drivemotor speed, the speed sensing switch closes the electrical circuit to the compressor causing the normal icemaking process to resume.

WATER PRESSURE SAFETY SWITCH installed in the potable water inlet line is set to electrically open at 10 PSIG and stop the compressor. This AUTOMATIC RESET switch will restart the icemaking process when water pressure rises to 20 PSIG.

WATER REGULATOR VALVE
WATER-COOLED MODELS

The water regulator valve functions to maintain a constant head pressure, by regulating the amount of incoming water flow through the condenser, on water-cooled models. The valve operates through the refrigerant system high side pressure. Rotating the adjusting screw, located on top of the valve, can INCREASE or DECREASE the operating head pressure.

WATER RESERVOIR

The water reservoir, with a float valve assembly, maintains a consistant water supply within the freezer assembly. The water level in the reservoir is the same water level as in the freezer and the correct water level in the freezer is level with the top of the auger flights. The water level in the freezer can be adjusted by raising or lowering the water reservoir with the bracket.

BIN THERMOSTAT BRACKET

The bin thermostat bracket is the bin full ice contact point of the bin thermostat capillary tube.

PR760 COMPONENT DESCRIPTION

AIR-COOLED

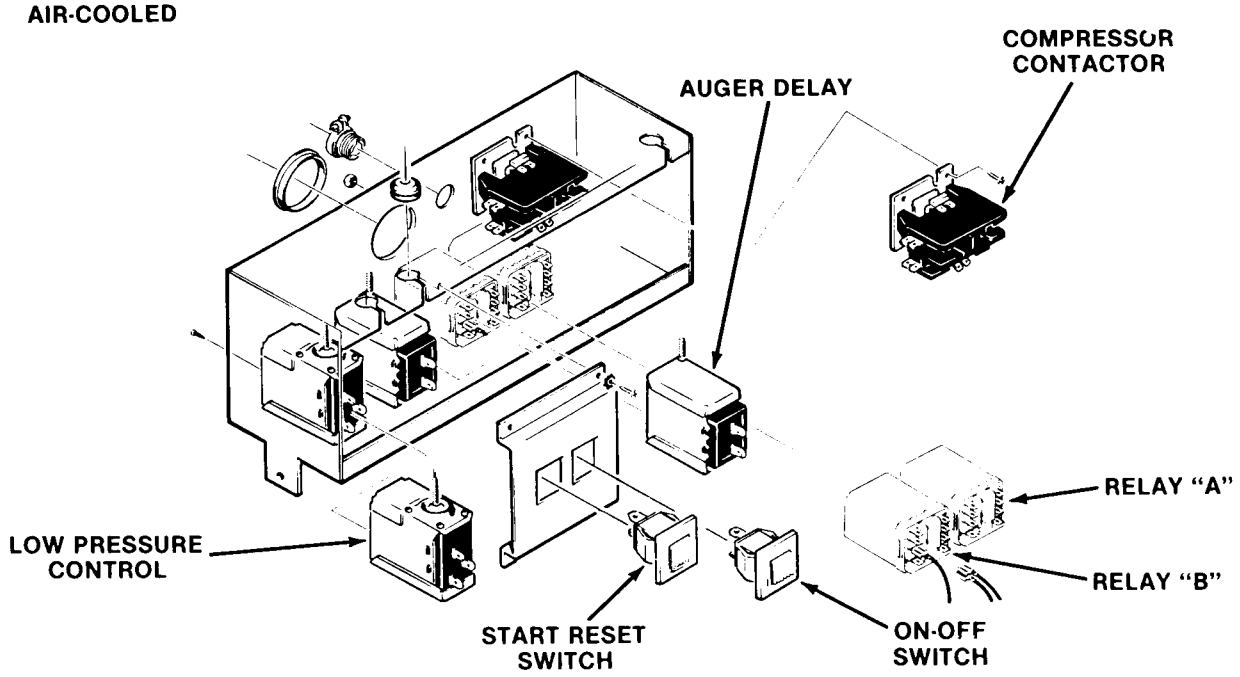

WATER-COOLED

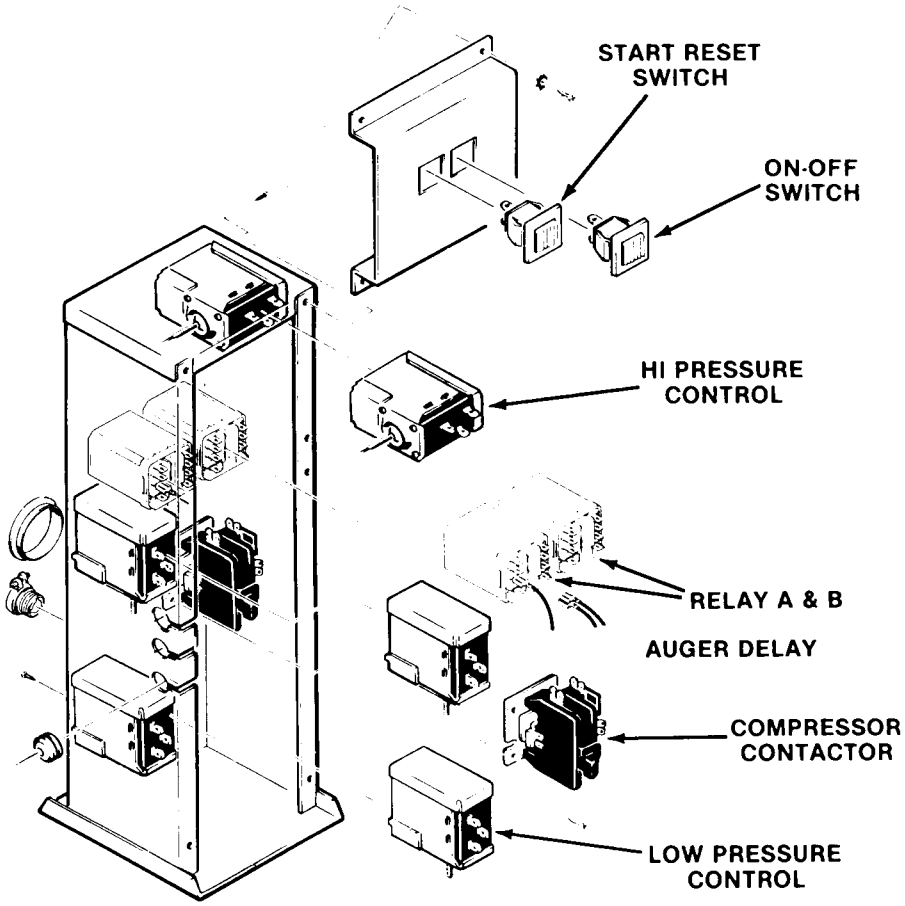

PR760 COMPONENT DESCRIPTION

AUGER DELAY SWITCH, a single-pole double throw (SPDT) switch, allows the gearmotor to rotate the Auger and clear the freezing chamber after the bin ice level switch circuit to compressor is OFF. When the icemaker restarts, the gearmotor starts in a no load condition, preventing excessive loading of gearmotor and bearings.

REFRIGERANT LO PRESSURE CONTROL is factory set to automatically SHUT DOWN the icemaker if the low-side pressure drops below 4 PSIG or low ambient or water temperatures exist. This is a AUTOMATIC RESET control.

Water-cooled icemakers have two refrigerant pressure switches, hi refrigerant pressure and low refrigerant pressure.

ON-OFF RESET PUSHBUTTON

When pushed completes the electrical circuit through the icemaker electrical components. The ON-OFF RESET PUSHBUTTON must be pressed to restart the icemaking process whenever any of the safety controls have functioned to stop the icemaker or an interruption in the electrical supply has occurred.

COMPRESSOR CONTACTOR

A single-pole contactor is used to supply current to the compressor; and, is wired so any control in the pilot circuit, such as the bin thermostat and high pressure control, etc., will cause the contactor coil to be de-energized, when the control contact OPENS, thereby breaking the circuit to the compressor through the contactor points.

ELBOW SAFETY SWITCH RELAY "A"

The elbow safety switch relay "A" maintains a circuit through the elbow safety switch until the elbow safety switch opens and switches the current through the lamp of the start reset pushbutton, which must be pushed and reset to restart the automatic icemaking process.

RELAY "B"

Relay "B" protects the compressor contactor from chattering during operation of the icemaking system.

COMPRESSOR START RELAY

The compressor start relay completes the circuit to the compressor from the start capacitor to provide enough energy to start the compressor. When the compressor motor has reached the proper RPM's, the compressor relay opens and removes the start capacitor from the circuit.

PR760 COMPONENT DESCRIPTION

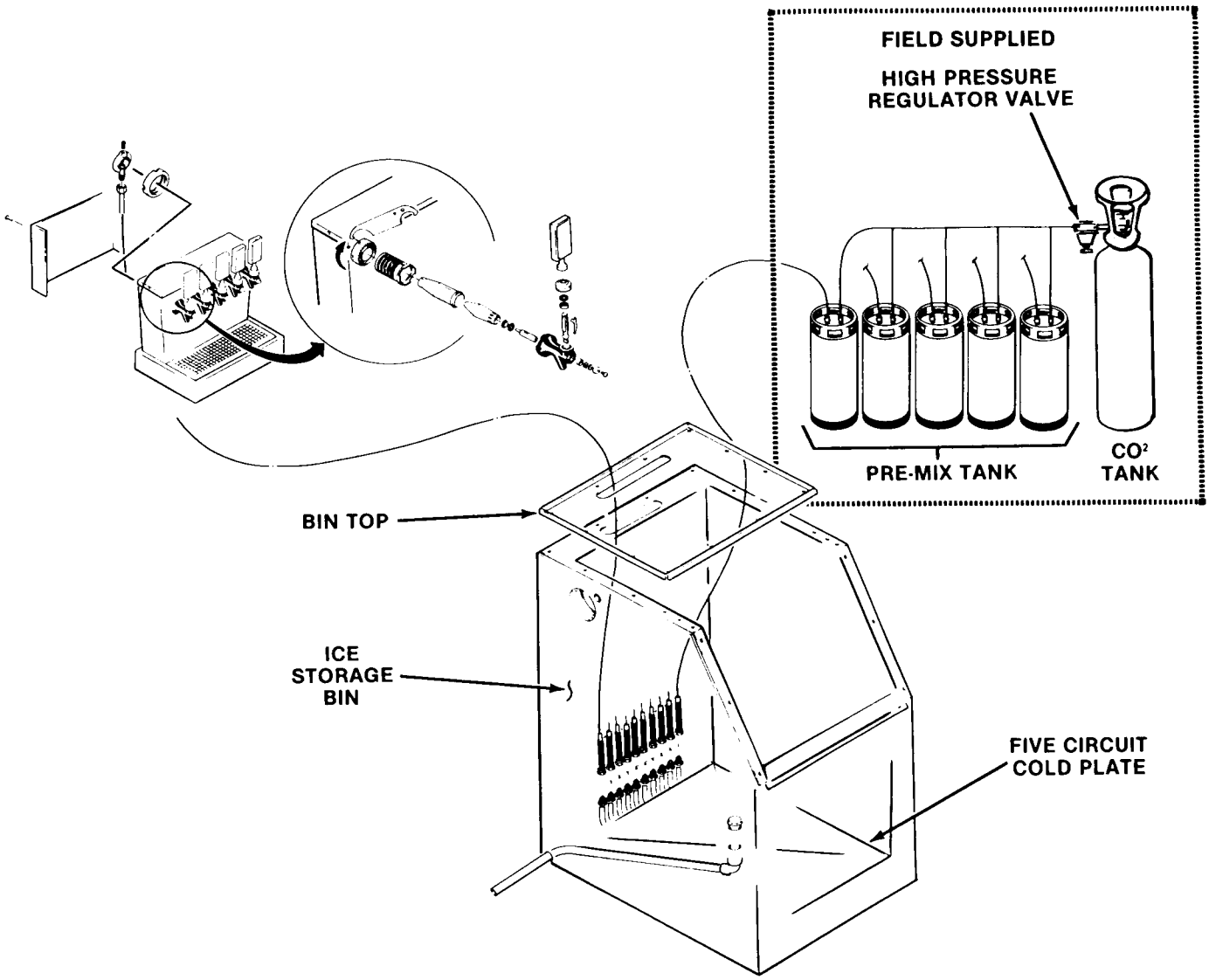

Pre-Mix Drink System

PR760 MAINTENANCE & CLEANING INSTRUCTIONS

A Scotsman Ice System represents a sizable investment of time and money in any company's business. In order to receive the best return for that investment, it MUST receive periodic maintenance.

It is the USER'S RESPONSIBILITY to see that the unit is properly maintained. It is always preferable; and less costly in the long run, to avoid possible down time by keeping it clean, adjusting it as needed and by replacing worn parts before they can cause failure. The following is a list of recommended maintenance that will help keep your machine running with a minimum of problems.

Maintenance and Cleaning should be scheduled at a MINIMUM of twice per year.

ICEMAKER

THE FOLLOWING MAINTENANCE SHOULD BE SCHEDULED AT LEAST TWO TIMES PER YEAR ON THIS ICEMAKER. CALL YOUR AUTHORIZED SCOTSMAN SERVICE AGENCY.

1. Check and clean water line strainers.
2. Check that the water level in the water reservoir is at the water level on the side of the float.
3. Remove cover from water reservoir and depress the float to insure that a full stream of water enters the reservoir.
4. Check that the icemaker cabinet is level, in side-to-side and front-to-back directions.
5. Clean the water reservoir and interior of the freezer assembly, using a solution of SCOTSMAN Ice Machine Cleaner. Refer to CLEANING-Icemaker.
6. When doubtful about refrigerant charge, install refrigerant gauges on Schrader valves and perform steps 6 and 7. Check gauge for compressor head pressure:

   AIR-COOLED MODELS: Varies between 130 and 145 PSIG.

   WATER-COOLED MODELS: Set at 135 PSIG. Adjust screw on top of water regulator valve to raise or lower head pressure.
7. Check gauge for suction line pressure:

   Varies between 8 and 12 PSIG, depending upon inlet water temperature and ambient air temperature.

AFTER SERVICING REFRIGERATION SYSTEM:

TORQUE REFRIGERATION ACCESS VALVE CAPS TO 60-75 INCH POUNDS.

8. Check drivemotor operation:

   Normal operating temperatures are about 160-degrees F., which is hot to touch. Oil motor once per year. Compressor should not start until this motor is up to full speed.

WARNING

Disconnect electrical power supply before removal procedures.

9. Check the elbow safety switch by removing the insulation halves, twisting the locking ring 90° and pulling out the switch assembly. The switch action can then be tested.

NOTE

The elbow safety switch is an ON-OFF switch that shuts off the compressor when an ice jam presses against the rubber diaphragm depressing the switch and opening the circuit. Melting action relieves pressure closing the circuit, lighting the start-reset pushbutton. The start-reset switch must then be pressed to start the automatic icemaking process.

10. Clean the air-cooled condenser, using vacuum cleaner, whisk broom or brush. Instruct customer to clean frequently and to be sure icemaker and fan motor are OFF.
11. Check that fan blades move freely, are not touching any surfaces and are not bent or out of balance.
12. Check for water leaks. Pour water down bin drain to be sure that drain line is open and clear.
13. Check the bin thermostat control bulb for position and function.

NOTE

The bin thermostat is factory set at 10-degrees F. differential and should keep the entire icemaker shut off at least 20 minutes in high ambient temperatures, longer in low ambient temperature during normal operation. Settings are 35-degrees F. CUT-OUT and 45-degrees F. CUT-IN.

PR760 MAINTENANCE & CLEANING INSTRUCTIONS

NOTE

If the unit being serviced is equipped with a STEEL NEEDLE bearing, the breaker assembly should be REPLACED. Contact your local Scotsman Distributor for further information. Breakers with a NON-METALLIC bearing should be cleaned and the seal replaced ONCE PER YEAR. If the type of breaker bearing is not known, the breaker should be inspected. All A and B models were equipped with steel needle bearings. Most C Models have the non-metallic bearings.

1. Remove elbow insulation and remove three Allen head screws and spout retaining brackets from the freezer assembly end of the elbow and switch assembly.
2. Remove three Allen head screws and spout retaining brackets from the freezer assembly end of the elbow and switch assembly.

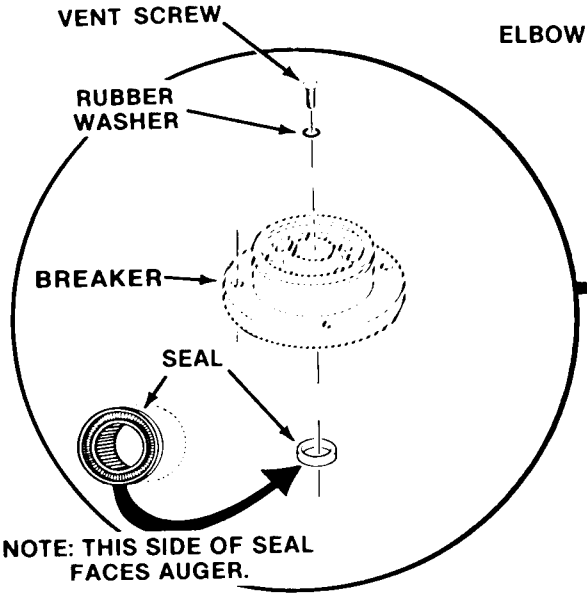

NOTE

In order to accomplish removal of the elbow and switch assembly in the next step, it may be necessary to further remove panels and disassemble the ice transport tube.

3. Lift the elbow and switch assembly and set aside to gain access to the top of the freezer assembly.
4. Remove four capscrews, lockwashers and the ice breaker assembly from the top of the freezer assembly for inspection.
5. Retain the O-ring for replacement during reassembly. Inspect the O-ring for cuts, tears or excessive wear, causes for replacement.
6. Replace the lip seal and inspect the top bearing seated in the ice breaker, wipe clean of mineral build up. Remove auger. Check seal and check auger for stains.

CAUTION

DO NOT force the auger and breaker together without having the vent hole open because pushing the breaker on with no air relief will cause the internal air pressure to force the grease seal away from the breaker.

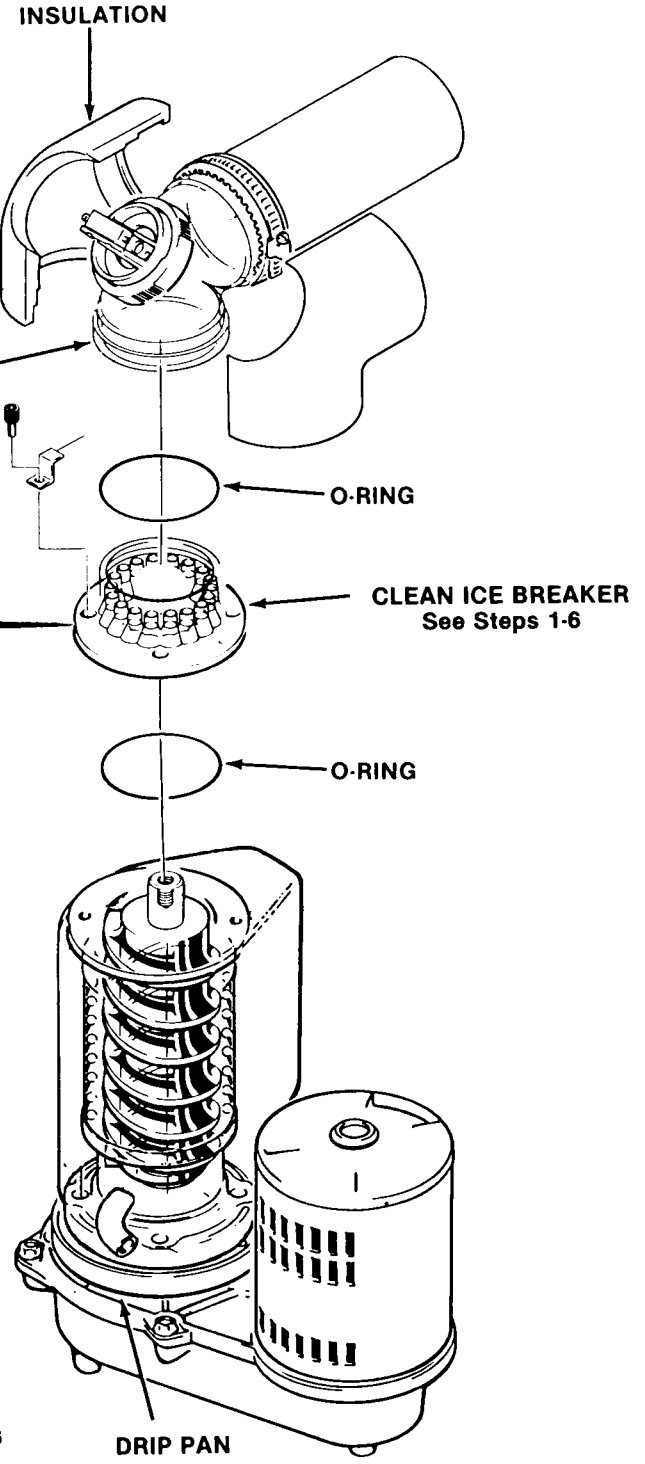

PR760 MAINTENANCE & CLEANING INSTRUCTIONS

NOTE

The elbow and switch assembly is manually reset and functions as a safety switch, to automatically stop the icemaking process if the bin thermostat control were to fail and cause ice to jam up in the ice transport tube.

CLEANING — Icemaker

1. PRESS the master ON-OFF pushbutton to OFF.
2. Remove screws and the top and front panels.
3. Remove all ice from the ice storage bin.
4. CLOSE the water supply shutoff valve; or, block the float in the water reservoir.
5. Use drain hose provided in the water feed tube and drain the reservoir.

////////////////////// **WARNING** //////////////////////

SCOTSMAN Ice Machine Cleaner contains Phosphoric and Hydroxyacetic acids. These compounds are corrosive and may cause burns. If swallowed, DO NOT induce vomiting. Give large amounts of water or milk. Call Physician immediately. In case of external contact flush with water. KEEP OUT OF THE REACH OF CHILDREN.

//

6. Prepare cleaning solution: Mix six ounces of SCOTSMAN Ice Machine Cleaner with one and one-half quarts of hot water.
7. Slowly pour the cleaning solution into the water reservoir.
8. PRESS the master ON-OFF pushbutton to ON.
9. Continue to slowly pour the cleaning solution into the water reservoir, maintain level just below the reservoir overflow.
10. Continue icemaking, using the cleaning solution, until all the solution is used up and the water reservoir is almost empty. DO NOT allow the icemaker to operate with empty reservoir.
11. PRESS the master ON-OFF pushbutton to OFF.
12. Wash and rinse the water reservoir.
13. Remove the block from the float in the water reservoir.
14. PRESS the master ON-OFF pushbutton to ON.
15. Continue icemaking for at least 15 minutes, to flush out any cleaning solution. Check ice for acid taste - continue icemaking until ice tastes sweet.
16. PRESS the master ON-OFF pushbutton to OFF.

////////////////////// **WARNING** //////////////////////

DO NOT use ice produced from the cleaning solution. Be sure none remains in the bin.

//

17. Remove all ice from the ice storage bin.
18. Add warm water to the ice storage bin and thoroughly wash and rinse all surfaces within the bin.
19. Clean and sanitize the ice storage bin each week.

NOTE

Cleaning requirements vary according to local water conditions and individual user operation. Visual inspection of the auger before and after cleaning will indicate frequency and procedure to be followed in local areas.

When doubtful about the clean condition of the auger, refer to the removal and replacement of the auger, water seal, o-ring, ice breaker assembly and freezer assembly to inspect the auger condition and the water seal condition.

PR760 MAINTENANCE & CLEANING INSTRUCTIONS

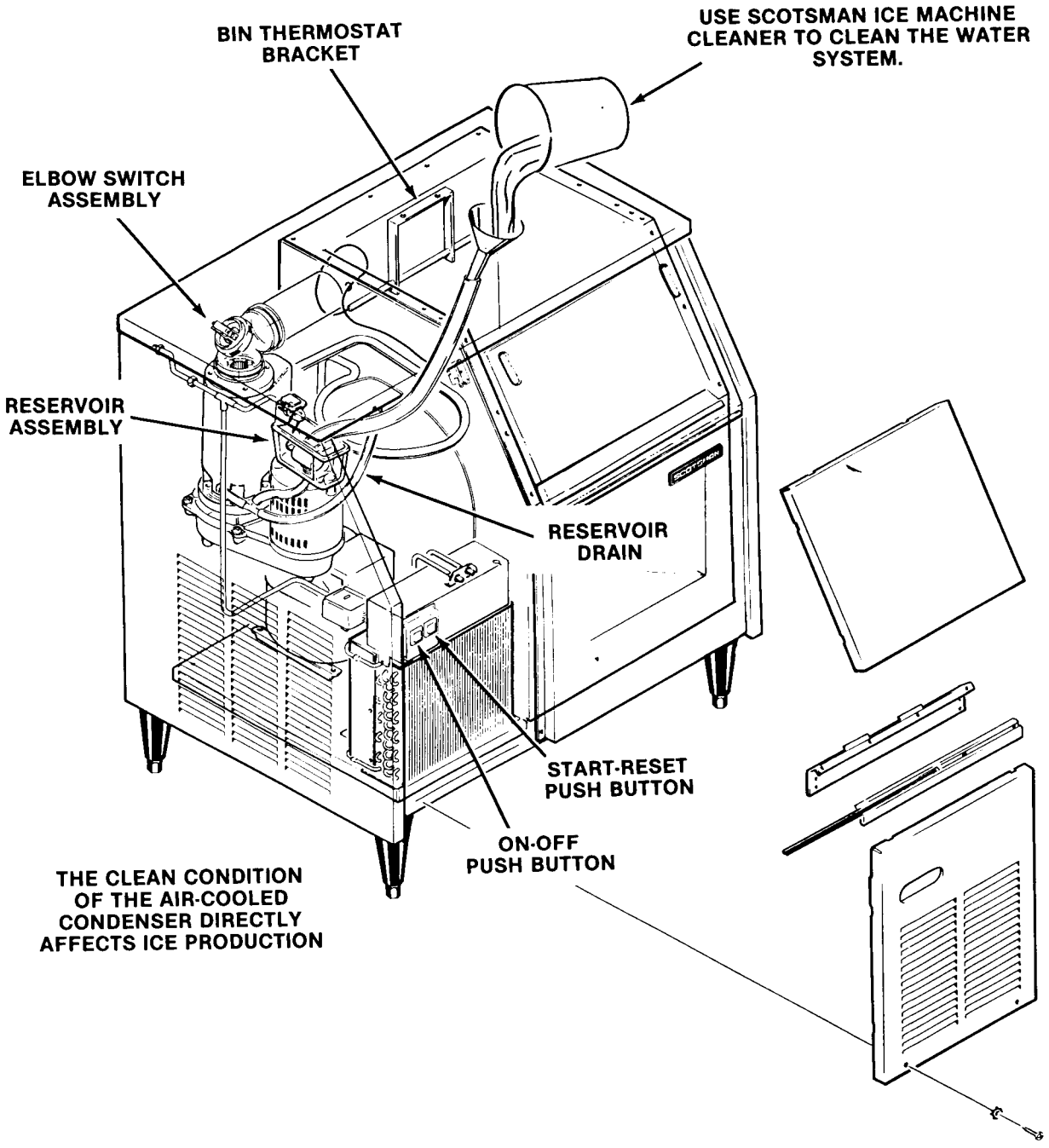

PR760 MAINTENANCE & CLEANING INSTRUCTIONS

CLEANING - Faucet Assembly

The faucet assembly need not be completely disassembled for the cleaning procedure. A special spanner or valve wrench, is required when removing the faucet body and lever assembly for the cleaning procedure, obtained through the soda supplier.

To remove and clean:

1. Temporarily disconnect syrup line at syrup tank, or otherwise release CO_2 gas pressure to the faucet to be cleaned.
2. Fit the tang at the large curved end of the valve wrench, into a hole in the round nut and unscrew, clockwise, to loosen the nut behind the faucet.
3. Unscrew the nut and remove the faucet body and lever assembly and the plastic compensator from the faucet sleeve and nut assembly.
4. Prepare cleaning solution: Mix six ounces of SCOTSMAN Ice Machine Cleaner with one and one-half quarts of hot water.
5. Immerse the removed parts in the cleaning solution, thoroughly washing solution over all surfaces and scrub surfaces with a brush.
6. Rinse all parts with clear hot water, to flush away all cleaning solution. Drain parts.
7. Repeat all steps, except step 4, for remaining faucets; then, pour remainder of the hot cleaning solution into the sink and rinse with clear hot water.
8. Sanitize all removed faucet parts. Refer to SANITIZING.
9. Replace cleaned and sanitized faucet parts in the reverse order of the removal procedure.

WARNING

SCOTSMAN Ice Machine Cleaner contains Phosphoric and Hydroxyacetic acids. These compounds are corrosive and may cause burns. If swallowed, DO NOT induce vomiting. Give large amounts of water or milk. Call Physician immediately. In case of external contact flush with water. KEEP OUT OF THE REACH OF CHILDREN.

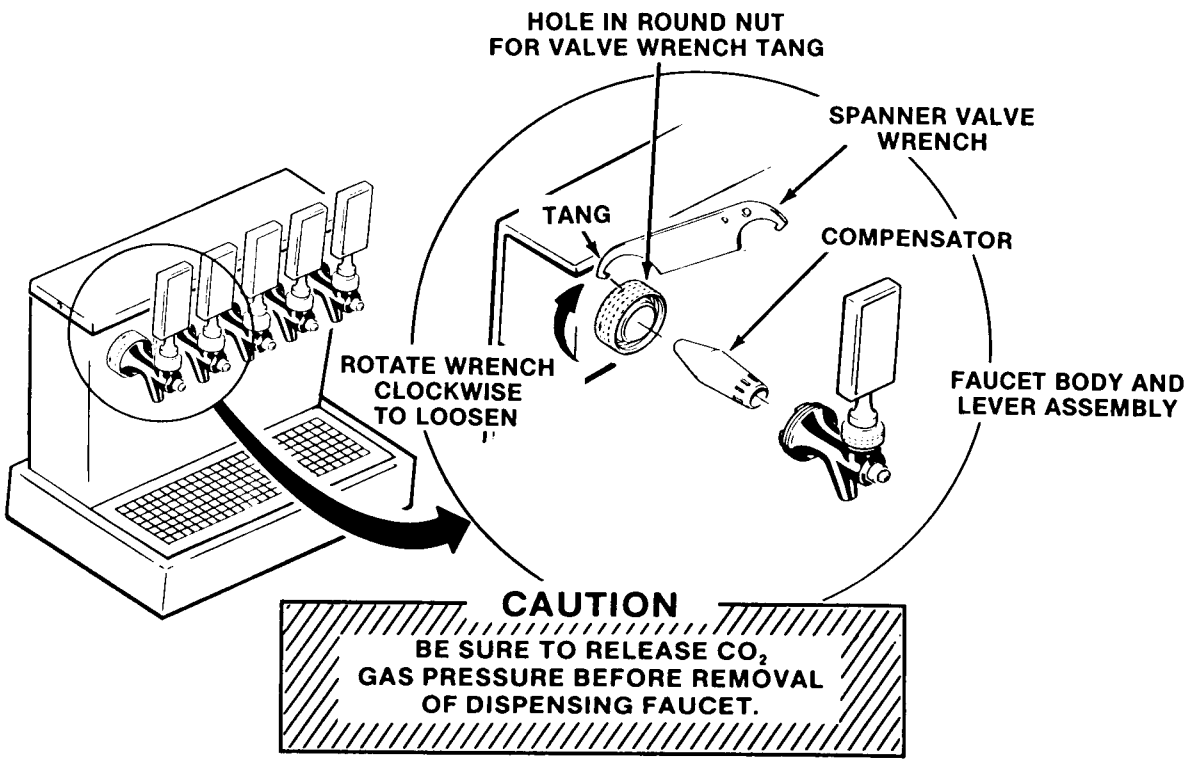

PR760 MAINTENANCE & CLEANING INSTRUCTIONS

////////////////////// WARNING //////////////////////

SCOTSMAN Ice Machine Cleaner contains Phosphoric and Hydroxyacetic acids. These compounds are corrosive and may cause burns. If swallowed, DO NOT induce vomiting. Give large amounts of water or milk. Call Physician immediately. In case of external contact flush with water. KEEP OUT OF THE REACH OF CHILDREN.

//

SANITIZING

Sanitizing is an important phase of the icemaking and dispensing operation. The following sanitizing procedure should be performed after every repair or replacement of parts in the Icemaker/Drink Dispenser. Additional requirements for performing the sanitizing procedure should be followed in accordance with the requirements of the local Health Authorities.

////////////////////// WARNING //////////////////////

Read WARNING thoroughly BEFORE preparing sanitizing solution, in next step.

1. **STERILEX 3-Q SANITIZING TABLETS**

   DANGER: KEEP OUT OF REACH OF CHILDREN. Tablets may be skin irritation or eye damage. Avoid prolonged skin contact. Do not get in eyes. In case of contact, flush with plenty of water. If irritation persists get medical attention. Avoid contamination of food.

   FIRST AID: If tablets are swallowed, drink promptly a large quantity of milk, egg whites or gelatin solution. Avoid alcohol.

   NOTE TO PHYSICIAN: Probable mucosal damage may contraindicate the use gastric lavage. Measures against circulatory shock, respiratory depression and convulsion may be needed. Rinse empty carton container thoroughly with water and discard. Always follow your health department regulations.

2. **MIKRO-QUAT**

   DANGER: Causes high damage and skin irritation. Do not get in eyes, or skin, or on clothing. Protect eyes when handling concentrated product. Harmful if swallowed. Avoid contamination of food.

   FIRST AID: In case of contact, immediately flush eyes or skin with plenty of water for at least 15 minutes. For eyes, call a physician. Remove and wash contaminated clothing before reuse. If swallowed, drink promptly a large quantity of milk, egg whites or gelatin solution or if these are not available, drink a large quantity of water. Call a physician immediately.

//

**Sterilex 3-Q sanitizing tablets are distributed by Pittsburgh Chemical Laboratory, Inc., Pittsburgh, PA 15222, and may be obtained through most restaurant supply houses.*

NOTE

Contact your Local Health Authorities and obtain their approval of the sanitizer you intend to use when sanitizing the Icemaker/Drink Dispenser.

Prior to performing the sanitizing procedure, it is assumed the cleaning procedure has been performed.

1. Prepare a sanitizing solution using a quaternary ammonium sanitizing compound.

NOTE

Carefully follow directions and observe all precautions on the sanitizing and compound container.

*One *Sterilex 3-Q sanitizing tablet per three quarts of water yields 200 ppm active quarternary; or, one-third ounce of *Mikro-Quat to one gallon of water yields 235 ppm active quarternary.*

The taste of ice and water will not be affected by the sanitizing of parts using the above mixed sanitizing solutions. Rinsing of part is not required with this relatively mild solution, but air drying of the parts is suggested before reassembly.

2. Immerse all parts, earlier removed and cleaned, in the sanitizing solution; or, if too large for the container of sanitizing solution, thoroughly wash the solution over all surfaces of all parts.
3. Drain all parts and allow to air dry.
4. Pour some of the sanitizing solution into the bin drain and the sink assembly drain.
5. Reassemble all air-dried parts in the Icemaker/Drink Dispenser.
6. Restore electrical power ON, water pressure ON, and pre-mix syrup and CO_2 pressure ON.
7. Replace all covers, doors and panels earlier removed.
8. Clean and sanitize the faucet assemblies and the bin interior and surfaces each week.

**Mikro-Quat, is manufactured by Economics Laboroatory, Inc., Osborn Building, St. Paul, MN 55102, and may be obtained from them through their Magnus Division, The Klenzade Division, or from restaurant supply houses.*

PR760 SERVICE DIAGNOSIS

The following charts list corrective actions for the causes of known symptoms of certain problems that can occur.

INTRODUCTION

SYMPTOM	POSSIBLE CAUSE	CORRECTION
Water Leaks.	Defective water seal.	Replace seal.
	Gravity feed line leaking.	Check hose clamp.
	Water level in reservoir too high.	Adjust water level to molded line on the float assembly.
	Storage bin drain and connecting fittings.	Check and repair.
Excessive noise or chattering.	Mineral or scale deposit on auger and inner freezing chamber walls.	For severe deposit, remove and manually polish auger, sand inner chamber walls of freezer barrel.
		For lighter concentration, use Scotsman Ice Machine Cleaner periodically.
	Intermittent water supply.	Check and clean water strainer.
		Check gravity feed line for air lock.
		Check to be sure float orifice is not restricted
		Check incoming water supply.
		Remove air lock.
	Water level in reservoir too low.	See CORRECTION for Water Leaks above.
	Gear reducer loose on frame.	Tighten gear reducer.
	Motor compressor not solid on rubber mounts.	Repair or replace rubber mounts.
	Gearmotor end-play or worn bearing.	Repair or replace bearing.
	Gearmotor thrust bearing worn.	Check/replace bearing.
	Top bearing worn.	Check/replace breaker.
	Water interruption.	Check for frozen water inlet to freezer.
Drivemotor makes high pitched noise.	Rotor bearing dry or worn.	Replace motor or bearing.
	Dry grease seal under rotor bearing.	Grease seal.

PR760 SERVICE DIAGNOSIS

SYMPTOM	POSSIBLE CAUSE	CORRECTION
Making wet ice	Back pressure too high.	Overcharge of refrigerant, faulty compressor or high head pressure. Lower pressure as indicated.
	Faulty compressor.	Replace compressor.
Low ice production.	Loss of refrigerant. Under or over-charge of refrigerant.	Check and recharge. See NAMEPLATE for charge correction.
	Dirty or plugged condenser.	Clean condenser.
	Low water level in water reservoir.	See CORRECTION for water leaks above.
	Partial restriction in capillary tube or drier.	Moisture in system. Overcharge of oil in system. Remove charge by blowing back through cap tube.
		Replace drier evacuate and recharge.
	Inlet water strainer partially plugged.	Remove screen and clean.
	Corroded or stained auger due to water condition.	Remove auger and clean, or use Scotsman Ice Machine Cleaner. See Maintenance Section.
Gearmotor noise.	Low on oil.	Remove case cover to check for proper oil level. Top of gears should be covered. Use: Sun Oil Company Prestige 50-ESP
Icemaker will not operate.	Blown fuse in line.	Replace fuse and check for cause of blown fuse.
	Bin thermostat set too high.	Adjust thermostat. Set at 35-degrees cut-out, 45-degrees cut-in.
	Loose electrical connection.	Check wiring.
	Switch in OFF position.	Set switch to ON position.
	Inoperative master switch.	Replace switch or thermal overload.
	Off on manual-reset pressure control.	Reset.
	Low supply water pressure.	Restore water pressure.

PR760 SERVICE DIAGNOSIS

SYMPTOM	POSSIBLE CAUSE	CORRECTION
Icemaker continues to operate with full storage bin.	Bin thermostat not properly set or is defective.	Re-set or replace bin thermostat. Re-set to 35-degrees cut-out, 45-degrees cut-in.
Compressor cycles intermittently.	Low voltage.	Check for overloading.
	Dirty condenser.	Clean condenser.
	Air circulation blocked.	Remove cause or move unit.
	Inoperative condenser fan motor.	Replace motor.
	Non-condensable gases in system.	Check for gas leaks, evacuate and recharge.
	Bin thermostat differential too small causing short cycling.	Widen differential 35-degrees cut-out, 45-degrees cut-in.
	Cycling on elbow switch.	Set or replace bin thermostat.
	Low on refrigerant causing low pressure control to cycle.	Check for leaks.
Icemaker operates but makes no ice.	Loss of undercharge of refrigerant.	Check for leaks and recharge. See NAMEPLATE for correct charge.
	Water not entering freezing chamber.	Plugged strainer or supply line. Check and clean. Air lock in gravity feed line. Check and remove air lock.
	Moisture in system.	Check, evacuate, replace drier.
		Recharge, See NAMEPLATE for correct charge.
	Water seal leaking.	Replace seal.
	Drivemotor or drive coupling stripped.	Repair or replace drivemotor or drive coupling.

PR760 ADJUSTMENT PROCEDURES

ADJUSTMENT OF THE BIN THERMOSTAT CONTROL

The control for the bin thermostat is the temperature control, located on the upper part of the retainer wall.

To adjust the bin thermostat control:

1. Hold a handful of ice against the capillary bulb in the ice storage bin.
2. Slowly rotate in the appropriate direction, the adjusting screw on the temperature control device until the icemaker shuts OFF.
3. Remove ice from the capillary bulb; then, place warm hand on the capillary bulb to restart the icemaker.
4. Place handful of ice against the capillary bulb and observe that the icemaker should shut OFF.

WARNING

The adjusting screws on the temperature control device have very sensitive response to adjustment. DO NOT attempt to adjust the screw until after thoroughly reading and understanding the instructions and illustrations. Over-adjusting or erratic guessing, can foul the instrument and cause ultimate delay and part replacement, WHICH COULD HAVE BEEN PREVENTED.

ADJUSTMENT OF THE DRINK DISPENSER VALVE

Adjust to INCREASE or DECREASE the rate of flow of the premix drink as follows:

1. To INCREASE Flow: Rotate screw COUNTER-CLOCKWISE, one-eighth turn.
2. To DECREASE Flow: Rotate screw CLOCKWISE, one-eighth turn.
3. Operate the adjusted valve, to test adjusted flow rate; and, repeat step as necessary, to achieve desired flow rate.

ADJUSTMENT OF THE LEG LEVELERS

When the Icemaker is ordered with the optional leg levelers, the cabinet must be leveled in the front-to-back and side-to-side directions. This adjustment should be performed during initial installation of the cabinet and anytime the cabinet is moved from the original location of another site.

1. Using a 1-1/8" open-end wrench, and a carpenter's bubble level, rotate the threaded leveler in each leg to RAISE or LOWER the cabinet until the cabinet is level in the front-to-back direction.
2. Repeat leveling in the side-to-side direction.
3. Recheck both the front-to-back and the side-to-side leveling and repeat adjustments, as necessary.

ADJUSTMENT OF THE WATER REGULATOR ASSEMBLY

The correct head pressure on water-cooled models is 135 PSIG. Adjustments can be performed on the water regulator assembly to increase or decrease the head pressure.

To adjust the water regulator assembly:

1. To INCREASE the head pressures: Rotate the adjusting screw, on the water regulator assembly COUNTER-CLOCKWISE.
2. To DECREASE the head pressure: Rotate the adjusting screw, on the water regulator assembly CLOCKWISE.

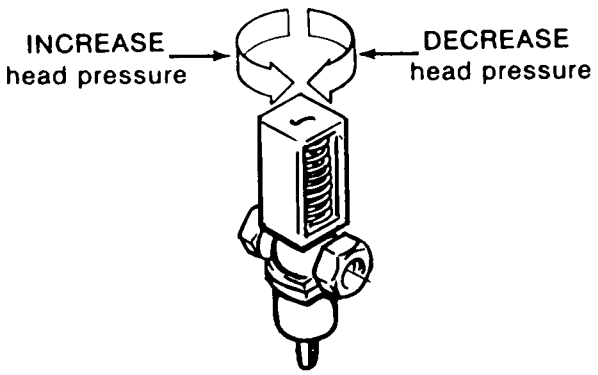

WATER REGULATOR

PR760 ADJUSTMENT PROCEDURES

ADJUSTMENT OF THE WATER RESERVOIR FLOAT

The correct water level in the water reservoir should be at the level of the raised molded line, on the side of the body of the water reservoir. When the water line level is above or below the raised molded line, adjustment can be performed to raise or lower the water level by bending the metal arm of the float inside the water reservoir.

To adjust the water reservoir float:

1. To RAISE the water level:
   Hold one end of the metal arm of the float and slightly bend the float up.
2. To LOWER the water level:
   Hold one end of the metal arm of the float and slightly bend the float DOWN.
3. To perform MAJOR adjustment:
   When repair or replacement has been performed and the water level line betweeen the water reservoir and the freezer assembly has been substantially altered:

   a. Loosen the three screws and lockwashers which attach the reservoir bracket and water reservoir to the freezer mount.

   b. Move the reservoir bracket UP or DOWN to properly position the water line level within the freezer. The proper water level within the freezer is 1/2" - 3/4" below the top of the auger.

   c. When proper water level within the freezer is adjusted, re-tighten screws attaching the water reservoir bracket to the freezer mount.

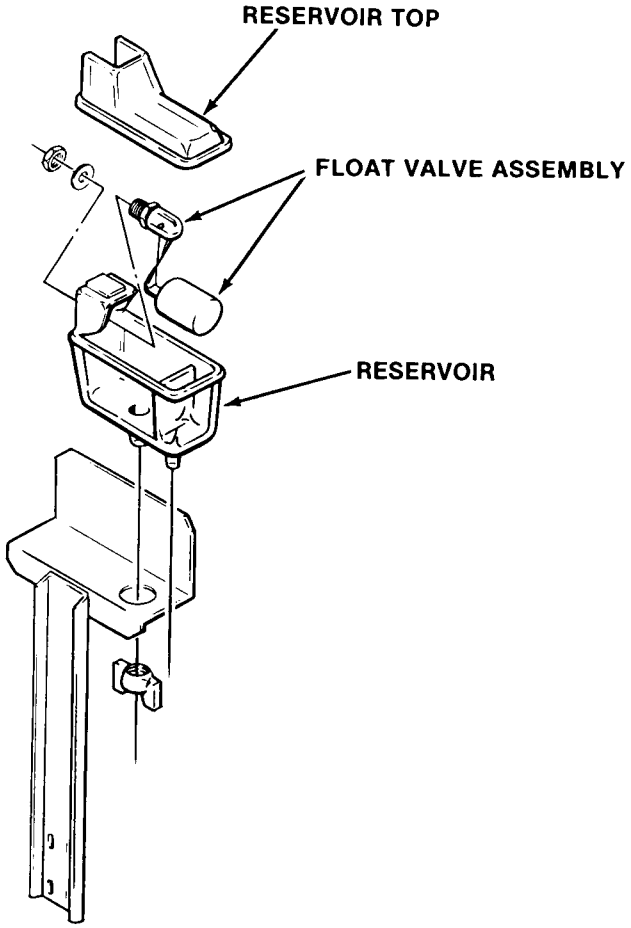

PR760 REMOVAL AND REPLACEMENT PROCEDURES

SLIDE OUT CHASSIS PROCEDURE

1. Disconnect the electrical supply to the icemaker at the circuit breaker or fuse box.

WARNING

Be sure the electrical power supply to the icemaker is OFF before proceeding with removal procedures.

2. Close the inlet water valve to the icemaker.
3. Remove two screws and the lower left front panel.
4. Remove plastic trim, screws, aluminum trim.
5. Remove screws and left front bracket. Remove upper front left panel. Disconnect the water inlet line. Point A.
6. Remove screws and control box cover to gain access and disconnect and remove from the control box the building source electrical connections.
7. Loosen the screw on the screw clamp and U-channel securing the ice transport tube to the elbow and safety switch and separate the ice transport tube from the elbow.
8. Remove wire leads from the bin thermostat. Point B.
9. Water-cooled models must be disconnected at the water-cooled condenser inlet and outlet connections. (Inside cabinet).
10. Remove Corbin clamp and remove reservoir overflow drain tubing from the reservoir and drip pan. Point C.
11. For partial chassis removal, remove two screws and remove base to base bracket located on the lower chassis front and pull chassis out to service. For complete removal, remove chassis stop. Point D.

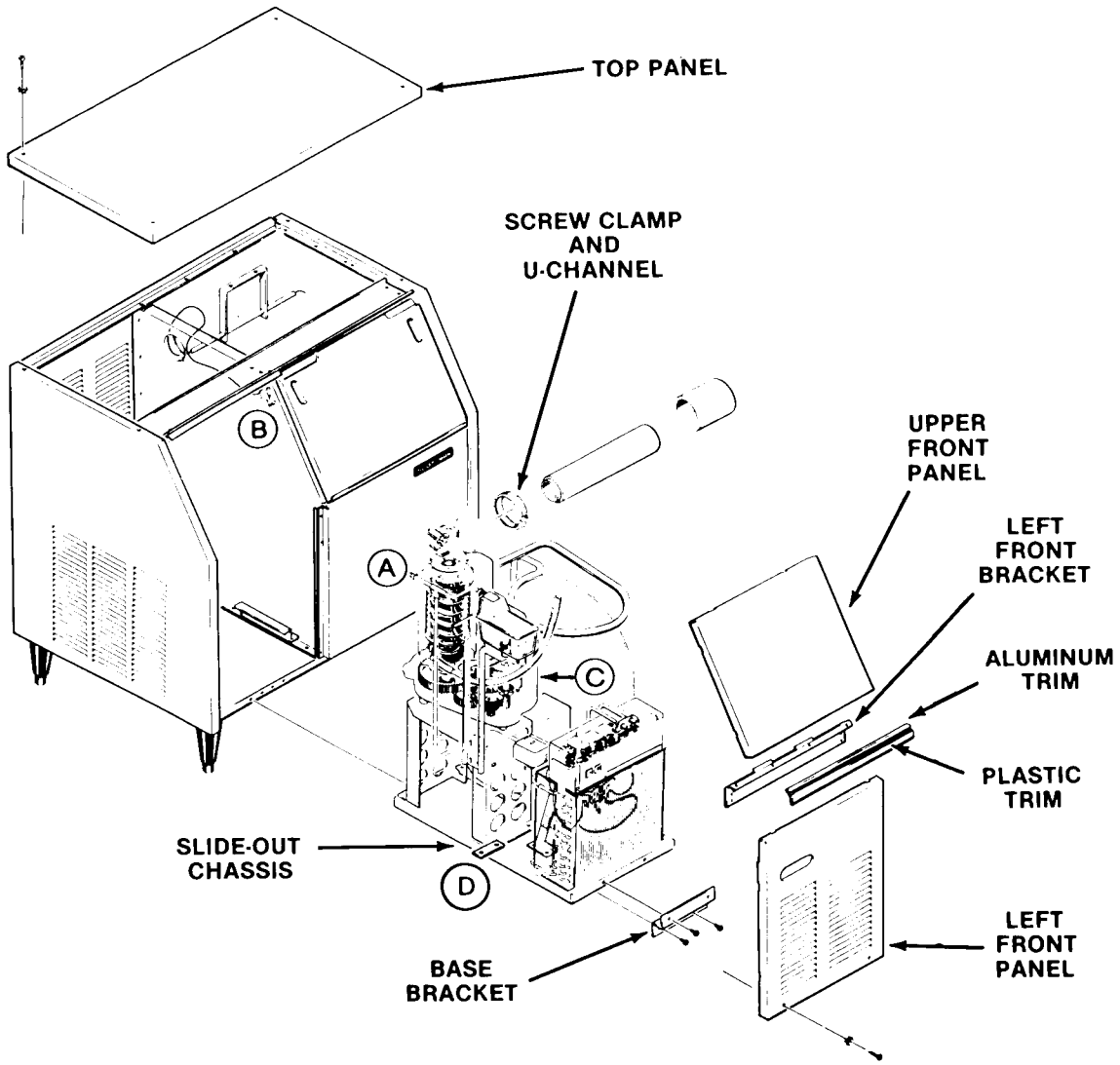

PR760 REMOVAL AND REPLACEMENT PROCEDURES

PR760's have been manufactured in "A", "B" and "C" Models (as in model PR760AE-1A vs. PR760AE-1C.) The following instructions are designated for either "A", "B" or "C" models. Be certain to check your model number and refer to the appropriate steps.

Read the instructions thoroughly before performing any Adjustment or Removal and Replacement Procedures.

////////////////////// **WARNING** //////////////////////

Be sure the electrical power supply and the water supply are OFF, BEFORE starting any of the following REMOVAL AND REPLACEMENT procedures as a precaution to prevent possible personal injury or damage to equipment.

//

REMOVAL AND REPLACEMENT OF THE AUGER, WATER SEAL, O-RING, ICE BREAKER ASSEMBLY AND FREEZER ASSEMBLY (A, B and C MODELS)

To remove the auger, water seal, o-ring and ice breaker assembly:

1. Shut off water supply to the icemaker/dispenser at the building source.
2. Disconnect or shut-off electrical power to the icemaker at the building source.
3. Perform steps from slide-out chassis procedure page and pull the chassis out for servicing.
4. Remove three socket head screws and spout retaining brackets from the end of the spout assembly at the top of the freezer assembly.
5. Lift the elbow safety switch and spout UP, off of the freezer assembly.
6. Retain the o-ring for replacement during reassembly. Inspect for cuts, tears or excessive wear, causes for replacement.
7. Remove four capscrews, lockwashers and the ice breaker assembly from the top of the freezer assembly.

NOTE: *To service icebreaker only, go to steps 21-24.*

8. Retain the o-ring for replacement during reassembly. Inspect for cuts, tears or excessive wear, causes for replacement.
9. Remove hose clamp and disconnect the water feeder tube from the reservoir, at the freezer to drain the reservoir and freezer of water.
10. Remove the auger. If necessary a bolt can be threaded into the top end of the auger from the freezer and a hand tool used to pull on the bolt to remove the auger.

To remove Water Seal only, omit steps 12, 13, and 14.

TO REMOVE FREEZER ASSEMBLY:

11. Pull back permagum around freezer base mounting bolts and remove four screws and flatwashers. Separate the freeezer assembly, gasket and adapters, from the drivemotor assembly.
12. Bleed off or blow the refrigerant charge through the Schrader valve.
13. Unsolder and disconnect the refrigerant suction line at the compressor, and the associated capillary line at the drier.
14. Remove the freezer assembly from the chassis.

A and B MODELS

15. Using a suitable length and size wooden dowel or stick inserted through the top of the open freezer assembly, tap the stationary piece water seal out the bottom of the freezer assembly.

C MODEL

15. Remove snap ring from inside bottom of evaporator assembly. Using a suitable length and size of wooden dowel or punch inserted through the top of the open freezer assembly, tap the stationary portion of the water seal out the bottom of the freezer assembly.

16. Replace the water seal any time it has been removed.

////////////////////// **CAUTION** //////////////////////

The lower two-part water seal is a precise seal and fitting. Any damage or wear will cause a failure. It is recommended that the lower two-part water seal be replaced any time there is a question of condition.

//

PR760 REMOVAL AND REPLACEMENT PROCEDURES

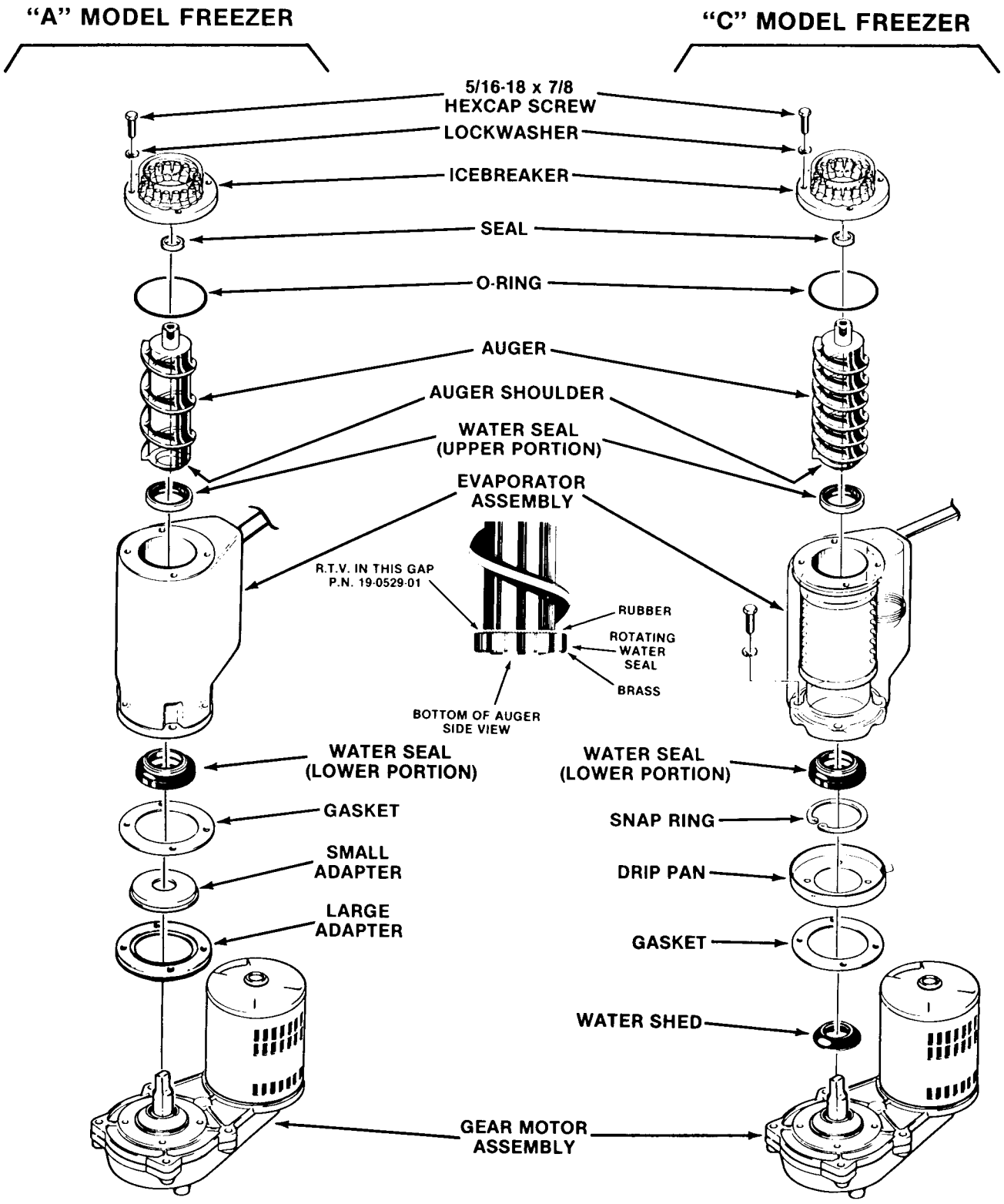

A and B MODELS

17. Replace the parts starting with the stationary part of the water seal. Carefully inspect it prior to assembly. Insert this half of the water seal into the bottom of the freezer. Then insert the brass freezer adapter into the bottom of the freezer tube and push it in as far as it will go.

C MODEL - OR REPLACEMENT FREEZER

17. Replace the new stationary portion of the two-part water seal in the bottom of the freezer assembly and press in far enough to install the snap ring. **IMPORTANT:** pull water seal back down against snap ring all the way around the freezer.

A and B MODELS

18. Mount the freezer and gasket to the gear motor case. Be certain that the gearmotor is in good working condition and that the large plastic adapter is in place on the gearbox.

C MODEL - OR REPLACEMENT FREEZER

18. Mount the freezer, drip pan and gasket to the gearmotor case. Check to be sure the gearmotor is in good condition and the water shed is in place around the output shaft.
19. Apply Scotsman part number 19-0529-01 RTV silicone rubber to the auger shoulder before pushing on the water seal. Place just enough silicone on to the auger, so that when the water seal is placed on the auger, the gap between the auger shoulder and water seal is completely filled with silicone.

    The silicone must be allowed to "set-up" or dry on the surface before any water can be added to the freezer.

CAUTION

If any silicone gets onto the mating surfaces of the water seal, the seal is ruined, and cannot be used.

20. Install auger.
21. Remove vent screw from brass plug to provide pressure relief during assembly and carefully place the breaker bearing assembly onto the auger. This new seal fits the auger shaft very tightly and it will go onto the auger with some resistance. Be very careful to push it straight onto the auger as tipping or angling of the breaker could damage the seal lip.
22. Install the vent screw with rubber washer into the breaker plug. Use a small drop of Loctite 680 on the screw threads.
23. Bolt the breaker back onto the freezer assembly and test the unit.
24. Reassemble ice transport tube, insulation, and bin top assembly in reverse order of disassembly.

CAUTION

DO NOT force the auger and breaker together without having the vent hole open because pushing the breaker on with no air relief will cause the internal air pressure to force the grease seal away from the breaker.

PR760 REMOVAL AND REPLACEMENT PROCEDURES

CAUTION

DO NOT force the auger and breaker together without having the vent hole open because pushing the breaker on with no air relief will cause the internal air pressure to force the grease seal away from the breaker.

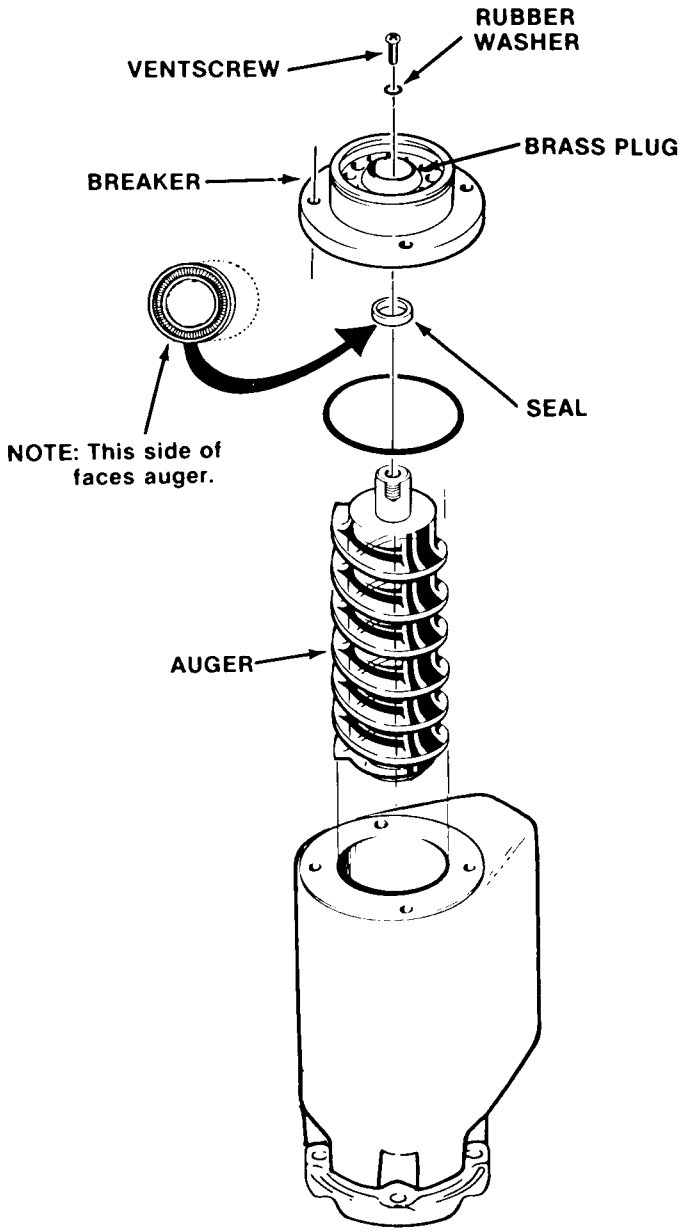

PR760 REMOVAL AND REPLACEMENT PROCEDURES

REMOVAL AND REPLACEMENT OF THE ELBOW AND SWITCH ASSEMBLY

To remove the elbow and switch assembly:

1. Disconnect the electrical supply to the icemaker at the circuit breaker or fuse box.

////////////////// WARNING //////////////////

Be sure the electrical power supply to the icemaker is OFF before proceeding with removal procedures.

//

2. Remove screws and remove top panel.
3. Remove insulation halves from the elbow switch assembly.
4. Loosen the screw on the screw clamp and U-channel securing the ice transport tube to the elbow and safety switch and separate the ice transport tube from the elbow.
6. Loosen the screw on the screw clamp and U-channel securing the ice transport tube to the elbow and safety switch and separate the ice transport tube from the elbow.
7. Remove bolt and washer and remove switch support from the ice breaker.
8. Remove three Allen head screws and spout retaining brackets from the freezer assembly and elbow and switch assembly.
9. Lift the elbow and switch assembly UP to clear the top of the freezer assembly.
10. Remove screws and the switch from the switch actuator housing.
11. Rotate the retainer ring 90-degrees to unlock the retainer ring and the switch actuator housing from the elbow assembly and separate the parts from the elbow.
12. Inspect the rubber diaphragm for cuts, tearing or excessive wear.

To replace the elbow and switch assembly, reverse the removal procedure.

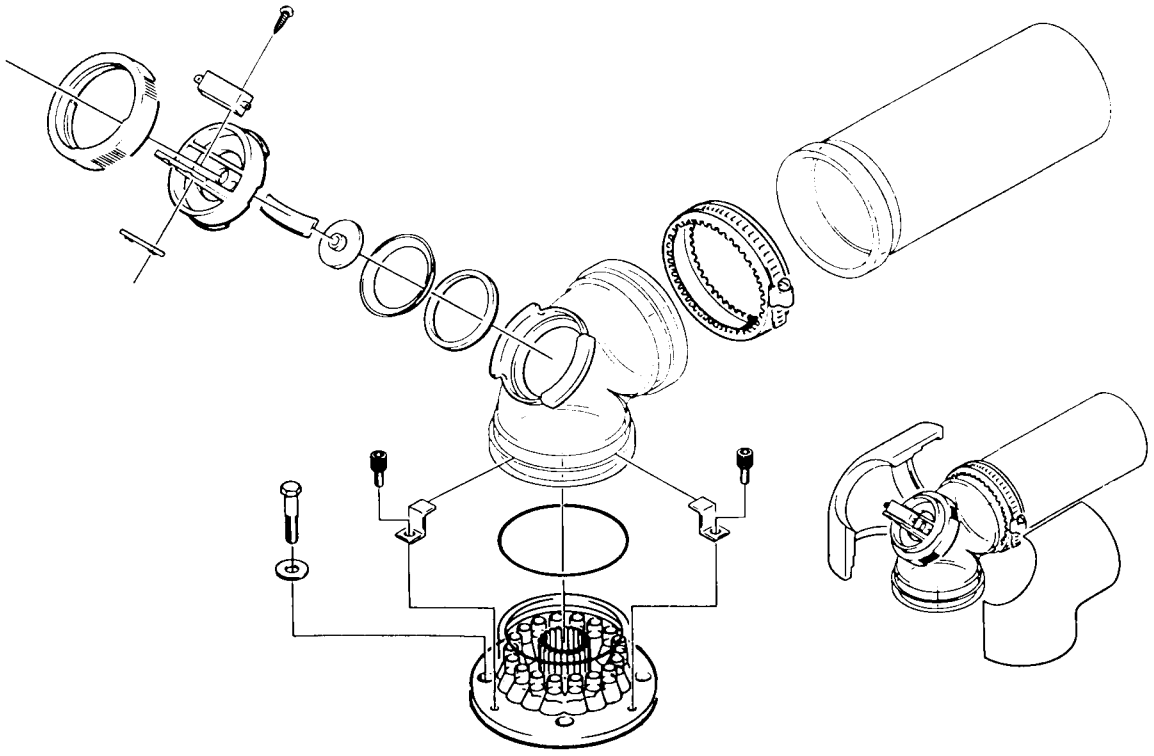

Ice Breaker Assembly

PR760 REMOVAL AND REPLACEMENT PROCEDURES

REMOVAL AND REPLACEMENT OF THE COMPRESSOR ASSEMBLY

To remove compressor refer to SLIDE-OUT CHASSIS PROCEDURE and remove chassis from cabinet.

1. Remove two screws and the cover from the compressor junction box.
2. Disconnect the electrical leads at the compressor junction box, that originate in the control box and fan motor.
3. Bleed off or blow the refrigerant charge through the Schrader valve.
4. Unsolder the suction line from the compressor.
5. Unsolder the discharge line from the compressor.
6. Unsolder the process header tube from the compressor and retain for installation on the replacement compressor.
7. Remove four bolts, lockwashers and washers which secure the compressor to the chassis mounting base.
8. Remove the compressor from the chassis.
9. To replace the compressor assembly, reverse the removal procedures.

NOTE

Always install a replacement drier, anytime the sealed refrigeration system is opened. Do not replace the drier until all other repair or replacement has been completed.

NOTE

Thoroughly evacuate the system to remove moisture and non-condensables.

10. When recharging the system with refrigerant, always check the nameplate for the specified refrigerant charge.

REMOVAL AND REPLACEMENT OF THE CONDENSER — AIR-COOLED MODELS

To remove the condenser refer to SLIDE OUT CHASSIS PROCEDURES and complete all steps.

1. Bleed off or blow the refrigerant charge through the Schrader valve.
2. Remove one screw and disconnect the drier brace and drier from the condenser shroud.
3. Unsolder and disconnect the condenser inlet tube at the condenser.
4. Unsolder and disconnect the condenser outlet tube at the condenser.
5. Remove three screws, lockwashers and washers securing the condenser to the chassis base.
6. Remove four screws and attach the control box to the condenser.
7. Remove the condenser from the chassis base.
8. To replace the condenser, reverse the removal procedure.
9. When recharging the system with refrigerant always check nameplate for the specified refrigerant charge.

REMOVAL AND REPLACEMENT OF THE CONDENSER — WATER-COOLED MODELS

To remove the water-cooled condenser:

1. Remove two screws and cabinet left front panel.
2. Bleed or blow the refrigerant charge through the Schrader valve.
3. Unsolder the refrigerant inlet and outlet lines from the condenser.
4. Disconnect the water inlet and outlet lines from the condenser.
5. Remove two bolts, lockwashers and washers which secure the condenser to the chassis mounting base.
6. Remove the condenser from the cabinet.
7. To replace the condenser, reverse the removal procedure.
8. When recharging the system with refrigerant always check nameplate for the specified refrigerant charge.

NOTE

Always install a replacement drier, anytime the sealed refrigeration system is opened. Do not replace the drier until all other repair or replacement has been completed.

Thoroughly evacuate the system to remove moisture and non-condensables.

PR760 REMOVAL AND REPLACEMENT PROCEDURES

REMOVAL AND REPLACEMENT OF THE LIQUID LINE DRIER

To remove the drier refer to SLIDE OUT CHASSIS PROCEDURES and complete all steps.

1. Remove screw and drier brace attaching the drier to the condenser shroud on air-cooled models; and, the chassis base on water-cooled models.
2. Bleed off or blow the refrigerant charge through the Schrader valve.
3. Unsolder refrigerant lines at top and bottom of drier, remove the drier and separate the drier from the drier brace.

To replace the drier:

1. Remove the factory seals from the replacement drier and install the drier in the refrigerant lines with the arrow positioned in the direction of the refrigerant flow.

////////////////// CAUTION //////////////////

If the factory seal is broken on the replacement drier, exposing it to the atmosphere more than a few minutes, the drier will absorb moisture from atmosphere and lose substantial ability for moisture removal.

Be sure the replacement drier is installed with the arrow positioned in the direction of the refrigerant flow.

//

2. install the drier brace on the drier.
3. Solder the drier into the lines, two places.
4. Purge the system and check for leaks.
5. Thoroughly evacuate the system to remove moisture and non-condensables.
6. Charge the system with refrigerant by weight SEE NAMEPLATE for specifications.
7. Leak test the system.

REMOVAL AND REPLACEMENT OF THE DISPENSING VALVE (A MODELS ONLY)

////////////////// CAUTION //////////////////

SCOTSMAN Parts Department DOES NOT stock repair parts for soda valves. Prevent delay and problems by ordering spare valves. For ordering replacement internal valve parts from the manufacturer:

THE CORNELIUS COMPANY
2727 North Ferry Street
Anoka, Minnesota 55303

//

1. To remove the dispensing valve temporarily disconnect syrup line at syrup tank, or otherwise release CO_2 gas pressure to the dispensing valve or faucet to be replaced or repaired.
2. Remove screws and remove dispensing tower back panel to gain access.
3. Disconnect the tube assembly from the adaptor at the back of the dispensing valve. See illustration.
4. Unscrew the shank nut on the threaded sleeve of the dispensing valve, behind the dispensing panel; then, remove the shank nut, shank seal washer and shank seal.
5. Remove the dispensing valve from the front of the dispensing panel on the dispensing tower assembly, using care to prevent damage to threads.
6. Disassemble and inspect all parts of the valve for replacement, as necessary.
7. To replace the dispensing valve, reverse the removal procedure.

PR760 REMOVAL AND REPLACEMENT PROCEDURES

REMOVAL AND REPLACEMENT OF THE GEAR MOTOR

WARNING

Be sure the electrical power supply to the icemaker is OFF before proceeding with removal procedures.

To remove the gear motor refer to SLIDE OUT CHASSIS PROCEDURES and complete all steps.

To remove the auger drivemotor:

1. Disconnect electrical power leads from the motor.
2. Unscrew four capscrews securing motor to gearcase.
3. Lift off motor winding the gear reducer.
4. Use a pry bar to remove rotor and rotor bearing from the gearcase.
5. Examine grease seal in gearcase. Replace if worn. Add grease to seal and bearing housing before re-assembly.

To replace, reverse the removal procedures.

NOTE

Motors must be exchanged complete. DO NOT mix rotors, housings or windings.

REMOVAL AND REPLACEMENT OF THE GEAR MOTOR ASSEMBLY

WARNING

Be sure the electrical power supply to the icemaker is OFF before proceeding with removal procedures.

CAUTION

SHUT OFF water supply to icemaker.

To remove the gear motor assembly:

1. Refer to Removal and Replacement of the Elbow & Switch Assembly and perform steps to gain access to the freezer assembly.
2. Thread suitable length bolts, having No. 5/16-18 UNC-2B threads, into thread hold in the top of the auger. Grasp bolt head with hand tool and pull auger out.
3. Unbolt freezer from gear motor assembly, lift up and off gear motor.
4. Remove the drivemotor cover and disconnect the three electrical wire leads.
5. Remove bolts holding gear motor plate to the machine base.
6. Lift the gear motor from the machine base.

To replace the gear motor assembly, reverse the removal procedure.

*Torque bolts to 250-300 inch pounds.

REPAIR OF THE GEAR MOTOR ASSEMBLY

1. Remove (6) cap screws to prepare to open gearcase.
2. Pry the two cases apart. Inspect the internal parts, look for:
   -Condition and quality of lubricant. (The proper oil level is flush with the top of the output (biggest) gear.)
   -Gear and gear shaft condition Woodruff key between output gear and shaft
   -Grease seals, back to back
   -Vent hole open
   -Thrust bearing intact.

   Be sure to count and retain the spacer washers as they come out of the gearbox.

   Replace the parts as required, using the part numbers found in the parts list section of this manual. Replace the gears into a CLEAN bottom gearcase, replacing the spacer washers in the same quantity as they were upon disassembly. If no count was kept, refer to the parts illustration.

NOTE: Some bearing grease should be placed in all bearings before assembly to insure proper lubrication upon start-up.

To reassemble:

1. Set top gearcase on gears and spacers and oil. Be sure O-ring is in place.
2. Replace gearcase cover. Drive in alignment pins before tightening cap screws and torque at 250-300 inch pounds.
3. Bench test the gearmotor assembly.

   Test for noise, amp draw (must not be in excess of icemaker nameplate for gearmotor) and oil leaks.

   Return gearbox to the unit. Be certain all mounting surfaces are clean and reassemble gearbox to chassis and freezer assembly.

   If the freezer water seal begins to leak, removal of the auger is required in order to replace the top bearing and water seal. AT THE SAME TIME, it would be recommended to remove the gearmotor assembly, open it up and inspect it.

PR760 REMOVAL AND REPLACEMENT PROCEDURES

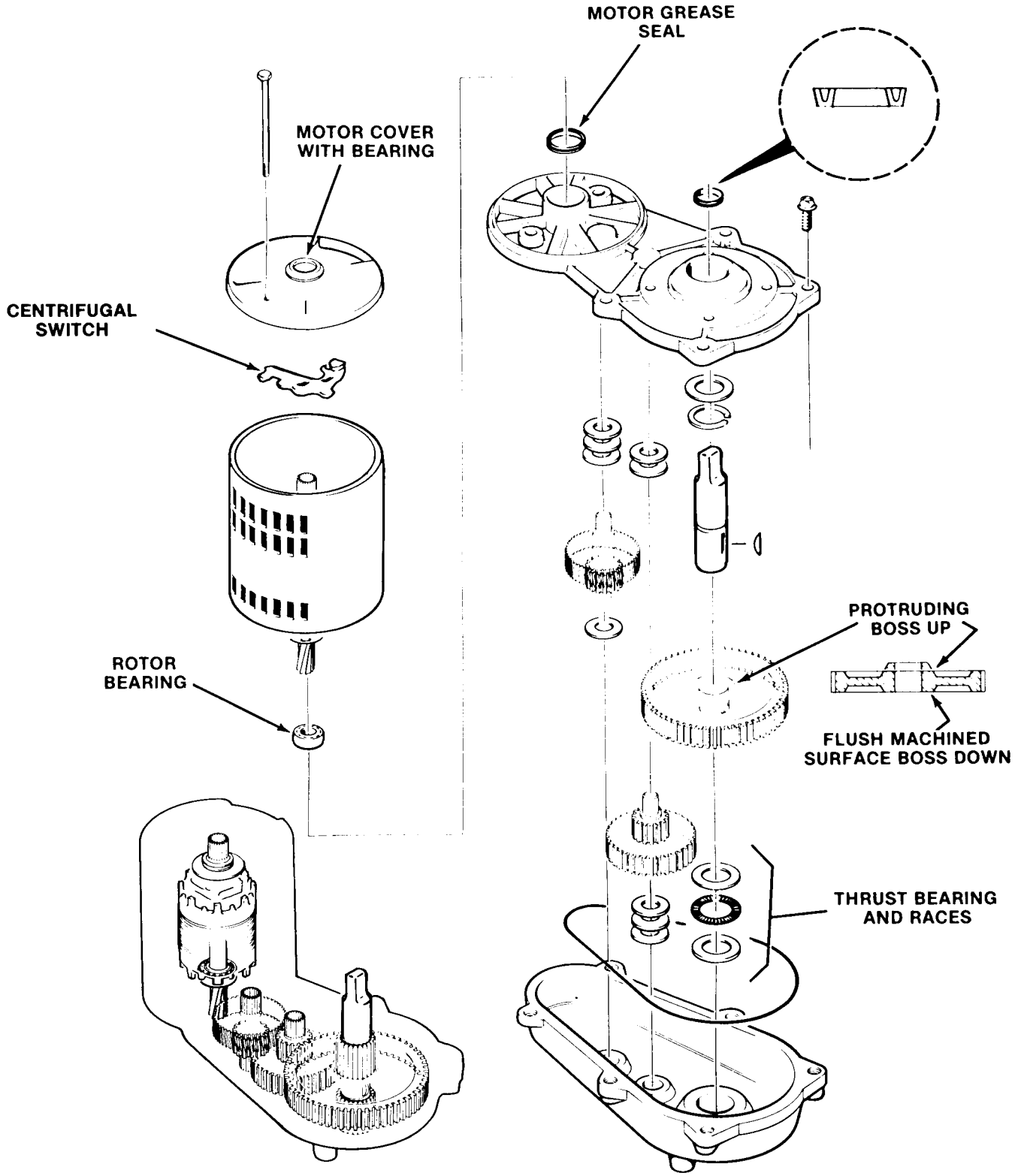

PR760 REMOVAL AND REPLACEMENT PROCEDURES

WARNING

Be sure the electrical power supply to the icemaker is OFF before proceeding with removal procedures.

REMOVAL AND REPLACEMENT OF THE FAN MOTOR ASSEMBLY — AIR-COOLED MODELS

NOTE

Before beginning this procedure, observe the fan blade position on the shaft of the fan motor and mark the fan blades so it will be correctly positioned during reassembly. Direction of air flow should be toward the fan motor.

To remove the fan motor assembly:

1. Disconnect the electrical supply to the icemaker at the circuit breaker or fuse box.
2. Remove two screws and the lower left front panel.
3. Remove plastic trim, screws, and aluminum trim.
4. Remove screws and left front bracket. Remove upper front left panel.
5. Disconnect the electrical lead from the fan motor at the compressor control box.
6. Remove two screws securing the motor bracket to the chassis base and remove the fan motor and motor bracket from the chassis.
7. Remove the nut from the end of the fan motor shaft and remove the fan blade.
8. Remove four screws securing the fan motor to the motor bracket and separate the motor from the bracket.

To replace the fan motor assembly, reverse the removal procedure.

REMOVAL AND REPLACEMENT OF THE WATER REGULATOR VALVE ASSEMBLY — WATER-COOLED MODELS

To remove the water regulator assembly refer to slide out chassis procedure and complete all steps.

1. Bleed off or blow the refrigerant charge through the Schrader valve.
2. Unsolder capillary tube from the discharge line process header.
3. Disconnect the water inlet and outlet lines from the water regulator valve.
4. Remove the two screws from the valve bracket to the machine base and remove the water regulator valve.
5. To replace the water regulator assembly, reverse the removal procedure.

NOTE

Always install a replacement drier, anytime the sealed refrigeration system is opened. Do not replace the drier until all other repair or replacement has been completed.

Thoroughly evacuate the system to remove moisture and non-condensables.

PR760 REMOVAL AND REPLACEMENT PROCEDURES

WARNING

Be sure the electrical power supply to the icemaker is OFF before proceeding with removal procedures.

NOTE

Be prepared with container to catch water left in lines disconnected in next steps, to prevent draining water on parts, components, electrical lines, etc.

REMOVAL AND REPLACEMENT OF THE WATER RESERVOIR ASSEMBLY

To remove the water reservoir assembly refer to slide out chassis procedure and complete all steps.

1. Disconnect the water inlet tube from the water reservoir assembly.
2. Remove two Corbin clamps and two tubes from the bottom of the water reservoir assembly.
3. Unscrew and remove the wing nut from the bottom of the water reservoir assembly.
4. Lift and remove the water reservoir assembly from the mounting bracket.

To replace the water reservoir assembly, reverse the removal procedure.

NOTE

Check that the installed replacement water reservoir assembly float moves freely. Bend metal arm of float to adjust, as necessary. The correct water level in the water reservoir is the point of the raised molded line, on the side of the body of the water reservoir.

REMOVAL AND REPLACEMENT OF THE SAFETY CONTROLS, HIGH PRESSURE, LOW PRESSURE, AND AUGER DELAY

To remove the controls, refer to the slide-out chassis procedure and complete all steps.

1. Bleed off or blow the refrigerant charge through the Schrader valve.
2. Unsolder the control capillary tube from its corresponding process header.
3. Replace the control and solder the capillary tube to its corresponding process header.
4. Follow the Removal and Replacement Procedure of the liquid line drier.

TABLE OF CONTENTS

Table of Contents 1
List of Illustrations 1
Specifications 2

GENERAL INFORMATION & INSTALLATION
Introduction 3
Unpacking and Inspection 3
Location and Leveling 3
Interconnecting Tubing 4
Electrical Connection 8
Final Check List 8

START UP OPERATION
Pre-Start 9
Start Up 10

PRINCIPLES OF OPERATION
Icemaker 11
Remote Unit 11
Electrical 11
Stacking Kit 11

ADJUSTMENT, REMOVAL & REPLACEMENT PROCEDURES
Circulating Pump and Motor Assembly 13
Fan Blade and Fan Motor 13
Manifold Solenoid By-Pass Valve and Assembly 13

MAINTENANCE & CLEANING INSTRUCTIONS
General 14
Icemaker 14
Remote Unit 14
Sanitizing Instructions 14

SERVICE DIAGNOSIS
Remote Condenser System 15

WIRING DIAGRAM
Wiring Diagram RCLS-2B, KRCL115, KRCL230 16
Wiring Diagram RCLS-2A, KTCL-1, KTCL-2, KTCL-3, KTCL-4 22

PARTS ILLUSTRATIONS AND PARTS LISTS
General 17
How to Order Parts and Accessories 17
Description 17
Test Kit 24

LIST OF ILLUSTRATIONS

Specifications Remote Closed Loop System 2
Location, Remote Unit 4
Warm Climate Performance Improvements 5
Interconnecting Tubing, Two MH750 Nugget Icemakers 6
Interconnecting Tubing, Stacking Modular Cubers 7
Cooling Cycle 12
Wiring Diagram 16
Major Assemblies 18
Manifold, By-Pass Valve Assembly 19
Stacking Kit Assembly 19
Circulating Pump, RCLS "B" 20
RCLS "A" 21
KTCL1, KTCL2, KTCL3, KTCL4, (RCLS "A") 22
RCLS "A" Model Pump Assembly 23

THIS PAGE
INTENTIONALLY
LEFT BLANK

SPECIFICATIONS

RCLS15 and RCLS30

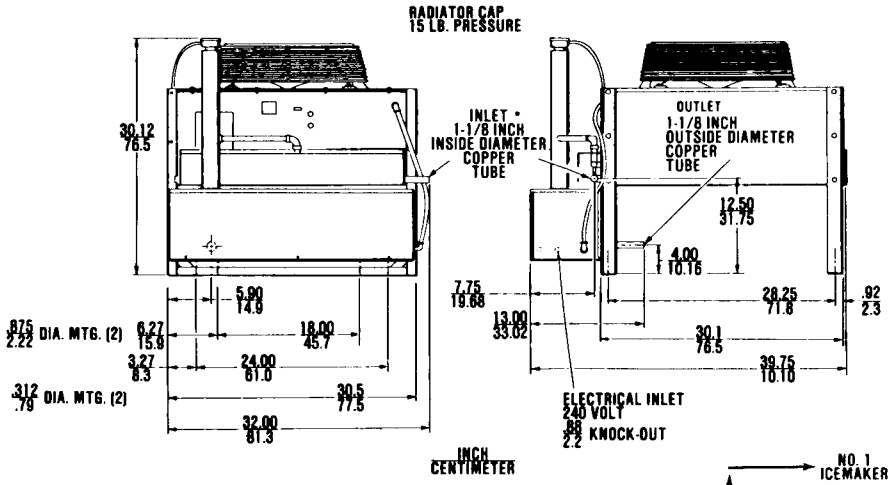

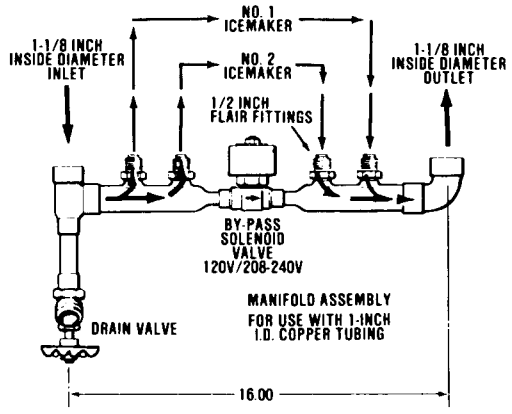

* SOME MODELS HAVE A 7/8 INCH OUTSIDE DIAMETER TUBING INLET.

USE 1-1/8 INCH OUTSIDE DIAMETER COPPER TUBING FOR INTERCONNECTING TUBING.

RCLS "B" MODEL ONLY

SEE DATA PLATE for MODEL NUMBER. SERIAL NUMBER and ELECTRICAL Specifications. Locate DATA PLATE on the upper left front panel.

MODEL NUMBER	
SERIAL NUMBER	

OPTIONS:

Kit required when 2 icemakers are installed:
KRCL115: for use with (2) 115 volt icemakers.
KRCL230: for use with (2) 230 volt icemakers.

IMPORTANT OPERATING REQUIREMENTS

	Minimum	Maximum
Air Temperatures	-20° F	100° F
Supply Voltage	207 V	253 V

IMPORTANT	
THE FOLLOWING HEAT TRANSFER FLUID MUST BE USED FOR PROPER OPERATION AND FREEZE PROTECTION	
LOWEST OUTDOOR TEMPERATURE EXPECTED	HEAT TRANSFER FLUID REQUIRED
+ 32° F	DISTILLED WATER
+ 10° F	UNDILUTED SCOTFREEZE K RED
- 30° F	UNDILUTED SCOTFREEZE K BLUE
FAILURE TO USE THE RECOMMENDED HEAT TRANSFER FLUID WILL VOID THE SCOTSMAN WARRANTY	

17-1567-01

The Remote Closed Loop System has been engineered to our own rigid safety and performance standards. The Underwriters Laboratories, Inc., (UL) Listing Mark signifies that its construction and design have been inspected and tested by them. UL inspectors also periodically examine production icemakers at the factory, to assure continued compliance.

To retain the safety and performance built into this icemaker, it is important that installation and maintenance be conducted in the manner outlined in this manual.

GENERAL INFORMATION AND INSTALLATION

I. INTRODUCTION

This manual provides the specifications and the step-by-step procedures for the installation, start up, operation, maintenance and cleaning for the Scotsman RCLS 15 and RCLS 30 Remote Closed Loop System "A" and "B" Model.

The Scotsman Remote Closed Loop System is a quality designed, engineered, constructed and thoroughly tested heat removal system, providing the utmost in flexability to fit the needs of a particular user.

Separate sections detail more specifically: General Information & Installation; Start Up Operation; Principles of Operation; Adjustment and Removal and Replacement Procedures; Maintenance and Cleaning Instructions; Service Diagnosis; Wiring Diagrams; and, the Illustrated Assemblies and Parts Lists.

DESCRIPTION

The Scotsman Remote Closed Loop System removes heat collected in the icemaking process from within the building. This cuts water and sewer costs by eliminating wasted water, and also relieving the air conditioning load.

II. UNPACKING AND INSPECTION CONTROL

1. Call your authorized Scotsman Distributor or Dealer, for proper installation. He's listed under ICE MAKING EQUIPMENT and MACHINERY in the yellow pages of the telephone book.
2. Visually inspect the exterior of the shipping container and skid and note any severe damage. File a concealed damage claim subject to internal inspection, with carrier representative present.
3. BEFORE removal of any panels or packing, carefully remove the shipping bolts and the shipping base or skid.
4. Remove screws and shipping tape, and the service panel from the chassis. Notify carrier of any concealed damage, and file a claim as stated in step 2 above.
5. Remove all internal support packing and tape within the unit.
6. Check to see that the fan blade moves freely and does not rub or touch any of the components.
7. See NAMEPLATE on the upper front left corner of remote unit.
8. Remove the manufacturer's Registration Card from the front of the manual and fill in all spaces including Model Number and Serial Number taken from the nameplate. Forward the completed, self-addressed registration card to the SCOTSMAN factory.

TO INSTALL A REMOTE CLOSED LOOP SYSTEM:

III. LOCATION AND LEVELING

Installation should meet local and state electrical, plumbing and building codes.

Prior consideration for location of remote closed unit shall include:

a. Roof mount installation of the remote unit must be to the roof manufacturer's specifications. Arrange for the services of the Bonded Roofing Contractor for the planning and the installation of the remote unit. The roofing contractor may also be involved in the location and the service outlets for electrical and plumbing connections.

b. Well ventilated location ABOVE icemaker(s).

c. Separate 230/60/1 electrical source for the remote unit and a separate electrical source for each icemaker. See IV. ELECTRICAL CONNECTIONS.

Interconnecting tubing for remote closed loop system with one or two icemakers cannot exceed 100 equivalent linear feet. See V. INTERCONNECTING TUBING.

Extreme warm climate installation may require extra caution in location, avoid hot, sunny locations, seek shaded areas. Use natural trade winds to your advantage.

The use of a structure to shade the remote unit from direct sun exposure and/or a stand extending the remote unit an additional 18 inches above the roof, will improve icemaking performance. DO NOT block air circulation.

1. Position icemakers and RCLS Unit in the selected permanent locations. Components must be installed level and RCLS fastened to location. When two icemakers are installed, each must be installed in the same location, stacked, or side by side.

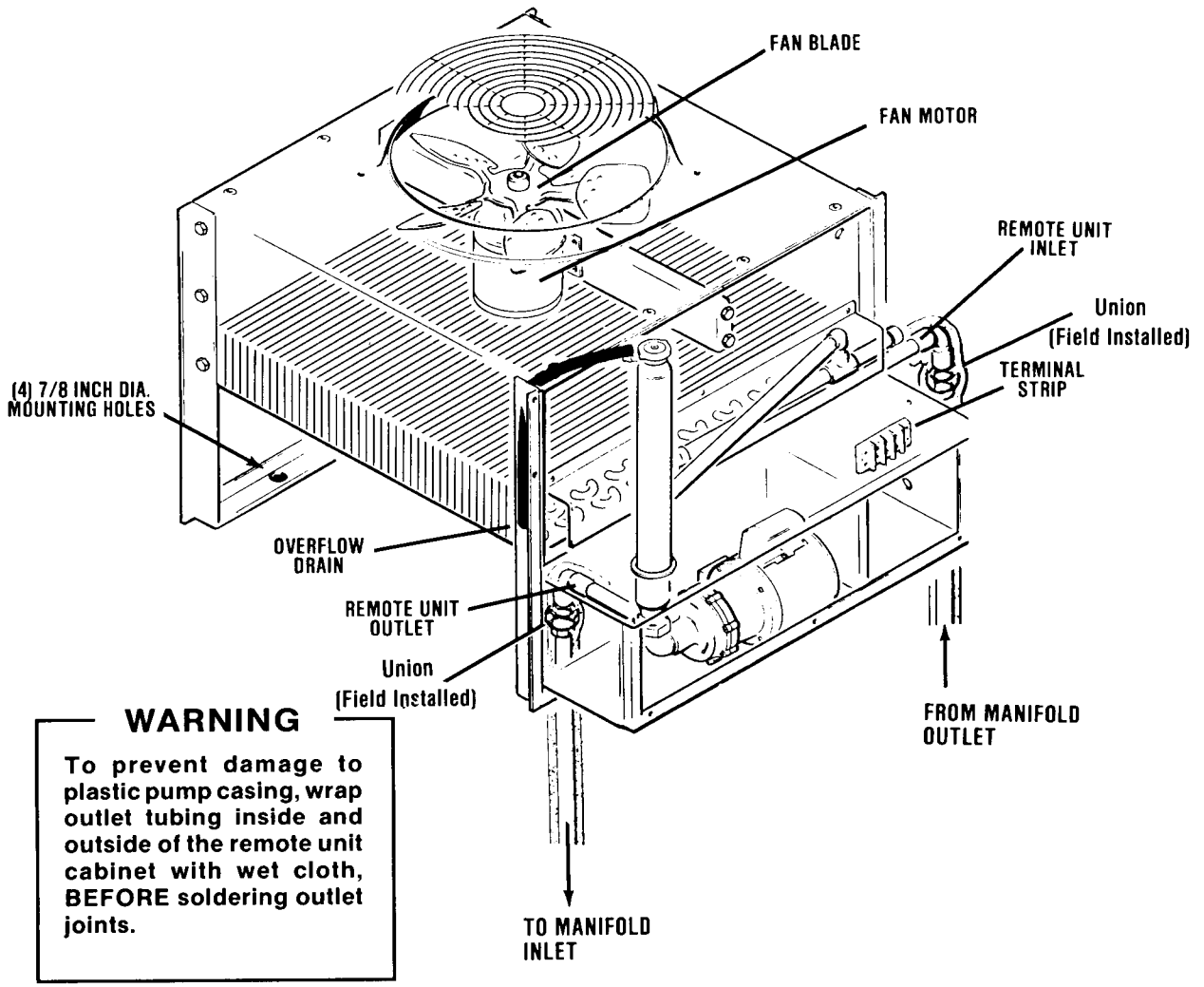

Location, Remote Unit.

IV. INTERCONNECTING TUBING

Installation should meet local and state plumbing codes, contact your local plumber for installation services.

Interconnecting tubing for remote closed loop system with one or two icemakers cannot exceed 100 equivalent linear feet (pipe fittings, tees, elbows and gate valves) of 1-inch I.D. Copper Tubing. Icemakers must be installed in same location, stacked or side by side.

CAUTION

Use COPPER TUBING ONLY, not galvanized pipe or fittings.

WARNING

For peak operating efficiency, 1-inch I.D. tubing and fittings must be used in the shortest and straightest routing throughout the entire system.

Manifold/Icemaker connections must not exceed a MAXIMUM length of 3-feet of MINIMUM size 1/2-inch tubing.

EQUIVALENCE CHART
(Equal to linear feet)

Elbow	1.8
Tee	5.2
Gate Valve	1.2

REMOTE CLOSED LOOP SYSTEM
GENERAL INFORMATION AND INSTALLATION

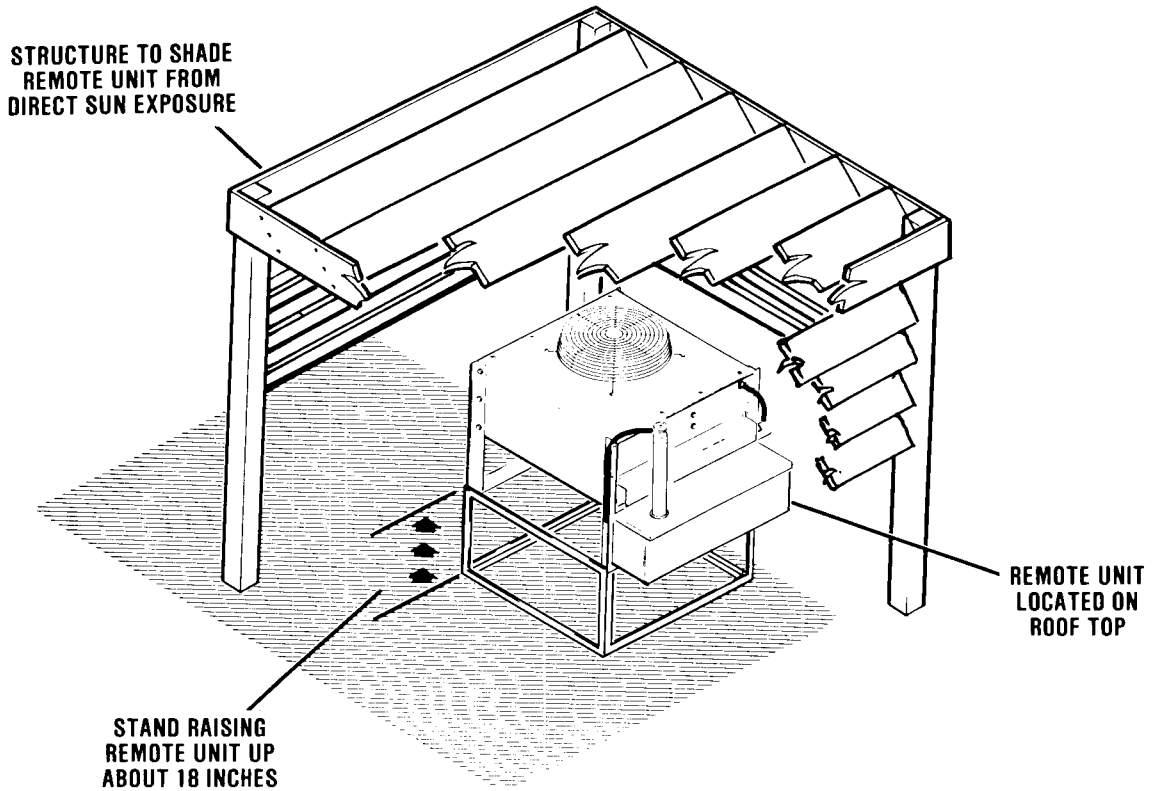

Warm Climate Performance Improvements used only when RCLS air intake temperature is greater than the roof air temperature.

1. Route connecting plumbing, avoiding traps and maintaining 1/8-inch per foot pitch drain toward icemaker(s) with the Manifold and Drain Valve at the lowest point of the plumbing system. Insulate all exposed tubing separately using cellular foam pipe insulation.

WARNING

To prevent damage to plastic pump casing, wrap outlet tubing inside and outside of the remote unit cabinet with wet cloth, BEFORE soldering outlet joints.

2. Route tubing between manifold connections and ice machine water-cooled condenser inlet and condenser drain. Locate the Manifold Assembly low enough in the interconnecting tubing so that complete drainage of the system is possible.

CAUTION

Use of smaller diameter tubing severely restricts coolant flow and ultimately ice production.

REMOTE CLOSED LOOP SYSTEM
GENERAL INFORMATION AND INSTALLATION

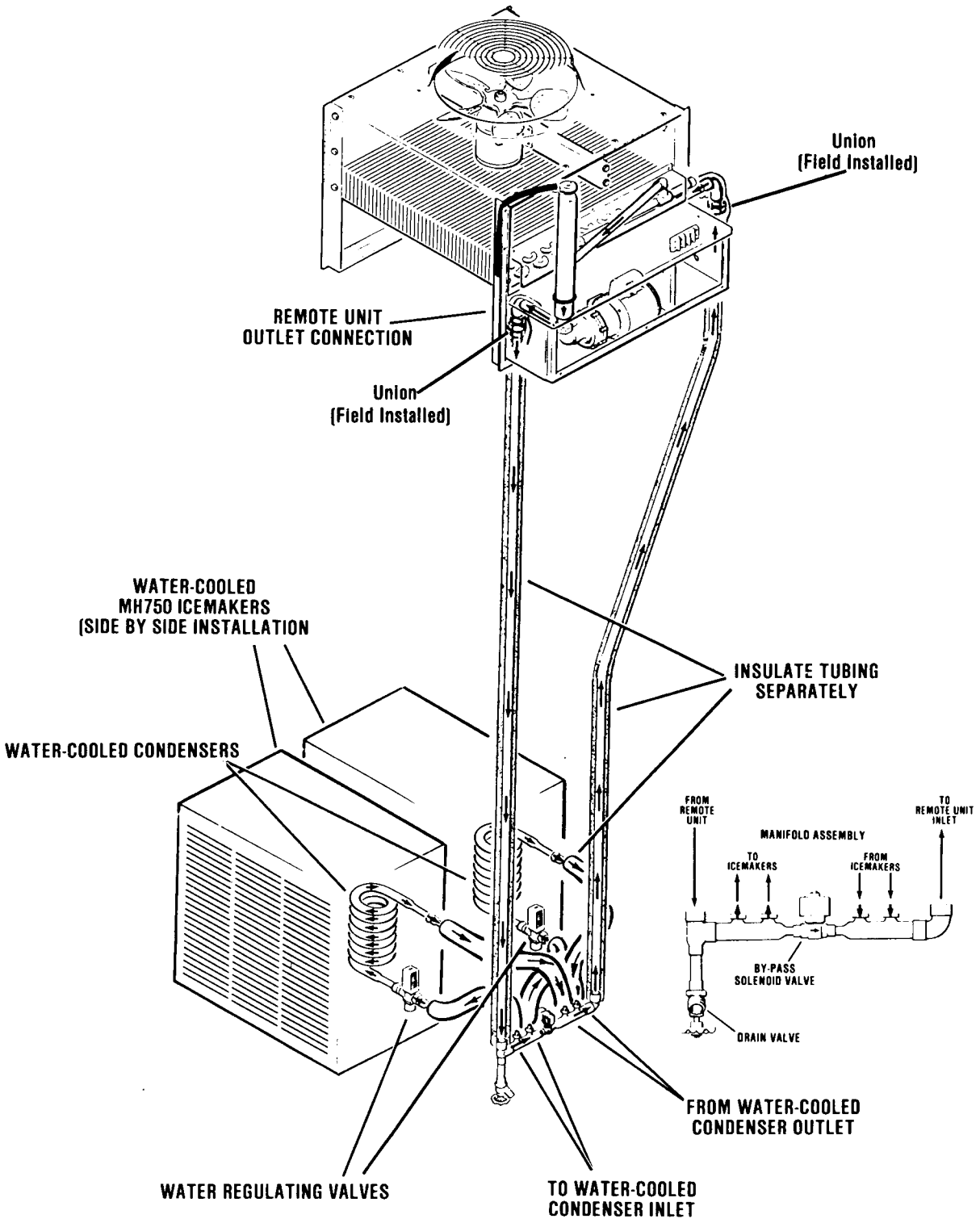

Interconnecting Tubing and Manifold Connections, Two MH750 Nugget Icemakers

RCLS B MODEL

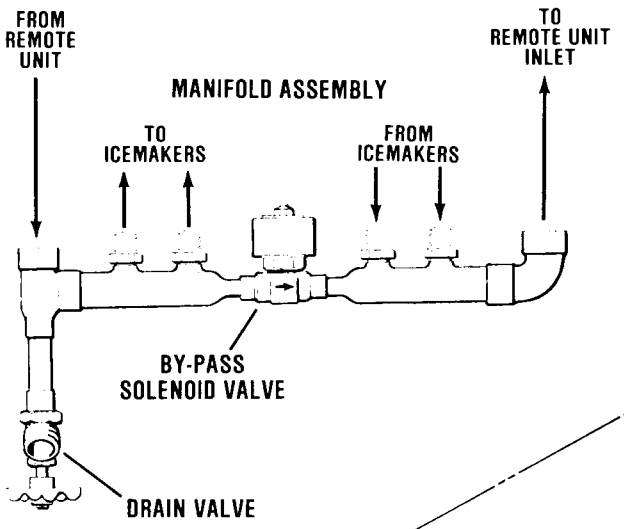

NOTE: The manifold must be installed so that the coolant flow is in the direction of the arrow on the solenoid valve.

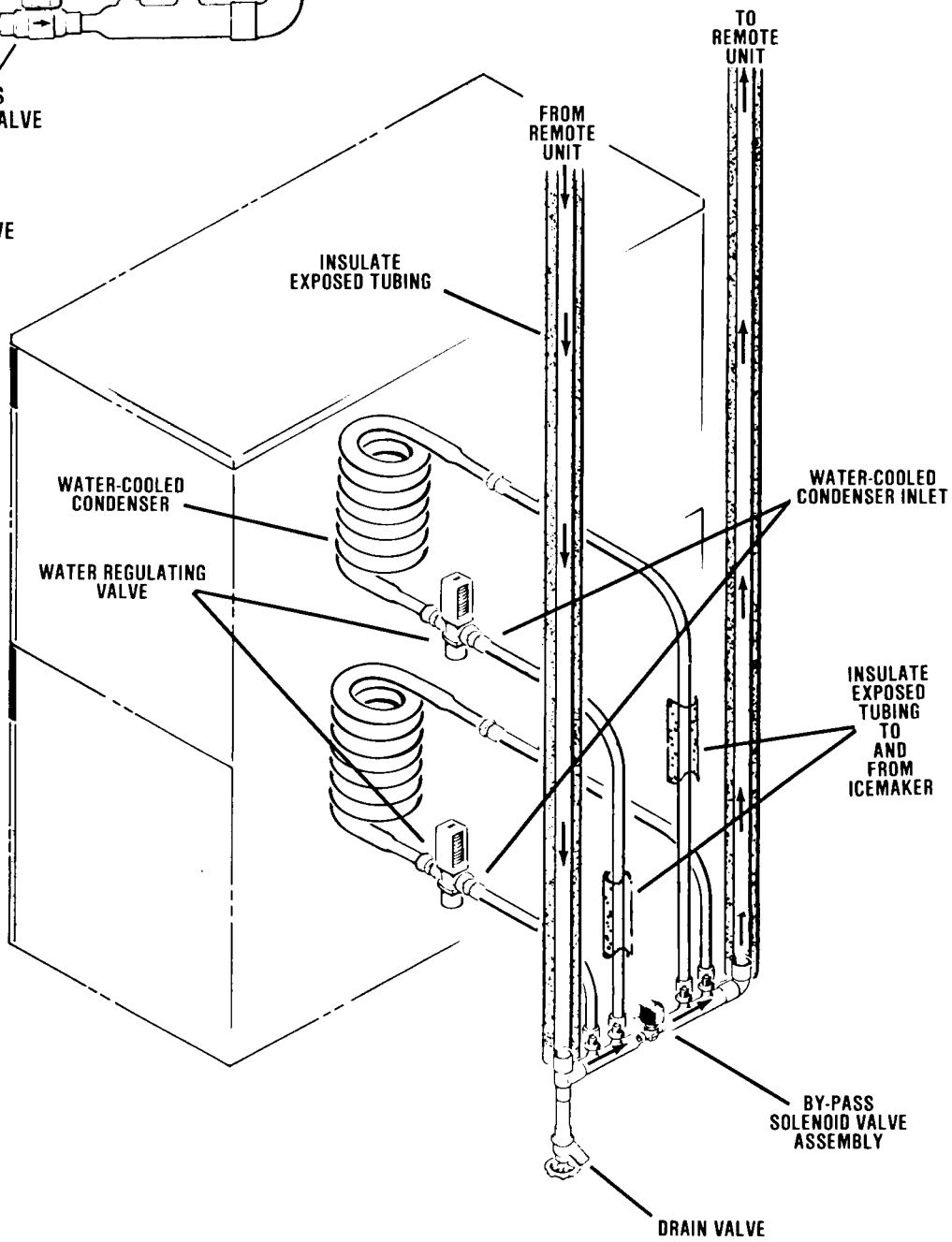

Interconnecting Tubing and Manifold Connections. Stacking Modular Cubers.

V. ELECTRICAL CONNECTIONS

SEE NAMEPLATE for current requirements to determine wire size to be used for electrical hookup. The remote condenser requires a solid earth ground wire. See wiring diagram. Be certain the remote condenser is connected to its own electrical circuit and individually fused. The maximum allowable voltage variation should not exceed ten percent of the nameplate rating, even under starting conditions.

Low voltages can cause erratic operation and may be responsible for serious damage.

All external wiring should conform to the National, State and local electrical code requirements. Usually an electrical permit and services of a licensed electrician will be required.

SOLENOID BY-PASS VALVE

The By-Pass Valve is operated by a electromagnetic coil which is a dual voltage coil that operates at either 115 volts or 230 volts. This is compatable with most Scotsman icemakers used in RCLS installations.

FOR SINGLE ICEMAKER HOOK-UP

1. Connect icemaker and remote unit to separate electrical power sources.
2. Refer to wiring diagram supplied with the icemaker and locate contactor terminals connected to the compressor. Connect lead wires from the By-Pass Valve Solenoid to the compressor terminal contactor connections, commonly T1 and T2. Bypass valve coil must be wired to match the icemaker voltage.

NOTE

Scotsman contour cuber CM1200-31 connections are made at terminals T2 of the compressor contactor and terminal 5 of the potential relay.

NOTE

When two icemakers are installed, a Stacking Kit must be used in conjunction with the Solenoid By-Pass Valve.

KRCL STACKING KIT

Dual icemaker installation in the Remote Closed Loop System requires use of a Stacking Kit.

KRCL115: For use with (2) 115 volt icemakers.
KRCL230: For use with (2) 230 volt icemakers.

FOR CONNECTION OF TWO ICEMAKERS:

See stacking kit NAMEPLATE and verify voltages are compatable with ice machines. Refer to appropriate wiring diagrams and connect each icemaker to the Stacking Kit terminal strip as follows:

1. Attach the Stacking Kit to a permanent location, convenient for each icemaker hook up and future service. Attach a solid earth ground wire to the GROUND SCREW.
2. Route connecting wires from first ice machine compressor contactor terminals, commonly T1 and T2, and connect to Stacking Kit terminal strip connections marked: FROM FIRST ICE MACHINE.
3. Route connecting wires from second ice machine compressor contactor terminals, commonly T1 and T2 and connect to Stacking Kit terminal strip connections marked: FROM SECOND ICE MACHINE.
4. Route connecting wires from Solenoid By-Pass Valve leads to the Stacking Kit terminal strips and connect to the connections marked: TO VALVE. Solenoid valve coil must be wired to match icemaker voltage.

CAUTION

IMPROPER VOLTAGE SUPPLIED TO THE ICEMAKER WILL VOID YOUR PARTS REPLACEMENT PROGRAM.

VI. FINAL CHECK LIST:

1. Has 1-inch copper tubing been used to interconnect components? Drain at lowest point?
2. All shipping material removed?
3. Have all electrical and plumbing connections been completed?
4. Have remote unit circulating pump and fan been checked for proper operation?
5. Proper air flow ventilation through remote unit?
6. Has proper SCOTFREEZE coolant been added and checked for proper level. Leak checked.
7. Thoroughly explain to the owner/user the significant specifications of the RCLS start up and operation maintenance & cleaning instructions going through the procedures.
8. Answer all questions about the RCLS, by the owner. Inform the owner of the name and telephone number of the authorized SCOTSMAN Service Agency serving him.

OPERATING INSTRUCTIONS

PRE-START

1. Fill system with distilled water and operate circulating pump. This action will rinse the system of flux or other contaminants. With circulating pump operating, check tubing connections for leaks.
2. Drain rinsing water from the system at the drain valve. Keep track of quantity of liquid used to fill the system. This information will be helpful when filling the system with coolant.

IMPORTANT	
THE FOLLOWING HEAT TRANSFER FLUID MUST BE USED FOR PROPER OPERATION AND FREEZE PROTECTION	
LOWEST OUTDOOR TEMPERATURE EXPECTED	HEAT TRANSFER FLUID REQUIRED
+ 32° F	DISTILLED WATER
+ 10° F	UNDILUTED SCOTFREEZE K RED
- 30° F	UNDILUTED SCOTFREEZE K BLUE
FAILURE TO USE THE RECOMMENDED HEAT TRANSFER FLUID WILL VOID THE SCOTSMAN WARRANTY 17-1567-01	

WARNING

This system must be filled with proper coolant. See the chart to determine the correct coolant. Use of any other coolant will void warranty.

3. Refill system with the proper coolant. Do not dilute coolant. Use of any other coolant will void warranty.
4. Operate system several hours and **recheck coolant level.** Coolant foams and expands during initial filling and coolant contracts as air is purged during use.
5. To eliminate accidental drainage of coolant, remove handle from drain valve and store in an accessible location.

WARNING

DO NOT DILUTE THE SCOTFREEZE KRED OR KBLUE.

WARNING

Running the unit without coolant will damage the pump.

START UP / OPERATION

WARNING

Check coolant level before START-UP. Running the unit without coolant will damage the pump.

I. START UP

1. Move the main power source ON-OFF switch to the remote unit to the ON position supplying electrical power to the Remote Unit. Observe the Remote unit fan motor and pump motor OPERATE and coolant CIRCULATES.
2. Move the main power source ON-OFF switch to each icemaker to the ON position supplying electrical power to each icemaker.
3. Observe that the By-Pass Solenoid has CLOSED diverting coolant flow through the icemaker condenser where heat generated during the icemaking process is transferred to the RCLS coolant.
4. Observe that the ice harvest is normal in quality and production is satisfactory.
5. Let the system operate until ice covers the bottom of the bin. Check for any excess noises beyond normal:

   REMOTE UNIT

   a. Fan noises, blades bent, touch other surfaces or out-of-balance.

   b. Vibrating type, pump loose at hold down bolts.

   ICEMAKER:

   a. Abnormal ice production noises.

6. FLAKERS: Hold a handful of ice around the Ice Storage Bin Thermostat Control Bulb to test icemaker when the compressor shuts off. The By-Pass Solenoid Valve will OPEN and the coolant will circulate within the interconnecting tubing and the remote unit.
7. Operate system for 30 minutes. Observe ice production is normal. Look and listen for unusual noise, vibrations or leakage. Stop icemaking process. Remove the ice and rinse the storage bin. Re-start automatic icemaking process.
8. Check coolant level and condition every 6 months. Coolant level must be above mid point of the remote condenser surge pipe. Do not replenish with water. Refill with proper coolant. To test coolant condition, use DOWFROST INHIBITED PROPYLENE GLYCOL TEST KIT following instructions provided with the test kit. Test Kit available through the Scotsman Service Department.
9. Refer to Maintenance and Cleaning Instructions and observe maintenance guidelines.

PRINCIPLES OF OPERATION

RCLS"A" and RCLS "B" models are similar in appearance although RCLS "A" model does not operate the same as RCLS "B" model. Refer to RCLS "A" model Installation Instructions for RCLS "A" model information. Additional Service Parts and wiring details may be found at the back of this book for the RCLS "A" model.

INTRODUCTION

The following text describes the sequential events as the coolant circulates within the Remote Closed Loop System.

I. ICEMAKER

Heat collected during the icemaking process is transferred from the refrigerant to the Scot Freeze coolant inside the icemaker water cooled condenser coil.

II. REMOTE UNIT

The circulating pump operates continually, circulating the coolant within the Remote Closed Loop System. Heat is transferred to the SCOTFREEZE coolant at the icemaker condenser coil and moved through the interconnecting tubing to the Remote Unit. Air drawn across the coils of the remote unit by the fan removes heat from the SCOTFREEZE coolant. The lowered temperature SCOTFREEZE coolant recirculates through the interconnecting tubing and returns to the icemaker.

When the ice storage bin is full, the ice machine(s) will shut off, the By-Pass Valve OPENS and coolant flow is diverted from the icemaker and circulates within the interconnecting tubing and the remote unit. When the automatic icemaking process restarts, the solenoid operates CLOSING the By-Pass Valve and the coolant flows through the ice machine water regulating valve and the water cooled condenser coil.

III. ELECTRICAL

The Remote Closed Loop System has two separate electrical circuits:

The remote unit electrical power supply which supplies power to the remote unit circulating pump and fan motor. Both run continuously whenever the main power supply switch to the Remote Unit is ON.

The second electrial circuit is between the icemaker and the By-Pass Valve Solenoid.

The By-Pass Valve Solenoid is electrically connected to the icemaker compressor leads. Electrical power supplied to the icemaker compressor is also supplied to the By-Pass Valve Solenoid which operates and CLOSES the By-Pass Valve.

IV. KRCL STACKING KIT

When two ice machines are connected to the RCLS electrical system, the Solenoid By-Pass Valve must be connected to the ice machines through the Stacking Kit KRCL. Electrical current from the first ice machine compressor contacts supplies current to the Stacking Kit relay coil which switches the two N/O contacts to the CLOSED position completing the circuit to the Solenoid By-Pass Valve. When current is supplied from the second ice machine the relay contacts are in the N/C position, the circuit is complete and the relay coil is not energized. When no ice machine is supplying current to the Solenoid By-Pass Valve, the Valve is in the Normally OPEN position and the coolant flow is through the normally OPEN By-Pass Valve.

REMOTE CLOSED LOOP SYSTEM
PRINCIPLES OF OPERATION

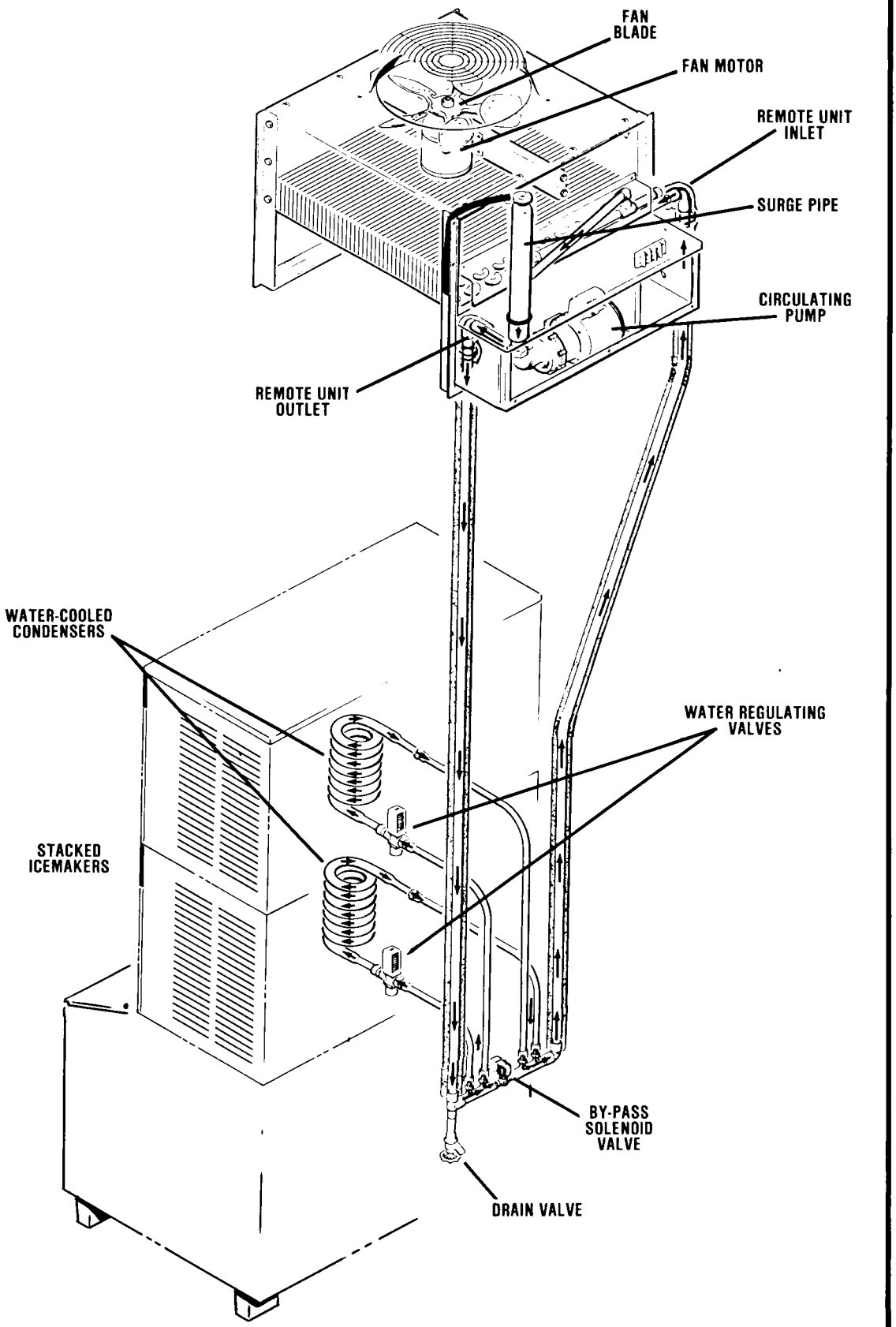

Cooling Cycle.

ADJUSTMENT, REMOVAL AND REPLACEMENT

Read the instructions thoroughly before performing any Adjustment, Removal or Replacement Procedures.

NOTE

Any work on the remote condenser or by-pass solenoid will require that the connected icemaker(s) be shut OFF first.

I. CIRCULATING PUMP ASSEMBLY

To remove Circulating Pump and Motor Assembly:

1. Switch electrical power supply to icemaker to OFF disconnecting power.
2. Switch electrical power supply to remote condenser to OFF disconnecting power to remote condenser.

WARNING

Always DISCONNECT Electrical power supply BEFORE STARTING any Removal procedures to prevent personal injury or damage to equipment.

3. Disconnect electrical leads to pump motor.
4. Open drain plug at the lowest point of the interconnecting tubing and drain sufficient coolant from the system. Surge pipe cap may have to be removed to relieve pressure. Coolant may be saved for reuse provided extreme operating conditions have not deteriorated the coolant condition.
5. Uncouple pipe fittings between surge pipe and pump. Also uncouple the outlet pipe fitting from the pump.
6. Remove pump and motor mounting bolts, and remove pump and motor assembly from the chassis.

Test coolant condition before reusing.

To replace the pump and motor assembly reverse the removal procedures.

II. FAN BLADE & FAN MOTOR

To remove remote condenser Fan Blade and Fan Motor:

1. Switch electrical power supply to icemaker to OFF disconnecting power.
2. Switch electrical power supply to remote unit to OFF, disconnecting electrical power to remote unit.

WARNING

Always DISCONNECT Electrical power supply BEFORE STARTING any Removal procedures to prevent personal injury or damage to equipment.

3. Remove screws and condenser fan guard.
4. Remove set screw and remove fan blade from motor shaft.
5. Remove electrical leads to the fan motor.
6. Remove motor mounting bolts and remove fan motor.

To replace Fan Blade and Fan Motor reverse the removal procedures.

III. BY-PASS VALVE AND SOLENOID ASSEMBLY

To remove By-Pass Valve and Solenoid assembly.

1. Disconnect electrical power supply to the icemaker.
2. Switch electrical power supply to remote unit to OFF, disconnecting electrical power to remote unit.

WARNING

Always DISCONNECT Electrical power supply BEFORE STARTING any Removal procedures to prevent personal injury or damage to equipment.

3. Disconnect electrical leads to By-Pass Solenoid.
4. Open drain valve at the manifold of the interconnecting tubing and drain all collant from system. Surge pipe cap may have to be removed to relieve pressure. Coolant may be saved for reuse provided extreme operating conditions have not deteriorated condition.
5. Unsweat fittings and remove By-Pass Valve and Solenoid assembly.

Test coolant condition before reusing.

To replace the By-Pass Valve and Solenoid assembly reverse the removal procedures.

MAINTENANCE & CLEANING INSTRUCTIONS

I. GENERAL

The periods and procedures for maintenance and cleaning are given as guides and are not to be construed as absolute or invariable. Cleaning especially will vary, depending upon the volume of ice produced and extreme ambient temperatures. Icemaker must be maintained individually, in accordance with its own particular location requirements.

II. ICEMAKER

Clean icemaker per cleaning instructions furnished with the particular unit.

III. REMOTE UNIT

Frequent cleaning and inspection of the Remote Condenser should be performed to maintain maximum efficiency of icemaker. A dirty Condenser or blocked air flow will greatly decrease icemaking efficiency.

1. With electrical power OFF, to both the icemaker and the Remote Condenser, clean the Remote Condenser, using a vacuum cleaner, whisk broom or brush. DO NOT USE A WIRE BRUSH. Instruct customer to clean frequently.
2. Check that fan blades move freely, are not touching any surfaces, are not bent or out of balance; check that the wire guard is properly installed and securely attached.
3. Check that the roof area immediately surrounding Remote Condenser is free and clear of any debris that may collect, such as leaves, paper, trash, etc.
4. Check coolant level and condition every 6 months. Coolant level must be above mid point of the remote condenser surge pipe. Replenish with the proper coolant. Refill with proper SCOTFREEZE KRED or KBLUE pre-mixed coolant. To test coolant condition, use DOWFROST INHIBITED PROPYLENE GLYCOL TEST KIT following instructions provided with the test kit. Test Kit available through the Scotsman Service Department.

IMPORTANT	
THE FOLLOWING HEAT TRANSFER FLUID MUST BE USED FOR PROPER OPERATION AND FREEZE PROTECTION	
LOWEST OUTDOOR TEMPERATURE EXPECTED	HEAT TRANSFER FLUID REQUIRED
+ 32° F	DISTILLED WATER
+ 10° F	UNDILUTED SCOTFREEZE K RED
- 30° F	UNDILUTED SCOTFREEZE K BLUE
FAILURE TO USE THE RECOMMENDED HEAT TRANSFER FLUID WILL VOID THE SCOTSMAN WARRANTY	
17-1567-01	

WARNING

This system must be filled with proper coolant. Use of any other coolant will void warranty.

WARNING

Running the unit without coolant will damage the pump.

IV. Sanitizing instructions:

The coolant may restrict the system if it becomes thickened, or "jells". This is usually caused by something "growing" in the system, and the glycol system should be sanitized.

A possible sanitizer is **CALGON** ice machine sanitizer. To sanitize:

1. Turn off icemakers and RCLS.
2. Drain the glycol system, discard the glycol.
3. Mix the sanitizer only with **distilled water** according to the sanitizer manufacturer's directions and fill the RCLS system.
4. Run the RCLS and the icemakers for about 10 - 15 minutes, then turn off the RCLS and icemakers, drain the system, discard the sanitizing solution.
5. Refill the system with new, fresh coolant.
6. Start up and check the system for leaks and operation.

SECTION VI SERVICE DIAGNOSIS

The Service Diagnosis Section is for use in aiding the serviceman in diagnosing a particular problem or pin-pointing the problem area.

The following chart lists corrective actions for the causes of known symptoms of certain problems that can occur in the Remote Closed Loop System.

SYMPTOM	POSSIBLE CAUSE	CORRECTION
Poor Ice Production	Coolant Level Insufficient	Add SCOTFREEZE. Look for a leak.
	Dirty Remote Condenser	Remove debris from remote condenser fins — restore air circulation.
	Extreme high ambient temperatures	Shade Remote Condenser from direct sunlight. DO NOT BLOCK AIR CIRCULATION
	Icemaker requires maintenance	Service Icemaker
	Circulating Pump	Replace Pump Assembly
	Improper tubing size or length	Replace and reroute as required
	Wrong coolant used	Flush with distilled water and replace with proper coolant. See Freeze Protection Chart.
	Coolant contaminated	Flush and Sanitize, See Cleaning.
No Ice Production	Main power supply to remote condenser or icemaker OFF.	Reset circuit breaker or replace fuse system for shorts or abnormally high current drain.
	Dirty Remote Condenser	Remove debris from remote condenser fins — restore air circulation.
	Solenoid By-Pass Valve defective	Replace Solenoid By-Pass Valve Assembly
	Stack Kit Relay defective	Replace Stack Kit Relay.
	Coolant level insufficient	Find leak, repair, add proper coolant.
	Circulating Pump defective	Replace Pump Assembly.
	Fan Motor defective	Replace Fan Motor Assembly.
High icemaker discharge pressure, with **no** ice maker malfunction such as non-condensable gases or defective water regulating valve	Normal when the RCLS air intake temperature goes past a certain point (different for each installation, but usually 70 - 80° F.)	None required — **optional** steps listed below.

OPTIONAL STEPS FOR OPTIMUM ICE MAKER PERFORMANCE:

The RCLS effectively "converts" water cooled icemakers to air cooled remote types and as in any air cooled refrigeration unit, when the cooling air temperature goes up, performance suffers. The following are steps to take to try and boost performance.

1. Check the installation. Restrictive piping, or excessively hot intake air, will cause performance drops —see Installation Instructions, pages 3 - 5.
2. If RCLS power supply is 208v, and pump motor is rated 230v, boost it to 230v using a transformer.
3. Eliminate all tubing restrictions inside the ice machine cabinet: route 1/2" tubing from bypass manifold directly to the water regulating valve, and route 1/2" tubing from ice maker condenser outlet to by pass manifold.
4. Change water regulating valves to 1/2" type.

RCLS B MODEL ONLY

WIRING DIAGRAM

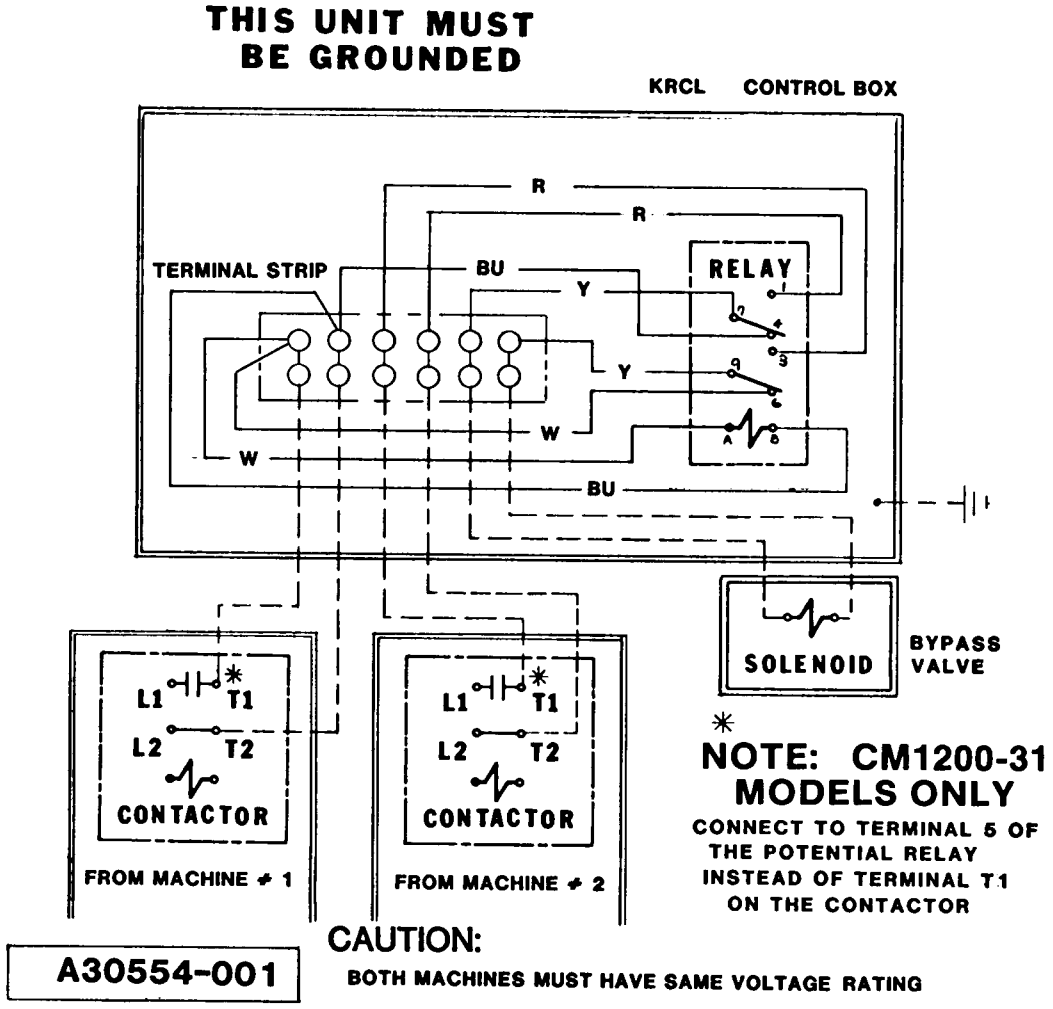

PARTS ILLUSTRATIONS AND PARTS LISTS

I. GENERAL

This section contains the Parts Illustrations and the Parts List for each of the major assemblies in the Model RCLS15 and RCLS30 Remote Closed Loop Systems.

A *No Number* designation, when used in the Part Number Column indicates the unit is not available from SCOTSMAN as an assembly. This designation is used only for the convenience and clarity of division in cataloging.

II. HOW TO ORDER PARTS OR ASSEMBLIES

When ordering parts or assemblies, to avoid costly delays and errors in shipment, give the part number, the complete description shown in the list, and the quantities of each part or assembly required. Also include the Model name, the serial number of the unit for which the part is required, and for parts which require color matching, the color of the Cabinet.

III. DESCRIPTION

A. All Part Numbers have TEN DIGITS (spaces), required for use in the Computer System. BE SURE to fill in ALL SPACES in the CATALOG NUMBER column, on the Parts Order form.

B. Enter the QUANTITY of the Parts ordered, in the last digit column under the QUANTITY column heading, the one under the small 55 number, for parts from 1 thru 9. For 10 or more parts use two columns.

To be sure you receive the proper parts in the proper quantities, ALWAYS use the PART NUMBERS and DESCRIPTIONS given in the Parts Manuals.

Write an order for the Part. (Use SCOTSMAN Parts Order Form DN103). Be sure to include:

a. Distributor Name.
b. (Use for DROP-SHIP order ONLY.)
c. Distributor Purchase Order Number.
d. Carrier.
e. How shipped (Truck, Rail, UPS, etc.)
f. Date ordered.
g. Part Catalog Number. (Use full TEN digits (spaces) listed in Parts Manual, including dashes between numbers.)
h. Description — as listed in Parts Manual.
i. Quantity — number of parts ordered. (Use far right column.)

B MODEL
See Pages 19, 20 & 21 for A MODEL

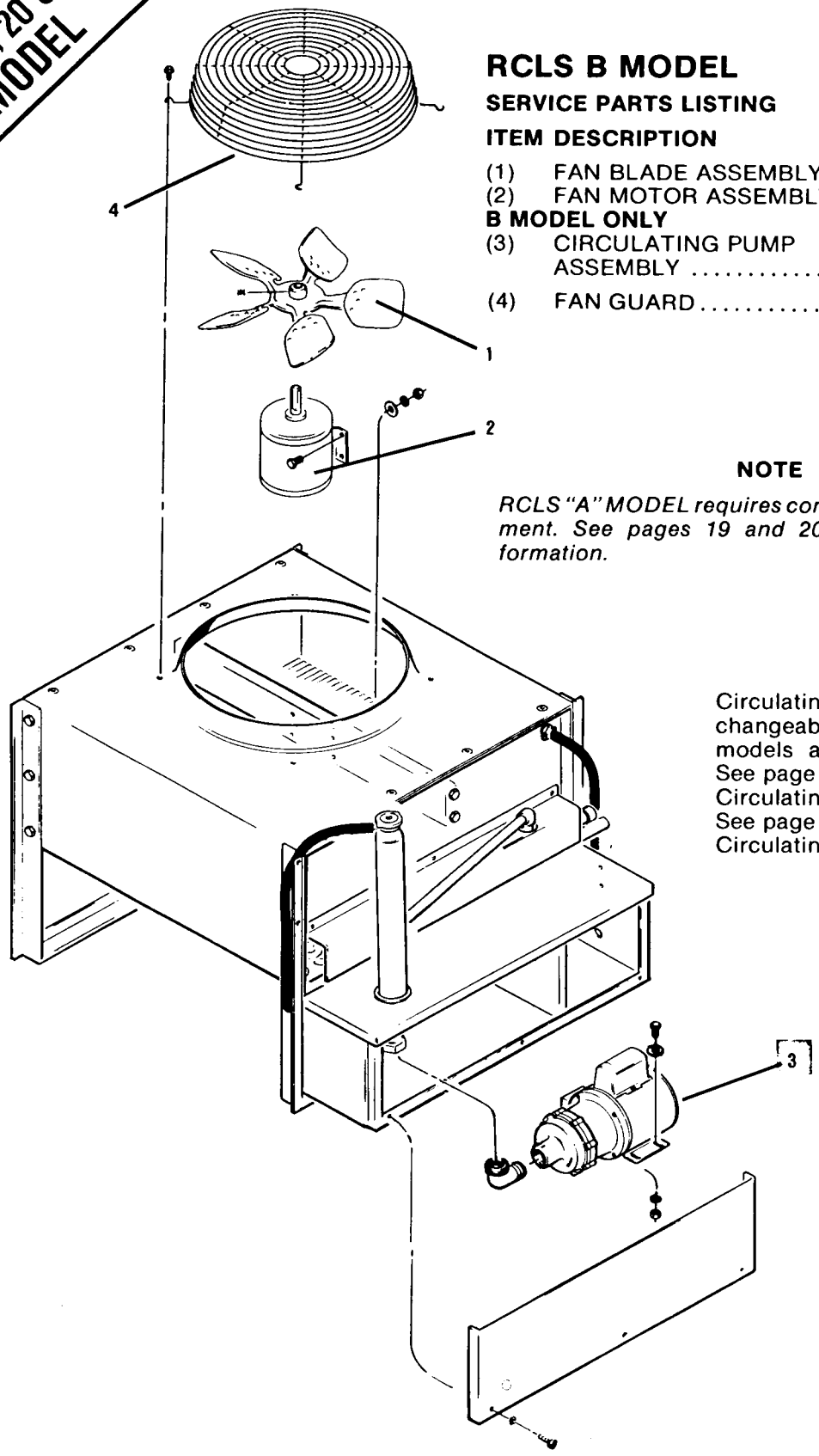

RCLS B MODEL

SERVICE PARTS LISTING

ITEM	DESCRIPTION	PART NO.
(1)	FAN BLADE ASSEMBLY	18-5104-01
(2)	FAN MOTOR ASSEMBLY	18-5301-01
B MODEL ONLY		
(3)	CIRCULATING PUMP ASSEMBLY	See Page 18
(4)	FAN GUARD	02-2618-01

NOTE

RCLS "A" MODEL requires complete pump replacement. See pages 19 and 20 for "A" Model information.

Circulating pump is **NOT** Interchangeable between RCLSA models and RCLSB models. See page 18 for RCLSB model Circulating Pump Assembly. See page 21 for RCLSA model Circulating Pump Assembly.

RCLS Major Assembly

B MODEL
See Page 19, 20 & 21 for
A MODEL

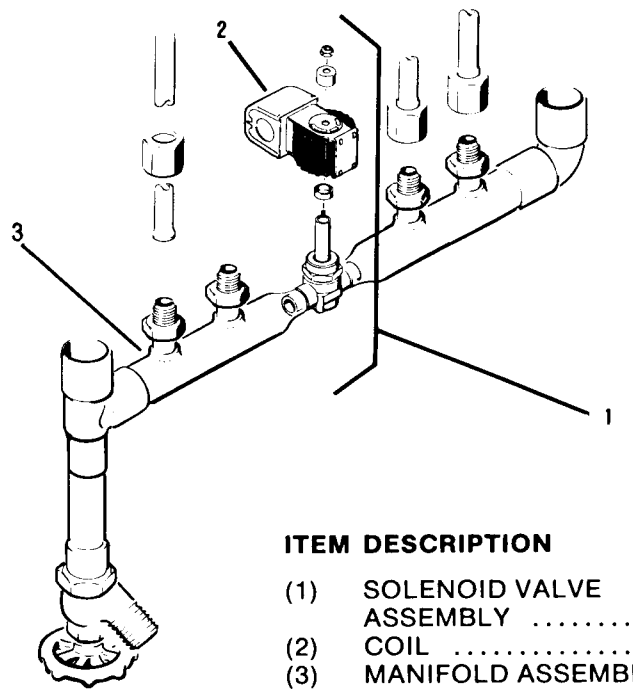

ITEM	DESCRIPTION	PART NO.
(1)	SOLENOID VALVE ASSEMBLY	12-2246-01
(2)	COIL	12-2246-11
(3)	MANIFOLD ASSEMBLY	A30546-020

Manifold, By-Pass Valve Assembly.

STACKING KIT

ITEM	DESCRIPTION	PART NO.
(1)	RELAY 115 VOLT	12-2070-01
(1)	RELAY 230 VOLT	12-2070-04

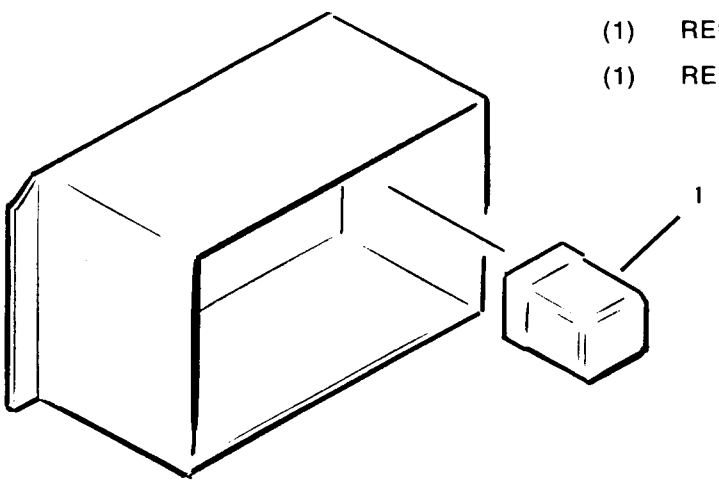

Stacking Kit Assembly, KRCL115 and KRCL230

B MODEL
See Page 19, 20 & 21 for
A MODEL

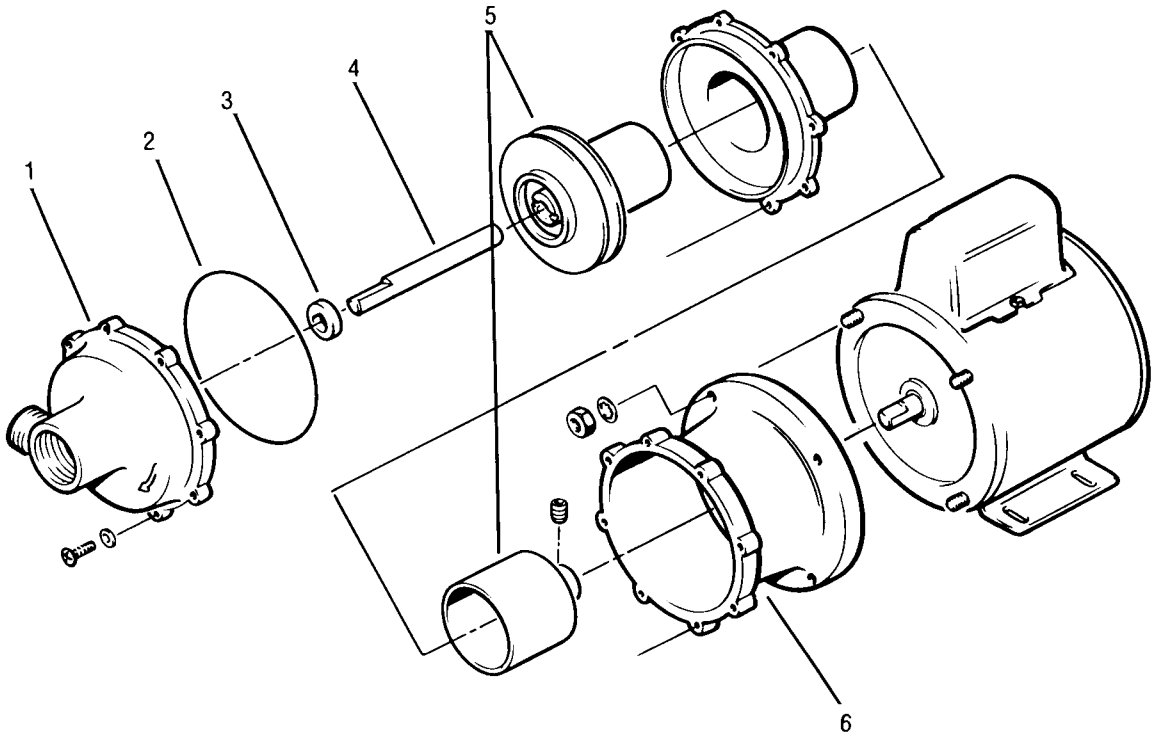

7 COMPLETE PUMP ASSEMBLY

RCLS "B" Pump Assembly is not interchangeable with A models.

RCLS "B" PUMP ASSEMBLY

ITEM	DESCRIPTION	PART NO.
(1)	PUMP HOUSING	12-2245-51
(2)	4-1/4 x 5/32 THK O RING	12-2245-52
(3)	CERAMIC THRUST WASHER	12-2245-54
(4)	IMPELLER SHAFT — CERAMIC	12-2245-55
(5)	ENCAPS IMPELLER — MAGNET W/CARBON BUSHING	12-2245-53
(6)	MOTOR CONNECTING BRACKET	12-2245-50
(7)	COMPLETE PUMP ASSEMBLY	12-2245-01

Circulating Pump Assembly (RCLS "B" Model)

A MODEL
See Page 16, 17 & 18 for
B MODEL

"A" MODEL ONLY

SERVICE PARTS LISTING

FAN BLADE ASSEMBLY	18-5104-01
FAN MOTOR ASSEMBLY	18-5301-01
CIRCULATING PUMP	12-2204-01
CONTACTOR	12-2041-03

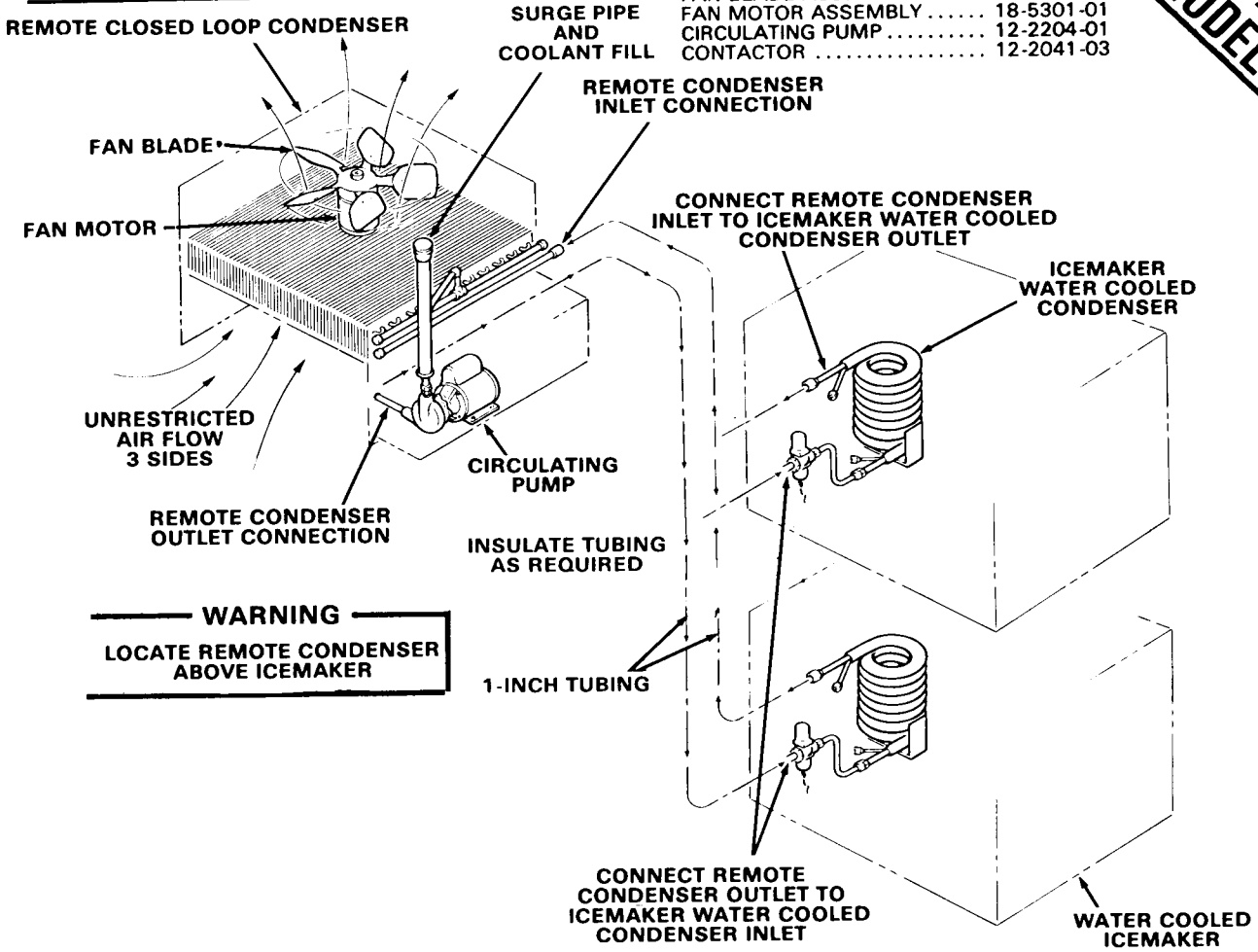

REMOTE CLOSED LOOP UNIT CONTROL BOX

"A" MODEL ONLY

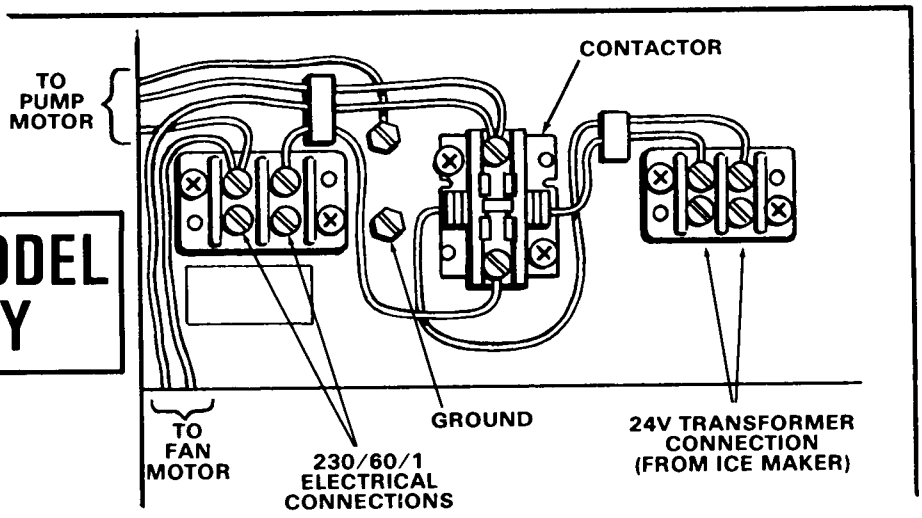

KIT KTCL1
KIT KTCL2

WIRING DIAGRAM

FOR USE WITH ONE ICEMAKER

NOTE
"A" MODEL HOOK-UP ONLY

THIS UNIT MUST BE GROUNDED

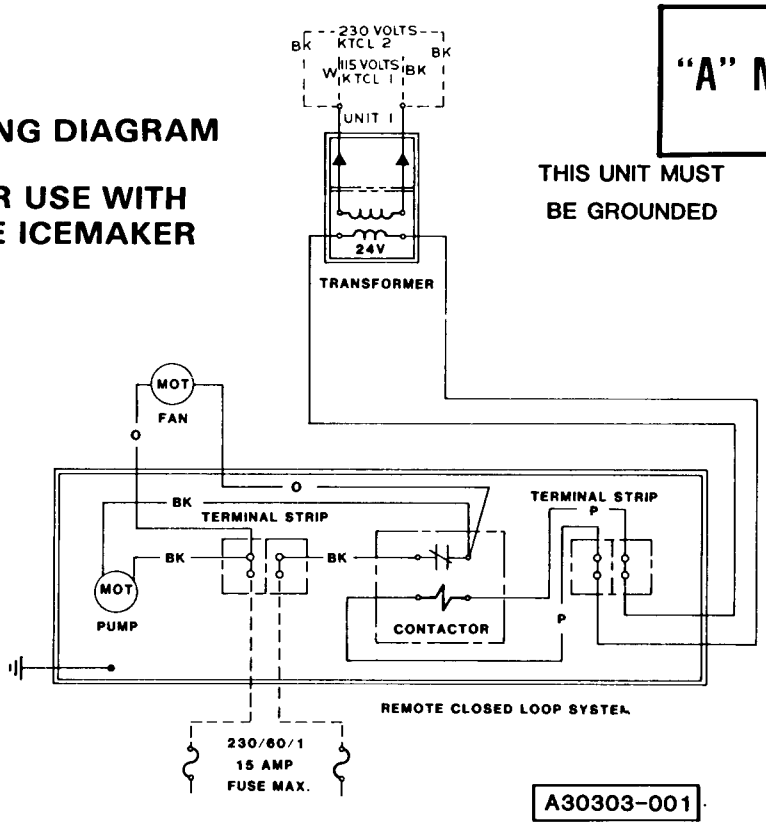

A30303-001

KIT KTCL3
KIT KTCL4

WIRING DIAGRAM

FOR USE WITH TWO ICEMAKERS

NOTE
"A" MODEL HOOK-UP ONLY

THIS UNIT MUST BE GROUNDED

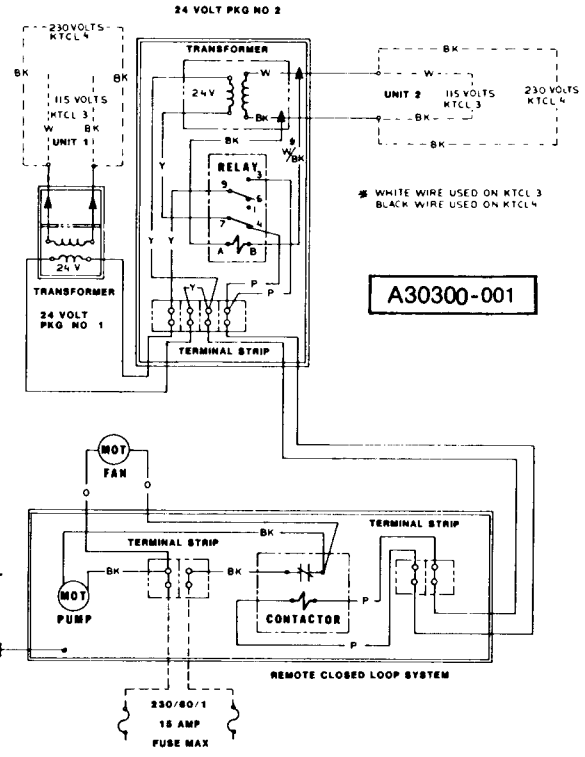

A30300-001

A MODEL ONLY

RCLS "A" MODEL PUMP ASSEMBLY

ITEM	DESCRIPTION	PART NO.
(1)	Pump Housing, 3/4-inch threaded Cast Iron	12-2204-21
(2)	Thrust Washer, Ceramic	12-2204-22
(3)	Impeller Shaft, 316 Stainless	12-2204-23
(4)	Impeller Magnet Assembly	12-2204-24
(5)	Gasket	12-2204-25
(6)	Housing Connecting Ring	12-2204-27
(7)	Connecting Bracket	12-2204-28
(8)	Complete Pump Assembly	12-2204-01

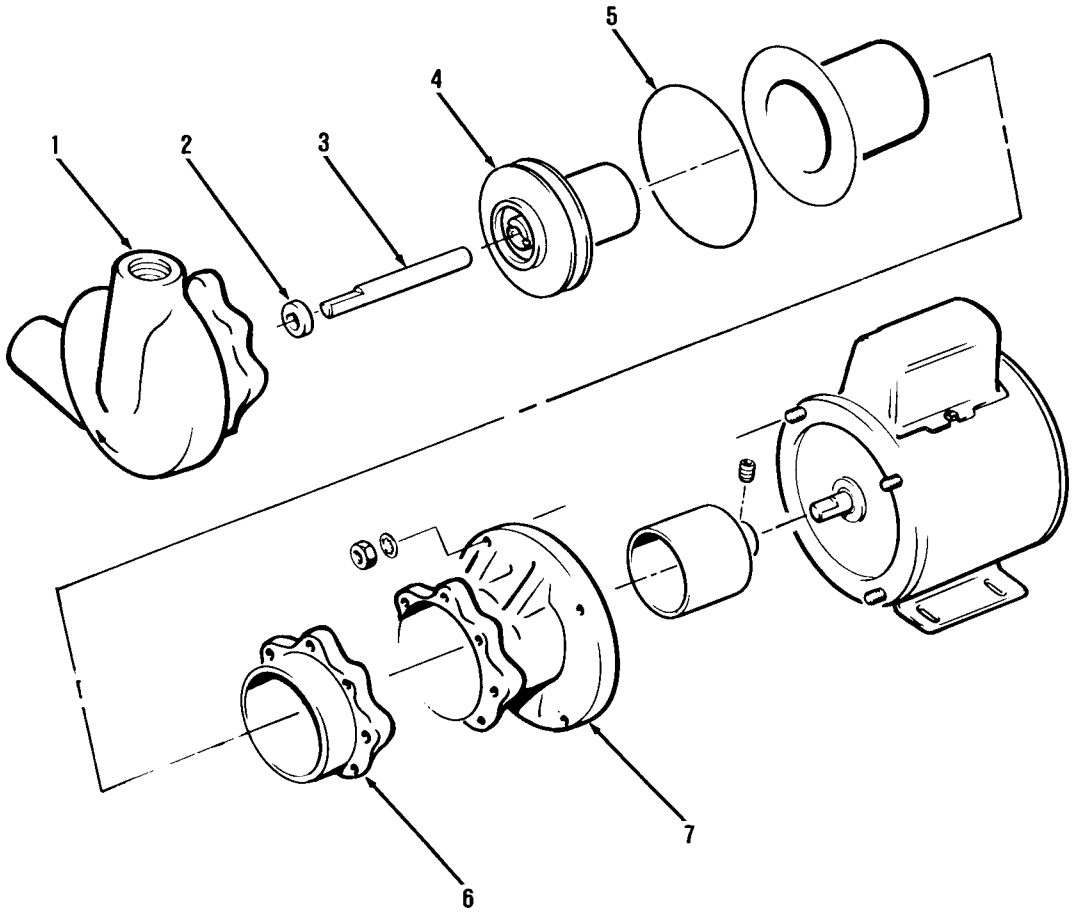

CABINET ASSEMBLY

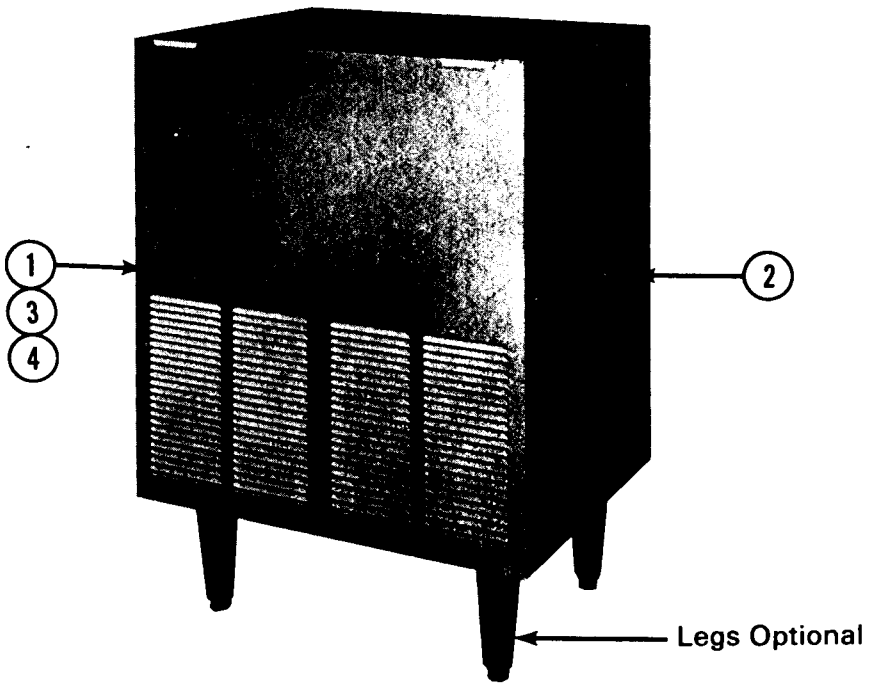

ITEM NO.	DESCRIPTION	PAINTED PART NO.	S.S. PART NO.
1.	Front Panel	A20048-000	A20048-001
2.	Side Panels	A20050-000	A20050-001
3.	Panel Strike	15-0411-00	15-0411-00
4.	Cabinet Catch	02-0836-00	02-0836-00

CONTROL BOX ASSEMBLY

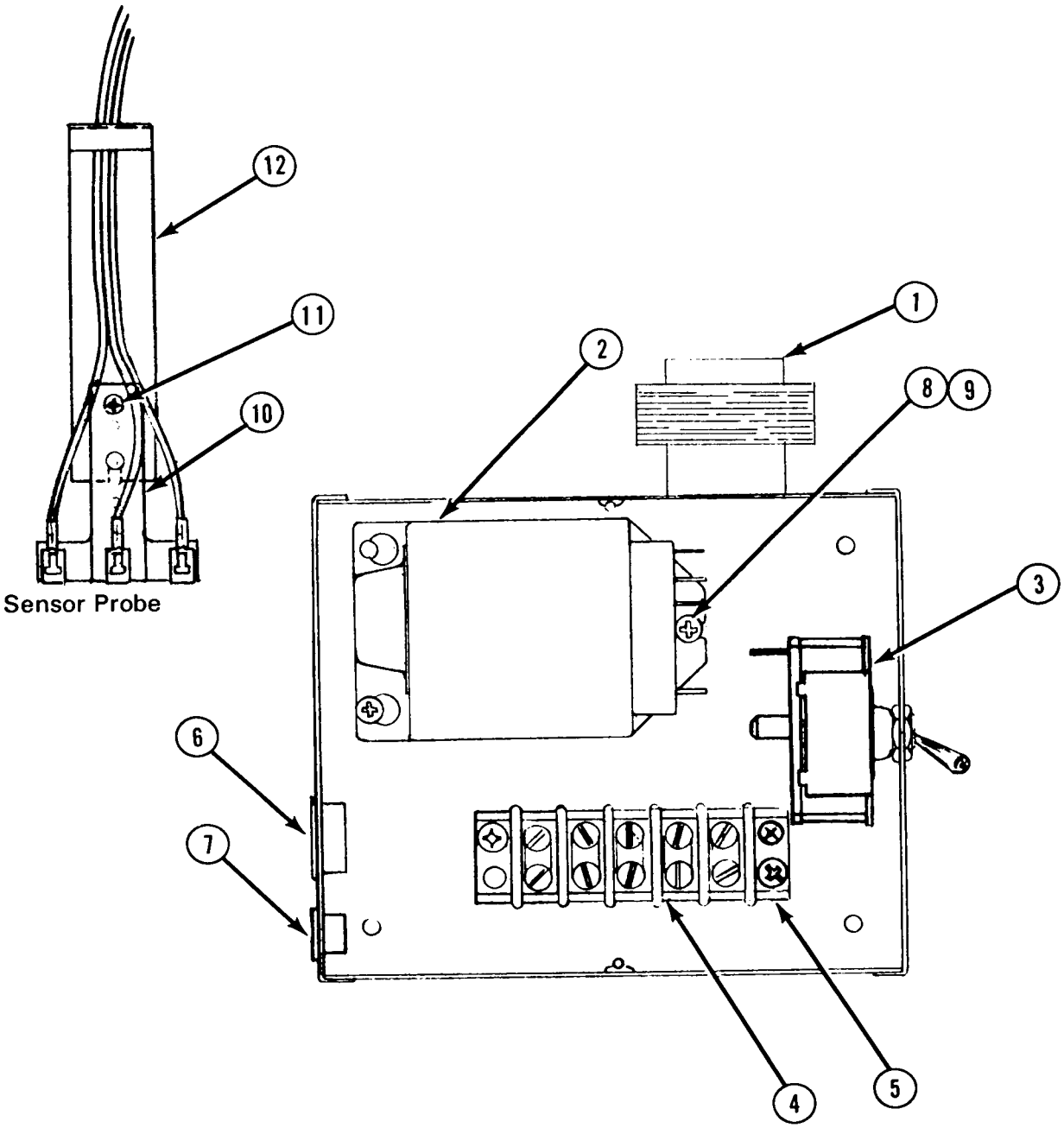

ITEM NO.	PART NO.	DESCRIPTION
1.	12-1809-01	Transformer
2.	11-0368-01	Ice Differential Control
3.	12-0426-01	Switch
4.	12-0813-07	Terminal Board
5.	03-1403-31	Screw
6.	12-1213-10	Bushing
7.	12-1213-06	Bushing
8.	03-1403-17	Screw
9.	03-1407-02	Washer
10.	11-0368-00	Sensor Probe
11.	03-1404-07	Screw
12.	A20506-000	Sensor Probe Brkt.

MACHINE ASSEMBLY

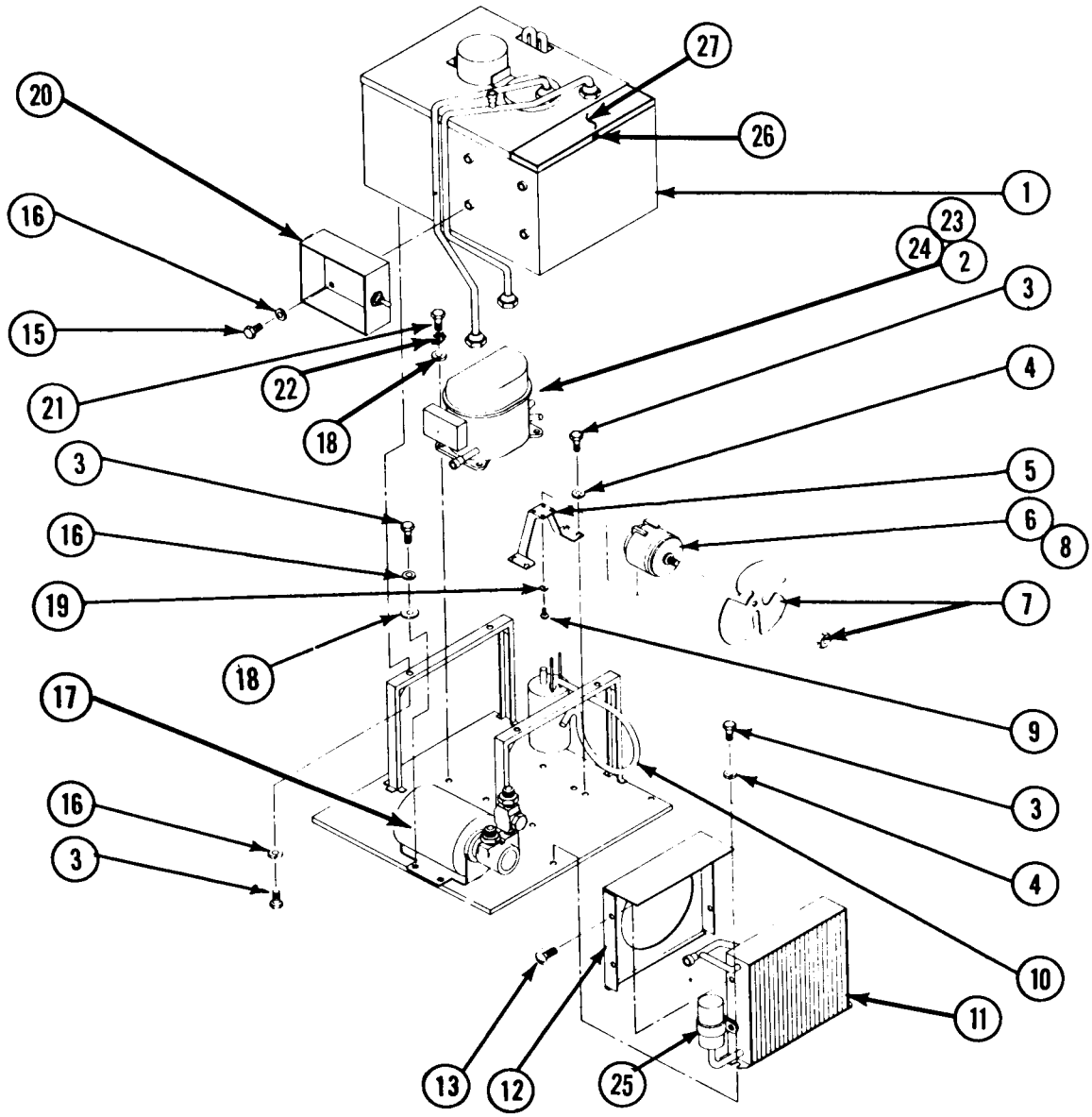

ITEM NO.	PART NO.	DESCRIPTION
1.	A23128-000	Evaporator Case
2.	18-0161-01	Compressor
3.	03-1405-03	Screw
4.	03-1417-09	Lockwasher
5.	18-0422-00	Mounting Bracket
6.	12-1575-01	Fan Motor
7.	18-0231-00	Fan Blade and Nut
*8.	12-1573-07	Fan Motor Wire
9.	03-1403-17	Machine Screw
10.	A20449-000	Accumulator Assy.
11.	18-0140-00	Condensor
12.	A15621-001	Shroud
13.	03-1404-15	Screw (4)
14.		
15.	03-1403-45	Screw
16.	03-1410-03	Lockwasher
17.	See Page 6	Pump Motor Assy.
18.	03-1407-05	Washer
19.	03-1417-03	Lockwasher
20.	See Page 2	Control Box
21.	03-1405-18	Screw
22.	03-1417-12	Lockwasher
23.	18-0161-20	Grommet
24.	18-0161-21	Sleeve
25.	02-0831-00	Drier
26.	03-1279-00	Wing Screw
27.	A22115-000	Ice Bank Lid
*28.	18-0161-02	Overload
*29.	18-0161-03	Relay
*30.	18-0161-05	Compositor

*Not Shown

ICE BANK ASSEMBLY

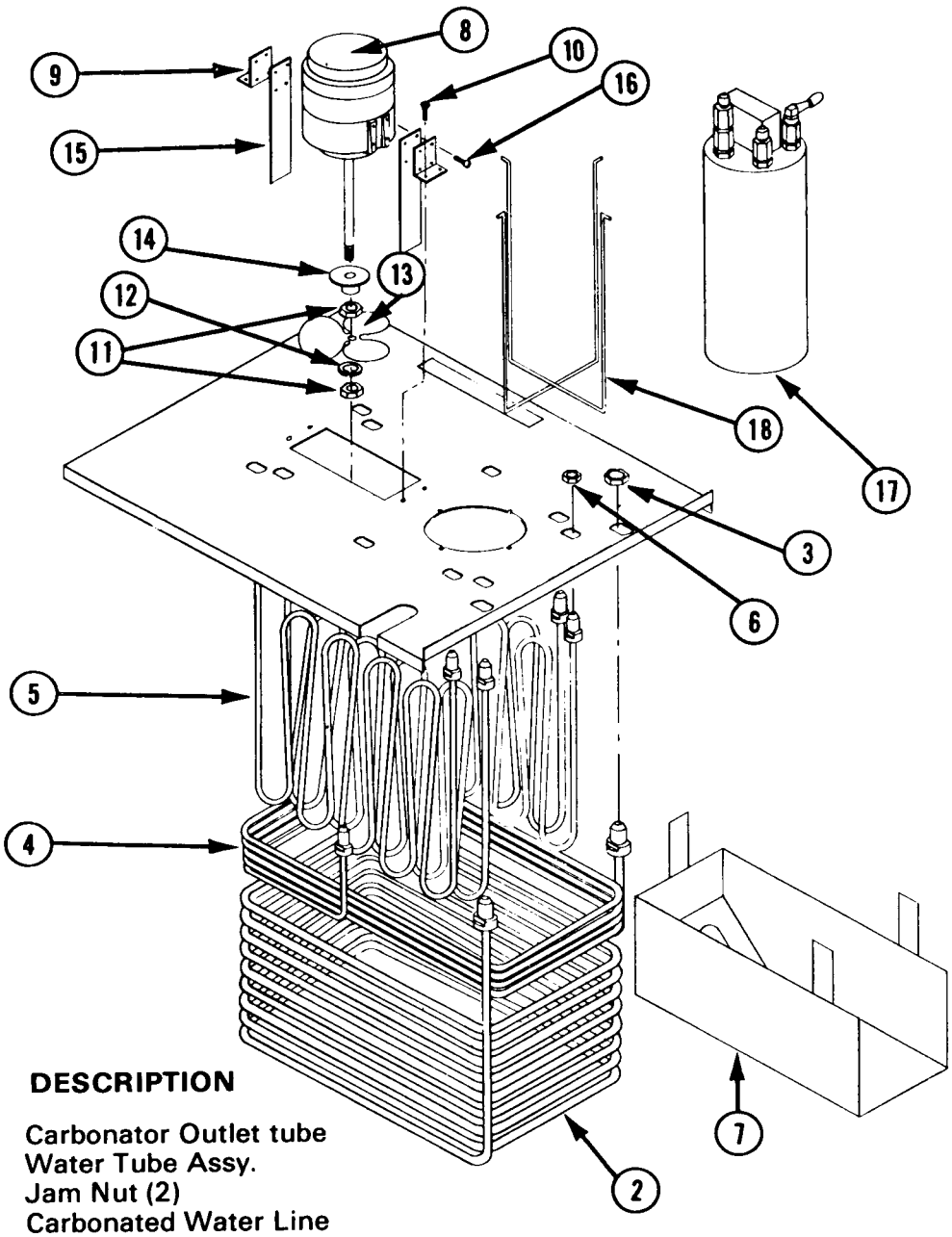

ITEM NO.	PART NO.	DESCRIPTION
*1.	A20540-000	Carbonator Outlet tube
2.	A20070-000	Water Tube Assy.
3.	A21510-002	Jam Nut (2)
4.	A20418-000	Carbonated Water Line
5.	A20073-000	Syrup Coil Fab
6.	A21510-001	Jam Nut (10)
7.	A20415-000	Water Baffle Fab
8.	12-1563-01	Agitator Motor
9.	A20526-000	Motor Brace
10.	03-1404-10	Screws
11.	03-1470-00	Hex Nuts SS
12.	03-1471-00	Lock Washer
13.	A23423-000	Agitator Propeller
14.	13-0724-00	Water Slinger
15.	A22178-000	Cooling Plate, Motor
16.	03-1404-16	Screws
17.	See Page 5	Carbonator Tank
18.	A20065-000	Tank Bracket Fab Assy.
*19.	02-1249-00	Nylon Flare Washer use (2) W/Item #1

*Not Shown

CARBONATION TANK - KENCO NO. KK-901C

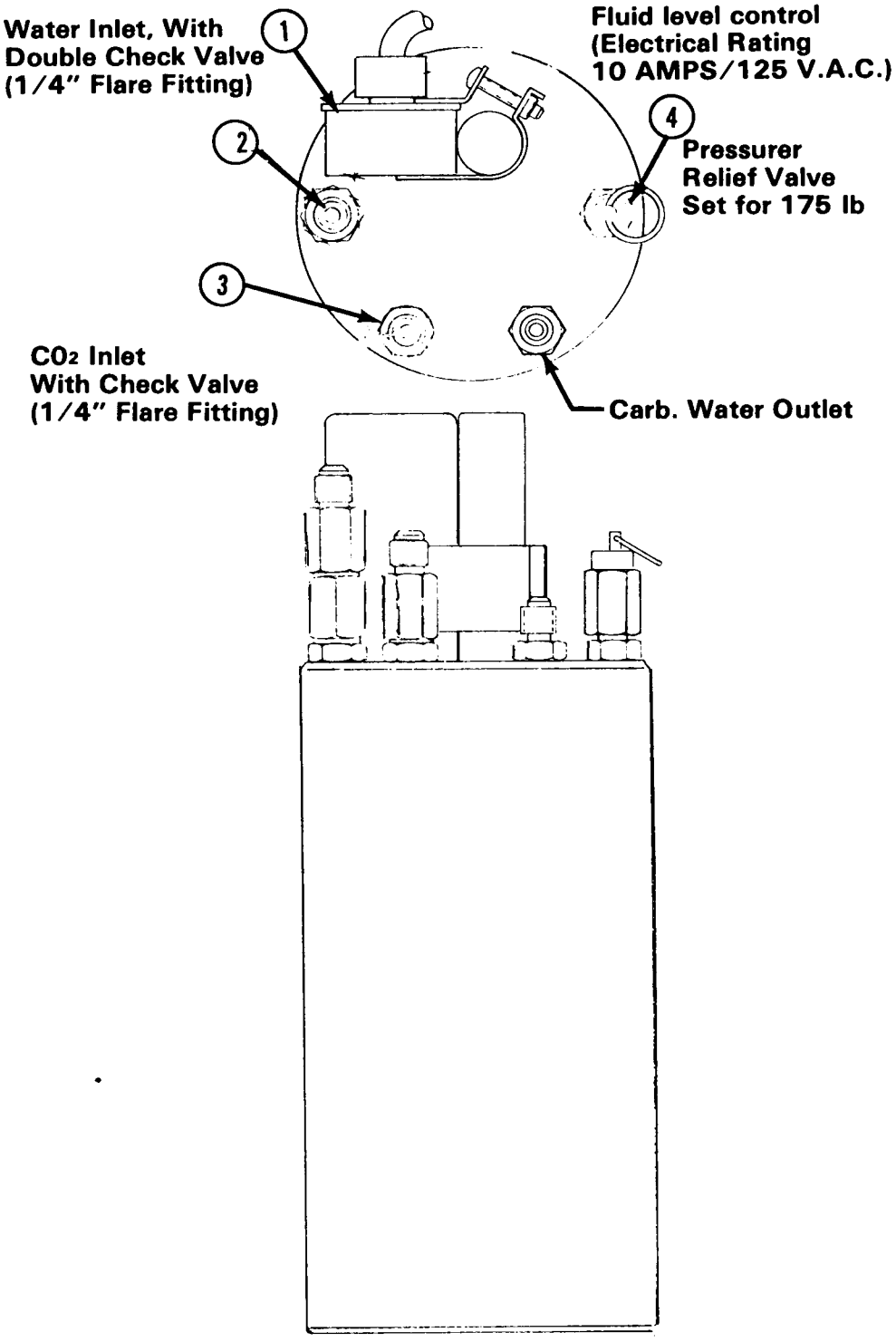

ITEM NO.	PART NO.	DESCRIPTION
1.	02-1975-50	Switch Assembly
2.	02-1975-51	Check Valve - Water
3.	02-1975-52	Check Valve - Gas
4.	02-1975-53	Relief Valve
5.	02-1975-00	Tank Complete

CARBONATOR PUMP ASSEMBLY

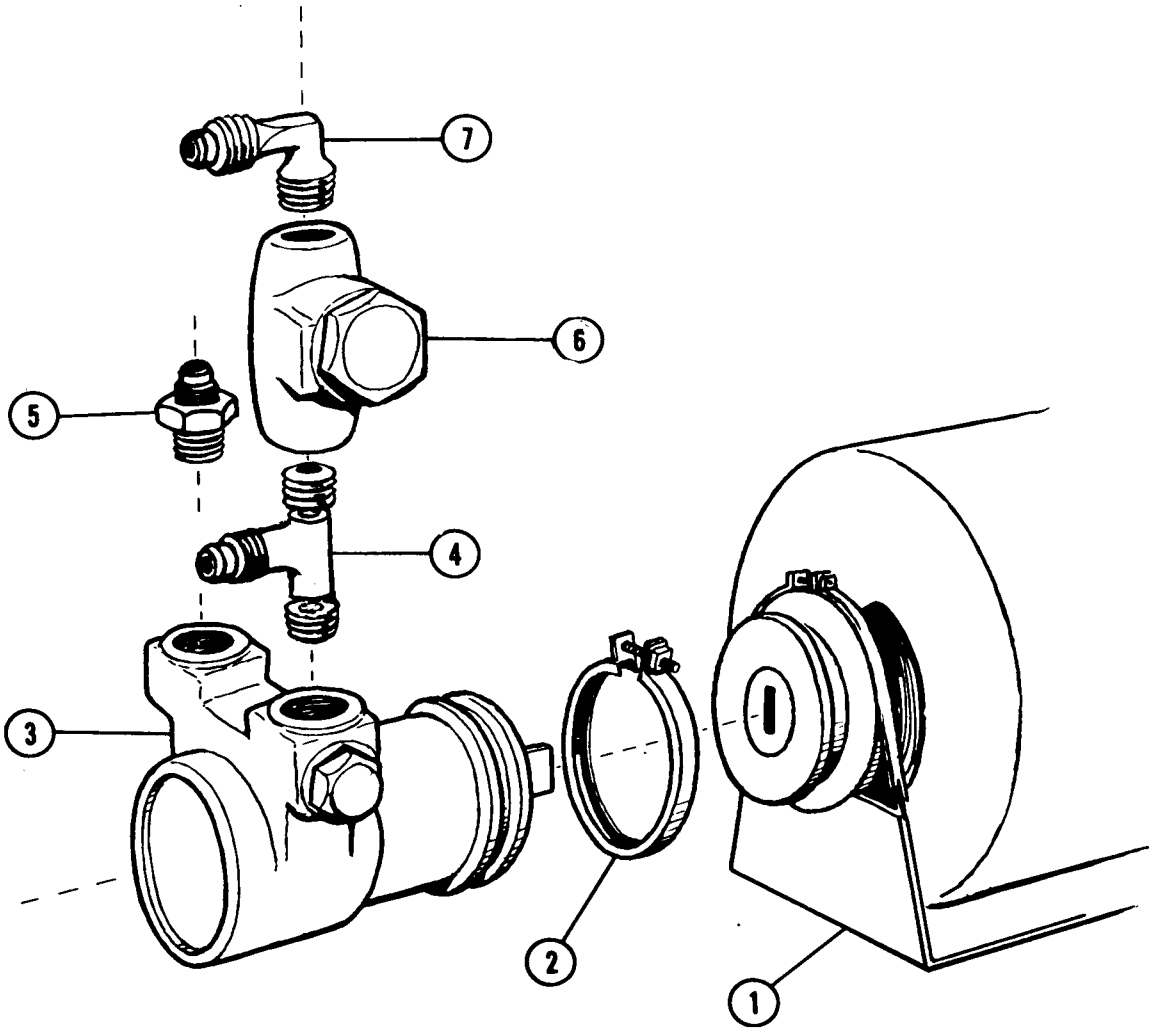

ITEM NO.	PART NO.	DESCRIPTION
1.	12-1339-01	Motor 115/60/1
2.	02-1527-00	Coupling Clamp
3.	02-1526-00	Pump
4.	16-0608-00	Tee 3/8" x 3/8" FNPT x 1/4" Fe Flare
5.	16-0355-00	Union 3/8 NPT x 3/8 Flare
6.	16-0162-01	Strainer
7.	16-0401-01	Half Union Elbow

TOUCH-O-MATIC FAUCET ASSEMBLY

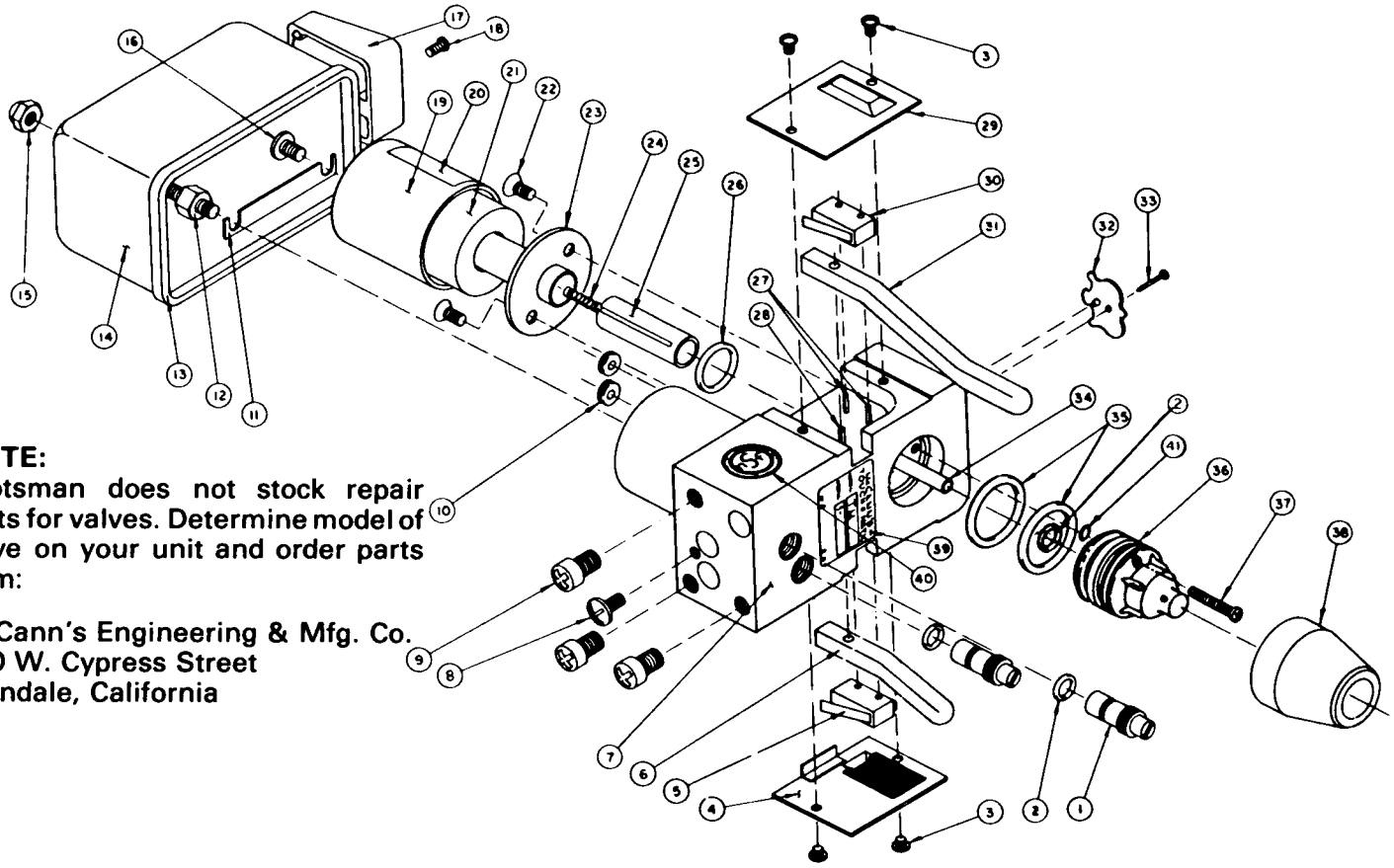

NOTE:
Scotsman does not stock repair parts for valves. Determine model of valve on your unit and order parts from:

McCann's Engineering & Mfg. Co.
430 W. Cypress Street
Glendale, California

ITEM NO.	PART NO.	DESCRIPTION
1.	1	Metering Stem
2.	2	"O" Ring, Metering Stem
3.	3	Screw, Side Plate
4.	152	Side Plate (Right Side)
5.	82	Switch Assembly (3 Wires)
6.	160	Lever, short
7.	01-0001	Block, 20-1000
7.	01-0002	Block, 20-2000
7.	01-0003	Block, 20-4000
7.	01-0004	Block, 20-1100-20-4100
7.	01-0005	Block, 20-2100-20-3100
8.	5	Screw, Inlet Retainer
9.	6	Screw, Faucet Mounting
10.	7	Grommet, Coil Housing
11.	8	Grounding Strap
11.	1508	Lockwasher in place of Part No. 8 on 12 V.D.C. and 20-4000
12.	9	Stud, Cover Mounting short
13.	10	Gasket Cover
14.	11	Cover (With Medallion Holes)
15.	13	Nut, Cover Retainer
16.	14	Screw, Coil Housing
17.	15	Medallion (Specify Flavor)
18.	16	Screw, Medallion Retainer
19.	17	Coil Cover
20.	20	Label (Specify Voltage) Coil

ITEM NO.	PART NO.	DESCRIPTION
21.	22	Coil (115 V.A.C.)
21.	24	Coil (12 V.A.C.)
21.	29	Coil (12 V.D.C.)
21.	23	Coil (24 V.A.C.)
22.	31	Screw, Plunger Housing Retainer
23.	32	Plunger Housing
24.	38	Spring, Plunger
25.	39	Plunger, Tough-O-Matic
26.	40	"O" Ring Plunger Housing
27.	41	Roll Pin, Switch
28.	42	Roll Pin, Lever
29.	151	Side Plate (Left Side)
30.	137	Switch Assembly, 2 Wires, Standard
30.	138	Switch Assembly, 2 Wires, Special
31.	159	Lever, Long
32.	49	Crest, McCANN'S
33.	50	Pin, Crest Retainer
34.	09-0017	Tube, Syrup
34.	89	Jet Tube
35.	52	"O" Ring Diffuser
36.	09-0018	Diffuser
37.	54	Screw, Diffuser Retainer
38.	09-0013	Pouring Spout, Red
38.	09-0015	Pouring Spout, Black
38.	09-0014	Pouring Spout, Clear
39.	149	Gasket

KV5E-30A VALVE KIT ASSEMBLY

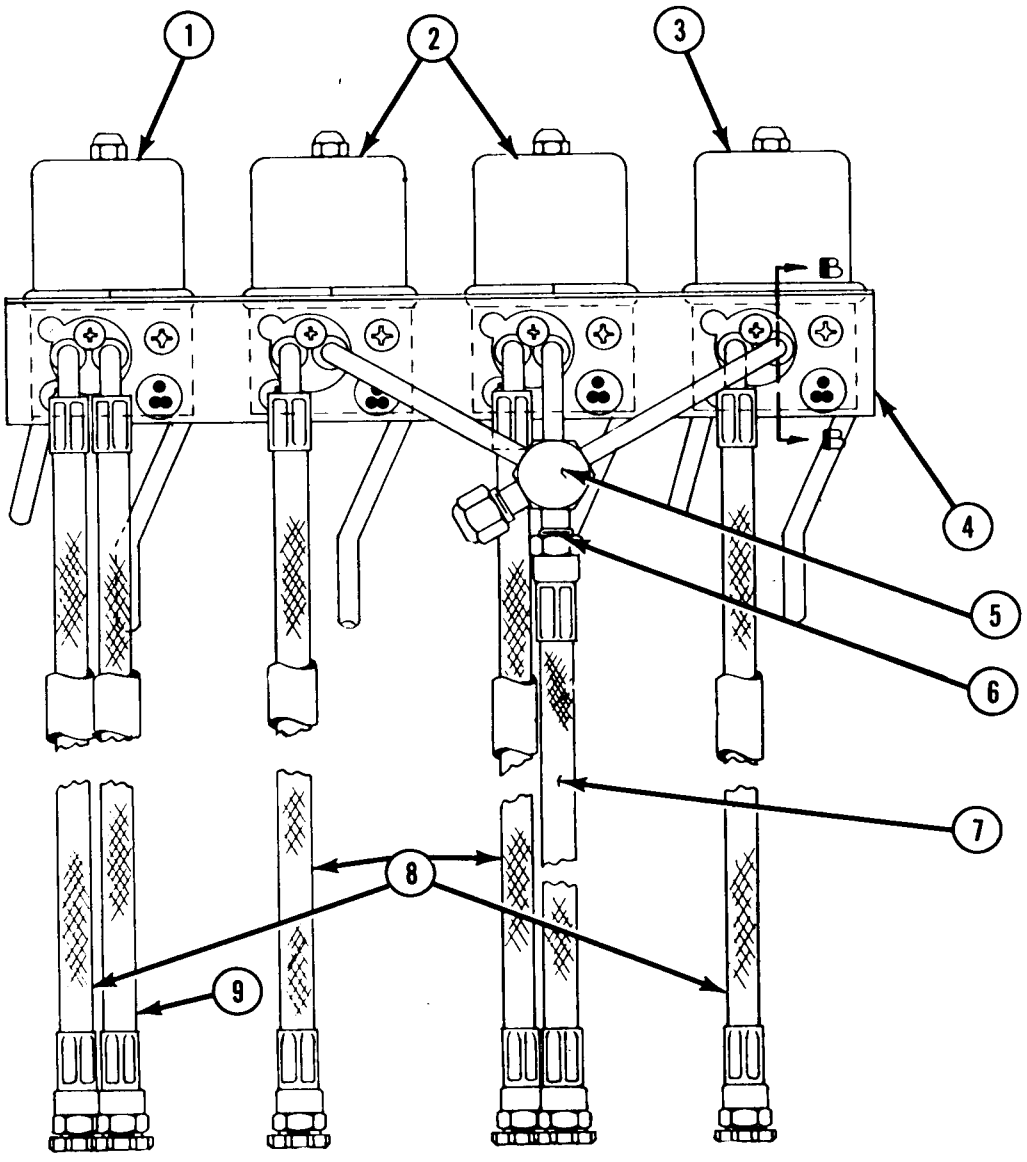

ITEM NO.	PART NO.	DESCRIPTION
1.	02-1205-19	Valve, two lever, non-carbonated
2.	02-1205-16	Valve, single lever, carbonated flavor
3.	02-1205-17	Valve, two lever, carbonated flavor & soda
4.	A20368-000	Valve Bracket
5.	02-2128-01	Carbonated Water Manifold
	13-0617-32	"O" Ring (3 required)
6.	02-1249-00	Washer (10 required)
7.	A20547-000	Carbonated Water Line
8.	A20546-000	Syrup Line

TABLE OF CONTENTS

Table of Contents i

List of Illustrations iii

Specifications iv

SECTION I- GENERAL INFORMATION & INSTALLATION 1-1

I. Introduction 1-1

II. Unpacking and Inspection 1-1

III. Location and Leveling 1-2

IV. Electrical Connections 1-2

V. Water Supply and Drain Connections 1-2

VI. Installation - Dispenser Mounting 1-3

VII. Installation - Optional Kits 1-5

VIII. Final Check List 1-5

SECTION II- OPERATING INSTRUCTIONS 2-1

I. Start-Up 2-1

SECTION III- PRINCIPLES OF OPERATION - How It Works 3-1

I. Power-ON - STANDBY 3-1

II. Vend Switch - Held IN 3-1

III. Vend Switch - Pushed IN, Immediately Released 3-1

IV. Component Description 3-3

SECTION IV- ADJUSTMENT AND REMOVAL AND REPLACEMENT PROCEDURES 4-1

I. Adjustment of the Bin Thermostat Control 4-1

II. Adjustment of the Ice Dispenser Motor Cam and Switches 4-2

III. Removal and Replacement of the Bin Thermostat Control 4-4

IV. Removal and Replacement of the Cylindrical Bin and Internal Parts 4-4

V. Removal and Replacement of the Drivemotor Assembly 4-4

TABLE OF CONTENTS (Cont'd)

VI. Removal and Replacement of the Ice Dispenser Chute Assembly 4-6

VII. Removal and Replacement of the Ice Dispenser Motor Assembly 4-6

SECTION V- MAINTENANCE AND CLEANING INSTRUCTIONS 5-1

I. General 5-1

II. Dispenser 5-1

III. Cleaning 5-1

IV. Sanitizing 5-3

SECTION VI- SERVICE DIAGNOSIS 6-1

I. Ice Agitation and Dispensing Systems 6-1

SECTION VII- WIRING DIAGRAM 7-1

Wiring Diagram RPD100 Dispenser 7-2

SECTION VIII- THE PARTS ILLUSTRATIONS AND PARTS LISTS 8-1

I. General 8-1

II. How to Use the Illustrations and Parts List 8-1

III. How to Order Parts or Assemblies 8-1

LIST OF ILLUSTRATIONS

	Specifications - Model RPD100	iv
Figure 1-1.	Installation Practice	1-4
Figure 1-2.	Examples of Ice Transport Tube Routing	1-6
Figure 2-1.	RPD100 Dispenser - Component Location	2-2
Figure 3-1.	RPD100 Vend Cycle Chart	3-2
Figure 4-1.	Adjustment of the Temperature Control	4-1
Figure 4-2.	Adjustment of the Cam-Switch Positions	4-3
Figure 4-3.	Ice Breaker, Agitator, Storage Bin - Exploded View	4-5
Figure 5-1.	Ice Breaker, Agitator, Storage Bin - Exploded View	5-2
Figure 7-1.	Wiring Diagram RPD100 Dispenser	7-2
Figure 8-A.	Model RPD100 Dispenser Flow Chart	8-2
Figure 8-1.	RPD100 Dispenser	8-3
Figure 8-2.	Major Assemblies	8-6
Figure 8-3.	Ice Breaker, Agitator, Cylindrical Bin Assembly	8-11
Figure 8-4.	Ice Dispenser Motor Assembly	8-14
Figure 8-5.	Drivemotor Assembly — 1/10 H.P.	8-16
Figure 8-6.	Control Box Assembly	8-19
Figure 8-00.	How To Use The Illustrated Parts List	8-21

SPECIFICATIONS
MODEL RPD100

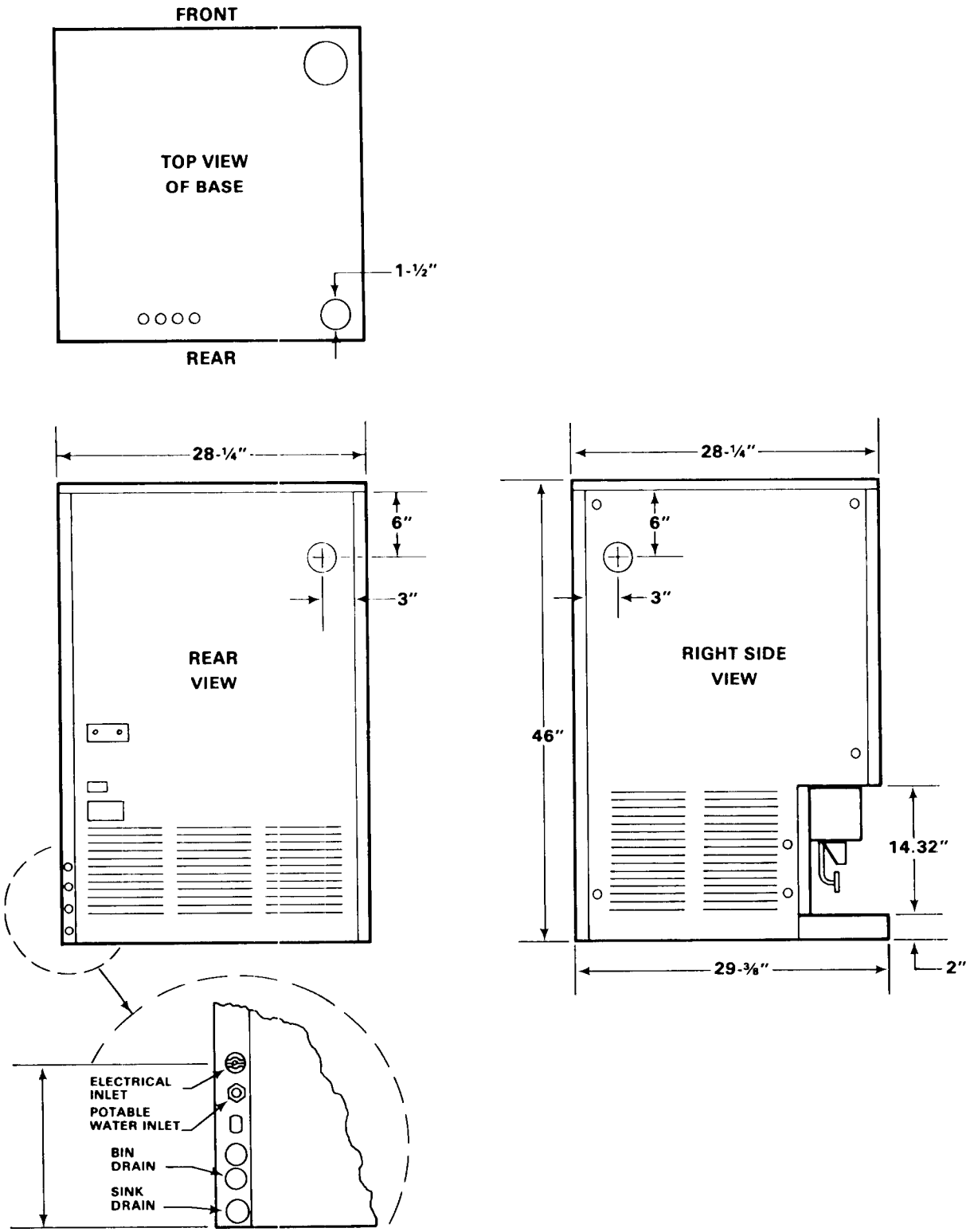

SPECIFICATIONS (Cont'd)

MODEL RPD100

Bin Storage: 90 lbs.*

Electrical: 115/60/1

Est. Ship. Wt.: 237 lbs.

TWO YEARS PARTS WARRANTY
FRONT SERVICE ACCESS PANEL

OPTIONAL KITS

SPKPCD1 - Stainless Panel Kit
KDPB2 - Dispensing Portion Box Kit
KDPB4 - Dispensing Portion Box Kit
KV7E-30A - Valve Kit - (5 valves)
KTX25 - 25-Ft. Ice Transport Tube
KTX50 - 50-Ft. Ice Transport Tube
KTX100 - 100-Ft. Ice Transport Tube

SEE NAMEPLATE, shown at left, for electrical specifications. NAMEPLATE located on the left section of the rear service panel of the cabinet.

Remove Splash Panel and the Sink Assembly to locate the Model/Serial Number plate, shown below, on the front center of the Base Assembly.

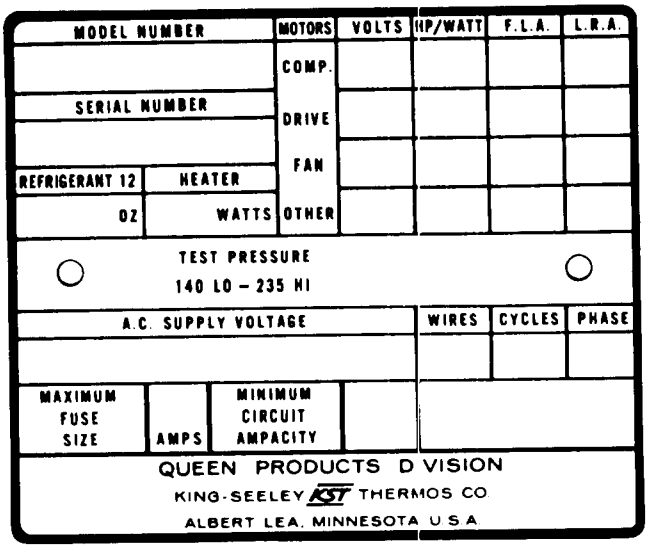

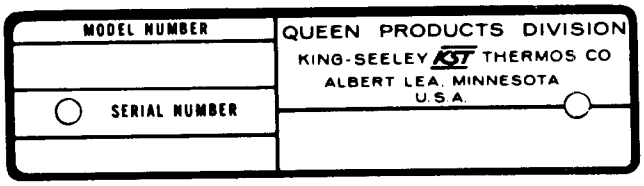

*Storage based on 90-percent of total volume x 34 lb. average density of ice. A.R.I. Standard.

We reserve the right to make product improvements at any time. Specifications and design are subject to change without notice.

This Dispenser has been engineered to our own rigid safety and performance standards. The National Sanitation Foundation (NSF) seal, signifies that it is listed with the NSF and that it complies with the materials and construction standards of the NSF. In addition, the Underwriters Laboratories, Inc., (UL) Listing Mark and the Canadian Standards Association (CSA) Monogram, both signify that its construction and design have been inspected and tested by them. NSF, UL and CSA inspectors also periodically examine production icemakers at the factory, to assure continued compliance.

To retain the safety and performance built into this Dispenser, it is important that installation and maintenance be conducted in the manner outlined in this manual.

SECTION I

GENERAL INFORMATION & INSTALLATION

I. INTRODUCTION

This manual provides specifications and the step-by-step procedures for the installation, start-up, operation, and the maintenance and cleaning for the SCOTSMAN Model RPD100 Dispenser.

The Model RPD100 Dispensers are quality designed, engineered and constructed, and thoroughly tested ice storage and dispensing systems, providing the utmost in flexibility to fit the needs of a particular user. Separate sections detail more specifically: General Information & Installation; Start Up Operation; Principles of Operation; Adjustment and Removal and Replacement Procedures; Maintenance and Cleaning Instructions; Service Diagnosis; Wiring Diagrams; and, the Illustrated Assemblies and Parts Lists.

With the Splash Panel, Sink Assembly and Rear Panel removed, work access can be gained for on-the-spot repair.

DESCRIPTION

An attractive compact cabinet with a Micomatte baked enamel finish. Also, an optional stainless steel panel kit is available. Both cabinets have up-to-date styling and easily removable front panels for easy access to electrical and mechanical components.

SELF-CONTAINED STORAGE BIN

The RPD100 Dispensers store ice in a self-contained, stainless steel ice storage bin cylinder, inside an insulated cabinet.

OVERALL DIMENSIONS

The overall dimensions of the Dispenser depth, height, etc., allows the Dispenser to be installed in harmony with the existing counter equipment, EC900 Icemaker, or on the DMS50 Machine Stand.

II. UNPACKING AND INSPECTION

1. Call your authorized SCOTSMAN Distributor or Dealer, for proper installation. He's listed under ICE MAKING EQUIPMENT and MACHINERY in the yellow pages of the telephone book.
2. Visually inspect the exterior of the shipping container and skid and any severe damage noted, should be reported to the delivery carrier; and, a concealed damage claim filed subject to internal inspection, with carrier representative present.
3. BEFORE removal of any panels or packing, carefully lay the Dispenser on its back and remove the shipping bolts and the shipping base or skid; then, install the sink drain, packed in Ice Storage Bin.
4. Remove screws and shipping tape, and the Front Panel from the cabinet, and inspect for any concealed damage. Notify carrier of any concealed damage claims, as stated in step 2 above.
5. Remove screws, the Spout Cover Assembly, then pull each end of the Splash Panel and remove Splash Panel from the front of the Dispenser. Unplug the dispensing switches cable from the Control Box.
6. Remove all internal support packing, tape or wire from internal mechanisms.
7. Remove Water Strainer from shipping envelope for installation in water supply line.
8. Use clean damp cloth or disposable paper wiper to wipe clean the interior surfaces of the ice storage Bin and the exterior surfaces of the cabinet.
9. See NAMEPLATE on the left midsection of of the rear service panel of the cabinet and check that the local source voltage corresponds with the voltage specified on the nameplate.

CAUTION

Improper voltage supplied to Dispenser will void your parts replacement program.

10. Connect dispensing switches cable to the Control Box and replace Splash Panel.
11. Remove the Manufacturer's Registration Card from the front of the User's Manual and fill in all spaces including: Model Number and Serial Number taken from the aluminum plate located on the front of the Base Assembly. Forward the completed, self addressed, registration card to the SCOTSMAN factory.

III. LOCATION AND LEVELING

WARNING

This Dispenser is NOT designed for outside installations where air temperatures are below 50-degrees F. or above 100-degrees F., and the water temperature is below 40-degrees F. or above 100-degrees F. Extended periods of operation at temperatures exceeding these limitations will constitute misuse, under the terms of the Scotsman Manufacturer's limited warranty, resulting in LOSS of warranty coverage.

1. Position the Dispenser in the selected permanent location.

NOTE

Prior consideration for location site shall include:

1. *Minimum room temperature 50-degrees F. and maximum room temperature 100-degrees F.*
2. *Water inlet temperatures: Minimum 40-degrees F. and Maximum 100-degrees F.*
3. *Well ventilated location.*
4. *SERVICE ACCESS: Adequate space for all service connections, through the rear of the cabinet. A six-inch minimum clearance at rear and sides for routing cooling air.*
5. *Surface requirements for sealing Dispenser to counter.*

2. LEVELING - (On EC900 or DMS50 Machine Stand): Level the Cabinet in both the left-to-right and front-to-rear directions. Add metal shims, to ensure that the Splash Panel and Sink Assembly can be easily removed and reinstalled.
3. LEVELING - (General):

NOTE

When installing Dispenser on counter top, the base shall be secured to the counter top and properly sealed to prevent contaminants and vermin from entering through the base of the Dispenser. The following procedure is recommended and the sealant can be a food grade caulking material, or SCOTSMAN Sealant P/N 19-0529-00 or 19-0529-01.

1. *With the Splash Panel and Sink Assembly removed, position Dispenser in selected site location; then, with a marking pen, trace the outline of the Dispenser base on the counter top.*
2. *Remove the Dispenser temporarily and proceed to lay a one-fourth inch bead of sealing or caulking compound on the counter top, just INSIDE the above traced outline.*
3. *Carefully position the Dispenser over the traced outline and sealant bead and gently lower the Dispenser in place, checking to ensure there is a continuous and proper seal around the entire base of the Dispenser.*
4. *BEFORE the sealant sets-up or hardens, check the front-to-rear and left-to-right leveling of the Dispenser; and, if required, add shims to achieve proper leveling.*
5. *When necessary, recaulk any areas opened by the shim or leveling process, performed in step 4 above.*

IV. ELECTRICAL CONNECTIONS

See NAMEPLATE for current requirements to determine wire size to be used for electrical hookup. The Dispenser requires a solid earth ground wire. See wiring diagram.

Be certain the Dispenser is connected to its own electrical circuit and individually fused. The maximum allowable voltage variation should not exceed ten percent of the nameplate rating, even under starting conditions. Low voltages can cause erratic operation and may be responsible for serious damage to the motor windings.

All external wiring should conform to the national, state and local electrical code requirements. Usually electrical permit and services of a licensed electrician will be required.

V. WATER SUPPLY AND DRAIN CONNECTIONS

A. WATER SUPPLY CONNECTIONS: The recommended water supply line is a 3/8-inch O.D. copper tubing. Connect to cold water supply line with standard plumbing fittings, with a shutoff valve installed in an accessible place between the water supply and the Dispenser.

A wire mesh strainer is provided and must be installed with the cleanout plug down. Locate the strainer in the water supply line, next to the Dispenser with the arrow on the strainer, in the direction of the water flow. The strainer protects against large particles of rust, scale, etc., which may be loosened in the water supply pipe, at the time of installation.

Water supply lines and connections shall be installed conforming with local plumbing codes. In some cases, a plumbing permit and services of a licensed plumber will be required.

B. DRAIN CONNECTIONS: All drains are gravity type and must have a minimum 1/4-inch fall per foot on horizontal runs. The drains to be installed conforming with local plumbing code. The drain receptacle should be an open, trapped or vented construction. Recommended Bin Drain is 5/8-inch O.D.

copper tubing and should be vented and run separately. Sink drain to be 7/8-inch O.D. copper tubing.

VI. INSTALLATION - DISPENSER MOUNTING

A. DISPENSER MOUNTED ON TOP OF EC900:

1. Remove the rear and side panels from both the RPD100 and EC900. Remove and discard the Top Panel from the EC900.

NOTE

A drip pan is provided with the EC900, for use when the RPD100 is mounted on top of the EC900. The drip pan will catch any dripping from drink heads, or the water spout, when the RPD100 Sink Assembly is removed. With attaching screws removed, the drip pan can be slid to the rear to provide access to the EC900 from the top for service requirements. The drip pan is not required when the Top Panel is installed on the EC900.

2. Position the RPD100 on top of the EC900; then, install three fish plates, one on each side and one at the rear, to secure the bottom of the RPD100 to the top of the EC900. See Figure 1-1.
3. Check leveling of the RPD100 and use metal shims, as necessary, for proper alignment to ensure easy removal and replacement of the Splash Panel and Sink Assembly.
4. Align the drain fitting on the rear of the Sink Assembly with the drain fitting at the center of the base of the Dispenser; then, check that the O-Ring is installed on the drain tube and covered with petroleum jelly, applying jelly when necessary and then push Sink Assembly in, to lock in place.
5. Check Figure 1-1 to measure, prepare and install the two hold down clips, shipped with the RPD100.

NOTE

The installed hold down clips, keep the front edge of the Sink Assembly held down to prevent it from vibrating, yet allows the sink to be easily removed and replaced for cleaning.

6. Install the 110-inch long. one-inch I.D. Nylon reinforced P.V.C. ice transport tubing on the outlet of the EC900 Extruder, and secure with one of the hose clamps provided.

CAUTION

Use extra care when routing the ice transport tubing in the next step to:

1. **Avoid any kinking or restrictions of any kind to tubing; and, that all curves or bends in tube routing have the largest possible radius. Minimum recommended bend radius is six and one-half inches.**
2. **Be sure to route tubing away from all moving parts, such as pulleys and belts. Ties may be required to ensure that tubing does not contact any moving parts.**
3. **Use only tubing approved by SCOTSMAN for use with the EC900, and also use only hose clamps provided.**

7. Route the ice transport tube up through the gusset in the rear, left-hand corner of the EC900, through the hole in the base and mounting pan of the RPD100, continuing up through the hole in the foam insulation and out into the bin.
8. Guide the end of the tubing under the saddle, through the two U-clamps, with the end of the tubing extending about one inch beyond the last U-clamp. Excess tubing should be worked back down into the EC900 Cabinet.
9. Route electrical wiring from the Bin Level Control of the RPD100, to the terminal block located in the small control box of the EC900. Refer to the EC900 instructions and wiring diagram. These wires may be routed along the ice transport tubing.

B. DISPENSER MOUNTED REMOTE OR ON COUNTER:

CAUTION

Be sure the Dispenser is installed on a solid support in accordance with local codes. Securely attach the Dispenser to the counter or other support with the shipping bolts or bolts of equivalent size to prevent possible tipping over of the Dispenser. Omit use of the bolt in the rear right-hand corner, eliminating interference with the sink drain assembly.

1. Level and seal the base of the Dispenser to the counter or other support, as given in the paragraph I-III-3 LEVELING.
2. Refer to paragraph I-VI-A above, and route the one-inch I.D. Nylon-reinforced P.V.C. ice transport tubing in the same manner into the RPD100 installed remote from the EC900.
3. When mounted on a counter top, cut a one and one-half inch diameter hole in the counter top at the left rear corner of the Dispenser.

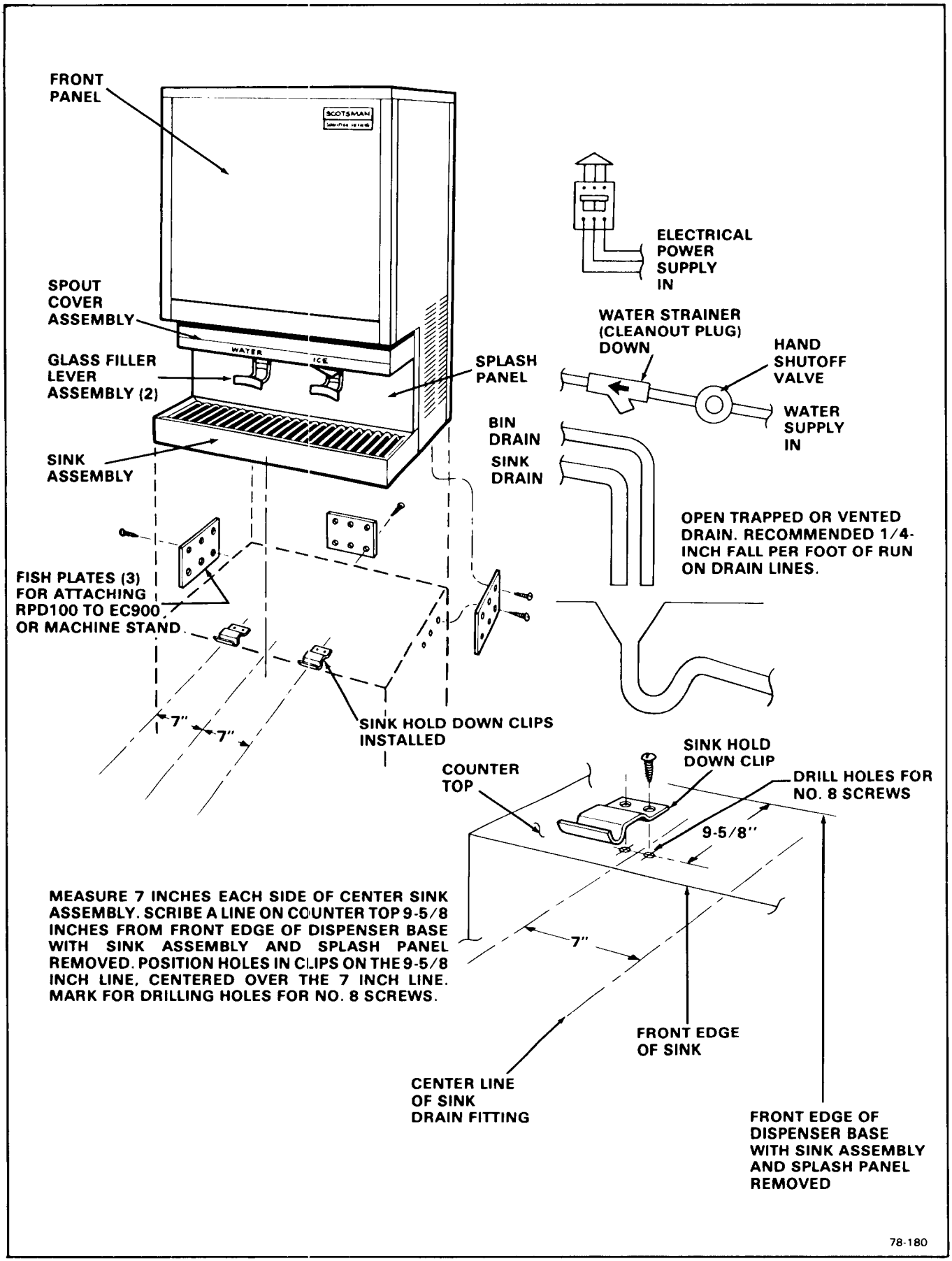

Figure 1-1. Installation Practice

4. When the ice transport tube delivers ice from above the Dispenser, cut a one and one-half inch diameter hole in the left side panel, or left rear panel, six inches below the top of the panel and three inches from the edge of the panel next to the left rear corner post. See Specifications page.

CAUTION

Strictly observe the following instructions in the use and handling of SCOTSMAN approved Nylon reinforced ice transport tubing, see Figure 1-2:

1. **Use only SCOTSMAN approved Nylon reinforced one inch I.D. transport tubing available in 25, 50 and 100 foot lengths, from your authorized SCOTSMAN dealer.**
2. **DO NOT splice tubing.**
3. **DO NOT route tubing from above the Dispenser down to the base and back up to the ice storage bin level. This U-shape in tubing forms a trap, or low section in the tubing, that will fill with water which cannot be drained.**
4. **Route all transport tubing to allow meltage water to drain to either the RPD100, the EC900, in both directions. Refer to instructions supplied with the EC900.**

VII. INSTALLATION - OPTIONAL KITS

Install kits ordered with the Dispenser:

1. KDPB2 Dispensing Portion Box Kit - designed to dispense an amount of ice LESS than the standard dispenser; or,
2. KDPB4 Dispensing Portion Box Kit - designed to dispense an amount of ice MORE than the standard dispenser; or,
3. KV7E-30A Valve Kit - a five-valve soda drink kit, of which one valve is used to replace the water spout which must be removed to install this kit.
4. SPKPCD1-Stainless Steel Panel Kit.
5. KTX25 - 25-foot length of Nylon reinforced, one-inch I.D. tubing for ice transporting.
6. KTX50 - 50-foot length of Nylon reinforced, one-inch I.D. tubing for ice transporting.
7. KTX100 - 100-foot length of Nylon reinforced, one-inch I.D. tubing for ice transporting.

The installation instructions for each of the above listed kits are shipped in the individual kit package.

VIII. FINAL CHECK LIST

1. Is the Dispenser level? (IMPORTANT)
2. Have all kits, if any, been installed and properly checked?
3. Has the sink drain assembly been installed?
4. Have all electrical and piping connections been made?
5. Has the ice transport tubing been installed and properly routed for good drainage?
6. Has the voltage been tested and checked against the nameplate rating?
7. Is the water supply line shutoff valve installed and electrical wiring properly connected?
8. Have the Bin and Cabinet been wiped clean?
9. Has the owner/user been given the User Manual and instructed on how to operate the Dispenser?
10. Has the Manufacturer's Registration Card been properly filled out? Check for correct Model and Serial numbers from Serial nameplate, then mail the completed card to the SCOTSMAN factory.
11. Check all conduit lines, to guard against vibration or rubbing and possible failure.
12. Is there at least six inches clearance behind and around the Dispenser for proper air circulation?
13. Is the Dispenser in a room where ambient temperatures are a minimum of 50-degrees F. all year around?
14. Has water supply pressure been checked to ensure a minimum of 20 PSI?
15. Has the owner been given name and telephone number of the authorized SCOTSMAN Service Agency serving him?

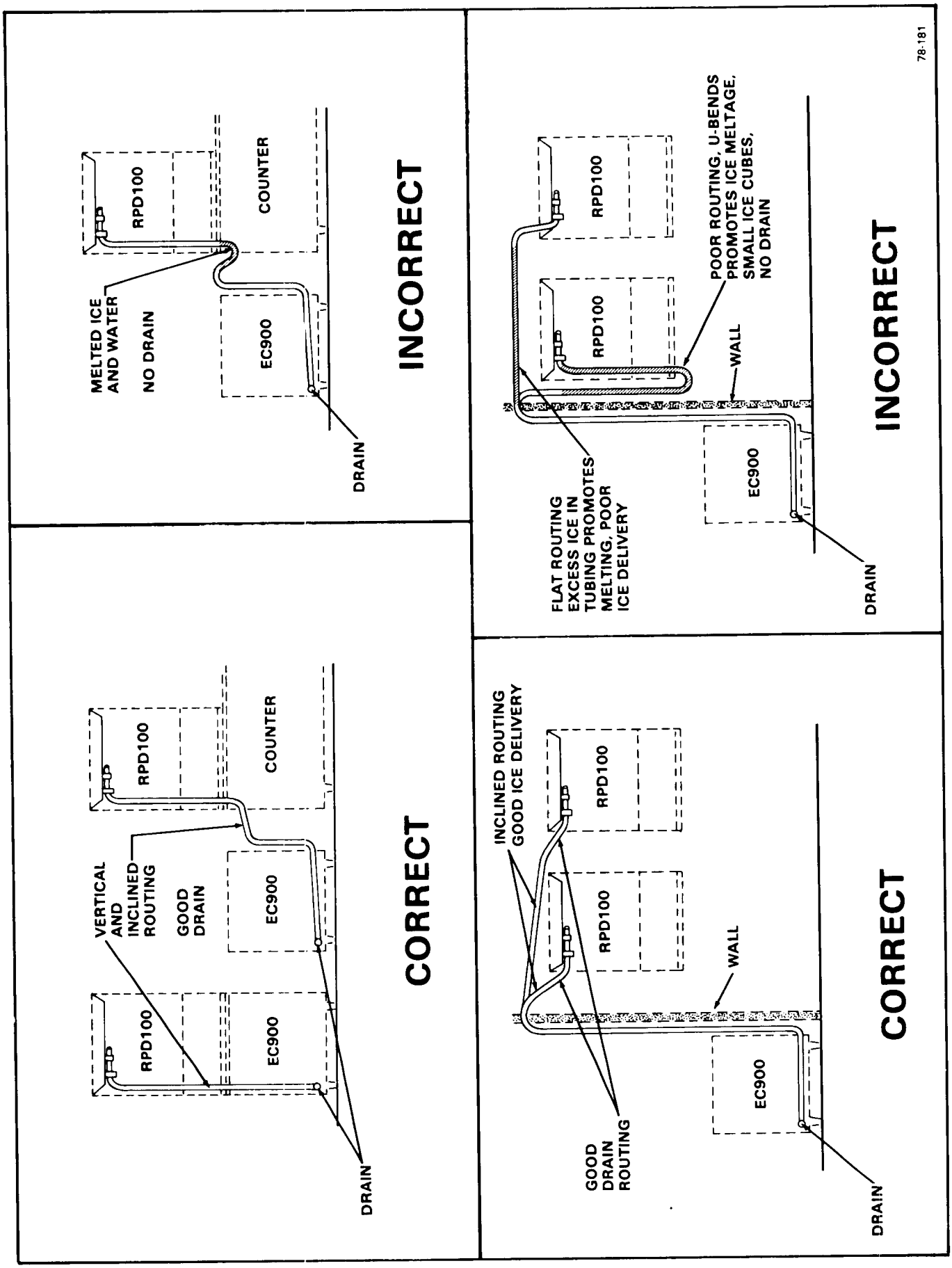

Figure 1-2. Examples of Ice Transport Tube Routing

SECTION II

OPERATING INSTRUCTIONS

I. START UP

1. Move both Manual ON-OFF toggle switches on the EC900, to the ON position, to start the automatic icemaking operation.
2. Within two or three minutes of operation, flaked ice will begin dropping from the ice spout at the upper end of the Freezer Assembly into the Extruder feeder hose.
3. Within the next two minutes or so, squared broken cubed ice should be emerging from the breaker end of the Extruder Assembly and into the ice transport tube that delivers ice to the ice storage bin in the RPD100.

NOTE

During the next phase, the time required to transport ice from the breaker end of the Extruder Assembly, through the ice transport tubing and into the ice storage bin of the RPD100, will vary according to type of installation, for example:

1. *RPD100 mounted on top of EC900: Travel time is about four to five minutes.*
2. *RPD100 remote from EC900: Travel time equals the length of the ice transport tube, in feet, multiplied by roughly two-feet-per-minute. So, travel time through a 16-foot tube would require roughly eight minutes. These time figures are mediun examples, and any, or all can be increased or decreased by variation in local ambient air temperatures and water supply.*

4. Observe the time required for ice to be transported from the Extruder breaker to the ice storage bin in the Dispenser, for future reference. That is, how long in minutes it takes for the first ice to be deposited in the storage bin.

NOTE

Let the icemaking process continue without interruption, until the bin in the Dispenser is filled with ice, up to the bin thermostat. During that time, return to the RPD100 to finalize start up procedures, with next steps.

5. Remove two screws and tilt the top of the Front Panel out slightly, then, lift the Panel off of the two alignment pins on the front of the Dispenser. See Figure 2-1.
6. Pull the Sink Assembly out and remove from the base of the Dispenser.
7. Remove screws at each end of the Spout Cover Assembly around the dispensing outlets and remove the Cover from the Dispenser.
8. Remove two screws and pull the Splash Panel loose from the Dispenser, and tilt the top of the Panel in and lay the Panel down to gain access to the Control Box.
9. Move the Master ON-OFF toggle switch, on the Control Box, to the ON position.
10. Check that all drain lines are tight and will not leak.
11. Replace the Splash Panel and the Sink Assembly.
12. Test that the RPD100 bin thermostat causes the EC900 icemaker to shut OFF. Hold ice against the bin thermostat bulb and generally less than one minute is required for the thermostat to react and cause the EC900 shutoff. See Figure 2-1.
13. Remove an amount of ice from the bin in the Dispenser to lower the ice level to below the bin thermostat bulb.

NOTE

Within minutes after the ice is removed from the sensing bulb, the bulb will warm up and cause the EC900 icemaker to restart. This control is factory set and should not be reset until testing is performed. Normal setting is about 35-degrees F. CUT-OUT and 40-degrees F. CUT-IN.

14. Thoroughly explain to the owner/user the significant specifications of the Dispenser, the start up and operation, maintenance and cleaning procedures. Answer all questions about the Dispenser, by the owner; and, inform the owner of the name and telephone number of the authorized SCOTSMAN Service Agency serving him.

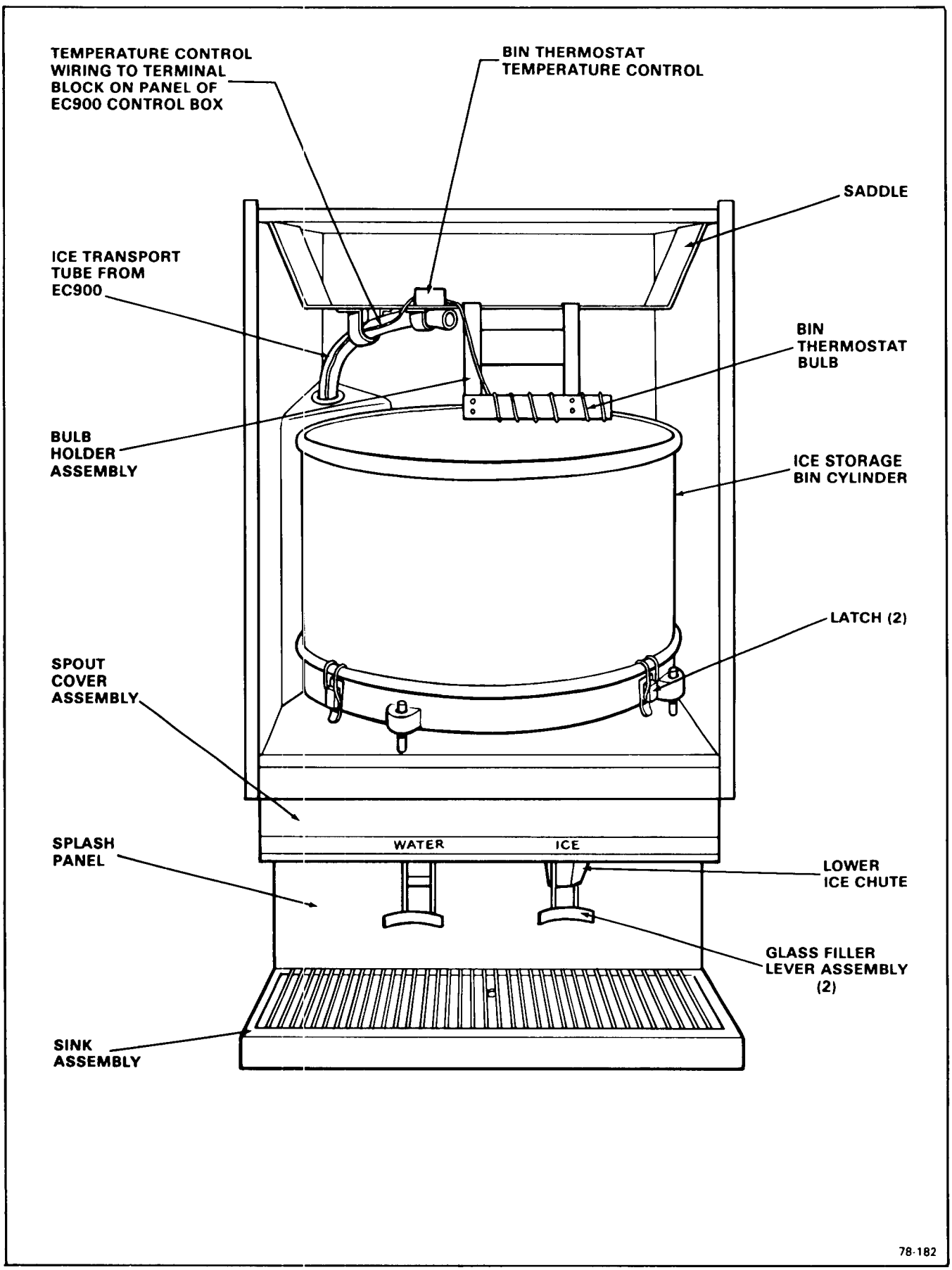

Figure 2-1. RPD100 Dispenser - Component Location

SECTION III

PRINCIPLES OF OPERATION

How It Works

Three descriptions follow: the POWER ON - STANDBY; the VEND SWITCH - HELD IN, where the operator pushes the ICE Glass Lever Filler Assembly IN and holds it IN; the VEND SWITCH - PUSHED IN, IMMEDIATELY RELEASED. In both VEND modes, the pushing IN of the ICE Glass Lever Filler Assembly depresses the Vend Switch, which begins the Ice Dispensing Cycle. See Figure 3-1.

I. POWER ON - STANDBY

In the STANDBY condition, electrical power is ON to the RPD100, ice is in the ice storage Bin, and the two motors, the Agitator Drivemotor and the Ice Dispensing Motor are de-energized, stopped, waiting for the Vend Switch to start a Dispense Cycle.

As shown in the timing chart, Figure 3-1, at T0, the Vend Switch is in the N/C position, the actuator arm roller of the top Cam Switch is on the outer surface of the Cam, the N/O contacts CLOSED; the actuator arm roller of the bottom Cam Switch is in the short groove of the Cam, with that Switch in the N/C position; the current path to the motors is not complete, so both motors are OFF. The Ice Portion Box is filled with ice, centered below the open ice chute hole in the bottom of the Bin, at the FULLY LEFT, rest position.

II. VEND SWITCH - HELD IN

The Vend Switch is depressed and HELD IN, T1, the N/O contacts CLOSE, there is no change in the top and bottom Cam Switches from the STANDBY positions, and a current path is being supplied to both motors, which start to operate. The rotating Cam on the Ice Dispensing Motor causes the actuator arm roller of the bottom Cam switch to ride up, out of the short groove onto the outer surface of the rotating Cam, moving toward sequence T2.

At T2, the actual dispense of ice begins. The HELD IN Vend Switch, the N/O contacts still CLOSED, both motors operating, and the Drive Link arm on the Ice Dispensing Motor moves the Ice Portion Box over the Lower Ice Chute and ice is dispensed into a container, glass, paper cup, etc. Both Cam Switches have the N/O contacts CLOSED, the actuator arm rollers on the outside surface of the Cam, which is rotating toward T3.

The actuator arm rollers of both Cam Switches drop into the long groove of the Cam, which moves both switches to the N/C position, opens the current path and both motors are OFF. However, the Dispensing Cycle has not been completed, because the Vend Switch has not been released, as yet; and, the Ice Portion Box is stopped, but it has not traveled to the FULLY LEFT, rest position.

Then, at T3, the Vend Switch is released and moves to the N/C contacts. This event completes the current path through the two Cam Switches, which remain unchanged from the T3 positions, to re-start both motors.

As the Cam rotates, the actuator arm rollers of both Cam Switches move up, out of the long groove, beginning T4. Both Cam Switches change, closing the N/O contacts, which keeps both motors operating; and, begins to move the Ice Portion Box to the FULLY LEFT, rest position.

With both motors operating, the Drive Link on the Ice Dispensing Motor moves the Ice Portion Box to the FULLY LEFT, rest position, which is centered below the ice chute opening in the bottom of the Bin; simultaneously, the Agitator Drivemotor is rotating the Ice Agitator in the ice-filled Bin causing ice to drop through the ice chute opening and fills the Ice Portion Box at T5. At this time, the rotating Cam causes the actuator arm roller of the lower Cam Switch to drop into the short groove of the Cam, the lower Cam Switch moves to the N/C contacts, opening the current path to shut both Motors OFF, T6.

The Dispensing Cycle has been completed, a portion of ice has been dispensed, the Vend Switch released, the Ice Portion Box is in the standby, rest position at FULLY LEFT, is refilled with ice, and both Motors are stopped. All switch positions are the same as they were in the beginning STANDBY condition, the CAM having made a full 360-degree rotation.

III. VEND SWITCH - PUSHED IN, IMMEDIATELY RELEASED

Between T1 and T2, the Vend Switch is momentarily depressed and released. When the Vend Switch is pushed IN, at T1, the N/O contacts are CLOSED, which provides a current path to start both Motors operating.

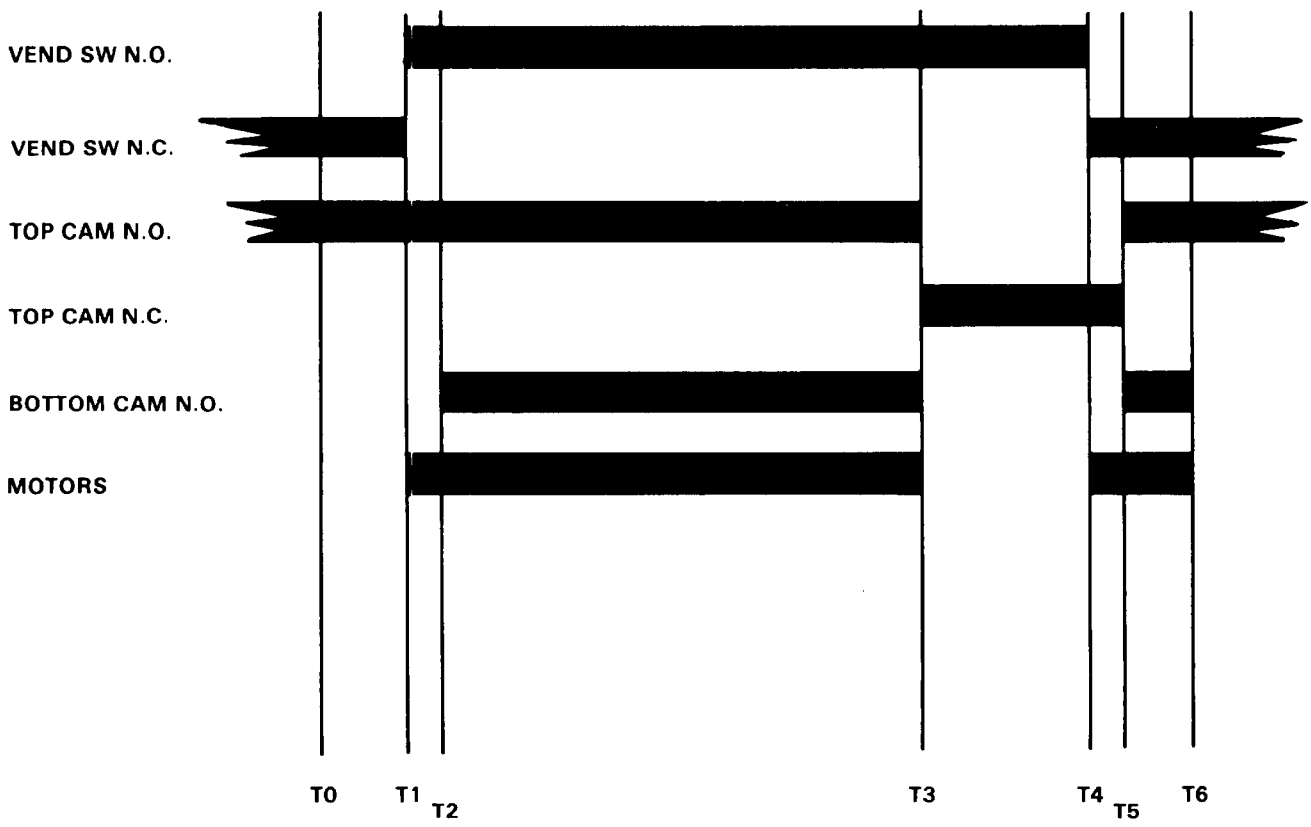

T0 STAND BY.
T1 VEND SW DEPRESSED.
T2 MOTOR ON CARRY-OVER (BOTTOM CAM).
T3 MOTOR STOPS IF VEND SWITCH IS STILL DEPRESSED.
T4 MOTOR STARTS WHEN VEND SWITCH IS RELEASED.
T5 MOTOR ON CARRY-OVER (BOTTOM CAM).
T6 END OF CYCLE MOTOR STOPS.

NOTE: *IF VEND SWITCH IS RELEASED AFTER T2 & BEFORE T3, THE MOTOR WILL NOT STOP AT T3 AND THE TIME BETWEEN T3 AND T4 MUST BE OMITTED FROM THE TIMING CHART. ICE DELIVERY IS COMPLETED BEFORE T3.*

Figure 3-1. RPD100 Vend Cycle Chart

The rotating Cam on the Ice Dispensing Motor causes the actuator arm roller of the bottom Cam Switch to ride up, out of the short groove onto the outer surface of the rotating Cam closing the N/O contacts of the bottom Cam Switch.

When the Vend Switch is released, the motors continue to operate through the CLOSED contacts of the bottom Cam Switch. The Drive Link arm on the Ice Dispensing Motor moves the Ice Portion Box over the Lower Ice Chute and ice is dispensed into a container, glass, paper cup, etc. Both Cams have the N/O contacts CLOSED, the actuator arm rollers on the outside surface of the Cam, which is rotating toward T3.

T3 and T4 occur simultaneously, the time between T3 and T4, shown on the Timing Chart, must be omitted. The actuator arm rollers of both Cam Switches drop into the long groove of the Cam, both Cam Switches have the N/O contacts OPEN, and the top Cam Switch is at the N/C contact. A current path continues to keep the Motors operating and the Cam rotating toward T5.

At T5, the actuator arm rollers of both Cam Switches have ridden up, out of the long groove to the outer surface of the rotating Cam, CLOSING the N/O contacts of both switches with a continued current path to the operating Motors. This causes the Drive Link arm on the Ice Dispensing Motor to move the Ice Portion Box to the FULLY LEFT, rest position, which is centered below the ice chute opening in the bottom of the bin; simultaneously, the Agitator Drivemotor is rotating the Ice Agitator in the ice-filled Bin causing ice to drop through the ice chute opening and fills the Ice Portion Box.

At T6, the rotating Cam causes the actuator arm roller of the lower Cam Switch to drop into the short groove of the Cam, OPENING the N/O contacts interrupting the current path to shut both Motors OFF.

The Dispensing Cycle has been completed, a portion of ice has been dispensed, the Vend Switch released, the Ice Portion Box is in the standby, rest position at FULLY LEFT, is refilled with ice, and both Motors are stopped. All switch positions are the same as they were in the beginning STANDBY condition, the CAM having made a full 360-degree rotation.

IV. COMPONENT DESCRIPTION

A. BIN THERMOSTAT CONTROL

The Bin Thermostat Control is located on the left section of the Saddle, above the Cylindrical Ice Storage Bin. The sensing capillary tube of the control is routed and wrapped around the Bulb Holder Assembly, located next to the Bin Thermostat Control and extends down into the ice storage bin.

The Control functions to automatically SHUT OFF the EC900 Icemaker, when the ice storage bin is filled and ice contacts the capillary tube. It also signals the RESTART of the Icemaker when the capillary tube starts to warm up after ice has been removed from the bin. Factory settings are 35-degrees F. CUT OUT and 40-degrees F. CUT-IN. ALWAYS CHECK a replacement Bin Thermostat Control BEFORE installing the Control in the Dispenser. Prepare a container of ice and water and insert a thermometer. As temperature indications on the thermometer decrease to 35-degrees F., insert the capillary tube of the bin Thermostat Control and determine temperature of CUT-OUT when an audible click is heard in the Control. Slowly add hot water to container and check audible click in the Control for CUT-IN while observing increase in temperature of water to 40-degrees F. Refer to procedure IV-I to adjust Bin Thermostat Control.

NOTE

The Bin Thermostat Control is wired through the holding relay and will not CUT-OUT the Icemaker until the end of the Harvest Cycle. Altitude adjustment should ONLY be performed on Icemakers installed at 2000-foot level locations and ABOVE, and adjust only in increments of one-fourth turn of a screw at a time.

B. WATER INLET SOLENOID VALVE

The Water Inlet Solenoid Valve functions only when the Glass Lever Filler Assembly for WATER is pushed IN and held IN. Pushing IN the WATER Glass Lever Filler Assembly depresses the Water Switch, which then moves from the STANDBY condition in the N/C position, to the N/O position, and makes a current path through the Water Inlet Solenoid Valve and water is dispensed. The Water Switch operates as an ON-OFF switch, so when the switch is held IN, it is ON, and maintains current to the Water Inlet Solenoid Valve until the WATER Glass Lever Filler Assembly is released, shutting OFF the Water Switch, which returns to the N/C position and opens the circuit to the Water Inlet Solenoid Valve, which in turn, closes and shuts OFF incoming water.

C. ICE AGITATOR - BREAKER SYSTEM

The Ice Agitator-Breaker System is comprised of the Stationary Bin Bottom, the Ice Agitator Assembly which is powered by the Agitator Drivemotor for rotation within the Bin, the Cylindrical Ice Storage Bin which also is stationary, and the Ice Breaker. The Ice Breaker is installed and locked into position with the two ends installed into slots in two Ice Breaker Brackets on the inner wall of the Bin.

When a Dispensing cycle begins, the Agitator Drivemotor operates to rotate the Ice Agitator Assembly, inside the Bin, through the shaft, bearing and Drive Hub Assembly. The rotating Ice Agitator Assembly moves the ice inside the bin where the ice is forced up the two slightly inclined panels, 180-degrees apart on the Ice Breaker; then, when the moving ice drops off the high side of the inclined panels it breaks into pieces to prevent masses of ice clinging together, which would cause problems in dispensing. An inclined displacement of material is designed in the Stationary Bin Bottom, leading away from the ice chute opening. This design provides a means of preventing any buildup of ice masses at the ice chute opening, for, as the Ice Agitator rotates it continuously pushes new ice over the ice chute opening and keeps moving ice away from the opening. For details related to switch positions, refer to procedures I, II and III in this section.

D. ICE DISPENSER MOTOR - ICE PORTION BOX

The Ice Dispenser Motor and Ice Portion Box function to dispense an ice portion from the Cylindrical Ice Storage Bin through the Lower Ice Chute into a container. Through a Drive Link arm, on the Ice Dispenser Motor, a pivot connection is made to a movable arm on the Ice Portion Box, which is moved within two short tracks, from the FULLY LEFT, rest position, where it is filled with ice supplied through an ice chute opening in the bottom of the bin, to the dispense position over the Lower Ice Chute, where the ice is dispensed into a container, then, the Ice Dispenser Motor completing the dispense cycle returns the Ice Portion Box to the FULLY LEFT position and is shut OFF.

SECTION IV

ADJUSTMENT AND REMOVAL AND REPLACEMENT

The procedures provided in this Section are arranged in alphabetical order, to make specific Adjustment and Removal and Replacement information easy to locate.

Read the instructions thoroughly before performing any Adjustment or Removal and Replacement Procedures.

WARNING

The adjusting screws on the Temperature Control device have very sensitive response to adjustment. DO NOT attempt to adjust the screw until after thoroughly reading and understanding the following instructions and illustrations. Over-adjusting or erratic guessing, can foul the instrument and cause ultimate delay and part replacement, WHICH COULD HAVE BEEN PREVENTED.

I. ADJUSTMENT OF THE BIN THERMOSTAT CONTROL

The control for the Bin Thermostat is the Temperature Control, mounted on the front of the Saddle, located across the top of the Dispenser above the Cylindrical Bin.

See Figure 4-1 for location and direction of rotation, clockwise (CW) or counterclockwise (CCW), of the adjusting screws on the Temperature Control, in the particular Control the adjustment is to be performed.

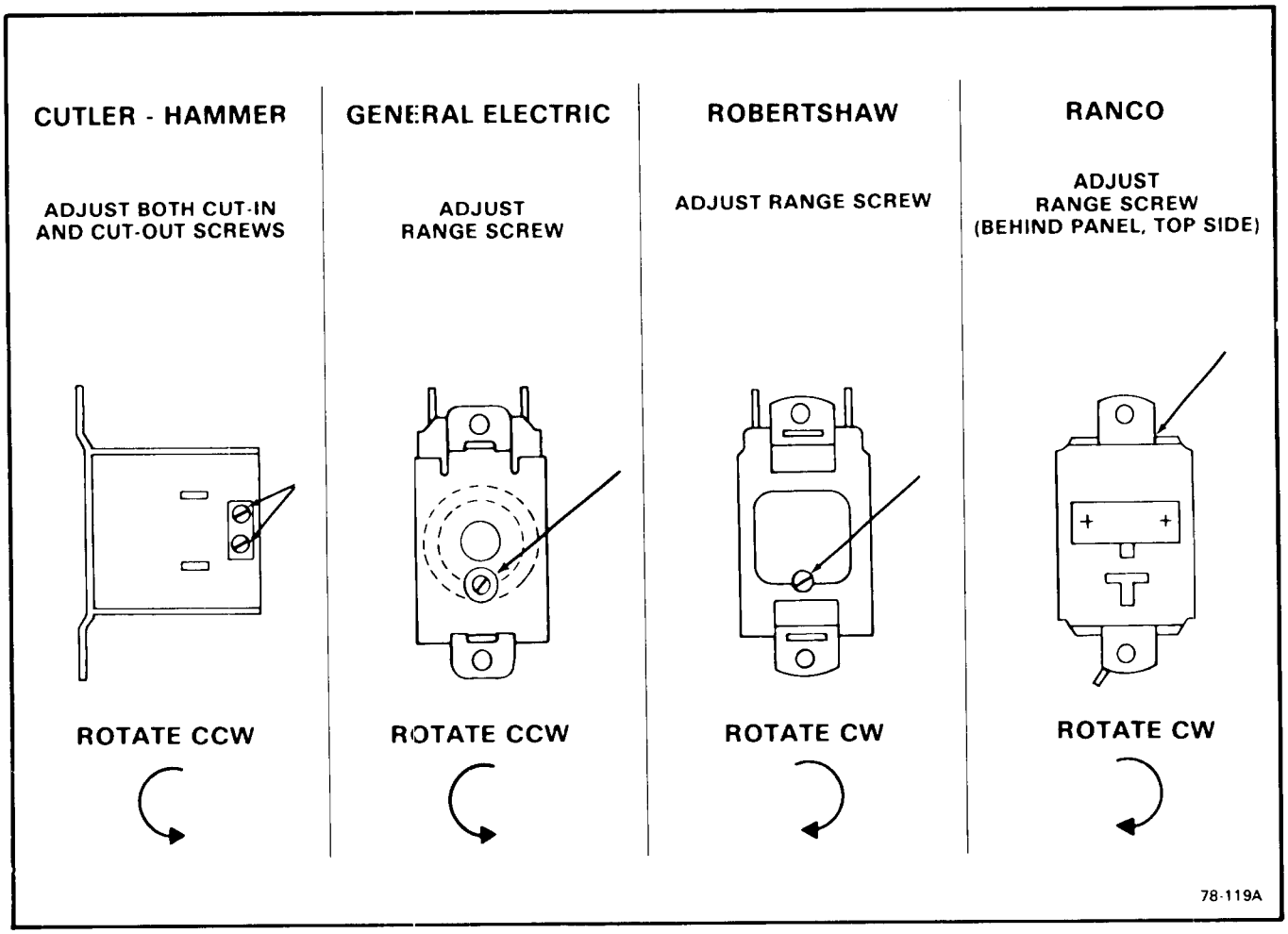

Figure 4-1. Adjustment of the Temperature Control.

II. ADJUSTMENT OF THE ICE DISPENSER MOTOR CAM AND SWITCHES

NOTE

1. *Adjustment of the Cam on the Ice Dispenser Motor should not be performed by anyone other than a qualified serviceman. This adjustment should only be performed following any parts replacement related to the dispensing mechanism; when the Ice Portion Box does not fully close, or fully open, during the dispense cycle; or, when a check of the Cam or switches discloses loose setscrews have caused the Cam or the switches to slip from the original factory checked and approved operating positions.*
2. *DO NOT perform this adjustment in an attempt to increase or decrease the portion of ice dispensed. Two kits are available for that purpose, refer to SPECIFICATIONS in the front of this manual.*

To Adjust the Cam and Switches:

1. Study Figure 4-2, to become familiar with location of the parts and the relationship of the key parts, to each other and to the adjusting screws.

   VIEW-A: illustrates the end of the Ice Dispensing Motor Assembly having the Cam, Switches, the Motor Brake, and the slots and adjusting screws for the IN-OUT adjustment to the switch actuator arm roller.

   VIEW-B: shows the location of the two setscrews and the two grooves in the Cam.

   VIEW-C, D and E: this series shows the two extreme positions and the correct position to be used in adjusting the Cam.

   VIEW-F: shows the side-to-side adjustment of the lower switch actuator arm roller, in a different reference axis than that used in VIEW-C, D and E.

2. When replacing a switch(s), attach to the Switch Bracket with the screws about midway in the slots, as in VIEW-F. Make snug, but do not fully tighten screws.

3. When replacing the Cam, the Ice Portion Box should be in the FULLY LEFT position; then, install the Cam on the shaft of the Motor with the short groove on the Cam, DOWN, facing away from the Motor, VIEW-B.

4. Rotate and position the Cam, so the lower switch actuator arm roller is centered in the short groove of the Cam; then, tighten the accessible setscrew on the Cam.

5. Push and hold the Motor Brake IN. The spring-loaded Brake is located around the lower end of the Motor and this step releases a ratchet-lock to free the Cam for rotation.

CAUTION

DO NOT rotate the Cam COUNTERCLOCKWISE, as CCW rotation will cause the switch actuator arm to be bent or break. Prevent possible damage by rotating CLOCKWISE.

6. While holding the Motor Brake IN, rotate the Cam CLOCKWISE, until the second setscrew appears and becomes accessible; then, tighten that setscrew.
7. Using VIEW's C, D and E as a guide, loosen the adjusting screws in the slots at the top of the Switch Bracket, VIEW-A, and adjust the Switch Bracket IN or OUT, so the lower switch actuator arm roller is positioned as in VIEW-E; then, tighten the screws.
8. Recheck the second reference axis, VIEW-F, and when necessary, loosen the two screws attaching the two switches to the Switch Bracket and adjust in the side-to-side movement, until center of the lower switch actuator arm roller is in alignment, as shown in VIEW-F; then, tighten screws.
9. Depress the lower switch actuator arm and observe the full travel of the roller, as the switch clicks ON and OFF, appears to be within the normal limits, as indicated in the shaded dotted lines in the groove illustrated in VIEW-F.

NOTE

When the observed travel of the roller is seen to extend OUTSIDE of the shaded normal limits indicated, repeat steps 7 and 8.

10. With the electrical power ON, to the RPD100, momentarily push IN on the Glass Lever Filler Assembly to initiate a dispense cycle; then, observe the CAM-Roller positions at the end of the cycle.

NOTE

The correct CAM-Roller position should be as in VIEW-E and VIEW-F. Experience has shown that in new installations of ice dispensing mechanisms in the RPD100, a second adjustment of the Cam is generally required, because the Motor Brake does not instantly STOP rotation of the Motor, at the end of the dispense cycle. The Ice Portion Box has travelled to the FULLY LEFT, rest position and has started back, as if starting a new dispense cycle, then STOPS. This undesirable over-travel of the Ice Portion Box is corrected with a second, final Cam adjustment, as given in the next steps.

CAUTION

Two directions of adjustments can be performed in this final adjustment to the Cam. When the Ice Portion Box stops SHORT of the FULLY LEFT position,

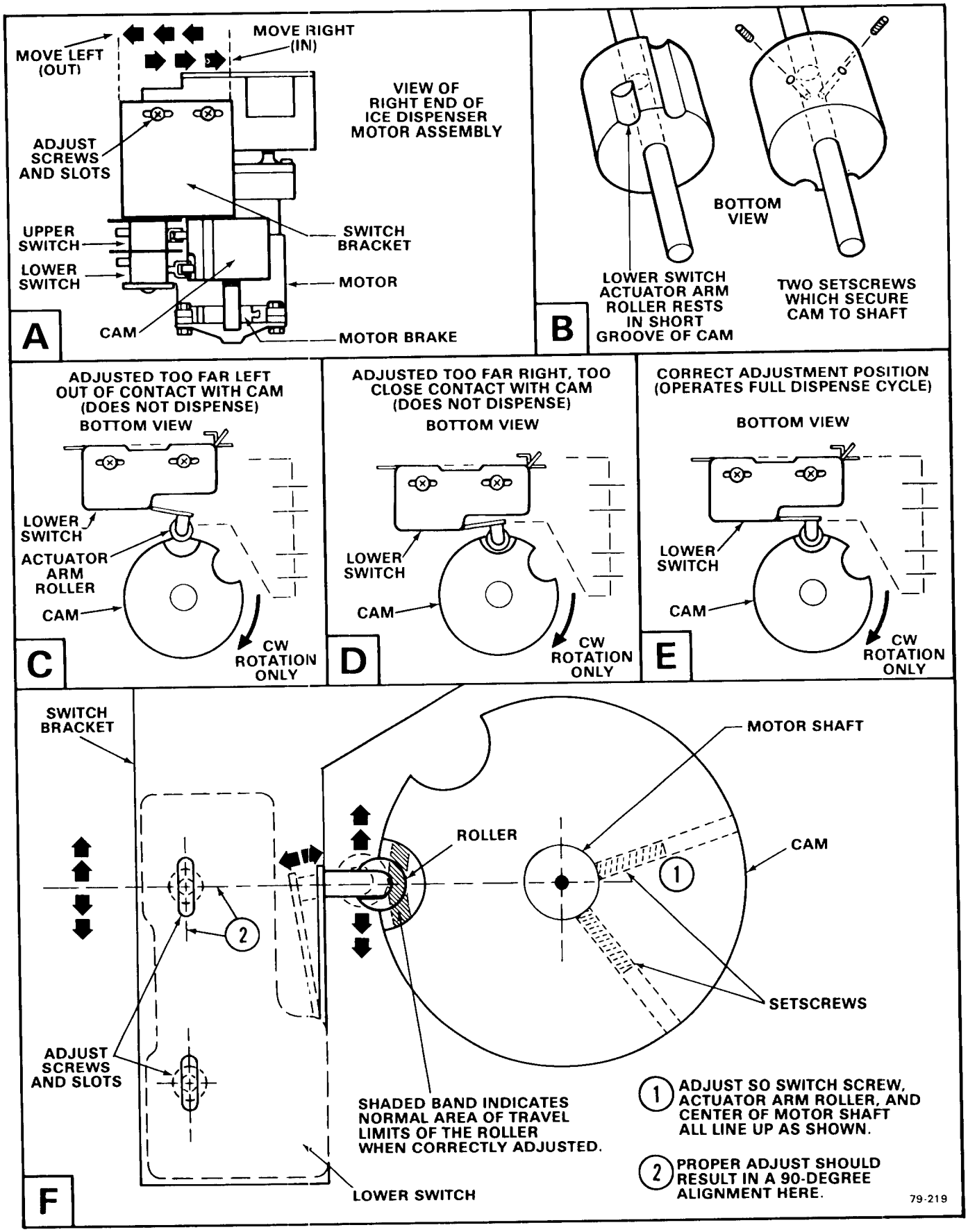

Figure 4-2. Adjustment of Cam-Switch Positions

loosen the setscrews and rotate the cam, very carefully COUNTERCLOCKWISE, three or four degrees; then retighten setscrews. When the Ice Portion Box travels PAST the FULLY LEFT position and starts back, loosen the setscrews and rotate the Cam CLOCKWISE three or four degrees, then tighten setscrews.

---

11. With the electrical power OFF, to the RPD100, loosen the setscrews on the Cam and slowly rotate the Cam three or four degrees CLOCKWISE; then, retighten the setscrews.
12. With the electrical power ON, to the RPD100, momentarily push IN on the Glass Lever Filler Assembly to initiate a dispense cycle, then, at the end of the cycle check that the Ice Portion Box stops at the FULLY LEFT, rest position. When necessary, repeat adjustment to achieve proper positioning of the Ice Portion Box.

WARNING

Be sure the electrical power supply and the water supply are OFF, BEFORE starting any of the following REMOVAL AND REPLACEMENT procedures, as a precaution to prevent possible personal injury or damage to equipment.

III. REMOVAL AND REPLACEMENT OF THE BIN THERMOSTAT CONTROL

CAUTION

Check to be sure the building source electrical power to the RPD100 and the EC900 is OFF or disconnected.

A. To remove the Bin Thermostat Control:

1. Remove two screws and tilt the top of the Front Panel out slightly, then lift the Panel off of the two alignment pins on the front of the Dispenser.
2. Pull the Sink Assembly out and remove from the base of the Dispenser.
3. Remove screws at each end of the Spout Cover Assembly, around the dispensing outlets, and remove the cover from the Dispenser.
4. Remove two screws and pull the Splash Panel loose from the Dispenser and tilt the top of the Panel in, and lay the Panel down to gain access to the Control Box.

NOTE

The Bin Thermostat Control is electrically connected to the EC900 24-volt circuit.

5. Disconnect the electrical leads from the Bin Thermostat Control, located on the front of the Saddle above the Cylindrical Bin.
6. Remove the thumbscrews from the Bin Thermostat Control and the wingnuts from the Bulb Holder Assembly; then, lift the two parts from the Saddle and carefully unwind the capillary tube for removal of the tube from the Bulb Holder Assembly. Do not kink the tube or use excessive pulling or handling.

B. To replace the Bin Thermostat Control, reverse the removal procedure.

IV. REMOVAL AND REPLACEMENT OF THE CYLINDRICAL BIN AND INTERNAL PARTS

A. To remove the Cylindrical Bin:

1. Remove two screws and tilt the top of the Front Panel out slightly, then lift the Panel off of the two alignment pins on the front of the Dispenser.
2. Unlock the Ice Breaker from the two brackets on the inner wall of the Cylindrical Bin and remove the Ice Breaker. See Figure 4-2.
3. Unscrew and remove the Cap Assembly, then, lift out the Ice Agitator Cone, and Ice Agitator Assembly.
4. Unlock the two Latches at the front of the Cylindrical Bin and remove the Bin from the Dispenser, using care not to contact or possibly damage the Bin Thermostat Control capillary tube and other parts.

B. To replace the Cylindrical Bin and internal parts, reverse the removal procedure.

V. REMOVAL AND REPLACEMENT OF THE DRIVEMOTOR ASSEMBLY

A. To remove the Drivemotor Assembly:

1. Remove two screws and tilt the top of the Front Panel slightly, then, lift the Panel off of the two alignment pins on the front of the Dispenser.
2. Pull the Sink Assembly out and remove from the base of the Dispenser.
3. Remove screws at each end of the Spout Cover Assembly, around the dispensing outlets, and remove the Cover from the Dispenser.
4. Remove two screws and pull the Splash Panel loose from the Dispenser and tilt the top of the Panel in, and lay the Panel down to gain access to the Drivemotor Assembly.
5. Move the Master ON-OFF toggle switches, on the RPD100 and EC900 Control Boxes, to the OFF positions.

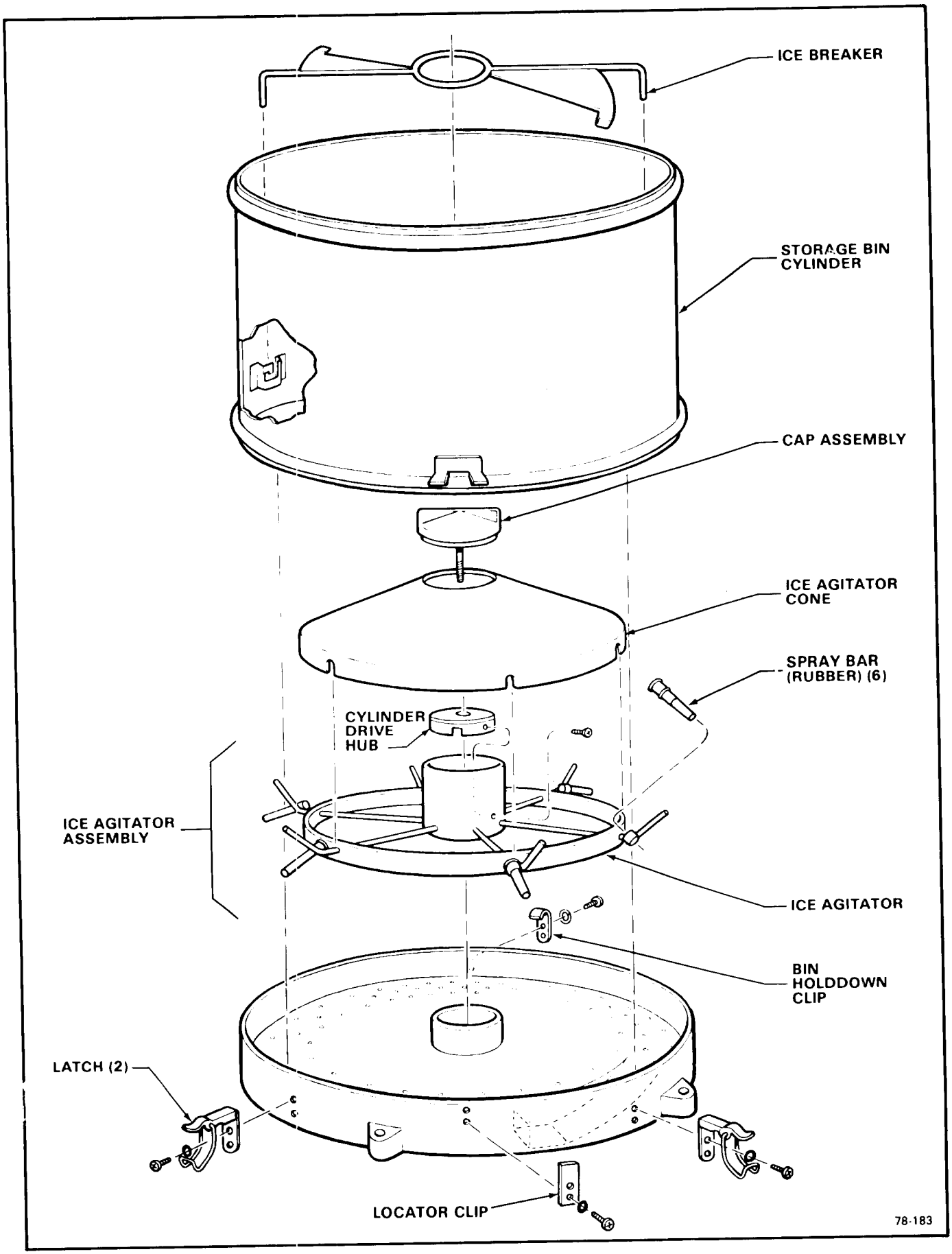

Figure 4-3. Ice Breaker, Agitator, Storage Bin - Exploded View

6. Remove screws and the Cover from the RPD100 Control Box; then, disconnect the two electrical leads from the Drivemotor, attached to the smaller of the two terminal boards in the Control Box
7. Remove screws and the two-clamp Shaft Collar from the Bin Shaft Assembly, just below the Bin Base Assembly; then, from inside the inner bin, grasp and pull the Hub Drive Assembly and attached Bin Shaft Assembly up and out of the bin, and the Bin Shaft Assembly uncouples from the Drivemotor splined shaft.
8. Remove and retain three screws and lockwashers from each end of the Gearmotor Motor Mounting Bracket, and lower the Bracket and Drivemotor Assembly and remove the assemblies from the Dispenser.

B. To replace the Drivemotor Assembly, reverse the removal procedure.

VI. REMOVAL AND REPLACEMENT OF THE ICE DISPENSER CHUTE ASSEMBLY

A. To remove the Ice Dispenser Chute Assembly:

1. Remove screws at each end of the Spout Cover Assembly, around the dispensing outlets, and remove the Cover from the Dispenser.
2. Pull the Sink Assembly forward and remove from the base of the Dispenser.
3. Remove two screws and pull the Splash Panel loose from the Dispenser and tilt the top of the Panel in, and lay the Panel down.
4. Move the Master ON-OFF toggle switches, on the RPD100 and EC900 Control Boxes, to the OFF positions.
5. Remove Hex Thumb Screw, see Figure 8-2, Index 13.
6. Slide the Dispenser Chute Bottom to the LEFT, to disengage from the Shoulder Screw.
7. Remove hose clamp and separate the drain hose from the Dispenser Chute Bottom.
8. Remove the Hair Pin Cotter and Pin from the movable arm of the Ice Dispenser Chute Assembly.
9. Slide the Ice Dispenser Chute Assembly, with the attached rubber Ice Chute Band, to the LEFT and off of the tracks.

B. To replace the Ice Dispensing Chute Assembly, reverse the removal procedure.

NOTE

IT IS IMPORTANT THE ICE DISPENSER BOX SLIDE FREELY IN THE TRACKS. With a clean cloth or rag, wipe the tracks clean of all old grease and any dirt; then, lubricate the tracks and all moving and sliding parts of the replacement Ice Dispenser Chute Assembly and connecting links, using a food grade grease, SCOTSMAN P/N 19-0569-01, or equivalent.

VII. REMOVAL AND REPLACEMENT OF THE ICE DISPENSER MOTOR ASSEMBLY

A. To remove the Ice Dispenser Motor Assembly:

1. Remove screws at each end of the Spout Cover Assembly, around the dispensing outlets, and remove the Cover from the Dispenser.
2. Pull the Sink Assembly forward and remove from the base of the Dispenser.
3. Remove two screws and pull the Splash Panel loose from the Dispenser and tilt the top of the Panel in, and lay the Panel Down.
4. Move the Master ON-OFF toggle switches, on the RPD100 and EC900 Control Boxes, to the OFF positions.
5. Remove screws and the Cover from the RPD100 Control Box; then, disconnect the two electrical leads from the Ice Dispenser Motor Assembly, attached to the smaller of the two terminal boards in the Control Box.
6. Remove and retain two bolts and lockwashers from each end of the Ice Dispenser Motor Assembly bracket and lower the assembly and remove from the Dispenser.

B. To replace the Ice Dispenser Motor Assembly, reverse the removal procedure.

SECTION V

MAINTENANCE & CLEANING INSTRUCTIONS

I. GENERAL

The periods and procedures for maintenance and cleaning are given as guides and are not to be construed as absolute or invariable. Cleaning especially will vary, depending upon local water conditions and ice volume produced; and, each Dispenser must be maintained individually, in accordance with its own particular location requirements.

II. DISPENSER

THE FOLLOWING MAINTENANCE SHOULD BE SCHEDULED AT LEAST TWO TIMES PER YEAR ON THIS DISPENSER. CALL YOUR AUTHORIZED SCOTSMAN SERVICE AGENCY.

1. Check and clean water line Strainer.
2. Check that the Dispenser is level, in the side-to-side and front-to-rear directions.
3. Clean the Ice Breaker, Agitator and Ice Storage Bin parts, using a solution of SCOTSMAN Ice Machine Cleaner. Refer to procedure V-III. CLEANING. Also; refer to EC900 instructions and perform cleaning and sanitizing in the EC900.

NOTE

Cleaning requirements vary according to local water conditions and individual user operation.

4. Check and tighten all bolts.
5. Check and tighten all electrical connections.
6. Check for water leaks and tighten drain line connections. Pour water down Bin drain line and Sink Assembly drain, to be sure that drain lines are open and clear.
7. Hold ice against the Bin Thermostat Control Bulb to test EC900 Icemaker shutoff. Less than one minute is about normal for the bulb to cause the EC900 icemaker to shut OFF.

NOTE

Within minutes after the ice is removed from the sensing bulb, the bulb will warm up and cause the EC900 to restart. This control is factory set and should not be reset until testing is performed. Normal setting is about 35-degrees F. CUT-OUT and 40-degrees F. CUT-IN.

III. CLEANING

1. Remove two screws and tilt the top of the Front Panel out slightly, then lift the Panel off of the two alignment pins on the front of the Dispenser.
2. Pull the Sink Assembly out and remove from the base of the Dispenser.
3. Remove screws at each end of the Spout Cover Assembly around the dispensing outlets and remove the Cover from the Dispenser.
4. Remove two screws and pull the Splash Panel loose from the Dispenser, and tilt the top of the Panel in and lay the Panel down to gain access to the Control Box.
5. Move the Master ON-OFF toggle switches, on the RPD100 and EC900 Control Boxes, to the OFF position.

WARNING

SCOTSMAN Ice Machine Cleaner contains Phosphoric and Hydroxyacetic acids. These compounds are corrosive and may cause burns if swallowed. DO NOT induce vomiting. Give large amounts of water or milk. Call physician immediately. In case of external contact, flush with water. KEEP OUT OF REACH OF CHILDREN.

6. Refer to EC900 instructions and perform cleaning and sanitizing in the EC900 BEFORE cleaning and sanitizing the RPD100.
7. Add hot water to the Bin to melt the ice; or, remove and discard all ice.
8. Prepare cleaning solution; Mix six ounces of SCOTSMAN Ice Machine Cleaner with three quarts of hot water.
9. Remove the Ice Breaker, Ice Agitator, and Bin parts, including the Storage Bin Cylinder, shown in the exploded view illustration Figure 5-1.
10. Remove the hose clamp and tube from the Dispenser Chute Bottom.
11. Remove the three-inch long, hex-shaped thumb screw and slide to remove the slot end of the Dispenser Chute Bottom off of the single shoulder screw.

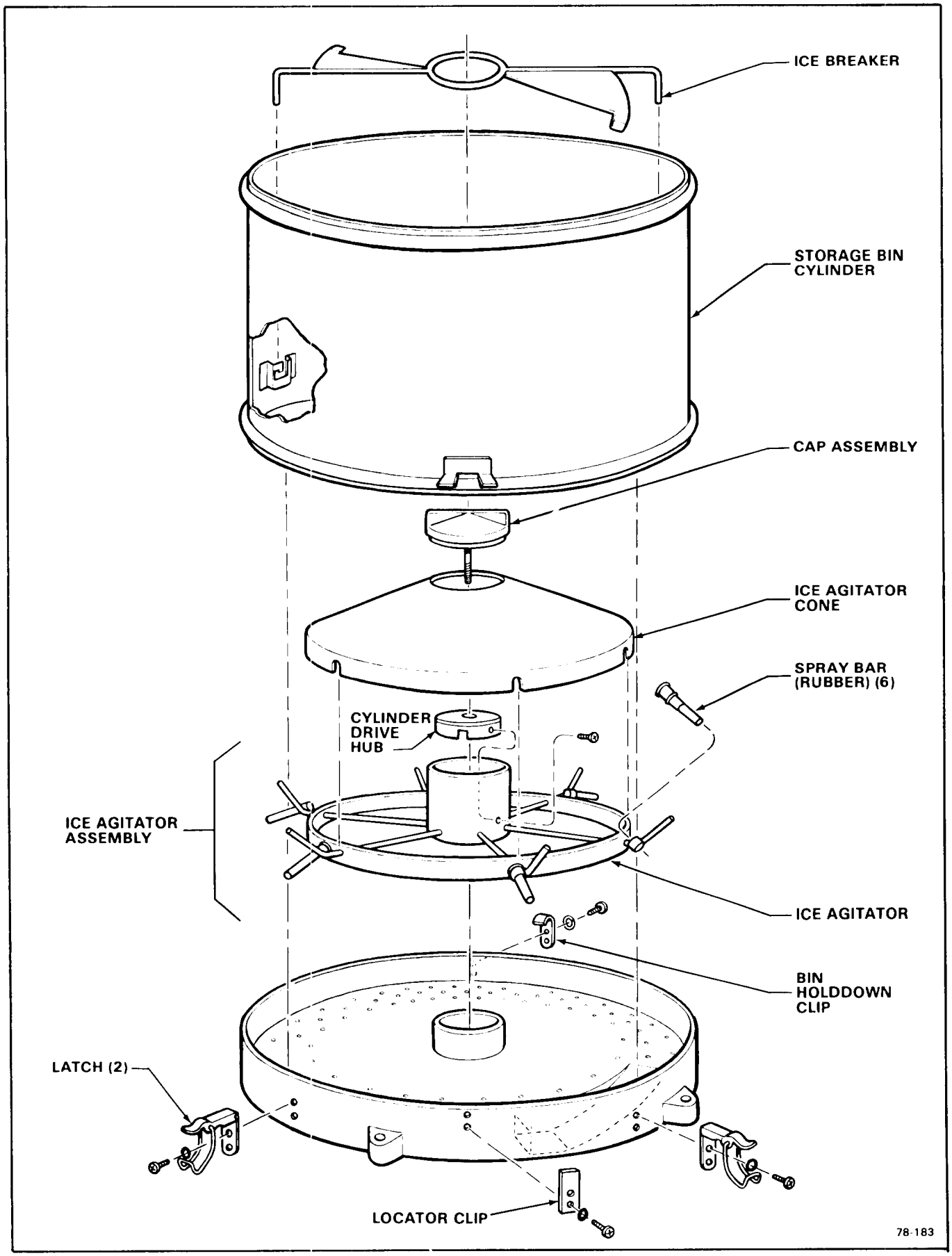

Figure 5-1. Ice Breaker, Agitator, Storage Bin Parts - Exploded View

12. Remove the hairpin cotter from the locking pin in the movable arm of the Ice Dispenser Portion Box Assembly.
13. Slide the Ice Dispenser Portion Box Assembly to the left and remove from the Dispenser.
14. Separate the rubber Ice Chute Band from the Ice Dispenser Portion Box Assembly.
15. Immerse all parts removed, in the cleaning solution; or, if too large for the container of cleaning solution, thoroughly wash the solution over all surfaces of all parts.
16. Rinse all parts with clear hot water, to flush away all cleaning solution. Drain parts.
17. Clean and rinse the Lower Ice Chute, the Spout Cover Assembly, the Sink and Grill and the Splash Panel Assembly.
18. Clean and rinse all panels and the Cabinet inner plastic surfaces.
19. Pour remainder of the hot cleaning solution into the Bin drain and Sink drain, to flush out any deposits of slime. Rinse with clean hot water.
20. Sanitize all Bin parts and ice contact parts. Refer to SANITIZING procedure V-IV.
21. Reassemble all air-dried Bin parts in the Dispenser. See Figure 5-1. Be sure rubber Ice Chute Band is installed on the Ice Dispenser Portion Box Assembly.
22. Move the Master ON-OFF toggle switch to the ON position.
23. Move both manual ON-OFF toggle switches on the EC900, to the ON position, to start the automatic icemaking operation.
24. Replace the Splash Panel and the Sink Assembly.
25. Fit the two holes, in the bottom of the Front Panel, over the two alignment pins on the front of the Dispenser, and push the Panel into place, securing with two screws.

IV. SANITIZING

Sanitizing is an important phase of the icemaking and dispensing operation. The following sanitizing procedure should be performed after every repair or replacement of parts in the Dispenser, in or through which ice is stored or dispensed and water is drained. Additional requirements for performing the sanitizing procedure should be followed in accordance with the requirements of the Local Health Authorities.

NOTE

Contact your Local Health Authorities and obtain their approval of the sanitizer you intend to use when sanitizing the Dispenser.

Prior to performing the sanitizing procedure, it is assumed the Front Panel, Sink Assembly and Splash Panels have been removed and the cleaning procedure performed up through step V-III-19.

WARNING

Read WARNING thoroughly BEFORE preparing sanitizing solution, in next step.

1. STERILEX 3-Q SANITIZING TABLETS.

DANGER: KEEP OUT OF REACH OF CHILDREN. Tablets may be harmful or fatal if swallowed. May cause skin irritation or eye damage. Avoid prolonged skin contact. Do not get in eyes. In case of contact, flush with plenty of water. If irritation persists get medical attention. Avoid contamination of food.

FIRST AID: If tablets are swallowed drink promptly a large quantity of milk, egg whites or gelatin solution. Avoid alcohol.

NOTE TO PHYSICIAN: Probable mucosal damage may contraindicate the use of gastric lavage. Measures against circulator shock, respiratory depression and convulsion may be needed.

Rinse empty carton container thoroughly with water and discard. Always follow your health department regulations.

2. MIKRO-QUAT

DANGER: Causes high damage and skin irritation. Do not get into eyes, on skin, or on clothing. Protect eyes when handling concentrated product. Harmful if swallowed. Avoid contamination of food.

FIRST AID: In case of contact, immediately flush eyes or skin with plenty of water for at least 15 minutes. For eyes, call a physician. Remove and wash contaminated clothing before reuse. If swallowed, drink promptly a large quantity of milk, egg whites or gelatin solution, or if these are not available, drink a large quantity of water. Call physician immediately.

1. Prepare a sanitizing solution using a quaternary ammonium sanitizing compound.

NOTE

1. *Carefully follow directions and observe all precautions on the sanitizing compound container.*
2. *One *Sterilex 3-Q sanitizing tablet per three quarts of water yields 200 ppm active quaternary; or, one-third ounce of *Mikro-Quat to one gallon of water yields 235 ppm active quaternary.*

3. *The taste of ice and water will not be affected by the sanitizing solutions. Rinsing of parts is not required with this relatively mild solution, but air drying of the parts is suggested before reassembly.*

2. Immerse all parts, earlier removed and cleaned, in the sanitizing solution; or, if too large for the container of sanitizing solution, thoroughly wash the solution over all surfaces of all parts.
3. Drain all parts and allow to dry.
4. Pour some of the sanitizing solution into the Bin drain and the Sink Assembly drain.
5. Reassemble all air-dried Bin parts in the Dispenser. See Figure 5-1.
6. Move the Master ON-OFF toggle switch to the ON position.
7. Replace the Splash Panel, Sink Assembly and the Front Panel on the Dispenser.
8. Clean and sanitize the Interior Bin parts and surfaces each week.

* *Sterilex 3-Q sanitizing tablets are distributed by Pittsburgh Chemical Laboratory, Inc., Pittsburgh, PA 15222, and may be obtained through most restaurant supply houses.*

* *Mikro-Quat, is manufactured by Economics Laboratory, Inc., Osborn Building, St. Paul, MN 55102, and may be obtained from them through their Magnus Division, the Klenzade Division or from restaurant supply houses.*

SECTION VI
SERVICE DIAGNOSIS

The Service Diagnosis Section is for use in aiding the serviceman in diagnosing a particular problem for pin-pointing the area in which the problem lies, thus an ever available reference for proper corrective action.

The following charts list corrective actions for the causes of known symptoms of certain problems that can occur.

I. ICE AGITATION AND DISPENSING SYSTEMS

SYMPTOM	POSSIBLE CAUSE	CORRECTION
Ice in Bin stuck together.	Ice Breaker missing in Bin.	Install Ice Breaker in Bin.
No portions of ice dispensed.	Loose setscrew in drive cam of Ice Dispensing Motor Assembly.	Tighten setscrew.
	Defective Cam switch.	Replace switch.
	Cam switch out of adjustment.	Adjust Cam switch.
	Defective Ice switch.	Replace Ice switch.
	Defective Drivemotor or Ice Dispensing Motor.	Replace defective motor.
	Drivemotor or Ice Dispensing Motor is OUT on thermal overload: too hot.	Let motor cool.
	Master switch in OFF position.	Move switch to ON position.
	Ice Dispensing Motor cam switch connector contact incomplete.	Check all plug contacts mate and seat properly.
	Ice switch connector contact incomplete.	Check all plug contacts mate and seat properly.
Ice Dispenser box does not fully close.	Drive linkage not properly assembled.	Reassemble, see Figure 8-5.
	Dispenser Timing Cam on shaft upside down.	Re-install Cam, in reverse.
	Dispenser Timing Cam loose on shaft.	Ensure setscrew is on flat of shaft, then re-tighten setscrew.
	Dispenser Cam switch out of adjustment.	Adjust Cam switch.
	Drive Cam loose on motor shaft.	Tighten setscrew.
Ice dispensing mechanism will not shut OFF.	Faulty Cam switch (lower).	Replace Cam switch (lower).
	Dispenser Motor Cam switch out of adjustment.	Adjust Cam switch.
	Dispenser Motor brake fails.	Repair or replace brake.

SECTION VII

WIRING DIAGRAMS

This Section is provided as an aid in understanding the electrical circuitry of the RPD100 Dispenser.

The Wiring Diagram in this Section is: Figure 7-1. Wiring Diagram RPD100 Dispenser.

WARNING

When conducting a continuity check of the Dispenser:

1. **Disconnect the main power source.**
2. **DO NOT use an incandescant lamp or jumper wire, conduct all tests with a volt-ohm-meter.**

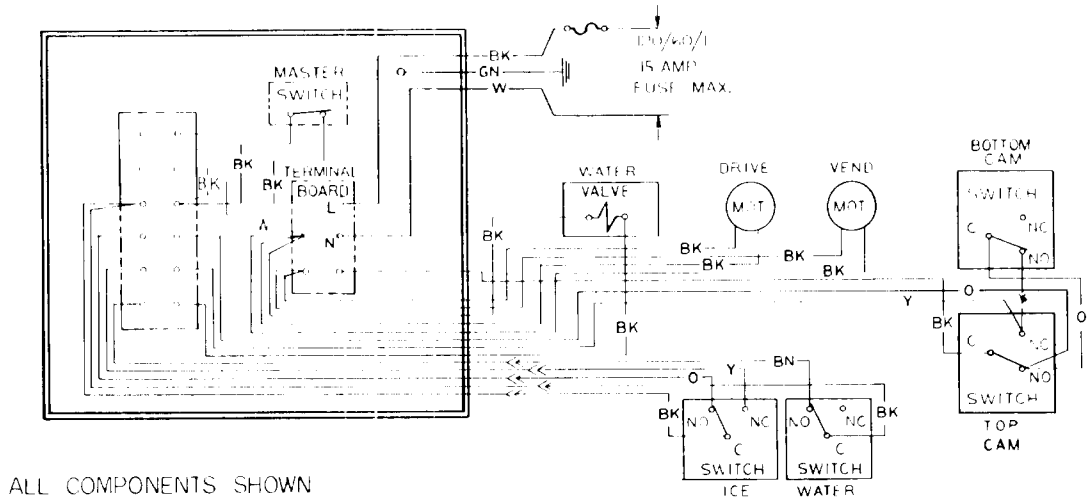

ALL COMPONENTS SHOWN
IN VENDING MODE

THIS UNIT MUST
BE GROUNDED

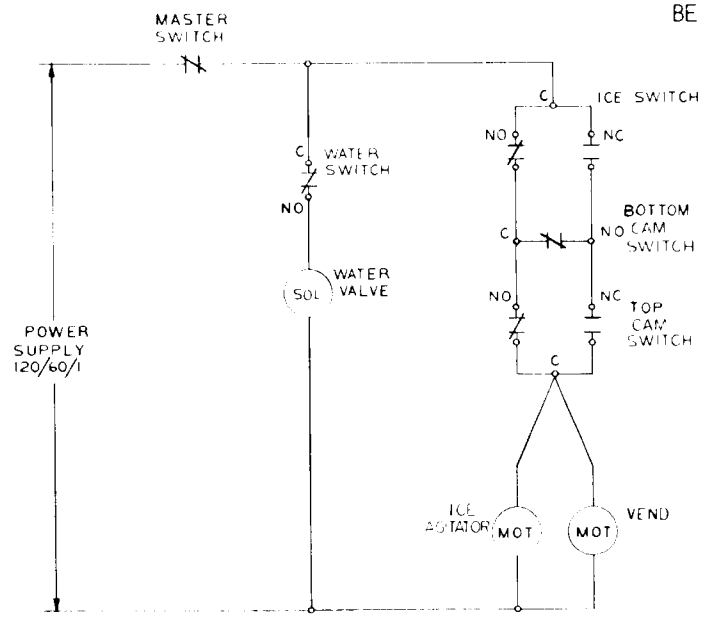

A29246-001

Figure 7-1. Wiring Diagram RPD100 Dispenser.

SECTION VIII

THE PARTS ILLUSTRATIONS AND PARTS LISTS

I. GENERAL

This section contains the Parts Illustrations and the Parts List for each of the major assemblies in the RPD100 Dispenser.

Each Parts Illustration shows an assembly as an exploded view, with an Index Number for each part or sub-assembly, given in disassembly order. These Index Numbers key with the Parts List for the assembly and are found in the parts List Column headed Index Number. The Description Column gives the identifying nomenclature for the item indexed. The Part Number Column gives the number of item. The Number Required Column gives the number of items required per assembly, but not necessarily the total number of parts required per Dispenser.

All assemblies are cross-referenced both from the major assembly listing where they first appear in the Parts Listing to their break-down listing, and from the break-down listing, back to the major assembly (next higher assembly) listing.

A *No Number* designation, when used in the Part Number Column indicates the unit is not available from SCOTSMAN as an assembly. This designation is used only for the convenience and clarity of division in cataloging.

When an Index Number is followed by a letter (e.g. la, lb), the letter indicates the part listed is part of the assembly indexed by the basic Index Number. The number required of the part indexed by the number and letter combination is only one of the assemblies indexed by the basic Index Number and not necessarily the total number or parts used in the Dispenser. Where the notation *Ref* occurs in the Number Required Column the number of the assemblies or parts required for use in the Dispenser will be found under a previous Index Number or in the next higher assembly Parts Listing. The next higher listing Figure/Index number is shown in the Description Column immediately following the items description.

II. HOW TO USE THE ILLUSTRATIONS AND PARTS LIST

To find the part number of a required part or assembly, turn to the List of Illustrations and find the page number of the Parts Illustration of the major or sub-assembly containing the part. Turn to the indicated page and locate the part and its Index Number on the specific illustration. Find the Index Number on the required part in the Parts List to determine the complete description of the part.

III. HOW TO ORDER PARTS OR ASSEMBLIES

When ordering parts or assemblies, to avoid costly delays and errors in shipment, give the part number, the complete description shown in the list, and the quantities of each part or assembly required. Also include the Model name, the serial number of the Dispenser for which the part is required, and for parts which require color matching, the color of the Cabinet. See Figure 8-00, at the end of the Section for detailed ordering instructions.

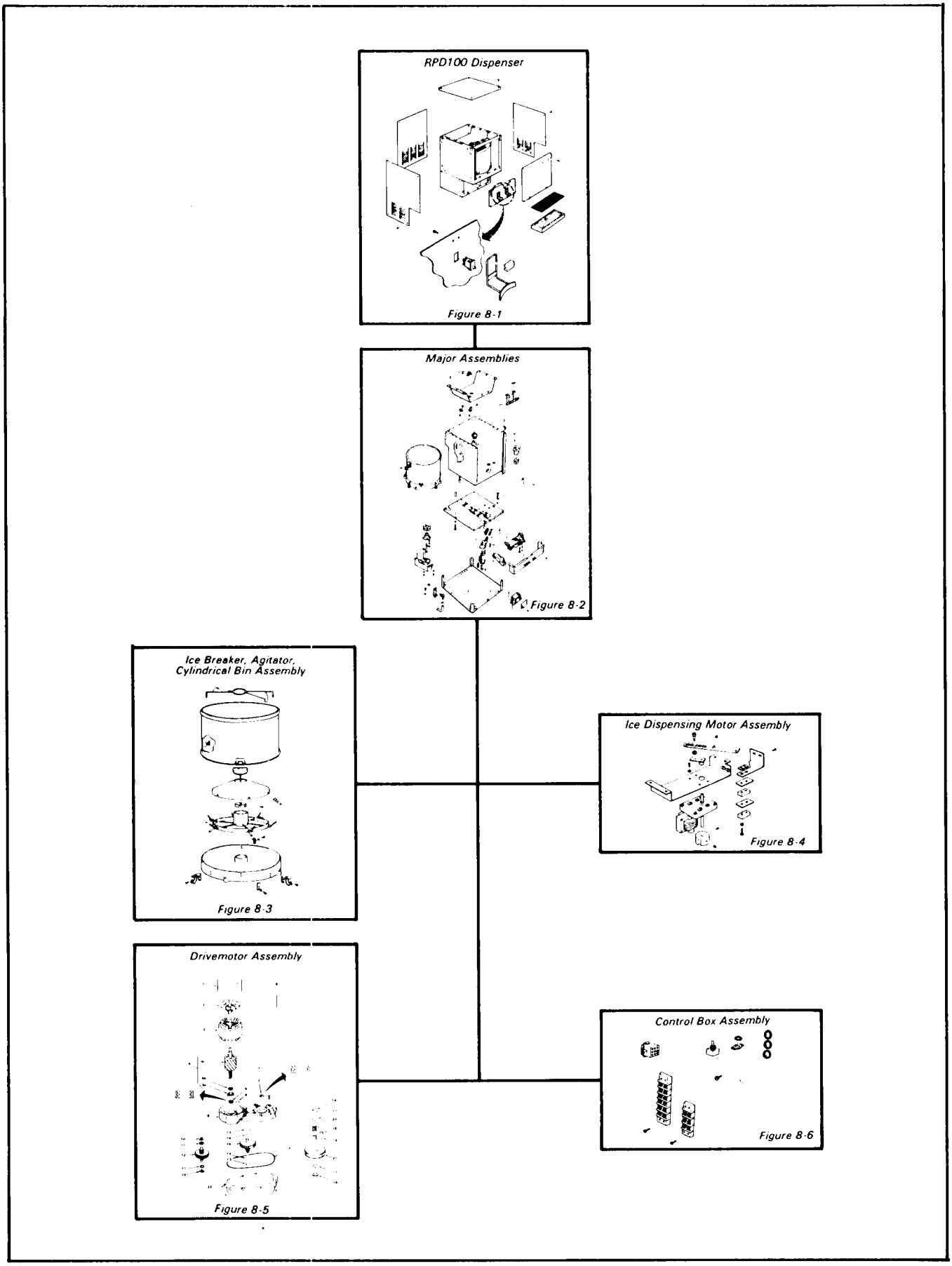

Figure 8-A. Model RPD100 Dispenser Flow Chart.

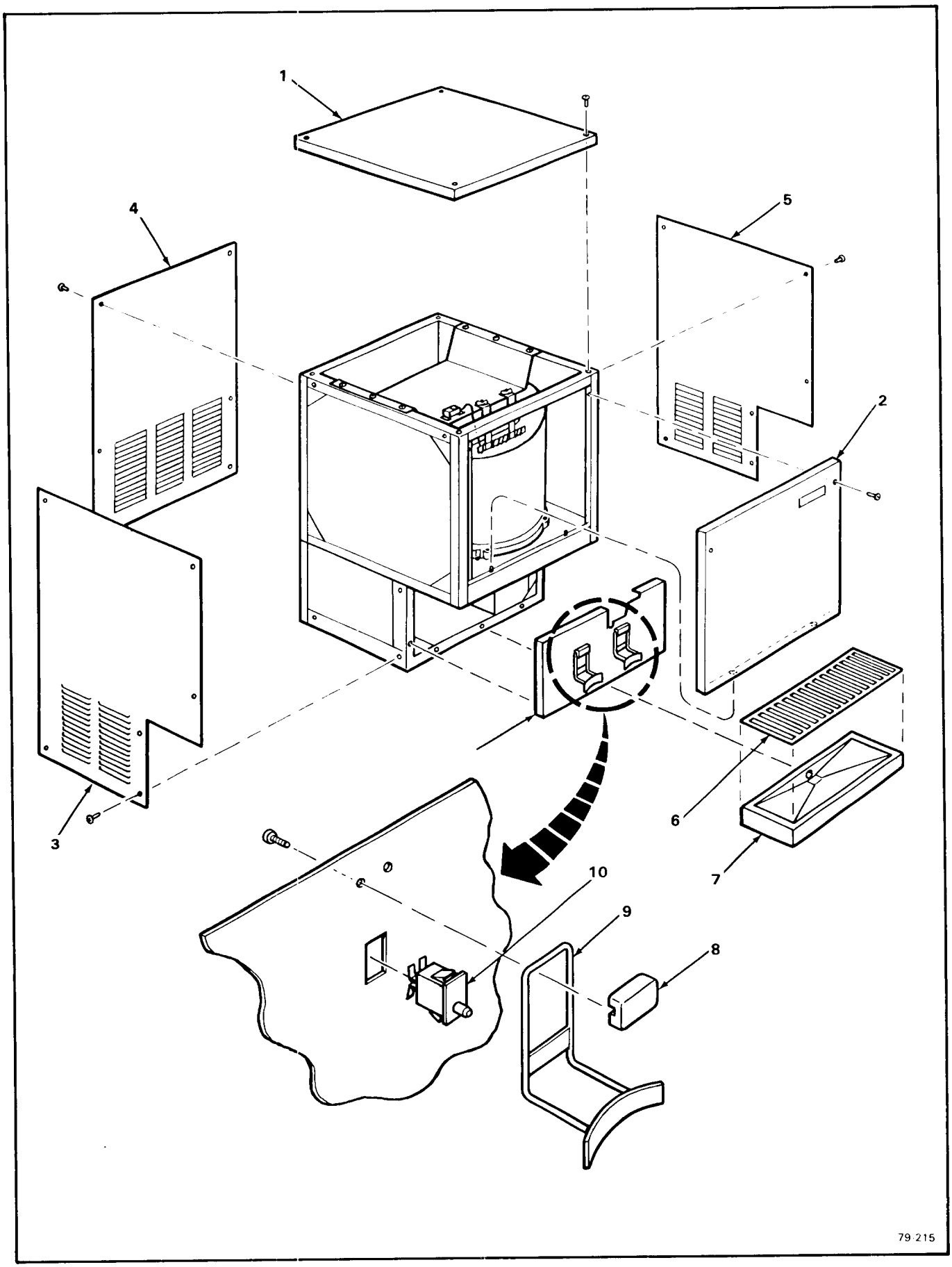

Figure 8-1. RPD100 Dispenser

Figure 8-1. RPD100 Dispenser

INDEX NO.	DESCRIPTION	PART NUMBER	REQ'D NUMBER
	RPD100 Dispenser	No Number	1
	* * *		
1	Panel, Top (Cover Assembly) (C.R.S. Painted)	A27633-001	1
	Panel, Top (Cover Assembly) (Stainless Steel)	A27633-002	1
	attaching parts, Index 1		
	Screw, No. 1/4-20 x 2-1/2 Phil Recess Pan Hd	03-1403-55	4
	* * *		
2	Panel Assembly, Front (C.R.S. Painted)	A27619-001	1
	Panel Assembly, Front (Stainless Steel)	A27619-002	1
	attaching parts, Index 2		
	Screw, No. 8 x 1-1/4 S/T Tap	03-1419-24	2
	* * *		
3	Panel, Left Side (C.R.S. Painted)	A27617-001	1
	Panel, Left Side (Stainless Steel)	A27617-002	1
	attaching parts, Index 3		
	Screw, No. 8 x 1-1/4 S/T Tap	03-1419-24	5
	* * *		
4	Panel, Cabinet Rear (C.R.S. Painted)	A27618-001	1
	Panel, Cabinet Rear (Stainless Steel)	A27618-002	1
	attaching parts, Index 4		
	Screw, No. 8 x 1-1/4 S/T Tap	03-1419-24	6
	* * *		
5	Panel, Right side (C.R.S. Painted)	A27616-001	1
	Panel, Right Side (Stainless Steel)	A27616-002	1
	attaching parts, Index 5		
	Screw, No. 8 x 1-1/4 S/T Tap	03-1419-24	5
	* * *		
6	Grill	02-2399-01	1
	* * *		
7	Sink Assembly	A27908-000	1

Figure 8-1. RPD100 Dispenser (cont'd)

INDEX NO.	DESCRIPTION	PART NUMBER	REQ'D NUMBER
	O-Ring	13-0617-02	1
	* * *		
8	Bracket, Lever Mounting	02-2429-01	1
	* * *		
9	Lever Assembly, Glass Filler	02-2470-01	1
	attaching parts, Index 8 & 9		
	Screw, No. 10-24 x 1/4 Phil Recess Pan Hd	03-1403-24	4
	* * *		
10	Switch	12-1376-00	1
	* * *		
11	Panel, Splash	A27644-001	1
	* * *		

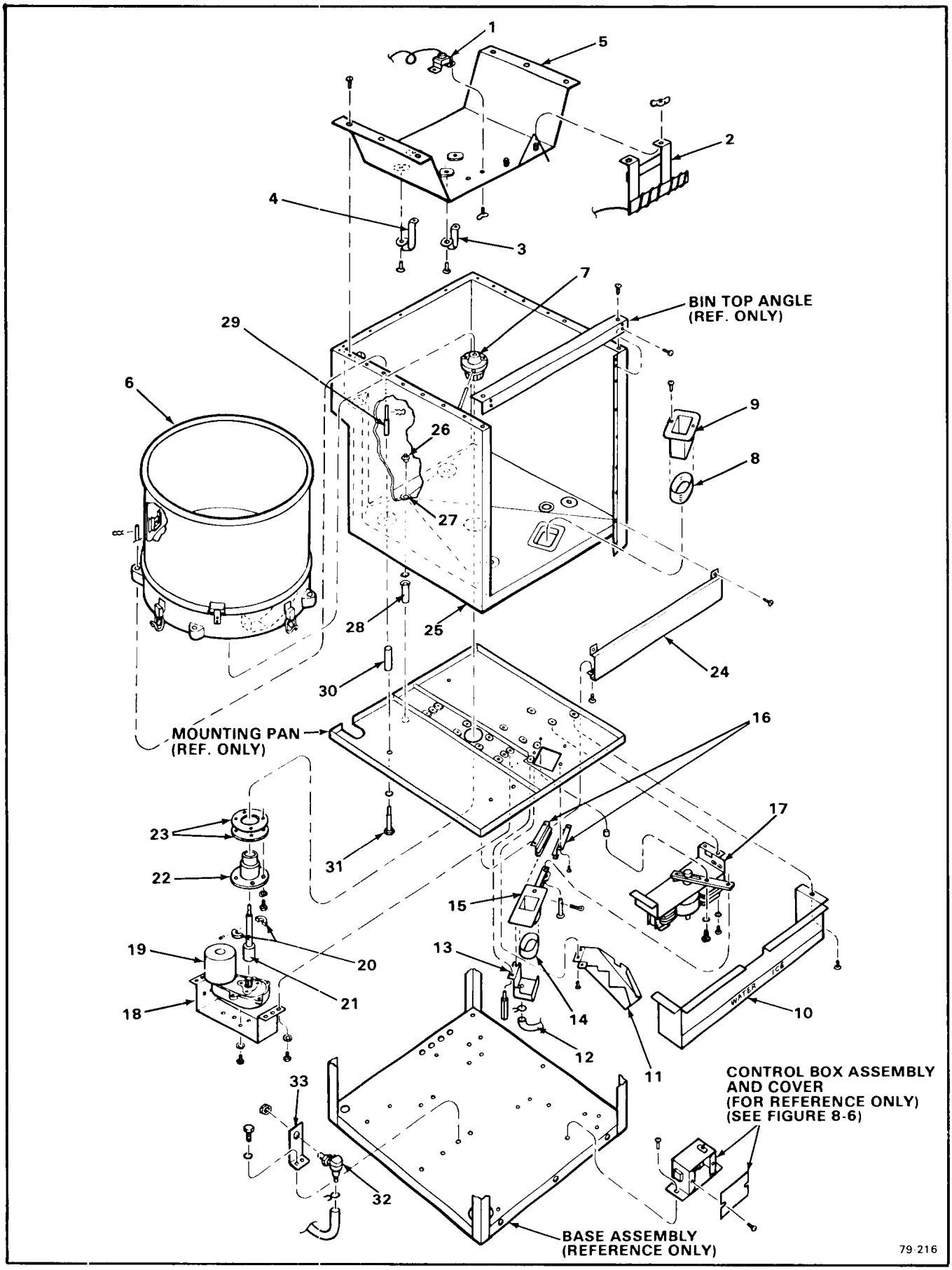

Figure 8-2. Major Assemblies

Figure 8-2. Major Assemblies

INDEX NO.	DESCRIPTION	PART NUMBER	REQ'D NUMBER
	Major Assemblies	No Number	Ref.
	* * *		
1	Control, Temperature (Bin Thermostat)	11-0353-02	1
	attaching part, Index 1		
	Thumbscrew	03-1279-01	2
	* * *		
2	Holder Assembly, Bulb	A28846-001	1
	attaching part, Index 2		
	Wingnut	03-0255-01	2
	* * *		
3	Clamp, Hose - Front	No Number	1
	* * *		
4	Clamp, Hose - Back	No Number	1
	attaching parts, Index 3 & 4		
	Screw, No. 1/4-20 x 1/2 Phil Recess Pan Hd	03-1403-48	4
	* * *		
5	Saddle	No Number	1
	attaching part, Index 5		
	Screw, No. 6-32 x 1/2 T/C Pan Hd	03-1613-01	2
	* * *		
6	Ice Breaker, Agitator, Cylindrical Bin Assembly	No Number	1
	(See Figure 8-3)		
	attaching part, Index 6		
	Clip, Hairpin (See Index 29)	03-1600-01	4
	* * *		
7	Drive Assembly, Hub	A26384-001	1
	attaching part, Index 7		
	Pin, Drive	A24094-001	1
	* * *		
8	Band, Ice Chute - (Rubber)	02-2471-01	1
	* * *		

Figure 8-2. Major Assemblies (cont'd)

INDEX NO.	DESCRIPTION	PART NUMBER	REQ'D NUMBER
9	Chute, Ice Dispenser	A27946-001	1
	attaching parts, Index 8 & 9		
	Screw, No. 8 x 1/2 T/F Tap	03-1404-10	2
	* * *		
10	Cover Assembly, Spout	A28966-001	1
	attaching part, Index 10		
	Screw, No. 10-24 x 3/8 Phil Recess Pan Hd	03-1403-27	2
	* * *		
11	Chute, Lower Ice	A27948-001	1
	attaching part, Index 11		
	Screw, No. 8-32 x 3/8 Phil Recess Pan Hd	03-1403-16	3
	* * *		
12	Tube, Tygon (32-inch long) (order by the foot)	13-0674-02	1
	attaching part, Index 12		
	Clamp, Hose	02-0538-00	1
	* * *		
13	Bottom, Dispenser Chute	A28041-001	1
	attaching part, Index 13		
	Thumbscrew	A26375-001	1
	* * *		
14	Band, Ice Chute — (Rubber)	02-2471-02	1
	* * *		
15	Dispenser Assembly, Ice — (Box & movable arm)	A28835-001	1
	attaching part, Index 15 (connects to Index 17)		
	Pin	S07973-000	1
	Cotter, Hair Pin	03-1604-01	1
	* * *		
16	Track	15-0631-01	2
	attaching parts, Index 16		
	Screw, No. 8 x 1/2 T/F Tap	03-1404-09	6
	* * *		

Figure 8-2. Major Assemblies (cont'd)

INDEX NO.	DESCRIPTION	PART NUMBER	REQ'D NUMBER
17	Ice Dispenser Motor Assembly	No Number	1
	(See Figure 8-4)		
	attaching parts, Index 17		
	Lockwasher, No. 1/4 Helical Spring	03-1410-03	4
	Screw, No. 1/4-20 x 3/8 Hex Cap	03-1405-01	4
	* * *		
18	Mounting Bracket, Gear Motor	No Number	1
	attaching part, Index 18		
	Lockwasher, No. 5/16 External Tooth	03-1417-12	5
	Screw, No. 5/16-18 x 1/2 Hex Cap	03-1405-15	6
	* * *		
19	Drivemotor Assembly	A28154-021	1
	(See Figure 8-5)		
	attaching part, Index 19		
	Lockwasher, No. 1/4 Helical Spring	03-1410-03	4
	Screw, No. 1/4-20 x 1/2 Hex Cap	03-1405-03	4
	* * *		
20	Collar, Shaft	02-2436-01	1
	(Two-piece clamp with two 10-32 screws)		
	* * *		
21	Shaft Assembly	A27546-001	1
	* * *		
22	Mounting Assembly, Bearing	A27427-001	1
	* * *		
23	Spacer	02-2397-01	2
	attaching parts, Index 22 & 23		
	Lockwasher, No. 5/16 Helical Spring	03-1410-04	4
	Screw, No. 5/16-18 x 1 Hex Cap	03-1405-18	4
	* * *		
24	Panel, Front Cover	A27623-002	1

Figure 8-2. Major Assemblies (cont'd)

INDEX NO.	DESCRIPTION	PART NUMBER	REQ'D NUMBER
	attaching part, Index 24		
	Screw, No. 6-32 x 1/2 T/C Pan Hd (at ends)	03-1613-01	2
	Screw, No. 6 x 1/4 T/F Tap (use underneath)	03-1404-08	6
	* * *		
25	Liner Assembly, Bin (Foamed)	A27542-020	1
	attaching parts, Index 25 to Mounting Pan		
26	Fitting, Drain	02-1751-00	1
	* * *		
27	O-Ring	13-0617-13	1
28	Tube, Drain	02-1957-00	1
	* * *		
29	Spacer, Bin Bottom	A28068-001	4
	* * *		
30	Spacer, Bin Support	A27541-001	4
	Clip, Hairpin (See Index 6)	03-1600-01	Ref.
	Lockwasher, No. 5/16 Helical Spring	03-1410-04	4
	* * *		
31	Screw, No. 5/16 - 18 x 2-1/2 Hex Cap	03-1405-22	4
	* * *		
32	Valve Assembly, Water	12-1900-07	1
	attaching part, Index 32 to 33		
	Pal Nut	03-1394-01	1
	* * *		
33	Bracket, Water Valve	A25805-001	1
	attaching part, Index 33		
	Screw, No. 8 x 1/2 T/F Tap	03-1404-10	2
	* * *		

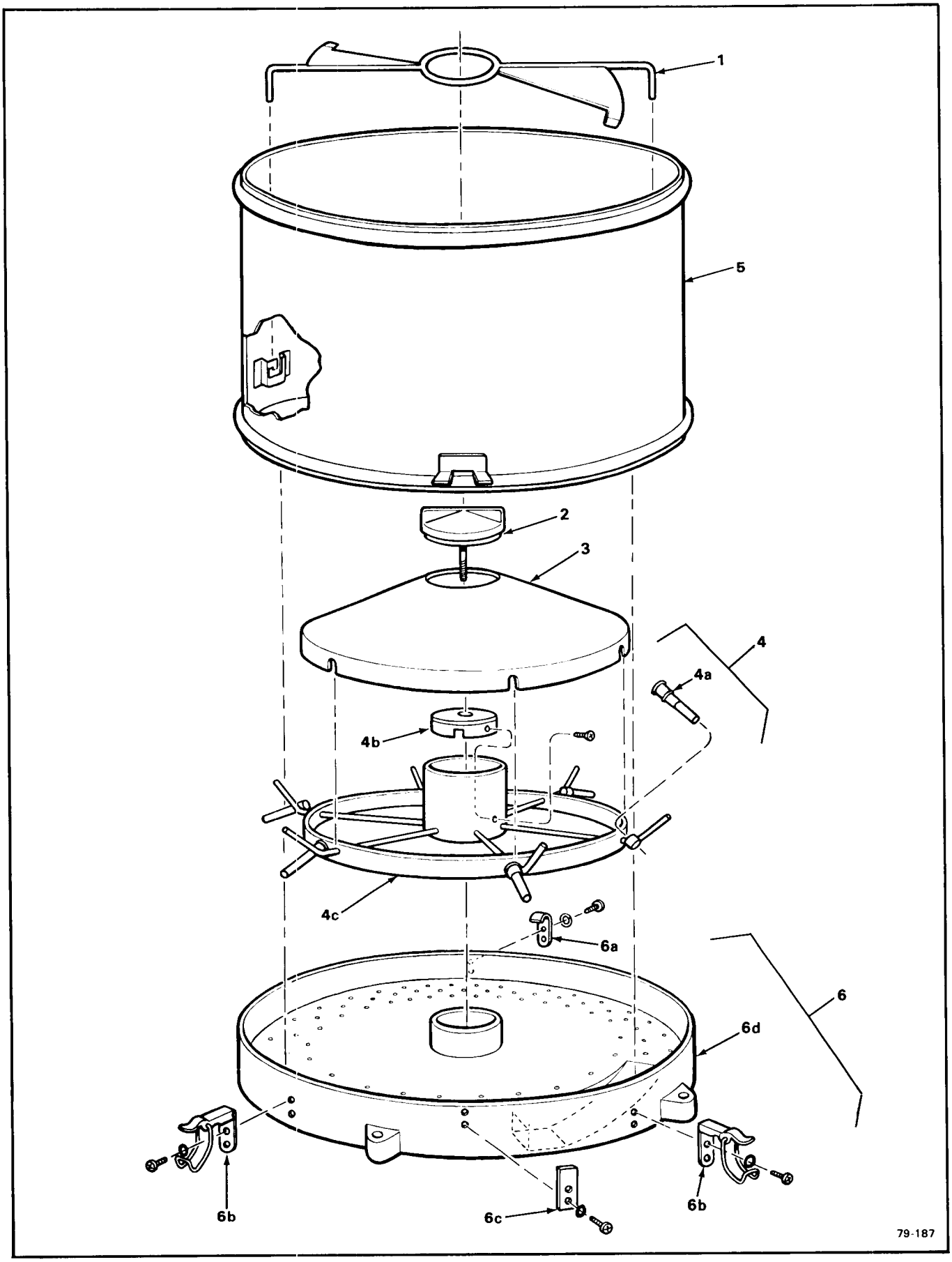

Figure 8-3. Ice Breaker, Agitator, Cylindrical Bin Assembly

Figure 8-3. Ice Breaker, Agitator, Cylindrical Bin Assembly

INDEX NO.	DESCRIPTION	PART NUMBER	REQ'D NUMBER
	Ice Breaker, Agitator, Cylindrical Bin Assembly	No Number	Ref.
	See Figure/Index 8-2/6		
	for next higher Assembly		
	* * *		
1	Breaker Assembly, Ice	A27566-001	1
	* * *		
2	Cap Assembly	02-2400-01	1
	* * *		
3	Cone, Ice Agitator	02-2409-01	1
	* * *		
4	Agitator Assembly, Ice	A27560-001	1
4a	Rubber - (Spray Bar)	13-0653-00	6
4b	Hub, Cylinder Drive	A14656-000	1
4c	Agitator, Ice	No Number	1
	attaching parts, Index 4b to 4c		
	Screw, No. 1/4-20 x 3/8 Phil Recess Flat Hd	03-1418-14	3
	* * *		
5	Cylinder, Storage Bin	A27584-001	1
	* * *		
6	Bottom Assembly — Clip, Latch and Stationary Bin	No Number	1
6a	Clip, Bin Holddown	A27189-001	1
	attaching part, Index 6a		
	Lockwasher, No. 6 Internal Tooth		2
	Screw, No. 6 x 3/8 T/F Tap	03-1531-04	2
6b	Latch	03-1596-01	2
	attaching parts, Index 6b		
	Lockwasher, No. 6 Internal Tooth	03-1417-14	4
	Screw, No. 8 x 3/8 T/F Tap	03-1531-04	4
	* * *		
6c	Clip, Locator	A29108-001	1

Figure 8-3. Ice Breaker, Agitator, Cylindrical Bin Assembly Cont'd.

INDEX NO.	DESCRIPTION	PART NUMBER	REQ'D NUMBER
	attaching part, Index 6c		
	Lockwasher, No. 6 Internal Tooth	03-1417-14	2
	Screw, No. 6 x 3/8 T/F Tap	03-1531-04	2
	* * *		
6d	Bottom, Stationary Bin	02-2431-01	1
	* * *		

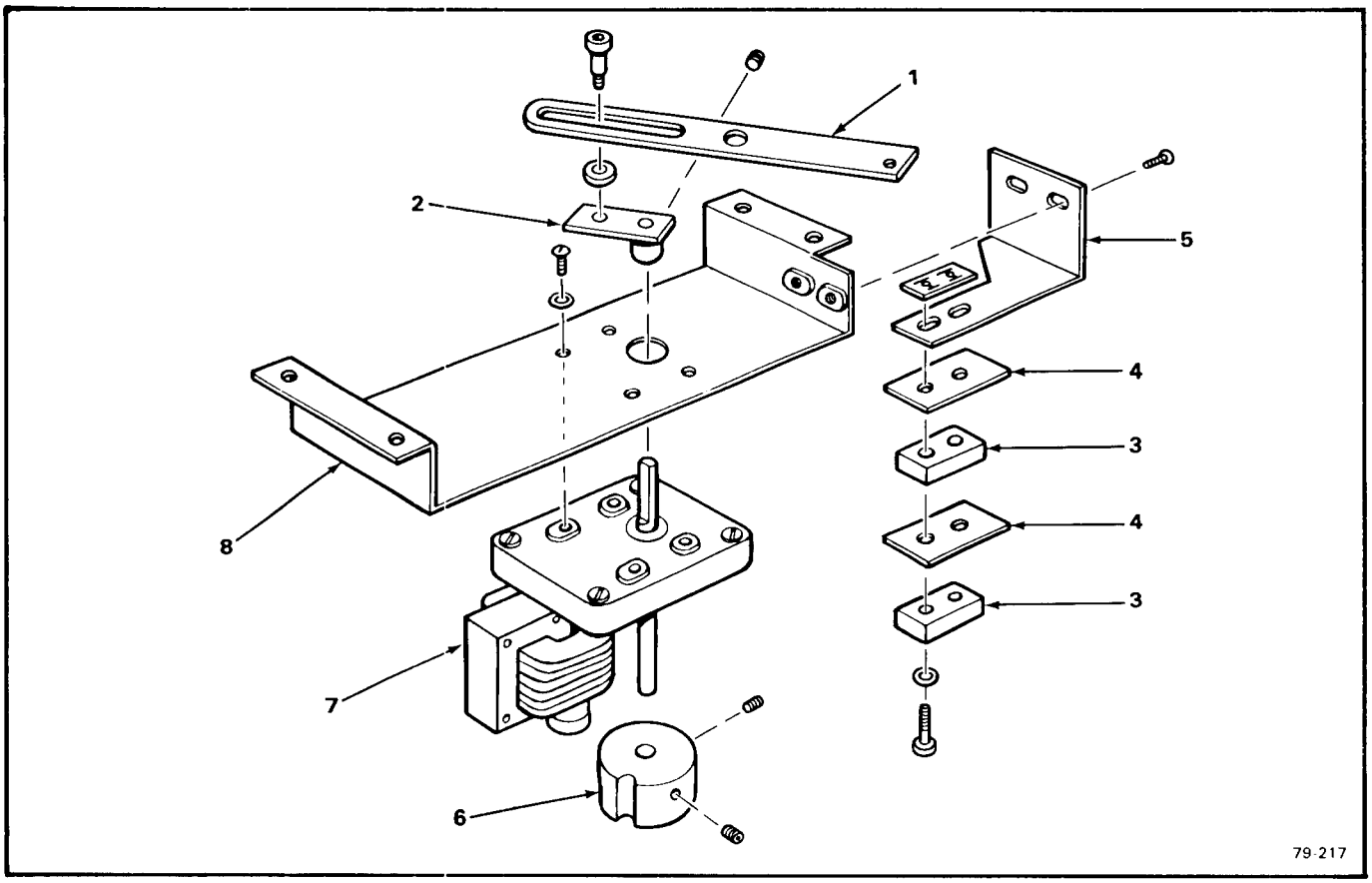

Figure 8-4. Ice Dispenser Motor Assembly

INDEX NO.	DESCRIPTION	PART NUMBER	REQ'D NUMBER
	Ice Dispenser Motor Assembly	No Number	Ref.
	(See Figure/Index 8-2/17		
	for next higher Assembly)		
	* * *		
1	Link, Drive	A28811-001	1
	* * *		
2	Hub, Drive	A28816-001	1
	attaching parts, Index 1 & 2 to 8		
	Setscrew	03-0431-08	1
	Washer, Special — Brass	03-1408-42	1
	Bolt, Shoulder	03-1598-02	1
	* * *		
3	Switch	12-0876-00	2
	* * *		

Figure 8-4. Ice Dispenser Motor Assembly (cont'd)

INDEX NO.	DESCRIPTION	PART NUMBER	REQ'D NUMBER
4	Insulator	No Number	2
	attaching parts, Index 3 & 4 to 5		
	Screw, No. 6-32 x 1-3/4 Phil Recess Pan Hd	03-1403-11	2
	Washer, Special	No Number	2
	Speednut, Double	03-0886-00	1
	* * *		
5	Bracket, Switch	No Number	1
	attaching part, Index 5		
	Screw, No. 8-32 x 3/8 Phil Recess Pan Hd	03-1403-16	2
	* * *		
6	Cam	02-2469-01	1
	attaching part, Index 6		
	Setscrew	03-0431-08	2
	* * *		
7	Motor, Gear	12-2117-01	1
	attaching part		
	Washer, No. 8 External Tooth	03-1417-03	4
	Screw, No. 8-32 x 3/8 Phil Recess Pan Hd	03-1403-16	4
	* * *		
8	Bracket, Mounting	No Number	1
	* * *		

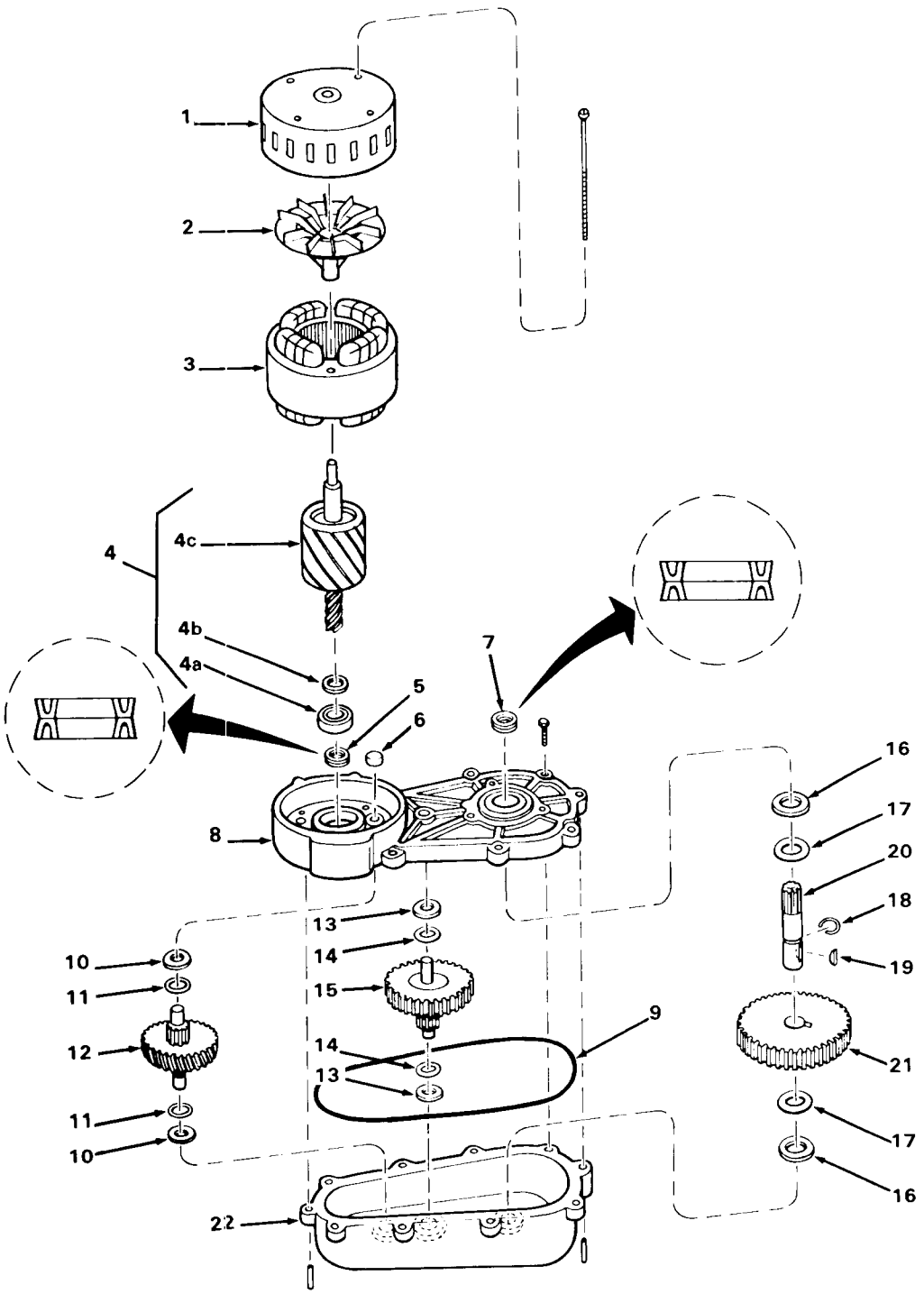

Figure 8-5. Drivemotor Assembly — 1/10 H.P.

Figure 8-5. Drivemotor Assembly — 1/10 H.P.

INDEX NO.	DESCRIPTION	PART NUMBER	REQ'D NUMBER
	Drivemotor Assembly -- (1/10 H.P.) (6.96 RPM)	A28154-021	Ref.
	(See Figure/Index 8-2/19		
	for next higher Assembly)		
	* * *		
1	Housing Assembly	A17047-001	1
	attaching part, Index 1 to 8		
	Screw, No. 10-32 x 5-1/4 Phil Hd Mach	03-1403-82	4
	* * *		
2	Fan, Boring	A28168-001	1
	* * *		
3	Stator Assembly (115/60/1)	12-1400-01	1
	* * *		
4	Rotor Assembly	A28160-001	1
4a	Bearing	02-1501-00	1
4b	Washer, Special	03-1408-08	1
4c	Rotor (Order P/N A28160-001)	No Number	1
	* * *		
5	Seal, Grease (Install back-to-back)	02-1504-00	2
	* * *		
6	Cap, Insulating	02-2459-01	1
	* * *		
7	Seal, Grease (Install back-to-back)	02-1503-00	2
	* * *		
8	Cover Assembly, Gear Case	A28165-001	1
	attaching parts, Index 8 to 22		
	Pin, Roll	03-0774-11	2
	Screw, No. 1/4-20 x 3/4 Flange	03-1252-00	2
	Screw, No. 1/4-20 x 5/8 Flange	03-1251-00	6
	* * *		
9	O-Ring	02-1505-00	1
	* * *		

Figure 8-5. Drivemotor Assembly — 1/10 H.P. (cont'd)

INDEX NO	DESCRIPTION	PART NUMBER	REQ'D NUMBER
10	Washer, Special (Thick)	03-1408-41	2
	* * *		
11	Washer, Special (Thin/Shim)	03-1408-38	A/R
	* * *		
12	Second Pinion Assembly, First Gear and	02-2443-01	1
	* * *		
13	Washer, Special (Thick)	03-1408-39	2
	* * *		
14	Washer, Special (Thin/Shim)	03-1408-40	A/R
	* * *		
15	Third Pinion Assembly, Second Gear and	02-2441-01	1
	* * *		
16	Washer, Special (Thick)	03-1408-21	2
	* * *		
17	Washer, Special (Thin/Shim)	03-1408-04	A/R
	* * *		
18	Ring, Retaining	03-1515-03	1
	* * *		
19	Key, Woodruff	03-1602-01	1
	* * *		
20	Shaft, Output	03-2445-01	1
	* * *		
21	Gear, Output	02-2444-01	1
	* * *		
22	Case Assembly, Gear	A28166-001	1
	* * *		

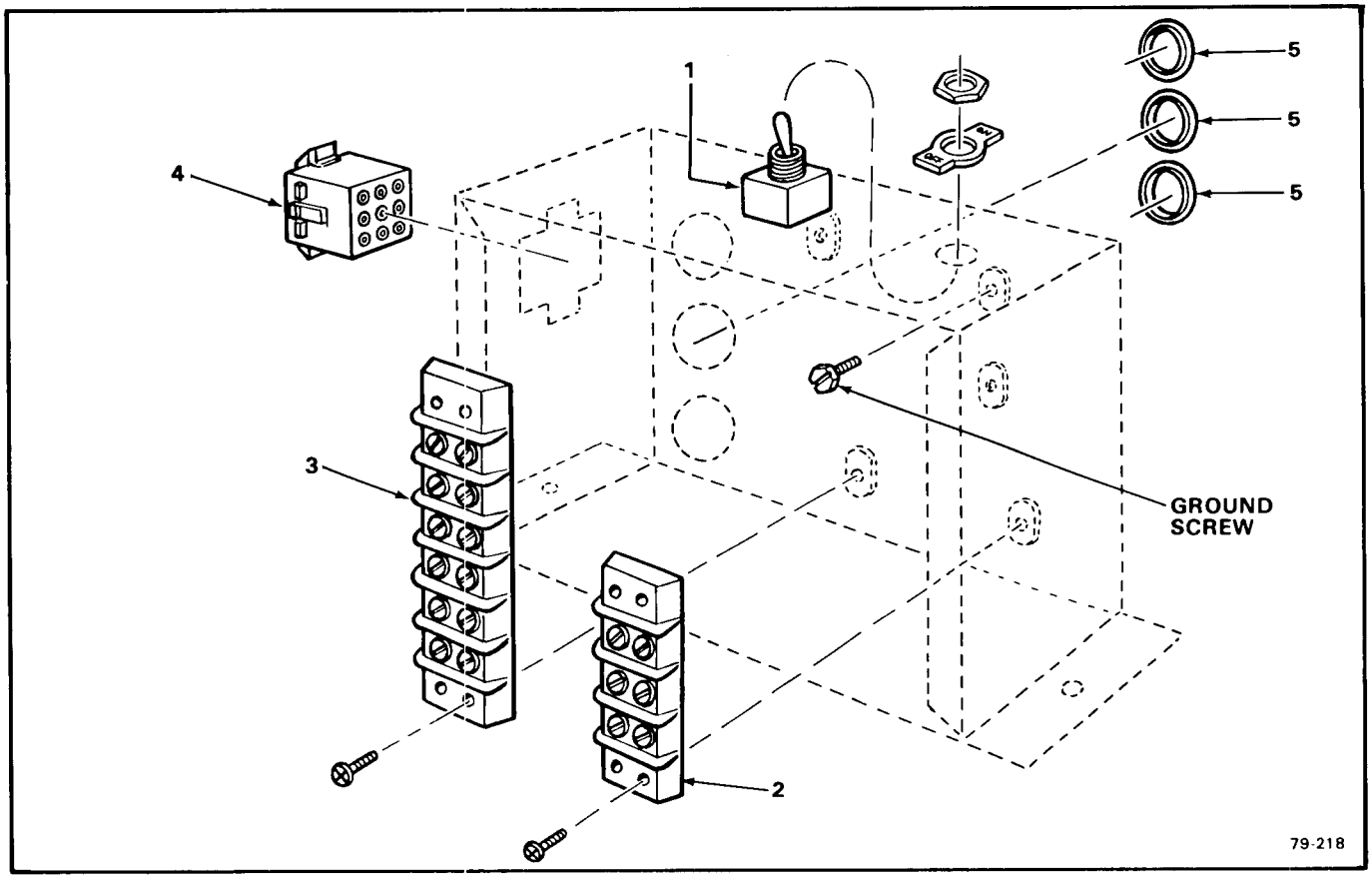

Figure 8-6. Control Box Assembly.

INDEX NO.	DESCRIPTION	PART NUMBER	REQ'D NUMBER
	Control Box Assembly	No Number	1
	(See Figure 8-2 for		
	next higher Assembly)		
	* * *		
1	Switch, Toggle	12-0426-01	1
	* * *		
2	Block, Terminal (short)	12-0813-00	1
	* * *		
3	Block, Terminal (long)	12-0813-03	1
	attaching parts, Index 2 & 3		
	Screw, No. 8-32 x 1/2 Phil Recess Pan Hd	03-1403-18	4
	* * *		
4	Housing, Connector — (Cap)	No Number	1
	* * *		

Figure 8-6. Control Box Assembly (cont'd)

INDEX NO	DESCRIPTION	PART NUMBER	REQ'D NUMBER
5	Bushing * * *	12-1213-10	3

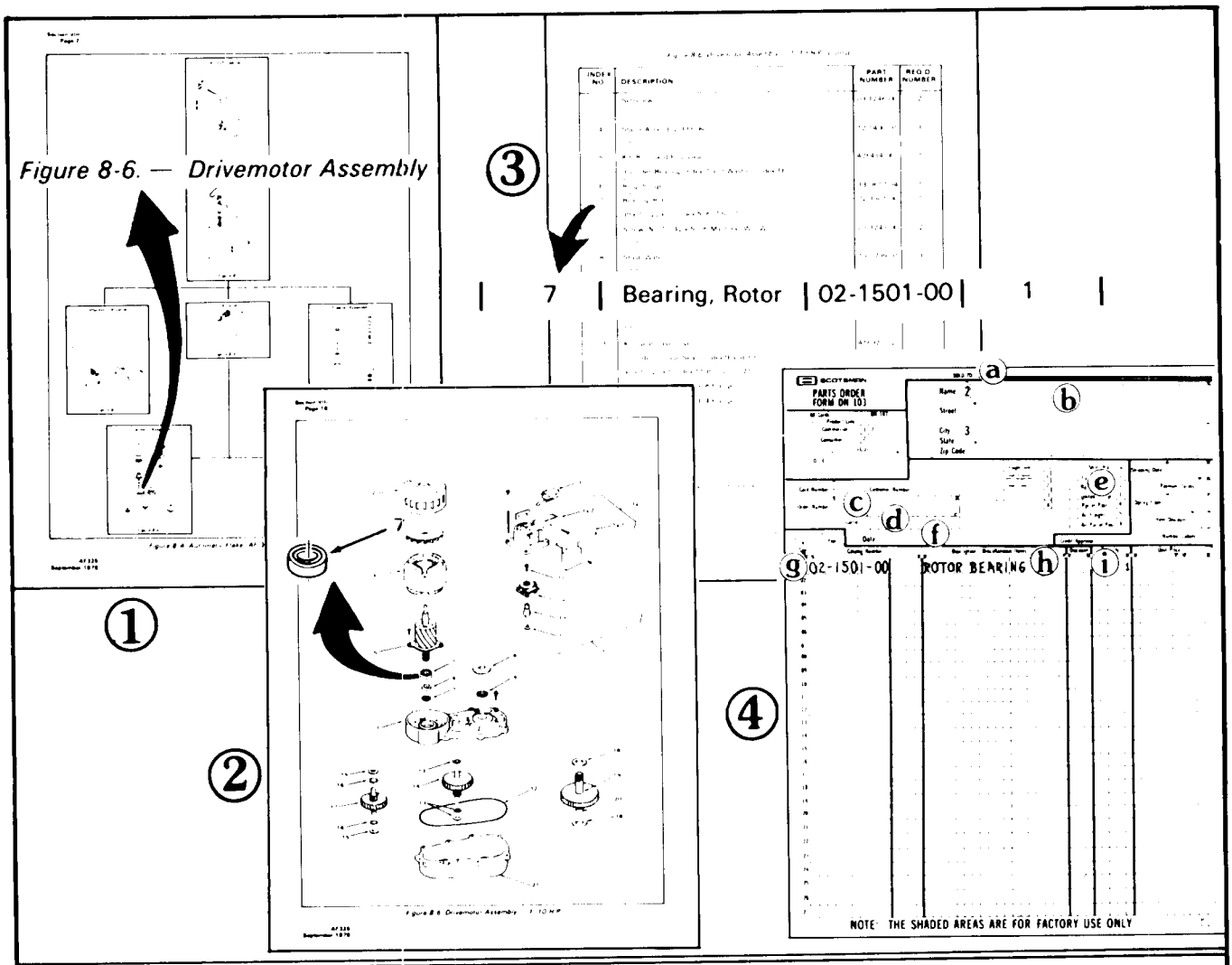

HOW TO USE A SCOTSMAN PARTS MANUAL WHEN ORDERING PARTS FOR ICE SYSTEMS PRODUCTS

IMPORTANT A. All Part Numbers have TEN DIGITS (spaces), required for use in the Computer System. BE SURE to fill in **ALL SPACES** in the CATALOG NUMBER column, on the Parts Order form as shown above.

B. Enter the QUANTITY of the Parts ordered, in the last digit column under the QUANTITY column heading, the one under the small 55 number, for parts from 1 thru 9. For 10 or more parts use two columns.

To be sure you receive the proper parts in the proper quantities, ALWAYS use the PART NUMBERS and DESCRIPTIONS given in the Parts Manuals.

The figures above illustrate the way a Parts Manual would be used, if the Part being ordered were the ROTOR BEARING that is used in the DRIVEMOTOR ASSEMBLY of an AF325 Automatic Flaker, for example.

PROCEDURE:

1. At the beginning of Section VIII, THE PARTS ILLUSTRATIONS AND PARTS LISTS, in each Parts and Service Manual, is Figure 8-A; which, is a flow chart prepared from exploded views in Section VIII. Use the flow chart to quickly determine which Figure contains the Assembly, Component or Part.

FIGURE 1: Since the Part required in the above example is in the DRIVEMOTOR ASSEMBLY, shown as FIGURE 8-6.

2. Open the Manual to page showing FIGURE 8-6.

3. Locate the PART and its INDEX NUMBER on the exploded view illustration.

FIGURE 2: The INDEX NUMBER for the PART is 7.

4. Check the numerical sequence in the associated Parts List following the illustration.

5. LOCATE the INDEX NUMBER 7, in the INDEX NO. column, the first column on the left side of the Parts List page.

FIGURE 3: INDEX NO. 7 is listed as a BEARING, ROTOR in the DESCRIPTION column. The Part Number for the Rotor Bearing is 02-1501-00 as listed in the PART NUMBER column on the right side of the Parts List page. And, one Rotor Bearing is listed in the REQ'D NUMBER column, or that ONLY one of those parts is required for one Drivemotor Assembly.

6. Write an order for the Part. (Use SCOTSMAN Parts Order Form DN103)

FIGURE 4: a. Distributor Name.
b. (Use for DROP-SHIP order ONLY).
c. Distributor Purchase Order Number.
d. Carrier
e. How shipped (Truck, Rail, UPS, etc.)
f. Date ordered
g. Part Catalog Number
(use full TEN digits (spaces) listed in Parts Manual, including dashes between numbers.
h. Description - as listed in Parts Manual.
i. Quantity - number of parts ordered.
(use far right column)

Figure 8-00. How To Use The Illustrated Parts List.

TABLE OF CONTENTS

Forward 1

Table of Contents 2

Specifications and Dimensions ..... 3&5

Photagraphs and Ice Making Capacity 4

Installation:
- Limitation 6
- Location 7
- Uncrating 7
- Preparation for Installation 8
- Setting Up Machine 8
- Placing Machine Section in Position 8
- Lifting Instruction Diagram 9
- Plumbing & Electrical Illustration 10
- Plumbing 11
- Water Treatment Water Supply 11
- Placing of Bin Thermostat Bulb 12
- Electrical 12
- Final Check List 13
- Start Up 14

Wiring Diagram	230/60/1	Air Cooled	15
Wiring Diagram	230/60/1	Water Cooled	16
Wiring Diagram	208/220/60/3	Air Cooled	17
Wiring Diagram	208/220/60/3	Water Cooled	18
Wiring Diagram	208/60/1	Air Cooled	19

Harvest Cycle 21-22

Freezing Cycle 23-24

How it Works

Service Analysis 25-28

Components Parts:
- Complete Unit Front View 29
- Complete Unit Left Side View 30
- Complete Unit Top View W.C. 31
- Complete Unit Top View A.C. 32
- Drive Linkage Assembly 33
- Sump Pump 34
- Control Box 35
- 3-Way Water Valve 36
- Spray Tube Assy. 37
- Case Parts 38

Service:
- Removing & Replacing Components 39-40
- Functional Parts & Maintenence 41-44
- Maintenance and Cleaning Instructions 45
- B-700 Bin 46

THIS PAGE
INTENTIONALLY
LEFT BLANK

THIS PAGE
INTENTIONALLY
LEFT BLANK

SPECIFICATIONS

	SC-1000H	SC-1000WH
Compressor	3 hp twin cylinder Semi Hermetic	3Hp twin cylinder Semi-Hermetic
Condenser	Cleanable Air Cooled	Cleanable Water Cooled
Refrigerant	R12	R12
Refrigerant Charge	115 ounces	115 ounces
Refrigerant Control	Twin Capillary Tube	Twin Capillary Tube
Power Consumption	14.6 Amp., 3 Wire 230 V., 60 Hertz Single Phase	8.4 Amp., 3 Wire 230 V., 60 Hertz Single Phase
Water Consumption to Produce Ice	30.9 Gallons per hour	30.9 Gallons per Hour
Water used by Condenser		1 to 3 1/2 Gallons per minute. Varies with water temperature.
Companion Bin	*B-700	B-700
Cube Size	Scotsman Large cube	Scotsman Large cube
Cubes Per Harvest	340	340
Average Operating Head Pressure	135-155 P.S.I.	140 P.S.I.
Average Operating Back Pressure	50-60 During off cycle	5 P.S.I. End of freeze cycle.

NOTE:

All Scotsman Cubers require neutral wire for secondary 115 volt components curcuit. 3 phase cubers require 4 wire service with neutral. Special voltages upon request.

* Models B-700 storage bins are not equipped with legs.Order leg package from Scotsman Sales Department.

SCOTSMAN®
ICE MACHINES

PRODUCT NAME:

SCOTSMAN®
CUBER MODEL 1000 SERIES

MANUFACTURER:

QUEEN PRODUCTS DIVISION
KING-SEELEY THERMOS CO.
ALBERT LEA, MINNESOTA 56007

SHOWN 3 QTR. SIZE

Model SC1000 produces large cubes



Model SM1005 produces medium cubes

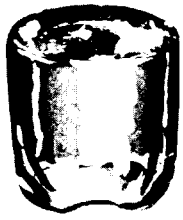

Model MM1010 produces small cubes



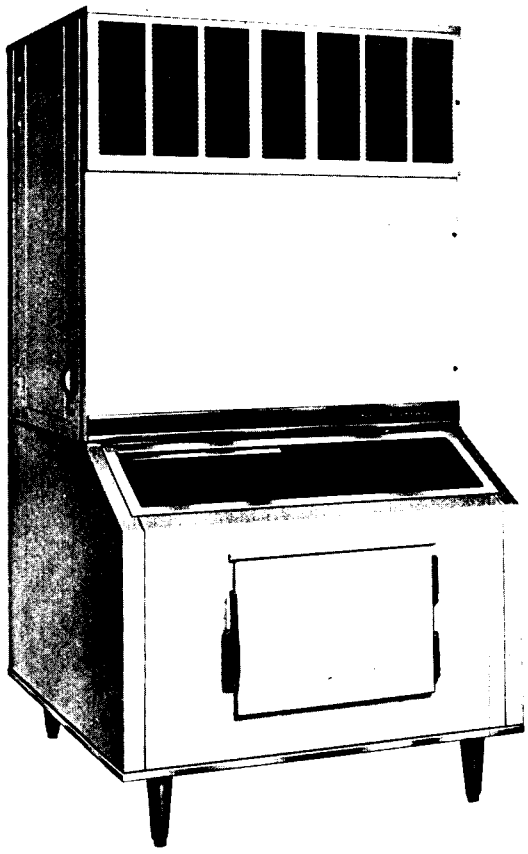

(ILLUSTRATED ON B700 BIN)

ice making capacity

Daily Ice Capacity is directly related to condenser air inlet temperature, water temperature, and age of machine.

NOTE: To keep your SCOTSMAN CUBER performing at it's maximum capacity, it is necessary to perform periodic maintenace as outlined on page 45 of this manual.

MANUFACTURER:

QUEEN PRODUCTS DIVISION
KING-SEELEY THERMOS CO.
ALBERT LEA, MINNESOTA 56007

1000 Series

Capacity: Refer to production chart.
Storage Bin: B700 Stainless Steel Lined
Height: 49-1/4"
Width: 46-5/8"
Depth: 36-1/8"

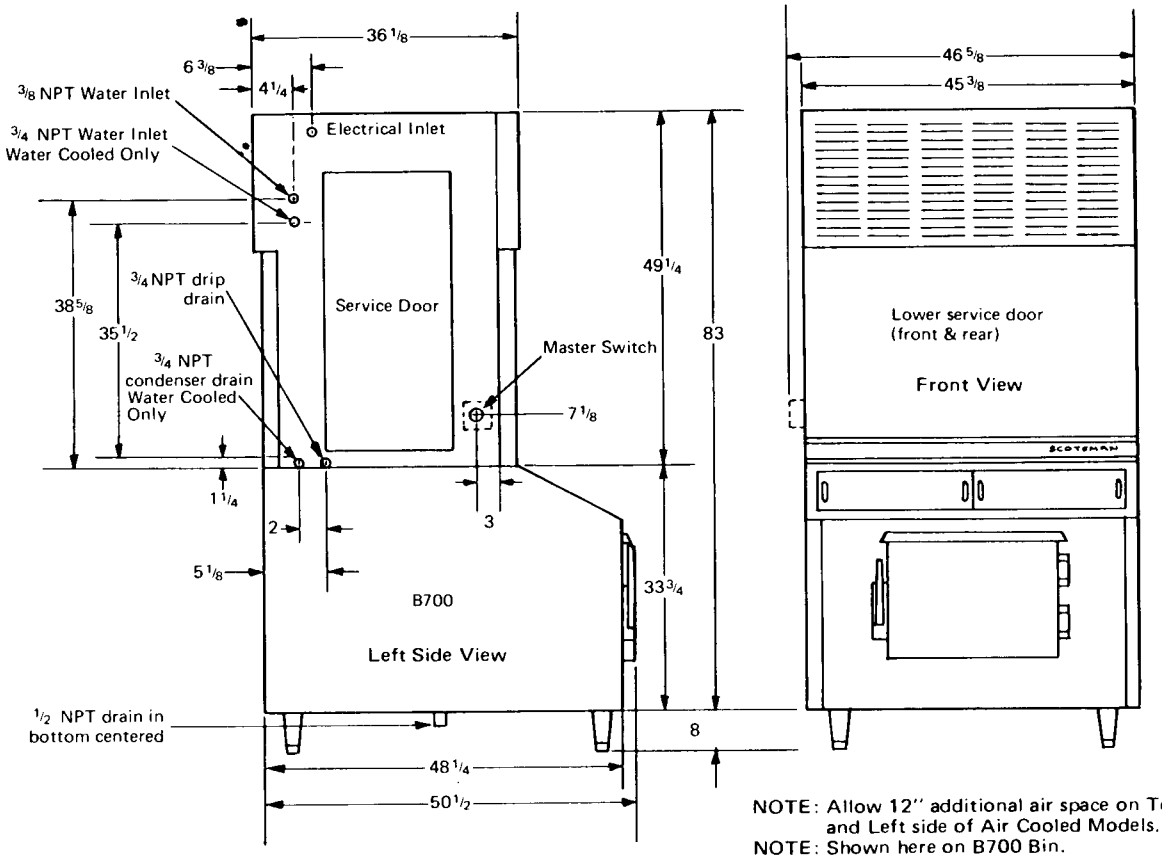

NOTE: Allow 12" additional air space on Top, Back and Left side of Air Cooled Models.
NOTE: Shown here on B700 Bin.

SPECIFICATIONS:

Model	Condensing Unit	Compressor Horsepower	Finish (P-painted) (SS-Stainless Steel)	Shipping Weight (lbs.)
SC1000HA	Air	3	P	915
SC1000HASS	Air	3	SS	915
SC1000WHA	Water	3	P	915
SC1000WHASS	Water	3	SS	915
SM1005HA	Air	3	P	915
SM1005HASS	Air	3	SS	915
SM1005WHA	Water	3	P	915
SM1005WHASS	Water	3	SS	915
MM1010HB	Air	3	P	915
MM1010HBSS	Air	3	SS	915
MM1010WHB	Water	3	P	915
MM1010WHBSS	Water	3	SS	915

Basic Electricals	Minimum Wire Sizes (w-wire) (g-gauge)			Total Amperages		
	SC 1000	SM 1005	MM 1010	SC 1000	SM 1005	MM 1010
Air Cooled						
115/230/60/1	3w 10g	3w 10g	3w 10g	23.1	23.1	23.1
115/208-220/ 60/3	4w 10g	4w 10g	4w 10g	20.1	20.1	20.1
Water Cooled						
115/230/60/1	3w 10g	3w 10g	3w 10g	20.9	20.9	20.9
115/208-220/ 60/3	4w 10g	4w 10g	4w 10g	17.9	17.9	17.9

Specifications subject to change without notice.

INSTALLATION LIMITATIONS

ELECTRICAL

1. Scotsman, like most manufacturers, purchases electrical motors that are rated to operate within 10% variance above or below nameplate ratings.

2. Improper voltages applied to Scotsman equipment can cause premature failures and burnouts. Failures of this type are not considered as factory fault or defect.

AMBIENT

WARNING — This machine is not designed for outdoor installations. This machine will not operate when air temperatures are below 50° F. or above 100° F.

This unit was not fabricated nor intended to be installed outdoors.

WATER

3. Scotsman Ice Systems require 20 pounds flowing water pressure to operate satisfactorily. Pressures lower than 20 pounds or unterruptions in the water supply can cause serious mechanical damage to this product.

This machine will not operate when water supply temperatures are below 40° F. or above 100%F.

INSTALLATION INSTRUCTIONS

The following installation instructions were written for use by a authorized tradesman only, not the user or customer. We suggest you call your local authorized Scotsman Service Agency for hook-up, and check out. He's listed under "Ice Making Machinery & Equipment" in your telephone book, yellow pages.

INSTALLTION

LOCATION OF THE ICE CUBE MACHINE

1. Select a location as convenient as possible for the user.
2. Accessible to the necessary electrical and plumbing connections.
3. If possible, have a minimum space of 12 inches above top and from left end panel for service.
4. A minimum of 24 inches for the convenience of the user in front of the machine.
5. Room temperature--minimum of 50 degrees, maximum of 100 degrees.

ALL INSTALLATIONS--Locate, if possible, so left end panel is accessible. Locate unit so proper circulation can be attained around the unit and behind it at least four inches. Provide plumbing and electrical connections so the unit can be moved out where the entire top can be removed and the unit can still be operated.

KITCHEN INSTALLTIONS--As a rule, the kitchen is not the most practical place to install an air-cooled condensing unit, as grease is almost always present and makes cleaning of the condensing unit difficult. Do not locate near range or steam table or other heating devices that may be used in the kitchen.

STOREROOM INSTALLATIONS--Be sure storeroom is of adequate size and properly ventilated. A small, poorly ventilated room will greatly impair effeiciency of the unit. The storeroom must be kept above 50 degrees in the winter months.

BASEMENT INSTALLTION---Locate machine in the coolest place. Locate the machine in a dry place. Keep away from furnace and boiler room. Keep away from service chutes and runways, also coal or other dust of any kind. If the machine is set over a floor drain, block the machine up enough to eliminate any possibe damage to the machine.

LOCATE THE MACHINE SO IT CAN BE SERVICED WHEN NECESSARY. ALLOW AT LEAST 12 INCHES OF SPACE AROUND THE MACHINE FOR CIRCULATING AIR.

UNCRATING

1. If possible, do not uncrate until equipment is in permanent location.
2. Storage bin and machine compartments are shipped in separate crates.
3. Remove hold-down bolts from skids.
4. Remove crate in usual manner for wood crating.

PREPARATION FOR INSTALLATION

1. Inspect complete unit cabinetry for shipping damage. Notify carrier of concealed damage claims.
2. Remove all service doors and panels.
3. Loosen motor compressor hold down nuts until motor compressor rides freely on mounting springs.

PREPARATION FOR INSTALLATION

5. Remove all masking tape and packing members from curtains and inner cube making compartments. Re-align components such as sump pump or cube racks that may have shifted in transit.

6. Remove water strainer from compressor section for installation on unit or in water supply line feeding unit.

7. Open electrical control box and prepare for hook up. Use knock outs, cord connectors, etc. Then check unit name plate voltage against building source voltage to make sure they correspond. Caution - Improper voltage applied to units will void your warranty protection.

8. Select unit location prior to hook up of water, drain and electric in accordance with local and nation codes, minimum room temperatures 50% Fahrenheit. On air cooled models select well ventilated location.

9. Remove service manual from storage bin and wipe bin clean with damp cloth.

SETTING UP MACHINE

1. Be sure floor strength is capable of 2,000 pounds in an area of 46 inches by 50 inches.

2. If ceiling height permits, use 8 inch base legs for the storage bin which will make a more convenient height for the user and allow more fall from the storage bin drain.

3. Storage bin must be absolutely level. (This is important).

PLACING MACHINE SECTION IN POSITION ON ICE STORAGE COMPARTMENT

1. Remove top and bottom doors on front and back of unit.
2. Extreme caution must be used to prevent damage to equipment or injury to the personel.
3. Weld nuts for attaching carrying handles have been incorporated in each unit. Two in each corner of the front and back, these are 3/8" and spaced 4" x 43 5/8".
4. For carrying handles use 2 x 6's at least 8 feet. This allows 2 feet on each end for hand holds.
5. On the B-700 bin, care should be taken to avoid damaging rubber gasket around opening.

— LIFTING — INSTRUCTIONS

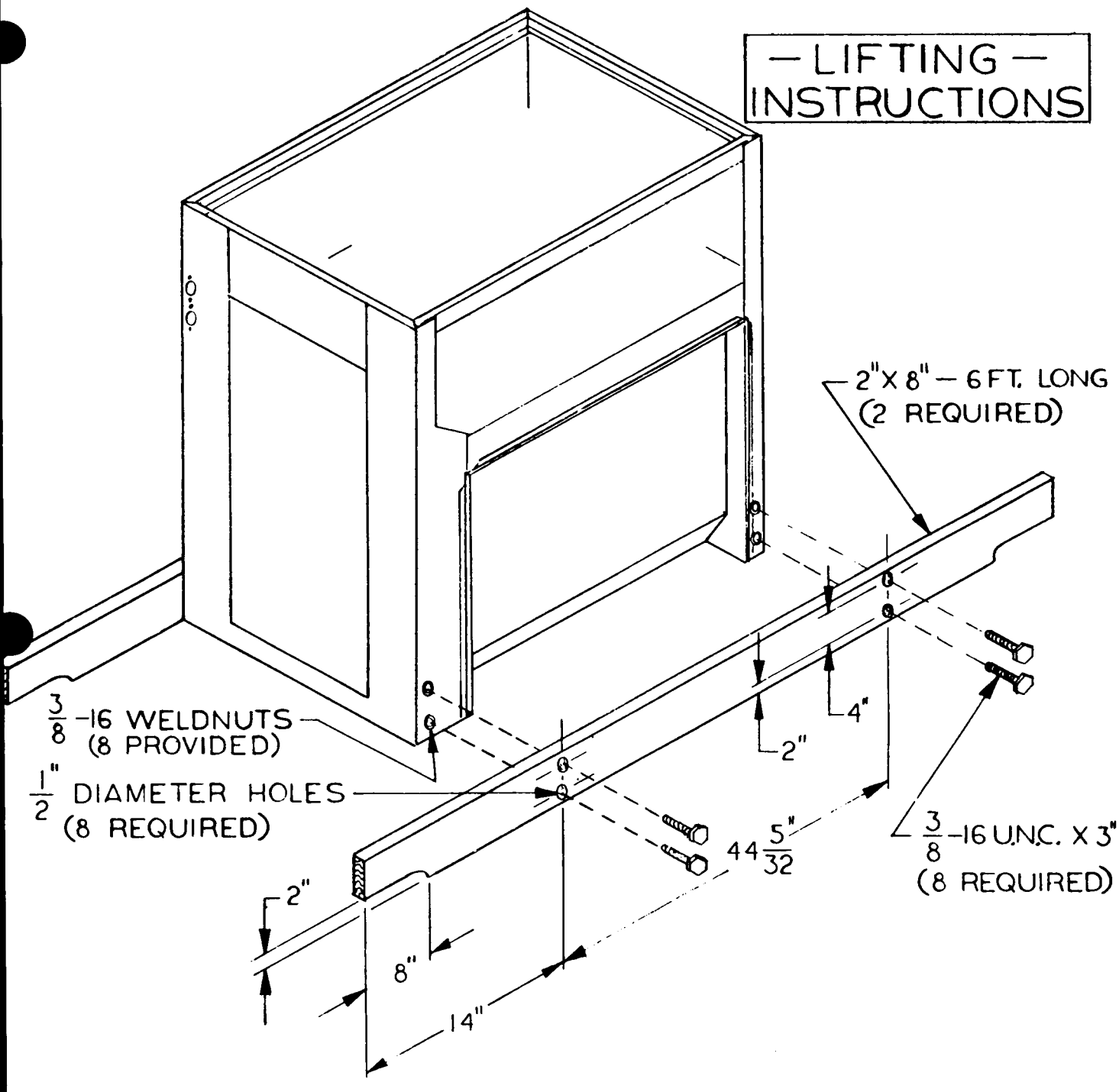

REMOVE DOORS. BOLT THE 2" X 8"S TO THE MACHINE BY MEANS OF EIGHT $\frac{3}{8}$ -16 U.N.C. CAP SCREWS INTO THE WELDNUTS PROVIDED IN THE FRAME.

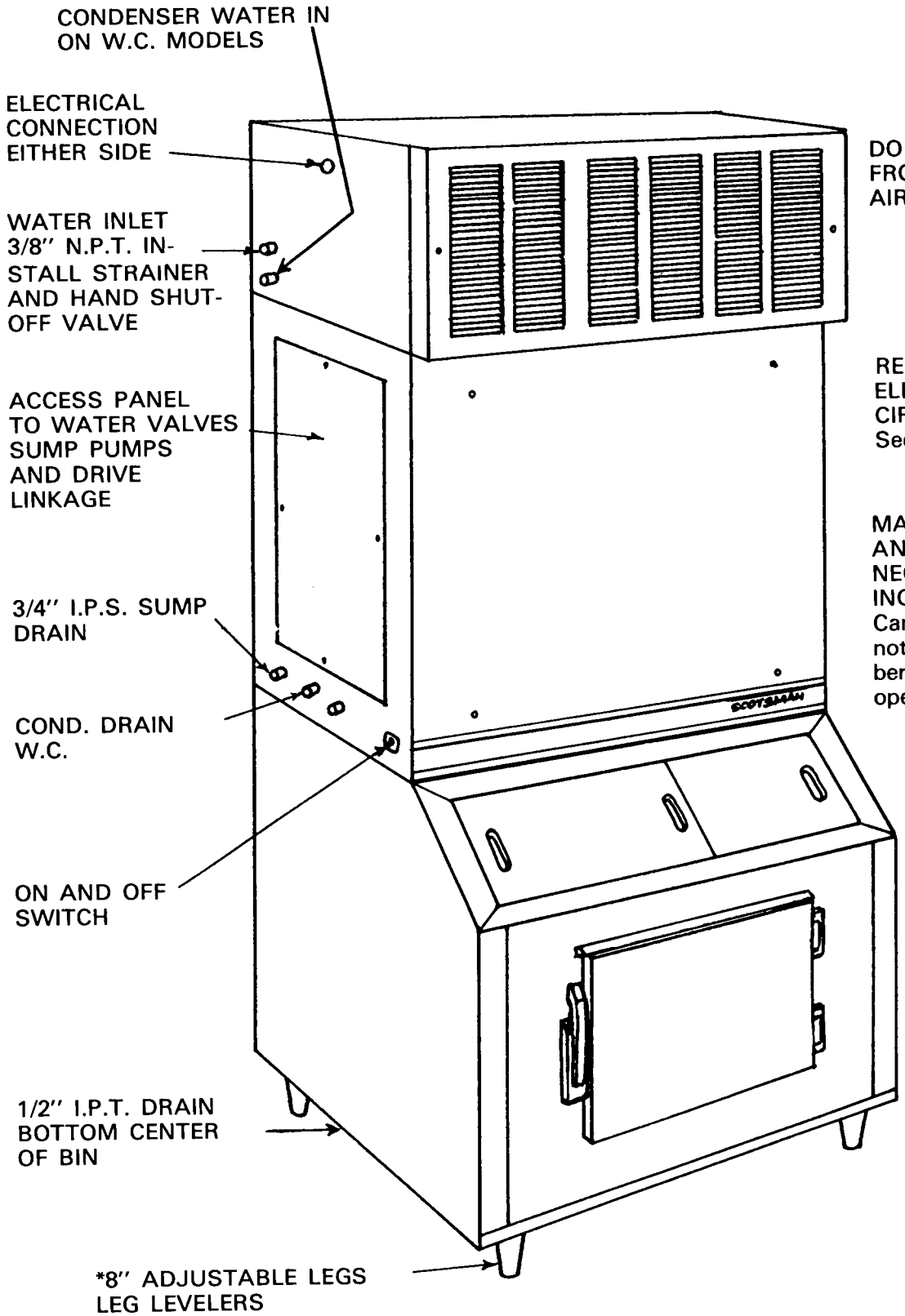

SC-1000 INSTALLATION ON B-700 BIN

* LEGS OPTIONAL

PLUMBING

1. Refer to Installation Diagram.
2. Water inlet should be 3/8" pipe or larger.
3. Strainer should be installed on outside of machine as close as possible to unit.
4. A shut-off valve either of globe or gate type should be installed next to strainer for the convenience of the service man.
5. (SC 1000 is equipped with three separate drains so as to comply with all plumbing codes.)
6. Drain marked sump should be kept 3/4" in size with adequate fall which assures complete emptying of the sump tank at the end of the freezing cycle; and also with enough velocity to remove any sediment or solids which may have accumulated from the preceding batch of ice cubes.
7. Storage drain should be connected to open drain.
8. The drain from the condensor on W.C. units has a slight pressure NOTE: If outlet of conected drain is visible, it is helpful to the service man in checking condensor water valve.

WATER SUPPLY AND DRAIN CONNECTIONS

Page 5 shows recommended water piping connections and drain facitlities for Model SC-1000

WATER SUPPLY

The cuber water supply line is 3/8" N.P.T. for all units. Connect to a cold water supply line with regular plumbing fittings with a shut-off valve installed in an accessibe place between supply line and machine. The water strainer supplied with the unit should be mounted with clean-out plug down. Locate the strainer next to the machine and the arrow in the direction of the flow.

Use care in connecting up water line to the machine. Water supply must be installed to conform with local code.

DRAIN

The recommended drain 3/4" N.P.T. tubing. Sweat to drain connections, must be run to open or trapped drain. If drain is a long run, allow a 1/4" pitch per foot. Drain must be installed to conform with local code. Run separate 1/2" bin drain.

WATER TREATMENT

1. In areas where vast amounts of solids and impurities are present in the water supply, it may be necessary to use some type of filtering equipment on the water that is used in the actual manufacture of the ice and not for the condenser.
2. If above condition is true, it is suggested to disconnect water regulator from present location in machine compartment and connect it to a 3/8" OD copper line which may be run to the filtering equipment.
3. For water treatment over and above normal local impurities, consult Service Dept., Scotsman Queen Products, Albert Lea, Minnesota.

PLACING OF BIN THERMOSTATE BULB IN STORAGE AREA

1. When mounting SC-1000 on B-700, 2 holes for fastening thermobulb are located on the back wall of the bin
2. Control has 12 foot cap tube. This should be brought down right front of freezing chamber, under cuber close to right side.
3. Bulb cover, gasket, and 2 buttons are packed with cuber.
4. When mounting unit on custom-built Bin, bulb should be mounted close to the bottom, back, right-hand corner of the cuber.
5. Bulb should always be mounted so as to not be damaged by scoops or shovels

ELECTRICAL

1. IMPORTANT: An ice machine must be connected by competent electrician.
2. Refer to wiring diagram.
3. SC-1000-4 (115-230/60/1) required 230 volt 3 wire, single phase system.
4. SC-1000-9 (115-208 & 220/60/3) requires 208-220 volt 4 wire, 3 phase system.
5. Compressor operates on higher voltages and components parts on 115 volts only. (Caution: In area where a wild phase is present in the system, it must be kept out of the low voltage circuit.
6. Electrician should be instructed to install proper disconnect switch with a solid neutral.

ELECTRICAL CONNECTION AND CHARACTERISTICS

Standard Voltage 3 Wire 230/60/1

All external wiring should conform with National Underwriters' and local code requirements. Check the voltage on the line before connecting the machine.

Be certain that the cubers are on their own circuit and individually fused. The maximum allowable voltage variation should not exceed 10% of the nameplate rating even under starting conditions. Low voltage can cause erratic operation, and may be responsible for serious damage to the overload switches and motor windings. Do not install 230 volt units on 208 volt supply. If necessary, use boost-back transformer to correct voltage.

208/220/60/3 3 phase 4 wire

Wire according to diagram on machine. All wiring to be done according to local, state and Nation codes.

MANUAL SWITCH

A manual switch is provided on left side of the unit for the convenience of the user when it is desired to shut the unit down for a period of time. When any electrical component parts are being removed or serviced, it is recommended that the line switch be put in the "Off" position.
Manual switch is also located in control box for shutting off compressor while cleaning unit.

FINAL CHECK LIST

1. Is the unit level (IMPORTANT).
2. Have all electrical and piping connections been made?
3. Has the voltage been tested and checked against the nameplate rating?
4. Have the compressor hold-down bolts been loosened so the compressor rides freely on its mounting springs.
5. Is the water supply valve open and the electric power on?
6. Is the water pressure adequate but not over 50# P.S.I.?
7. Is the unit clean?
8. Has the owner been given the operating manual, and has he been instructed on how to operate the machine?
9. Have the installation date sent to factory. This is the owner's protection as well as the sellers.
10. Check all the refrigerant and conduit lines to guard against vibration and possible failure.
11. Is there 12" clearance behind and around unit for proper air circulation?
12. Is unit in a room where ambient temperatures are minimum 50° F., even in winter months?

HIGH PRESSURE CONTROL W.C. MODELS

A high pressure control is provided to shut down the complete unit in case of extremely high head pressures or interrupted water supply. Some models are equipped with a lock-out type, and the unit will remain off until the control is reset manually. (To reset, press down small plunger on top of control.) The high pressure control should be set at 185 pounds.

START UP

1. Make sure all service valves on the condensing unit are backseated and turned as far as possible to the left. Replace the valve caps after checking the valves.
2. Make sure that the flow of air is not impeded in any way over condenser on air-cooled models. Keep condenser clean, (Check and clean the condenser monthly.)
3. Turn on cube water supply at hand shut-off valve. Make sure water pressure does not exceed 50# p.s.i. pressure. If necessary, install water pressure regulator to reduce pressure to approximately 50 pounds.
4. Remove cover from control box, check for loose or frayed wire, then turn compressor switch to "on" position. Also on off switch left side of unit.
5. Turn disc on time clock to the right just far enough for water solenoid valve to energize. Allow clock to take it through harvest cycle. This will be approximately 2 1/2 minutes. (Figures on dial represent minutes.) Dial pointer should be set on Number 2-1/2. After the compressor starts, turn the dial completely around and send it through another harvest cycle. Do this several times. This will completely flush out machine of any dust that may have accumulated in shipment.
6. After the machine has been properly flushed, allow it to go into a freezing cycle--check for possible water leaks, check sump pump operation--should be running freely. Also note if jet tube travel is correct, and that none of the jets are plugged. Jet spray of water should hit the middle of the cup.
7. Time clock dial does not rotate at the end of the harvest cycle; it is started later by the cube size control located in the control box.
8. Freezing time will be approximately 30 minutes in a 70 degree ambient. (Longer if above, and shorter if below.)
9. Watch first cube harvest and check to make sure that plastic curtain has not been damaged in shipment.
10. Check texture of cubes made: Partially cloudy cubes throughout suggest unit running short of water near end of freezing, or possible an extremely bad water condition, which would indicate use of filtering or purifying equipment. Contact SCOTSMAN - Queen Products, Ice Machine Service Department, Albert Lea, Minnesota, For further details..
11. With unit on harvest cycle, take a handful of cubes made and hold on storage bin thermostat cover. Should cut unit off in one to two minutes--remove ice; unit should cut back on automatically. Thermostat is factory set at 35° out, 39° in.
12. Install gauges and check head and back pressures; on air-cooled models head pressure after twenty minutes of freezing cycle at 70° ambient will be approxmately 150 pounds p.s.i. back pressure gradually pulls down to approximately 4 pounds p.s.i. just before harvest cycle. Higher ambients will cause higher head pressure.
13. Remove gauges, replace control box cover and all service panels.

WIRING DIAGRAM

230/60/1
Air Cooled

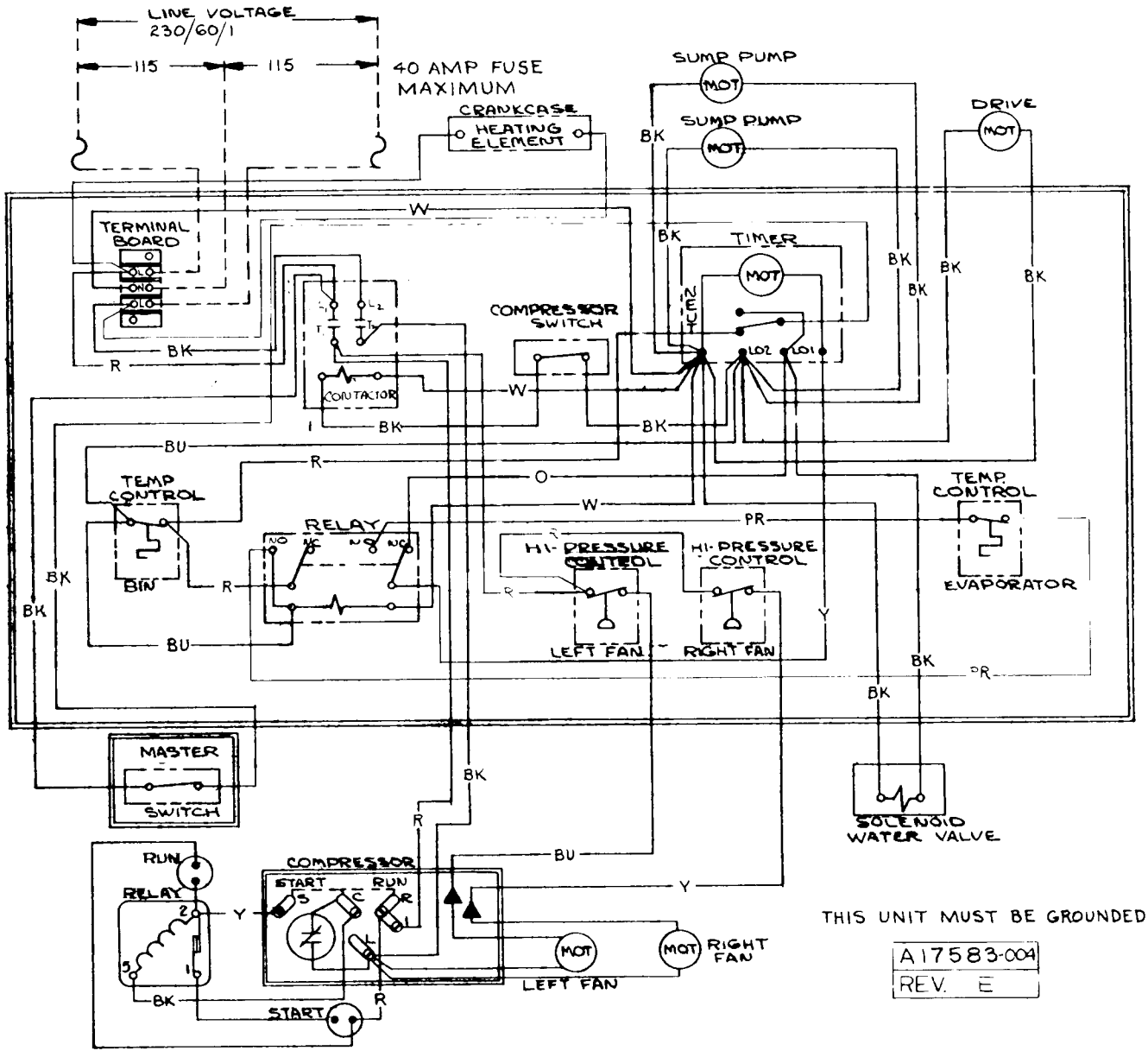

THIS UNIT MUST BE GROUNDED

A17583-004
REV. E

WIRING DIAGRAM

230/60/1
Water Cooled

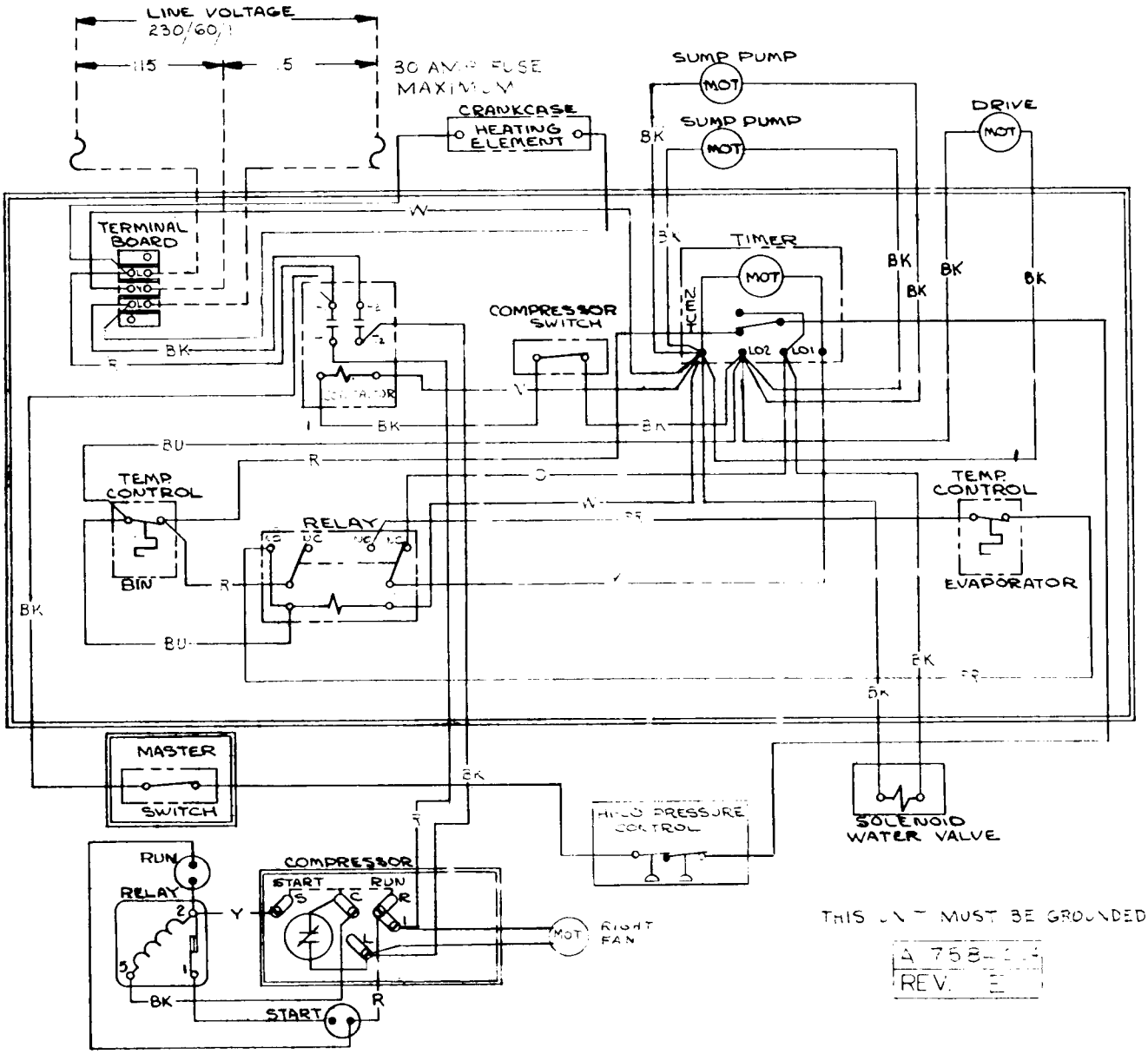

WIRING DIAGRAM

208-220/60/3

Air Cooled

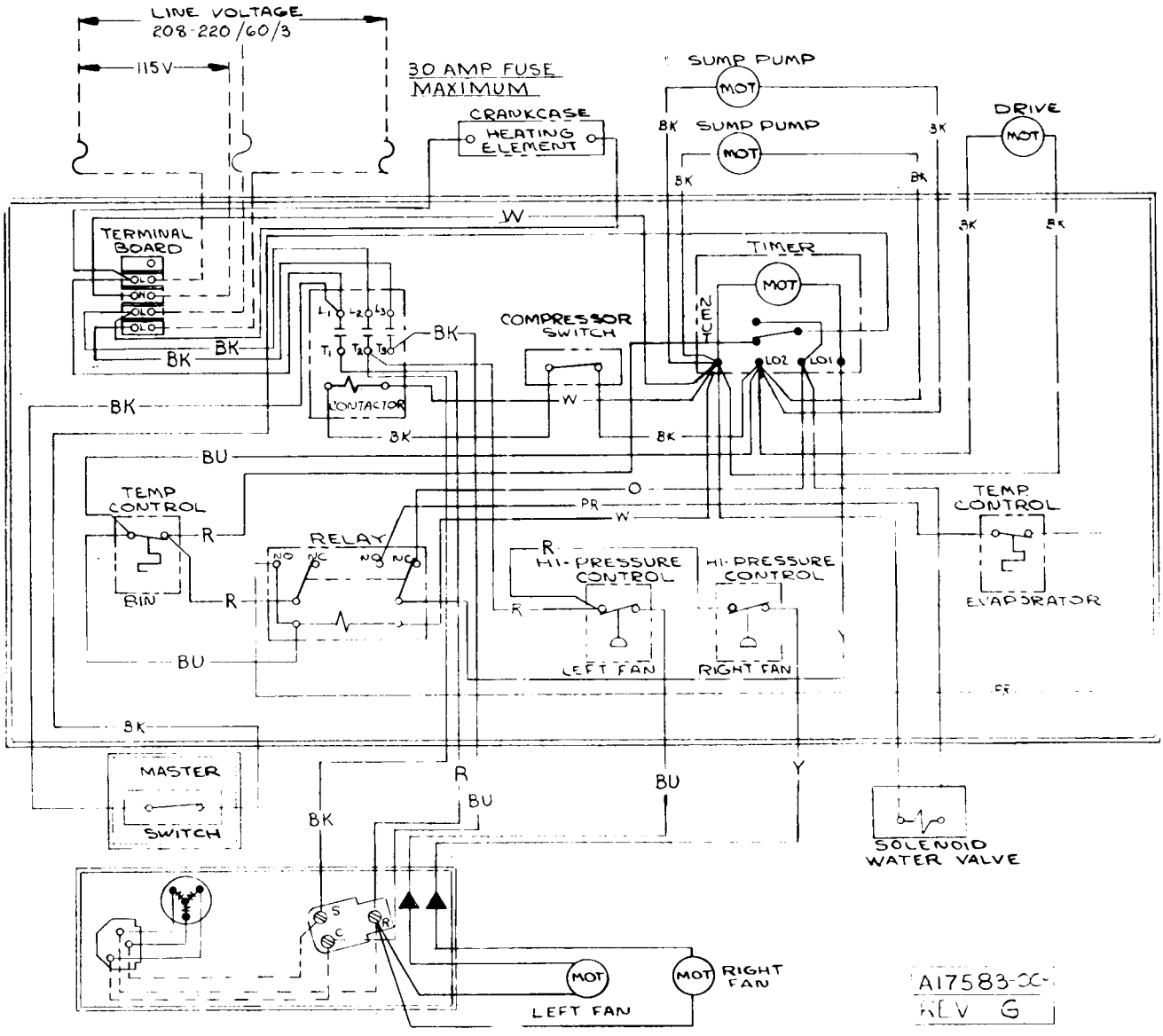

WIRING DIAGRAM
208-220/60
Water Cooled

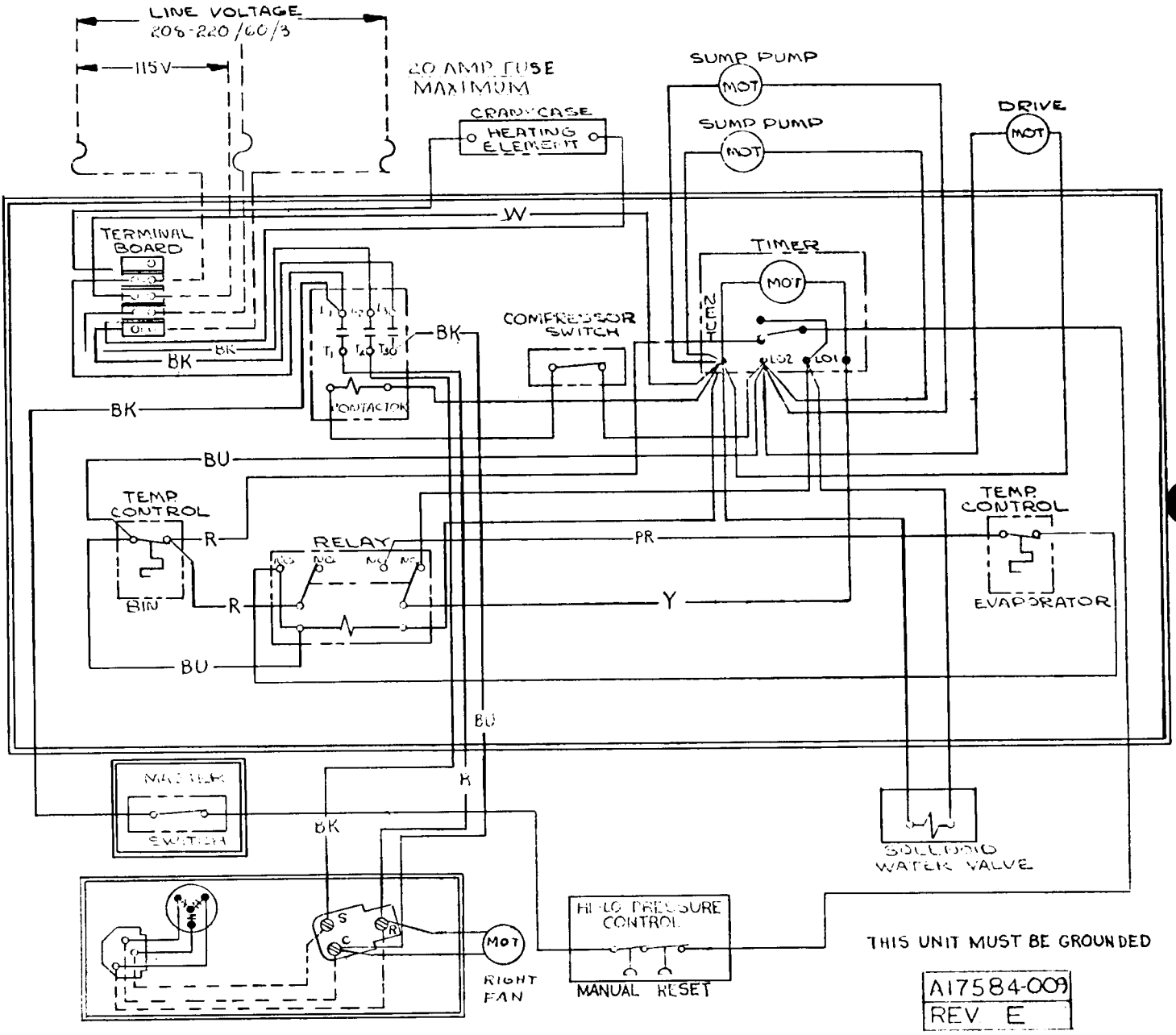

A-17584-009
REV-E

WIRING DIAGRAM

208/60/1
Air Cooled

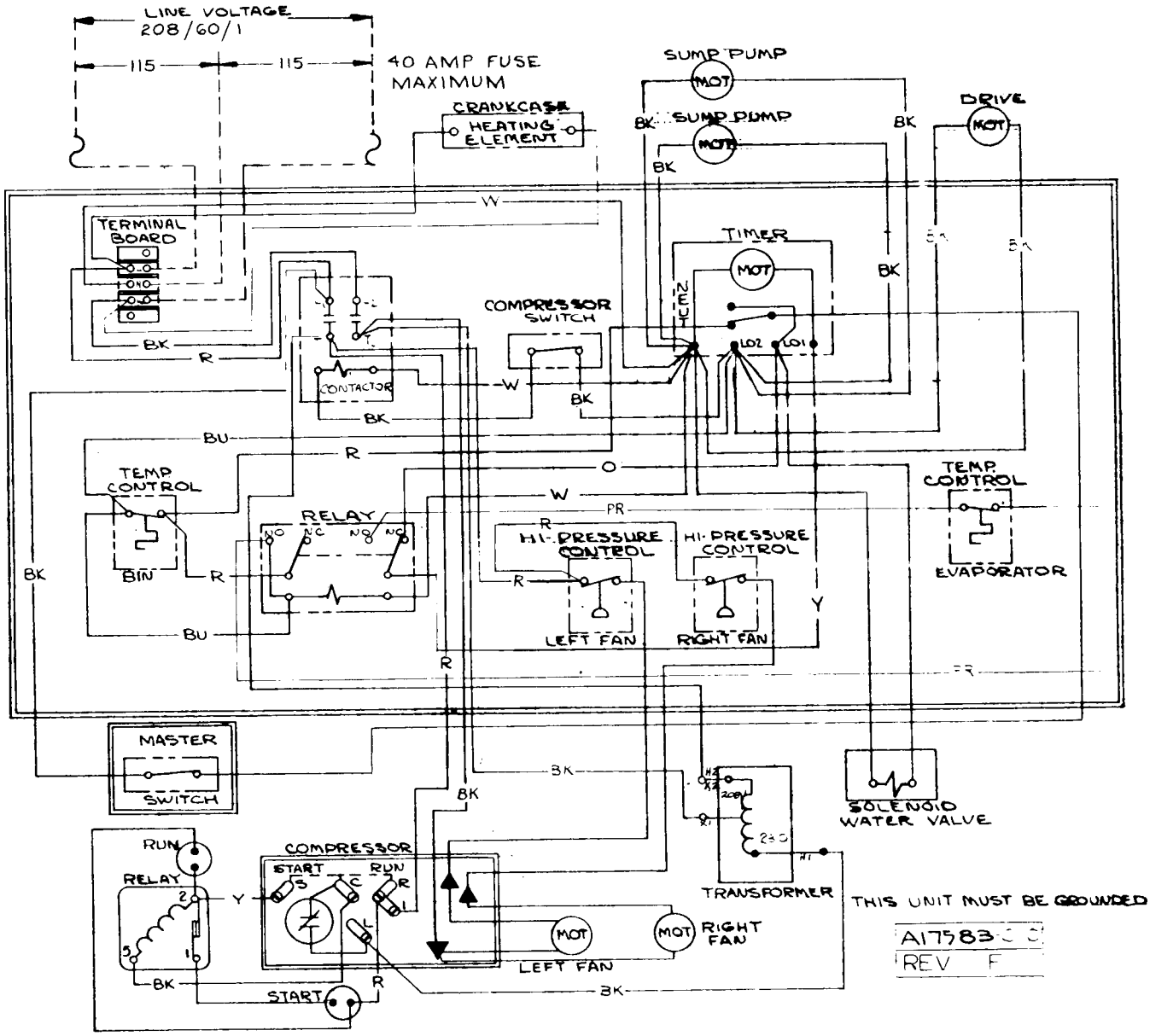

WIRING DIAGRAM
208/60/1
Water Cooled

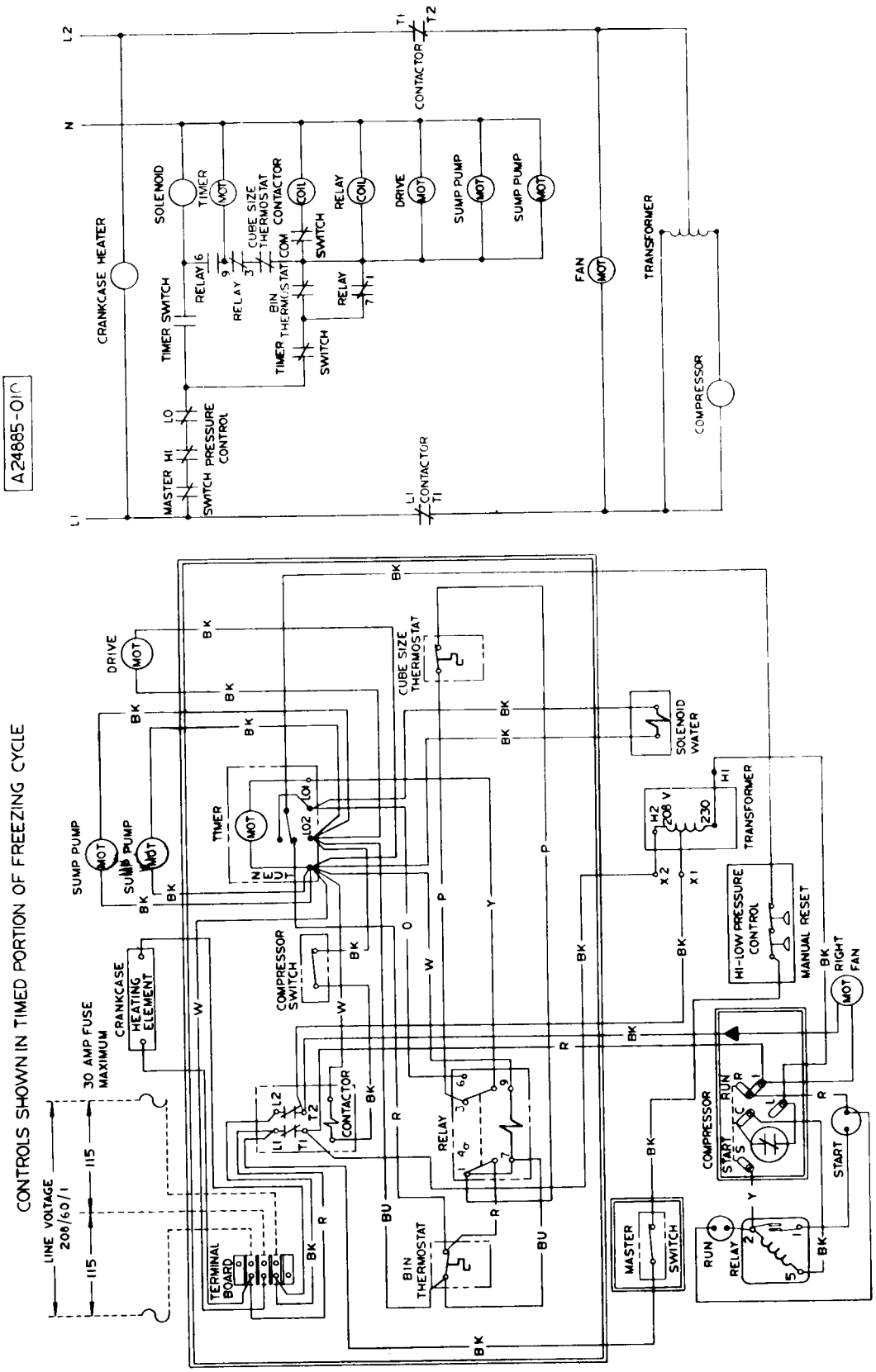

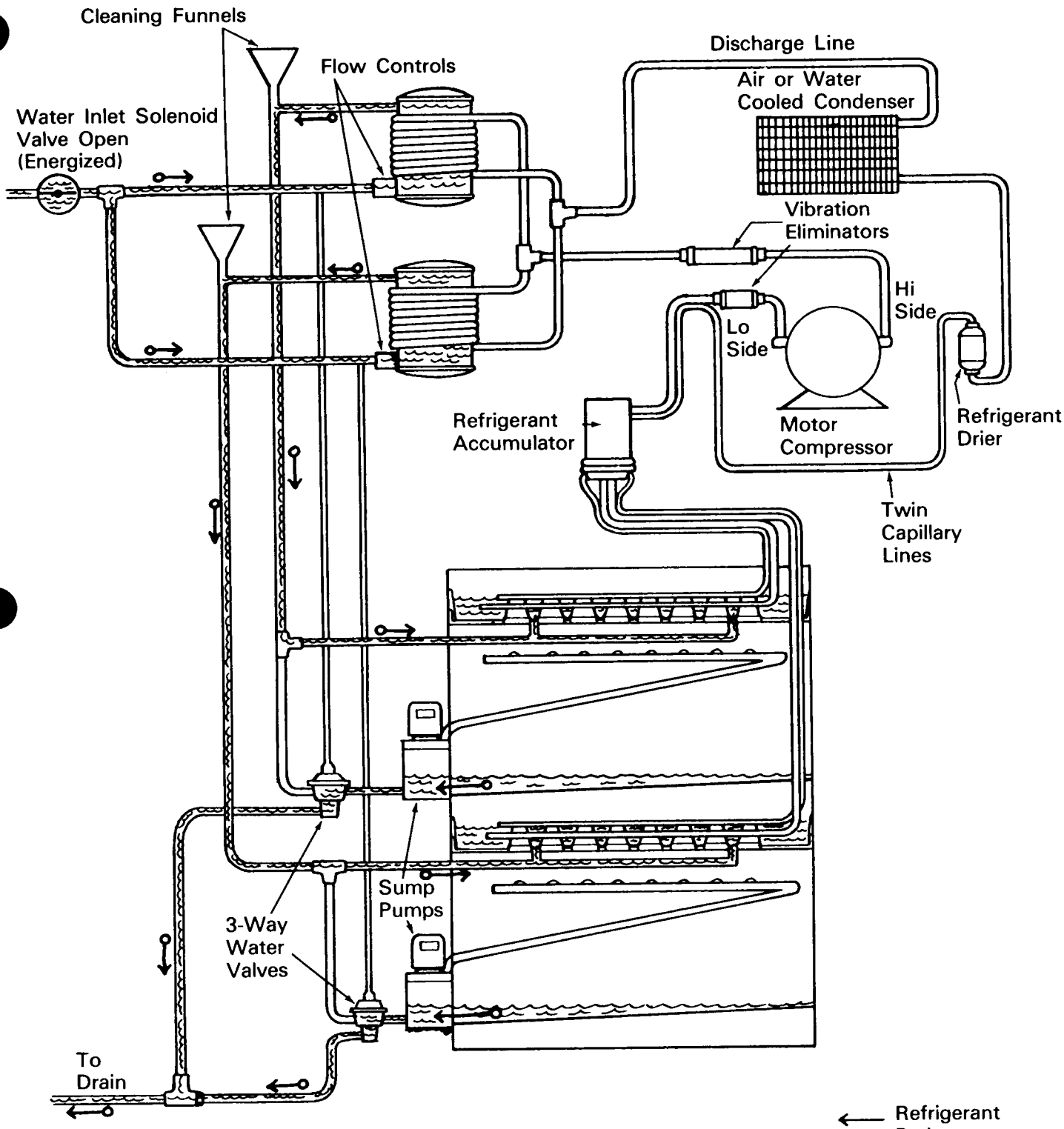

WATER-REFRIGERANT SCHEMATIC
SC-1000
HARVEST CYCLE

HARVEST

With master switch (on left side of unit) and compressor switch (in main control box) in the on position turn timer manually to the harvest position. This energizes water inlet solenoid valve allowing water to flow thru flow contols into heat exchanger tanks. This inlet water pressure forces water out of tanks and also actuates 3-way water valves which in turn allows water to flow into upper cavity of freezing chambers and surplus water from preceeding batch of ice cubes to go down the drain. The platen cavity is completely filled up to the overflow point,and continues to overflow while in the defrost cycle; the amount of this water running over the overflow pipe is controlled by the flow control device and the length of harvest time setting on the time clock; overflow water goes down the drain also. Meanwhile, cubes being released from the cups drop by gravity into cubes chute, through curtained opening into storage bin. At completion of harvest cycle, micro-switch on the timer now drops points holding defrost components in cycle and switches to freezing cycle set of contacts. Clock motor now stops and will not start until cube size control closes once more. As the new freezing cycle starts, note that our inlet solenoid closes. Since water enters heat exchanger tank on bottom and flows out through top, this insures full tank for the next cycle. The chilled water from the upper cavity flows by gravity through the water valve to the sump tank and resevoir. This water is used produce the next batch of cubes.

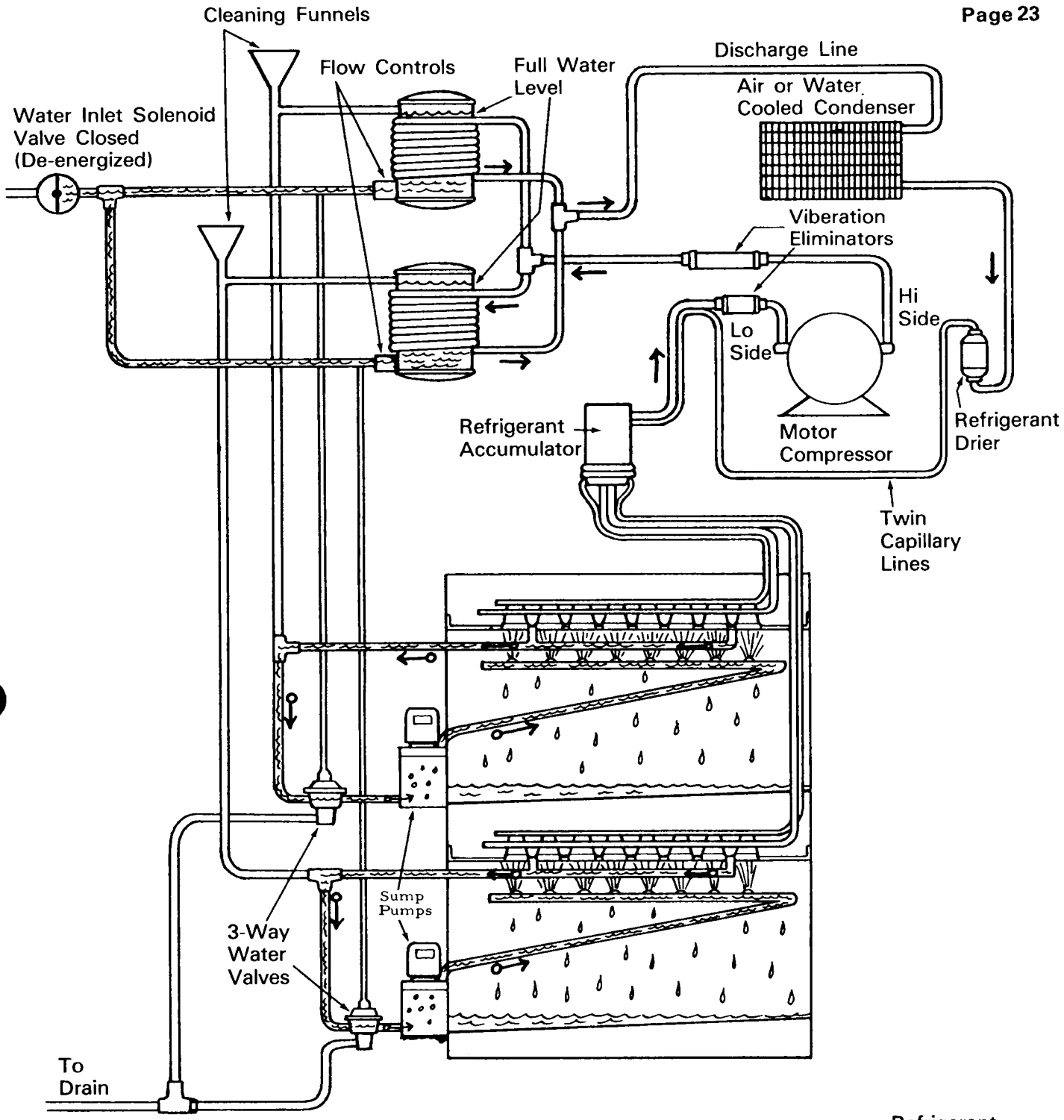

WATER-REFRIGERANT SCHEMATIC
SC-1000
FREEZING CYCLE

FREEZING CYCLE

At the start of the freezing cycle, sump tank contains enough water to make a complete batch of ice cubes, plus approximately an extra gallon. When time clock closes load circuit, it starts the compressor, sump pump and spray bar motor. At the same time, it opens circuit to clock motor. (Clock motor does not run first part of freezing cycle--this is approximately 20 minutes.) This timer has an arrangement for carrying and directing current. After a predetermined amount of ice is frozen, the cube size or reverse acting temperature switch closes, actuating the time clock motor circuit which continues the freezing cycle approximately 9 more minutes. (After clock motor starts, freezing time will be 12 minutes less defrost time setting.) At the end of the 9 minute period, time clock operated cam opens compressor, sump pump and drive circuit, and closes circuit to time clock motor.

NOTE:

Harvest water is used to make next batch of ice, therefore on initial start up unit must be in a defrost cycle. This can be done by manually operating timer.

SERVICE ANALYSIS

Symptom	Possible Cause	Suggested Correction
1. unit will not run	Power off	Check main switch, fuses and wiring.
	Manual switch in off position.	Check
	High pressure control locked out.	Reset. (Water cooled models)
	Ambient temperature of room too low.	Must be above 50° .
	Bin controls set too high.	Set approximately 35° cut out, 39° cut in.
2. Compressor cycles intermittently.	Low voltage	Check with volt meter.
	Air in system causing high head.	Purge system.
	Shortage of refrigerant	Check frost line and operating pressure.
3. Cubes small. (short cycle)	Cube size control not properly set.	Set control to colder
	Moisture in system	Purge charge, evacuate, change dryer, & re-charge
	Short of water because too low setting on water supply.	Increase pressure, new lines or larger lines.
	Lower drain valve in sump tank leaking	Flush or remove and clean.
	Sump tank stand pipe not properly seated.	Check and re-seat
4. Cubes small. (long cycle)	Shortage of refrigerant	Check frost line and charge as required. Check for system leaks.

SERVICE ANALYSIS		
Symptom	**Possible Cause**	**Suggested Correction**
5. Cubes too large. (slow defrost)	Very small shortage of refrigerant.	Check frost line, charge as required.
	Cube size control set too low.	Reset to warmer setting.
6. Cubes cloudy	Drain valve and sump tank leaking, loosing water.	Check during freeze cycle jet tubes plugged, clean all jets.
	Curtains damaged or binding.	Repair or replace
	Restriction in incoming water.	Check at strainer and flow controls
	Screen plugged on bottom of sump pumps.	Remove and clean.
7. Irregular cubes. (some clear, some cloudy)	Clogged jets in jet tubes.	Remove & Clean
	Cube slides interfering with jets.	Adjust
8. Improper harvest	Time clock not set properly.	Reset on 2 1/2 Minutes
	Incoming water restricted.	Check water lines, etc.
	Solenoid valve leaking. (Hot water tank)	Check during freeze cycle
	Head pressure too low.	Adjust regulator on water cooled units.
		Check fan cycling on air cooled units.

SERVICE ANALYSIS

Symptom	Possible Cause	Suggested Correction
8. Improper harvest (Cont'd.)	Machine not level. (Allow water to stand in upper cavities and freeze.)	Level machine.
9. High head pressure	Over-charge of refrigerant.	Purge
	Air in system	Purge
	Defective water regulating valve.	Replace
	Burned out or stuck fan motor(s) air cooled	Replace or oil as needed
	Water valve improperly adjusted.	Readjust to desired head. Water cooled models 135# p.s.i.
	Incoming water restricted.	Check screens, lines, etc.
10. High suction	Dirty or plugged condenser. Air cooled.	Blow condenser clean
	Ineffeicient compressor	Check with gauges and replace valve plate if necessary.
	Overcharge of refrigerant.	Check frost line and high back pressures purge off excess.
11. Low suction pressure.	Restricted dryer.	Check back pressure and replace drier if necessary
	Moisture in system.	Blow charge, replace drier evacuate system and recharge per name plate specs.

Symptom	Possible Cause	Suggested Correction
11. Low suction pressure. (Cont'd.)	Extreme shortage of refrigerant.	Add refrigerant. Check and correct system leaks.
	Ambient temperatures too low. Air cooled.	Increase ambient to minimum 50° F.
12. Unit noisy.	Hold-down bolts on compressor not loosened.	Turn up until unit is free.
	Refrigernat lines vibrating.	Straigten
	Compressor short of oil.	Check oil level. Proper level 1 1/2 inches below crankcase port, or 1/2 of sight glass bullseye on compressor.
	High head pressures.	Check with gauges. Purge if necessary.
	Shroud touching fan blades on air cooled models.	Reposition shroud

SC-1000 H
Front View

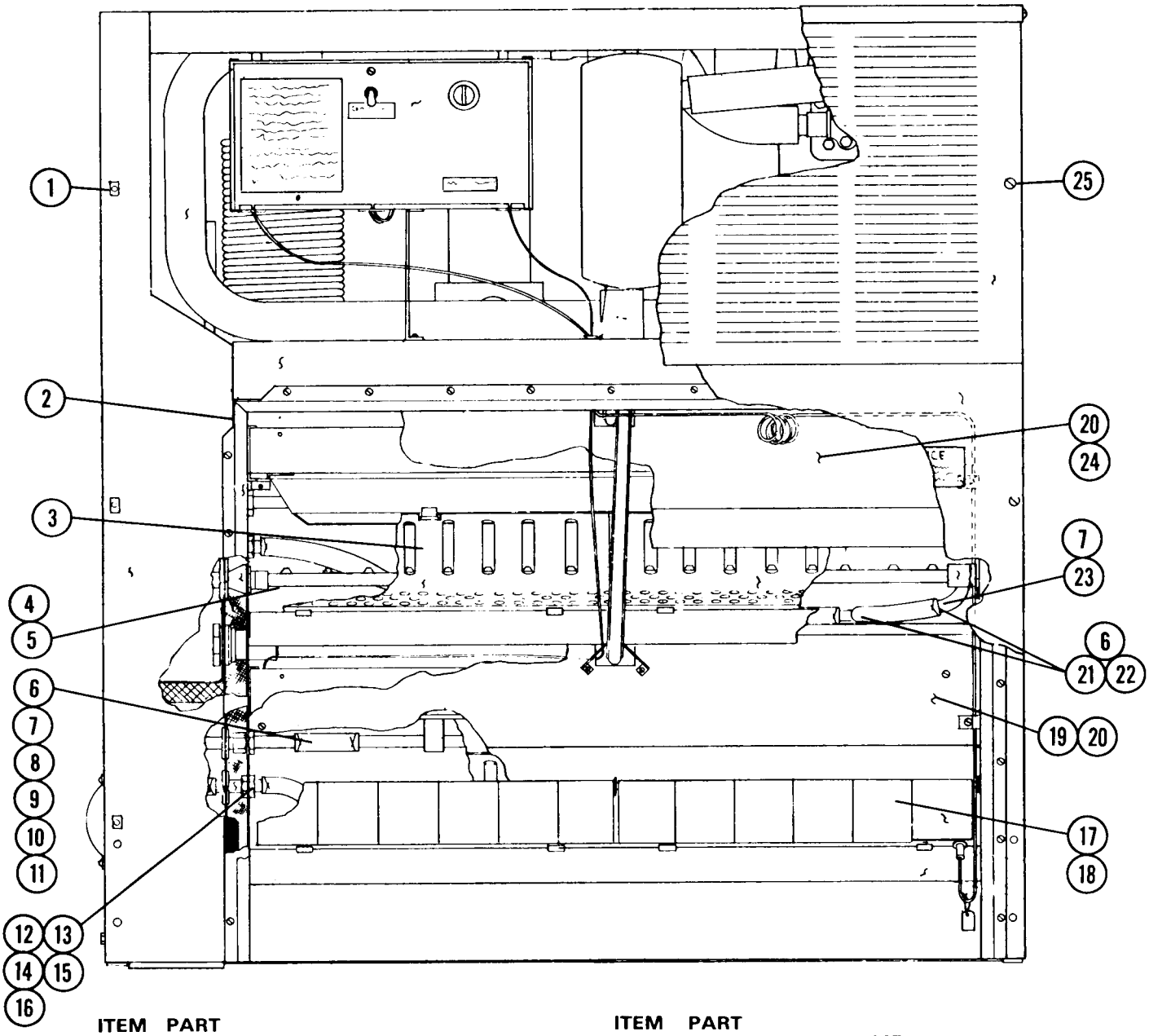

ITEM NO.	PART NO.	NAME
1.	03-1029-00	Nut (2 reqd.)
2.	A18165-000	Door Gasket (2 reqd.)
3.	A17573-000	Chutes (8 reqd.)
4.	A13815-001	Platen & Cup Assy. (2 reqd.)
5.	13-0314-00	Rubber Cupholder only (2 reqd.)
6.	13-0674-07	Tygon 3/4" I.D. Per Foot
7.	02-1358-00	Hose Clamps 3/4"
8.	A18004-000	Inlet Water Assy.
9.	13-0617-02	"O" Ring
10.	13-0327-00	Grommet
11.	A13796-000	Inlet, Inner Assy.
12.	A18174-000	Inlet, Spray Bar
13.	A18172-000	Nut, Inlet Tube
14.	A18173-000	"O" Ring Nut
15.	13-0617-05	"O" Ring

ITEM NO.	PART NO.	NAME
16.	13-0169-00	Grommet
17.	A17243-000	Cutain Assy. (4 reqd.)
18.	03-0727-000	Thumb Screw (curtain)
19.	A17604-000	Face Plate, Lower
20.	03-1404-10	S.S. Screws
21.	02-0536-01	Hose Clamps
		TEE 5/8 x 5/8 x 3/4
23.	13-0674-06	Tygon Tube 5/8" Per Ft.
24.	A17603-000	Face Plate, Upper
25.	03-1418-22	Screws (12 reqd.)
		IN PACKAGE
	A15759-000	Bulb Cover
	13-0590-00	Gasket
	A16108-000	Bulb Holder Buttons

SC-1000 H
Left Side View

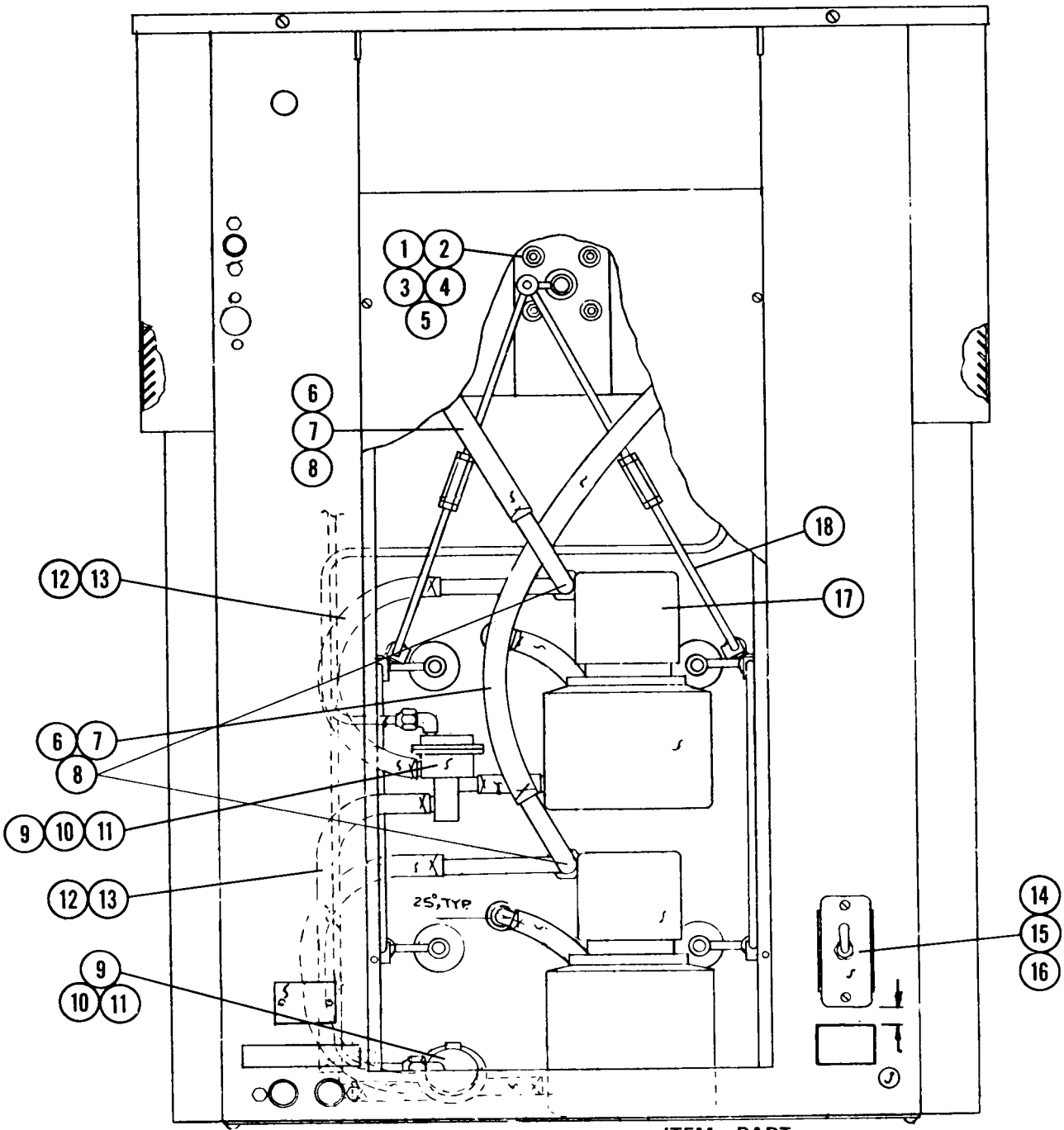

ITEM NO.	PART NO.	NAME
1.	A23392-001	Drive Motor
2.	13-0100-00	Grommet (4 reqd.)
3.	03-1403-22	Screw (4 reqd.)
4.	03-1406-03	Nut (4 reqd.)
5.	03-1407-04	Washer (8 reqd.)
6.	13-0674-07	Hose 3/8" I.D. per foot
7.	02-1358-01	Hose Clamps 3/4"
8.		Tank Outlet
9.	A19722-000	3 way Water Valve
10.	03-1403-28	Screws (4 reqd.)
11.	03-1417-05	Lockwashers (4 reqd.)
12.	02-0536-00	Hose Clamp
13.	13-0674-10	Tygon Hose 7/16 per ft.
14.	12-0426-00	Switch
15.		Switch Plate
16.		Switch
17.	12-1395-01	Sump Pump
18.	A17569-000	Drive Linkage Complete

SC-1000 H, WATER COOLED

Top View

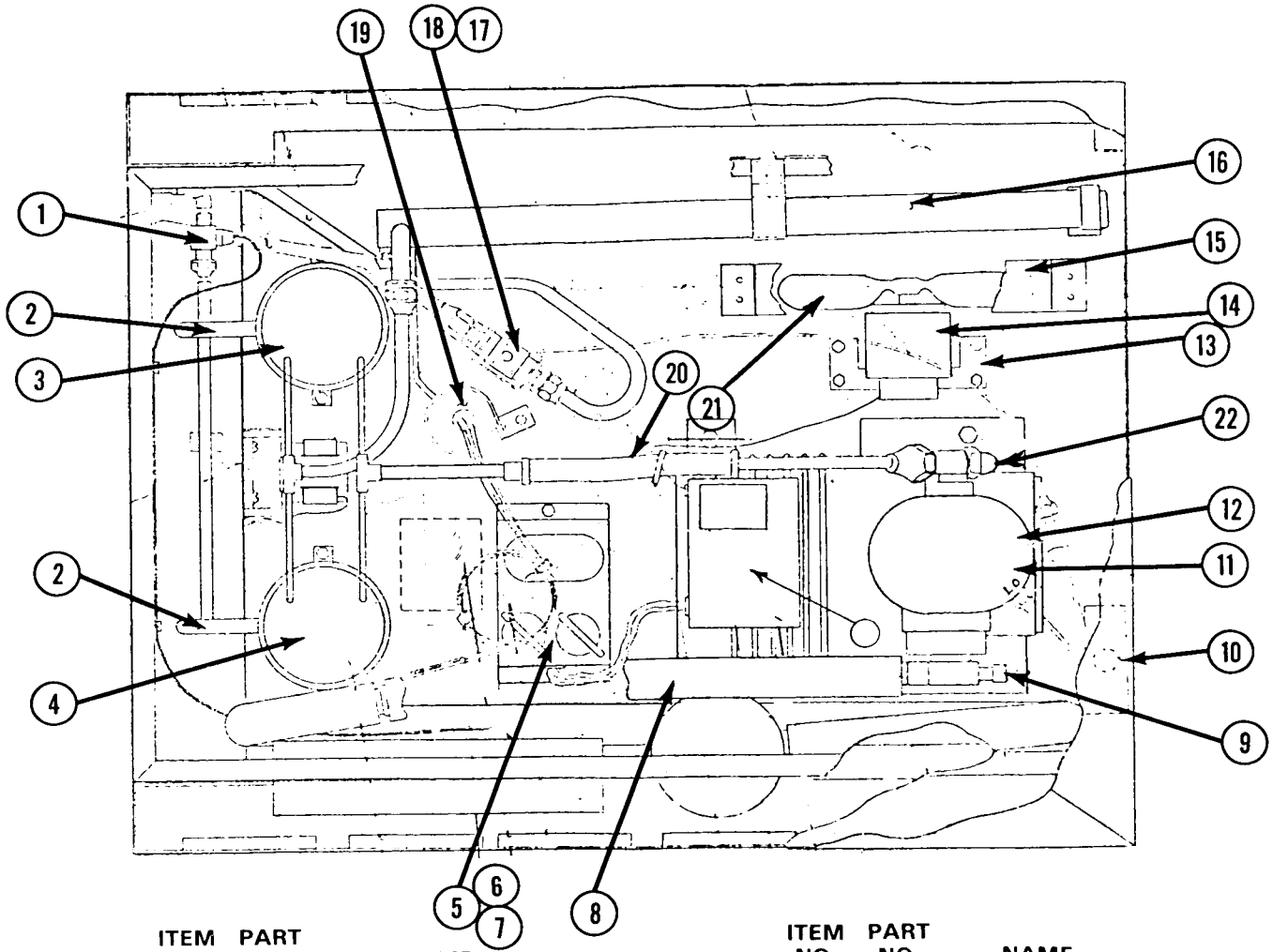

ITEM NO.	PART NO.	NAME
1.	12-0621-G1	Solenoid Valve
2.	A13346-006	Flow Control
3.	A17836-000	Rear Water Tank
4.	A17837-000	Front Water Tank
5.	18-1901-27	Starting Capacitor
6.	18-1405-00	Overload
7.	18-1903-26	Relay
8.	16-0326-00	Flexible Line
9.	18-1410-00	Suction Service Valve
10.	11-0286-00	Hi-Lo Press Control
11.	18-1400-02	Compressor 115/230/60/1
	18-1400-03	Compressor 115/208-220/60/3
	18-1400-02	Compressor 115/208/60/1

ITEM NO.	PART NO.	NAME
12.	18-1415-00	Valve Plate Kit
13.	18-1421-00	Fan Bracket
14.	18-0788-02	Fan Motor 115/230/60/1
	18-0788-07	Fan Motor 115/208/220/60/3
15.	A24927-001	Fan Shroud
16.	18-1422-00	Condensor
17.	11-0198-01	Water Regulating Valve
18.	A18500-000	Regulator Bracket
19.	02-0822-00	Dryer
20.	16-0247-00	Vibration Eliminator
21.	18-0787-00	Fan Blade
22.	18-1411-00	Discharge Service Valve

SC-1000 H, AIR COOLED

Top View

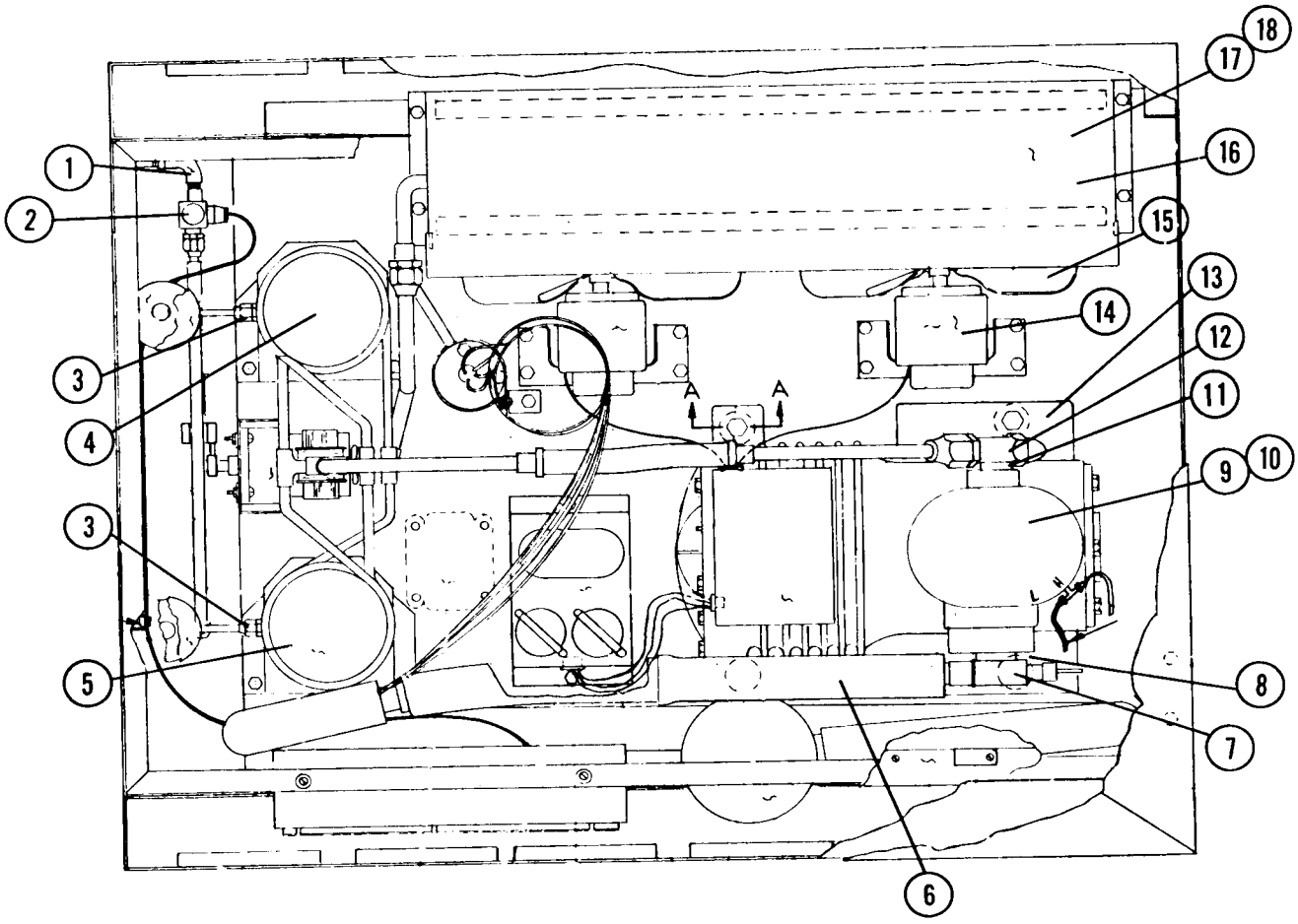

ITEM NO.	PART NO.	NAME
1.		Street Elbow
2.	12-0621-G1	Solenoid Valve
3.	A13346-00	Flow Control
4.	A17836-000	Rear Water Tank
5.	A17837-000	Front Water Tank
6.	16-0326-00	Flexible Line
7.	18-1410-00	Suction Serv. Valve
8.	18-0736-00	Suction Serv. Valve Gasket
9.	18-1400-02	Compressor 115/230/60/1
	18-1400-03	Compressor 208/220/60/3
10.	18-1415-00	Valve Plate Kit
11.	18-1411-00	Discharge Serv. Valve
12.	18-0242-00	Discharge Valve Gasket
13.	18-1929-01	Crank Case Heater*
14.	18-0788-02	Fan Motor
15.	18-0787-00	Fan Blade
16.	18-0399-01	Condensor
17.	A13860-000	Shroud Assy.
18.	03-1404-15	Shroud Fasteners (6)
19.	16-0247-00	Vibrator
20.	18-1405-00	Overload 230/60/1
21.	18-1901-26	Starting Capacitor
22.	18-1902-20 (2 reqd.)	Running Capacitor 13/52
23.	18-1903-26	Relay
24.	02-0822-00	Dryer
25.	18-1406-00	Overload 208-220/60/3

(*) Not Shown

SC-1000 LINKAGE ASSEMBLY
A-17569-000

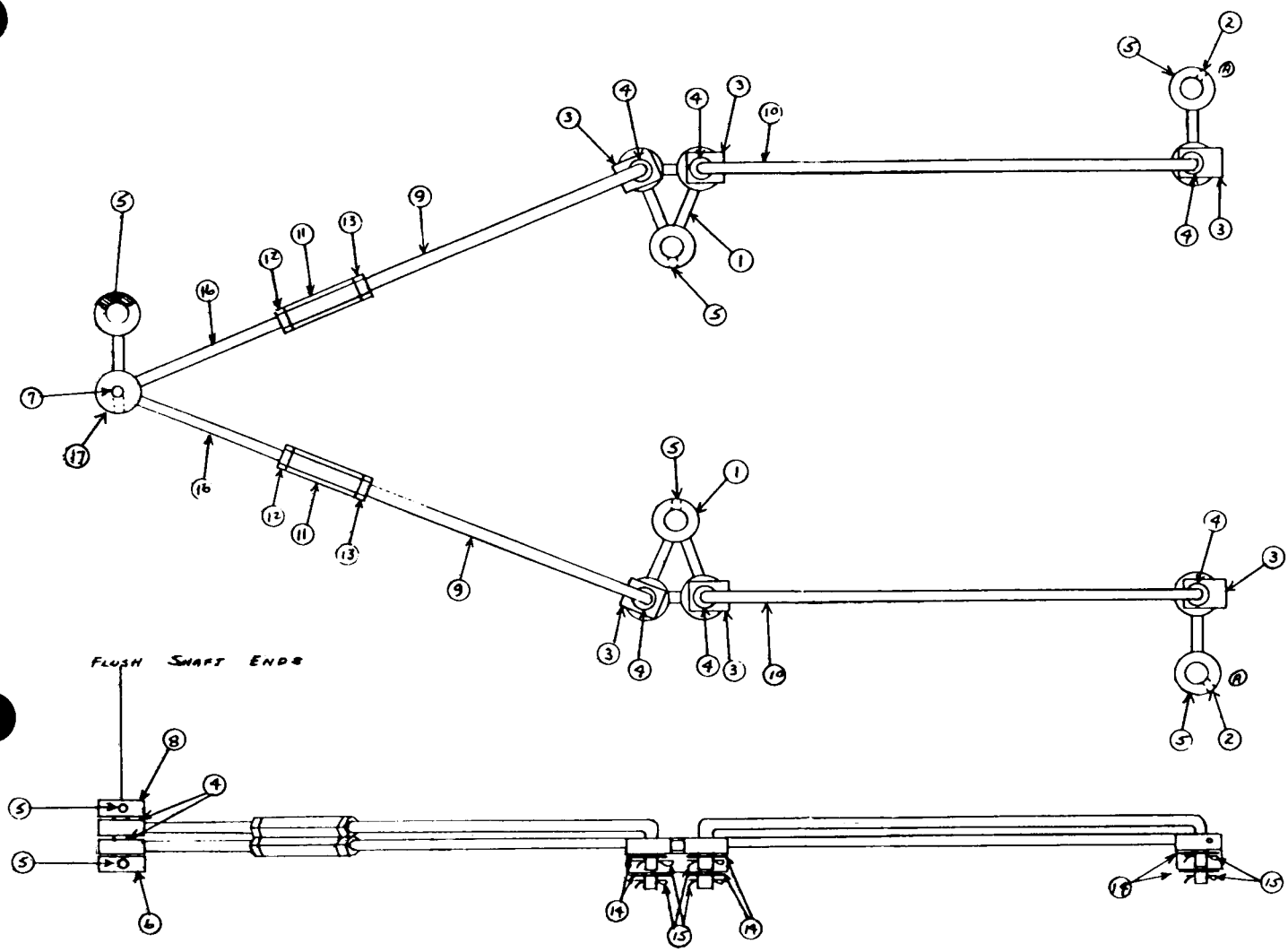

ITEM NO.	PART NO.	NAME
1.	A17233-000	Double Drive Arm
2.	A17232-000	Drive Arm
3.	S07558-000	Bearing Clip
4.	02-0654-01	Bearing
5.	03-0431-00	Set Screw
6.	A18948-000	Motor Drive Arm
7.	A13849-000	Shaft
8.	A13848-000	Arm End
9.	S07938-000	Right Linkage
10.	A17568-000	Lower Linkage
11.	S07936-000	Kinkage Coupling
12.	S07937-000	Left Linkage Nut
13.	03-1407-05	Washer
14.	03-0396-01	Cotter Pin
15.	A13850-000	Linkage Upper Assy.
16.	A18948-000	Motor Drive Arm
*	A17569-000	Complete Linkage

SUMP PUMP
SC-1000

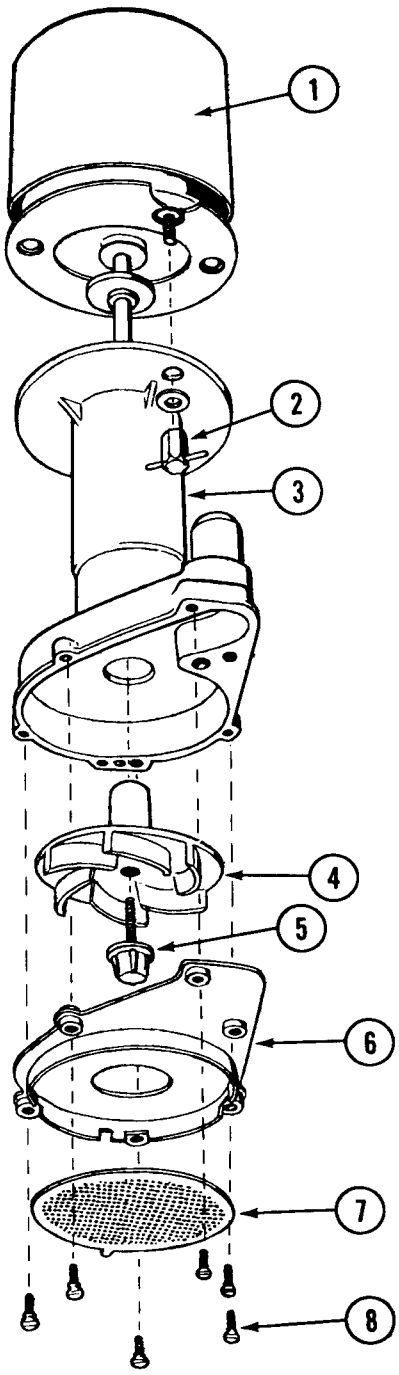

ITEM NO.	PART NO.	NAME
1.	12-1395-32	Motor Only
2.	12-1351-32	Wing Hex Nuts
3.	12-1351-30	Pump Body
4.	12-1351-21	Impellar and Spring
5.	12-1351-31	Impellar Screw and Gasket
6.	12-1351-27	Bottom Inlet Plate
7.	12-1351-26	Inlet Screen
8.	12-1351-29	Wing Screws
	12-1395-01	Complete Pump

CONTROL BOX

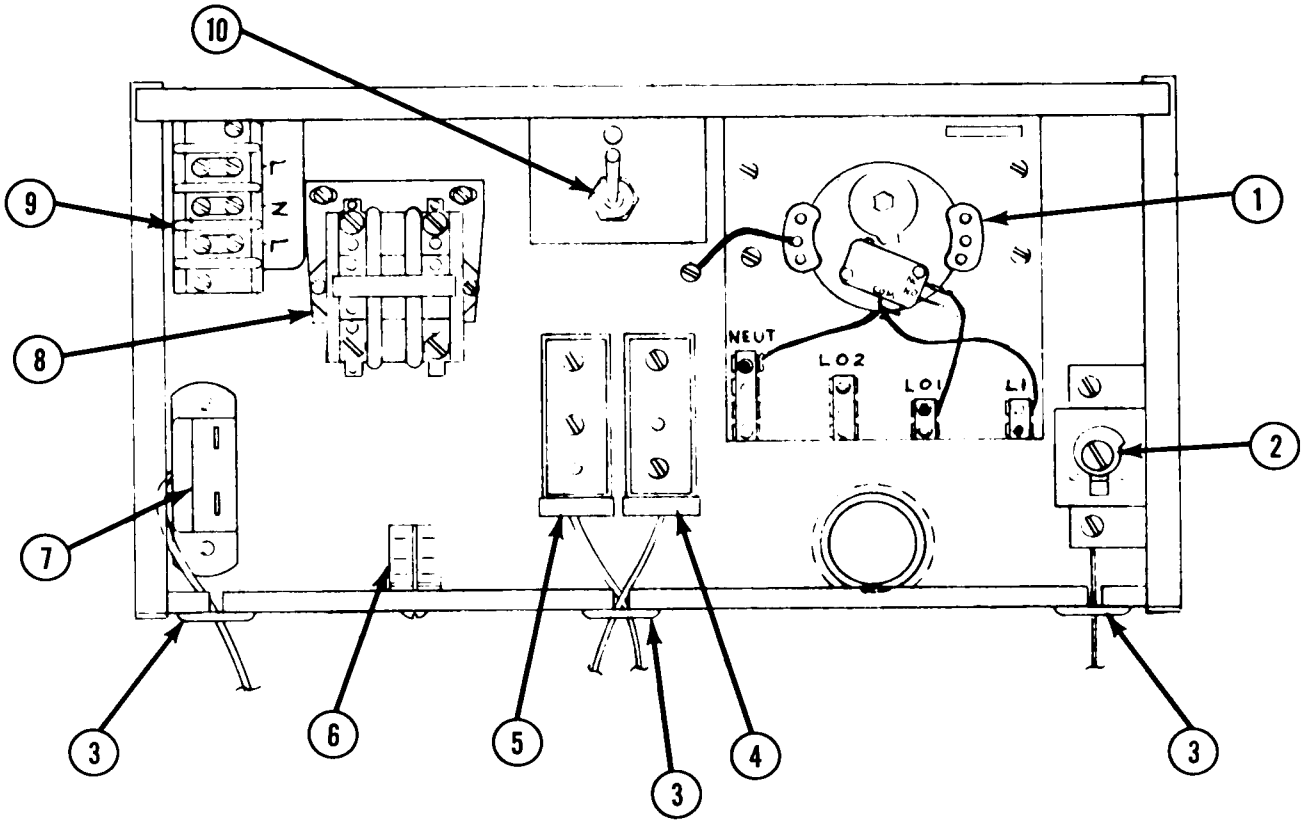

ITEM NO.	PART NO.	NAME
1.	A25939-001	Timer
2.	11-0345-00	Temperature Control
3.	13-0124-00	Grommet
4.	11-0343-00	Right Fan Control
5.	11-0342-00	Left Fan Control
6.	12-1645-00	Relay
7.	11-0353-01	Bin Thermostat
8.	12-0820-01	Contactor
9.	12-0813-00	Terminal Block
10.	12-0426-01	Switch

3-WAY WATER VALVE
SC-1000

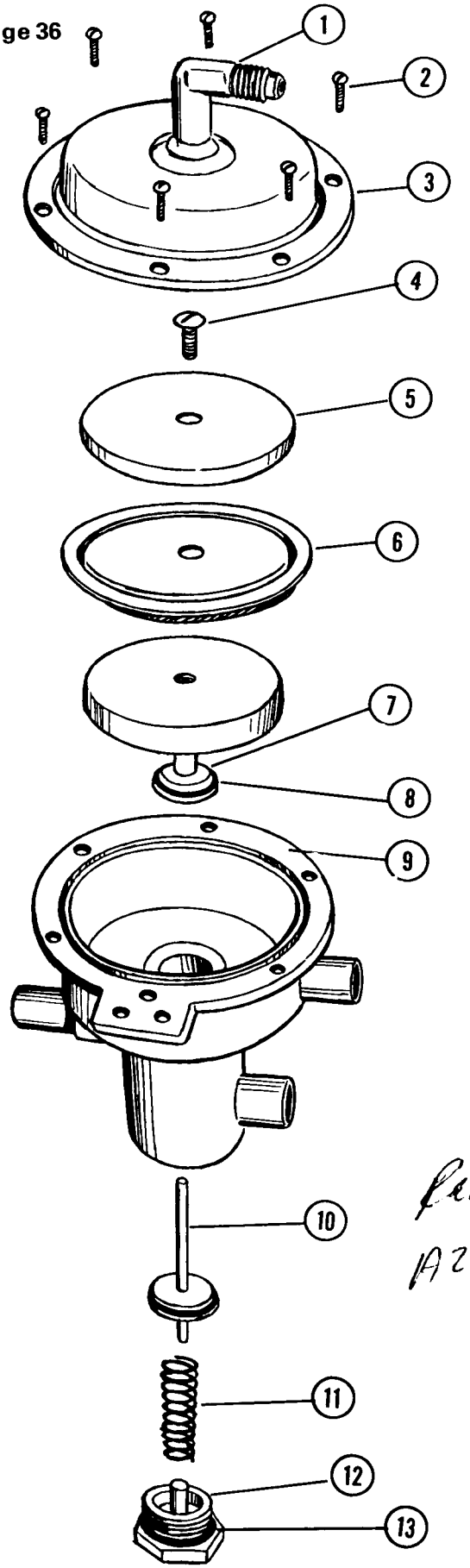

ITEM NO.	PART NO.	NAME
1.	16-0190-00	Elbow
2.	03-1403-06	Screws
3.	A18192-000	Valve Cover
4.	13-1506-01	Screw
5.	A18312-000	Diaphram Cover
6.	13-0606-00	Rolling Diaphram
7.	A17941-000	Plunger Assy.
8.	13-0617-01	"O" Ring
9.	A17947-000	Valve Body
10.	A17942-000	Plunger
11.	02-1545-00	Spring
12.	A17937-000	Valve Cap
13.	13-0617-02	Bottom "O" Ring
	A19722-00	Valve Complete

Repair Kit
A24561-001

SC-1000 SPRAY TUBE AND SPRAY TUBE DRIVE ASSEMBLY

4 per Unit

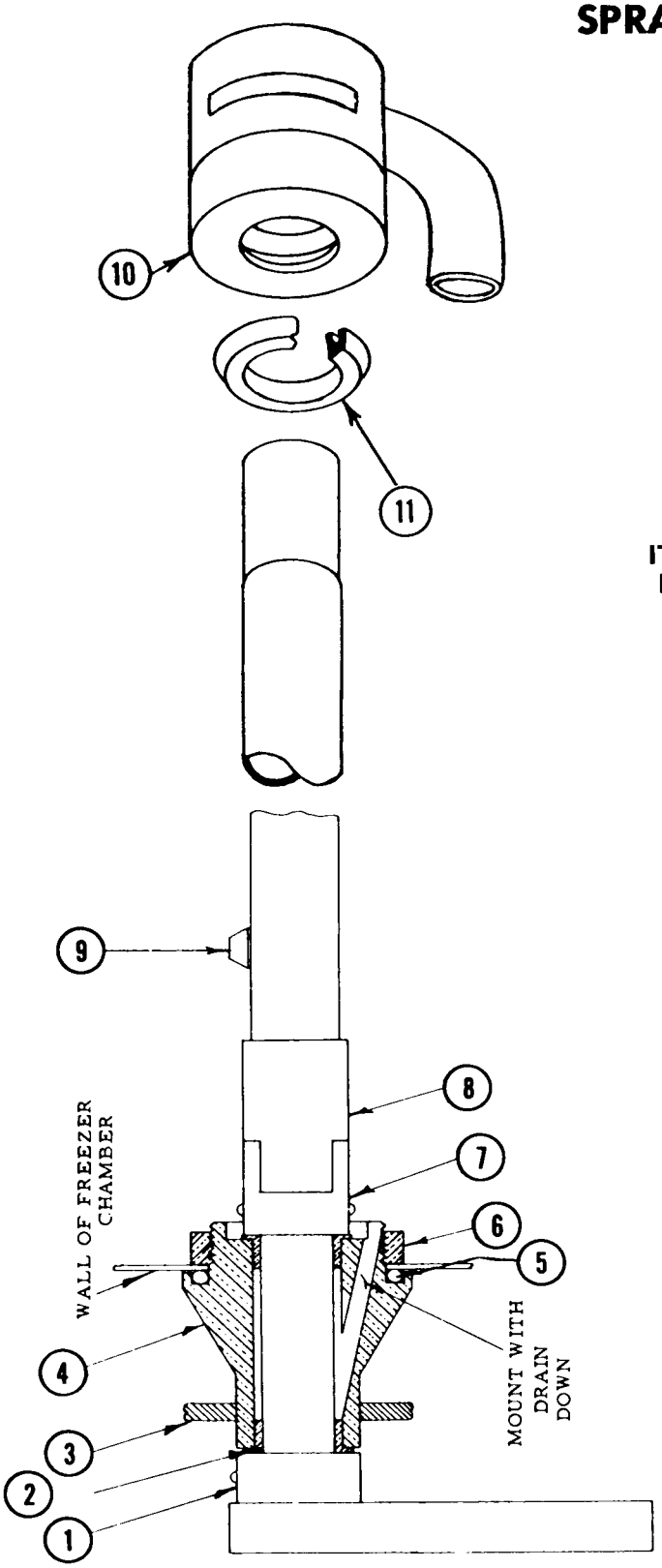

ITEM NO.	PART NO.	NAME
1.	S07130-000	Collar
2.	02-0438-00	Flange Bearing
3.	13-0169-00	Grommet
4.	S08887-000	Drive Bearing Support
5.	13-0617-33	"O" Ring
6.	S07635-000	Nut
7.	A13837-000	Driving Journal Assy.
8.	A17563-000	Sprayer Tube
9.	02-1803-01	Jet
10.	A16963-000	End Bearing Ass'y.
11.	13-0168-00	"U" Cup

SC-1000 CASE PARTS
Air and Water Cooled

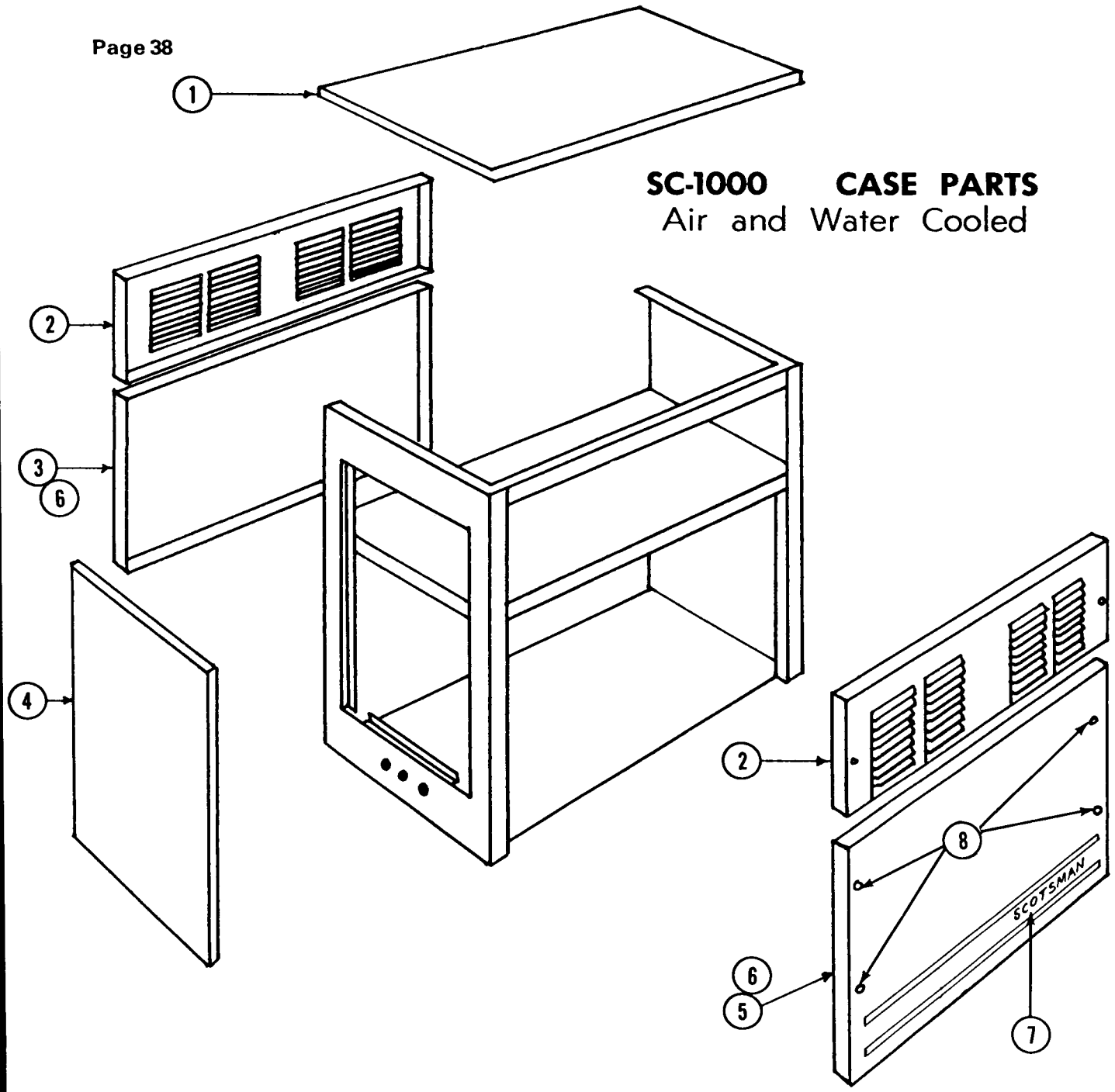

ITEM NO.	PART NO.	NAME
1.	A17990-008	Top
2.	A17988-008	Upper Door
3.	A17684-002	Rear Lower Door
4.	A17710-008	Left Door
5.	A17663-000	Front Lower Door
6.	02-1548-00	Plastic Door Liner
7.	15-0474-01	Emblem Decal
8.	03-1418-22	Screws (26 Reqd.)

SERVICE-COMPLETE UNIT

ALL STEPS LISTED BELOW SHOULD ONLY BE STARTED WHEN WATER AND ELECTRICAL SUPPLY ARE OFF TO PREVENT ACCIDENTS.

TO REMOVE SUMP PUMP

1. Remove left access panel. (4 screws)
2. Loosen hose clamp on sump pump discharge tube.
3. Pull sump pump out.
4. Pull wire from pump to control box.
5. Replace pump in reverse of above. Note: Always try new pump in shop before putting on the job.

TO REMOVE DRIVE MOTOR

1. Remove left side panel.
2. Loosen set screw on drive journal arm to motor.
3. Take 4 nuts loose on mounting bracket to motor, including the four rubber grommets.
4. Pull electrical cord from control box receptacle.
5. Install new motor in reverse or above.
6. Check and adjust spray bar travel as required.

TO REMOVE SPRAY TUBE ASSEMBLY

1. Remove lower front door.
2. Remove plastic curtain and cube chutes.
3. Lift right end of spray bar out of holder. This loosens spray bar, also the tygon tubing connection and elbow.
4. Pull tygon tubing and stationary elbow off this end of spray tube. (Has rubber O-Ring sealer).
5. Replace in reverse order.

TO REMOVE WATER INLET SOLENOID/FLOW CONTROL

1. Remove cabinet top.
2. Pull electrical leads from spade terminals on top of solenoid.
3. Loosen the 3/8" S.A.E. flare nut on outlet side of valve.
4. Unscrew entire valve body assembly from its pipe fitting on inlet side.
5. Replace in reverse of above.

TO REPLACE MOTOR COMPRESSOR VALVE PLATE

1. Install compound gauge in suction service valve port and close suction service valve by turning valve stem all the way in (Front seated).
2. Operate motor compressor until gauge reading reaches zero. Turn off unit.
3. Front seat discharge service valve.
4. Loosen all head bolts and tap lightly with rubber-faced or plastic hammer to break loose.
5. Remove head, defective valve plate and any gasket material that may have stuck to head or compressor body.
6. Install new valve plate with all new gaskets as provided, tightening each head bolt a little at a time until all are snug.
7. Remove port gauge plug from discharge valve and crack open suction side letting gas purge off trapped air from head. Install hi side gauge in this port, back up both service valve stems and check around valve plate for refrigerant leaks.

SERVICE--COMPLETE UNIT (Continued)

8. Start unit, noting head and back pressures. If normal, let run until compressor gets warm. Tighten all head bolts once more, and again check for leaks.

TO REPLACE THE COMPRESSOR

1. Front seat both suction service valve and discharge service valve on the compressor.
2. Disconnect the wiring from the compressor.
3. Remove the bolts holding the service valve to the motor compressor body.
4. Remove the compressor hold-down nuts and lift the compressor out of the unit.
5. Reverse steps 1 through 4 in replacing the compressor.
6. Check the compressor for oil before connecting the oil lines. Should be 2 inches down from the top of the oil plug hole, or 1/2 of sight glass.
7. Remove the gauge port plug from the discharge service valve. Crack the suction service valve slightly, allowing some gas to escape out the gauge port of the discharge valve. When you have thouroughly purged the compressor, replace the plug and open all valves. It may be necessary to charge the unit because some of the gas was lost when the defective compressor was removed. Check and charge if necessary.

TO REPLACE SILENT 3-WAY WATER VALVES

1. Remove left side access panel.
2. Remove 2 screws from mounting bracket.
3. Remove top 1/4" flare fitting.
4. Remove 3 hose clamps.
5. Replace in reverse.

FUNCTIONAL PARTS AND MAINTENANCE

PART NAME: Relay Potter & Brumfield Type PR5AX

NUMBER: 12-0419-00

FUNCTION: Relay is used as a by-pass on the bin thermostat when it tries to cut unit off on a full bin of cubes during a freezing cycle. This insures full cubes every time a harvest occurs and prevents short cycling on bin thermostat.

SETTING: Factory set.

REPAIRABLE: No. Replace when inoperative.

MAINTENANCE: Check electrical connections and blow points free of lint or dirt.

PART NAME: Temperature Control Storage Bin White Rodgers Type 1604-31

NUMBER: 11-0353-01

FUNCTION: To automatically cut machine off when ice level in storage bin reaches thermobulb. Automatically starts machine when ice level in bin falls below bulb location.

SETTING: These controls have adjustable differential. Setting on range dial should be 35° out, 39° in.

REPAIRABLE: No. Replace when inoperative.

MAINTENANCE: Remove cover, check points for corrosion or arching every six months. Blow control free of bugs, dirt, etc. Check capillary for cracks or worn spots due to vibration.
Hold a small handful of ice on thermostat bulb to check operation of control. Tighten electrical connections.

PART NAME: Inlet Water Solenoid

NUMBER: 12-0621-G1

FUNCTION: During freezing cycle this valve is closed, keeps water from entering heat exchanger tank and also from leaking out of tank.
During harvest or defrost cycle this valve opens and allows inlet water to pass to flow control orfice and thence to push warm water out of heat exchanger tank into back of cups molds, performing the defrost.

SETTING: Factory set.

REPAIRABLE: Yes

MAINTENANCE: Flush control each six months.

FUNCTIONAL PARTS AND MAINTENANCE

PART NAME: Drive Motor Merkle Korff

NUMBER: A23392-001

FUNCTION: This motor is used to drive the linkage mechanism which in turn drives the osillating jet spray tubes, this provides a constant spray movement to all the inverted cube molds and by so doing also aerates the water producing clear, solid Scotsman cubes.

SETTING: No settings on motor.

REPAIRABLE: Yes--to some extent. Not recommended although front bearings and windings could possibly be replaced by electric motor shop. Normally replace out of warranty motors.

MAINTENANCE: Oil every six months or less as use indicates. Use SAE 20 oil. There are two oil cups on the motor and a gear case slotted screw which has to be removed to add or change oil in gear case proper. Drive linkage should be inspected to insure free movement with no binding or drag on drive motor.

PART NAME: Time-Finishing Clock

NUMBER: A19070-021

FUNCTION: Heart of cyclematic control system is the reverse acting cube size control, No. 11-0345-01, and the time clock it actuates. All electrical components are connected to the time clock terminal board and are shunted by means of a double pole single throw micro-switch to either the freezing cycle or harvest cycle. Micro-switch is in turn actuated by two metal cams that are directly connected to the electric timer clock motor. Timer has 12 minute cycle, 10 1/2 minutes on freezing cycle after being cut on by cube size control and 2 1/2 minutes on defrost cycle. Time clock face has numerals to 12 on half the face. Each numeral represents a half minute period. Adjustable cam can be moved to lengthen or shorten defrost period.

SETTING: Normal setting for defrost is on No. 5 which is 2 1/2 minutes.

REPAIRABLE: Yes. Micro-switch only, Part No. 12-0645-20 is replaceable as well as timer clock motor only, Part No. A19070-021.

MAINTENANCE: Check all electrical connections, blow contact points free of dust, dirt, etc.

FUNCTIONAL PARTS AND MAINTENANCE

PART NAME: Reverse Acting Cube Size Control

NAUMBER: 11-0345-01

FUNCTION: Reverse acting temperature control, closes on temperature decrease, opens on temperature rise. Control determines length of freezing cycle and by the same token, the cube size. A lower setting on control will produce larger cubes, a higher setting, smaller cubes. This control actuates time clock motor, which takes over balance of freezing cycle and also defrost period.

SETTING: Turn dial clockwise to lower setting.

REPAIRABLE: No. Replace when inoperative.

MAINTENANCE: Check electrical connections. Blow points free of dust, dirt, lint, etc.

PART NAME: Sump Pump

NUMBER: 2 per unit 12-1395-01

FUNCTION: Recirculating pump used to pump supply water in sump tank to jet tubes during freezing cycle.

SETTING: Factory set.

REPAIRABLE: Motor only available part no. 12-1395-32.

MAINTENANCE: Flush out sump tank and sump pump intake with Scotsman ice machine cleaner.

FUNCTIONAL PARTS AND MAINTENANCE

PART NAME:	Control Hi-Pressure Penn
NUMBER:	11-0342-00
FUNCTION:	To control one condenser fan motor between pressures of 170 lbs. and 150 lbs.
SETTING:	Factory set.
REPAIRABLE:	No.
MAINTENANCE:	None
PART NAME:	Control Hi-Pressure Penn
NUMBER:	11-0343-00
FUNCTION:	To control one condenser fan motor between pressures of 155 lbs. and 135 lbs.
SETTING:	Factory set.
REPAIRABLE:	No
MAINTENANCE:	None
PART NAME:	3 way valve
NUMBER:	A19722-000
FUNCTION:	To route water for freezing and harvest cycles. Incoming water pressure during harvest flexes rubber diaphram against valve stem assy. which opens and closes necessary ports. Stem is spring loaded for return to position during freezing cycle.
SETTING:	None
REPAIRABLE:	Yes, diaphram, "O" ring and spring replacable.
MAINTENANCE:	Flush during maintenance cleaning.

MAINTENANCE INSTRUCTION FOR SCOTSMAN CUBERS

THE FOLLOWING MAINTENANCE MUST BE ACCOMPLISHED TWO (2) TIMES PER YEAR ON ALL SCOTSMAN CUBERS. Call your authorized scotsman service department.

1. Clean air-cooled condenser. This is to be done frequently with the machine shut off.
2. Clean evaporator, sump tank and screen using Scotsman Ice Machine Cleaner or equivalent.
3. Remove jet tube and manually clean jets by unscrewing jets.
4. Check curtain assembly.
5. Tighten all electrical connections.
6. Tighten all bolts.
7. Check water supply. Clean and flush flow control. Clean water strainer.
8. Oil jet tubes drive motor three (3) places. Use SAE 20 oil-2 oil cups, 1 crank case screw covered opening.
9. Oil condenser fan motor. Punch sealed cap or remove screws where possible.
10. Check for refrigeration leaks.
11. Check for water leaks. Tighten drain line connections.
12. Check size and condition of cubes. Adjust as required. See Service Analysis Section.
13. Check bin thermostat setting. Factory set as 35° out, 39° in.

CLEANING INSTRUCTIONS FOR SCOTSMAN ICE MACHINES MODELS SC1000

1. Remove front access doors.
2. Locate control box with time clock knob protruding thru cover.
3. Put unit through a harvest cycle manually. This may be done by turning the time clock knob clockwise until the arrow on the knob is pointing to the hole in the control box cover.
4. Locate the two funnels which are directly under the top cover on the left end of the machine. Remove the metal covers from the funnels. Immediately after the arrow and the hole are lined up as described in Step #3, pour 24 ounces of "Scotsman Ice Machine Cleaner" into each funnel.
5. Let unit finish cube harvest cycle and start into freezing cycle. This will be approximately 5 minutes after Step #3. At this time turn off the compressor switch.
6. Let unit operate normally for 10-15 minutes into the freezing cycle. No ice will be made because the motor compressor is not in operation.
7. At the end of this time put the unit through 2 or 3 harvest cycles manually to allow fresh make up water to clean out remaining solution. Each time waiting approximately 5 minutes after the arrow and the hole are lined up until the next harvest cycle is done manually.
8. Turn the compressor switch back on.
9. Check each new batch of cubes until they are clear and until acid taste has been removed from cubes.
10. Put hot water in storage bin to melt the cubes and there-by clean the drains with the same solution that has just cleaned the unit.
11. Use a damp cloth to wipe off curtains and inside of storage bin.
12. Replace all access doors.
13. Unit is now ready for continued automatic operation.

B-700 STORAGE BIN FOR SC-1000 CUBER

H Models

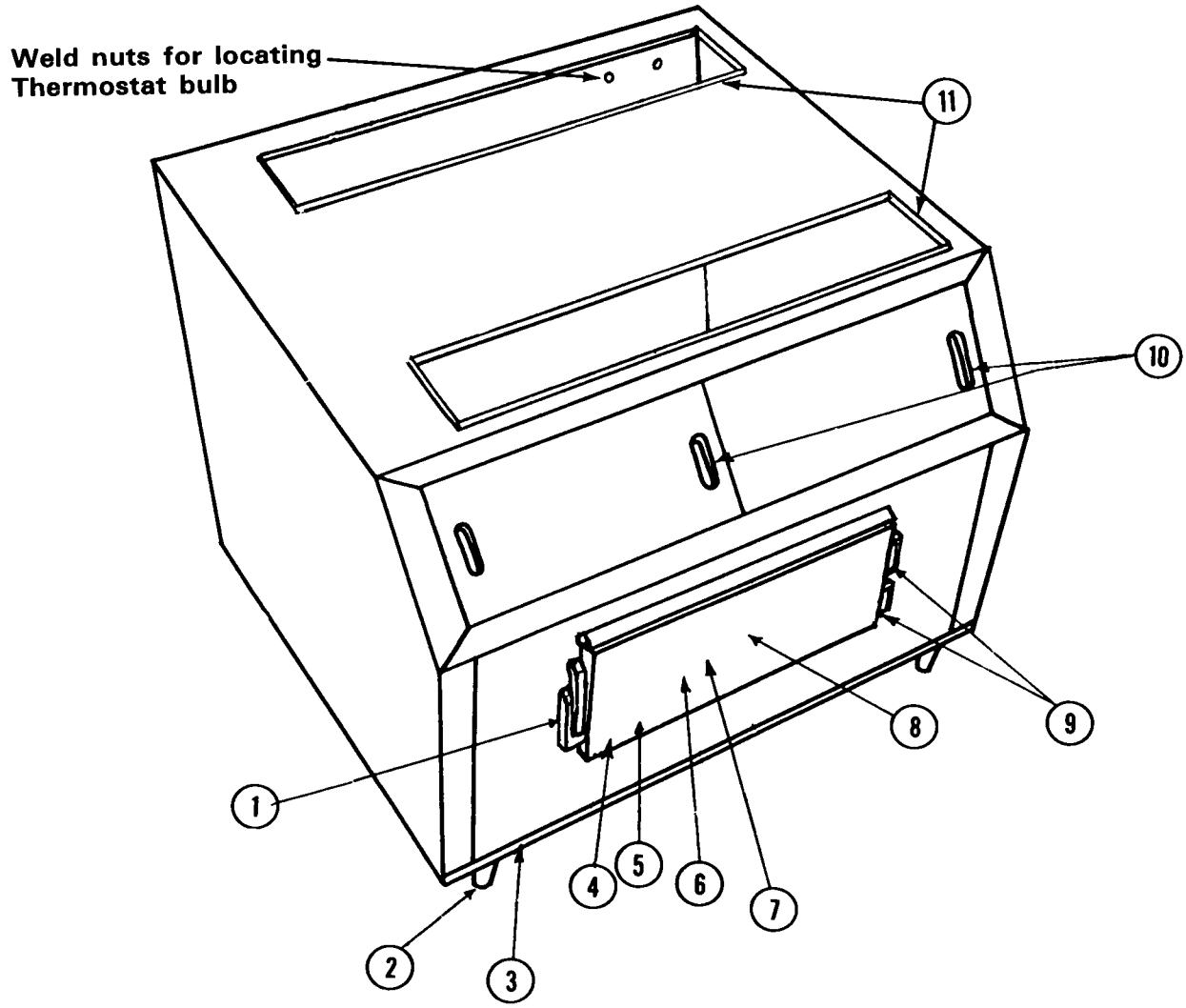

ITEM		NAME
1.	02-1568-00	Latch & Strike
*2.	KLP2	Leg (4 Reqd.)
3.		Moulding
3.	A15114-000	Baffle *
4.	A17342-000	Spill Door *
5.	02-1000-00	Door Liner *
6.	13-0264-00	Door Gasket *
7.	A18300-010	Door Assy. Complete with Hardware-- grey
8.	A18300-002	Door Assy. Stainless Steel
9.	02-1569-00	Hinges
10.	02-1529-00	Sliding Door Plastic 2/unit
	A18770-000	Sliding Door Stainless Steel
11.	02-1544-00	Gasket

* OPTIONAL

TABLE OF CONTENTS
SC-100

Foreward	1
Table of Contents	2
Photograph and Ice Making Capacity	3
Specifications and Dimensions	4-5
Selecting Location:	
Location	6
Uncrating	6
Preparation for Installation	6-7
Installation	7-8
Water Supply and Drain	8
Electrical Connection and Characteristics	8
Wiring Diagrams	
Air Cooled	9
Water Cooled	10
Diagram Plumbing Connections	11
Diagram Installation Practice	12
Final Check List	13
Start-Up	14-15
Cycle of Operation:	
Harvest Cycle	16
Freezing Cycle	17
Service Analysis Charts	18-19
Exploded Views - Component Parts:	
Sump Pump	20
Control Box	21
Complete Unit (End View)	22
Complete Unit (Front View)	23
Case Parts	24
Hot Water Tank	25
Condensing Unit (Air Cooled)	26
Condensing Unit (Water Cooled)	27
Water Valve	28
Service Information	
Installation of Water Valve Kit	29
Water Valve Assembled	30
Drive Linkage	31
Spray Bar Ass'y.	32
Functional Parts and Maintenance	33-35
Service Complete Unit	36-37
Maintenance Instructions	38
Parts List	39-40

THIS PAGE
INTENTIONALLY
LEFT BLANK

THIS PAGE
INTENTIONALLY
LEFT BLANK

SCOTSMAN®

SUPER CUBER
SC-100
SERIES

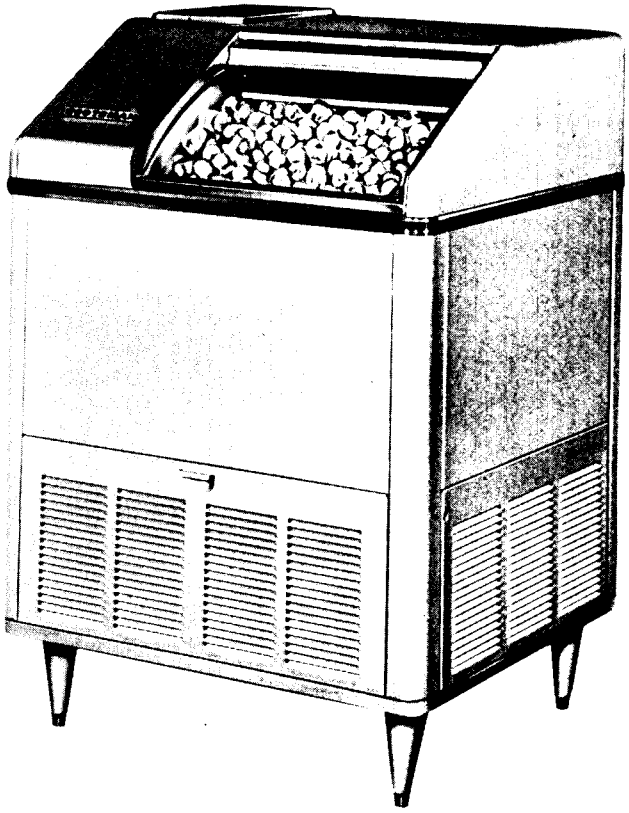

ice making capacity

Air Cooled Models

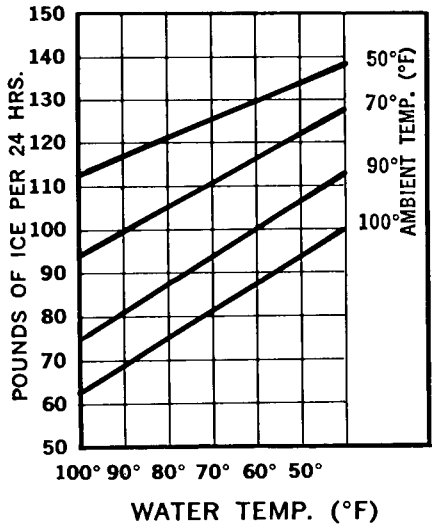

Water Cooled Models

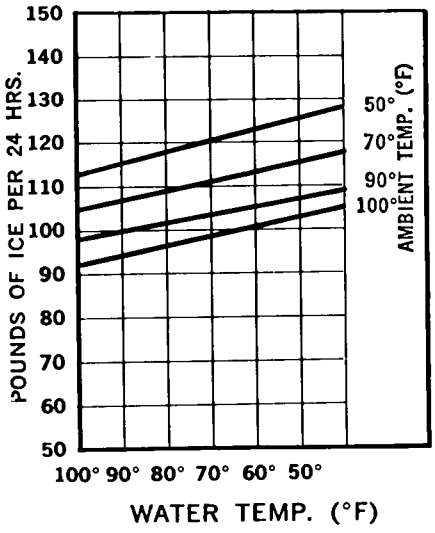

SPECIFICATIONS

SUPER CUBER SC-100 SERIES	MODEL SC-100H	MODEL SC-100WH	MODEL SC-100H-SS	MODEL SC-100WH-SS
Daily capacity up to 110 lbs.	X	X	X	X
Self-contained 50 lb. capacity storage bin	X	X	X	X
Air-cooled condenser	X		X	
Water cooled condenser		X		X
Heavy duty 1/3 HP. Compressor	X	X	X	X
Standard 115 V, 60 cy, 1 ph, AC	X	X	X	X
1/4" water inlet SAE Flare	X		X	
5/8" OD tube		X		X
5/8" OD overflow drain	X	X	X	X
5/8" OD storage bin drain	X	X	X	X
5/8" OD tube condensate drain		X		X
Hammerloid grey exterior	X	X		
Stainless steel exterior			X	X
Stainless steel lined storage bin	X	X	X	X
46" height (with legs)	X	X	X	X
40" height (without legs)	X	X	X	X
34 1/8" width	X	X	X	X
24 1/2" depth	X	X	X	X
Approximate shipping weight	350	350	350	350

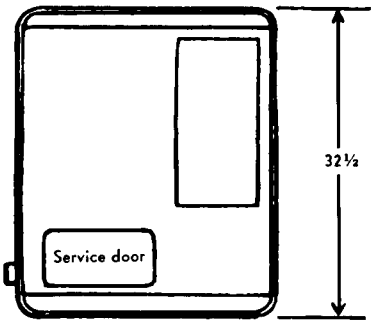

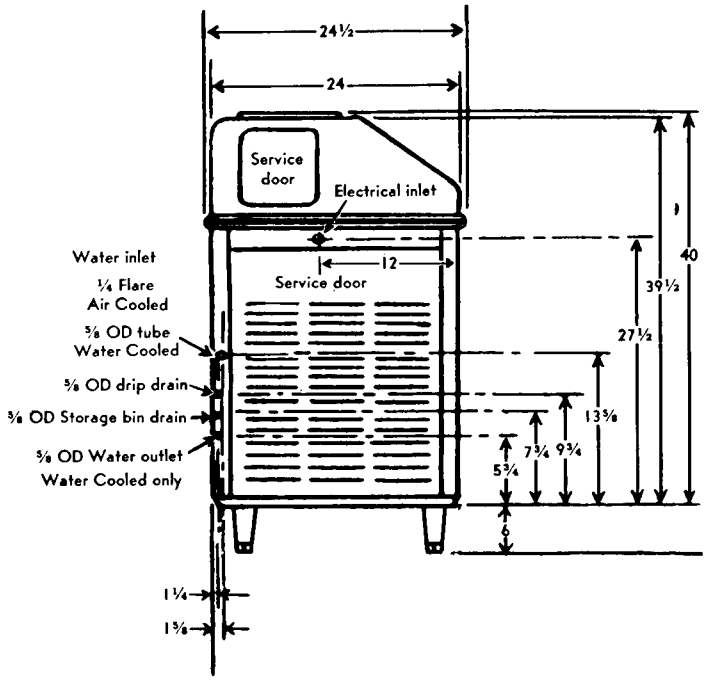

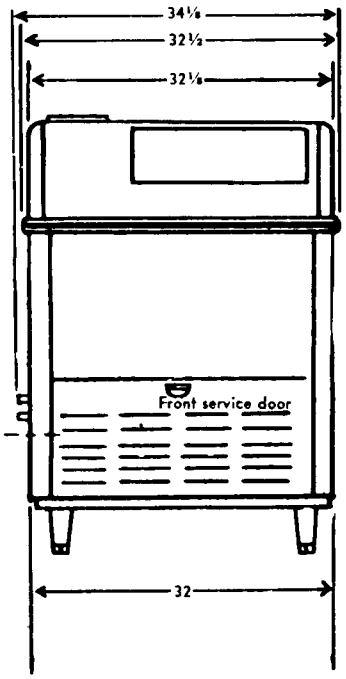

SPECIFICATIONS

	MODEL SC-100H	MODEL SC-100WH
Compressor	115/60/1 1/3 HP	115/60/1 1/3 HP
Condenser	Air Cooled	Water Cooled
Refrigerant	Refrigerant 12	Refrigerant 12
Refrigerant Charge	21 ounces	21 ounces
Power Consumption	11 Amperes	11 Amperes
Cubes Per Harvest	40 Full size super cubes	40 Full size super cubes
Water Consumption to Produce Ice	5 Quarts Per Hour	5 Quarts Per Hour
Water Used by the Condensing Unit		20 Gallons per Hour Average - Varies with Water Temperature.
DIMENSIONS		
Height with 6" Legs	46"	46"
Height-Less 6" Legs	40"	40"
Width	34 1/8"	34 1/8"
Depth	24 1/2"	24 1/2"
WEIGHTS		
Uncrated	300 lbs.	300 lbs.
Crated	350 lbs.	350 lbs.

INSTALLATION

UNCRATING OF MACHINE

1. The complete machine comes in one crate. After the crate is removed, inspect for concealed damage. Remove the bottom skid by removing all bolts. Then cut all wires holding support packing from refrigerant line. Then loosen shipping bolts on the compressor. Be sure the compressor is floating free on spring mounts. Then check all refrigerant lines for rubbing or touching other surfaces. Also check for possible transportation damage.

2. Remove all service doors and panels.

3. Remove leg packages in compartment base and install 4 legs in unit base sockets. Level unit with adjustable legs.

4. Loosen motor compressor hold down nuts until motor compressor rides freely on mounting springs.

5. Remove water strainer from storage package for installation in water supply line feeding unit.

6. Open electrical control box and prepare for hook up, use knock outs, cord connectors etc. Then check unit name plate voltage against building source voltage and make sure they correspond. Caution--Improper voltage supplied to units will void your warranty protection.

7. Make sure all service valves on the condensing unit are open and turned as far as possible to the left. Replace the valve caps after checking the valves. All Models are shipped with valves back seated.

8. Make sure that the flow of air is not impeded in any way over condenser on air-cooled models. Keep condenser clean. (Check and clean the condenser monthly.)

9. Operating room temperatures are minimum 50° F. and maximum 100° F.

10. Have the installation and warranty cards been filled out and sent to factory to insure warranty protection?

LOCATION OF THE ICE CUBE MACHINE

UNDER BAR INSTALLATIONS--Locate, if possible, so left end panel is accessible. Locate unit so proper circulation can be attained around the unit and behind it at least four inches. Provide plumbing and electrical connections so the unit can be moved out where the entire top hood can be removed and the unit can still be operated.

KITCHEN INSTALLATIONS--As a rule, the kitchen is not the most practical place to install an air-cooled condensing unit, as grease is almost always present and makes cleaning of the condensing unit difficult. Do not locate near range or steam table or other heating devices that may be used in the kitchen.

STOREROOM INSTALLATIONS--Be sure storeroom is of adequate size and properly ventilated. A small, poorly ventilated room will greatly impair the efficiency of the unit. The storeroom must be kept above 50 degrees in the winter months.

INSTALLATION

BASEMENT INSTALLATIONS--Locate machine in the coolest place. Locate the machine in a dry place. Keep away from furnace and boiler room. Keep away from service chutes and runways, also coal or other dust of any kind. If the machine is set over a floor drain, block the machine up enough to eliminate any possible damage to the machine.

LOCATE THE MACHINE SO IT CAN BE SERVICED WHEN NECESSARY. ALLOW AT LEAST FOUR INCHES OF SPACE AROUND THE MACHINE FOR CIRCULATING AIR.

IMPORTANT: ADJUST LEVELER LEGS. MACHINE MUST BE LEVEL.

Remove water reservoir cover and take out paper packing around float ball, make sure overflow standpipe is securely in place.

Remove water strainer from storage bin for installation on unit or in water supply line feeding unit.

Remove 3/4" flat shipping slug between 3 way water valve stem and body. Replace rear service panel.

Remove all masking tape and packing members from curtains and inner cube making compartments. Re-align components such as sump pump that may have shifted in transit.

INSTALLATION

WATER SUPPLY AND DRAIN CONNECTIONS

Pages 11 & 12 show recommended water piping connections and drain facilities for Model SC-100 and SC-100W.

WATER SUPPLY

The recommended water supply line is 1/4" OD copper tubing for air-cooled units. Connect to a cold water supply line with regular plumbing fittings with a shut-off valve installed in an accessible place between supply line and machine. The water strainer supplied with the unit should be mounted with clean-out plug down. Locate the strainer next to the machine and the arrow in the direction of the flow, as per Page 12.

The water supply line connects to the 1/4" OD soft copper tubing (See Figures Page 11). Use care in connecting up water line to the machine. Water supply must be installed to conform with local code.

Water connections for the SC-100W water-cooled units is 1/2" OD copper tubing one connection on cabinet for both make-up water and condenser water.

DRAIN

The recommended drain; is 5/8" OD copper tubing. Sweat to drain connection (See Page 12). Must be run to open or trapped drain. If drain is a long run, allow a 1/4" pitch per foot. Drain must be installed to conform with local code.

ELECTRICAL CONNECTIONS AND CHARACTERISTICS

SC-100	110-115 V, 60 Cycle	Single Phase, 11 Amps.

All external wiring should conform with National Underwriters' and local code requirements. Check the voltage on the line before connecting the machine. Model SC-100 requires 110-115 volts, 60 cycle, single phase.

The SC-100 should be wired to a 15 Amp. circuit. Be certain that the Super Cubers are on their own circuit and individually fused. The maximum allowable voltage variation should not exceed 10 % of the nameplate rating even under starting conditions. Low voltage can cause erratic operation, and may be responsible for serious damage to the overload switches and motor windings.

WIRING DIAGRAM

SC-100 AIR COOLED

115/60/1

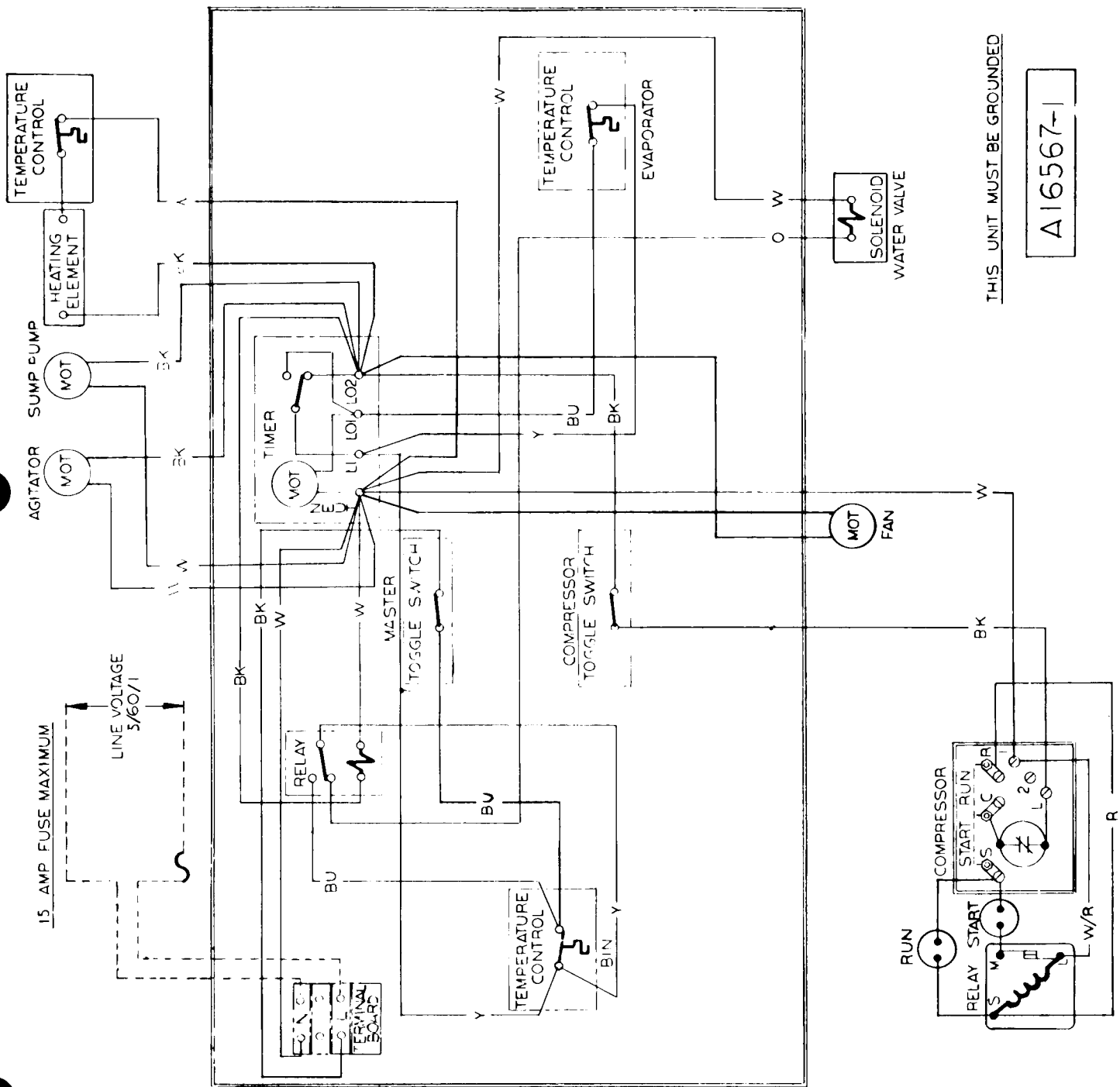

WIRING DIAGRAM

SC-100 WATER COOLED

115/60/1

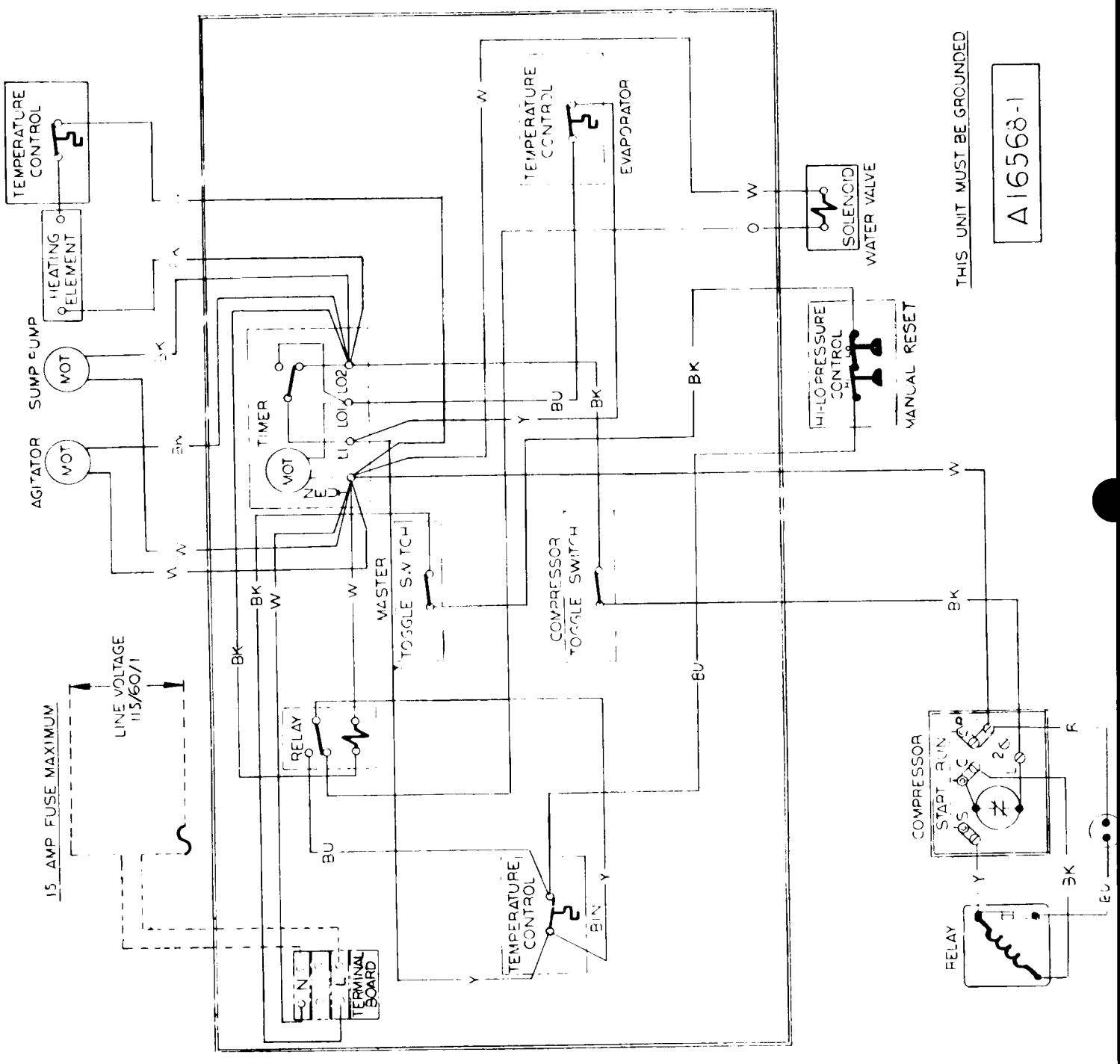

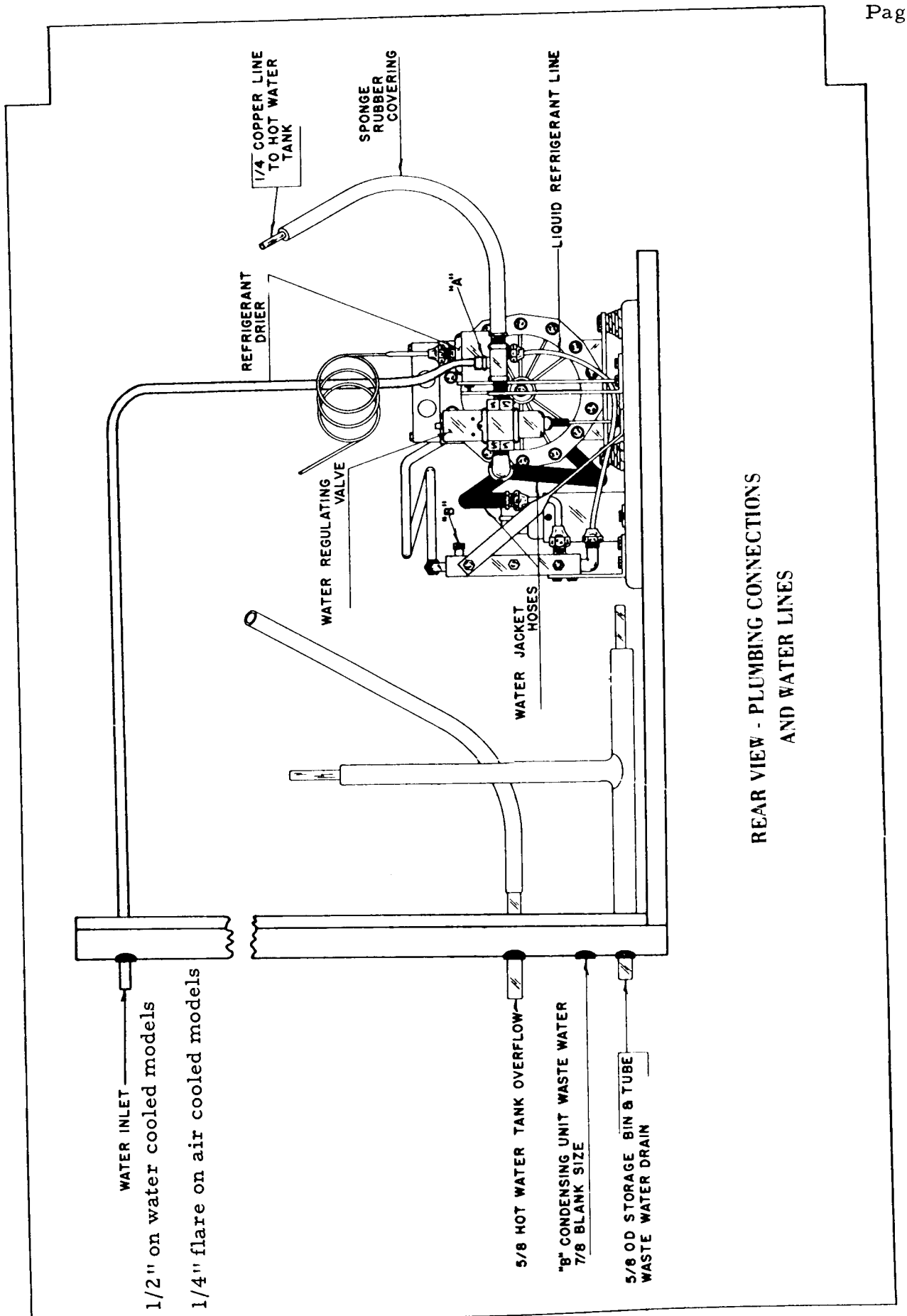

REAR VIEW - PLUMBING CONNECTIONS AND WATER LINES

INSTALLATION PRACTICE

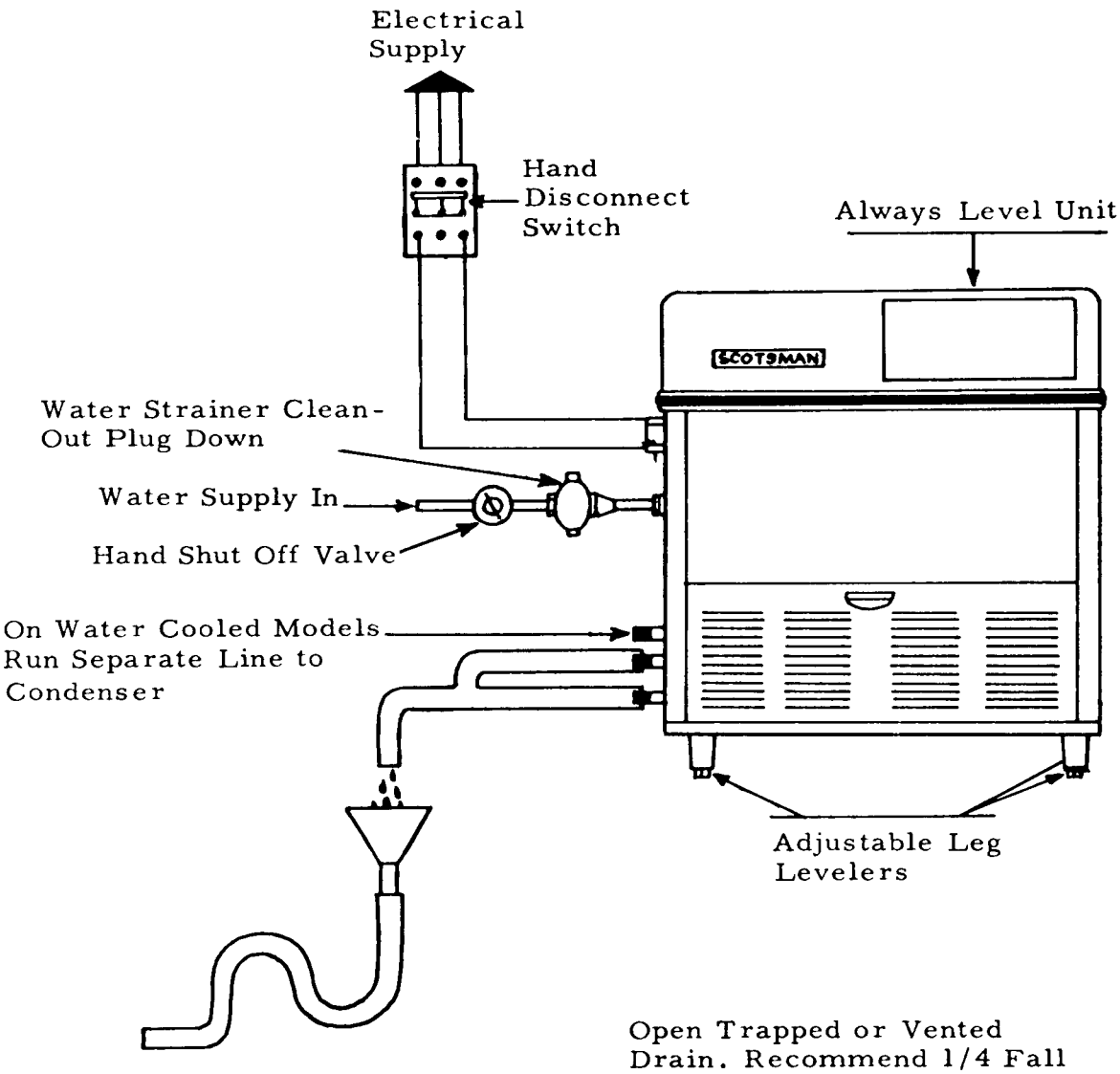

FINAL CHECK LIST

1. Is the unit level? (IMPORTANT)
2. Have all electrical and piping connections been made?
3. Has the voltage been tested and checked against the nameplate rating?
4. Have the compressor hold-down bolts been loosened so the compressor rides freely on its mounting springs?
5. Is the water supply valve open and the electric power on?
6. Is the water reservoir filled and shut off? Paper removed and float adjusted.
7. Is the unit clean?
8. Has the owner been given the operating manual, and has he been instructed on how to operate the machine?
9. Have the installation and warranty cards been filled out? This is the owner's protection as well as the sellers.
10. Check all refrigerant and conduit lines to guard against vibrations and possible failure.
11. Is there 4" clearance behind and around unit for proper air circulation?
12. Is unit in a room where ambient temperatures are minimum 50° F. even in winter months?

INSTALLATION

START UP

1. On all water cooled models, turn on water supply to water-cooled condenser and check for leaks in connections made.

2. Turn on cube supply at hand shut-off valve. Make sure hot water tank fills to overflow, if it does not, adjust timer lever to 4 minute setting. NOTE: Unit has built-in water flow control set to reduce flow rate to approximately .25 gallons per minute.

3. Check electrical circuit .11 Amps. Do not connect with other appliances into one ordinary wall outlet: 115 volts required.

4. Inspect components in electrical control box, check for loose or frayed wire, then turn both manual switches to "on" position. NOTE: All "H" model cubers have two manual on-off switches. One is for motor compressor only during cleaning operation, one is master switch for complete unit.

5. Turn disc on time clock to the right just far enough for water solenoid valve to energize. Allow clock to take it through harvest cycle. This will be approximately 3 1/2 minutes. Dial pointer should be set on Number 3 1/2. After the compressor starts, turn the dial completely around and send it through another harvest cycle. Do this several times. This will completely flush out machine of any dust that may have accumulated in shipment.

6. After machine has been properly flushed, allow it to go into a freezing cycle - check for possible water leaks, check sump pump operation - should be running freely. Also note if jet tube travel is correct, and that none of the jets are plugged. Jet spray of water should hit the middle of the cups.

7. Time clock dial does not rotate at the end of the harvest cycle; it is started later by the cube size control located in the control box.

8. Freezing time will be approximately 25 minutes in a 70 degree ambient.. (Longer if above, and shorter if below.) Average complete cycle time is 30 minutes.

9. Watch first cube harvest and check to make sure that plastic curtain has not not been damaged in shipment.

10. Check size of cubes made: If too small, after a second cycle, adjust cube size control to lower or colder setting - until desired cube size is reached.

INSTALLATION

11. Check texture of cubes made: Partially cloudy cubes throughout suggest unit running short of water near end of freezing, or possibly an extremely bad water condition, which would indicate use of filtering or purifying equipment. Contact SCOTSMAN - Queen Products, Div., Ice Machine Service Department, Albert Lea, Minnesota, for futher details.

12. With unit on harvest cycle, take a handful of cubes made and hold on storage bin thermostat cover. Should cut unit off in one or two minutes - remove ice: unit should cut back on automatically. Thermostat is factory set at 35 degrees out, 39 degrees in.

13. Install gauges and check head and back pressure: air-cooled models, head pressure after twenty minutes of freezing cycle at 70° ambient will be approximately 125 pounds PSI. The back pressure starts out at approximately 50 pounds PSI and gradually pulls down to approximately 4 pounds PSI just before harvest cycle. Higher ambients and dirty condenser will cause higher pressures. Water-cooled models have water regulating valves factory set at 125 pounds PSI: check reading and adjust if necessary. Back pressure will operate the same as on air-cooled models.

14. Remove gauges, replace control box cover and all service panels.

15. Instruct owner on how to operate and clean machine.

HARVEST CYCLE
SC-100

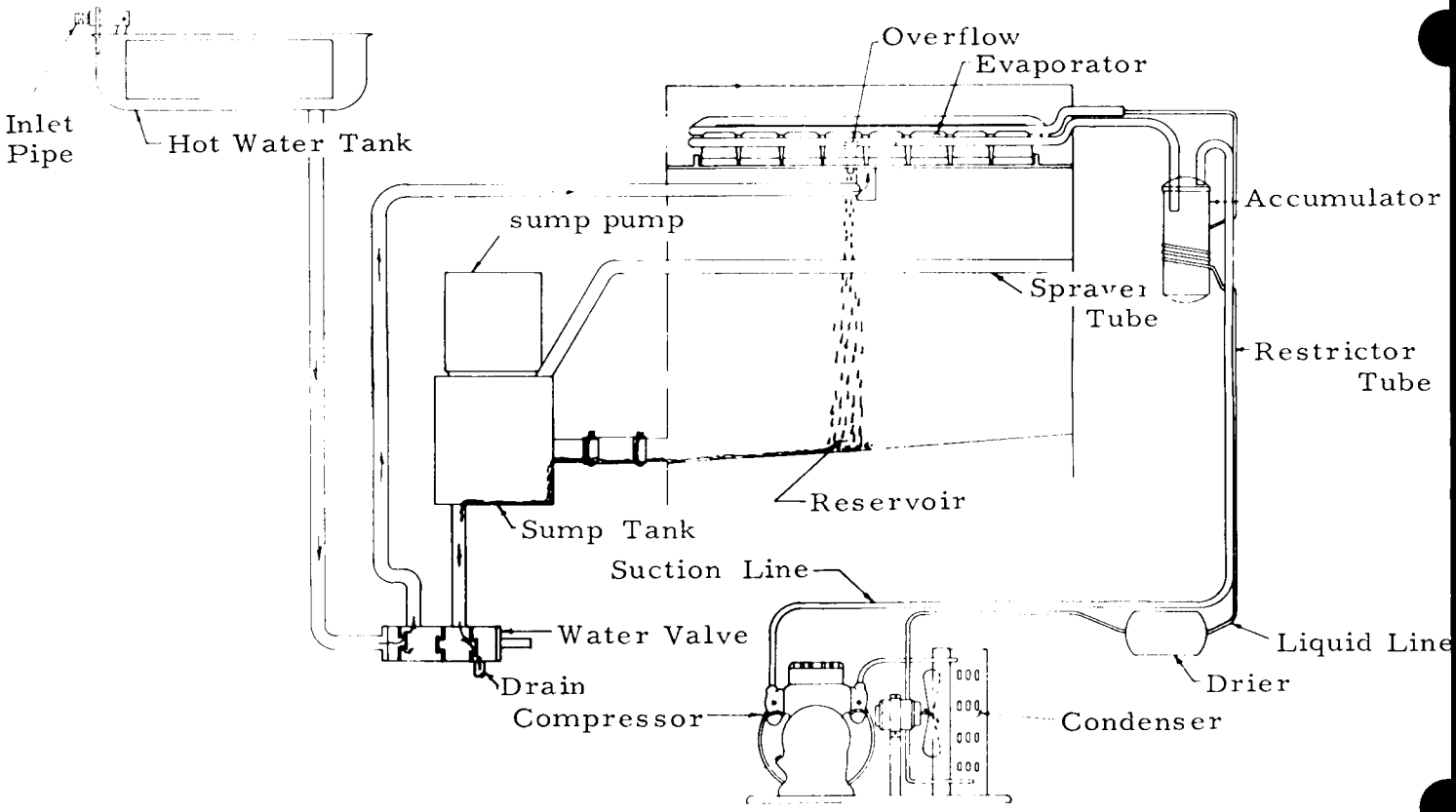

At the end of the freezing cycle the time clock operated switch opens compressor, sump pump and heater element circuit, and closes circuit to time clock motor, and solenoid operated water valve. At this time, the water valve allows heated water in hot tank to flow by gravity through solenoid operated valve, and into the upper cavity of the freezing chamber, and, at the same time allows the surplus water from the preceding batch of ice cubes to go down the drain. The hot water from the tank flows into the rubber platen holding the cups and by conduction on back of cups causes to defrost. The platen cavity is completely filled up to the overflow point, and continues to overflow while in the defrost cycle; the amount of this water running over the overflow pipe is controlled by the size of the flow control orifice and the length of harvest time setting on the time clock; overflow water goes down the drain also. Meanwhile, cubes being released from the cups drop by gravity through curtained opening into storage bin. At completion of harvest cycle, the micro-switch on the timer now drops points holding defrost components in cycle and switches to freezing cycle set of contacts . Clock motor now stops and will not start until cube size control closes once more. The freezing cycle starts and the water vakve allows the hot tank to refill. The chilled water from upper cavity flows by gravity through the water valve into the sump tank . Here it is picked up by the sump pump and this water is used to produce the next batch of ice cubes.

FREEZING CYCLE
SC-100
Water Circuit - Refrigerant

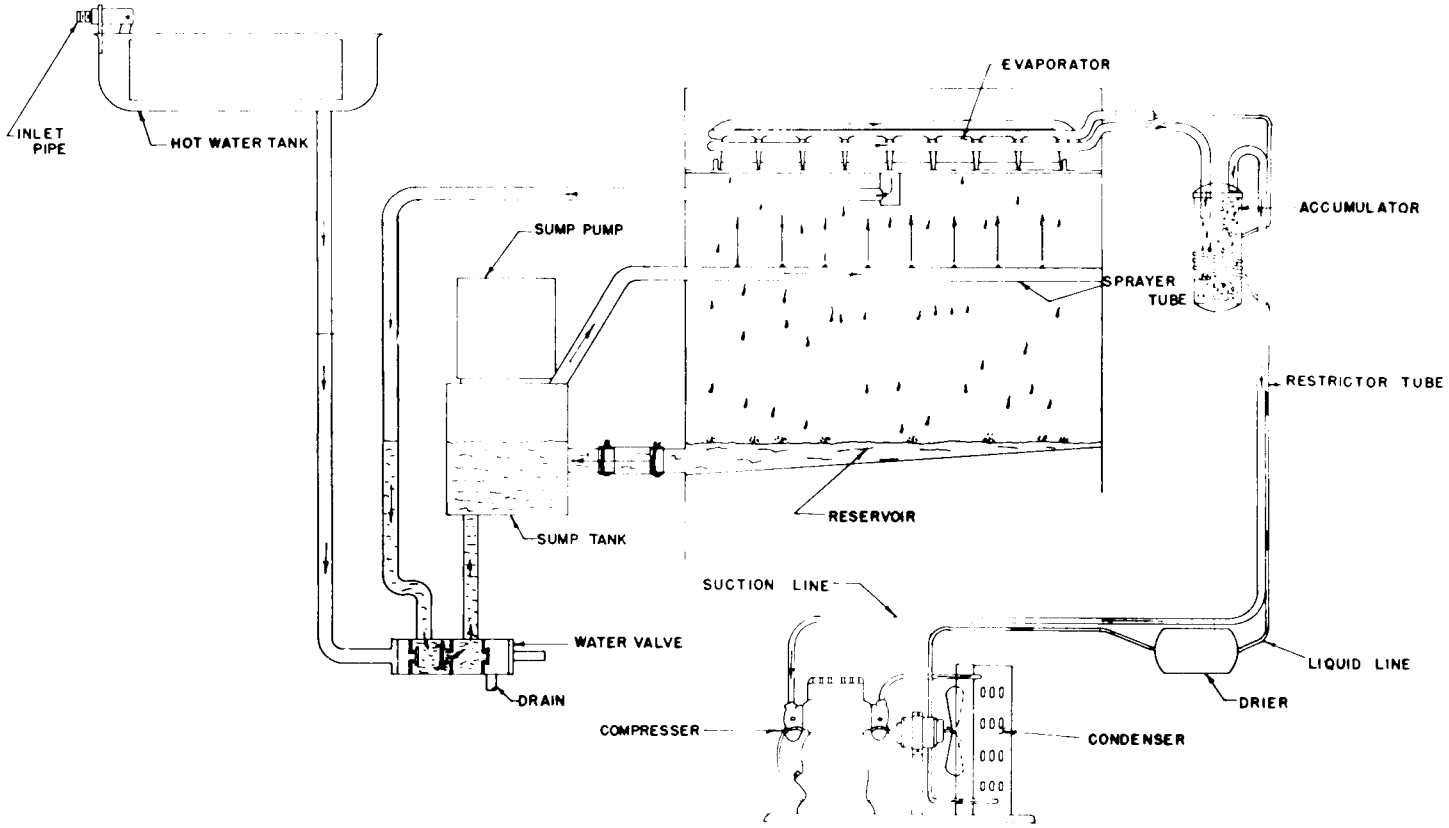

At the start of the freezing cycle, reservoir and sump tank contain enough water to make a complete batch of ice cubes, plus approximately an extra pint. When time clock closes load circuit, it starts the compressor, sump pump and heater element in hot water tank. At the same time, it opens the circuit to clock motor. (Clock motor does not run first part of freezing cycle---This is approximately 25 minutes.) This timer has a single pole double throw micro-switch for carrying and directing current. After a predetermined amount of ice is frozen, the cube size or reverse acting temperature control closes, actuating the time clock motor circuit which continues the freezing cycle approximately 9 more minutes. (After clock motor starts, freezing will be 12 minutes less defrost time setting.

Harvest water is used to produce the next batch of ice, therefore on the initial start up it is necessary to have the unit in a harvest cycle. This can be done by manually turning timer to harvest position.

SERVICE ANALYSIS

SYMPTOM	POSSIBLE CAUSE	SUGGESTED CORRECTION
Shortage of water	Water spraying out through curtains	Replace broken curtains if any broken. Adjust travel of jet tube if spraying too far forward.
	Three-Way water valve leaking	Check the valve for foreign matter. Check valve seats and replace if necessary.
	Water entering hot water tank too slowly	Check pressure at source-20# required. Dirt in solenoid and flow control- blow out.
		Partial restrictions in water strainer. Clean Strainer.
Irregular size cubes and some cloudy	Some jets plugged	Clean jets.
	Shortage of water	See Shortage of Water
	Cube Chute in path of spray	Reposition cube chute.
	Unit not level	Water overflowing air vent holes on low side burning cubes. Level as required.
Cubes too large	Cube size control set low	Raise setting on cube size control.
Decreased ice capacity	Inefficient compressor	Replace.
	Leaky water valve	Replace or repair.
	High head pressure	Dirty condenser. Clean. Bad fan motor. Replace. Non-condensable gas in the system: purge the system. Too hot a location with poor circulation:
		relocate the unit, or provide for ventilation by cutting openings; Overcharge of refrigerant. Correct the charge.
	Partially restricted cap tube	Purge & replace charge and drier
Hole washed inside cube	Water over the top of the cube cups during harvest	Level unit.

SERVICE ANALYSIS

SYMPTOM	POSSIBLE CAUSE	SUGGESTED CORRECTION
Unit will not run.	Blown fuse	Replace fuse & check for cause of blown fuse.
	Bin thermostat set too high	Adjust thermostat. Set between 35° out to 39 degrees in.
	Switch in Off position	Turn switch to On position.
	Inoperative master switch	Replace switch
	Timer contacts open	Replace Micro-Switch.
Compresser cycles intermittently	Low voltage	Check circuit for overloading. Check voltage at the supply to the building. If low, contact the power company.
	Dirty condenser	Clean with vacuum cleaner, air or stiff brush. (Do NOT use wire brush.)
	Air circulation blocked	Allow sufficient air space all around unit.
	Inoperative condenser fan motor	Check to see if defective. If defective, replace.
	Non-condensable gases in system	Purge the system.
Cubes too small	Cube size control set too high	Lower the setting. Turn towards colder.
	Partially restricted capillary	Blow charge, add new gas & drier.
	Moisture in system	Replace the dryer.
	Shortage of water	See remedies for shortage of water.
	Shortage of refrigerant	Check for leaks and recharge.
Cloudy cubes	Shortage of water	See remedies for shortage of water.
	Dirty water supply	Use water softener or water filter.
	Restricted strainer on pump	Clean pump strainer.
	Accumulated impurities	Use SCOTSMAN Ice Machine Cleaner.
Poor harvests	Too short defrost time	Check and adjust harvest cycle. Timer should be set at 3 1/2
	Restriction in incoming water	Check water feed line strainer and flow control valve. To increase amount of water increasing defrost time.
	Insufficient quantity of hot water	Cold ambiet-must be 50° minimum heating element in tank defective.
	Solenoid valve not opening the water valve	Solenoid binding or burned out. Replace.
	Air vent holes in upper cube cups plugged	Clean out holes.

SC-100 SUMP PUMP

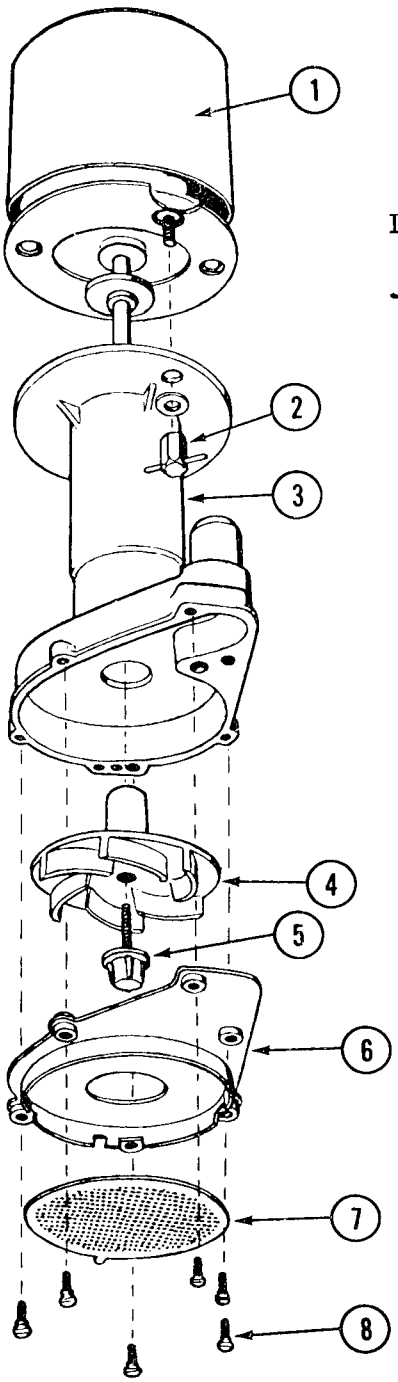

ITEM NO.	PART NO.	NAME
1.	12-1351-22	Motor Only
2.	12-1351-32	Wing Hex Nuts
3.	12-418-30	Pump Body
4.	12-1351-21	Impellar and Spring
5.	12-1351-31	Impellar Screw and Gasket
6.	12-1351-27	Bottom Inlet Plate
7.	12-1351-26	Inlet Screen
8.	12-1351-29	Wing Screws
	12-418-1	Complete Pump

SC-100 CONTROL BOX ASSY

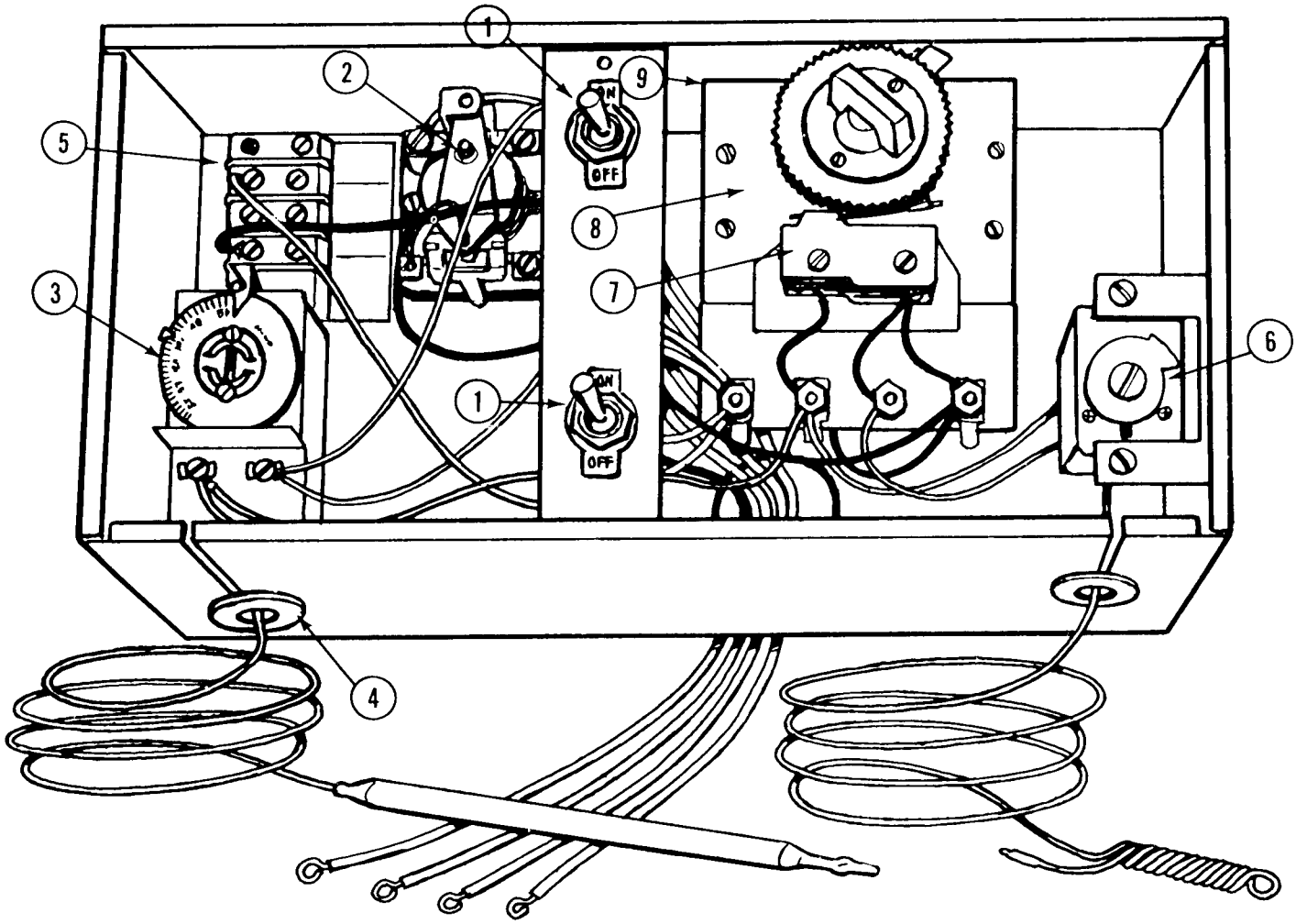

ITEM NO.	PART NO.	NAME
1.	12-537	Switches
2.	12-419	Relay
3.	11-99-1	Bin Control
4.	13-124	Grommets
5.	12-813	Terminal Block
6.	11-351	Cube Size Control
7.	12-645-20	Timer Micro-Switch only
8.	12-645-1	Timer
9.	12-367	Timer Motor only

SC-100H
COMPLETE UNIT
Left Side

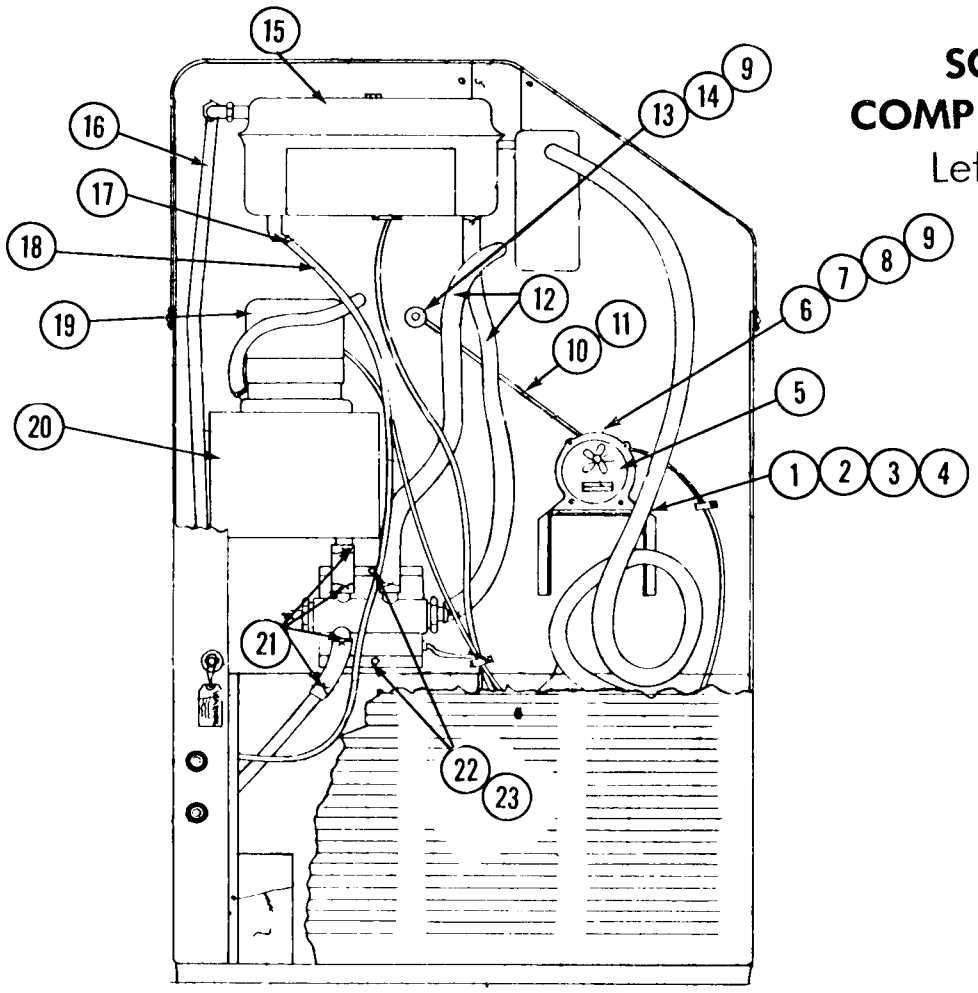

ITEM NO.	PART NO.	NAME
1.	3-08	Machine Screw
2.	3-61	Nut
3.	3-298	Washer
4.	3-88	Lock Washer
5.	12-680-1	Drive Motor
6.	S-7128	Driven Arm
7.	A-7033	Bearing
8.	S-7558	Bearing Clip
9.	3-431	Set Screw
10.	S-7132	Linkage Rod
11.	A-6726	Linkage Complete w/arms
12.	5-179	Tygon Tubing per ft.
13.	A-6462	Driver Arm
14.	S-7130	Collar
15.	A-12870	Cover Ass'y
16.	A-17810	Water Inlet Ass'y
17.	2-534	Hose Clamps
18.	13-79	Rubber Tubing per foot
19.	12418-1	Sump Pump
20.	A-8515	Sump Tank
21.	2-536	Hose Clamps
22.	3-515	Cap Screw
23.	3-89	Lock Washer

SC-100H COMPLETE UNIT

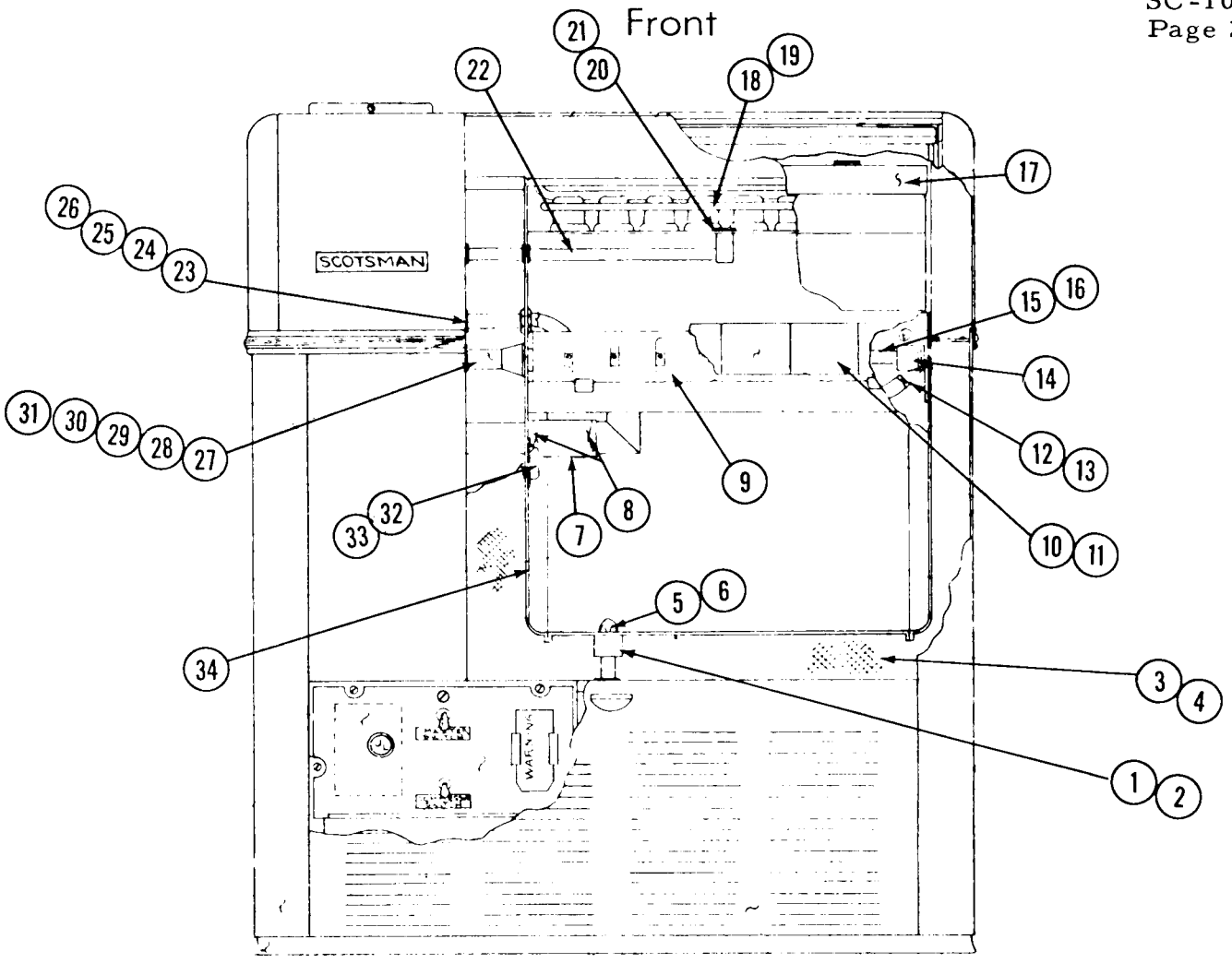

ITEM NO.	PART NO.	NAME
1.	A-18102	Storage Drain Fitting
2.	2-530	"O" Ring
3.	A-15721-1	Insulation Bottom
4.	A-16246	Insulation Layout
5.	A-18090	Drain Fitting (Male)
6.	A-6448	Drain Strainer
7.	5-170-2	Tygon Hose
8.	2-537-1	Clamps (2 required)
9.	A-16460	Cube Chute
10.	A-16465	Curtain Ass'y
11.	3-727	Thumb Screws (2)
12.	2-536-1	Clamp
13.	5-179	Tygon Tube
14.	A-16963	End Bearing
15.	A-16463	Sprayer Tube
16.	S-6907	Jets
17.	2-1489	Plastic Insul. Cover

ITEM NO.	PART NO.	NAME
18.	A-16172	G Freezer and Acc. Assy
19.	S-9251	Rubber Cupholder
20.	S-7434	Adapter
21.	3-579	Fiber Washer
22.	A-16437	Inlet Tube
23.	A-16970	Inlet Tube
24.	2-541	"O" Ring
25.	S-9965	"O" Ring
26.	13-125	Grommet
27.	S-8887	/Drive Bearing Support
28.	S-7639	Drive Journal Ass'y
29.	S-7635	Nut
30.	3-606	Fiber Washer
31.	13-169	Grommet
32.	A-15759	Bulb Cover
33.	13-590	Bulb Gasket
34.	A-16133	Storage & Resv. Assy

SC-100H CASE AND HOOD ASSY

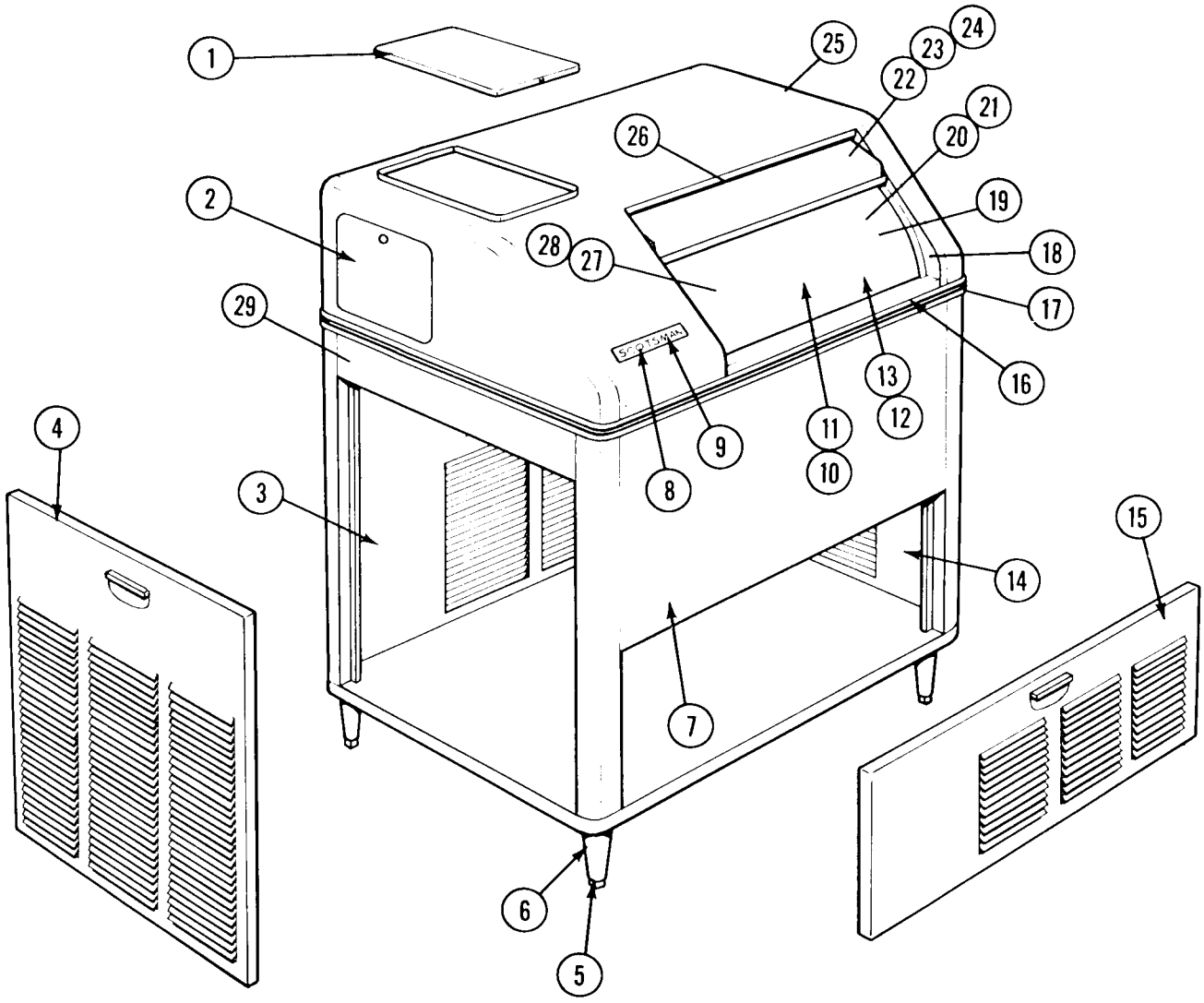

ITEM NO.	PART NO.	NAME
1.	A-6767	Top Door
2.	A-6530	Top Side Door
3.	A-16563	Back Door
4.	S-9405	Left Door
5.	8-522	Leg Leveler
6.	A-15803	Leg
7.	A-16138	Case Assy
8.	15-156	Emblem
9.	3-271	Speed Nuts *
10.	A-18102	Storage Drain Assy*
11.	A-18090	Drain Fitting Male*
12.	A-16246	Insulation Layout*
13.	A-15721-1	Bottom Insulation*
14.	A-16561	Right Door
15.	A-15789	Front Door

ITEM NO.	PART NO.	NAME
16.	15-324	Plastic Insert(per foot)
17.	A-6510	Moulding Strip, Front
18.	A-16208	Door Track
19.	A-16133	Storage Bin Assy *
20.	A-15759	Bulb Cover *
21.	13-590	Bulb Gasket *
22.	A-15559	Sliding Door
23.	3-640	Door Glides(Door)
24.	3-1195	Door Glides (Hood)
25.	A-15599	Hood Assy
26.	A-16209	Door Catch *
27.	2-530	"O" Ring Drain *
28.	A-6448	Drain Strainer*
29.	A-17191	Left Panel

*Not Shown

SC-100 HOT WATER TANK

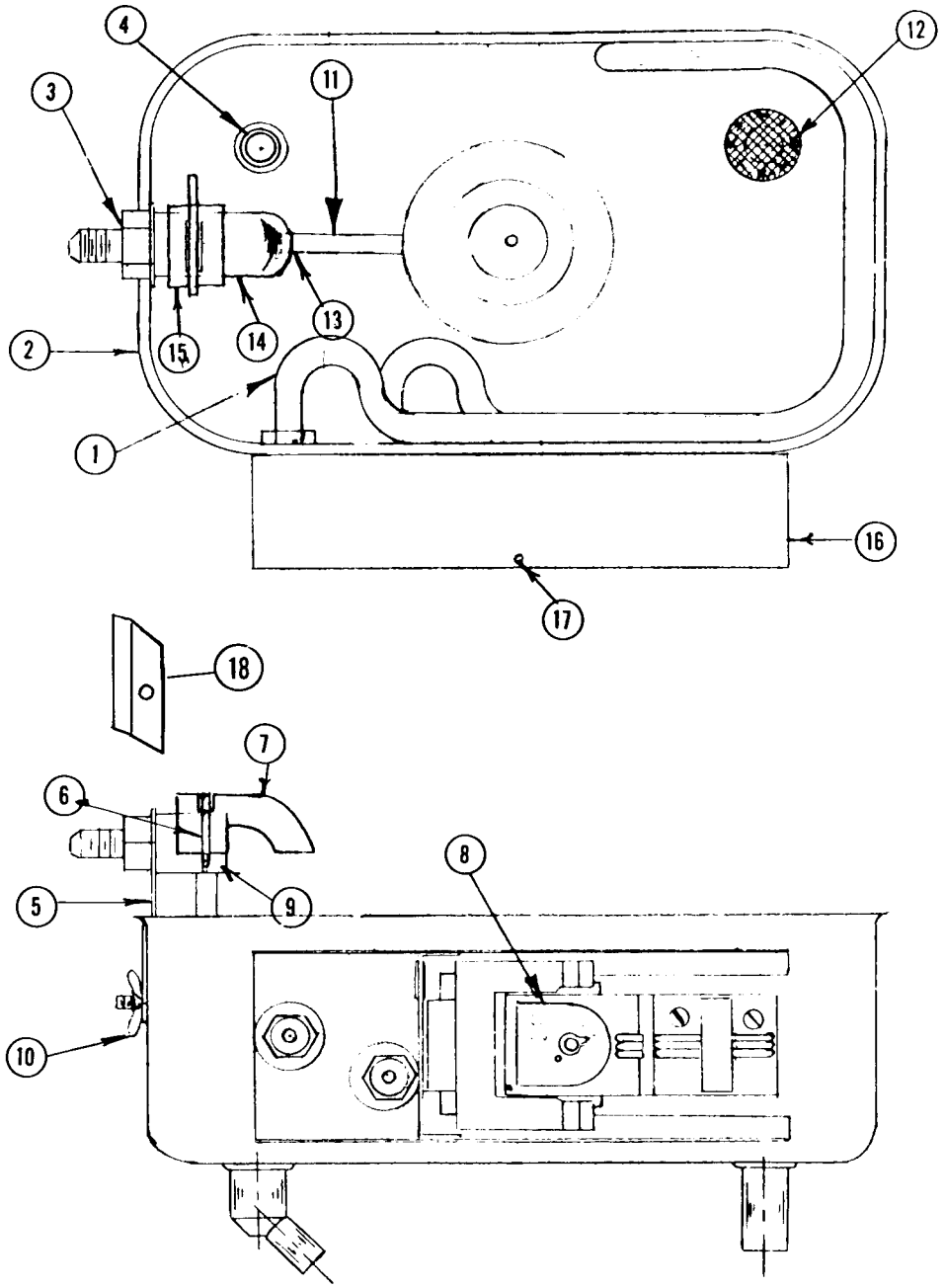

ITEM NO.	PART NO.	NAME
1.	12-356R	Heating Element
2.	A-6467	Hot Water Tank Only
3.	S-7044	Nut
4.	A-6477	Stand Pipe
5.	A-12869	Inlet Water Bracket
6.	2-1259	Valve Pin
7.	2-1320	Water Deflector, plastic
8.	12-246	Thermo Disc
9.	A-6771	Water Inlet Valve Ass'y. (complete with float)
10.	3-255	Wing Nut
11.	A-12068	Float Ass'y (includes arm)
12.	A-5998	Screen
13.	A-5777	Valve Seat Holder (*)
14.	S-6947	Valve Seat (*)
15.	3-1001	Rivet, Stainless Steel (*)
16.	A-6480	Thermostat Box Cover
17.	3-129	Screw
	A-6466	Hot Water Tank Complete (less cover)
18.	A-18418	Water Deflector

CONDENSING UNIT

1/3 HP Air Cooled, Copeland

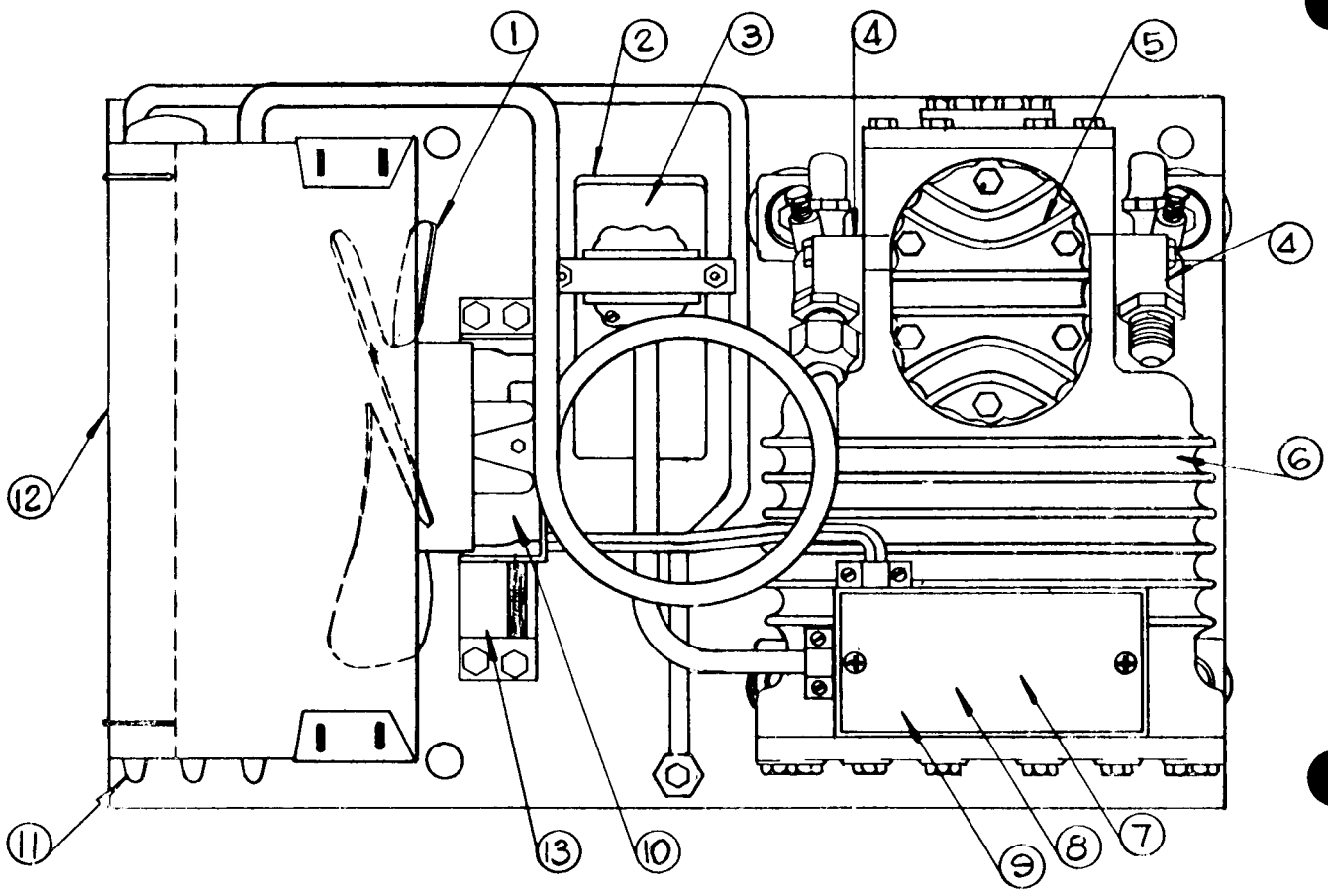

ITEM NO.	PART NO.	NAME
1.	18-231	Fan Blade
2.	18-1901-4	Starting Capacitor
3.	18-1903-4	Relay
4.	18-237	Suction & Discharge Service Valves
5.	18-222	Valve Plate & Gasket Kt Kit Assembly (*)
6.	18-221	Motor Compressor 115/60/1 AC
7.	18-240	Overload Klixon
8.	18-241	Terminal Ass'y) (*)
9.	18-270	Terminal Board (*)
10.	18-150-1	Fan Motor
11.	18-234	Condenser
12.	A-12109	Shroud
13.	18-233	Fan Motor Bracket

Note:

Not available as a complete mounted ass'y

(*) Not Shown

CONDENSING UNIT
⅓ HP Water Cooled, Copeland

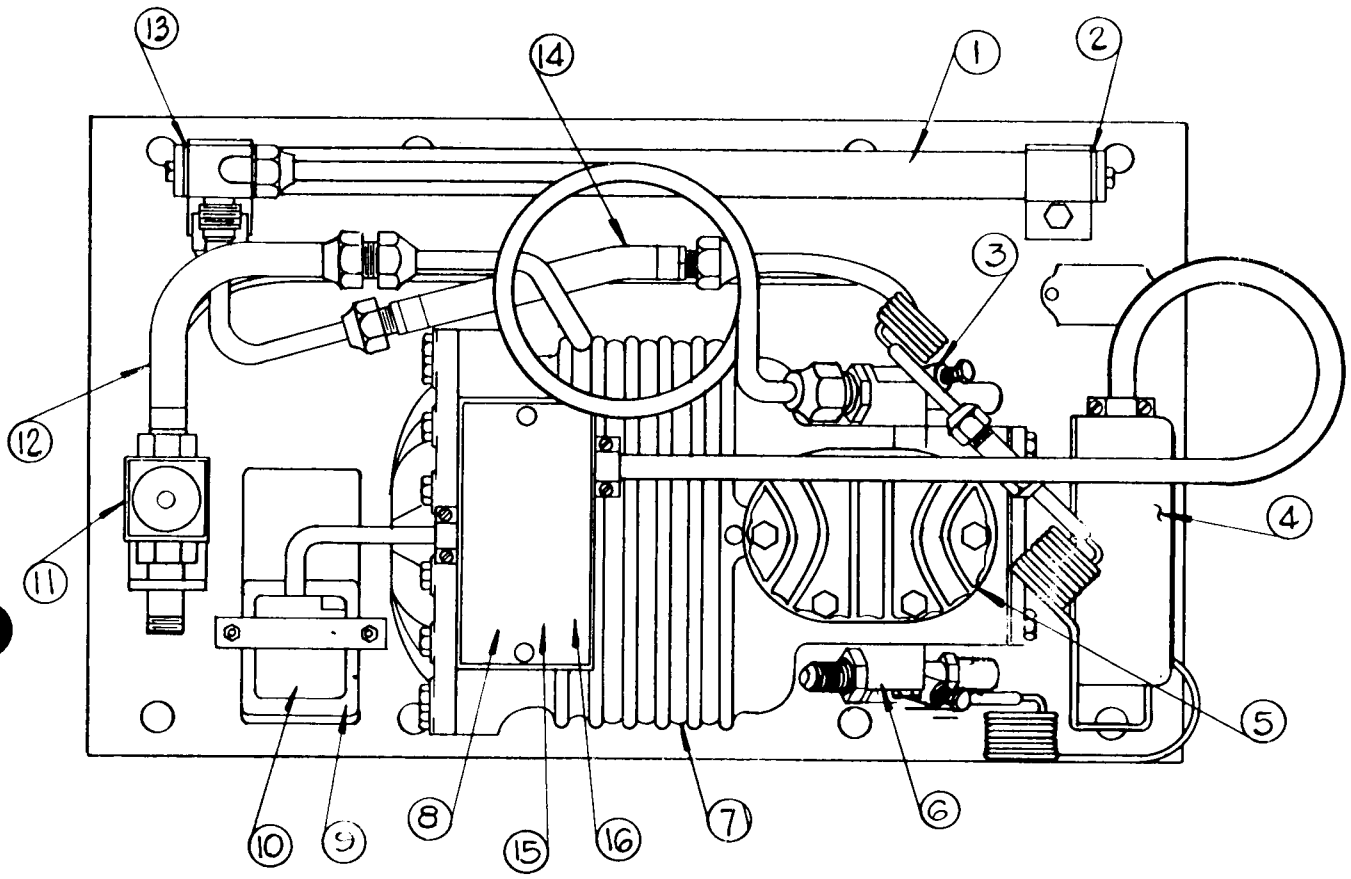

ITEM NO.	PART NO.	NAME
1.	18-259	Condenser
2.	18-262	Plain Gasket
3.	18-237	Discharge Service Valve
4.	11-286	High-Pressure Control
5.	18-222	Valve Plate & Gasket Kit Assembly (*)
6.	18-237	Suction Service Valve
7.	18-257	Motor Compressor 115/60/1 WC
8.	18-240	Klixon (overload) (*)
9.	18-1901-4	Starting Capacitor
10.	18-1903-4	Relay
11.	11-198	Water Valve
12.	18-260	Compressor to Valve Water Hose
13.	18-263	Manifold Gasket
14.	18-261	Compressor to Condenser Water Hose
15.	18-270	Terminal Board (*)
16.	18-241	Terminal Ass'y

(*) Not Shown

Note:
Not available as a complete mounted Ass'y

3WAY WATER VALVE
SC-100

ITEM NO.	PART NO.	NAME
1.	S-6926	Valve Inlet Cap
2.	13-148	Rubber Valve Seat (3 per unit)
3.	A-8139-20	All Items Covered By No. 3 Are Included in Repair Kit
4.	3-165	Machine Screw
5.	12-2481	Solenoid
6.	S-8995	Solenoid Pin
7.	2-420	Spring
8	S-6928	Arm Support Ass'y
9.	3-396-1	Cotter Keys (2 required)
10.	S-7973	Pins (2 required)
11.	S-6932	Valve Arm
12.	S-8151	Valve Body
13.	3-88	Washer (4 required)
14.	3-61	Nut (4 required)
15.	S-6925	Valve Packing Gland
	A-8139	Complete Valve (SC-100, SC-200)
16.	2-557	Valve Stem Guide
17.	2-419	Compression Spring
18.	S-6924	Valve Seat Washer
19.	2-418	Spring
20.	2-424	Packing
21.	S-6931	Packing Washer.12
22.	3-570	Fiber Washer

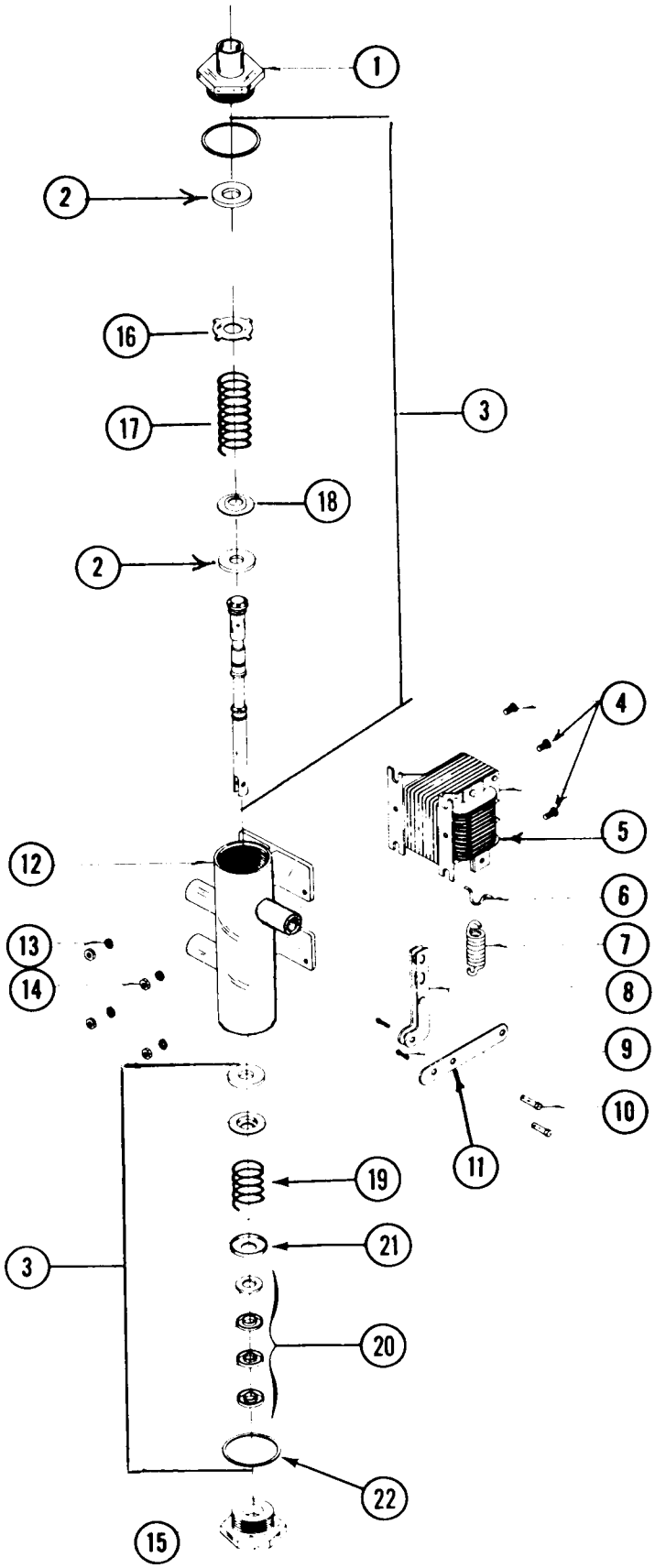

Note:

Complete A-8139-20 kit will be substituted on order for stem only.

INSTRUCTIONS FOR INSTALLING A8139-20 VALVE REPAIR KIT

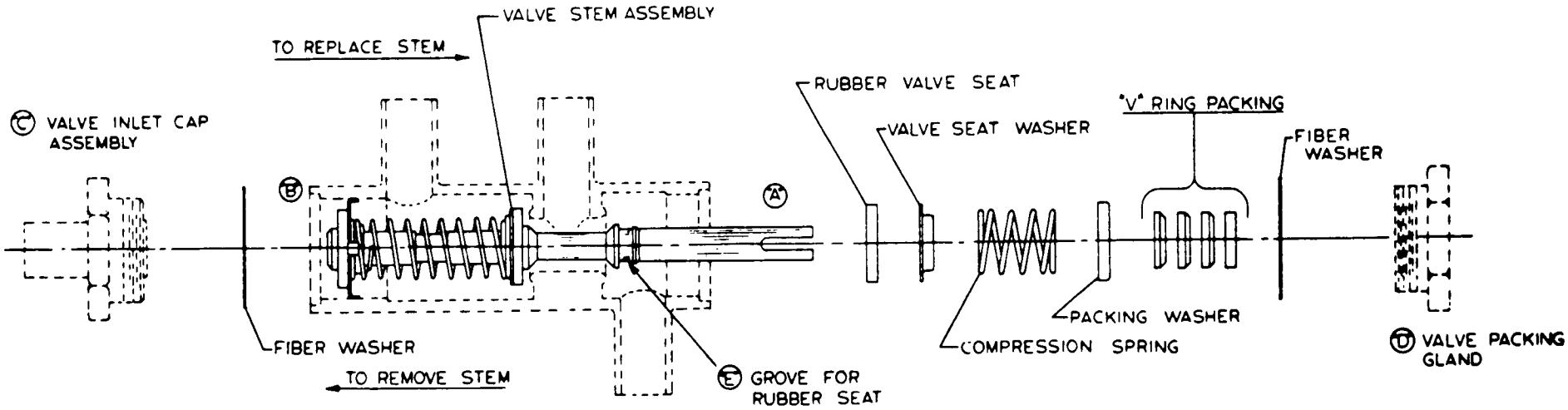

1. REMOVE COTTER KEY AND STAINLESS STEEL PIN (NOT SHOWN) FROM VALVE STEM END "A".
2. REMOVE "C" VALVE INLET CAP ASSEMBLY AND "D" VALVE PACKING GLAND FROM VALVE BODY.
3. REMOVE VALVE STEM ASSEMBLY AS SHOWN.
4. CLEAN THE INSIDE OF THE VALVE BODY.
5. INSERT ASSEMBLED PORTION OF VALVE KIT (VALVE STEM ASSEMBLY), AS SHOWN, THRU END "B".
6. SCREW "C", VALVE INLET CAP, TO VALVE BODY (BE SURE TO INSERT NEW FIBER WASHER) TO POSITION OR SECURE VALVE STEM ASSEMBLY IN VALVE BODY.
7. ASSEMBLE IN SEQUENCE PARTS SHOWN IN DIAGRAM AND PACKED LOOSE IN THE KIT.
   NOTE: USE "½" COPPER TUBE OR EQUIVALENT OVER STEM END "A" TO PUSH RUBBER VALVE SEAT INTO GROOVE "E".
8. SCREW "D", VALVE PACKING GLAND, TO BODY. (BE SURE TO INSTALL NEW FIBER WASHER).
9. ASSEMBLE STAINLESS STEEL PIN AND COTTER KEY TO END "A"

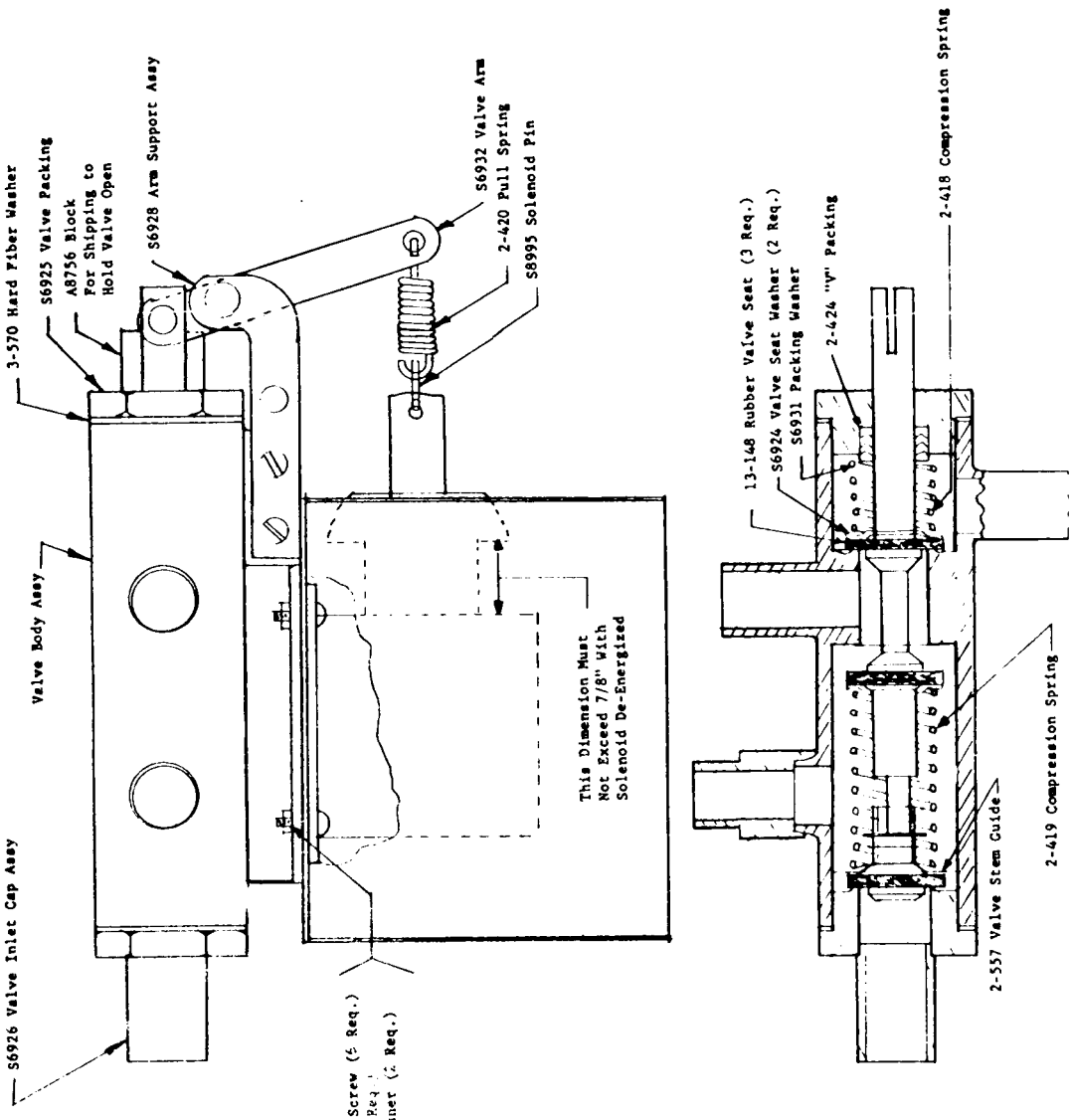

WATER VALVE ASSEMBLED

COMPLETE DRIVE LINKAGE

Part No. A-6726

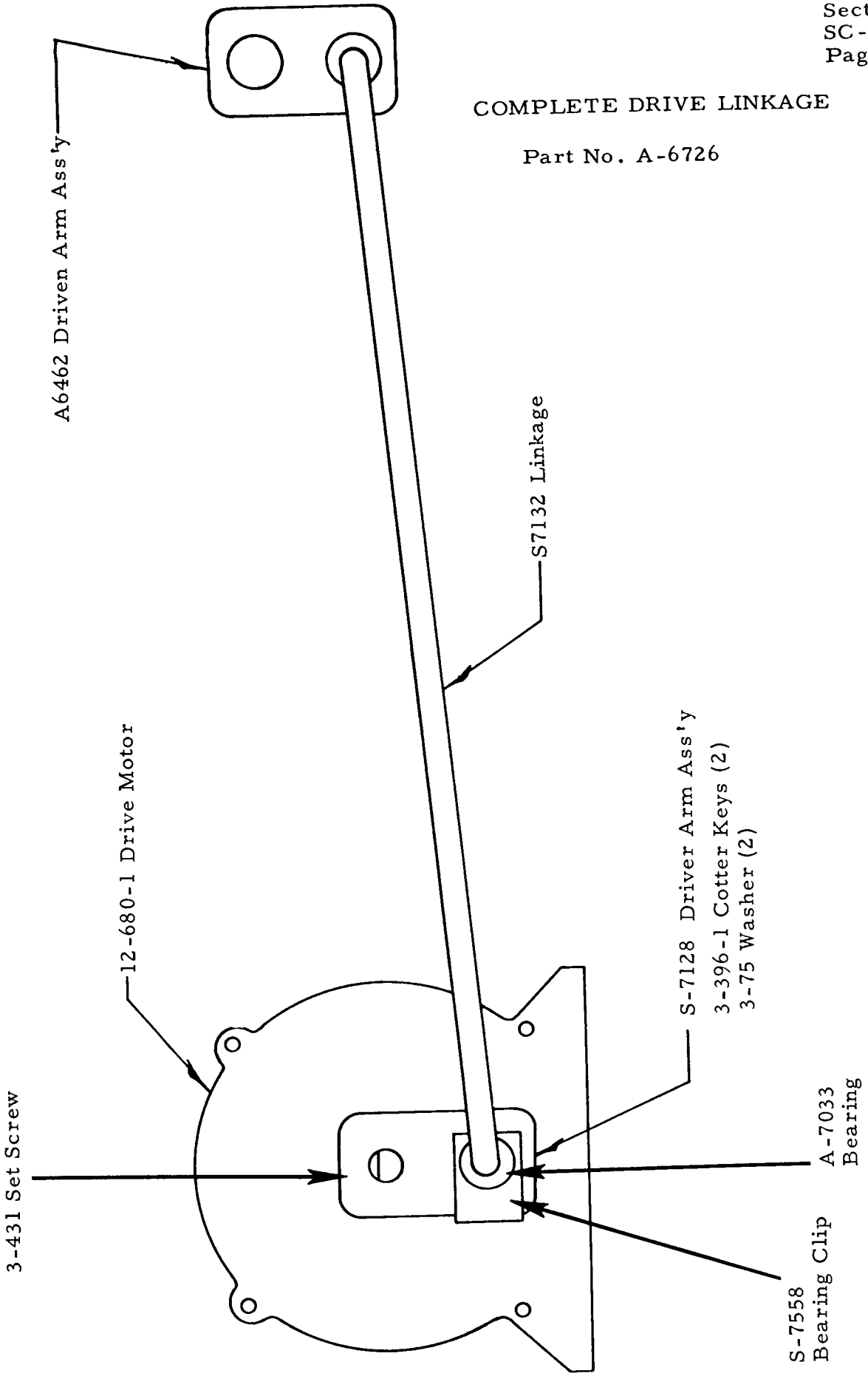

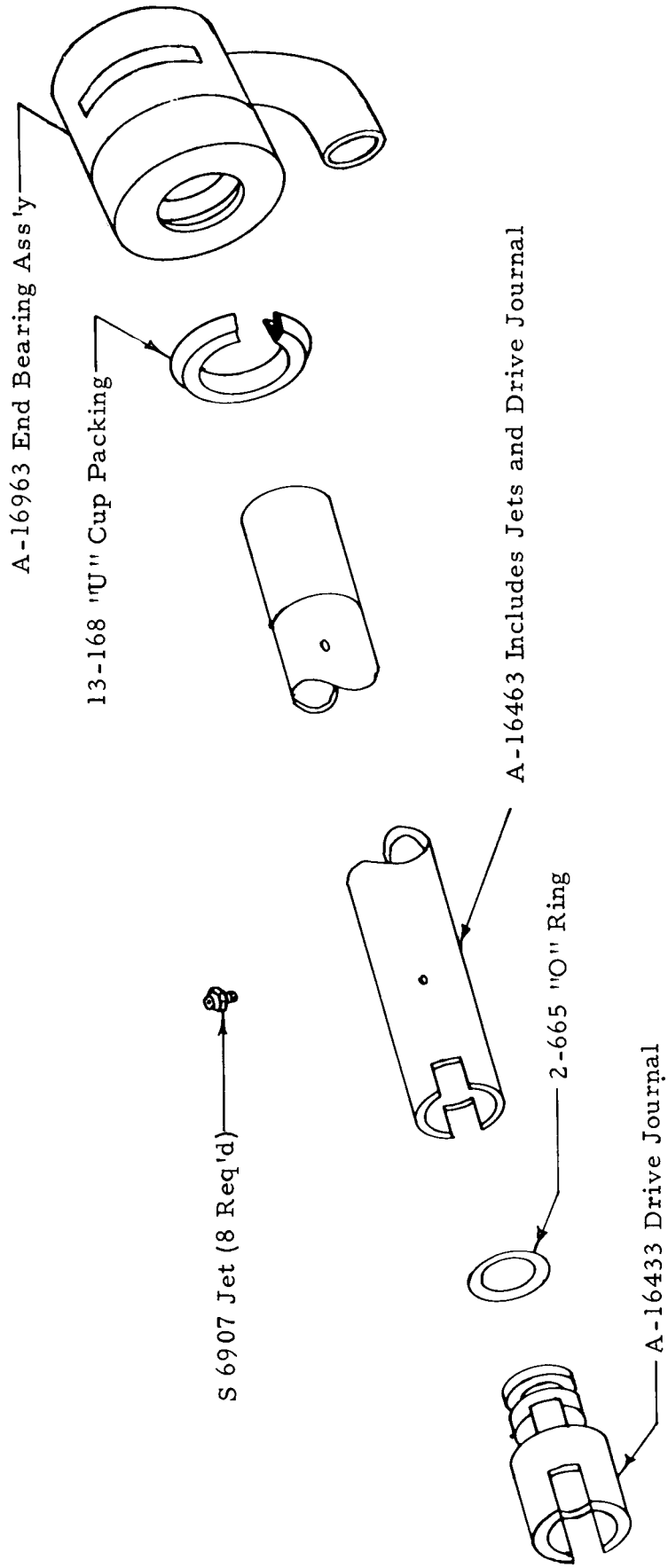

SPRAYER TUBE ASSEMBLY

FUNCTIONAL PARTS AND MAINTENANCE

PART NAME: Relay

NUMBER: 12-419

FUNCTION: Relay is used as a by-pass on the bin thermostat when it tries to cut unit off on a full bin of cubes during a freezing cycle. This insures full cubes every time a harvest occures and prevents short cycling on bin thermostat.

SETTING: Factory set.

REPAIRABLE: No. Replace when inoperative.

MAINTENANCE: Check electrical connections and blow points free of lint or dirt.

PART NAME: Temperature Control Storage Bin — White Rodgers — Type 1604-31

NUMBER: 11-99-1

FUNCTION: To automatically cut machine off when ice level in storage bin reaches thermobulb. Automatically starts machine when ice level in bin falls below bulb location.

SETTING: Most of these controls have adjustable differential. Setting on range dial should be 35° cut out, 39° cut in.

REPAIRABLE: No. Replace when inoperative. If out of warranty it can be sent in through your local refrigeration supply dealer and repaired or replaced for a small percentage of original cost.

MAINTENANCE: Remove cover, check points for corrosion or arcing every 6 months. Blow control free of bugs dirt, etc. Check capillary for cracks or worn spots due to vibration.

Hold a small handful of ice on thermostat bulb to check operation of control. Tighten electrical connections.

PART NAME: Water valve with solenoid

NUMBER: A-8139 -Water valve only
A-8140-Solenoid &Mounting Hardware
12-248-1 Solenoid only

FUNCTION: This water valve is electrically operated by a solenoid. Valve proper has three valve seats and four water ports. This valve is the heart of the water control system. During freezing cycle it uses two upper openings to circulate water between rubber platen and sump tank. Closes off openings to hot water and drain tube. During defrost period, electrically operated solenoid pulls seats back from hot water supply and drain by closes center port to direct hot water to top of platen. Hot water goes up into freezer through first top opening to defrost cubes while water used in freezing cycle and left in sump tank drains through second top opening and out through drain opening.

SETTING: None. Factory set.

REPAIRABLE: Yes, All components are replaceable including valve seats, gaskets, V-packing, solenoids, etc.

MAINTENANCE: Valve and entire unit should be cleaned with ice machine cleaner every six months. In many localities heavy scale accumulation will lodge in valve and hold rubber seats open. This will either let warm water seep into sump freezer supply and cause long freezing cycle or else it will let sump freezer supply seep down drain and cause shortage of cube supply water. This results in short cycles, partial cubes and cloudy cubes. Manually flushing valve will also help in many cases.

FUNCTIONAL PARTS AND MAINTENANCE

PART NAME: Agitator Drive Motor Merkle Korff

NUMBER: 12-680-1

FUNCTION: This motor is used to drive the linkage mechanism which in turn drives the oscillating jet spray tubes. This provides a constant spray movement to all the inverted cube molds and by so doing also aerates the water producing clear solid Scotsman cubes.

SETTING: No settings on motor.

REPAIRABLE: Yes-to some extent. Not recommended although front bearings and windings could possibly be replaced by electric motor shop. Normally replace out of warranty motors.

MAINTENANCE: Oil every six months or less as use indicates. Use SAE 20 oil. There are three oil cups on the motor and gear case to add oil. Drive linkage should be inspected to insure free movement with no binding or drag on drive motor.

PART NAME: Timer

NUMBER: 12-645-1

FUNCTION: Heart of the cyclematic control system is the temperature control Part No. 11-345 and the time clock it actuates. All electrical components are connected to the time clock terminal board and are shunted by means of a single pole, double throw micro-switch to either the freezing cycle or harvest cycle. Micro-switch is actuated by two metal cams that are directly connected to the electric timer clock motor. Timer has a 12 minute cycle, 3 1/2 minutes on defrost cycle. Time clock face has numerals to 7 on half the face. Each numeral represents a one minute period. Face also has a lever beneath it which can be moved to lengthen or shorten defrost period.

SETTING: Normal setting for defrost is 3 1/2 minutes.

REPAIRABLE: Yes. Micro-Switch only, Part No. 12-645-20 is replacable as well as timer clock motor only, Part No. 12-367.

MAINTENANCE: Check all electrical connections, blow contact points free of dust, dirt, etc.

FUCTIONAL PARTS AND MAINTENANCE

PART NAME: Reverse Acting Temperature Control

NUMBER: 11-345

FUNCTION Reverse acting temperature control, closes on temperature decrease, opens on temperature rise. Control determines length of freezing cycle and by the same token, the cube size. A lower setting on control will produce larger cubes, a higher setting, smaller cubes. This control actuates time clock motor, which then takes over balance of freezing cycle and also defrost period.

SETTING: Control is adjustable with screw driver on off-set cam.

REPAIRABLE: No, Replace when inoperative.

MAINTENANCE: Check electrical connections. Blow points free of dust, dirt, lint, etc.

PART NAME: Solenoid

NUMBER: 12-248-1

FUNCTION: Solenoid is mounted directly on water valve body. Adequate stops are present in the housing of the solenoid but may require bending or adjusting. An electrically operated solenoid which is used to open and close the water valve through mechanical linkage. Solenoid is a continuous duty type.

SETTING: Solenoid itself requires no adjustment, however, linkage should be adjusted so that solenoid can make positive contact when energized and core will leave field when de-energized.

REPAIRABLE: No. Replace when inoperative.

MAINTENANCE: Solenoid proper requires no maintenance, but care should be exercised to insure proper voltage to coil to avert burn-outs. Mechanical linkage can be oiled and adjusted to prevent drag on solenoid. Many solenoid burn-outs are caused indirectly such as a sticking time clock which will keep solenoid energized for long periods of time.

PART NAME: Sump pump

NUMBER 12-418-1

FUNCTION: Recirculating pump used to pump supply water in sump tank to jet tubes during freezing cycle.

SETTING: Factory set

REPAIRABLE: Yes. Motors rewound, impeller blades replaced. Generally out of warranty pumps are replaced by motor only part no. 12-1351-22.

MAINTENANCE: None. Grease seal ball bearing permanently lubricated

SERVICE - COMPLETE UNIT

ALL STEPS LISTED BELOW SHOULD ONLY BE STARTED WHEN WATER AND ELECTRICAL SUPPLY ARE OFF TO PREVENT ACCIDENTS.

To remove cabinet top or hood.

1. Remove two back end screws in rear moulding strip.
2. Pull out black insert tape concealing screws.
3. Remove balance of screws in moulding strips.
4. Lift hood straight up.

To remove Sump Pump.

1. Remove hood left and top panels.
2. Remove hose clamp on pump discharge line.
3. Loosen brass wing nut holding pump in position.
4. Disconnect cord which leads to terminal board.
5. Lift pump straight up and out through left side opening.

To remove Agitator Motor on SC-100

1. Disconnect wires at the control box terminal board.
2. Loosen the Allen set screw on driver crank arm and remove the drive arm.
3. Remove the four hold-down screws and remove the motor.

To remove the jet tube assembly on Model SC-100

1. Remove the plastic curtain assembly.
2. Remove the cube rack.
3. Lift the right end of the jet tube straight up and slide the other end out of the driving slot.

To remove Water Inlet Valve to hot water tank.

1. Remove hood left and top panels.
2. Remove hot water tank cover.
3. Loosen 1/4" SAE flare nut to water inlet valve.
4. Loosen hex sided brass nut holding valve to bracket.
5. Remove and replace water inlet valve.

To remove complete Hot Water Tank on Model SC-100

1. Remove complete hood.
2. Remove the two hose clamps to drain lines.
3. Loosen 1/4" SAE flare nut to inlet valve.
4. Disconnect lead wire to control box terminal board, lift up from bracket clips and out.

To change hot water tank Heating Element on Model SC-100

1. Remove top and left side hood service panels.
2. Remove hot water tank cover.
3. Drain all water from hot water tank.
4. Remove stainless steel thermostat cover.
5. Remove lock nut from each element prong.
6. Install new element, fill tank and check operation. Should heat water to 140° F.

To remove Solenoid-Operated Three Way Water Valve.

1. Remove left side service panel.
2. Drain all water from unit, disconnect power and water.
3. Remove four clamps holding tygon tubing to valve.
4. Remove two hex head cap screws holding water valve housing to cabinet and drop straight down. Lead-in wire to solenoid has plug-in terminal.

SERVICE - COMPLETE UNIT

To replace storage bin door

1. Lift door up and slide back approximately six inches.
2. Lift up on underside of door and pull straight out and toward you.
3. Replace door in reverse procedure.

To replace motor compressor valve plate

1. Install compound gauge in suction service valve port and close suction service valve by turning valve stem all the way in (Front Seated.)
2. Operate motor compressor until gauge reading reaches zero. Turn off unit.
3. Front seat discharge service valve.
4. Loosen all head bolts and tap head lightly with rubber-faced or plastic hammer to break loose.
5. Remove head, defective valve plate and any gasket material that may have stuck to head or compressor body.
6. Install new valve plate with all new gaskets as provided, tightening each head bolt a little at a time until all are snug.
7. Remove port gauge plug from discharge valve and crack open suction side letting gas purge off trapped air from head. Install hi-side gauge in this port, back up both service valve stems and check around valve plate for refrigerant leaks.
8. Start unit, noting head and back pressures. If normal, let run until compressor gets warm. Tighten all head bolts once more, and again check for leaks.

To replace the compressor

1. Front seat both suction service valve and discharge service valve on the compressor.
2. Disconnect the wiring from the compressor.
3. Remove the bolts holding the service valve to the motor compressor body.
4. Remove the compressor hold-down nuts and lift the compressor out of the unit.
5. Reverse steps 1 through 4 in replacing the compressor.
6. Check the compressor for oil before connecting the oil lines. Should be 2 inches down from the top of the oil plug hole or 1/2 of sight glass.
7. Remove the gauge port plug from the discharge service valve. Crack the suction service valve slightly, allowing some gas to escape out the gauge port of the discharge valve. When you have thoroughly purged the compressor, replace the plug and open all valves. It may be necessary to charge the unit because some of the gas was lost when the defective compressor was removed. Check and charge is necessary.

MAINTENANCE INSTRUCTION FOR SCOTSMAN SUPER CUBERS

THE FOLLOWING MAINTENANCE MUST BE ACCOMPLISHED TWO (2) TIMES PER YEAR ON ALL SCOTSMAN SUPER CUBERS.

1. Clean air-cooled condenser; This is to be done frequently with the machine shut off.
2. Clean hot water tank and evaporator, sump tank and screen, using Scotsman Ice Machine Cleaner or equivalent.
3. Remove jet tube and manually clean jets by unscrewing jets.
4. Check curtain assembly.
5. Tighten all electrical connections.
6. Tighten all bolts.
7. Check water supply. Check water pressure flow through flow control. Clean water strainer.
8. Oil jet tubes drive motor three(3) places. Use SAE 20 oil - 3 oil cups.
9. Grease plunger on water solenoid valve with high temp grease. -OPTIONAL
10. Oil Condenser fan motor. Punch sealed cap or remove screws where possible.
11. Check for refrigeration leaks with halide torch.
12. Check for water leaks. Tighten drain line connections.
13. Check size and condition of cubes. Adjust as required. See Service Analysis Section.
14. Check bin thermostat setting. Factory set at 35° out, 39° in.

PROCEDURE FOR USE OF SCOTSMAN ICE MACHINE CLEANER IN SCOTSMAN ICE MACHINES

1. Remove front access door
2. Locate control box with time clock knob protruding thru cover.
3. Put unit through a harvest cycle manually. This may be done by turning time clock knob clockwise until a loud snap is heard.
4. Let unit finish cube harvest cycle and start into freezing cycle. This will be approximately 5 minutes after the loud snap in Step #3 is heard. At this time turn the compressor switch off, the lower of the two switches in the control box.
5. Locate the hot water tank which is directly under the top access door. Remove door. Remove the hot water tank cover by pulling up around the edge until it snaps off. Pour 4 ounces (half bottle) of "Scotsman Ice Machine Cleaner" into the hot water tank.
6. Locate the sump reservoir which is in the storage bin area and directly behind the ice discharge chute. This discharge chute is covered by a series of white plastic curtains which are free to swing out into the storage bin. Pour 4 ounces (half bottle) of "Scotsman Ice Machine Cleaner" into the sump reservoir.
7. Let unit operate normally for 10-15 minutes into the freezing cycle. No ice will be made because the motor compressor is not in operation.
8. At the end of this time put the unit through 2 or 3 harvest cycles manually to allow fresh make up water to clean out remaining solution. Each time waiting approximately 5 minutes after the loud snap until the next harvest cycle is done manually.
9. Turn the compressor switch back on.
10. Check each new batch of cubes until they are clear and until acid taste has been removed from cubes.
11. Put hot water in storage bin to melt the cubes and thereby clean the drains with the same solution that has just cleaned the unit.
12. Use a damp cloth to wipe off curtains and inside of storage bin.
13. Replace all access doors.
14. Unit is now ready for continued automatic operation.

PARTS LIST - SC-100H

1. CABINET PARTS

Case Hood Assembly	A-15599
Hood Top Door	A-6767
Hood Side Door	A-6530
Door Slide	A-16208
Sliding Door	A-15559
Emblem	15-156
Moulding Strip - Rear	A-6509
Moulding Strip - Front	A-6510
Cabinet Front Service Door	A-15789
Cabinet Right Side Service Door	A-16561
Cabinet Rear Service Door	A-16563
Cabinet Left Side Service Door	S-9405

2. CONTROL BOX - ELECTRICAL COMPONENTS

Timer Assembly	12-645-1
Timer Micro-Switch	12-645-20
Cube Size Control	11-345
On-Off Switch and Compressor Switch	12-426
Bin Thermostat	11-99-1
Complete Cube Relay	12-419

3. CONDENSING UNITS AND REFRIGERANT CIRCUIT

	AIR-COOLED	WATER-COOLED
Freezer and HX assy. complete	A-16172	Same
Suction HX and Accumulator Line	A-6123	Same
Drier	2-350	Same
Motor Compressor 115/60/1	18-221	18-257
Valve Plate and Gasket Kit	18-222	Same
Relay	18-1903-4	Same
Starting Capacitor	18-1901-4	Same
Fan Motor	18-150-1	
Fan Blade	18-231	
Condenser	18-234	18-259
Shroud for Condenser	A-12109	
Klixon Overload (for units not inherent protected)	18-240	Same
Replaceable Terminal Assembly	18-241	Same
Terminal Board	18-270	Same
Compressor to water valve hose		18-260
Compressor to condenser hose		18-261
Plain Gasket for 18-259		18-262
Manifold Gasket for 18-259		18-263
Manual re-set dual pressure control		11-286
Penn Water Regulating Valve		11-198

4. HOT WATER TANK

Hot Water Tank Complete ...S.S.	A-6466
Hot Water Tank Only ...S.S.	A-6467
Standpipe for A-6468	A-6477
Water Inlet Valve	A-6771
Rubber Seat for Valve	S-6947
Valve Pin	2-1259
Float Assembly	A-12068
Thermostat	12-246
Rod Type Heating Element	12-356R
Hot Water Tank Cover	A-12870
Cover Hold-Down Spring Clips	2-1234
Water Deflector, (plastic)	2-1320
Strainer Screen Assembly	A-5998

5. WATER VALVE

3-Way Water Valve less Solenoid	A-8139
Solenoid & Mounting Hardware	A-8140
Replacement Rubber Valve Seats	13-148
Solenoid Only	12-248-1
Water Valve Repair Kit	A-8139-20
Solenoid Pull Spring 1 1/2 inches	2-420
Solenoid Pull Key	S-8995

6. WATER CIRCUIT

Inlet Water Strainer	16-162
Inlet Water Pressure Regulator	A-13346-1
Sump Pump Assembly	12-418-1
Sump Pump Motor Only	12-1351-22
Sump Tank Assembly, insulated	A-8515
Sump Tank Cover	S-9809
Sprayer Tube Assembly	A-16463
Sprayer Tube Jet Only	S-6907
End Bearing, water inlet to sprayer tube	A-16963
U-Cup for Sprayer Tube	13-168

7. DRIVE MOTOR AND LINKAGE

Drive Motor	12-680-1
Drive Linkage assembly	A-6726
Driver Arm Assembly	A-6462
Linkage Rod	S-7132
Driver Arm Assembly	S-7128
Drive Bearing Support	S-8887
Driving Journal	S-7639

8. STORAGE BIN AND COMPONENTS

"O" Ring	2-530
Storage Bin Drain Assembly, Male	A-18090
Drain, strainer	A-6448
Storage Bin Drain Ass'y, Female	A-18102
Bin Thermostat Bulb Cover	A-15759
Bin Thermostat Bulb Gasket	13-590
Cube Chute	A-16460
Curtain Assembly	A-16465

MISCELLANEOUS

Ice Machine Cleaner, 8 oz. bottle	19-343
Ice Scoop	2-540
Leg Leveler	8-522
Legs	A-15803

TABLE OF CONTENTS

Foreward 1

Table of Contents 2

Photograph and Ice Making Capacity 3

Specifications and Dimensions 4-5

Selecting Location:
- Location 6
- Uncrating 6
- Preparation for Installation 6-7

Installation 7-8

Water Supply and Drain 8

Electrical Connection and Characteristics 8

Wiring Diagrams
- Air Cooled 9
- Water Cooled 10

Diagram Plumbing Connections 11

Final Check List 12

Start-up 13-14

Cycle of Operation:
- Harvest Cycle 15-16
- Freezing Cycle 17-18

Service Analysis Charts 19-20

Exploded Views - Component Parts:
- Sump Pump 21
- Water Valve Assembly 22
- Control Box 23
- Complete Unit (End View) 24
- Complete Unit (Front View) 25
- Case Parts 26
- Condensing Unit (Air Cooled) 27
- Condensing Unit (Water Cooled) 28

Service Information
- Drive Linkage 29
- Spray Bar Ass'Y. 30
- Functional Parts and Maintenance 31
- Service Complete Unit 32

Maintenance Instructions 33

Parts List 34-35

THIS PAGE
INTENTIONALLY
LEFT BLANK

THIS PAGE
INTENTIONALLY
LEFT BLANK

SCOTSMAN®

SUPER CUBER
SC-100
SERIES

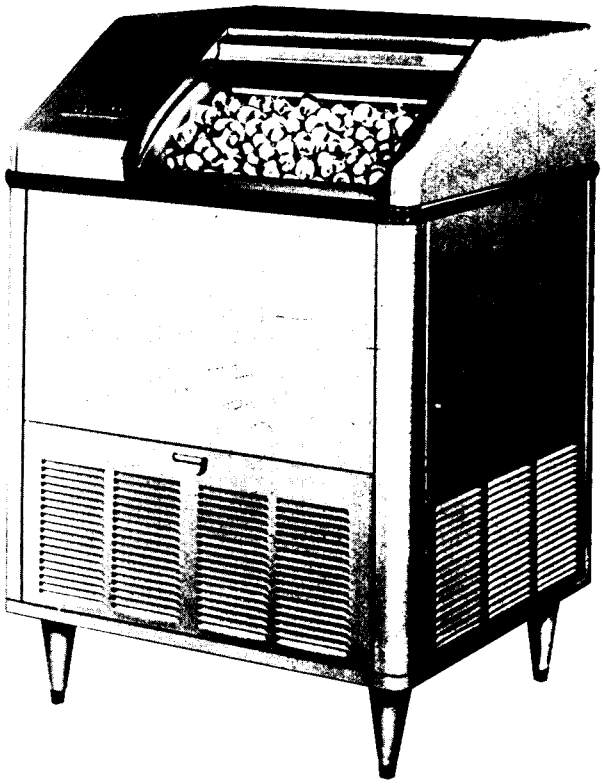

ice making capacity

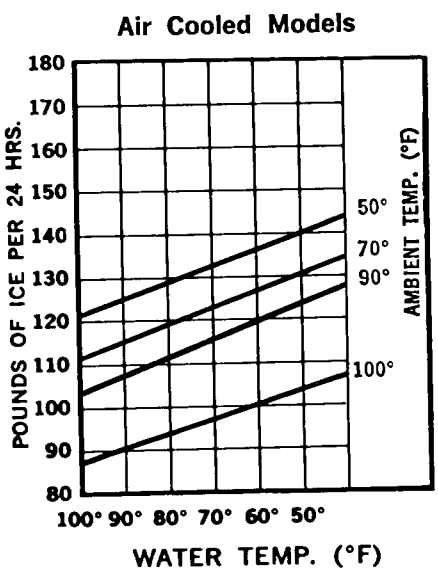

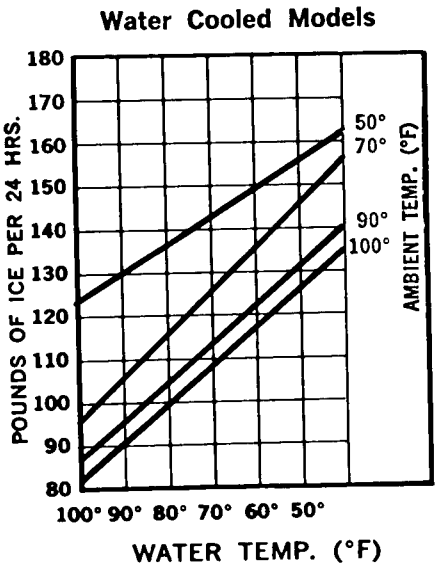

SPECIFICATIONS

SUPER CUBER SC-100 **SERIES**	SC-100J	SC-100WJ	SC-100J-SS	SC-100WJSS
CONDENSER, Air Cooled	X		X	
CONDENSER, Water Cooled		X		X
WATER DRAIN, Condenser - 5/8" O.D.		X		X
FINISH, Hammerloid Grey	X	X		
FINISH, Stainless Steel			X	X
SHIPPING WEIGHT	319	325	326	330

DAILY CAPACITY up to 110 lbs.
STORAGE BIN CAPACITY (Self-Contained) 50 lbs.
COMPRESSOR 1/2 H.P.
ELECTRICAL 115 V, 60 CY, 1 PH
WATER INLET, 3/8" SAE Flare
WATER DRAIN, Bin - 5/8" O.D.

STORAGE BIN, Stainless Steel
HEIGHT (with legs) - 45 1/4" to 46"
HEIGHT (without legs) - 39 1/4"
WIDTH - 34 1/8"
DEPTH - 24 1/2"

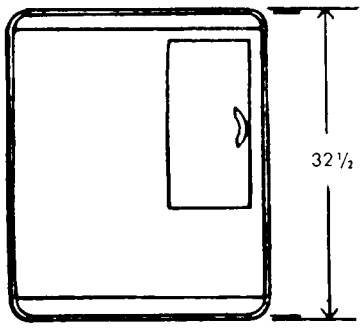

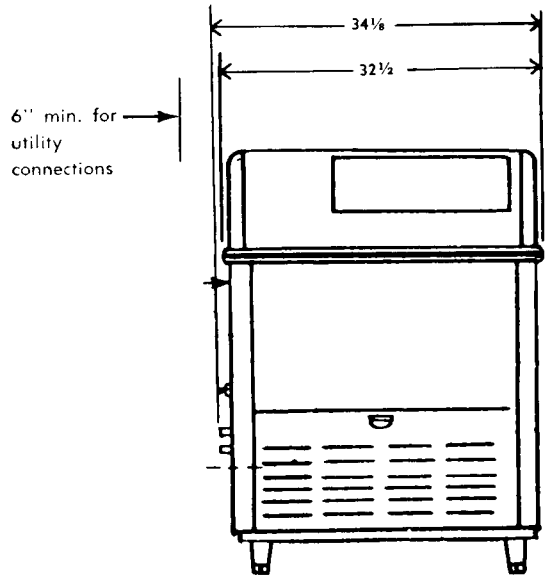

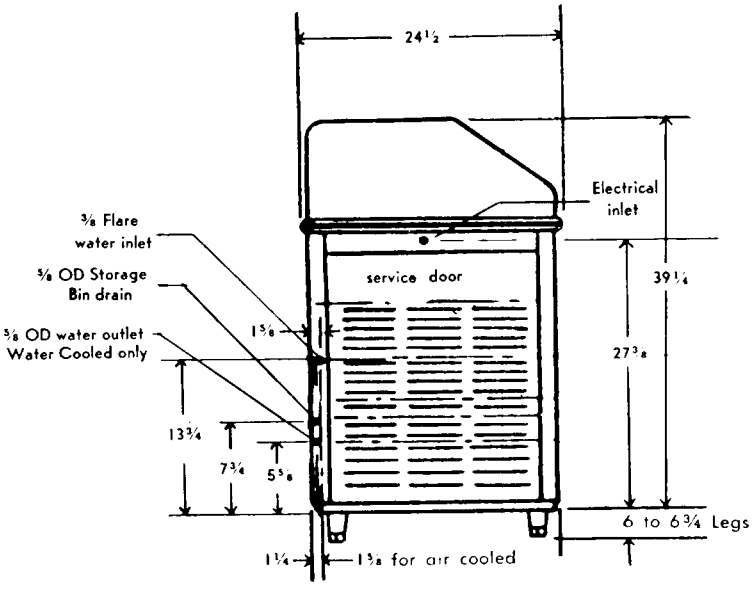

Specifications subject to change without notice.

SPECIFICATIONS

	SC100J-1	SC100WJ-1
Compressor - Copeland	RSF-0050-1AA	Same
Volts & Hertz	115 v-60	115 v-60
Amperes	11.2	11.2
Fan - Wattage	7.0	None
Sump Pump	2	2
Spray Bar Motor - Wattage	35	35
Defrost - Warm Water Heated By	Hot Gas	Hot Gas
Total Power Consumption - Amperes	13	13
Refrigerant Type	Refrige-rant 12	Refrige-rant 12
Refrigerant Charge	28 ounces	28 ounces
Cubes Per Harvest	40 Full size super cubes	40 Full size super cubes
Water Consumption to Produce Ice	5 Quarts per hour	5 Quarts per hour
Water Used by the Condensing Unit		45 Gallons per hour. Average-Varies with Water Temperature

DIMENSIONS

Height with 6" Legs	46"	46"
Height-Less 6" Legs	39 1/4"	39 1/4"
Width	34 1/8"	34 1/8"
Depth	24 1/2"	24 1/2"

Weight	Shipping	Net
SC100J	316	265
SC100WJ	322	271
SC100J-SS	322	271
SC100WJ-SS	326	275

INSTALLATION

UNCRATING OF MACHINE

1. The complete machine comes in one crate. After the crate is removed, inspect for concealed damage. Remove the bottom skid by removing all bolts. Then cut all wires holding support packing from refrigerant line. Be sure the compressor is snug on spring mounts. Then check all refrigerant lines for rubbing or touching other surfaces. Also check for possible transportation damage.

2. Remove all service doors and panels.

3. Remove leg package in compartment base and install 4 legs in unit base sockets. Level unit with adjustable legs.

4. Remove protective shipping tape from bin door, freezer curtain.

5. Remove water strainer from storage package for installation in water supply line feeding unit.

6. Open electrical control box and prepare for hook up, use knock outs, cord connectors, etc. Then check unit name plate voltage against building source voltage and make sure they correspond. Caution - improper voltage supplied to units will void your warranty protection.

7. Make sure suction service valve on the condensing unit is fully back seated. Replace the valve cap after checking. All models are shipped with valve back seated. Not necessary on units equipped with Schrader Valves.

8. Make sure that the flow of air is not impeded in any way over condenser on air-cooled models. Keep condenser clean. (Check and clean the condenser monthly.)

9. Operating room temperatures are minimum 50° F. and maximum 100° F.

10. Have the installation and warranty cards been filled out sent to the factory to insure warranty protection?

LOCATION OF THE ICE CUBE MACHINE

UNDER BAR INSTALLATIONS - Locate, if possible, so left end panel is accessible. Locate unit so proper circulation can be attained around the unit and behind it at least four inches. Provide plumbing and electrical connections so the unit can be moved out where the entire top hood can be removed and the unit can still be operated.

KITCHEN INSTALLATION - As a rule, the kitchen is not the most practical place to install an air-cooled condensing unit, as grease is almost always present and makes cleaning of the condensing unit difficult. Do not locate near range or steam table or other heating devices that may be used in the kitchen.

STOREROOM INSTALLATIONS - Be sure storeroom is of adequate size and properly ventilated. A small, poorly ventilated room will greatly impair the efficiency of the unit. The storeroom must be kept above 50 degrees in the winter months.

BASEMENT INSTALLATIONS - Locate machine in the coolest place. Locate the machine in a dry place. Keep away from furnace and boiler room. Keep away from service chutes and runways, also coal or other dust of any kind. If the machine is set over a floor drain, block the machine up enough to eliminate any possible damage to the machine.

LOCATE THE MACHINE SO IT CAN BE SERVICED WHEN NECESAARY. ALLOW AT LEAST FOUR INCHES OF SPACE AROUND THE MACHINE FOR CIRCULATING AIR.

IMPORTANT: ADJUST LEVELER LEGS. MACHINE MUST BE LEVEL.

INSTALLATION

WATER SUPPLY AND DRAIN CONNECTIONS

WATER SUPPLY

The recommended water supply line is 3/8" OD copper tubing. Connect to a cold water supply line with regular plumbing fittings with a shut-off valve installed in an accessible place between supply line and machine. The water strainer supplied with the unit should be mounted with clean-out plug down. Locate the strainer next to the machine and the arrow in the direction of the flow, as per Page 11. A3/8" male flare connection on left corner post provides easy access.

The water supply should be installed to conform with local code.

DRAIN

The recommended drain; is 5/8" OD copper tubing. Sweat to drain connection (See Page 11). Must be run to open or trapped drain. If drain is a long run, allow a 1/4" pitch per foot. Drain must be installed to conform with local code.

ELECTRICAL CONNECTIONS AND CHARACTERISTICS

SC-100	110-115 V, 60 Cycle	Single Phase, 13 Amps.

All external wiring should conform with National and local code requirements. Check the voltage on the line before connecting the machine. Model SC-100 requires 110-115 volts, 60 cycle, single phase.

The SC-100 should be wired to a 20 Amp. circuit. Be certain that the Super Cubers are on their own circuit and individually fused. The maximum allowable voltage variation should not exceed 10% of the nameplate rating even under starting conditions. Low voltage can cause erratic operation, and may be responsible for serious damage to the overload switches and motor windings.

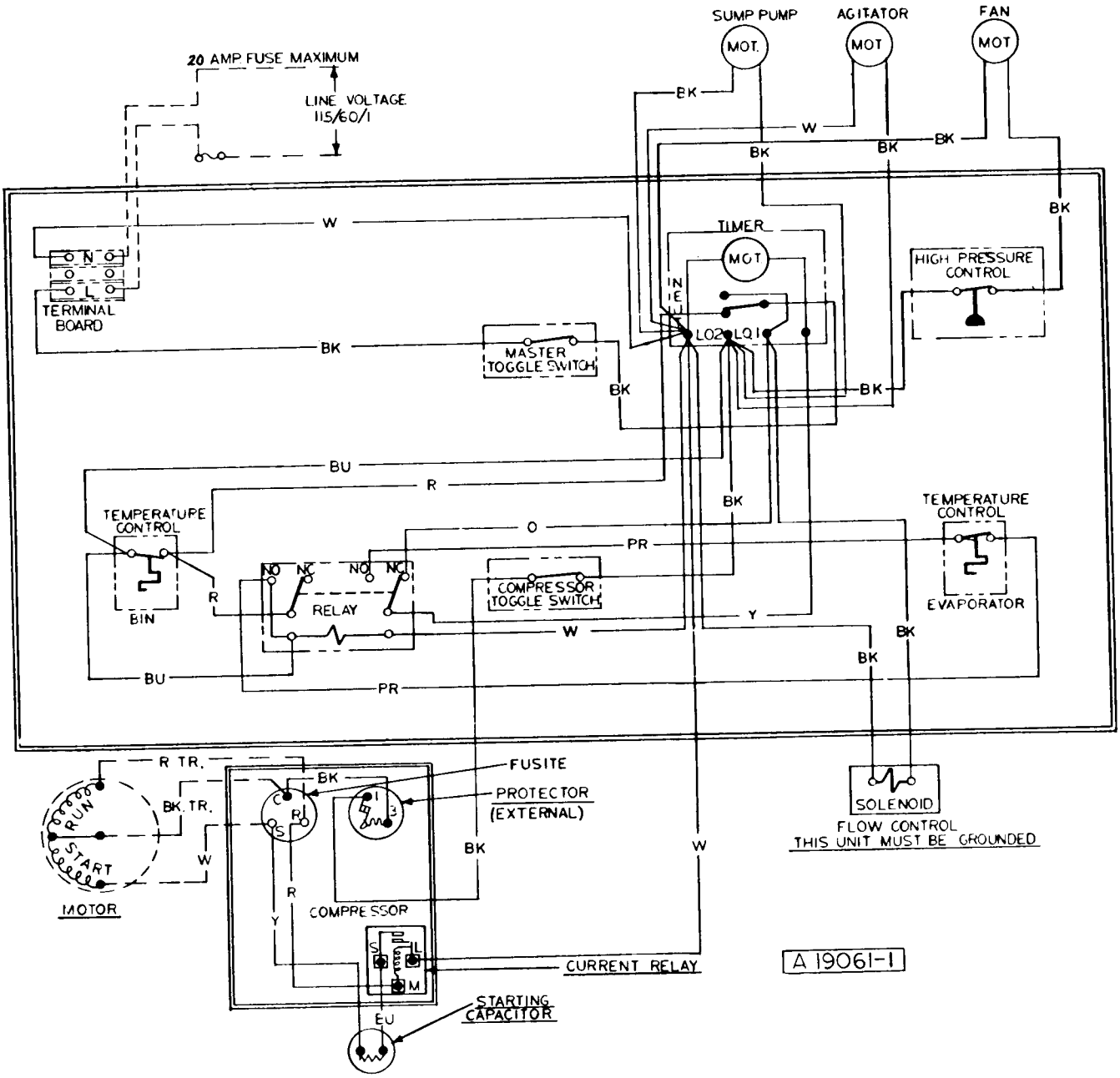

Title: Wiring Diagram
SC100J-1
115-60-1
Air Cooled

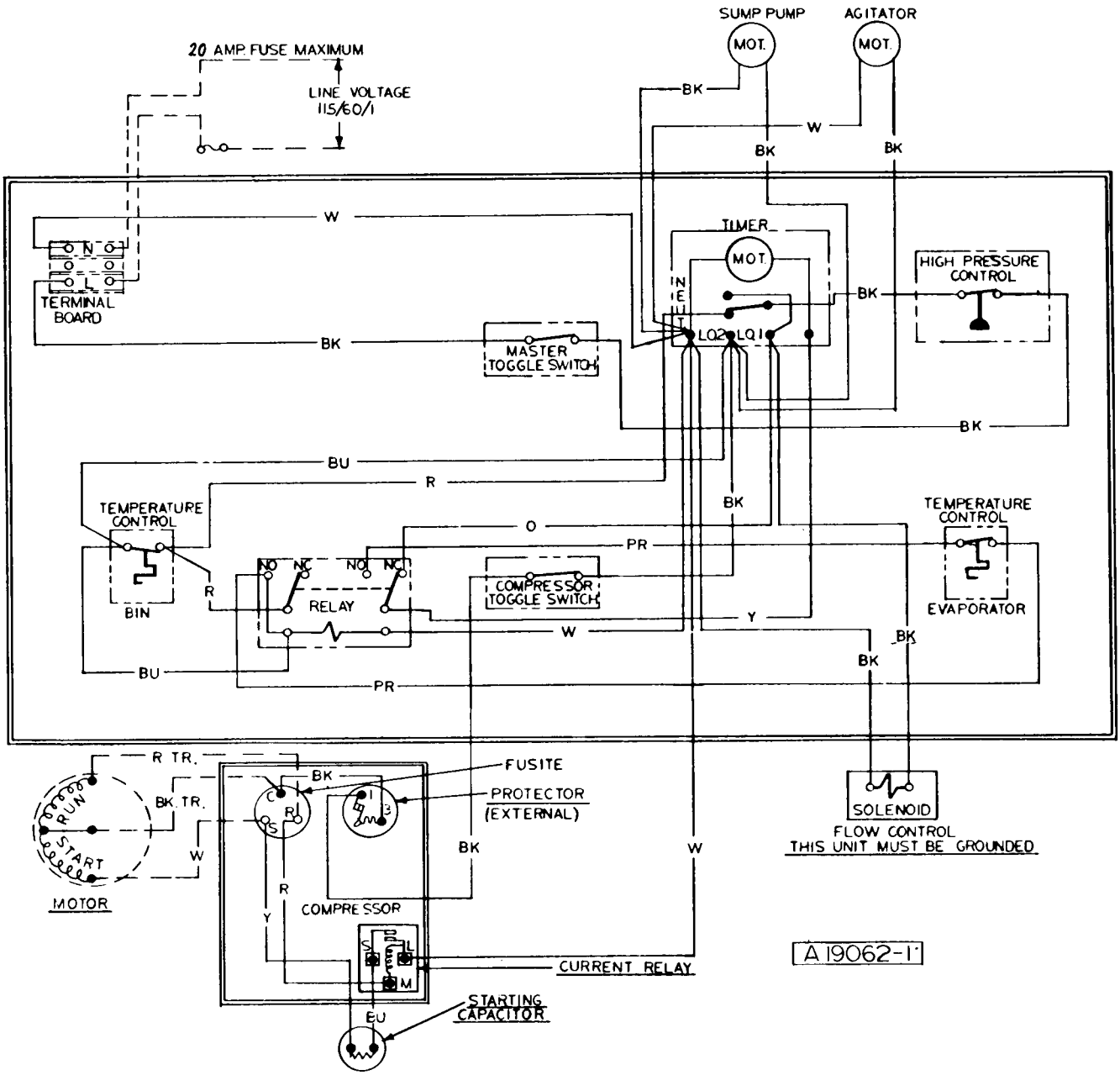

Title: Wiring Diagram
SC100WJ-1
115-60-1
Water Cooled

INSTALLATION PRACTICE

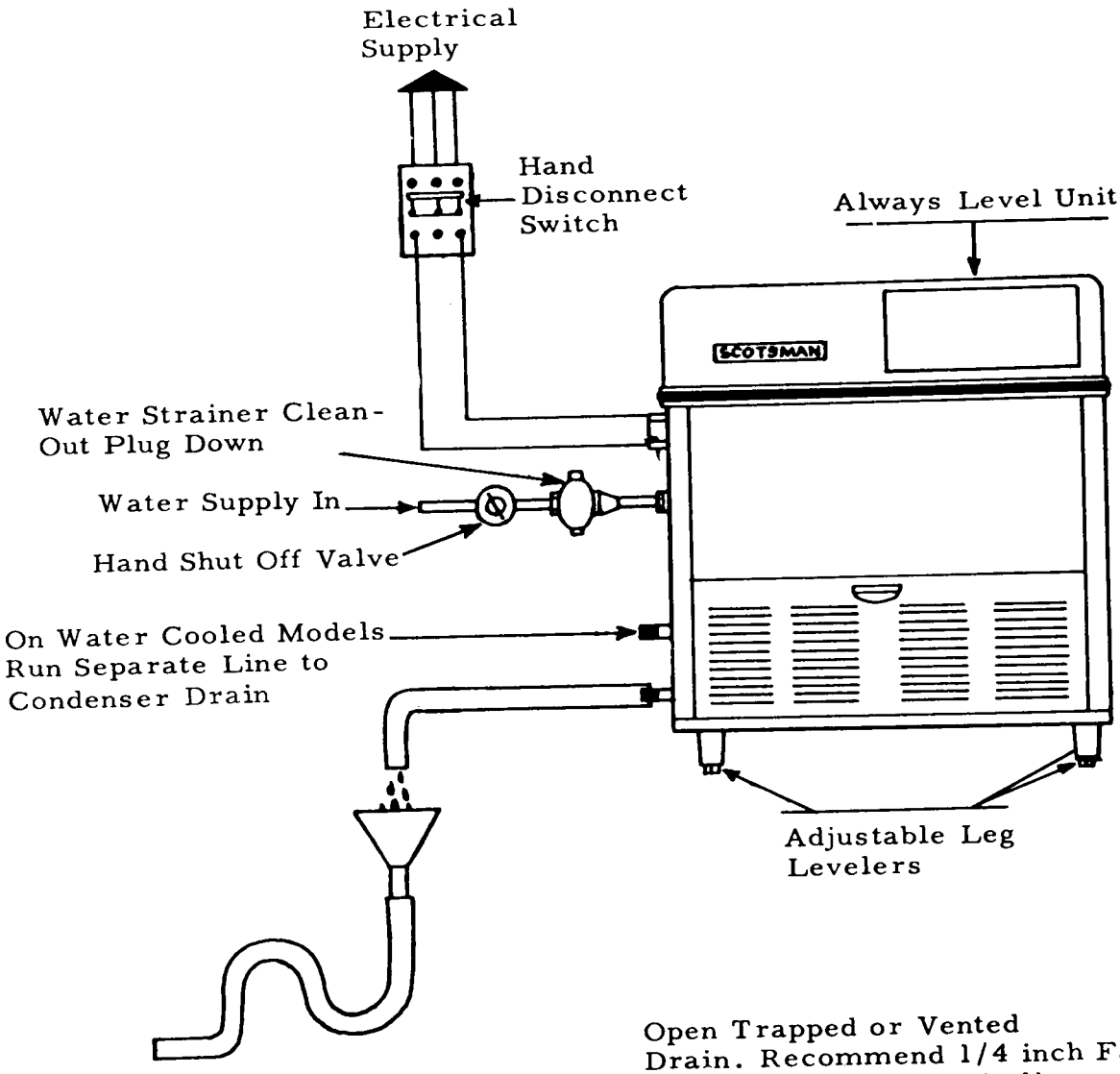

FINAL CHECK LIST

1. Is the unit level? (IMPORTANT)
2. Have all electrical and piping connections been made?
3. Has the voltage been tested and checked against the nameplate rating?
4. Have the compressor hold-down bolts been checked to insure the compressor is snug to its mounting pads?
5. Is the water supply valve open and the electric power properly hooked up?
6. All masking tape removed from doors, panels and inner freezer curtain?
7. Is the unit clean? Has storage bin been wiped clean with cold water cloth?
8. Has the owner been given the operating manual, and has he been instructed on how to operate the machine?
9. Have the installation and warranty cards been filled out? Check for correct model and serial numbers from serial plate on unit then promptly mail card to factory.
10. Check all refrigerant and conduit lines to guard against vibrations and possible failure.
11. Is there 4" clearance behind and around unit for proper air circulation?
12. Is unit in a room where ambient temperatures are minimum 50° F. even in winter months?
13. Has water supply pressure been checked to insure at least a minimum pressure of 20 pounds?

INSTALLATION - START UP

1. Remove lower front, and left side service doors to facilitate start up and check out.

2. Make sure water supply is turned on, then check timer finishing clock in main control box making sure the micro switch arm is resting down in offset slot in the cam (harvest position). If adjustment is necessary, turn timer knob clockwise into harvest position.

3. Inspect components in electrical control box, check for loose or frayed wire, then turn both manual switches to "on" position. All cubers have two manual on-off switches. One is for motor compressor only during cleaning operation, one is master switch for complete unit.

4. When both switches are thrown "on", water inlet solenoid will be energized allowing water to enter cuber, thru warm water tank, 3 way water valve and up into front side of freezer cup section. This will "fill" icemaker for the freezing cycle- Check operation of spray bar drive motor thru left side service door.

5. Allow clock to carry unit through harvest cycle. This will be Approximately three minutes. Dial pointer should be set on Number 2 1/2. After the compressor starts, turn the dial completely around and send it through another harvest cycle. Do this several times. This will completely flush out machine of any dust that may have accumulated in shipment.

6. After machine has been properly flushed, allow it to go into a freezing cycle-check for possible water leaks, check sump pump operation - should be running freely. Also note if jet tube operation is correct, and that none of the jets are plugged.

7. Time clock dial does not rotate at the end of the harvest cycle; it is started later by the cube size thermostat control located in the control box.

8. Freezing time will be approximately 25 minutes in a 70 degree ambient. (Longer if above, and shorter if below.) Average complete cycle time is 30 minutes.

9. Watch first cube harvest and check to make sure that plastic curtain sections have not been damaged in shipment. Also that curtains do not swing back into freezer and catch on cube racks.

10. Check size of cubes made: If too small, after a second cycle, adjust cube size control to lower or colder setting - until desired cube size is reached. Normal cube size is with a 3/8" depression in crown.

INSTALLATION

11. Check texture of cubes made: Partially cloudy cubes throughout suggest unit running short of water near end of freezing, or possibly an extremely bad water condition, which would indicate use of filtering or purifying equipment. Contact SCOTSMAN - Queen Products, Div., Ice Machine Service Department, Albert Lea, Minnesota, for futher details.

12. With unit on harvest cycle, take a handful of cubes made and hold on storage bin thermostat cover. Should cut unit off at end of harvest cycle. Remove ice, unit should cut back on automatically in 3 or 4 minutes. Thermostat is factory set at 35 degrees out, 39 degrees in.

13. Install gauges and check head and back pressure: air-cooled models, head pressure after twenty minutes of freezing cycle at 70° ambient will be approximately 125 pounds PSI. The back pressure starts out at approximately 50 pounds PSI and gradually pulls down to approximately 4 pounds PSI just before harvest cycle. Higher ambients and dirty condenser will cause higher pressures. Water-cooled models have water regulating valves factory set at 135 pounds PSI: check reading and adjust if necessary. Back pressure will operate the same as on air-cooled models.

14. Remove gauges, replace control box cover and all service panels.

15. Instruct owner on how to operate and clean machine.

HARVEST CYCLE

At the end of the freezing cycle the time clock operated switch opens compressor, sump pump and fan motor circuit, and closes circuit to time clock motor and solenoid operated inlet water valve. Inlet water pressure at bottom of hot water tank now forces heated water out the top of tank through warm water tubing and into front side of evaporator cup section. At the same time the surplus water from the preceding batch of ice cubes goes through three way water valve and off to drain. Water from the hot water tank flows into the rubber platen holding the evaporator cups and by conduction on back of cups causes the formed ice cubes to defrost or drop out. The platen-evaporator cavity is normally filled to the overflow level in 2 or 2 1/2 minutes. The amount of water running over the overflow pipe is controlled by the size of the flow control orifice and the length of the harvest time setting on the time clock past the overflow point. Overflow water goes down the drain also.

Meanwhile, cubes released drop by gravity to the inclined cube chute and thru the curtained opening into ice storage bin. At the completion of harvest cycle, the micro-switch on the timer now drops points holding defrost components in cycle and switches to freezing cycle set of contacts. Timer completes harvest cycle when microswitch arm lifts out of rear cam slot. Timer clock motor now stops and will not start again until cube size thermostat control closes once more. Electrically harvest cycle components cease, freezing cycle components start up. Chilled defrost water from the upper cavity now flows by gravity back through the three way water valve into freezer sump or reservior pan. Here water is picked up by the water pump and continually recirculated through sprayer tube to produce the next batch of cubes.

HARVEST CYCLE SC-100J

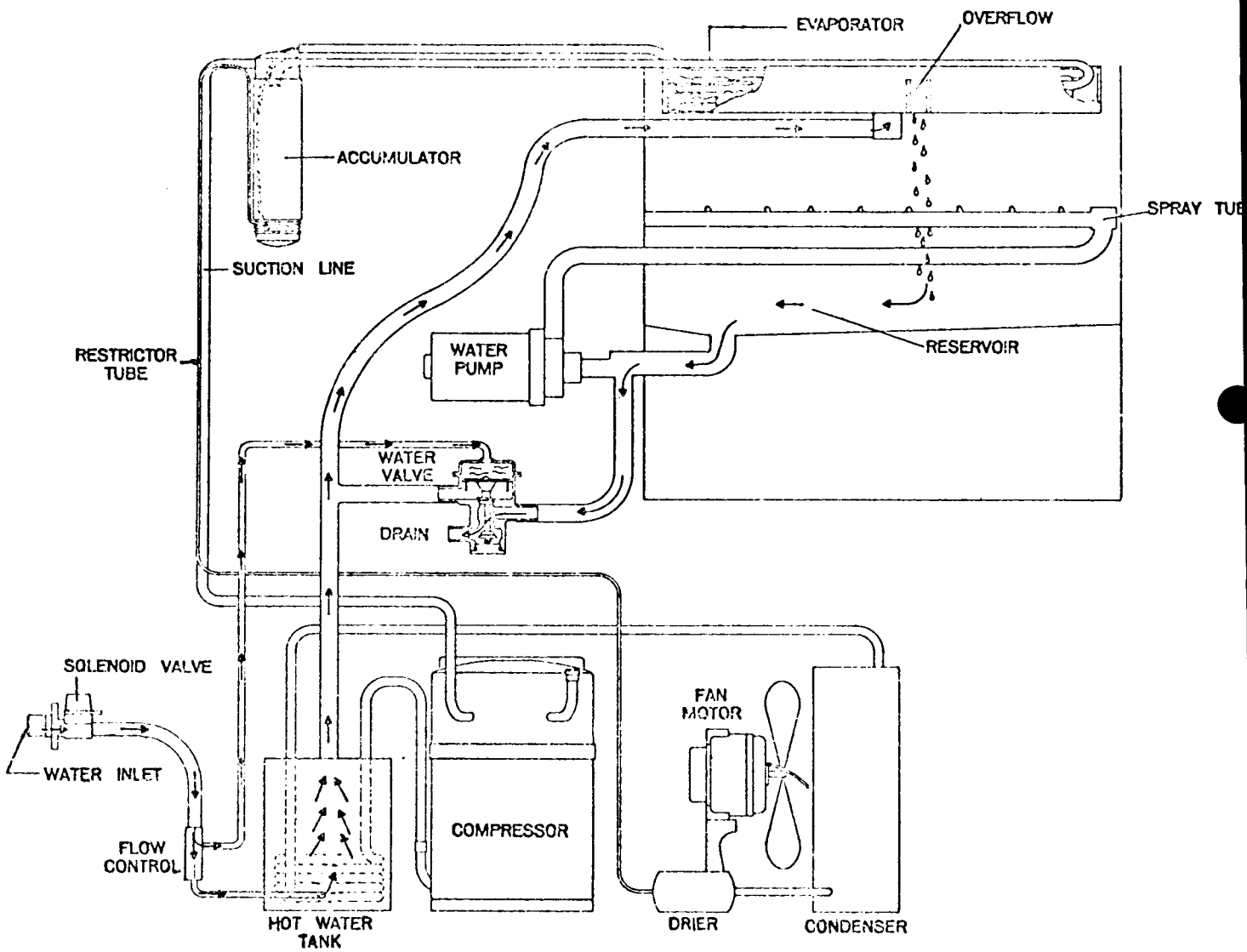

FREEZING CYCLE

As the freezing cycle starts, electrically the components operating are the compressor and fan motor, recirculating water pump and the sprayer tube drive motor.

The refrigerant curcuit which equalized at about 50 pounds gauge during the "off" or harvest cycle, thru the capillary refrigerant control, now rises rapidly to 125 - 135 pounds head pressure. The suction or low side pressure starting at 50 pounds pulls down fairly quickly to about 25 pounds at which point the ice cubes are starting to form a thin shell in cube cups. Continuing from 25 pounds slowly on down towards the finished cube pressure of approximately 5 pounds takes an average of 20-25 minutes.

During this portion of the freezing cycle the electrical brain is the reverse acting, cube size thermostat. This thermostat electrically is holding the freezing cycle components "live". When the ice cubes are about 3/4 formed, the decreasing suction pressure and temperature, activated the temperature sensing bulb of the reverse acting, cube size control, closing its contacts. This does not interrupt the freezing cycle, the closing of the cube size thermostat contacts electrically transfers the finishing of the freezing cycle to the finishing clock motor or timer as it is sometimes called. One full revolution of the timers dial is 15 minutes however of the total 15 minutes only, 3 minutes are used for the defrost or harvest cycle.

This means then that after the cube size contacts close they activate the timer motor. This control takes over and continues freezing cycle for another 12 minutes with timer dial now turning. When the 12 minutes are completed, an offset in the timer dial allows a micro switch with activating arm riding on that cam to drop into the slot electrically stopping the freezing cycle and starting the 3 minutes harvest cycle - The clock motor continues thru harvest cycles. A notch on the timer dial now lifts micro switch arm up on dial, electrically stopping harvest cycle and starts back into a new freezing cycle.

FREEZING CYCLE SC-100J

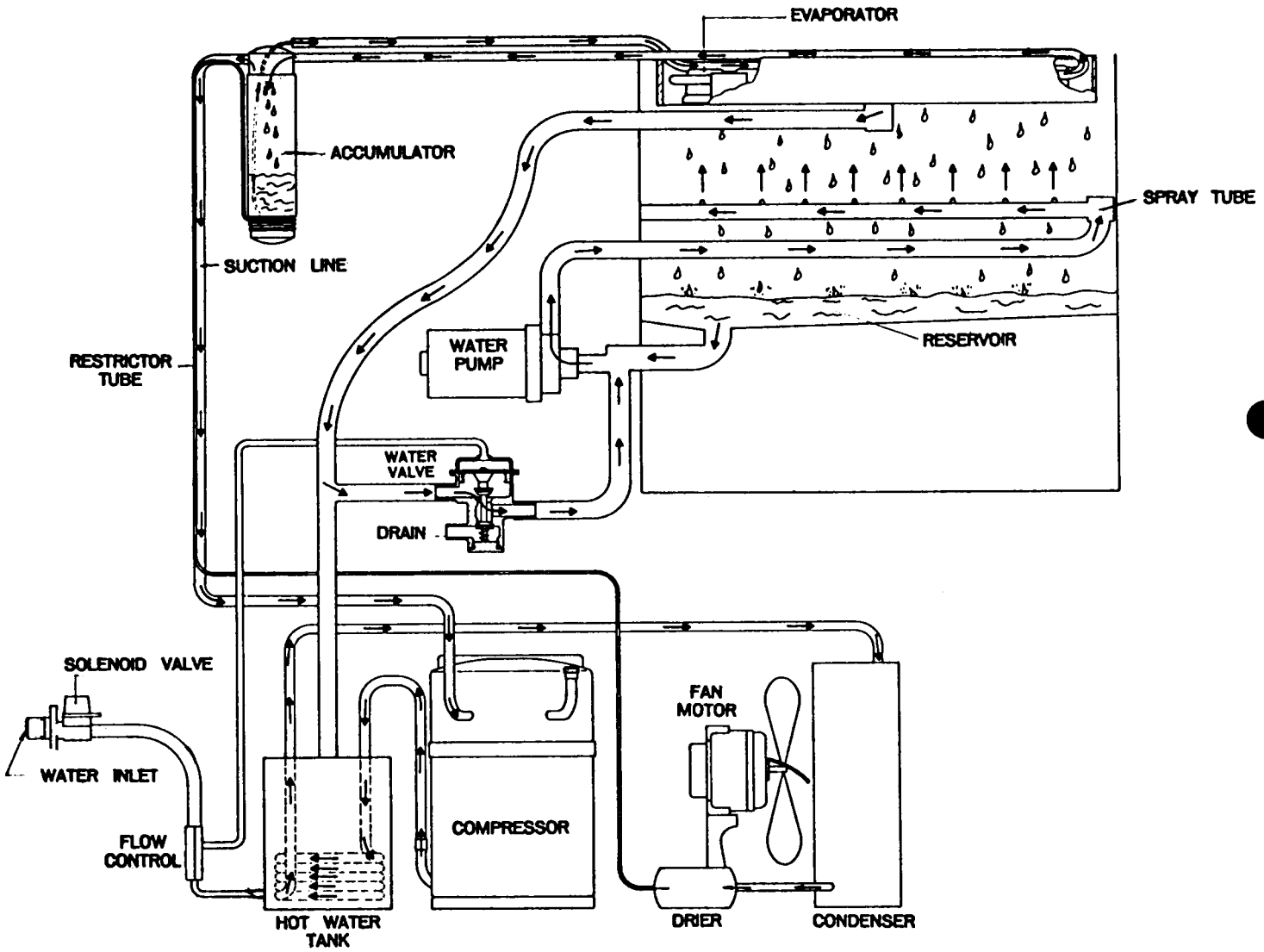

SERVICE ANALYSIS

SYMPTOM	POSSIBLE CAUSE	SUGGESTED CORRECTION
Unit will not run.	Blown fuse	Replace fuse & check for cause of blown fuse.
	Bin thermostat set too high	Adjust thermostat. Set between 35° out to 39 degrees in.
	Switch in Off position	Turn switch to On position.
	Inoperative master switch	Replace switch
	Timer contacts open	Replace timer micro-switch.
Compresser cycles intermittently	Low voltage	Check circuit for overloading. Check voltage at the supply to the building. If low, contact the power company.
	Dirty condenser	Clean with vacuum cleaner, air or stiff brush. (Do NOT use wire brush.)
	Air circulation blocked	Allow sufficient air space all around unit.
	Inoperative condenser fan motor	Check to see if defective. If defective, replace.
	Non-condensable gases in system	Purge the system.
Cubes too small	Cube size control set too high	Lower the setting. Turn towards colder.
	Partially restricted capillary tube.	Blow charge, add new gas & drier. After exacuating system with suction pump.
	Moisture in system	Same as above.
	Shortage of water	See remedies for shortage of water.
	Shortage of refrigerant	Check for leaks and recharge.
Cloudy cubes	Shortage of water	See remedies for shortage of water.
	Dirty water supply	Use water softener or water filter.
	Restricted drain on pump	Clean pump strainer.
	Accumulated impurities	Use SCOTSMAN Ice Machine Cleaner.
Poor harvests	Too short defrost time	Check and adjust harvest cycle. Timer should be set at 2 1/2.
	Restriction in incoming water	Check water feed line strainer and flow reducing valve. To give greater water flow increasing defrost time.
	Insufficient quantity of hot water	Cold ambient - must be 50° minimum faulty fan control on aircooled models.
	Solenoid valve not opening the water valve	Solenoid binding or burned out. Replace.
	Air vent holes in upper cube cups plugged	Clean out holes.

SERVICE ANALYSIS

SYMPTOM	POSSIBLE CAUSE	SUGGESTED CORRECTION
Shortage of water	Water spraying out through curtains	Replace broken curtains if any broken.
	Three-Way water valve leaking	Check the valve for foreign matter. Check valve seats and replace if necessary.
	Water entering hot water tank too slowly	Check pressure at source-20# required. Dirt in solenoid and flow control- blow out.
		Partial restrictions in water strainer. Clean Strainer.
Irregular size cubes and some cloudy	Some jets plugged	Clean jets.
	Shortage of water	See Shortage of Water
	Unit not level	Water overflowing air vent holes on low side burning cubes. Level as required.
Cubes too large	Cube size control turned too cold	Turn setting on cube size control dial towards warmer
Decreased ice capacity	Inefficient compressor	Replace .
	Leaky water valve	Replace or repair.
	High head pressure	Dirty condenser. Clean. Bad fan motor. Replace.
	Non-condensable gas in the system:	purge the system.
	Poor Air circulation or excessively hot location	relocate the unit, or provide for ventilation by cutting openings;
	Overcharge of refrigerant	Correct the charge. Purge off slowly.
	Partially restricted cap tube	Purge & replace charge and drier
Hole washed inside cube	Water over the top of the cube cups during harvest	Level unit.

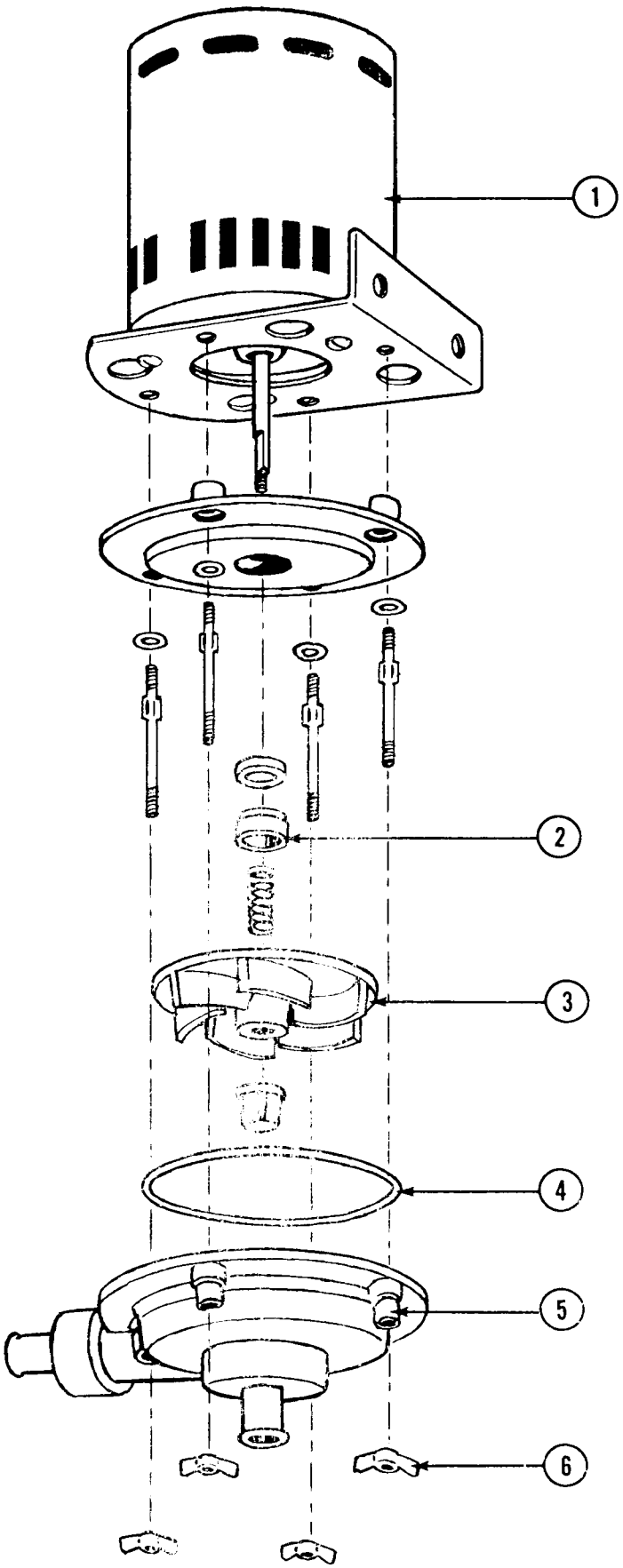

SUMP PUMP ASSEMBLY
PART NO. 12-1532-1B

ITEM NO.	PART NO.	NAME
1.	12-1532-51	Motor only
2.	12-1532-57	Water Seal
3.	12-1532-58	Impeller
4.	12-1532-60	O-Ring
5.	12-1532-61	Outlet Housing
6.	12-1532-62	Wing Nuts

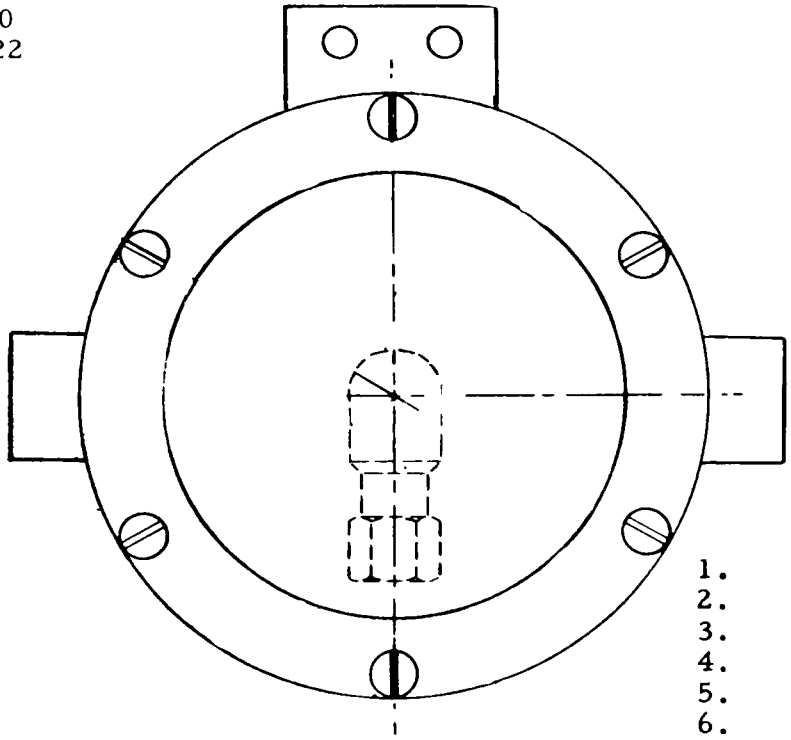

WATER VALVE ASSEMBLY
A-19722-1

1.	13-617-2	O-Ring
2.	A-17937	Valve Cap Bottom
3.	2-1545	Spring
4.	13-617-1	O-Ring
5.	A-17942	Lower Plunger Rod
6.	3-1403-6	Screws (6)
7.	A-18192	Valve Top Cover
8.	3-1403-27	Screw
9.	A-17941	Upper Plunger
10.	13-606	Rubber Diaphragm
11.	A-18312	Diaphragm Cover
12.	A-17947	Valve Body

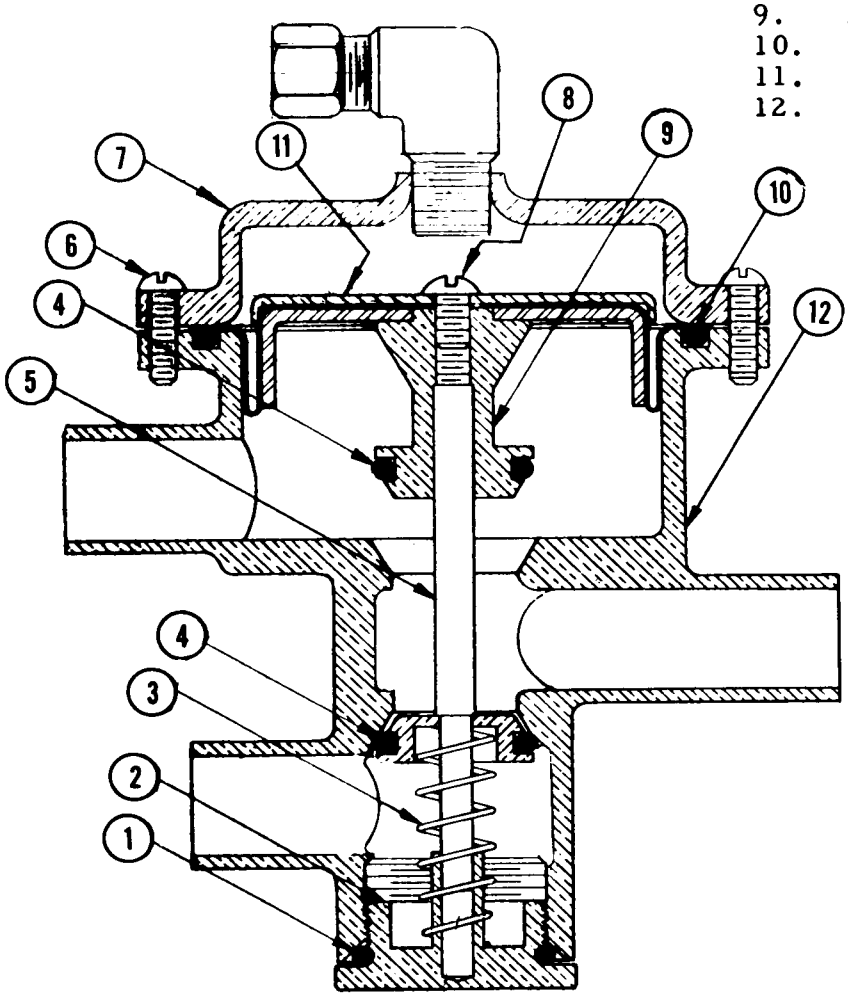

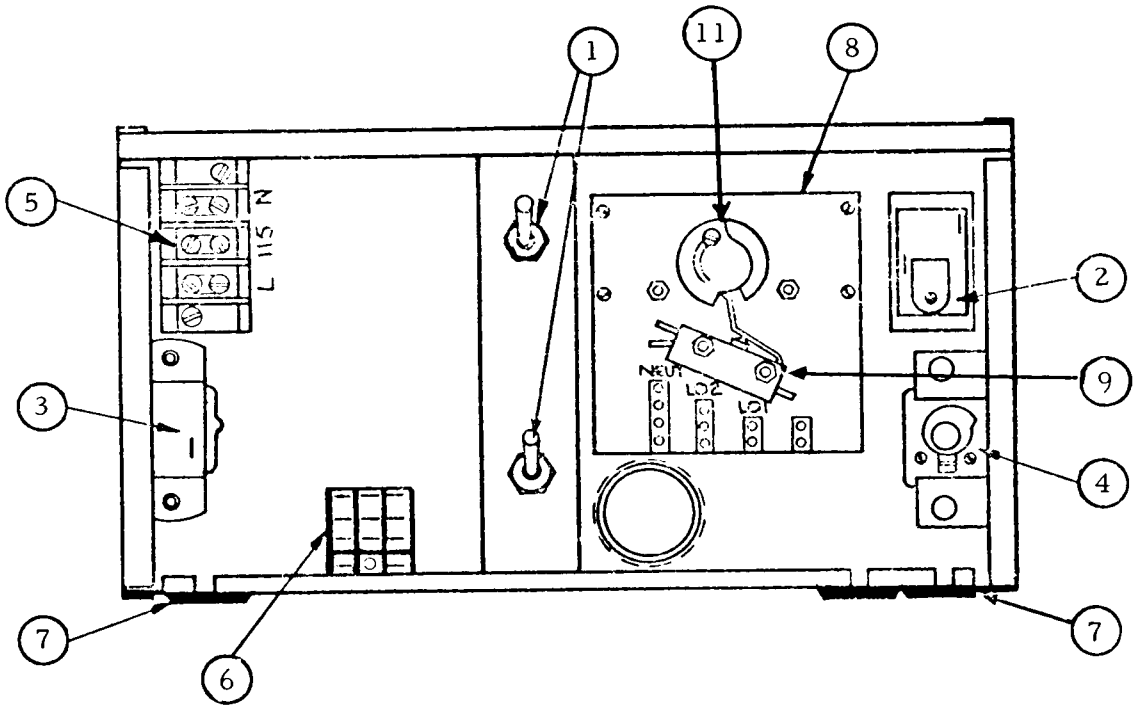

CONTROL BOX ASSEMBLY

ITEM No.	PART NO.	NAME
1.	12-426-1	Switches
2.	11-352	Head Pressure Control - Air Cooled Only
2.	11357	High Head Pressure Control- Water Cooled Only
3.	11-353	Bin Control
4.	11-345	Cube Size Control
5.	12-813	Terminal Block
6.	12-1645	Relay
7.	13-124	Grommets
8.	A-21038-1	Timer Assy.
9.	12-1480	Timer Micro Switch
*10.	12-1478-1	Timer Motor Only
11.	2-1651	Cam Assy.

* Not Shown

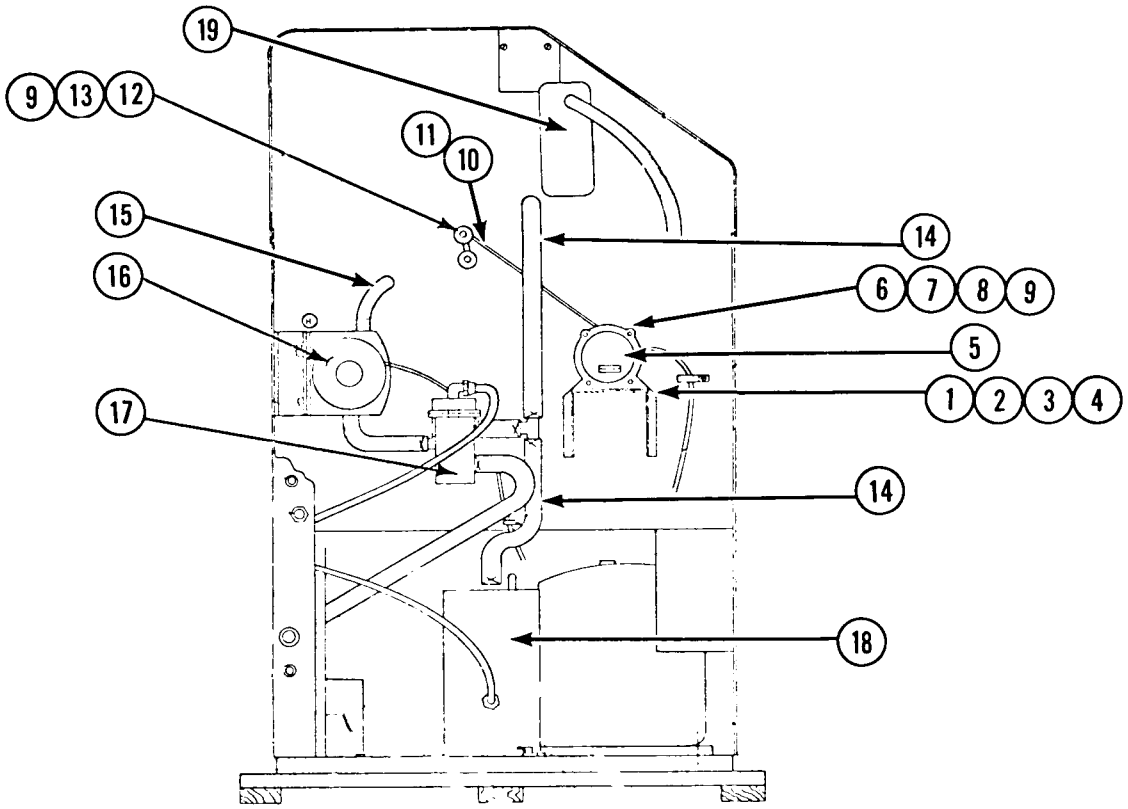

CABINET VIEW - LEFT SIDE

ITEM NO.	PART NO.	NAME
1.	3-1403-28	Machine Screw
2.	3-1406-6	Nut
3.	3-1407-4	Washer
4.	3-1417-5	Lock Washer
5.	12-1346-1	Drive Motor
6.	S-7128	Driven Arm
7.	A-7033	Bearing
8.	S-7558	Bearing Clip
9.	3-431	Set Screw
10.	S-7132	Linkage Rod
11.	A-6726	Linkage Complete w/arms
12.	A-6462	Driven Arm
13.	S-7130	Collar
14.	13-674-6	Tggon Tubing per ft.
15.	13-674-9	Tggon Tubing per ft.
16.	12-1532-1B	Water Pump
17.	A-19722	Water Valve
18.	A19026	Defrost Water Tank
19.	A-19038	Freezer and Suction Line Ass'y.

SC-100J COMPLETE UNIT

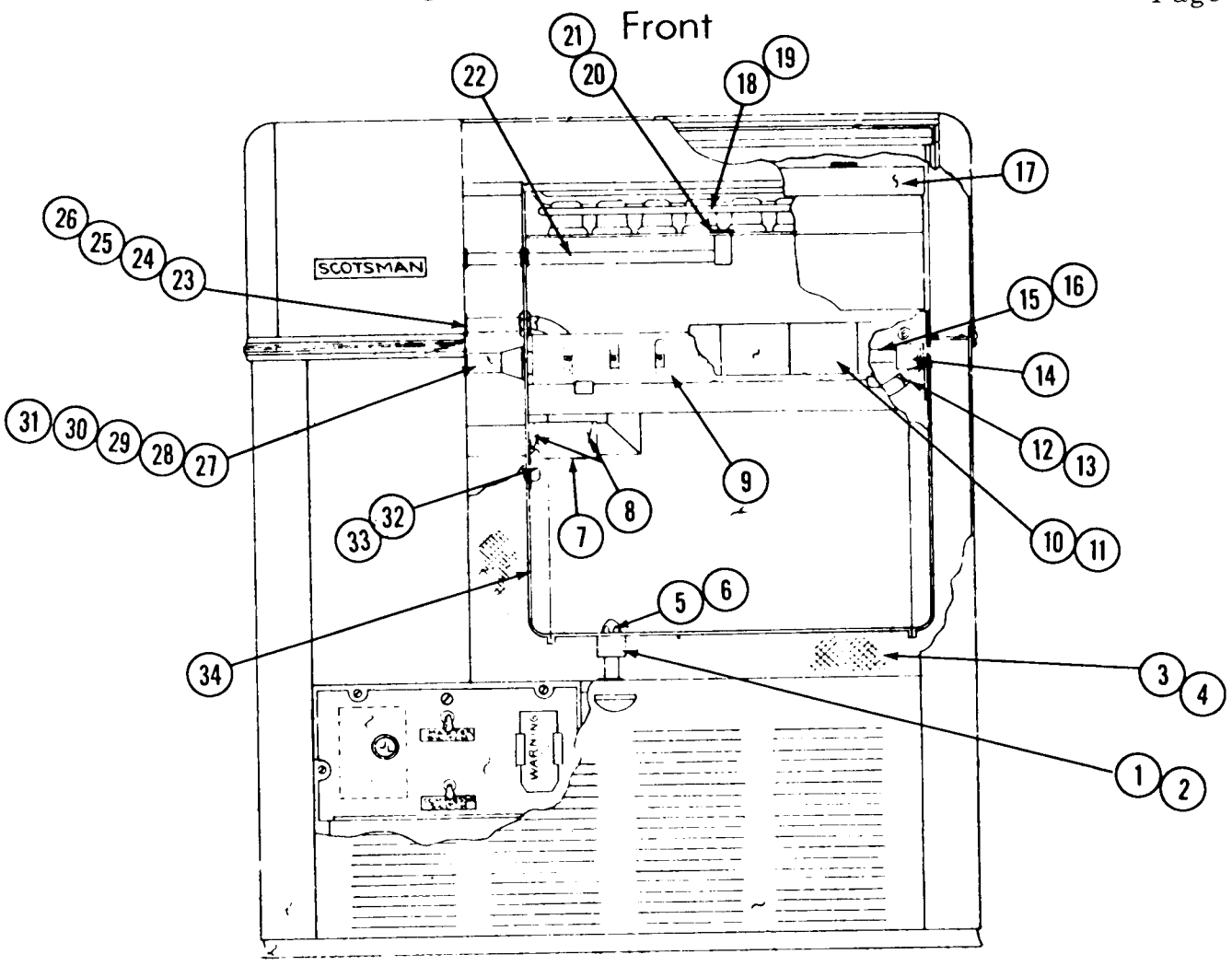

ITEM NO.	PART NO.	NAME	ITEM NO.	PART NO.	NAME
1.	A-18102	Storage Drain Fitting	18.	A-19038	Freezer Suction Line Assy.
2.	2-530	"O" Ring	19.	S-9251	Rubber Cupholder
3.	A-15721-1	Insulation Bottom	20.	S-7434	Adapter
4.	A-16246	Insulation Layout	21.	3-1409-3	Fiber Washer
5.	2-1741	Drain Fitting (Male)	22.	A-16437	Inlet Tube
6.	A-6448	Drain Strainer	23.	A-16970	Inlet Tube
7.	5-170-2	Tygon Hose	24.	2-541	"O" Ring
8.	2-537-1	Clamps (2 required)	25.	S-9965	"O" Ring Nut
9.	A-16460	Cube Chute	26.	13-125	Grommet
10.	A-16465	Curtain Ass'y	27.	S-8887	Drive Bearing Support
11.	3-727	Thumb Screws (2)	28.	S-7639	Drive Journal Ass'y
12.	2-1338-2	Clamp	29.	S-7635	Nut
13.	13-674-5	Tygon Tube	30.	3-1409-8	Fiber Washer
14.	A-16963	End Bearing	31.	13-169	Grommet
15.	A-16463	Sprayer Tube	32.	A-19555	Bulb Cover
16.	2-1803-1	Jets	33.	13-590	Bulb Gasket
17.	2-1489	Plastic Insul. Cover	34.	A-18889	Storage & Resv. Assy.

SC-100 J CASE AND HOOD ASSY.

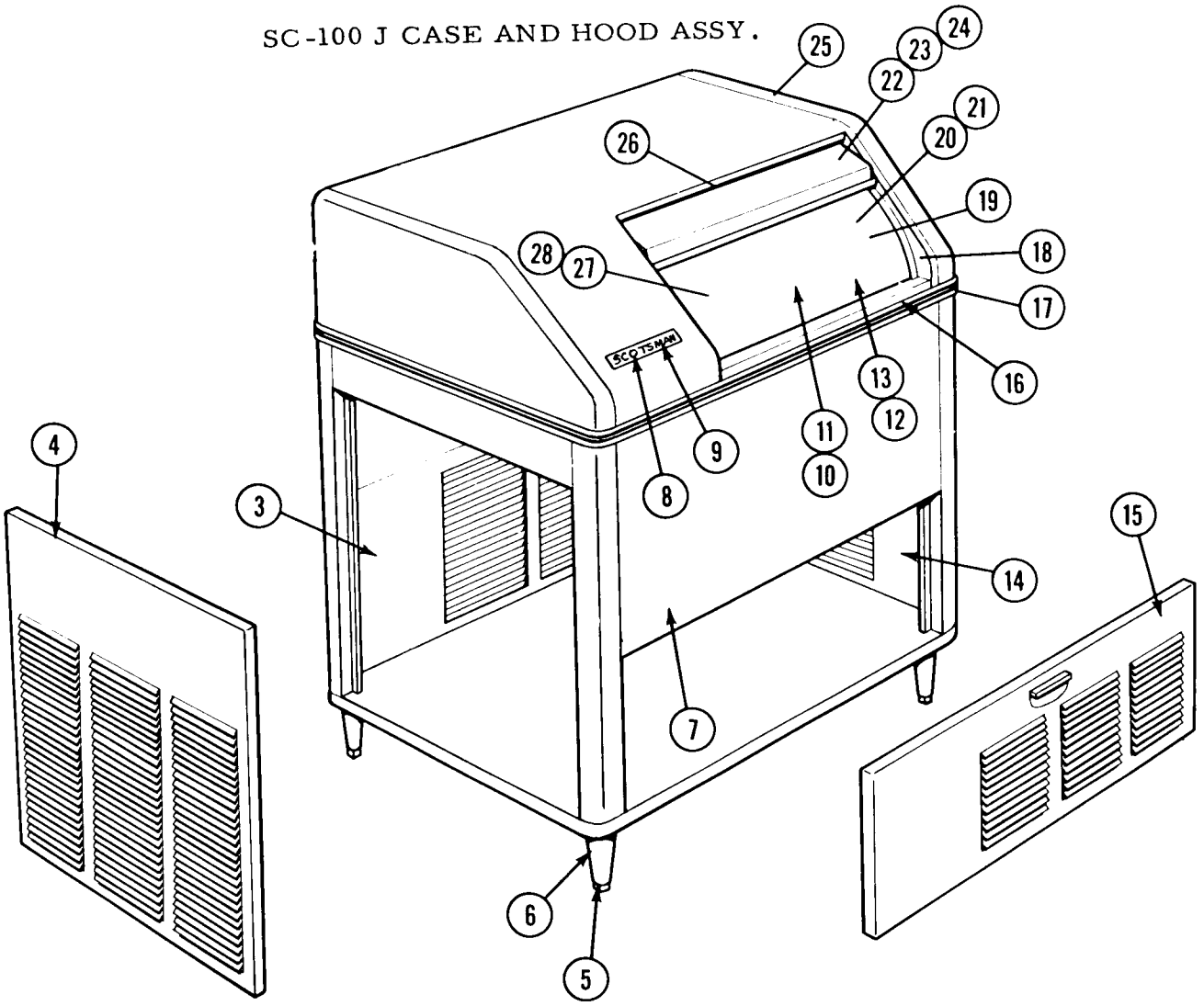

ITEM NO.	PART NO. GRAY	PART NO. S.S.	NAME
1.	2-530		"O" Ring Drain*
2.	A-6448		Drain Strainer*
3.	A-16563	A-16563-2	Back Door
4.	S-9405	S-9405-S	Left Door
5.	8-522	8-522-1	Leg Leveler
6.	A-15803	A-15803-1	Leg
7.	A-18842	A-18842-1	Case Assy
8.	15-156		Emblem
9.	3-271		Speed Nuts*
10.	A-18102		Storage Drain Assy*
11.	A-18090		Drain Fitting Male*
14.	A-16561	A-16561-2	Right Door
15.	A-15789	A-15789-2	Front Door
16.	15-324		Plastic Insert (per foot)
17.	A-6510		Moulding Strip, Front
18.	A-16208		Door Track
19.	A-18889		Storage Bin Assy*
20.	A-19555		Bulb Cover*
21.	13-590		Bulb Gasket*
22.	2-1735	A-15559	Sliding Door
23.	3-640		Door Blides (Door)
24.	3-1195		Door Glides (Hood)
25.	A-19238	A-19238-1	Hood Assy
26.	2-1736		Door Lanyard

* Not Shown

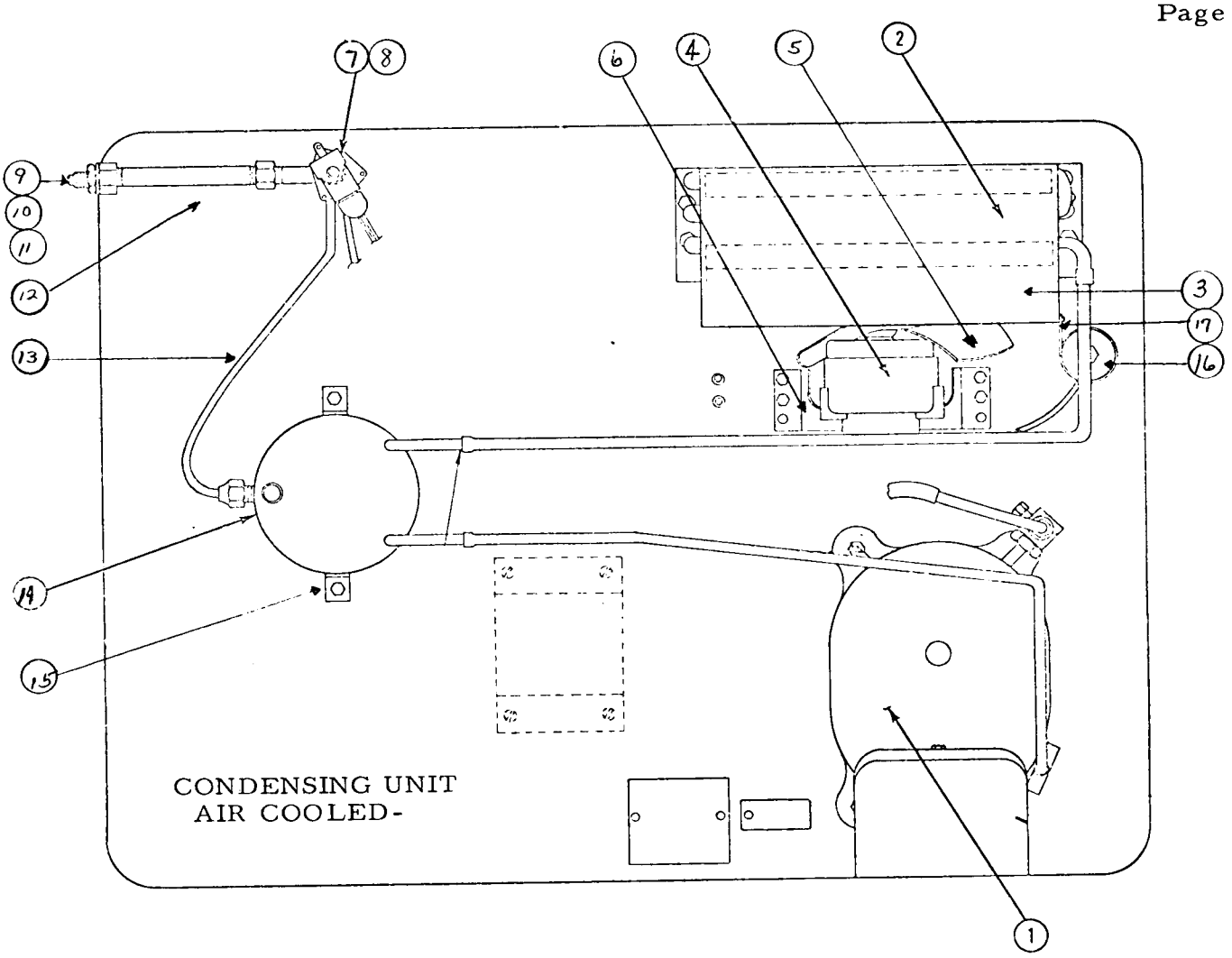

ITEM NO.	PART NO.	NAME
1.	18-2201-1	Motor Compressor 115/60/1
	18-2201-25	Klixon (overload)*
	18-2201-26	Compressor Relay*
	18-2201-29	Start Capacitor*
2.	18-234	Condenser
3.	A-18229	Condenser Shroud
4.	12-1575-1	Fan Motor
	12-1573-8	Lead Wire (Fan Motor)*
5.	18-231	Fan Blade
6.	18-422	Fan Motor Bracket
7.	12-1434-1	Water Solenoid Valve
8.	A-19788-4	Water Flow Control*
9.	A-19239	Inlet Water Fitting
10.	16-526	Brass Nipple
11.	16-540	Coupling
12.	A-18696	Inlet Water Assy Complete
13.	5-397-1	Nylon Water Line per ft.
14.	A-19026	Defrost Water Tank
15.	A-1-233	Water Tank Bracket
16.	2-350	Drier
17.	A-19386	Drier Brace

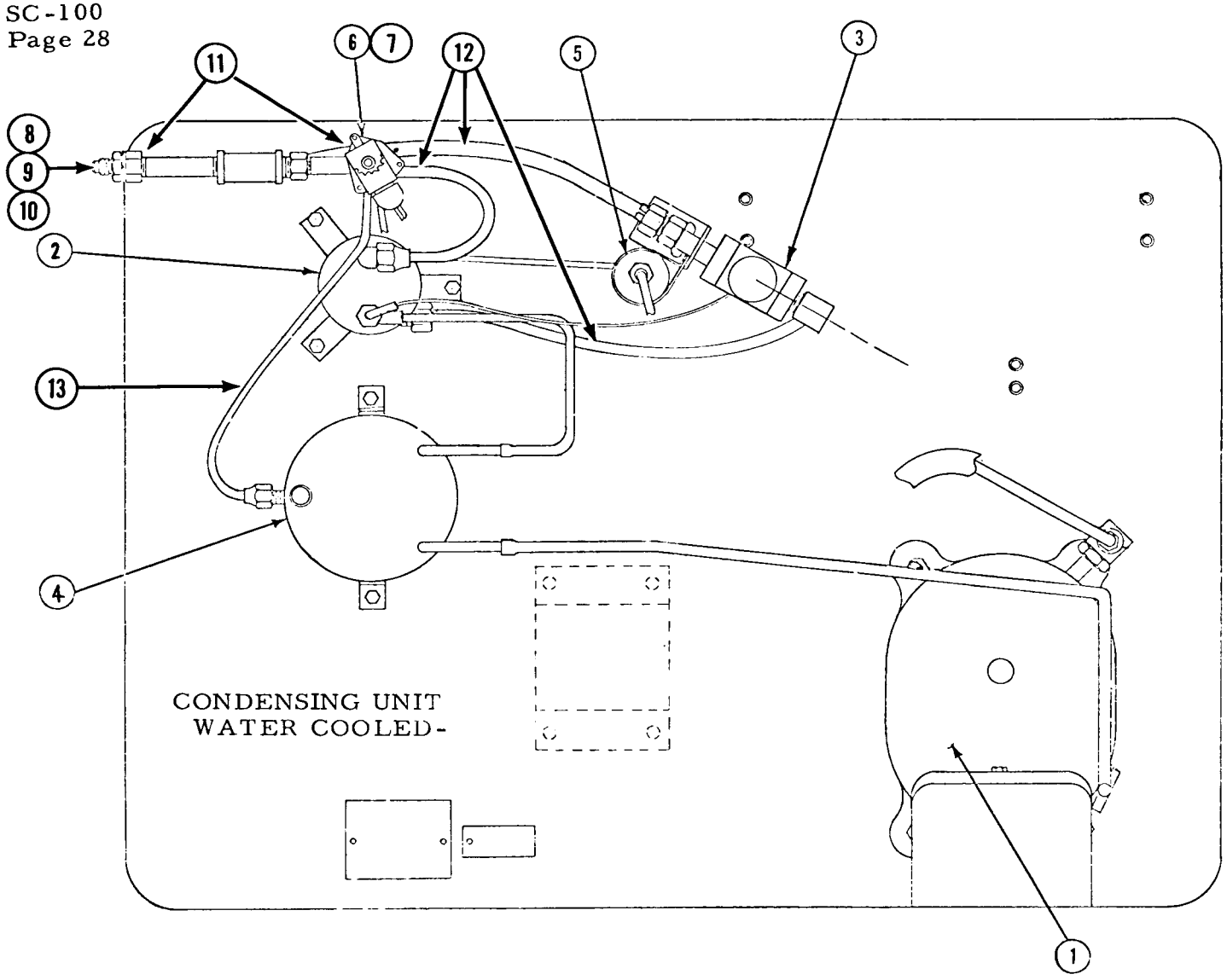

ITEM NO.	PART NO.	NAME
1.	18-2201-1	Motor Compressor 115/60/1
	18-2201-25	Klixon (overload)*
	18-2201-26	Compressor Relay*
	18-2201-29	Start Capacitor
2.	18-699-3	Condenser
3.	11-198	Water Regulator Valve
4.	A-19026	Defrost Water Tank
5.	2-350	Drier
	A-19386	Drier Brace
6.	12-1434-1	Water Solenoid Valve
7.	A-19788-4	Water Flow Control*
8.	A-19239	Inlet Water Fitting
9.	16-527	Brass Nipple
10.	16-537	Brass Tee
11.	A-18696-1	Inlet Water Assy Complete
12.	5-397-2	Nylon Water Line per ft.- 3/8"
13.	5-397-1	Nylon Water Line per ft.- 1/4"

COMPLETE DRIVE LINKAGE

Part No. A-6726

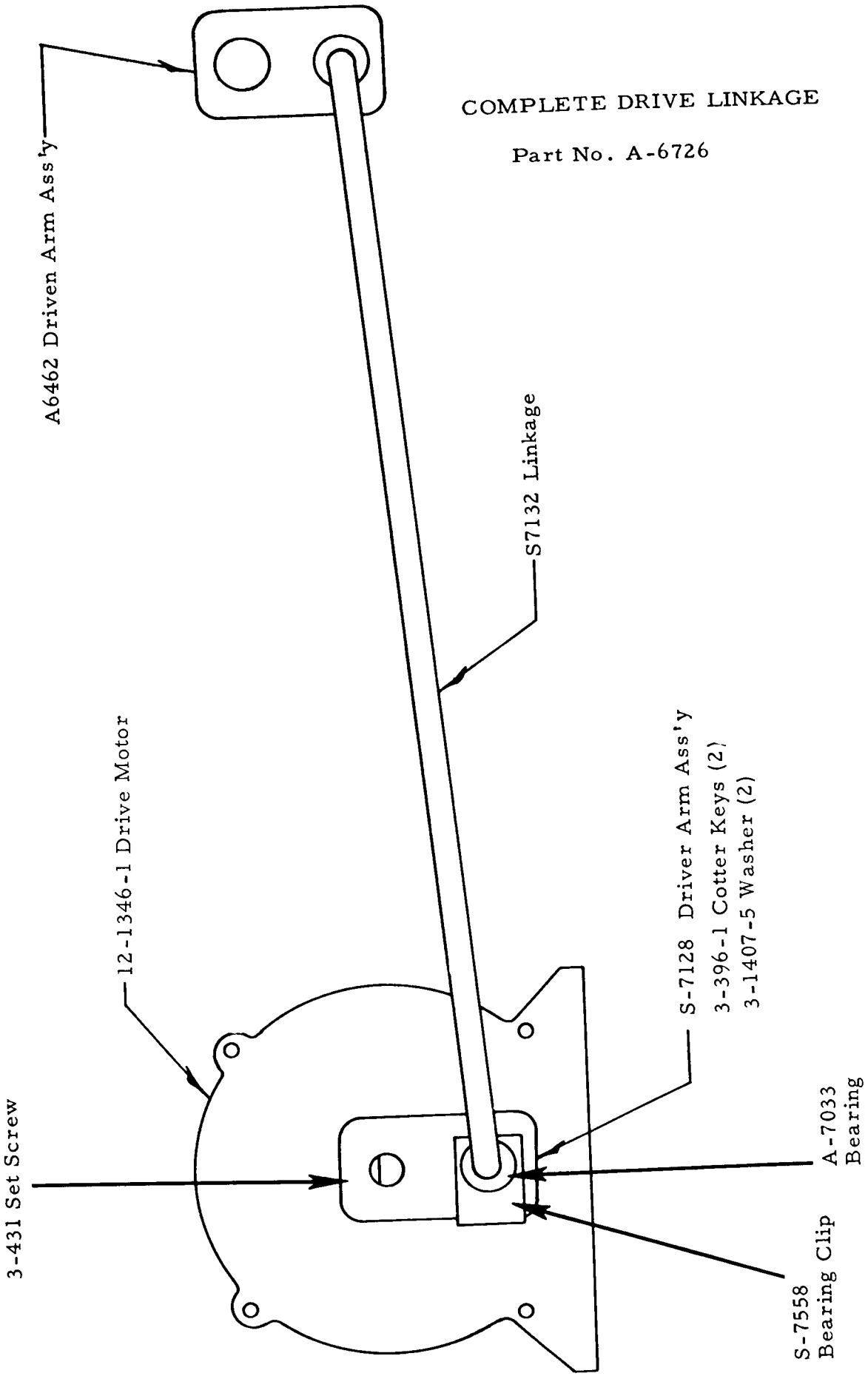

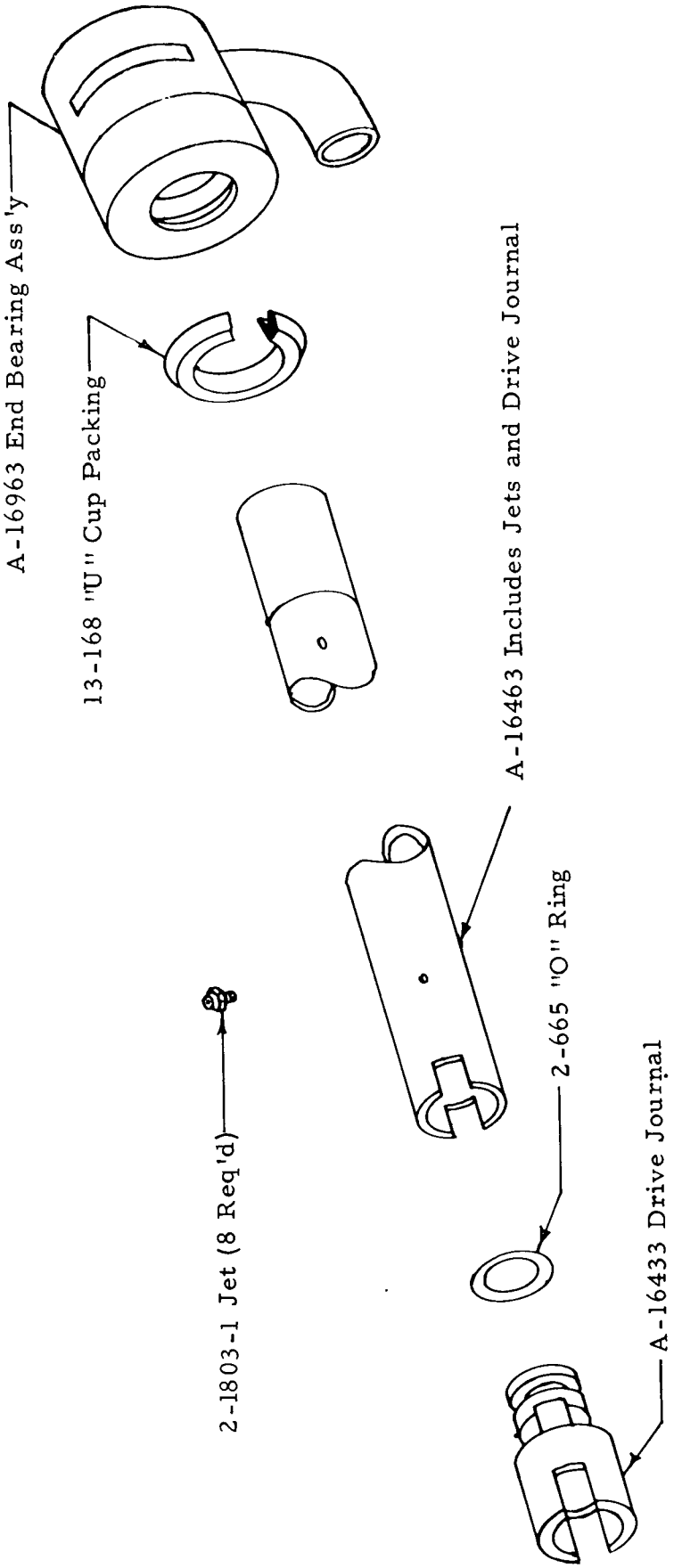

SPRAYER TUBE ASSEMBLY

FUNCTIONAL PARTS
DESCRIPTION

11-352	Fan cycle - head pressure control Robert Shaw #A P 20-1066 120# 140# Range Automatic reset - SPST Nonadjustable
11-353	Bin Thermostat Cutler Hammer #9530 N 213 Cut Off 35° cut in 39° Adjustable calibrate for altitude over 2,000 ft.
11-357	High pressure Cut off - Water cooled models Robert Shaw #A P 21-2048 Control opens 190# P.S.I. Manual re-set - Adjustable
11-345	Cube size thermostat Rance A11-377 Reverse acting, closes on temperature Decrease - Has adjustment dial
12-1645	Relay 115/60/1 Ameco or Potter Bumfield 2 P.D.T. By passes Thermostat during freeze cycle.
18-699-3	Water cooled condenser W.C. models only Packless #QVWC-37 3/4 H.P. rating - upright tank type
12-1532-1B	Water recirculating, sump pump Hartell Inc. 3000 RPM - shaded pole, thermally protected motor - 1/25 H.P. 115/60/1
18-2201-1	Motor compressor 115/60/1 Copeland refrigeration - Copelaweld RSF-0056-1AA 2 Pole, 3500 RPM Hermetic for use with refrigerant R-12
A-21038-1	Finishing Clock or Timer Manufactured by Queen Products Div. 2-1651 Knob cam assembly 12-1480 Micro switch.
12-1434-1	Water inlet solenoid Detroit Controls Corp. #S-30-A 115/60/1 coil - Nylon body 1/4" MPT inlet & outlet No flow control. Also American Standard Control #SSV-20206

SERVICE - COMPLETE UNIT

ALL STEPS LISTED BELOW SHOULD ONLY BE STARTED WHEN WATER AND ELECTRICAL SUPPLY ARE OFF TO PREVENT ACCIDENTS.

To remove cabinet top or hood.

1. Remove two back end screws in rear moulding strip.
2. Pull out black insert tape concealing screws.
3. Remove balance of screws in moulding strips.
4. Lift hood straight up.

To remove Sump Pump.

1. Remove lower left side service panel.
2. Disconnect hose clamps and hoses on pump ports.
3. Remove electrical lead to control box.
4. Remove 2 screws in pump mounting bracket.

To remove Agitator Motor on SC-100

1. Remove left side service panel
2. Disconnect wires at the control box terminal board.
3. Loosen the Allen set screw on driver crank arm and remove the drive arm.
4. Remove the four hold-down screws and remove the motor.

To remove the jet tube assembly on Model SC-100

1. Remove the plastic curtain assembly.
2. Remove the cube rack.
3. Lift the right end of the jet tube straight up and slide the other end out of the driving slot.

To remove Three Way Water Valve

1. Remove lower front left side service door.
2. Remove all hose clamps to water valve.
3. Remove upper water line connection to elbow on top valve housing.
4. Loosen two nut and bolt assemblies holding valve to mounting bracket. Valve now drops free.
5. Replace in reverse of above.

To replace Storage Bin Door

1. Lift door up and slide back as you normally would to remove ice from bin.
2. Remove screw at center rear edge of door where it is attached to lanyard.
3. Pull door straight out.
4. Install repaired or new door in reverse of step number 2 above.

MAINTENANCE INSTRUCTION FOR SCOTSMAN SUPER CUBERS

THE FOLLOWING MAINTENANCE MUST BE ACCOMPLISHED TWO (2) TIMES PER YEAR ON ALL SCOTSMAN SUPER CUBERS. CALL YOUR AUTHORIZED SCOTSMAN SERVICE DEPARTMENT.

1. Clean air-cooled condenser; This is to be done frequently with the machine shut off.
2. Clean water system and evaporator, sump tank and screen, using Scotsman Ice Machine Cleaner or equivalent.
3. Remove jet tube and manually clean jets by unscrewing jets.
4. Check curtain assembly.
5. Tighten all electrical connections.
6. Tighten all bolts.
7. Check water supply. Check water pressure flow through flow control. Clean water strainer.
8. Oil jet tubes drive motor three(3) places. Use SAE 20 oil - 3 oil cups.
9. Oil Condenser fan motor. Punch sealed cap or remove screws where possible.
10. Check for refrigeration leaks with halide torch.
11. Check for water leaks. Tighten drain line connections.
12. Check size and condition of cubes. Adjust as required. See Service Analysis
13. Section.
    Check bin thermostat setting. Factory set at 35° out, 39° in.

CLEANING INSTRUCTIONS FOR SCOTSMAN ICE MACHINES MODELS MM110J and SC100J

1. Remove front access door.
2. Locate control box with time clock knob protruding through cover.
3. Start unit through a harvest cycle manually. This may be done by turning time clock knob clockwise until the snap of the timer microswitch is heard.
4. Let unit finish cube harvest cycle and start into freezing cycle. This will be approximately 5 minutes after Step #3 has been completed. At this time turn the compressor switch off, the lower of the two switches in the control box.
5. Locate the sump reservoir which is in the storage bin area and directly behind the ice discharge chute. This discharge chute is covered by a series of white plastic curtains which are free to swing out into the storage bin. Pour 4 ounces (half bottle) of "Scotsman Ice Machine Cleaner" into the sump reservoir.
6. Locate insulation panel which is directly above platen. Lift insulation panel, pour the remaining 4 ounces of "Scotsman Ice Machine Cleaner" into platen.
7. Let unit operate normally for 10 to 15 minutes into the freezing cycle. No ice will be made because the motor compressor is not in operation.
8. At the end of this time put the unit through 2 or 3 harvest cycles manually to allow fresh make up water to clean out remaining solution. Each time waiting approximately 5 minutes after the loud snap until the nest harvest cycle is done manually.
9. Turn the compressor switch back on.
10. Check each new batch of cubes until they are clear and until acid tast has been removed from cubes.
11. Put hot water in storage bin to melt the cubes and thereby clean the drains with the same solution that has just cleaned the unit.
12. Use a damp cloth to wipe off curtains and inside of storage bin.
13. Replace all access doors.

PARTS LIST SC-100J

CABINET PARTS

		S. S. Finish
2-1736	Sliding Door Lanyard	
A-19238	Case hood assembly, less doors	A-19238-1
A-16208	Door slide track	
15-156	Emblem	
A-6509	Moulding strip - rear	
A-6510	Moulding strip - front	
A-15789	Cabinet front service	A-15789-2
A-16561	Cabinet right side service door	A-1656-2
A-16563	Cabinet rear service door	A-16563-2
2-1735	Sliding Door	A-15559
S-9405	Cabinet left side service door	S-9405-S

CONTROL BOX - ELECTRICAL COMPONENTS

12-813	Terminal Block
A-21038-1	Timer Assembly
12-1480	Timer Micro-switch
11-345	Cube size control
12-426-1	On-Off switches (2)
11-353	Bin thermostat
12-1645	Complete cube relay
11-352	Fan cycle control A.C.
11-357	H. Pressure control

CONDENSING UNITS AND REFRIGERANT CIRCUIT

	AIR-COOLED	WATER-COOLED
Freezer Cup and Platen only	A-16152	Same
Freezer and H X assembly complete	A-19038	Same
Drier - Refrigerant	2-350	Same
Motor compressor 115/60/1	18-2201-1	Same
Relay	18-2201-26	Same
Starting capacitor	18-2201-29	Same
Fan motor	18-1575-1	None
Fan blade	18-321	None
Condenser	18-334	18-699-3
Shroud for condenser	A-18229	
Klixon overload	18-2201-25	Same
Tire type valve cap	16-563	Same
Tire type valve core	16-560	Same
Rubber cube cup holder	S-9251	Same
Plastic curtain rod assembly	A-16465	Same
Water Regulating Valve	None	11-198

4. HOT WATER CONDENSER TANK

A-19026	Hot water tank complete - Air & Water cooled.

5. WATER VALVE

A-19722	Complete Valve
13-617-2	O-Ring
A-17937	Valve Cap Bottom
2-1545	Compression Spring
13-617-1	O-Ring
A-17942	Lower Plunger
3-1403-6	Cover Screws (6)
A-18192	Valve Cover
A-17941	Upper Plunger
13-606	Rubber Diaphram
A-18312	Diaphram Cover
A-17947	Valve Body

6. WATER CIRCUIT

12-1434-1	Inlet water solenoid
16-162	Inlet water strainer
A-19788-4	Inlet water flow control
12-1532-1B	Sump pump assembly
A-16463	Sprayer tube assembly
2-1803-1	Sprayer tube jet only

7. DRIVE MOTOR AND LINKAGE

12-1346-1	Drive Motor
A-6726	Drive Linkage assembly
A-6462	Driver Arm Assembly
S-7132	Linkage Rod
S-7128	Driver Arm Assembly
S-8887	Drive Bearing Support
S-7639	Driving Journal

8. STORAGE BIN AND COMPONENTS

2-530	"O" Ring
2-1741	Storage Bin Drain Assembly, Male
A-6448	Drain, strainer
A-18102	Storage Bin Drain Ass'y, Female
A-19555	Bin Thermostat Bulb Cover
13-590	Bin Thermostat Bulb Gasket
A-16460	Cube Chute
A-16465	Curtain Assembly

9. MISCELLANEOUS

2-540	Ice Scoop
15-324	Plastic trim insert-per ft.
1-657	Packing crate
12-1532-51	Sump Pump motor only
19-343	Scotsman Ice Machine Cleaner
5-397-2	Nylon tube (per foot) 3/8"

TABLE OF CONTENTS
SC-200

Foreward	1
Table of Contents	2
Photograph and Ice Making Capacity	3
Specifications and Dimensions	4-5
Selecting Location:	
Location	6
Uncrating	6
Preparation for Installation	6-7
Installation	7-8
Water Supply and Drain	11-12
Electrical Connection and Characteristics	8
Wiring Diagrams:	
Air Cooled	9
Water Cooled	10
Diagram Plumbing Connections	11
Diagram Installation Practice	12
Final Check List	13
Start-Up	14-15
Cycle of Operation:	
Harvest Cycle	16
Freezing Cycle	17
Service Analysis Charts	18-19
Exploded Views - Component Parts:	
Sump Pump	20
Control Box	21
Complete Unit (End View)	22
Complete Unit (Front View)	23
Case Parts	24
Hot Water Tank	25
Condensing Unit (Air Cooled)	26
Condensing Unit (Water Cooled)	27
Water Valve	28
Evaporator Assy	29
Service Information	
Installation of Water Valve Kit	30
Water Valve Assembled	31
Drive Linkage and Spray Bar	32
Functional Parts and Maintenance	33-35
Service Complete Unit	36-38
Maintenance Instructions	38
Parts List	39-40

THIS PAGE
INTENTIONALLY
LEFT BLANK

THIS PAGE
INTENTIONALLY
LEFT BLANK

SCOTSMAN®

SUPER CUBER
SC-200
SERIES

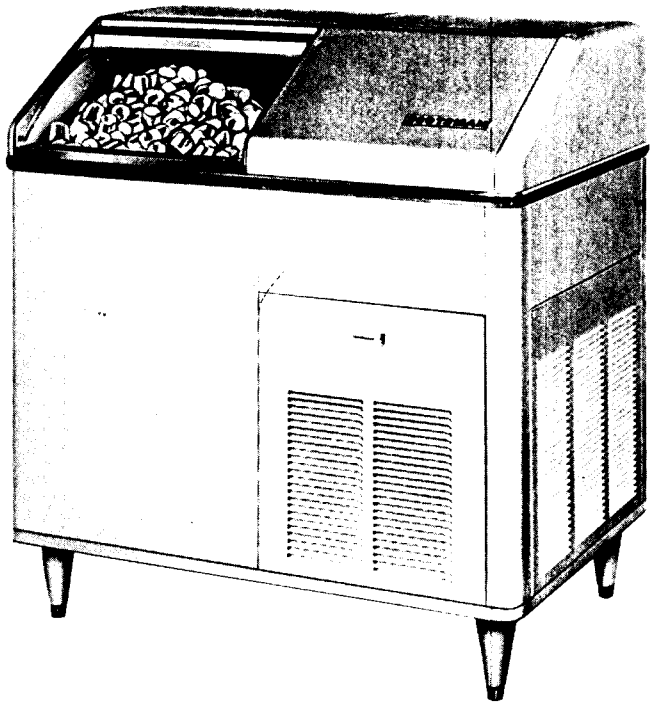

ice making capacity

Air Cooled Models

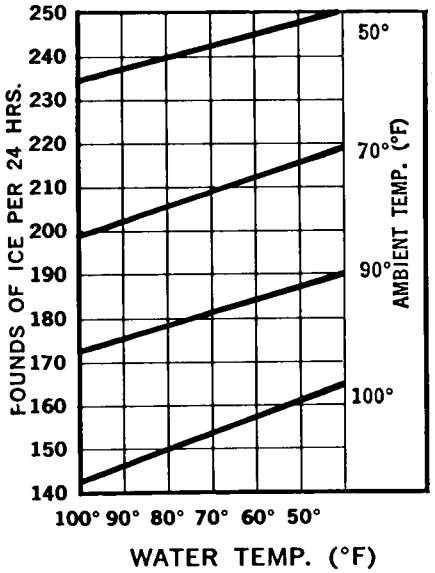

Water Cooled Models

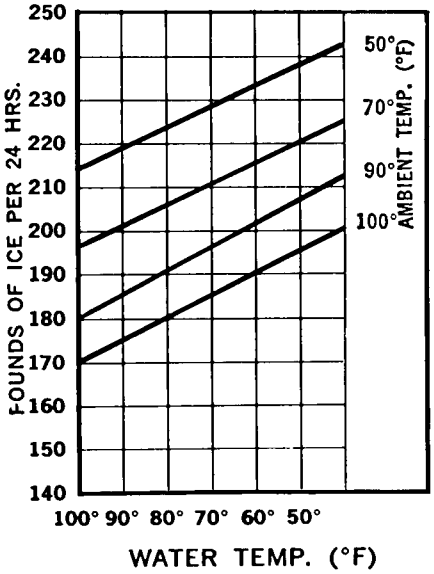

SPECIFICATIONS

SUPER CUBER SC-200 SERIES	MODEL SC-200H	MODEL SC-200WH	MODEL SC-200H-SS	MODEL SC-200WH-SS
Daily capacity up to 225 lbs.	X	X	X	X
Self-contained 150 lb. capacity storage bin	X	X	X	X
Air cooled condenser	X		X	
Water cooled condenser		X		X
Heavy duty ½ HP. Compressor	X	X	X	X
Standard 115 V, 60 cy, 1 ph, AC—	X	X	X	X
¼" water inlet SAE Flare	X		X	
½" water inlet OD Copper		X		X
⅝" OD copper condensate drain	X	X	X	X
⅝" OD copper storage bin drain	X	X	X	X
⅝" OD water outlet Copper	X	X	X	X
Hammerloid grey exterior	X	X		
Stainless steel exterior			X	X
Stainless steel lined storage bin	X	X	X	X
45 ¼" high (with legs)	X	X	X	X
39 ¼" high (without legs)	X	X	X	X
44 ¼" wide	X	X	X	X
24 ½" depth	X	X	X	X
Approximate shipping weight	420	420	420	420

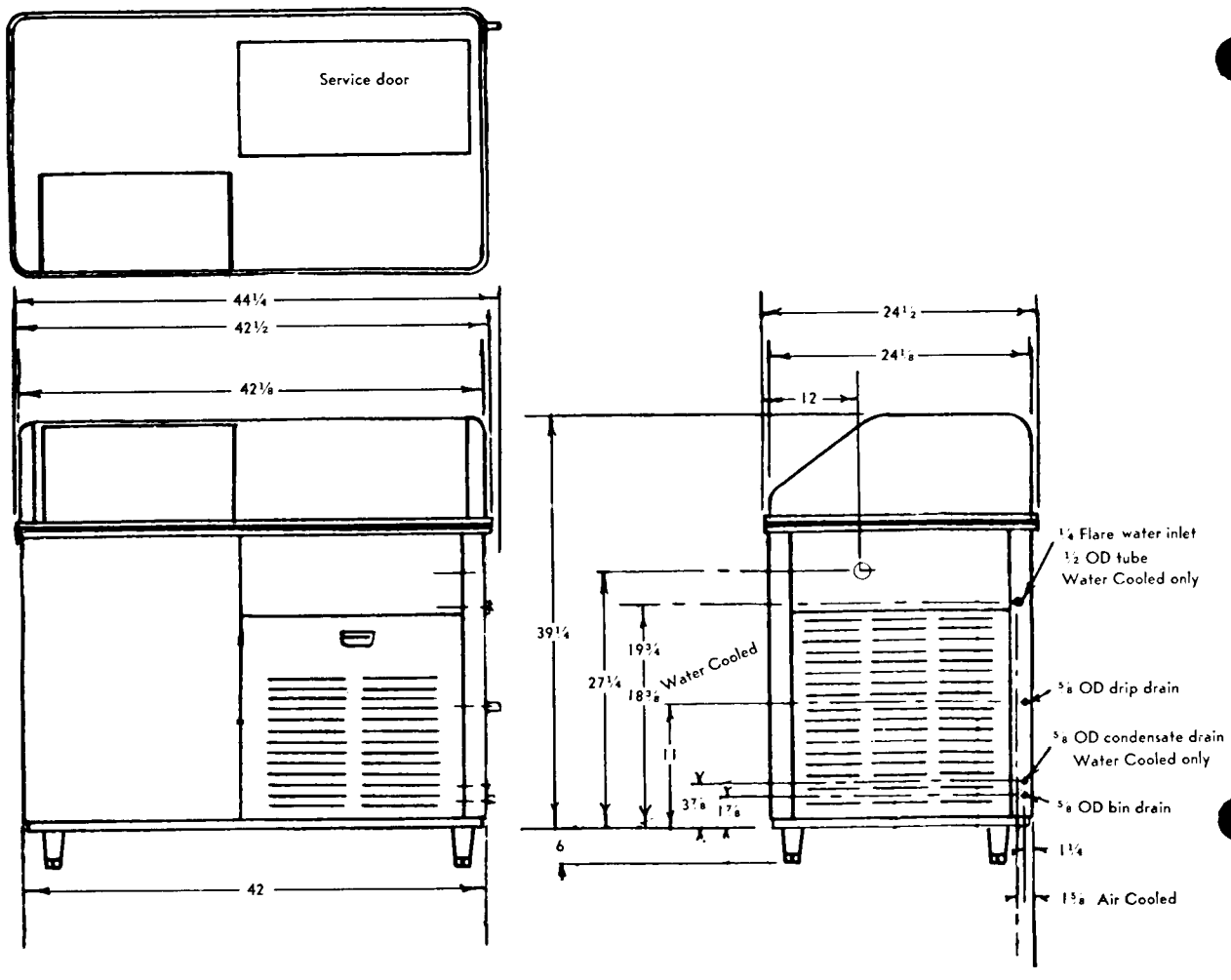

SPECIFICATIONS

	MODEL SC-200	MODEL SC-200
Compressor 1/2 H.P.	115/60/1	115/60/1
Condenser	Air Cooled	Water Cooled
Refrigerant	Refrigerant 12	Refrigerant 12
Refrigerant Charge	24 ounces	24 ounces
Power Consumption	17 Amperes	17 Amperes
Cubes per Harvest	72 Regular sized cubes	72 Regular sized cubes
Water Consumption to Produce Ice	2 Gallons per Hour	2 Gallons per Hour
Water Used by the Condensing Unit		30 Gallons per Hour Average - Varies with Water Temperature.
DIMENSIONS		
Height-with 6" Legs	45 1/4"	45 1/4"
Height-Less 6" Legs	39 1/4"	39 1/4"
Width	44 1/4"	44 1/4"
Depth	24 1/2"	24 1/2"
WEIGHTS		
Uncrated	400 lbs.	400 lbs.
Crated	420 lbs	420 lbs

INSTALLATION

UNCRATING OF MACHINE

1. The complete machine comes in one crate. After the crate is removed, inspect for concealed damage. Remove the bottom skid by removing all bolts. Then cut all wires holding support packing from refrigerant line. Then loosen shipping bolts on the compressor. Be sure the compressor is floating free on spring mounts. Then check all refrigerant lines for rubbing or touching other surfaces. Also check for possible transportation damage.

2. Remove all service doors and panels.

3. Remove leg packages in compartment base and install 4 legs in unit base sockets. Level unit with adjustable legs.

4. Loosen motor compressor hold down nuts until motor compressor rides freely on mounting springs.

5. Remove water strainer from storage package for installation in water supply line feeding unit.

6. Open electrical control box and prepare for hook up, use knock outs, cord connectors etc. Then check unit name plate voltage against building source voltage and make sure they correspond. Caution--Improper voltage supplied to units will void your warranty protection.

7. Make sure all service valves on the condensing unit are open and turned as far as possible to the left. Replace the valve caps after checking the valves. All Models are shipped with valves back seated.

8. Make sure that the flow of air is not impeded in any way over condenser on air-cooled models. Keep condenser clean. (Check and clean the condenser monthly.)

9. Operating room temperatures are minimum 50° F. and maximum 100° F.

10. Have the installation and warranty cards been filled out and sent to factory to insure warranty protection?

LOCATION OF THE ICE CUBE MACHINE

UNDER BAR INSTALLATIONS--Locate, if possible, so left end panel is accessible. Locate unit so proper circulation can be attained around the unit and behind it at least four inches. Provide plumbing and electrical connections so the unit can be moved out where the entire top hood can be removed and the unit can still be operated.

KITCHEN INSTALLATIONS--As a rule, the kitchen is not the most practical place to install an air-cooled condensing unit, as grease is almost always present and makes cleaning of the condensing unit difficult. Do not locate near range or steam table or other heating devices that may be used in the kitchen.

STOREROOM INSTALLATIONS--Be sure storeroom is of adequate size and properly ventilated. A small, poorly ventilated room will greatly impair the efficiency of the unit. The storeroom must be kept above 50 degrees in the winter months.

INSTALLATION

BASEMENT INSTALLATIONS--Locate machine in the coolest place. Locate the machine in a dry place. Keep away from furnace and boiler room. Keep away from service chutes and runways, also coal or other dust of any kind. If the machine is set over a floor drain, block the machine up enough to eliminate any possible damage to the machine.

LOCATE THE MACHINE SO IT CAN BE SERVICED WHEN NECESSARY. ALLOW AT LEAST FOUR INCHES OF SPACE AROUND THE MACHINE FOR CIRCULATING AIR.

IMPORTANT: ADJUST LEVELER LEGS. MACHINE MUST BE LEVEL.

Remove water reservoir cover and take out paper packing around float ball, make sure overflow standpipe is securely in place.

Remove water strainer from storage bin for installation on unit or in water supply line feeding unit.

Remove 3/4" flat shipping slug between 3 way water valve stem and body. Replace rear service panel.

Remove all masking tape and packing members from curtains and inner cube making compartments. Re-align components such as sump pump that may have shifted in transit.

INSTALLATION

WATER SUPPLY AND DRAIN CONNECTIONS

Pages 11 & 12 show recommended water piping connections and drain facilities for Model SC-200 and SC-200W.

WATER SUPPLY

The recommended water supply line is 1/4" OD copper tubing for air-cooled units. Connect to a cold water supply line with regular plumbing fittings with a shut-off valve installed in an accessible place between supply line and machine. The water strainer supplied with the unit should be mounted with clean-out plug down. Locate the strainer next to the machine and the arrow in the direction of the flow, as per Page 12.

The water supply line connects to the 1/4" OD soft copper tubing (See Figures Page 12). Use care in connecting up water line to the machine. Water supply must be installed to conform with local code.

Water connections for the SC-200 water-cooled units is 1/2" OD copper tubing one connection on cabinet for both make-up water and condenser water.

DRAIN

The recommended drain; is 5/8" OD copper tubing. Sweat to drain connection (See Page 12). Must be run to open or trapped drain. If drain is a long run, allow a 1/4" pitch per foot. Drain must be installed to conform with local code.

ELECTRICAL CONNECTIONS AND CHARACTERISTICS

SC-200	110-115 V, 60 Cycle	Single Phase, 17 Amps.

All external wiring should conform with National Underwriters' and local code requirements. Check the voltage on the line before connecting the machine. Model SC-200 requires 110-115 volts, 60 cycle, single phase.

The SC-200 should be wired to a 20 Amp. circuit. Be certain that the Super Cubers are on their own circuit and individually fused. The maximum allowable voltage variation should not exceed 10 % of the nameplate rating even under starting conditions. Low voltage can cause erratic operation, and may be responsible for serious damage to the overload switches and motor windings.

WIRING DIAGRAM

SC-200

Air Cooled

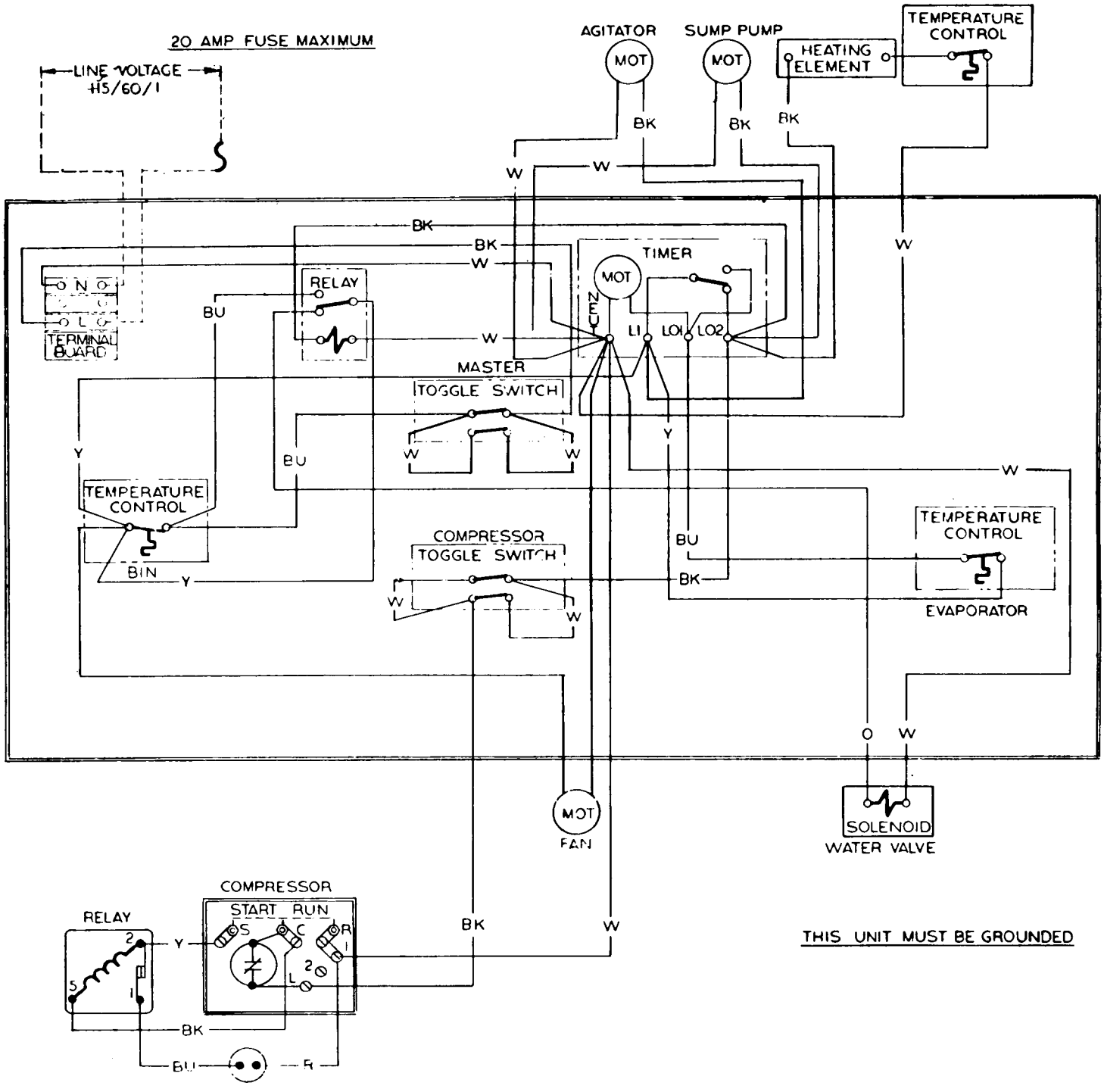

WIRING DIAGRAM

SC-200

Water Cooled

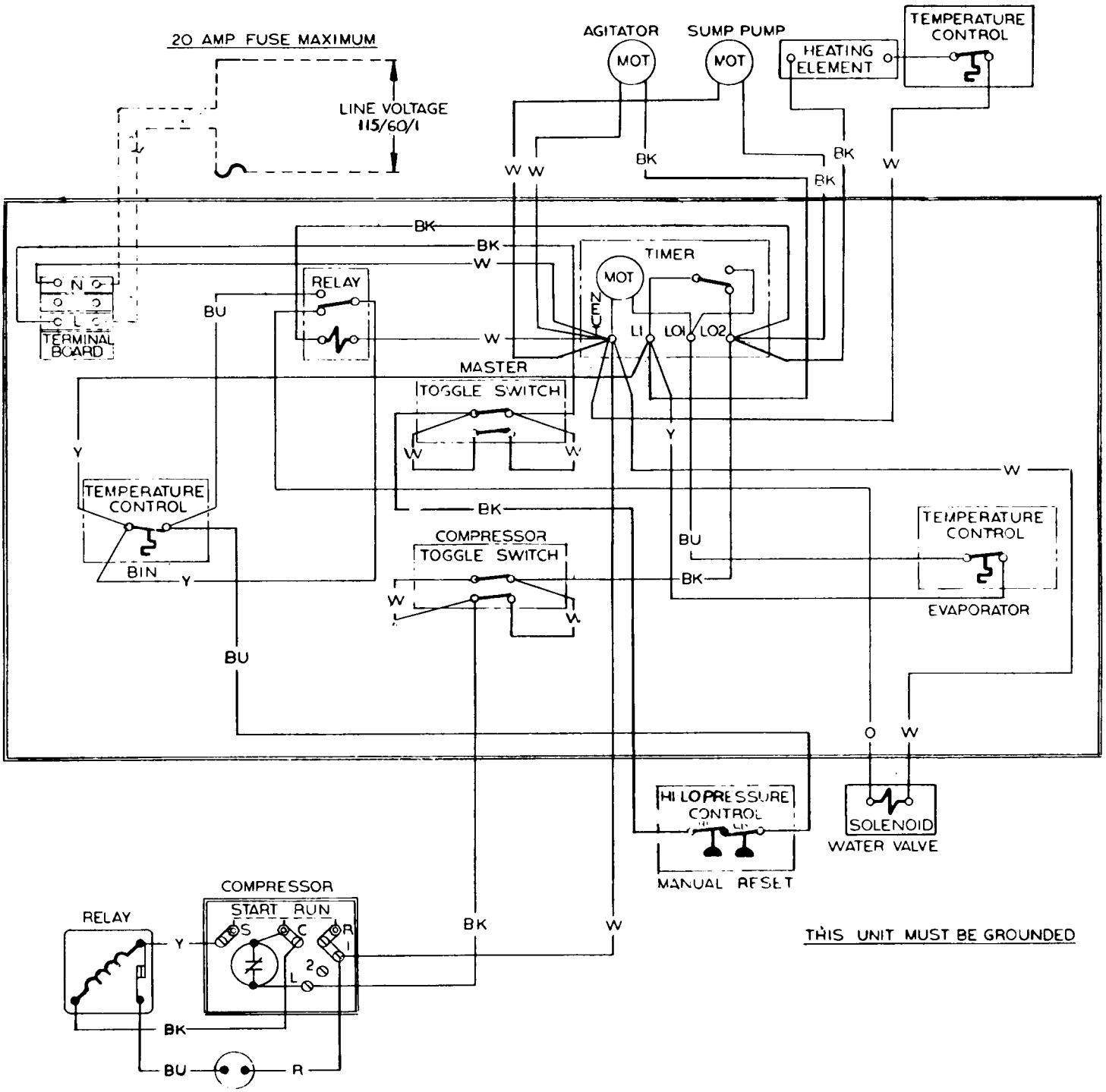

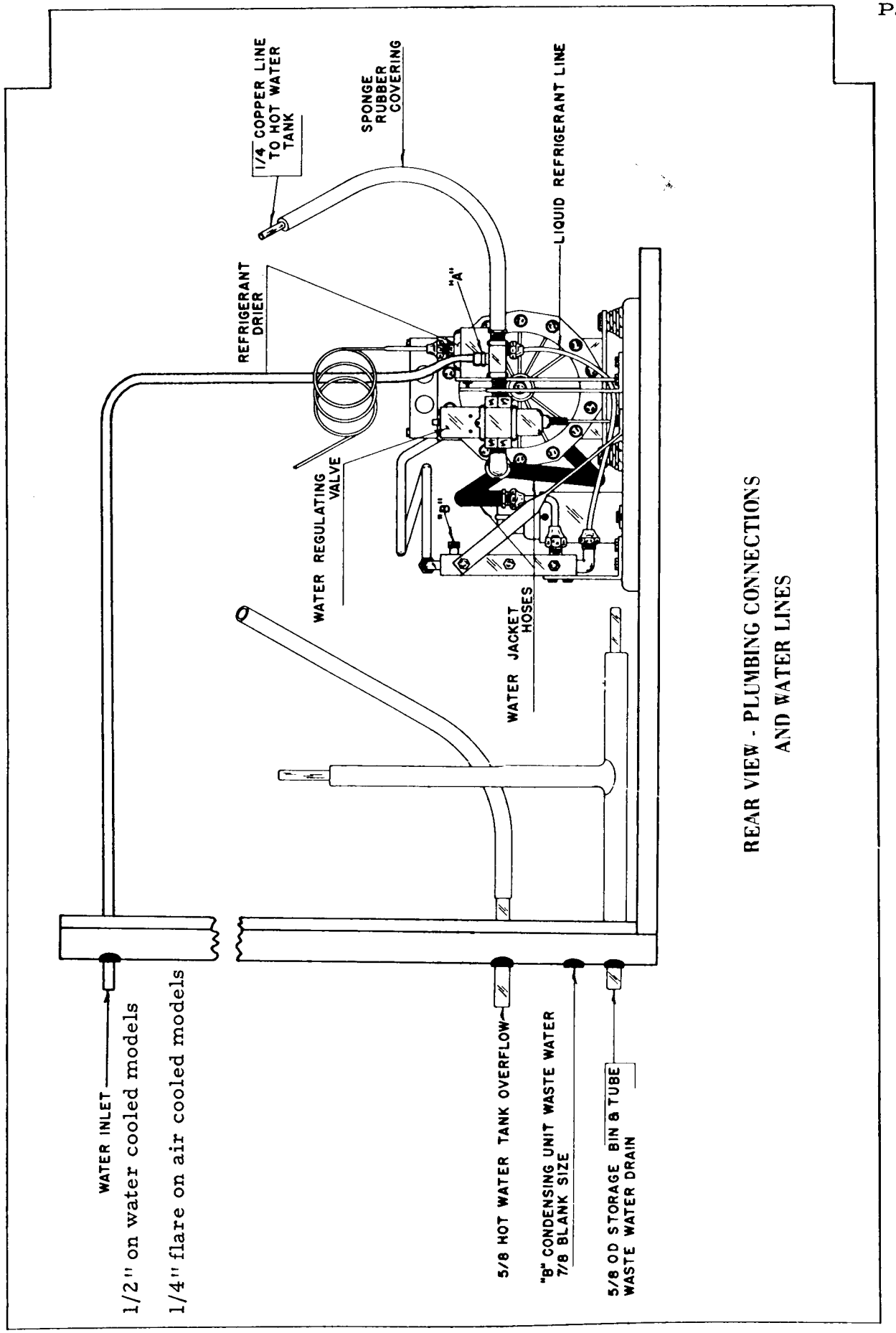

REAR VIEW - PLUMBING CONNECTIONS
AND WATER LINES

INSTALLATION PRACTICE

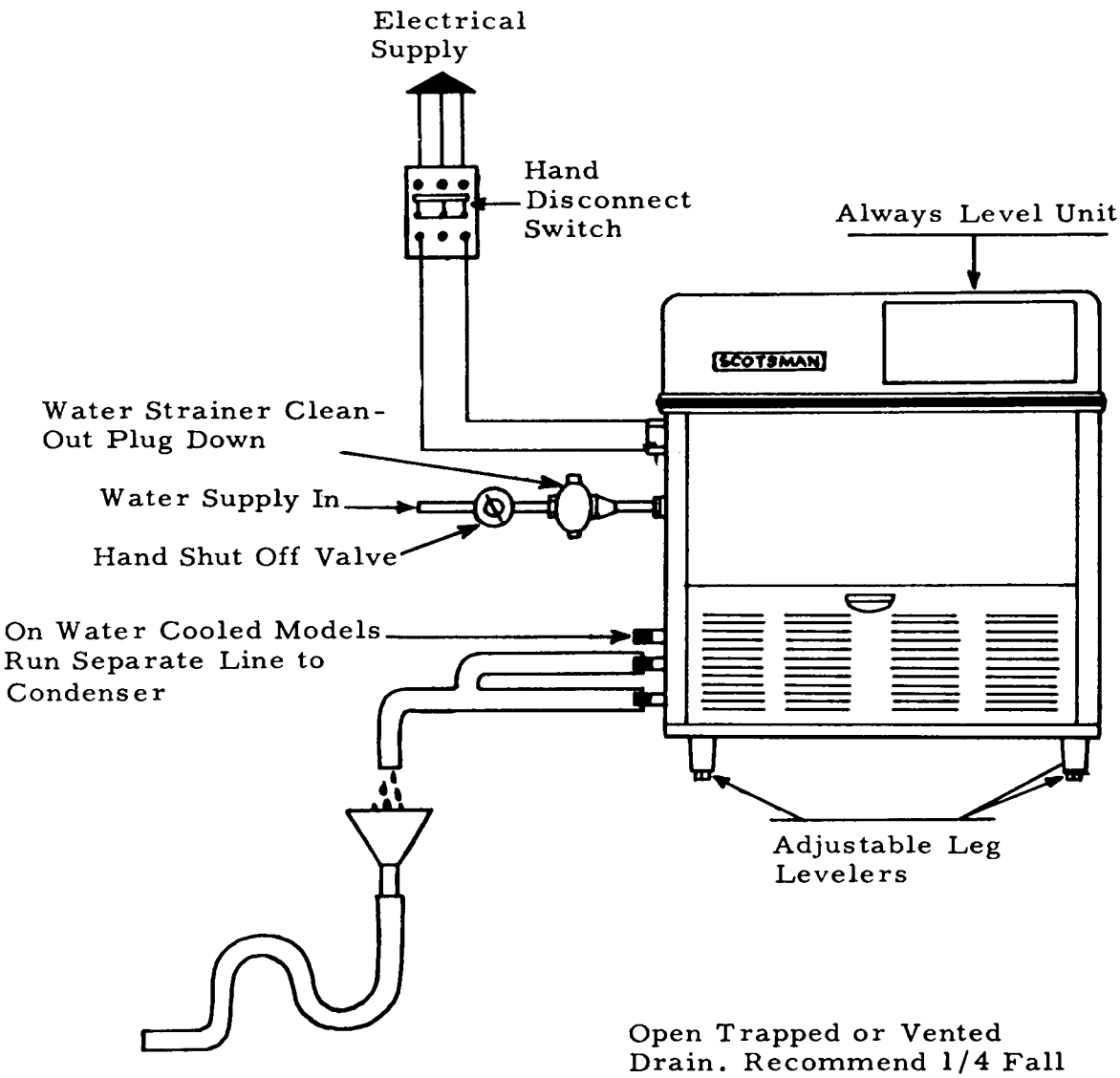

FINAL CHECK LIST

1. Is the unit level? (IMPORTANT)
2. Have all electrical and piping connections been made?
3. Has the voltage been tested and checked against the nameplate rating?
4. Have the compressor hold-down bolts been lossened so the compressor rides freely on its mounting springs.
5. Is the water supply valve open and the electric power on?
6. Is the water reservoir filled and shut off? Paper removed and float adjusted.
7. Is the unit clean?
8. Has the owner been given the operating manual, and has he been instructed on how to operate the machine?
9. Have the installation and warranty cards been filled out? This is the owner's protection as well as the sellers.
10. Check all refrigerant and conduit lines to guard against vibrations and possible failure.
11. Is there 4" clearance behind and around unit for proper air circulation?
12. Is unit in a room where ambient temperatures are minimum 50° F. even in winter months?

INSTALLATION

START UP

1. On all water cooled models, turn on water supply to water-cooled condenser and check for leaks in connections made.

2. Turn on cube supply at hand shut-off valve. Make sure hot water tank fills to overflow, if it does not, adjust timer lever to 4 minute setting. NOTE: Unit has built-in water flow control set to reduce flow rate to approximately .30 gallons per minute.

3. Check electrical circuit. 17 Amps. Do not connect with other appliances into one ordinary wall outlet: 115 volts required.
4. Inspect components in electrical control box, check for loose or frayed wire, then turn both manual switches to "on" position. NOTE: All "H" model cubers have two manual on-off switches. One is for motor compressor only during cleaning operation, one is master switch for complete unit.

5. Turn disc on time clock to the right just far enough for water solenoid valve to energize. Allow clock to take it through harvest cycle. This will be approximately two minutes. Dial pointer should be set on Number 3 1/2. After the compressor starts, turn the dial completely around and send it through another harvest cycle. Do this several times. This will completely flush out machine of any dust that may have accumulated in shipment.

6. After machine has been properly flushed, allow it to go into a freezing cycle - check for possible water leaks, check sump pump operation - should be running freely. Also note if jet tube travel is correct, and that none of the jets are plugged. Jet spray of water should hit the middle of the cups.

7. Time clock dial does not rotate at the end of the harvest cycle; it is started later by the cube size control located in the control box.

8. Freezing time will be approximately 25 minutes in a 70 degree ambient. (Longer if above, and shorter if below.) Average complete cycle time is 30 minutes.

9. Watch first cube harvest and check to make sure that plastic curtain has not not been damaged in shipment.

10. Check size of cubes made: If too small, after a second cycle, adjust cube size control to lower or colder setting - until desired cube size is reached.

INSTALLATION

11. Check texture of cubes made: Partially cloudy cubes throughout suggest unit running short of water near end of freezing, or possibly an extremely bad water condition, which would indicate use of filtering or purifying equipment. Contact SCOTSMAN - Queen Products, Div., Ice Machine Service Department, Albert Lea, Minnesota, for futher details.

12. With unit on harvest cycle, take a handful of cubes made and hold on storage bin thermostat cover. Should cut unit off in one or two minutes - remove ice: unit should cut back on automatically. Thermostat is factory set at 35 degrees out, 39 degrees in.

13. Install gauges and check head and back pressure: air-cooled models, head pressure after twenty minutes of freezing cycle at 70° ambient will be approximately 125 pounds PSI. The back pressure starts out at approximately 50 pounds PSI and gradually pulls down to approximately 4 pounds PSI just before harvest cycle. Higher ambients and dirty condenser will cause higher pressures. Water-cooled models have water regulating valves factory set at 125 pounds PSI: check reading and adjust if necessary. Back pressure will operate the same as on air-cooled models.

14. Remove gauges, replace control box cover and all service panels.

15. Instruct owner on how to operate and clean machine.

HARVEST CYCLE
SC-200

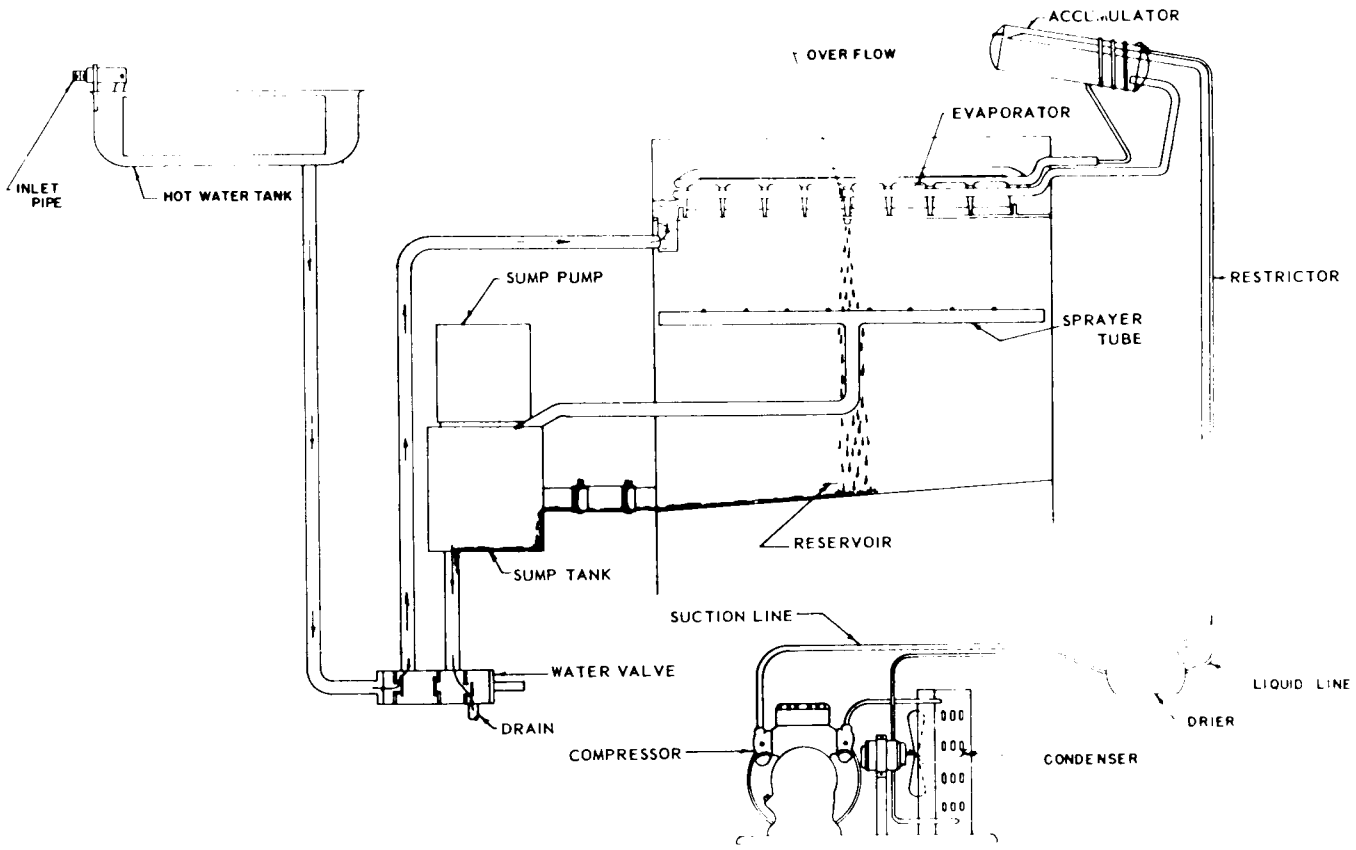

At the end of the freezing cycle the time clock operated switch opens compressor, sump pump and heater element circuit, and closes circuit to time clock motor, drive motor and solenoid operated water valve. At this time, the water valve allows heated water in hot water tank to flow by gravity through solenoid operated valve, and into the upper cavity of the freezing chamber, and, at the same time allows the surplus water from the preceding batch of ice cubes to go down the drain. The hot water from the water tank flows into the rubber platen holding the cups and by conduction on back of cups causes cubes to defrost. The platen cavity is completely filled up to the overflow point, and continues to overflow while in the defrost cycle; the amount of this water running over the overflow pipe is controlled by the size of the flow control orifice and the length of harvest time setting on the time clock; overflow water goes down the drain also. Meanwhile, cubes being released from the cups drop by gravity and are mechanically ejected through curtained opening into storage bin by jet tube which is actuated by drive motor. At completion of harvest cycle, the micro-switch on the timer now drops points holding defrost components in cycle and switches to freezing cycle set of contacts. Clock motor now stops and will not start until cube size control closes once more. The freezing cycle starts and the water valve allows the hot water tank to refill. The chilled water from the upper cavity flows by gravity through the water valve into the sump tank. Here it is picked up by the sump pump and this water is used to produce the next batch of cubes.

FREEZING CYCLE
SC-200
Water Circuit - Refrigerant

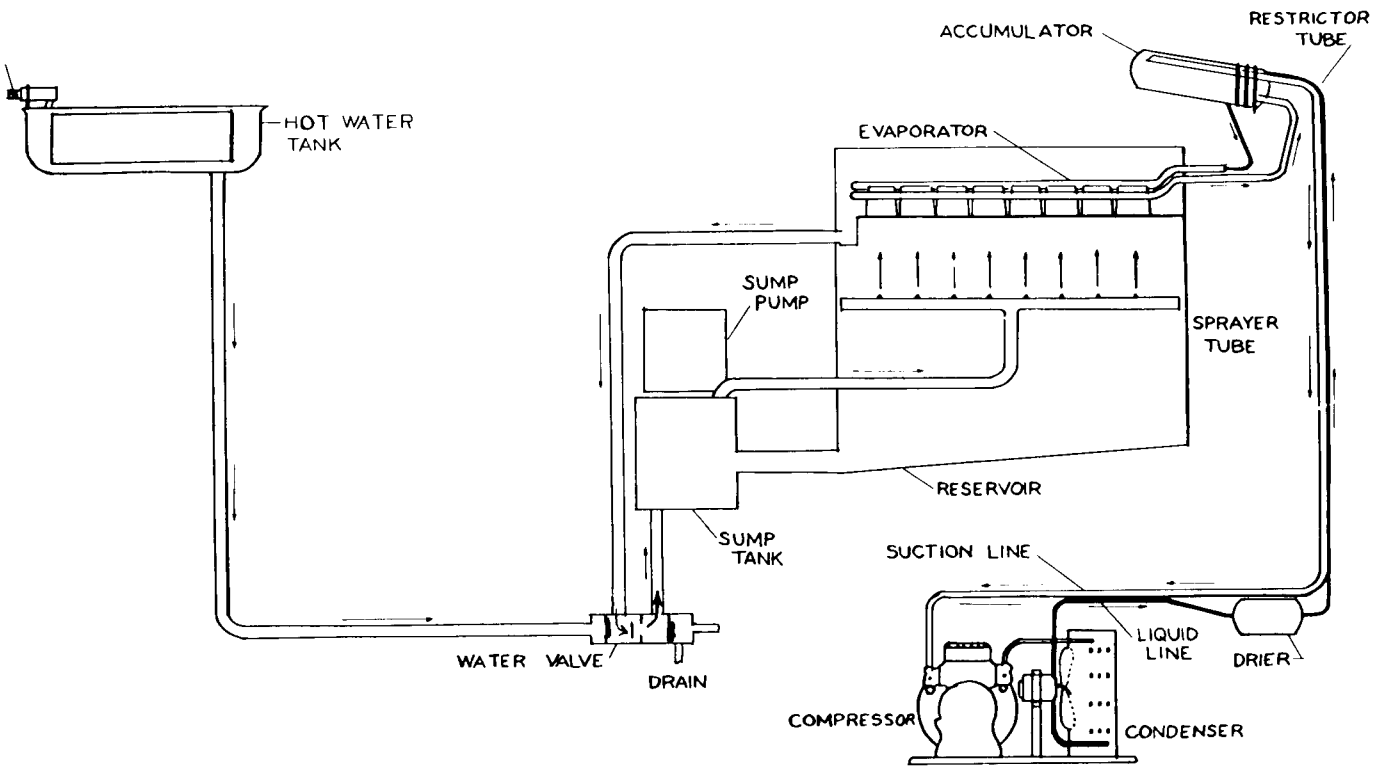

At the start of the freezing cycle, reservoir and sump tank contain enough water to make a complete batch of ice cubes, plus approximately an extra pint. When time clock closes load circuit, it starts the compressor, sump pump and heater element in hot water tank. At the same time, it opens the circuit to clock motor. (Clock motor does not run first part of freezing cycle---This is approximately 20 minutes.) This timer has a single pole double throw micro-switch for carrying and directing current. After a predetermined amount of ice is frozen, the cube size or reverse acting temperature control closes, actuating the time clock motor circuit which continues the freezing cycle approximately 9 more minutes. (After clock motor starts, freezing will be 12 minutes less defrost time setting.

Harvest water is used to produce the next batch of ice, therefore on the initial start up it is necessary to have the unit in a harvest cycle. This can be done by manually turning timer to harvest position.

SERVICE ANALYSIS

SYMPTOM	POSSIBLE CAUSE	SUGGESTED CORRECTION
Shortage of water	Water spraying out through curtains	Replace broken curtains if any broken.
	Three-Way water valve leaking	Check the valve for foreign matter. Check valve seats and replace if necessary.
	Water entering hot water tank too slowly	Check pressure at source-20# required. Dirt in solenoid and flow control- blow out.
		Partial restrictions in water strainer. Clean Strainer.
Irregular size cubes and some cloudy	Some jets plugged	Clean jets.
	Shortage of water	See Shortage of Water
		Reposition cube chute.
	Unit not level	Water overflowing air vent holes on low side burning cubes. Level as required.
Cubes too large	Cube size control set low	Raise setting on cube size control.
Decreased ice capacity	Inefficient compressor	Replace .
	Leaky water valve	Replace or repair.
	High head pressure	Dirty condenser. Clean. Bad fan motor. Replace. Non-condensable gas in the system: purge the system. Too hot a location with poor circulation:
		relocate the unit, or provide for ventilation by cutting openings; Overcharge of refrigerant. Correct the charge.
	Partially restricted cap tube	Purge & replace charge and drier
Hole washed inside cube	Water over the top of the cube cups during harvest	Level unit.

SERVICE ANALYSIS

SYMPTOM	POSSIBLE CAUSE	SUGGESTED CORRECTION
Unit will not run.	Blown fuse	Replace fuse & check for cause of blown fuse.
	Bin thermostat set too high	Adjust thermostat. Set between 35° out to 39 degrees in.
	Switch in Off position	Turn switch to On position.
	Inoperative master switch	Replace switch
	Timer contacts open	Replace timer micro-switch.
Compresser cycles intermittently	Low voltage	Check circuit for overloading. Check voltage at the supply to the building. If low, contact the power company.
	Dirty condenser	Clean with vacuum cleaner, air or stiff brush. (Do NOT use wire brush.)
	Air circulation blocked	Allow sufficient air space all around unit.
	Inoperative condenser fan motor	Check to see if defective. If defective, replace.
	Non-condensable gases in system	Purge the system.
Cubes too small	Cube size control set too high	Lower the setting. Turn towards colder.
	Partially restricted capillary	Blow charge, add new gas & drier.
	Moisture in system	Replace the dryer.
	Shortage of water	See remedies for shortage of water.
	Shortage of refrigerant	Check for leaks and recharge.
Cloudy cubes	Shortage of water	See remedies for shortage of water.
	Dirty water supply	Use water softener or water filter.
	Restricted drain on pump	Clean pump strainer.
	Accumulated impurities	Use SCOTSMAN Ice Machine Cleaner.
Poor harvests	Too short defrost time	Check and adjust harvest cycle. Timer should be set at 3 1/2.
	Restriction in incoming water	Check water feed line strainer and flow reducing valve. To give greater water flow increasing defrost time.
	Insufficient quantity of hot water	Cold ambient - must be 50° minimum faulty fan control on air-cooled models.
	Solenoid valve not opening the water valve	Solenoid binding or burned out. Replace.
	Air vent holes in upper cube cups plugged	Clean out holes.

SC-200

SUMP PUMP

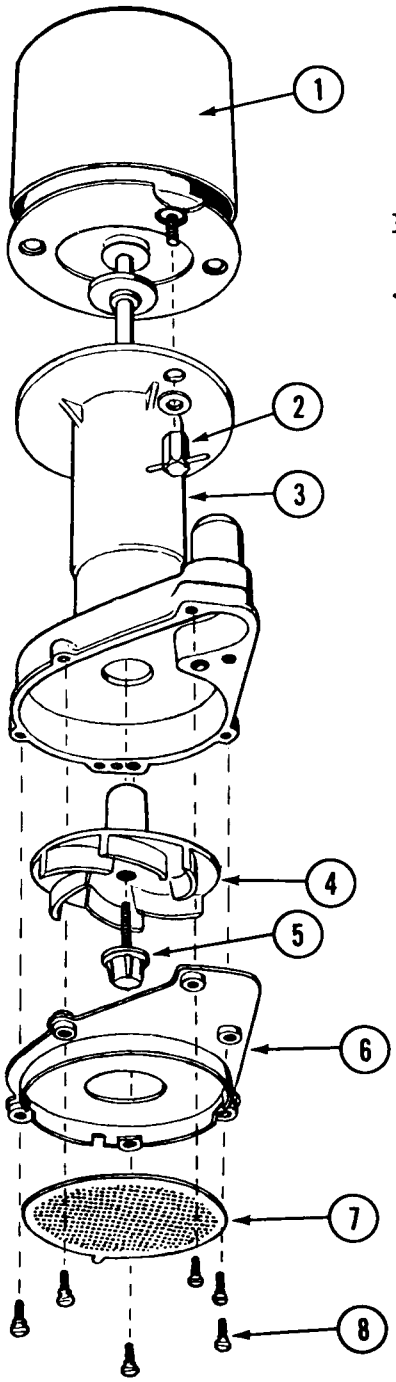

ITEM NO.	PART NO.	NAME
1.	12-1351-22	Motor Only
2.	12-1351-32	Wing Hex Nuts
3.	12-418-30	Pump Body
4.	12-1351-21	Impellar and Spring
5.	12-1351-31	Impellar Screw and Gasket
6.	12-1351-27	Bottom Inlet Plate
7.	12-1351-26	Inlet Screen
8.	12-1351-29	Wing Screws
	12-418-1	Complete Pump

SC-200 CONTROL BOX ASSY

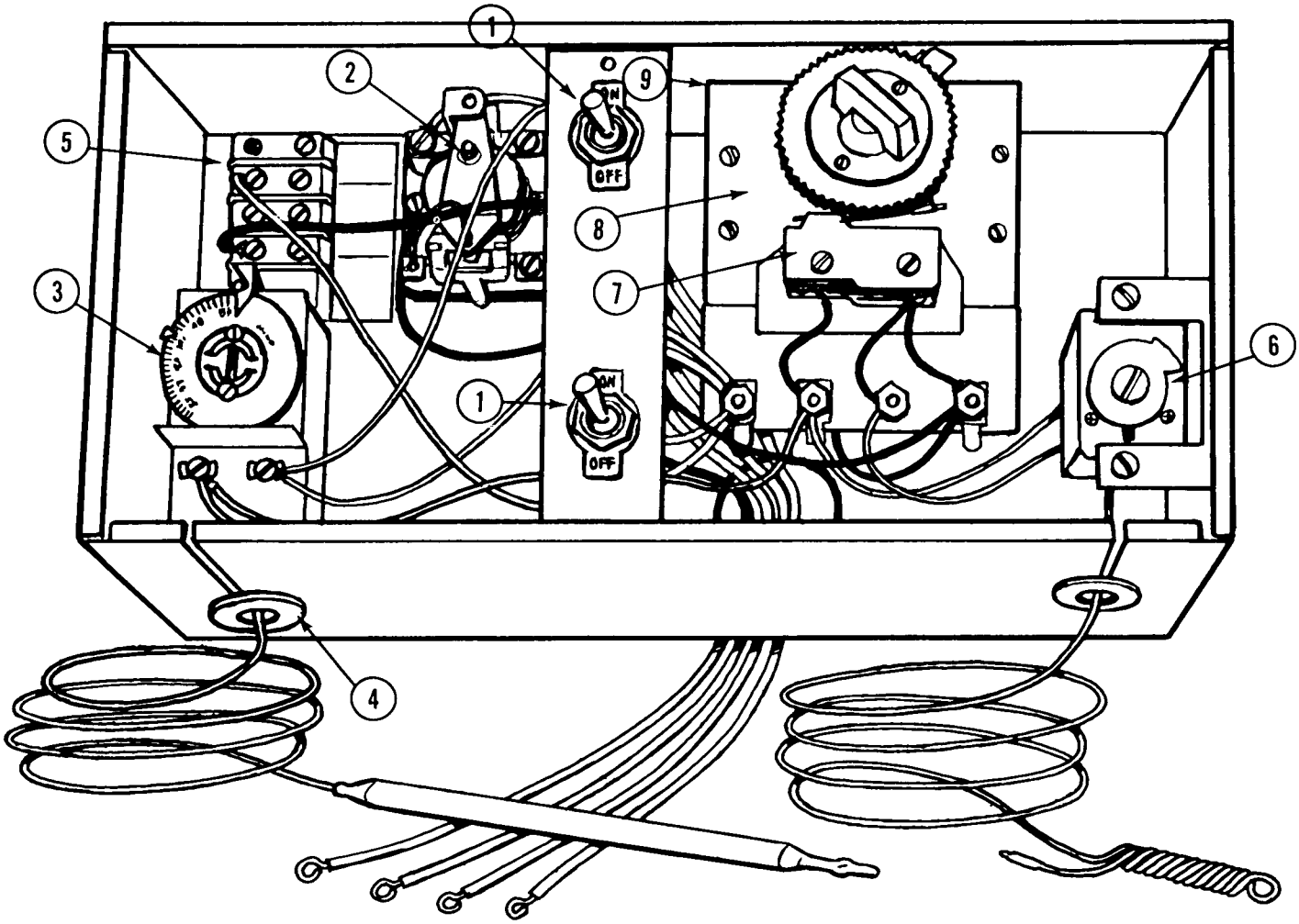

ITEM NO.	PART NO.	NAME
1.	12-537	Switches
2.	12-419	Relay
3.	11-99-1	Bin Control
4.	13-124	Grommets
5.	12-813	Terminal Block
6.	11-345	Cube Size Control
7.	12-645-20	Timer Micro-Switch only
8.	12-645-1	Timer A19670-021
9.	12-367	Timer Motor only

A19670-021

~~11-035-1-20~~

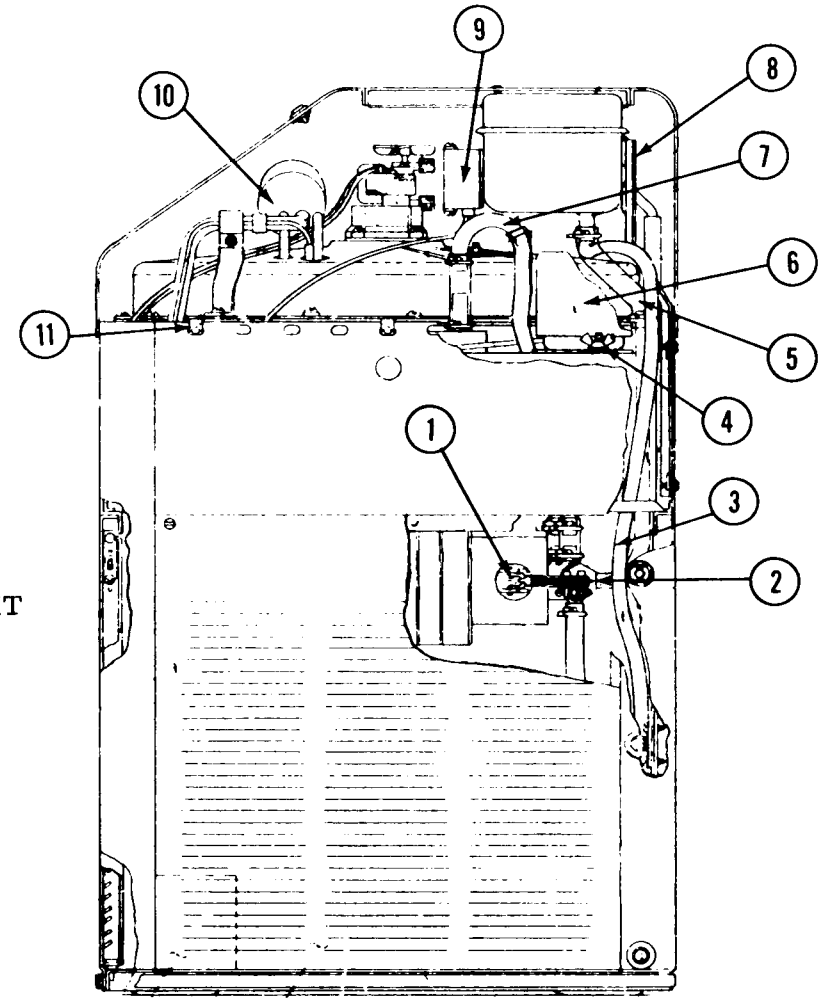

SC-200
COMPLETE UNIT

(Right Side)

ITEM NO.	PART NO.	NAME
1.	12-248-1	Solenoid
2.	A-8139	Complete Valve
3.	13-79	Rubber Drain Tube per ft.
4.	3-552	Wing Nut
5.	5-179	Tygon Tube per ft.
6.	12-418-1	Sump Pump
7.	A-17080	Elbow
8.	A-6742	Hot Water Tank Bracket
9.	A-6480	Thermo Box Cover
10.	S-9508	Suction & Acc. Assy
11.	3-449	Speednuts (18)

SC-200
COMPLETE UNIT

(Front)

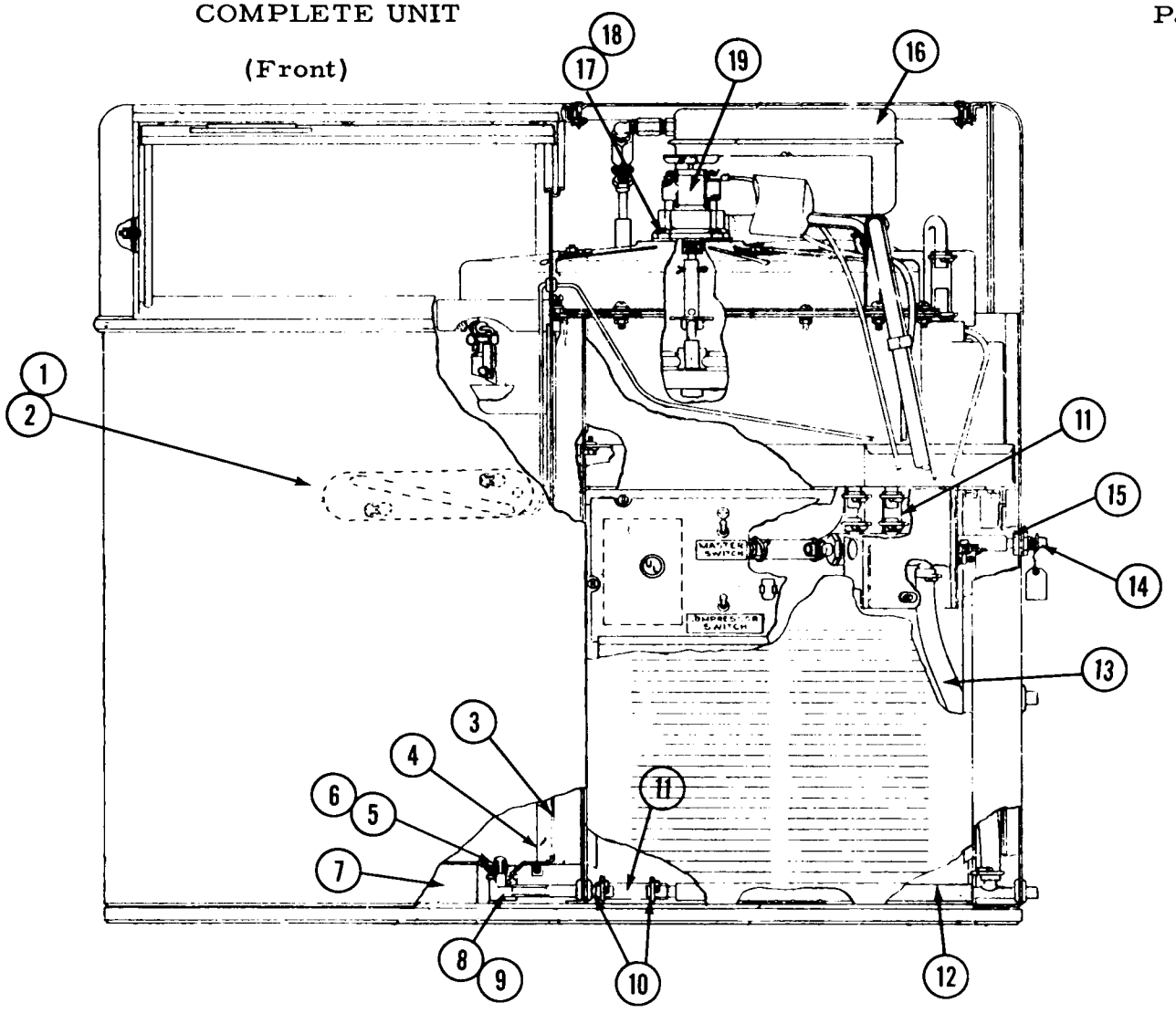

ITEM NO.	PART NO.	NAME
1.	A-15759	Bulb Cover
2.	13-590	Bulb Gasket
3.	A-15743	Insulation Layout
4.	A-15705	Storage Bin
5.	A-6448	Strainer
6.	A-18090	Drain Fitting (Male)
7.	A-15721-2	Bottom Insulation
8.	A-18103	Drain Ass'y
9.	2-530	"O" Ring
10.	2-1338	Hose Clamp
11.	5-179	Tygon Tube per ft.
12.	A-16174	Drain Assy
13.	13-567	Drain Tube per ft.
14.	A-9755	Inlet Water Tube
15.	S-7044	Nut
16.	A-12870	Tank Cover
17.	13-176	Drive Motor Gasket
18.	3-1211	Screw (4)
19.	12-675-1	Drive Motor

SC-200 CASE PARTS

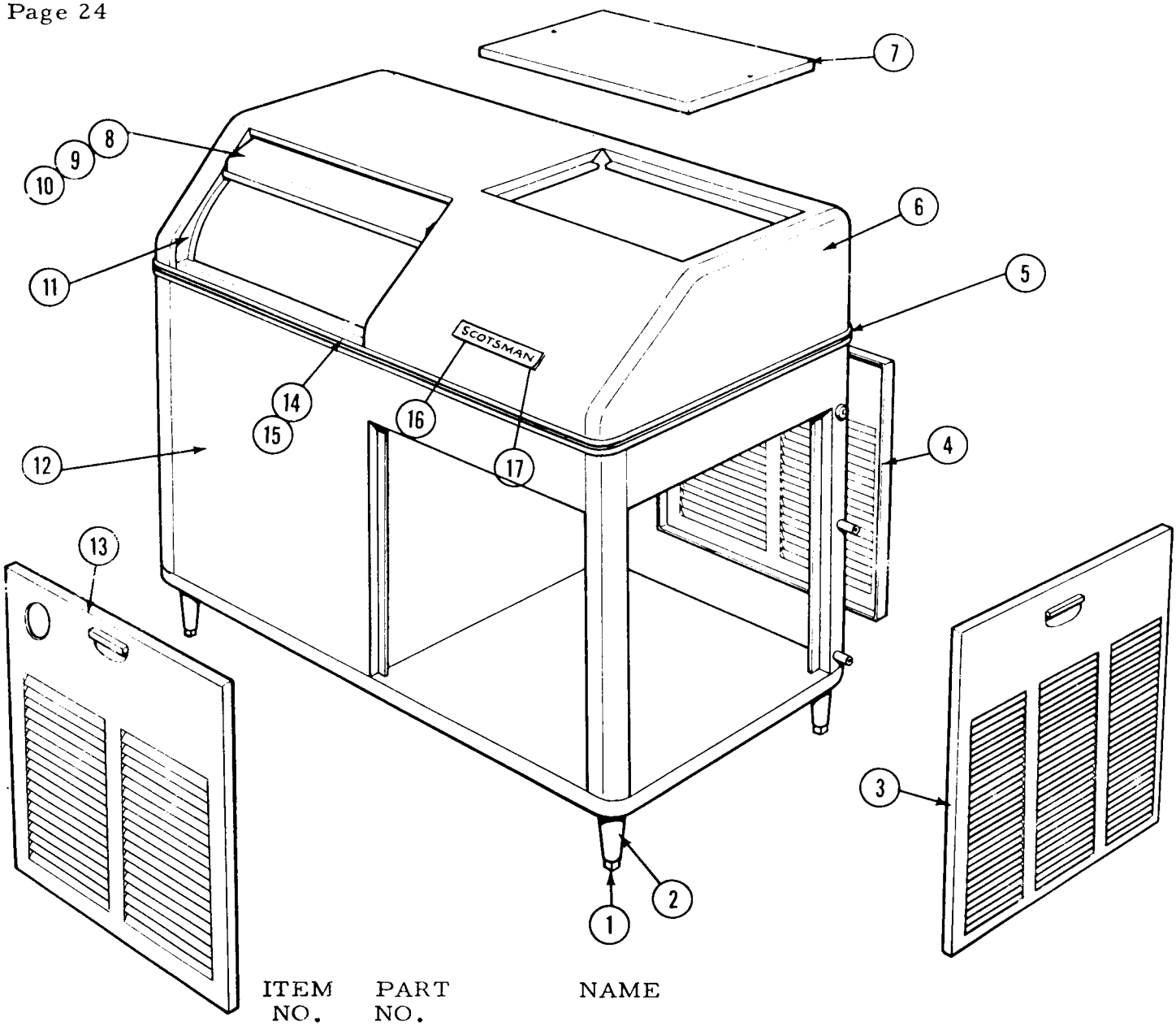

ITEM NO.	PART NO.	NAME
1.	8-522	Leg Levlers
2.	A-15803	Leg
3.	S-6840	Side Door
4.	A-8739	Back Door
5.	A-5862	Rear Moulding Strip
6.	A-15603	Hood (less doors)
7.	S-6849	Top Door
8.	A-15559	Sliding Door
9.	3-640	Door Glide
10.	2-1616	Door Catch
11.	A-16208	Door Track
12.	A-16177	Case Ass'y (less doors)
13.	A-15866	Front Door
14.	A-5863	Moulding Strip
15.	15-324	Plastic Insert
16.	15-156	Emblem
17.	3-271	Speed Nuts

SC-200
HOT WATER TANK

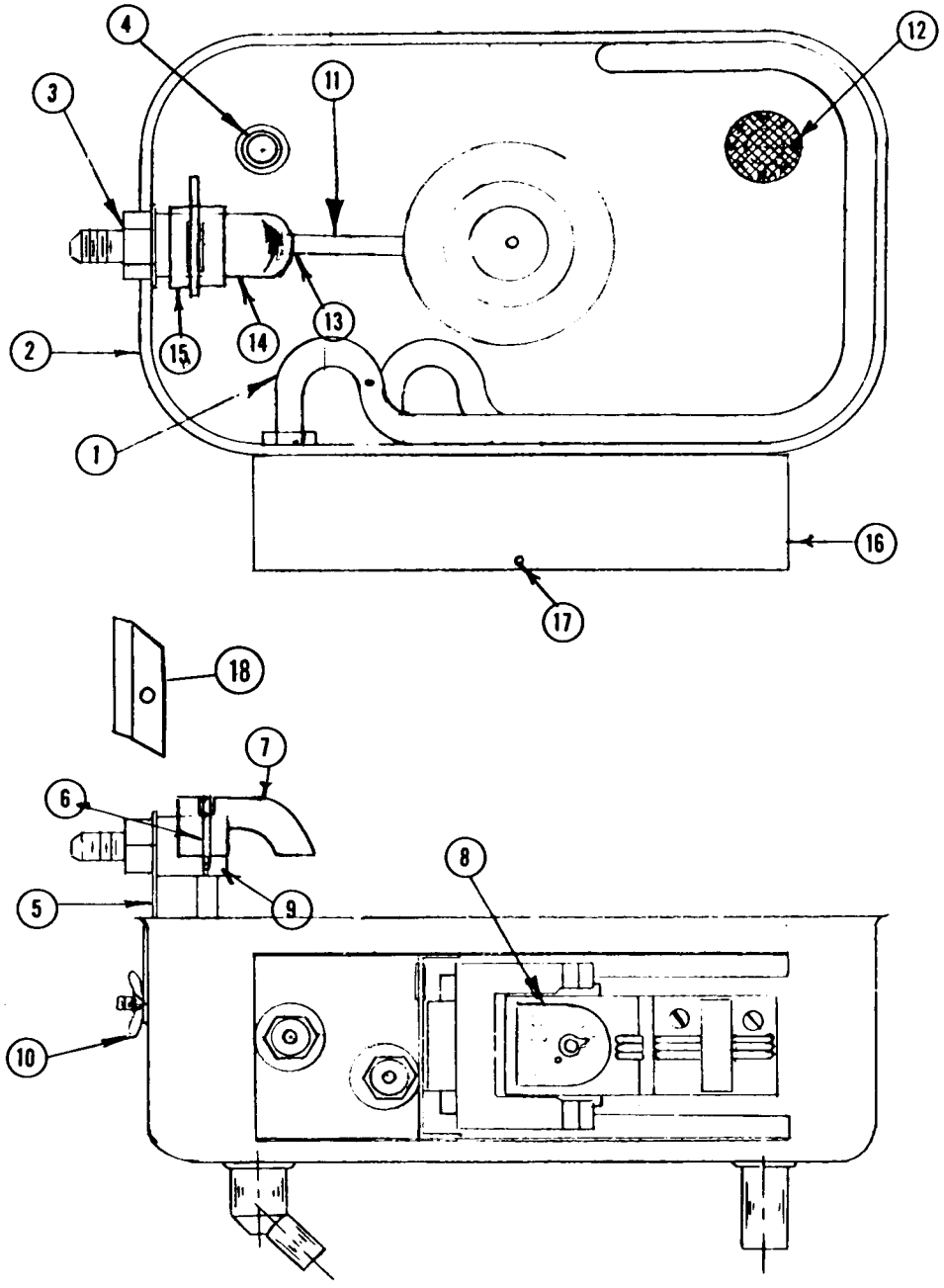

A06771-020

ITEM NO.	PART NO.	NAME
1.	12-356	Heating Element
2.	A-6467	Hot Water Tank Only
3.	S-7044	Nut
4.	A-6477	Stand Pipe
5.	A-12869	Inlet Water Bracket
6.	2-1259	Valve Pin
7.	2-1320	Water Deflector, plastic
8.	12-246	Thermo Disc
9.	A-6771	Water Inlet Valve Ass'y (complete with float)
10.	3-255	Wing Nut
11.	A-12068	Float Ass'y (includes arm)
12.	A-5998	Screen
13.	A-5777	Valve Seat Holder (*)
14.	S-6947	Valve Seat (*)
15.	3-1001	Rivet, Stainless Steel (*)
16.	A-6480	Thermostat Box Cover
17.	3-129	Screw
18.	A-18418	Water Deflector
19.	A-9754	Hot Water Tank Complete (less cover)

SC-200
CONDENSING UNIT
1/2 HP Air Cooled, Copeland

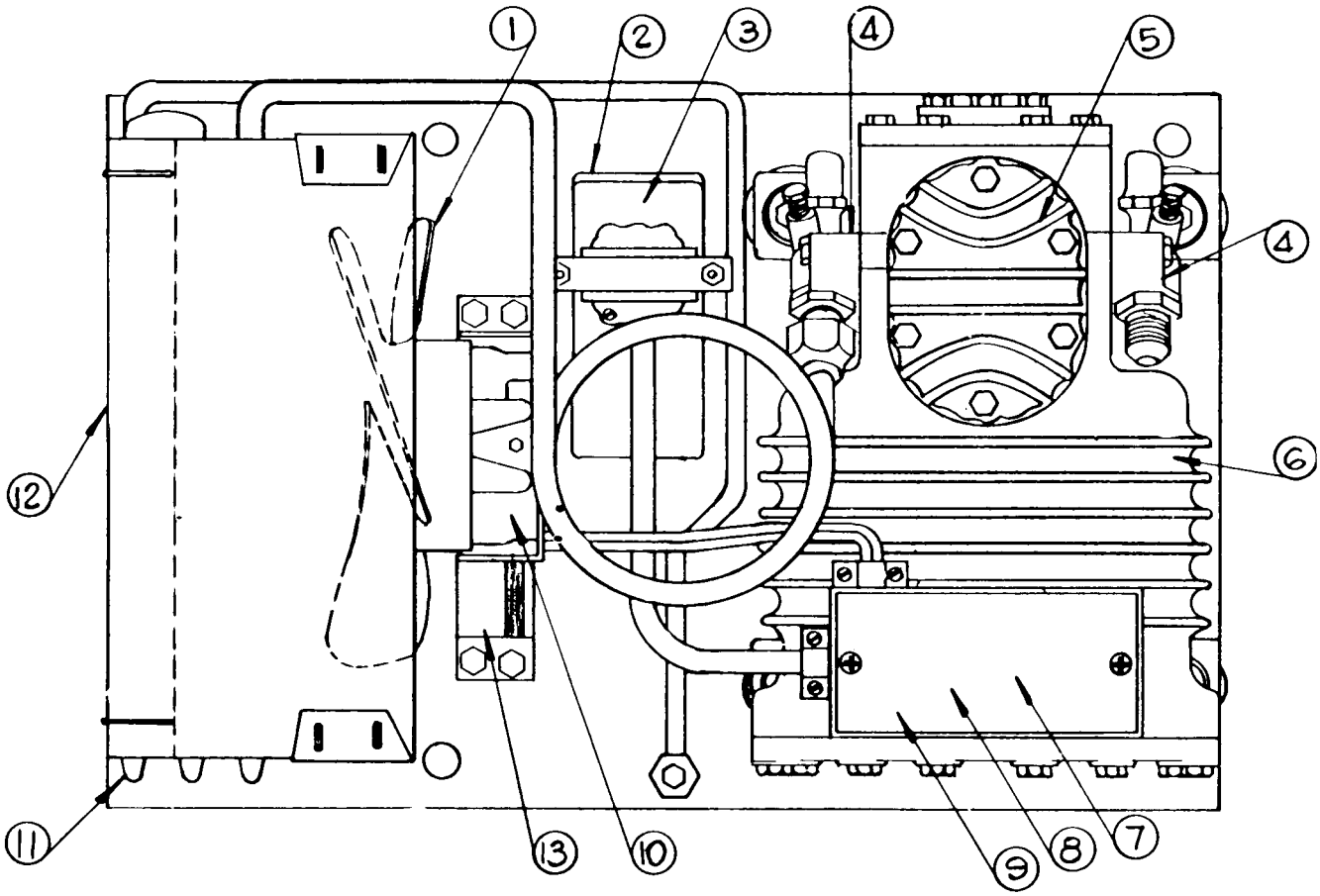

ITEM NO.	PART NO.	NAME
1.	18-363	Fan Blade
2.	18-1901-7	Starting Capacitor
3.	18-1903-4	Relay
4.	18-337	Suction, Service Valve (18-237 Discharge Valve)
5.	18-326	Valve Plate & Gasket Kit Assembly (*)
6.	18-325	Motor Compressor 115/60/1
7.	18-347	Overload Klixon (*)
8.	18-241	Treminal Assembly (*)

Note:
Not available as a complete mounted ass'y

ITEM NO.	PART NO.	NAME
9.	18-270	Terminal Board (*)
10.	18-333-1	Fan Motor
11.	18-334	Condenser
12.	A-12111	Shroud
13.	18-388	Fan Motor Bracket

NOTE: Overload Not Used On Units That Are Inherent Protected. If Possible Use Copeland Part No. When Ordering Capacitors & Relays

SC-200

CONDENSING UNIT

½ HP Water Cooled, Copeland

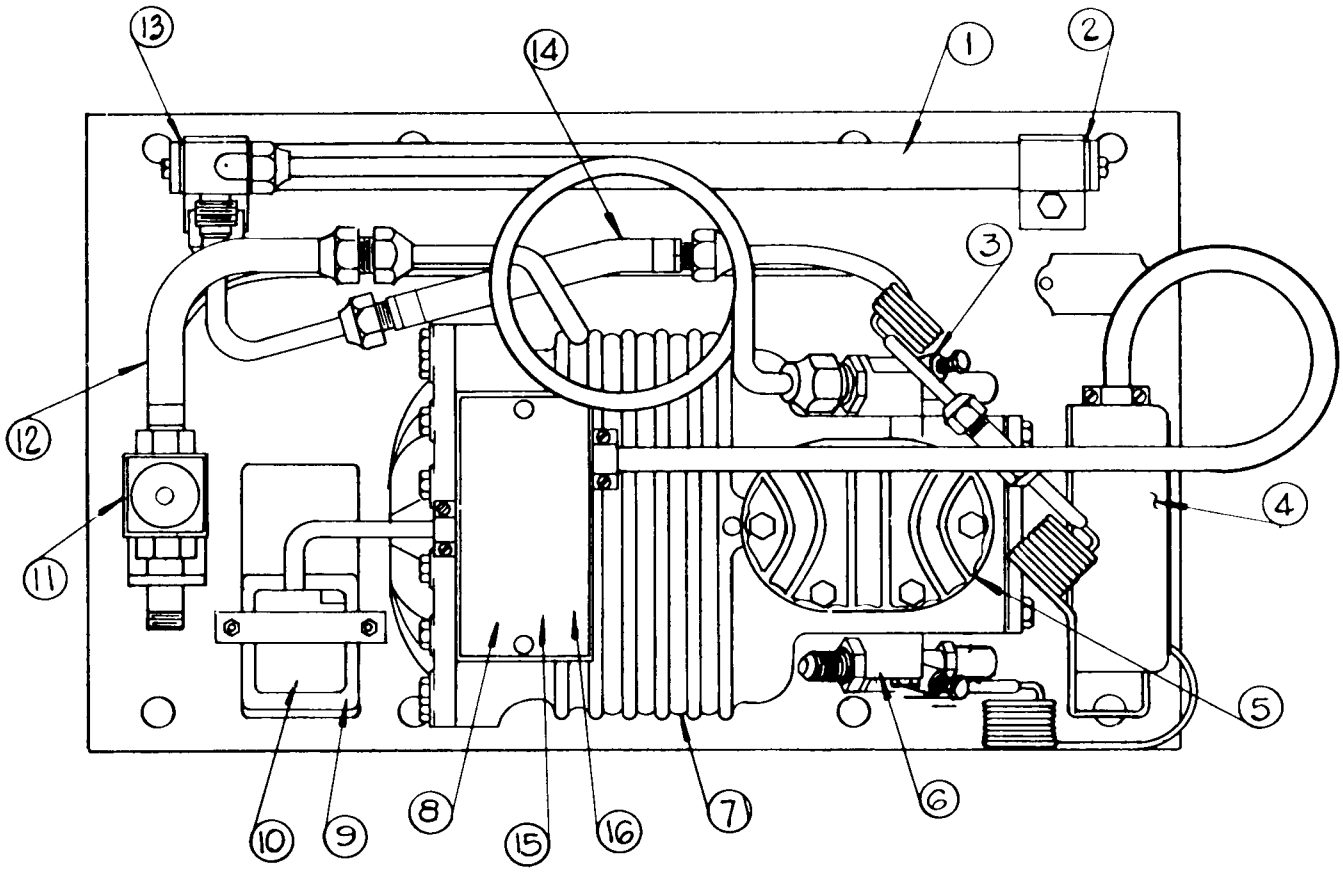

ITEM NO.	PART NO.	NAME
1.	18-368	Condenser
2.	18-262	Plain Gasket
3.	18-237	Discharge Service Valve
4.	11-286	High Pressure Control
5.	18-326	Valve Plate & Gasket Kit Assembly (*)
6.	18-337	Suction Service Valve
7.	18-355	Motor Compressor 115/60/1
8.	18-347	Klixon Overload (*)
9.	18-1901-7	Starting Capacitior
10.	18-1903-4	Relay
11.	11-198	Water Valve
12.	18-260	Compressor to Valve Water Hose
13.	18-263	Manifold Gasket
14.	18-261	Compressor to Condener Water Hose
15.	18-270	Terminal Board (*)
16.	18-241	Terminal Assembly (*)

If Possible Use Copeland Part No When Ordering Capacitors & Relays.

(*) Not Shown

Note:

Not available as a complete mounted assembly.

SC-200

3 WAY WATER VALVE

ITEM NO.	PART NO.	NAME
1.	S-6926	Valve Inlet Cap
2.	13-148	Rubber Valve Seat (3 per unit)
3.	A-8139-20	All Items Covered by No. 3 are included in Repair Kit
4.	3-165	Machine Screw
5.	12-248-1	Solenoid
6.	S-8995	Solenoid Pin
7.	2-420	Spring
8.	S-6928	Arm Support Ass'y
9.	3-396-1	Cotter Keys (2 required)
10.	S-7973	Pins (2 required)
11.	S-6932	Valve Arm
12.	S-8151	Valve Body
13.	3-88	Washer (4 required)
14.	3-61	Nut (4 required)
15.	S-6925	Valve Packing Gland
16.	2-557	Valve Stem Guide
17.	2-419	Compr. Spring
18.	S-6924	Valve Seat Washer
19.	2-418	Spring
20.	2-424	Packing
21.	S-6931	Packing Washer
22.	3-570	Fiber Washer
	A-8139	Complete Valve

A23005

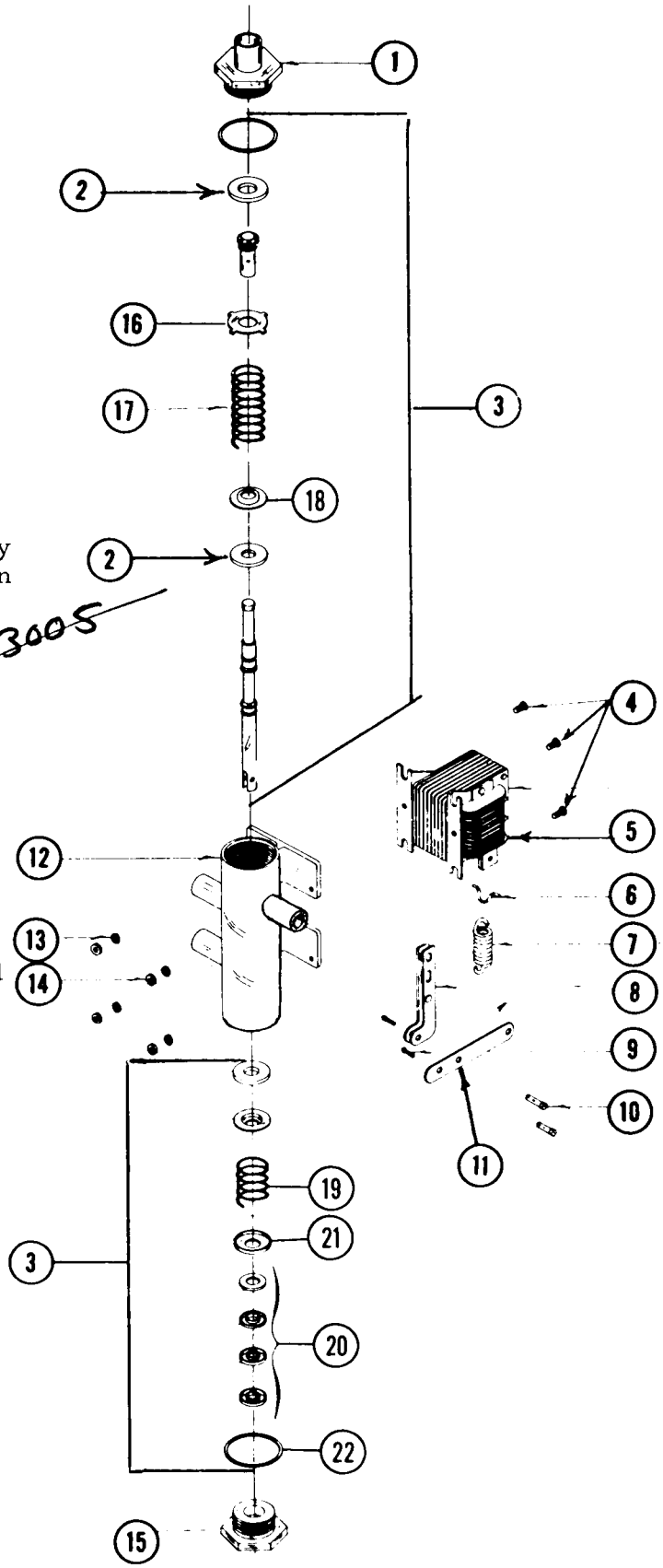

Note:

Complete A-8139-20 kit will be substituted on orders for stem only.

SC-200 H FREEZER ASSY

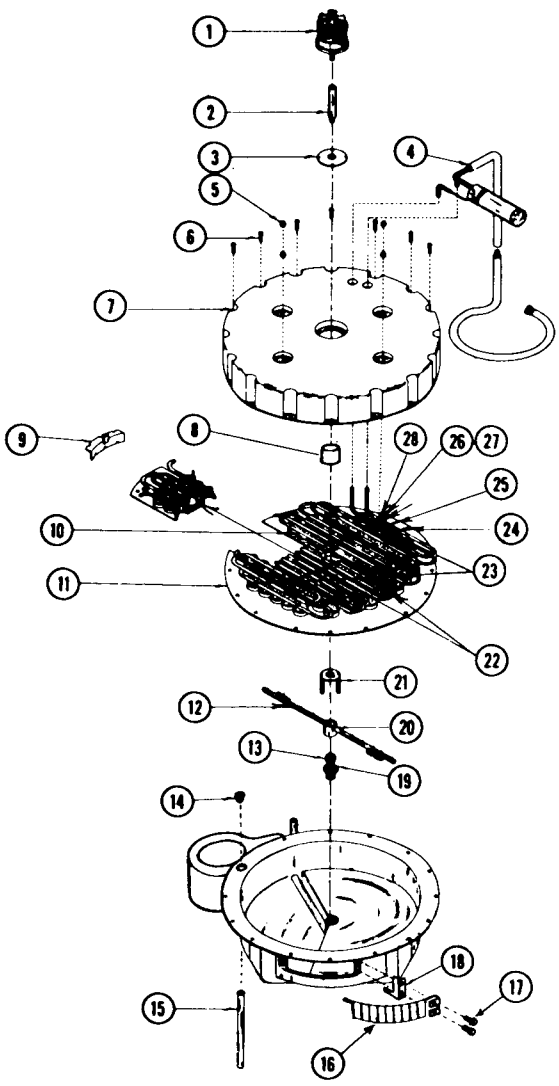

ITEM NO.	PART NO.	NAME
1.	12-675-1	Drive Motor
2.	A-6084	Drive Shaft
3.	13-176	Drive Motor Gasket
4.	S-9508	Suction Line, Cap Tube Ass'y
5.	3-357	Nut (4 required)
6.	3-10	Screws 16 required)
7.	A-15703	Freezing Chamber Top
8.	2-468	Center Cup
9.	A-6034	Water Baffle
10.	A-16117	Platen & Cup Ass'y (with spacers)
11.	13-174	Rubber Cup Holder
12.	S-6907	Jets (8 required)
13.	S-6909	Jet Bearing Shaft
14.	S-7434	Adapter
15.	A-16163	Hot Water Tube
16.	A-15807	Curtain Ass'y
17.	S-7234	Cap Nuts 2 required
18.	S-7730	Cube Stopper
19.	2-433	"O" Ring
20.	S-6903	Spray Bar
21.	S-6900	Drive Arm
22.	A-9012	Short Spacers (2 required)
23.	A-9011	Long Spacers (2 required)
24.	S-6866	"I" Bolt (4 required)
25.	A-12436	Coil Clamp (4 reqd.)
26.	S-6866	SRubber Insul. (4 required)
27.	3-547	Screw (4 required)
28.	3-73	Nut (4 required

INSTRUCTIONS FOR INSTALLING A8139-20 VALVE REPAIR KIT

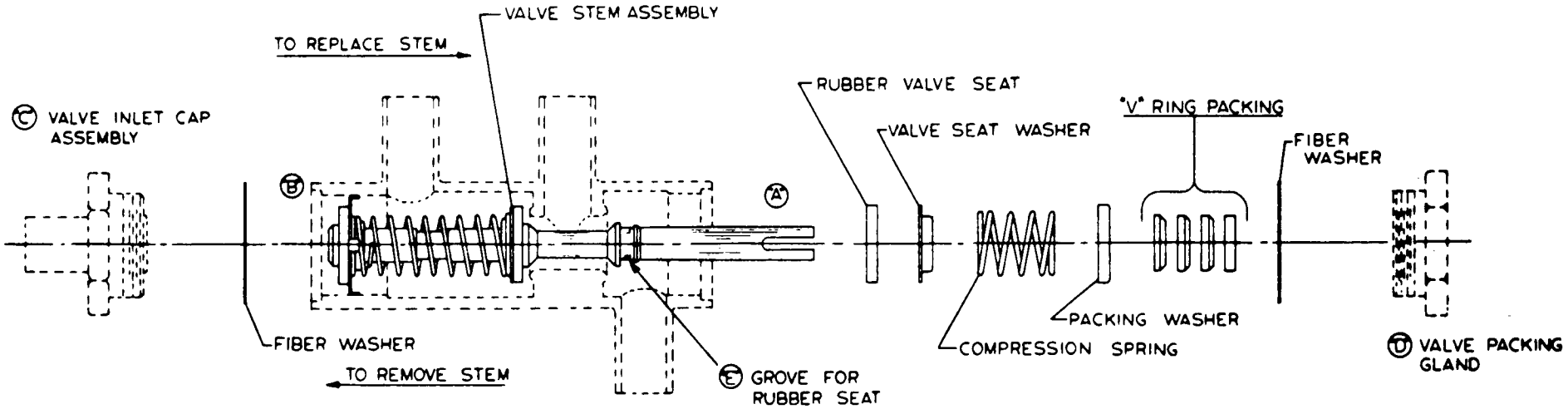

1. REMOVE COTTER KEY AND STAINLESS STEEL PIN (NOT SHOWN) FROM VALVE STEM END "A".
2. REMOVE "C" VALVE INLET CAP ASSEMBLY AND "D" VALVE PACKING GLAND FROM VALVE BODY.
3. REMOVE VALVE STEM ASSEMBLY AS SHOWN.
4. CLEAN THE INSIDE OF THE VALVE BODY.
5. INSERT ASSEMBLED PORTION OF VALVE KIT (VALVE STEM ASSEMBLY), AS SHOWN, THRU END "B".
6. SCREW "C", VALVE INLET CAP, TO VALVE BODY (BE SURE TO INSERT NEW FIBER WASHER) TO POSITION OR SECURE VALVE STEM ASSEMBLY IN VALVE BODY.
7. ASSEMBLE IN SEQUENCE PARTS SHOWN IN DIAGRAM AND PACKED LOOSE IN THE KIT.
   NOTE: USE ½" COPPER TUBE OR EQUIVALENT OVER STEM END "A" TO PUSH RUBBER VALVE SEAT INTO GROOVE "E".
8. SCREW "D", VALVE PACKING GLAND, TO BODY. (BE SURE TO INSTALL NEW FIBER WASHER).
9. ASSEMBLE STAINLESS STEEL PIN AND COTTER KEY TO END "A"

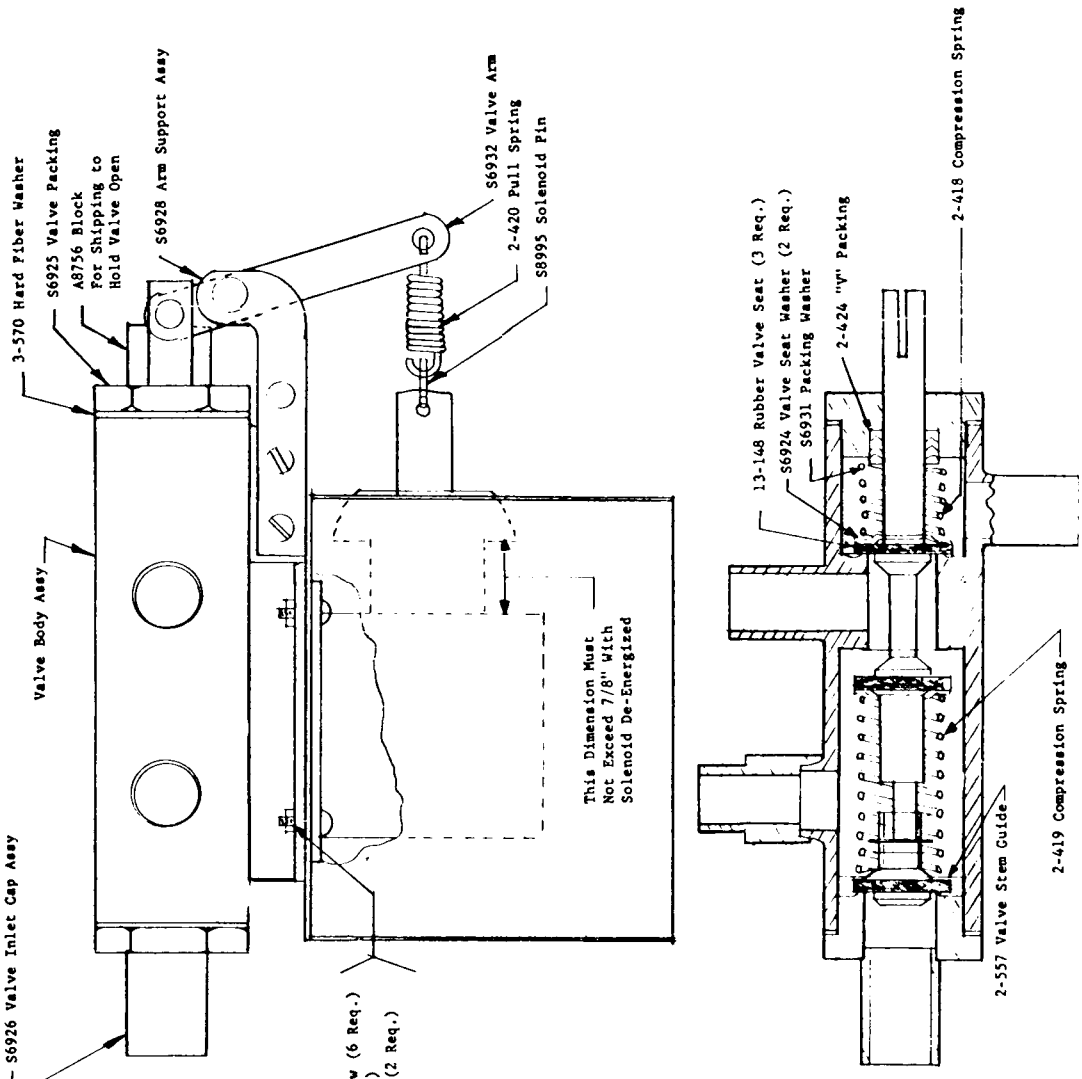

WATER VALVE ASSEMBLED

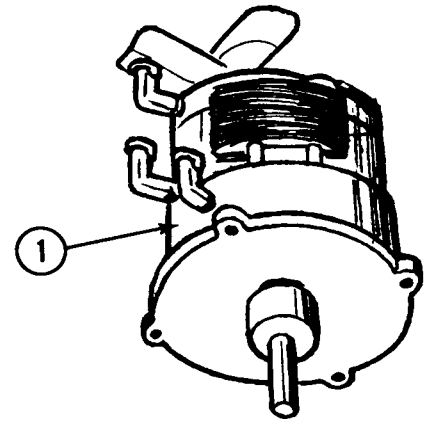

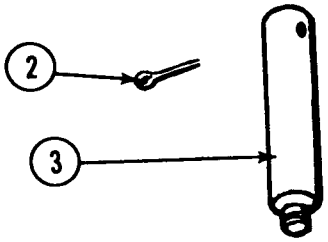

Note: Left Hand Thread

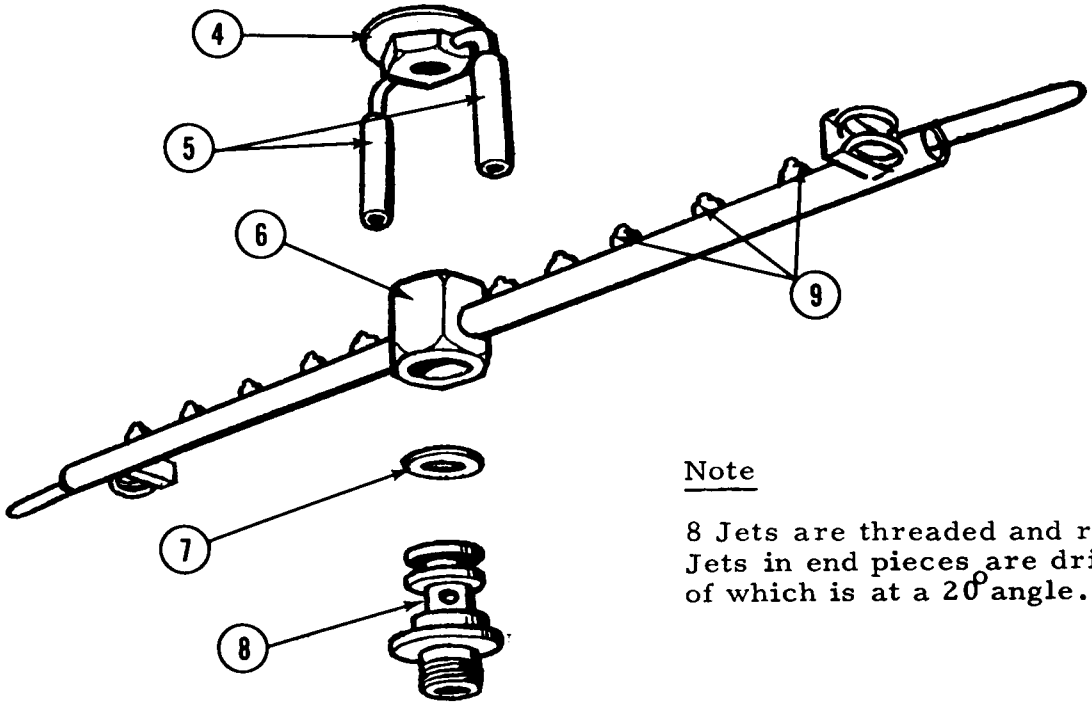

DRIVE LINKAGE AND SPRAY BAR
SC-200

Item no.	Part no.	Name
1.	12-675-1	Drive Motor
2.	3-290	Cotter Ket
3.	A-6084	Drive Shaft
4.	S-6900	Drive Arm
5.	S-7315	Rubber Covers
6.	S-6903	Spray Bar
7.	2-433	"O" Ring
8.	S-6909	Inlet & Bearing Assy
9.	S-6907	Jets

Note

8 Jets are threaded and removeable. Jets in end pieces are drilled holes, one of which is at a 20° angle.

FUNCTIONAL PARTS AND MAINTENANCE

PART NAME: Relay

NUMBER: 12-419

FUNCTION: Relay is used as a by-pass on the bin thermostat when it tries to cut unit off on a full bin of cubes during a freezing cycle. This insures full cubes every time a harvest occures and prevents short cycling on bin thermostat.

SETTING: Factory set.

REPAIRABLE: No. Replace when inoperative.

MAINTENANCE: Check electrical connections and blow points free of lint or dirt.

PART NAME: Temperature Control White Rodgers Type 1604-31 Storage Bin

NUMBER: 11-99-1

FUNCTION: To automatically cut machine off when ice level in storage bin reaches thermobulb. Automatically starts machine when ice level in bin falls below bulb location.

SETTING: Most of these controls have adjustable differential. Setting on range dial should be 35° cut out, 39° cut in.

REPAIRABLE: No. Replace when inoperative. If out of warranty it can be sent in through your local refrigeration supply dealer and repaired or replaced for a small percentage of original cost.

MAINTENANCE: Remove cover, check points for corrosion or arcing every 6 months. Blow control free of bugs dirt, etc. Check capillary for cracks or worn spots due to vibration.

Hold a small handful of ice on thermostat bulb to check operation of control. Tighten electrical connections.

PART NAME: Water valve with solenoid

NUMBER: A-8139 -Water valve only
A-8140-Solenoid &Mounting Hardware
12-248-1 Solenoid only

FUNCTION: This water valve is electrically operated by a solenoid. Valve proper has three valve seats and four water ports. This valve is the heart of the water control system. During freezing cycle it uses two upper openings to circulate water between sump tank and sump pump plus excess overflow water caught in reserve tank. Closes off openings to hot water and drain tube. During defrost period, electrically operated solenoid pulls seats back from hot water supply and drain but closes center port to direct hot water to top of platen. Hot water goes up into freezer through first top opening to defrost cubes while water used in freezing cycle and left in sump tank drains through second top opening and out through drain opening.

SETTING: None. Factory set.

REPAIRABLE: Yes, All components are replaceable including valve seats, gaskets, V-packing, solenoids, etc.

MAINTENANCE: Valve and entire unit should be cleaned with ice machine cleaner every six months. In many localities heavy scale accumulation will lodge in valve and hold rubber seats open. This will either let warm water seep into sump freezer supply and cause long freezing cycle or else it will let sump freezer supply seep down drain and cause shortage of cube supply water. This results in short cycles, partial cubes and cloudy cubes. Manually flushing valve will also help in many cases.

FUNCTIONAL PARTS AND MAINTENANCE

PART NAME: Agitator Drive Motor Merkle Korff

NUMBER: 12-675-1

FUNCTION: This motor is used to drive the linkage mechanism which in turn drives the oscillating jet spray tubes. This provides a constant spray movement to all the inverted cube molds and by so doing also aerates the water producing clear solid Scotsman cubes.

SETTING: No settings on motor.

REPAIRABLE: Yes-to some extent. Not recommended although front bearings and windings could possibly be replaced by electric motor shop. Normally replace out of warranty motors.

MAINTENANCE: Oil every six months or less as use indicates. Use SAE 20 oil. There are three oil cups on the motor and gear case to add oil. Drive linkage should be inspected to insure free movement with no binding or drag on drive motor.

PART NAME: Timer

NUMBER: 12-645-1

FUNCTION: Heart of the cyclematic control system is the temperature control Part No. 11-351 and the time clock it actuates. All electrical components are connected to the time clock terminal board and are shunted by means of a single pole, double throw micro-switch to either the freezing cycle or harvest cycle. Micro-switch is actuated by two metal cams that are directly connected to the electric timer clock motor. Timer has a 12 minute cycle, 9 1/2 minutes on defrost cycle. Time clock face has numerals to 7 on half the face. Each numeral represents a one minute period. Face also has a lever beneath it which can be moved to lengthen or shorten defrost period.

SETTING: Normal setting for defrost is 2 1/2 minutes.

REPAIRABLE: Yes. Micro-Switch only, Part No. 12-645-20 is replacable as well as timer clock motor only, Part No. 17-367.

MAINTENANCE: Check all electrical connections, blow contact points free of dust, dirt, etc.

FUCTIONAL PARTS AND MAINTENANCE

PART NAME: Reverse Acting Temperature Control

NUMBER: 11-345

FUNCTION: Reverse acting temperature control, closes on temperature decrease, opens on temperature rise. Control determines length of freezing cycle and by the same token, the cube size. A lower setting on control will produce larger cubes, a higher setting, smaller cubes. This control actuates time clock motor, which then takes over balance of freezing cycle and also defrost period.

SETTING: Control is adjustable with screw driver on off-set cam.

REPAIRABLE: No, Replace when inoperative.

MAINTENANCE: Check electrical connections. Blow points free of dust, dirt, lint, etc.

PART NAME: Solenoid

NUMBER: 12-248-1

FUNCTION: Solenoid is mounted directly on water valve body. Adequate stops are present in the housing of the solenoid but may require bending or adjusting. An electrically operated solenoid which is used to open and close the water valve through mechanical linkage. Solenoid is a continuous duty type.

SETTING: Solenoid itself requires no adjustment, however, linkage should be adjusted so that solenoid can make positive contact when energized and core will leave field when de-energized.

REPAIRABLE: No. Replace when inoperative.

MAINTENANCE: Solenoid proper requires no maintenance, but care should be exercised to insure proper voltage to coil to avert burn-outs. Mechanical linkage can be oiled and adjusted to prevent drag on solenoid. Many solenoid burn-outs are caused indirectly such as a sticking time clock which will keep solenoid energized for long periods of time.

PART NAME: Sump pump

NUMBER 12-418-1

FUNCTION: Recirculating pump used to pump supply water in sump tank to jet tubes during freezing cycle.

SETTING: Factory set

REPAIRABLE: Yes. Motors rewound, impeller blades replaced. Generally out of warranty pumps are replaced by motor only part no. 12-1351-22.

MAINTENANCE: None. Grease seal ball bearing permanently lubricated

SERVICE - COMPLETE UNIT

ALL STEPS LISTED BELOW SHOULD ONLY BE STARTED WHEN WATER AND ELECTRICAL SUPPLY ARE OFF TO PREVENT ACCIDENTS.

To remove cabinet top or hood.

1. Removee two back end screws in rear moulding strip.
2. Pull out black insert tape concealing screws.
3. Remove balance of screws in moulding strips.
4. Lift hood straight up.

To remove Sump Pump.

1. Remove hood top panel.
2. Disconnect hose clamp on goose neck.
3. Remove electrical lead to control box.
4. Loosen 2 wing nuts and washer. This disengages pump cover.

To remove Drive Motor

1. Remove hood top panel.
2. Disconnect electrical cord in control box
3. Reach in through curtained opening and remove drive fork from drive shaft attached to motor. Note drive fork has left hand thread.
4. Remove 4 screws holding drive motor to freezer dome and pull drive motor shaft out.

To remove the Jet Tube assembly

1. Reach in through storage bin sliding door and remove two brass thumb screws holding plastic curtain closed.
2. Open curtain on hinge and reach hand into opening, feeling for spray bar.
3. Follow spray bar to center hub, turn spray bar so one end points towards curtain opening. Now lift straight up on spray bar. then out after spray bar comes off center hub.

To remove Water Inlet Valve to hot water tank.

1. Remove hood top panel.
2. Remove hot water tank cover.
3. Loosen 1/4" SAE flare nut to water inlet valve.
4. Loosen hex sided brass nut holding valve to bracket.
5. Remove and replace water inlet valve.

To remove complete Hot Water Tank

1. Remove complete hood.
2. Remove the two hose clamps to drain lines.
3. Loosen 1/4" SAE flare nut to inlet valve.
4. Disconnect lead wire to control box, lift up from bracket clips and out.

To change hot water tank Heating Element

1. Remove top hood service panels.
2. Remove hot water tank cover.
3. Drain all water from hot water tank.
4. Remove stainless steel thermostat cover.
5. Remove lock nut from each element prong.
6. Install new element, fill tank and check operation. Should heat water to 140°F.

SERVICE - COMPLETE UNIT

To remove solenoid-Operated Three Way Water Valve

1. Remove lower front and right side service doors.
2. Remove all hose clamps to solenoid operated water valve.
3. Remove upper and lower hex head cap screws holding valve housing to frame.
4. Drop entire assembly down, unplug cord to solenoid at solenoid, loosen solenoid nut and bolt assemblies holding solenoid to brass valve proper.
5. Replace in reverse of above.

To replace Storage Bin Door

1. Lift door up and slide back as you normally would to remove ice from bin.
2. Pull door straight out.
3. Install repaired or new door in reverse of step number 2 above.

To replace Motor Compressor Valve Plate

1. Install compound gauge in suction service valve port and close suction service valve by turning valve stem all the way in. (Front seated)
2. Operate motor compressor until gauge reading reaches zero. Turn off unit.
3. Front seat discharge service valve.
4. Loosen all head bolts and tap head lightly with rubber-faced or plastic hammer to break loose.
5. Remove head, defective valve plate and any gasket material that may have stuck to head or compressor body.
6. Install new valve plate with all new gaskets as provided, tightening each head bolt a little at a time until all are snug.
7. Remove port gauge plug from discharge valve and crack open suction side letting gas purge off trapped air from head. Install hi side gauge in this port, back up both service valve stems and check around valve plate for refrigerant leaks.
8. Start unit, noting head & back pressures. If normal, let run until compressor gets warm. Tighten all head bolts once more, and again check for leaks.

To replace the Compressor

1. Front seat both suction service valve and discharge service valve on the compressor.
2. Disconnect the wiring from the compressor
3. Remove the bolts holding the service valve to the motor compressor body.
4. Remove the compressor hold-down nuts and lift the compressor out of the unit. unit.
5. Reverse steps 1 through 4 in replacing the compressor.
6. Check the compressor for oil before connecting the oil lines. Should be 2 inches down from the top of the oil plug hole or not over 1/2 of sight class
7. Remove the gauge port plug from the discharge service valve. Crack the suction service valve slightly, allowing some gas to escape out the gauge port of the discharge valve. When you have thoroughly purged the compressor, replace the plug and open all valves. It may be necessary to charge the unit because some of the gas was lost when the defective compressor was removed. Check & charge if necessary.

MAINTENANCE INSTRUCTION FOR SCOTSMAN SUPER CUBERS

THE FOLLOWING MAINTENANCE MUST BE ACCOMPLISHED TWO (2) TIMES PER YEAR ON ALL SCOTSMAN SUPER CUBERS. CALL YOUR AUTHORIZED SCOTSMAN SERVICE DEPARTMENT.

1. Clean air-cooled condenser; This is to be done frequently with the machine shut off.
2. Clean hot water tank and evaporator, sump tank and screen, using Scotsman Ice Machine Cleaner or equivalent.
3. Remove jet tube and manually clean jets by unscrewing jets.
4. Check curtain assembly.
5. Tighten all electrical connections.
6. Tighten all bolts.
7. Check water supply. Check water pressure flow through flow control. Clean water strainer.
8. Oil jet tubes drive motor three(3) places. Use SAE 20 oil - 3 oil cups.
9. Grease plunger on water solenoid valve with high temp grease. -OPTIONAL
10. Oil Condenser fan motor. Punch sealed cap or remove screws where possible.
11. Check for refrigeration leaks with halide torch.
12. Check for water leaks. Tighten drain line connections.
13. Check size and condition of cubes. Adjust as required. See Service Analysis Section.
14. Check bin thermostat setting. Factory set at 35° out, 39° in.

PROCEDURE FOR USE OF SCOTSMAN ICE MACHINE CLEANER IN SCOTSMAN ICE MACHINES

1. Remove front access door
2. Locate control box with time clock knob protruding thru cover.
3. Put unit through a harvest cycle manually. This may be done by turning time clock knob clockwise until a loud snap is heard.
4. Let unit finish cube harvest cycle and start into freezing cycle. This will be approximately 5 minutes after the loud snap in Step #3 is heard. At this time turn the compressor switch off, the lower of the two switches in the control box.
5. Locate the hot water tank which is directly under the top access door. Remove door. Remove the hot water tank cover by pulling up around the edge until it snaps off. Pour 4 ounces (half bottle) of "Scotsman Ice Machine Cleaner" into the hot water tank.
6. Locate the sump reservoir which is in the storage bin area and directly behind the ice discharge chute. This discharge chute is covered by a series of white plastic curtains which are free to swing out into the storage bin. Pour 4 ounces (half bottle) of "Scotsman Ice Machine Cleaner" into the sump reservoir.
7. Let unit operate normally for 10-15 minutes into the freezing cycle. No ice will be made because the motor compressor is not in operation.
8. At the end of this time put the unit through 2 or 3 harvest cycles manually to allow fresh make up water to clean out remaining solution. Each time waiting approximately 5 minutes after the loud snap until the next harvest cycle is done manually.
9. Turn the compressor switch back on.
10. Check each new batch of cubes until they are clear and until acid taste has been removed from cubes.
11. Put hot water in storage bin to melt the cubes and thereby clean the drains with the same solution that has just cleaned the unit.
12. Use a damp cloth to wipe off curtains and inside of storage bin.
13. Replace all access doors.
14. Unit is now ready for continued automatic operation.

PARTS LIST SC-200

1. CABINET PARTS

A-15603	Case hood assembly, less doors
S-6849	Hood top door
A-16208	Door slide
15-156	Emblem
A-5862	Moulding strip - rear
A-5863	Moulding strip - front
A-15866	Cabinet right side front service
S-6840	Cabinet right side service door
A-8739	Cabinet rear service door
A-15559	Sliding Door

2. CONTROL BOX - ELECTRICAL COMPONENTS

12-645-1	Timer Assembly
12-645-20	Timer micro-switch
11-345	Cube size control
12-537	On-Off switch
11-99-1	Bin thermostat
12-419	Complete cube relay

3. CONDENSING UNITS AND REFRIGERANT CIRCUIT

	AIR - COOLED	WATER - COOLED
Freezer Cup and platen only	A-16117	
Freezer and H X assembly complete kit	A-15787-25	Same
Suction H X and accumulator line	S-9508	Same
Drier	2-544	Same
Motor compressor 115/60/1	18-325	18-355
Valve plate and gasket kit	18-326	Same
Relay	18-1903-4	Same
Starting capacitor	18-1901-7	18-1901-7
Fan motor	18-333-1	
Fan blade	18-363	
Condenser	18-334	18-354
Shroud for condenser	A-12111	
Klixon overload	18-347	Same
Replaceable terminal assembly	18-241	Same
Terminal board	18-270	Same
Compressor to water valve hose		18-260
Compressor to condenser hose		18-261
Plain gasket for 18-259		18-262
Manifold gasket for 18-259		18-263
Manual re-set dual pressure control		11-286
Water regulating valve		11-198

PARTS LIST - SC-200

4. HOT WATER TANK

A-9754	Hot water tank complete - s.s., less cover
A-6467	Hot water tank only - - - s.s.
A-6477	Standpipe
A-6771	Water inlet valve
S-6947	Rubber seat for valve
A-5998	Drain Screen
A-12068	Float Assembly
12-246	Thermostat
12-356	Rod type heating element
A-12870	Hot water tank cover

5. WATER VALVE

A-8139	3-Way water valve less solenoid
A-8140	Solenoid & mounting hardware
13-148	Replacement rubber valve seats
2-424	V-packing
2-418	Compression spring 1 inch
2-419	Compression spring 2 1/2 inches
2-420	Solenoid pull spring 1 1/2 inches
S-8995	Solenoid pull key

6. WATER CIRCUIT

16-162	Inlet water strainer
A-13346-5	Inlet water flow control
12-418-1	Sump pump assembly
S-6903	Sprayer tube assembly
S-6907	Sprayer tube jet only
S-7730	Rubber, cube stopper
S-6909	Jet bearing hub

7. DRIVE MOTOR AND LINKAGE

12-675-1	Drive motor
A-6084	Drive shaft
S-6900	Drive fork
13-176	Drive motor gasket

8. STORAGE BIN AND COMPONENTS

A-15705	Storage bin
A-18090	Storage bin drain assembly
A-6448	Drain, strainer
A-15759	Bin thermostat bulb cover
13-590	Bin thermostat bulb gasket
A-15807	Curtain assembly

9. MISCELLANEOUS

2-540	Ice Scoop
15-324	Plastic trim insert-per ft.
1-657	Packing crate
12-1351-22	Sump Pump motor only
19-343	Scotsman Ice Machine Cleaner

TABLE OF CONTENTS
SC-200 J

Foreward	1
Table of Contents	2
Photograph and Ice Making Capacity	3
Specifications and Dimensions	4-5
Selecting Location:	
Location	6
Uncrating	6
Preparation for Installation	6-7
Installation - Water Drain	7-8
Wiring Diagrams:	
Air Cooled	9
Water Cooled	10
Diagram Installation Practice	11
Final Check List	12
Start-Up	13-14
Cycle of Operation:	
Harvest Cycle	15-16
Freezing Cycle	17-18
Service Analysis Charts	19-20
Exploded Views - Component Parts:	
Sump Pump	21
Control Box	22
Complete Unit (Top View W.C.)	23
Complete Unit (End View)	24
Complete Unit (Top View A.C.)	25
Case Parts	26
Hot Water Tanks	27
Compressor Assembly -Air and Water	28
Water Valve	29
Evaporator Assy	30
Service Information	
Drive Linkage and Spray Bar	31
Functional Parts and Maintenance	32
Service Complete Unit	33
Maintenance Instructions	34
Parts List	35-36

THIS PAGE
INTENTIONALLY
LEFT BLANK

THIS PAGE
INTENTIONALLY
LEFT BLANK

SCOTSMAN

SUPER CUBER
SC-200
SERIES

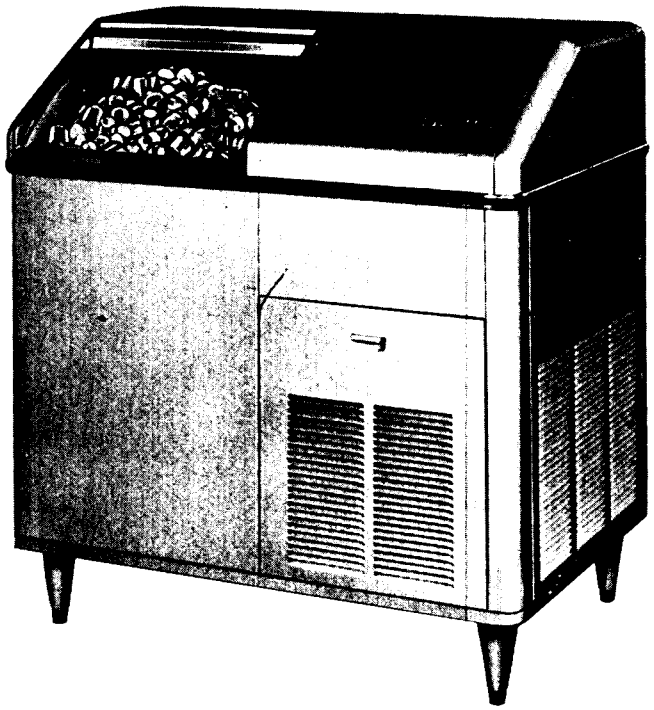

ice making capacity

Air Cooled Models

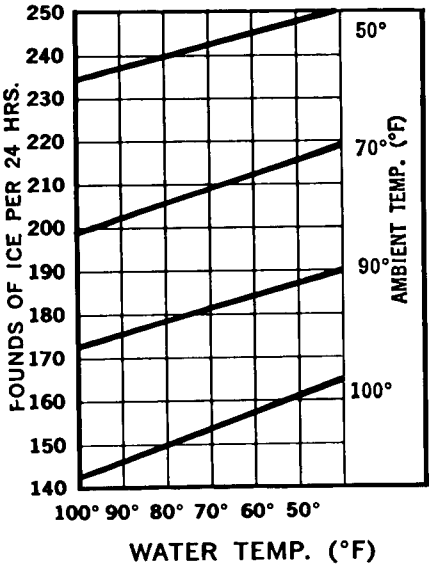

Water Cooled Models

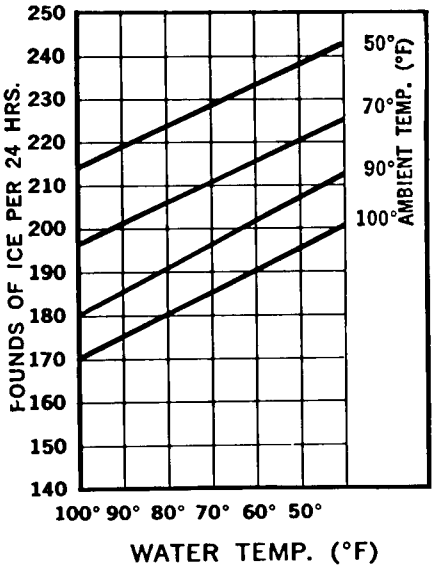

SPECIFICATIONS

SUPER CUBER SC-200 SERIES	MODEL SC-200 J	MODEL SC-200W J	MODEL SC-200 J-SS	MODEL SC-200W J-SS
Daily capacity up to 225 lbs.	X	X	X	X
Self-contained 150 lb. capacity storage bin	X	X	X	X
Air cooled condenser	X		X	
Water cooled condenser		X		X
Heavy duty ¾" HP. Compressor	X	X	X	X
Standard 115 V, 60 cy, 1 ph, AC—	X	X	X	X
⅜" water inlet SAE Flare	X		X	
½" water inlet OD Copper		X		X
⅝" OD copper condensate drain	X	X	X	X
⅝" OD copper storage bin drain	X	X	X	X
⅝" OD water outlet Copper	X	X	X	X
Hammerloid grey exterior	X	X		
Stainless steel exterior			X	X
Stainless steel lined storage bin	X	X	X	X
45 ¼" high (with legs)	X	X	X	X
39 ¼" high (without legs)	X	X	X	X
44 ¼" wide	X	X	X	X
24 ½" depth	X	X	X	X
Approximate shipping weight	405	405	405	405

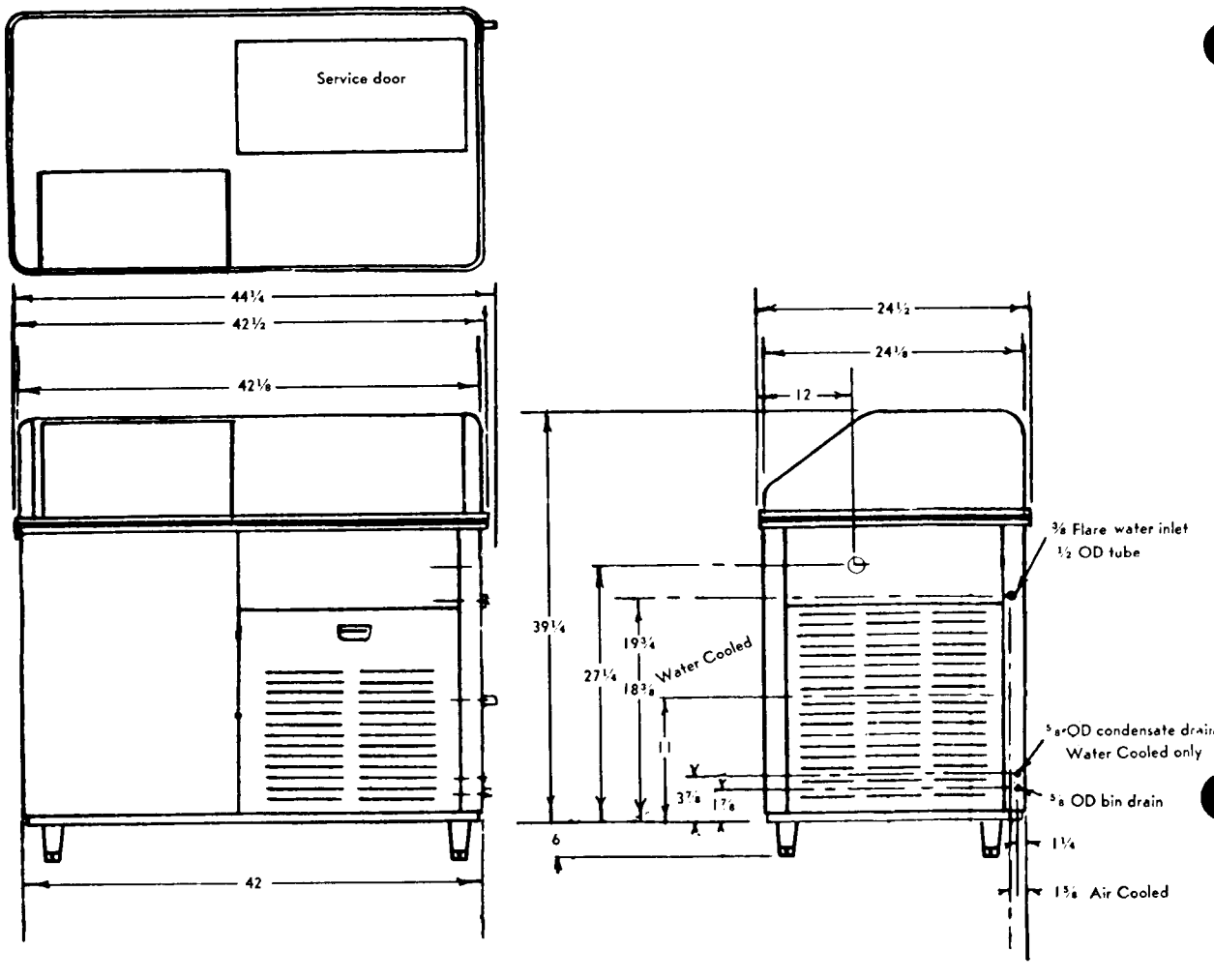

SPECIFICATIONS

	SC-200-J-1	SC-200J-1
Compressor 3/4 H.P.	Copelaweld 115/60/1	Coplaweld 115/60/1
Condenser	Air Cooled	Water Cooled
Refrigerant	Refrigerant 12	Refrigerant 12
Refrigerant Charge	24 ounces	24 ounces
Power Consumption	17.25 Amperes	17 Amperes
Cubes per Harvest	72 Super Cubes	72 Super Cubes
Water Consumption to Produce Ice	2 Gal. per hour	2 Gal. per hour
Water Used by the Condensing Unit	None	30 Gal. per hr. Average Varies with water temp
Dimensions		
Height - with 6" legs	45 1/4"	45 1/4"
Height- less 6" legs	39 1/4"	39 1/4"
Width	44 1/4"	44 1/4"
Depth	24 1/2"	24 1/2"
Weights		
Uncrated	385 lbs.	385 lbs.
Crated	405 lbs.	405 lbs.

INSTALLATION

UNCRATING OF MACHINE

1. The complete machine comes in one crate. After the crate is removed, inspect for concealed damage. Remove the bottom skid by removing all bolts. Then cut all wires holding support packing from refrigerant line. Be sure the compressor is snug on spring mounts. Then check all refrigerant lines for rubbing or touching other surfaces. Also check for possible transportation damage.

2. Remove all service doors and panels.

3. Remove leg package in compartment base and install 4 legs in unit base sockets. Level unit with adjustable legs.

4. Remove protective shipping tape from bin door, freezer curtain.

5. Remove water strainer from storage package for installation in water supply line feeding unit.

6. Open electrical control box and prepare for hook up, use knock outs, cord connectors, etc. Then check unit name plate voltage against building source voltage and make sure they correspond. Caution - improper voltage supplied to units will void your warranty protection.

7. Make sure suction service valve on the condensing unit is fully back seated. Replace the valve cap after checking. All models are shipped with valve back seated.

8. Make sure that the flow of air is not impeded in any way over condenser on air-cooled models. Keep condenser clean. (Check and clean the condenser monthly.)

9. Operating room temperatures are minimum 50° F. and maximum 100° F.

10. Have the installation and warranty cards been filled out sent to the factory to insure warranty protection?

LOCATION OF THE ICE CUBE MACHINE

UNDER BAR INSTALLATIONS - Locate, if possible, so left end panel is accessible. Locate unit so proper circulation can be attained around the unit and behind it at least four inches. Provide plumbing and electrical connections so the unit can be moved out where the entire top hood can be removed and the unit can still be operated.

KITCHEN INSTALLATION - As a rule, the kitchen is not the most practical place to install an air-cooled condensing unit, as grease is almost always present and makes cleaning of the condensing unit difficult. Do not locate near range or steam table or other heating devices that may be used in the kitchen.

STOREROOM INSTALLATIONS - Be sure storeroom is of adequate size and properly ventilated. A small, poorly ventilated room will greatly impair the efficiency of the unit. The storeroom must be kept above 50 degrees in the winter months.

BASEMENT INSTALLATIONS - Locate machine in the coolest place. Locate the machine in a dry place. Keep away from furnace and boiler room. Keep away from service chutes and runways, also coal or other dust of any kind. If the machine is set over a floor drain, block the machine up enough to eliminate any possible damage to the machine.

LOCATE THE MACHINE SO IT CAN BE SERVICED WHEN NECESAARY. ALLOW AT LEAST FOUR INCHES OF SPACE AROUND THE MACHINE FOR CIRCULATING AIR.

IMPORTANT: ADJUST LEVELER LEGS. MACHINE MUST BE LEVEL.

ELECTRICAL CONNECTIONS AND CHARACTERISTICS

	115 volts, 60 cycle, single phase	Water-cooled
Compressor	14.0 Amperes	14.0 Amperes
Sump Motor	1.32 Amperes	1.32 Amperes
Fan-Air Cooled Models	.75 Amperes	None
Spray Bar Motor	.6 Amperes	.6 Amperes
TOTAL - FULL LOAD AMPERES	16.67 Amperes	15.92 Amperes

The SC-200J should be wired to a 20 Amp. circuit. Be certain that the Super Cubers are on their own circuit and individually fused. The maximum allowable voltage variation should not exceed 10 per cent of the nameplate rating even under starting conditions. Low voltage can cause erratic operation, and may be responsible for serious damage to the overload switches and motor windings.

All external wiring should conform with National Underwriters' and local code requirements. Check the voltage on the line before connecting the machine.

INSTALLATION

WATER SUPPLY AND DRAIN CONNECTIONS

WATER SUPPLY - Air Cooled Models SC-200J

The recommended water supply line is 3/8" OD copper tubing for air-cooled units. Connect to a cold water supply line with regular plumbing fittings with a shut-off valve installed in an accessible place between supply line and machine. The water strainer supplied with the unit should be mounted with clean-out plug down. Locate the strainer next to the machine and the arrow in the direction of the flow.

A 3/8" male flare fitting is provided on right rear corner for convenience in hook up.

WATER SUPPLY - Water Cooled Models SC-200WJ

Water cooled models have same inlet water supply as the air cooled models. An additional 5/8" condenser water drain is added, however.

When choosing the water supply for this cuber, consideration should be given to -

A. Length of run.
B. Water clarity and purity.
C. Adequate supply pressures.

Since water is the most important single ingredient in producing ice, you cannot over emphasize the three items mentioned above. Low water pressure (below 20 pounds) may cause malfunction of the three way water valve. Water containing excessive minerals will tend to produce cloudy colored cubes and scale build up on parts in the water system.

Heavily clorinated water can be controlled using charcoal or carbon filters.

WIRING DIAGRAM
SC-200J Air Cooled

115/60/1

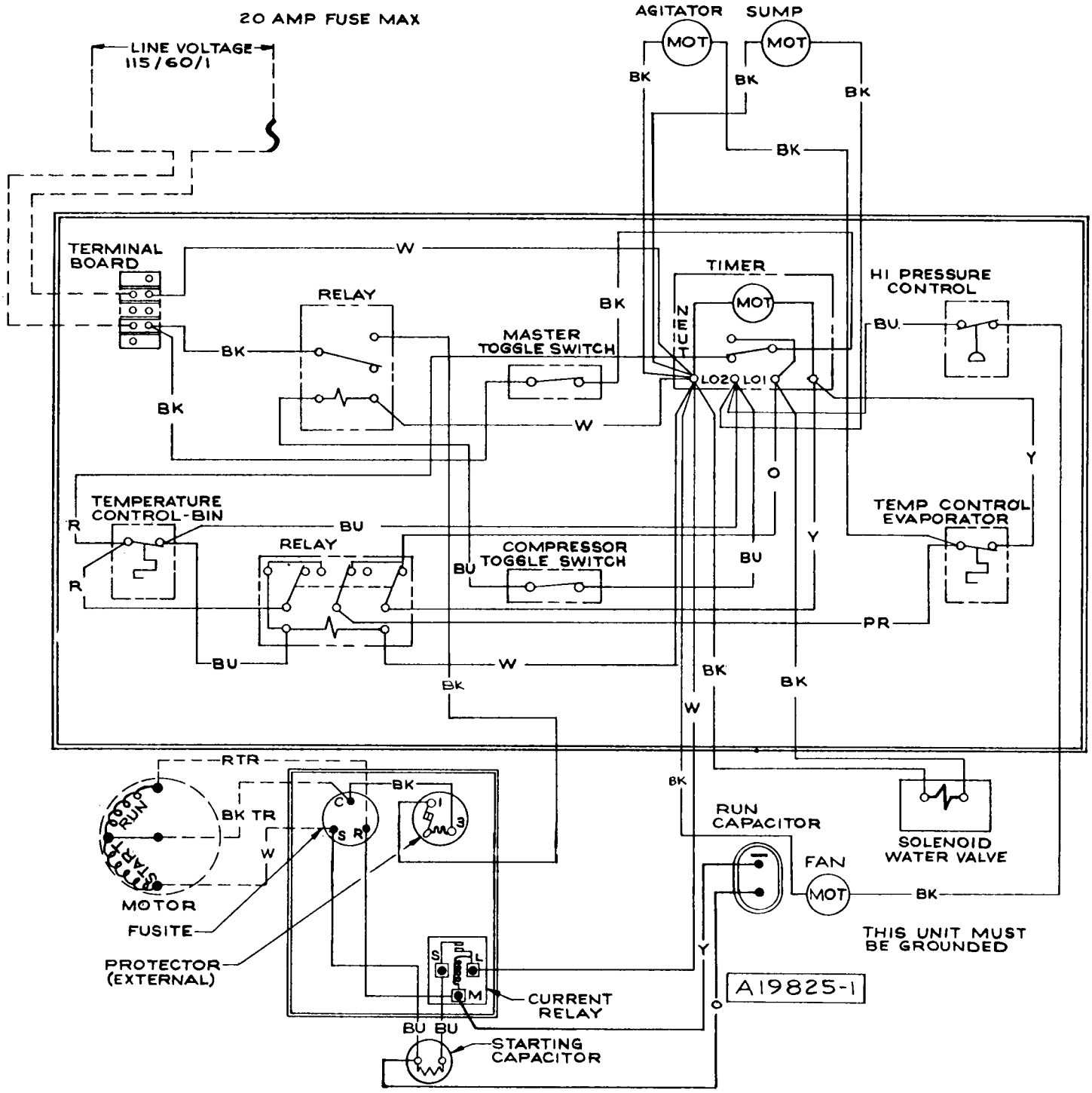

WIRING DIAGRAM
SC-200WJ

115/60/1

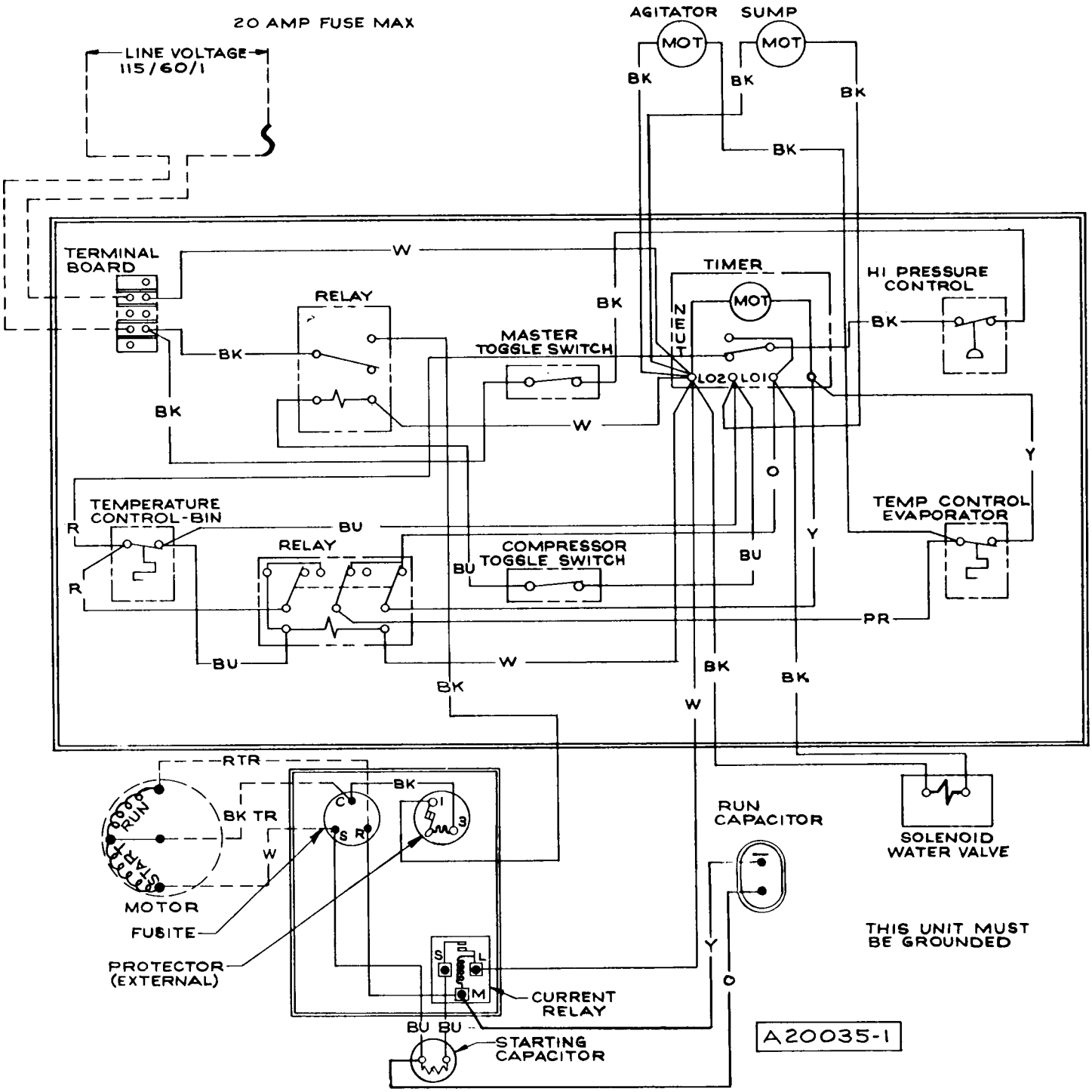

INSTALLATION PRACTICE

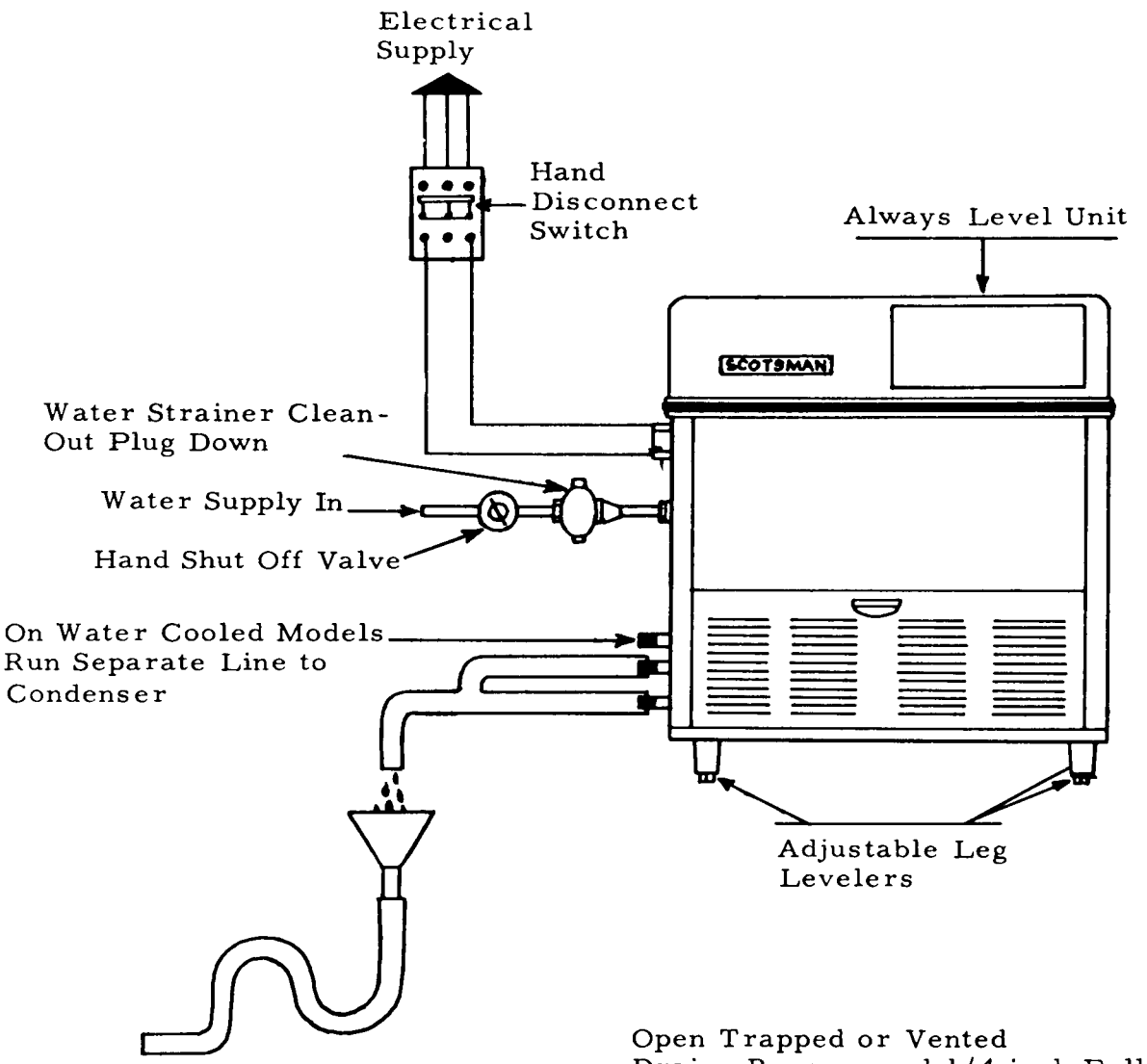

Open Trapped or Vented Drain. Recommend 1/4 inch Fall per foot of run on drain lines.

FINAL CHECK LIST

1. Is the unit level? (IMPORTANT)
2. Have all electrical and piping connections been made?
3. Has the voltage been tested and checked against the nameplate rating?
4. Have the compressor hold-down bolts been checked to insure the compressor is snug to its mounting pads?
5. Is the water supply valve open and the electric power properly hooked up?
6. All masking tape removed from doors, panels and inner freezer curtain?
7. Is the unit clean? Has storage bin been wiped clean with cold water cloth?
8. Has the owner been given the operating manual, and has he been instructed on how to operate the machine?
9. Have the installation and warranty cards been filled out? Check for correct model and serial numbers from serial plate on unit then promptly mail card to factory.
10. Check all refrigerant and conduit lines to guard against vibrations and possible failure.
11. Is there 4" clearance behind and around unit for proper air circulation?
12. Is unit in a room where ambient temperatures are minimum 50° F. even in winter months?
13. Has water supply pressure been checked to insure at least a minimum pressure of 20 pounds?

INSTALLATION - START UP

1. Remove hood (top) service panel and lower front, right side service doors to facilitate start up and check out.

2. Make sure water supply is turned on, then check timer finishing clock in main control box making sure the micro switch roller is resting down in offset slot in the cam (harvest position). If adjustment is necessary, turn timer knob clockwise into harvest position.

3. Inspect components in electrical control box, check for loose or frayed wire, then turn both manual switches to "on" position. All cubers have two manual on-off switches. One is for motor compressor only during cleaning operation, one is master switch for complete unit.

4. When both switches are thrown "on", water inlet solenoid will be energized allowing water to enter cuber, thru warm water tank, 3 way water valve and up into back side of freezer cup section- This will "fill" icemaker for the freezing cycle- Check operation of spray bar drive motor thru hood top panel. Spray bar motor should be running during harvest cycle.

5. Allow clock to carry unit through harvest cycle. This will be approximately three minutes. Dial pointer should be set on Number 3 1/2. After the compressor starts, turn the dial completely around and send it through another harvest cycle. Do this several times. This will completely flush out machine of any dust that may have accumulated in shipment.

6. After machine has been properly flushed, allow it to go into a freezing cycle - check for possible water leaks, check sump pump operation - should be running freely. Also note if jet tube operation is correct, and that none of the jets are plugged.

7. Time clock dial does not rotate at the end of the harvest cycle; it is started later by the cube size thermostat control located in the control box.

8. Freezing time will be approximately 25 minutes in a 70 degree ambient. (Longer if above, and shorter if below.) Average complete cycle time is 30 minutes.

9. Watch first cube harvest and check to make sure that plastic curtain sections have not been damaged in shipment. Also that curtains do not swing back into freezer and catch on spray bar.

10. Check size of cubes made: If too small, after a second cycle, adjust cube size control to lower or colder setting - until desired cube size is reached. Normal cube size is with a 3/8" depression in crown.

INSTALLATION

11. Check texture of cubes made: Partially cloudy cubes throughout suggest unit running short of water near end of freezing, or possibly an extremely bad water condition, which would indicate use of filtering or purifying equipment. Contact SCOTSMAN - Queen Products, Div., Ice Machine Service Department, Albert Lea, Minnesota, for futher details.

12. With unit on harvest cycle, take a handful of cubes made and hold on storage bin thermostat cover. Should cut unit off at end of harvest cycle. Remove ice, unit should cut back on automatically in 3 or 4 minutes. Thermostat is factory set at 35 degrees out, 39 degrees in.

13. Install gauges and check head and back pressure: air-cooled models, head pressure after twenty minutes of freezing cycle at 70° ambient will be approximately 125 pounds PSI. The back pressure starts out at approximately 50 pounds PSI and gradually pulls down to approximately 4 pounds PSI just before harvest cycle. Higher ambients and dirty condenser will cause higher pressures. Water-cooled models have water regulating valves factory set at 135 pounds PSI: check reading and adjust if necessary. Back pressure will operate the same as on air-cooled models.

14. Remove gauges, replace control box cover and all service panels.

15. Instruct owner on how to operate and clean machine.

HARVEST CYCLE

At the end of the freezing cycle the time clock operated switch opens compressor, sump pump and fan motor circuit, and closes circuit to time clock motor, spray drive motor and solenoid operated inlet water valve. Inlet water pressure at bottom of hot water tank now forces heated water out the top of tank through warm water tubing and into back side of evaporator cup section. At the same time the surplus water from the preceding batch of ice cubes goes through three way water valve and off to drain. Water from the hot water tank flows into the rubber platen holding the evaporator cups and by conduction on back of cups causes the formed ice cubes to defrost or drop out. The platen-evaporator cavity is normally filled to the overflow level in 2 or 2 1/2 minutes. The amount of water running over the overflow pipe is controlled by the size of the flow control orifice and the length of the harvest time setting on the time clock past the overflow point. Overflow water goes down the drain also.

Meanwhile, cubes released drop by gravity and are mechanically ejected thru curtained opening into ice storage bin by sprayer tube which is being actuated by drive motor. At the completion of harvest cycle, the micro-switch on the timer now drops points holding defrost components in cycle and switches to freezing cycle set of contacts. Timer completes harvest cycle when micro-switch roller lifts out of rear cam slot. Timer clock motor now stops and will not start again until cube size thermostat control closes once more. Electrically harvest cycle components cease, freezing cycle components start up. Chilled defrost water from the upper cavity now flows by gravity back through the three way water valve into freezer sump or reservoir pan. Here water is picked up by the water pump and continually recirculated through sprayer tube to produce the next batch of cubes.

HARVEST CYCLE
SC200J
Water Circuit

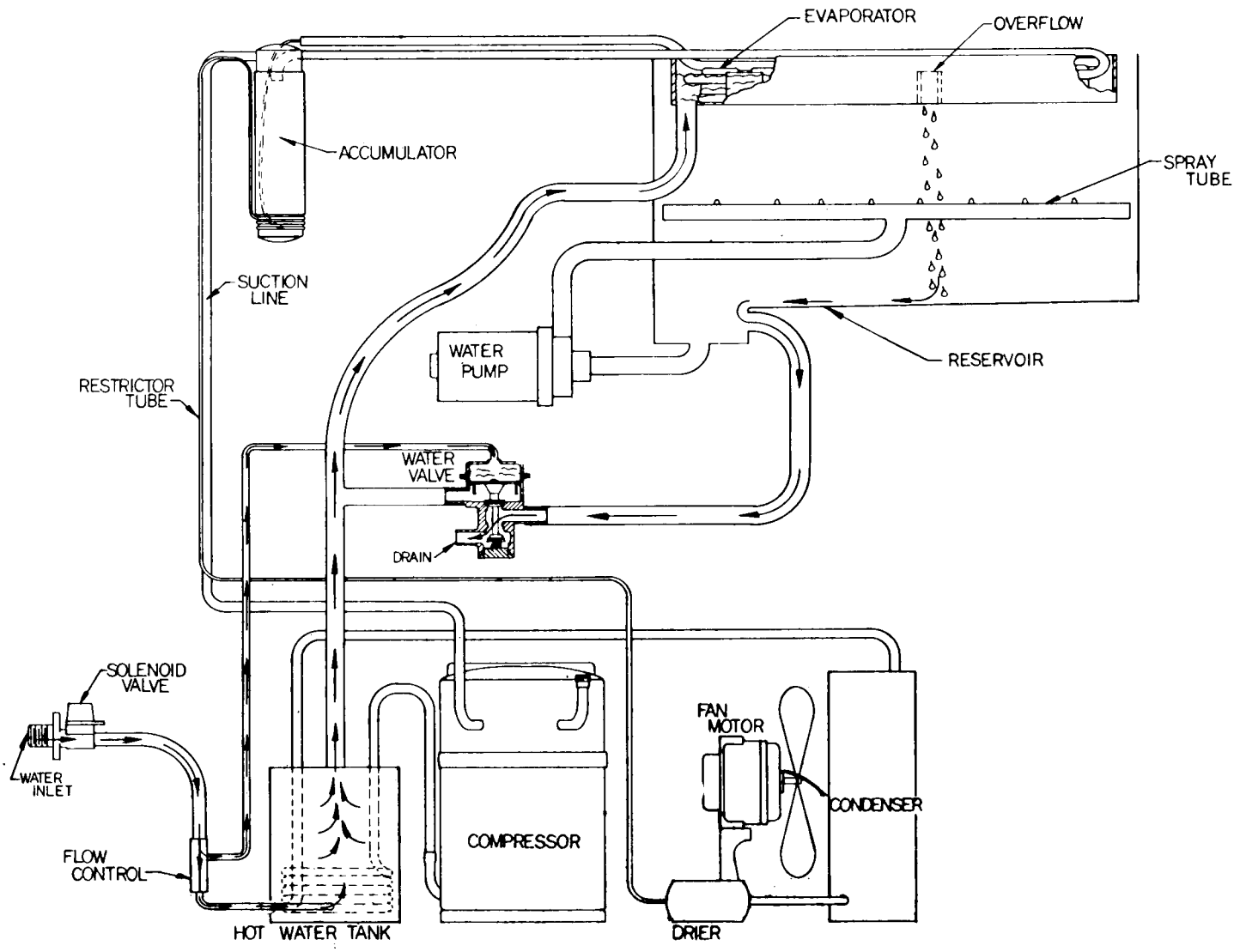

FREEZING CYCLE

As the freezing cycle starts, electrically the components operating are the com-compressor and fan motor, recirculating water pump and the sprayer tube drive motor.

The refrigerant curcuit which equalized at about 50 pounds gauge during the "off" or harvest cycle, thru the capillary refrigerant control, now rises rapidly to 125 - 135 pounds head pressure. The suction or low side pressure starting at 50 pounds pulls down fairly quickly to about 25 pounds at which point the ice cubes are starting to form a thin shell in cube cups. Continuing from 25 pounds slowly on down towards the finished cube pressure of approximately 5 pounds takes an average of 20-25 minutes.

During this portion of the freezing cycle the electrical brain is the reverse acting, cube size thermostat. This thermostat electrically is holding the freezing cycle components "live". When the ice cubes are about 3/4 formed, the decreasing suction pressure and temperature, activate the temperature sensing bulb of the reverse acting, cube size size control, closing its contacts. This does not interrupt the freezing cycle, the closing of the cube size thermostat contacts electrically transfers the finishing of the freezing cycle to the finishing clock motor or timer as it is sometimes called. One full revolution of the timers dial is 12 minutes as is noted by the numerals on the dial however of the total 12 minutes on the timer dial, 3 minutes are used for the defrost or harvest cycle.

This means then that after the cube size contacts close they activate the timer motor. This control takes over and continues freezing cycle for another 9 minutes with timer dial now turning. When the 9 minutes are completed, an offset in the timer dial allows a micro switch with activating arm riding on that cam to drop into the slot electrically stopping the freezing cycle and starting the 3 minutes harvest cycle - The clock motor continues thru harvest cycles. A notch on the timer dial now lifts micro switch arm up on dial, electrically stopping harvest cycle and starts back into a new freezing cycle.

FREEZING CYCLE
SC-200J
Water & Refrigerant Circuit

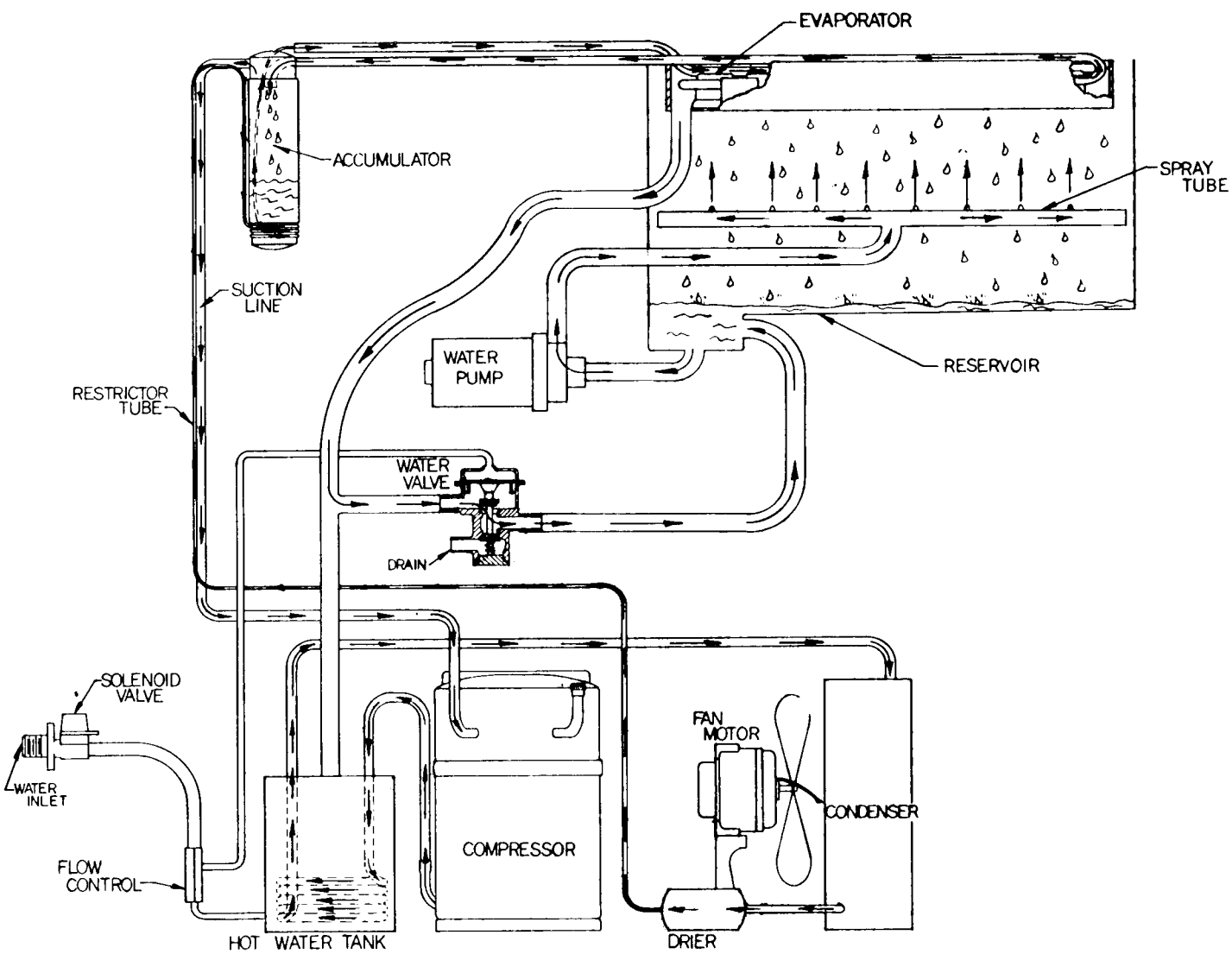

SERVICE ANALYSIS

SYMPTOM	POSSIBLE CAUSE	SUGGESTED CORRECTION
Shortage of water	Water spraying out through curtains	Replace broken curtains if any broken.
	Three-Way water valve leaking	Check the valve for foreign matter. Check valve seats and replace if necessary.
	Water entering hot water tank too slowly	Check pressure at source-20# required. Dirt in solenoid and flow control- blow out.
		Partial restrictions in water strainer. Clean Strainer.
Irregular size cubes and some cloudy	Some jets plugged	Clean jets.
	Shortage of water	See Shortage of Water
	Unit not level	Water overflowing air vent holes on low side burning cubes. Level as required.
Cubes too large	Cube size control turned too cold	Turn setting on cube size control dial towards warmer
Decreased ice capacity	Inefficient compressor	Replace.
	Leaky water valve	Replace or repair.
	High head pressure	Dirty condenser. Clean. Bad fan motor. Replace.
	Non-condensable gas in the system:	purge the system.
	Poor Air circulation or excessively hot location	relocate the unit, or provide for ventilation by cutting openings;
	Overcharge of refrigerant	Correct the charge. Purge off slowly.
	Partially restricted cap tube	Purge & replace charge and drier
Hole washed inside cube	Water over the top of the cube cups during harvest	Level unit.

SERVICE ANALYSIS

SYMPTOM	POSSIBLE CAUSE	SUGGESTED CORRECTION
Unit will not run.	Blown fuse	Replace fuse & check for cause of blown fuse.
	Bin thermostat set too high	Adjust thermostat. Set between 35° out to 39 degrees in.
	Switch in Off position	Turn switch to On position.
	Inoperative master switch	Replace switch
	Timer contacts open	Replace timer micro-switch.
Compresser cycles intermittently	Low voltage	Check circuit for overloading. Check voltage at the supply to the building. If low, contact the power company.
	Dirty condenser	Clean with vacuum cleaner, air or stiff brush. (Do NOT use wire brush.)
	Air circulation blocked	Allow sufficient air space all around unit.
	Inoperative condenser fan motor	Check to see if defective. If defective, replace.
	Non-condensable gases in system	Purge the system.
Cubes too small	Cube size control set too high	Lower the setting. Turn towards colder.
	Partially restricted capillary tube.	Blow charge, add new gas & drier. After exacuating system with suction pump.
	Moisture in system	Same as above.
	Shortage of water	See remedies for shortage of water.
	Shortage of refrigerant	Check for leaks and recharge.
Cloudy cubes	Shortage of water	See remedies for shortage of water.
	Dirty water supply	Use water softener or water filter.
	Restricted drain on pump	Clean pump strainer.
	Accumulated impurities	Use SCOTSMAN Ice Machine Cleaner.
Poor harvests	Too short defrost time	Check and adjust harvest cycle. Timer should be set at 3 1/2.
	Restriction in incoming water	Check water feed line strainer and flow reducing valve. To give greater water flow increasing defrost time.
	Insufficient quantity of hot water	Cold ambient - must be 50° minimum faulty fan control on aircooled models.
	Solenoid valve not opening the water valve	Solenoid binding or burned out. Replace.
	Air vent holes in upper cube cups plugged	Clean out holes.

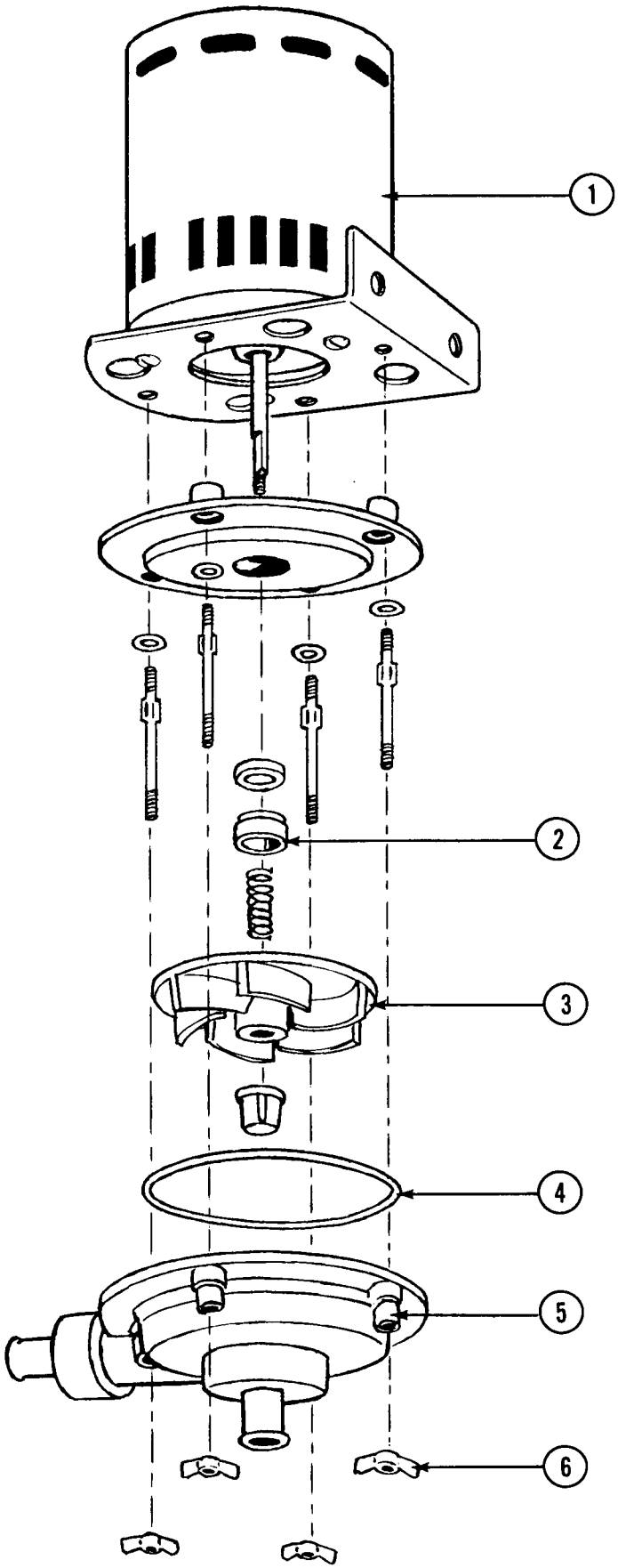

SUMP PUMP ASSEMBLY
PART NO. 12-1532-1

ITEM NO.	PART NO.	NAME
1.	12-1532-51	Motor only
2.	12-1532-57	Water Seal
3.	12-1532-58	Impellar
4.	12-1532-60	O-Ring
5.	12-1532-61	Outlet Housing
6.	12-1532-62	Wing Nuts

CONTROL BOX
115/60/1

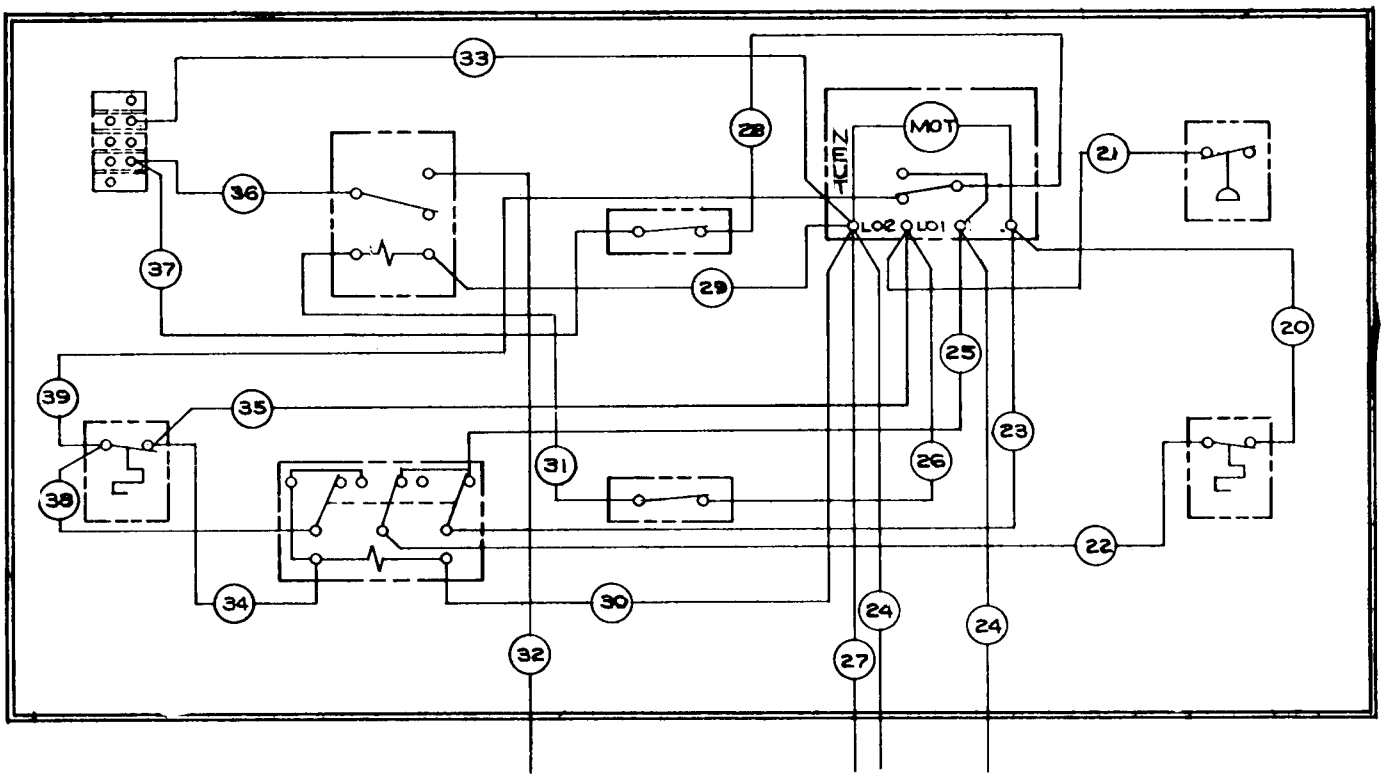

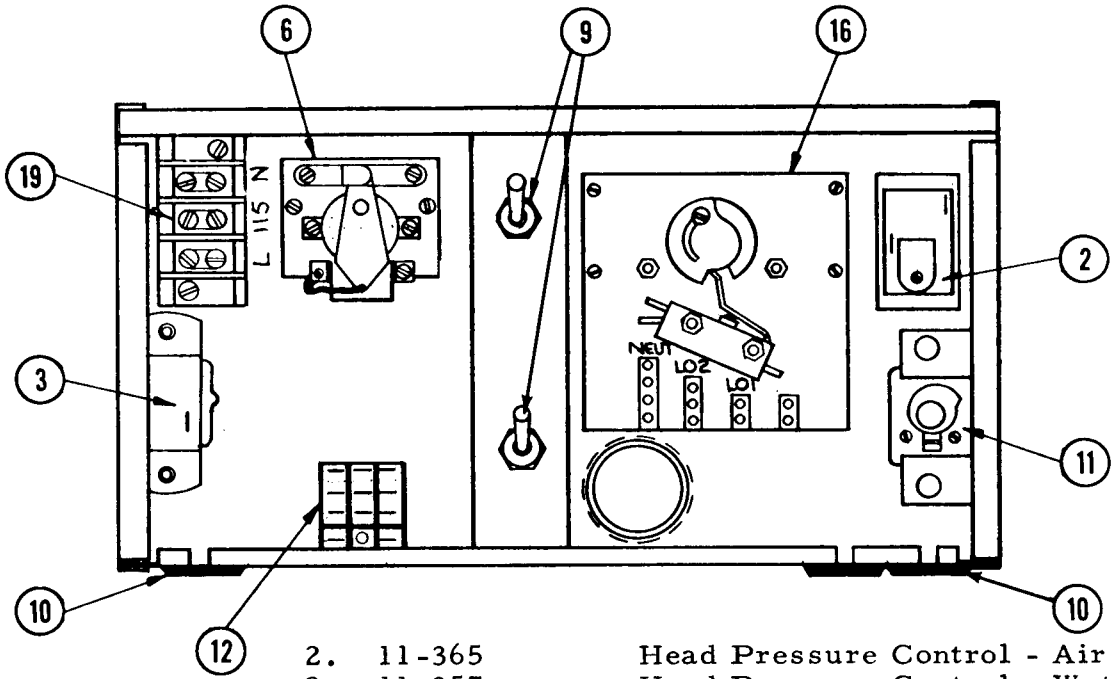

2.	11-365	Head Pressure Control - Air Cooled Only
2.	11-357	Head Pressure Control - Water Cooled Only
3.	11-353	Bin Thermostat
6.	12-419	Relay
9.	12-426	Switches
10.	13-124	Grommet
11.	11-345	Cube Size Thermostat
12.	12-1598	Complete Cycle Relay
16.	A-21038-1	Timer
19.	12-813	Terminal Block

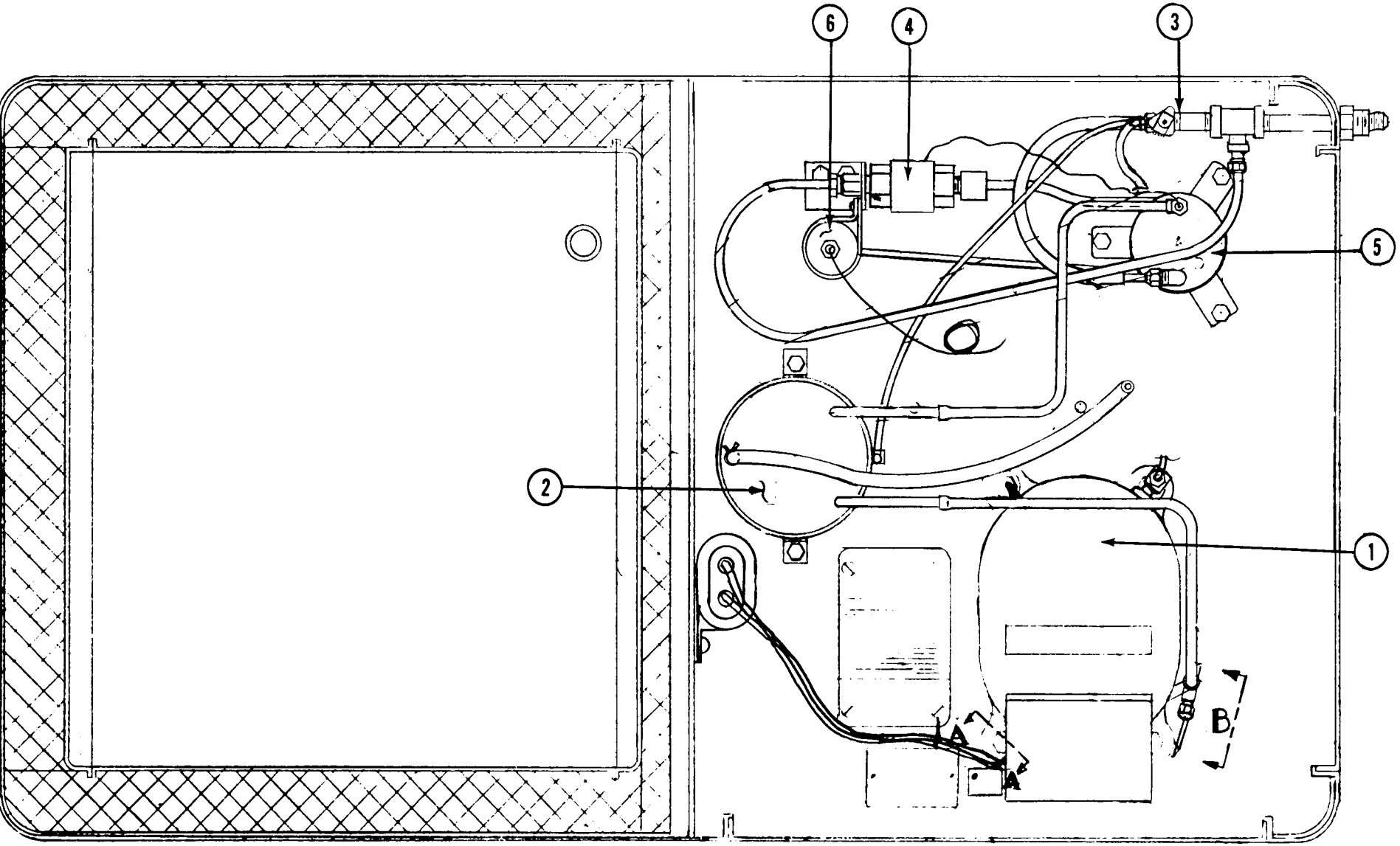

CABINET TOP VIEW

SC-200WJ

1.	18-2430	Motor Compressor
2.	A-20161	Warm Water Tank
3.	12-1434-1	Inlet Water Solenoid
4.	11-198	Water Regulating Valve
5.	18-699-4	Water Cooled Condenser
6.	2-1752-2	Refrigerant Drier

CABINET FRONT-END VIEWS
SC-200J

7.	12-1532-1	Water Pump
8.	12-675-1	Agitator Motor
11.	A-19722	Three Way Water Valve

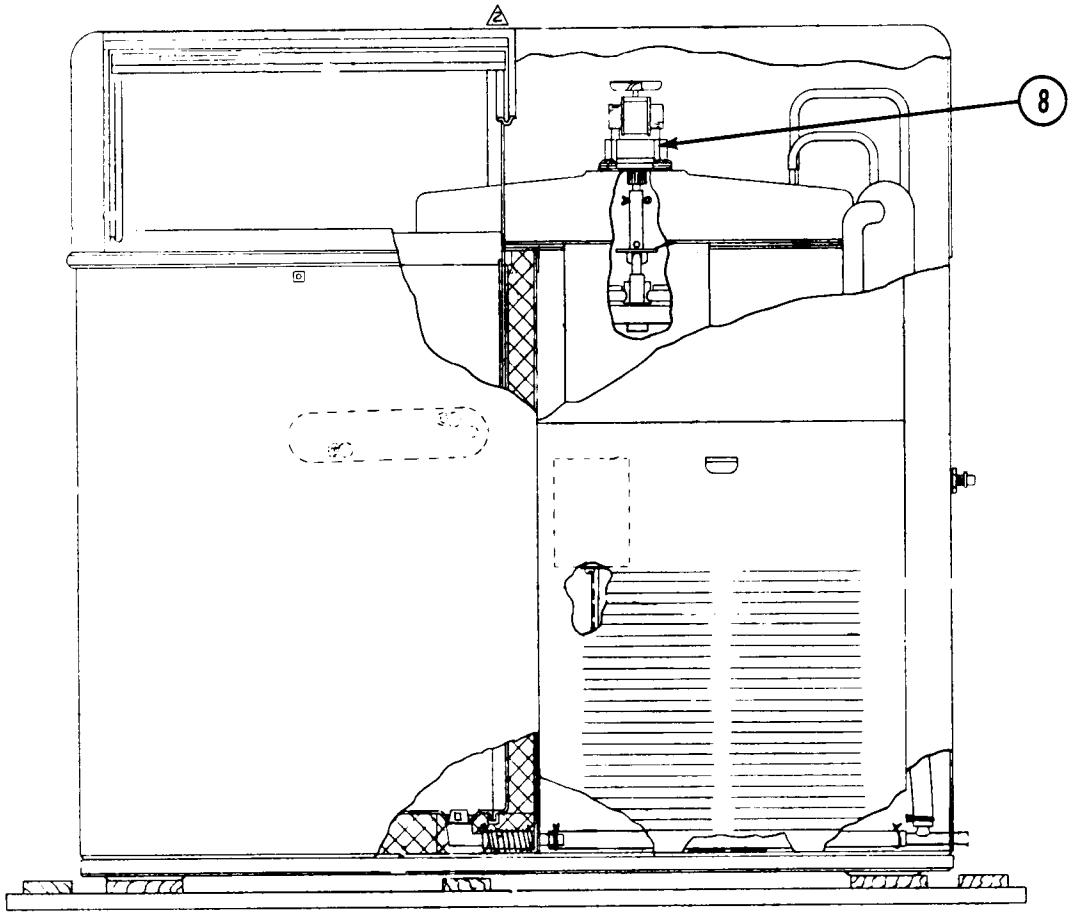

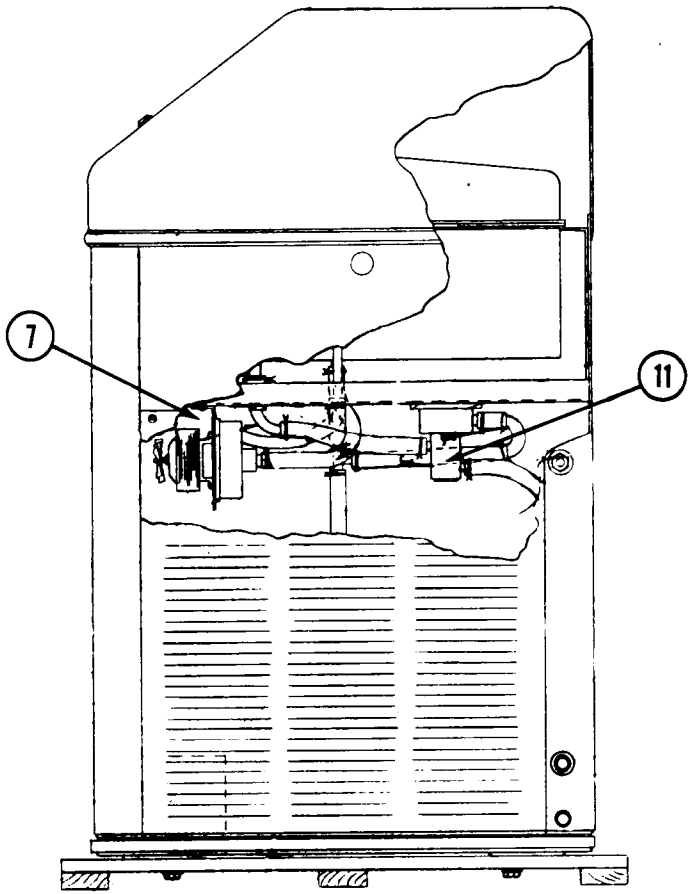

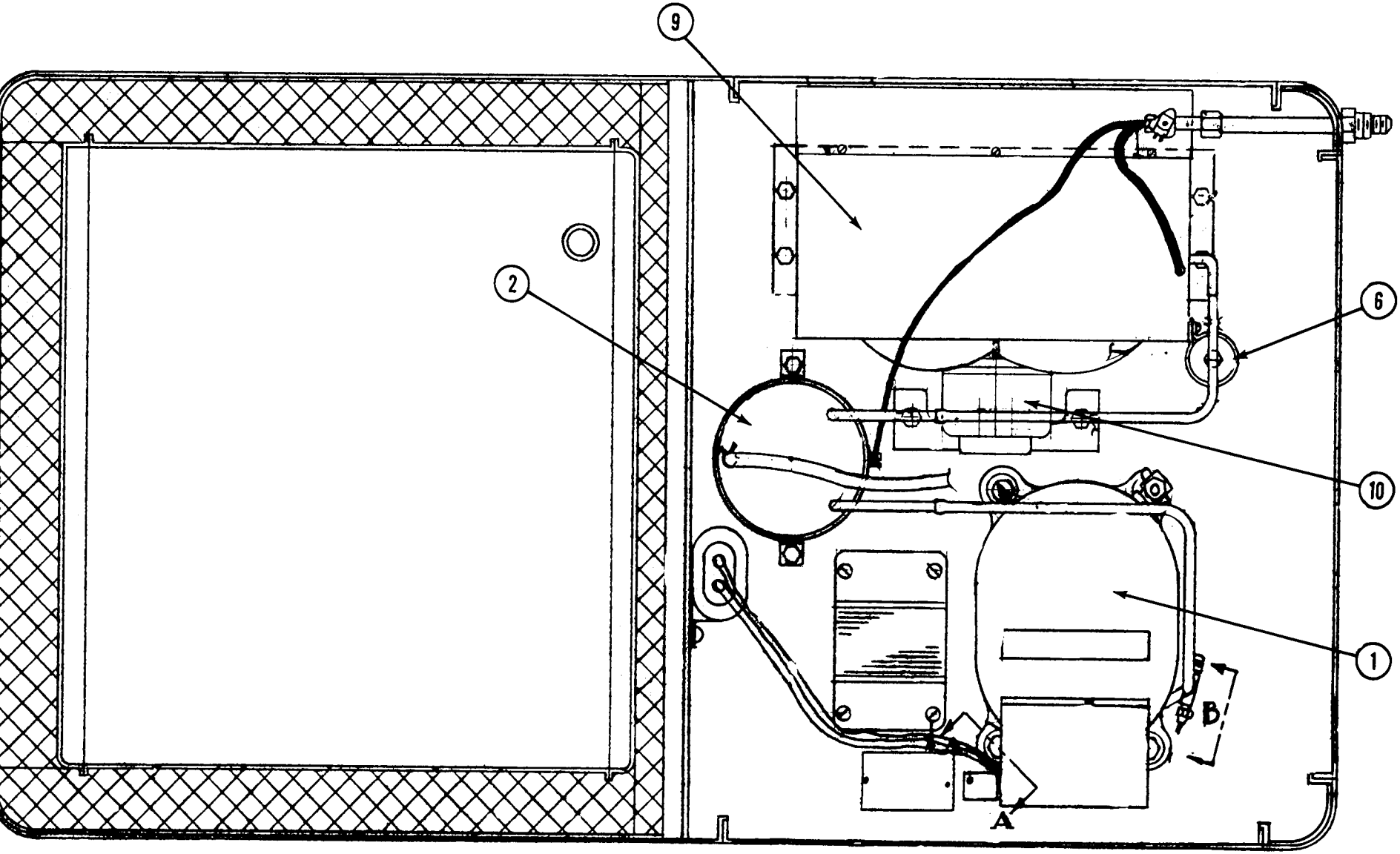

1.	18-2430	Motor Compressor
2.	A-20161	Warm Water Tank
6.	2-1752-2	Refrigerant Drier
9.	18-334	Air Cooled Condenser
10.	18-1576-1	Fan Motor

CABINET TOP VIEW
SC-200 J

SC-200 CASE PARTS

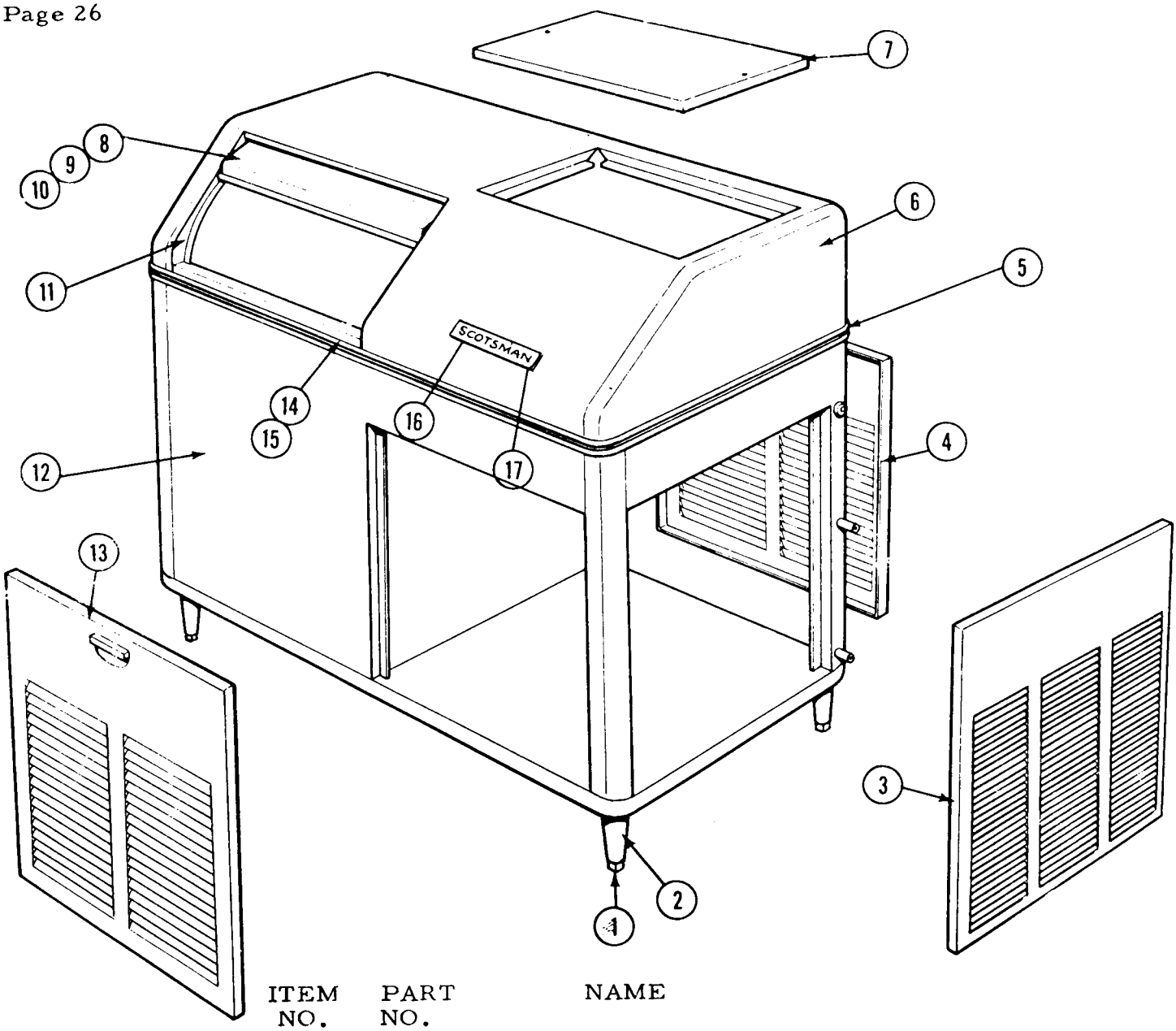

ITEM NO.	PART NO.	NAME
1.	8-522	Leg Levlers
2.	A-15803	Leg
3.	S-6840	Side Door
4.	A-8739	Back Door
5.	A-5862	Rear Moulding Strip
6.	A-19852	Hood (less doors)
7.	A-7676	Top Door
8.	A-15559	Sliding Door
9.	3-640	Door Glide
10.	2-1616	Door Catch
11.	A-16208	Door Track
12.	A-19520	Case Ass'y (less doors)
13.	A-15866	Front Door
14.	A-5863	Moulding Strip
15.	15-324	Plastic Insert-per foot
16.	15-156	Emblem
17.	3-271	Speed Nuts

Add letter "S" to parts for stainless steel finish

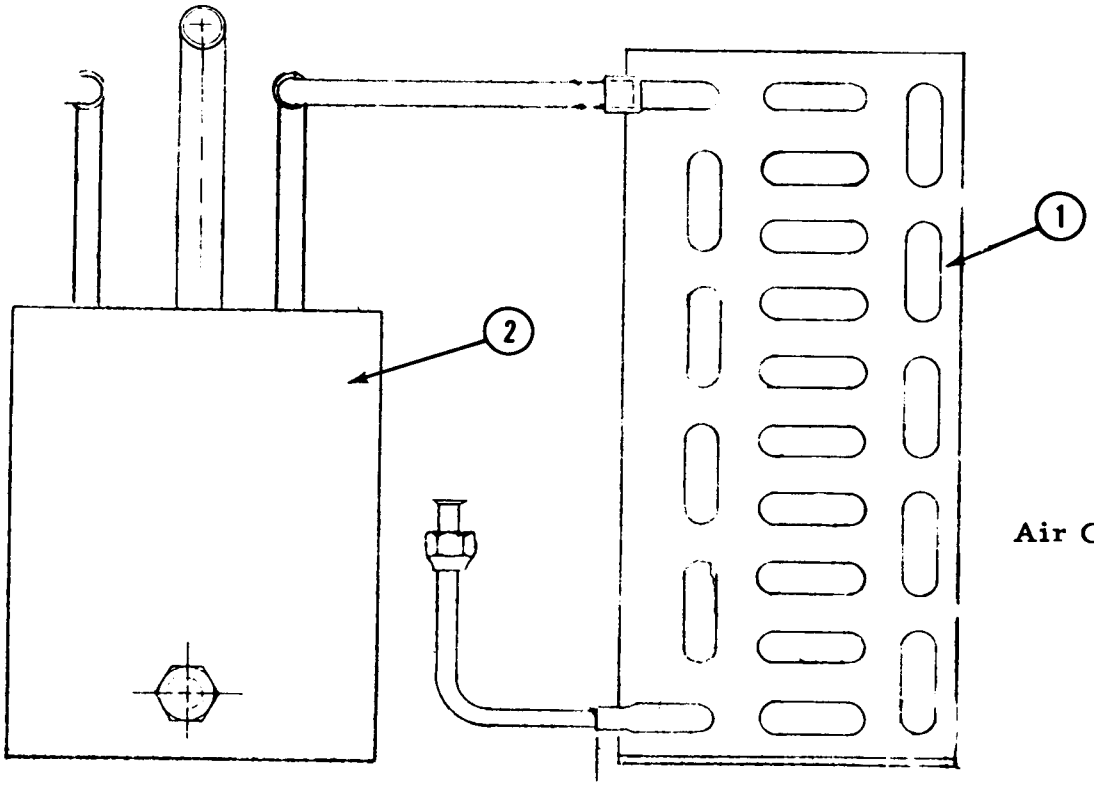

SC-200J
Air Cooled Condenser

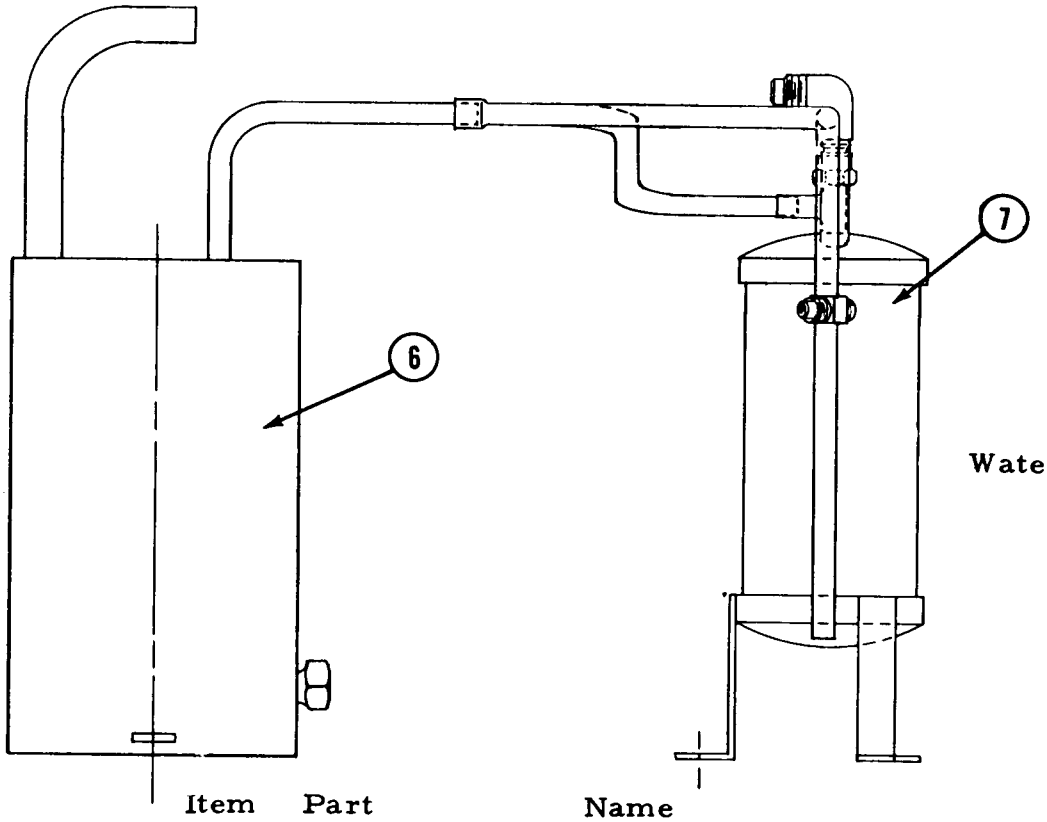

SC-200WJ
Water Cooled Condenser

Item No.	Part No.	Name
1.	18-334	A. C. Condenser
2.	A-20161	Warm Water Condenser Tank
6.	A-20161	Warm Water Condenser Tank
7.	18-699-4	Water Cooled Condenser

MOTOR COMPRESSOR
Air and Water
115/60/1 3500 RPM

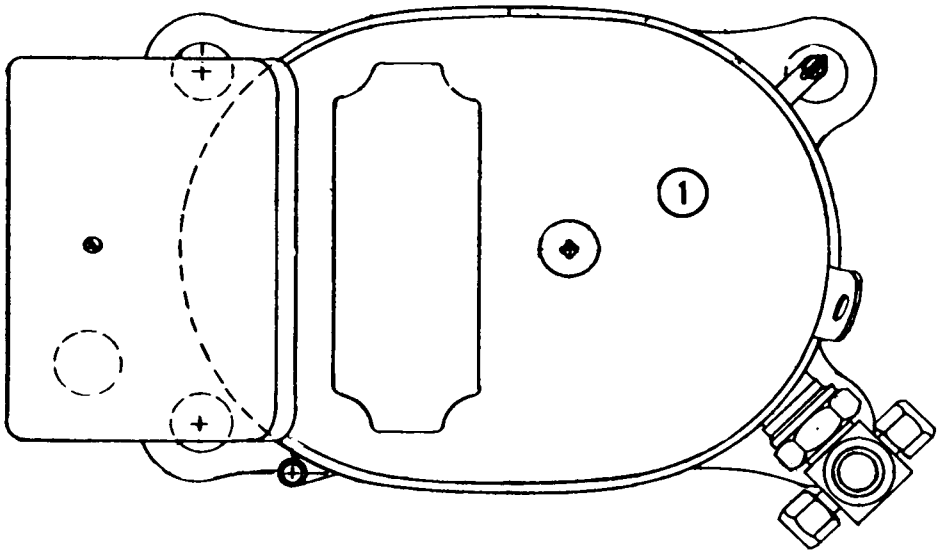

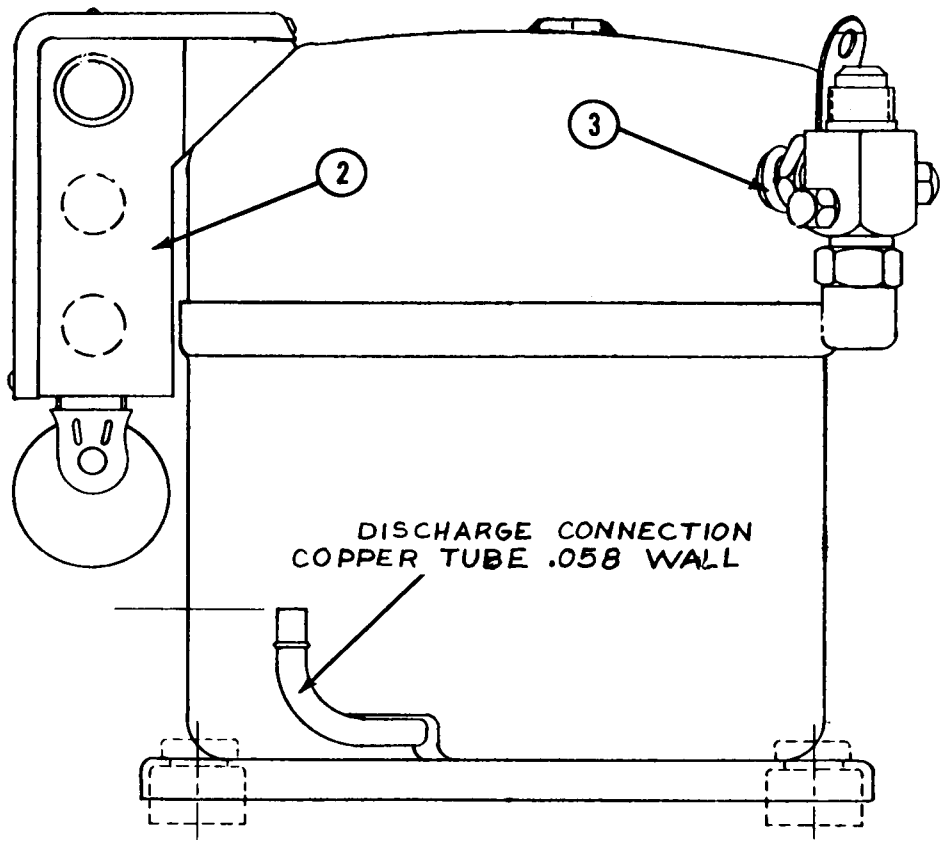

Item No.	Part No.	Name
1.	18-2430	Compressor Only Copelaweld Model RSL2-0075-1AA
2.	18-2400-25	Compressor Overload
	18-2410	Relay
	18-2420	Capacitor
3.	18-2400-28	Suction Valve
	*18-1902-17	Capacitor

On base-not shown

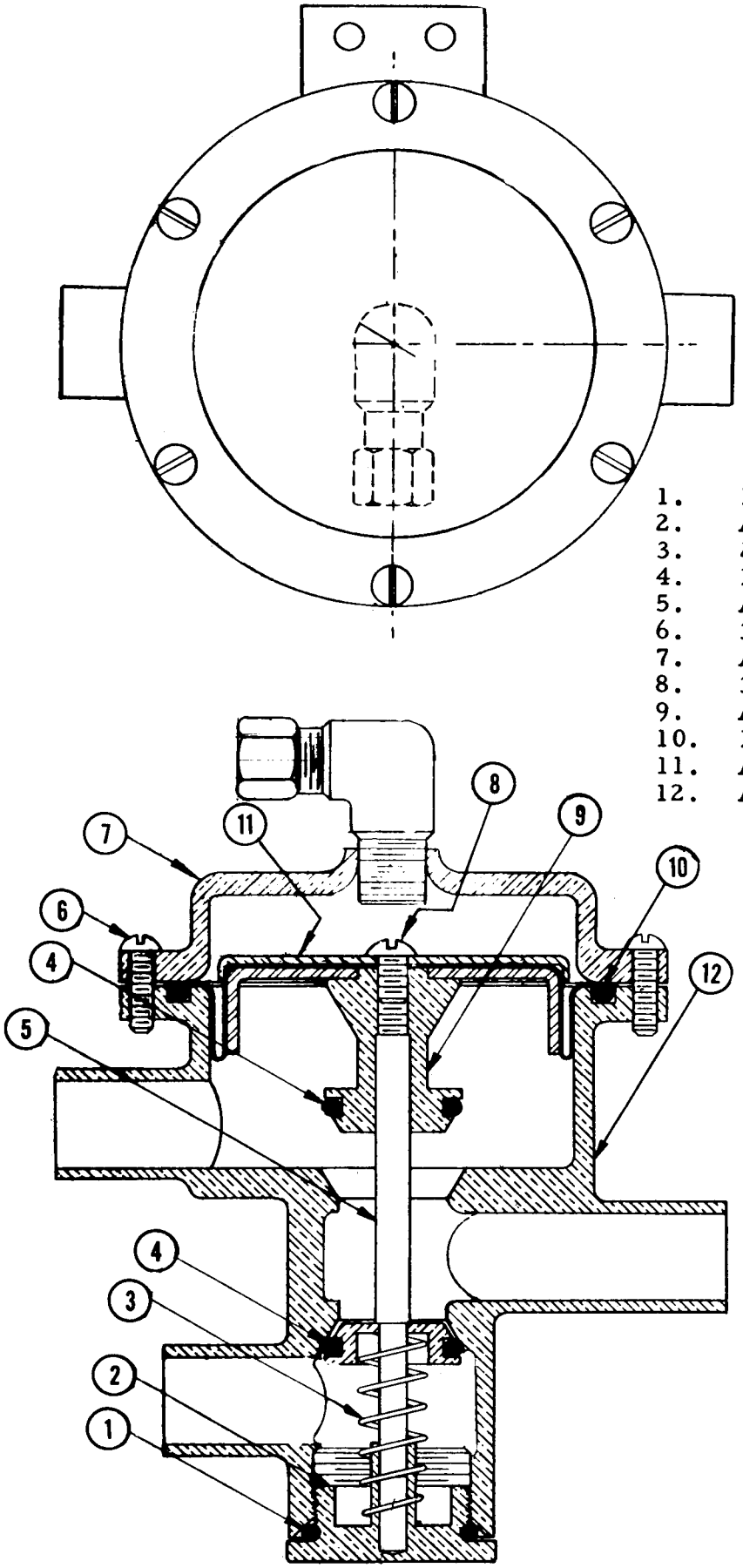

WATER VALVE ASSEMBLY
A-19722-1

1.	13-617-2	O-Ring
2.	A-17937	Valve Cap Bottom
3.	2-1545	Spring
4.	13-617-1	O-Ring
5.	A-17942	Lower Plunger Rod
6.	3-1403-6	Screws (6)
7.	A-18192	Valve Top Cover
8.	3-1403-27	Screw
9.	A-17941	Upper Plunger
10.	13-606	Rubber Diaphragm
11.	A-18312	Diaphragm Cover
12.	A-17947	Valve Body

SC-200 J FREEZER ASSY

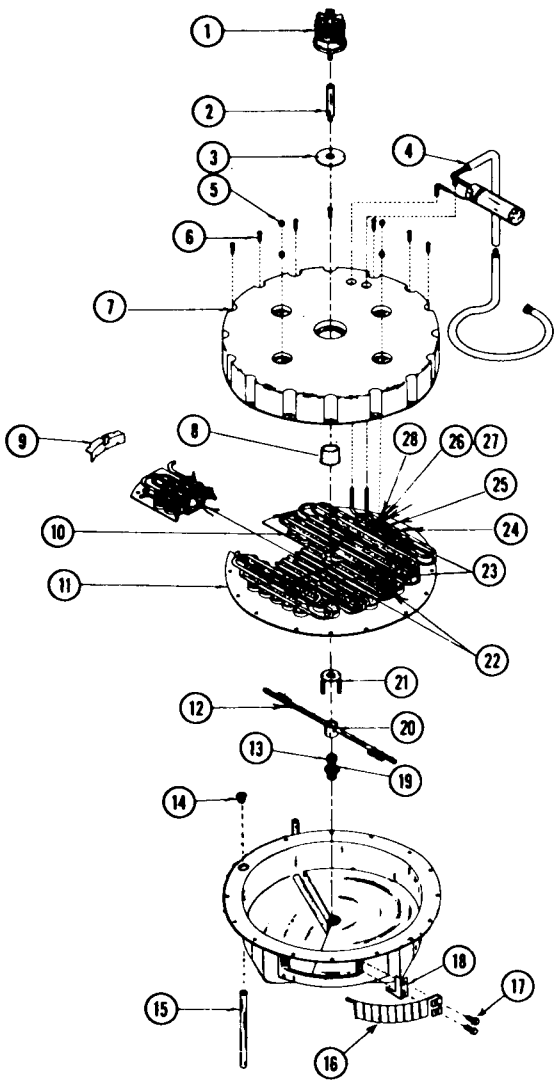

ITEM NO.	PART NO.	NAME
1.	12-675-1	Drive Motor
2.	A-6084	Drive Shaft
3.	13-176	Drive Motor Gasket
4.	A-19833	Suction Line, Cap Tube Ass'y
5.	3-357	Nut (4 required)
6.	3-10	Screws 16 required)
7.	A-19494	Freezing Chamber Top
8.	2-468	Center Cup
9.	A-6034	Water Baffle
10.	A-20562	Platen & Cup Ass'y (with spacers)
11.	13-659	Rubber Cup Holder
12.	2-1803-1	Jets (8 required)
13.	A-19508	Jet Bearing Shaft
14.	S-7434	Adapter
15.	A-16238	Hot Water Tube
16.	A-19541	Curtain Ass'y
17.	S-7234	Cap Nuts 2 required
18.	S-7730	Cube Stopper
19.	2-433	"O" Ring
20.	S-6903	Spray Bar
21.	S-6900	Drive Arm
22.	A-9012	Short Spacers (2 required)
23.	A-9011	Long Spacers (2 required)
24.	S-6866	"I" Bolt (4 required)
25.	A-12436	Coil Clamp (4 reqd.)
26.	S-6866	Rubber Insul. (4 required)
27.	3-547	Screw (4 required)
28.	3-73	Nut (4 required

Complete Freezer in crate, less item #1, 2, 3.
A-19539-25

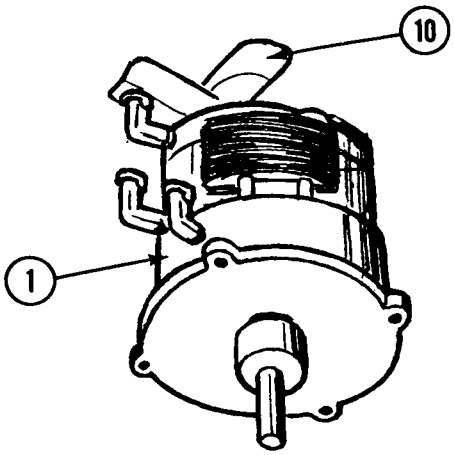

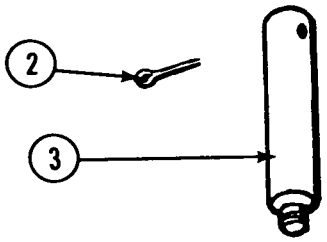

Note: Left Hand Thread

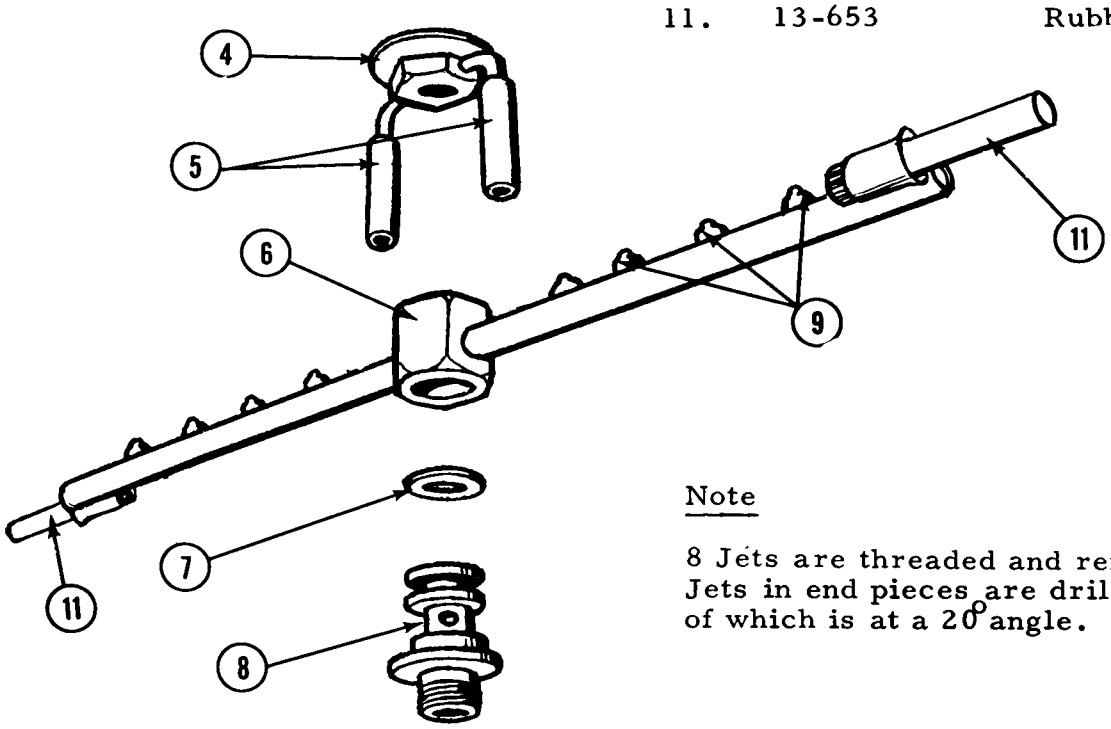

DRIVE LINKAGE AND SPRAY BAR
SC-200J

Item no.	Part no.	Name
1.	12-675-1	Drive Motor
2.	3-290	Cotter Key
3.	A-6084	Drive Shaft
4.	S-6900	Drive Arm
5.	S-7315	Rubber Covers
6.	S-6903	Spray Bar
7.	2-433	"O" Ring
8.	S-6909	Inlet & Bearing Assy
9.	2-1803-1	Jets
10.	12-1383-20	Fan Blade
11.	13-653	Rubber Spray Bar Tips

Note

8 Jets are threaded and removeable. Jets in end pieces are drilled holes, one of which is at a 20° angle.

FUNCTIONAL PARTS
DESCRIPTION

11-365	Fan cycle- head pressure control Robert Shaw #A P 20-1066 120# 140# Range Automatic reset - SPST Nonadjustable
11-353	Bin Thermostat Cutler Hammer #9530 N 213 Cut Off 35° cut in 39° Adjustable calibrate for altitude over 2000 ft.
11-357	High pressure Cut off - Water cooled models Robert Shaw #A P 21-2048 Control opens 190# P.S.I. Manual re-set - Adjustable
12-419	Relay - (by passes thermostat during freezing cycle) Potter - Brumfield #PR5AY 115/60/1 - SPDT Rated 25 amps
11-345	Cube size thermostat Rance A11-377 Reverse acting, closes on temperature Decrease - Has adjustment dial
12-1598	Relay 115/60/1 Ameco or Potter Bumfield 3 PDT #KU-14A-15 Holds cuber drive motor thru Harvest cycle
18-699-4	Water cooled condenser W.C. models only Packless #QVWC-310 1 H.P. rating - upright tank type
12-1532-1	Water recirculating, sump pump Hartell Inc. 3000 RPM - shaded pole, thermally protected motor - 1/25 H.P. 115/60/1
18-2430	Motor compressor 115/60/1 Copeland refrigeration - Copelaweld RSL2-0075-1AA 2 Pole, 3500 RPM Hermetic for use with refrigerant R-12
A-21038-1	Finishing Clock or Timer Manufactured by Queen Products Div 2-1651 Knob cam assembly 12-1480 Micro switch.
12-1434-1	Water inlet solinoid Detroit Controls Corp. #S-30-A 115/60/1 coil - Nylon body 1/4" MPT inlet & outlet No flow control. Also American Standard Control #SSV-20206
18-1902-17	Running Capacitor Copeland Refrigeration #014-0001-00 10 Microfarad rating

SERVICE - COMPLETE UNIT

ALL STEPS LISTED BELOW SHOULD ONLY BE STARTED WHEN WATER AND ELECTRICAL SUPPLY ARE OFF TO PREVENT ACCIDENTS.

To remove cabinet top or hood.

1. Remove two back end screws in rear moulding strip.
2. Pull out black insert tape concealing screws.
3. Remove balance of screws in moulding strips.
4. Lift hood straight up.

To remove Sump Pump.

1. Remove lower right side service panel.
2. Disconnect hose clamp on goose neck.
3. Remove electrical lead to control box.
4. Remove 2 screws in pump mounting bracket.

To remove Drive Motor

1. Remove hood top panel.
2. Disconnect electrical cord connectors from motor coil.
3. Reach in through curtained opening and remove drive fork from drive shaft attached to motor. Note drive fork has left hand thread.
4. Remove 4 screws holding drive motor to freezer dome and pull drive motor shaft out.

To remove the Jet Tube assembly

1. Reach in through storage bin sliding door and remove two brass thumb screws holding plastic curtain closed.
2. Open curtain on hinge and reach hand into opening, feeling for spray bar.
3. Follow spray bar to center hub, turn spray bar so one end points towards curtain opening. Now lift straight up on spray bar. then out after spray bar comes off center hub.

To remove Three Way Water Valve

1. Remove lower front right side service door.
2. Remove all hose clamps to water valve.
3. Remove upper water line connection to elbow on top valve housing.
4. Loosen two nut and bolt assemblies holding valve to mounting bracket. Proper valve now drops free.
5. Replace in reverse of above.

To replace Storage Bin Door

1. Lift door up and slide back as you normally would to remove ice from bin.
2. Remove screw at center rear edge of door where it is attached to lanyard.
3. Pull door straight out.
4. Install repaired or new door in reverse of step number 2 above.

MAINTENANCE INSTRUCTION FOR SCOTSMAN SUPER CUBERS

THE FOLLOWING MAINTENANCE MUST BE ACCOMPLISHED TWO (2) TIMES PER YEAR ON ALL SCOTSMAN SUPER CUBERS. CALL YOUR AUTHORIZED SCOTSMAN SERVICE DEPARTMENT.

1. Clean air-cooled condenser; This is to be done frequently with the machine shut off.
2. Clean water system and evaporator, sump tank and screen, using Scotsman Ice Machine Cleaner or equivalent.
3. Remove jet tube and manually clean jets by unscrewing jets.
4. Check curtain assembly.
5. Tighten all electrical connections.
6. Tighten all bolts.
7. Check water supply. Check water pressure flow through flow control. Clean water strainer.
8. Oil jet tubes drive motor three(3) places. Use SAE 20 oil - 3 oil cups.
9. Oil Condenser fan motor. Punch sealed cap or remove screws where possible.
10. Check for refrigeration leaks with halide torch.
11. Check for water leaks. Tighten drain line connections.
12. Check size and condition of cubes. Adjust as required. See Service Analysis
13. Section.
    Check bin thermostat setting. Factory set at 35° out, 39° in.

PROCEDURE FOR USE OF SCOTSMAN ICE MACHINE CLEANER

1. Remove lower front access door.
2. Locate control box with time clock knob protruding thru cover.
3. Put unit through a harvest cycle manually. This may be done by turning time clock knob clockwise until a loud snap is heard.
4. Let unit finish cube harvest cycle and start into freezing cycle. This will be approximately 5 minutes after the loud snap in Step #3 is heard. At this time turn the compressor switch off, the lower of the two switches in the control box.
5. Locate the sump reservoir which is in the storage bin area and directly behind the ice discharge chute. This discharge chute is covered by a series of white plastic curtains which are free to swing out into the storage bin. Pour 4 ounces (half bottle) of "Scotsman Ice Machine Cleaner" into the sump reservoir.
6. Let unit operate normally for 10-15 minutes into the freezing cycle. No ice will be made because the motor compressor is not in operation.
7. At the end of this time put the unit through 2 or 3 harvest cycles manually to allow fresh make up water to clean out remaining solution. Each time waiting approximately 5 minutes after the loud snap until the next harvest cycle is done manually.
8. Turn the compressor switch back on.
9. Check each new batch of cubes until they are clear and until acid taste has been removed from cubes.
10. Put hot water in storage bin to melt the cubes and thereby clean the drains with the same solution that has just cleaned the unit.
11. Use a damp cloth to wipe off curtains and inside of storage bin.
12. Replace lower front access door.
13. Unit is now ready for continued automatic operation.

PARTS LIST SC-200J

CABINET PARTS

		S. S. Finish
2-1736	Sliding Door Lanyard	
A-19852	Case hood assembly, less doors	A-19852-1
A-7676	Hood top door	A-7676-S
A-16208	Door slide track	
15-156	Emblem	
A-5862	Moulding strip - rear	
A-5863	Moulding strip - front	
A-15866	Cabinet right side front service	A-15866-S
S-6840	Cabinet right side service door	A-6840-S
A-8739	Cabinet rear service door	A-8739-S
A-15559	Sliding Door	

2. CONTROL BOX - ELECTRICAL COMPONENTS

12-813	Terminal Block
A-21038-1	Timer Assembly
12-1480	Timer Micro-switch
11-345	Cube size control
12-426-1	On-Off switchs (2)
11-353	Bin thermostat
12-419	Complete cube relay
11-365	Fan cycle control A.C.
11-357	H. Pressure control
12-1598	Relay

3. CONDENSING UNITS AND REFRIGERANT CIRCUIT

	AIR-COOLED	WATER-COOLED
Freezer Cup and Platen only	A-20562	Same
Freezer and H X assembly complete kit	A-19539-25	Same
Suction H X and accumulator line	A-19833	Same
Drier - Refrigerant	2-1752-2	Same
Motor compressor 115/60/1	18-2430	Same
Relay	18-2410	Same
Starting capacitor	18-2420	Same
Fan motor	18-1576-1	None
Fan blade	18-363	None
Condenser	18-334	18-699-4
Shroud for condenser	A-12111	
Klixon overload	18-2400-25	Same
Tire type valve cap	16-563	Same
Tire type valve core	16-560	Same
Freezer center cup-plastic	2-468	Same
Rubber cube cup holder	13-659	Same
Plastic curtain rod assembly	A-19541	Same
Running capacitor	18-1902-17	Same
Water Regulating Valve	None	11-198

PARTS LIST - SC-200J

4. HOT WATER CONDENSER TANK

A-20161	Hot water tank complete - Air & Water cooled

5. WATER VALVE

A-19722	Complete Valve
13-617-2	O - Ring
A-17937	Valve Cap Bottom
2-1545	Compression Spring
13-617-1	O - Ring
A-17942	Lower Plunger
3-1403-6	Cover Screws (6)
A-18192	Valve Cover
A-17941	Upper Plunger
13-606	Rubber Diaphram
A-18312	Diaphram Cover
A-17947	Valve Body

6. WATER CIRCUIT

12-1434-1	Inlet water solenoid
16-162	Inlet water strainer
A-19788-2	Inlet water flow control
12-1532-1	Sump pump assembly
2-545	O-Ring - Jet tube ends (2)
S-6903	Sprayer tube assembly
2-1803-1	Sprayer tube jet only
S-7730	Rubber, cube stopper
A-19508	Jet bearing hub
13-653	Rubber rods - spray bar (2)

7. DRIVE MOTOR AND LINKAGE

3-290	Cotter key
12-675-1	Drive motor
A-6084	Drive shaft
S-6900	Drive fork
13-176	Drive motor gasket

8. STORAGE BIN AND COMPONENTS

2-530	Drain O-Ring
A-15705	Storage bin
A-18090	Storage bin drain assembly
A-6448	Drain, strainer
A-19555	Bin thermostat bulb cover
13-590	Bin thermostat bulb gasket
A-16108	Bulb holder buttons (2)

9. MISCELLANEOUS

2-540	Ice Scoop
15-324	Plastic trim insert-per ft.
1-657	Packing crate
12-1532-51	Sump Pump motor only
19-343	Scotsman Ice Machine Cleaner
5-397-2	Nylon tube (per foot)

TABLE OF CONTENTS
SC-300J

Table of Contents 1
Photograph and Ice Making Capacity 2
Specifications and Dimensions 3-4
Selection Location:
- Location 5
- Uncrating 5
- Preparation for Installation 5-6

Installation 6-7
Water Supply and Drain 7
Electrical Connection and Characteristics 7
Wiring Diagrams:
- Water Cooled 115/60/1 8
- Air Cooled 115/60/1 9
- Air Cooled 230/60/1 10
- Water Cooled 230/60/1 11
- Air Cooled 208/60/1 12
- Water Cooled 208/60/1 13

Diagram Installation Plumbing 14
Final Check List 15
Start-Up 16
Cycle of Operation:
- Harvest Cycle 17
- Freezing Cycle 18

Service Analysis Charts 19
Exploded Views - Component Parts:
- Sump Pump 20
- Control Box 21
- Complete Unit (Front) 22
- Complete Unit Top, Air Cooled 23
- Complete Unit Top, Water Cooled 24
- Compressor Assy. 25
- Spray Tube 26
- Drive Linkage 27
- Water Valve 28
- Case Assembly 29

Service Information
- Functional Parts Description 30
- Service Complete Unit 31

Maintenance Instructions 32

THIS PAGE
INTENTIONALLY
LEFT BLANK

SCOTSMAN

SUPER CUBER
SC-300J
SERIES

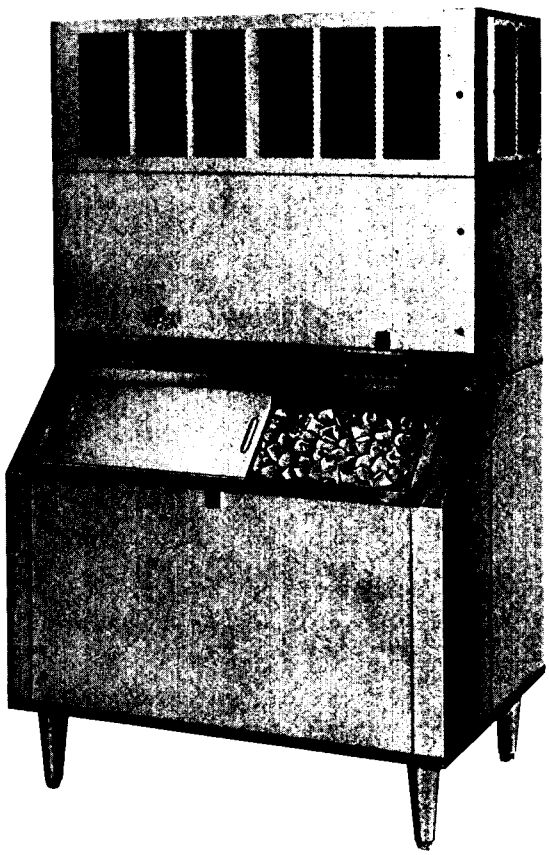

ice making capacity

Daily Ice Capacity is directly related to condenser air inlet temperature, water temperature, and age of machine. Average daily capacity at 90° air and 70° water is air cooled: 230 lbs. and water cooled: 250 lbs.

NOTE: To keep your SCOTSMAN SUPER CUBER performing at it's maximum capacity, it is necessary to perform periodic maintenance as outlined on page 32 of this manual.

SPECIFICATIONS

SUPER CUBER SC-300 SERIES	MODEL SC-300J	MODEL SC-300WJ	MODEL SC-300J-SS	MODEL SC-300WJ-SS
CONDENSER, Air Cooled	X		X	
CONDENSER, Water Cooled		X		X
COMPRESSOR 3/4 HP	X	X	X	X
FINISH, Hammerloid Grey	X	X		
FINISH, Stainless Steel			X	X
SHIPPING WEIGHT (Machine Section)	425	420	430	425

STANDARD ELECTRICALS	MINIMUM WIRE SIZES	TOTAL AMPERAGES
115/60/1	2 wire 12 gauge	15.0 Amperes
115/230/60/1	3 wire 14 gauge	8.3 Amperes
115/208/60/1	3 wire 14 gauge	10.4 Amperes

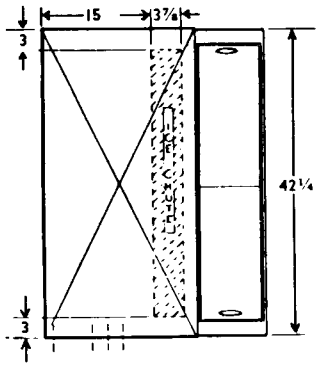

STORAGE BIN: 400, 650 or 1250 lb.
Stainless Steel Lined
DEPTH: 20-1/2"
WIDTH: 43-7/8"
HEIGHT: 34-3/8"

NOTE: Shown here on B400 Bin

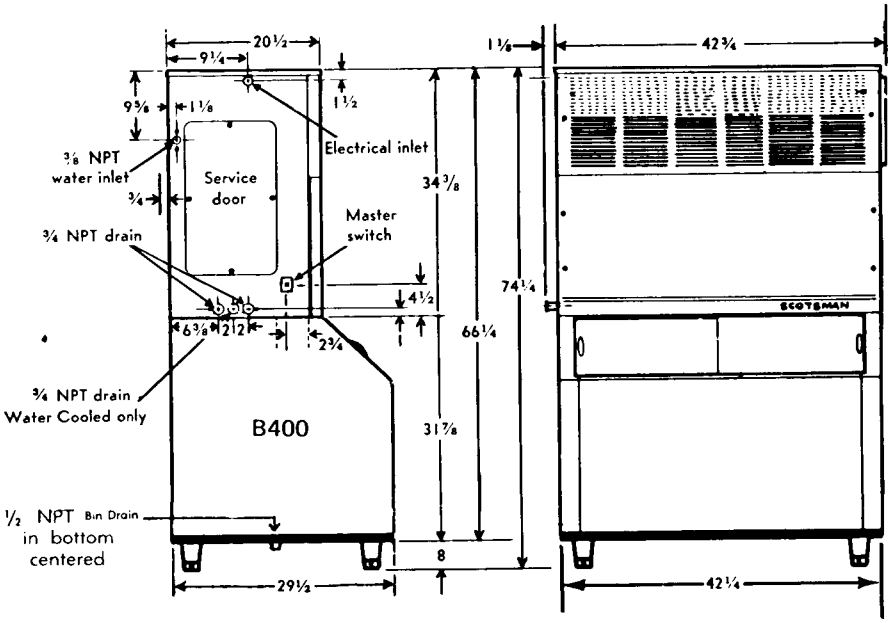

INSTALLATION SPECIFICATIONS

	Model SC-300J	Model SC-300WJ
Compressor	230/60/1 3/4 HP	230/60/1 3/4 HP
Copelaweld		
No. RSL2-0075 1AA-218		
Compressor Amperage	6.1 Amps	6.1 Amps
Condenser	Air Cooled	Water Cooled
Fan Motor amps.	.38 Amps	None
Refrigerant	R-12	R-12
Refrigerant Charge	37 ounces	36 ounces
Power Consumption	8.5 Amps	8.5 Amps
Water Consumption to Produce Ice	4 Gal. per hour	4 Gal. per hour

NOTE:

All Scotsman Super Cubers require neutral wire for secondary 115 volt components circuit. 3 phase cubers require 4 wire service with neutral. Special voltages upon request.

Companion Bins	B-650 or B-400	B-650 or B-400
Cube Size	Scotsman Super cube	Scotsman Super cube
Cubes Per Harvest	80	80

DIMENSIONS – Cuber Only		
Height	34-3/8"	34-3/8"
Width	42-1/4"	42-1/4"
Depth	20-1/2"	20-1/2"
WEIGHTS		
Uncrated	410 lbs.	410 lbs.
Crated	430 lbs.	430 lbs.

INSTALLATION

LOCATION OF THE ICE CUBE MACHINE

1. Select a location as convenient as possible for the user.
2. Accessible to the necessary electrical and plumbing connections.
3. If possible, have a minimum space of 12 inches above top and from left end panel for service.
4. A minimum of 24 inches for the convenience of the user in front of the machine.
5. Room temperature – minimum of 50 degrees, maximum of 100 degrees.

ALL INSTALLATIONS—Locate, if possible, so left end panel is accessible. Locate unit so proper circulation can be attained around the unit and behind it at least four inches. Provide plumbing and electrical connections so the unit can be moved out where the entire top can be removed and the unit can still be operated.

KITCHEN INSTALLATIONS—As a rule, the kitchen is not the most practical place to install an air-cooled condensing unit, as grease is almost always present and makes cleaning of the condensing unit difficult. Do not locate near range or steam table or other heating devices that may be used in the kitchen.

STOREROOM INSTALLATION—Be sure storeroom is of adequate size and properly ventilated. A small, poorly ventilated room will greatly impair the efficiency of the unit. The storeroom must be kept above 50 degrees in the winter months.

BASEMENT INSTALLATION—Locate machine in the coolest place. Locate the machine in a dry place. Keep away from furnace and boiler room. Keep away from service chutes and runways, also coal or other dust of any kind. If the machine is set over a floor drain, block the machine up enough to eliminate any possible damage to the machine.

LOCATE THE MACHINE SO IT CAN BE SERVICED WHEN NECESSARY. ALLOW AT LEAST FOUR INCHES OF SPACE AROUND THE MACHINE FOR CIRCULATING AIR.

UNCRATING

1. If possible, do not uncrate until equipment is in permanent location.
2. Storage bin and machine compartments are shipped in separate crates.
3. Remove hold-down bolts from skids.
4. Remove crate in usual manner for wood crating.

PREPARATION FOR INSTALLATION

1. Inspect complete unit cabinetry for shipping damage. Notify carrier of concealed damage claims.
2. Remove all service doors and panels.
3. Remove leg package from bin and install 4 legs in bin base sockets.
4. Remove all masking tape and packing members from curtains and inner cube making compartment. Re-align components such as sump pump or cube racks that may have shifted in transit.
5. Remove water strainer from compressor section for installation on unit or in water supply line feeding unit.
6. Open electrical control box and prepare for hook up. Use knock outs, cord connectors, etc. Then check unit nameplate voltage against building source voltage to make sure they correspond. Caution – Improper voltage applied to units will void your parts program.
7. Select unit location prior to hook up of water, drain and electric in accordance with local and national codes, minimum room temperatures 50° Fahrenheit. On air cooled models select well ventilated location.
8. Remove registration card from storage bin and wipe bin clean with damp cloth.
9. Fill out registration card completely including model and serial numbers as taken from aluminum plate found behind front service panel and forward to Scotsman factory using self-mailing card.

SETTING UP MACHINE

1. Be sure floor strength is capable of 1,000 pounds in an area of 46 inches by 35 inches.
2. Storage bin must be absolutely level. (This is important).

PLACING MACHINE SECTION IN POSITION ON ICE STORAGE COMPARTMENT

1. Remove front top service door and large front service door to facilitate handling.
2. Extreme caution must be used to prevent damage to the equipment or injury to the personnel.
3. Have four men available at this installation.
4. Place 2 x 4's or other available shims at all four corners which allows clearance for fingers.
5. Place 2 x 4's lengthwise across storage bin a short distance in from front and back which will allow clearance for fingers when section is set in place.
6. Each man should take a position at corners of machine section using one hand to lift with and the other hand to steady machine. (Caution - all four men should be instructed to lift together so as not to tip unit over.)
7. After machine is in position on 2 x 4's on bin section, tilt machine forward and backward to remove 2 x 4's, being careful of ice opening gasket on bin.
8. Place machine section in exact position on storage compartment.
9. Bolt two back tie straps to hold machine section in place.

INSTALLATION

WATER SUPPLY AND DRAIN CONNECTIONS

Page 14 shows recommended water piping connections and drain facilities for Model SC-300J and SC-300WJ.

WATER SUPPLY

The cuber water supply line is 3/8" N.P.T. for all units. Connect to a cold water supply line with regular plumbing fittings with a shut-off valve installed in an accessible place between supply line and machine. The water strainer supplied with the unit would be mounted with clean-out plug down. Locate the strainer next to the machine and the arrow in the direction of the flow.

Use care in connecting up water line to the machine. Water supply must be installed to conform with local code.

Water connection for the SC-300WJ water-cooled units should be at least 1/2" OD copper tubing to the water cooled condenser. One connection is made inside of cabinet for both make-up water and condenser water. Note: Water pressures over 50 P.S.I. will cause heavy vibration and excess waste water during defrost periods, use water pressure regulator to adjust flow pressures.

DRAIN

The recommended drain 3/4" OD copper tubing. Sweat to drain connection (See Page 14). Must be run to open or trapped drain. If drain is a long run, allow a 1/4" pitch per foot. Drain must be installed to conform with local code. Run separate 3/4" bin drain.

ELECTRICAL CONNECTIONS AND CHARACTERISTICS

Standard Voltage 3 Wire 230/60/1 Total Amperage Draw 8.5

All external wiring should conform with National, State and local code requirements. Check the voltage on the line before connecting the machine.

The SC-300J should be wired to a 20 Amp. circuit. Be certain that the Super Cubers are on their own circuit and individually fused. The maximum allowable voltage variation should not exceed 10% of the nameplate rating even under starting conditions. Low voltage can cause erratic operation, and may be responsible for serious damage to the overload switches and motor windings. Do not install 230 volt units on 208 volt supply. If necessary, use boost-buck transformer to correct voltage.

WIRING DIAGRAM
115/60/1
Water Cooled

A-22615-1
Optional C55J
Crusher

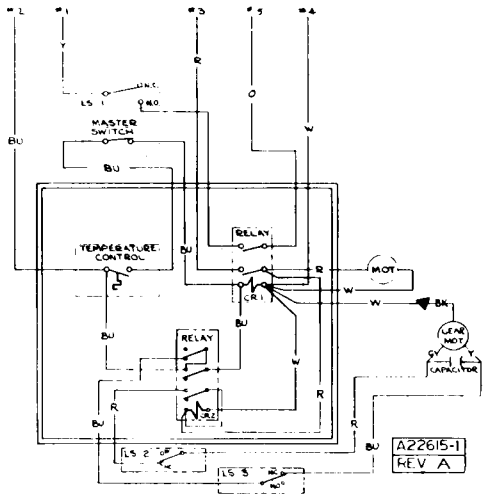

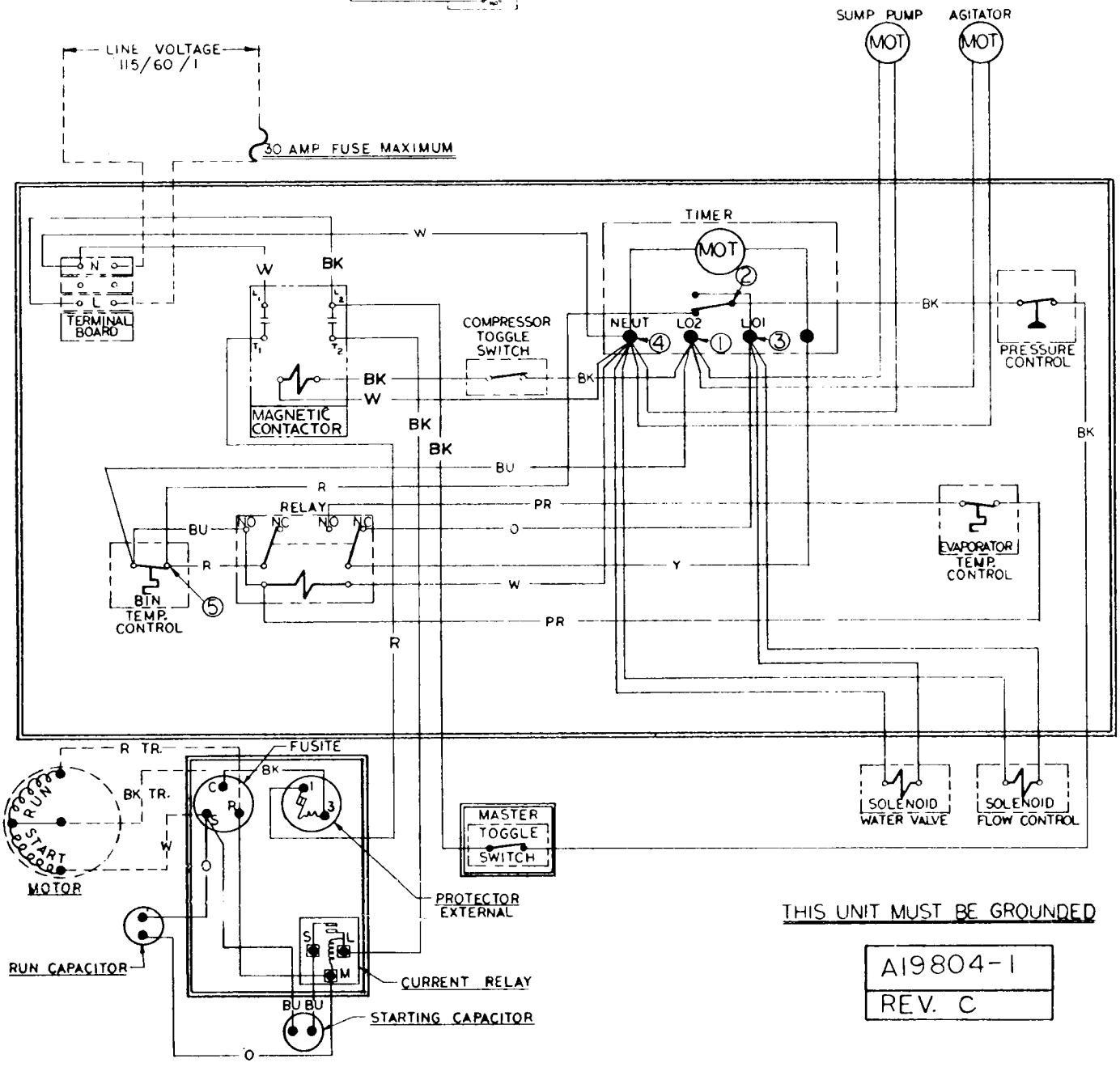

THIS UNIT MUST BE GROUNDED

A19804-1
REV. C

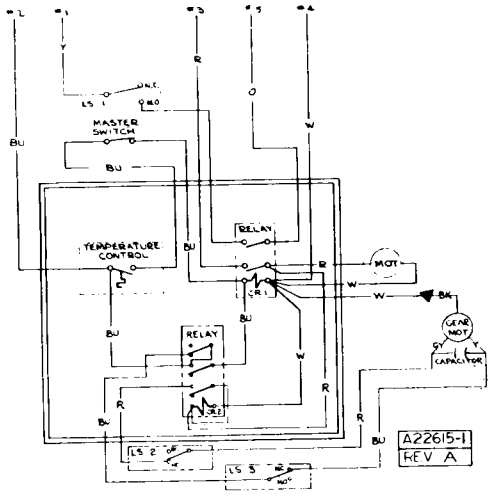

A-22615-1
Optional C55J
Crusher

WIRING DIAGRAM
115/60/1
Air Cooled

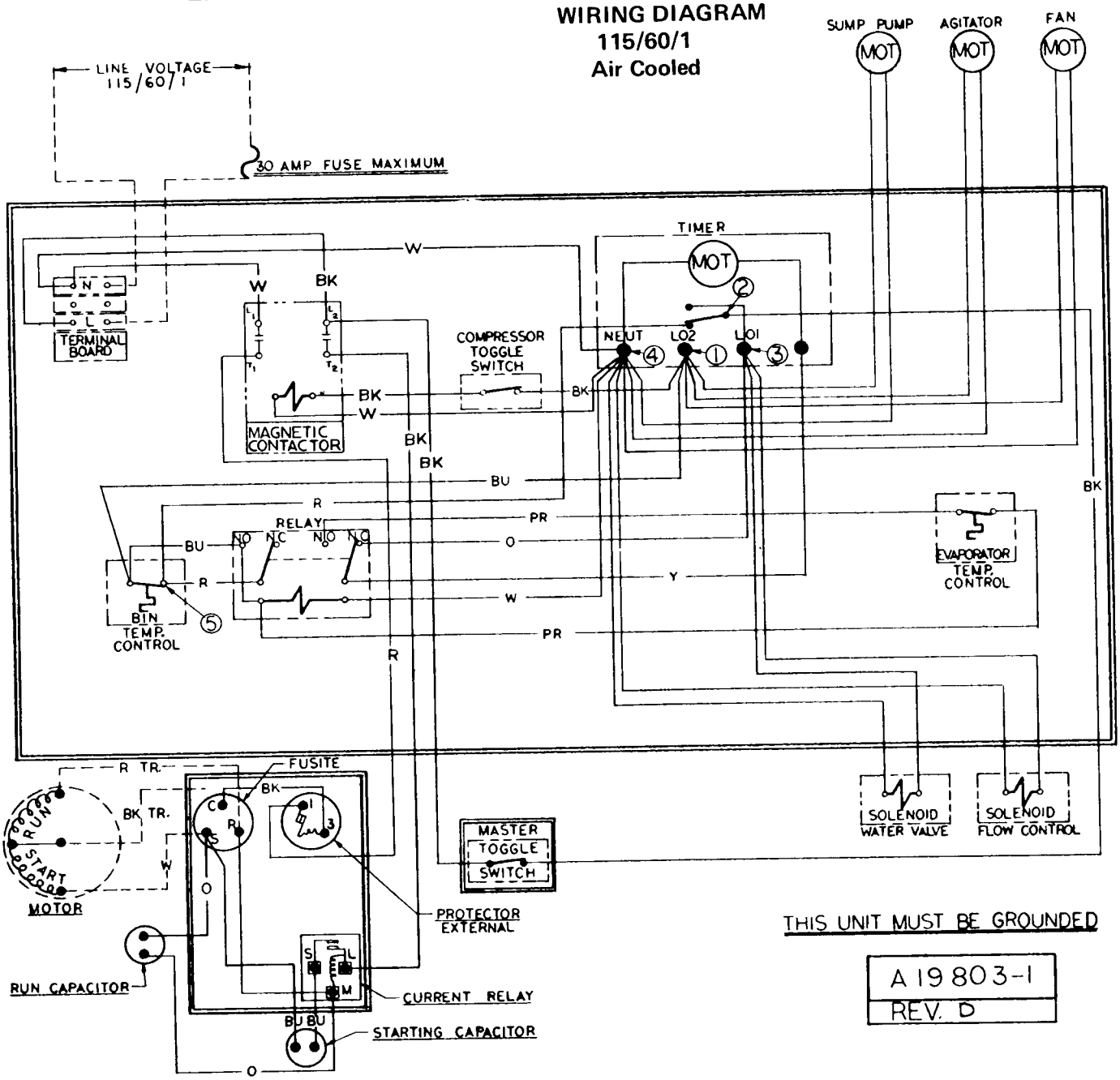

THIS UNIT MUST BE GROUNDED

A 19803-1
REV. D

A22615-1
Optional C-55J
Crushers

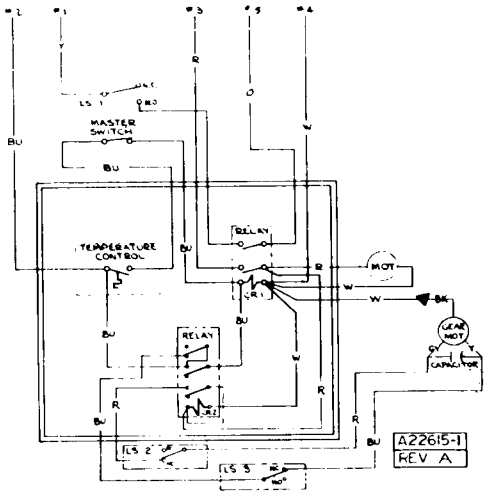

WIRING DIAGRAM
230/60/1
Air Cooled

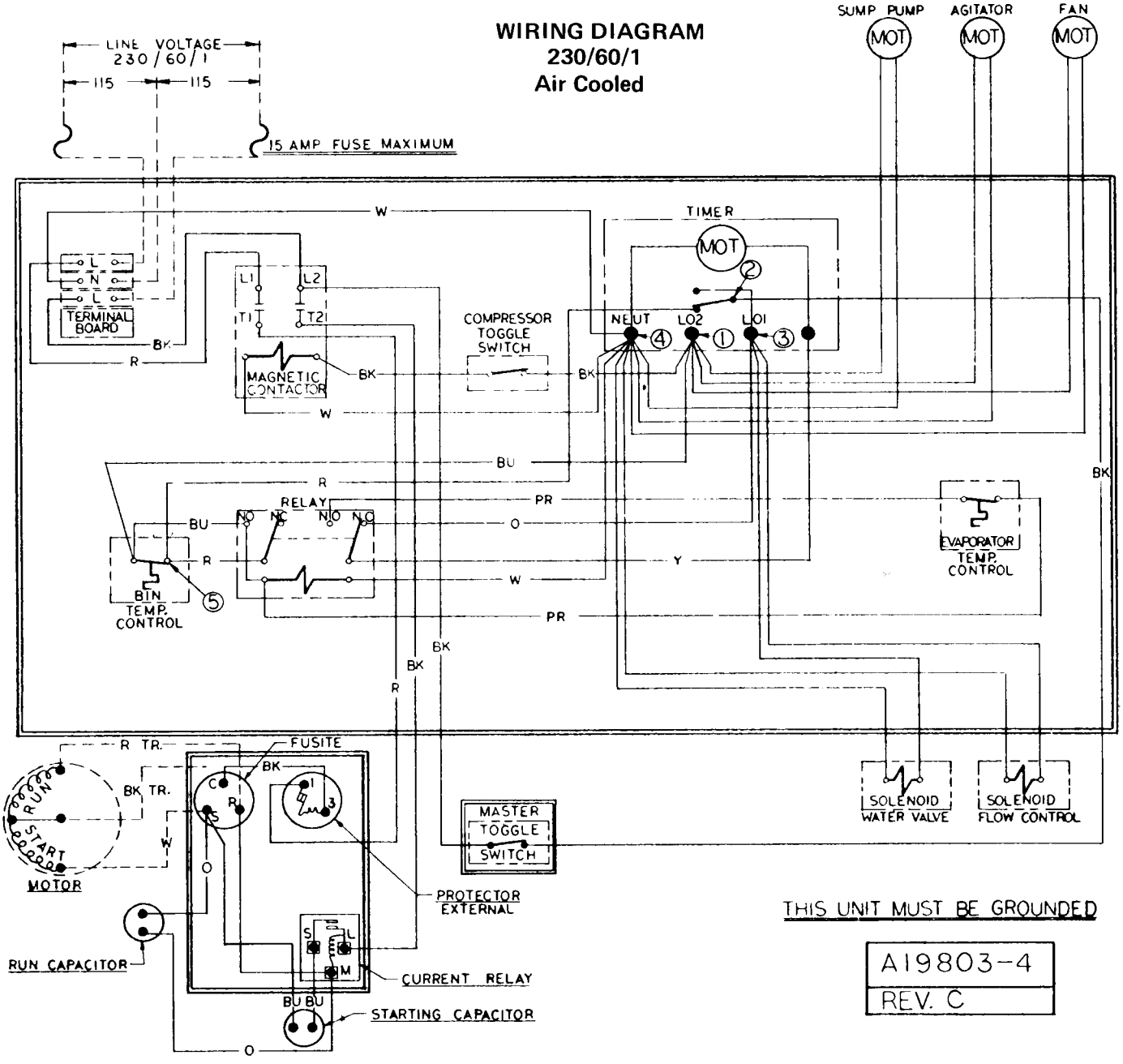

THIS UNIT MUST BE GROUNDED

A19803-4
REV. C

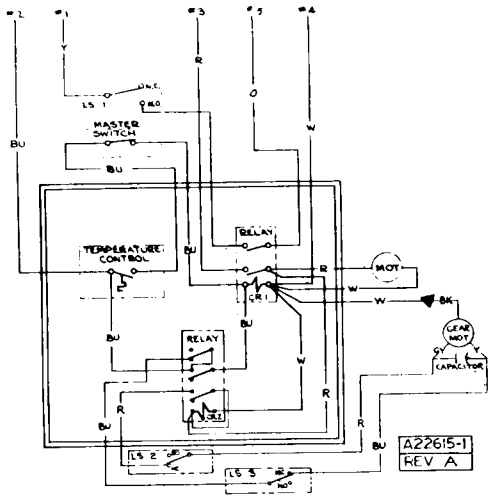

A22615-1
Optional C55J
Crusher

WIRING DIAGRAM
230/60/1
Water Cooled

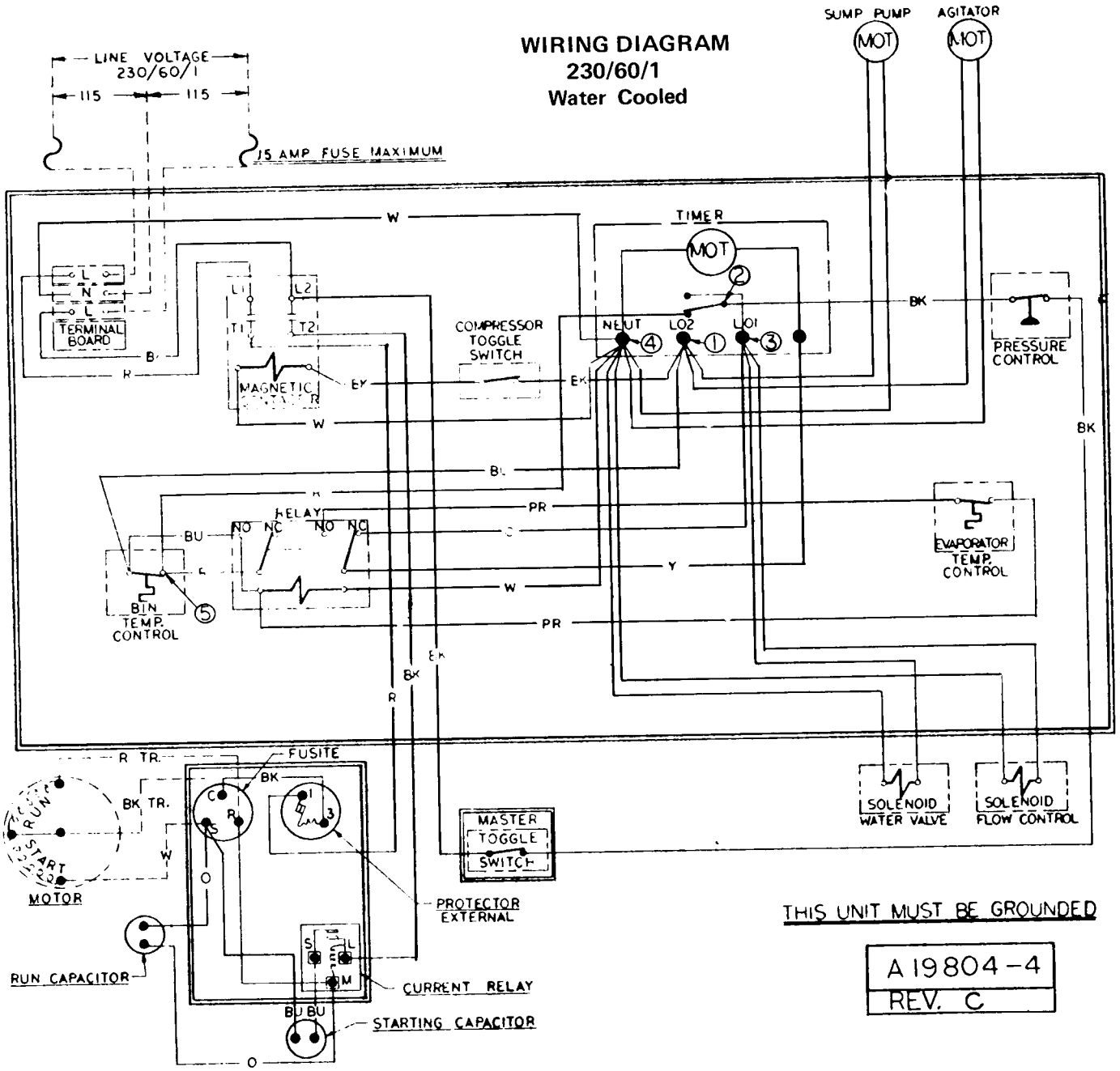

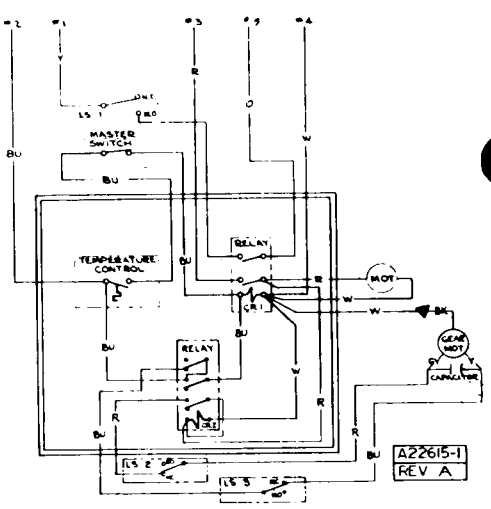

A22615-1
Optional C55J
Crusher

WIRING DIAGRAM
208/60/1
Air Cooled

LINE VOLTAGE
208/60/1
115 — 115
20 AMP FUSE MAXIMUM

SUMP PUMP MOT
AGITATOR MOT
FAN MOT

TERMINAL BOARD
MAGNETIC CONTACTOR
COMPRESSOR TOGGLE SWITCH
TIMER MOT
NEUT LO2 LO1
RELAY
BIN TEMP. CONTROL
EVAPORATOR TEMP. CONTROL
SOLENOID WATER VALVE
SOLENOID FLOW CONTROL
MASTER TOGGLE SWITCH
PROTECTOR EXTERNAL
CURRENT RELAY
STARTING CAPACITOR
RUN CAPACITOR
MOTOR
FUSITE

THIS UNIT MUST BE GROUNDED

A19803-10
REV. C

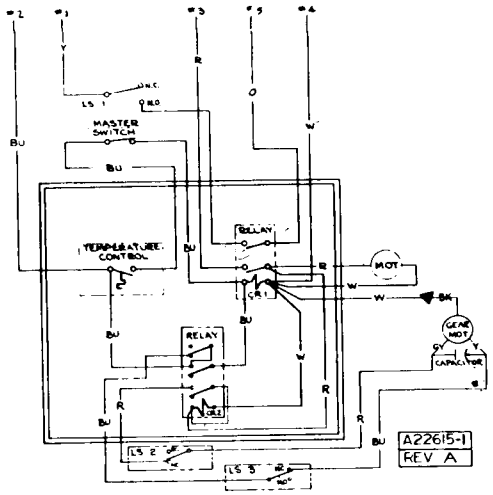

A22615-1
Optional
C55J Crusher

WIRING DIAGRAM
208/60/1
Water Cooled

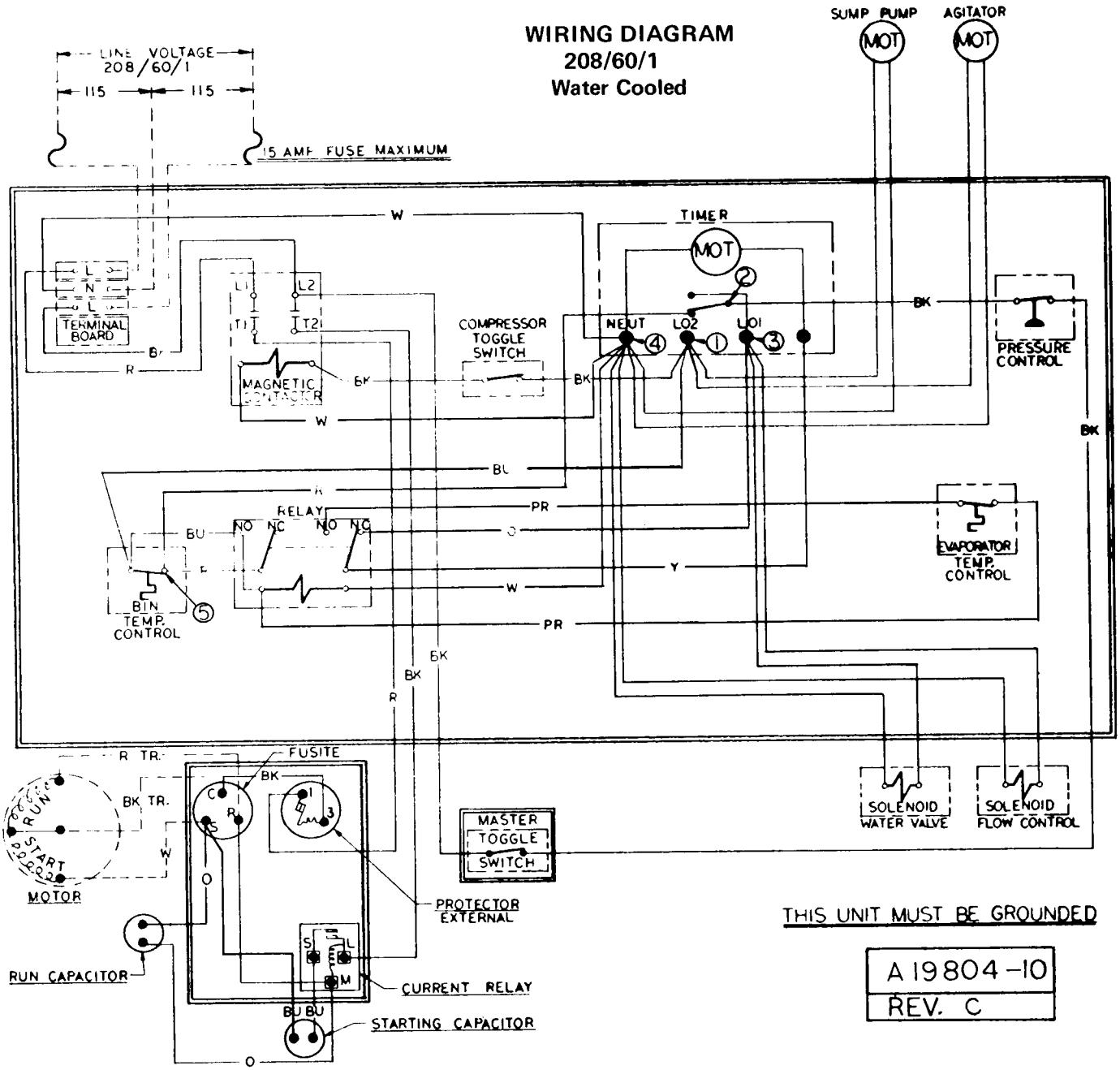

THIS UNIT MUST BE GROUNDED

A 19804-10
REV. C

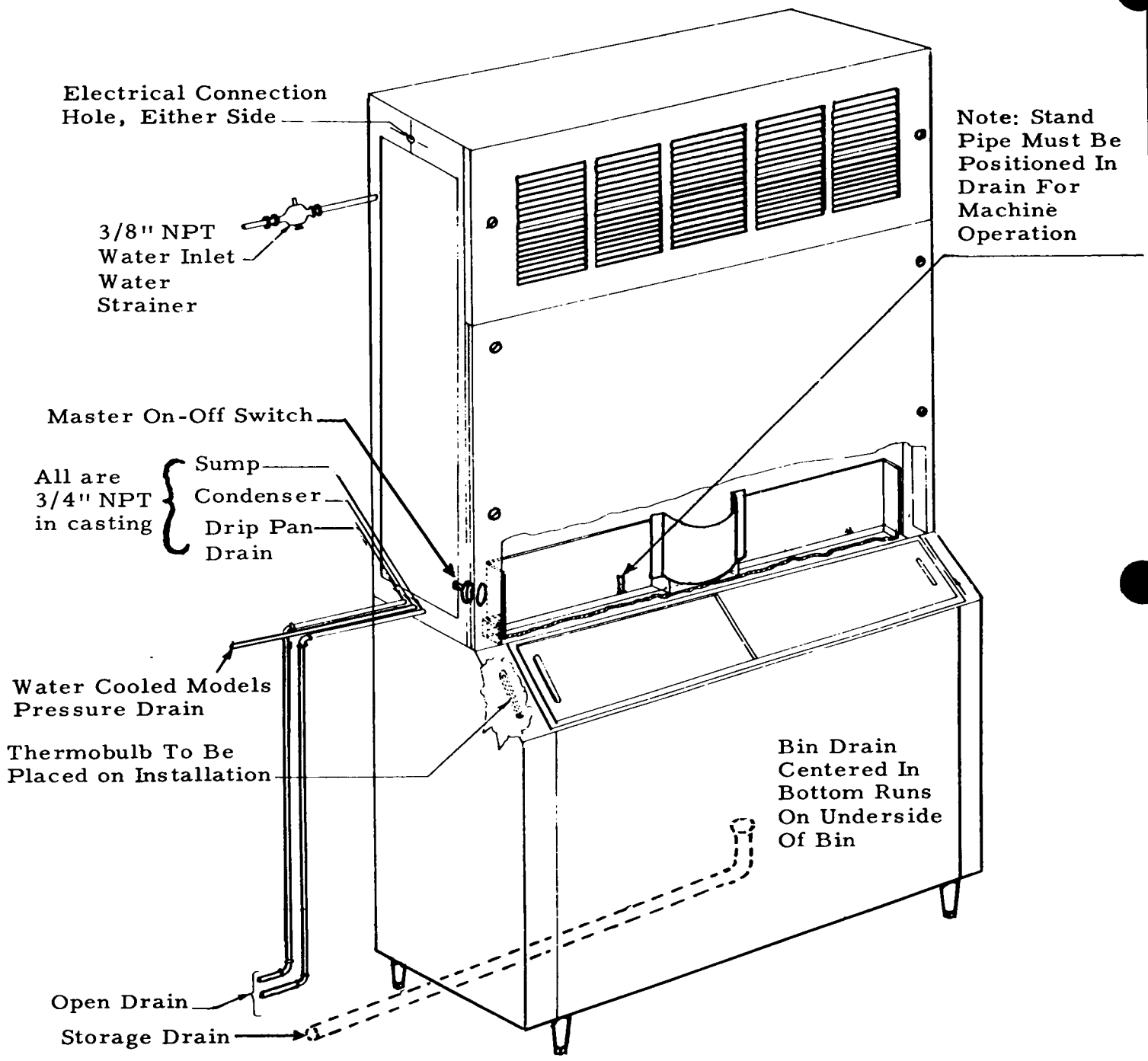

NOTE: Hand shut off valve to be located ahead of water strainer.
Air cooled models do not use condenser or pressures drain.

SC-300 INSTALLATION

FINAL CHECK LIST

1. Is the unit level? (IMPORTANT)
2. Have all electrical and piping connections been made?
3. Has the voltage been tested and checked against the nameplate rating?
4. Have the compressor hold-down bolts been checked to insure the compressor is snug to its mounting pads?
5. Is the water supply valve open and the electric power properly hooked up?
6. All masking tape removed from doors, panels and inner freezer curtain?
7. Is the unit clean? Has storage bin been wiped clean with cold water cloth?
8. Has the owner been given the operating manual, and has he been instructed on how to operate the machine?
9. Have the installation and registration cards been filled out? Check for correct model and serial numbers from serial plate on unit then promptly mail card to factory.
10. Check all refrigerant and conduit lines to guard against vibrations and possible failure.
11. Is there 4" clearance behind and around unit for proper air circulation?
12. Is unit in a room where ambient temperatures are minimum 50° F. even in winter months?
13. Has water supply pressure been checked to insure at least a minimum pressure of 20 pounds?

INSTALLATION

START UP

1. On all water cooled models, turn on water supply to water-cooled condenser and check for leaks in connections made.
2. Turn on cube supply at hand shut-off valve. Make sure hot water tank fills to overflow, if it does not, adjust timer lever to 3-1/2 minute setting. NOTE: Unit has built-in water flow control set to reduce flow rate to approximately .75 gallons per minute.
3. Check electrical circuit. Do not connect with other appliances into one ordinary wall outlet.
4. Inspect components in electrical control box, check for loose or frayed wire, then turn both manual switches to "on" position. NOTE: All "J" model cubers have two manual on-off switches. One is for motor compressor only during cleaning operation, one is master switch for complete unit.
5. Turn disc on time clock to the right just far enough for water solenoid valve to energize. Allow clock to take it through harvest cycle. This will be approximately 3-1/2 minutes. Dial pointer should be set on Number 3-1/2. After the compressor starts, turn the dial completely around and send it through another harvest cycle. Do this several times. This will completely flush out machine of any dust that may have accumulated in shipment.
6. After machine has been properly flushed, allow it to go into a freezing cycle - check for possible water leaks, check sump pump operation - should be running freely. Also note if jet tube travel is correct, and that none of the jets are plugged. Jet spray of water should hit the middle of the cups.
7. Time clock dial does not rotate at the end of the harvest cycle; it is started later by the cube size control located in the control box.
8. Freezing time will be approximately 25 minutes in a 70 degree ambient. (Longer if above, and shorter if below.) Average complete cycle time is 30 minutes.
9. Watch first cube harvest and check to make sure that plastic curtain has not been damaged in shipment.
10. Check size of cubes made: If too small, after a second cycle, adjust cube size control to lower or colder setting - until desired cube size is reached. Normal cube size is with a 3/8" depression in crown.
11. Check texture of cubes made: Partially cloudy cubes throughout suggest unit running short of water near end of freezing or possible an extremely bad water condition, which would indicate use of filtering or purifying equipment. Contact SCOTSMAN - Queen Products, Div., Ice Machine Service Department, Albert Lea, Minnesota, for further details.
12. With unit on harvest cycle, take a handful of cubes made and hold on storage bin thermostat cover. Should cut unit off in one or two minutes - remove ice: unit should cut back on automatically. Thermostat is factory set at 35 degrees out, 39 degrees in.
13. Install gauges and check head and back pressure: air-cooled models, head pressure after twenty minutes of freezing cycle at 70° ambient will be approximately 125 pounds PSI. The back pressure starts out at approximately 50 pounds PSI and gradually pulls down to approximately 4 pounds PSI just before harvest cycle. Higher ambients and dirty condenser will cause higher pressures. Water-cooled models have water regulating valves factory set at 125 PSI: check reading and adjust if necessary. Back pressure will operate the same as on air-cooled models.
14. Remove gauges, replace control box cover and all service panels.
15. Instruct owner on how to operate and clean machine.

HOW IT WORKS

During our freezing cycle, water is trapped in heat exchanger tank, (1-3/4 gallons). Here it picks up heat from the compressor discharge line which is coiled and soldered externally to its outer circumference. The closed control type solenoid keeps fresh water from entering tank and also holds water in the tank from leaking back out. During defrost period, our open type water valve solenoid is energized allowing warm water to be trapped in the platen cavity, also the closed control type solenoid is opened allowing new incoming water to force stored warm water out of heat exchanger tank into platen cavities, performing our defrost.

At the end of the freezing cycle, time clock operated cam opens, stopping compressor, spray bar motor and sump pump and closes circuit to both solenoid operated water valves. Energizing solenoid flow control (A) allows heated water in hot water tank to flow out top by inlet water pressure through solenoid operated valve, and into upper cavity of the freezing chamber, and at the same time solenoid allows (B) the surplus water from the preceding batch of ice cubes to go down the drain. The hot water from the water tank flows into the rubber platen holding the cups and by conduction on back of cups causes cubes to defrost. The platen cavity is completely filled up to the overflow point, and

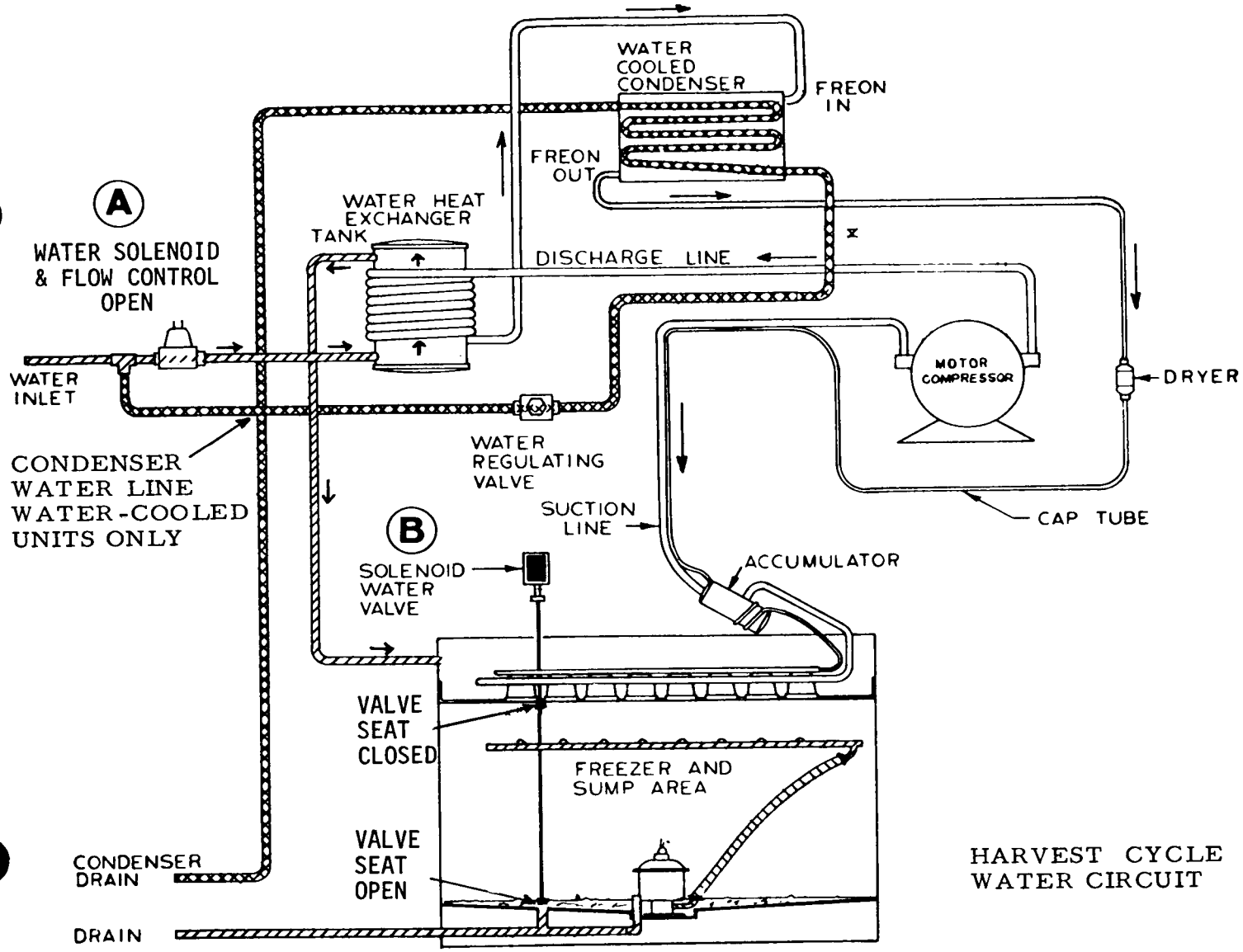

HARVEST CYCLE WATER CIRCUIT

continues to overflow while in the defrost cycle; the amount of this water running over the overflow pipe is controlled by the flow control and the length of harvest time setting on the clock; overflow water goes down the drain also. Meanwhile, cubes being released from the cups drop by gravity onto the cube chute, through curtained opening and into storage bin. At completion of harvest cycle, the micro-switch on the timer now drops points holding defrost components in cycle and switches to freezing cycle set of contacts. Clock motor now stops and will not start until cube size control closes once more. The freezing cycle starts and the water valve allows the hot water tank to refill. The chilled water from the upper cavity flows by gravity through the water valve to the sump tank and reservoir. This water is used to produce the next batch of cubes.

All water used by the cuber enters first thru the water supply inlet and goes directly into the condenser receiver. During a normal freezing cycle, water then goes to a tee to the water regulating valve which is on the inlet side of the condenser water circuit and down the drain. At the start of the freezing cycle, reservoir and sump tank contain enough water to make a complete batch of ice cubes, plus approximately an extra cup. When time clock closes load circuit, it starts the compressor, sump pump. At the same time, it opens the circuit to the clock motor. (Clock motor does not run first part of freezing cycle—this is approximately 15 minutes.) This timer has a double cam, double contacts arrangement for carrying and directing current. After a predetermined amount of ice is frozen, the cube size or reverse acting temperature switch closes, actuating the time clock motor circuit which continues the freezing cycle approximately 12 more minutes. (After clock motor starts, freezing time will be 15 minutes less defrost time setting.)

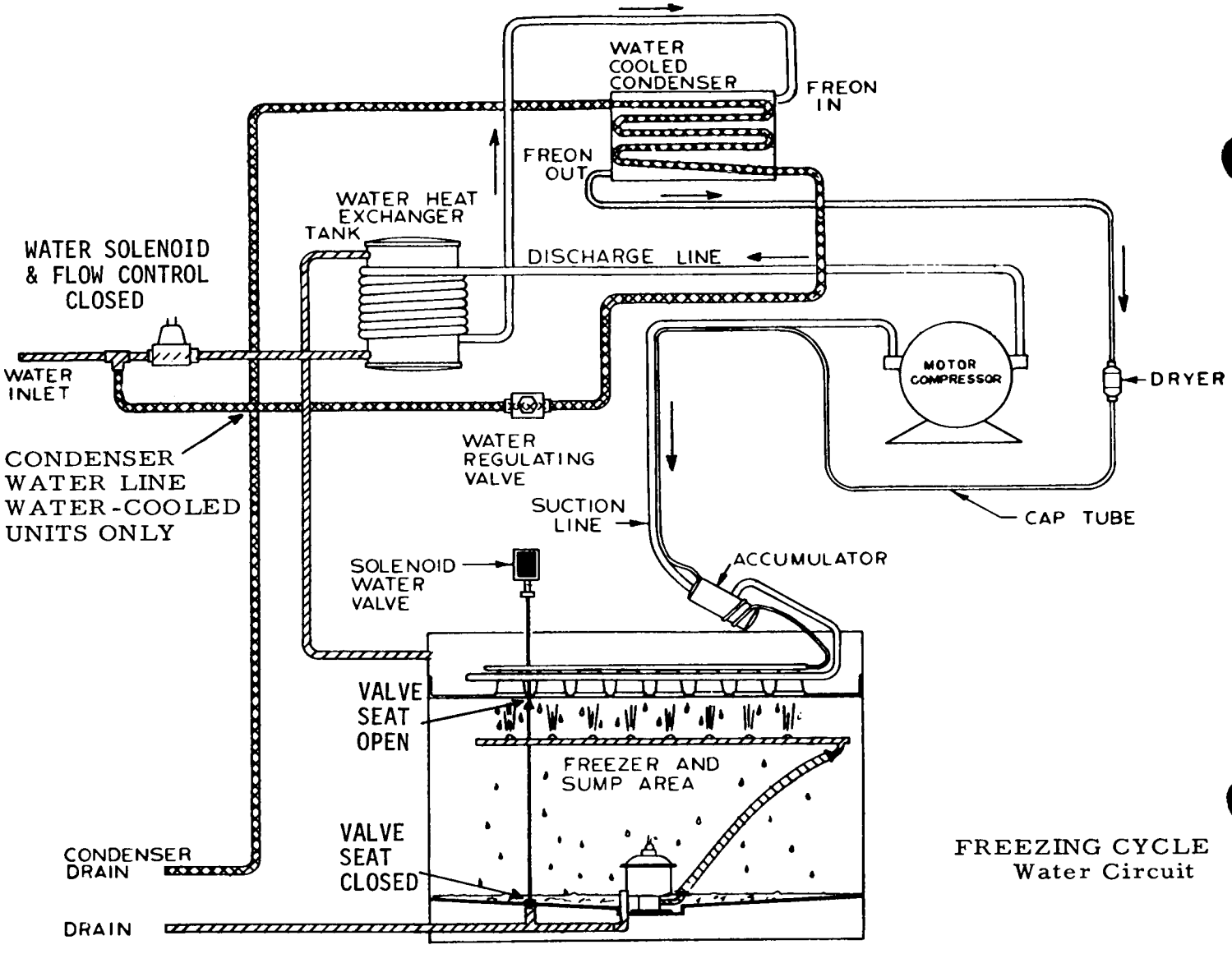

FREEZING CYCLE
Water Circuit

SYMPTOM	POSSIBLE CAUSE	SUGGESTED CORRECTION
Unit will not run	Blown fuse	Replace fuse & check for cause of blown fuse.
	Bin thermostat set too high	Adjust thermostat. Set between 35° to 39° degrees.
	Switch in OFF position	Turn switch to ON position
	Inoperative master switch	Replace switch
	Timer contacts open	Replace timer contacts.
Compresser cycles intermittently	Low voltage	Check circuit for overloading. Check voltage at the supply to the building. If low, contact the power company.
	Dirty condenser	Clean with vacuum cleaner, air or stiff brush. (Do NOT use wire brush.)
	Air circulation blocked.	Allow sufficient air space all around unit.
	Inoperative condenser fan motor	Check to see if defective, If defective, replace.
	Non-condensable gases in system	Purge the system.
Cubes too small	Cube size control set too high	Lower the setting.
	Partially restricted capillary	Blow charge, add new gas & drier.
	Moisture in system	Replace the dryer.
	Shortage of water	See remedies for Shortage of water.
	Shortage of refrigerant	Check for leaks and recharge.
Cloudy Cubes	Shortage of water	See Remedies for Shortage of Water.
	Dirty water supply	Use water softener or water filter.
	Restricted drain on pump	Clean pump strainer.
	Accumulated impurities	Use SCOTSMAN Ice Machine Cleaner.
Poor harvests	Too short defrost time	Check and adjust harvest cycle. Timer should be set at 3-1/2.
	Water temperature too low	Temperature of the water in hot water tank too low. Should be between 100-110 degrees.
	Restriction in incoming water	Check water feed line strainer and flow control.
	Insufficient quantity of hot water	Water pressure too low. Flow control needs replacing or cleaning.
	Solenoid valve not opening the water valve	Solenoid binding or burned out. Replace.
	Air vent holes in upper cube cups plugged	Clean out holes.
Shortage of water	Water spraying out through curtains	Replace broken curtains if any broken. Adjust travel of jet tube if spraying too far forward.
	Water valve leaking	Check the valve for foreign matter. Check valve seats and replace if necessary. Travel on Solenoid not enough. Holding valve open.
	Water entering hot water tank too slowly	Check water pressure and flow control. Clean strainer.
Irregular size cubes and some cloudy	Some jets plugged	Clean jets.
	Shortage of water	See Shortage of Water.
	Unit not level	Water overflowing air vent holes on low side burning cubes. Level as required.
Cubes too large	Cube size control set too low	Raise setting on cube size control.
Decreased ice capacity	Inefficient compressor	Replace.
	Timer points stuck together	Replace Micro switch.
	Leaky water valve	Replace or repair.
	High head pressure	Dirty condenser. Clean Bad fan motor. Replace. Non-condensable gas in the system: Purge the system. Too hot a location with poor circulation: relocate the unit, or provide for ventilation by cutting openings. Overcharge of refrigerant. Correct the charge.
	Partially restricted cap tube	Purge & replace charge and drier.
Hole washed inside cube	Water over the top of the cube cups during harvest	Level unit

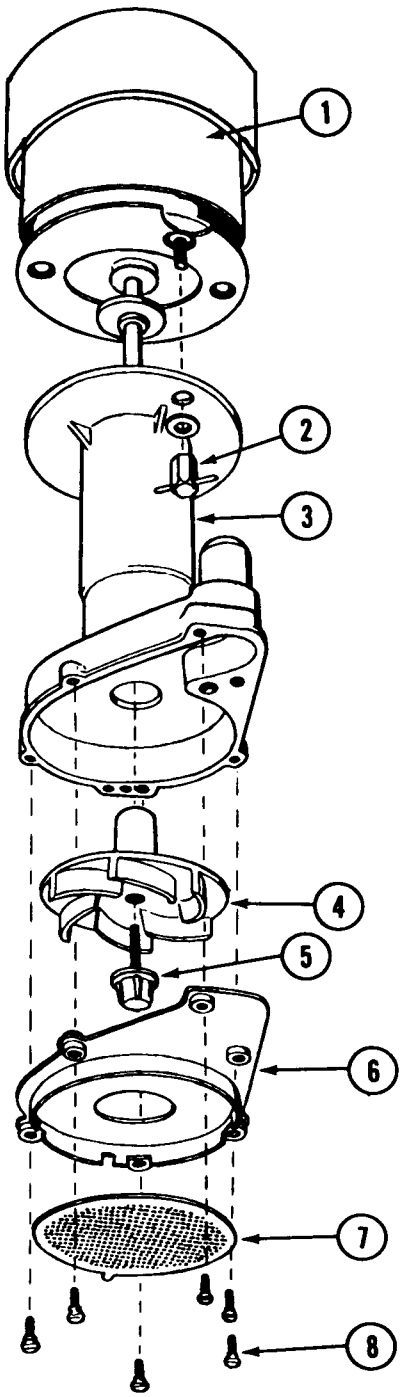

SC-300 J SUMP PUMP

ITEM	PART NO.	NAME
1	12-1701-50	Motor Only
2	12-1351-32	Wing Hex Nuts
3	12-418-30	Pump Body
4	12-1351-21	Impellar and Spring
5	12-1351-31	Impellar Screw and Gasket
6	12-1351-27	Bottom Inlet Plate
7	12-1351-26	Inlet Screen
8	12-1351-29	Wing Screws
	12-1701-1	Complete Pump

SC-300 J CONTROL BOX ASSEMBLY

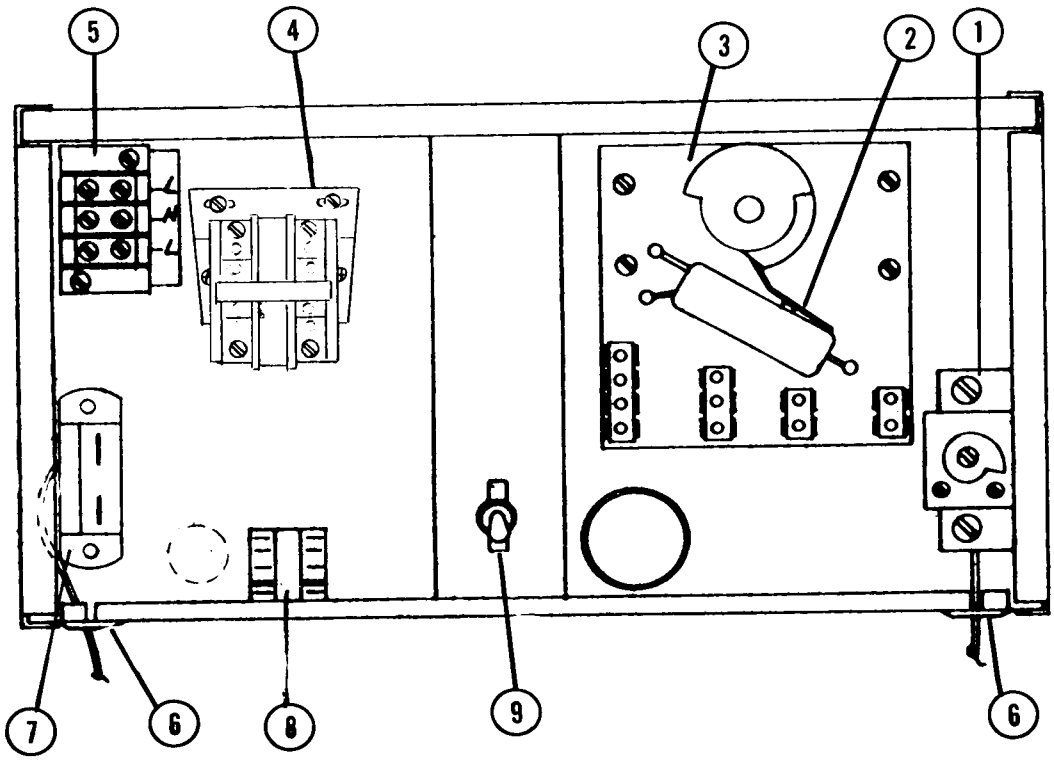

ITEM	PART NO.	NAME
1	11-345	Cube Size Control
2	12-1721-50	Micro Switch
3	A-21038-1	Timer Assembly Complete
4	12-820-1	Contactor
5	12-813	Terminal Board
6	13-124	Grommet
7	11-353	Bin Thermostat
8	12-1645	Relay
9	12-426	Switch

SC-300 J MODEL

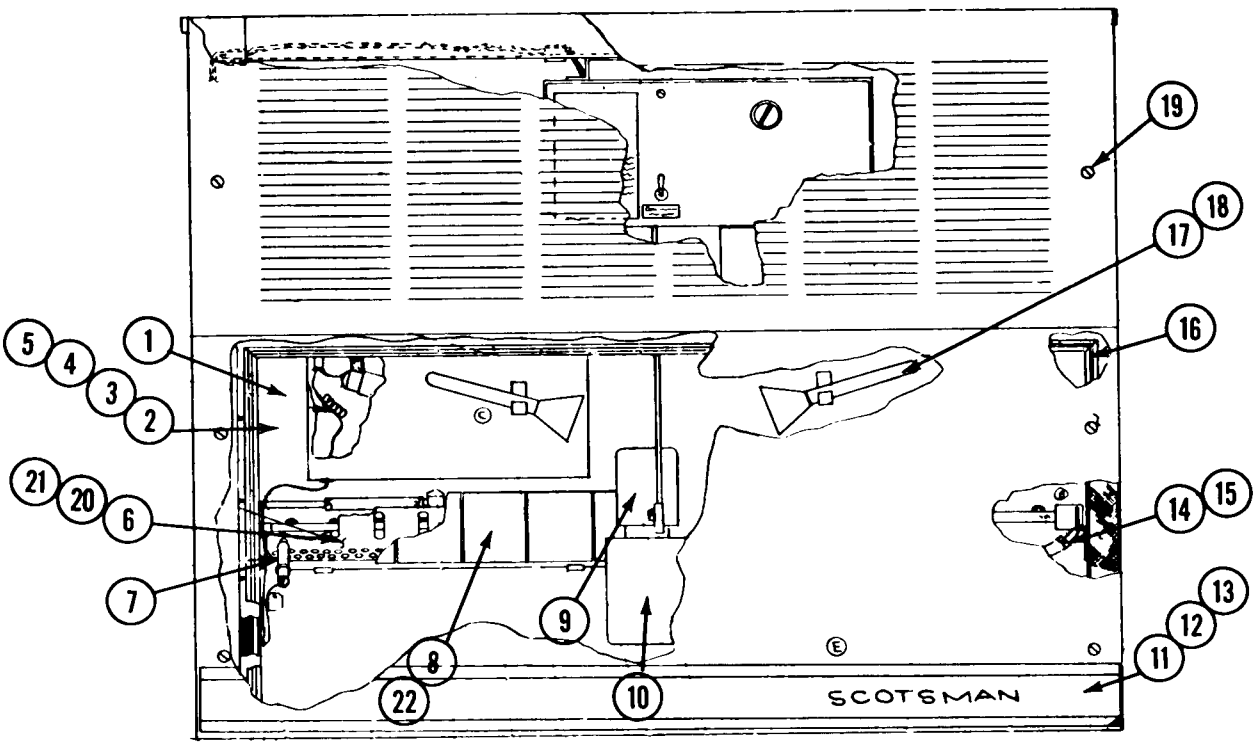

ITEM	PART NO.	DESCRIPTION
1	A-16458	Face Plate
2	A-19805	Freezer Ass'y Complete
3	A-16264	Left Cup Ass'y
4	A-16261	Right Cup Ass'y
5	13-109-1	Rubber Cup Holder
6	A-16718	Cube Chute Left
7	3-727	Thumb Screw (curtain)
8	A-16778	Left Curtain Ass'y
9	12-1701-1	Sump Pump
10	A-17521	Stand Pipe *
11	15-474	Emblem Decal
12	A-5720-9	Moulding Trim
13	15-61	Moulding Clip
14	2-536-1	Hose Clamp
15	5-179	Tygon (per ft.)
16	A-17126	Door Gasket
17	13-335	Funnel
18	2-1396-1	Clamp
19	3-789	Screw (6 required)
20	A-16720	Cube Chute, Right
21	A-16716	Deflector
22	A-16777	Curtain Assy., Right

* Not Shown

IN PACKAGE:

A-16108	Buttons
13-590	Bulb Gasket
A-15759	Bulb Cover

SC-300 J AIR COOLED CHASSIS
Top View

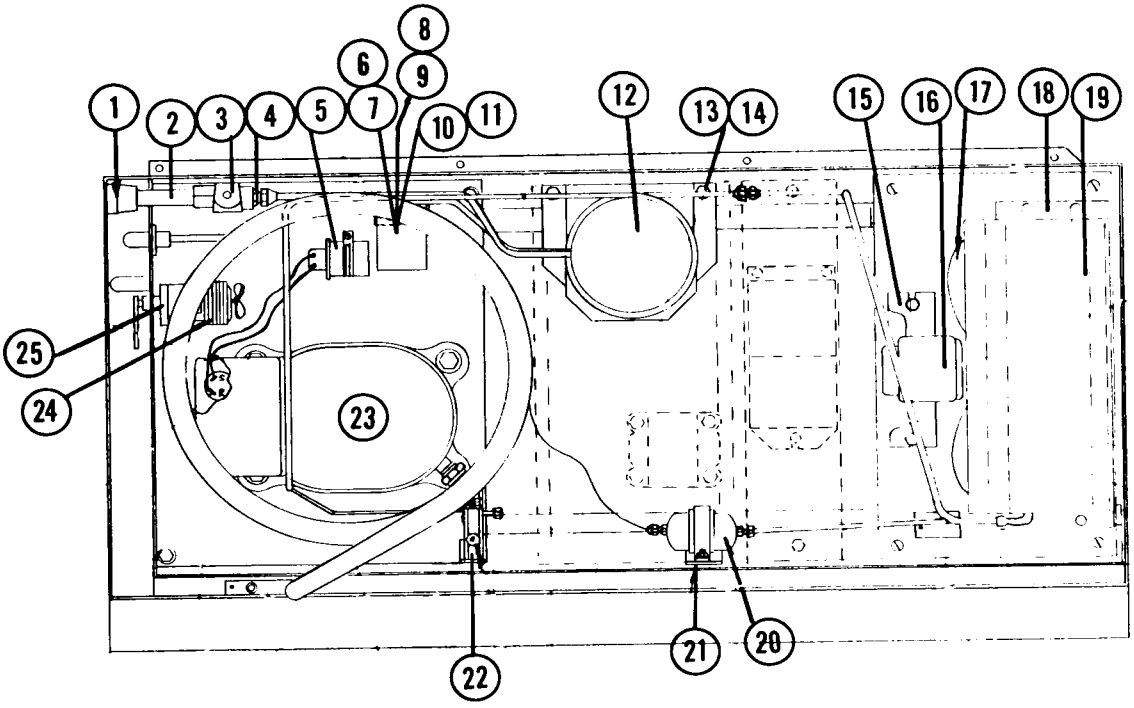

ITEM	PART NO.	DESCRIPTION
1	A-10706	Inlet Casting
2	16-115-1	Nipple
3	12-621A-1	Solenoid Valve
4	12-621-21	Flow Control
5	18-1902-17	Run Capacitor
	13-666	Terminal Cover
6	12-796-1	Defrost Solenoid
7	S-8995	Solenoid Key
8	3-1403-31	Screw (4)
9	13-610	Grommet (4)
10	3-1407-4	Washer (4)
11	3-1269	Nut (4)
12	A-19792	Hot Water Tank Ass'y.
13	13-1405-3	Screw (2)
14	3-1407-5	Washer (2)
15	18-388	Fan Mtr. Bracket
16	18-559-1	Fan Motor
17	18-625	Fan Blade
18	18-334	Condenser
19	A-12111	Condenser Shroud
20	2-544	Dryer
21	A-9388	Drier Brace
22	18-138	Hi Side Service Valve
23	18-2400-1	Compressor 115/60/1
24	A-23391-1	Drive Motor
25	3-1513	Screw (4)
	3-1406-3	Nut (4)
	3-1410-2	Washer (4)

SC-300 J WATER COOLED CHASSIS
Top View

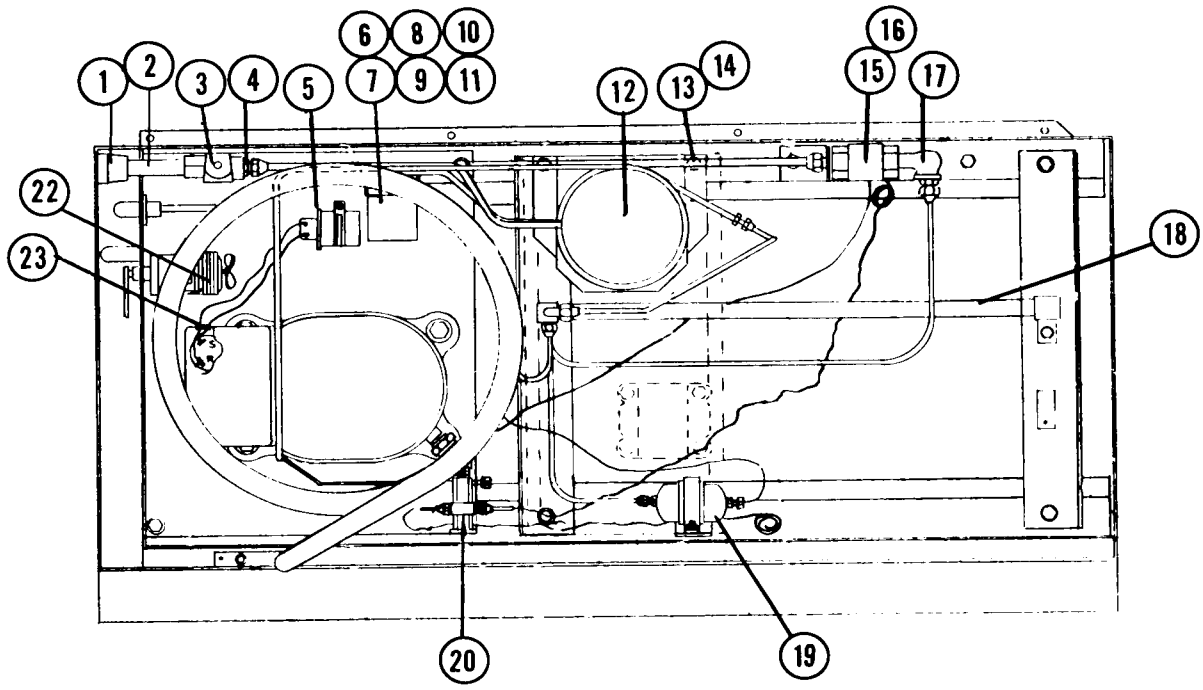

ITEM	PART NO.	NAME
1	A-10706	Inlet Casting
2	16-98-2	Nipple
3	12-621A-1	Solenoid Valve
4	12-621-21	Flow Control
5	18-1902-17	Run Capacitor
	13-666	Terminal Cover
6	12-796-1	Defrost Solenoid
7	S-8995	Solenoid Key
8	3-1403-31	Screw (2 required)
9	13-610	Grommet (4 required)
10	3-1407-4	Washer (4 required)
11	3-1269	Nut (4 required)
12	A-19835	Hot Water Tank Ass'y.
13	13-1405-3	Screw (2 reqd)
14	13-1407-5	Washer (2 reqd)
15	11-198	Water Valve
16	A-11899	Valve Bracket
17	16-355	Half Union
18	18-354	Condenser
19	2-544	Drier
20	18-138	Hi-Side Service Valve
21	18-2400-1	Compressor 115/60/1
22	A-23391-1	Drive Motor
23	3-1513	Screw (4 required)
	3-1406-3	Nut (4 required)
	3-1410-2	Washer (4 required)

COMPRESSOR ASSEMBLY

SC-300J
TOP VIEW

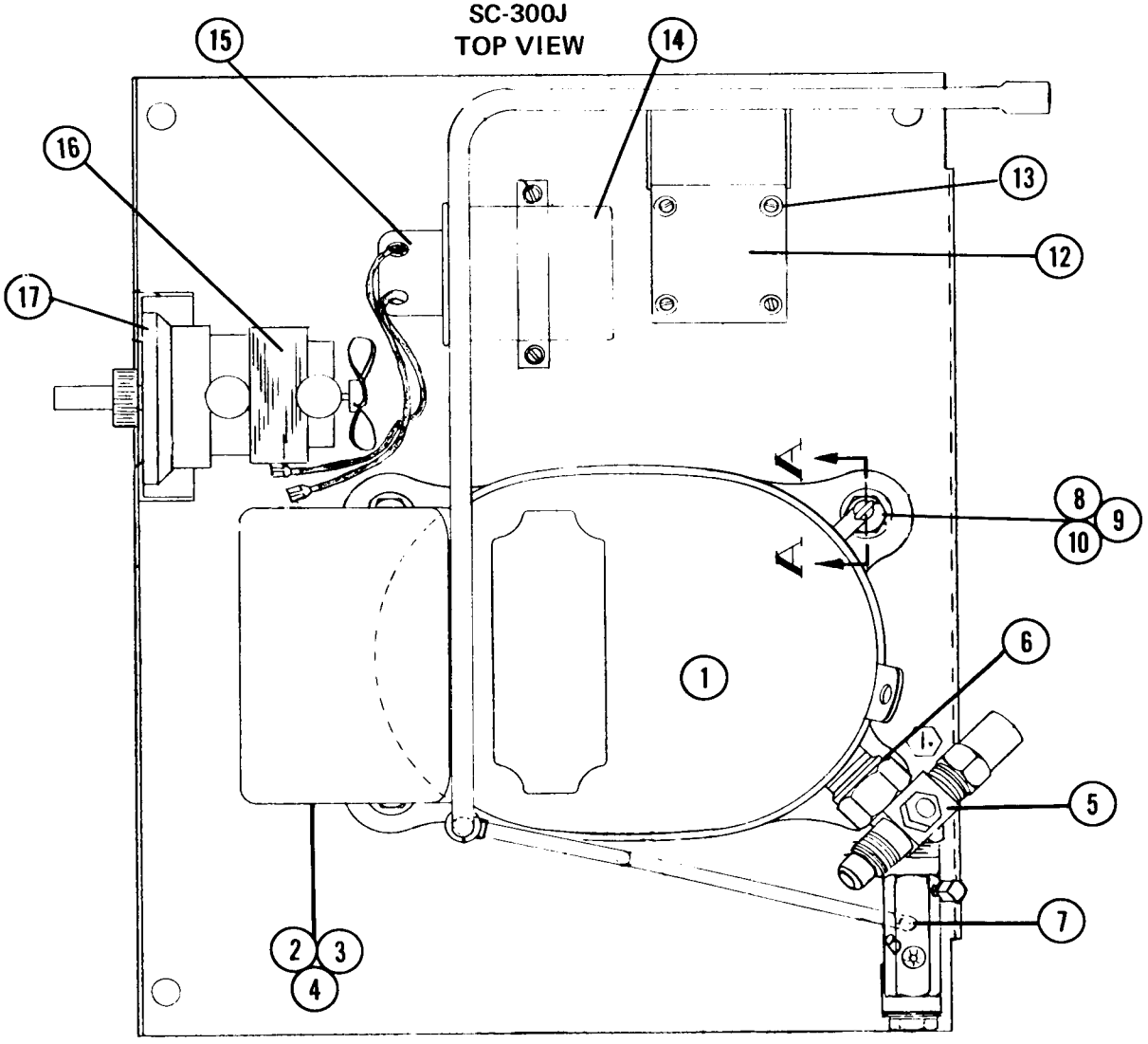

ITEM	PART NO.	NAME
1	18-2400-1	Compressor 115/60/1
2	18-2400-25	Overload *
3	18-2410	Relay *
4	18-2420	Start Capacitor *
5	18-2201-30	Suction Valve
6	18-2300-29	Valve Seal *
7	18-138	Hi-Side Service Valve
8	3-1405-20	Screw (4 required)
9	3-1407-7	Washer (4 required)
10	18-2200-27	Mounting Sleeve (4 required)
11	18-2200-28	Mounting Grommet (4 required)
12	12-796-1	Solenoid
	S-8995	Solenoid Key *
13	3-1403-31	Screw (4 required)
	3-1269	Nut (4 required)
	3-1407-4	Washer (4 required)
	13-610	Grommet (4 required)
14	18-1902-17	Run Capacitor
15	13-666	Terminal Cover
16	A-23391-1	Drive Motor
17	3-1513	Screw (4 required)
	3-1406-3	Nut (4 required)
	3-1410-2	Washer (4 required)

* Not Shown

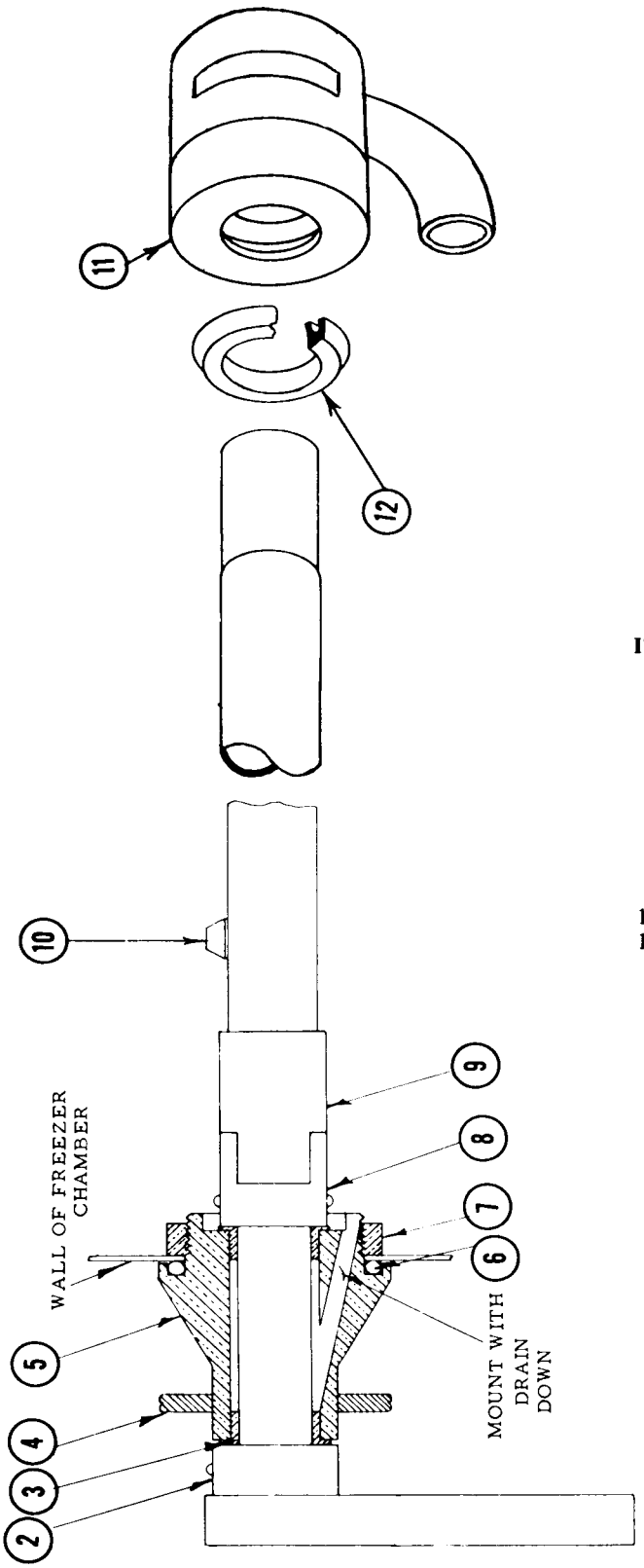

SC-300 SPRAY TUBE AND SPRAY TUBE DRIVE ASSEMBLY
"J" Models

ITEM	PART NO.	NAME
1	S-7130	Collar
2	2-438	Flange Bearing
3	13-169	Grommet
4	A-5660	Drive Bearing Support
5	2-610	"O" Ring
6	S-7635	Nut
7	A-5679	Driving Journal Ass'y
8	A-16714	Sprayer Tube Complete
9	2-1803-1	Jet
10	A-16963	End Bearing Ass'y
11	13-168	"U" Cup

SPRAY BAR DRIVE LINKAGE
SC-300 J Model

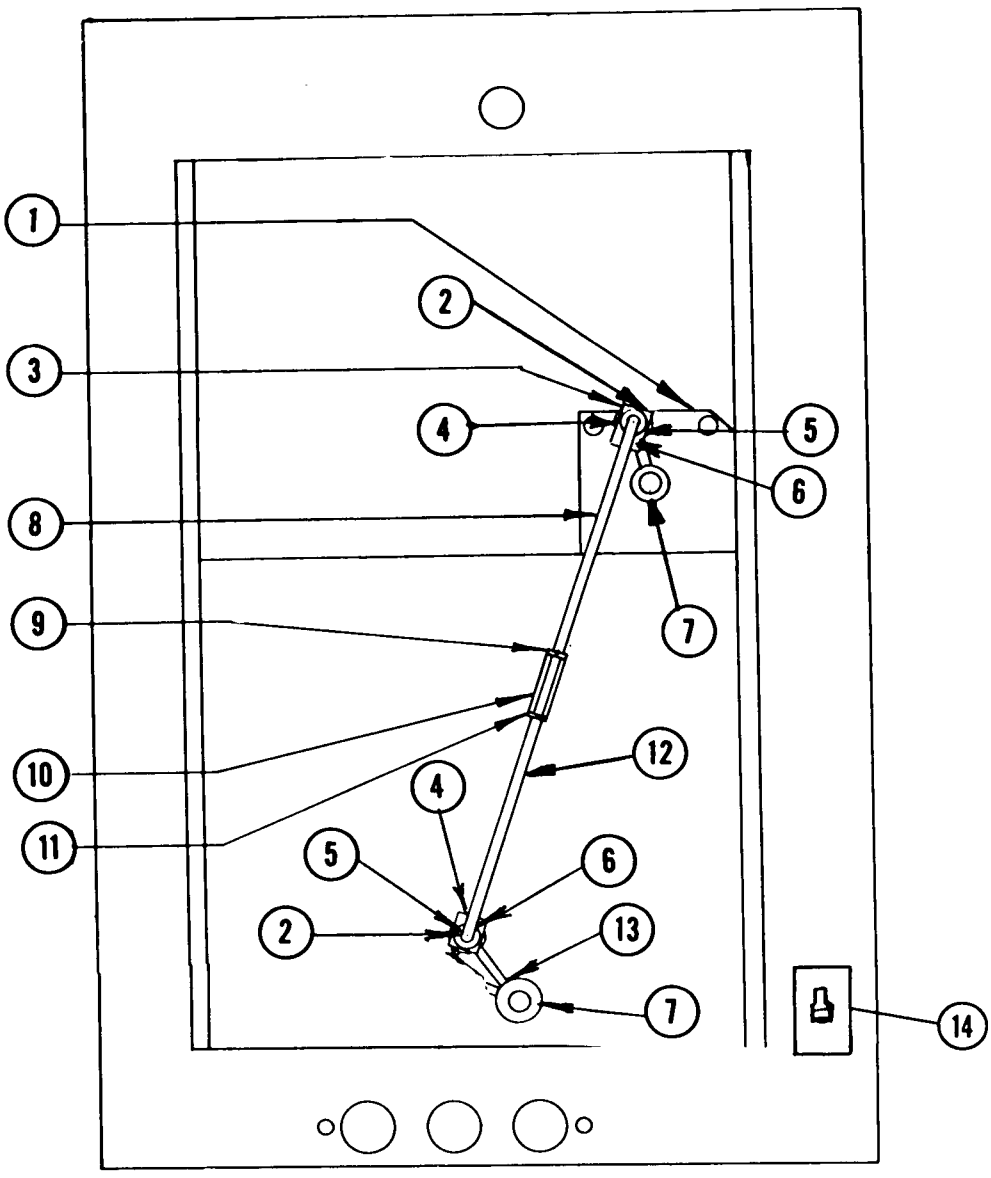

ITEM	PART NO.	NAME
1	A-23391-1	Drive Motor
2	3-396-1	Cotter Key
3	S-9666	Driver Arm
4	A-7033	Bearing
5	3-1407-5	Washer
6	S-7558	Bearing Clip
7	3-431	Set Screw
8	A-10641	Left Upper Linkage
9	S-7937	Left Lock Nut
10	S-7936	Linkage Coupling
11	3-1406-9	Right Lock Nut
12	S-7938	Bottom Linkage
13	S-9619	Driven Arm
	A-10716	Complete Linkage Ass'y (Less Motor)
14	12-537	Switch 115/60/1

WATER VALVE ASSY

SC-300 Thru "J" Models

ITEM	PART NO.	NAME
1	2-549	Spring
2	A-10642	Lower Valve Rod
3	S-8949	Valve Guide
4	2-545	"O"Ring *
5	3-1069	Cotter Pin
6	S-8948	Lock Nut
7	S-8950	Valve Nut
8	S-7974	Stainless Pin
9	S-8953	Lower Link
10	S-8578	Drain Nut
11	S-6924	Valve Seat Washer
12	2-419	Compression Spring
13	S-8942	Valve Guide Assembly (includes pin and tube)
14	3-396-1	Cotter Pins
	* Not Shown	
	A-18875	Valve Complete

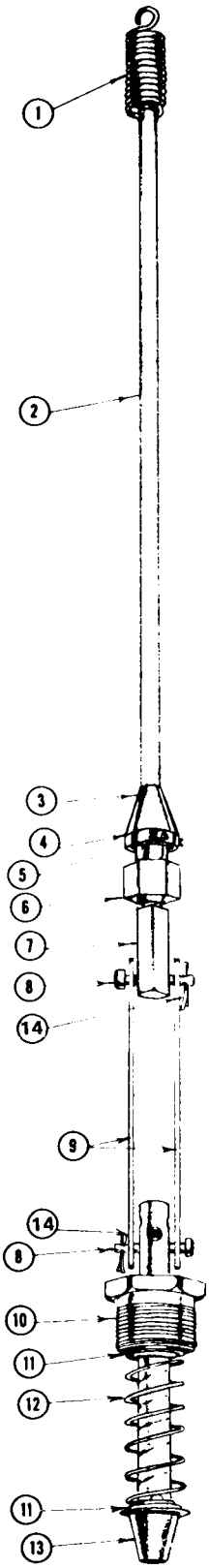

SC-300 AIR and WATER COOLED CASE ASSY

"J" Models

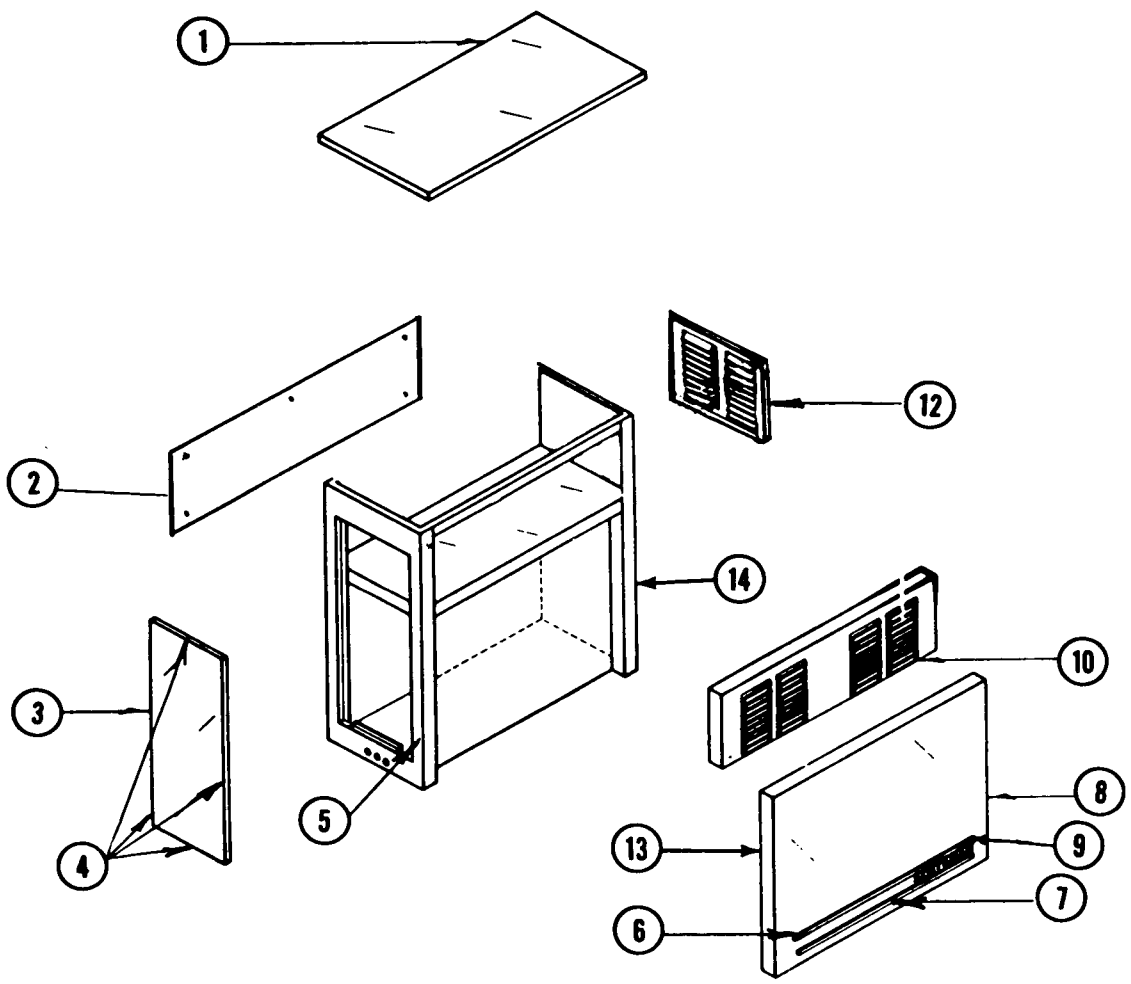

ITEM	PART NO		NAME
	Gray	S.S.	
1	A-17452	A-17452-1	Top Panel
2	A-9321	A-9321-S	Back Assy
3	S-6713	S-6713-S	Left Side Door
4	3-1419-9	S	Screws
5	A-16876	A-16876-1	Left Panel
6	2-1512		Door Liner
7	A-5720-9		Moulding Trim (2)
8	15-61		Moulding Clip
9	A-17571		Door Gasket
10	A-16875	A-16875-1	Top Front Door
12	A-11910	A-16875-1	A.C. Right Side Door
	A-12024	A-12024-S	W.C. Right Side Door
13	A-16903	A-16903-1	Front Lower Door
14	A-11909	A-11909-S	Right Side Panel

FUNCTIONAL PARTS DESCRIPTION

11-353	Bin Thermostat Cutler Hammer No. 9530 N 213 Cut Off 35° cut in 39° Adjustable calibrate for altitude over 2,000 ft.
11-345	Cube size thermostat Ranco A11-377 Reverse acting, closes on temperature Decrease - Has adjustment dial
12-1645	Relay 115/60/1 Ameco or Potter Bumfield 3 PDT No. KU-11A-45 Holds cuber drive motor thru Harvest cycle
12-1701-50	Water recirculating, sump pump Hartell Inc. 3000 RPM - shaded pole, thermally protected motor - 1/25 H.P. 115/60/1
18-2400	Motor compressor 230/60/1 Copeland refrigeration - Copelaweld RSL2-0075-1AA 2 Pole, 3500 RPM Hermetic for use with refrigerant R-12.
18-1902-17	Running Capacitor Copeland Refrigeration No. 0124-0001-00 10 Microfarad rating
A-21038-1	Finishing Clock or Timer Manufactured by Queen Products Division 12-1721-50 — Micro switch.
A23391-1	Drive Motor Merkle Korff Model No. 3724UP-115 39 RPM 115/60/1 Shaded Pole
12-820-1	Contactor Furnas No. 41NA20AF-B 110/120/60/1
12-621A-1	Inlet water solenoid/flow control valve Detroit Control Company No. SSV-4552 .75 GPM Flow rate.
12-796-1	Solenoid (open type) Control's company of America No. 813-210-2
11-198	Water Valve (water cooled models only) Penn type V46AA-12

SERVICE – COMPLETE UNIT

ALL STEPS LISTED BELOW SHOULD ONLY BE STARTED WHEN WATER AND ELECTRICAL SUPPLY ARE OFF TO PREVENT ACCIDENTS.

To remove cabinet top.

1. Remove two screws on each end.
2. Lift top straight up.

To remove sump pump

1. Remove lower front door (4 screws)
2. Remove top front panel. (2 screws)
3. Remove screw holding wire tube bracket to pump.
4. Loosen hose clamp on sump pump discharge tube.
5. Pull sump pump out.
6. Disconnect wires in control box.
7. Pull wire from tube.
8. Replace pump in reverse of above. Note: Always try new pump in shop before putting on the job.

To remove drive motor

1. Remove left side panel.
2. Loosen set screw on drive journal arm to motor.
3. Take 4 nuts loose on mounting bracket to motor, including the four rubber grommets.
4. Disconnect leads from terminal board.
5. Install new motor in reverse of above.
6. Check and adjust spray bar travel as required.

To remove spray tube assembly

1. Remove lower front door.
2. Remove plastic curtain and cube trays.
3. Lift right end of spray bar out of holder. This loosens spray bar, also the tygon tubing connection and elbow.
4. Pull tygon tubing and stationary elbow off this end of spray tube. (Has rubber O-Ring sealer)
5. Replace in reverse of above

To remove water inlet solenoid/flow control

1. Remove cabinet top.
2. Pull electrical leads from spade terminals on top of solenoid.
3. Loosen the 3/8" S.A.E. flare nut on outlet side of valve (2 flare nuts on water cooled models)
4. Unscrew entire valve body assembly from its pipe fitting on inlet side.
5. Replace in reverse of above.

To remove open type solenoid – Water Valve Linkage

1. Remove cabinet top.
2. Pull two electrical jacks from solenoid coil.
3. Remove 4 screws and rubber mounts holding solenoid to bracket
4. Solenoid coil and plunger will fall free.
5. Remove old solenoid core and the wire yoke that attaches to pull spring. Put this in new core and fasten to spring on valve linkage.
6. Re-assemble in reverse procedure, check operation after completion. When de-energized face space between coil and plunger faces is 3/4" to 7/8".

MAINTENANCE INSTRUCTIONS FOR SCOTSMAN SUPER CUBERS

THE FOLLOWING MAINTENANCE SHOULD BE SCHEDULED EACH (6) SIX MONTHS ON ALL SCOTSMAN SUPER CUBERS.

1. Clean air-cooled condenser; This is to be done frequently with the machine shut off.
2. Clean hot water tank and evaporator, sump tank and screen, using Scotsman Ice Machine Cleaner or equivalent.
3. Remove jet tube and manually clean jets by unscrewing jets.
4. Check curtain assembly.
5. Tighten all electrical connections.
6. Tighten all bolts.
7. Check water supply. Check water pressure flow through flow control. Clean water strainer.
8. Oil jet tubes drive motor three (3) places. Use SAE 20 oil - 2 oil cups and slotted screw.
9. Check plunger on water solenoid valve. Should be 3/4" between faces.
10. Oil Condenser fan motor. Punch sealed cap or remove screws where possible.
11. Check for refrigeration leaks with halide torch.
12. Check for water leaks. Tighten drain line connections.
13. Check size and condition of cubes. Adjust as required. See Service Analysis Section.
14. Check bin thermostat setting. Factory set at 35° out, 39° in.

CLEANING INSTRUCTIONS FOR SCOTSMAN ICE MACHINES MODELS SC-300J

1. Remove front access doors.
2. Locate control box with time clock knob protruding thru cover.
3. Put unit through a harvest cycle manually. This may be done by turning time clock knob clockwise until a loud snap is heard.
4. Locate the rubber funnels which are on the face plate to the right and left of the sump pump. Pour 8 ounces (full bottle) of "Scotsman Ice Machine Cleaner" into each funnel, immediately after the loud snap in Step No. 3 is heard.
5. Let unit finish cube harvest cycle and start into freezing cycle. This will be approximately 5 minutes after the loud snap in Step No. 3 is heard. At this time turn off the compressor switch.
6. Let unit operate normally for 10 - 15 minutes into the freezing cycle. No ice will be made because the motor compressor is not in operation.
7. At the end of this time put the unit through 2 or 3 harvest cycles manually to allow fresh make up water to clean out remaining solution. Each time waiting approximately 5 minutes after the loud snap until the next harvest cycle is done manually.
8. Turn the compressor switch back on.
9. Check each new batch of cubes until they are clear and until acid taste has been removed from cubes.
10. Put hot water in storage bin to melt the cubes and thereby clean the drains with the same solution that has just cleaned the unit.
11. Use a damp cloth to wipe off curtains and inside of storage bin.
12. Replace all access doors.
13. Unit is now ready for continued automatic operation.

TABLE OF CONTENTS

FORWORD		1
TABLE OF CONTENTS		2
SPECIFICATION AND DIMENSIONS		3-4
PHOTOGRAPH AND ICE MAKING CHART		5
SELECTING LOCATION		
Location		6
Uncrating		6
Preparation for Installation		6
Setting up Machine		7
Placing Machine Section in Place		7
Installing Crusher		7
Plumbing		7-8
Electrical		8
Start Up		9
Wiring Diagram 230/60/1	AC	10
Wiring Diagram 230/60/1	WC	11
Wiring Diagram 208-220/60/3	AC	12
Wiring Diagram 208-220/60/3	WC	13
Wiring Diagram 208/60/1	AC	14
Wiring Diagram 208/60/1	WC	15
Wiring Diagram C-5B		16
Diagram Plumbing Connections		17
Final Check List		18
CYCLE OF OPERATION		
Harvest Cycle		19
Freezing Cycle		20
SERVICE ANALYSIS CHARTS		21-24
EXPLODED VIEWS OF COMPONENT PARTS		
Sump Pump		25
Control Box		26
Drive Linkage, Spray Bars		27
Front View, Complete Unit		28
Top View, Air Cooled		29
Top View, Water Cooled		30
Air Cooled Case Assy.		31
Water Cooled Case Assy.		32
Hot Water Tank and Water Valve Assy.		33
Spray Bar and Bearing Assy.		34
Drain Valve Assembly		35
SERVICE INFORMATION		
Water Valve Adjustment		36
Miscellaneous Service Information		37
Removing & Replacing Component Parts		38-39
Functional Part & Maintenance		40-45
Maintenance Instructions		46-47
Parts List		48-49

THIS PAGE
INTENTIONALLY
LEFT BLANK

THIS PAGE
INTENTIONALLY
LEFT BLANK

SPECIFICATIONS

	SC-500H	SC-500WH
Compressor	1 1/2 hp twin cylinder Semi Hermetic	1 hp twin cylinder Semi Hermetic
Condenser	Cleanable Air Cooled	Cleanable Water Cooled
Refrigerant	R12	R12
Refrigerant Charge	53 ounces	51 ounces
Refrigerant Control	Twin Capillary Tube	Twin Capillary Tube
Power Consumption	10 Amp., 3 Wire 230 V., 60 Cycle Single Phase	10 Amp., 3 Wire 230 V., 60 Cycle Single Phase
Water Consumption to Produce Ice	4 1/2 Gallons per hour	4 1/2 Gallons per hour
Water Used by Condenser		1 to 3 1/2 Gallons per minute. Varies with water temperature.
Ice Capacity	See Chart. Page 5	See Chart. Page 5
Companion Bins	B-400 B-650 B-1250	Same Same Same
Cube Size	Scotsman Super cube	Same
Cubes Per Harvest	160	160

Note: All Scotsman Super Cubers require neutral wire for secondary 115 volt component circuit: 3 phase cubers require 4 wire service with neutral. Special voltages upon request.

SPECIFICATIONS

SUPER CUBER SC-500 SERIES	MODEL SC-500WH	MODEL SC-500H	MODEL SC-500WH-SS	MODEL SC-500H-SS
Daily capacity up to 500 lbs.	X	X	X	X
400 lb., 650 lb. or 1250 lb. storage unit	X	X	X	X
Air cooled condenser		X		X
Water cooled condenser	X		X	
Heavy duty 1 HP. Compressor	X		X	
Heavy duty 1 ½ HP. Compressor		X		X
*Standard 115-230 V, 60 cy, 1 ph, 3 wire	X	X	X	X
½" water inlet NPT	X	X	X	X
¾" drip drain NPT	X	X	X	X
½" drain on B650H bin NPT				
¾" sump drain NPT	X	X	X	X
¾" condenser drain NPT	X		X	
Hammerloid grey exterior	X	X		
Stainless steel exterior			X	X
Stainless steel lined storage bin	X	X	X	X
98 5/8" to 99 3/8" height (with legs) and B650H Bin	X	X	X	X
90 5/8" height (without legs) and B650H Bin	X	X	X	X
42 ¼" width	X	X	X	X
34 1/8" Overall depth including bin (water cooled)	X		X	
39 1/8" Overall depth including bin (air cooled)		X		X
Shipping weight	540	522	546	528

*Neutral wire required

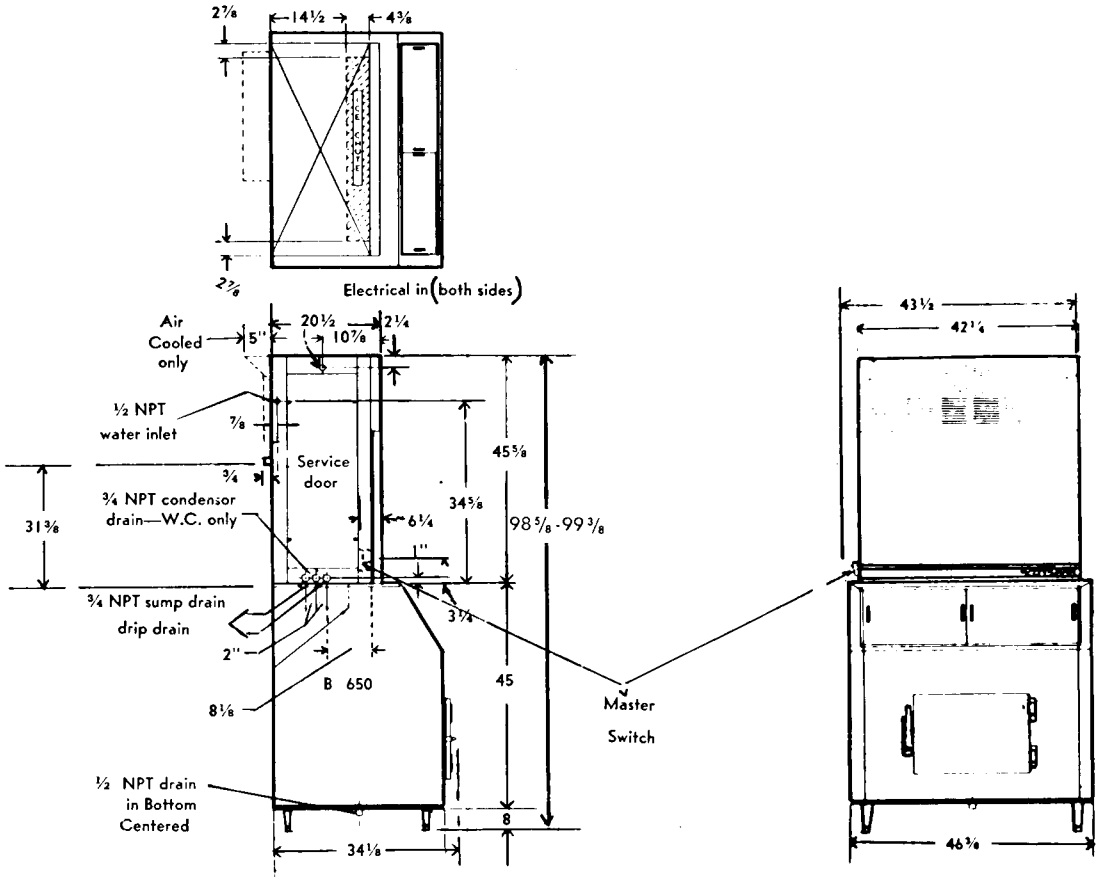

SCOTSMAN®

SUPER CUBER
SC-500
SERIES

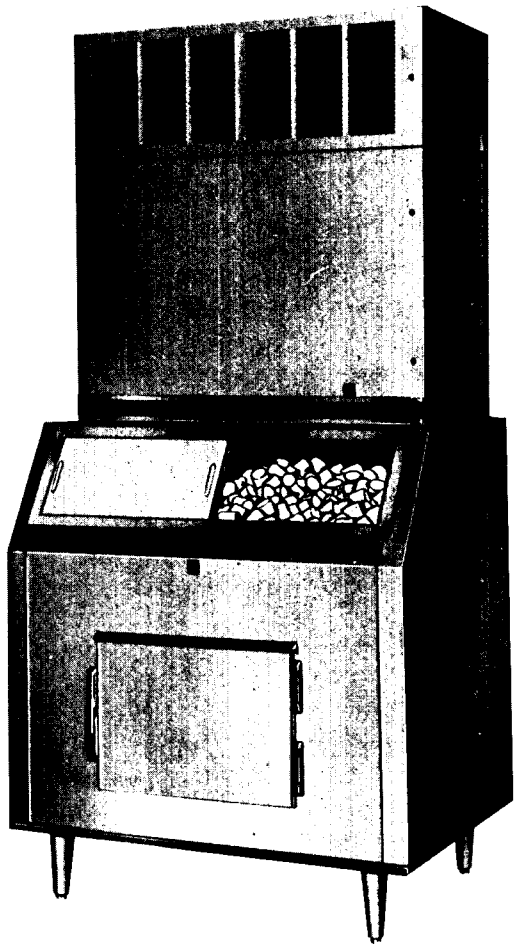

ice making capacity

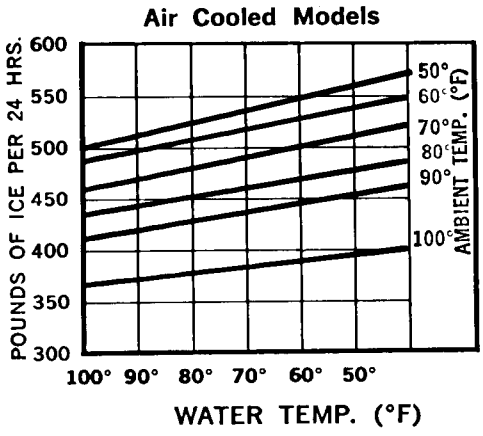

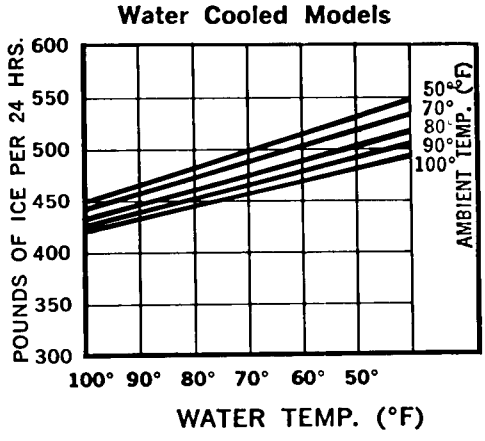

INSTALLATION

LOCATION

1. Select a location as convenient as possible for the user.
2. Accessible to the necessary electrical and plumbing connections.
3. If possible, have minimum space of 12 inches above top and from left end panel for service.
4. A minimum of 24 inches for the convenience of the user in front of the machine.
5. Room temperatures--minimum of 50 degrees, maximum of 100 degrees.

UNCRATING

1. If possible, do not uncrate until equipment is in permanent location.
2. Storage bin and machine compartments are shipped in separate crates.
3. Remove hold-down bolts from skids.
4. Remove crate in usual manner for wood crating.
5. Remove warranty card and Users manual from storage bin and wipe bin clean with damp cloth.
6. Fill out warranty card completely including model and serial numbers as taken from aluminum plate found behind front service panel and forward to Scotsman factory using self-mailing card.

PREPARATION FOR INSTALLATION

1. Inspect complete unit cabinetry for shipping damage. Notify carrier of concealed damage claims
2. Remove all service doors and panels.
3. Remove water reservoir cover and take out paper packing around float ball, make sure plastic overflow standpipe is securely in place. Adjust water level, by bending float arm, to the highest possible elevation without running over overflow standpipe.
4. Remove leg package from bin and install 4 legs in base sockets of bin.
5. Loosen motor compressor hold down nuts until motor compressor rides freely on mounting springs.
6. Remove all masking tape and packing members from curtains and inner cube making compartments. Re-align components such as sump pump or cube racks that may have shifted in transit.
7. Remove water strainer from machine section for installation on unit or in water supply line feeding unit.
8. Open electrical control box and prepare for hook up. Use knock outs, cord connectors, etc. Then check unit nameplate voltage against building source voltage to make sure they correspond. Caution - Improper voltage applied to units will void your warranty protection.

SETTING UP MACHINE

1. Be sure floor strength is capable of 1,000 pounds in an area of 29 inches by 42 inches.
2. If ceiling height permits, use 6 inch base legs for the storage bin which will make a more convenient height for the user and allow more fall from the storage bin drain.
3. Storage bin must be absolutely level. (This is important).

PLACING MACHINE SECTION IN POSITION ON ICE STORAGE COMPARTMENT

1. Remove front top service door and large front service door to facilitate handling.
2. Extreme caution must be used to prevent damage to the equipment or injury to the personnel.
3. If at all possible, use Carrying Handles. Have four men available at this installation.
4. If handles are not available, place 2 x 4's or other available shims at all four corners which allows clearance for fingers.
5. Place 2 x 4's lengthwise across storage bin a short distance in from front and back which will allow clearance for fingers when section is set in place.
6. Each man should take a position at corners of machine section using one hand to lift with and other hand to steady machine. (CAUTION--all four men should be instructed to lift together so as not to tip unit over.)
7. After machine is in position on 2 x 4's on bin section, tilt machine forward and backward to remove 2 x 4's.
8. Place machine section in exact position on storage compartment gasket.
9. Bolt two back tie straps to hold machine section in place.

WHEN INSTALLING C-55H CRUSHER

1. Unpack crusher and check electrical connections to make sure it is in proper running condition.
2. Place crusher in exact position on storage bin.
3. Bolt two back tie straps to hold crusher section in place on bin.
4. Follow steps under paragraph, "Placing Machine Section in position on Ice Storage Compartment."

PLUMBING

1. Refer to Installation Diagram page 17.
2. Water inlet should be 3/8 inch pipe or larger.
3. Strainer should be installed on outside of machine as close as possible to unit.
4. A shut-off valve either of globe or gate type should be installed next to strainer for convenience of the service man.
5. SC-500 is equipped with three separate drains so as to comply with all plumbing codes. Drain marked drip pan drain is to catch any condensation that may come from the unit and must have fall as it flows by gravity. Bin has own centered, bottom drain.
6. Drain marked sump should be kept 3/4 inch in size with adequate fall which assures complete emptying of the sump tank at the end of the freezing cycle; and also with enough velocity to remove any sediment or solids which may have accumulated from the preceding batch of ice cubes.
7. Storage drain should be connected to open drain.
8. On water cooled models the drain from the condenser has slight pressure. (NOTE: If outlet of connected drain is visible, it is helpful to the service man in checking condenser water valve.)

9. Air cooled models SC-500 do not use condenser drain connection since refrigerant cooling medium is air rather than water.
10. In areas where vast amounts of solids and impurities are present in the water supply, it may be necessary to use some type of filtering equipment on the water that is used in the actual manufacture of the ice and not for the condenser.
11. If above condition is true, it is suggested to disconnect water line from present location in machine compartment and connect it to a 1/4 inch OD copper line which may be run to the filtering equipment. (Note: if water softening equipment is available in building, connect 1/4 inch line in soft water ahead of heater.)
12. For water treatment over and above normal local impurities, consult Service Dept., Scotsman Queen Products, Albert Lea, Minnesota.

ELECTRICAL

1. IMPORTANT. An ice machine must be connected by a competent electrician.
2. Refer to wiring diagrams, pages 10-15 for proper voltage hookup in accordance with voltage stamped on complete unit serial plate.
3. Compressor motor operates on high voltage only and all component parts operate on 110 volts only. (CAUTION: In areas where a wild phase is present in their system, it must be kept out of component circuit.) Note: Part #12-532 Heating Element requires 230V.
4. Electrician should be instructed to install proper disconnect switch of a three pole variety with solid neutral.
5. Select proper amperage load and fuses per diagrams on pages 10-15 whose voltage corresponds to unit voltage.

MANUAL SWITCH

A manual switch is provided at bottom of left side of icemaker for the convenience of the user when it is desired to shut the unit down for a period of time. When any electrical component parts are being removed or serviced, it is recommended that the line switch be put in the "OFF" position.

DUAL PRESSURE CONTROL, WATER COOLED UNITS

A high pressure control is provided to shut down the complete unit in case of extremely high head pressures or interrupted water supply. Some models are equipped with a lock-out type, and the unit will remain off until the control is reset manually. (To reset, press down small plunger on top of control.) The high pressure control should be set at 190 pounds.

The low pressure control is provided as an added safety precaution in case of a broken or leaking refrigerant line. This prevents drawing in air or moisture. The setting of the low pressure control should be zero pounds cut-out and 32 pounds cut-in.

START - UP

1. Make sure all service valves on the condensing unit are open and turned as far as possible to the left. Replace the valve caps after checking the valves. All models are shipped with valves open.
2. Make sure that the flow of air is not impeded in any way over condenser on air-cooled models. Keep condenser clean. (Check and clean the condenser monthly).
3. On all water-cooled models, turn on water supply to water-cooled condenser and check for leaks in connections made.
4. Turn on cube supply at hand shut-off vlave. Make sure hot water tank fills to proper level, if it does not, adjust level to 1/4" below overflow pipe by bending float rod.
5. NOTE: Unit has built-in flow control set to approximately .4 gallons per minute.
6. Check electrical circuit for proper voltage from building source. Do not connect with other appliances.
7. Remove cover from control box, check for loose or frayed wire, then turn manual switch to "on" position. Note: All "H" models have motor compressor only switch in control box.
8. Turn disc on time clock to the right just far enough for water solenoid valve to energize. Allow clock to take it through harvest cycle. This will be approximately 3 1/2 minutes. (Figures on dial represent minutes).
9. Dial pointer should be set on Number 3 1/2. After the compressor starts, turn the dial completely around and send it through another harvest cycle. Do this several times. This will completely flush machine of any dust that may have accumulated in shipment.
9. After machine has been properly flushed, allow it to go into a freezing cycle--check for possible water leaks, check sump pump operation--should be running freely. Also note if jet tube travel is correct, and that none of the jets are plugged.
10. Time clock dial does not rotate at the end of the harvest cycle; it is started later by the cube size control located in the control box.
11. Freezing time will be approximately 30 minutes in a 70 degree ambient. (Longer if above, and shorter if below). After 25 minutes of the freezing cycle, check water in float chamber with a thermometer. (Should be approximately 130-140 degrees at this time.) If temperature is not correct adjust thermostat on left side of hot water tank.
12. Watch first harvest and check to make sure that plastic curtains have not been damaged in shipment.
13. Check size of cubes made: If too small after a second complete cycle; adjust cube size control to lower or colder setting.
14. Check texture of cubes made; partially cloudy cubes throughout suggest unit running short of water near end of freezing, or possibly an extremely bad water condition, which would indicate use of filtering or purifying equipment. Contact SCOTSMAN -- Queen Products, Service Department, Albert Lea, Minnesota, for further details.
15. With unit on harvest cycle, take a handful of cubes made and hold on storage bin thermostat cover. Should cut unit off in one to two minutes. Remove ice: unit should cut back on automatically. Thermostat is factory set at 35° out, 39° in.
16. Replace all panels and service doors.

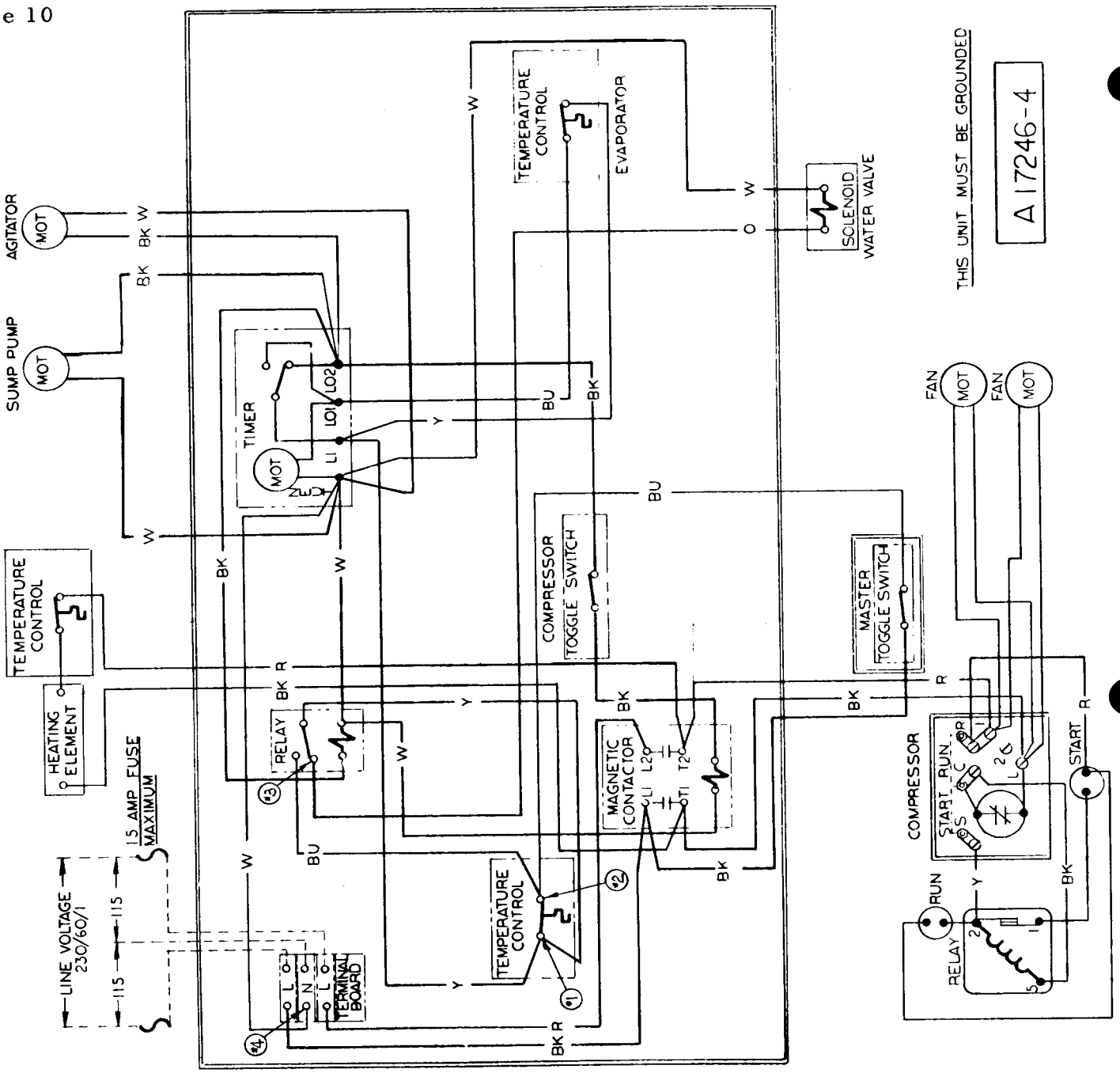

SC-500

WIRING DIAGRAM

230/60/1 AIR COOLED

A-17246-4

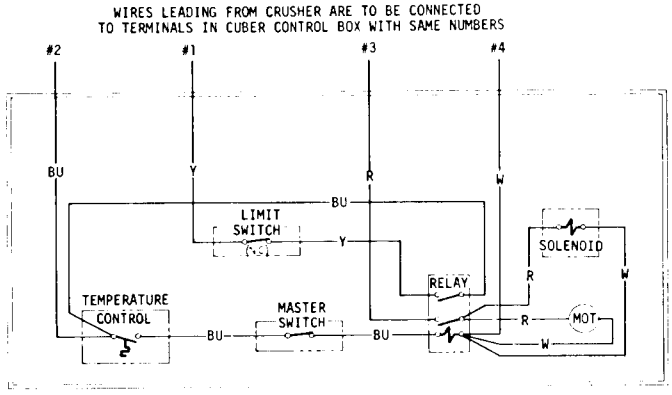

A18880

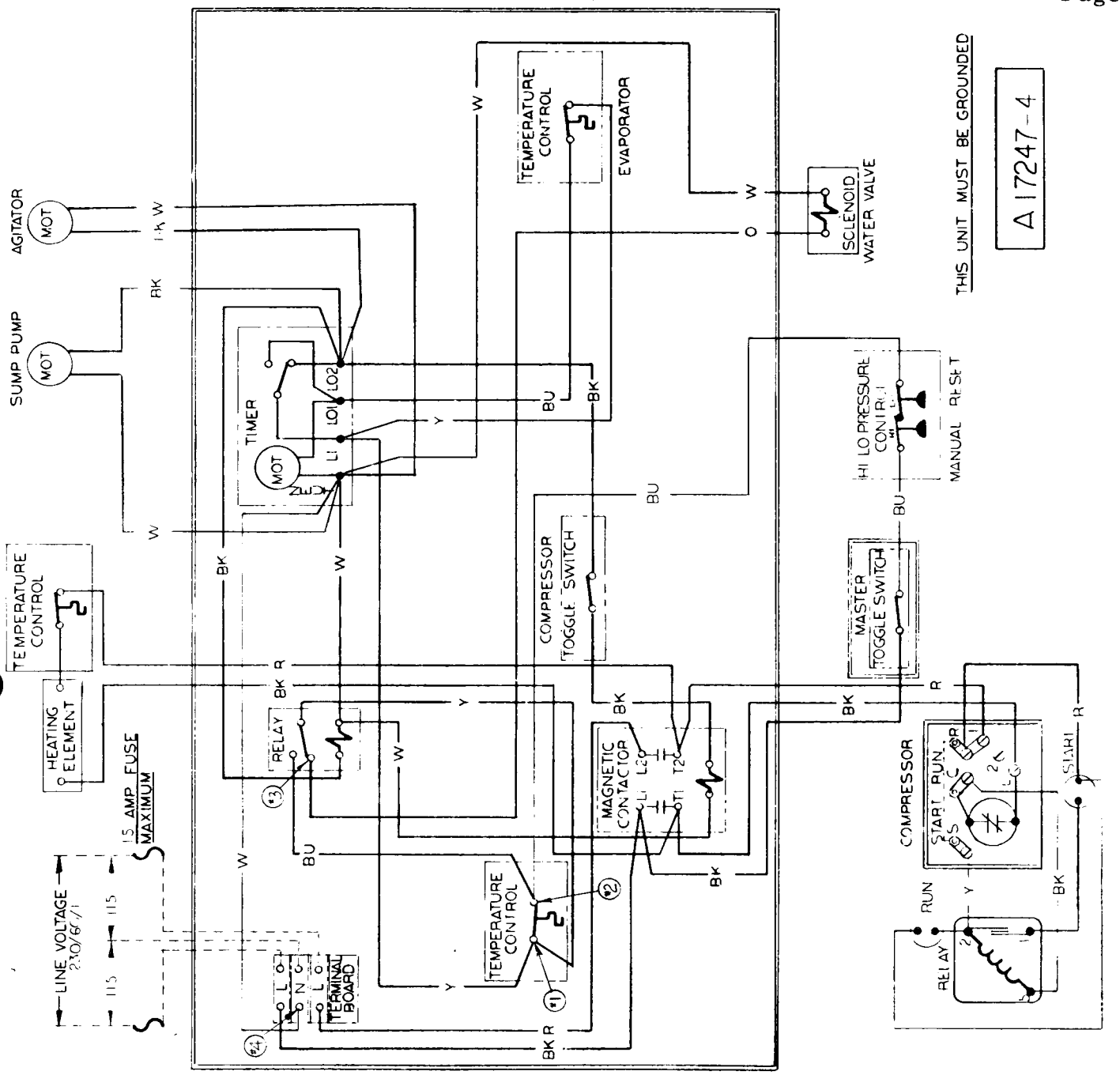

SC-500

WIRING DIAGRAM

230/60/1 WATER COOLED

A-17247-4

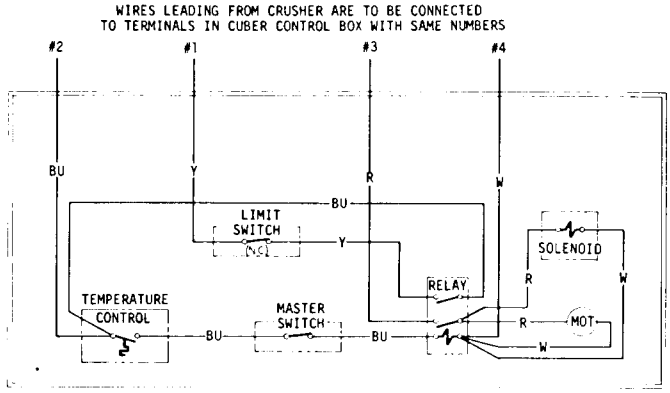

A18880

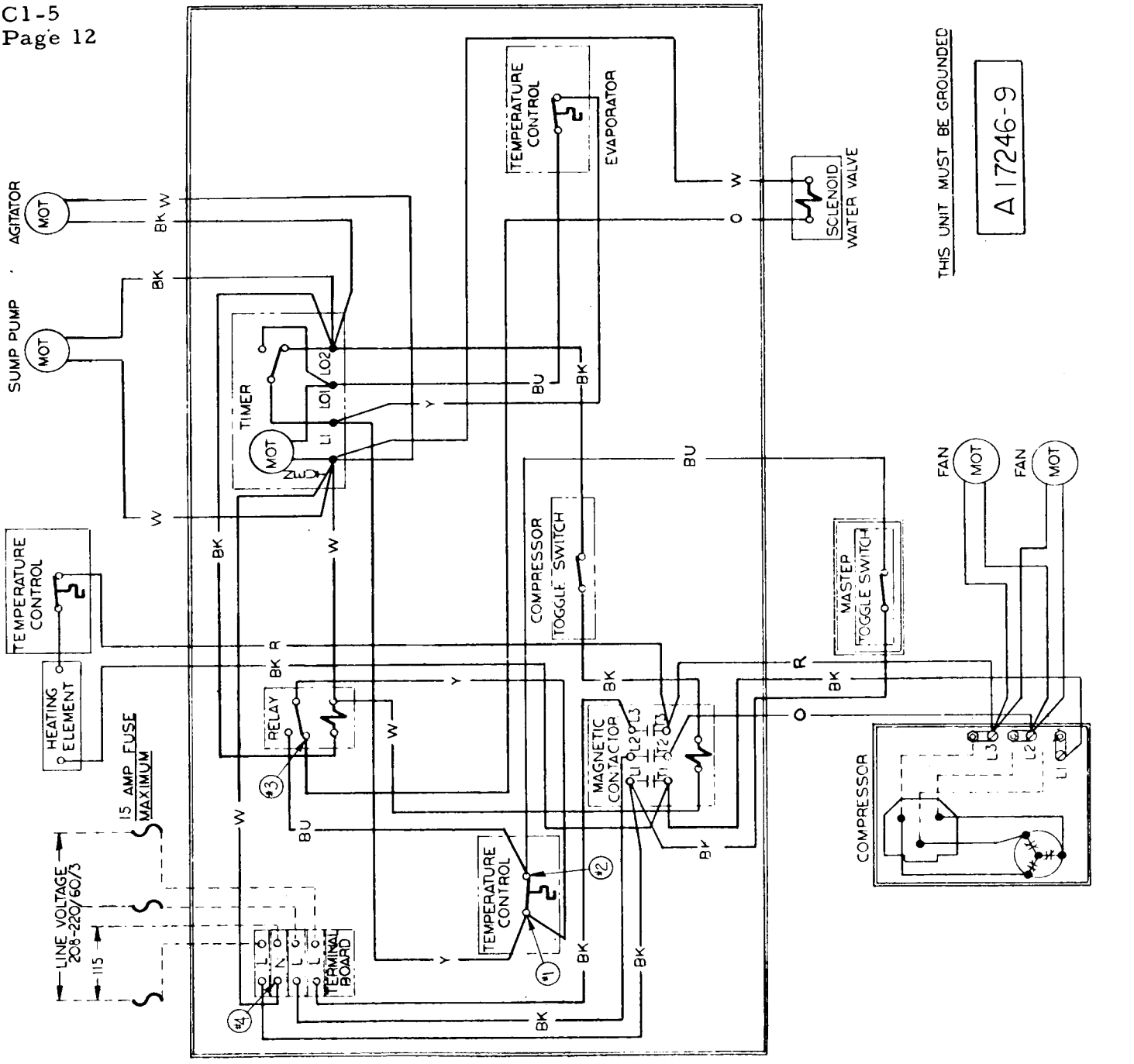

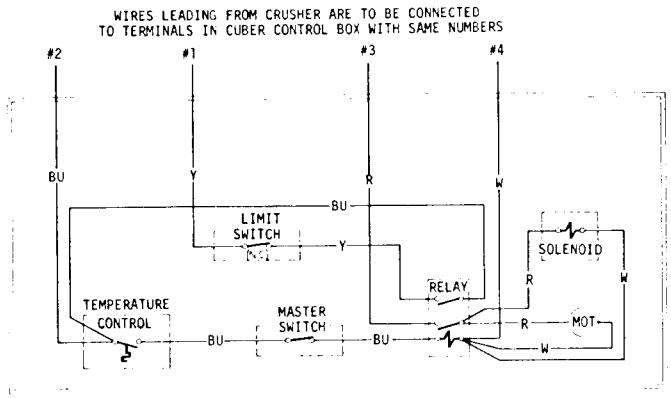

SC-500

WIRING DIAGRAM

208/220/60/3 AIR COOLED

A-17246-9

A18880

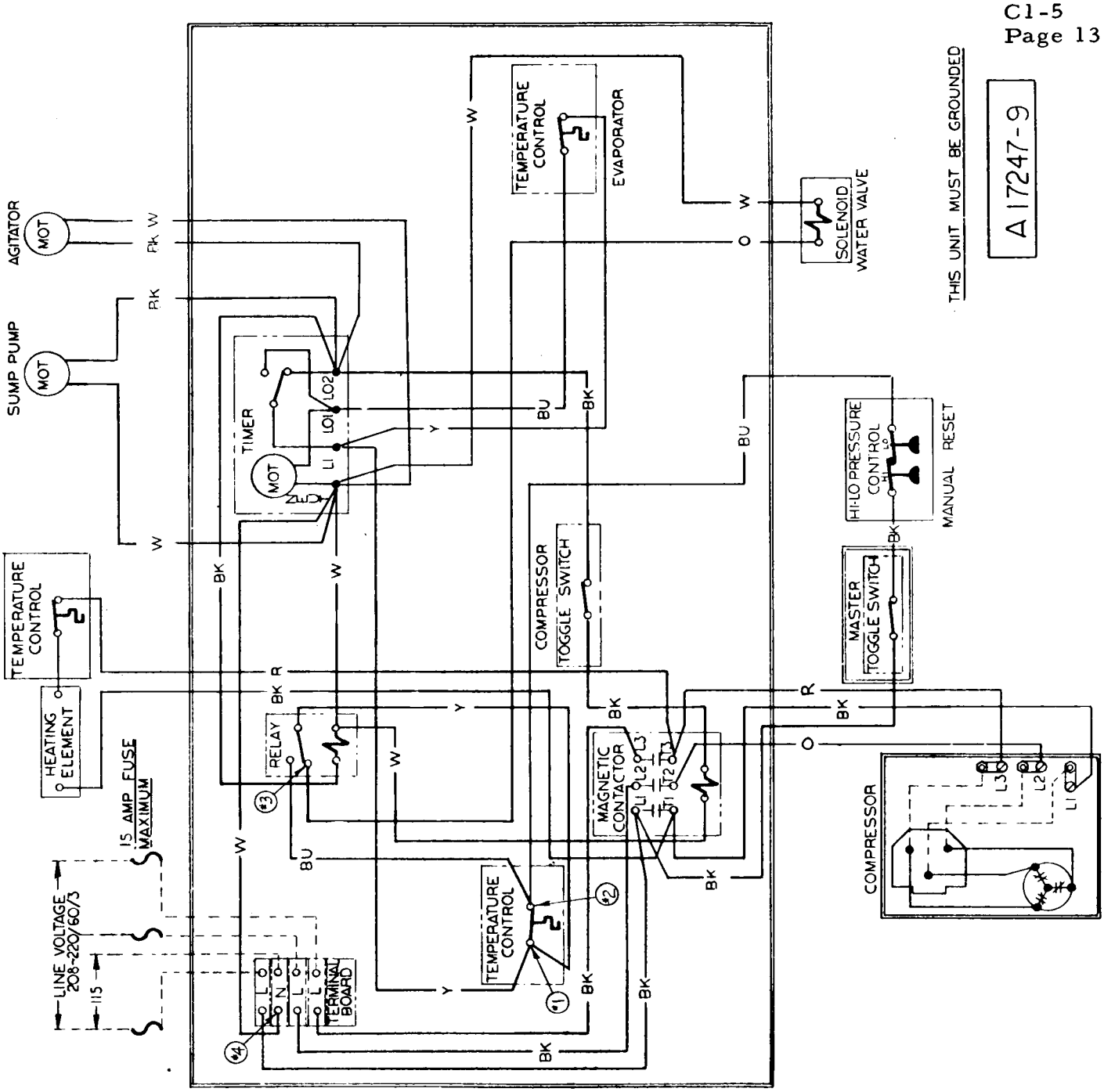

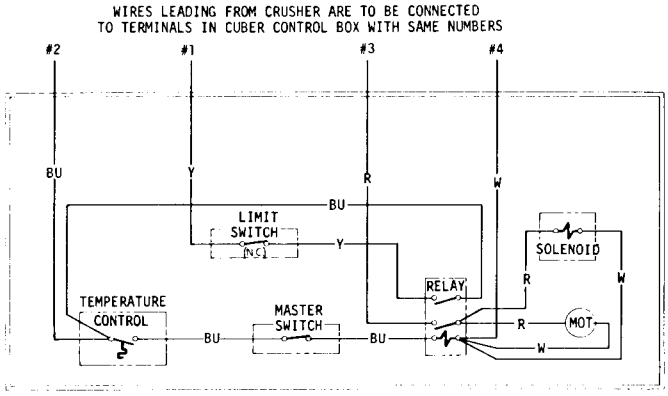

SC-500

WIRING DIAGRAM

208/220/60/3 WATER COOLED

A-17247-9

A18880

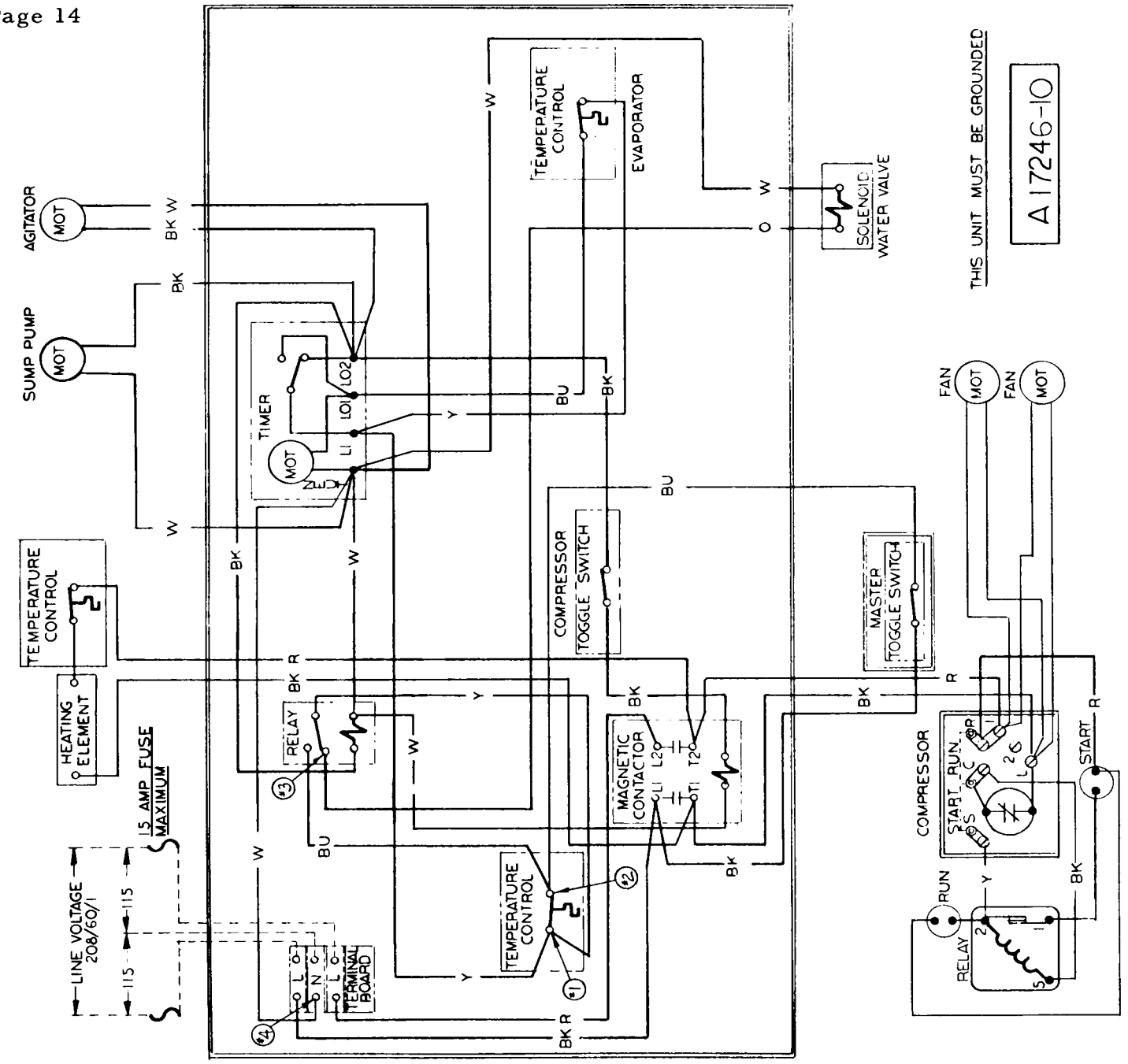

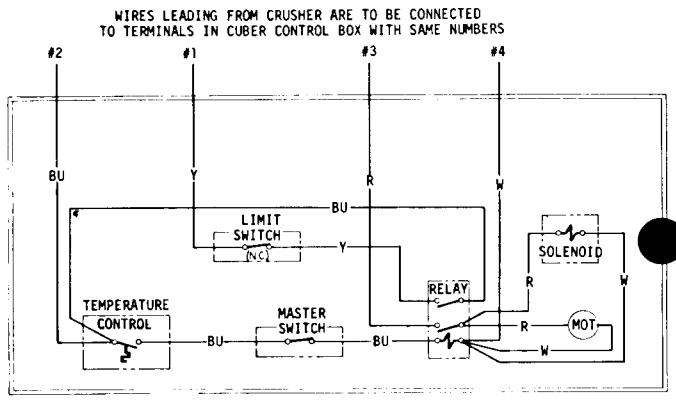

SC-500

WIRING DIAGRAM

208/60/1 AIR COOLED

A-17246-10

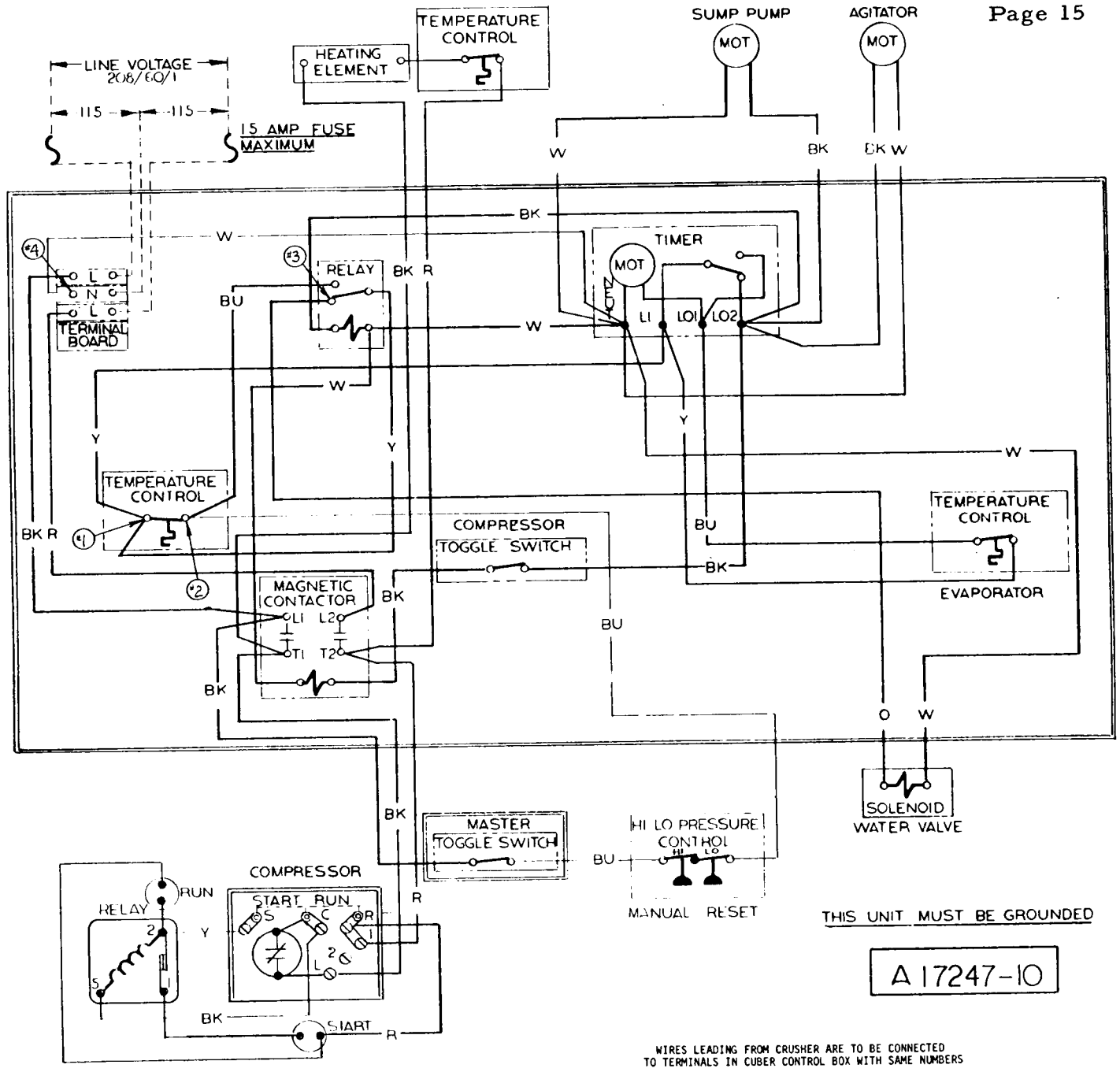

THIS UNIT MUST BE GROUNDED

A 17247-10

WIRES LEADING FROM CRUSHER ARE TO BE CONNECTED TO TERMINALS IN CUBER CONTROL BOX WITH SAME NUMBERS

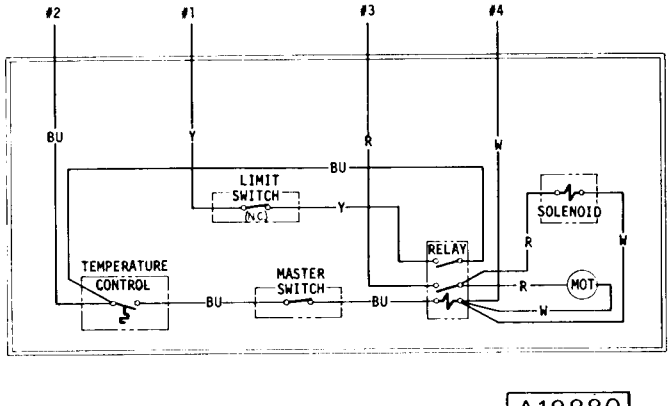

SC-500

WIRING DIAGRAM

208/60/1 WATER COOLED

A-17247-10

A18880

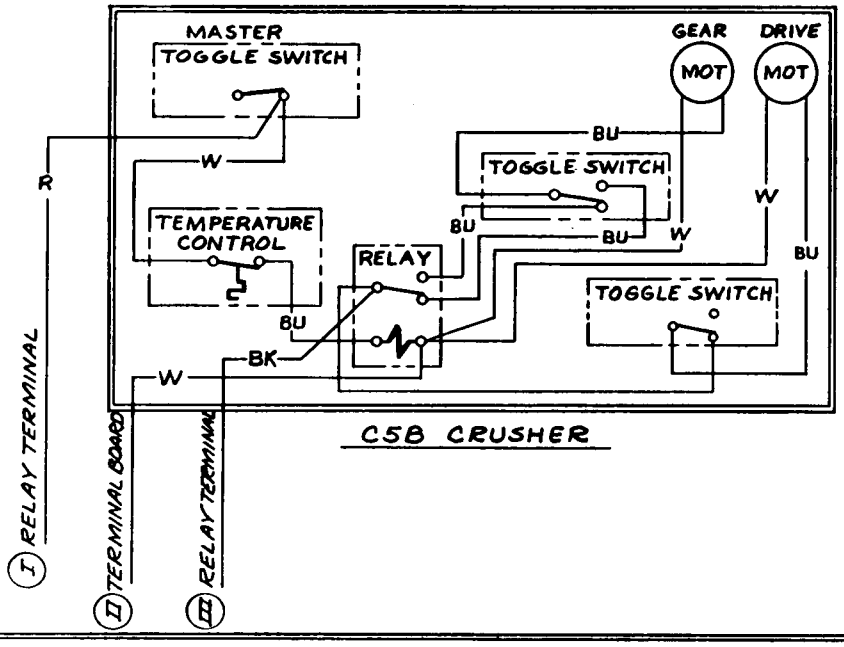

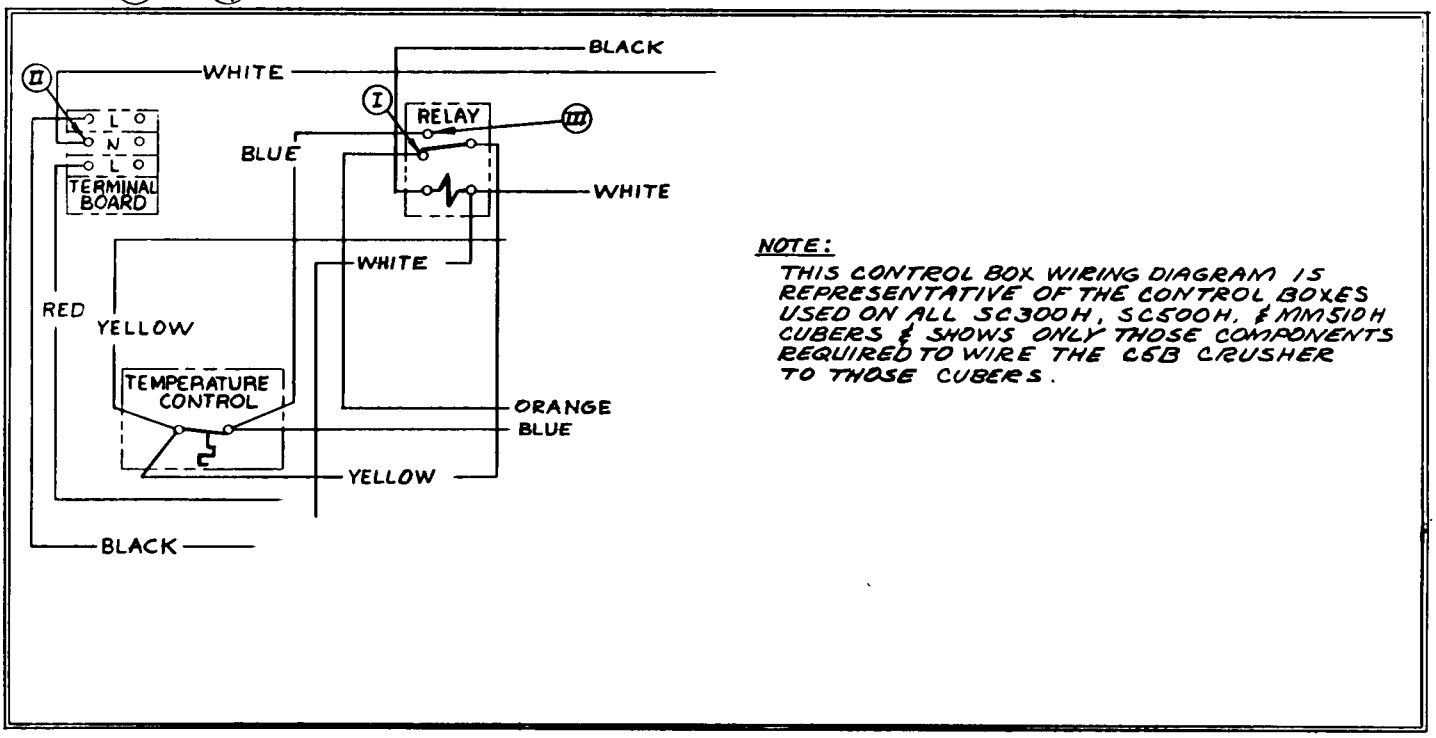

NOTE:
THIS CONTROL BOX WIRING DIAGRAM IS REPRESENTATIVE OF THE CONTROL BOXES USED ON ALL SC300H, SC500H, & NM510H CUBERS & SHOWS ONLY THOSE COMPONENTS REQUIRED TO WIRE THE C5B CRUSHER TO THOSE CUBERS.

C5B CRUSHER WITH
"H" MODEL CUBERS

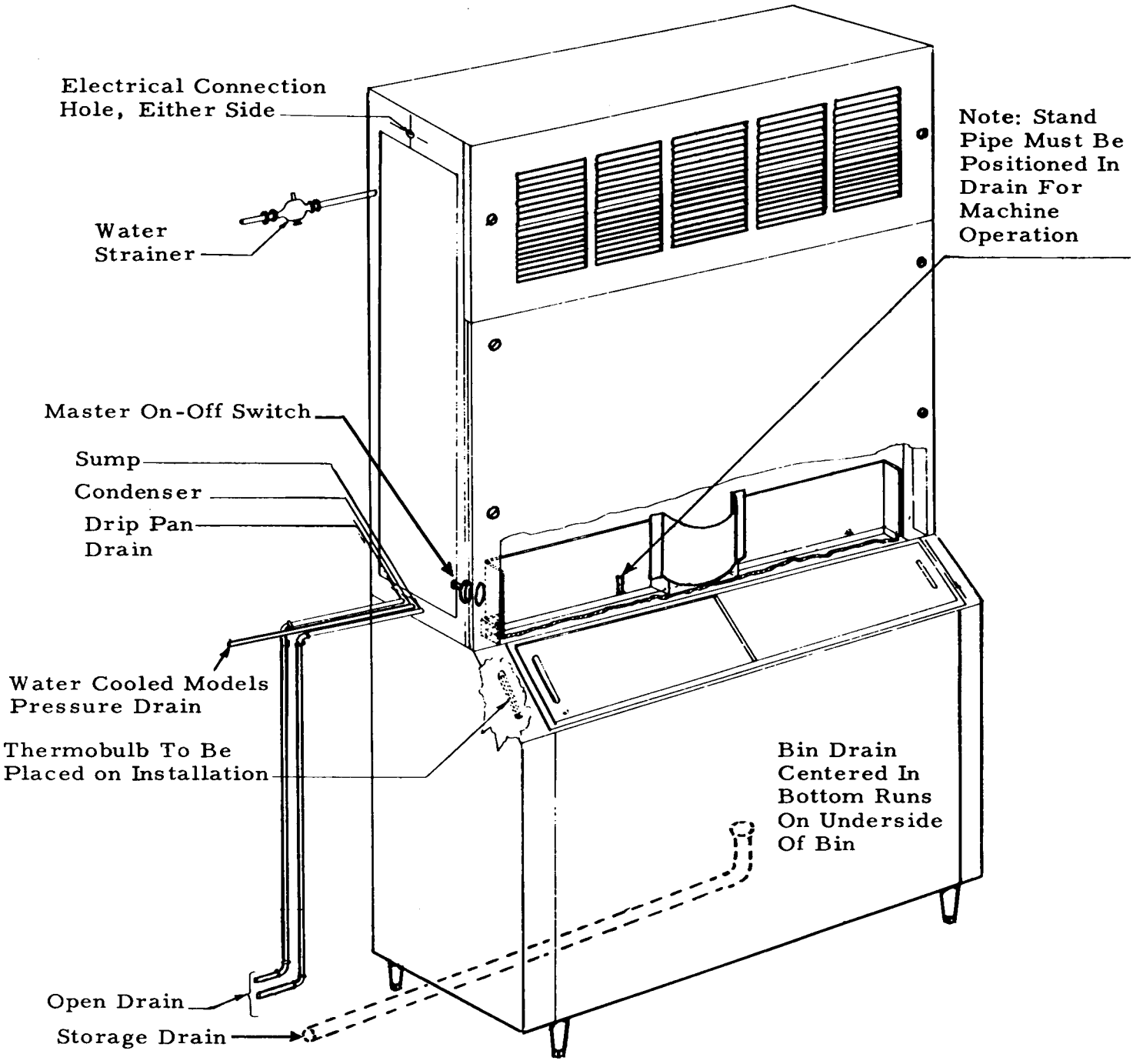

NOTE: Hand shut off valve to be located ahead of water strainer.
Air cooled models do not use condenser or pressures drain.

SC-500 INSTALLATION
WITH B-400 SERIES BIN

INSTALLATION

FINAL CHECK LIST

1. Is the machine level? (Important)
2. Have all electrical and plumbing connections been made and checked?
3. Is the water supply valve open and the electrical power on?
4. Has the voltage been load-tested and checked against nameplate voltage?
5. Have the compressor hold-down bolts been loosened so that the compressor rides freely on its mounting springs?
6. Has float been checked and set in hot water tank for proper water level?
7. Turn machine on and test heater and thermostat. After 25 minutes of freezing cycle, check water in float tank (should be approximately 130 to 140 degrees by this time). If temperature is not correct, adjust thermostat.
8. Operate machine for at least two complete cycles.
9. Is the machine quiet in operation?
10. Have the installation and warranty cards been filled out?
11. Has the owner been instructed on how to operate the machine?
12. Is the machine clean?
13. Check the storage bin thermostat for proper setting of approximately 35 degrees cut out, 39 degrees cut in.
14. Head pressure average 135 # P.S I.
15. Back or suction pressure equalize with head during harvest cycle. During start of freeze cycle starts at about 60# P S I gradually pulls down to 3-5 # P S I end of freezing cycle.

HARVEST CYCLE

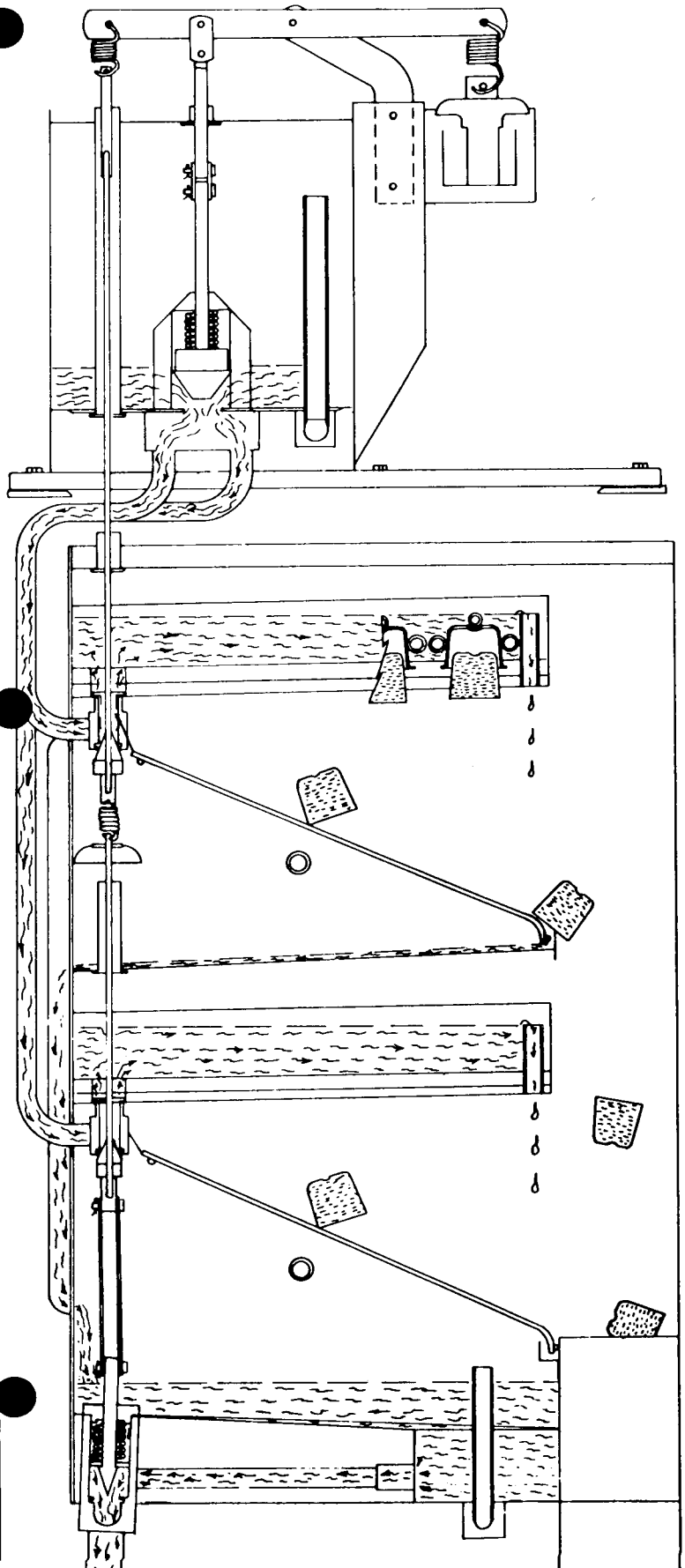

At the end of the freezing cycle the hot water from the water tank flows into the rubber platen holding the cups and by conduction on back of cups causes cubes to defrost. The platen cavity is completely filled up to the overflow point, and continues to overflow while in the defrost cycle; the amount of this water running over the overflow pipe is controlled by the flow control and the length of harvest time setting on the time clock; overflow water goes down the drain also. Meanwhile, cubes being released from the cups drop by gravity onto cube chute, then through curtained opening into storage bin. At completion of harvest cycle, the micro-switch on the timer shaft now drops points holding defrost components in cycle and switches to freezing cycle set of contacts. Clock motor now stops and will not start until cube size control closes once more. The freezing cycle starts and the water valve allows the hot water tank to refill. The chilled water from the upper cavity flows by gravity through the water valve to the sump tank and reservoir. This water is used to produce the next batch of cubes.

FREEZING CYCLE

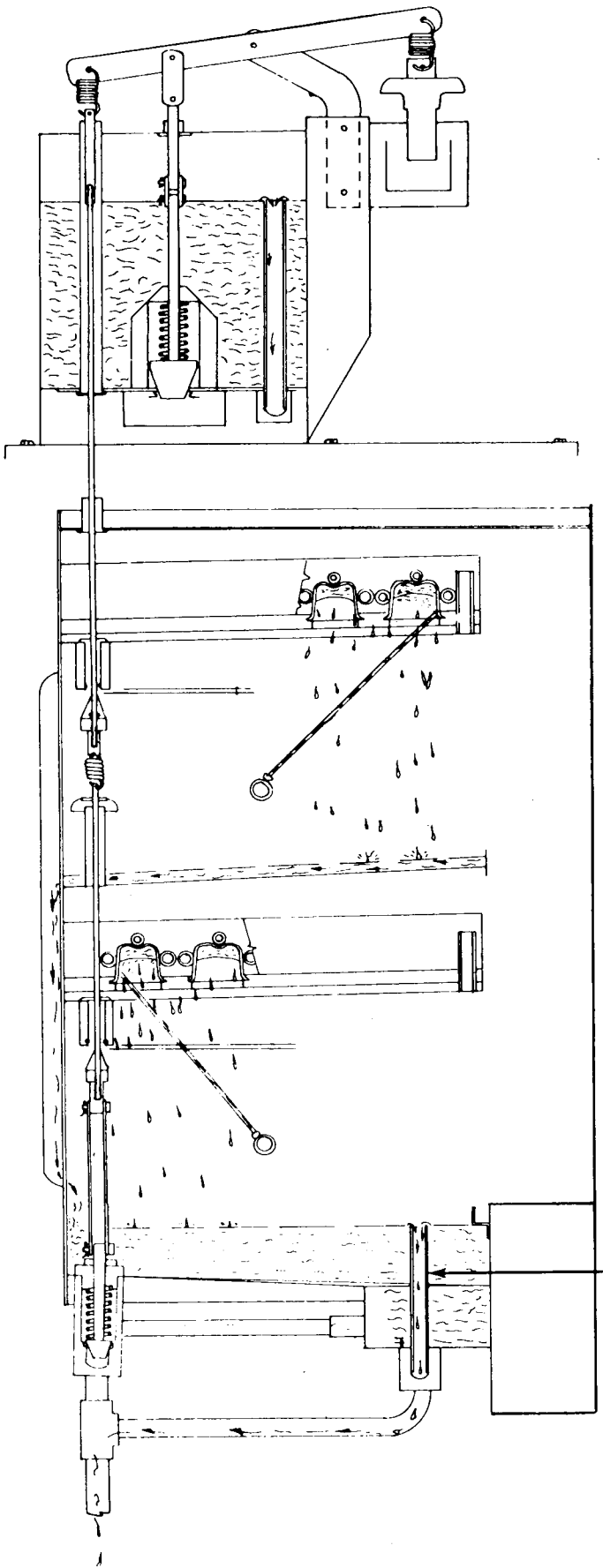

At the start of the freezing cycle, reservoir and sump tank contain enough water to make a complete batch of ice cubes, plus approximately an extra quart. When time clock closes load circuit, it starts the compressor, sump pump and heater element in hot water tank. At the same time it opens the circuit to clock motor. (Clock motor does not run first part of freezing cycle- - this is approximately 8 1/2 minutes) This timer has a single pole, double throw micro-switch for carrying and directing current. After a predetermined amount of ice is frozen, the cube size or reverse acting temperature switch closes, actuating the time clock motor circuit which continues the freezing cycle approximately 8 1/2 more minutes. (After clock motor starts, freezing time will be 12 minutes less defrost time setting.) At the end of the 8 1/2 minute period, time clock operated switch opens compressor, sump pump and heater element circuit, and closes circuit to time clock motor and solenoid operated water valve. At this time, the water valve allows heated water in hot water tank to flow by gravity through solenoid valve, and into the upper cavity of the freezing chamber, and, at the same time allows the surplus water from the preceding batch of ice cubes to go down the drain.

NOTE: Harvest water is used to make next batch of ice, therefore on initial start up it is necessary to have unit in a harvest cycle. This can be done by manually turning timer dial. Average cycle time is 30-35 minutes.

SERVICE ANALYSIS

Symptom	Possible Cause	Suggested Correction
1. Unit will not run.	Power off. Blown fuse.	Check main switch, fuses and wiring
	Manual switch in off position.	Turn manual switch to "on"
	High pressure control locked out.	Reset and check for cause of control off.
	Ambient temperature of room too low.	Must be above 50° Farenheit.
	Bin thermostat set too high.	Set approximately 35° cut out, 39° cut in.
2. Compressor cycles intermittently.	Low voltage.	Check with volt meter. Notify power company if 10% over or under nameplate rating.
	Air in system causing high head.	Purge system. Evacuate and re-charge.
	Shortage of refrigerant.	Check frost line, should be cool but not frost on suction service valve.
3. Cubes small. (short cycle)	Cube size control not properly set.	Set control to colder setting
	Moisture in system.	Change dryer and refrigerant.
	Short of water.	Flow control plugged.
		Clean out - install filter in supply line.
	Lower drain valve in sump tank leaking.	Flush or remove and clean. Replace rubber O-ring seat.
	Sump tank stand pipe not properly seated.	Check and re position.
4. Cubes small. (long cycle)	Shortage of refrigerant.	Check frost line and add refrigerant. Refer to name-plate for correct amount of refrigerant.

SERVICE ANALYSIS

Symptom	Possible Cause	Suggested Correction
5. Cubes too large. (slow defrost)	Very small shortage of refrigerant.	Check frost line. Add refrigerant slowly.
	Water valves not holding in hot water tank.	Hold float closed and check during freeze cycle.
	Cube size control set too cold.	Reset to warmer setting on adjustable cam.
6. Cubes cloudy.	Drain valve and sump tank leaking.	Check during freeze cycle.
	Curtains damaged or binding.	Repair or replace.
	Restriction in incoming water.	Check at float in hot water tank and flow control.
	Screen plugged on bottom of sump pump.	Remove and clean.
7. Irregular cubes. (some clear, some cloudy)	Clogged jets in jet tubes.	Remove and clean. Use care not to elongate jet holes
	Cube slides interfering with jets.	Adjust so that jet streams center in cube rack slots.
8. Improper harvest.	Time clock not set properly.	Reset on No. 3 1/2 with adjustable cam.
	Drain valves in hot water tank leaking which prevents water from coming up to temperature.	Inspect and repair. Check rubber O-ring seat under tapered plunger.
	Incoming water restricted.	Check water lines, etc.
	Float valve leaking. (Hot Water Tank)	Check during freeze cycle, float valve should fill tank to 1/2" below overflow pipe then shut water supply off. Replace rubber seat if leak continues.

SERVICE ANALYSIS

Symptom	Possible Cause	Suggested Correction
8. Improper harvest. (Cont'd.)	Stand pipe not properly seated; in hot water tank.	Remove cover and check.
	Machine not level. (Allow water to stand in upper cavities and freeze.)	Level machine.
	Burned out heating element in hot water tank.	Replace.
9. High head pressure.	Over-charge of refrigerant.	Purge.
	Air in system.	Purge.
	Defective water regulating valve.	Replace.
	Burned out or stuck fan motor(s) air cooled.	Replace or oil as needed.
	Water regulating valve improperly adjusted.	Readjust to desired head 135# water cooled models.
	Incoming water restricted.	Check screens, lines, etc.
10. High suction.	Dirty or plugged condenser. Air cooled.	Blow condenser clean.
	Inefficient compressor. valve plate.	Check with gauges and replace if necessary.
	Moisture in refrigerant system.	Purge refrigerant, replace dryer, and re-charge.
	Shortage of refrigerant.	Check frost line, add refrigerant until cool suction service valve is felt.
	Overcharge of refrigerant.	Purge.
11. Low suction pressure.	Moisture in system.	Purge charge, evacuate, replace dryer, and re-charge to nameplate charge.

SERVICE ANALYSIS

Symptom	Possible Cause	Suggested Correction
11. Low Suction pressure. (Cont'd.)	Extreme shortage of refrigerant.	Add refrigerant.
	Ambient temperatures too low. Air cooled.	Increase ambient to minimum 50°F.
12. Water leaking from plastic tubing in upper left hand corner above cube discharge openings.	Float level set too high in hot water tank.	Readjust. Bend float arm to hold water level 1/2" below overflow.
	Float valve leaking.	
	Water-logged float ball.	
13. Unit noisy.	Hold-down bolts on compressor not loosened.	Turn up until unit is free, floating on mounting springs.
	Refrigerant lines vibrating.	Straighten.
	Compressor short of oil.	Check oil level. Proper level 1 1/2 inches below crankcase port or 1/2 of sight glass.
	High head pressures.	Check with gauges. Normal head pressure is 135-150#. Purge if necessary.
	Shroud touching fan blades on air cooled models.	Reposition shroud.

SC-500 H SUMP PUMP

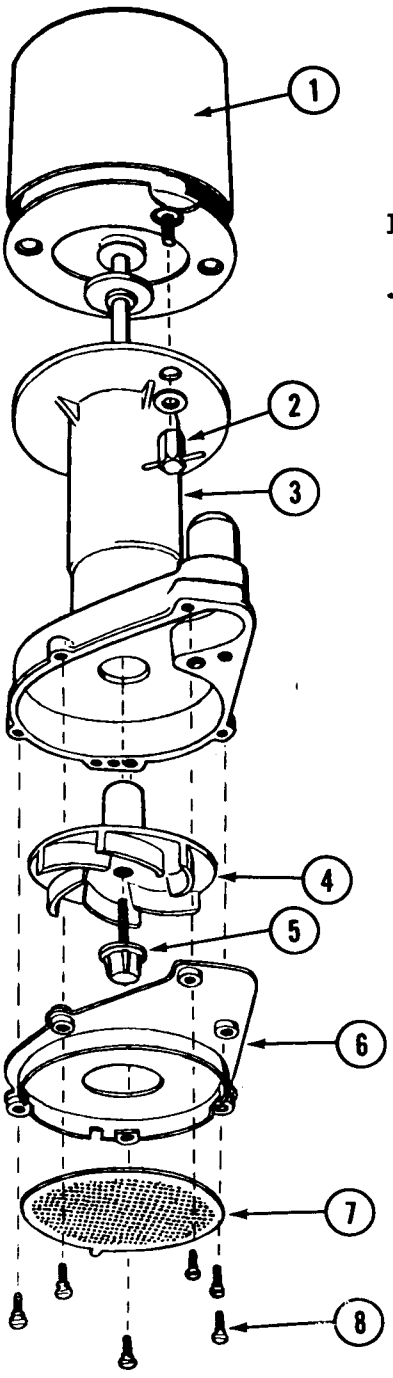

ITEM NO.	PART NO.	NAME
1.	12-1351-22	Motor Only
2.	12-1351-32	Wing Hex Nuts
3.	12-418-30	Pump Body
4.	12-1351-21	Impellar and Spring
5.	12-1351-31	Impellar Screw and Gasket
6.	12-1351-27	Bottom Inlet Plate
7.	12-1351-26	Inlet Screen
8.	12-1351-29	Wing Screws
	~~12-418A-1~~ 12-1701-01	Complete Pump

SC-500 H CONTROL BOX ASSY

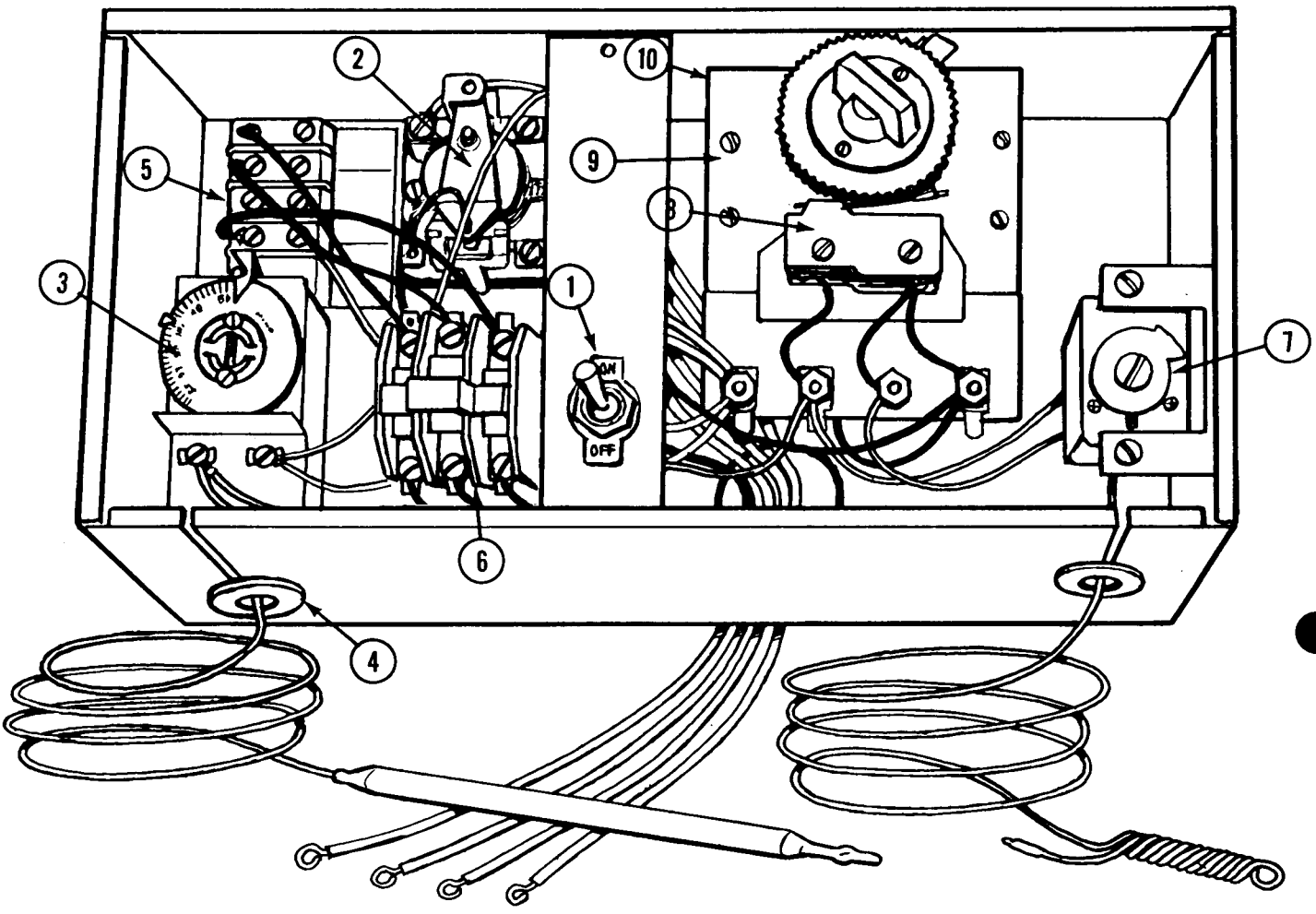

ITEM NO.	PART NO.	NAME
1.	12-426	Switch
2.	12-419	Relay
3.	11-99-1	Bin Control
4.	13-124	Grommets
5.	12-813	Terminal Block
6.	12-820-1	Contactor 115/230/60/1 & 115/208/60/1
	12-739-1	Contactor 115/208-220/60/3
7.	11-345-1	Cube Size Control
8.	12-645-20	Timer Micro Switch only
9.	12-645-1	Timer
10.	12-367	Timer Motor only

SC-500 DRIVE LINKAGE

"H" Models

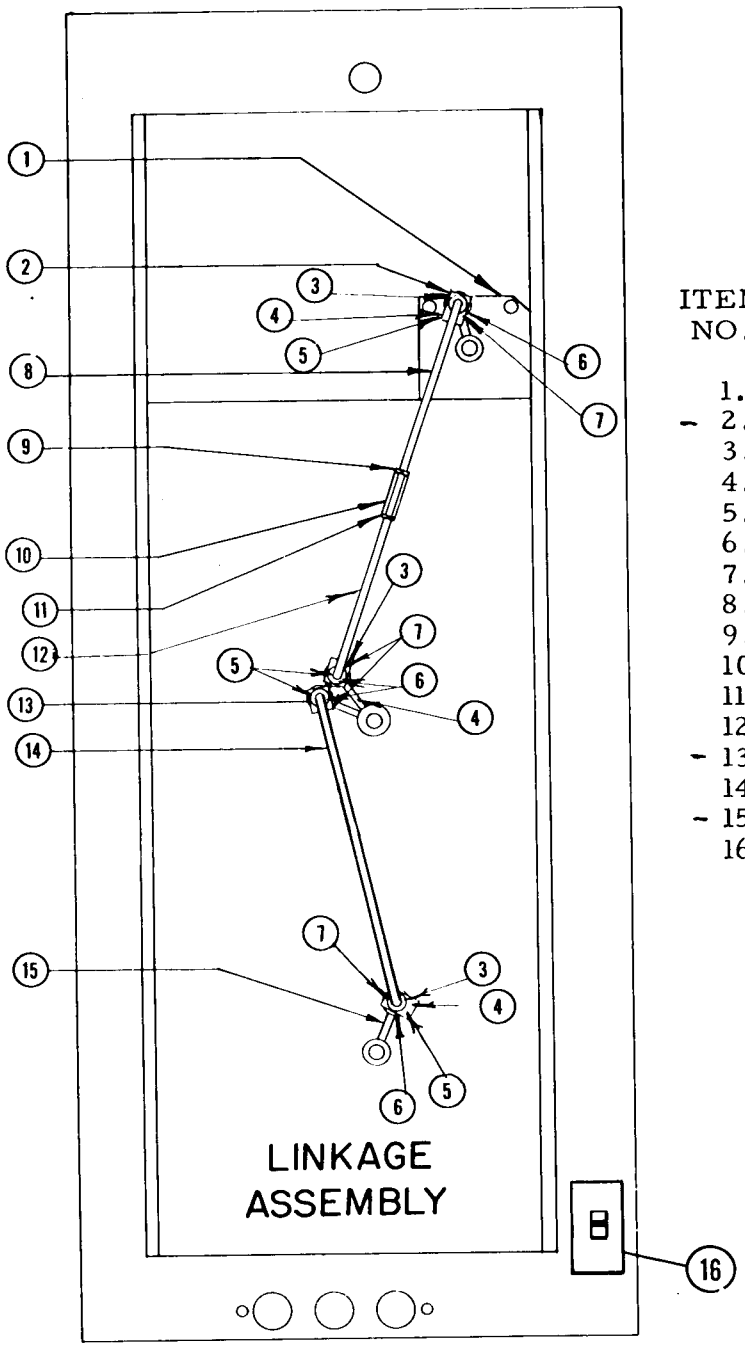

ITEM NO.	PART NO.	NAME
1.	12-446	Drive Motor
- 2.	S-9666	Driver Arm
3.	S-7558	Bearing Clip
4.	3-431	Set Screw
5.	3-75	Washer
6.	3-396-1	Cotter Key S.S.
7.	A-7033	Bearing
8.	S-7940	Upper Linkage (left)
9.	S-7937	Linkage Nut (left)
10.	S-7936	Linkage Coupling
11.	3-357	Nut (Right)
12.	S-7938	Linkage (Right)
- 13.	A-17233	Double Driven Arm
14.	A-17234	Lower Linkage
- 15.	A-17232	Driven Arm
16.	12-426	Switch
	A-17230	Linkage Complete (less Motor)

SC-500 H AIR and WATER COOLED

Front View

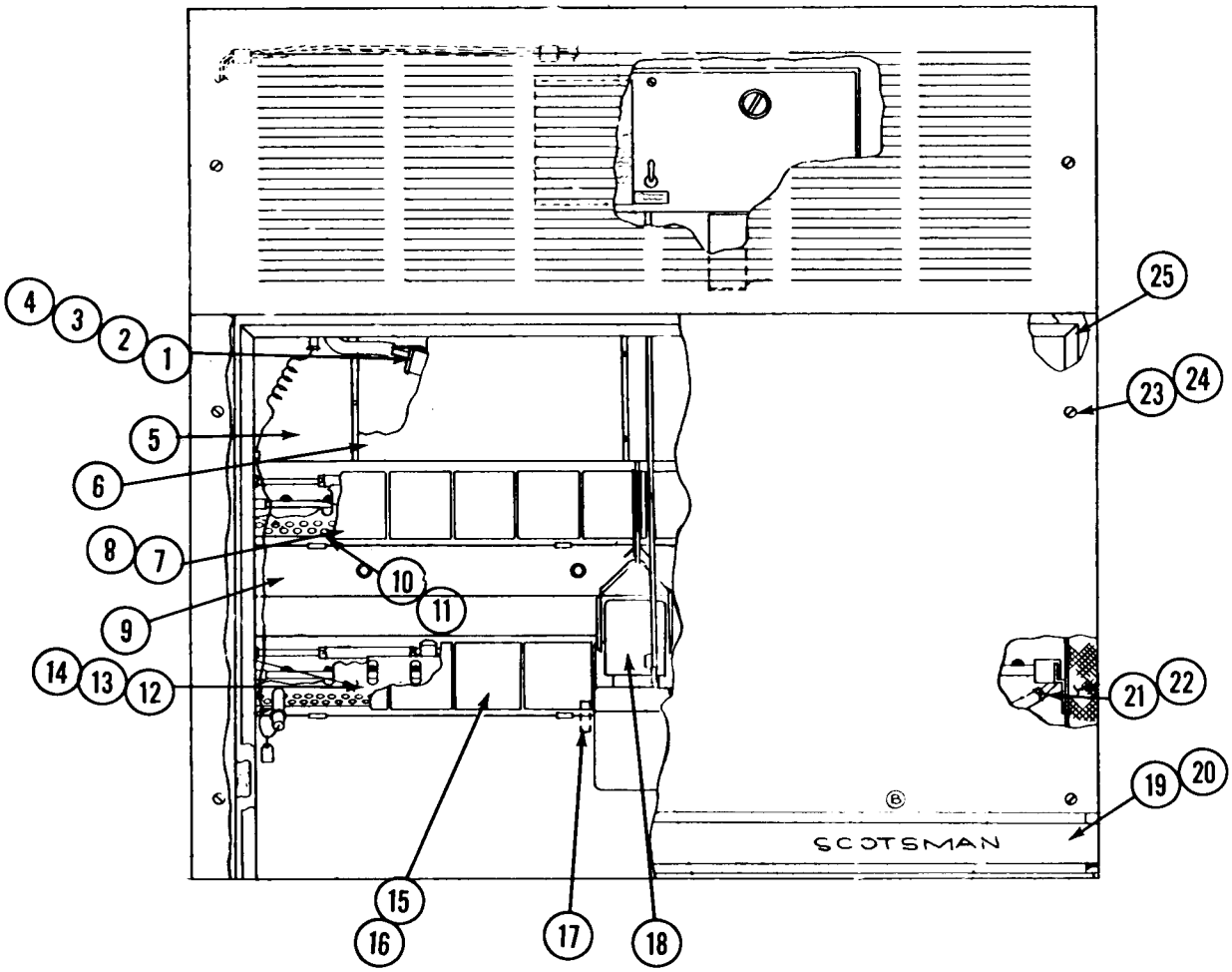

ITEM NO.	PART NO.	NAME
1.	A-18536	Frezzer Complete
2.	A-5809-1	Left Cup Ass'y (2 required)
3.	A-5805-1	Right Cup Ass'y (2 required)
4.	13-109-1	Rubber Cup Holder 4 reqd)
5.	A-18311	Upper Face Plate
6.	S-9805	Accumulator Cover
7.	A-17243	Upper Curtain Ass'y
8.	3-727	Thumb Screws (curtain)
9.	A-16662	Lower Face Plate
10.	A-17270	Upper Cube Chute, Right
11.	A-17272	Upper Cube Chute, Left
12.	A-16720	Cube Chute, Right
13.	A-16718	Cube Chute, Left
14.	A-16716	Cube Deflector
15.	A-16778	Left Curtain Ass'y
16.	A-16777	Right Curtain Ass'y
17.	A-17521	Stand Pipe
18.	12-418A-1	Sump Pump
19.	15-474	Emblem Decal
20.	A-5720-9	Moulding Trim (2 required)
21.	2-1338-1	Hose Clamps (6 required)
22.	5-179	Tygon Tube
23.	3-1029	Nut (6 required)
24.	3-789	Screw (6 required)
25.	A-17256	Door Gasket

In Package: A-16108 Buttons
13-590 Bulb Gasket
A-15759 Bulb Cover

*Not Shown

SC-500 H AIR COOLED

Top View

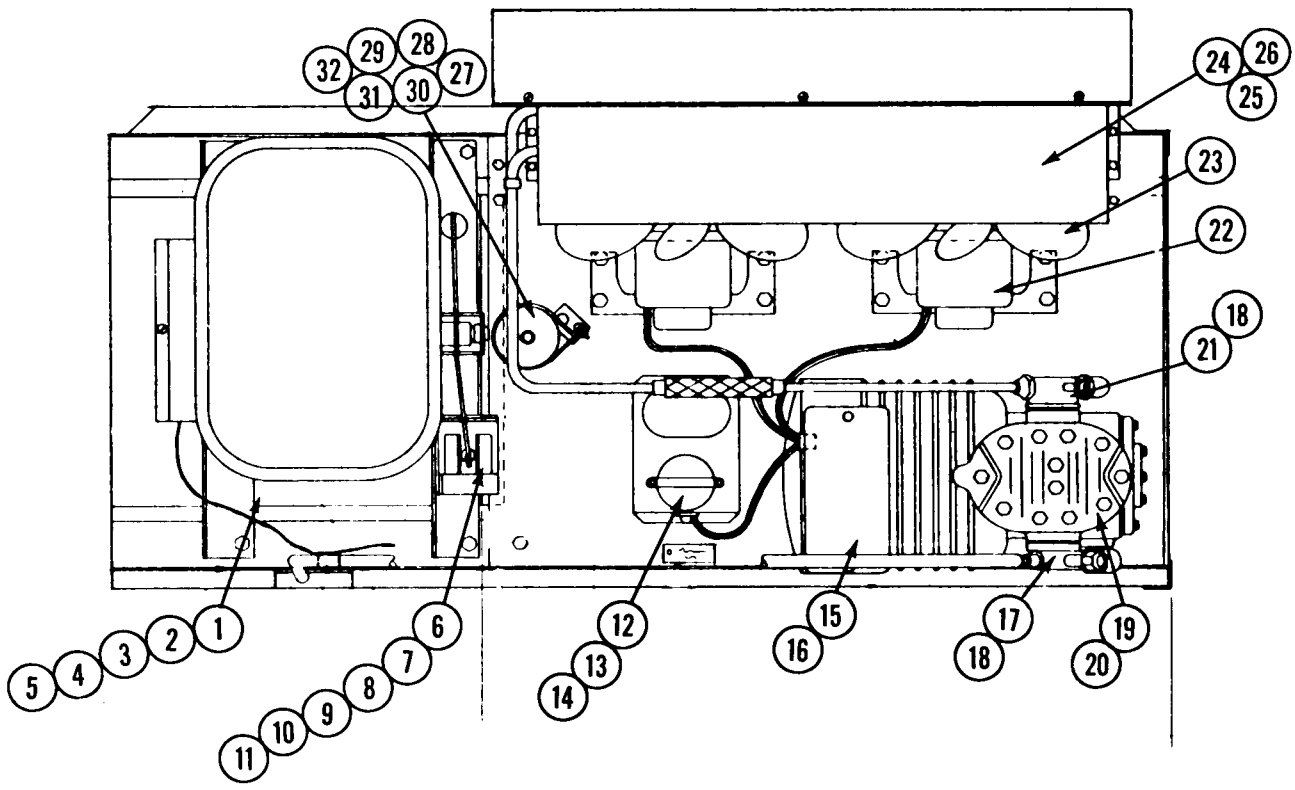

ITEM NO.	PART NO.	NAME
1.	12-446	Drive Motor*
2.	13-100	Grommet (4 required)*
3.	3-50	Screw (4 required)*
4.	3-70	Nut (4 required)*
5.	3-1021	Washer (4 required)*
6.	12-1396-1	Solenoid } Bottom Mount.
7.	A-18276	Solenoid Mount }
8.	3-1284	Elastic Stop Nut (4 required)
9.	13-625	Grommet (4 required)
10.	13-298	Washer (4 required)
11.	3-499	Screw (4 required)
12.	18-1901-20	Start Capacitor
13.	18-1902-20	Ron Capacitor
14.	18-1903-22	Relay
15.	18-270	Terminal Board*
16.	18-734	Klixon*
17.	18-561	Suction Service Valve
18.	18-242	Serv. Valve Gasket*
19.	18-621	Compressor 230/60/1
	18-631	Compressor 208/60/1
	18-630	Compressor 208-230/60/1
20.	18-326	Valve Plate & Gasket Kit*
21.	18-1908	Discharge Serv. Valve
22.	18-559	Fan Motor
23.	18-625	Fan Blade
24.	A-17329	Shroud
25.	2-784	Shroud Fastener
26.	18-624	Condensor
27.	3-75	Washer
28.	3-11	Screw
29.	3-60	Nut
30.	2-677	Dryer
31.	A-6355	Dryer Bracket
32.	A-9388	Dryer Brace

*Not Shown

SC-500 H WATER COOLED

Top View

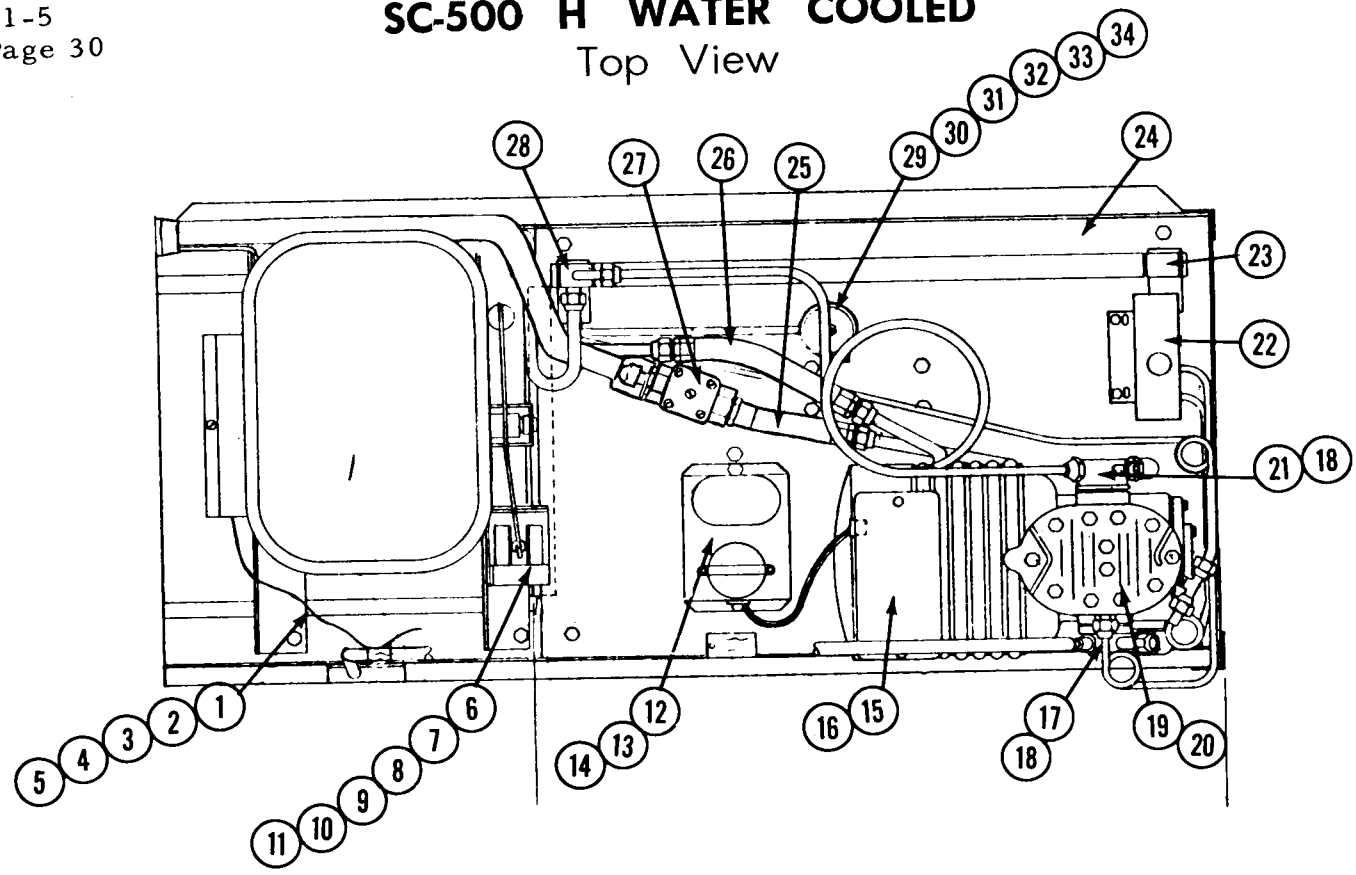

ITEM NO.	PART NO.	NAME
1.	12-446	Drive Motor*
2.	13-100	Grommet (4 required)*
3.	3-50	Screw (4 required)*
4.	3-70	Nut (4 required)*
5.	3-1021	Washer (4 required)*
6.	12-1396-1	Solenoid } Bottom mount.
7.	A-18276	Solenoid Mount }
8.	3-1284	Elastic Stop Nut (4 required)
9.	13-625	Grommet (4 required)
10.	13-298	Washer (4 required)
11.	3-499	Screw (4 required)
12.	18-1901-15	Start Capacitor
13.	18-1902-17	Run Capacitor
14.	18-1903-18	Relay
15.	18-270	Terminal Board*
16.	18-533	Klixon
17.	18-561	Suction Serv. Valve
18.	18-242	Serv. Valve Gasket
19.	18-546	Compressor 230/60/1
	18-571	Compressor 208-220/60/3
	18-550	Compressor 208/60/1
20.	18-326	Valve Plate & Gasket Kit
21.	18-1908	Discharge Serv. Valve
22.	11-286	Hi-Lo Press. Control
23.	18-548	Cond. Gasket
24.	18-599	Condensor
25.	18-260	Flexible Hose
26.	18-261	Flexible Hose
27.	11-198	Water Regulator
28.	18-549	Manifold Gasket
29.	3-75	Washer
30.	3-11	Screw
31.	3-60	Nut
32.	2-677	Dryer
33.	A-6355	Dryer Bracket
34.	A-9388	Dryer Brace

SC-500 AIR COOLED CASE ASSY
"H" Models

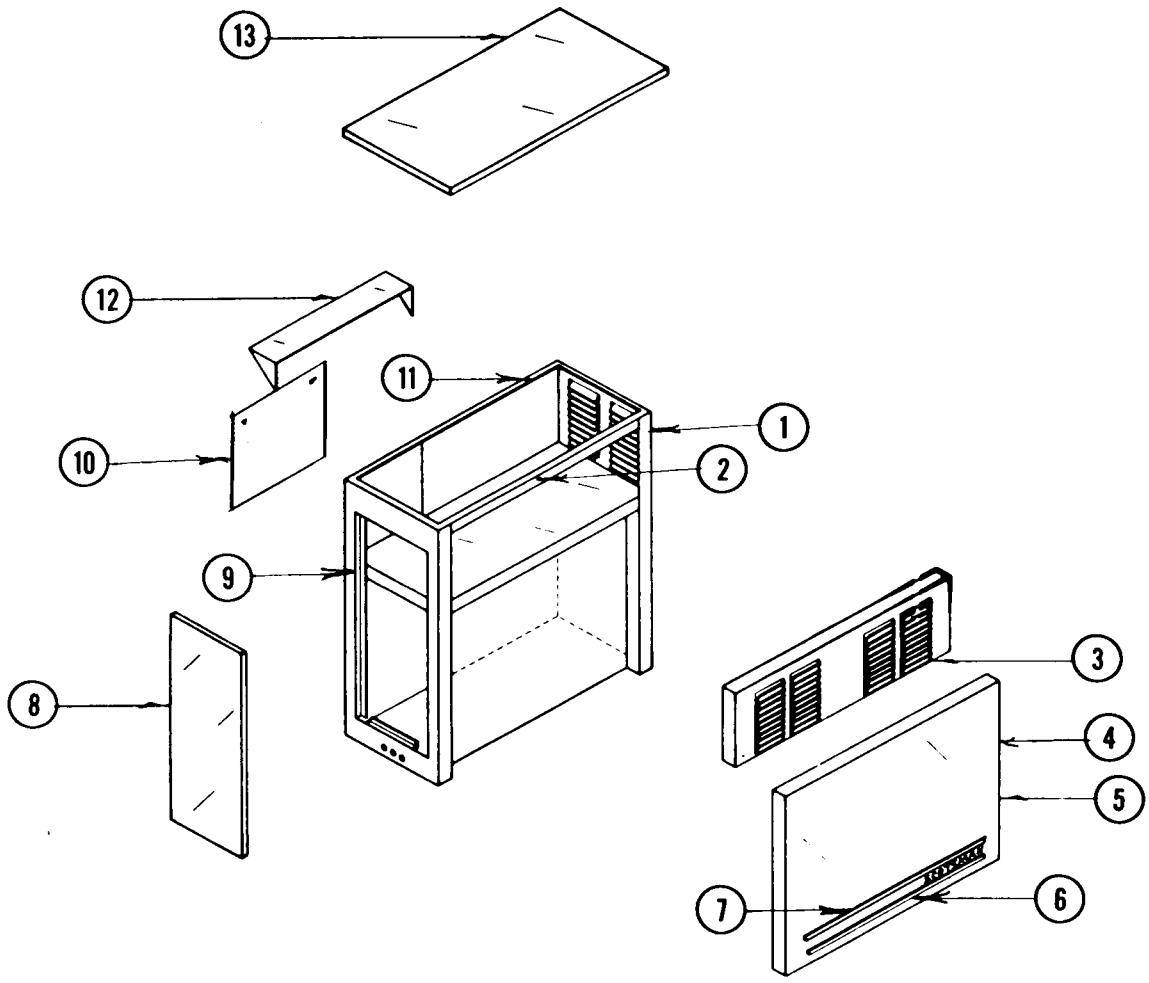

ITEM NO.	PART NO.	NAME
1.	A-8490	Right Side Panel
2.	A-17238	Top Channel
3.	A-16875	Upper Door Front
4.	A-17571	Door Gasket
5.	A-17352	Front Lower Door Assembly Complete
6.	A-5720-9	Moulding Strip
7.	15-474	Emblem Decal
8.	A-17211	Left Side Door
9.	A-17210	Left Side Panel Ass'y
10.	A-8495	Back Assembly
11.	A-8483	Top Back Ass'y
12.	A-8521	Shroud Top
13.	A-5694	Top Panel

SC-500 WATER COOLED CASE ASSY

"H" Models

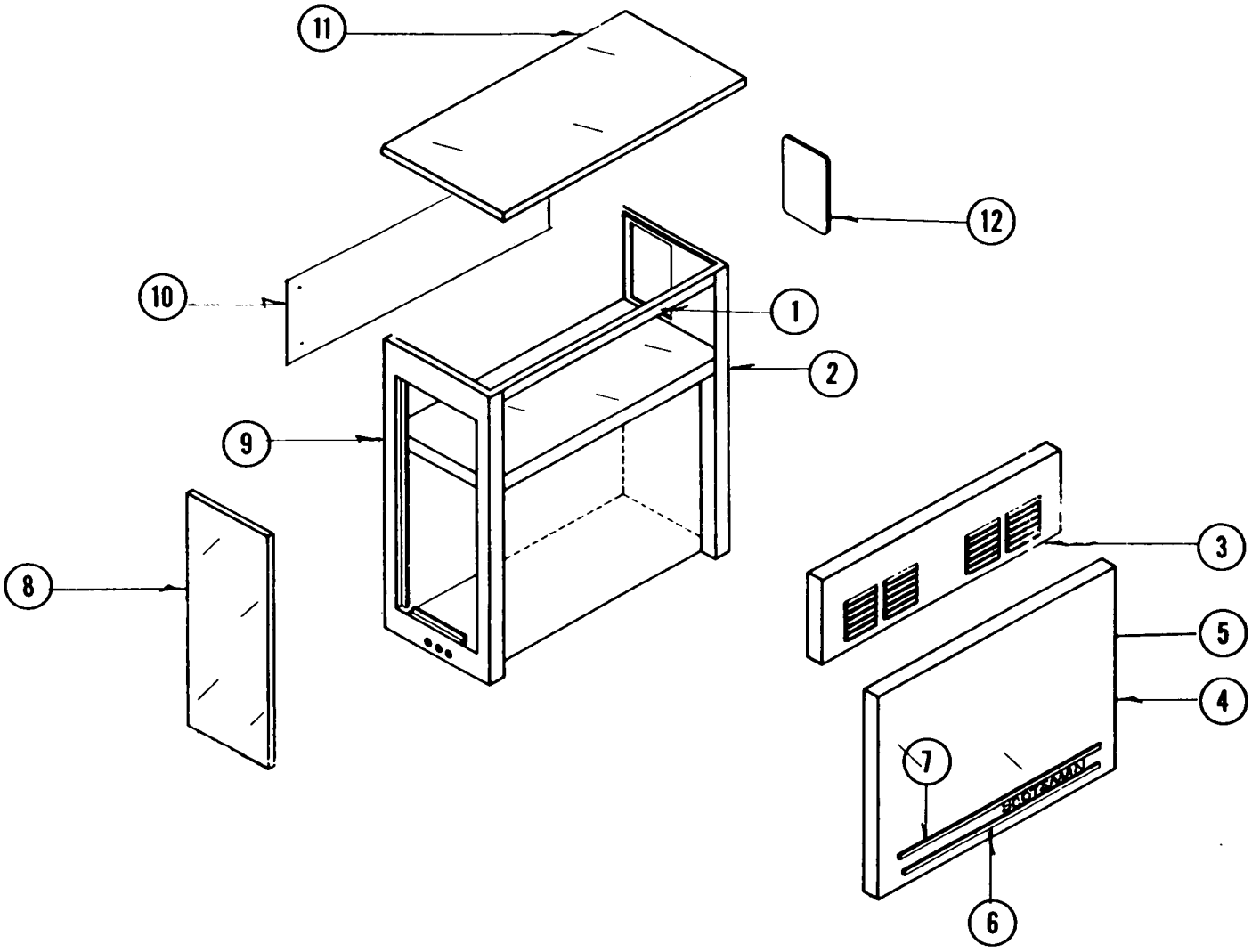

ITEM NO.	PART NO.	NAME
1.	A-17238	Top Channel Ass'y
2.	A-9323	Right Side Panel
3.	A-16875	Upper Door Ass'y (front)
4.	A-17352	Front Lower Door Assembly
5.	A-17571	Door Gasket
6.	A-5720-9	Moulding Strip (2 required)
7.	15-474	Emblem Decal
8.	A-17211	Left Side Door
9.	A-17210	Left Side Panel Ass'y
10.	A-9321	Back Assembly
11.	A-5694	Top Panel
12.	A-5693	Right Side Panel Door

SC-500 HOT WATER TANK AND WATER VALVE ASSEMBLIES

Thru "H" Models

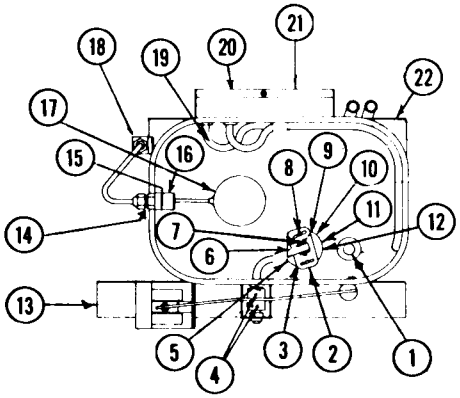

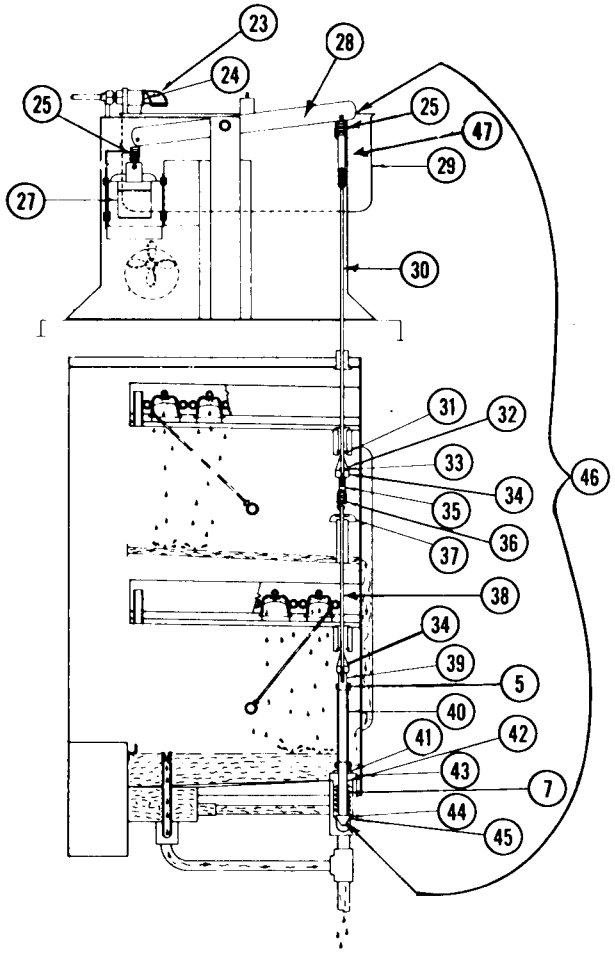

ITEM NO.	PART NO.	NAME
1.	A-8610	Stand Pipe
2.	S-8839	Valve Plunger
3.	A-8188	Plunger Link (SS) (2 reqd.)
4.	3-774	Roll Pins (2 required)
5.	S-7974	Stainless Pins (2 required)
6.	3-396-1	Cotter Pins SS (2 required)
7.	2-419	Compression Spring
8.	3-255	Wing Nuts (2 required)
9.	A-8182	Valve Seat Ass'y
10.	A-8186	Drain Ass'y
11.	2-543	'O' Ring
12.	2-530	'O' Ring (drain ass'y)
13.	A-8175	Right Bracket
14.	A-6771	Water Inlet Valve Ass'y
15.	A-5777	Valve Seat Holder
16.	S-6947	Rubber Valve Seat
17.	A-12068	Float & Arm Ass'y
18.	A-13346-4	Flow Control
19.	12-532	Heating Element
20.	12-246	Thermostat (*)
21.	A-6480	Thermo Disc Cover
22.	A-8173	Left Bracket
23.	2-1320	Plastic Deflector
24.	2-1259	Valve Pin
25.	2-420	Spring
27	12-1396-01	Solenoid - BOTTOM MOUNT
27.	12-1250-1	Solenoid - SIDE MOUNT
28.	A-8763	Lever Ass'y & Arm
29.	A-8171	Hot Water Tank Sub Ass'y
30.	A-8199	Valve Rod
31.	2-541	'O' Ring
32.	S-8949	Valve Guide
33.	2-545	'O' Ring
34.	S-8948	Lock Nut
35.	S-8946	Valve Nut
36.	2-549	Spring
37.	A-18355	Deflector Ass'y
38.	S-8951	Lower Rod
39.	S-8950	Lower Valve Nut
40.	S-8953	Lower Valve Link (2)
41.	S-8578	Drain Nut Stop
42.	S-8942	Valve Guide Ass'y
43.	S-7891	Nut
44.	S-6924	Valve Seat Washer (2 reqd.)
45.	2-541	'O' Ring
46.	A-8332	Water Valve Linkage Assembly
47.	S-8943	Rod End
48.	A-16378	Drain Screen
	A-17426-1	Hot Water Tank Complete

(*) Not Shown

**"H" Model use 12-1396-1 Solenoid

SC-500 SPRAY TUBE AND SPRAY TUBE DRIVE ASSY

"H" Models

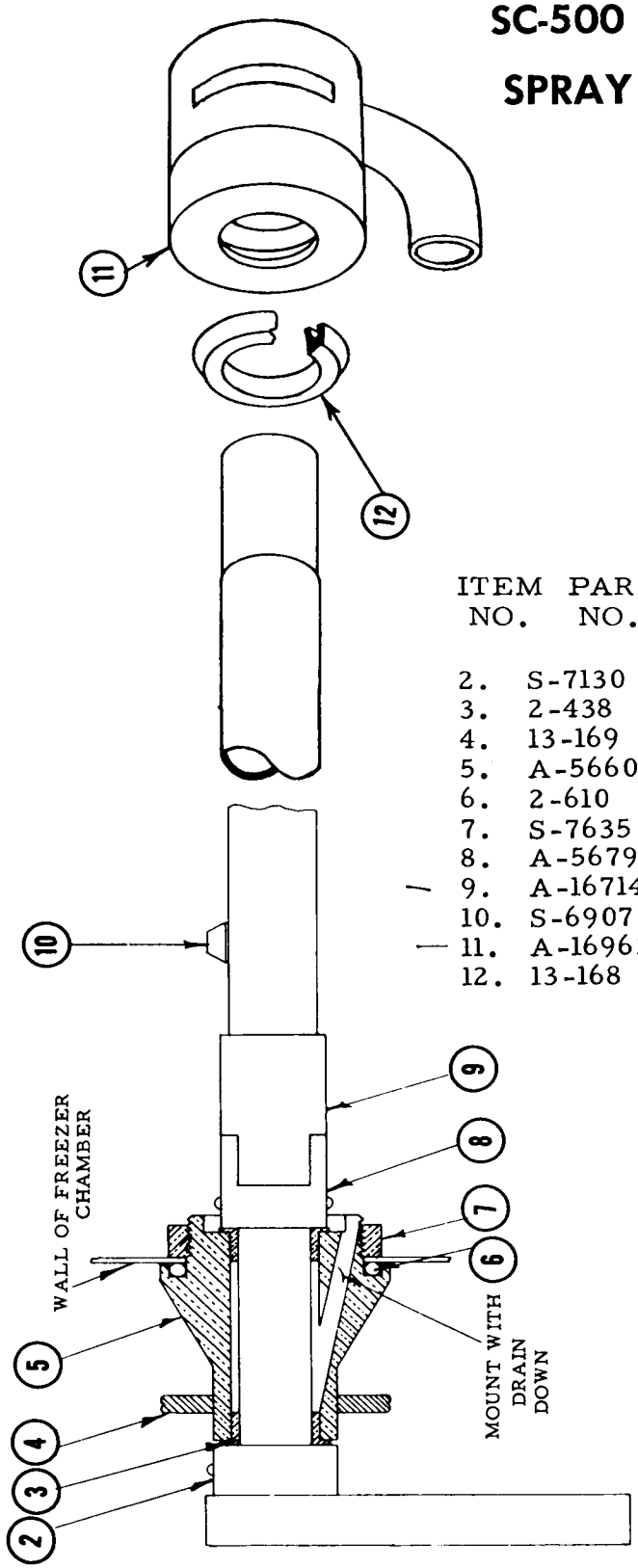

ITEM NO.	PART NO.	NAME
2.	S-7130	Collar
3.	2-438	Flange Bearing
4.	13-169	Grommet
5.	A-5660	Drive Bearing Support
6.	2-610	"O" Ring
7.	S-7635	Nut
8.	A-5679	Drive Journal Ass'y
9.	A-16714	Sprayer Tube
10.	S-6907	Jet
11.	A-16963	End Bearing Ass'y
12.	13-168	"U" Cup

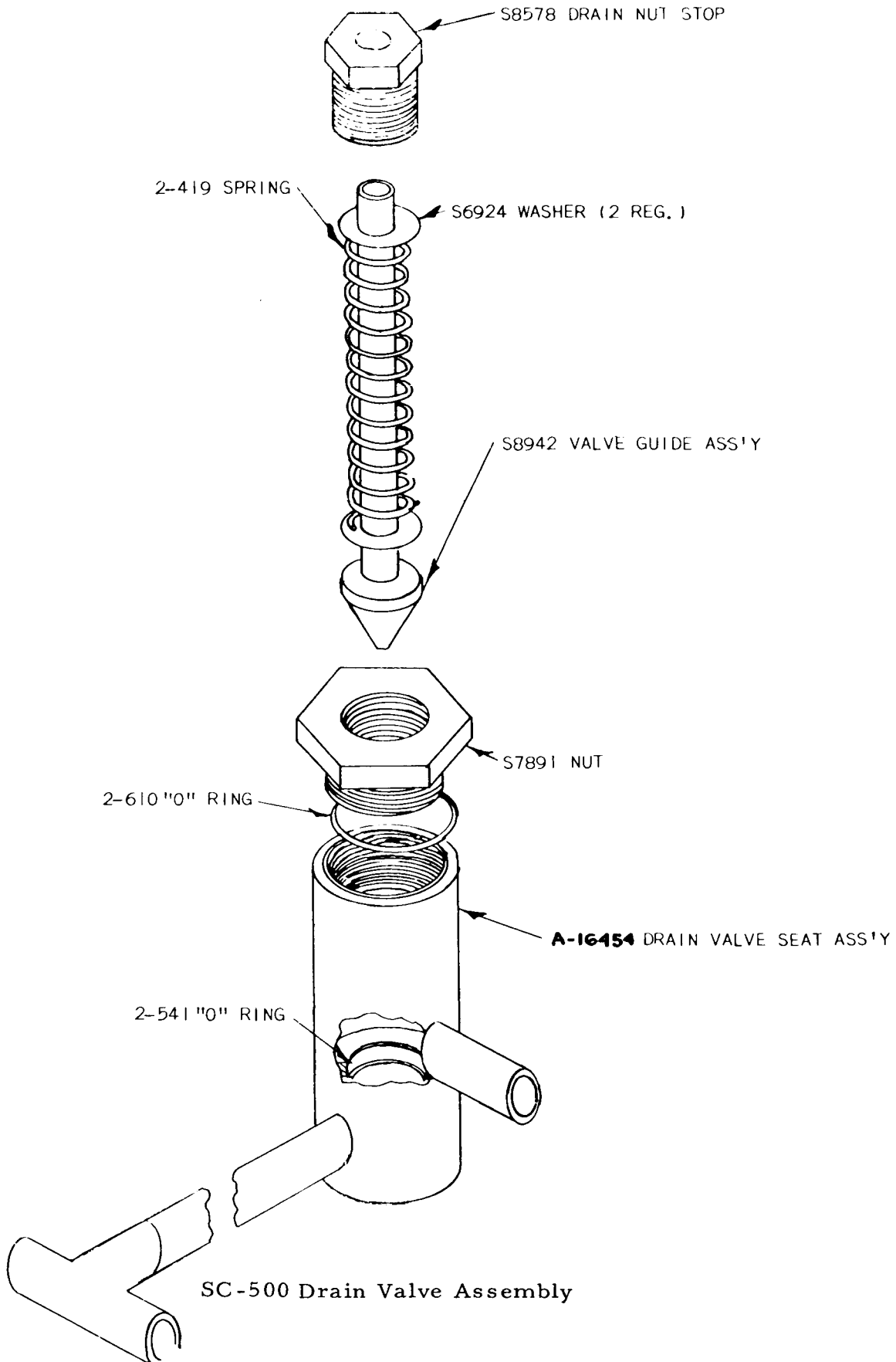

SC-500 Drain Valve Assembly

SC-500
WATER VALVE ASSEMBLY
LINKAGE AND ADJUSTMENT

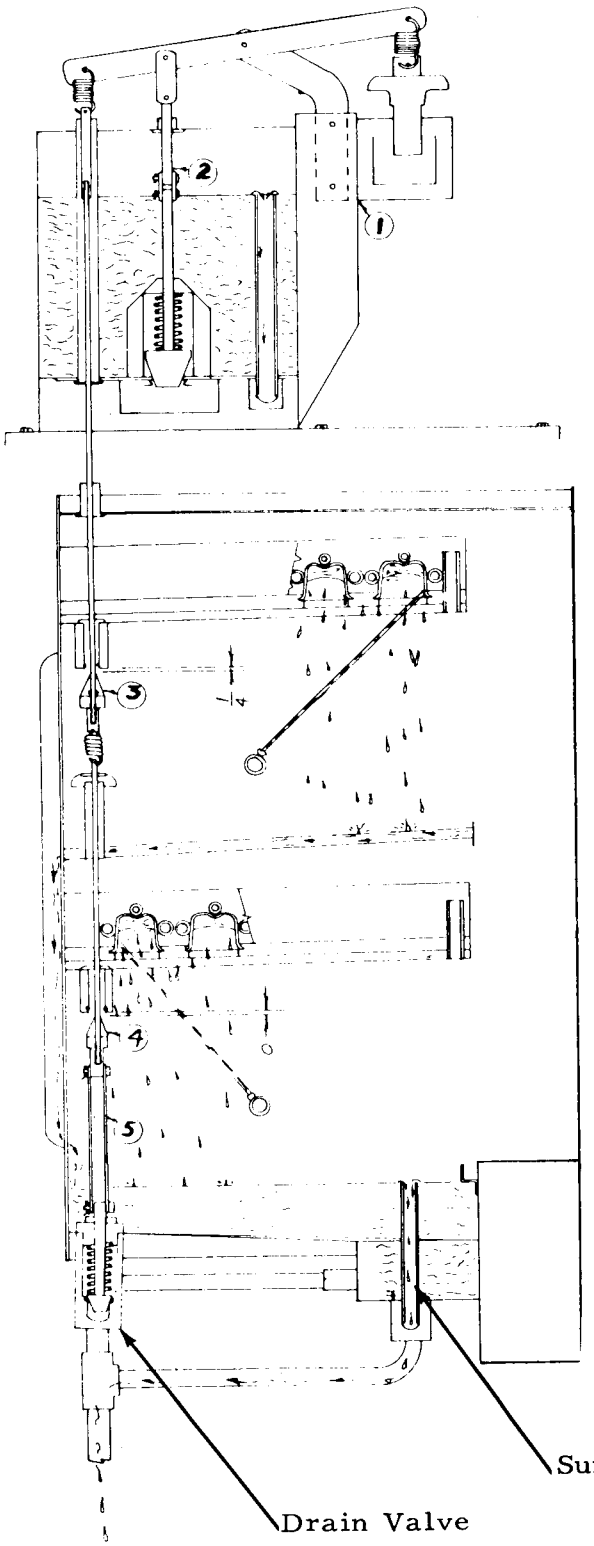

INSTRUCTIONS -- WATER VALVE ADJUSTMENT

Adjust solenoid at Point 1 up or down to the point where linkage at Point 2 is free and valve is closed in hot wate tank with solenoid open wide.

Adjust valve at Point 3 to 1/4 inch distance from end of valve guide (S-9849) to valve seat (solenoid wide open).

Adjust valve at Point 4 to 0 inch distance from end of valve guide (S-8949) to valve seat (solenoid wide open).

Linkage at Point 5 adjusted to be free.

With solenoid closed, valve in hot water tank should b open about 3/8 inch or more. Valve at Points 3 and 4 should be closed. Spring at Point 3 should be stretched about 1/4 inch. Valve at Point 5 should be open about 3/8 inch.

Trouble -- Hot water tank valve not opening wide enough
Solenoid should be adjusted lower so to obtai
full travel of solenoid.

SERVICE

Scotsman models SC-500 provide the user with the Scotsman Super Cube. By comparison with the Scotsman model MM-510 cuber, whose cabinet it resembles. Models SC-500 produce 160 cubes versus 416 miniture. sized cubes in the MM-510 cuber series. For practical purposes we can say the miniture cube is 1/4 the size of regular Scotsman cubes.

Other features of interest are as follows:

1. Air cooled models utilize a fan control on one of the two fan motors to maintain head pressure in low ambient location.
2. Hot water for defrost heated electrically..
3. Plastic curtains secured with thumb screws.
4. Cube chutes fabricated from stainless steel sheets rather than former plated rod types.
5. Automatic defrost and freezing cycles actuated by thermostatic temperature control.
6. Spray bar motor oscillates at 20 RPM.
7. Defrost setting on finishing clock is 3 1/2 minutes.
8. New style finishing clock has enclosed micro switch and offset adjustable cams to carry and direct electrical current thru defrost cycle.
9. All evaporator surfaces are tin dipped.

SERVICE

REMOVING AND REPLACING COMPONENT PARTS

Capillary Tubes

These controls are an integral part of the suction line, being soldered to it along most of its entirety.

To Replace Compressor Valve Plate

1. Install compound gauge in suction service valve port and close suction service valve by turning valve stem all the way in (Front seated)
2. Operate motor compressor until gauge reading reaches zero. Turn off unit.
3. Front seat discharge service valve.
4. Loosen all head bolts and tap head lightly with rubber-faced or plastic hammer to break loose.
5. Remove head, defective valve plate and any gasket material that may have stuck to head or compressor body.
6. Install new valve plate with all new gaskets as provided, tightening each head bolt a little at a time until all are snug.
7. Remove port gauge plug from discharge valve and crack open suction side letting gas purge off trapped air from head. Install hi side gauge in this port, back up both service valve stems and check around valve plate for refrigerant leaks.
8. Start unit, noting head and back pressures. If normal, let run until compressor gets warm. Tighten all head bolts once more, and again check for leaks.

To Replace the Compressor

1. Front seat both suction service valve and discharge service valve on the compressor.
2. Disconnect the wiring from the compressor.
3. Remove the bolts holding the service valve to the motor compressor body.
4. Remove the compressor hold-down nuts and lift the compressor out of the unit.
5. Reverse steps 1 through 4 in replacing the compressor.
6. Check the compressor for oil before connecting the oil lines. Should be 2 inches down from the top of the oil plug hole or 1/2 of sight glass.
7. Remove the gauge port plug from the discharge service valve. Crack the suction service valve slightly, allowing some gas to escape out the gauge port of the discharge valve. When you have thoroughly purged the compressor, replace the plug and open all valves. It may be necessary to charge the unit because of some of the gas was lost when the defective compressor was removed. Check and charge if necessary.

SERVICE

REMOVING AND REPLACING COMPONENT PARTS

To Remove Sump Pump

1. Put line switch in "Off" position.
2. Disconnect motor leads from terminals marked sump pump in control box.
3. Loosen cord connector and pull motor leads free.
4. Remove splash cover from sump and lift out pump.
5. Disconnect hoses.
6. To replace, reverse procedure.

To Remove Jet Tubes

1. Remove curtains from cube discharge openings.
2. Remove cube slides.
3. Push jet tube up at right end of tube, and bring forward far enough to acquire space to pull left end of tube out of drive mechanism.
4. Now remove stationary elbow coupling from right end of jet tube. Jet tube is now free, can be cleaned from right end opening.
5. To replace, reverse procedure. (Be sure to replace bearing on end of jet tube.) Check O-Ring in right side elbow.

To Adjust Linkage on Jet Tubes

1. Remove left access panel.
2. Loosen lock nuts on turn buckles. (Note. One lock nut has left hand thread, the other right.)
3. Adjust turn buckle for desired linkage. (Note. Check at cube discharge opening with flashlight to be sure jet sprays are hitting front and back cups.)
4. Caution. Be sure to tighten lock nuts after adjustment has been made.

To Remove Jet Tube Drive Motor

1. Disconnect motor leads on terminals marked drive motor in control box.
2. Loosen connector and remove leads from control box.
3. Loosen Allen head set screw in drive arm.
4. Remove drive arm.
5. Remove motor hold-down bolts. (Note. For easy removal of hold-down bolts, remove access panel.)

To Remove Large End Panels

1. Remove concealed screws under door gasket.
2. Remove screws from top and back panels.
3. Pull panels loose from rear of machine.
4. Pull forward and remove. (Note. All insulation used in this machine is in sections in a solid form and can be removed readily to repair water leaks, or any other trouble that might develop.

FUNCTIONAL PARTS & MAINTENANCE

PART NAME:	Jet Tube Assembly.
PART NUMBER:	A-16714 2 per unit
PART FUNCTION:	This tube acts as the water distributor for the ice cube cups. Each tube has 26 jets over its length with each jet feeding one row of cups from front to back. Supply water is forced into the jet tubes by the sump pump and is directed upward in a continuous stream. Drive motor through drive linkage forces these tubes back and forth over a 20° arc which covers all cube cups.
PART SETTINGS:	Factory set. Occasionally the spray tube travel will be either too far forward or back missing the first or last row of cups as the case may be. This can be corrected by adjusting the nuts provided on the drive linkage.
PART REPAIRABLE:	Yes, jets replaceable.
PART MAINTENANCE:	Check inlet supply elbow to make sure O-ring there is not worn letting water leak at this point. All jets should be cleaned also. By running Scotsman Ice Machine Cleaner through unit this step will eliminate hand cleaning. Partially plugged jets will produce cloudy or partial cubes. Wholly plugged jet will not produce a cube in cube cups it normally covers.
PART NAME:	Sump Pump.
PART NUMBER:	12-418A-1
PART FUNCTION:	Recirculating Pump used to pump supply water in sump tank to jet tubes during freezing cycle.
PART SETTINGS:	Factory set.
PART REPAIRABLE:	Yes. Motors rewound, impeller blades replaced. Motors only are also available for this pump, Part No. 12-1351-22.
PARTS MAINTENANCE:	Cleaning a stuck motor with carbon tetrachloride or equivalent will re-activate the majority of the motors

FUNCTIONAL PARTS & MAINTENANCE

PART NAME:	Agitator Drive Motor 20 RPM	Merkle Korff
PART NUMBER:	12-446	
PART FUNCTION:	This motor is used to drive the linkage mechanism which in turn drives the osxillating jet spray tubes. This provides a constant spray movement to all the inverted cube molds and by so doing also aerates the water producing clear, solid Scotsman cubes.	
PART SETTINGS:	No settings on motor, however, there are adjustable mounts which allow for moving motor slightly to position correctly.	
PART REPAIRABLE:	Yes, to some extent. Bearings, windings, etc., may be replaced in electric motor shops. Normally replace.	
PART MAINTENANCE:	Proper care in oiling with SAE 20 every six months or less as use indicates. There are two oil cups on the motor and a gear case hex head screw which has to be removed to change or add oil in gear case proper. Drive linkage should be inspected to insure free movement and no binding or drag on drive motor.	

PART NAME:	Spray Tube Drive Linkage
PART NUMBER:	A-17230
PART FUNCTION:	To connect and transmit mechanically, drive motor power to jet tubes assembly. Consists of 3 arms fastened one each to the two jet tubes and one drive motor. Arms are connected by a two piece rod which has an adjustment nut in the middle to correct spray tube travel.
PART SETTINGS:	Factory set. Linkage should be adjusted so that there is no drag on drive motor and also to insure spray tube travel across all cube cups.
PART REPAIRABLE:	Yes. All components replaceable.
PART MAINTENANCE:	Check linkage for binding or worn spots. Tighten set screws holding arms to spray tubes and drive motor.

FUNCTIONAL PARTS & MAINTENANCE

PART NAME:	Hot water tank complete.
PART NUMBER:	A-17426-1
PART FUNCTION:	Tank serves dual purpose, stores correct amount of incoming supply water for next freezing cycle and also heats it electrically for use in defrosting preceding batch of cubes. Water inlet valve and float ball maintain correct water level. Thermostat and heating element maintain constant hot water temperature. 135°F.
PART SETTINGS:	Factory set. Water float level has adjustment arm. Water level should be maintained 1/4" below overflow pipe. Thermostat governing temperature, of heating element has a scale and pointer which is factory set 135°F.
PART REPAIRABLE:	Yes. All components of tank are replaceable. Water inlet valve. A-6771, heating element part No. 12-532 and thermostat Part No. 12-246 are easily changed.
PART MAINTENANCE:	Periodic cleaning with Scotsman Ice Machine Cleaner will dissolve accumulated scale on inlet valve seat, heating element and side walls of hot water tank. This in turn prevents excess loss due to leaky inlet valve and more efficient operation of heating element.
PART NAME:	Water Valve Assembly
PART NUMBER:	A-8332
PART USAGE:	Used on all models.
PART FUNCTION:	This portion of water valve extends thru unit from top to bottom and is actuated by the 12-1396-1 solenoid. During defrost periods it positions one seat to each freezer assembly and shunts hot water to those trays while also opening bottom drain valve. During freezing cycle seats to freezers drop down as does bottom drain seat, closing off drain water. This assembly made in sections which can be dismantled from inside.
PART SETTINGS:	Entire valve can be adjusted either individually on each seat and drain seat or as a whole by taking up top rod adjustment to solenoid.
PART REPAIRABLE:	Yes. All components in valve linkage available from factory stock.
PART MAINTENANCE:	Care should be exercised in seeing that seats to platens or freezer trays, close fully during defrost and that hot water drain in tank opens 3/4" letting defrost water leave tank. Linkage when in defrost position will allow the 12-1396-1 actuating solenoid to fully close and when in freezing cycle to fully open. Seats, rods and springs in valve linkage should be checked for adjustment and wear every six months.

FUNCTIONAL PARTS & MAINTENANCE

PART NAME: Solenoid

PART NUMBER: 12-1396-1

PART FUNCTION: An electrically operated solenoid which is used to open and close the water valve through mechanical linkage. Solenoid is a continuous duty type.

PART SETTINGS: Solenoid itself requires no adjustment, however, linkage should be adjusted so that solenoid can make positive contact when energized and core will leave field when de-energized. Adjust linkage so that solenoid travels approximately 3/4" to close when energized.

PART REPAIRABLE: No. Replace when in-operative.

PART MAINTENANCE: Solenoid proper requires no maintenance but care should be exercised to insure proper voltage to coil to avert burn-outs. Mechanical linkage can be oiled and adjusted to prevent drag on solenoid. Many solenoid burn-outs are caused indirectly such as a sticking time clock which will keep solenoid energized for long periods of time.

PART NAME: Relay Potter and Brumfield Type PR5AX

PART NUMBER: 12-419

PART FUNCTION: Relay is used as a by-pass on the bin thermostat when it tries to cut unit off on a full bin of cubes during a freezing cycle. This insures full cubes every time a harvest occurs and prevents short cycling on bin thermostat.

PART SETTINGS: Factory set.

PART REPAIRABLE: No. Replace when in-operative.

PART MAINTENANCE: Check electrical connections and blow points clear of lint or dirt.

FUNCTIONAL PARTS & MAINTENANCE

PART NAME:	Reverse Acting Temperature Control
PART NUMBER:	11-345-1
PART FUNCTION:	Reverse acting temperature control, closes on temperature decrease, opens on temperature rise. Control determines length of freezing cycle and by the same token, the cube size. A lower setting on control will produce larger cubes, a higher setting, smaller cubes. This control actuates time clock motor, Part No. 12-645-1, which then takes over balance of freezing cycle (8 1/2 minutes) and also defrost period 3 1/2 minutes.
PART SETTINGS:	Adjustable by screw driver slot.
PART REPAIRABLE:	No. Replace when inoperative.
PART MAINTENANCE:	Check electrical connections. Blow points free of dust, dirt, lint, etc.
PART NAME:	Contactor
PART NUMBER:	12-820-1
PART FUNCTION:	Across the line contactor used to provide protection for hi voltage compressor only. Contactor is wired sc any of the controls in pilot circuit such as bin thermostat will cause contactor holding coil to drop contact points when actuated. There are no overloads or resets on this control.
PART SETTINGS:	Factory set, no adjustments necessary.
PART REPAIRABLE:	No. Replace
PART MAINTENANCE:	Check control for loose electrical connections and blow free of any dust, dirt, etc.

FUNCTIONAL PARTS & MAINTENANCE

PART NAME: Temperature Control Storage Bin. White Rodgers Type 16A64-9

PART NUMBER: 11-99-1

PART FUNCTION: To automatically cut machine off when ice level in storage bin reaches thermostat bulb. Automatically starts machine when ice level in bin falls below bulb location.

PART SETTINGS: Most of these controls have differential being $4^{o}F$. Settings are 35° cut out and 39° cut in.

PART REPAIRABLE: No. Replace when inoperative. If out of warranty it can be sent in through your local refrigeration supply dealer and repaired or replaced for a small percentage of original cost.

PART MAINTENANCE: Remove cover, check points for corrosion or arcing every six months. Blow control free of bugs, dirt, etc. Check capillary for cracks or worn spots due to vibration.

Hold small handful of ice on thermostat bulb to check operation of control. Tighten electrical connections.

PART NAME: Timer. Automatic Electric.

PART NUMBER: 12-645-1

PART USAGE: Heart of the cyclematic control system is the cube size temperature control Part No. 11-345-1 and the time clock it actuates. All electrical components are connected to the time clock terminal board and are shunted by means of a micro-switch to either the freezing cycle or harvest cycle. Micro-switch is in turn actuated by two metal cans that are directly connected to the electric timer clock motor. Timer has a 12 minute cycle, 8 1/2 minutes on freezing cycle after being cut on by low temperature control and 3 1/2 minutes on defrost cycle. Time clock face has numerals to 7 on half the face. Each numeral represents a minute period. Face also has a lever beneath it which can be moved to lengthen or shorten defrost period.

PART SETTINGS: Normal setting for defrost is on No. 3 1/2 which is 3 1/2 minutes.

PART REPAIRABLE: Yes. Micro-switch, Part No. 12-645-1 are replaceable as well as timer clock motor only Part No. 12-367.

PART MAINTENANCE: Check all electrical connections, blow contact points free of dust, dirt, etc.

MAINTENANCE INSTRUCTIONS FOR SCOTSMAN SUPER CUBERS

THE FOLLOWING MAINTENANCE MUST BE ACCOMPLISHED TWO (2) TIMES PER YEAR ON ALL SCOTSMAN SUPER CUBERS.

1. Clean air-cooled condenser. This is to be done frequently with the machine shut off. Air cooled models.
2. Clean hot water tank and evaporator, sump tank and screen, using Scotsman Ice Machine Cleaner or equivalent.
3. Remove jet tube and manually clean jets.
4. Check curtain assemblies. Replace any broken sections.
5. Tighten all electrical connections.
6. Tighten all bolts.
7. Check water supply. Clean and flush flow control. Clean water strainer.
8. Oil jet tubes drive motor three (3) places. Use SAE 20 oil--2 oil cups, 1 crankcase screw covered opening.
9. Oil sump pump motor. Necessary to remove pump on some models. Use SAE 20 oil. Note: Some pumps are ball bearing style, they have no oilers hence need no oiling.
10. Oil condenser fan motor. Punch sealed cap or remove screws where possible.
11. Check for refrigeration leaks with halide torch.
12. Check for water leaks. Tighten drain line connections.
13. Check size and condition of cubes. Adjust as required. See Service Analysis Section.
14. Check bin thermostat setting. Factory set at 35° out, 39° in.

PROCEDURES FOR USE OF SCOTSMAN ICE MACHINE CLEANER IN SCOTSMAN ICE MACHINE.

1. Remove front access doors.
2. Locate control box with time clock knob protruding thru cover.
3. Put unit through a harvest cycle manually. This may be done by turning time clock knob clockwise until a loud snap is heard.
4. Let unit finish cube harvest cycle and start into freezing cycle. This will be approximately 5 minutes after the loud snap in Step #3 is heard. At this time turn off the compressor switch.
5. Locate the hot water tank which is directly behind the top access door. Remove the hot water tank cover by pulling up around the edge until it snaps off. Pour 16 ounces, of "Scotsman Ice Machine Cleaner" into the hot water tank.

6. Locate the sump reservoirs which are directly behind the ice discharge chutes. The discharge chutes are covered by a series of white plastic curtains which are free to swing out into the storage bin. Pour 8 ounces, of "Scotsman Ice Machine Cleaner" into each sump reservoir at both the upper and lower levels.

7. Let unit operate normally for 10-15 minutes into the freezing cycle. No ice will be made because the motor compressor is not in operation.

8. At the end of this time put the unit through 2 or 3 harvest cycles manually to allow fresh make up water to clean out remaining solution. Each time waiting approximately 5 minutes after the loud snap until the next harvest cycle is done manually.

9. Turn the compressor switch back on.

10. Check each new batch of new cubes until they are clean and until acid taste has been removed from cubes.

11. Put hot water in storage bin to melt the cubes and thereby clean the drains with the same solution that has just cleaned the unit.

12. Use a damp cloth to wipe off curtains and inside of storage bin.

13. Replace all access doors.

14. Unit is now ready for continued automatic operation.

DESCRIPTION	
CASE PARTS	
Scotsman Emblem	15-474
Left Side Door	A-17211
Bulb Cover	A-15759
Bulb Gasket	13-590
Adapter Plug (Freezer Assembly)	S-7434
Right Side Panel, W.C.	A-9323
Right Side Panel, A.C.	A-8490
Left Side Panel	A-17210
Back Panel, W.C.	A-9321
Back Panel, A.C.	A-8495
Drive Bearing Support	A-5660
Top Panel	A-5694
Center Cube Deflector	A-16716
Upper Cube Chute, Left	A-17272
Upper Cube Chute, Right	A-16270
Lower Cube Chute, Left	A-16718
Lower Cube Chute, Right	A-16720
Shroud Top, A.C.	A-8521
Upper Curtain Assembly	A-17243
Lower Curtain Assembly, Right	A-16777
Lower Curtain Assembly, Left	A-16778
Door Nut, 6 reqd.	3-1029
Door Screws, 6 reqd.	3-789
Upper Door Assembly	A-16875
Front Door Liner Assembly	2-1536
Lower Front Door Assembly	A-17352
Upper Face Plate Assembly	A-18311
Lower Face Plate Assembly	A-16662
Bulb Holder Buttons	A-16108
Cube Tray Assembly, 2 reqd.	A-17285
Accumulator Cover	S-9805
Door Gasket	A-17571

For stainless steel case parts add -S to Part No.

DESCRIPTION	
ELECTRICAL	
Temperature Control (W-R)	11-99-1
Timer	12-645-1
Control, Cube Size	11-345-1
Relay (Bin Thermostat)	12-419
Drive Motor	12-446
Sump Pump	12-418A-1
Contactor	12-820-1
Terminal Block	12-813
Toggle Switch (On/Off)	2/unit 12-426

COND. UNIT	
Dryer	2-677
Relay, W.C.	18-1903-18
Dual Pressure Control	11-286
Motor Compressor-- 230/60/1, W.C.	18-546
Valve Plate and Gaskets	18-326
Water Cooled Condenser	18-599
Water Regulating Valve	11-198
Motor Compressor-- 208/60/1, W.C.	18-550
Starting Capacitor, W.C.	18-1901-15
Running Capacitor, W.C.	18-1902-17
Overload Klixon	18-533
Terminal Assembly	18-270
Service Valve Gasket	18-561
Plain Condenser Gasket	18-548
Manifold Condenser Gasket	18-549
(2 per unit) Fan Motor	18-559
(2 per unit) Fan Blades	18-625
(2 per unit) Fan Motor Bracket	18-636
Condenser, Air Cooled	18-624
Vibration Eliminator	16-317
Motor Compressor, 230/60/1, A.C.	18-621
Motor Compressor, 208/60/1, A.C.	18-631

WATER VALVE

DESCRIPTION	
Upper Valve Rod	S-8943
Rubber Valve Seat "O" Ring	2-541
Rubber Valve Seat "O" Ring	2-530
Middle Valve Rod	A-8199
Valve Nut	S-8946
Middle Valve Spring	2-549
Lower Valve Rod	S-8951
Lower Valve Link	S-8953
Spring (Drain Valve Seat Assembly)	2-419

WATER CIRCUIT

Spray Tube Assembly	A-16714
Inlet Pipe Assembly (Upper)	A-5858
Inlet Pipe Assembly (Lower)	A-5859
End Bearing Assembly	A-16963
Overflow Pipe (Sump)	A-17521
Strainer	16-207
"U" Cup	13-168

DRIVE MOTOR & LINKAGE

Single Driven Arm Assembly	A-17232
Double Driven Arm Assembly	A-17233
Linkage Coupling	S-7936
Linkage Rod, Lower	A-17234
Left Linkage Rod	S-7940
Linkage Rods, Right	S-7938
Complete Drive Linkage Assembly	A-17230
Driver Arm Assembly	S-9666
Set Screw	3-431
Drive Motor	12-446
Left Linkage Nut	S-7937
Right Lock Nut (Two reqd.)	3-357
Driving Journal Assembly	A-5679
Drive Motor Grommets	13-100
Bearing, Oil Lite	A-7033

DESCRIPTION	
Water Valve Assembly, Complete	A-8332
Valve Seat Washer	S-6924
Valve Lever	A-8763
Valve Plunger	S-8839
Valve Link	A-8188
Drain Valve Seat Assembly	A-8182
Drain Valve Guide	S-8942
Valve Guide Assembly	S-8949
Short Pin (Water Valve) S.S.	S-7974
Roll Pin	3-774
Water Deflector Cup	A-18355
Spring (Solenoid & Water Valve)	2-420

HOT WATER TANK

Long Pin (Solenoid)	S-2186
Water Inlet Valve	A-6771
Valve Seat	S-6947
Nut (Inlet Valve)	S-7044
Hot Water Tank Assembly	A-17426-1
Standpipe Overflow	A-8610
Hot Water Tank Cover	A-13385
Compression Spring (Hot Water Tank)	2-419
Float Assembly	A-12068
Drain Screen, Water Tank	A-16378
Valve Spring	2-420
Wing Nut	3-255
Right Bracket Support	A-8175
Left Bracket Support	A-8173
Hot Water Tank	A-8171
Heating Element	12-532R
O Ring	2-530
Solenoid	12-1396-1
Flow Control	A-13346-4
Thermostat	12-246
Thermo Disc Cover	A-6480
Plastic Water Deflector	2-1320
Solenoid Mount	A-18275
Elastic Stop Nut, 4 reqd.	3-1284
Grommet, 4 reqd.	13-625
Washers, 4 reqd.	13-298
Screws	3-499

TABLE OF CONTENTS

Forward	Page 1
Table of Contents	2
General Description	3
Installation Specifications	4-5
Mechanical Specifications	7
Installation	8-10
Start Up	11
Chassis Assembly Views	12-13
Cabinet Assembly Views	14-15
Ice Maker Section	
Operation - Components - Refrigerant	16-17
Wiring Diagrams	19-20
Service Analysis	21-24
Cleaning Instructions	25
Maintenance Instructions	26
Repair Parts Section	27-32
Carbonation Section	
Facts & History of CO_2	33-38
How it Works (Sources)	39-41
CO_2 Regulators - Operation	42-43
Syrup Tank System - Pressure types	44
Carbonated Water Schematic - How It Works	45-46
Wiring Diagram - Liquid Level Control	47
Service Analysis Charts	48-49
Electronic Valves - Parts & Service	50-52
Repair Parts Section	53-54
Conversion Kits - Accessory Items:	
Location - Usage on SD-1H	55
Kit Illustrations - Installation	56-73
Parts List	64

THIS PAGE
INTENTIONALLY
LEFT BLANK

THIS PAGE
INTENTIONALLY
LEFT BLANK

DESCRIPTION

The SCOTSMAN AUTOMATIC DRINK DISPENSER is designed for drugstores, resturants, cafeterias, ball parks, drive-ins, amusement parks, theatres--in fact, any place where crowds gather and seek ice cold, thirst quenching refreshments in a hurry. The continuous flow dispensers, together with the concealed SCOTSMAN crushed ice maker, is designed for the peak periods of traffic.

ATTRACTIVE COMPACT CABINET

Dark grey finish anodized aluminum trim, up-to-date-styling, and removable panels for easy access to mechanical parts. Hood assembly of stainless steel attractively designed for front or back counter installation.

SEALED REFRIGERATION SYSTEM

Provides quiet, efficient operation of the machine. Compressor motor is spring mounted, the worm motor and carbonator pump is rubber mounted for quiet operation.

SELF-CONTAINED STORAGE BIN

Stores its own ice supply in a heavily insulated, stainless steel storage bin with handy access door opening in hood-counter.

STANDARD OVER-ALL DIMENSIONS

Allows automatic drink dispenser to be installed in harmony with existing counter equipment.

HOW IT WORKS

The unit is completely automatic; water is circulated through a self-contained carbonator which guarantees a ready, abundant supply of perfect carbonated water at all times. Maximum cooling of sweet water, carbonated water and syrups is accomplished by the large capacity cold plate which forms the ice storage bin bottom. All modern dispensing heads allow the mixture of a set amount of syrup and carbonated water. A manual switch starts the ice machine and from then on ice is produced automatically in small uniform pieces. When the storage bin fills, a bin thermostat automatically shuts the machine off and causes it to start up again when the ice is removed from the storage bin.

SCOTSMAN®

DRINK DISPENSER ICE MACHINE

SD-1H series

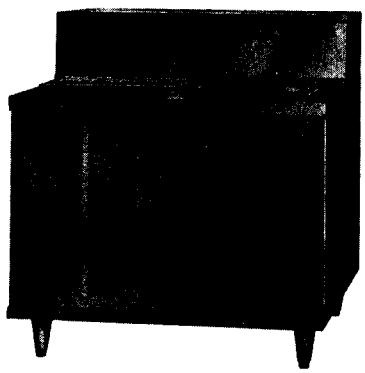

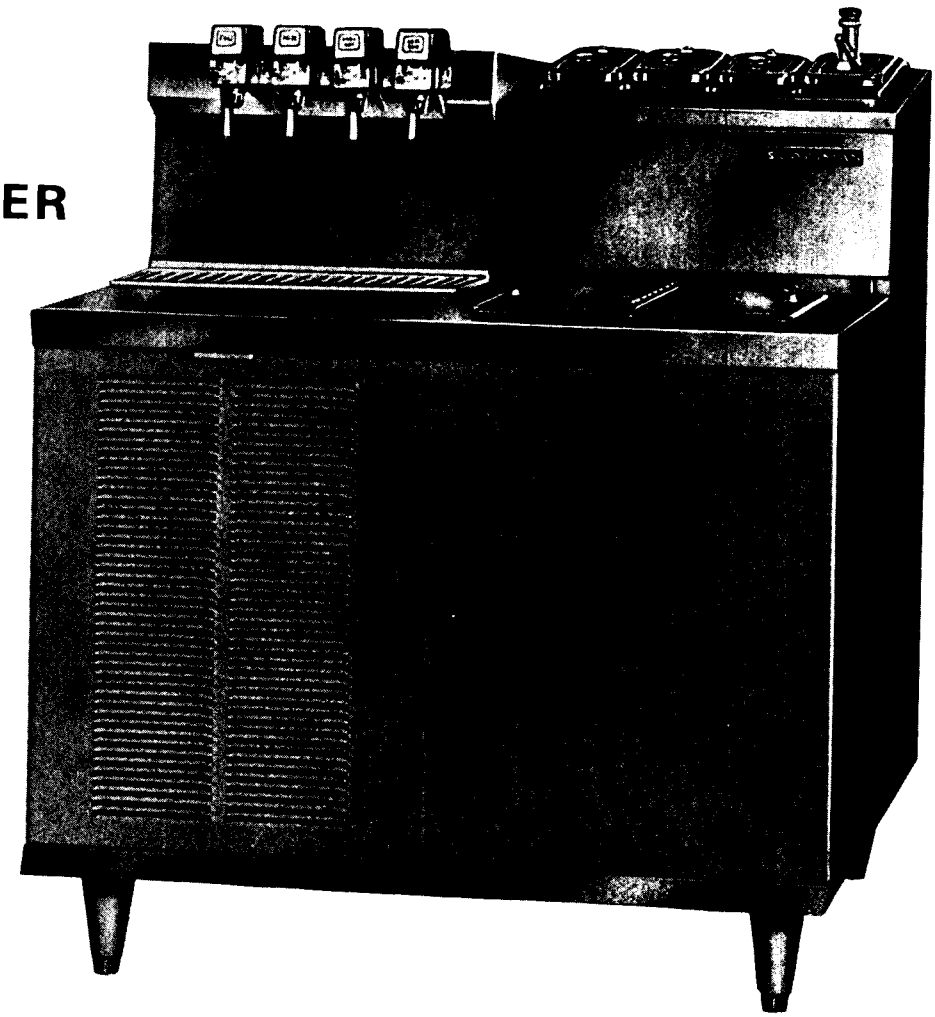

ice making capacity

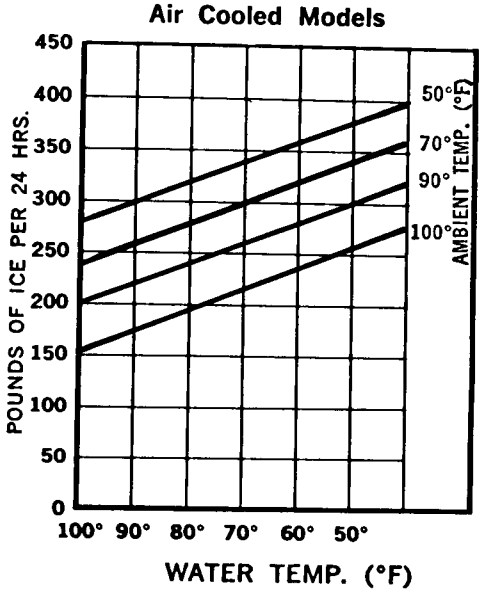

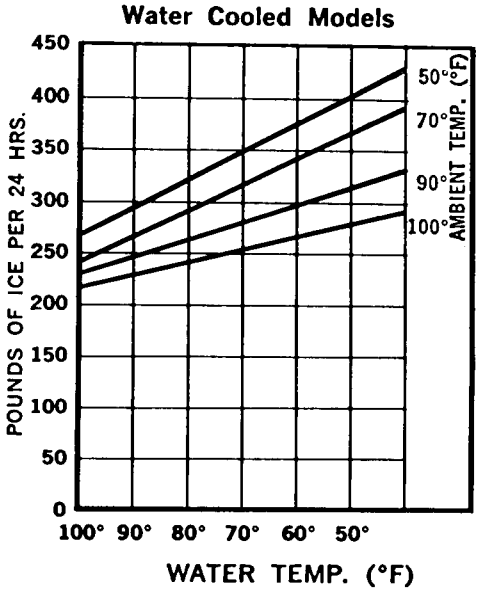

SPECIFICATIONS

COMBINATION ICE MACHINE AND DRINK DISPENSER	MODEL SD-1H	MODEL SD-1WH	MODEL SD-1H-SS	MODEL SD-1WH SS
Daily capacity up to 350 lbs.	X	X	X	X
Self contained storage bin. Stores up to 200 lbs.	X	X	X	X
Heavy duty 1/3 HP. Compressor	X	X	X	X
Air cooled condenser	X		X	
Water cooled condenser		X		X
1/4 HP. evaporator drive motor	X	X	X	X
1/4 HP. carbonator system	X	X	X	X
Standard 115 V. 60 cy. 1 ph. AC	X	X	X	X
1/4" CO2 inlet SAE Flare	X	X	X	X
3/8" water inlet SAE Flare	X	X	X	X
3/8" water inlet SAE Flare		X		X
Condenser outlet 3/8" O.D. Tube		X		X
Sump and drip drain 5/8" O.D. Tube	X	X	X	X
5/8" bin drain O.D.	X	X	X	X
Textured dark grey exterior	X	X		
Stainless steel exterior			X	X
Height with legs 45 1/2" plus "A" below.	X	X	X	X
Height to working surface with legs 35 1/2"	X	X	X	X
Width 40"	X	X	X	X
Depth 31"	X	X	X	X
Approximate shipping weight	526	526	526	526

"A" ACCESSORY KITS

K-41E

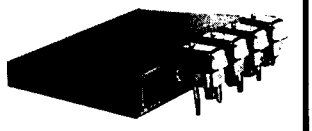

Electric valve unit: dispenses four flavors plus carbonated and plain water. Prefabricated hose assembly speeds internal connections. Easily installed by removing top panel at left of machine, and setting unit over the opening.

K-42S

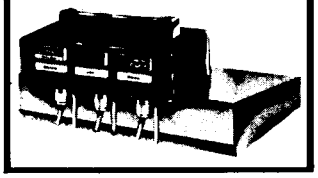

"Satellite" postmix head base: provides mounting surface and prefabricated hose assembly for easy installation of this popular remote postmix dispensing head. Replaces top panel at left of machine. Head not included.

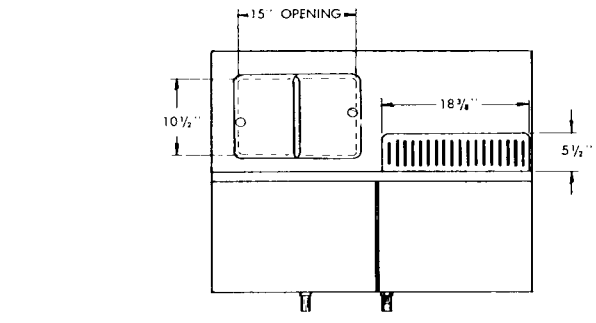

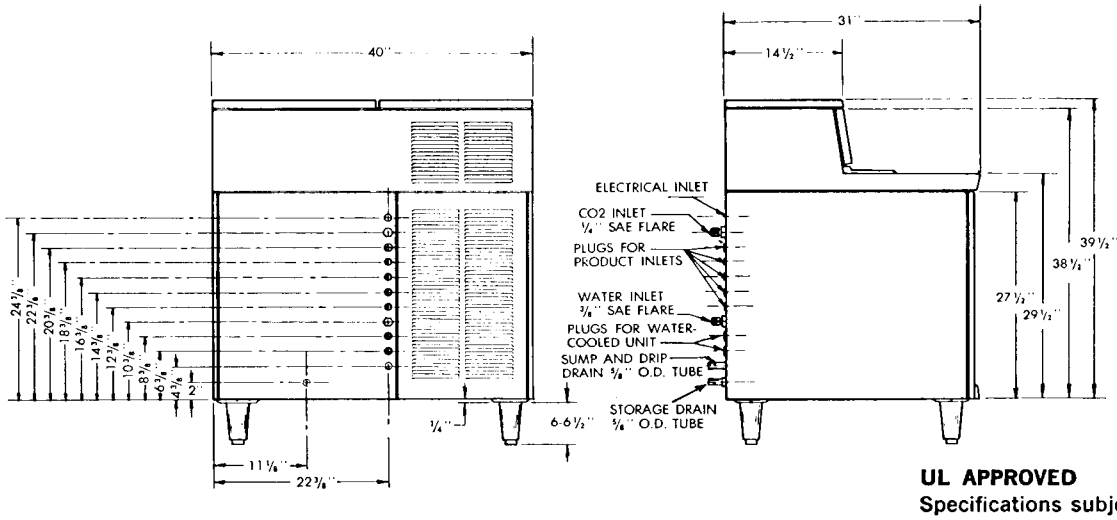

K-43R

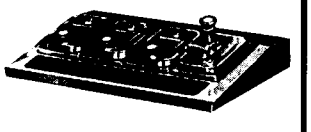

Syrup rail kit: holds four jars, replaces top panel at right of machine. Chilled air from ice bin provides refrigeration. Jars not included — openings accept 4 1/16 x 6 3/4" jars with depths of 6 9/16" or 9 1/16". Maximum of two 9 1/16" jars may be used.

UL APPROVED

Specifications subject to change without notice.

INTRODUCTION

SCOTSMAN MODEL SD1-H DRINK DISPENSER IS DESIGNED TO provide the utmost in flexibility to fit a particular users needs.
Hood top panels are seperated and removable to allow use of numerous syrup dispensing heads and accessories as required.

A seven circuit cold plate forms the ice storage bin bottom allowing use of five syrup flavors plus a cold sweet water and carbonated water cicuit.

A complete carbonated water system comes built in, including carbonator pump and tank with connections thru cold plate.

There are no syrup lines (pre-cool) connected from the cabinet fittings to the cold plate nor post cooled lines from plate to fixture. These lines come with the Scotsman kits K-42S Satellite and K-41E Electric valve kit.

All connections for syrup, water and CO_2 gas are located on a common panel at the rear center of the cabinet back. Drains and electrical supply lines are also located at cabinet back.

DRINK DISPENSER
General Specification

ELECTRICAL RATING	SD-1-H
Input Voltage	115 60/1
Amperage - Total	13.6
No. of Motors	3
Largest Motor - Compressor	1/3 H.P.
Amperage - Largest Motor- Compressor	4.9 Amps

PLUMBING AND CO_2	
Water Inlet (all Models)	3/8" Flare
Water Inlet - Condenser (W.C. models)	3/8" Flare
Drain Overflow	5/8" O.D. Copper
Drain - Storage	5/8" O.D. Copper
Drain Condenser (W.C. models)	3/8" O.D. Copper
CO_2 Connections	1/4" Flare
CO_2 Line Size Recommended	1/4" to 10' run

ICE MAKER SECTION	
Compressor	1/3 H.P.
Condenser	Air or Water Cooled
Refrigerant	R - 12
Refrigerant Control	Capillary tube
Standard Voltage Characteristics	115, 60, 1
Drive Motor	1/4 H.P.
Ice Making Capacity	* 350 lbs. per day
Storage Capacity	200 lbs.

CARBONATOR SECTION	
Motor	1/4 H.P.
Pump - Procon	60 gph
Switch - Pump Up	Electrodes in Tank
Voltage Characteristics	115, 60, 1
Cold Plate	18 3/4" x 26 3/8"
Control - Pump Up	Liquid Level - Relay
Carbonator Tank	Bastian Blessing

DISPENSER SECTION

Order and use conversion kits as follows:

K41-E	Electric Valve Kit
K42-S	Satellite Head Kit
K43-R	Syrup Rail Kit

See manual section, Factory Conversion Kits, Accessories for Installations procedures.

INSTALLATION

UNCRATING DRINK DISPENSER

The entire unit, less conversion kits, comes in one crate. Upon delivery a visual inspection of the crate should be made and any severe damage noted should be reported to the delivering carrier and a concealed damage claim filed subject to internal inspection with carrier representative present. Remove crate by pulling nails driven through sides of crate into the bottom skid. A nail puller is best suited here. Next remove (4) four bolts from underside of skid which connect to complete unit base. Unit now free from all crating.

PREPARATION FOR INSTALLATION

Remove all service and access panels from unit cabinetry-leg package is wired to inner machinery compartment, remove and install (4) four legs.
Next remove all packing tapes or wires in machinery compartment. Remove paper packing in float operated reservoir, found under left top hood cover.
Loosen (4) four motor compressor hold down nuts until compressor rides freely on mounting springs.
Next select proper drink dispenser conversion kit or kits and install same per instructions in kit. Also refer to this manual secton " Factory Conversion Kits".

LOCATION

Select the location before delivering the unit to the job. The following points should be considered.

1. Convenience-Place the unit where it is practical to give efficient use. It can be located either in a back bar or in a front bar. It is designed to fit into a standard soda fountain line-up or it can be used as an individual counter unit. Keep in mind that the dispenser can serve a double function of providing crushed ice as well as carbonated beverages.

2. Servicing Unit-Bearing in mind that all service connections are made at the back center panel, provisions for adequate access space must be considered here. Also on all air cooled models, cooling air is drawn through louvered front panel and exhausted out rear louvered back and hood panels therefore a minimum 12" air gap must be maintained for proper condensing unit operation.

3. On air cooled models, condenser is directly behind front service door to facilitate regular cleaning schedules, advise user to clean frequently.

4. Avoid installations where temperature extremes can be experienced Scotsman does not recommend installations below 50° Fahrenheit nor above 100° Fahrenheit.

TYPICAL POST MIX CARBONATED BEVERAGE SYSTEM

APPLICABLE TO THE SD-1 H

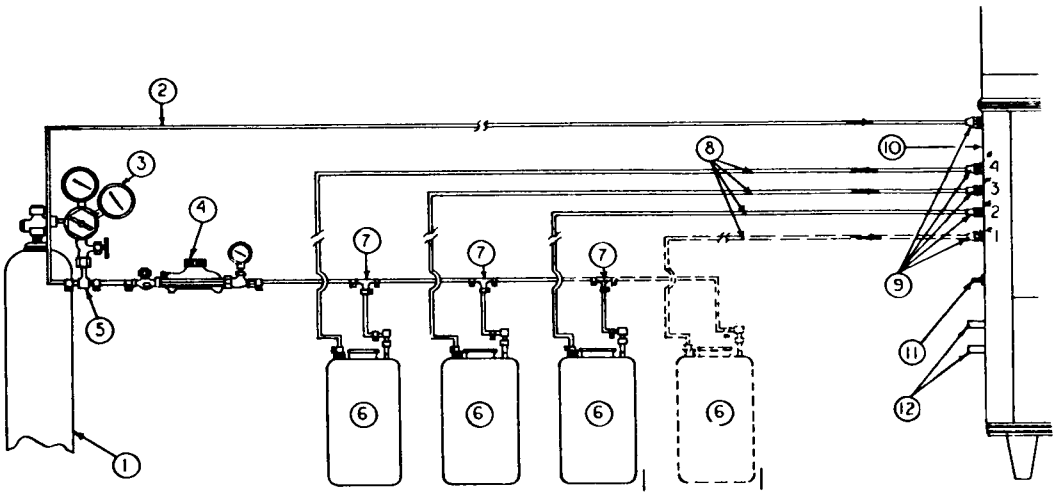

CODE

1. CO_2 CYLINDER
2. CO_2 LINE (COPPER, STAINLESS STEEL OR PLASTIC)
3. HIGH PRESSURE CO_2 REGULATOR FOR CARBONATOR
4. LOW PRESSURE CO_2 REGULATOR FOR SYRUP TANKS
5. BRANCH TEE
6. SYRUP TANKS
7. TEE
8. PRODUCT LINES (STAINLESS STEEL OR PLASTIC)
9. 1/4 S.A.E. FLARE FITTING
10. ELECTRICAL INLET
11. WATER INLET 3/8 SAE FLARE FITTING
12. DRAINS

NOTE:

Items shown are not sold by Scotsman.

Recommended Source:

Excellall Products Division
The Bastian-Blessing Co.
4201 W. Peterson Avenue,
Chicago, Illinois

INSTALLATION

Be certain the SCOTSMAN DISPENSER is on its own circuit and individually fused. Seperate switches are located in the front of the dispenser allowing the dispensing equipment and the ice machine to operate independently of each other. All internal wiring is completed.

All external wiring should conform to National Underwriters and local electrical code requirements. An electrical permit and the services of a licensed electrician will usually be required. See wiring diagram for proper hook-up.

PLUMBING - AIR COOLED MODELS

The recommended water supply line is 3/8" O.D.tubing for SD-1. A 3/8" flare fitting is provided on the machine for water inlet. Connect to cold water supply line using a shut-off valve installed in an accessible place between supply and machine.
A wire mesh strainer is provided on the pump inlet connections as a protection against large particles of rust, scale, etc., which may be loosened in the water pipe at time of installation. This strainer will not prevent fine particles from damaging the pump, therefore, a good filter is recommended in any installation and is absolutelv essential when the water supply contains solids. Maximum water supply pressure must be at least 20 lbs. below operating CO_2 pressure. If supply pressure exceeds this, carbonator may flood. Install a water pressure regulator in the water supply line and adjust as required.

PLUMBING - WATER COOLED MODELS

On water cooled models a seperate connection to the condensing unit will be required. A 3/8" flare fitting is provided on the machine for water inlet, a 3/8" O.D. Copper drain line is provided. Water supply must be installed to conform with local plumbing codes. In some cases a licensed plumber and/or a plumbing permit will be required.
All drains are gravity types and must be pitched 1/4" fall per foot of horizontal run. All drains to be installed per local and state codes. Drain receptacle should be of open, trapped or vented construction. Storage bin drain is 5/8" O.D. Copper tubing and should be vented and run seperately.

ELECTRICAL

Rating
SD-1-H
115 volts 13.6 Amps.
60 cycle, single phase
20 amp Maximum Fuse
Use No. 12 wire for runs
under 50 feet.

INSTALLATION

START - UP

When the machine is placed and conversion kits added as per instructions and all plumbing and electrical connections are completed and tested, turn on the water supply. Be sure the float cover is removed to check on the float operation and water level in the water reservoir. Be sure water reservoir is filled before starting ice machine. Water level should be 1/2 inch below the reservoir overflow pipe.
Connect CO_2 cylinder, CO_2 Hi-Lo pressure regulator and syrup tanks to proper fitting on cabinet rear panel.
Slowly open CO_2 cylinder and set both CO_2 regulators to 30# gauge reading.
Check all syrup lines, fittings to cold plate, dispensing head connections etc. with bubble soap and correct any leaks found.

Check all internal water connections for leaks. Start carbonator by turning on top switch.

Install gauges and check refrigerant pressures at the time of start-up. Flare connections can work loose during shipment. Add refrigerant as required - see ice machine section. Turn on ice machine switch in front of cabinet and machine is in automatic operation. In two or three minutes ice will start dropping off worm shaft and out the ice chute. Let the machine operate for at least 30 minutes or until ice covers the bottom plate. Check for any excess noise in carbonator or ice machine.

Test the ice storage control bulb by holding a handful of ice around the bulb until the machine shuts off. One minute should be normal for the control to function. Within minutes after the ice is removed, the bulb will warm up and the machine will automatically start up. The control is factory set and should not be reset until this test is made. Normal setting of this control should be approximately 35 degrees cut-out and 45 degrees cut-in to prevent short cycling.

Check hand reset low pressure control setting. This safety device should normally be set 10 p s i below normal suction pressure to prevent cutting off when the compressor first starts up and still provide safety in case of interruption in water supply, shortage of refrigerant, low ambient or any other cause of abnormal low suction pressures.

Adjust dispenser heads to give correct proportions of syrup and carbonated water. See instructions provided with dispenser.

Explain the machine to the owner, showing him how the machine works and go over the owner's operating instructions. Answer all the owner's questions about the machine, and do not leave with any doubt in the owner's mind about the machine, how to operate it or where to reach the service man in case of need. Call back the next day to check the machine again and answer any other questions the owner may have.

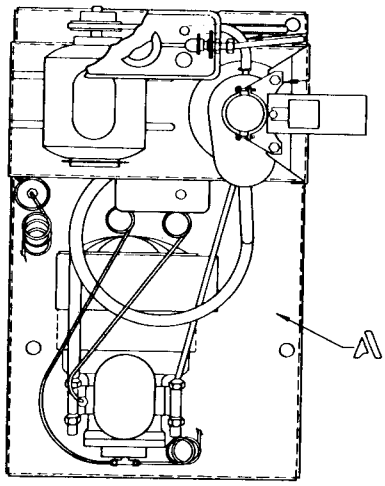

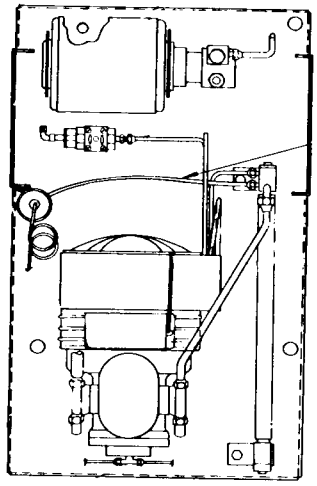

DETAIL A1

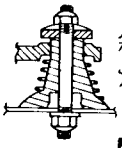

RUNNING POSITION SHOWN
TIGHTEN DOWN FOR SHIPMENT
STD. COMPRESSOR MOUNTING
AS FURNISHED BY COPELAND

DETAIL B3

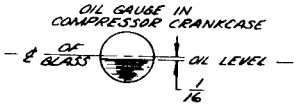

WITH UNIT RUNNING ADJUST
WATER LEVEL TO BE 1 1/16
BELOW OVERFLOW TOP

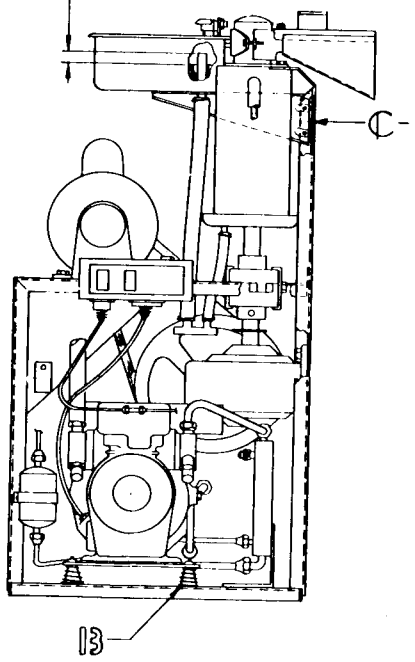

CHASSIS ASSEMBLY
SD-1 Water Cooled

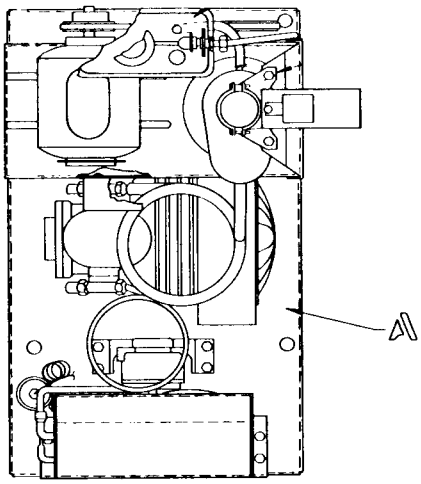

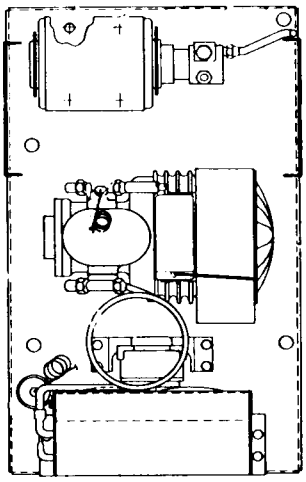

DETAIL A1

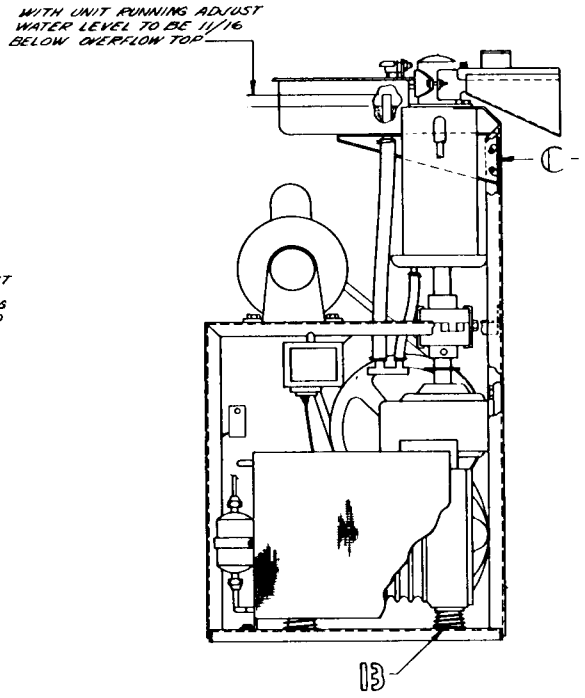

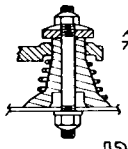

RUNNING POSITION SHOWN TIGHTEN DOWN FOR SHIPMENT

STD. COMPRESSOR MOUNTING AS FURNISHED BY COPELAND

DETAIL 13

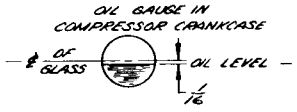

CHASSIS ASSEMBLY
SD-1H Air Cooled

CABINET ASSEMBLY
SD-1WH
Water Cooled

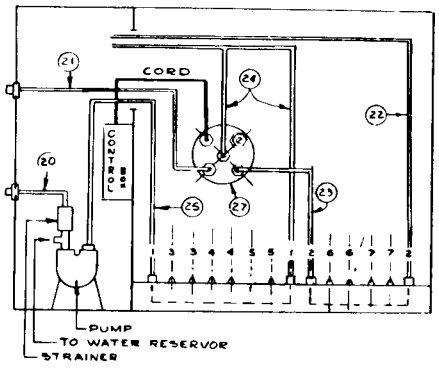

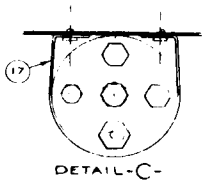

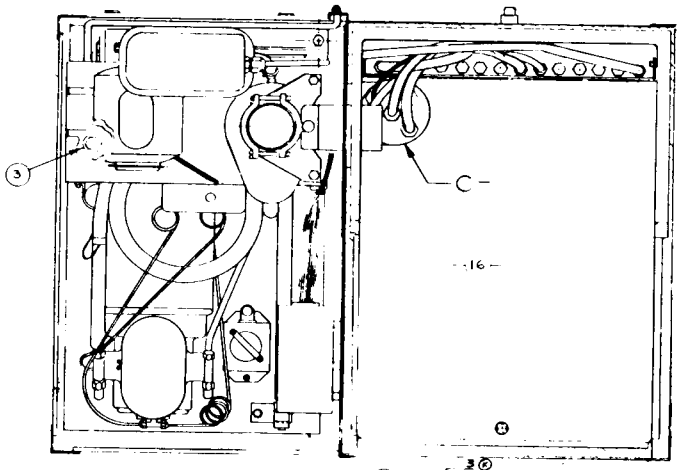

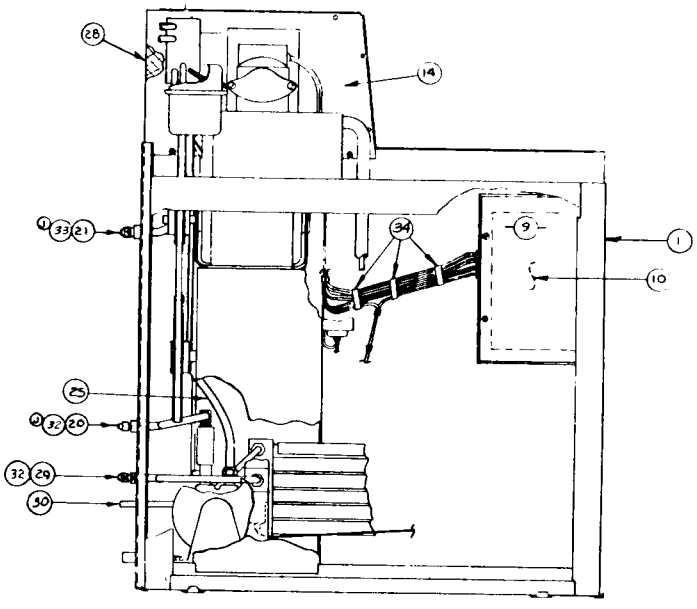

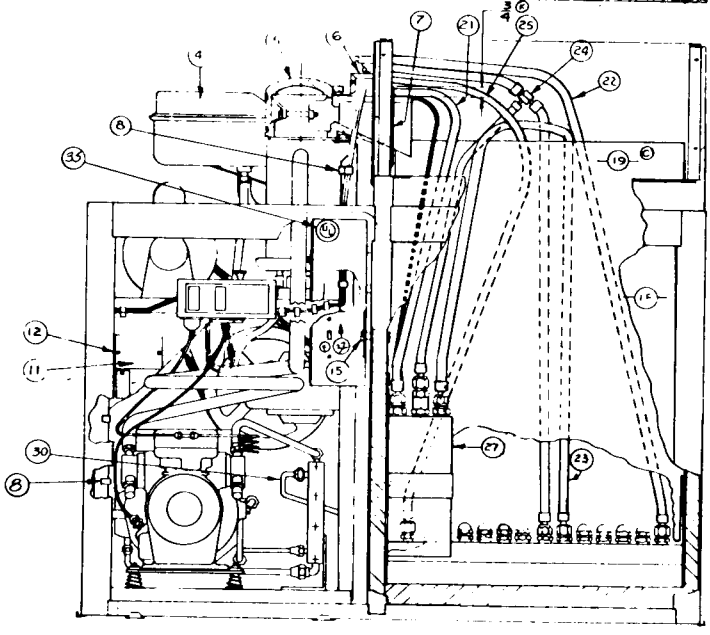

	Part No.	Description
16.	A-17790	Bin-Cold Plate Assembly
21.	A-17732	CO_2 Gas Line
22.	A-17743-1	Soda Line
23.	A-17743	Soda Line
24.	A-17718	Water Line
25.	A-17737	Flexible Line
27.	2-1499	Carbonator Tank

CABINET ASSEMBLY
SD1-H Air Cooled

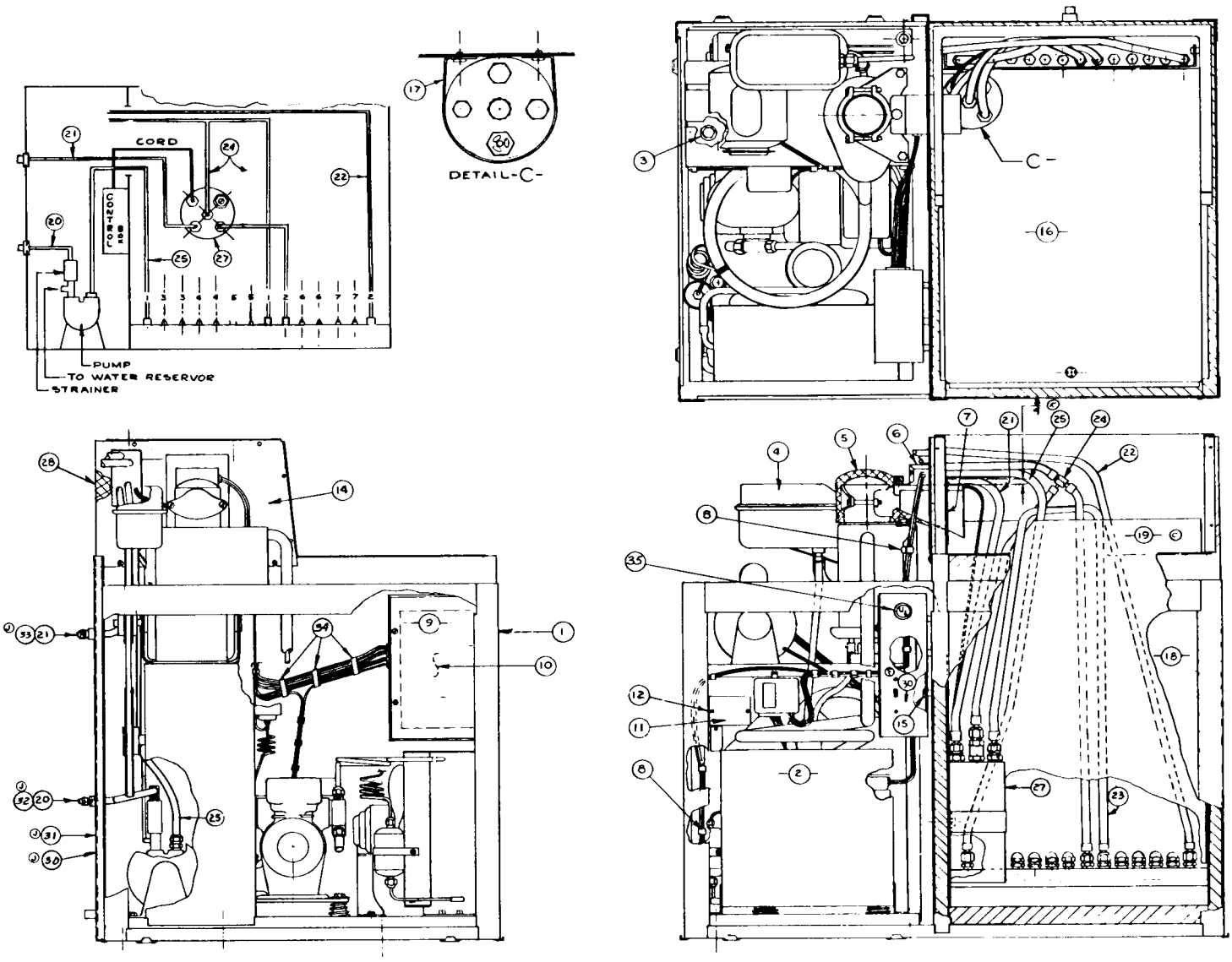

	Part No.	Description
27.	2-1499	Carbonator Tank
25.	A-17737	Flexible Line
24.	A-17718	Water Line
23.	A-17743	Soda Line
22.	A-17743-1	Soda Line
21.	A-17732	CO_2 Line
16.	A-17790	Bin-Cold Plate Assy

ICE MACHINE SECTION

HOW IT WORKS

Water enters at the cabinet fitting, passes through the strainer at the pump and then goes to the water reservoir. The function of the reservoir is to maintain a constant water level inside the freezer. Water from the reservoir enters the freezer at the bottom and is frozen inside the freezer. A stainless steel auger inside the freezer carries the ice upward where it is extruded passed the Ice-breaker into the storage bin.
The auger is rotated by a gear reducer which is operated by a motor through a belt drive.
A manual switch starts the machine and from then on Ice is produced automatically in small uniform pieces. When the storage bin fills a thermostat shuts off the machine and causes it to start up again when ice is taken from the storage bin. The Ice Machine Section operates independent of the carbonator and dispensing section although it is built into the same cabinet.

ELECTRICAL SECTION

The dispensers are designed to work on a standard voltage 115/60/1. Special voltage requirements are available on special order. Therefore always check nameplate before turning on power supply.

Nameplate voltage must not vary more then plus or minus 10 percent.

A. Compressor: The compressor has a capacity start induction motor. Capacitor and Relay may be mounted on the compressor junction box or seperate-on the machine box. A klixon overload protector is located under the compressor junction box cover.

B. **DRIVE MOTOR** (NEMA frame size 48 freezer)

All models are equipped with standard 1/2 " shaft, 1/4 HP, capacitor start, induction motors. These motors turn counter clockwise and may be replaced with any standard make motor corresponding to the nameplate rating. (Be sure motor runs counter clockwise viewed from the shaft end.)

C. HIGH-LOW PRESSURE CUT-OUT (Used on water cooled models only.)

Ranco control is located on the frame assembly. Factory settings cut-out 5 lbs. on low pressure and 180p s i on high pressure. This control prevents operation at abnormal pressures.

D. LOW PRESSURE CUT-OUT (Hand reset on all air cooled models.)

Ranco control is located on the frame assembly. Factory settings cut-out 5 p s i. Safety device to cut off machine and keep it off in case of water supply failure, loss of refrigerant, low ambient temperature or other causes of low pressure.

E. STORAGE BIN THERMOSTAT

Bin control located on frame assembly. Sensing bulb located at front storage bin wall. Factory settings 35° cut-out, 45° cut-in. This control shuts off complete machine when ice in storage bin builds up to control bulb and automatically re-starts ice-maker when ice is removed from bulb.

ICE MACHINE SECTION

F. MICRO SAFETY SWITCH

The micro switch is located in the top of the stainless steel ice deliver spout. Should storage bin thermostat fail to cut off when ice level in bin reaches spout opening, ice pressure backs up into spout against a spring loaded spout pressure plate that activates micro switch and cuts off the refrigeration unit but allows freezer drive motor to run.
Icemachine should not be run on this safety device. Bin thermostat should be checked for calibration or replacement.

G. ICE MACHINE ON-OFF SWITCH

Located in master control box, this switch when manual activated either stops or starts icemachine operation. Switch also incorporates built in thermal overload protection for freezer drive motor. Whenever excessive overloads occur, the standard 6 amp. overload causes switch to "trip out!" Will not start until manually re-set.

H. MOTOR COMPRESSOR

SD - 1H models use a 1/3 HP Copeland, semi-hermetic compressor. Standard voltage is 115/60/1. Standard electrical components such as relays, starting capacitors and klixon overloads are readily replaced. On compressor proper service valves, valve plates and compressor heads are replaceable.

I. GEAR REDUCER

Winsmith model 3CT reducer is utilized on Drink Dispenser. At least once a year Mobil 600w oil should be changed. All internal parts replaceable.

NORMAL OPERATING PRESSURES

Check refrigerant pressure settings after 30 minutes of initial start up. Attach gauges to proper fitting on compressor service valves.
On water cooled models correct head pressure is 135 p s i. Adjust water regulating valve to maintain this reading.

On air cooled models, head pressure will vary slightly depending upon ambient air, however, normal reading is 130 p s i.
Suction pressure should be 15p s i with proper refrigerant charge, frost line will extend about 8 inches out of accumulator. Suction pressure will vary approximately 2 p s i either way depending upon ambient and incoming water supply temperatures to freezer.

ICE MACHINE SECTION

REFRIGERANT CHARGE

The below refrigerant charge is approximate. When charging, set at 135 p s i head pressure and charge so that the frost line extends out of the accumulator after fifteen minutes of operation. Frost out of accumulator at least 8 inches and preferable 1/2 way to the compressor for best capacity and performance.

MODEL	REFRIGERANT CHARGE	
SD-1 air	26 oz.	R-12
SD-1 water	24 oz.	R-12

OIL LEVEL

Oil level should be kept at 1/3 way up sight glass, Do not fill over 1/2.

WATER SYSTEM

A water level is maintained in the water reservoir by a float operated valve. Water is piped from the water reservoir to the freezing chamber by a gravity feed line maintaining an equal water level. A removable overflow pipe is installed in the water reservoir for cleaning the reservoir as well as preventing damage should the inlet water valve fail.

The water reservoir is equipped with a 2 inch air gap to prevent back siphoning and meet all health codes.

The water level in the water reservoir is adjusted by bending float ball arm. The water level should be set 1/2 inch below the overflow pipe. A condensate drip pan is connected to the drain circuit to automatically dispose of condensate moisture.

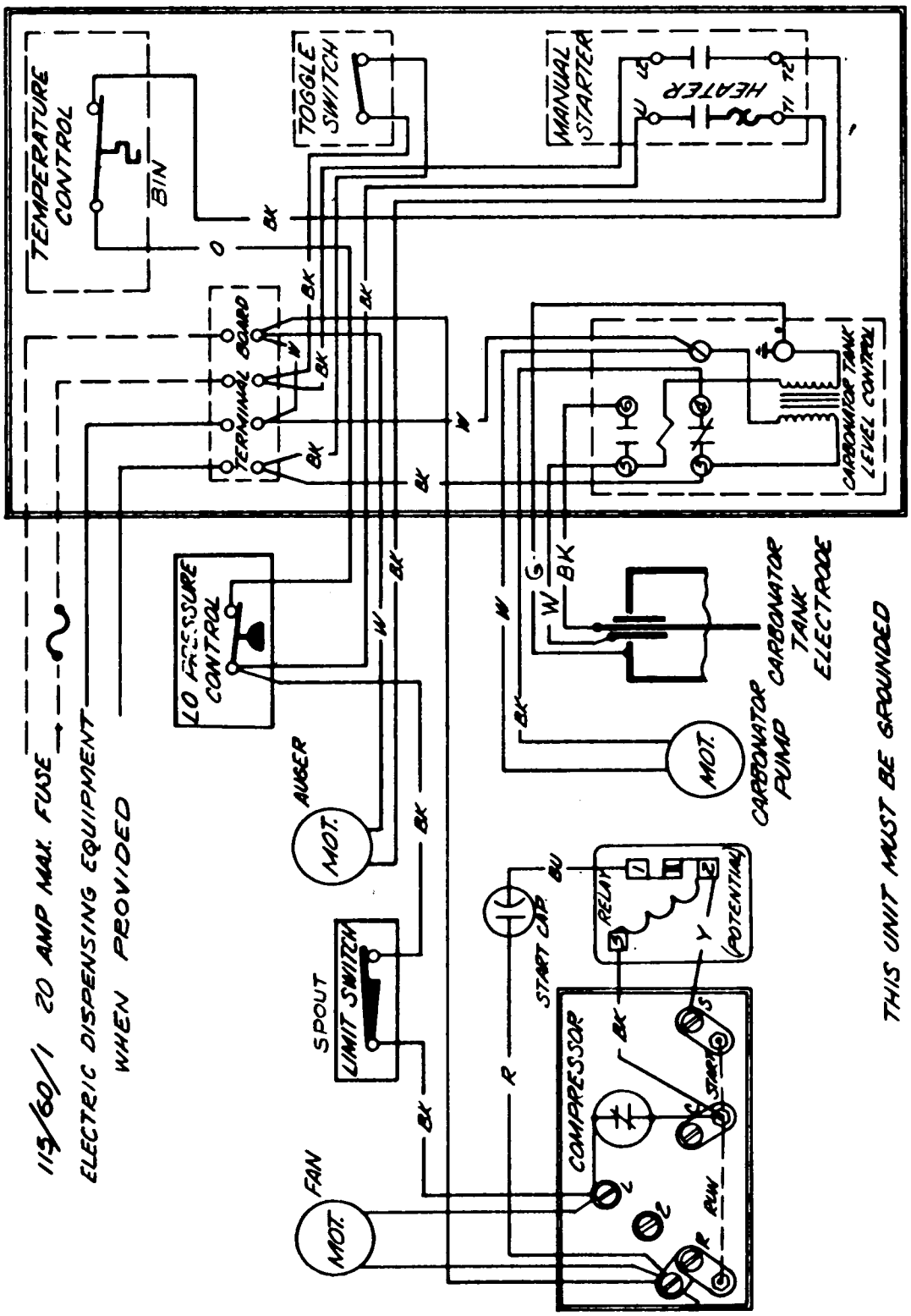

WESTINGHOUSE ON-OFF SWITH MSTOZ®

MOTOR MFG.	HEATER ELEMENT	TRIP CURRENT AT 40° C
G.E.	MSH 6.0 A	6.0
WHSE.	MSH 6.0 A	6.0
CENTURY	MSH 5.0 A	5.0

WIRING DIAGRAM
SD-1 Air Cooled

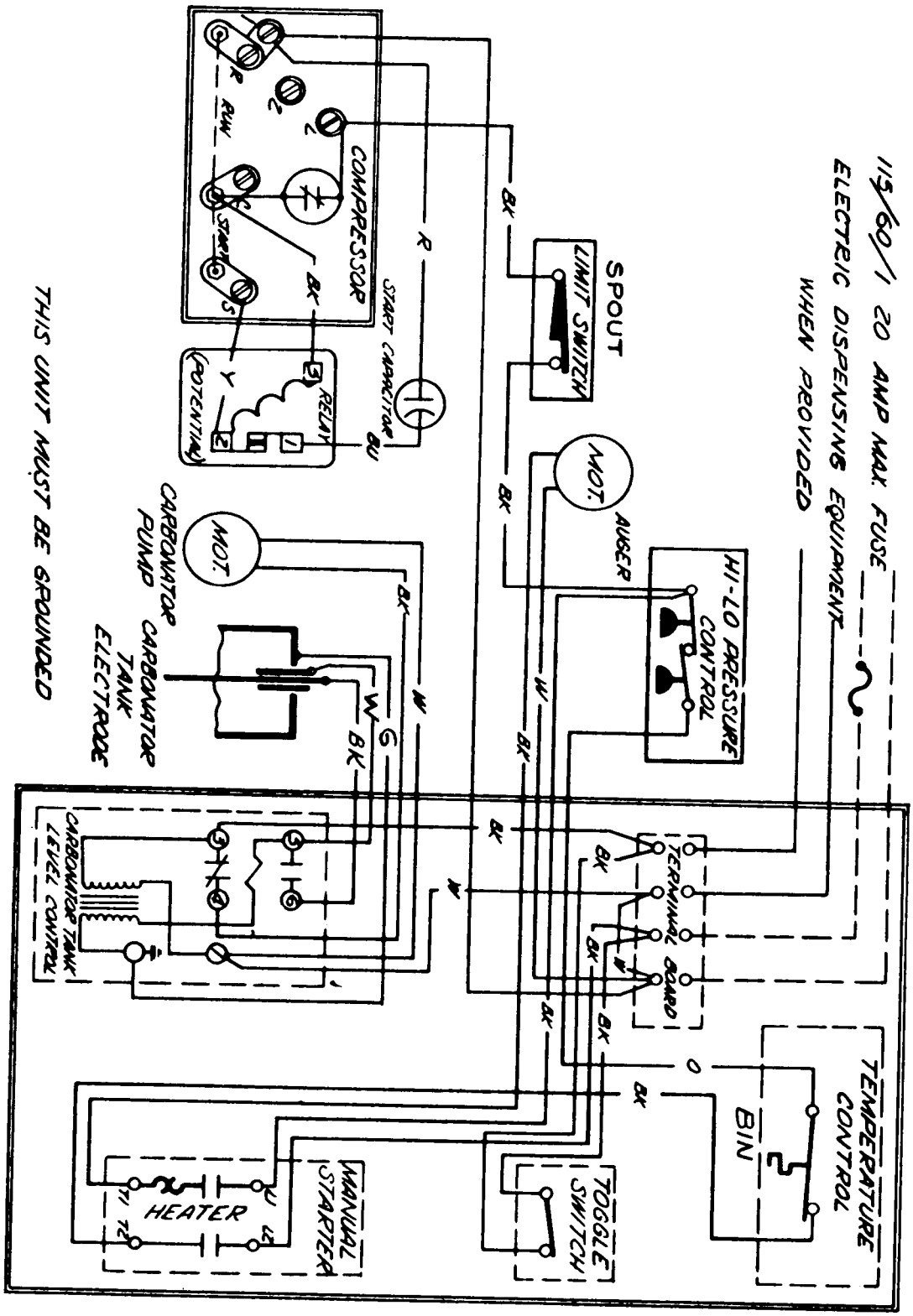

WESTINGHOUSE ON-OFF SWITH MST02Ⓑ

MOTOR MFG.	HEATER ELEMENT	TRIP CURRENT AT 90° C
G.E.	MSH 6.0 A	6.0
WHSE.	MSH 6.0 A	6.0
CENTURY	MSH5.0 A	5.0

WIRING DIAGRAM
SD-1 Water Cooled

ICE MACHINE SECTION

Service Analysis Chart

COMPLAINT	POSSIBLE CAUSE	CORRECTION
Low ice production	Loss of refrigerant Under or over-charge of refrigerant.	Check and recharge with proper amount of refrigerant.
	Drive motor weak.	Replace
	Dirty or plugged condenser	Clean condenser
	Low water level in water reservoir	Adjust to 1/2 inch below overflow standpipe.
	Overcharge of oil in system	Check at oil hole on compressor. Proper level is 1/3 full on crankcase sight glass.
	Partial restriction in capillary tube or drier.	Moisture in system. Overcharge of oil in system. Remove charge by blowing back through cap tube. Replace drier and recharge.
	Inlet water strainer partially plugged.	Remove screen and clean.
	Corroded or stained worm shaft due to water condition.	Remove worm shaft and clean, or use Scotsman Ice Machine Cleaner. See Maintenance Section.
	Slipping drive belt	Adjust belt tension or replace worn belt.
	Defective gear reducer.	Check reducer driven shaft to freezer shaft. Should rotate at 12 R P M. Replace if worn.
Machine runs but makes no ice.	Loss or undercharge of refrigerant.	Check for leaks and recharge.
	Drive motor, belts, gear reducer on drive coupling inoperative.	Gear reducer and worm turn at 12 RPM. Check. Repair or replace.
	Pulleys loose on shafts.	Tighten, repair or replace.

ICE MACHINE SECTION

Service Analysis Chart

COMPLAINT	POSSIBLE CAUSE	CORRECTION
Machine runs but makes no ice. (Cont.)	Water not entering freezing chamber.	Plugged strainer or supply line. Check and clean. Air lock in gravity feed line. Check and remove air lock.
	Moisture in system.	Check and remove charge and drier. Replace and recharge.
	Water seal leaking.	Replace seal. See section on maintenance.
	Defective manual overload switch.	Replace switch.
Water leaks.	Defective water seal.	Replace. See section on maintenance.
	Gravity feed line leaking.	Check hose clamps.
	'O' ring in spout casting leaking.	Remove spout casting and install new 'O' ring.
	Storage bin drain and connecting fittings.	Check and repair. Tighten fitting-replace 'O' ring.
	Water level in reservoir too high.	Adjust to 1/2 inch below overflow pipe.
Excessive noise or chattering.	Scale or mineral build-up on inside of freezer.	Clean with Scotsman Ice Machine Cleaner. See section on maintenance.
	Mineral deposit or scale on auger and cylinder walls.	Ice sticking and jamming inside. Clean with Scotsman Ice Machine Cleaner or remove auger and polish.
	Intermittent water supply.	Check and clean water strainer. Check gravity feed line for air lock. Remove air lock.
	Water level in reservoir too low.	Adjust to 1/2 inch below overflow pipe, or raise reservoir.
	Mis-aligned coupling or worn insert.	Repair or replace.

ICE MACHINE SECTION

Service Analysis Chart

COMPLAINT	POSSIBLE CAUSE	CORRECTION
Excessive noise or chattering. (Cont.)	Low ambient temperature.	Move to heated space 50°F. is minimum.
	Gear reducer low on oil.	Check oil level and refill to oil level plug.
	Gear reducer loose on frame.	Tighten.
	Pulleys worn or loose on shaft.	Repair or replace.
	Belt cracked or worn.	Replace belt.
	Drive motor end-play or worn bearings.	Repair or replace.
	Motor compressor not floating on springs.	Loosen hold-down bolts
Machine continues to run with full storage bin.	Storage bin thermostat not properly set or is defective.	Reset or replace. Reset to 35° cut-out 45° cut-in.

Ice Machine Section

COMPLAINT	POSSIBLE CAUSE	CORRECTION
Unit will not run.	Blown fuse in line.	Replace fuse and check for cause of blown fuse.
	Bin thermostat set too high.	Adjust thermostat. Set at 35° cut-out, 45° cut-in.
	Loose electrical connection Switch in 'OFF' position.	Check wiring. Turn switch on.
	Inoperative master switch.	Replace switch or thermal overload.
	Off on manual reset low pressure control.	Reset.
Compressor cycles intermittently.	Low voltage.	Check for overloading.
	Dirty condenser.	Clean.
	Aircirculation blocked.	Move unit to correct.
	Inoperative condenser motor.	Replace.
	Non-condensable gases in system.	Purge off.
	Bin thermostat differential too small causing short cycling.	Widen differential 35°cut-out, 45°cut-in.
	Cycling on ice chute micro switch.	Set or replace bin thermostat.
Making wet ice.	Surrounding air temperature too high.	Correct or move unit.
	Under or over-charge of refrigerant.	Recharge with proper amount. Should frost out of accumulator at least 8".
	High water level in water reservoir.	Lower to 1/2" below overflow pipe.
	Back pressure too high.	Overcharge of refrigerant, faulty compressor or high head pressure. Lower as indicated.
	Faulty compressor or valve plate.	Repair or replace.

CLEANING INSTRUCTIONS

1. Set ice machine and dispensing switch to OFF.
2. Remove all ice from storage bin.
3. Turn OFF water supply or block float. Drain reservoir by removing overflow tube (gray plastic tube) in reservoir, replace overflow tube.
4. Set ice machine switch to ON and pour cleaning solution into reservoir. DO NOT fill above overflow tube; use 6 oz. of Scotsman Cleaner and $1\frac{1}{2}$ qt. hot water.
5. Continue to make ice on solution until the solution is used up and reservoir has only about 1 inch solution remaining. DO NOT allow unit to operate with empty reservoir.
6. Set ice machine switch to OFF, remove overflow tube, wash and rinse reservoir, replace overflow tube, turn water on or remove float block.
7. Set ice machine switch to ON. Let unit run for at least 15 minutes to flush out any cleaning solution. Check ice for acid taste - run until ice tastes sweet.
8. Set ice machine switch to OFF, add hot water to ice bin, using this melt water, thoroughly wash and rinse all surfaces within the storage bin.
9. Parts removed from storage bin, splash grill etc. clean in accordance with local health department regulations.
10. Pour hot water into drip pan each day to keep drains open.
11. Clean dispensing equipment in accordance with manufacturers recommendations. This should be explained in owners manual or installation instructions provided with dispensing equipment. If cleaning instructions are not available then follow procedure below.
12. Check faucet nozzle parts, these usually snap or screw off. These parts should be cleaned and sanitized each day.
13. Dispensers having ice compartments should be cleaned and sanitized each week.
14. Syrup lines and tank should be drained and then sanitized twice each month.

MAINTENANCE INSTRUCTIONS

THE FOLLOWING MAINTENACE SHOULD BE ACCOMPLISHED TWO TIMES PER YEAR ON ALL SCOTSMAN DRINK DISPENSERS.

1. Check and clean water strainers and float valve. Depress float valve to insure full stream of water.

2. Check water level and machine level. Keep water level below overflow, but as high as possible and still not run out of spout opening with machine off. Water should come out of spout with ice at all times. Adjust as required.

3. Clean reservoir and interior of freezer assembly using SCOTSMAN Ice Machine Cleaner in accordance to instructions provided, see page 25.

NOTE: Cleaning requirements vary according to local water conditions. Visual inspection of the auger and reservoir before and after cleaning will indicate how often the machine must be cleaned in local areas.

4. Check high and low side pressures. On water cooled models, set pressure at 135 p s i . Suction pressure should be above 12 p s i and will range up to 16 p s i depending upon water and ambient temperatures.

5. Set hand reset low pressure control to cut off in event of water supply interruption or low ambient temperature at approximately 5 p s i.

6. Change oil in gear reducer. Use Mobil 600W or equivalent good grade of gear oil with a viscosity of 125 to 190. For unit with grease fittings use Mobilgrease BRB No. 1 or any good grade ball bearing grease. Particularly important when there is eveidence that water has gotten into gear housing. Remove gear reducer to facilitate.

7. Oil drive motor and pump motor , use SAE 10 oil.

8. Check top bearing of freezing tube. If moisture is around bearing, wipe up and remove grease. Add new grease. Use Beacon No. 325. or equivalent waterproof grease.

9. Check and adjust belt tension.

10. Clean air cooled condenser. Inform customer to clean frequently. Always shut off machine when cleaning.

11. Oil condenser fan motor when possible.

12. Check for refrigerant leaks and proper frost line. Should frost out of accumulator approximately one-half way to compressor.

13. Check for water leaks. Tighten drain line connections. Run water down bin drain line to make sure it is open.

14. Check quality of ice. Ice should be wet when formed, but will cure rapidly to normal hardness in the bin.

15. Check thermostat and pressure plate cut off. Micro switch cuts off only compressor. Bin thermostat should be set at 10° differential and should keep entire machine off at least twenty minutes in high ambients (longer in low) during normal operation.

SD-1H FREEZER

Part No. A-14886-1

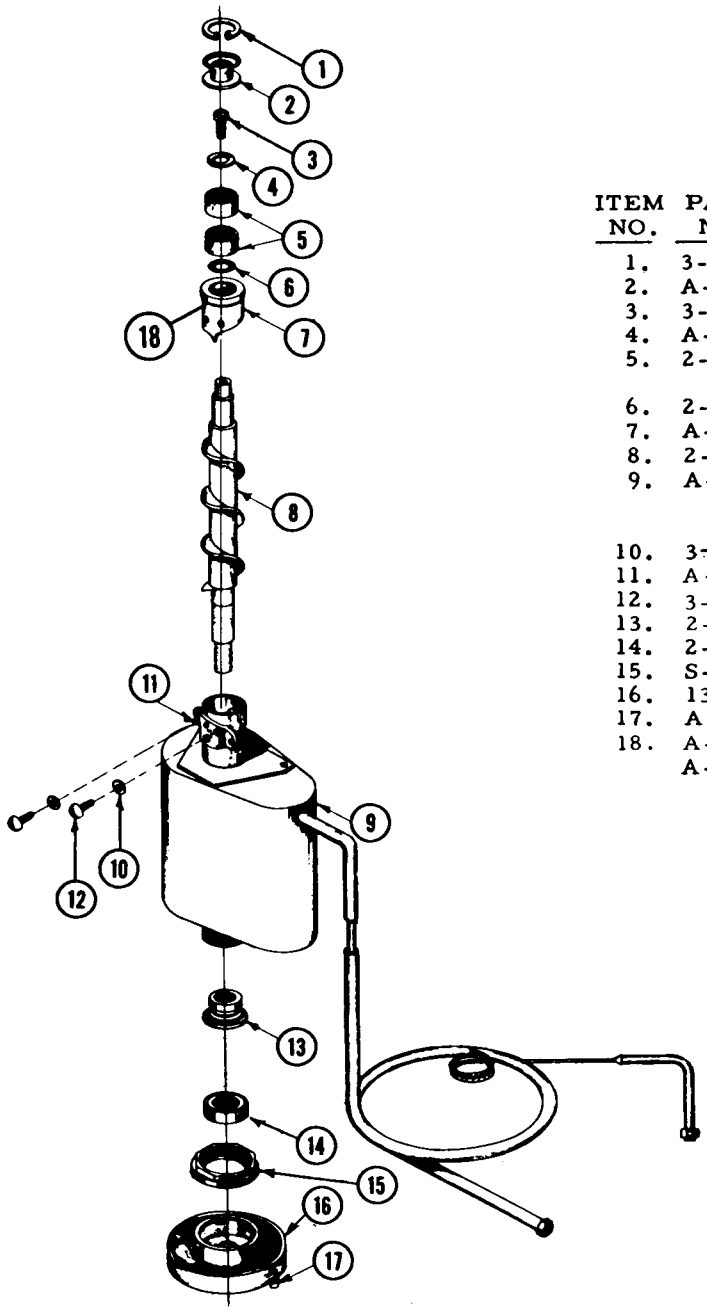

ITEM NO.	PART NO.	NAME
1.	3-553	Snap Ring
2.	A-7701	Worm Shaft Cap
3.	3-758	Cap Screw
4.	A-7699	Worm Tube Washer
5.	2-1412	Bearing (matched set two)
6.	2-386	'O' Ring
7.	A-14591	Ice Breaker
8.	2-1413	Worm Shaft
9.	A-7826	Worm Tube, Accumulator, Suction, & Cap Tube Assembly
10.	3-679	Washer (2 reqd.)
11.	A-18430	Casting (spout)
12.	3-732	Bolt (2 reqd.)
13.	2-1300	Water Seal
14.	2-417	Lower Bearing
15.	S-8817	Worm Tube Nut
16.	13-213	Rubber Drip Pan
17.	A-8002	Drain Tube (copper)
18.	A-14678	Breaker & Bearing Ass
	A-14886-1	Freezer Complete

SD-1H
RESERVOIR ASSEMBLY

Part No. A-8339

ITEM NO.	PART NO.	NAME
1.	A-16012	Reservoir Cover
2.	2-1259	Valve Pin
3.	2-1320	Deflector
4.	S-8770	Inlet Valve
5.	3-1001	Rivet
6.	A-5777	Valve Seat Holder
7.	S-6947	Valve Seat
8.	S-7044	Nut
9.	A-12869	Bracket
10.	S-6715	Stand Pipe
11.	S-8138	Inlet Valve Ass'y
12.	A-13409	Reservoir Body
13.	A-8055	Bracket Nut
14.	A-12067	Float and Arm Ass'y
15.	A-18418	Water Deflector
	A-8339	Complete (less cover)

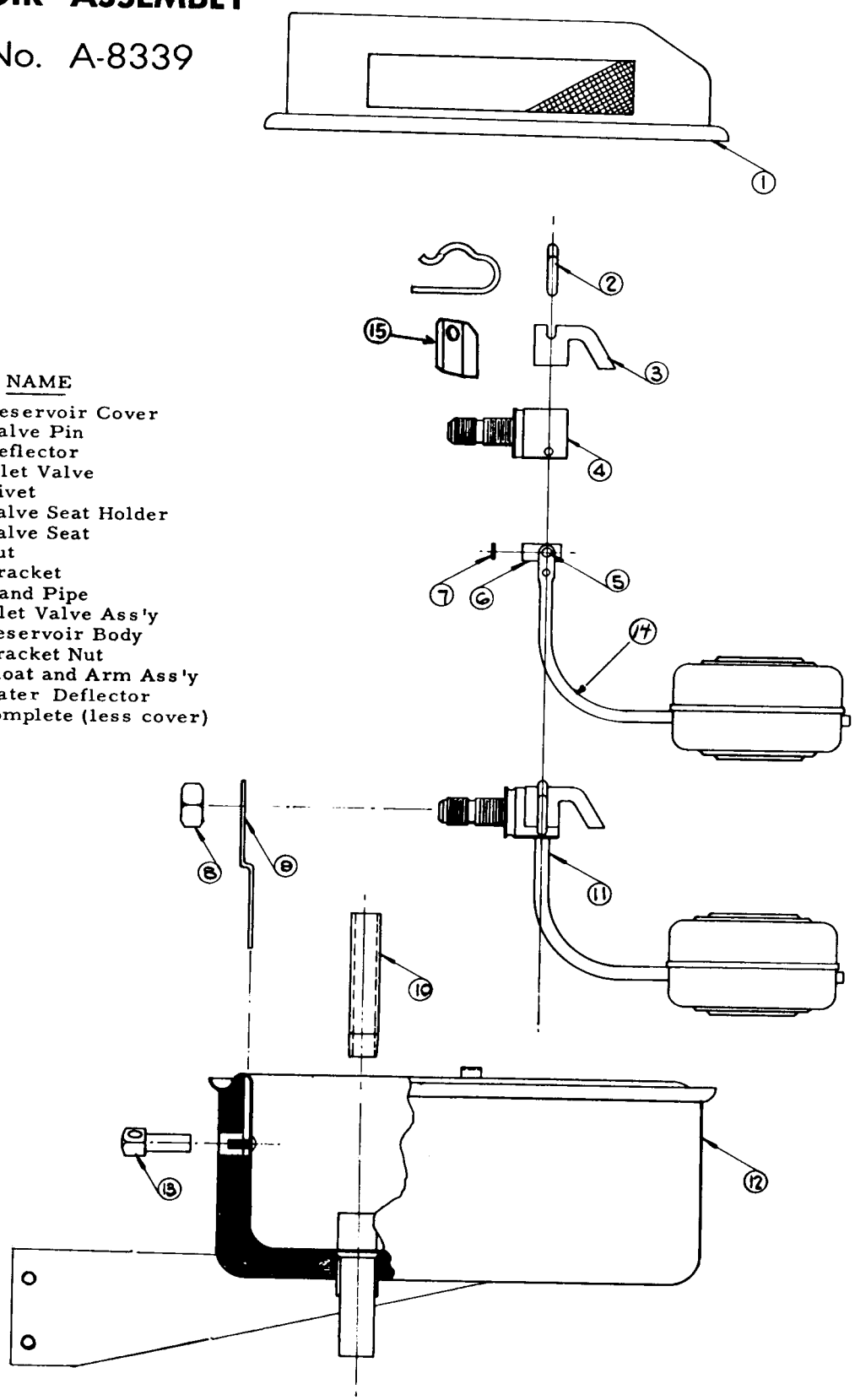

SD-1H
GEAR REDUCER

Part No. 2-337

Winsmith Part No. (3CTS)

ITEM NO.	PART NO.	NAME
1.	2-580-28	Slow-Speed Gasket (2)
2.	2-580-24	Slow-Speed Seal (2)
3.	2-580-26	Slow-Speed Bearing (2)
4.	2-337-20	Slow-Speed Gear & Shaft
5.	2-768-25	High-Speed Gasket (2)
6.	2-337-23	High-Speed Bearing (2)
7.	2-768-20	High-Speed Seal
8.	2-337-21	High-Speed Gear & Shaft (integral)
9.	2-580-27	Slow-Speed Spacers (2)
	2-337	Complete Reducer

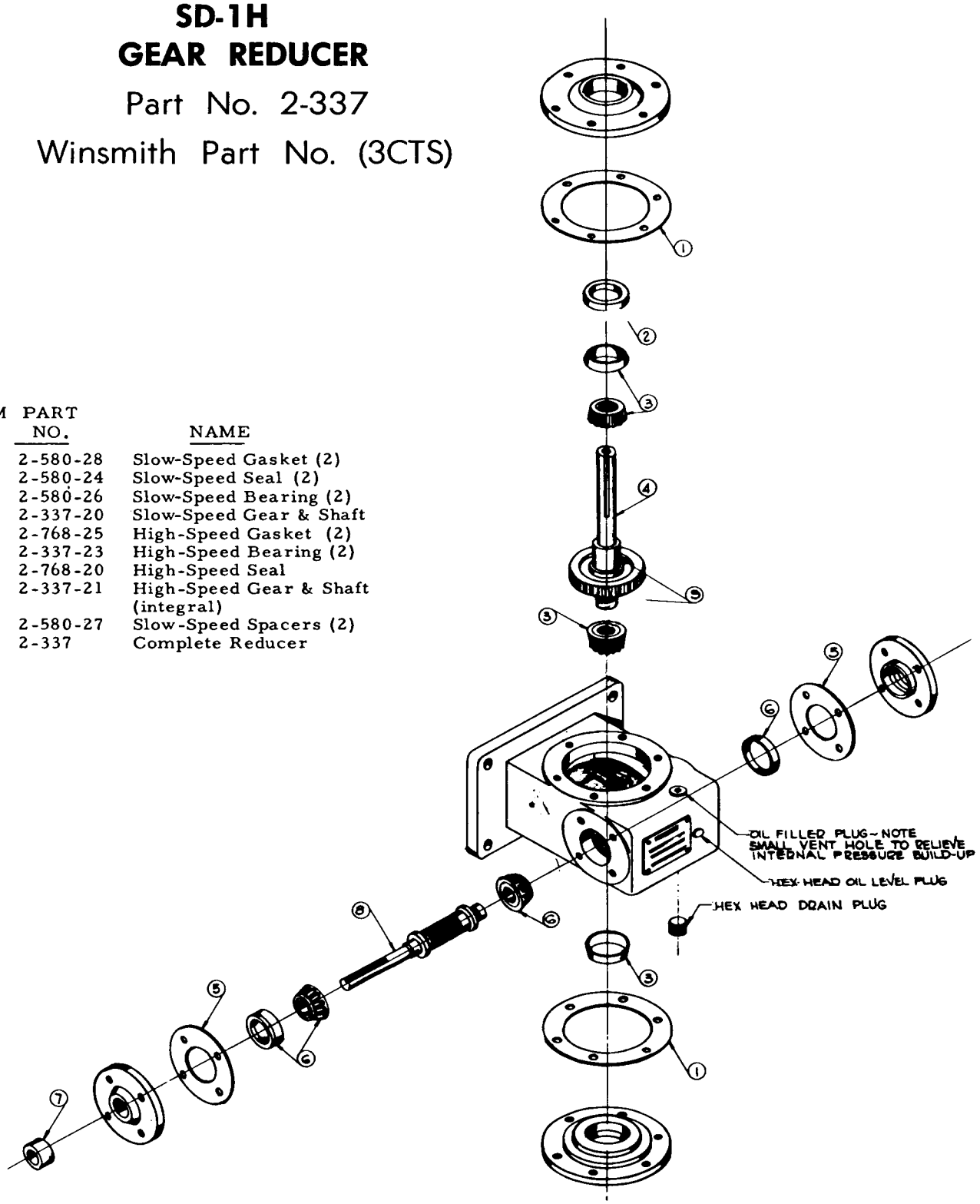

SD-1 H
CONDENSING UNIT
⅓ HP Air Cooled, Copeland

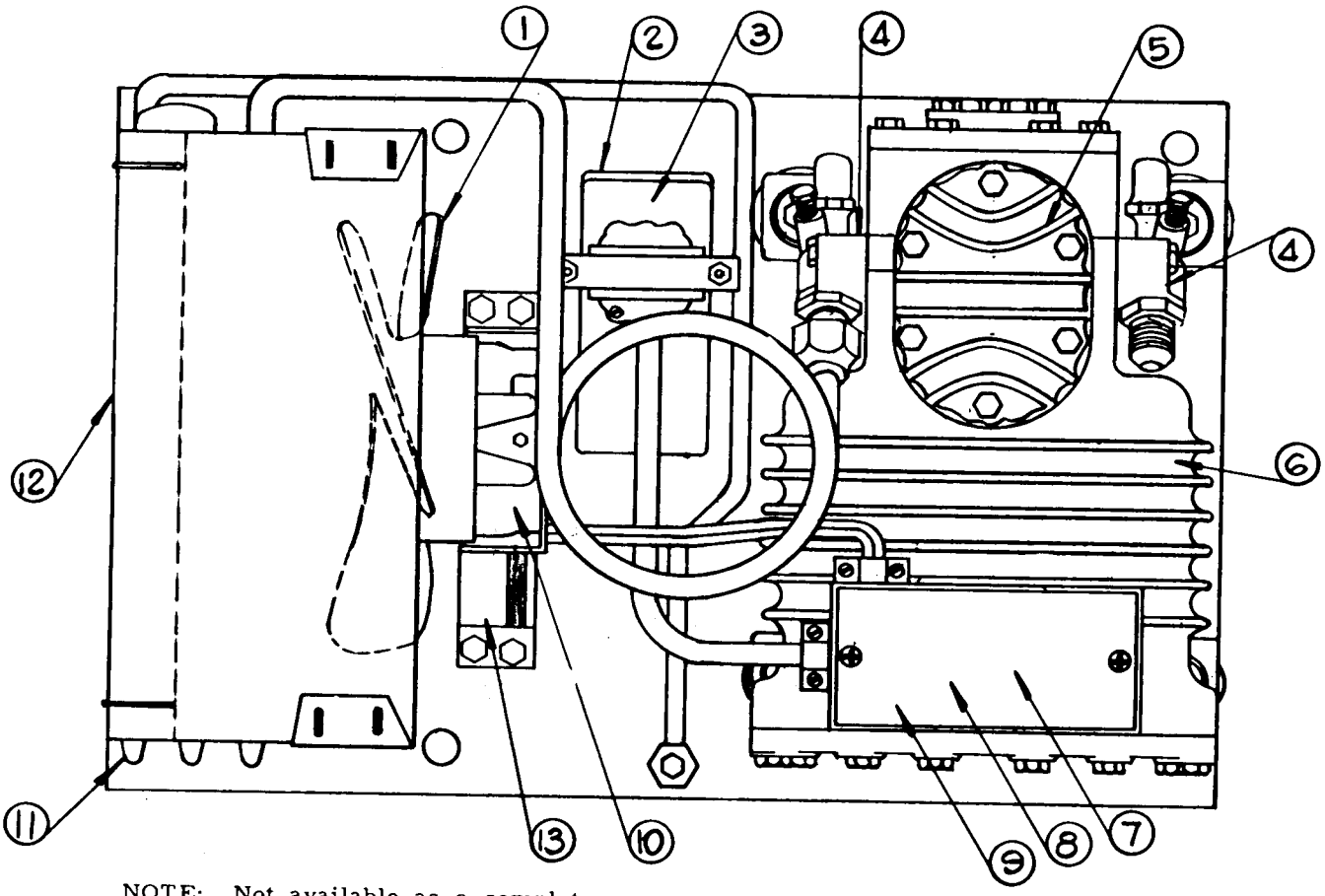

NOTE: Not available as a complete mounted assembly.

ITEM NO.	PART NO.	NAME
1.	18-231	Fan Blade
2.	18-1901-4	Starting Capacitor
3.	18-1903-4	Relay
4.	18-237	Suction & Discharge Service Valves
5.	18-222	Valve Plate & Gasket Kt Kit Assembly (*)
6.	18-221	Motor Compressor 115/60/1 AC
7.	18-240	Overload Klixon
8.	18-241	Terminal Ass'y) (*)
9.	18-270	Terminal Board (*)
10.	18-150-1	Fan Motor
11.	18-234	Condenser
12.	A-12109	Shroud
13.	18-422	Fan Motor Bracket

(*) Not Shown

NOTE: Old Style
18-228 Starting Capacitor
18-227 Relay

SD-1 H
CONDENSING UNIT
⅓ HP Water Cooled, Copeland

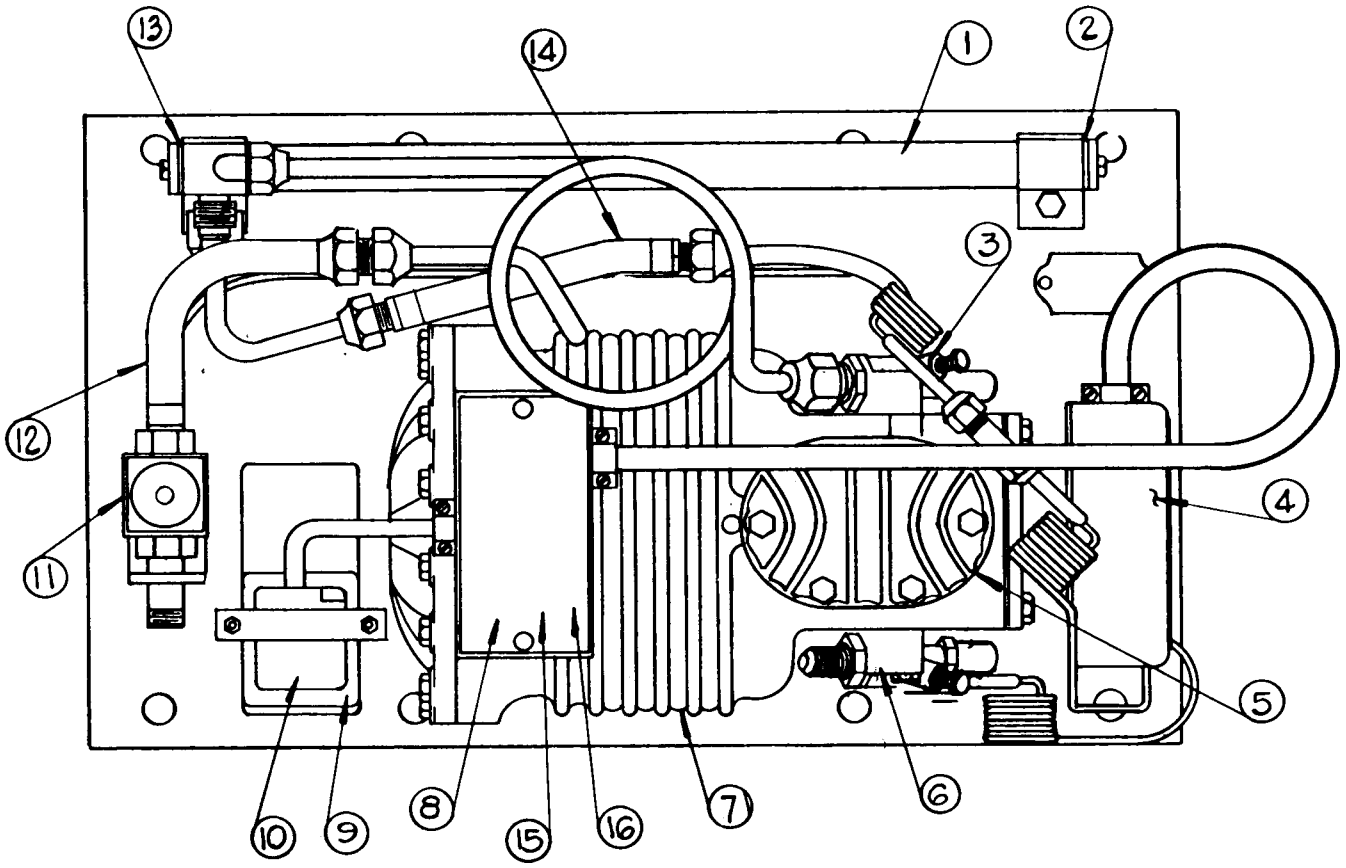

NOTE: Not available as a complete mounted assembly.

ITEM NO.	PART NO.	NAME
1.	18-259	Condenser
2.	18-262	Plain Gasket
3.	18-237	Discharge Service Valve
4.	11-286-1	High-Pressure Control
5.	18-222	Valve Plate & Gasket Kit Assembly (*)
6.	18-237	Suction Service Valve
7.	18-257	Motor Compressor 115/60/1 WC
8.	18-240	Klixon (overload) (*)
9.	18-1901-4	Starting Capacitor
10.	18-1903-4	Relay
11.	11-198	Water Valve
12.	18-260	Compressor to Valve Water Hose
13.	18-263	Manifold Gasket
14.	18-261	Compressor to Condenser Water Hose
15.	18-270	Terminal Board (*)
16.	18-241	Terminal Ass'y

(*) Not Shown

NOTE: Old Style
18-228 Starting Capacitor
18-227 Relay

CABINET PANELS
SD-1H MODELS

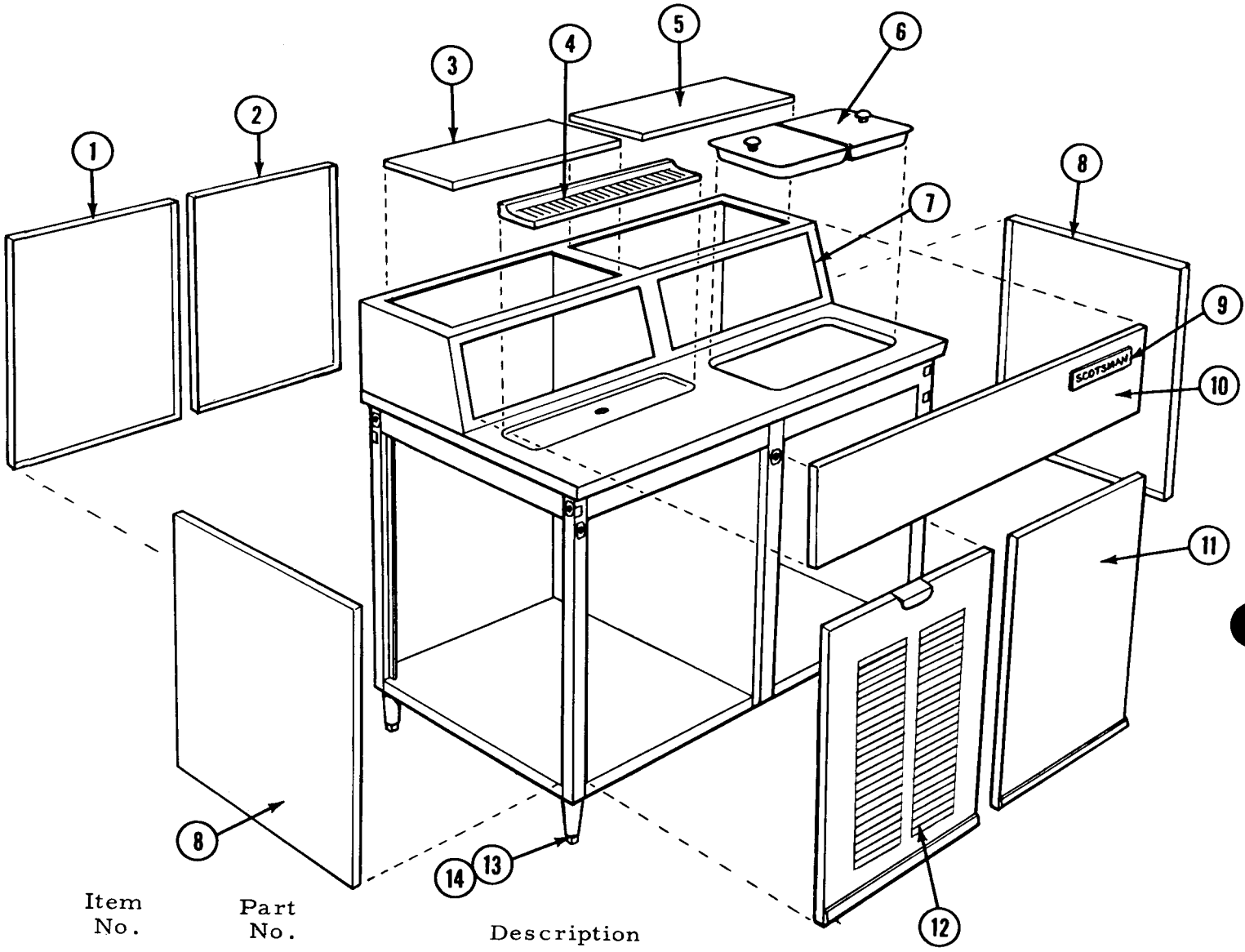

Item No.	Part No.	Description
1.	A-17754	Rear Service Door
2.	A-17753	Rear Panel - Case Panel
3.	A-17829	Left Top Panel- Hood
4.	2-1553	Drip Grille
5.	A-17812	Right Top Panel -Hood
6.	2-1550	Ice Bin Door
7.	A-17616	Hood Assembly
8.	A-17749	Right Left-Panel-Case
9.	15-156-1	Scotsman Emblem
10.	A-17608	Front Panel - Hood
11.	A-17766	Front Panel - Case
12.	A-17615	Front Service Door
13.	A-15803-1	Leg
14.	8-522-1	Leg Leveler for A-15803-1

Stainless Steel Models

To order items, 1-2-8-11-12 in stainless steel, add a dash (-1) one to above part numbers.

CARBONATION

"THE LIFE OF THE DRINK"

No other single element in the Bottling Industry occupies the unique position of Carbonic gas. It is the foundation on which the industry has been built. The Sparkle of lively bubbles which attract the eye and enhance the taste is called "carbonation."

This important element is too often taken for granted. It deserves greater attention--proper and uniform carbonation is as important a taste element in bottled beverages as the flavors themselves.

The information and suggestions on the next few pages are offered to encourage more exact control for obtaining greater uniformity in carbonation.

SOME FACTS ABOUT CO_2

Carbonic Anhydride, Carbonic Gas, or Carbon Dioxide, as it is variously termed, has the chemical symbol CO_2. It is under normal conditions a colorless, odorless gas, one and one-half times heavier than air. Chemically it is the combustion product of the element Carbon. It occurs in nature as the result of all types of combustion.

Carbonated Water has been found in natural springs in many parts of the world. Such springs have been known for centuries and have been highly regarded for beverage purposes.

Many of the desirable characteristics of carbonated beverages are due to the carbonic gas contained in them. It is therefore most important to determine the proper amount of carbonation such beverages should contain and having done that to provide the necessary control to insure uniformity of the product in this respect at all times.

–PROPERTIES–

Color	None
Odor	Pungent
Latent Heat	120 BTU/lb. at 0°F.
Critical Pressure	1,055 LBS. sq. in.
Critical Temperature	87.8°F.
Pressure in drums at 70°	839 lbs. sq. in.
1 lb. CO_2	8.50 Cu. ft. at atmospheric pressure and 50°F.
Solid CO_2 (Dry Ice)	110°F.

THE HISTORY OF CARBON DIOXIDE

Carbon dioxide has the distinction of being the first gas discovered. In the early part of the seventeenth century, Von Helmont, a Belgian, prepared it by burning wood and by treating mineral carbonates with acid. Black later discovered that carbon dioxide can combine with caustic alkalis and suggested the name "Fixed Air." It was not until 1781 that its real nature was demonstrated by Lavoisier--"Father of modern Chemistry."

The gas was first obtained in a liquid form by Faraday in 1834. But, of course, these were only laboratory scale experiments. It is claimed that a Prof. Venee of Montpelier, France, made the first soda water in 1750 by mixing a little soda and acid in a bottle of water. This is the orgin, no doubt, of the name "soda water."

The History of Carbon Dioxide

Joseph Priestly, another famous chemist, also made several artificially carbonated waters and in 1772 published a pamphlet entitled "Directions for Impregnating water with Fixed Air in Order to Communicate to it the Peculiar Spirit and Virtues of Pyrmont Water.

This was the beginning of great interest in the manufacture of artificial mineral waters. In England, after Priestly had shown the way, ginger beer came into popularity and later carbonated beverages made with sweet syrups as we know them today.

In America, Philadelphia claims the honor of having the first "soda water" manufacturer. Be that as it may, we find that by the middle of the 19th century, as the demand for CO_2 increased, many investigators were busy devising better and cheaper methods of preparing the gas for beverage purposes. While some of the gas then used was obtained from breweries, much was also obtained from the action of sulphuric acid (vitriol) on marble chips, or carbonate of soda.

Nearly every soft drink manufacturer had his own gas generating outfit and incorporated CO_2 into his beverages by agitation within closed vessels. Needless to say, aside from the cost involved, these operations were not only inefficient, but dangerous to a high degree.

In 1888 Jacob Baur, the founder of the liquid Corporation, conceived the idea of producing carbonic gas for coke gas, compressing it to a liquid state and marketing it in steel cylinders.

In May of 1889, the first cylinder of Red Diamond Gas was shipped from Liquid's first plant at 437 Illinois Street, Chicago. The company was then known as "The Liquid Carbonic Acid Manufacturing Company."

The convenience and economy of Carbonic Gas in cylinders was recognized by the industry and soon replaced the use of generator gas entirely.

CARBONATION AND THE FACTORS WHICH GOVERN IT

Carbonated water is largely a mechanical mixture of CO_2 and water and the term "carbonated water" is usually understood to mean water that contains gas to its capacity.

This capacity varies with pressure and temperature. The amount of gas water will absorb increases directly with the pressure. The amount of gas water will absorb also increases as the temperature decreases.

Therefore, any measure of the actual gas content of carbonated water will depend on the two factors--pressure and temperature.

The unit of measure that has been adopted as standard is "the volume."

One volume is the amount of gas that water will absorb at atmospheric pressure and at 60° Fahrenheit.

A volume of gas occupies the same space as does the water by which it is absorbed.

The pressure gauge on the carbonator or on the regulator or on the volume testing apparatus, does not show atmospheric pressure. This means that zero on the gauge is atmospheric pressure which is approximately fifteen pounds per square inch at sea level.

EFFECT OF TEMPERATURE 1

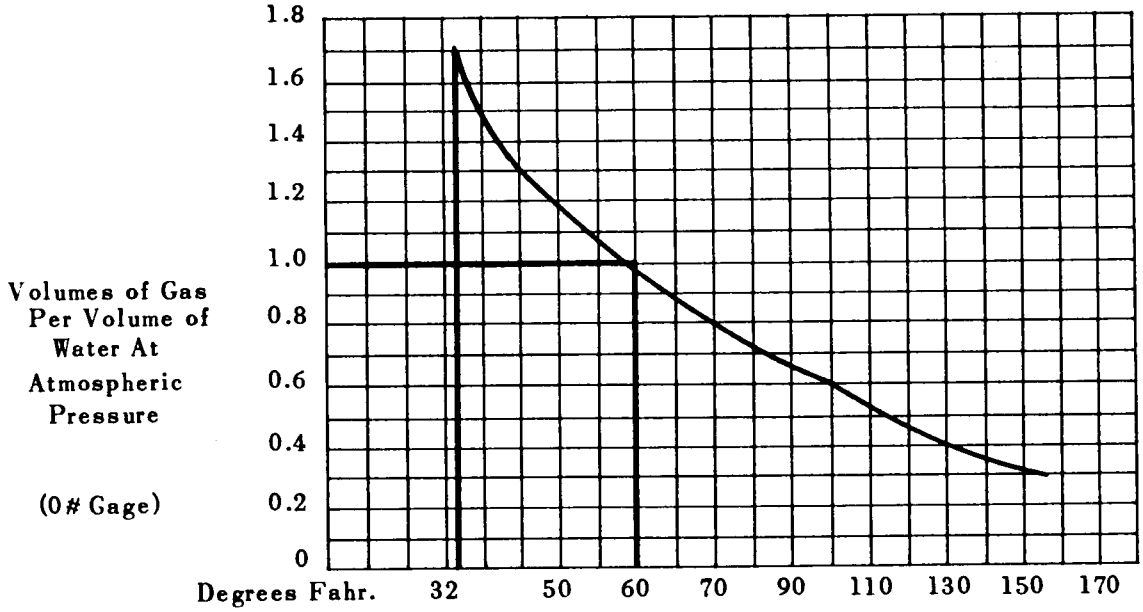

Chart No. 1 shows the effect of temperature change on the amount of gas water will absorb.

The pressure you will note, is constant--namely, atmospheric or 0 lbs. gauge. As the temperature of the water is lowered, the amount of gas it will absorb increases, until at 60°F. it is one volume. Note that from 60° to 150° the slope of the curve changes gradually, from 60° to 32° F., however, the curve changes more abruptly, and for each 10° difference in temperature, a decided increase in gas absorption is apparent, until at 32°, or slightly above the freezing point, we find that 1.7 volumes of gas is absorbed by the water at atmospheric pressure. From this curve it will be apparent that the cooler the water is, the more gas it will absorb.

EFFECT OF PRESSURE 2

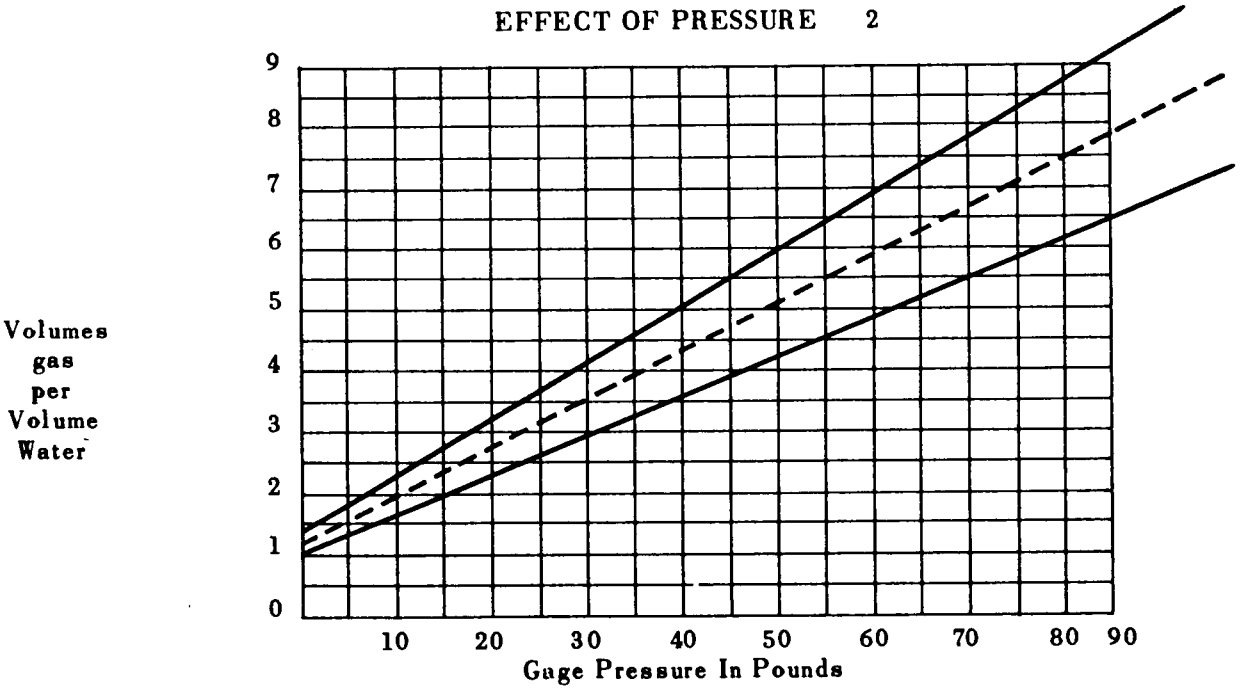

EFFECT OF PRESSURE

Chart No. 2 shows the effect of increasing pressures, temperature being constant, on the amount of gas water will absorb. You will note that the chart is a straight line, of the same slope throughout, indicating that as the pressure is increased, the gas volumes increase. Furthermore, the "gas volume" increase is directly proportional to the pressure. To illustrate--at 0 lbs. gauge and 60°F. we find that the water will absorb one volume of gas, at 15 lbs. increase in pressure, water at 60° will absorb one additional volume of gas. If the temperature of the water is 45°, then, for every 15 lbs. increase in pressure, the water will absorb 1.3 volumes of gas.

FOR A UNIFORM BEVERAGE
Control Carbonation

Carbonation is an important taste ingredient of your beverage. One of the vital attributes of any beverage is uniform taste--bottle after bottle. There are four elements that influence the taste of a beverage.--

1. FLAVOR 2. SWEETNESS 3. CARBONATION 4. TEMPERATURE

All but the final temperature of your drink are susceptible to direct control at your plant. Flavor and sweetness standards should be and probably are definitely established by means of exact formulas.

Carbonation standards should also be established for each flavor in your line--Sparkling water, ginger ales, and other "mixers" should be in the "high carbonation" bracket--the highest carbonation practically obtainable is the ideal to be sought for.

Cola drinks, root beer and other low acid drinks are in the next bracket usually carbonated to 3 or 3½ volumes--

Some bottlers prefer fruit drinks, especially Orange--at a lower carbonation. Determine a standard of carbonation for each flavor that you consider best for your market.

Set up definite instructions for maintaining these standards, just as you maintain standard formulas for the sugar flavor, acid and other ingredients.

FLAVOR	CARBONATION STANDARD
Root Beer	3½ Volumes

Having determined the carbonation standards, it is important that all concerned know how to control the factors that will enable you to maintain them.

HOW TO PRODUCE UNIFORM BEVERAGES

Bottlers know the importance of developing the proper formula for a beverage. They fully realize that for any bottled beverage to achieve popular favor, it must be right--in flavor, in taste, and in gas content.

How To Produce Uniform Beverages

The development of the proper formula for a beverage is, of course, an essential step in establishing that beverage in popular favor. To keep its popularity, the beverage must be the same from day to day and month to month. The formula must be followed exactly and the beverage produced in just the same manner. This means that perfect control of variable factors is necessary to assure uniformity.

The number of volumes of gas in a finished beverage has a definite relationship to the taste of the beverage. Correct carbonation means a sparkling, pungent, thirst-quenching beverage that completely satisfies the consumer. Low carbonation leaves the beverage with a flat, insipid taste which is unsatisfactory. Finished beverages should be checked at frequent intervals to assure proper carbonation in the bottle.

The amount of sugar in a beverage determines, with a given acid content, its sweetness. The sugar also has another important function in the beverage. Sugar makes the "body" of the beverage and "body" is a necessary background for any flavor. A change in the body changes the taste of the beverage even though the same flavor is used. High quality extracts are, of course, a necessity.

Control of sugar content of the beverage is very important. It depends on the beaume of syrup used and the throw used. Variation in syrup density changes the finished beverage if the throw remains the same. Variation in the throw will also change the beverage if the syrup density is unchanged. By checking the beaume of the finished beverage a control is established where it does the most good.

Uniform finished beveraged can be made only by positive control over such variable factors in beverage production.

Check the density of your syrup with a beaume scale.

Check the actual throw in the bottle by measuring individual sample bottles.

Check the final result by using the finished drink tester on the completed beverage.

Check the carbonation in the finished beverage.

KNOW YOUR WATER

Water that is satisfactory for drinking purposes is generally satisfactory for carbonating. There are very few exceptions to this rule.

The water used for carbonating must be clean. That means free from suspended matter of all kinds including water organisms which may be too small to see except under a microscope.

All water should be properly filtered and it is advisable to use an activated carbon unit after the filter. The ideal set up is to follow the activated carbon unit with a paper filter. This will prevent particles of the carbon coming through with the water.

Chemical composition of the water does not affect carbonation within the limits of potable water. If enough material were in solution to interfere with carbonation, it would not be possible to use the water for drinking purposes.

Organic matter in solution can cause trouble if present in excessive quantities but this trouble is removed by activated carbon.

Know Your Water

It may be necessary to treat water chemically in some cases. Hardness can be removed by chemical treatment and that is sometimes advisable to prevent scale formation on machinery, particularly on soaker parts. Alkalinity can be reduced by chemical treatment and that is advisable if the alkalinity is high enough to affect the taste of the water or if it is sufficient to neutralize too much of the acid in the beverage. If objectionable material is present in the raw water, that may require chemical treatment.

Such treatment, properly handled, does not affect carbonation and it does not change the necessity for proper filtration. Chemical treatment should be followed by filtration.

FOES OF CARBONATION AND HOW TO COMBAT THEM

AIR

Too much air in the water interferes with proper carbonation and also causes the CO_2 gas to leave the water more quickly when the bottle of finished beverage is opened. It is therefore important to to reduce the amount of air present to the minimum.

Some air is present in the raw water supply. More may be added in the mechanical handling of the water. When such water reaches the carbonator, the CO_2 gas tends to drive it out of the water. If steps are not taken to remove it, this air will accumulate in the carbonator and much of it will be carried through in the water and into the finished beverage. That is why all liquid carbonators have an automatic air snift.

CARBONATOR SECTION

HOW IT WORKS

Most of the cold drinks served at a soda fountain are carbonated. Therefore, nothing is more important to the successful operation of a fountain than cold, properly carbonated water to make drinks sparkling, full flavored and fully satisfying in quality.

Water is carbonated by combining it with carbonic acid gas (CO_2) . This is done in a sealed chamber by forcing gas from a drum through a pressure regulating valve into the water in this chamber. As the carbonated water is used from this chamber, it is replaced by a high pressure water pump. The operation of this pump is controlled by an automatic switch device which senses the water level.

Two conditions must be maintained in order to induce and hold carbonic gas in water, They are:

1. Pressure
2. Adequate refrigeration or cooling.

In the SCOTSMAN DISPENSER, pressure is supplied by the gas drum and is present throughout the system to the carbonator tank and keeps the water carbonated. Without adequate cooling, however, carbonation escapes rapidly after the water leaves the tank. Soft drinks should be dispensed at 40°F. or below. The colder the water the greater the carbonation. Cooling with ice a temperature of 32°F. can be reached and held without danger of freezing as is true with mechanical refrigeration systems. Thus, less CO_2 is used to achieve the same degree of carbonation in a drink.

THE GAS DRUM-Source of carbonation

Drums for carbonic acid gas are made of drawn steel tubing and are built to withstand great pressure. As delivered, they contain liquid gas reduced to liquid form by tremendous compression.

Each one is equipped with a safety valve set to blow out before internal pressure can explode the drum itself. Once this valve "pops off", the contents of a drum will escape. Drums, therefore, should always be stored in a cool place to keep the liquid from expanding and increasing pressure inside the gas drum.

Drums are classified by weight. They come, as a rule, in two sizes: 20-lb. drums and 50-lb drums. These weights refer to the compressed liquid contents and are in addition to the tare weight usually indicated on the head of each drum.

CARBONATOR SECTION

HOW TO CHANGE A GAS DRUM - NEXT PAGE - SINGLE REGULATOR IS SHOWN

1. Close drum head valve (A) (clockwise).
2. Close regulator outlet valve (B) (clockwise).
3. Disconnect regulator from drum by removing regulator coupling nut (C). Gauge should drop to "0".
4. If gauge does not drop to "0", turn regulator key (D) clockwise to allow all gas to escape from the body of the regulator through the main connection.
5. Turn regulator key (D) counter-clockwise until it is free and loose and regulator is closed.
6. Put full drum in place of one being replaced. Couple regulator coupling nut (C) to new gas drum, first making certain that there is a good fiber washer at the connection.
7. Open drum head valve (A) all the way, turning it as far as it will go to bring packing up tight against the shoulder of the valve stem.
8. Turn regulator key (D) clockwise slowly until standard operating pressure, as indicated on the gauge, is reached. Unless you have a low pressure carbonator the standard operating pressure is 100 lbs., depending on the manufacturer's recommendation.
9. Open regulator outlet valve (B) slowly and release gas to carbonator. As pressure equalizes, open this valve all the way.

WASHERS: In gas connections and lines under high pressure, use fiber washers only. In lines carrying liquids or subject to relatively low pressures, rubber or leather washers should be used.

Keep gas turned on at all times to insure uniform well-carbonated water.

Shown is single stage regulator with gauge as used on gravity type drink dispenser heads. For pressure type dispensing heads a two stage or hi and lo pressure regulator and gauge are required.

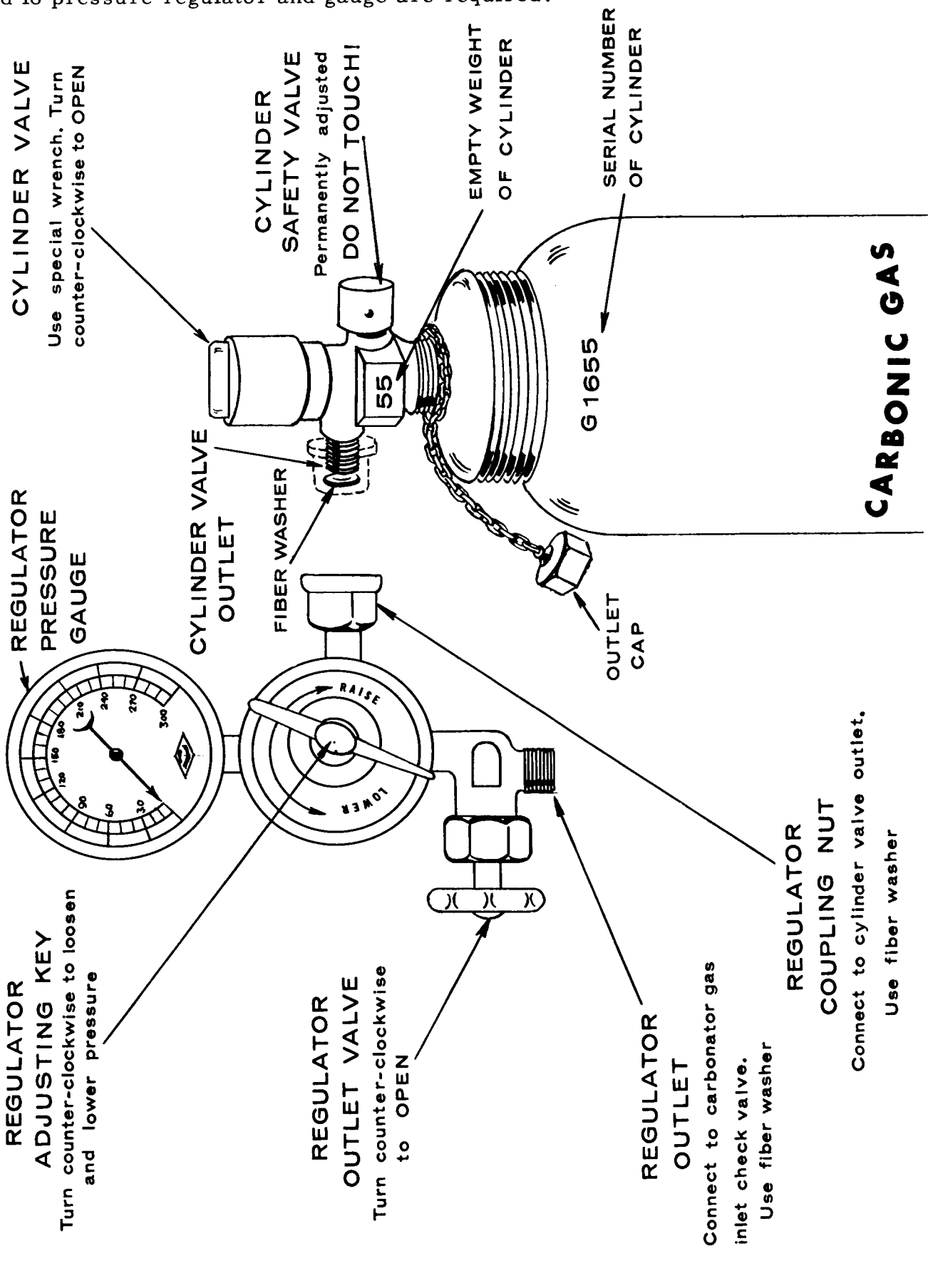

CARBONATOR SECTION

Make sure that the regulator coupling nut and regulator valve coupling are tight and that both contain a good fiber washer.

Make sure that the water back-pressure check valve is functioning properly.

Sometimes it is difficult to detect a leak in the regulator gauge. In checking here apply the lather generously, and watch closely.

If a leak occurs near either end of a hose, cut off the defective end and refasten hose with clamps. Otherwise, replace hose.

OPERATION-Gravity type dispensing heads.

Turn on CO_2 gas and adjust regulator to 100 lbs. pressure, open soda water faucet for one-half minute to blow all air out of carbonator. Close faucet, turn on water supply and turn on power supply to pump motor. When pump stops, open faucet again until full stream of water is obtained. Draw several glasses of water and note pump operation. Pump will operate after approximately 14 ounces of carbonated water have been drawn.

The carbonator will operate satisfactorily on CO_2 pressures from 80 to 120 pounds. set regulator at 80 lbs. for maximum gas economy or adjust to suit requirements of the faucet used.

OPERATION-Pressure type dispensing heads, kits.

Pressure types dispensing systems require both hi and lo pressure gauges as well as syrup tanks etc.
Hi pressure CO_2 gauge feeds carbonator, lo pressure gauge feeds pressure to syrup tanks, forcing syrup thru lines to dispensing heads. Normal pressure setting is 30# gauge.
See accompanying sketch for details.
The system is completely automatic in operation, and requires no attention except maintaining CO_2 supply, and periodic servicing of water supply line filter.

IMPORTANT: Insufficient water supply will cause noisy operation and eventual damage to pump. If strainer and filter are clear and line valves open, noisy pump operation indicates insufficient water supply.

WARNING: If the installation is idle and exposed to freezing temperatures, disconnect water supply line and blow all water out of carbonation system.

CARBONATOR SECTION

THE REGULATOR GAUGE--ACCESSORY ITEM, NOT INCLUDED WITH DISPENSER

The regulator in the carbonating system is mounted at the outlet of the gas drum. The regulator reduces and controls the pressure of carbonic acid gas before it enters the carbonator . The regulator gauge indicates gas pressure at the regulator outlet valve.

TESTING REGULAR GAUGE - SEE ILLUSTRATION ON FOLLOWING PAGES

The regulator gauge should be tested every time a gas drum is changed and at least once every 60 to 90 days. Follow this procedure:

1. Close the drum head valve (clockwise).
2. Close the regulator outlet valve (clockwise).
3. Loosen the regulator coupling nut.
4. Turn regulator adjusting key clockwise until gas pressure in regulator is released and the needle on the regulator gauge drops to "0". Turn this adjusting key counter-clockwise until it is loose and free.
5. Tighten regulator coupling nut and open drum head valve slowly. (The regulator outlet valve remains closed.)
6. Check the reading of the needle on the gauge. If it remains at "0", the regulator is in good condition. If the needle rises but does not register more than 15 pounds pressure, the regulator is working satisfactorily within acceptable limits. If the needle creeps to 30 pounds pressure or more, the regulator needs immediate repair.

HOW TO FIND AND STOP GAS LEAKS

Whenever a fresh drum of CO_2 gas is connected to the carbonating system, open the drum valve until the regulator gauge reaches maximum pressure (approximately 120 to 125 lbs.) and then close drum valve.

If the needle of the gauge on the regulator continues to drop, there is a leak in the system. Due to some absorption of gas in the water in the carbonator, the needle may drop a few pounds, but it should then come to a stop if there is no leak.

If a leak is found by this method, proceed to locate it as follows:

You can test the carbonation system for gas leaks by applying shaving soap lather with a shaving brush to all joints, connections, and valves. If there is a leak, bubbles will appear.

If gas is escaping at the stem of the drum head valve, open valve all the way. Usually this closes a leak through the packing around valve stem. Also tighten packing nut to keep gas from escaping through packing.

DIAGRAM OF PARTS AND ACCESSORIES FOR INSTALLING SYRUP TANKS ON MODEL SD-1 H COMBINATION ICE MAKER AND DISPENSER

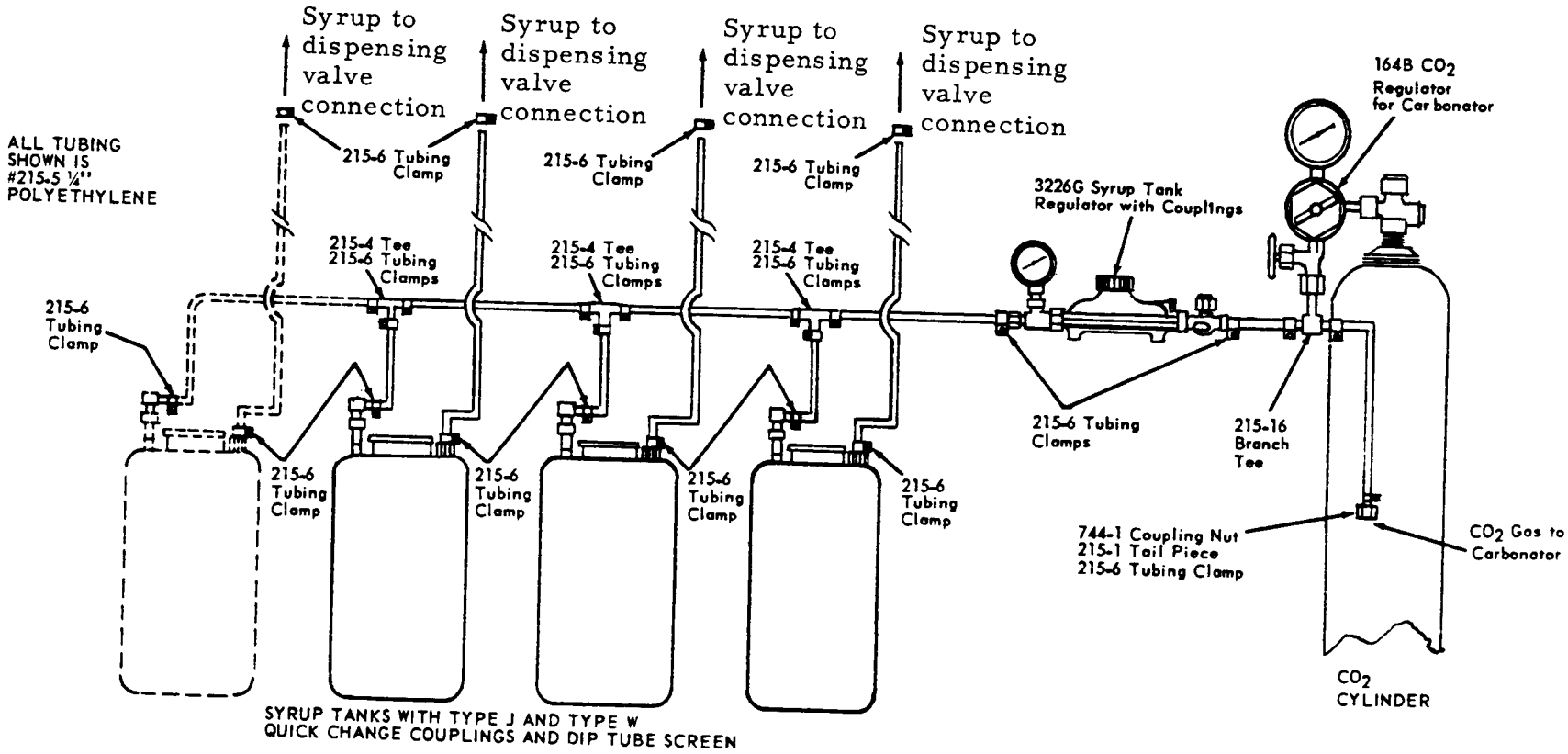

Typical layout for use on pressure type dispensing heads - kits -

Source: Excellall Products Div.
Bastian Blessing Co.
4201 W. Peterson Ave.,
Chicago, Illinois

CARBONATION SYSTEM

HOW IT WORKS (See Sketch page 46)

Water enters the cabinet and goes directly to the strainer mounted on the carbonator pump. After passing through the strainer, part of the water goes to the reservoir of the ice machine. The remainder of the water goes through the pump to the cold plate. Water may go through the check valve in the pump when the pump is not operating. The water passes through the cold plate and is cooled, leaving the cold plate the water enters a tee. At this point the water may go to the dispensing equipment to provide cold drinking water or cold water for non-carbonated drinks. The rest of the water coming from the tee goes to the carnator tank. The water inlet to the carbonator tank has a check valve, therefore the water enters the tank only when the pump is running and the water pressure is above the CO_2 pressure in the tank. A water jet breaks up the water into a fine spray, the CO_2 atmosphere inside the tank mixes with the water to produce the carbonated water. The CO_2 gas enters the tank through check valves directly from the cabinet fitting. The carbonated water leaves the tank, makes a pass through the cold plate and goes to the dispensing equipment for use as carbonated water or carbonated drinks.

The water level in the tank and switching of the pump is controlled by electrodes in the carbonator tank and the liquid level control. Here's how it works.

At start up the pump motor contacts on the relay are closed and the relay is de-energized. Note that the secondary of the transformer which supplies power to the relay is a open circuit. As the water rises in the tank it comes in contact with the low level electrode. Nothing happens since the wire from the electrode goes to a open switch or contact on the relay. As the water continues to rise it then makes contact with the high level electrode. At this instant a electrical circuit is completed through relay and water. This circuit energizes the relay which opens the pump switch and closes the electrode switch. Now as carbonated water is used and the water breaks contact with the high level control the pump will stay off since there is still a electrical circuit through the relay, electrode contacts and water by way of the low level electrode. As the carbonated water level continues to drop it breaks contact with the low level electrode, this de-energizes the relay and the pump starts filling the tank. This cycle continues over and over again always maintaining a carbonated water level between the tips of the two electrodes.

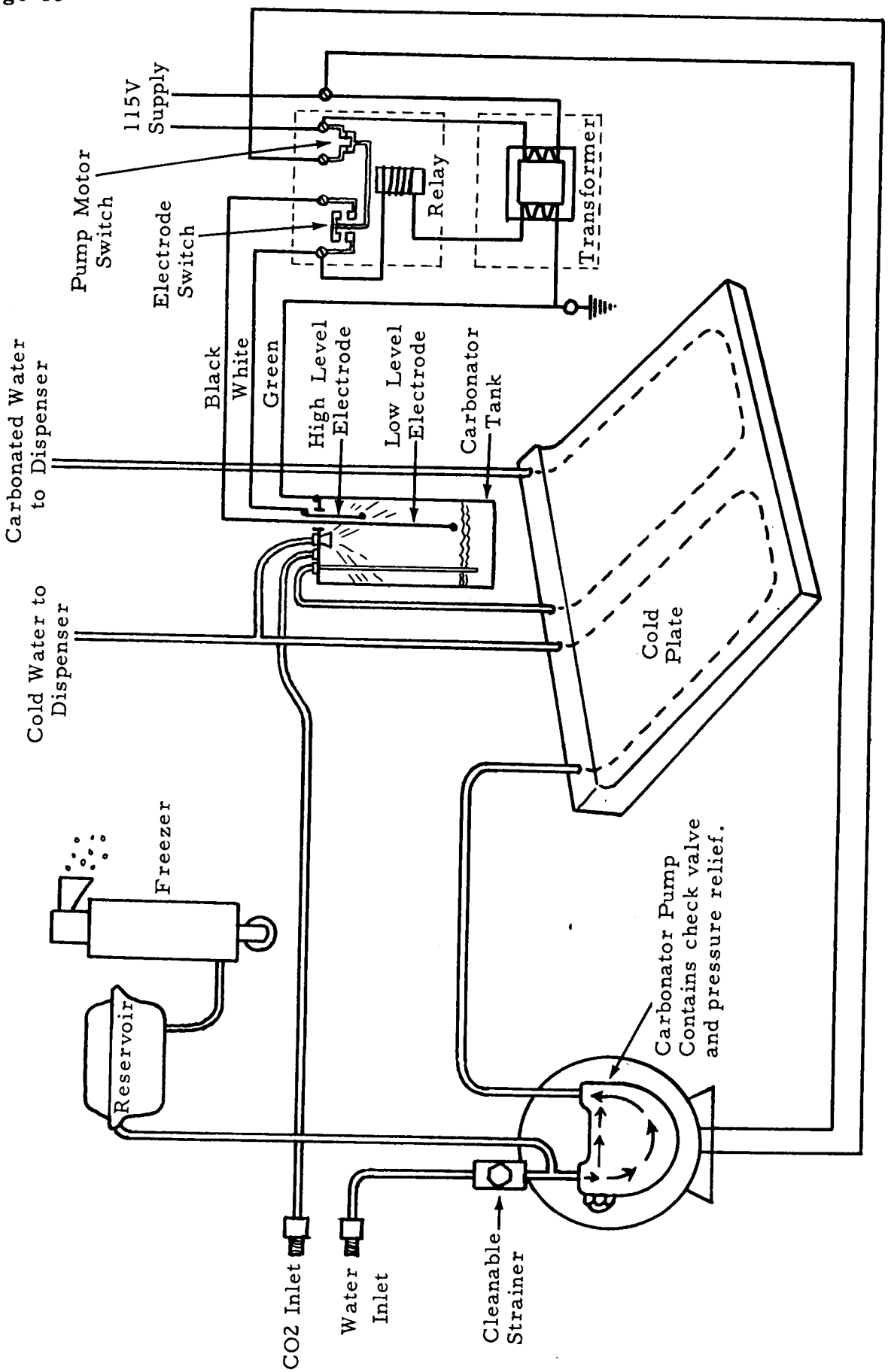

WATER SYSTEM SCHEMATIC

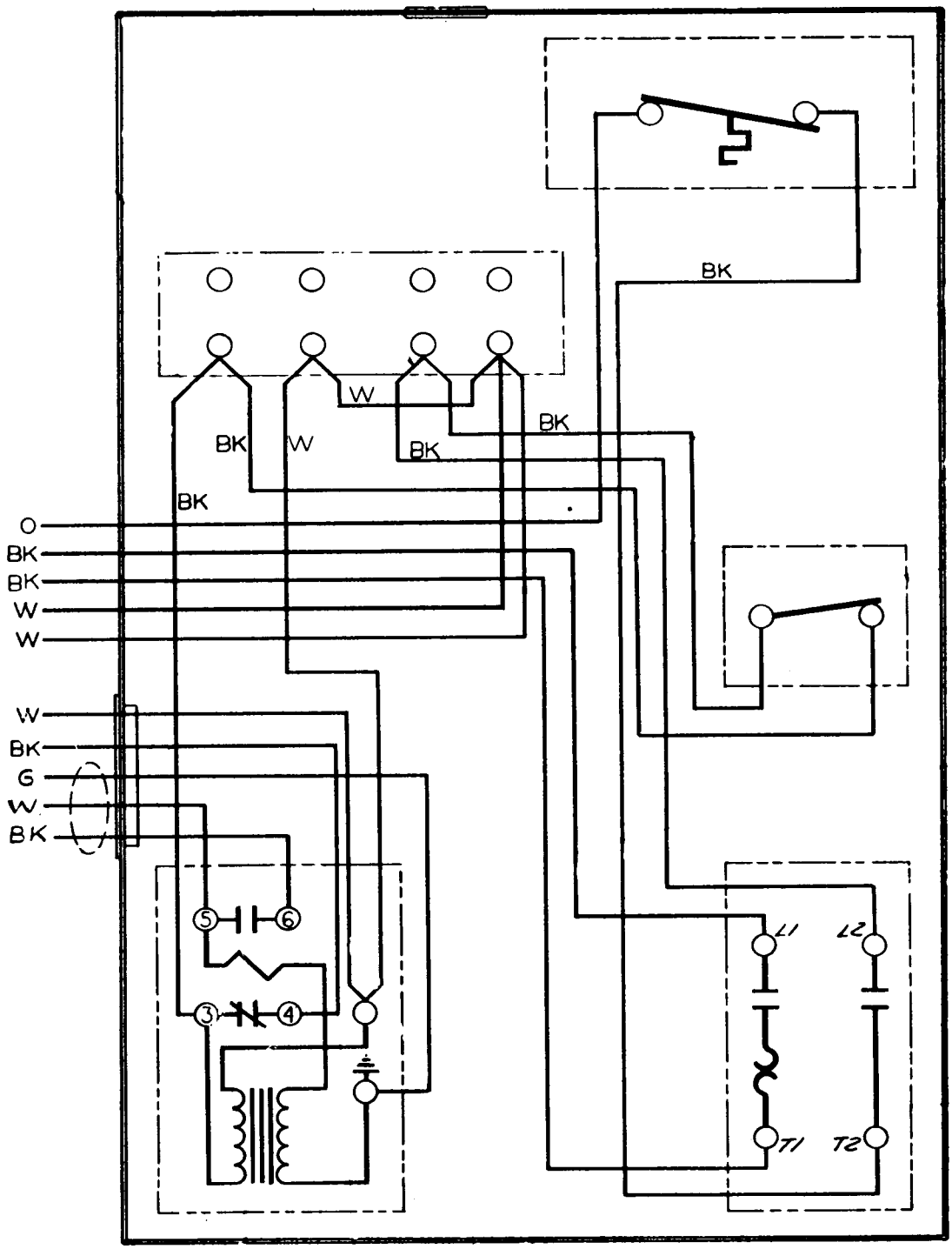

WIRING DIAGRAM
Carbonator Liquid Level Control
All SD-1H Models

CARBONATION SECTION
Service Analysis Chart

COMPLAINT	POSSIBLE CAUSE	CORRECTION
Milky carbonated water	Air in carbonator	Vent carbonator
	Pump sucking air	Check for loose fittings Replace pump
Gas only flows from dispenser valve	Water turned off	Turn on
	Electric motor not cutting on.	Check liquid level control Check carbonator tank electrode
Carbonator fills with water	Water pressure too high	Adjust if possible, or install pressure reducer
	Gas pressure too low	Set regulator key to deliver proper gas pressure
	Gas drum empty	Replace
Carbonated water backs up into city water line.	Dirty or worn back-pressure check valve	Clean or replace valve seats
Excessive pumping	Closed water supply valve	Open valve
	Water supply (building or city) shut off	Re-establish source
	Automatic switch out of order	Check switch, replace if necessary
	Water inlet screen clogged	Remove and clean screen
	Pump inlet or check valve out of order	Repair or replace
	Swollen washers in hose couplings obstruct flow of water	Replace washers
Carbonator pump pounds water running in spurts	Air in pump	Vent pump
	Water off	Turn water on
	Filter or strainer plugged	Clean or replace
	Inlet line too small	Must be 3/8" copper or larger

CARBONATION SECTION

Service Analysis Chart

COMPLAINT	POSSIBLE CAUSE	CORRECTION
No carbonated water (pump does not run)	Motor burnt out	Replace
	Liquid level control	Check relay wiring, contacts Repair or replace relay
	Carbonator Switch	Replace
	Tank electrode shorted	Repair or replace
No carbonated water (pump runs)	Pump running backwards	Reverse wiring inside motor
	Worn pump	Replace
	Pump check valve leaks	Clean or replace
	Pump relay valve opens too soon	Clean; valve is adjustable, set higher; or replace
	Clogged filter or inlet screen	Clean or replace
	Water line blocked	Check for smashed washer at fittings or plugged check valve on tank
Flat carbonated water	Gas drum empty or low	Replace drum
	Gas turned off	Turn on gas
	Regulator set too low	Increase pressure
	Gas line plugged by swollen washer	Replace washer
	Water pressure too high	Adjust if possible or install water pressure regulator
Metallic taste	Carbonated water backing up into city water line	Clean water back-pressure check valve, replace washer
	Carbonated water line connected by mistake to brass or copper lines. Use proper beverage tubings.	Make proper connection using approved tubing.
Carbonated water off taste	Oil, dirt or grease inside carbonator	Clean carbonator
	Tainted gas.	Sniff gas at drum head to determine if drum should be replaced.

DISPENSER SECTION

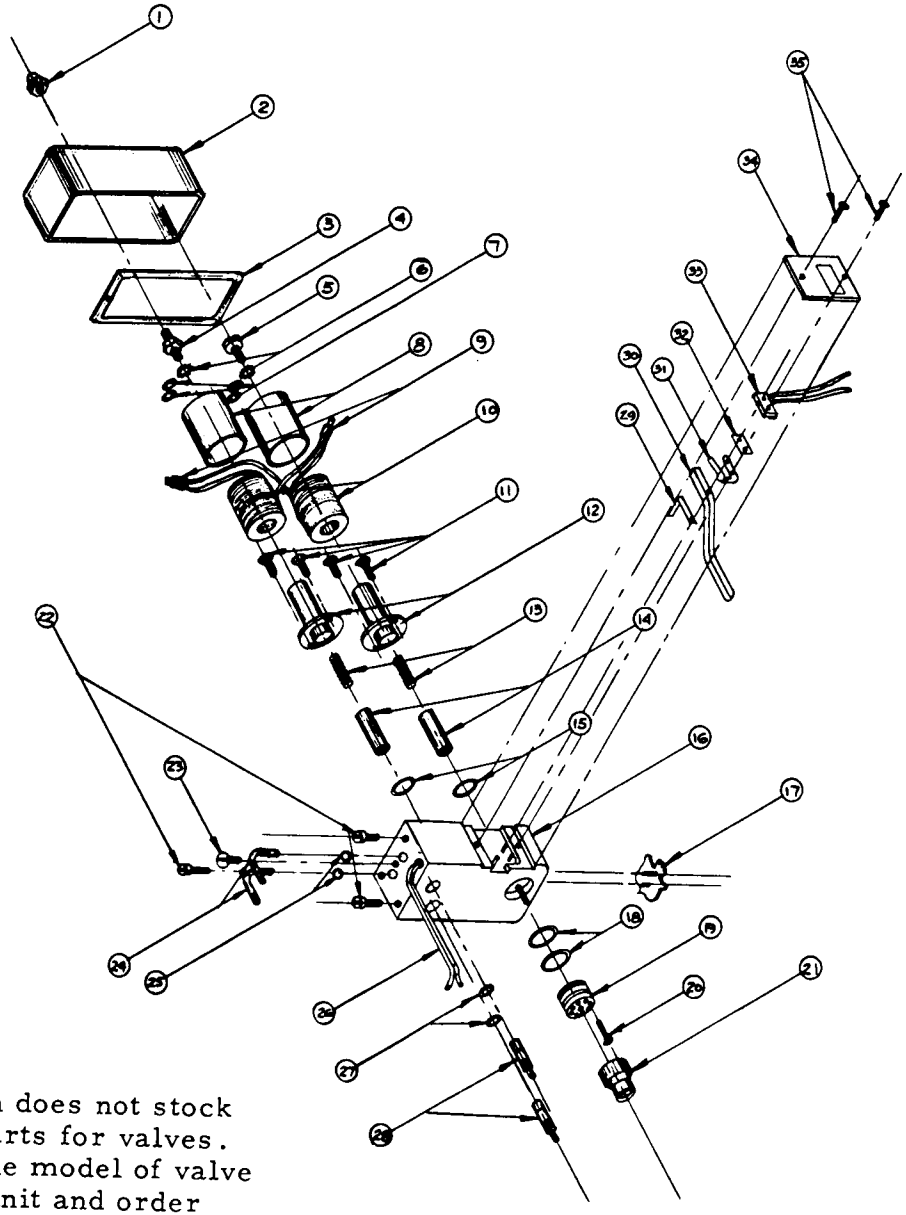

NOTES:
1. - MC-29 THRU MC-35
2. - MC-20 THRU MC-22
3. - MC-41, MC42 & MC43.

	NO.	PART NO.	DESCRIPTION
	35	MC-12	SCREW, SWITCH COVER
	34	MC-11	PLATE, SWITCH COVER
	33	MC-9	MICRO-SWITCH
	32	MC-8	INSULATOR, MICRO-SWITCH
	31	MC-7	ACTUATOR, MICRO-SWITCH
	30	MC-10	LEVER, ACTUATING
	29	MC-46	GROUNDING STRAP
	28	MC-2	STEM, METERING
	27	MC-3	"O" RING, METERING STEM
	26	MC-13	SERVICE CORD
	25	MC-39	"O" RING, INLET FITTING
3	24	MC-43	INLET FITTING
	23	MC-38	SCREW, RETAINER
	22	MC-37	SCREW, MOUNTING
	21	MC-40	SPOUT
	20	MC-6	SCREW, DIFFUSER
	19	MC-4	DIFFUSER
	18	MC-5	"O" RING, DIFFUSER
	17	MC-47	McCANN CREST
	16	MC-1	BASE, FAUCET
	15	MC-14	"O" RING, PLUNGER HOUSING
	14	MC-15	PLUNGER, SOLENOID
	13	MC-16	SPRING, SOLENOID PLUNGER
	12	MC-17	HOUSING, PLUNGER
	11	MC-19	SCREW, PLUNGER HOUSING
2	10	MC-20	COIL, SOLENOID
	9	MC-44	NUTS, STA-KON WIRE
	8	MC-23	HOUSING, COIL
	7	MC-24	GROMMET, COIL HOUSING
	6	MC-26	LOCKWASHER, SOLENOID VALVE STEM
	5	MC-27	SCREW, SOLENOID VALVE STEM
	4	MC-25	STUD, SOLENOID VALVE STEM
	3	MC-28	GASKET, COVER
1	2	MC-29	COVER, TOUCH-O-MATIC
	1	MC-36	ACORN NUT, COVER

TOUCH-O-MATIC FAUCET
MODEL NO. TMC-10

McCANN'S
ENGINEERING AND MFG. CO.
430 W. CYPRESS ST., GLENDALE, CALIF.

NOTE: Scotsman does not stock repair parts for valves. Determine model of valve on your unit and order parts from:

McCann's Engineering & Mfg. Co.
430 W. Cypress Street
Glendale, California

I. PRINCIPLE OF OPERATION

When the operator presses a glass against the main actuating lever (30) of the faucet, this lever in turn depresses the actuating button on the electric Micro-switch (33). The switch then completes the circuit, allowing electricity to flow immediately to both solenoid valve coils (10). With the coils energized, they immediately act as electro magnets by creating a magnetic force that raises the plungers (14) located in the center of the coils. When these two plungers are in a raised position, syrup and water are then permitted to flow through an orofice, into the spout (21) (mixing chamber) and finally end up in the operators glass blended perfectly.

II. METHOD OF SANITIZING OR CLEANING FAUCET

The faucet need not be dismantled in order to be cleansed. All that is required is simply fill a spare syrup tank with your cleaning agent, connect it to the syrup line to the desired faucet and flush it through faucet and syrup system with CO_2 pressure. A clean water rinse may be accomplished in the same manner.

The faucet spout should be removed and cleaned weekly.

III. POWER SOURCE

Our standard Touch-O-Matic Faucet is supplied with 115 Volt A.C. - 60 Cycle coils. However, they can be supplied with various voltages. Naturally each faucet is clearly marked regarding its required voltage, the coil housing (8) is also marked accordingly. The coil itself is color coded to identify its voltage as follows:

RED	LEADS indicate	-	115 VAC	- 60 Cycle
BLACK	LEADS indicate	-	12 VAC	- 60 Cycle
YELLOW	LEADS indicate	-	12 VDC	-
BLUE	LEADS indicate	-	6 VDC	

IV. METHOD OF DISMANTLING SOLENOID VALVE

1. Remove screw (5) and lock washer from plunger housing.
2. Remove coil housing (8).
3. Remove coil (10) by lifting only, do not cut wires.
4. Remove the 2 screws (11) from plunger housing base.
5. Remove plunger housing (12), lift straight up.
6. Remove plunger spring (13).
7. Remove plunger (14).

TO REASSEMBLE - REVERSE PROCEDURE.

NOTE!! Before removing a faucet from a dispenser or fountain, or before dismantling a solenoid valve that is mounted on a fountain, be sure to turn off the CO_2 pressure to the syrup tank and carbonator. Also, bleed off the CO_2 pressure on the syrup tank and carbonator, if there are no shut-off valves on the fountain.

V. SERVICE TIPS

1. When the 2 screws (11) that fasten the plunger housing (12) to the plastic valve base (16) are replaced, they should be screwed down all the way. In other words, be sure that the large stainless washer on the plunger housing (12) is pressed firmly against the plastic. If one screw was all the way in and the other was only half way in (for example), the plunger in the housing might "cock" and cause dripping - Caution - these screws do not have to be extra tight, just snug down.

2. When reassembling solenoid, with plunger spring (13), place in plunger (14), allow the plunger housing (12) to be placed over the plunger and spring and held together, thus preventing the plunger spring from falling out while assembling.

3. There is a difference between the Touch-O-Matic Non-Carbonated (NC) and the Carbonated faucet. The Non-Carbonated faucets are marked NC on the underside of the faucet. The NC faucet is designed for plain water. Since this pressure could vary from 10 to 100 psi at various locations throughout the same city, we arrived at a medium flow of water. On this faucet, we use a 3/16" orifice which will pass a sufficient amount of water at 10 psi. This faucet can work on pressure up to 50 psi, but no higher or the plunger will fail to open occasionally.

   The Carbonated faucet will operate on pressures up to 125 psi, by using a smaller 1/8" orifice.

4. RECOMMENDED OPERATING PRESSURES

   10 to 20 psi on syrup - average 15 psi.
   80 to 120 psi on carbonated water - average 100 psi.

5. RATE OF FLOW AND PROPER BLENDING

   The fastest rate of flow recommended for the Touch-O-Matic Faucet is 2 ounces per second of finished drink. In other words, a 6 ounce finished drink should take at least 3 seconds to pour. If a faster pour is used, the carbonation in the drink would be reduced.

   The typical blend used, is 1 ounce of syrup and 5 ounces of water for a finished 6 ounce drink. However, this may vary with the brand of syrup used, therefore check with your syrup supplier.

   To increase flow of syrup or water, turn metering screw out (counter-clockwise) and inward (clockwise) to decrease flow. These adjustments are sensitive and should be treated as such, by not turning more than an eighth of a turn at a time.

6. When replacing Spring Actuator (31) on micro-switch, pull switch straight out evenly. If switch is raised unevenly, it will bind and make it difficult to remove. When replacing switch, be sure to have actuating button of switch at top position not at the bottom. This will insure longer life of the actuating spring.

CARBONATOR PUMP ASSEMBLY

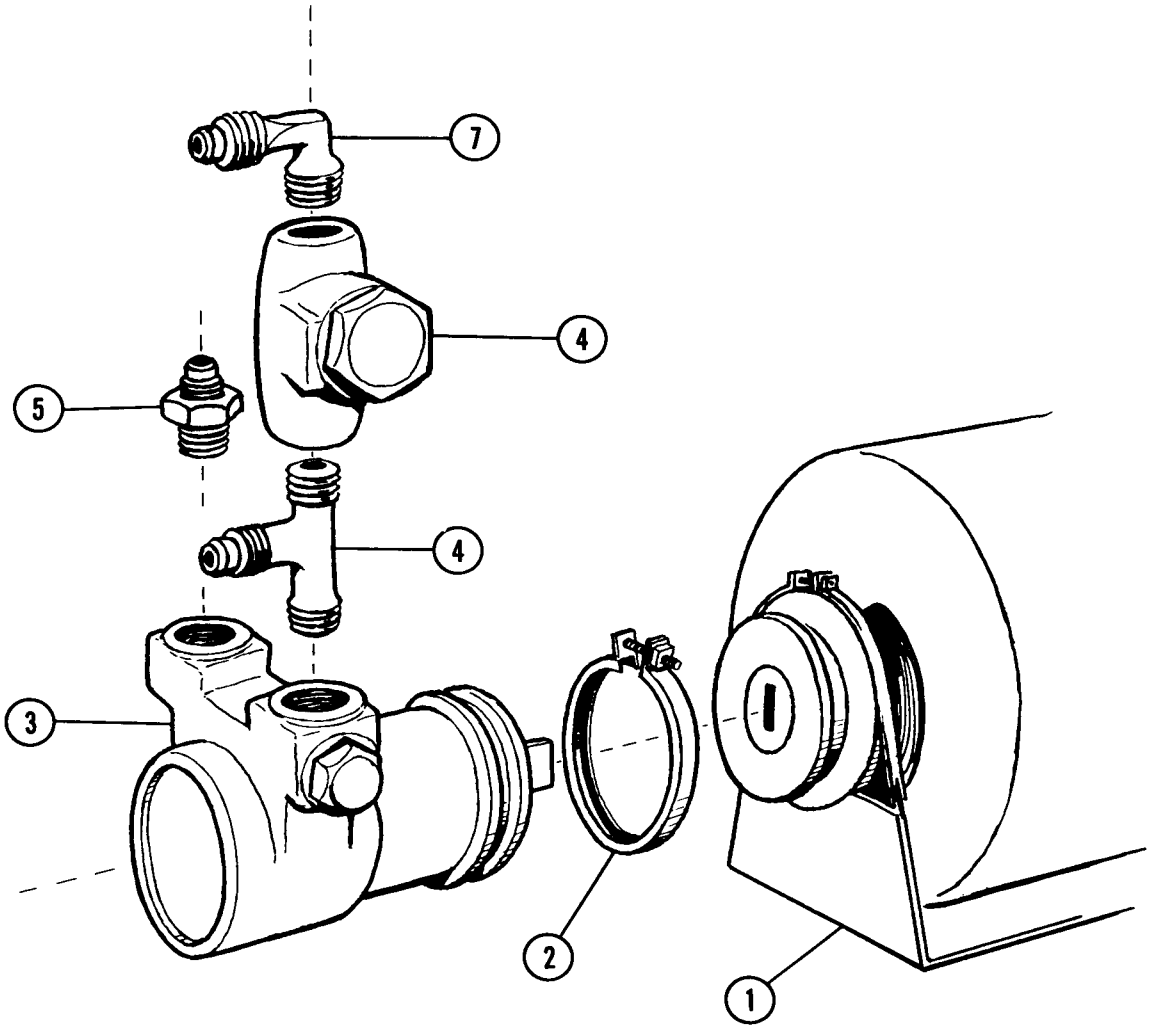

ITEM NO.	PART NO.	NAME
1.	12-1339-1	Motor 115/60/1
2.	2-1527	Coupling Clamp
3.	2-1526	Pump
4.	16-468	Tee 3/8" x 3/8" NPT x 1/4" Flare
5.	16-355	Union 3/8 NPT x 3/8 Flare
6.	16-162-1	Strainer
7.	16-401	Half Union Elbow

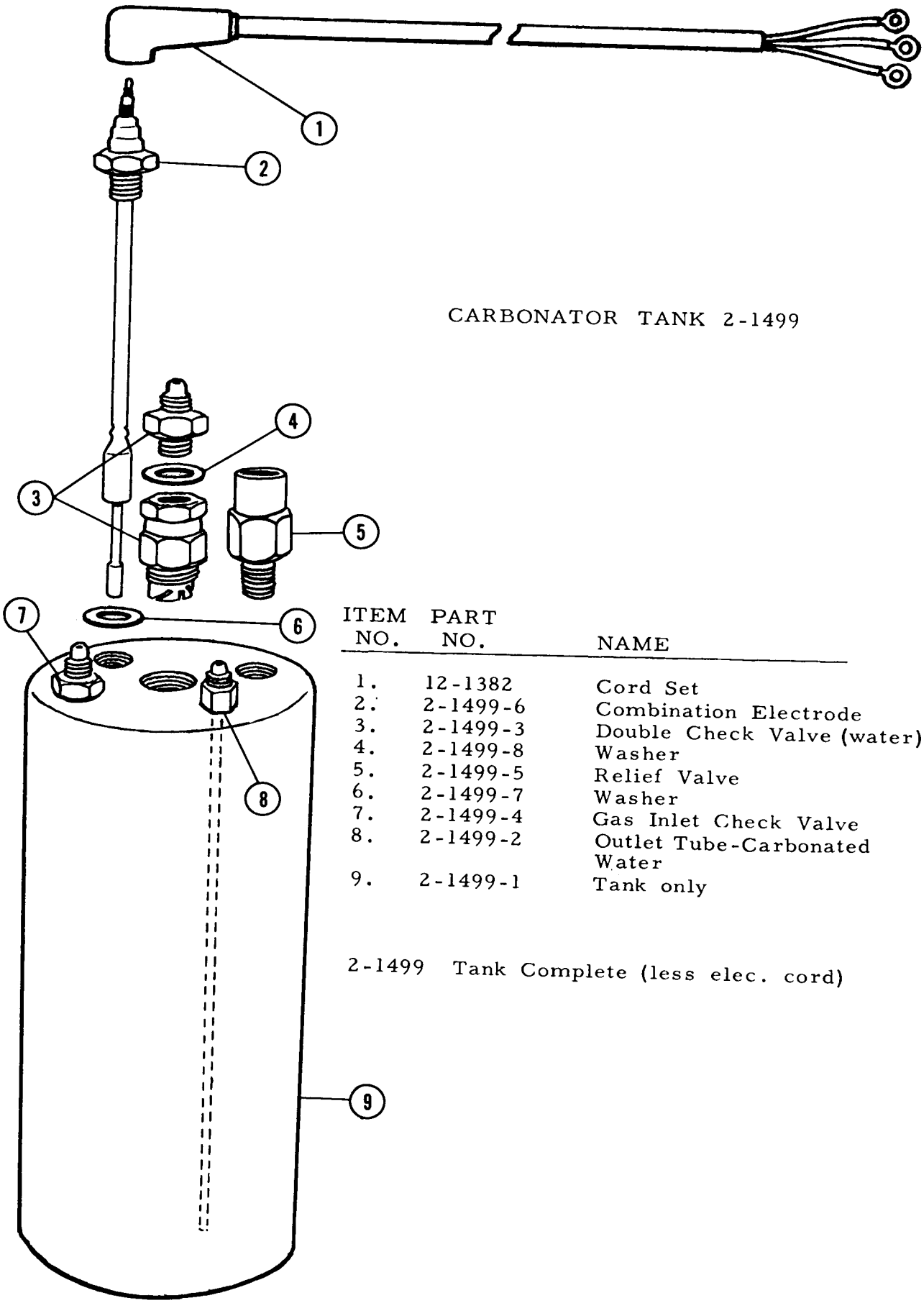

CARBONATOR TANK 2-1499

ITEM NO.	PART NO.	NAME
1.	12-1382	Cord Set
2.	2-1499-6	Combination Electrode
3.	2-1499-3	Double Check Valve (water)
4.	2-1499-8	Washer
5.	2-1499-5	Relief Valve
6.	2-1499-7	Washer
7.	2-1499-4	Gas Inlet Check Valve
8.	2-1499-2	Outlet Tube-Carbonated Water
9.	2-1499-1	Tank only

2-1499 Tank Complete (less elec. cord)

CONVERSION KIT

LOCATION - USAGE

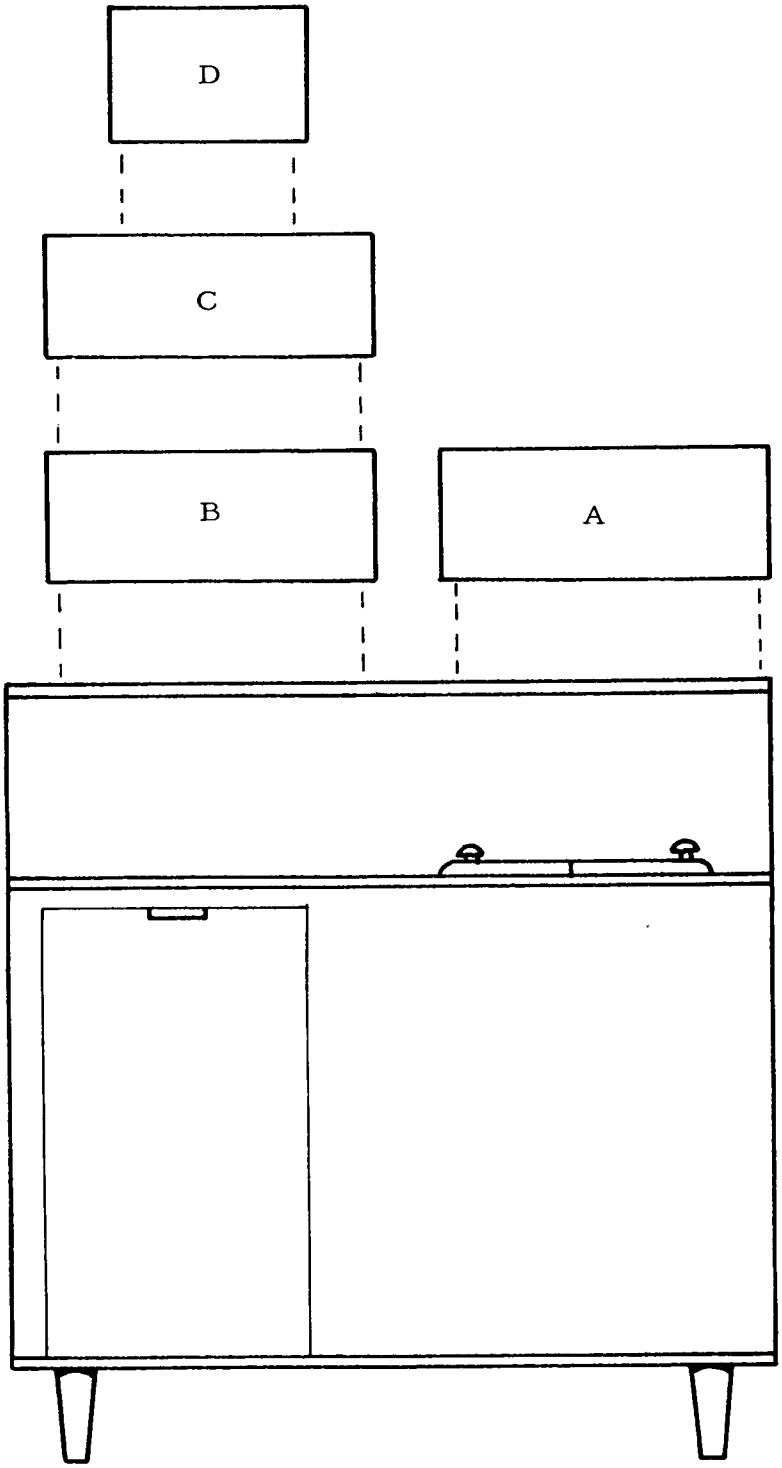

A. Syrup Rail Kit
part #K-43R

B. Satellite Kit
part #K-42S

C. Electric Valve Kit
Part #K-41E

D. Gravity Type Syrup Dispensing Heads Not Sold by SCOTSMAN. Purchase from supplier.

NOTE:

CO2 gas cylinders, syrup tanks and regulators are not part of the complete unit or the accessory kits.

Contact your SCOTSMAN Salesman for these items.

Suggested source:

EXCELALL PRODUCTS DIV.
Bastian-Blessing Co.
4201 W. Peterson Ave.
Chicago, Illinois

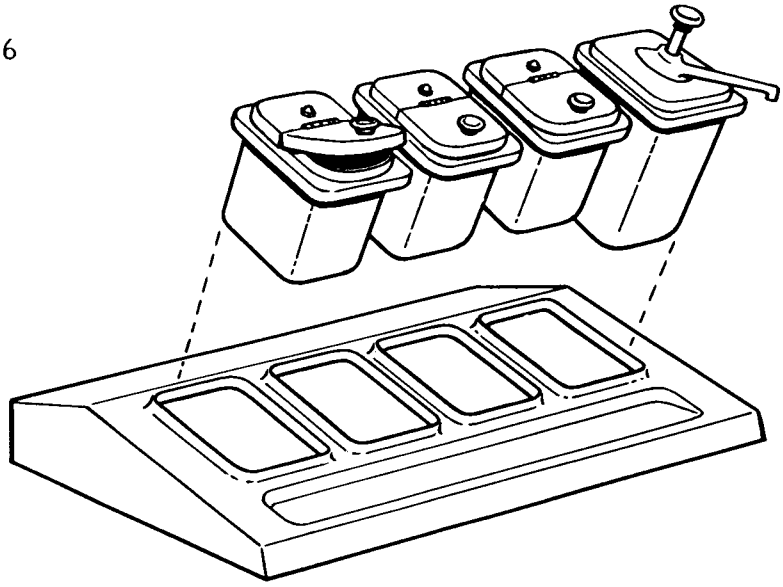

ILLUSTRATION A

K-43R Syrup Rail Kit

Kit does not include syrup or fruit jars

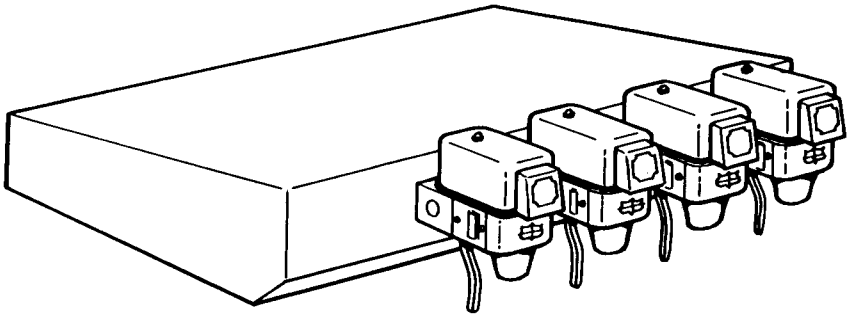

ILLUSTRATION B

K-41E Electric Valve Kit

Kit comes complete with valves installed.

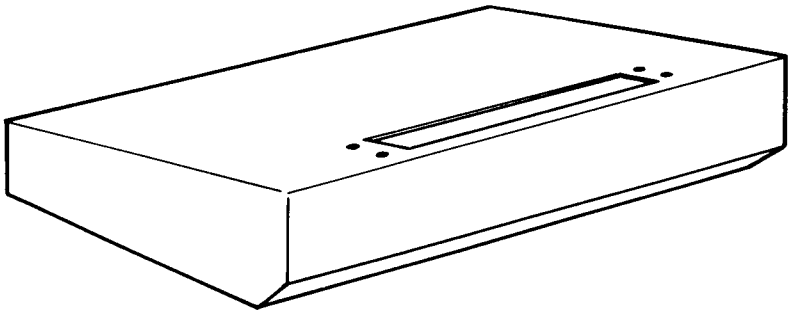

ILLUSTRATION C

K-42S Satellite Kit

Kit does not include Satellite head.

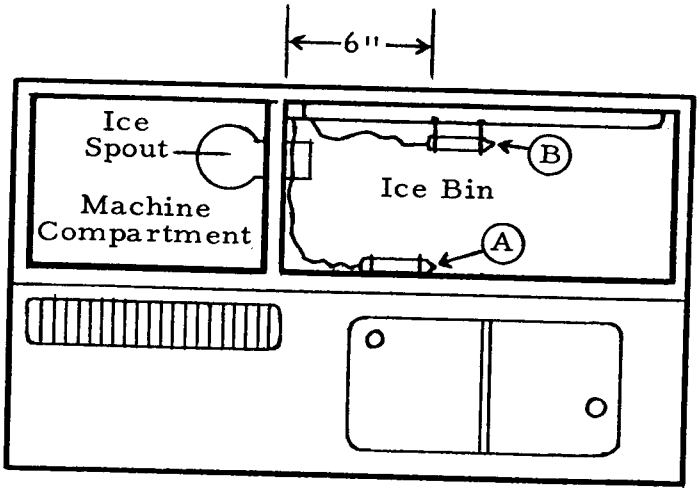

TOP VIEW SD1H or SD2H

When installing topping tanks and K-43R syrup rail, move thermostat from location Ⓐ to location Ⓑ. At location Ⓑ bulb thermostat holder is clipped on to the tube cover panel. If thermostat is not moved the ice filling the bin will push the topping tank up before the bin thermostat stops ice machine.

CONVERSION KIT CONTENTS
Usage

A. Syrup Rail Kit — Mounts Right Hood Top
Part #K 43R — Illustration "A"

This kit contains a tapered stainless steel framework that replaces right hood top panel. Frame rail will hold four standard size syrup or crushed fruit jars. The jars are not included in this kit and must be purchased seperately. Because of the location of the ice spout, the first two jars on the left as you face the unit must not exceed a depth of 6 1/2" from rail top.

B. Satellite Kit — Mounts Left Hood Top
Part # K 42S — Illustration "B"

This kit contains a stainless steel mounting station for use with Satellite head that replaces present left hood top panel. Kit also contains adaptor hardware and product lines. Kit does not include Satellite head, must be purchased seperately.

C. Electric Valve Kit — Mounts Left Hood Top
Part # K 41E — Illustration "C"

This kit contains a stainless steel mounting station that replaces present left hood top panel. Mounting station is pre-drilled to accept four(4) McCann electrically operated syrup dispensing valves. Supplied in kit are (2) two single lever carbonated valves, one (1), two lever carbonated valve and one(1) two lever sweet water valve.
All necessary product lines, fittings, etc. are also supplied in this kit.

D. Represents anyone of numerous manufacturer's gravity type, post-mix syrup dispensing heads that can be adopted to this unit.
Because of the large variety of dispensing heads available, Scotsman does not attempt to make a conversion bracket for each one. However, the left side stainless steel top panel, utilizing the stiffness channels packed in bin, can be used to support the particular dispensing head being used. Drill mounting, drain holes through this panel and secure to the underside using stiffness channels. Scotsman does not sell dispensing heads, order from supplier. Suggest when ordering gravity type dispensing heads that you specify one valve to have a split lever whereby cold water can be drained through head. There is no water station provided on complete unit although there is a flexible sweet water line provived.

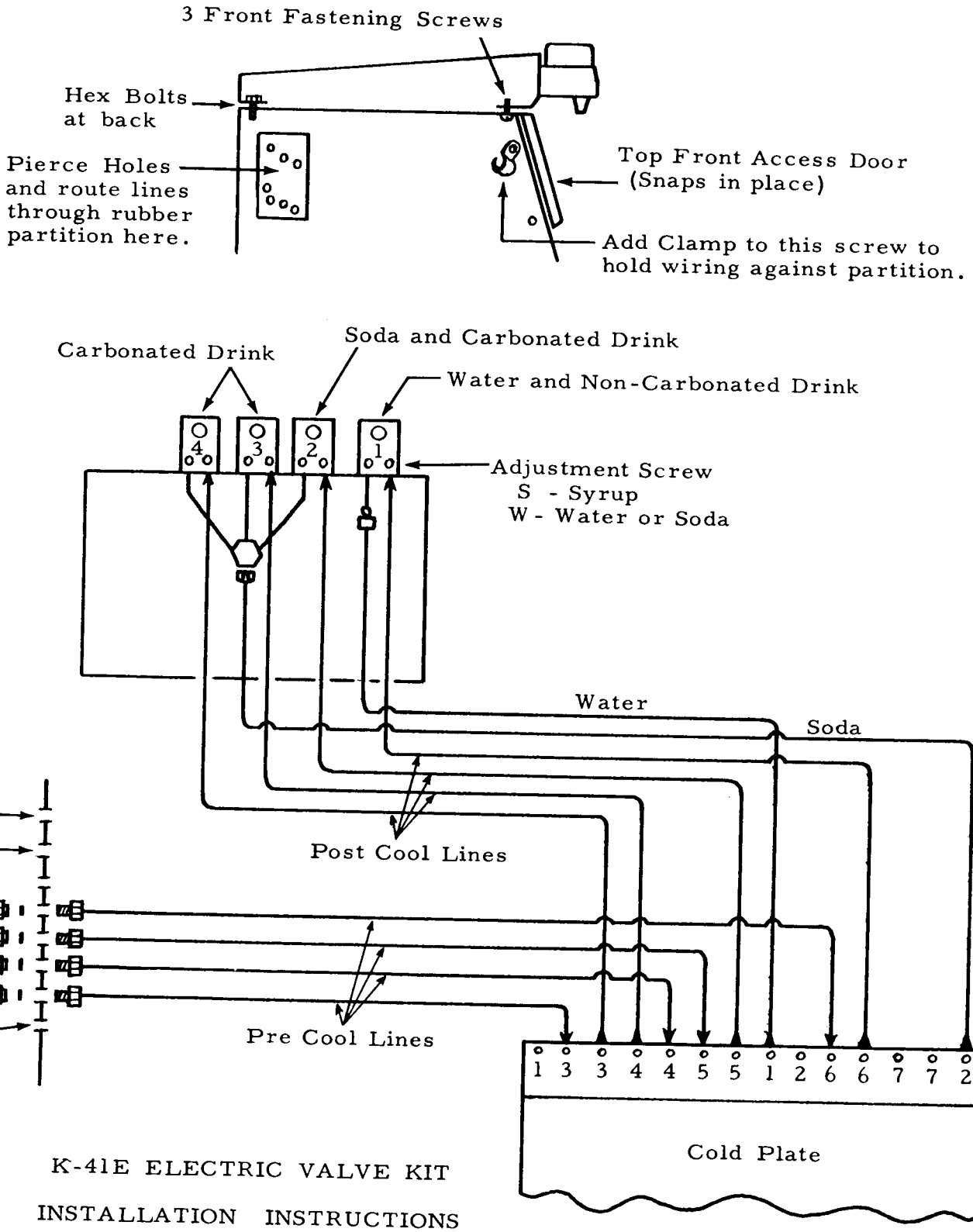

K-41E ELECTRIC VALVE KIT

INSTALLATION INSTRUCTIONS

INSTALLATION INSTRUCTIONS
K41E ELECTRIC VALVE KIT

1. Unpack carton and check material list.to insure all parts of list are included.
2. Remove icemaker top front access panel.
3. Remove both top panels by removing the 3 sheet metal screws from underside of front hood brace. Loosen 2 hex bolts at back lip and slide panel back and off.
4. Remove stainless steel syrup line protector panel from storage bin back wall. Held in place by open slots. Pull straight up and out.

5. Now take the four syrup pre-cool lines, Part A-17730 from kit, also needed will be four each fibre washers 3-579, and S-7044 nuts to secure male end of lines to rear cabinet bulk head. Remove rear service door and connect four lines putting male end through from inside cabinet bulkhead and securing to outside with first a fibre washer then the S-7044 back nut. See installation sketch, attach to proper circuit numbers on cold plate, run lines through sponge rubber opening next to ice delivery spout. Attach female ends of lines to plate using small plastic washer on each connection.
6. Now set valve kit assembly on top of unit to facilitate connections of lines to kit and through sponge rubber opening between machine compartment and line.
    a. Connect flexible soda water line to 3 way manifold on underside of valve kit. Soda line is capped off on end lying in machine compartment--other end is already attached to cold plate #2. See sketch.
    b. Flexible cold sweet water line is also capped off on end lying in machine compartment. Fasten to single sweet water valve connection on underside of valve kit per sketch. Other end is already connected to cold plate on center connection #1.

7. Run four syrup post-cool lines from valve kit through sponge rubber opening next to spout and attach to proper circuit on cold plate per sketch. Use plastic washers supplied on cold plate connections.

8. Run electric valve kit wiring through plastic clamp as shown, into control box and fasten to upper terminal strip per wiring diagram on control box cover.

9. Connect CO_2 pressure (30#) to all connections made, check for leaks with bubble soap.

10. Replace stainless steel syrup line protector panel on rear bin wall.

11. Install right side hood top panel and secure, also secure valve kit assembly to hood brackets.

12. Check operation of complete unit, replace all service doors, panels.

ELECTRONIC OR SATELLITE KITS

Install the conversion kit package or packages user requires per instruction given in this manual and packed in kit. After all connections are made within unit cabnitery, install the remote syrup tanks, lines and the CO_2 gas cylinder, hi and lo pressure gauges with lines leading to cabinet connections.

Make sure CO_2 regulators are in a normally closed or zero reading position before opening CO_2 cylinder valve.

Slowly open CO_2 cylinder valve and adjust high pressure guage feeding carbonator tank to a value of 85 - 100# gauge. Next adjust lo pressure regulator feeding remote syrup tanks to a value of 20 - 25# gauge reading. NOTE: Lo pressure system is used to force syrups from remote tanks through product lines, cold plate and up to dispensing valve. Most syrup tank manufacturers do not recommend CO_2 pressures in excess of 30# gauge therefore be sure and follow that particular manufacturers instructions on proper application.

Check for leaks at connections made from regulators up to back of dispensing valves with bubble soap. Repair any leaks found.

Shut off hand valve at CO_2 tank and bleed all pressure out of system.

Fill syrup tanks half full of clean water, replace tank covers and open CO_2 valve. Open water supply valve feeding complete unit, then turn on the carbonator switch in unit control box.

Now actuate dispensing valves and draw the clean water from syrup tanks through valves. Hold in carbonated water lever. Check to make sure the carbonator pump cycles correctly.

After flushing system, shut off CO_2 cylinder, carbonator switch and bleed off pressure. Dump any water left in syrup tanks.

Fill tanks with syrups of user's choice, replace covers, and open CO_2 cylinder valve.

Turn on both carbonator and ice maker switches. Actuate each dispensing valve until a full flow of syrup comes thru valves. Donot attempt to adjust dispensing valves until cold plate is completely covered with ice, then make adjustments as required.

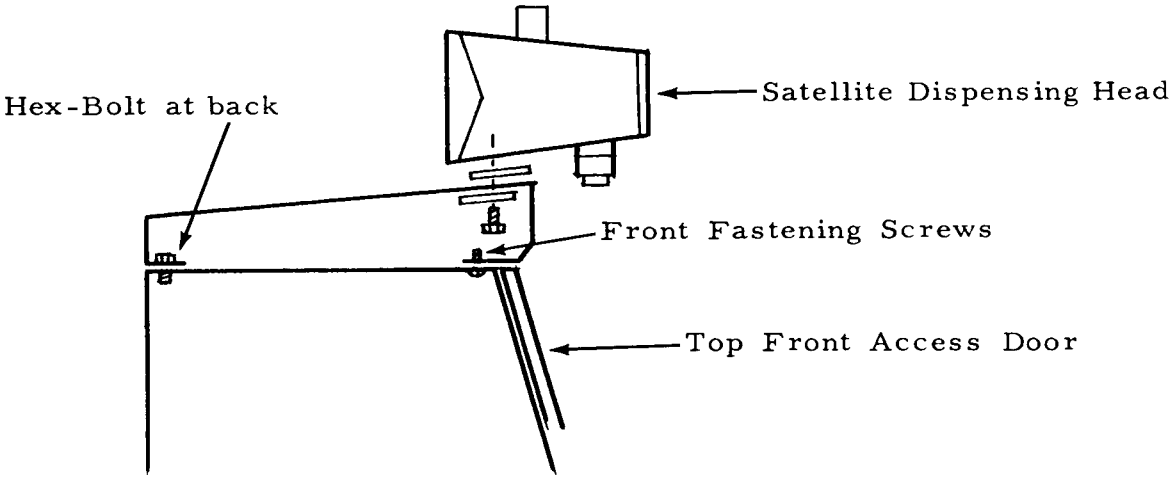

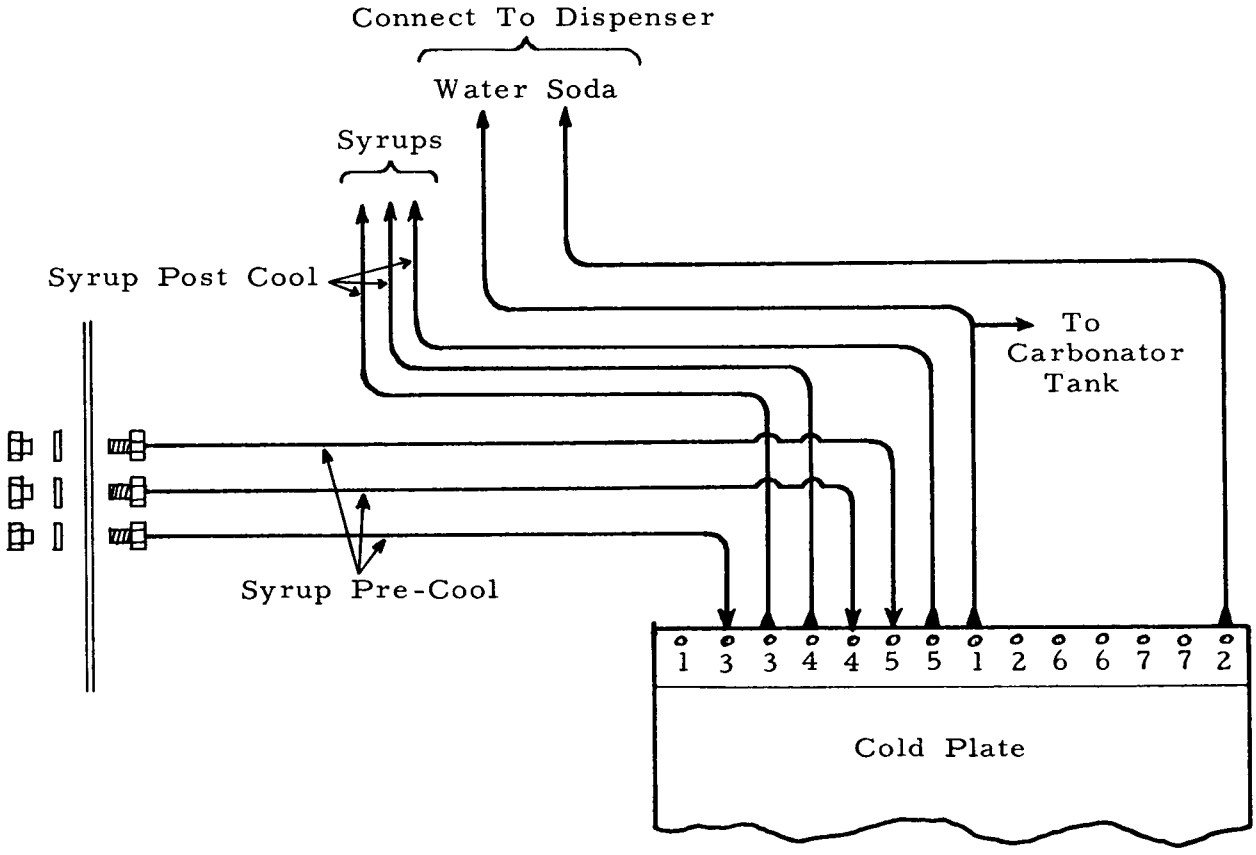

K-42S SATELLITE KIT

INSTALLATION INSTRUCTIONS

ADAPTING GRAVITY TYPE POST MIX DISPENSING HEADS

After choosing the particular head of your choice, same can be mounted directly on top of the stainless steel hood on the left as your face unit.

Holes have to be cut through this panel for drain and supply lines also for mounting holes. Channel support brackets are packed in storage bin, they should be attached to underside of left hood top panel to support weight of the dispensing head.

Drains from dispensing head can be teed into the clear plastic tubing attached to unit drip tray drain.

Carbonated water supply line from cold plate should be attached to appropriate fitting on dispensing head and checked for leaks.

Hook up CO_2 cylinder, hi pressure regulators to connection at unit back panel and set carbonator pressure at 85# gauge.

Turn on water and electrical supplies to complete unit, then turn on unit carbonator and ice maker switches. Open dispenser valves and draw water through valves, checking carbonator pump cycle. Pour syrup into head and draw off until clear flow comes through.

Do not attempt adjustments to valves until sufficient ice has been made to fill dispensing head and cover bin cold plate. Then make necessary adjustments.

SYRUP RAIL KIT

Since this is merely a stainless steel framework to hold standard size crushed fruit and syrup jars, you need only remove stainless steel right hood top panel and replace with this framework. Use same mounting holes and screws taken from hood top panel.

Care should be taken in selecting the first two fruit or syrup jars on the left as you face unit. Their length must not exceed 6 1/2" in depth as their relative location is in front of the ice discharge spout.

INSTALLATION INSTRUCTION SYRUP RAIL

1. Remove top front access door--held by friction catches.
2. Remove right-hand top by removing three screws along front, loosen Hex-Bolts at back and slide top back and off.
3. Reverse above operations to mount the syrup rail.
4. Note: The first two syrup jars used in the right-hand holes must not extend below top of ice spout.

CONVERSION OF MODELS SD-1H AND SD-2H POST-MIX TO PREMIX

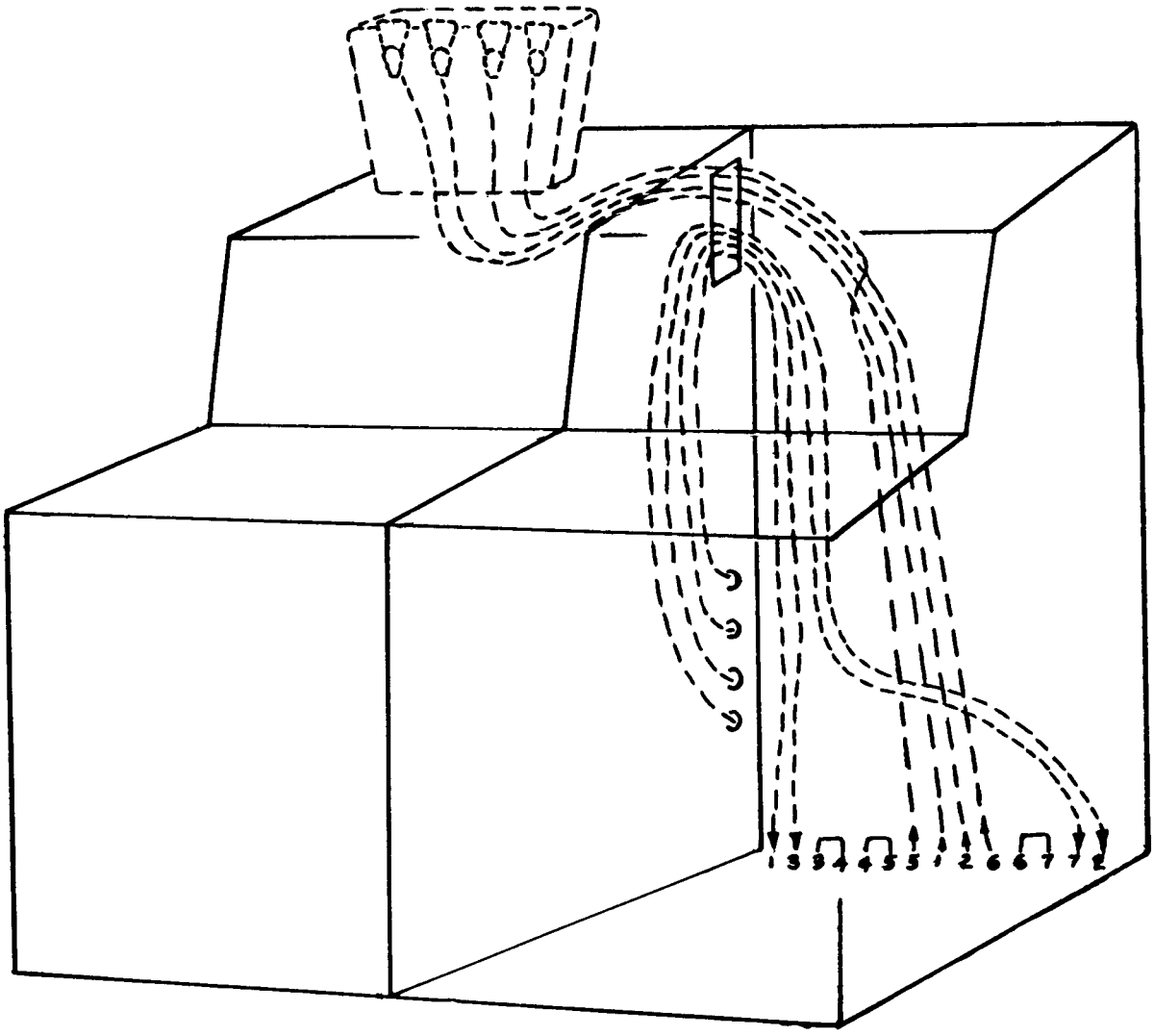

1. Remove all hose ass'y in storage bin.
2. Remove carbonator tank.
3. Cap outlet of carbonator pump.
4. Remove wire to carbonator - Dispensing switch.
5. Make pre-mix connections and route.
6. # 1 circuit 1W cold plate to be used for primary flavor.
7. Modify left top as required to fit premix dispensing head.
8. Insulate hoses between storage bin and dispensing head.
9. Insert jumpers between cold plate posts 3-4; 4-5 and 6-7.

PARTS LIST SD-1H

CABINET PARTS

Description	Part No.
Rear Service Door	A-17754
Rear Panel-Case	A-17753
Rear Panel- Hood	A-17829
Drip Grill	2-1553
Right top Panel-Hood	A-17812
Ice Bin Door	2-1550
Hood Assy-less Panels	A-17616
RightLeft Panel-Case	A-17749
Scotsman Emblem	15-156-1
Front Panel-Hood	A-17608
Front Panel-Case	A-17766
Front Service Door	A-17615
Leg	A-15803-1
Leg Leveler	8-522-1

CO_2 AND WATER CIRCUIT

Description	Part No.
Flexible Line	A-17737
Water Line	A-17718
Soda Line	A-17743
Soda Line	A-17743-1
CO2 Line	A-17732
Bin and Cold Plate Assy	A-17790
Carbonator Tank	2-1499-
Electrode	2-1499-6
Water Check Valve	2-1499-3
Washer (check valve-water)	2-1499-8
Relief Valve	2-1499-5
Washer (Electrode)	2-1499-7
Gas Inlet Check Valve	2-1499-4
Outlet Tube-Carbonated Water	2-1499-2
Tank only	2-1499-1

CARBONATOR PUMP ASSY

Motor 115/60/1	12-634-5
Coupling Clamp	2-1527
Carbonator Pump	2-1526
Tee 3/8 X 3/8 NPT X 1/4" Flare	16-162-1
Half Union Elbow	16-401

CARBONATOR PUMP CONTROL

Control (less case & cord)	12-634-5
Relay Coil	12-634-1
Primary Coil	12-634-2
Secondary Coil	12-634-3
Contact Points	12-792

FREEZER ASSY

Freezer Complete	A-14886-1
Snap Ring	3-553
Worm Shaft Cap	A-7701
Cap Screw	3-758
Worm Tube Washer	A-7699
Bearing (Matched Set)	2-1412
"O" Ring	2-386
Ice Breaker	A-14591
Worm Shaft	2-1413
Worm Tube, Acc., Suction Line	A-7826
Washer	3-679
Spout Casting, Rear	A-18430
Spout Casting, Front	A-14254
Bolts	3-732
Water Seal	2-1300
Lower Bearing	2-417
Worm Tube Nut	S-8817
Rubber Drip Pan	13-213
Drain Tube	A-8002
Breaker & Bearing Assy	A-14678

RESERVOIR ASSY

Reservoir Cover	
Valve Pin	A-16012
Deflector	2-1259
Inlet Valve	2-1320
Rivet	S-8770
Valve Seat Holder	3-1001
Valve Seat	A-5777
Nut	S-6947
Bracket	S-7044
Stand Pipe	A-12869
Inlet Valve Assy	S-6715
Reservoir Body	S-8138
Bracket Nut	A-13409
Float & Arm Assy	A-8055
Water Deflector	A-12067
Reservoir (less cover)	A-18418
	A-8339

CONDENSING UNIT

Condensor W.C.		18-259
Plain Gasket		18-262
Discharge Service Valve		18-237
Hi-Pressure Control		11-286-1
Valve Plate Kit		18-222
Compressor 115/60/1	W.C.	18-257
Compressor 115/60/1	A.C.	18-221
Klixon		18-240
Starting Capacitor		18-1901-4
Relay		18-1903-4

Water Valve	11-198
Water Hose, Comp. to Cond.	18-261
Manifold Cond. Gasket	18-263
Terminal Board	18-270
Terminal Assy	18-241
Fan Blade	18-321
Fan Motor	18-150-1
Condensor A.C.	18-234
Condensor Shroud	A-12109
Fan Motor Bracket	18-422

TABLE OF CONTENTS

Page	1	Table of Contents
	2	General Description - Introduction
	3 - 4	Specification - Capacity Chart
	5	Mechanical Specifications
	6 - 7 - 8	Installation - Preparation
	9 - 10	Ice Machine - How It Works
	11 - 12 - 13	Service Analysis - Icemaker
	14	Cleaning Instructions
	15	Maintenance Instructions
	16	Wiring Diagram - Air Cooled
	17	Wiring Diagram - Water Cooled
	18	Chassis Assembly - Air Cooled
	19	Chassis Assembly - Water Cooled
	20	Cabinet Assembly - Air Cooled
	21	Cabinet Assembly - Water Cooled
	22 - 25	Component Part Assemblies
	26 - 33	Carbonation Section
	34	Water System
	35 - 36	Service Analysis - Carbonation
	37 - 40	Component Parts - Assemblies
	41 - 42	Electric Faucet Operation
	42 - 43	Electric Faucet Service Analysis
	44 - 46	Conversion Kits - Usage
	47 - 48	Conversion Kits Installation
	50	Part Listing

THIS PAGE
INTENTIONALLY
LEFT BLANK

INTRODUCTION

SCOTSMAN MODEL SD1-J DRINK DISPENSER IS DESIGNED TO provide the utmost in flexibility to fit a particular users needs.

Hood top panels are seperated and removable to allow use of numerous syrup dispensing heads and accessories as required.

A seven circuit cold plate in the ice storage bin bottom allows use of five syrup flavors plus a cold sweet water and carbonated water circuit.

A complete carbonated water system comes built in, including carbonator pump and tank with connections thru cold plate.

There are no syrup lines (pre-cool) connected from the cabinet fittings to the cold plate nor post cooled lines from plate to fixture. These lines come with the Scotsman kits K-42S Satellite and K-41E Electric valve kit.

All connections for syrup, water, CO_2 gas, electrical, and drains are located on a common panel on the left rear corner of the cabinet back.

Note: Starting with serial Number LZ 310235 and up, all SD-1J Dispensers will be equipped with a Temprite carbonator tank and electrode.

DESCRIPTION

The SCOTSMAN AUTOMATIC DRINK DISPENSER is designed for drugstores, restaurants, cafeterias, ball parks, drive-ins, amusement parks, theatres — in fact, any place where crowds gather and seek ice cold, thirst quenching refreshments in a hurry. The continuous flow dispensers, together with the concealed SCOTSMAN crushed ice maker, is designed for the peak periods of traffic.

ATTRACTIVE COMPACT CABINET

Dark grey finish anodized aluminum trim, up-to-date-styling, and removable panels for easy access to mechanical parts. Hood assembly of stainless steel attractively designed for front or back counter installation.

SEALED REFRIGERATION SYSTEM

To provide quiet, efficient operation of the machine, the compressor motor is internally spring mounted, the carbonator pump is rubber mounted and the freezer has a direct-drive gear motor.

SELF-CONTAINED STORAGE BIN

Stores its own ice supply in a heavily insulated, stainless steel storage bin with handy access door opening in hood-counter.

STANDARD OVER-ALL DIMENSIONS

Allows automatic drink dispenser to be installed in harmony with existing counter equipment.

HOW IT WORKS

The unit is completely automatic; water is circulated through a self-contained carbonator which guarantees a ready, abundant supply of perfect carbonated water at all times. Maximum cooling of sweet water, carbonated water and syrups is accomplished by the large capacity cold plate. All modern dispensing heads allow the mixture of a set amount of syrup and carbonated water. A manual switch starts the ice machine and from then on ice is produced automatically in small uniform pieces. When the storage bin fills, a bin thermostat automatically shuts the machine off and causes it to start up again when the ice is removed from the storage bin.

SCOTSMAN®

DRINK DISPENSER ICE MACHINE

SD - 1J series

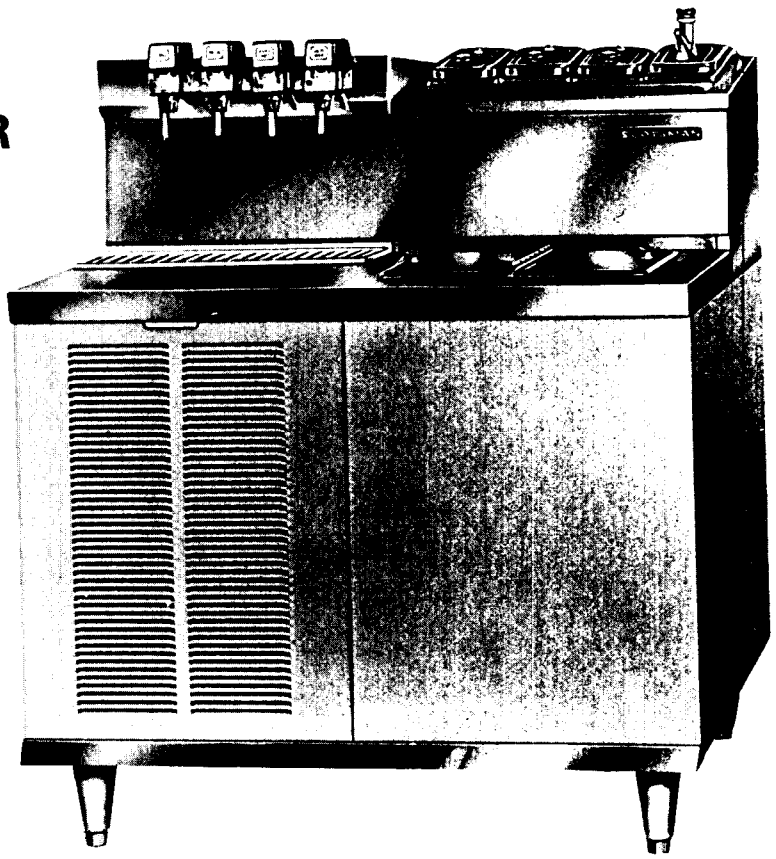

ice making capacity

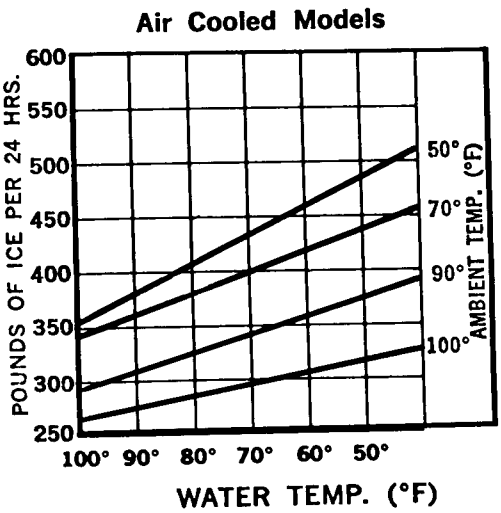

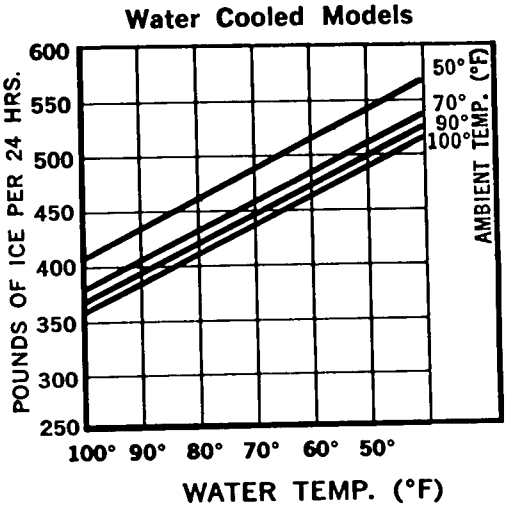

SPECIFICATIONS

COMBINATION ICE MACHINE AND DRINK DISPENSER	MODEL SD-IJ	MODEL SD-IWJ	MODEL SD-IJ-SS	MODEL SD-IWJ-SS
CONDENSER, Air Cooled	X		X	
CONDENSER, Water Cooled		X		X
CONDENSER WATER INLET 3/8" SAE Flare		X		X
CONDENSER WATER OUTLET 3/8" SAE Flare		X		X
FINISH, Hammerloid Grey	X	X		
FINISH, Stainless Steel			X	X
SHIPPING WEIGHT	464	464	464	464

DAILY CAPACITY up to 430 lb. (Air Cooled)
up to 500 lb. (Water Cooled)
STORAGE BIN CAPACITY (Self Contained) 200 lbs.
COMPRESSOR 1/2 H.P.
EVAPORATOR DRIVE MOTOR 1/10 H.P.
CARBONATOR SYSTEM 1/4 H.P.
ELECTRICAL 115 V, 60 CY, 1 PH, AC
CO 2 INLET 1/4" SAE Flare

WATER INLET 3/8" SAE Flare
*SUMP & DRIP DRAIN 5/8" O.D. Tube
* BIN DRAIN 5/8" O.D.
STORAGE BIN, Stainless steel
HEIGHT (With legs) 45 1/2" to 46 1/4"
HEIGHT (Without legs) 39 1/2"
WIDTH 40"
DEPTH 31"

*(Plastic tube accepts size shown O.D. tube)

"A" ACCESSORY KITS

K-41E

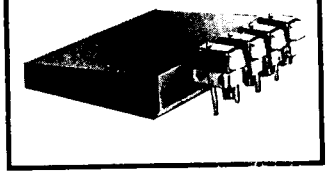

Electric valve unit: dispenses four flavors plus carbonated and plain water. Prefabricated hose assembly speeds internal connections. Easily installed by removing top panel at left of machine, and setting unit over the opening.

K-42S

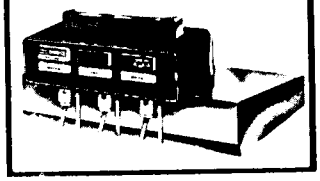

"Satellite" postmix head base: provides mounting surface and prefabricated hose assembly for easy installation of this popular remote postmix dispensing head. Replaces top panel at left of machine. Head not included.

K-43R

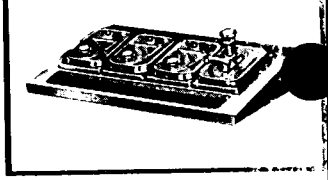

Syrup rail kit: holds four jars, replaces top panel at right of machine. Chilled air from ice bin provides refrigeration. Jars not included — openings accept 4 1/16 x 6 3/4" jars with depths of 6 9/16" or 9 1/16". Maximum of two 9 1/16" jars may be used.

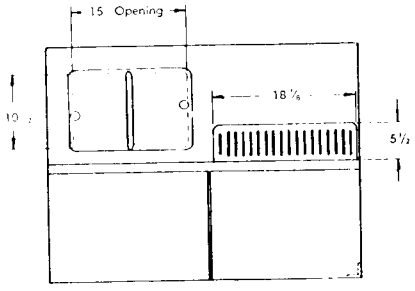

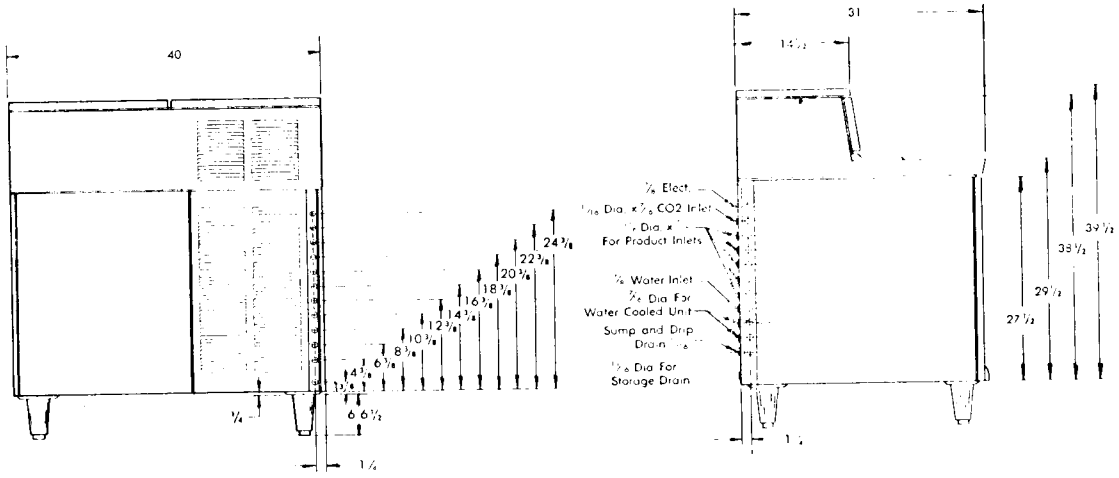

Specifications subject to change without notice.

DRINK DISPENSER
General Specification

	SD-1J	SD-1WJ
Compressor	1/2 HP Copelaweld	Same
Condenser	Air Cooled	Water Cooled
Refrigerant	26 oz. R 12	24 oz. R 12
Refrigerant Control	Capillary Tube	Same
Power Consumption – Compressor	11.0 Amps.	Same
Power Consumption – Gear Motor	4.0 Amps.	Same
Total Power Consumption	16.1 Amps.	14.3 Amps.
Current	115 V. 60 cycle, 1 Ph.	Same
Gear Motor Drive	1/10 HP	Same
Worm – R. P. M.	10.5	Same
Water Consumption – Freezer	2.5 Gallons per hour	Same
Water Consumption – Condenser		Varies from .75 to 2 G. P. M.

PLUMBING AND CO_2

Water Inlet (all Models)	3/8" Flare
Water Inlet – Condenser (W.C. models)	3/8" Flare
Drain Overflow	5/8" O. D. Copper
Drain – Storage	5/8" O. D. Copper
Drain Condenser (W. C. models)	3/8" O. D. Copper
CO_2 Connections	1/4" Flare
CO_2 Line Size Recommended	1/4" to 10' run

CARBONATOR SECTION

Motor	1/4 H. P.
Pump – Procon	100 gph
Switch – Pump Up	Electrodes in Tank
Voltage Characteristics	115, 60, 1
Cold Plate	18-3/4" x 26-3/8"
Control – Pump Up	Solid State Liquid Level Control
Carbonator Tank	Temprite

DISPENSER SECTION

Order and use conversion kits as follows:

K41-E	Electric Valve Kit
K42-S	Satellite Head Kit
K43-R	Syrup Rail Kit

See manual section, Factory Conversion Kits, Accessories for Installations procedures.

INSTALLATION

UNCRATING DRINK DISPENSER

The entire unit, less conversion kits, comes in one crate. Upon delivery a visual inspection of the crate should be made and any severe damage noted should be reported to the delivering carrier and a concealed damage claim filed subject to internal inspection with carrier representative present. Remove crate by pulling nails driven through sides of crate into the bottom skid. A nail puller is best suited here. Next remove (4) four bolts from underside of skid which connect to complete unit base. Unit now free from all crating.

PREPARATION FOR INSTALLATION

Remove all service and access panels from unit cabinetry-leg package is wired to inner machinery compartment, remove and install (4) four legs.

Next remove all packing tapes or wires in machinery compartment.

Next select proper drink dispenser conversion kit or kits and install same per instructions in kit. Also refer to this manual section "Factory Conversion Kits".

LOCATION

Select the location before delivering the unit to the job. The following points should be considered.

1. Convenience-Place the unit where it is practical to give efficient use. It can be located either in a back bar or in a front bar. It is designed to fit into a standard soda fountain line-up or it can be used as an individual counter unit. Keep in mind that the dispenser can serve a double function of providing crushed ice as well as carbonated beverages.

2. Servicing Unit—Bearing in mind that all service connections are made at the left back corner provisions for adequate access space must be considered here. Also on air cooled models, cooling air is drawn in through the rear louvered back and hood panels and exhausted through the louvered front panel, therefore a minimum 6" air gap must be maintained for proper condensing unit operation.

3. On air cooled models, condenser is directly behind front service door to facilitate regular cleaning schedules, advise user to clean frequently.

4. Avoid installations where temperature extremes can be experienced. Scotsman does not recommend installation below 50° Fahrenheit nor above 100° Fahrenheit.

TYPICAL POST MIX CARBONATED BEVERAGE SYSTEM

APPLICABLE TO THE SD-1J

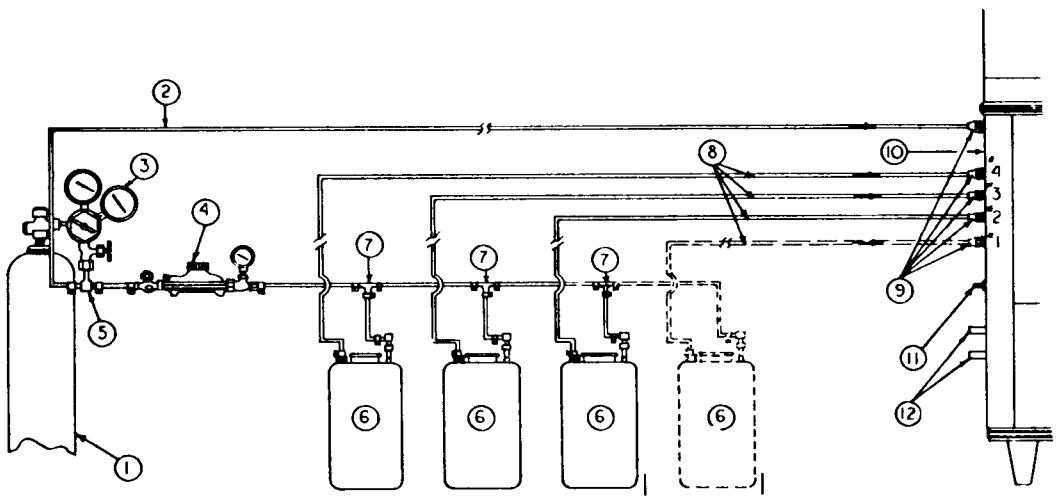

CODE

1. CO_2 CYLINDER
2. CO_2 LINE (COPPER, STAINLESS STEEL OR PLASTIC)
3. HIGH PRESSURE CO_2 REGULATOR FOR CARBONATOR
4. LOW PRESSURE CO_2 REGULATOR FOR SYRUP TANKS
5. BRANCH TEE
6. SYRUP TANKS
7. TEE
8. PRODUCT LINES (STAINLESS STEEL OR PLASTIC)
9. 1/4 S.A.E. FLARE FITTING
10. ELECTRICAL INLET
11. WATER INLET 3/8 SAE FLARE PITTING
12. DRAINS

NOTE:

Items shown are not sold by Scotsman.

Recommended Source:

Excellall Products Division
The Bastian-Blessing Co.
4201 W. Peterson Co.
Chicago, Illinois

INSTALLATION

Be certain the SCOTSMAN DISPENSER is on its own circuit and individually fused. Seperate switches are located in the front of the dispenser allowing the dispensing equipment and the ice machine to operate independently of each other. All internal wiring is completed.

All external wiring should conform to National Underwriters and local electrical code requirements. An electrical permit and the services of a licensed electrician will usually be required. See wiring diagram for proper hook-up.

PLUMBING–AIR COOLED MODELS

The recommended water supply line is 3/8" O'D' tubing for SD-1. A 3/8" flare fitting is provided on the machine for water inlet. Connect to cold water supply line using a shut-off valve installed in an accessible place between supply and machine.

A wire mesh strainer is provided on the pump inlet connections as a protection against large particles of rust, scale, ets., which may be loosened in the water pipe at time of installation. This strainer will not prevent fine particles from damaging the pump, therefore, a good filter is recommended in any installation and is absolutely essential when the water supply contains solids. Maximum water supply pressure must be at least 20 lbs. below operating CO_2 pressure. If supply pressure exceeds this, carbonator may flood. Install a water pressure regulator in the water supply line and adjust as required.

PLUMBING–WATER COOLED MODELS

On water cooled models a seperate connection to the condensing unit will be required. A 3/8" flare fitting is provided on the machine for water inlet, a 3/8" O.D. Copper drain line is provided. Water supply must be installed to conform with local plumbing codes. In some cases a licensed plumber and/or a plumbing permit will be required.

All drains are gravity types and must be pitched 1/4" fall per foot of horizontal run. All drains to be installed per local and state codes. Drain receptacle should be of open, trapped or vented construction. Storage bin drain is 5/8" O.D. Copper tubing and should be vented and run seperately.

ELECTRICAL

Rating SD-1-J
115 volts 16.1 Amps.
60 cycle, single phase
20 amp Maximum Fuse
Use No. 12 wire for runs under 50 feet.

START–UP

When the machine is placed and conversion kits added as per instructions and all plumbing and electrical connections are completed and tested, turn on the water supply. Be sure the float cover is removed to check on the float operation and water level in the water reservoir. Be sure water reservoir is filled before starting ice machine. Water level should be 1/4 inch below the reservoir overflow pipe.

Connect CO_2 cylinder, CO_2 Hi-Lo pressure regulator and syrup tanks to proper fitting on cabinet rear panel.

Slowly open CO_2 cylinder and set both CO_2 regulators to 30 lbs. guage reading.

Check all syrup lines, fitting to cold plate, dispensing head connections etc. with bubble soap and correct any leaks found.

Check all internal water connections for leaks. Start carbonator by turning on top switch.

Install gauges and check refrigerant pressures at the time of start-up. Flare connections can work loose during shipment. Add refrigerant as required – see ice machine section. Turn on ice machine switch in front of cabinet and machine is in automatic operation. In two or three minutes ice will start dropping off worm shaft and out the ice chute. Let the machine operate for at least 30 minutes or until ice covers the bottom plate. Check for any excess noise in carbonator or ice machine.

Test the ice storage control bulb by holding a handful of ice around the bulb until the machine shuts off. One minute should be normal for the control to function. Within minutes after the ice is removed, the bulb will warm up and machine will automatically start up. The control is factory set and should not be reset until this test is made. Normal setting of this control chould be approximately 35 degrees cut-out and 45 degrees cut-in to prevent short cycling.

Check hand reset low pressure control setting. This safety device should normally be set 10 p s i below normal suction pressure to prevent cutting off when the compressor first starts up and still provide safety in case of interruption in water supply, shortage of refrigerant, low ambient or any other cause of abnormal low suction pressures.

Adjust dispenser heads to give correct proportions of syrup and carbonated water. See instructions provided with dispenser.

Explain the machine to the owner, showing him how the machine works and go over the owner's operating instructions. Answer all the owner's questions about the machine, and do not leave with any doubt in the owner's mind about the machine, how to operate it or where to reach the service man in case of need. Call back the next day to check the machine again and answer any other questions the owner may have.

ICE MACHINE SECTION

HOW IT WORKS

Water enters at the cabinet fitting, passes through the strainer at the pump and then goes to the water reservoir. The function of the reservoir is to maintain a constant water level inside the freezer. Water from the reservoir enters the freezer at the bottom and is frozen inside the freezer. A stainless steel auger inside the freezer carries the ice upward where it is extruded passed the Ice-breaker into the storage bin.

The auger is rotated by a direct drive gear motor.

A manual switch starts the machine and from then on Ice is produced automatically in small uniform pieces. When the storage bin fills a thermostat shuts off the machine and causes it to start up again when ice is taken from the storage bin. The Ice Machine Section operates independent of the carbonator and dispensing section although it is built into the same cabinet.

ELECTRICAL SYSTEM: The super Flaker Model SD-1J is designed to work on standard electrical supply 115 volts, 60 cycle single phase.

Supply voltage should not vary more than plus or minus 10 percent over nameplate rating.

Special voltage requirements are available on special order. Therefore, always check nameplate for this information before connecting electrical supply.

The electrical circuit consists of condensing unit, freezer gear motor, storage bin thermostat ON and OFF switch and spout micro (safety) switch.

A.CONDENSING UNIT: The starting capacitor and starting relay are housed and fastened to the motor compressor.

B.GEAR MOTOR TO FREEZER: Models SD-1J are equipped with a 1/10 horsepower direct drive gearmotor. A speed sensing switch mounted on top of the motor of the gear unit will open and stop the compressor when the RPM of the gearmotor is less than 900. At 1200 RPM it will close, starting the compressor.

In an actual operation any condition that may cause excessively hard ice and overloads within the freezer assembly, water intteruptions, cold ambients, etc. is transmitted to the gearmotor reducing it's speed. When gearmotor slows down to approximately 900 RPM the speed sensing switch opens the electrical circuit to the compressor. The compressor stops and no more ice is produced, meanwhile the gearmotor continues to run, clearing the overload condition and gradually resumes full speed. At 1200 RPM gearmotor speed sensing switch closes compressor circuit causing the normal icemaking process to begin once more.

Any freeze up possibility is thereby automatically cleared out by the gearmotor.

C.STORAGE BIN THERMOSTAT: Thermostat control body is located in electrical control box. The thermostat sensing tube is threaded into the ice storage bin where it automatically stops the icemaker when ice bin fills to sensing tube level and restarts icemaker when ice is removed. Factory settings are 35° cut out, 45° cut in.

Altitude correction begins at 2,000 feet, cut in and cut out screws should be adjusted equally, not more than 1/4 turn at a time.

D'MICRO SAFETY SWITCH: The micro switch is located in the top of the ice chute. The switch is operated by a pressure plate inside the ice chute. Ice backs up in the chute if the storage bin thermostat fails. Micro switch will shut off the condensing unit only, when operated.

E.ON-OFF SWITCH: A manual on-off switch is located in control box.

F.SAFETY CONTROL: High head pressure. On water cooled models only. Factory set to stop entire icemaker if head pressure reaches 190 lb. PSIG. Manual reset, adjustable.

G.SAFETY CONTROL: Low back pressure. Used on both models, this control is set to electrically "open at 2 lbs PSIG, stopping entire icemaker. manual reset, non adjustable.

NORMAL OPERATING PRESSURES

Check refrigerant pressure settings after 30 minutes of initail start up. Attach gauges to proper fitting on compressor service valves.

On water cooled models correct head pressure is 135 p s i. Adjust water regulating valve to maintain this reading.

On air cooled models, head pressure will vary slightly depending upon ambient air, however, normal reading is 130 p s i.

Suction pressure should be 15 p s i with proper refrigerant charge, frost line will extend about 8 inches out of accumulator. Suction pressure will vary approximately 2 p s i either way depending upon ambient and incoming water supply temperatures to freezer.

ICE MACHINE SECTION

REFRIGERANT CHARGE

The below refrigerant charge is approximate. When charging, set at 135 p s i head pressure and charge so that the frost line extends out of the accumulator after fifteen minutes of operation. Frost out of accumulator at least 8 inches and preferable 1/2 way to the compressor for best capacity and performance.

MODEL	REFRIGERANT	CHARGE
SD-1 air	26 oz.	R-12
SD-1 water	24 oz.	R-12

WATER SYSTEM

A water level is maintained in the water reservoir by a float operated valve. Water is piped from the water reservoir to the freezing chamber by a gravity feed line maintaining an equal water level. An overflow is installed in the water reservoir should the inlet water valve fail.

The water reservoir is equipped with a 2 inch air gap to prevent back siphoning and meet all health codes.

The water level in the water reservoir is adjusted by bending float ball arm. The water level should be set 1/4 inch below the overflow pipe. A condensate drip pan is connected to the drain circuit to automatically dispose of condensate moisture.

SERVICE ANALYSIS

ICE MACHINE SECTION

COMPLAINT	POSSIBLE CAUSE	CORRECTION
Water Leaks	Defective water seal.	Replace
	Gravity feed line leaking.	Check hose clamps.
	Water level in reservoir too high	Adjust water level to 1/4" below reservoir overflow, then raise reservoir until water comes out freezer spout, then lower reservoir 3/4".
	Storage bin drain and connecting fittings.	Check and repair.
Excessive noise or chattering.	Mineral or scale deposit on auger and inner freezing chamber walls	For severe deposits, remove and manually polish auger, sand inner chamber walls of freezer barrel.
		For lighter concentration, use Scotsman Ice Machine Cleaner periodically.
	Intermittent waters supply.	Check and clean water strainer.
		Check gravity feed line for air lock.
		Remove air lock.
	Water level in reservoir too low.	See "Corrections" under "Complaint" water leaks.
	Gear Reducer loose on frame	Tighten.
	Motor compressor not solid on rubber mounts.	Repair or replace rubber mounts
	Gear motor end-play or worn bearings	Repair or replace
Making wet ice	Surrounding air temperature too high.	Correct or move unit.
	Under or over-charge of refrigerant.	Recharge with proper amount. Should frost out of accumulator at least 8". See nameplate for correct charge. See "Corrections" under "Complaint" water leaks
	Back pressure too high	Overcharge of refrigerant, faculty compressor or high head pressure. Lower as indicated.
	Faulty compressor or valve plate.	Repair or replace.

SERVICE ANALYSIS

ICE MACHINE SECTION

COMPLAINT	POSSIBLE CAUSE	CORRECTION
Low ice production.	Loss of refrigerant. Under or overcharge or refrigerant.	Check and recharge. See nameplate for correct charge.
	Drive motor weak.	Replace.
	Dirty or plugged condenser.	Clean condenser.
	Low water level in water reservoir.	See "Corrections" under "Complaint" water leaks.
	Partial restriction in capillary tube or drier.	Moisture in system. Overcharge of oil in system. Remove charge by blowing back through cap tube. Replace drier and recharge.
	Inlet water strainer partially plugged.	Remove screen and clean.
	Corroded or stained worm shaft due to water condition.	Remove worm shaft and clean, or use Scotsman Ice Machine Cleaner. See Maintenance Section.
Gear motor noise.	Low on oil.	Remove case cover to check for proper oil level. Top of gears should be covered. Use: Sun Oil Company Prestige 50-EP
Unit will not run.	Blown fuse in line	Replace fuse and check for cause of blown fuse.
	Bin thermostat set too high.	Adjust thermostat. Set at 35° cut-out, 45° cut-in.
	Loose electrical connection.	Check wiring.
	Switch in "OFF" position.	Turn switch "ON".
	Inoperative master switch.	Replace switch or thermal overload.
	Off on munual-reset low pressure control.	Reset.
Machine continues to run with full storage bin	Bin thermostat not properly set or is defective.	Re-set or replace. Re-set to 35° cut-out, 45° cut-in.

SERVICE ANALYSIS

ICE MACHINE SECTION

COMPLAINT	POSSIBLE CAUSE	CORRECTION
Compressor cycles intermittently.	Low voltage.	Check for overloading.
	Dirty condenser	Clean
	Air circulation blocked.	Remove cause or move unit.
	Inoperative condenser fan motor.	Replace.
	Non-condensable gases in system.	Check for leaks, evacuate and recharge.
	Bin thermostat differential too small causing short cycling.	Widen differential 35° cut-out, 45° cut-in.
	Cycling on ice chute microswitch.	Set or replace bin thermostat.
Machine runs but makes no ice.	Loss or undercharge of refrigerant.	Check for leaks and recharge. See nameplate for correct charge.
	Water not entering freezing chamber.	Plugged strainer or supply line. Check and clean. Air lock in gravity feed line. Check and remove air lock.
	Moisture in system.	Check, evacuate, replace drier. Recharge. See nameplate for correct charge.
	Water seal leaking	Replace seal.
	Water turned off while unit was operating.	Freezer inlet water line froze shut. Unit must be turned off and defrosted.
	Drive gear motor or drive coupling stripped.	Repair or replace.

CLEANING INSTRUCTIONS

1. Set ice machine and dispensing switch to OFF.
2. Remove all ice from storage bin.
3. Turn OFF water supply or block float.
4. Set ice machine switch to ON and pour cleaning solution into reservoir. DO NOT fill above overflow tube; use 6 oz. of Scotsman Cleaner and 1-1/2 qt. hot water.
5. Continue to make ice on solution until the solution is used up and reservoir has only about 1 inch solution remaining. DO NOT allow unit to operate with empty reservoir.
6. Set ice machine switch to OFF, wash and rinse reservoir, turn water ON or remove float block.
7. Set ice machine switch to ON. Let unit run for at least 15 minutes to flush out any cleaning solution. Check ice for acid taste -- run until ice tastes sweet.
8. Set ice machine switch to OFF. Add hot water to ice bin. Using this melt water, thoroughly wash and rinse all surfaces within the storage bin.
9. Parts removed from storage bin, splash grill, etc., clean in accordance with local Health Department regulation.
10. Pour hot water into drip pan each day to keep drains open.
11. Clean dispensing equipment in accordance with manufacturer's recommendations. This should be explained in Owner's Manual or Installation Instructions provided with dispensing equipment. If cleaning instructions are not available, then follow procedure below.
12. Check faucet nozzle parts, these usually snap or screw off. These parts should be cleaned and sanitized each day.
13. Dispensers having ice compartments should be cleaned and sanitized each week. Syrup lines and tank should be drained and then sanitized twice each month.

MAINTENANCE INSTRUCTIONS

THE FOLLOWING MAINTENANCE SHOULD BE ACCOMPLISHED TWO TIMES PER YEAR ON ALL SCOTSMAN DRINK DISPENSERS'

1. Check and clean water strainers and float valve. Depress float valve to insure full stream of water.

2. Check water level and machine level. Keep water level below overflow, but as high as possible and still not run out of spout opening with machine off. Water should come out of spout with ice at all times. Adjust as required.

3. Clean reservoir and interior of freezer assembly using SCOTSMAN Ice Machine Cleaner in accordance to instructions provided.

NOTE: Cleaning requirements vary according to local water conditions. Visual inspection of the auger before and after cleaning will indicate best procedure to be followed in local areas.

4. Check high and low side pressures. On air-cooled models head pressures range between 130 and 145 PSI. Suction pressure should be above 12 PSI and will range up to 16 PSI depending upon water and ambient temperatures.

5. Check gearmotor operation. Normal running temperatures are in the area of 160° farenheit, which is hot to the touch. Check operation of centrifugal switch and the micro switch it actuates. When micro switch is actuated, compressor stops, gearmotor continues to run.

6. Check top bearing of freezing tube. Remove retainer ring around edge of stamped brass cap. If moisture is around bearing, wipe up and remove grease. Add new grease. Use Beacon No. 325. Replace cap and retainer ring.

7. Clean air-cooled condenser. Inform customer to clean frequently. Always shut off machine when cleaning.

8. Oil condenser fan motor when possible.

9. Check for refrigerant leaks and proper frost line. Should frost out of accumulator at least one-half way to compressor, and in some areas back to service valve.

10. Check for water leaks. Tighten drain line connections. Run water down bin drain line to make sure it is open.

11. Check quality of ice. Ice should be wet when formed, but will cure rapidly to normal hardness in bin.

12. Check thermostat and pressure plate cut off in spout. Micro switch cuts off only compressor. Bin thermostat should be set at 10° differential and should keep entire machine off at least twenty minutes in high ambients (longer in low) during normal operation. Settings are 35° cut out, 45° cut in.

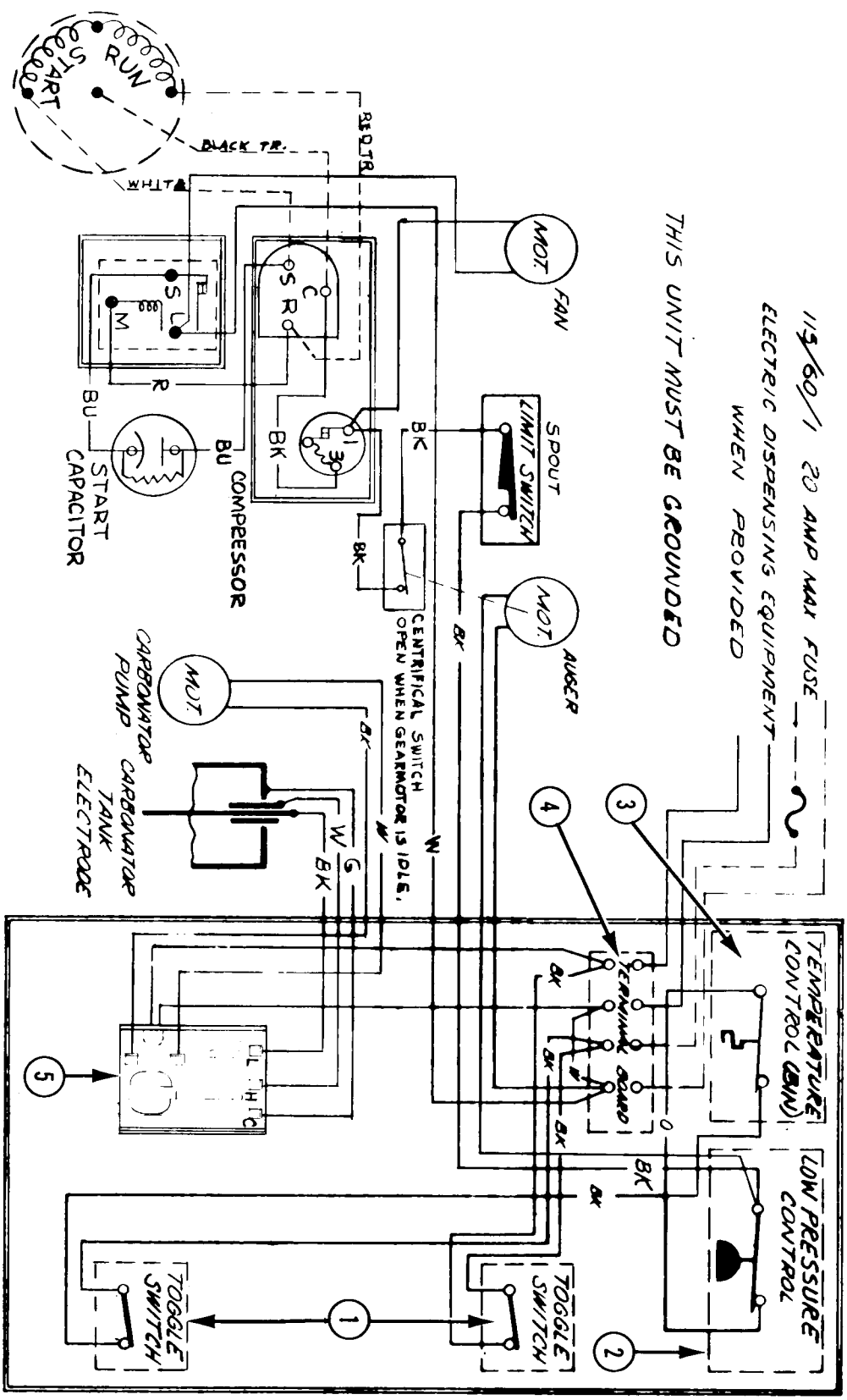

WIRING DIAGRAM

SD - 1 J AIR COOLED

Item No.	Part No.	Name
1.	12-426-1	Toggle Switch
2.	11-358	Lo Pressure Control
3.	11-354	Bin Thermostat
4.	12-813-1	Terminal Board
5.	11-373-1	Water Level Control

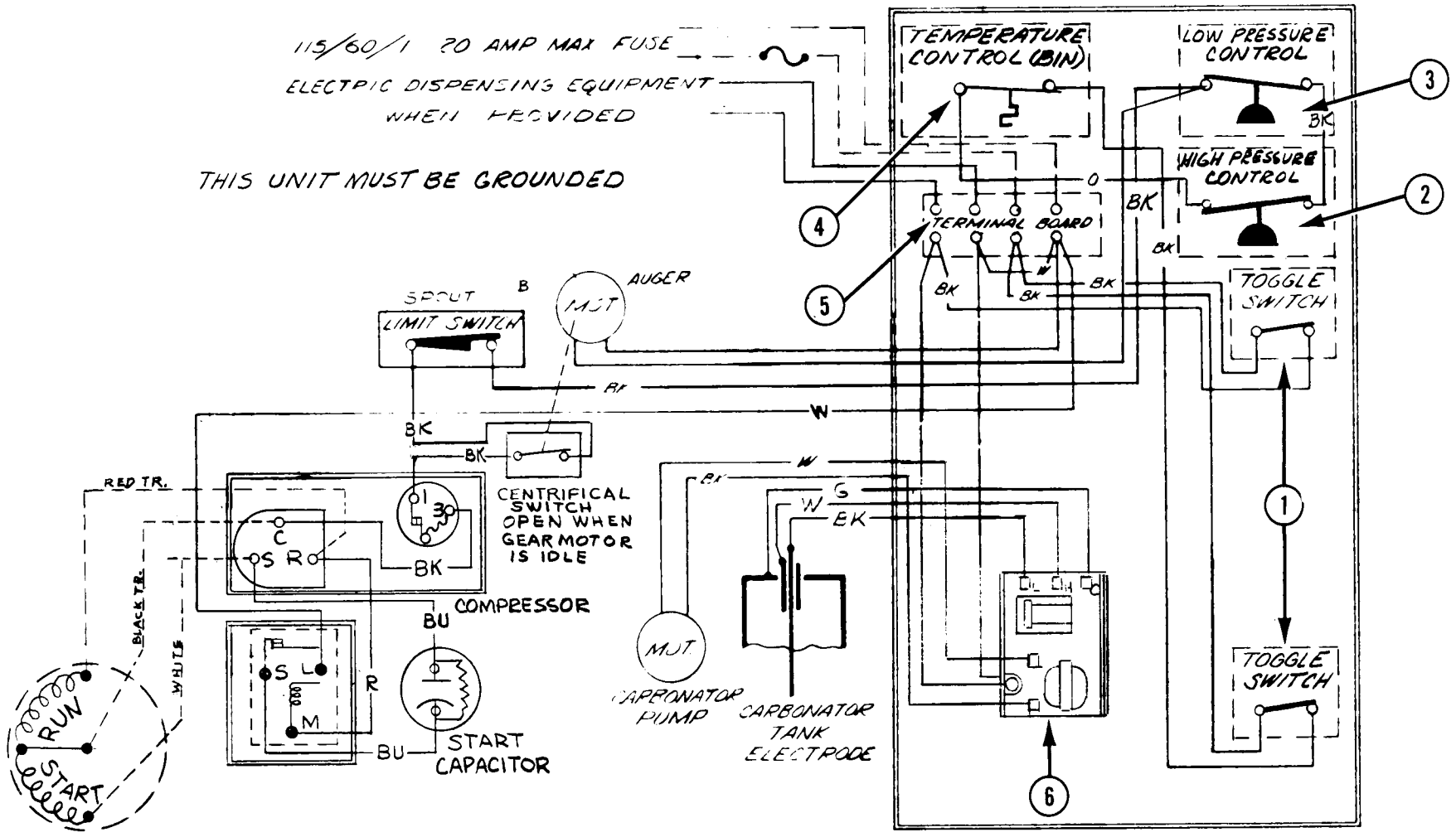

WIRING DIAGRAM

SD - 1 WJ WATER COOLED

Item No.	Part No.	Name
1.	12-426-1	Toggle Switch
2.	11-357	High Pressure Control
3.	11-358	Low pressure Control
4.	11-354	Bin Thermostat
5.	12-813-1	Terminal Board
6.	11-373-1	Water Level Control

CHASSIS ASSEMBLY
SD - 1 J AIR COOLED

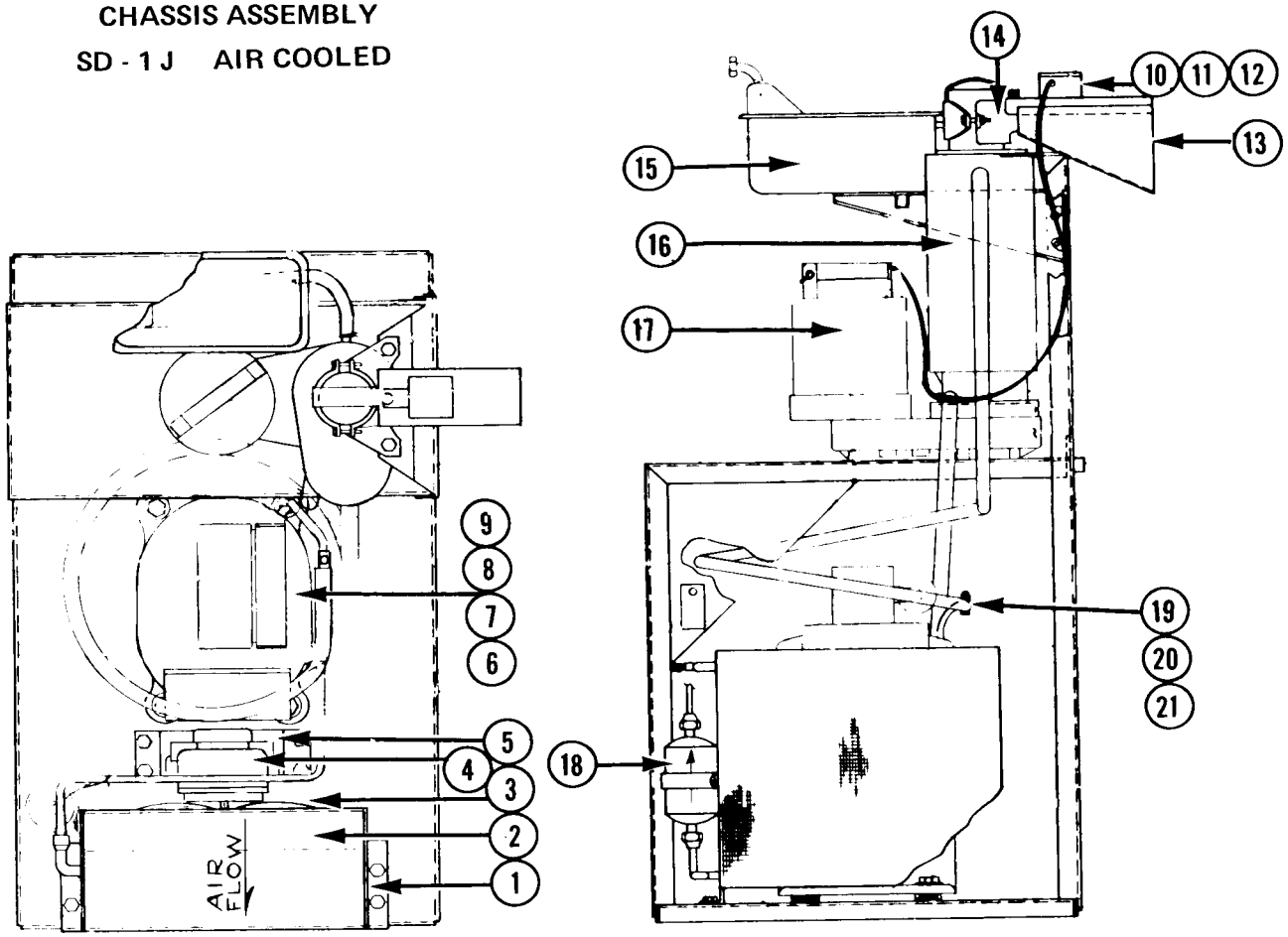

Item No.	Part No.	Description
1.	18-234	Condenser (Air Cooled)
2.	A-18229	Fan Shroud
3.	18-285	Fan Blade
4.	12-1575-1	Fan Motor
	12-1573-2	Fan Motor Lead
5.	18-422	Fan Motor Bracket
6.	18-2210	Motor Compressor
7.	18-2200-26	Compressor Relay *
8.	18-2200-29	Start Capacitor *
9.	18-2200-25	Compressor Overload *
10.	12-1018	Spout Micro Switch
11.	A-16360	Spout Pressure Plate
12.	2-1321	Pressure Plate Spring
13.	A-21307	Spout Body Only
14.	A-14254	Spout Casting
15.	A-22348	Water Reservior
16.	A-20713-1	Freezer Assembly
17.	A-18380-1	Gear Motor
18.	2-350	Drier
19.	16-563	Suction Valve Cap
20.	16-560	Suction Valve Core
21.	A-20578-1	Adapter

*Not Shown

CHASSIS ASSEMBLY
S D - 1 J WATER COOLED

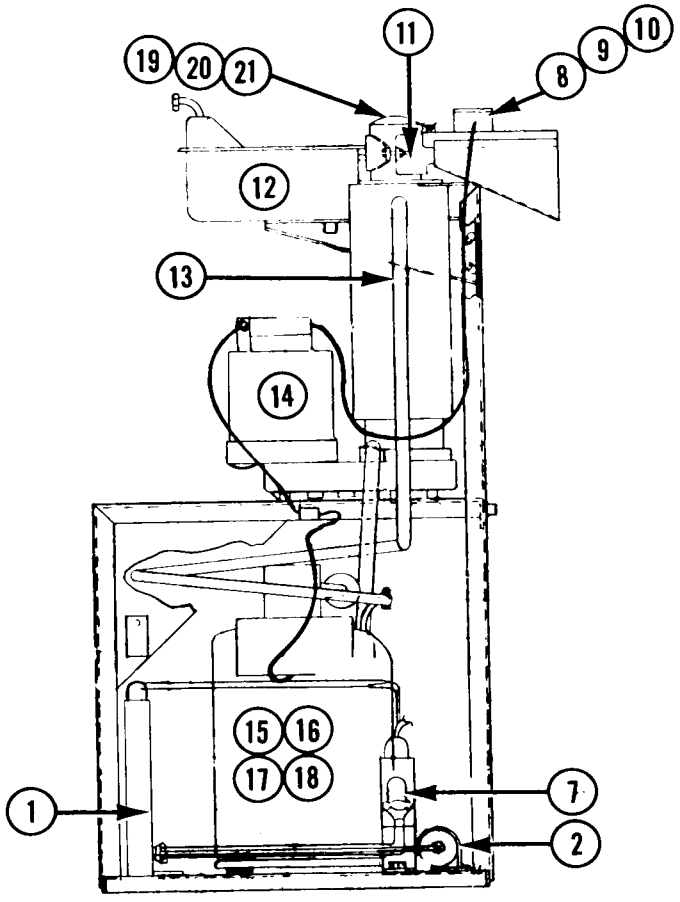

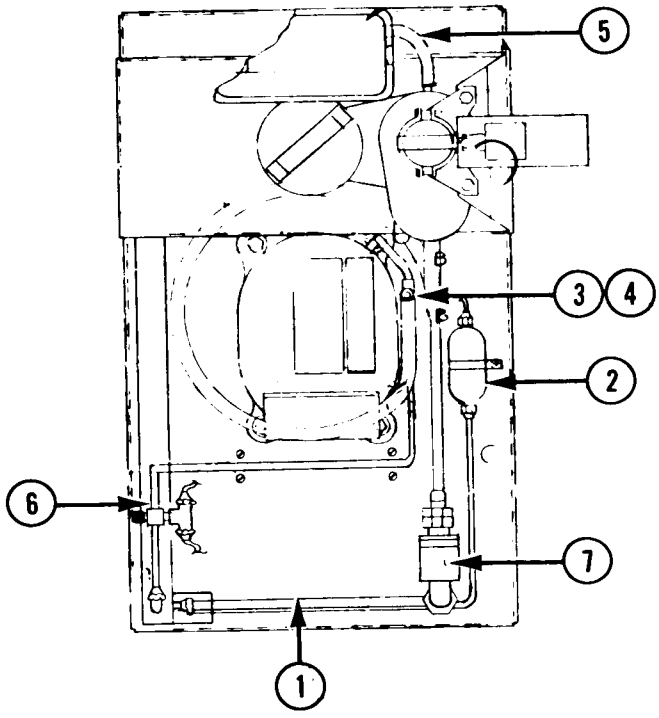

Item No.	Part No.	Description
1.	18-368	Condenser (Water Cooled)
2.	2-350	Drier
3.	16-563	Valve Cap
4.	16-560	Valve Core
5.	13-674-4	Tubing / per ft.
6.	5-397-2	Plastic Water Line / per ft.
7.	11-198	Water Regulating Valve
8.	12-1018	Spout Micro Switch
9.	A-16360	Spout Pressure Plate
10.	2-1321	Pressure Plate Spring
11.	A-14254	Spout Casting
12.	A-22348	Water Reservoir
13.	A-20713-1	Freezer Assembly
14.	A-18380-1	Gear Motor
15.	18-2210	Motor Compressor
16.	18-2200-26	Compressor Relay *
17.	18-2200-29	Start Capacitor *
18.	18-2200-25	Compressor Overload *
19.	A-15070	Spout Insulation Left
20.	A-15071	Spout Insulation Right
21.	A-8736	Straps

* Not Shown

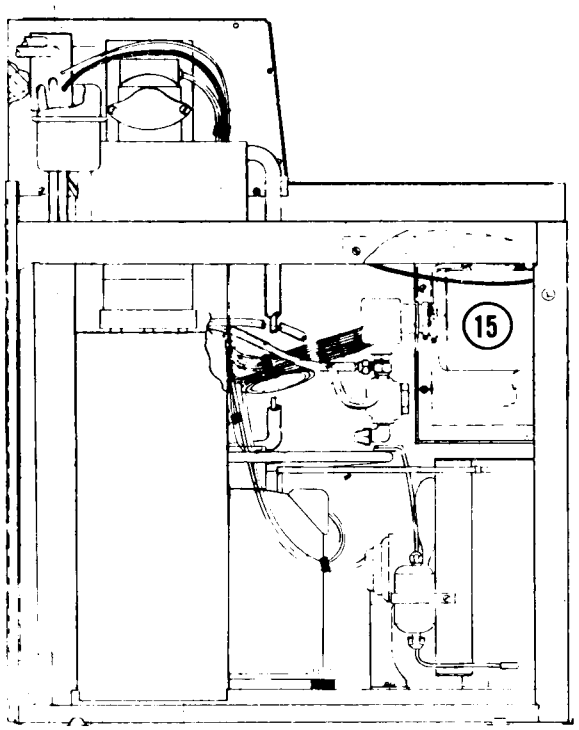

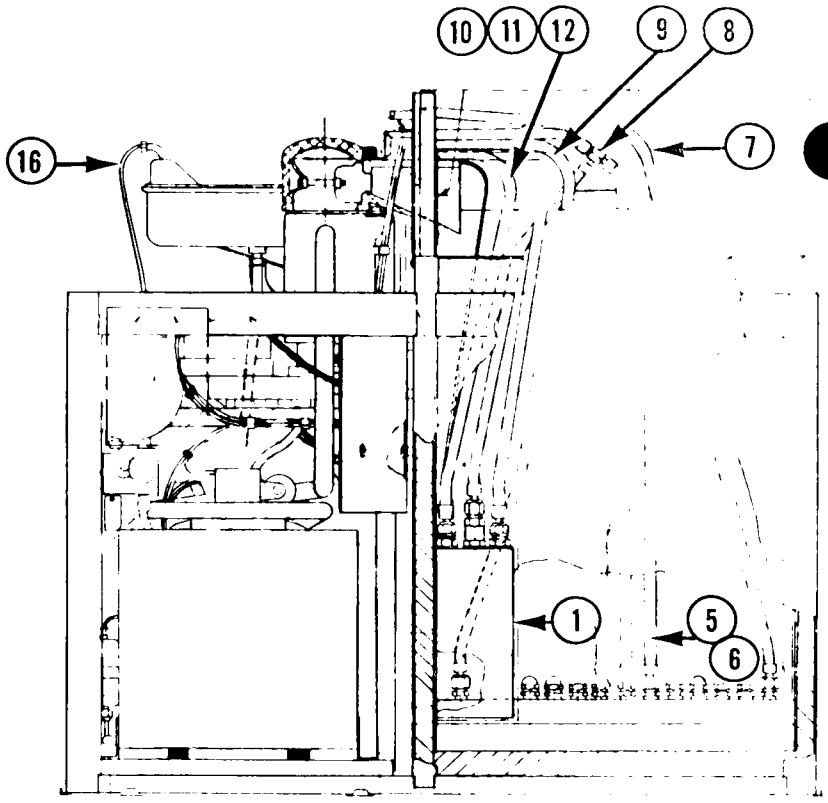

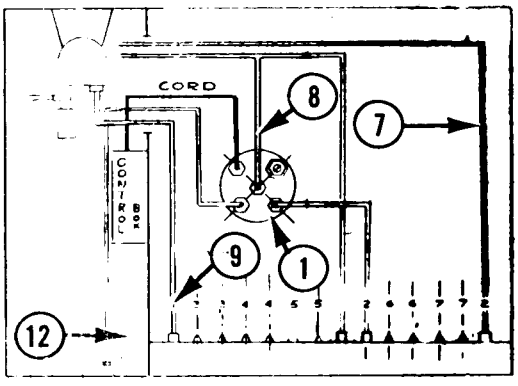

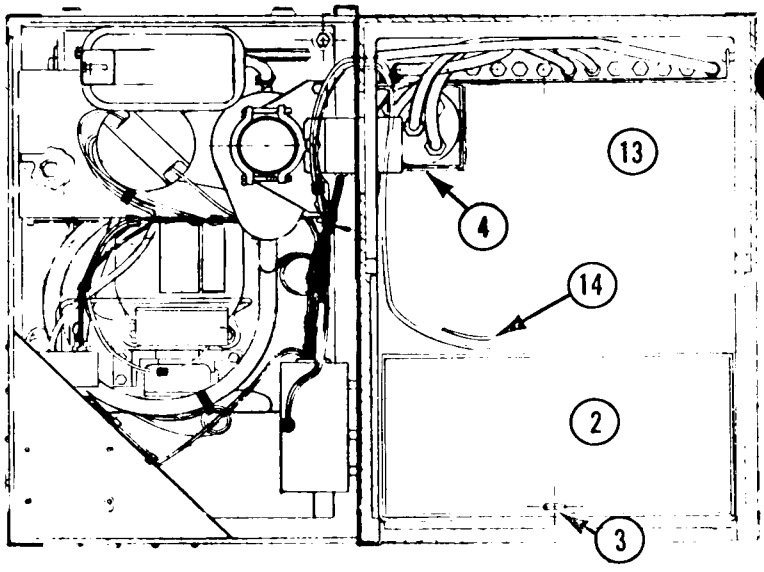

CABINET ASSEMBLY

SD-1J AIR COOLED

	Part Number	Description		Part Number	Description
1.	2-1916	Temprite Carbonator Tank	8.	A-17718	Water Line Assembly
	2-1916-7	Electrode	9.	A-17737	Flexible Line Assembly
	11-373-1	Liquid Level Control *	10.	3-1409-4	Washer
2.	A-18028	Cold Plate Assembly	11.	S-7044	Nut
3.	A-22106	Eye Bolt	12.	A-17732	CO_2 Line Assembly
4.	2-1859	Tank Bracket	13.	A-21645	Storage Bin Assembly
5.	2-1249	Washer	14.	A-21239	Control Bulb Holder
6.	A-17743	Soda Line Assembly	15.	A-21511-1	Carbonator Pump Complete
7.	A-17743-1	Soda Line Assembly	16.	5-397-1	Plastic Water Line/per ft.

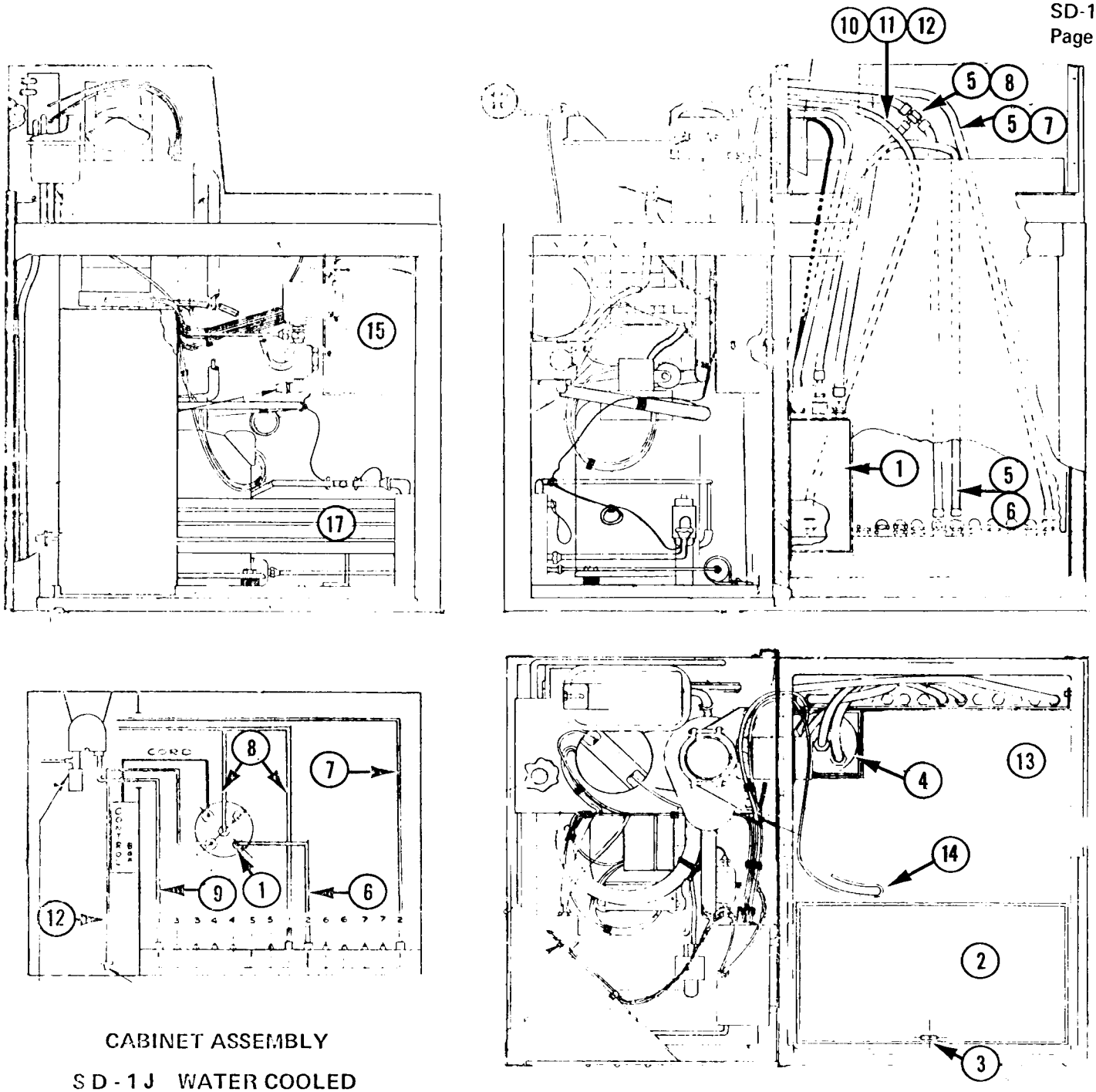

CABINET ASSEMBLY

S D - 1 J WATER COOLED

	Part Number	Description		Part Number	Description
1.	2-1916	Temprite Carbonator Tank	9.	A-17737	Flexible Line Assembly
	2-1916-7	Electrode	10.	3-1409-4	Washer
	11-373-1	Liquid Level Control *	11.	S-7044	Nut
2.	A-18028	Cold Plate Assembly	12.	A-17732	CO_2 Line Assembly
3.	A-22106	Eye Bolt	13.	A-21645	Storage Bin Assembly
4.	2-1859	Tank Bracket	14.	A-21239	Control Bulb Holder
5.	2-1249	Washer	15.	A-21511-1	Carbonator Pump Assembly
6.	A-17743	Soda Line Assembly	16.	5-397-1	Plastic Water Line/per ft.
7.	A-17743-1	Soda Line Assembly	17.	18-368	Water Cooled Condenser
8.	A-17718	Water Line Assembly			

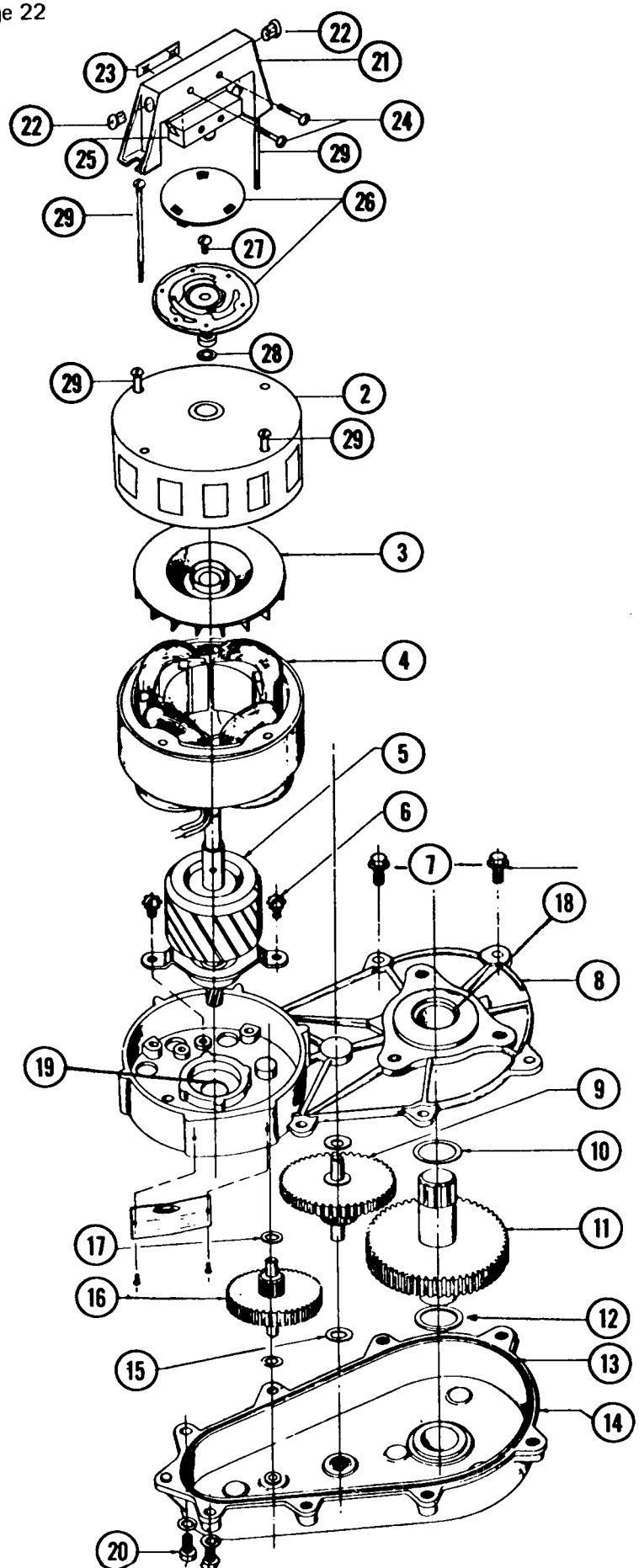

GEAR MOTOR ASSY.

Item	Part No.	Description
2.	A-17047	Motor Housing
3.	A-16915	Cooling Fan
4.	12-1400-1	Stator Assy.
5.	A-19884-2	Rotor Assy.
6.	3-1245	Screws
7.	3-1251	Flange Screws
8.	A-16920	Gear Case Cover
9.	2-1521	Gear & Pinion
10.	3-1408-5	Washer
11.	2-1513	Gear & Output Shaft
12.	3-1408-4	Washer
13.	2-1505	"O" Ring
14.	A-16919	Gear Case Assy.
15.	3-1408-6	Washer
16.	2-1520	1st Gear & Pinion
17.	3-1408-7	Washer
18.	2-1503	Grease Seal
19.	2-1504	Grease Seal
20.	3-1252	Screw
21.	8-579	Switch Bracket
22.	12-1213-3	Snap Bushings
23.	3-886	Twin Speed Nut
24.	3-1403-10	Screws
25.	12-1644	Switch
26.	A19898	Synchro Snap Assy.
27.	3-1248-1	Screw
28.	3-1417-6	Washer
29.	3-1403-43	Motor Bolts

A-18380-1 Gear Motor Assy. Complete

Output Shaft turns at 10 RPM

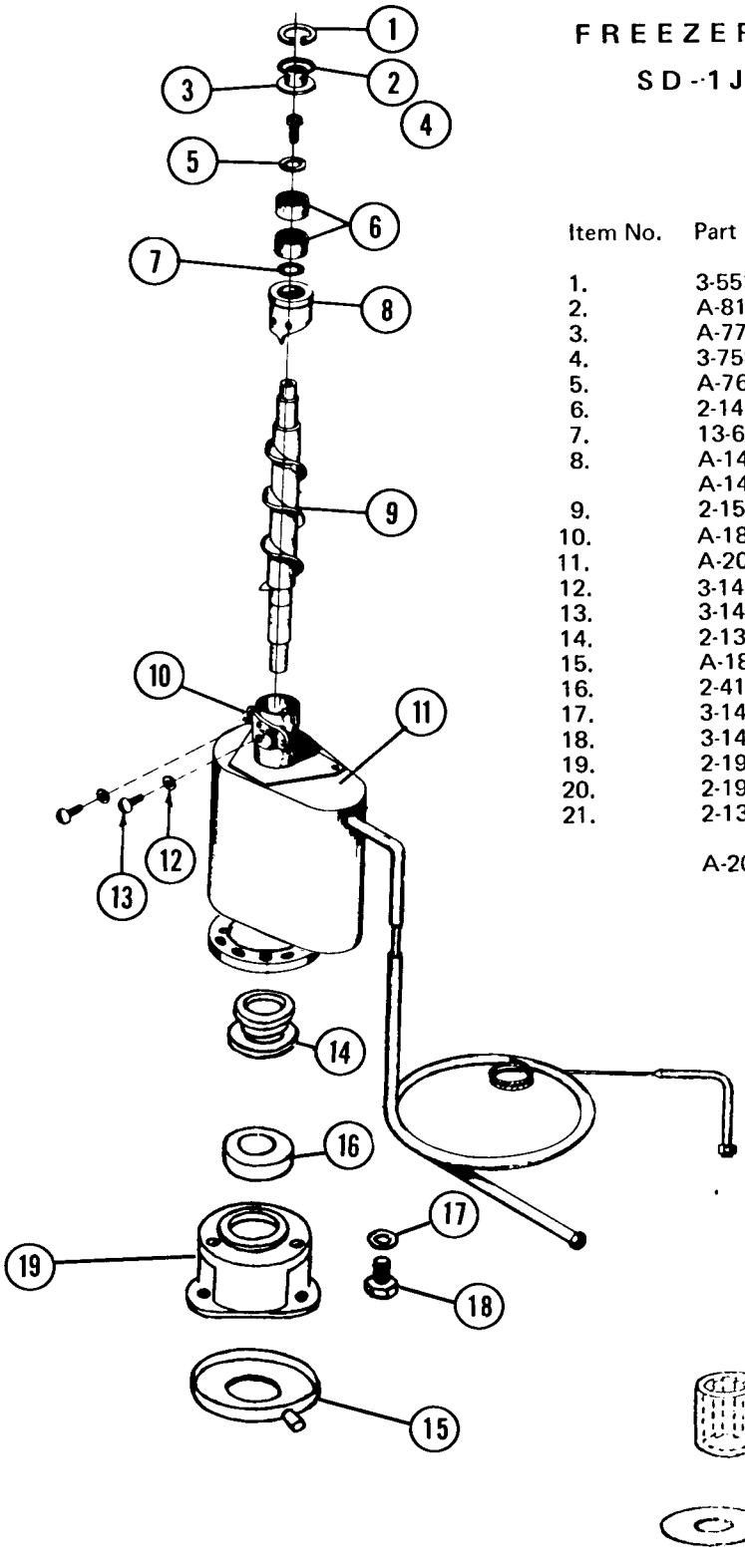

FREEZER ASSEMBLY

SD-1J MODELS

Item No.	Part No.	Description
1.	3-553	Snap Ring
2.	A-8162	Cap Hook
3.	A-7701	Cap
4.	3-758	Cap Screw
5.	A-7699	Washer
6.	2-1412	Bearing
7.	13-617-16	"O" Ring
8.	A-14591	Breaker
	A-14678	Breaker with bearing
9.	2-1538	Auger
10.	A-18430	Spout Plate
11.	A-20712	Worm Tube--Suction Line
12.	3-1410-3	Washer
13.	3-1403-48	Screws
14.	2-1300	Water Seal Use A-18945
15.	A-18153	Drip Pan
16.	2-417	Lower Bearing
17.	3-1408-3	Washer
18.	3-1405-42	Screw
19.	2-1914	Adapter
20.	2-1913	Spline Drive Coupling
21.	2-1347	Shaft Drip Shield Rubber
	A-20713-1	Freezer Complete

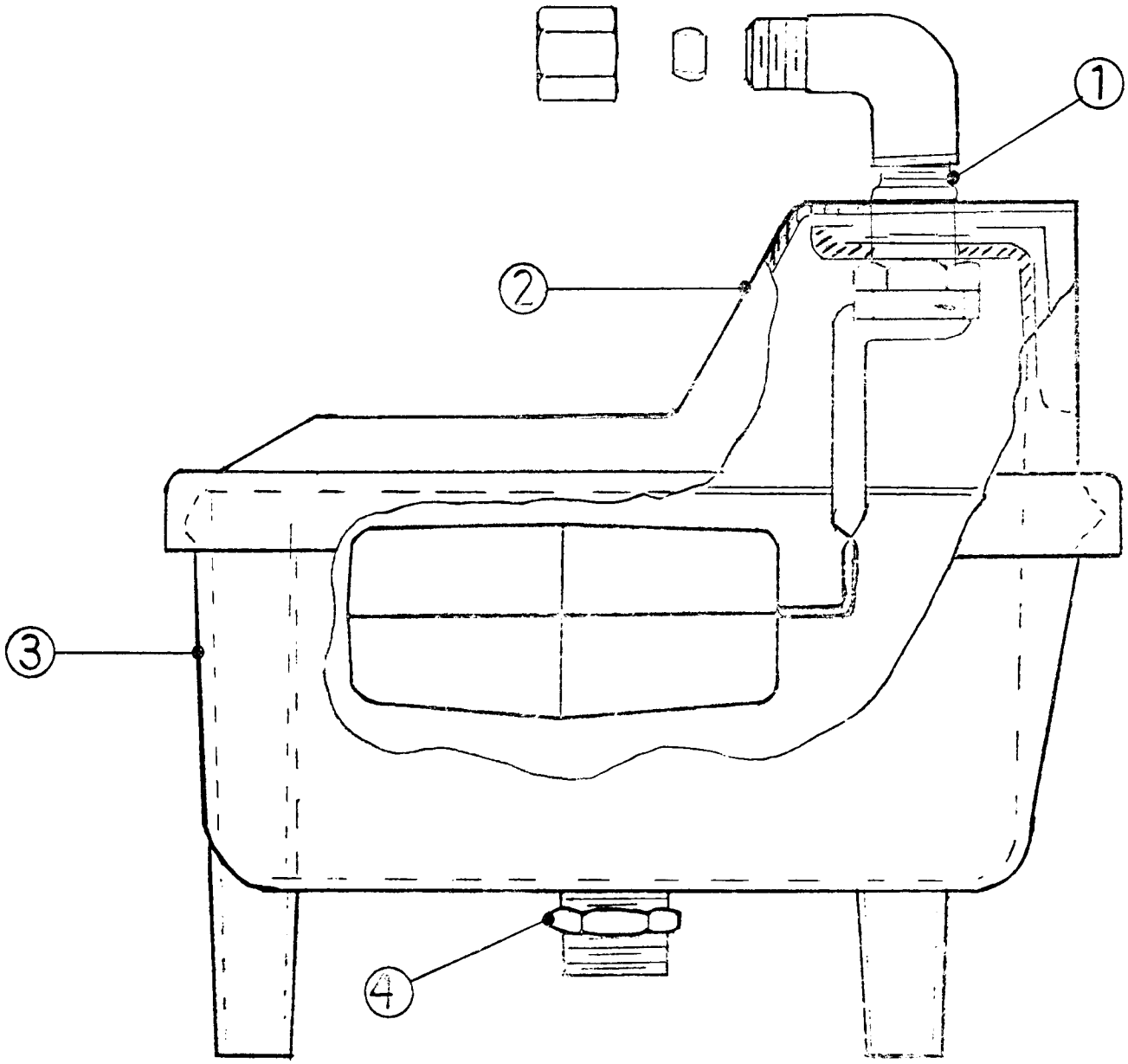

RESERVOIR ASSEMBLY
A-22348

1.	2-1793-2	Valve Assembly consisting of,
		Inlet Ell
		Straight Compression nut
		Compression Sleeve
		Valve Assembly with Float
2.	2-1793-3	Reservoir Cover
3.	2-1793-4	Reservoir Body
4.	2-1793-5	Reservoir mounting nut 3/8 - 13

CABINET PANELS SD-1J MODELS

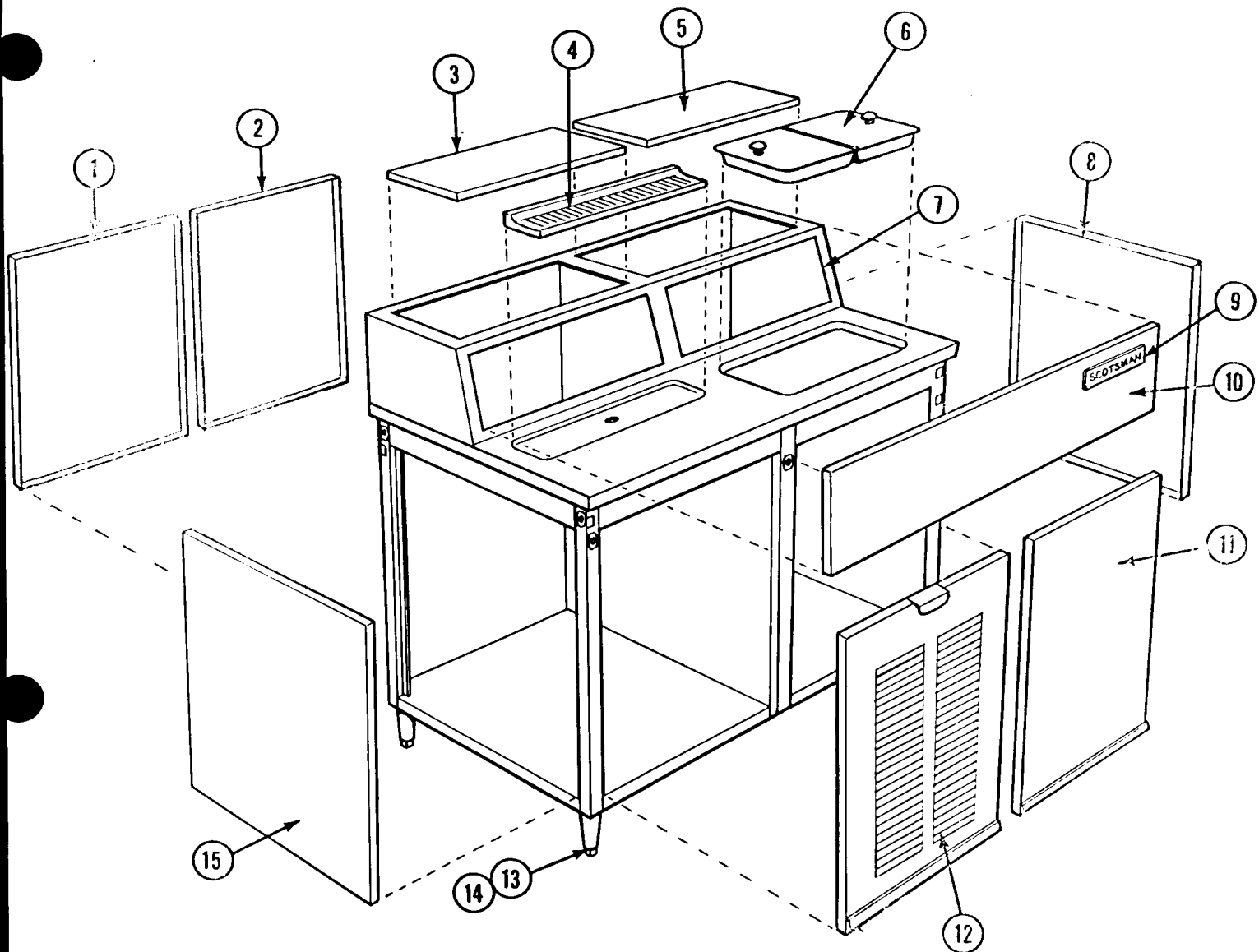

Item	Part No.	Description
1.	A-17754	Rear Service Door
2.	A-17753	Rear Panel – Case Panel
3.	A-17829	Left Top Panel – Hood
4.	2-1553	Drip Grille
5.	A-17812	Right Top Panel –Hood
6.	2-1550	Ice Bin Door
7.	A-17616	Hood Assembly
8.	A-17749	Right – Panel – Case
9.	15-156	Scotsman Emblem
10.	A-22280	Front Panel – Hood
11.	A-17766	Front Panel – Case
12.	A-17615	Front Service Door
13.	A-15803-1	Leg
14.	8-522	Leg Leveler for A-15803-1
15.	A-19156	Left Panel-Case

Stainless Steel Models

To order items, 1-2-8-11-12-15 in. stainless steel, add a dash (-1) one to above part numbers.

CARBONATION

SOME FACTS ABOUT CO_2

Carbonic Anhydride, Carbonic Gas, or Carbon Dioxide, as it is variously termed, has the chemical symbol CO_2. It is under normal conditions a colorless, odorless gas, one and one-half times heavier than air. Chemically it is the combustion product of the element Carbon. It occurs in nature as the result of all types of combustion.

Carbonated Water has been found in natural springs in many parts of the world. Such springs have been known for centuries and have been highly regarded for beverage purposes.

Many of the desirable characteristics of carbonated beverages are due to the carbonic gas contained in them. It is therefore most important to determine the proper amount of carbonation such beverages should contain and having done that to provide the necessary control to insure uniformity of the product in this respect at all times.

PROPERTIES

Color	None
Odor	Pungent
Latent Heat	120 BTU/lb. at 0° F.
Critical Pressure	1,055 lbs. sq. in.
Critical Temperature	87.8°F.
Pressure in drums at 70°	839 lbs. sq. in.
1 lb. CO_2	8.50 Cu. ft. at atmospheric pressure and 50° F.
Solid CO_2 (Dry Ice)	110° F.

CARBONATION AND THE FACTORS WHICH GOVERN IT

Carbonated water is largely a mechanical mixture of CO_2 and water and the term "carbonated water" is usually understood to mean water that contains gas to its capacity.

This capacity varies with pressure and temperature. The amount of gas water will absorb increases directly with the pressure. The amount of gas water will absorb also increases as the temperature decreases.

Therefore, any measure of the actual gas content of carbonated water will depend on the two factors—pressure and temperature.

The unit of measure that has been adopted as standard is "the volume."

One volume is the amount of gas that water will absorb at atmospheric pressure and at 60° Fahrenheit.

A volume of gas occupies the same space as does the water by which it is abosrbed.

The pressure gauge on the carbonator or on the regulator or on the volume testing apparatus, does not show atmospheric pressure. This means that zero on the gauge is atmospheric pressure which is approximately fifteen pounds per square inch at sea level.

The pressure you will note, is constant—namely, atmospheric or 0 lbs. gauge. As the temperature of the water is lowered, the amount of gas it will absorb increases, until after 60° F. it is one volume. Note that from 60° to 150 the slope of the curve changes gradually, from 60° to 32° F., however, the curve changes more abruptly, and for each 10° difference in temperature, a decided increase in gas absorption is apparent, until at 32° or slightly above the freezing point, we find that 1.7 volumes of gas is absorbed by the water at atmospheric pressure. From this curve it will be apparent that the cooler the water is, the more gas it will absorb.

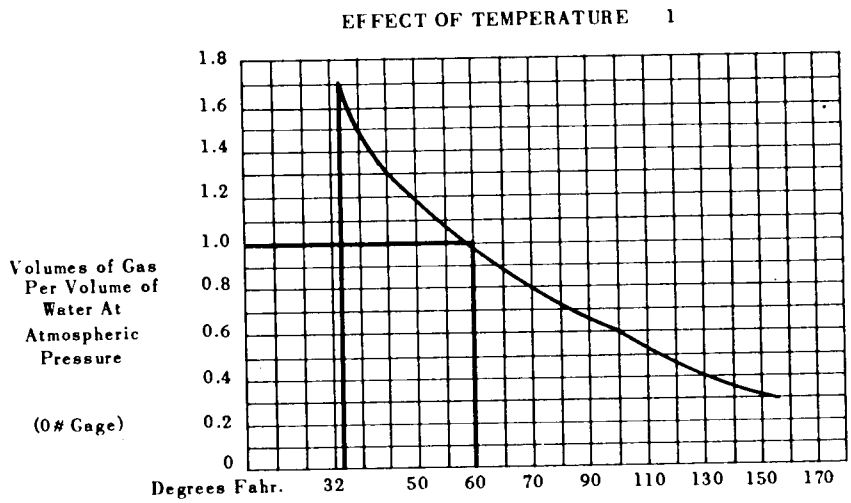

Chart No. 1 shows the effect of temperature change on the amount of gas water will absorb.

CARBONATION

EFFECT OF PRESSURE

Chart No. 2 shows the effect of increasing pressures, temperature being constant, on the amount of gas water will absorb. You will note that the chart is a straight line, of the same slope throughout, indicating that as the pressure is increased, the gas volumes increase. Furthermore, the "gas volume" increase is directly proportional to the pressure. To illustrate—at 0 lbs. gauge and 60° F. we find that the water will absorb one volume of gas, at 15 lbs. increase in pressure, water at 60° will absorb one additional volume of gas. If the temperature of the water is 45°,then, for every 15 lbs. increase in pressure, the water will absorb 1.3 volumes of gas.

FOR A UNIFORM BEVERAGE
Control Carbonation

Carbonation is an important taste ingredient of your beverage. One of the vital attributes of any beverage is uniform taste—bottle after bottle. There are four elements that influence the taste of a beverage.

1. FLAVOR
2. SWEETNESS
3. CARBONATION
4. TEMPERATURE

All but the final temperature of your drink are susceptible to direct control at your plant. Flavor and sweetness standards should be and probably are definitely established by means of exact formulas.

Carbonation standards should also be established for each flavor in your line—Sparkling water, ginger ales, and other "mixers" should be in the "high carbonation" bracket—the highest carbonation practically obtainable is the ideal to be sought for.

Cola drinks, root beer and other low acid drinks are in the next bracket usually carbonated to 3 or 3-1/2 volumes.

Some bottlers prefer fruit drinks, especially Orange—at a lower carbonation. Determine a standard of carbonation for each flavor that you consider best for your market.

Set up definite instructions for maintaining these standards, just as you maintain standard formulas for the sugar flavor, acid and other ingredients.

FLAVOR	CARBONATION STANDARD
Root Beer	3-1/2 Volumes

Having determined the carbonation standards, it is important that all concerned know how to control the factors that will enable you to maintain them.

HOW TO PRODUCE UNIFORM BEVERAGES

Bottlers know the importance of developing the proper formula for a beverage. They fully realize that for any bottled beverage to achieve popular favor, it must be right—in flavor, in taste, and in gas content.

The development of the proper formula for a beverage is, of course, an essential step in establishing that beverage in popular favor. To keep its popularity, the beverage must be the same from day to day and month to month. The formula must be followed exactly and the beverage produced in just the same manner.

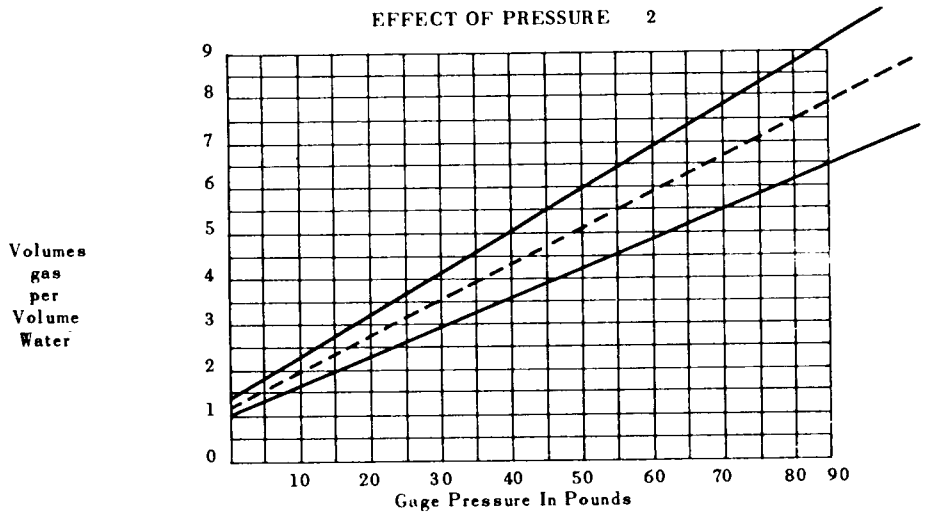

CARBONATION

This means that perfect control of variable factors is necessary to assure uniformity.

The number of volumes of gas in a finished beverage has a definite relationship to the taste of the beverage. Correct carbonation means a sparkling, pungent, thirst-quenching beverage that completely satifies the consumer. Low carbonation leaves the beverage with a flat, insipid taste which is unsatisfactory. Finished beverages should be checked at frequent intervals to assure proper carbonation in the bottle.

The amount of sugar in a beverage determines,with a given acid content, its sweetness. The sugar also has another important function in the beverage. Sugar makes the "body" of the beverage and "body" is a necessary background for any flavor. A change in the body changes the taste of the beverage even though the same flavor is used. High quality extracts are, of course, a necessity.

Control of sugar content of the beverage is very important. It depends on the beaume of syrup used and the throw used. Variation in syrup density changes the finished beverage if the throw remains the same. Variation in the throw will also change the beverage if the syrup density is unchanged. By checking the beaume of the finished beverage a control is established where it does the most good.

Uniform finished beveraged can be made only be positive control over such variable factors in beverage production.

Check the density of your syrup with a beaume scale.

Check the actual throw in the bottle by measuring individual sample bottles.

Check the final result by using the finished drink tester on the completed beverage.

Check the carbonation in the finished beverage.

KNOW YOUR WATER

Water that is satisfactory for drinking purposes is generally satisfactory for carbonating. There are very few exceptions to this rule.

The water used for carbonating must be clean. That means free from suspended matter of all kinds including water organisms which may be too small to see except under a microscope.

All water should be properly filtered and it is advisable to use an activated carbon unit after the filter. The ideal set up is to follow the activated carbon unit with a paper filter. This will prevent particles of the carbon coming though with the water.

Chemical composition of the water does not affect carbonation within the limits of potable water. If enough material were in solution to interfere with carbonation, it would not be possible to use the water for drinking purposes.

Organic matter in solution can cause trouble if present in excessive quantities but this trouble is removed by activated carbon.

It may be necessary to treat water chemically in some cases. Hardness can be removed by chemical treatment and that is sometimes advisable to prevent scale formation on machinery, particularly on soaker parts. Alkalinity can be reduced by chemical treatment and that is advisable if the alkalinity is high enough to affect the taste of the water or if it is sufficient to neutralize too much of the acid in the beverage. If objectionable material is present in the raw water, that may require chemical treatment.

Such treatment, properly handled, does not affect carbonation and it does not change the necessity for proper filtration. Chemical treatment should be followed by filtration.

FOES OF CARBONATION AND HOW TO COMBAT THEM

AIR

Too much air in the water interferes with proper carbonation and also causes the CO_2 gas to leave the water more quickly when the bottle of finished beverage is opened. It is therefore important to reduce the amount of air present to the minumum.

Some air is present in the raw water supply. More may be added in the mechanical handling of the water. When such water reaches the carbonator, the CO_2 gas tends to drive it out of the water. If steps are not taken to remove it, this air will accumulate in the carbonator and much of it will be carried through in the water and into the finished beverage. That is why all liquid carbonators have an automatic air snift.

CARBONATOR SECTION

HOW IT WORKS

Most of the cold drinks served at a soda fountain are carbonated. Therefore, nothing is more important to the successful operation of a fountain than cold, properly carbonated water to make drinks sparkling, full flavored and fully satisfying in quality.

Water is carbonated by combining it with carbonic acid gas (CO_2). This is done in a sealed chamber by forcing gas from a drum through a pressure regulating valve into the water in this chamber. As the carbonated water is used from this chamber, it is replaced by a high pressure water pump. The operation of this pump is controlled by an automatic switch device which senses the water level.

Two conditions must be maintained in order to induce and hold carbonic gas in water. They are:

1. Pressure
2. Adequate refrigeration or cooling.

In the SCOTSMAN DISPENSER, pressure is supplied by the gas drum and is present throughout the system to the carbonator tank and keeps the water carbonated. Without adequate cooling, however, carbonation escapes rapidly after the water leaves the tank. Soft drinks should be dispensed at 40° F. or below. The colder the water the greater the carbonation. Cooling with ice at temperature of 32° F. can be reached and held without danger of freezing as is true with mechanical refrigeration systems. Thus, less CO_2 is used to achieve the same degree of carbonation in a drink.

THE GAS DRUM— Source of carbonation

Drums for carbonic acid gas are made of drawn steel tubing and are built to withstand great pressure. As delivered, they contain liquid gas reduced to liquid form by tremendous compression.

Each one is equipped with a safety valve set to blow out before internal pressure can explode the drum itself. Once this valve "pops off", the contents of a drum will escape. Drums, therefore, should always be stored in a cool place to keep the liquid from expanding and increasing pressure inside the gas drum.

Drums are classified by weight. They come, as a rule, in two sizes: 20-lb. drums and 50-lb drums. These weights refer to the compressed liquid contents and are in addition to the tare weight usually indicated on the head of each drum.

HOW TO CHANGE A GAS DRUM
NEXT PAGE
SINGLE REGULATOR IS SHOWN

1. Close drum head valve (A) (clockwise).
2. Close regulator outlet valve (B) (clockwise).
3. Disconnect regulator from drum by removing regulator coupling nut (C). Gauge should drop to "0".
4. If gauge does not drop to "0", turn regulator key (D) clockwise to allow all gas to escape from the body of the regulator through the main connection.
5. Turn regulator key (D) counter-clockwise until it is free and loose and regulator is closed.
6. Put full drum in place of one being replaced. Couple regulator coupling nut (C) to new gas drum, first making certain that there is a good fiber washer at the connection.
7. Open drum head valve (A) all the way, turning it as far as it will go to bring packing up tight against the shoulder of the valve stem.
8. Turn regulator key (D) clockwise slowly until standard operating pressure, as indicated on the gauge, is reached. Unless you have a low pressure carbonator the standard operating pressure is 100 lbs., depending on the manufacturer's recommendation.
9. Open regulator outlet valve (B) slowly and release gas to carbonator. As pressure equalizes, open this valve all the way.

WASHERS: In gas connections and lines under high pressure, use fiber washers only. In lines carrying liquids or subject to relatively low pressures, rubber or leather washers should be used.

Keep gas turned on at all times to insure uniform well-carbonated water.

Shown is single stage regulator with gauge as used on gravity type drink dispenser heads. For pressure type dispensing heads a two stage or hi and lo pressure regulator and gauge are required.

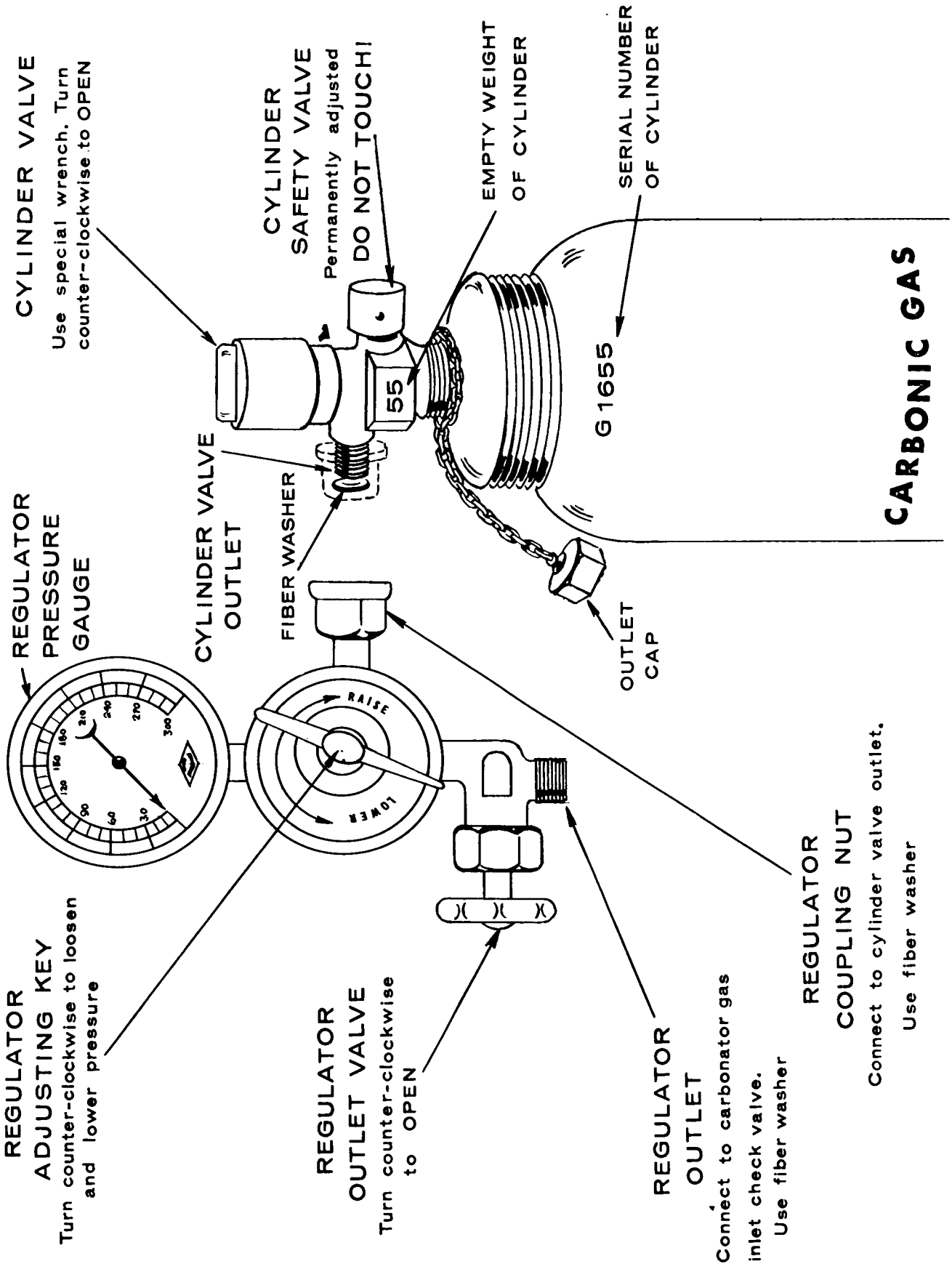

CARBONATOR SECTION

Make sure that the regulator coupling nut and regulator valve coupling are tight and that both contain a good fiber washer.

Make sure that the water back-pressure check valve is functioning properly.

Sometimes it is difficult to detect a leak in the regulator gauge. In checking here apply the lather generously, and watch closely.

If a leak occurs near either end of a hose, cut off the defective end and refasten hose with clamps. Otherwise, replace hose.

OPERATION—Gravity type dispensing heads.

Turn on CO_2 gas and adjust regulator to 100 lbs. pressure, open soda water faucet for one-half minute to blow all air out of carbonator. Close faucet, turn on water supply and turn on power supply to pump motor. When pump stops, open faucet again until full stream of water is obtained. Draw several glasses of water and note pump operation. Pump will operate after approximately 14 ounces of carbonated water have been drawn.

The carbonator will operate satisfactorily on CO_2 pressures from 80 to 120 pounds. set regulator at 80 lbs. for maximum gas economy or adjust to suit requirements of the faucet used.

OPERATION—Pressure type dispensing heads, kits.

Pressure types dispensing systems require both hi and lo pressure gauges as well as syrup tanks etc.

Hi pressure CO_2 gauge feeds carbonator, lo pressure gauge feeds pressure to syrup tanks, forcing syrup thru lines to dispensing heads. Normal pressure setting is 30 lb. gauge.

See accompanying sketch for details.

The system is completely automatic in operation, and requires no attention except maintaining CO_2 supply, and periodic servicing of water supply line filter.

IMPORTANT: Insufficient water supply will cause noisy operation and eventual damage to pump. If strainer and filter are clear and line valves open, noisy pump operation indicates insufficient water supply.

WARNING: If the installation is idle and exposed to freezing temperatures, disconnect water supply line and blow all water out of carbonation system.

HOW TO FIND AND STOP GAS LEAKS

Whenever a fresh drum of CO_2 gas is connected to the carbonating system, open the drum valve until the regulator gauge reaches maximum pressure (approximately 120 to 125 lbs.) and then close drum valve.

If the needle of the gauge on the regulator continues to drop, there is a leak in the system. Due to some absorption of gas in the water in the carbonator, the needle may drop a few pounds, but it should then come to a stop if there is no leak.

If a leak is found by this method, proceed to locate it as follows:

You can test the carbonation system for gas leaks by applying shaving soap lather with a shaving brush to all joints, connections, and valves. If there is a leak, bubbles will apear.

If gas is escaping at the stem of the drum head valve, open valve all the way. Usually this closes a leak through the packing round valve system. Also tighten packing nut to keep gas from escaping through packing.

DIAGRAM OF PARTS AND ACCESSORIES FOR INSTALLING SYRUP TANKS ON MODEL SD-1J COMBINATION ICE MAKER AND DISPENSER

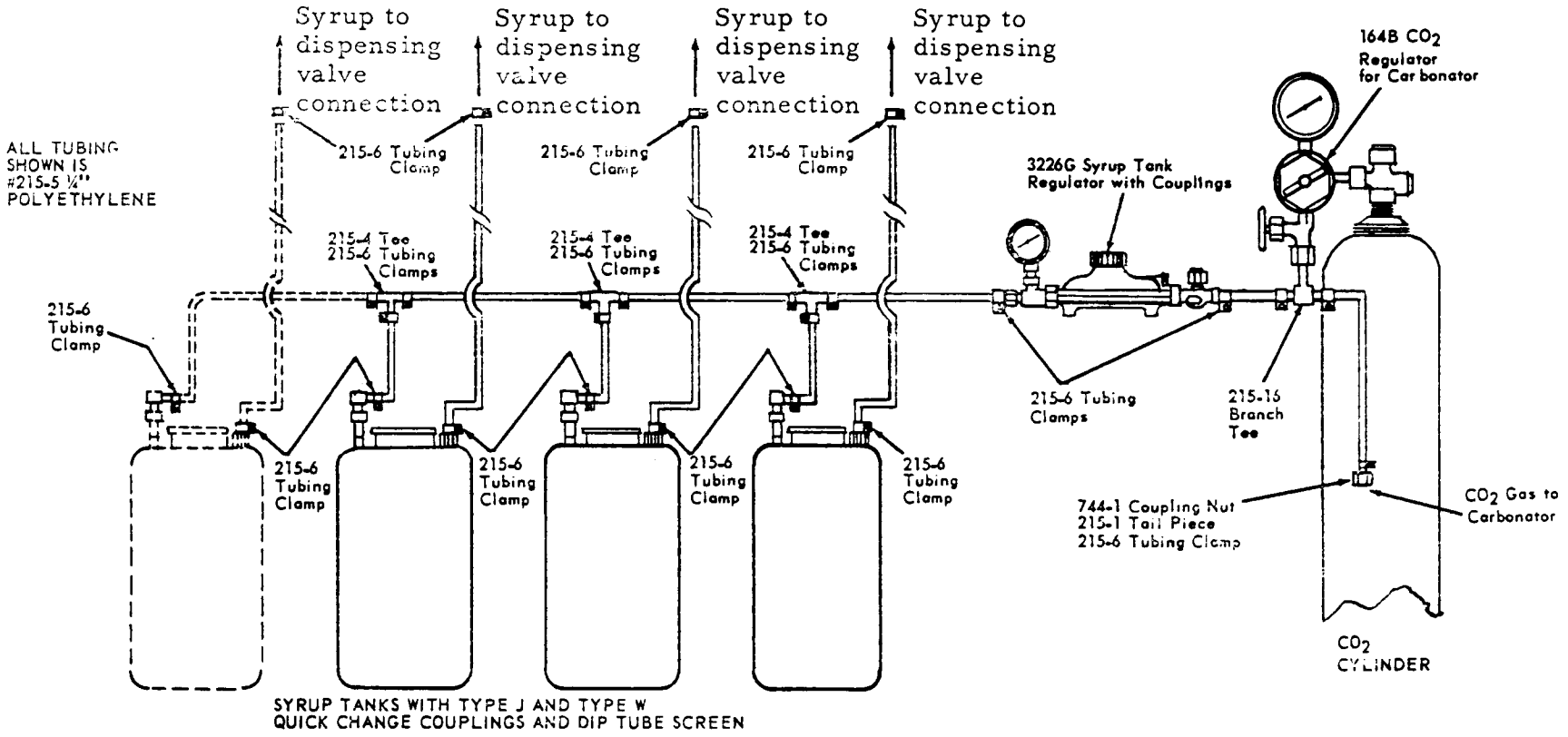

Typical layout for use on pressure type dispensing heads - kits -

Source: Excellall Products Div.
Bastian Blessing Co.
4201 W. Peterson Ave.,
Chicago, Illinois

CARBONATION SECTION

Carbonator Tank Operations

Water from the source first goes through a filter to remove foreign particles or odors from the water depending on local water conditions. It is recommended that a good filter be installed. The water then enters the machine cabinet and goes through an aluminum cold plate in the ice bin to chill the water before carbonation.

From the coils it goes to the carbonator pump where it is first strained to remove any particles in the water and then pumped into the carbonator tank at high pressure by the heavy-duty carbonator pump (100 gph). The water inlet to the carbonator tank has a check valve; therefore, the water enters the tank only when the pump is running and the water pressure is above the CO_2 pressure in the tank. A water jet breaks up the water into a fine spray as it enters the tank. The CO_2 atmosphere inside the tank mixes with the water to produce the carbonated water. The CO_2 gas enters the tank through a check valve from the CO_2 cylinder.

The carbonated water leaves the tank and goes through the stainless steel soda water cooling coils where it is chilled before going to the dispensing valves for use as carbonated water or in carbonated drinks. CO_2 gas from the cylinder goes to two places. First to the carbonator tank where it is mixed with water to produce soda or carbonated water. It also goes to each of the four syrup tanks where its pressure is used to force the syrup in the tanks through the syrup lines, the stainless steel syrup cooling coils in the ice bank, and on to the dispensing valves where it is mixed with the carbonated water to provide carbonated soft drinks.

Liquid Level Control Operation

The water level in the carbonator tank and the switching of the pump is controlled by electrodes in the carbonator tank and the liquid level control. This is how it works.

The control supplied with this machine is solid state control that supplies a low voltage circuit through the carbonator tank. This control is highly sensitive and will operate properly with very pure water, even distilled water.

At start up the pump motor relay contacts in the liquid level control are closed and the pump motor is running. As the water rises in the tank it comes in contact with the low-level electrode. Nothing happens since the wire from the electrode goes to an open switch or contact on a relay in the liquid level control. As the water continues to rise, it then makes contact with the high-level electrode.

At this instant an electrical circuit is completed from the common electrode (tank body), through the water to the high-level electrode. through the electronic control and back to the common electrode. The completion of this circuit indirectly energizes the relay which open the pump motor circuit and closes a circuit to the electrode. Now as carbonated water is used and the water breaks contact with the high-level electrodes, the pump will stay off since the relay electrode contacts provide a circuit between the high and low-level electrodes. As the carbonated water level continues to drop, it breaks contact with the low-level electrode. This indirectly de-energizes the relay and the pump starts filling the tank. This cycle continues over and over again, always maintaining a carbonated water level between the tips of the two electrodes.

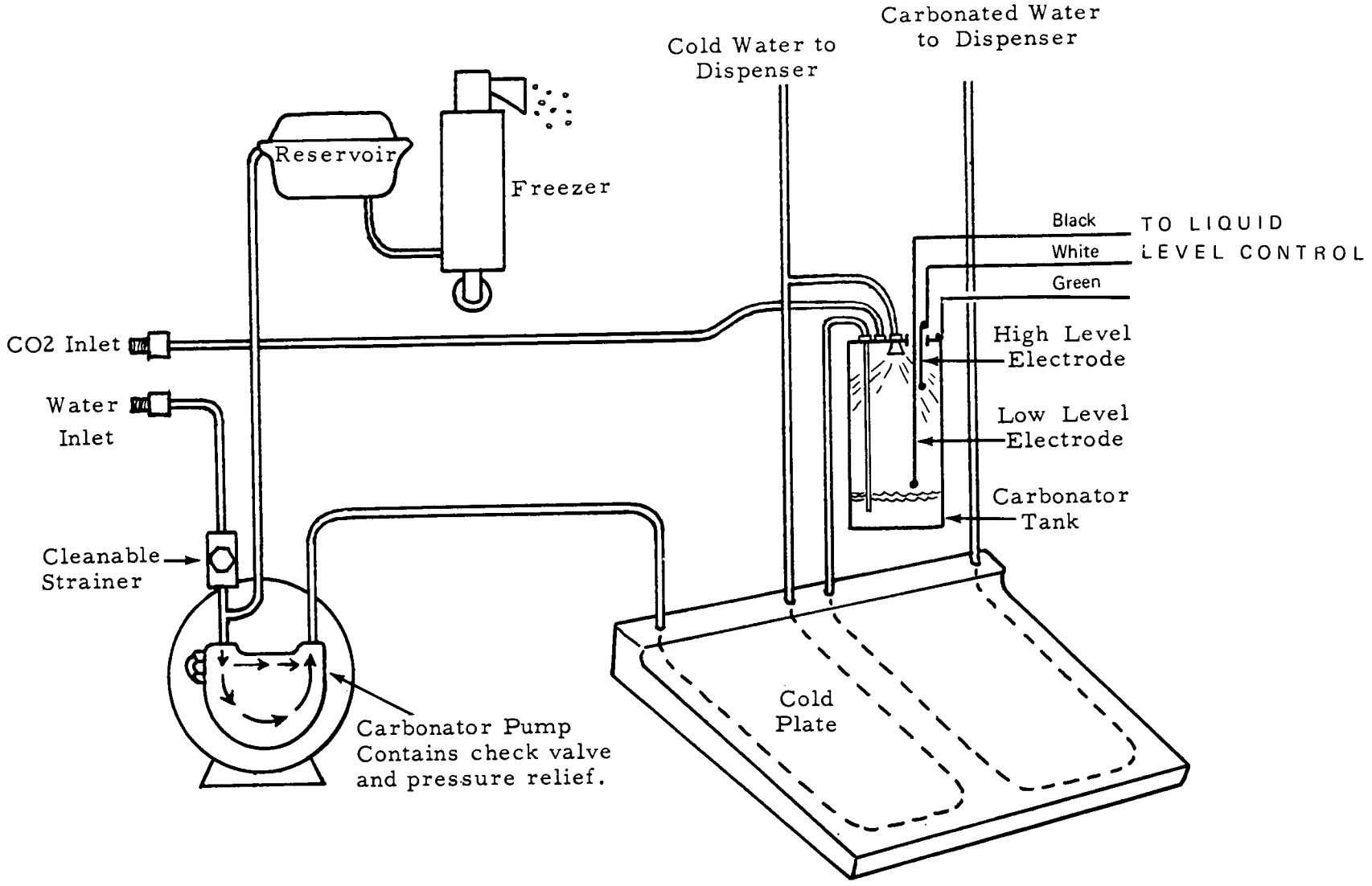

WATER SYSTEM SCHEMATIC

SERVICE ANALYSIS
CARBONATION SECTION

COMPLAINT	POSSIBLE CAUSE	CORRECTION
No carbonated water (pump does not run).	Motor burnt out.	Replace.
	Liquid level control.	Check relay wiring, contacts.
	Bad bearings causing pump to stop.	Repair or replace motor.
	Tank electrode shorted.	Repair or replace.
	Pump jammed.	Check for foreign particles in pump housing, clean or replace.
No carbonated water (pump runs)	Pump running backwards	Reverse wiring inside motor.
	Open in transformer, relay coil, or high level electrode.	Repair or replace.
	Worn Pump.	Replace.
	Pump check valve leaks.	Clean or replace.
	Pump relay bypass valve opens too soon	Clean; valve is adjustable, set higher; or replace.
	Clogged filter or inlet screen.	Clean or replace.
	Water line blocked.	Check for smashed washer at fittings or plugged check valve on tank.
Flat carbonated water.	Gas drum empty or low.	Replace drum.
	Gas turned off.	Turn on gas.
	Regulator set too low.	Increase pressure.
	Gas line plugged by swollen washer.	Replace washer.
	Water pressure too high.	Adjust if possible or install water pressure regulator.
Metallic taste.	Carbonated water backing up into city water line.	Clean water back-pressure check valve, replace washer.
	Carbonated water line connected by mistake to brass or copper lines. Use proper beverage tubings.	Make proper connection using approved tubing.
Carbonated water off taste.	Oil, dirt or grease inside carbonator.	Clean carbonator.
	Oil or pipe dope in water lines.	Clean and flush.
	Tainted gas.	Sniff gas at drum head to determine if drum should be replaced.
	Water filter needed or filter filter element bad	Install a good filter or replace filter element.

SERVICE ANALYSIS
CARBONATION SECTION

COMPLAINT	POSSIBLE CAUSE	CORRECTION
Milky carbonated water.	Air in carbonator.	Vent carbonator.
	Pump sucking air.	Check for loose fittings. Replace pump.
Gas only flows from dispenser valve.	Water turned off.	Turn on.
	Pump motor not cutting on.	Check liquid level control. Check carbonator tank electrode.
Carbonator fills with water	Water turned on before CO_2 pressure.	Shut off water supply. Empty water from tank with pump. Apply CO_2 pressure first, then water pressure.
	Water pressure too high	Adjust if possible, or install pressure reducer.
	Gas pressure too low.	Set regulator key to deliver proper gas pressure.
	Gas drum empty.	Replace.
	Open in transformer, relay coil, or high level electrode.	Repair or replace.
Carbonated water backs up into city water line.	Dirty or worn back-pressure check valve.	Clean or replace valve seats.
Excessive pumping.	Closed water supply valve.	Open valve.
	Water supply (building or city) shut off.	Re-establish source.
	Automatic switch out of order	Check switch, replace if necessary.
	Water inlet screen clogged.	Remove and clean screen.
	Pump inlet or check valve out of order.	Repair or replace.
	Swollen washers in hose couplings obstruct flow of water	Replace washers.
	Tank electrode shorted.	Repair or replace.
Carbonator pump pounds water running in spurts.	Air in pump.	Vent pump.
	Water off.	Turn water on.
	Filter or strainer plugged.	Clean or replace.
	Inlet line too small.	Must be 3/8" copper or larger.

TEMPRITE CARBONATOR TANK

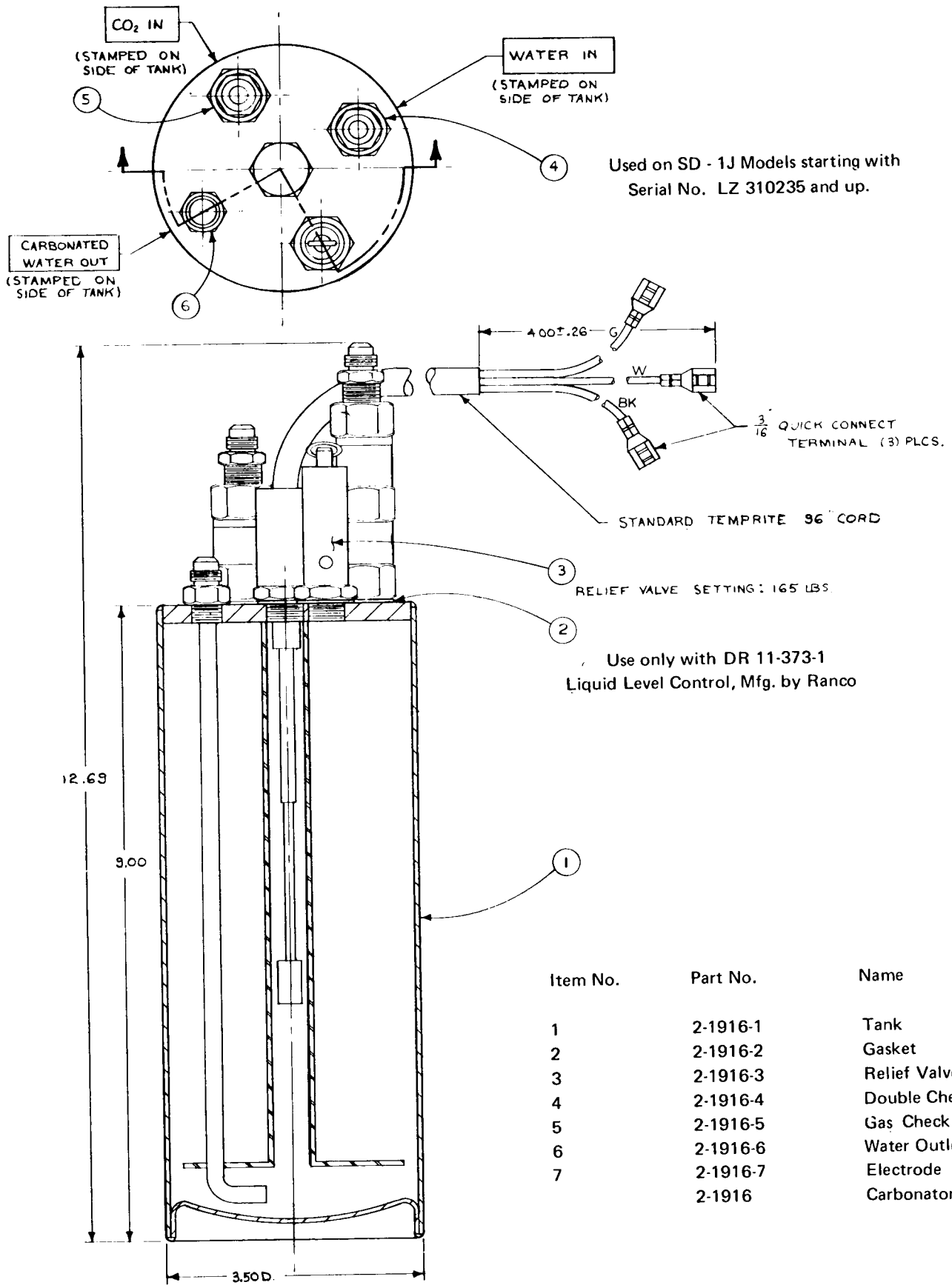

Used on SD - 1J Models starting with Serial No. LZ 310235 and up.

Use only with DR 11-373-1 Liquid Level Control, Mfg. by Ranco

Item No.	Part No.	Name
1	2-1916-1	Tank
2	2-1916-2	Gasket
3	2-1916-3	Relief Valve
4	2-1916-4	Double Check Valve
5	2-1916-5	Gas Check Valve
6	2-1916-6	Water Outlet
7	2-1916-7	Electrode
	2-1916	Carbonator Tank Complete

BASTIAN BLESSING CARBONATOR TANK

Use with SD-1J up to Serial No LZ 310235

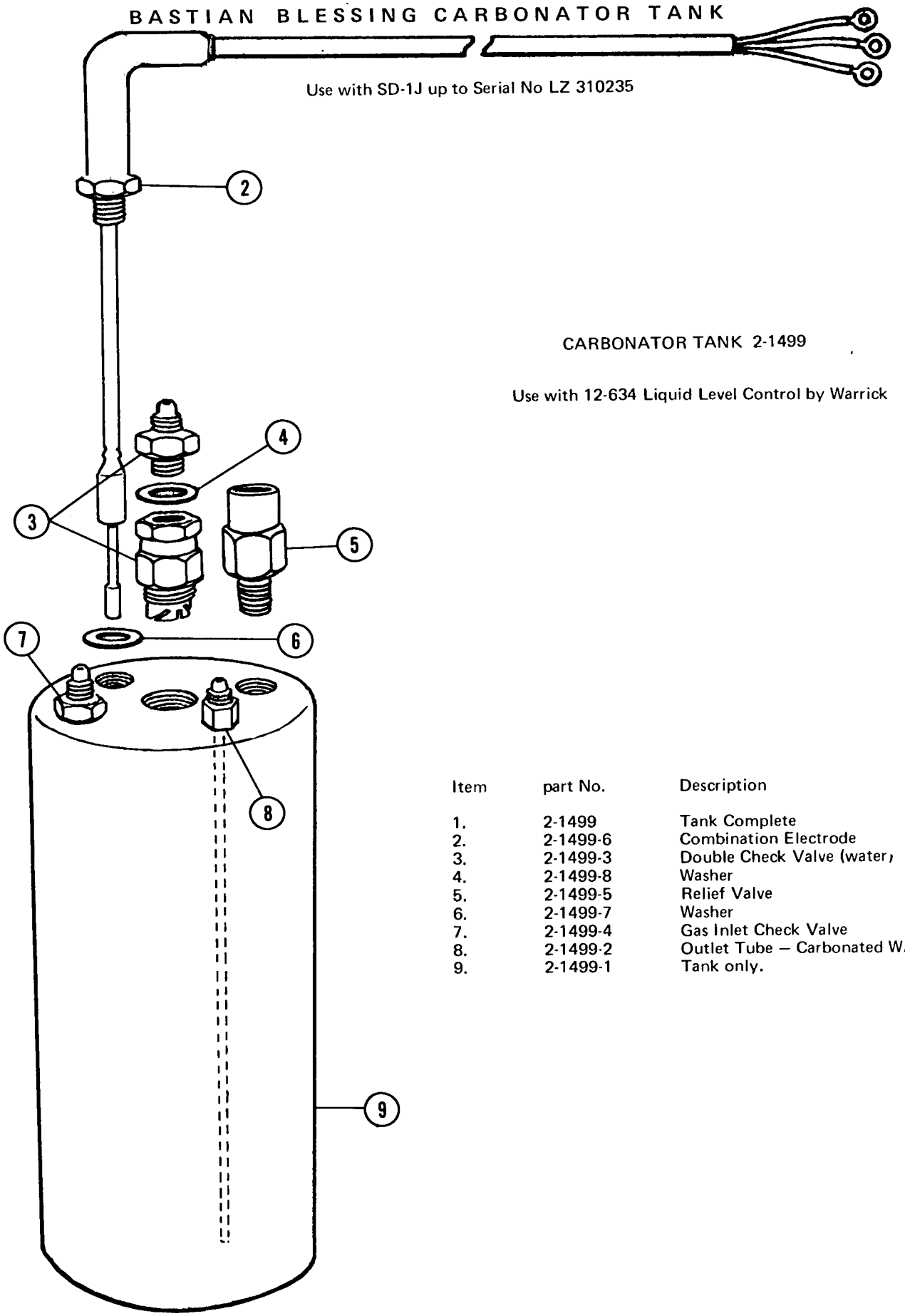

CARBONATOR TANK 2-1499

Use with 12-634 Liquid Level Control by Warrick

Item	part No.	Description
1.	2-1499	Tank Complete
2.	2-1499-6	Combination Electrode
3.	2-1499-3	Double Check Valve (water)
4.	2-1499-8	Washer
5.	2-1499-5	Relief Valve
6.	2-1499-7	Washer
7.	2-1499-4	Gas Inlet Check Valve
8.	2-1499-2	Outlet Tube – Carbonated WAter
9.	2-1499-1	Tank only.

CARBONATOR PUMP ASSEMBLY

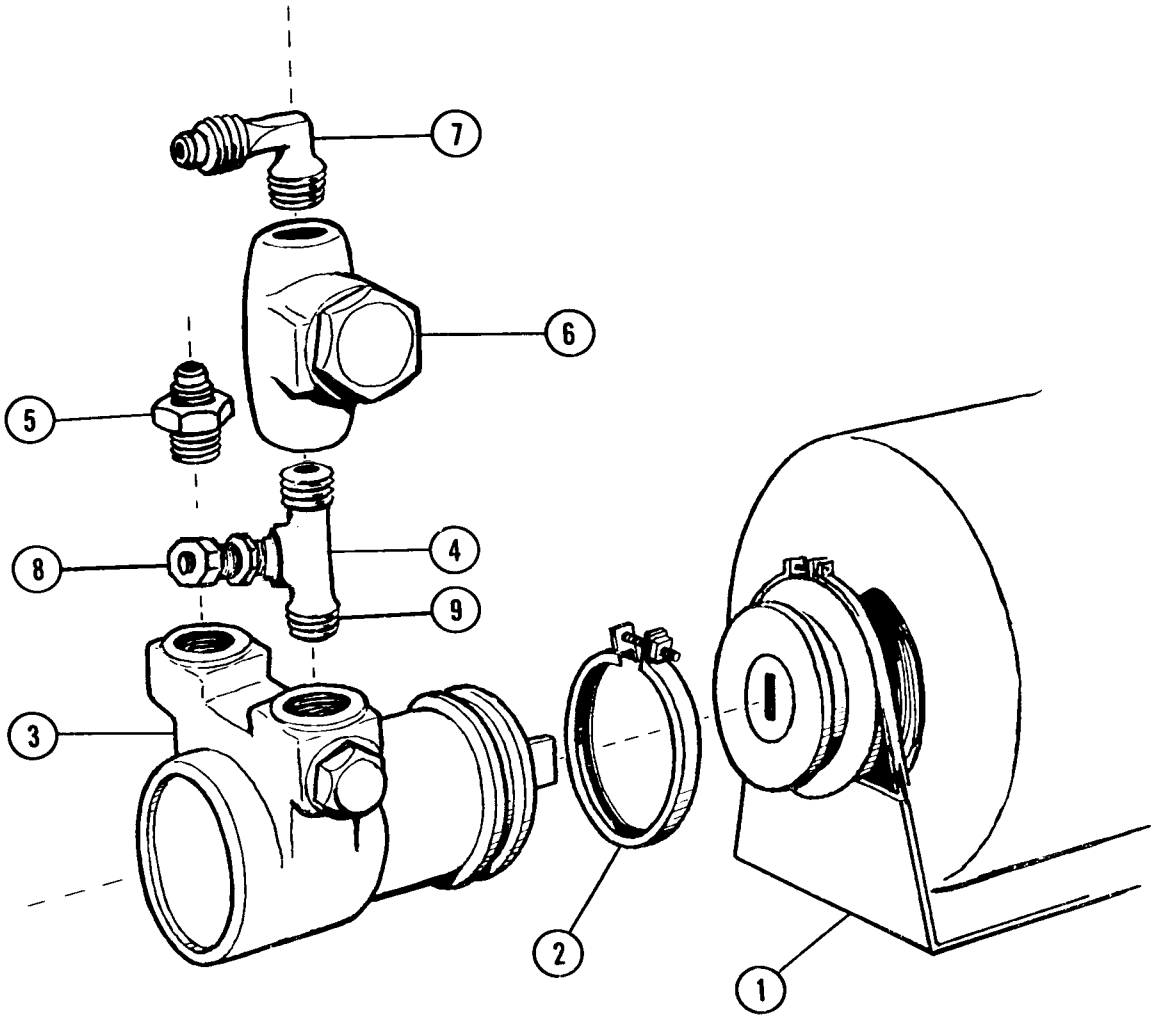

Item	Part No.	Description
1.	12-1339-1	Motor 115/60/1
2.	2-1527	Coupling Clamp
3.	2-1526	Pump
4.	16-608	Brass Tee
5.	16-355	Union 3/8 NPT x 3/8 Flare
6.	16-162-1	Strainer
7.	16-401	Half Union Elbow
8.	16-588-1	St. Connector
9.	2-98-2	Nipple

TOUCH-O-MATIC FAUCET ASSEMBLY

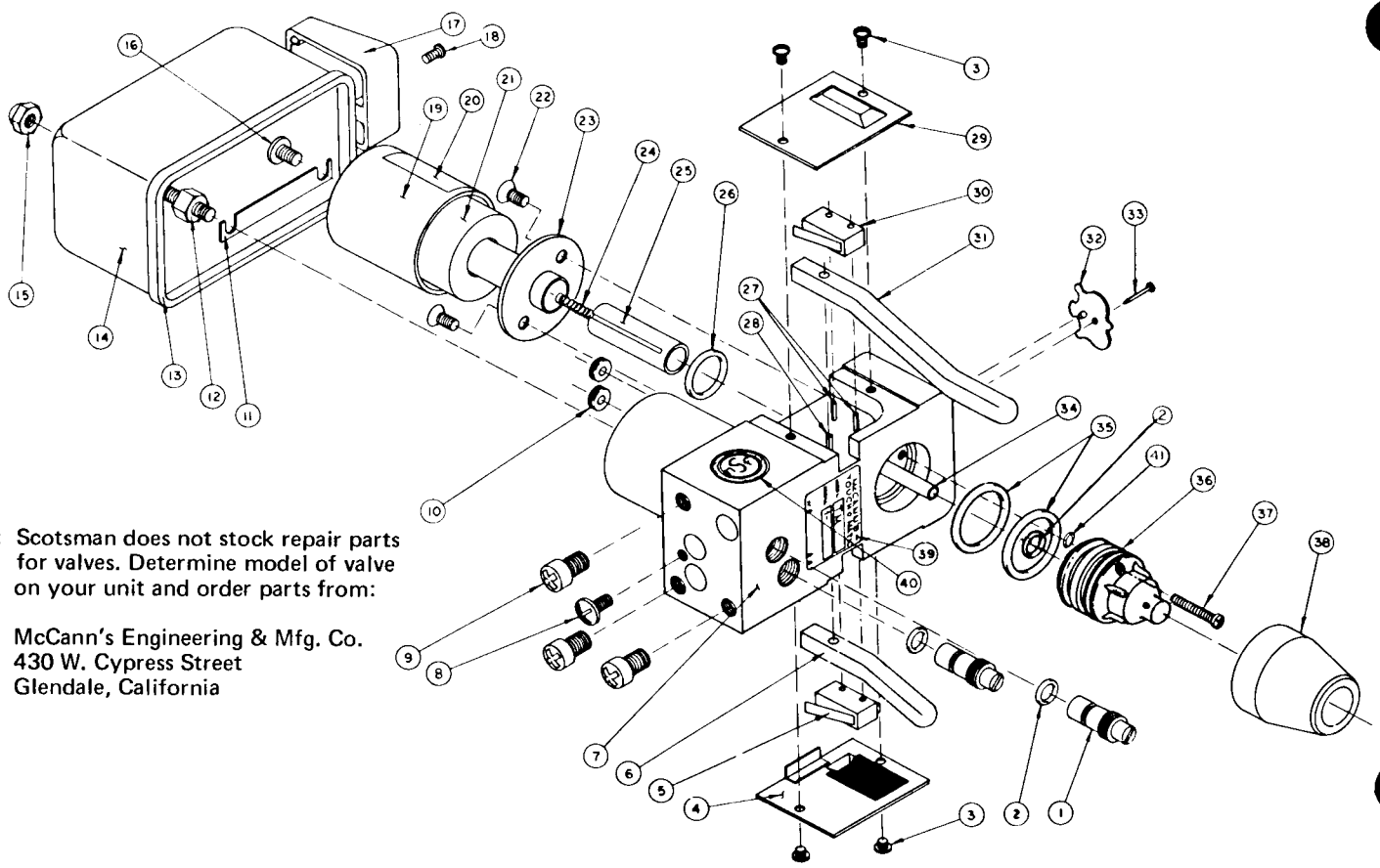

NOTE: Scotsman does not stock repair parts for valves. Determine model of valve on your unit and order parts from:

McCann's Engineering & Mfg. Co.
430 W. Cypress Street
Glendale, California

Item	Part No.	Description	Item	Part No.	Description
1	1	Metering Stem	21	22	Coil (115 V. A. C.)
2	2	"O" Ring, Metering Stem	21	24	Coil (12 V. A. C.)
3	3	Screw, Side Plate	21	29	Coil (12 V. D. C.)
4	152	Side Plate (Right Side)	21	23	Coil (24 V. A. C.)
5	82	Switch Assembly (3 Wires)	22	31	Screw, Plunger Housing Retainer
6	160	Lever, short	23	32	Plunger Housing
7	01-0001	Block, 20-1000	24	38	Spring, Plunger
7	01-0002	Block, 20-2000	25	39	Plunger, Touch-O-Matic
7	01-0003	Block, 20-4000	26	40	"O" Ring Plunger Housing
7	01-0004	Block, 20-1100-20-4100	27	41	Roll Pin, Switch
7	01-0005	Block, 20-2100-20-3100	28	42	Roll Pin, Lever
8	5	Screw, Inlet Retainer	29	151	Side Plate (Left Side)
9	6	Screw, Faucet Mounting	30	137	Switch Assembly, 2 Wires, Standard
10	7	Grommet, Coil Housing	30	138	Switch Assembly, 2 Wires, Special
11	8	Grounding Strap	31	159	Lever, long
11	1508	Lockwasher in place of Part No. 8 on 12 V. D. C. and 20-4000	32	49	Crest, Mc CANN'S
			33	50	Pin, Crest Retainer
12	9	Stud, Cover Mounting short	34	09-0017	Tube, Syrup
13	10	Gasket Cover	34	89	Jet Tube
14	11	Cover (With Medallion Holes)	35	52	"O" Ring Diffuser
15	13	Nut, Cover Retainer	36	09-0018	Diffuser
16	14	Screw, Coil Housing	37	54	Screw, Di ffuser Retainer
17	15	Medallion (Specify Flavor)	38	09-0013	Pouring Spout, Red
18	16	Screw, Medallion Retainer	38	09-0015	Pouring Spout, Black
19	17	Coil Cover	38	09-0014	Pouring Spout, Clear
20	20	Label (Specify Voltage) Coil	39	149	Gasket

I. PRINCIPLE OF OPERATIONS

When the operator presses a glass against the main actuating lever of the faucet, this lever activates an electrical switch, causing the solenoid coil or coils to become energized and the plunger or plungers to be raised electromagnetically. The raising of these plungers allows the syrup and water, which are under pressure, to flow through their respective orifices and into the spout. In the spouts, the various liquids are completely mixed under ideal flow conditions to result in a homogeneous product having a minimum amount of foam. The block in which all of this action takes place is transparent to allow visual inspection of this operation, as well as to visually determine where any obstruction or problem might be.

II. METHOD OF SANITIZING OR CLEANING FAUCET

The faucet need not be dismantled in order to be cleansed. All that is required is simply fill a spare syrup tank with your cleaning agent, connect it to the syrup line to the desired faucet and flush it through facuet and syrup system with CO_2 pressure. A clean water rinse may be accomplished in the same manner.

Back flushing:

a. Release CO_2 pressure on syrup tank.
b. Disconnect syrup line at some convenient point and place line from faucet in a container.
c. Remove spout and replace it with back flush adapter.
d. Hold back flush adapter in place while energizing faucet allowing soda water to reverse flow through syrup side. NOTE: If the back flush adapter is not available, do not remove the spout and place hand palm side up on the spout creating a seal, a towel may be used. Then energize faucet.

The faucet spout should be removed and cleaned weekly.

III. POWER SOURCE

Our atandard Touch-O- Matic Faucet is supplied with 115 Volt A.C.- 60 Cycle coils. However, they can be supplied with various voltages. Naturally each faucet is clearly marked regarding its required voltage, the coil housing (8) is also marked accordingly. The coil itself is color coded to identify its voltage as follows:

RED LEADS indicate – 115 VAC – 60 Cycle
BLACK LEADS indicate – 12 VAC – 60 Cycle
YELLOW LEADS indicate – 12 VDC
BLUE LEADS indicate – 6 VDC

IV. METHOD OF DISMANTLING SOLENOID VALVE

Solenoid housing removal and replacement for repair or exchange.

a. Disconnect power source.
b. Turn off water supply for either water or soda solenoid removal.
c. Turn off CO_2 supply for either water or soda solenoid removal.
d. For soda solenoid removal only, bleed pressure from carbonator tank by SLOWLY opening the bleeder valve on top of carbonator tank.
e. For syrup solenoid removal only, bleed pressure from applicable syrup tank by SLOWLY opening the bleeder valve on top of syrup tank.
f. Remove chrome cover if applicable by unscrewing acorn nut counter-clockwise.
g. Remove solenoid cover by removing cover screw and pulling cover directly away from faucet block.
h. Lift solenoid coil up off of solenoid housing. NOTE: in the event there is not sufficient wire slack to allow the coil to come off the housing, then lift the coil high enough to allow removal of the two flat head phillip screws that hold the housing to the valve base block.
i. Remove both flat head phillip screws holding the housing to the valve base block.
j. Remove the solenoid housing by pulling the housing out of the block.
k. Remove the plunger and the spring from the solenoid housing. NOTE: Care should be exercised in the replacement of all fittings to guard against damaging "O" ring. For ease of installation, it has been found that wetting the "O" ring before installation reduces the danger of cutting the "O"ring.
l. Inspect the plunger, spring and seating area of the plunger in the faucet block. If the plunger seating area in the valve base is chipped or damaged in any way, the faucet block must be replaced. If the rubber seating area of the plunger is deformed, the plunger must be replaced. Inspect inside tubing of solenoid housing for any dirt or particles that could reduce the travel of the plunger. It is suggested that when no defects can be noted by visual inspection that a new plunger and spring be replaced and operation be rechecked. In most instances this will correct the problem.
m. For replacement of the solenoid housing, reverse procedures as outlined. NOTE: Before replacing plunger housing, depress plunger in housing and feel the spring action to insure that spring has been installed properly. CAUTION: BE SURE "O" RING HAS BEEN REPLACED AROUND HOUSING TUBE BELOW HOUSING MOUNTING PLATE BEFORE INSTALLATION

TOUCH-O-MATIC FAUCET ASSEMBLY

V. SERVICE TIPS

1. When the 2 screws (22) that fasten the plunger housing (23) to the plastic valve base (7) are replaced, they should be screwed down all the way. In other words, be sure that the large stainless washer on the plunger housing (23) is pressed firmly against the plastic. If one screw was all the way in and the other was only half way in (for example), the plunger in the housing might "cock" and cause dripping. Caution—these screws do not have to be extra tight, just snug down.

2. When reassembling solenoid, with plunger spring (24), place in plunger (25), allow the plunger housing (23) to be placed over the plunger and spring and held together, thus preventing the plunger spring from falling out while assembling.

3. There is a difference between the Touch-O- Matic Non-Carbonated (NC) and the Carbonated faucet. The Non-Carbonated faucets are marked NC on the underside of the faucet. The NC faucet is designed for plain water. Since this pressure could vary from 10 to 100 psi at various locations throughout the same city, we arrived at a medium flow of water. On this faucet, we use a 3/16" orifice which will pass a sufficient amount of water at 10 pai. This faucet can work on pressure up to 50 psi, but no higher or the plunger will fail to open occasionally.

The Carbonated faucet will operate on pressures up to 124 psi, by using a smaller 1/8" orifice.

4. RECOMMENDED OPERATING PRESSURES

10 to 20 psi on syrup – average 15 psi.
80 to 120 psi on carbonated water – average 100 psi.

5. RATE OF FLOW AND PROPER BLENDING

The fastest rate of flow recommended for the Touch-O-Matic Faucet is 2 ounces per second of finished drink. In other words, a 6 ounce finished drink should take at least 3 seconds to pour. If a faster pour is used, the carbonation in the drink would be reduced.

The typical blend used, is 1 ounce of syrup and 5 ounces of water for a finished 6 ounce drink. However, this may vary with the brand of syrup used, therefore check with your syrup supplier.

To increase flow of syrup or water, turn metering screw out (counter-clockwise) and inward (clockwise) to decrease flow. These adjustments are sensitive and should be treated as such, by not turning more than an eighth of a turn at a time.

SERVICE ANALYSIS
FAUCET SECTION

COMPLAINT	POSSIBLE CAUSE	CORRECTION
1. Syrup or water drips through spout.	Foreign matter on plunger seat.	Operate faucet sereral times to flush out Remove plunger from solenoid valve and clean valve port and plunger seat. Back flush valve. (See Servicing Note No.2)
	Nick or cut on plunger seat.	Remove plunger and replace.
	Broken or defective plunger Spring	Remove spring and replace.
2. Faucet continues to pour even when lever is not actuated.	Lever is sticking.	Clean syrup from lever and lubricate with vaseline.
	Electric switch defective.	Replace.
	Plunger Stuck.	Replace spring and/or clean solenoid housing. Back flush valve.
3. Noisy solenoid valve-	Dirt or particles in back of plunger	Operate faucet several times to flush out. Back flush. Remove and clean plunger and solenoid housing.
4. Actuation of lever results in no flow.	Defective switch	Replace.
	Bad solenoid coil and switch connection	Check and correct.
	Power off.	Check circuit and fuse and correct
	Low voltage.	Voltage at coil should be 100 volts on 115 VAC line. If volt-meter not available, turn off all lights and other electrically operated devices to check under best conditions at that location.

SERVICE ANALYSIS

FAUCET SECTION

COMPLAINT	POSSIBLE CAUSE	CORRECTION
5. Drink too sweet insuf-soda or water to syrup ratio (heavy drink)	Soda solenoid coil defective	Replace.
	Defective soda solenoid coil connection	Check and correct.
	A non-carbonated faucet may be in a high carbonated faucet application.	Replace with correct faucet
	Insufficient soda flow due to low carbonator pressure	Check CO_2 supply pressure and replace tank if CO_2 pressure is low and/or reset regulator as required.
	Obstruction in water and/or soda line.	Clean out line.
	Water shut-off valve partially closed.	Check and open freely.
	Syrup pressure too high.	Check and reset low pressure regulator.
6. Drink not sweet enough excessive soda or water to syrup ratio (light drink)	Syrup solenoid coil defective.	Replace.
	Defective syrup solenoid coil connection.	Check and correct. Replace
	Carbonator pressure too high	Check and correct.
	Obstruction in syrup line.	Check transparent block to see if there is any obvious obstruction.
		Back flush. (See Servicing Notes No. 2)
		Remove and clean syrup plunger and solenoid coil housing.
	Water pressure too high. Drink will also have low carbonation.	Add regulator in water inlet line.
7. Foaming of finished drink	Over carbonation of soda.	Reduce CO_2 pressure on carbonator.
	Carbonation of syrup.	Reduce CO_2 pressure on syrup. Some root beers will foam when their CO_2 pressures are above 15 psi.
		Larger sized syrup lines may be required for long runs.
	Dirty lines, valves, etc.	Backflush. (See Servicing Note No. 2)
		Remove and clean syrup plunger and solenoid coil housing.
	Supercooled ice in drink.	Use ice at approximately 32°F.
	Product temperature too high.	Product temperature must be below 42° F.
	Pressure too high.	Reduce CO_2 pressure to recommended setting.
8. Inconsistent brixing.	Dirty lines, valves, etc.	Backflush. (See Servicing Note No. 2)
		Remove and clean syrup plunger and solenoid coil housing.
	CO_2 supply low.	Renew CO_2 cylinder.
	Leak in CO_2 line.	Locate and correct.
	Leaking water check valve on carbonator tank.	See carbonator trouble shooting guide.
9. Insufficient carbonation.	See carbonator trouble shooting guide.	

NOTE: In new installations, objectional taste or odor, foaming and inconsistent brixing may be the result of contaminants such as oils or pipe sealing compounds, Thoroughly clean all lines prior to installing and back flush are required.

CONVERSION KIT
LOCATION - USAGE

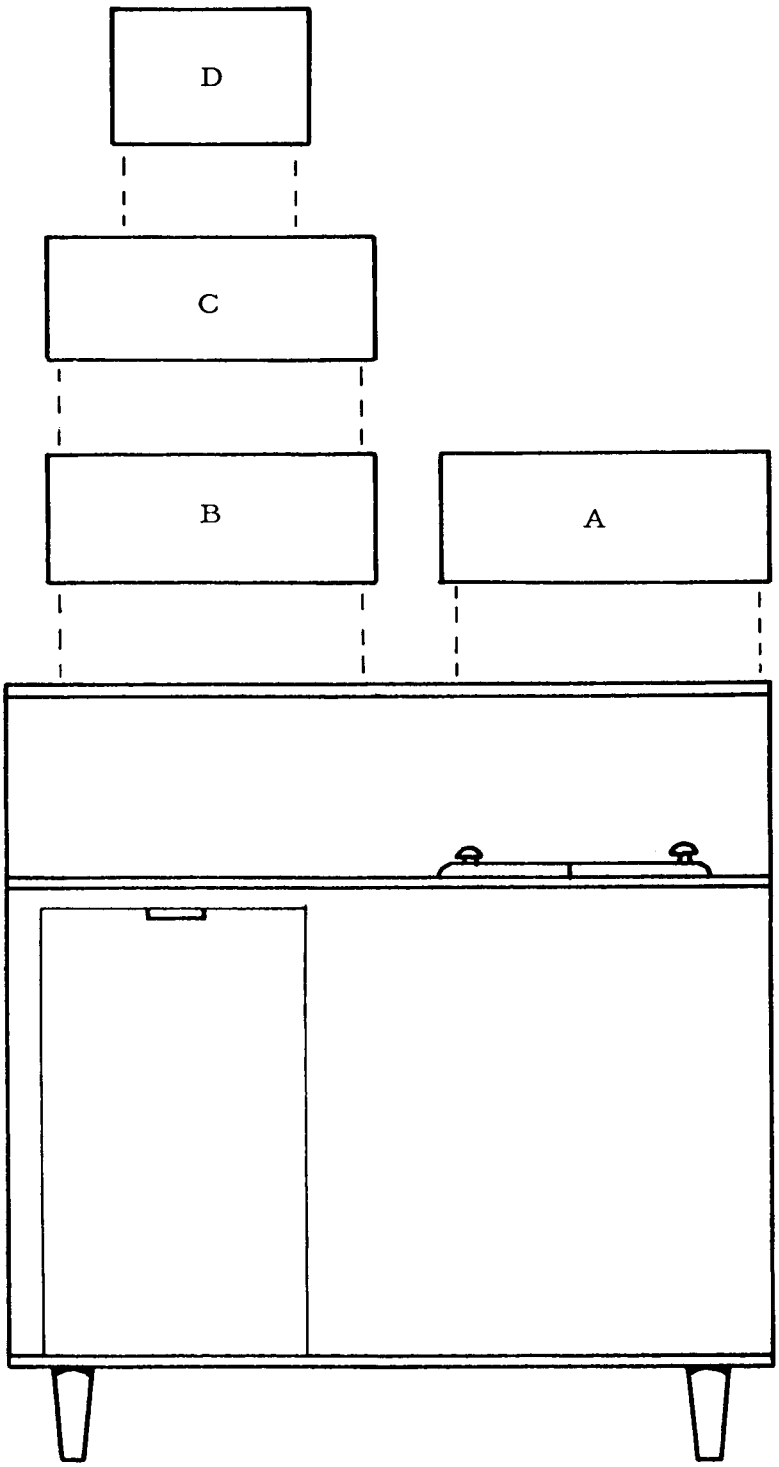

A. Syrup Rail Kit
Part No. K-43R

B. Satellite Kit
Part No. K-42S

C. Electric Valve Kit
Part No. K-41E

D. GravityType Syrup
Dispensing Heads Not
Sold by SCOTSMAN .
Purchase from supplier.

NOTE:

CO_2 gas cylinders, syrup tanks and regulators are not part of the complete unit or the accessory kits.

Contact your SCOTSMAN Salesman for these items.

Suggested source:

EXCELLALL PRODUCTS DIV.
Bastian-Blessing Co.
4201 W. Peterson Ave.
Chicago, Illinois

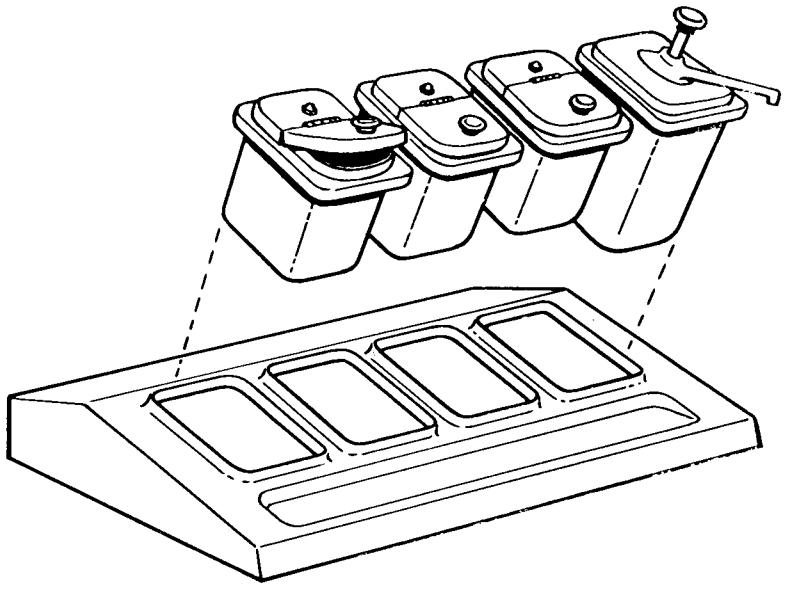

ILLUSTRATION A

K - 43R Syrup Rail Kit

Kit does not include syrup or fruit jars.

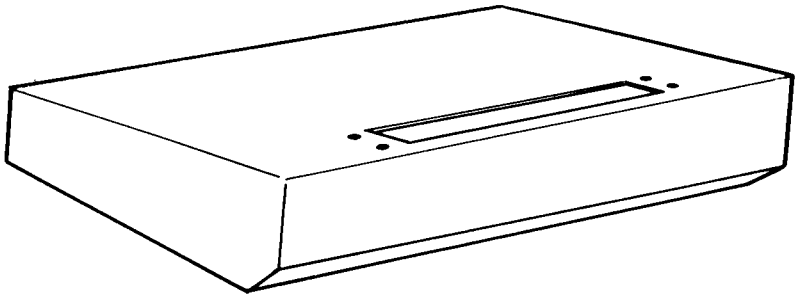

ILLUSTRATION B

K - 42S Satellite Kit

Kit does not include Satellite head.

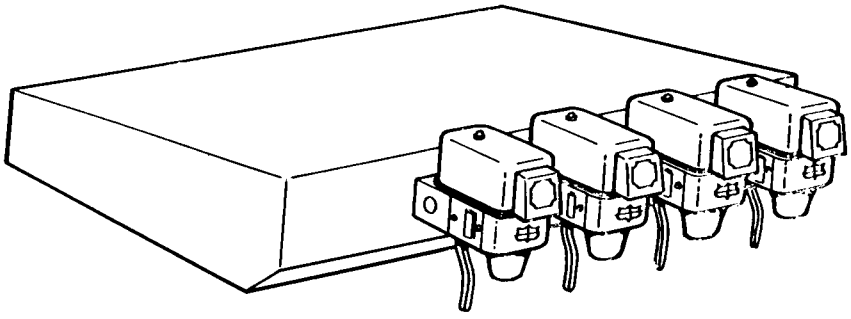

ILLUSTRATION C

K - 41E Electric Valve Kit

Kit comes complete with valves installed.

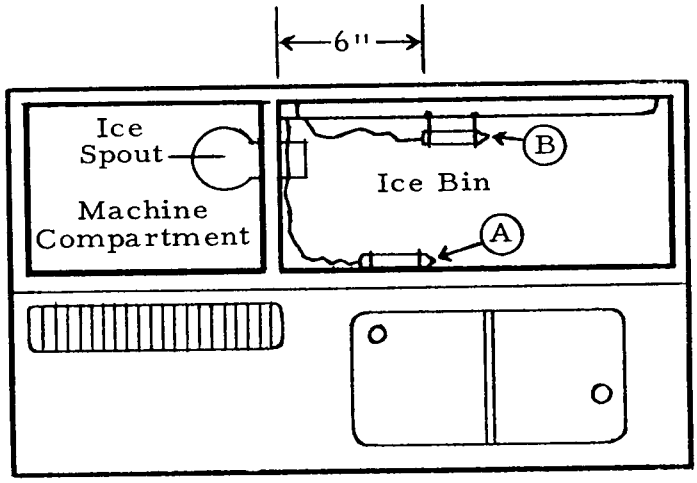

TOP VIEW OF SD1J

When installing topping tanks and K - 43R syrup rail, move thermostat from location A to location B. At location B bulb thermostat holder is clipped on to the tube cover panel. If thermostat is not moved the ice filling the bin will push the topping tank up before the bin thermostat stops ice machine.

CONVERSION KIT CONTENTS
Usage

A. Syrup Rail Kit

Part No. 43R

Mounts Right Hood Top
Illustration "A"

This kit contains a tapered stainless steel framework that replaces right hood top panel. Frame rail will hold four standard size syrup or crushed fruit jars. The jars are not included in this kit and must be purchased seperately. Because of the location of the ice spout, the first two jars on the left as you face the unit must not exceed a depth of 6-1/2" from rail top.

B. Satellite Ki t
Part No. K 42S

Mounts Left Hood Top
Il lustration "B"

This kit contains a stainless steel mounting station for use with Satellite head that replaces present left hood top panel. Kit also contains adaptor hardware and product lines. Kit does not include Satellite head, must bepurchased seperately.

C. Electric Valve Kit

Part No. K 41E

Mounts Left Hood Top
Illustration "C"

This kit contains a stainless steel mounting station that replaces present left hood top panel. Mounting station is pre-drilled to accept four (4) McCann electrically operated syrup dispensing valves. Supplied in kit are (2) two single lever carbonated valves, one (1), two lever carbonated valve and one (1) two lever sweet water valve.

All necessary product lines, fittings, etc. are also supplied in this kit.

D. Represents anyone of numerous manufacturer's gravity type, post-mix syrup dispensing heads that can be adopted to this unit.

Because of the large variety of dispensing heads available, Scotsman does not attempt to make a conversion bracket for each one. However, the left side stainless steel top panel, utilizing the stiffness channels packed in bin. can be used to support the particular dispensing heao being used. Drill mounting, drain holes through this panel and secure to the underside using stiffness channels. Scotsman does not sell dispensing heads, order from supplier. Suggest when ordering gravity type dispensing heads that you specify one valve to have a split lever whereby cold water can be drained through head. There is no water station provided on complete unit although there is a flexible sweet water line provided.

E. K 41E Electric Valve Kit

Item No.	Part No.	Description
1.	2-1205	Valve, Single Lever, Carbonated Flavor
2.	2-1205-1	Valve, Two Levers, Carbonated Flavor & Soda
3.	2-1205-3	Valve, Two Lever, Non-Carbonated Flavor & Plain Water
4.	A-18282	Carbonated Water Manifold Ass'y
5.	A-18285	Plain Water Tube Ass'y
6.	A-17728	Syrup Line, Post Cool
7.	A-17730	Syrup Line, Pre Cool
	2-1249	Nylon Washer
	2-1204	"O" Ring

* Shown on next page

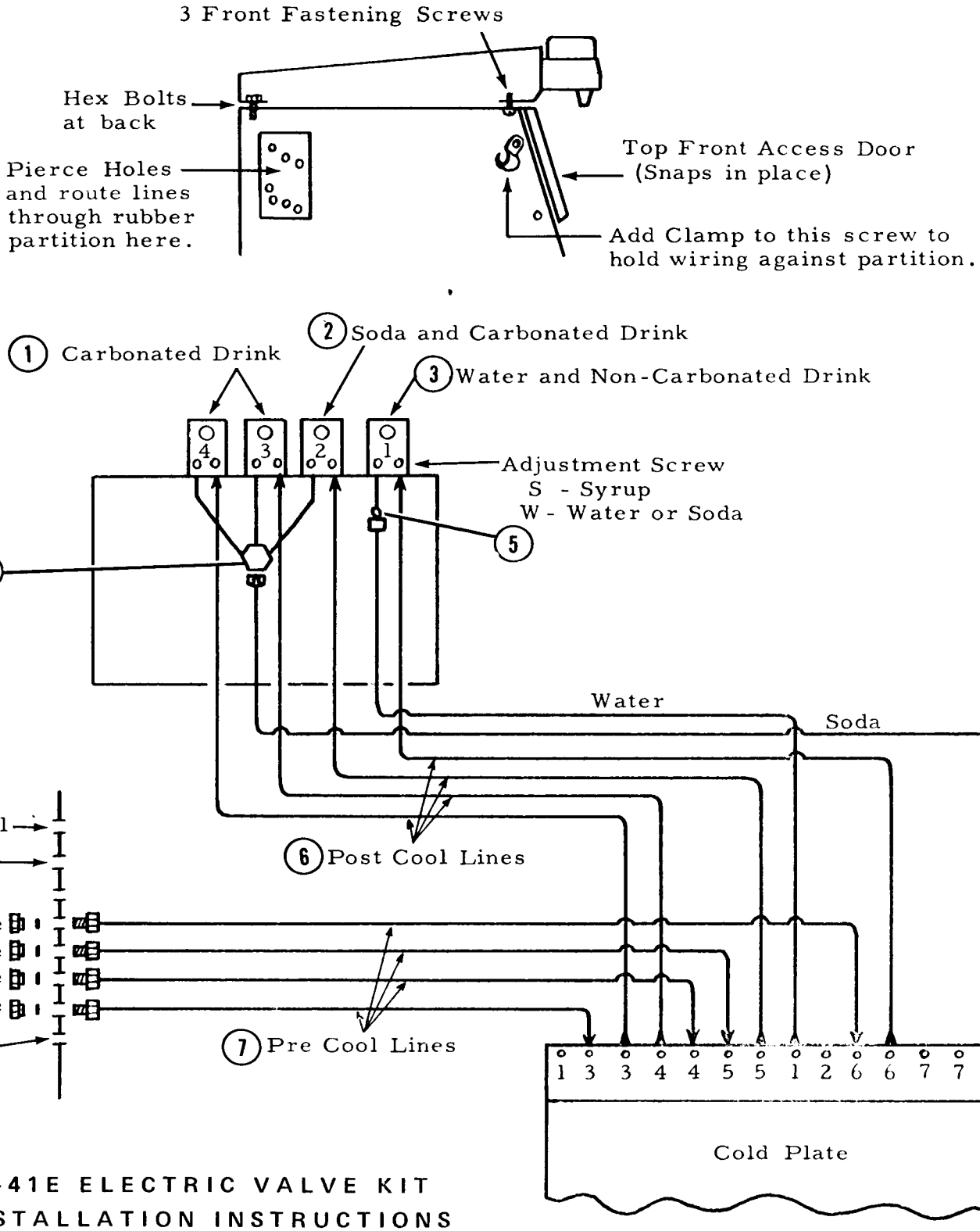

K-41E ELECTRIC VALVE KIT
INSTALLATION INSTRUCTIONS

INSTALLATION INSTRUCTIONS
K41E ELECTRIC VALVE KIT

1. Unpack carton and check material list to insure all parts of list are included.

2. Remove icemaker top front access panel.

3. Remove both top panels by removing the 3 sheet metal screws from underside of front hood brace. Loosen 2 hex bolts at back lip and slide panel back and off.

4. Remove stainless steel syrup line protector panel from storage bin back wall. Held in place by open slots. Pull straight up and out.

5. Now take the four syrup pre-cool lines, Part A-17730 from kit, also needed will be four each fibre washers 3-579, and S-7044 nuts to secure male end of lines to rear cabinet bulk head. Remove rear service door and connect four lines putting male end through from inside cabinet bulkhead and securing to outside with first a fibre washer then the S-7044 back nut. See installation sketch, attach to proper circuit numbers on cold plate, run lines through sponge rubber opening next to ice delivery spout. Attach female ends of lines to plate using small plastic washer on each connection.

6. Now set valve kit assembly on top of unit to facilitate connections of lines to kit and through sponge rubber opening between machine compartment and line.

   a. Connect flexible soda water line to 3 way manifold on underside of valve kit. Soda line is capped off on end lying in machine compartment – other end is already attached to cold plate No.2. See sketch.

   b. Flexible cold sweet water line is alo capped off on end lying in machine compartment. Fasten to single sweet water valve connection on underside of valve kit per sketch. Other end is already connected to cold plate on center connection No. 1.

7. Run four syrup post-cool lines from valve kit through sponge rubber opening next to spout and attach to proper circuit on cold plate per sketch. Use plastic washers supplied on cold plate connections.

8. Run electric valve kit wiring through plastic clamp as shown, into control box and fasten to upper terminal strip per wiring diagram on control box cover.

9. Connect CO_2 pressure (30 lb.) to all connections made, check for leaks with bubble soap.

10. Replace stainless steel syrup line protector panel on rear bin wall.

11. Install right side hood top panel and secure, also secure valve kit assembly to hood brackets.

12. Check operation of complete unit, replace all service doors, panels.

ELECTRONIC OR SATELLITE KITS

Install the conversion kit package or packages user requires per instruction given in this manual and packed in kit. After all connections are made within unit cabnitery, install the remote syrup tanks, lines and the CO_2 gas cylinder, hi and lo pressure gauges with lines leading to cabinet connections.

Make sure CO_2 regulators are in a normally closed or zero reading position before opening CO_2 cylinder valve.

Slowly open CO_2 cylinder valve and adjust high pressure gauge feeding carbonator tank to a value of 85 – 100 lb gauge. Next adjust lo pressure regulator feeding remote syrup tanks to a value of 20 – 25 lb. gauge reading. NOTE: Lo pressure system is used to force syrups from remote tanks through product lines, cold plate and up to dispensing valve. Most syrup tank manufacturers do not recommend CO_2 pressures in excess of 30 lb. gauge therfore be sure and follow that particular manufacturers instructions on proper application.

Check for leaks at connections made from regulators up to back of dispensing valves with bubble soap. Repair any leaks found.

Shut off hand valve at CO_2 tank and bleed all pressure out of system.

Fill syrup tanks half full of clean water, replace tank covers and open CO_2 valve. Open water supply valve feeding complete unit, then turn on the carbonator switch in unit control box.

Now actuate dispensing valves and draw the clean water from syrup tanks through valves. Hold in carbonated water lever. Check to make sure the carbonator pump cycles correctly.

After flushing system, shut off CO_2 cylinder, carbonator switch and bleed off pressure. Dump any water left in syrup tanks.

Fill tanks with syrups of user's choice, replace covers, and open CO_2 cylinder valve.

Turn on both carbonator and ice make switches. Actuate each dispensing valve until a full flow of syrup comes thru valves. Do not attempt to adjust dispensing valves until cold plate is completely covered with ice, then make adjustments as required.

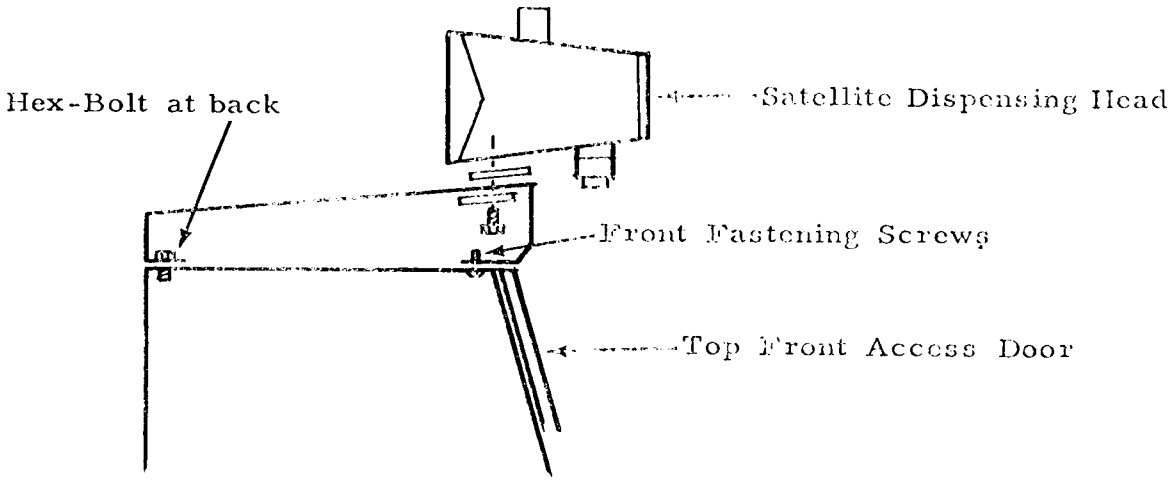

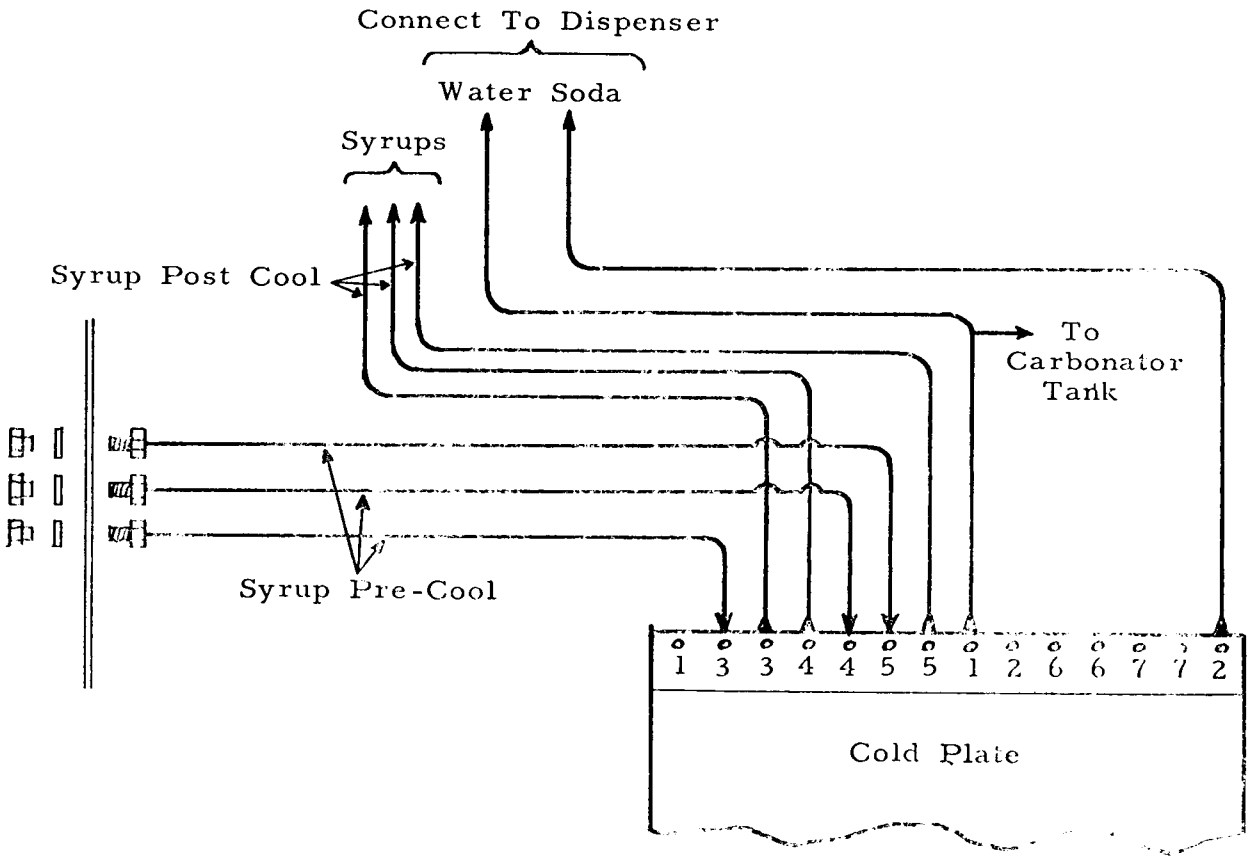

K-42S SATELLITE KIT

INSTALLATION INSTRUCTIONS

PARTS LIST SD-1J

CABINET PARTS

Description	Part No.
Rear Service Door	A-17754
Rear Panel-Case	A-17753
Left Top Panel-Hood	A-17829
Drip Grill	2-1553
Right Top Panel-Hood	A-17812
Ice Bin Door	2-1550
Hood Assy-less Panels	A-17616
Right Panel-Case	A-17749
Scotsman Emblem	15-156-1
Front Panel-Hood	A-22280
Front Panel-Case	A-17766
Front Service Door	A-17615
Leg	A-15803-1
Leg Leveler	8-522-1
Left Panel-Case	A-19156

CARBONATOR PUMP ASSY

Motor 115/60/1	12-1339-1
Coupling Clamp	2-1527
Carbonator Pump	2-1526
Brass Tee	16-608
Half Union Elbow	16-401

FREEZER ASSY

Freezer Complete	A-20713-1
Snap Ring	3-553
Worm Shaft Cap	A-7701
Cap Screw	3-758
Worm Tube Washer	A7699
Bearing (Matched Set)	2-1412
"O" Ring	13-617-16
Ice Breaker	A-14591
Worm Shaft	2-1538
Worm Tube, Acc., Suction Line	A-20712
Washer	3-1410-3
Spout Casting, Rear	A-18430
Spout Casting, Front	A-14254
Bolts	3-1403-48
Water Seal	2-1300
Lower Bearing	2-417
Drip Pan	A-18153
Breaker & Bearing Assy	A-14678
Adapter	2-1914
Spline Drive Coupling	2-1913

CONDENSING UNIT

Description		Part No.
Condensor W. C.		18-368
Hi-Pressure Control		11-357
Low Pressure Control		11-358
Compressor 115/60/1	W.C.	18-2210
Compressor 115/60/1	A.C.	18-2210
Klixon		18-2200-26
Starting Capacitor		18-2200-29
Relay		18-2200-25
Water Valve		11-198
Fan Blade		18-285
Fan Motor		12-1575-1
Condensor	A.C.	18-234
Condensor Shroud		A-18229
Fan Motor Bracket		18-422

CO_2 AND WATER CIRCUIT

Flexible Line	A-17737
Water Line	A-17718
Soda Line	A-17743
Soda Line	A-17743-1
CO_2 Line	A-17732
Storage Bin	A-21645
Cold Plate Assembly	A-18028
Liquid Level Control	11-373-1 or 11-368-1
Carbonator Tank	2-1916
Electrode	2-1916-7
Gas Check Valve	2-1916-5
Washer (check valve-water)	2-1916-2
Relief Valve	2-1916-3
Washer (Electrode)	2-1916-2
Double Check Valve	2-1916-4
Outlet Tube-Carbonated Water Tank only	2-1916-1

RESERVOIR ASSY

Reservoir Cover	2-1793-3
Inlet Valve Assy	2-1793-2
Reservoir Body	2-1793-4
Bracket Nut	2-1793-5
Reservoir Assembly	A-22348

TABLE OF CONTENTS

	Page
Forword	1
Table of Contents	2
General Description	3
Installation Specifications	4-5
Introduction	6
Mechanical Specifications	7
Installation	8-10
Start Up	11
Chassis Assembly Views	12-13
Ice Maker Section	
Operation - Components - Refrigerant	14-16
Wiring Diagrams	17-18
Service Analysis	19-22
Cleaning Instructions	23
Maintenance Instructions	24
Repair Parts Section	25-31
Carbonation Section	
Facts & History of CO_2	32-37
How It Works (Sources)	38
CO_2 Regulators - Operation	39-40
Carbonator Section	41-42
Syrup Tank System - Pressure Types	43
How It Works	44
Carbonated Water Schematic	45
Wiring Diagram - Liquid Level Control	46
Service Analysis Charts	47-48
Electronic Valves - Parts & Service	49-51
Repair Parts Section	52-53
Conversion Kits - Accessory Items:	
Location - Usage on SD-2H	54
Kit Illustrations - Installation	55-62
Parts List	63

THIS PAGE
INTENTIONALLY
LEFT BLANK

THIS PAGE
INTENTIONALLY
LEFT BLANK

DESCRIPTION

The SCOTSMAN AUTOMATIC DRINK DISPENSER is designed for drugstores, resturants, cafeterias, ball parks, drive-ins, amusement parks, theatres--in fact, any place where crowds gather and seek ice cold, thirst quenching refreshments in a hurry. The continuous flow dispensers, together with the concealed SCOTSMAN crushed ice maker, is designed for the peak periods of traffic.

ATTRACTIVE COMPACT CABINET

Dark grey finish anodized aluminum trim, up-to-date-styling, and removable panels for easy access to mechanical parts. Hood assembly of stainless steel attractively designed for front or back counter installation.

SEALED REFRIGERATION SYSTEM

Provides quiet, efficient operation of the machine. Compressor motor is spring mounted, the worm motor and carbonator pump is rubber mounted for quiet operation.

SELF-CONTAINED STORAGE BIN

Stores its own ice supply in a heavily insulated, stainless steel storage bin with handy access door opening in hood-counter.

STANDARD OVER-ALL DIMENSIONS

Allows automatic drink dispenser to be installed in harmony with existing counter equipment.

HOW IT WORKS

The unit is completely automatic; water is circulated through a self-contained carbonator which guarantees a ready, abundant supply of perfect carbonated water at all times. Maximum cooling of sweet water, carbonated water and syrups is accomplished by the large capacity cold plate which forms the ice storage bin bottom. All modern dispensing heads allow the mixture of a set amount of syrup and carbonated water. A manual switch starts the ice machine and from then on ice is produced automatically in small uniform pieces. When the storage bin fills, a bin thermostat automatically shuts the machine off and causes it to start up again when the ice is removed from the storage bin.

SCOTSMAN

DRINK DISPENSER ICE MACHINE

SD-2H series

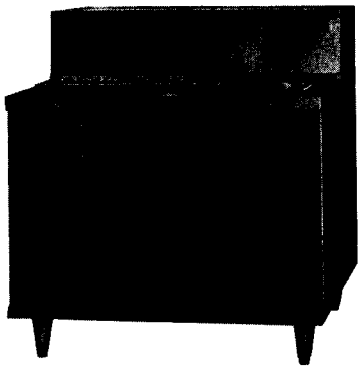

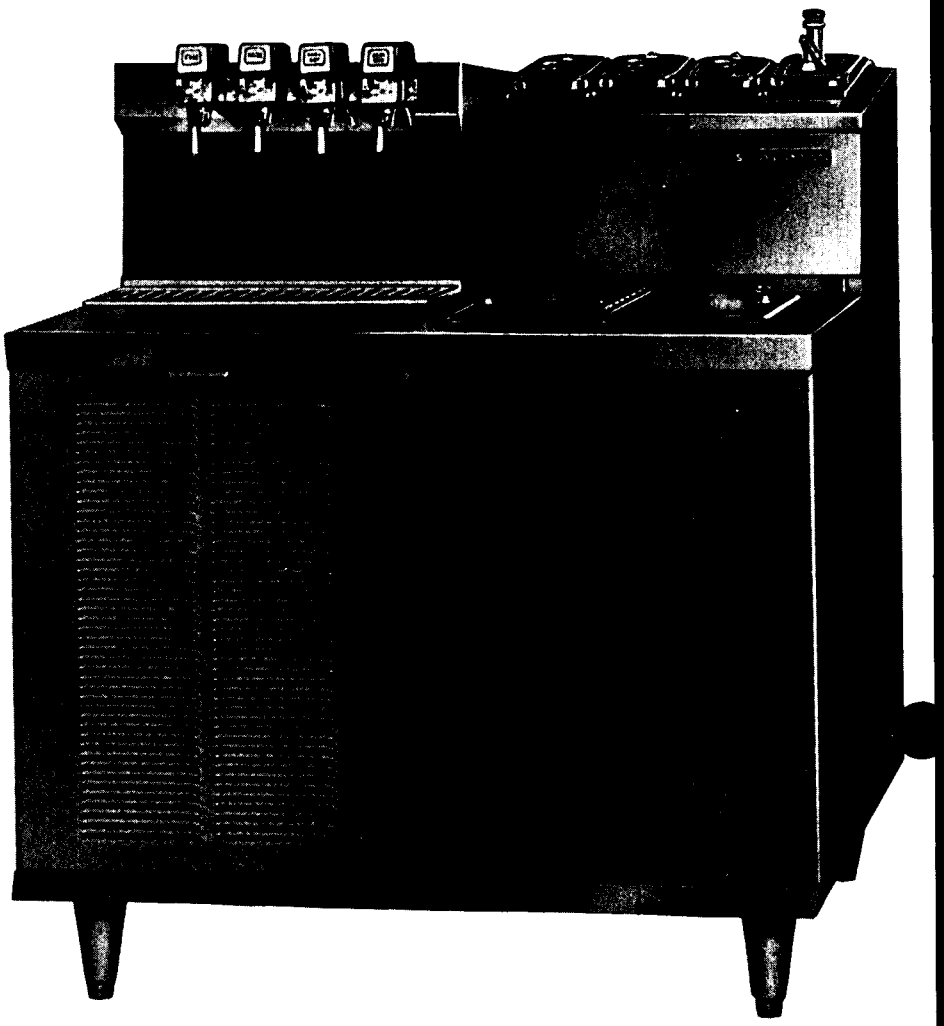

ice making capacity

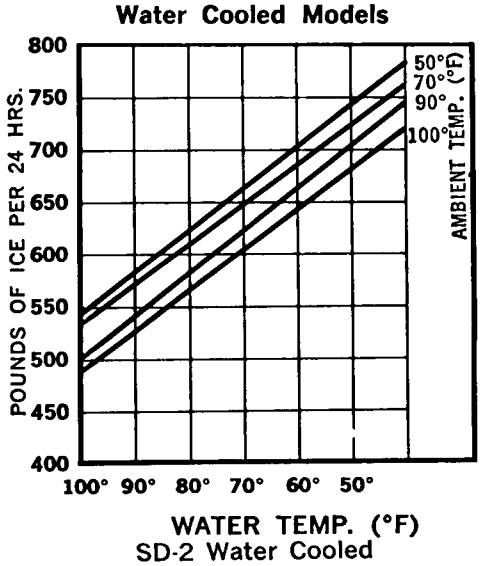

SD-2 Water Cooled

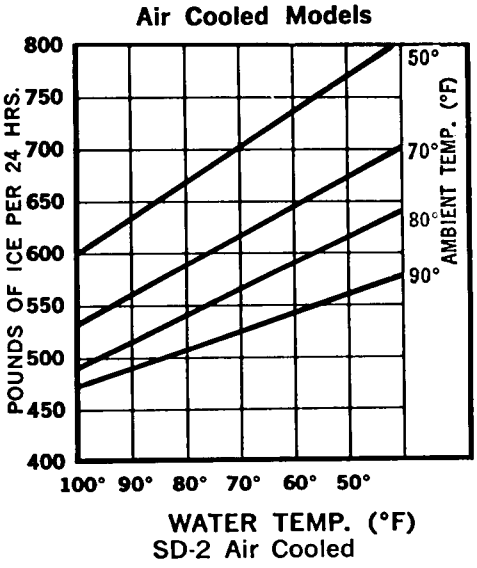

SD-2 Air Cooled

SPECIFICATIONS

COMBINATION ICE MACHINE AND DRINK DISPENSER	MODEL SD-2H	MODEL SD-2WH	MODEL SD-2H-SS	MODEL SD-2WHSS
Daily capacity up to 650 lbs.	X	X	X	X
Self contained storage bin. Stores up to 200 lbs.	X	X	X	X
Heavy duty 1/2 H.P. Compressor	X	X	X	X
Air cooled condenser	X		X	
Water cooled condenser		X		X
1/4 H.P. evaporator drive motor	X	X	X	X
1/4 H.P. carbonator system	X	X	X	X
Standard 115 V. 60 cy. 1 ph. AC	X	X	X	X
1/4" CO2 inlet SAE Flare	X	X	X	X
3/8" water inlet SAE Flare	X	X	X	X
3/8" water inlet SAE Flare		X		X
Condenser outlet 3/8" O.D. Tube		X		X
Sump and drip drain 5/8" O.D. Tube	X	X	X	X
5/8" bin drain O.D.	X	X	X	X
Textured dark grey exterior	X	X		
Stainless steel exterior			X	X
Height with legs 45 1/2" plus "A" below.	X	X	X	X
Height to working surface with legs 35 1/2"	X	X	X	X
Width 40"	X	X	X	X
Depth 31"	X	X	X	X
Approximate shipping weight	567	567	567	567

Cabinet dimensions on line drawings below reflect all SD 2H units up to serial number 172910. See next page for serial numbers above 172910.

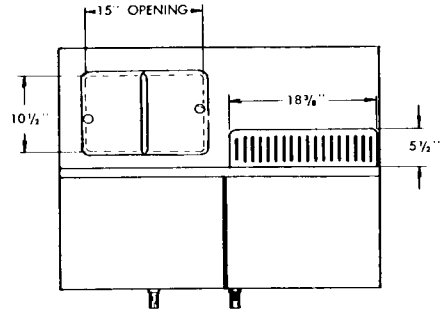

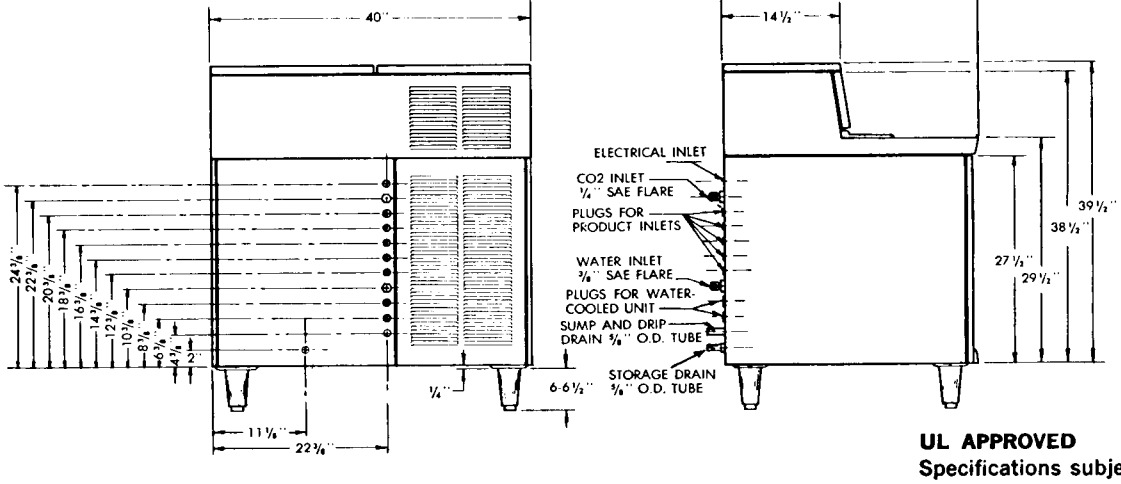

"A" ACCESSORY KITS

K-41E

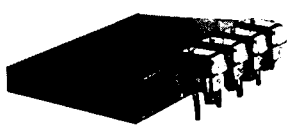

Electric valve unit: dispenses four flavors plus carbonated and plain water. Prefabricated hose assembly speeds internal connections. Easily installed by removing top panel at left of machine, and setting unit over the opening.

K-42S

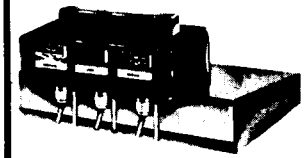

"Satellite" postmix head base: provides mounting surface and prefabricated hose assembly for easy installation of this popular remote postmix dispensing head. Replaces top panel at left of machine. Head not included.

K-43R

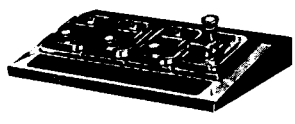

Syrup rail kit: holds four jars, replaces top panel at right of machine. Chilled air from ice bin provides refrigeration. Jars not included — openings accept 4 1/16 x 6 3/4" jars with depths of 6 9/16" or 9 1/16". Maximum of two 9 1/16" jars may be used.

UL APPROVED

Specifications subject to change without notice.

INTRODUCTION

SCOTSMAN MODEL SD2-H DRINK DISPENSER IS DESIGNED TO provide the utmost in flexibility to fit a particular users needs.
Hood top panels are seperated and removable to allow use of numerous syrup dispensing heads and accessories as required.

A seven circuit cold plate forms the ice storage bin bottom allowing use of five syrup flavors plus a cold sweet water and carbonated water cicuit.

A complete carbonated water system comes built in, including carbonator pump and tank with connections thru cold plate.

There are no syrup lines (pre-cool) connected from the cabinet fittings to the cold plate nor post cooled lines from plate to fixture. These lines come with the Scotsman kits K-42S Satellite and K-41E Electric valve kit.

All connections for syrup, water and CO_2 gas are located on a common panel at the rear of the cabinet back. Drains and electrical supply lines are also located at cabinet back.

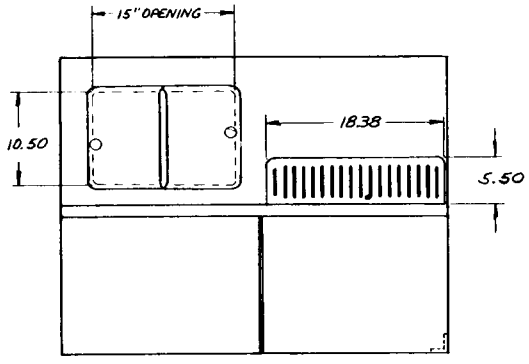

For serial numbers above 172910

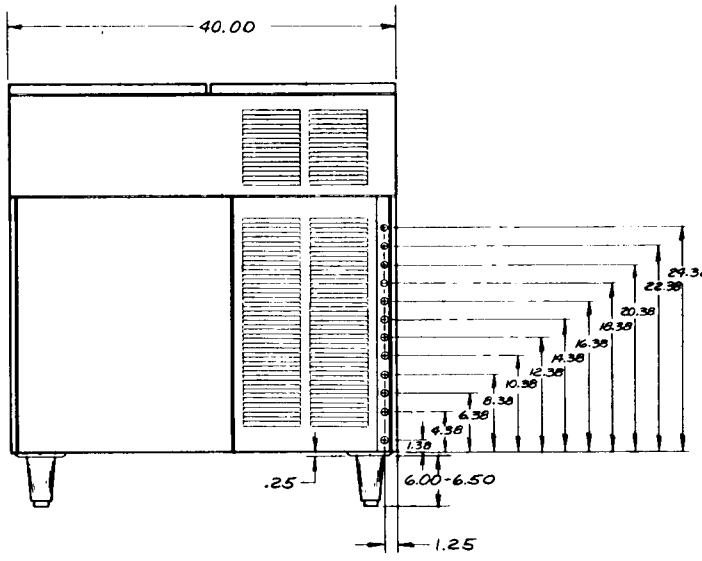

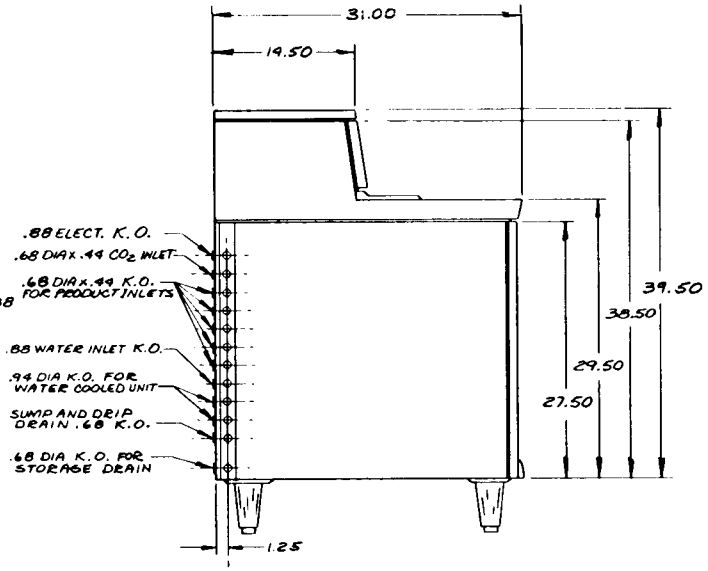

DRINK DISPENSER
General Specification

ELECTRICAL RATING	SD-2-H
Input Voltage	115 60/1
Amperage - Total	17.2
No. of Motors	3
Largest Motor - Compressor	1/2 H.P.
Amperage - Largest Motor- Compressor	7.4 Amps.

PLUMBING AND CO_2	
Water Inlet (all Models)	3/8" Flare
Water Inlet - Condenser (W.C. models)	3/8" Flare
Drain Overflow	5/8" O.D. Copper
Drain - Storage	5/8" O.D. Copper
Drain Condenser (W.C. models)	3/8" O.D. Copper
CO_2 Connections	1/4" Flare
CO_2 Line Size Recommended	1/4" to 10' run

ICE MAKER SECTION	
Compressor	1/2 H.P.
Condenser	Air or Water Cooled
Refrigerant	R - 12
Refrigerant Control	Capillary tube
Standard Voltage Characteristics	115, 60, 1
Drive Motor	1/4 H.P.
Ice Making Capacity	* 650 Lbs. per day
Storage Capacity	200 lbs.

CARBONATOR SECTION	
Motor	1/4 H.P.
Pump - Procon	60 gph
Switch - Pump Up	Electrodes in Tank
Voltage Characteristics	115, 60, 1
Cold Plate	18 3/4" x 26 3/8"
Control - Pump Up	Liquid Level - Relay
Carbonator Tank	Bastian Blessing

DISPENSER SECTION
Order and use conversion kits as follows:

K41-E	Electric Valve Kit
K42-S	Satellite Head Kit
K43-R	Syrup Rail Kit

See manual section, Factory Conversion Kits, Accessories for Installations procedures.

INSTALLATION

UNCRATING DRINK DISPENSER

The entire unit, less conversion kits, comes in one crate. Upon delivery a visual inspection of the crate should be made and any severe damage noted should be reported to the delivering carrier and a concealed damage claim filed subject to internal inspection with carrier representative present. Remove crate by pulling nails driven through sides of crate into the bottom skid. A nail puller is best suited here. Next remove (4) four bolts from underside of skid which connect to complete unit base. Unit now free from all crating.

PREPARATION FOR INSTALLATION

Remove all service and access panels from unit cabinetry-leg package is wired to inner machinery compartment, remove and install (4) four legs.
Next remove all packing tapes or wires in machinery compartment. Remove paper packing in float operated reservoir, found under left top hood cover.
Loosen (4) four motor compressor hold down nuts until compressor rides freely on mounting springs.
Next select proper drink dispenser conversion kit or kits and install same per instructions in kit. Also refer to this manual secton " Factory Conversion Kits".

LOCATION

Select the location before delivering the unit to the job. The following points should be considered.

1. Convenience-Place the unit where it is practical to give efficient use. It can be located either in a back bar or in a front bar. It is designed to fit into a standard soda fountain line-up or it can be used as an individual counter unit. Keep in mind that the dispenser can serve a double function of providing crushed ice as well as carbonated beverages.

2. Servicing Unit-Bearing in mind that all service connections are made at the back center panel, provisions for adequate access space must be considered here. Also on all air cooled models, cooling air is drawn through louvered front panel and exhausted out rear louvered back and hood panels therefore a minimum 12" air gap must be maintained for proper condensing unit operation.

3. On air cooled models, condenser is directly behind front service door to facilitate regular cleaning schedules, advise user to clean frequently.

4. Avoid installations where temperature extremes can be experienced Scotsman does not recommend installations below 50° Fahrenheit nor above 100° Fahrenheit.

TYPICAL POST MIX CARBONATED BEVERAGE SYSTEM

APPLICABLE TO THE SD-2-H

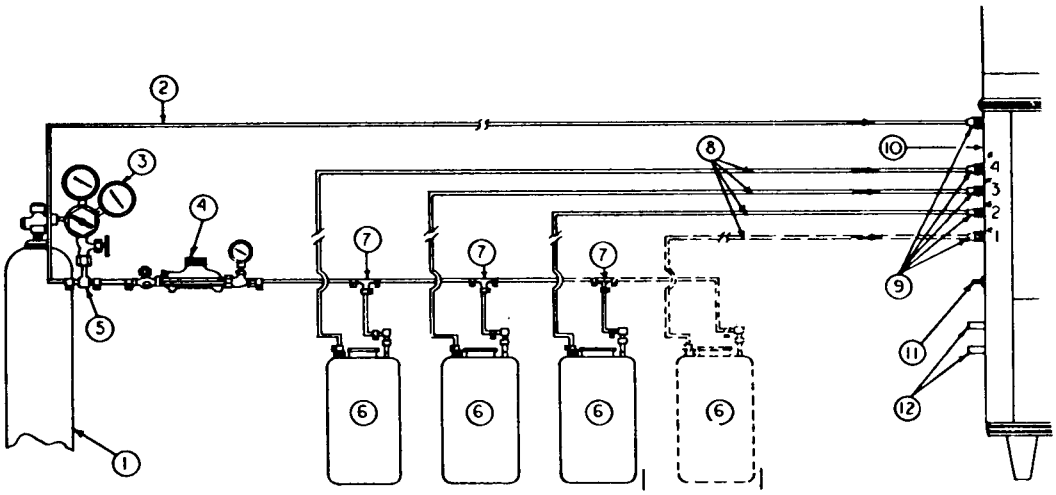

CODE

1. CO_2 CYLINDER
2. CO_2 LINE (COPPER, STAINLESS STEEL OR PLASTIC)
3. HIGH PRESSURE CO_2 REGULATOR FOR CARBONATOR
4. LOW PRESSURE CO_2 REGULATOR FOR SYRUP TANKS
5. BRANCH TEE
6. SYRUP TANKS
7. TEE
8. PRODUCT LINES (STAINLESS STEEL OR PLASTIC)
9. 1/4 S.A.E. FLARE FITTING
10. ELECTRICAL INLET
11. WATER INLET 3/8 S.A.E. FLARE FITTING
12. DRAINS

NOTE:

Items shown are not sold by Scotsman.

Recommended Source:

Excellall Products Division
The Bastian-Blessing Co.
4201 W. Peterson Avenue,
Chicago, Illinois

INSTALLATION

Be certain the SCOTSMAN DISPENSER is on its own circuit and individually fused. Seperate switches are located in the front of the dispenser allowing the dispensing equipment and the ice machine to operate independently of each other. All internal wiring is completed.

All external wiring should conform to National Underwriters and local electrical code requirements. An electrical permit and the services of a licensed electrician will usually be required. See wiring diagram for proper hook-up.

PLUMBING - AIR COOLED MODELS

The recommended water supply line is 3/8" O.D. tubing for SD-2. A 3/8" flare fitting is provided on the machine for water inlet. Connect to cold water supply line using a shut-off valve installed in an accessible place between supply and machine.
A wire mesh strainer is provided on the pump inlet connections as a protection against large particles of rust, scale, etc., which may be loosened in the water pipe at time of installation. This strainer will not prevent fine particles from damaging the pump, therefore, a good filter is recommended in any installation and is absolutelv essential when the water supply contains solids. Maximum water supply pressure must be at least 20 lbs. below operating CO_2 pressure. If supply pressure exceeds this, carbonator may flood. Install a water pressure regulator in the water supply line and adjust as required.

PLUMBING - WATER COOLED MODELS

On water cooled models a seperate connection to the condensing unit will be required. A 3/8" flare fitting is provided on the machine for water inlet, a 3/8" O.D. Copper drain line is provided. Water supply must be installed to conform with local plumbing codes. In some cases a licensed plumber and/or a plumbing permit will be required.
All drains are gravity types and must be pitched 1/4" fall per foot of horizontal run. All drains to be installed per local and state codes. Drain receptacle should be of open, trapped or vented construction. Storage bin drain is 5/8" O.D. Copper tubing and should be vented and run seperately.

ELECTRICAL

Rating
SD-2-H
115 volts 17.6 Amps.
60 cycle, single phase
20 amp Maximum Fuse
Use No. 12 wire for runs
under 50 feet.

INSTALLATION

START - UP

When the machine is placed and conversion kits added as per instructions and all plumbing and electrical connections are completed and tested, turn on the water supply. Be sure the float cover is removed to check on the float operation and water level in the water reservoir. Be sure water reservoir is filled before starting ice machine. Water level should be 1/2 inch below the reservoir overflow pipe.
Connect CO_2 cylinder, CO_2 Hi-Lo pressure regulator and syrup tanks to proper fitting on cabinet rear panel.
Slowly open CO_2 cylinder and set both CO_2 regulators to 30# gauge reading. Check all syrup lines, fittings to cold plate, dispensing head connections etc. with bubble soap and correct any leaks found.

Check all internal water connections for leaks. Start carbonator by turning on top switch.

Install gauges and check refrigerant pressures at the time of start-up. Flare connections can work loose during shipment. Add refrigerant as required - see ice machine section. Turn on ice machine switch in front of cabinet and machine is in automatic operation. In two or three minutes ice will start dropping off worm shaft and out the ice chute. Let the machine operate for at least 30 minutes or until ice covers the bottom plate. Check for any excess noise in carbonator or ice machine.

Test the ice storage control bulb by holding a handful of ice around the bulb until the machine shuts off. One minute should be normal for the control to function. Within minutes after the ice is removed, the bulb will warm up and the machine will automatically start up. The control is factory set and should not be reset until this test is made. Normal setting of this control should be approximately 35 degrees cut-out and 45 degrees cut-in to prevent short cycling.

Check hand reset low pressure control setting. This safety device should normally be set 10 p s i below normal suction pressure to prevent cutting off when the compressor first starts up and still provide safety in case of interruption in water supply, shortage of refrigerant, low ambient or any other cause of abnormal low suction pressures.

Adjust dispenser heads to give correct proportions of syrup and carbonated water. See instructions provided with dispenser.

Explain the machine to the owner, showing him how the machine works and go over the owner's operating instructions. Answer all the owner's questions about the machine, and do not leave with any doubt in the owner's mind about the machine, how to operate it or where to reach the service man in case of need. Call back the next day to check the machine again and answer any other questions the owner may have.

SD-2H
CHASSIS ASSEMBLY
Side View

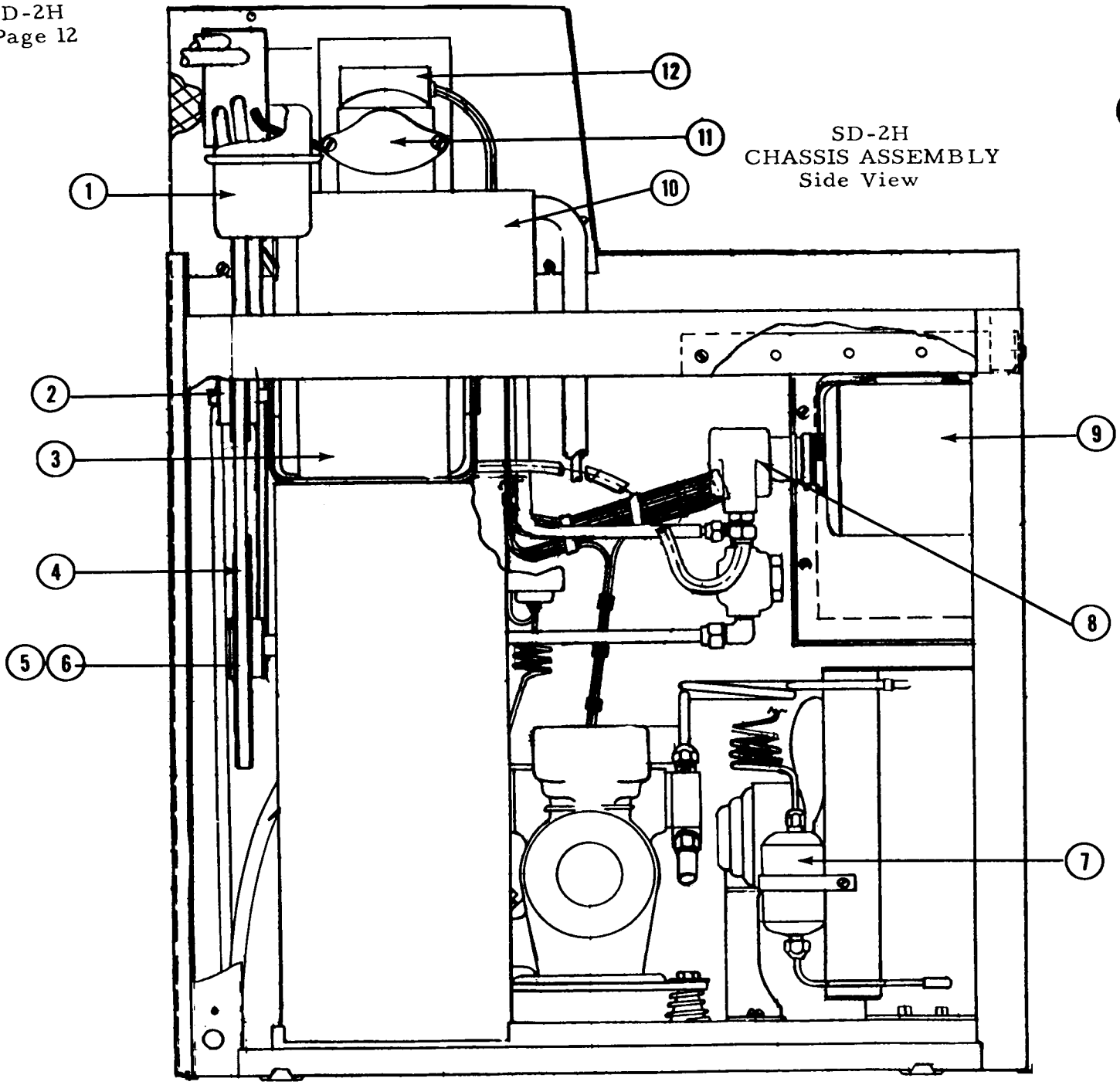

ITEM NO.	PART NO.	NAME
1.	A-19036	Reservoir
2.	2-1462	Pulley
3.	12-864-1	Motor 115/60/1
4.	13-558	Belt
5.	2-337	Reducer
6.	S-6035	Key
7.	2-544	Drier
8.	2-1526	Carbonator Pump
9.	12-1339-1	Pump Motor
10.	A-6991-3	Freezer
11.	A-18431	Spout Plate
12.	12-1018	Switch

SD-2H
CHASSIS ASSEMBLY
Front View

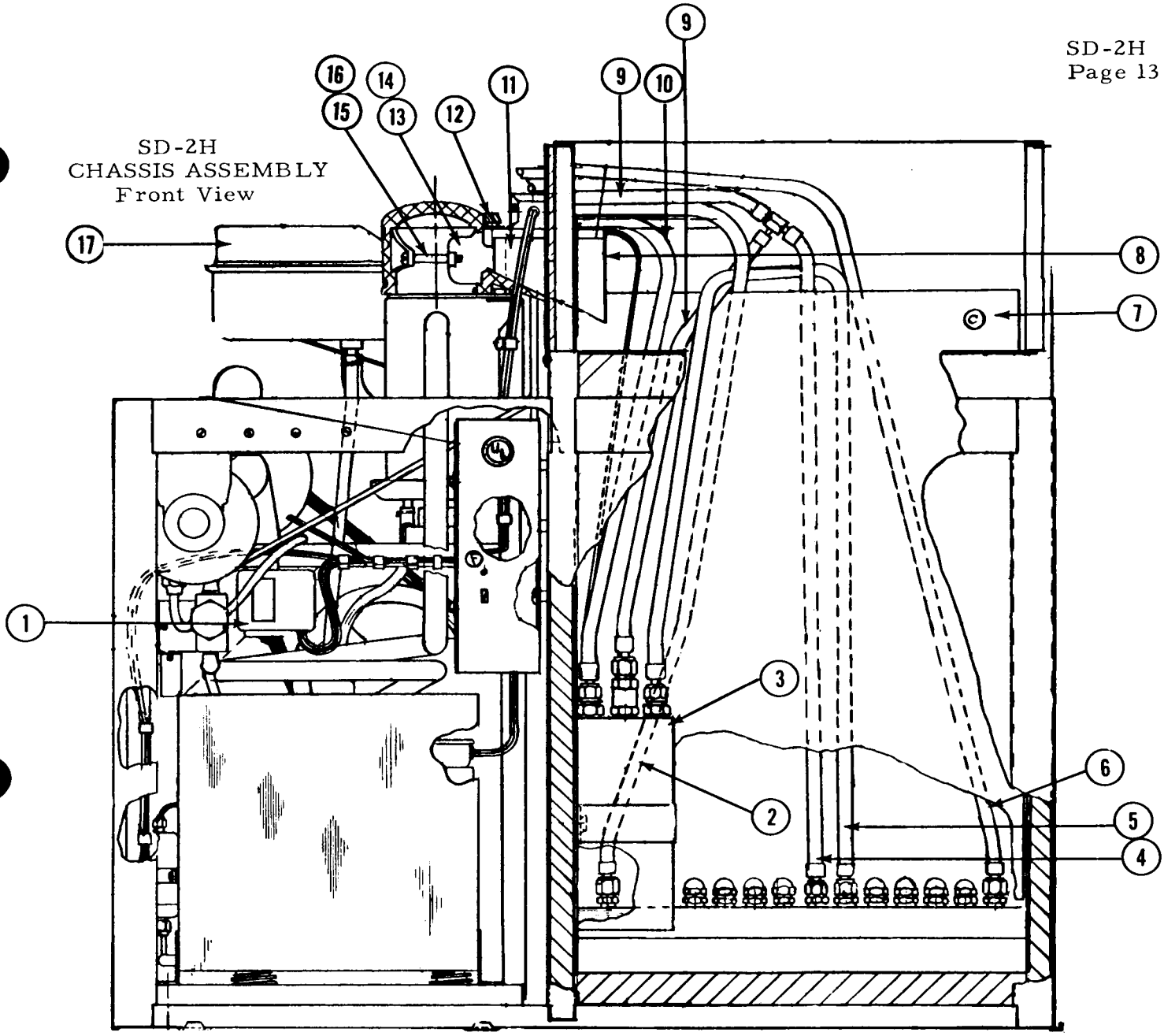

ITEM NO.	PART NO.	NAME
1.	11-273	Control A.C.
	11-286	Control W.C.
2.	A-17737	Flexible Line
3.	2-1499	Carbonator Tank
4.	A-17725-7	Water Line
5.	A-17743	Soda Line
6.	A-17743-1	Soda Line
7.	A-18385	Tube Cover
8.	A-16353	Pressure Plate Assy
9.	A-17725-6	Tube
10.	A-17732	Co 2 Line
11.	A-16350	Spout
12.	A-14256	Nut
13.	A-14269	Casting
14.	2-1437	"O" Ring
15.	3-721	Screws
16.	3-679	Washers
17.	A-16012	Cover

ICE MACHINE SECTION

HOW IT WORKS

Water enters at the cabinet fitting, passes through the strainer at the pump and then goes to the water reservoir. The function of the reservoir is to maintain a constant water level inside the freezer. Water from the reservoir enters the freezer at the bottom and is frozen inside the freezer. A stainless steel auger inside the freezer carries the ice upward where it is extruded past the Ice-breaker into the storage bin.
The auger is rotated by a gear reducer which is operated by a motor through a belt drive.
A manual switch starts the machine and from then on Ice is produced automatically in small uniform pieces. When the storage bin fills a thermostat shuts off the machine and causes it to start up again when ice is taken from the storage bin. The Ice Machine Section operates independent of the carbonator and dispensing section although it is built into the same cabinet.

ELECTRICAL SECTION

The dispensers are designed to work on a standard voltage 115/60/1. Special voltage requirements are available on special order. Therefore always check nameplate before turning on power supply.

Nameplate voltage must not vary more then plus or minus 10 percent.

A. Compressor: The compressor has a capacity start induction motor. Capacitor and Relay may be mounted on the compressor junction box or seperate-on the machine box. A klixon overload protector is located under the compressor junction box cover.

B. **DRIVE MOTOR FREEZER** (NEMA frame size 48)

All models are equipped with standard 1/2" shaft, 1/4 HP, capacitor start, induction motors. These motors turn counter clockwise and may be replaced with any standard make motor corresponding to the nameplate rating. (Be sure motor runs counter clockwise viewed from the shaft end.)

C. HIGH-LOW PRESSURE CUT-OUT (Used on water cooled models only.)

Ranco control is located on the frame assembly. Factory settings cut-out 5 lbs. on low pressure and 180p s i on high pressure. This control prevents operation at abnormal pressures.

D. LOW PRESSURE CUT-OUT (Hand reset on all air cooled models.)

Ranco control is located on the frame assembly. Factory settings cut-out 5 p s i. Safety device to cut off machine and keep it off in case of water supply failure, loss of refrigerant, low ambient temperature or other causes of low pressure.

E. STORAGE BIN THERMOSTAT

Bin control located on frame assembly. Sensing bulb located at front storage bin wall. Factory settings 35° cut-out, 45° cut-in. This control shuts off complete machine when ice in storage bin builds up to control bulb and automatically re-starts ice-maker when ice is removed from bulb.

ICE MACHINE SECTION

F. MICRO SAFETY SWITCH

The micro switch is located in the top of the stainless steel ice deliver spout. Should storage bin thermostat fail to cut off when ice level in bin reaches spout opening, ice pressure backs up into spout against a spring loaded spout pressure plate that activates micro switch and cuts off the refrigeration unit but allows freezer drive motor to run.
Icemachine should not be run on this safety device. Bin thermostat should be checked for calibration or replacement.

G. ICE MACHINE ON-OFF SWITCH

Located in master control box, this switch when manual activated either stops or starts icemachine operation. Switch also incorporates built in thermal overload protection for freezer drive motor. Whenever excessive overloads occur, the standard 6 amp. overload causes switch to "trip out!' Will not start until manually re-set.

H. MOTOR COMPRESSOR

SD-2H models use a 1/2 HP Copeland, semi-hermetic compressor. Standard voltage is 115/60/1. Standard electrical components such as relays, starting capacitors and klixon overloads are readily replaced. On compressor proper service valves, valve plates and compressor heads are replaceable.

I. GEAR REDUCER

Winsmith model 3CT reducer is utilized on Drink Dispenser. At least once a year Mobil 600w oil should be changed. All internal parts replaceable.

NORMAL OPERATING PRESSURES

Check refrigerant pressure settings after 30 minutes of initial start up. Attach gauges to proper fitting on compressor service valves.
On water cooled models correct head pressure is 135 p s i. Adjust water regulating valve to maintain this reading.

On air cooled models, head pressure will vary slightly depending upon ambient air, however, normal reading is 130 p s i .
Suction pressure should be 15p s i with proper refrigerant charge, frost line will extend about 8 inches out of accumulator. Suction pressure will vary approximately 2 p s i either way depending upon ambient and incoming water supply temperatures to freezer.

ICE MACHINE SECTION

REFRIGERANT CHARGE

The below refrigerant charge is approximate. When charging, set at 135 p s i head pressure and charge so that the frost line extends out of the accumulator after fifteen minutes of operation. Frost out of accumulator at least 8 inches and preferable 1/2 way to the compressor for best capacity and performance.

MODEL	REFRIGERANT CHARGE	
SD-2 air	33 oz.	R-12
SD-2 water	30 oz.	R-12

OIL LEVEL

Oil level should be kept at 1/3 way up sight glass, Do not fill over 1/2.

WATER SYSTEM

A water level is maintained in the water reservoir by a float operated valve. Water is piped from the water reservoir to the freezing chamber by a gravity feed line maintaining an equal water level. A removable overflow pipe is installed in the water reservoir for cleaning the reservoir as well as preventing damage should the inlet water valve fail.

The water reservoir is equipped with a 2 inch air gap to prevent back siphoning and meet all health codes.

The water level in the water reservoir is adjusted by bending float ball arm. The water level should be set 1/2 inch below the overflow pipe. A condensate drip pan is connected to the drain circuit to automatically dispose of condensate moisture.

WIRING DIAGRAM
SD-2 Air Cooled

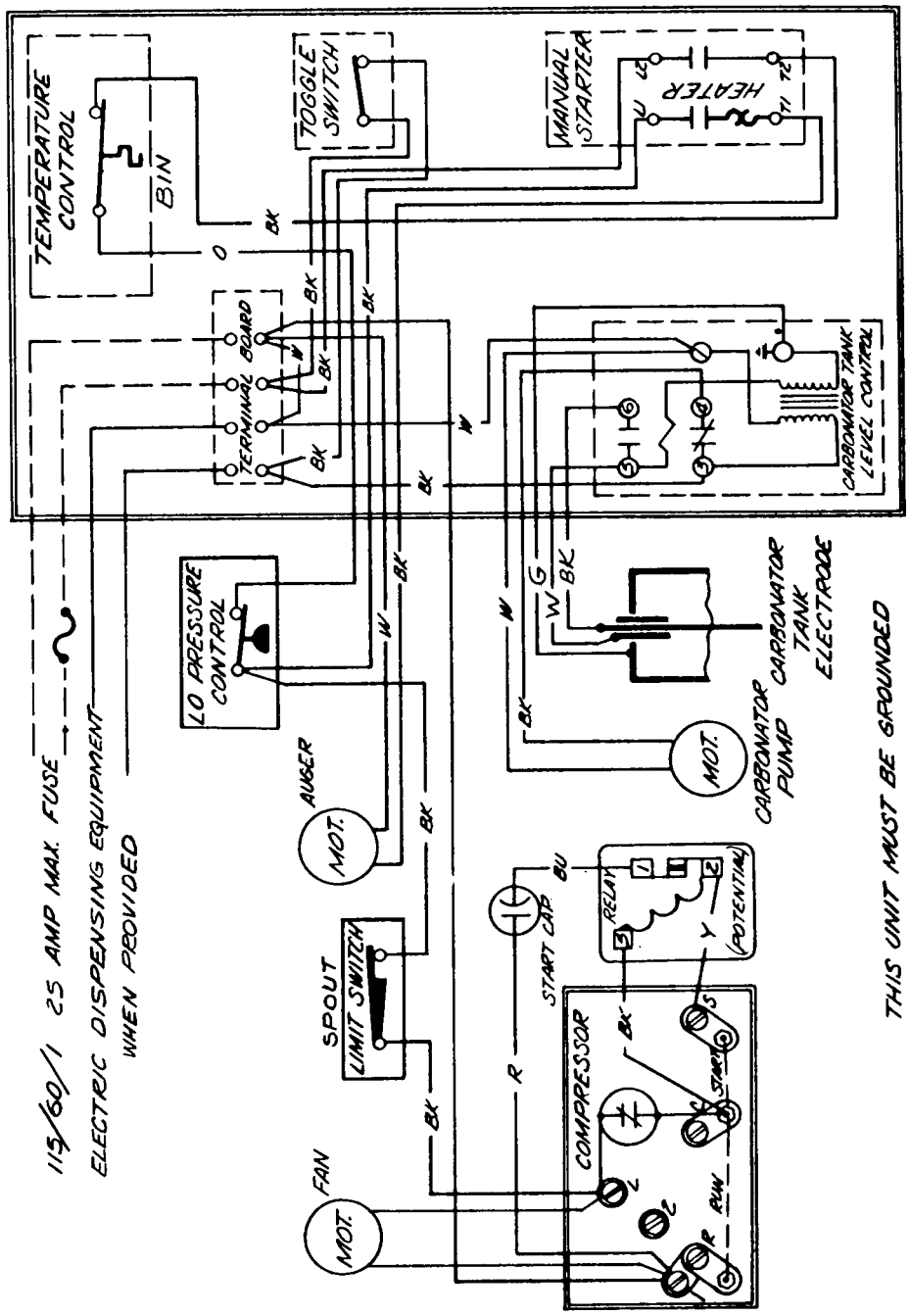

WESTINGHOUSE ON-OFF SWITCH MST02®

MOTOR MFG.	HEATER ELEMENT	TRIP CURRENT AT 40° C	MOTOR FLA	% PROTECTION
G.E.	MSH 6.0 A	6.0	5.2	115
WHSE.	MSH 6.0 A	6.0	4.9	122
CENTURY	MSH 5.0 A	5.0	4.2	119

WIRING DIAGRAM
SD-2WH Water Cooled

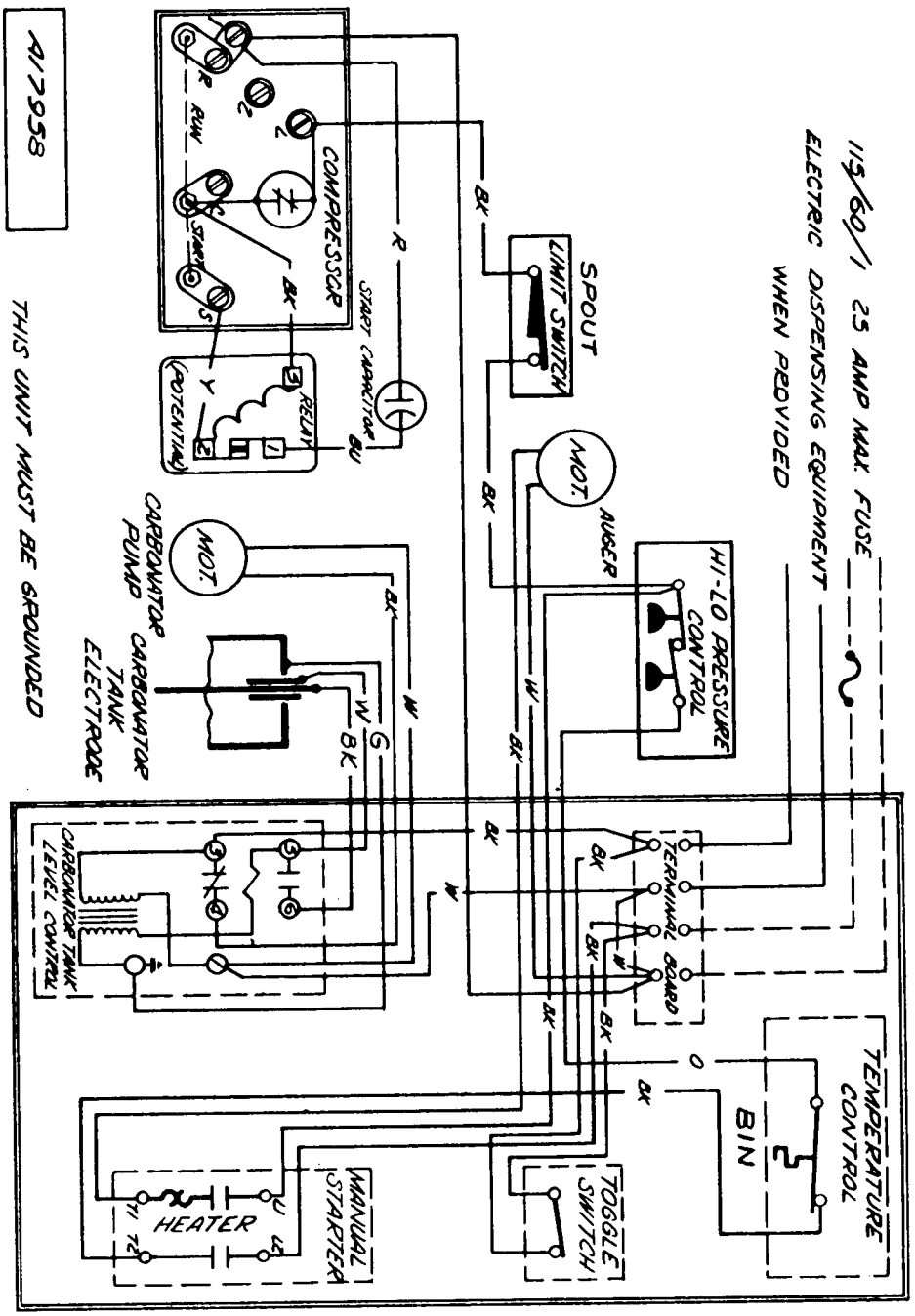

WESTINGHOUSE ON-OFF SWITCH MSTOR®

MOTOR MFG.	HEATER ELEMENT	TRIP CURRENT AT 40° C	MOTOR FLA	% PROTECTION
G.E	MSH 6.0 A	6.0	5.2	115
WHSE.	MSH 6.0 A	6.0	4.9	122
CENTURY	MSH 5.0 A	5.0	4.2	119

ICE MACHINE SECTION

Service Analysis Chart

COMPLAINT	POSSIBLE CAUSE	CORRECTION
Low ice production	Loss of refrigerant Under or over-charge of refrigerant.	Check and recharge with proper amount of refrigerant.
	Drive motor weak.	Replace
	Dirty or plugged condenser	Clean condenser
	Low water level in water reservoir	Adjust to 1/2 inch below overflow standpipe.
	Overcharge of oil in system	Check at oil hole on compressor. Proper level is 1/3 full on crankcase sight glass.
	Partial restriction in capillary tube or drier.	Moisture in system. Overcharge of oil in system. Remove charge by blowing back through cap tube. Replace drier and recharge.
	Inlet water strainer partially plugged.	Remove screen and clean.
	Corroded or stained worm shaft due to water condition.	Remove worm shaft and clean, or use Scotsman Ice Machine Cleaner. See Maintenance Section.
	Slipping drive belt	Adjust belt tension or replace worn belt.
	Defective gear reducer.	Check reducer driven shaft to freezer shaft. Should rotate at 12 R P M. Replace if worn.
Machine runs but makes no ice.	Loss or undercharge of refrigerant.	Check for leaks and recharge.
	Drive motor, belts, gear reducer on drive coupling inoperative.	Gear reducer and worm turn at 12 RPM. Check. Repair or replace.
	Pulleys loose on shafts.	Tighten, repair or replace.

ICE MACHINE SECTION

Service Analysis Chart

COMPLAINT	POSSIBLE CAUSE	CORRECTION
Machine runs but makes no ice. (Cont.)	Water not entering freezing chamber.	Plugged strainer or supply line. Check and clean. Air lock in gravity feed line. Check and remove air lock.
	Moisture in system.	Check and remove charge and drier. Replace and recharge.
	Water seal leaking.	Replace seal. See section on maintenance.
	Defective manual overload switch.	Replace switch.
Water leaks.	Defective water seal.	Replace. See section on maintenance.
	Gravity feed line leaking.	Check hose clamps.
	'O' ring in spout casting leaking.	Remove spout casting and install new 'O' ring.
	Storage bin drain and connecting fittings.	Check and repair. Tighten fitting-replace 'O' ring.
	Water level in reservoir too high.	Adjust to 1/2 inch below overflow pipe.
Excessive noise or chattering.	Scale or mineral build-up on inside of freezer.	Clean with Scotsman Ice Machine Cleaner. See section on maintenance.
	Mineral deposit or scale on auger and cylinder walls.	Ice sticking and jamming inside. Clean with Scotsman Ice Machine Cleaner or remove auger and polish.
	Intermittent water supply.	Check and clean water strainer. Check gravity feed line for air lock. Remove air lock.
	Water level in reservoir too low.	Adjust to 1/2 inch below overflow pipe, or raise reservoir.
	Mis-aligned coupling or worn insert.	Repair or replace.

ICE MACHINE SECTION

Service Analysis Chart

COMPLAINT	POSSIBLE CAUSE	CORRECTION
Excessive noise or chattering. (Cont.)	Low ambient temperature.	Move to heated space 50°F. is minimum.
	Gear reducer low on oil.	Check oil level and refill to oil level plug.
	Gear reducer loose on frame.	Tighten.
	Pulleys worn or loose on shaft.	Repair or replace.
	Belt cracked or worn.	Replace belt.
	Drive motor end-play or worn bearings.	Repair or replace.
	Motor compressor not floating on springs.	Loosen hold-down bolts
Machine continues to run with full storage bin.	Storage bin thermostat not properly set or is defective.	Reset or replace. Reset to 35° cut-out 45° cut-in.

Ice Machine Section

COMPLAINT	POSSIBLE CAUSE	CORRECTION
Unit will not run.	Blown fuse in line.	Replace fuse and check for cause of blown fuse.
	Bin thermostat set too high.	Adjust thermostat. Set at 35° cut-out, 45° cut-in.
	Loose electrical connection Switch in 'OFF' position.	Check wiring. Turn switch on.
	Inoperative master switch.	Replace switch or thermal overload.
	Off on manual reset low pressure control.	Reset.
Compressor cycles intermittently.	Low voltage.	Check for overloading.
	Dirty condenser.	Clean.
	Aircirculation blocked.	Move unit to correct.
	Inoperative condenser motor.	Replace.
	Non-condensable gases in system.	Purge off.
	Bin thermostat differential too small causing short cycling.	Widen differential 35°cut-out, 45°cut-in.
	Cycling on ice chute micro switch.	Set or replace bin thermostat.
Making wet ice.	Surrounding air temperature too high.	Correct or move unit.
	Under or over-charge of refrigerant.	Recharge with proper amount. Should frost out of accumulator at least 8".
	High water level in water reservoir.	Lower to 1/2" below overflow pipe.
	Back pressure too high.	Overcharge of refrigerant, faulty compressor or high head pressure. Lower as indicated.
	Faulty compressor or valve plate.	Repair or replace.

CLEANING INSTRUCTIONS

1. Set ice machine and dispensing switch to OFF.
2. Remove all ice from storage bin.
3. Turn OFF water supply or block float. Drain reservoir by removing overflow tube (gray plastic tube) in reservoir, replace overflow tube.
4. Set ice machine switch to ON and pour cleaning solution into reservoir. DO NOT fill above overflow tube; use 6 oz. of Scotsman Cleaner and $1\frac{1}{2}$ qt. hot water.
5. Continue to make ice on solution until the solution is used up and reservoir has only about 1 inch solution remaining. DO NOT allow unit to operate with empty reservoir.
6. Set ice machine switch to OFF, remove overflow tube, wash and rinse reservoir, replace overflow tube, turn water on or remove float block.
7. Set ice machine switch to ON. Let unit run for at least 15 minutes to flush out any cleaning solution. Check ice for acid taste - run until ice tastes sweet.
8. Set ice machine switch to OFF, add hot water to ice bin, using this melt water, thoroughly wash and rinse all surfaces within the storage bin.
9. Parts removed from storage bin, splash grill etc. clean in accordance with local health department regulations.
10. Pour hot water into drip pan each day to keep drains open.
11. Clean dispensing equipment in accordance with manufacturers recommendations. This should be explained in owners manual or installation instructions provided with dispensing equipment. If cleaning instructions are not available then follow procedure below.
12. Check faucet nozzle parts, these usually snap or screw off. These parts should be cleaned and sanitized each day.
13. Dispensers having ice compartments should be cleaned and sanitized each week.
14. Syrup lines and tank should be drained and then sanitized twice each month.

MAINTENANCE INSTRUCTIONS

THE FOLLOWING MAINTENANCE SHOULD BE ACCOMPLISHED TWO TIMES PER YEAR ON ALL SCOTSMAN DRINK DISPENSERS.

1. Check and clean water strainers and float valve. Depress float valve to insure full stream of water.

2. Check water level and machine level. Keep water level below overflow, but as high as possible and still not run out of spout opening with machine off. Water should come out of spout with ice at all times. Adjust as required.

3. Clean reservoir and interior of freezer assembly using SCOTSMAN Ice Machine Cleaner in accordance to instructions provided, see page 23.

NOTE: Cleaning requirements vary according to local water conditions. Visual inspection of the auger and reservoir before and after cleaning will indicate how often the machine must be cleaned in local areas.

4. Check high and low side pressures. On water cooled models, set pressure at 135 p s i . Suction pressure should be above 12 p s i and will range up to 16 p s i depending upon water and ambient temperatures.

5. Set hand reset low pressure control to cut off in event of water supply interruption or low ambient temperature at approximately 5 p s i.

6. Change oil in gear reducer. Use Mobil 600W or equivalent good grade of gear oil with a viscosity of 125 to 190. For unit with grease fittings use Mobilgrease BRB No. 1 or any good grade ball bearing grease. Particularly important when there is eveidence that water has gotten into gear housing. Remove gear reducer to facilitate.

7. Oil drive motor and pump motor , use SAE 10 oil.

8. Check top bearing of freezing tube. If moisture is around bearing, wipe up and remove grease. Add new grease. Use Beacon No. 325 or equivalent waterproof grease.

9. Check and adjust belt tension.

10. Clean air cooled condenser. Inform customer to clean frequently. Always shut off machine when cleaning.

11. Oil condenser fan motor when possible.

12. Check for refrigerant leaks and proper frost line. Should frost out of accumulator approximately one-half way to compressor.

13. Check for water leaks. Tighten drain line connections. Run water down bin drain line to make sure it is open.

14. Check quality of ice. Ice should be wet when formed, but will cure rapidly to normal hardness in the bin.

15. Check thermostat and pressure plate cut off. Micro switch cuts off only compressor. Bin thermostat should be set at 10° differential and should keep entire machine off at least twenty minutes in high ambients (longer in low) during normal operation.

Manual Reset
K-F Low PSI
11-0358-00

FREEZER ASSEMBLY
SD-2H

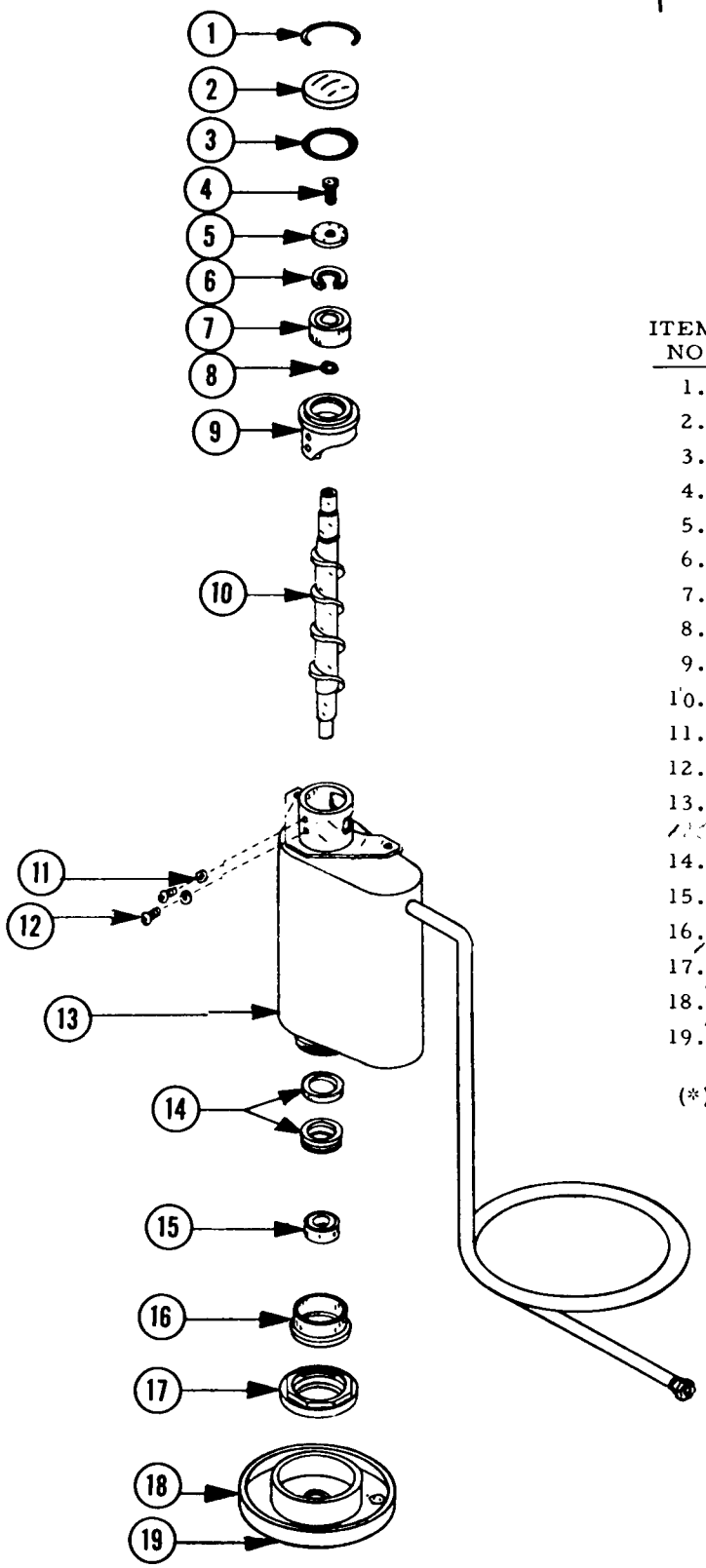

ITEM NO.	PART NO.	NAME
1.	A-8582	Cap Hook
2.	A-8581	Worm Tube Cap
3.	2-560	'O' Ring
4.	3-715	Cap Screw
5.	A-6273	Worm Tube Washer
6.	3-712	Snap Ring
7.	2-646	Top Bearing
8.	2-643	'O' Ring
9.	A-8316	Ice Breaker
10.	2-617	Worm Shaft
11.	3-679	Lock Washers
12.	3-207	Screws (brass 1/4x20x5/8)
13.	A-6382	Suction Line, Worm Tube, Cap Tube Assembly
14.	2-929	Water Seal
15.	2-619	Bearing, lower
16.	A-10591	Bearing Retainer
17.	A-6153	Worm Tube Nut
18.	13-208	Rubber Drip Pan
19.	A-8002	Drain Tube (*)
	A-6991-3	Freezer Complete

(*) Not Shown

Bin stat
11-0099-00

SD-2H RESERVOIR ASSEMBLY
Part No. A-19036

ITEM NO.	PART NO.	NAME
1.	A-16012	Reservoir Cover
2.	2-1259	Valve Pin
3.	2-1320	Deflector
4.	S-8770	Inlet Valve
5.	3-1001	Rivet
6.	A-5777	Valve Seat Holder
7.	S-6947	Valve Seat
8.	S-7044	Nut
9.	A-12869	Bracket
10.	S-6715	Stand Pipe
11.	S-8138	Inlet Valve Ass'y
12.	A-13409	Reservoir Body
13.	A-8055	Bracket Nut
14.	A-12067	Float and Arm Ass'y
15.	A-18418	Water Deflector
	A-19035	Complete (less cover)

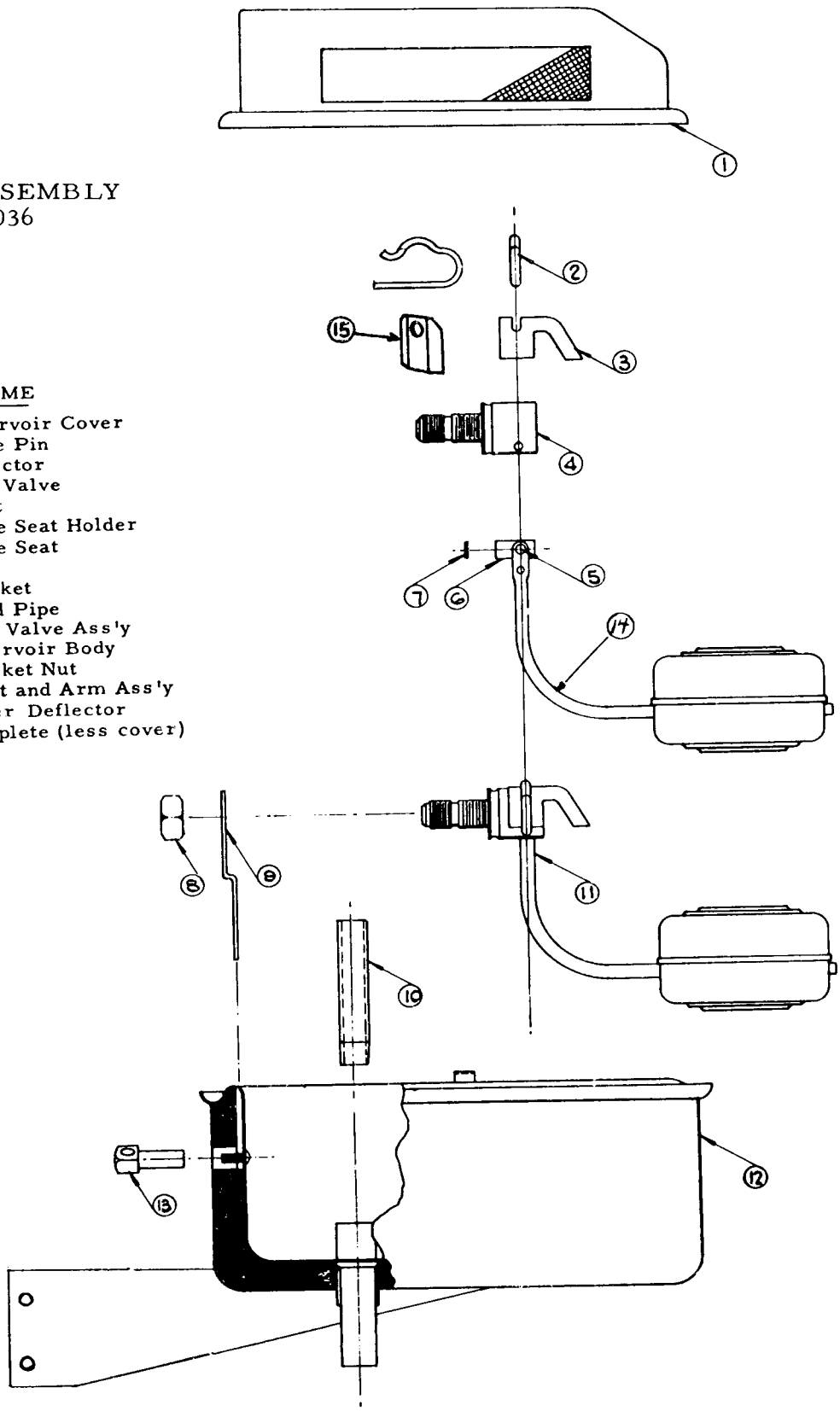

SD-2H GEAR REDUCER
Part No. 2-337
Winsmith Part No. (3CTS)

ITEM NO.	PART NO.	NAME
1.	2-580-28	Slow-Speed Gasket (2)
2.	2-580-24	Slow-Speed Seal (2)
3.	2-580-26	Slow-Speed Bearing (2)
4.	2-337-20	Slow-Speed Gear & Shaft
5.	2-768-25	High-Speed Gasket (2)
6.	2-337-23	High-Speed Bearing (2)
7.	2-768-20	High-Speed Seal
8.	2-337-21	High-Speed Gear & Shaft (integral)
9.	2-580-27	Slow-Speed Spacers (2)
	2-337	Complete Reducer

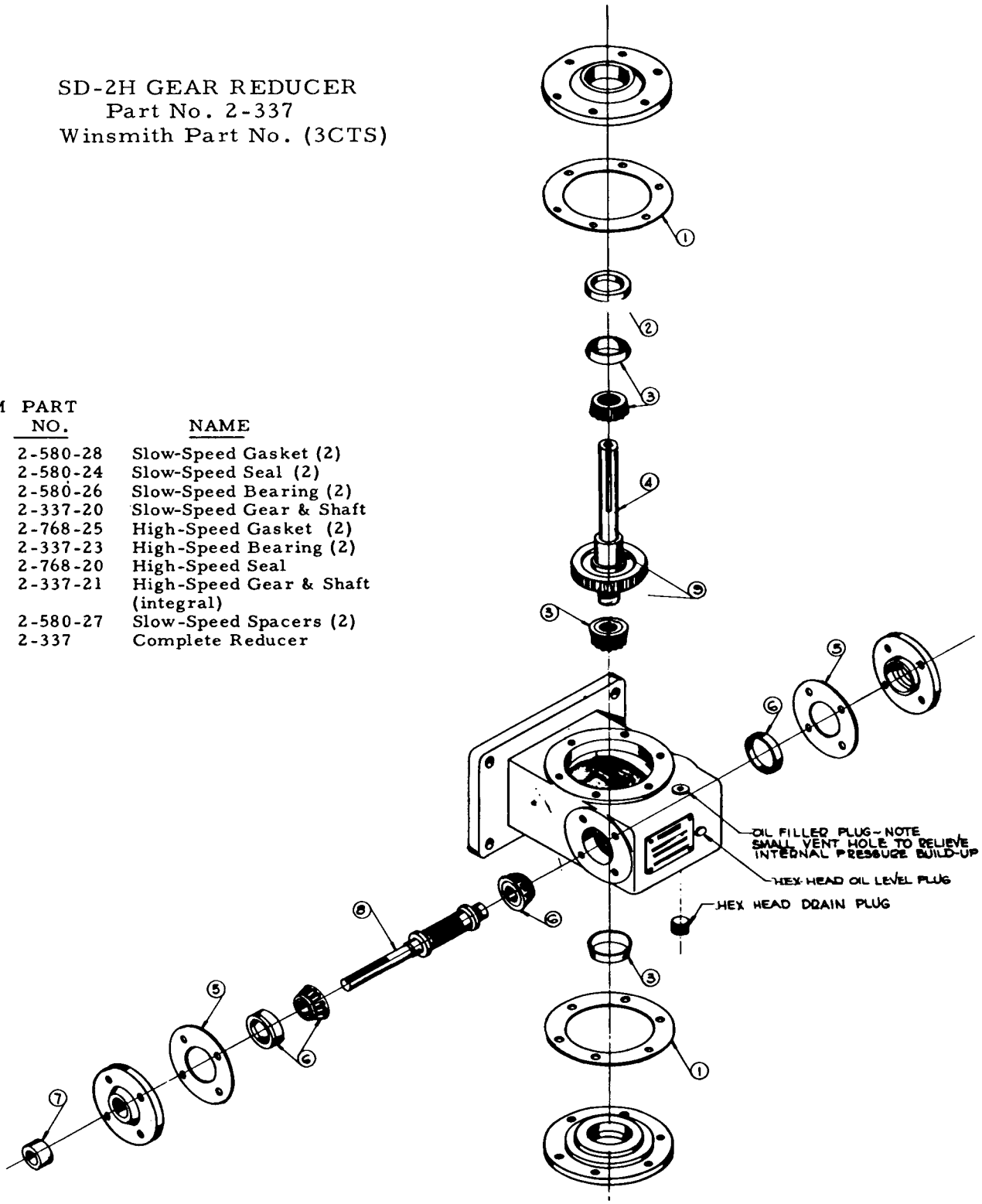

SD-2H CONDENSING UNIT
1/2 HP Air Cooled, Copeland

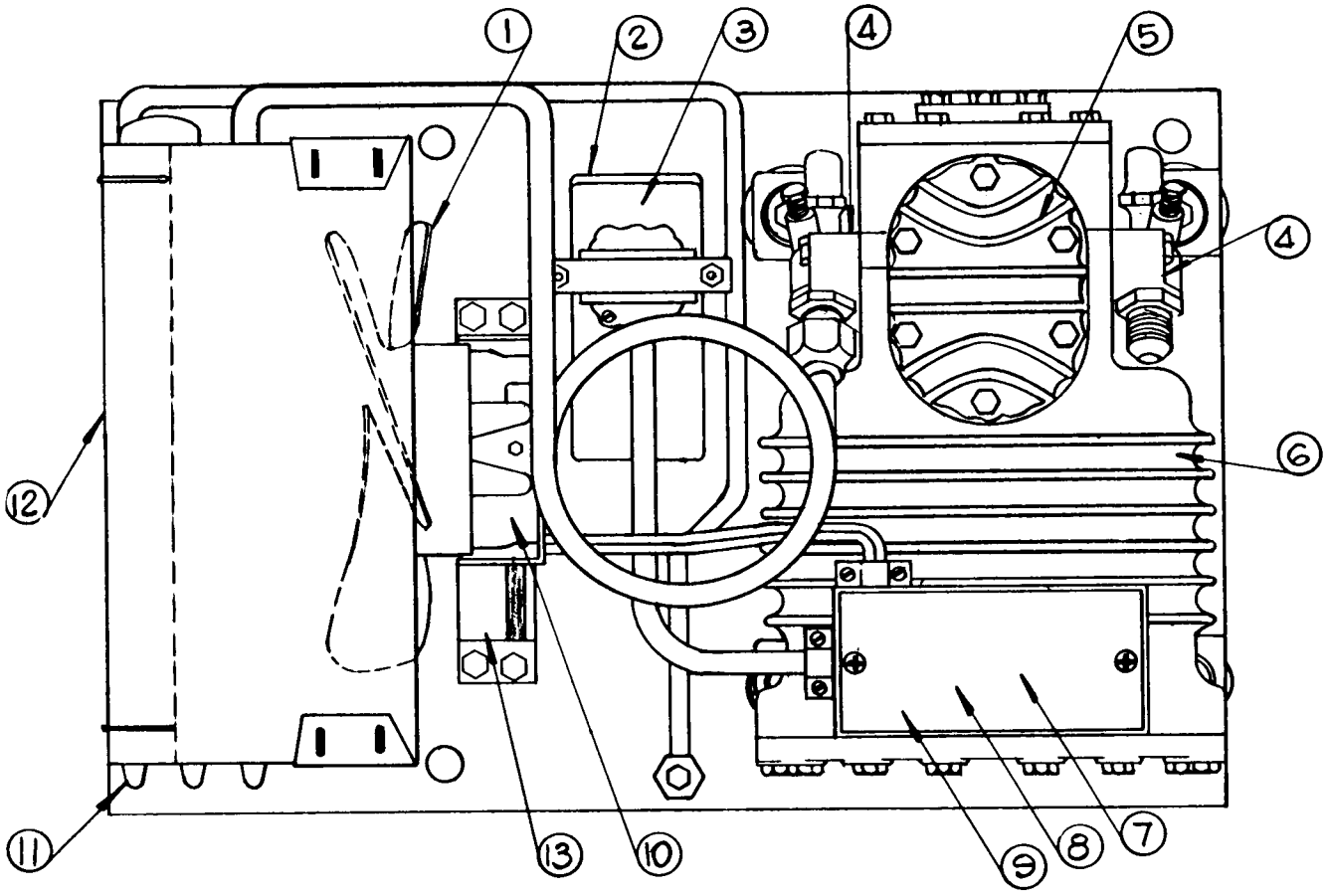

NOTE: Not available as a complete mounted assembly.

ITEM NO.	PART NO.	NAME
1.	18-363	Fan Blade
2.	18-1901-7	Starting Capacitor
3.	18-1903-4	Relay
4.	18-337	Suction, Service Valve (18-237 Discharge Valve)
5.	18-326	Valve Plate & Gasket Kit Assembly (*)
6.	18-325	Motor Compressor 115/60/1
7.	18-347	Overload Klixon (*)
8.	18-241	Terminal Assembly (*)
9.	18-270	Terminal Board (*)
10.	18-333-1	Fan Motor
11.	18-334	Condenser
12.	A-12111	Shroud
13.	18-388	Fan Motor Bracket

NOTE: Overload Not Used On Units That Are Inherent Protected. If Possible Use Copeland Part No. When Ordering Capacitors & Relays

Bin stat 11-0099-00

SD-2H CONDENSING UNIT
1/2 HP Water Cooled, Copeland

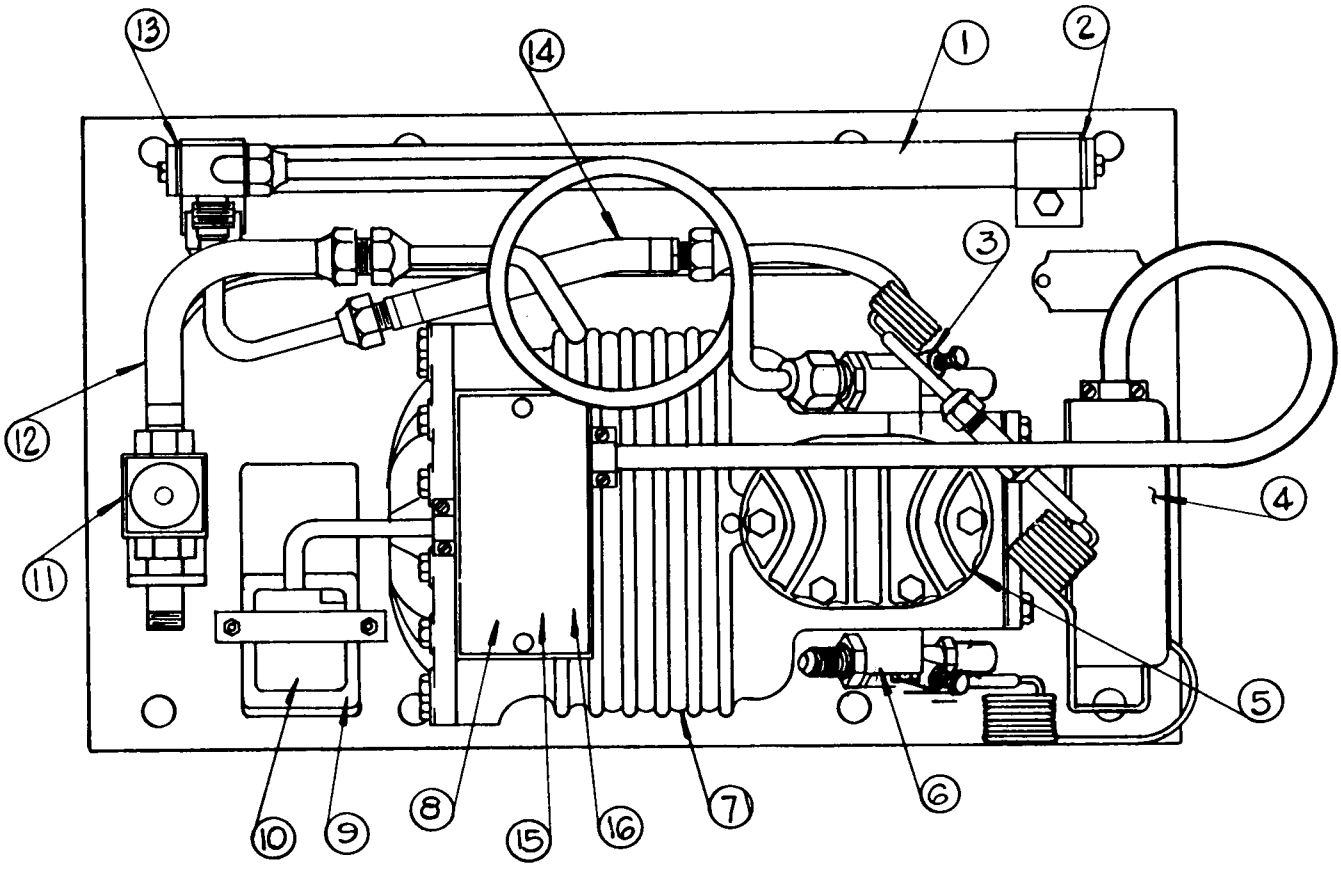

NOTE: Not available as a complete mounted assembly.

ITEM NO.	PART NO.	NAME
1.	18-368	Condenser
2.	18-262	Plain Gasket
3.	18-237	Discharge Service Valve
4.	11-286	High Pressure Control
5.	18-326	Valve Plate & Gasket Kit Assembly (*)
6.	18-337	Suction Service Valve
7.	18-355	Motor Compressor 115/60/1
8.	18-347	Klixon Overload (*)
9.	18-1901-7	Starting Capacitior
10.	18-1903-4	Relay
11.	11-198	Water Valve
12.	18-260	Compressor to Valve Water Hose
13.	18-263	Manifold Gasket
14.	18-261	Compressor to Condener Water Hose
15.	18-270	Terminal Board (*)
16.	18-241	Terminal Assembly (*)

If Possible Use Copeland Part No When Ordering Capacitors & Relays.

(*) Not Shown

CABINET PANELS

SD-2H MODELS

Common to all serial numbers up to and including serial number 172910.

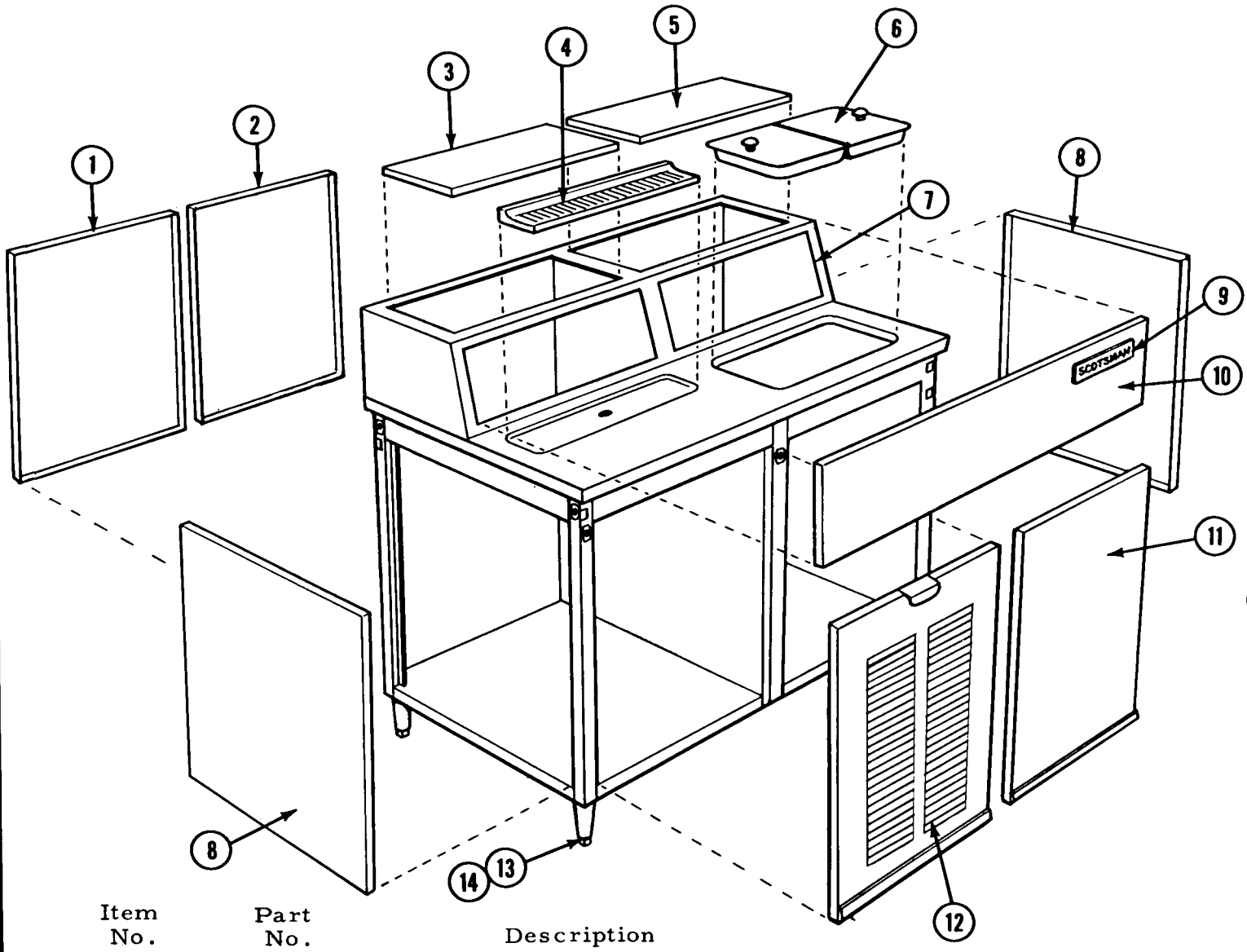

Item No.	Part No.	Description
1.	A-17754	Rear Service Door
2.	A-17753	Rear Panel - Case Panel
3.	A-17829	Left Top Panel- Hood
4.	2-1553	Drip Grille
5.	A-17812	Right Top Panel -Hood
6.	2-1550	Ice Bin Door
7.	A-17616	Hood Assembly
8.	A-17749	Right Left-Panel-Case
9.	15-156-1	Scotsman Emblem
10.	A-17608	Front Panel - Hood
11.	A-17766	Front Panel - Case
12.	A-17615	Front Service Door
13.	A-15803-1	Leg
14.	8-522-1	Leg Leveler for A-15803-1

Stainless Steel Models

To order items, 1-2-8-11-12 in stainless steel, add a dash (-1) one to above part numbers.

CABINET PANELS

SD-2H MODELS

Cabinet change affecting drain, syrup fittings to cabinet left side starts with serial numbers higher than 172910.

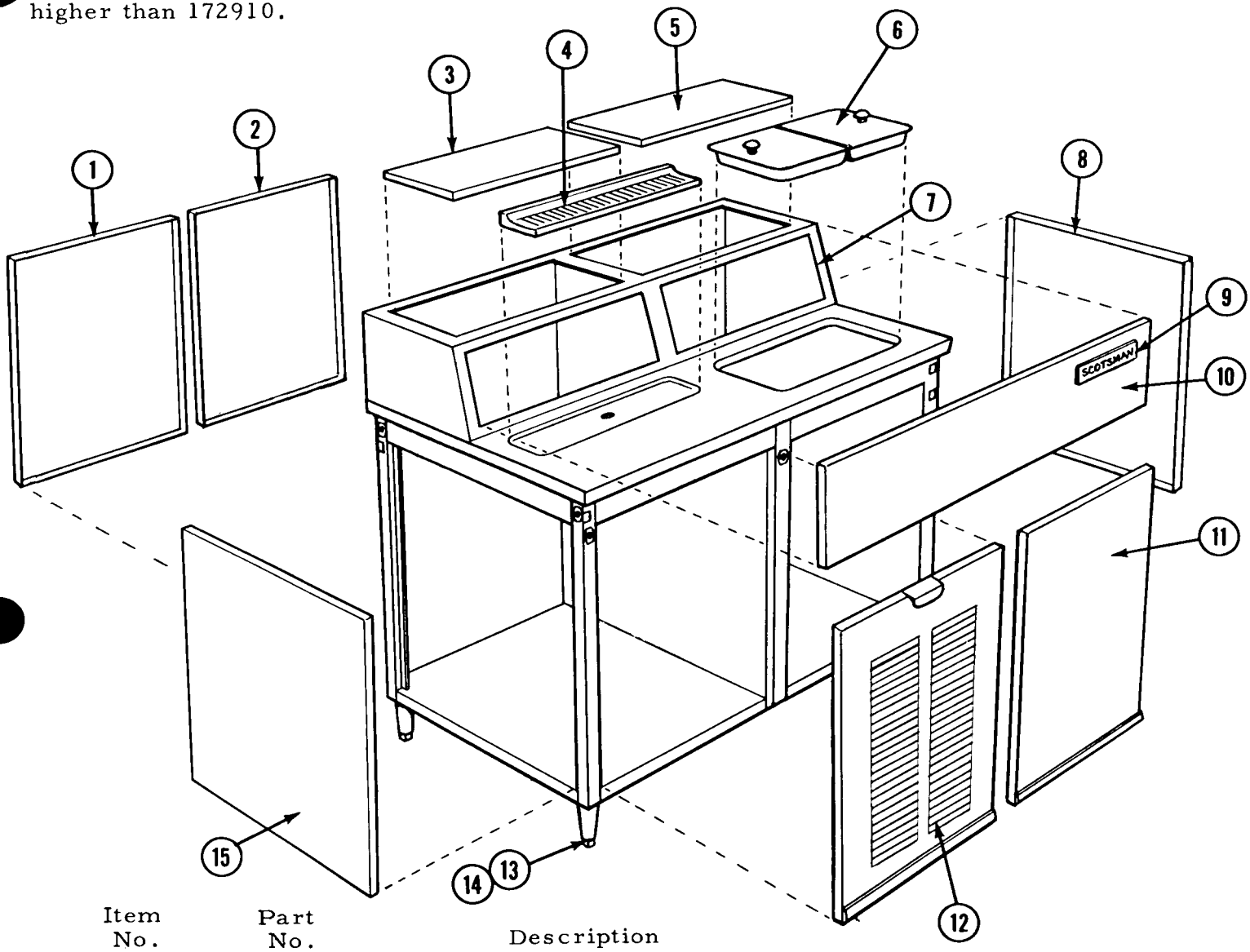

Item No.	Part No.	Description
1.	A-17754	Rear Service Door
2.	A-17753	Rear Panel - Case Panel
3.	A-17829	Left Top Panel- Hood
4.	2-1553	Drip Grille
5.	A-17812	Right Top Panel -Hood
6.	2-1550	Ice Bin Door
7.	A-17616	Hood Assembly
8.	A-17749	Right- Panel - Case
9.	15-156-1	Scotsman Emblem
10.	A-17608	Front Panel - Hood
11.	A-17766	Front Panel - Case
12.	A-17615	Front Service Door
13.	A-15803-1	Leg
14.	8-522-1	Leg Leveler for A-15803-1
15.	A-19156	Left Panel Case

Stainless Steel Models

To order items, 1-2-8-11-12-15 in stainless steel, add a dash (-1) one to above part numbers.

CARBONATION

"THE LIFE OF THE DRINK"

No other single element in the Bottling Industry occupies the unique position of Carbonic gas. It is the foundation on which the industry has been built. The Sparkle of lively bubbles which attract the eye and enhance the taste is called "carbonation."

This important element is too often taken for granted. It deserves greater attention--proper and uniform carbonation is as important a taste element in bottled beverages as the flavors themselves.

The information and suggestions on the next few pages are offered to encourage more exact control for obtaining greater uniformity in carbonation.

SOME FACTS ABOUT CO_2

Carbonic Anhydride, Carbonic Gas, or Carbon Dioxide, as it is variously termed, has the chemical symbol CO_2. It is under normal conditions a colorless, odorless gas, one and one-half times heavier than air. Chemically it is the combustion product of the element Carbon. It occurs in nature as the result of all types of combustion.

Carbonated Water has been found in natural springs in many parts of the world. Such springs have been known for centuries and have been highly regarded for beverage purposes.

Many of the desirable characteristics of carbonated beverages are due to the carbonic gas contained in them. It is therefore most important to determine the proper amount of carbonation such beverages should contain and having done that to provide the necessary control to insure uniformity of the product in this respect at all times.

–PROPERTIES–

Color	None
Odor	Pungent
Latent Heat	120 BTU/lb. at 0°F.
Critical Pressure	1,055 LBS. sq. in.
Critical Temperature	87.8°F.
Pressure in drums at 70°	839 lbs. sq. in.
1 lb. CO_2	8.50 Cu. ft. at atmospheric pressure and 50°F.
Solid CO_2 (Dry Ice)	110°F.

THE HISTORY OF CARBON DIOXIDE

Carbon dioxide has the distinction of being the first gas discovered. In the early part of the seventeenth century, Von Helmont, a Belgian, prepared it by burning wood and by treating mineral carbonates with acid. Black later discovered that carbon dioxide can combine with caustic alkalis and suggested the name "Fixed Air." It was not until 1781 that its real nature was demonstrated by Lavoisier--"Father of modern Chemistry."

The gas was first obtained in a liquid form by Faraday in 1834. But, of course, these were only laboratory scale experiments. It is claimed that a Prof. Venee of Montpelier, France, made the first soda water in 1750 by mixing a little soda and acid in a bottle of water. This is the orgin, no doubt, of the name "soda water."

The History of Carbon Dioxide

Joseph Priestly, another famous chemist, also made several artificially carbonated waters and in 1772 published a pamphlet entitled "Directions for Impregnating water with Fixed Air in Order to Communicate to it the Peculiar Spirit and Virtues of Pyrmont Water.

This was the beginning of great interest in the manufacture of artificial mineral waters. In England, after Priestly had shown the way, ginger beer came into popularity and later carbonated beverages made with sweet syrups as we know them today.

In America, Philadelphia claims the honor of having the first "soda water" manufacturer. Be that as it may, we find that by the middle of the 19th century, as the demand for CO_2 increased, many investigators were busy devising better and cheaper methods of preparing the gas for beverage purposes. While some of the gas then used was obtained from breweries, much was also obtained from the action of sulphuric acid (vitriol) on marble chips, or carbonate of soda.

Nearly every soft drink manufacturer had his own gas generating outfit and incorporated CO_2 into his beverages by agitation within closed vessels. Needless to say, aside from the cost involved, these operations were not only inefficient, but dangerous to a high degree.

In 1888 Jacob Baur, the founder of the liquid Corporation, conceived the idea of producing carbonic gas for coke gas, compressing it to a liquid state and marketing it in steel cylinders.

In May of 1889, the first cylinder of Red Diamond Gas was shipped from Liquid's first plant at 437 Illinois Street, Chicago. The company was then known as "The Liquid Carbonic Acid Manufacturing Company."

The convenience and economy of Carbonic Gas in cylinders was recognized by the industry and soon replaced the use of generator gas entirely.

CARBONATION AND THE FACTORS WHICH GOVERN IT

Carbonated water is largely a mechanical mixture of CO_2 and water and the term "carbonated water" is usually understood to mean water that contains gas to its capacity.

This capacity varies with pressure and temperature. The amount of gas water will absorb increases directly with the pressure. The amount of gas water will absorb also increases as the temperature decreases.

Therefore, any measure of the actual gas content of carbonated water will depend on the two factors--pressure and temperature.

The unit of measure that has been adopted as standard is "the volume."

One volume is the amount of gas that water will absorb at atmospheric pressure and at 60° Fahrenheit.

A volume of gas occupies the same space as does the water by which it is absorbed.

The pressure gauge on the carbonator or on the regulator or on the volume testing apparatus, does not show atmospheric pressure. This means that zero on the gauge is atmospheric pressure which is approximately fifteen pounds per square inch at sea level.

EFFECT OF TEMPERATURE 1

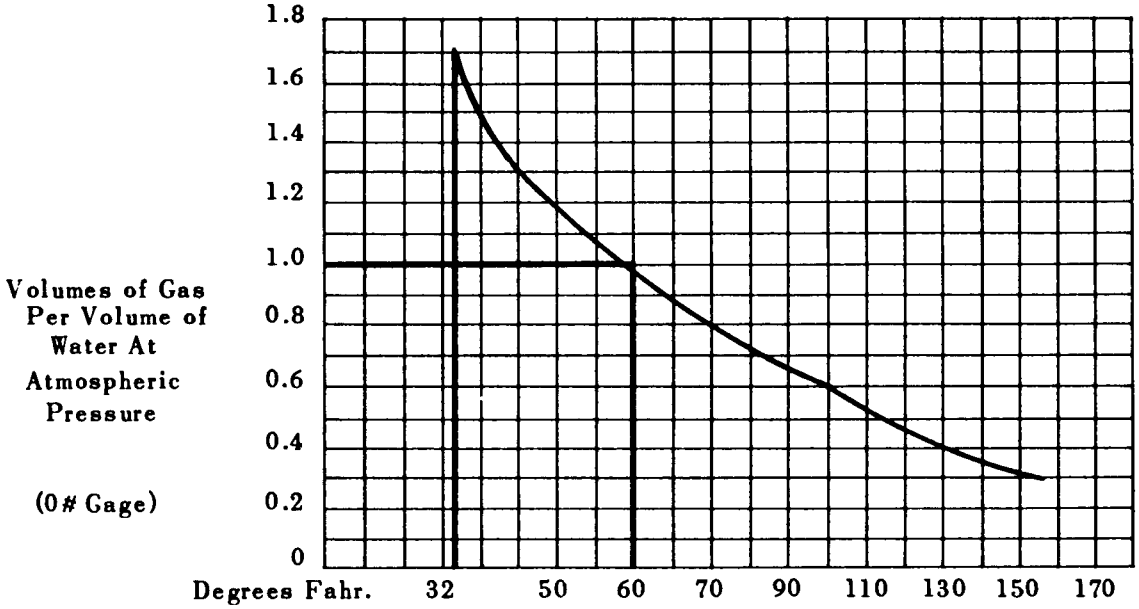

Chart No. 1 shows the effect of temperature change on the amount of gas water will absorb.

The pressure you will note, is constant--namely, atmospheric or 0 lbs. gauge. As the temperature of the water is lowered, the amount of gas it will absorb increases, until at 60°F. it is one volume. Note that from 60° to 150° the slope of the curve changes gradually, from 60° to 32° F., however, the curve changes more abruptly, and for each 10° difference in temperature, a decided increase in gas absorption is apparent, until at 32°, or slightly above the freezing point, we find that 1.7 volumes of gas is absorbed by the water at atmospheric pressure. From this curve it will be apparent that the cooler the water is, the more gas it will absorb.

EFFECT OF PRESSURE 2

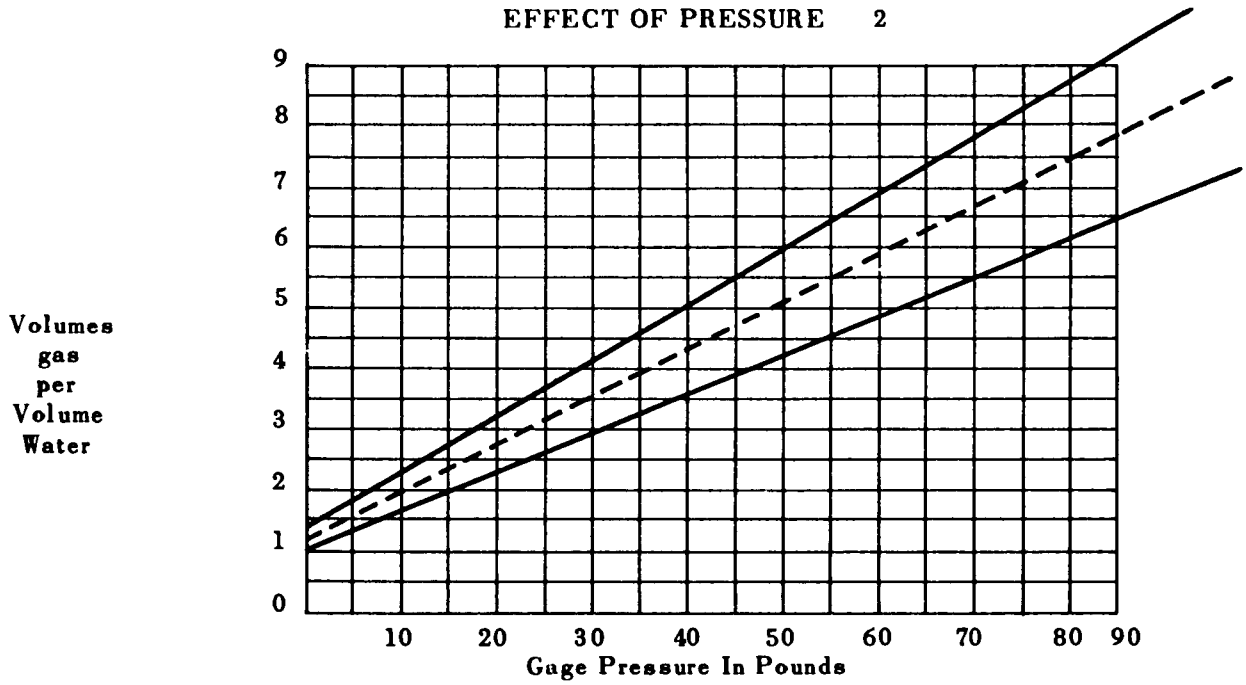

EFFECT OF PRESSURE

Chart No. 2 shows the effect of increasing pressures, temperature being constant, on the amount of gas water will absorb. You will note that the chart is a straight line, of the same slope throughout, indicating that as the pressure is increased, the gas volumes increase. Furthermore, the "gas volume" increase is directly proportional to the pressure. To illustrate--at 0 lbs. gauge and 60°F. we find that the water will absorb one volume of gas, at 15 lbs. increase in pressure, water at 60° will absorb one additional volume of gas. If the temperature of the water is 45°, then, for every 15 lbs. increase in pressure, the water will absorb 1.3 volumes of gas.

FOR A UNIFORM BEVERAGE
Control Carbonation

Carbonation is an important taste ingredient of your beverage. One of the vital attributes of any beverage is uniform taste--bottle after bottle. There are four elements that influence the taste of a beverage.--

1. FLAVOR 2. SWEETNESS 3. CARBONATION 4. TEMPERATURE

All but the final temperature of your drink are susceptible to direct control at your plant. Flavor and sweetness standards should be and probably are definitely established by means of exact formulas.

Carbonation standards should also be established for each flavor in your line--Sparkling water, ginger ales, and other "mixers" should be in the "high carbonation" bracket--the highest carbonation practically obtainable is the ideal to be sought for.

Cola drinks, root beer and other low acid drinks are in the next bracket usually carbonated to 3 or 3½ volumes--

Some bottlers prefer fruit drinks, especially Orange--at a lower carbonation. Determine a standard of carbonation for each flavor that you consider best for your market.

Set up definite instructions for maintaining these standards, just as you maintain standard formulas for the sugar flavor, acid and other ingredients.

FLAVOR	CARBONATION STANDARD
Root Beer	3½ Volumes

Having determined the carbonation standards, it is important that all concerned know how to control the factors that will enable you to maintain them.

HOW TO PRODUCE UNIFORM BEVERAGES

Bottlers know the importance of developing the proper formula for a beverage. They fully realize that for any bottled beverage to achieve popular favor, it must be right--in flavor, in taste, and in gas content.

How To Produce Uniform Beverages

The development of the proper formula for a beverage is, of course, an essential step in establishing that beverage in popular favor. To keep its popularity, the beverage must be the same from day to day and month to month. The formula must be followed exactly and the beverage produced in just the same manner. This means that perfect control of variable factors is necessary to assure uniformity.

The number of volumes of gas in a finished beverage has a definite relationship to the taste of the beverage. Correct carbonation means a sparkling, pungent, thirst-quenching beverage that completely satisfies the consumer. Low carbonation leaves the beverage with a flat, insipid taste which is unsatisfactory. Finished beverages should be checked at frequent intervals to assure proper carbonation in the bottle.

The amount of sugar in a beverage determines, with a given acid content, its sweetness. The sugar also has another important function in the beverage. Sugar makes the "body" of the beverage and "body" is a necessary background for any flavor. A change in the body changes the taste of the beverage even though the same flavor is used. High quality extracts are, of course, a necessity.

Control of sugar content of the beverage is very important. It depends on the beaume of syrup used and the throw used. Variation in syrup density changes the finished beverage if the throw remains the same. Variation in the throw will also change the beverage if the syrup density is unchanged. By checking the beaume of the finished beverage a control is established where it does the most good.

Uniform finished beveraged can be made only by positive control over such variable factors in beverage production.

Check the density of your syrup with a beaume scale.

Check the actual throw in the bottle by measuring individual sample bottles.

Check the final result by using the finished drink tester on the completed beverage.

Check the carbonation in the finished beverage.

KNOW YOUR WATER

Water that is satisfactory for drinking purposes is generally satisfactory for carbonating. There are very few exceptions to this rule.

The water used for carbonating must be clean. That means free from suspended matter of all kinds including water organisms which may be too small to see except under a microscope.

All water should be properly filtered and it is advisable to use an activated carbon unit after the filter. The ideal set up is to follow the activated carbon unit with a paper filter. This will prevent particles of the carbon coming through with the water.

Chemical composition of the water does not affect carbonation within the limits of potable water. If enough material were in solution to interfere with carbonation, it would not be possible to use the water for drinking purposes.

Organic matter in solution can cause trouble if present in excessive quantities but this trouble is removed by activated carbon.

It may be necessary to treat water chemically in some cases. Hardness can be removed by chemical treatment and that is sometimes advisable to prevent scale formation on machinery, particularly on soaker parts. Alkalinity can be reduced by chemical treatment and that is advisable if the alkalinity is high enough to affect the taste of the water or if it is sufficient to neutralize too much of the acid in the beverage. If objectionable material is present in the raw water, that may require chemical treatment.

Such treatment, properly handled, does not affect carbonation and it does not change the necessity for proper filtration. Chemical treatment should be followed by filtration.

FOES OF CARBONATION AND HOW TO COMBAT THEM

AIR

Too much air in the water interferes with proper carbonation and also causes the CO_2 gas to leave the water more quickly when the bottle of finished beverage is opened. It is therefore important to to reduce the amount of air present to the minimum.

Some air is present in the raw water supply. More may be added in the mechanical handling of the water. When such water reaches the carbonator, the CO_2 gas tends to drive it out of the water. If steps are not taken to remove it, this air will accumulate in the carbonator and much of it will be carried through in the water and into the finished beverage. That is why all liquid carbonators have an automatic air snift.

CARBONATOR SECTION

HOW IT WORKS

Most of the cold drinks served at a soda fountain are carbonated. Therefore, nothing is more important to the successful operation of a fountain than cold, properly carbonated water to make drinks sparkling, full flavored and fully satisfying in quality.

Water is carbonated by combining it with carbonic acid gas (CO_2) . This is done in a sealed chamber by forcing gas from a drum through a pressure regulating valve into the water in this chamber. As the carbonated water is used from this chamber, it is replaced by a high pressure water pump. The operation of this pump is controlled by an automatic switch device which senses the water level.

Two conditions must be maintained in order to induce and hold carbonic gas in water, They are:

1. Pressure
2. Adequate refrigeration or cooling.

In the SCOTSMAN DISPENSER, pressure is supplied by the gas drum and is present throughout the system to the carbonator tank and keeps the water carbonated. Without adequate cooling, however, carbonation escapes rapidly after the water leaves the tank. Soft drinks should be dispensed at $40^{o}F$. or below. The colder the water the greater the carbonation. Cooling with ice a temperature of $32^{o}F$. can be reached and held without danger of freezing as is true with mechanical refrigeration systems. Thus, less CO_2 is used to achieve the same degree of carbonation in a drink.

THE GAS DRUM-Source of carbonation

Drums for carbonic acid gas are made of drawn steel tubing and are built to withstand great pressure. As delivered, they contain liquid gas reduced to liquid form by tremendous compression.

Each one is equipped with a safety valve set to blow out before internal pressure can explode the drum itself. Once this valve "pops off", the contents of a drum will escape. Drums, therefore, should always be stored in a cool place to keep the liquid from expanding and increasing pressure inside the gas drum.

Drums are classified by weight. They come, as a rule, in two sizes: 20-lb. drums and 50-lb drums. These weights refer to the compressed liquid contents and are in addition to the tare weight usually indicated on the head of each drum.

CARBONATOR SECTION

HOW TO CHANGE A GAS DRUM - NEXT PAGE - SINGLE REGULATOR IS SHOWN

1. Close drum head valve (A) (clockwise).
2. Close regulator outlet valve (B) (clockwise).
3. Disconnect regulator from drum by removing regulator coupling nut (C). Gauge should drop to "0".
4. If gauge does not drop to "0", turn regulator key (D) clockwise to allow all gas to escape from the body of the regulator through the main connection.
5. Turn regulator key (D) counter-clockwise until it is free and loose and regulator is closed.
6. Put full drum in place of one being replaced. Couple regulator coupling nut (C) to new gas drum, first making certain that there is a good fiber washer at the connection.
7. Open drum head valve (A) all the way, turning it as far as it will go to bring packing up tight against the shoulder of the valve stem.
8. Turn regulator key (D) clockwise slowly until standard operating pressure, as indicated on the gauge, is reached. Unless you have a low pressure carbonator the standard operating pressure is 100 lbs., depending on the manufacturer's recommendation.
9. Open regulator outlet valve (B) slowly and release gas to carbonator. As pressure equalizes, open this valve all the way.

WASHERS: In gas connections and lines under high pressure, use fiber washers only. In lines carrying liquids or subject to relatively low pressures, rubber or leather washers should be used.

Keep gas turned on at all times to insure uniform well-carbonated water.

Shown is single stage regulator with gauge as used on gravity type drink dispenser heads. For pressure type dispensing heads a two stage or hi and lo pressure regulator and gauge are required.

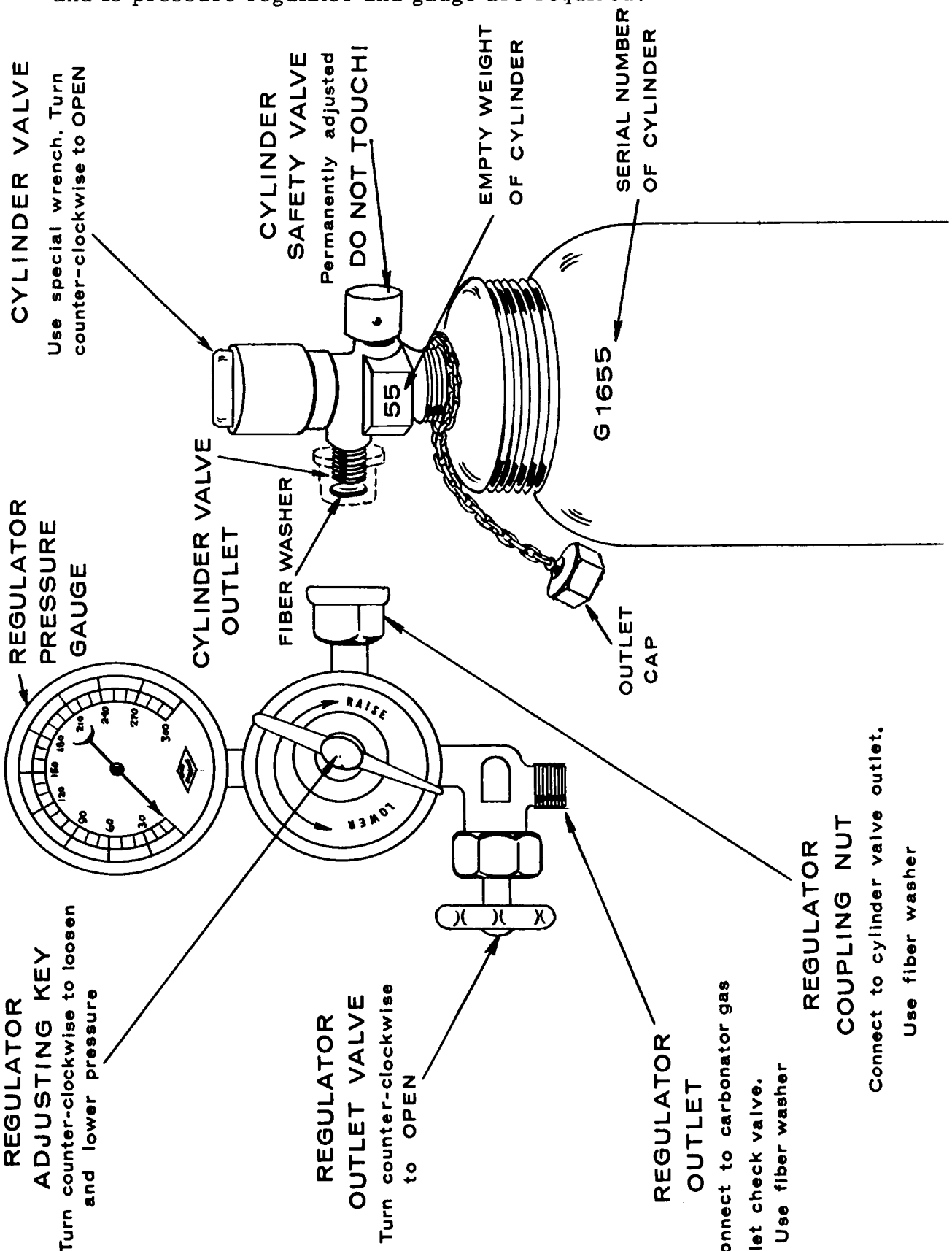

CARBONATOR SECTION

Make sure that the regulator coupling nut and regulator valve coupling are tight and that both contain a good fiber washer.

Make sure that the water back-pressure check valve is functioning properly.

Sometimes it is difficult to detect a leak in the regulator gauge. In checking here apply the lather generously, and watch closely.

If a leak occurs near either end of a hose, cut off the defective end and refasten hose with clamps. Otherwise, replace hose.

OPERATION-Gravity type dispensing heads.

Turn on CO_2 gas and adjust regulator to 100 lbs. pressure, open soda water faucet for one-half minute to blow all air out of carbonator. Close faucet, turn on water supply and turn on power supply to pump motor. When pump stops, open faucet again until full stream of water is obtained. Draw several glasses of water and note pump operation. Pump will operate after approximately 14 ounces of carbonated water have been drawn.

The carbonator will operate satisfactorily on CO_2 pressures from 80 to 120 pounds. set regulator at 80 lbs. for maximum gas economy or adjust to suit requirements of the faucet used.

OPERATION-Pressure type dispensing heads, kits.

Pressure types dispensing systems require both hi and lo pressure gauges as well as syrup tanks etc.
Hi pressure CO_2 gauge feeds carbonator, lo pressure gauge feeds pressure to syrup tanks, forcing syrup thru lines to dispensing heads. Normal pressure setting is 30# gauge.
See accompanying sketch for details.
The system is completely automatic in operation, and requires no attention except maintaining CO_2 supply, and periodic servicing of water supply line filter.

IMPORTANT: Insufficient water supply will cause noisy operation and eventual damage to pump. If strainer and filter are clear and line valves open, noisy pump operation indicates insufficient water supply.

WARNING: If the installation is idle and exposed to freezing temperatures, disconnect water supply line and blow all water out of carbonation system.

THE REGULATOR GAUGE--ACCESSORY ITEM, NOT INCLUDED WITH DISPENSER

The regulator in the carbonating system is mounted at the outlet of the gas drum. The regulator reduces and controls the pressure of carbonic acid gas before it enters the carbonator . The regulator gauge indicates gas pressure at the regulator outlet valve.

TESTING REGULAR GAUGE - SEE ILLUSTRATION ON FOLLOWING PAGES

The regulator gauge should be tested every time a gas drum is changed and at least once every 60 to 90 days. Follow this procedure:

1. Close the drum head valve (clockwise).
2. Close the regulator outlet valve (clockwise).
3. Loosen the regulator coupling nut.
4. Turn regulator adjusting key clockwise until gas pressure in regulator is released and the needle on the regulator gauge drops to "0". Turn this adjusting key counter-clockwise until it is loose and free.
5. Tighten regulator coupling nut and open drum head valve slowly. (The regulator outlet valve remains closed.)
6. Check the reading of the needle on the gauge. If it remains at "0", the regulator is in good condition. If the needle rises but does not register more than 15 pounds pressure, the regulator is working satisfactorily within acceptable limits. If the needle creeps to 30 pounds pressure or more, the regulator needs immediate repair.

HOW TO FIND AND STOP GAS LEAKS

Whenever a fresh drum of CO_2 gas is connected to the carbonating system, open the drum valve until the regulator gauge reaches maximum pressure (approximately 120 to 125 lbs.) and then close drum valve.

If the needle of the gauge on the regulator continues to drop, there is a leak in the system. Due to some absorption of gas in the water in the carbonator, the needle may drop a few pounds, but it should then come to a stop if there is no leak.

If a leak is found by this method, proceed to locate it as follows:

You can test the carbonation system for gas leaks by applying shaving soap lather with a shaving brush to all joints, connections, and valves. If there is a leak, bubbles will appear.

If gas is escaping at the stem of the drum head valve, open valve all the way. Usually this closes a leak through the packing around valve stem. Also tighten packing nut to keep gas from escaping through packing.

DIAGRAM OF PARTS AND ACCESSORIES FOR
INSTALLING SYRUP TANKS ON MODEL SD-2H
COMBINATION ICE MAKER AND DISPENSER

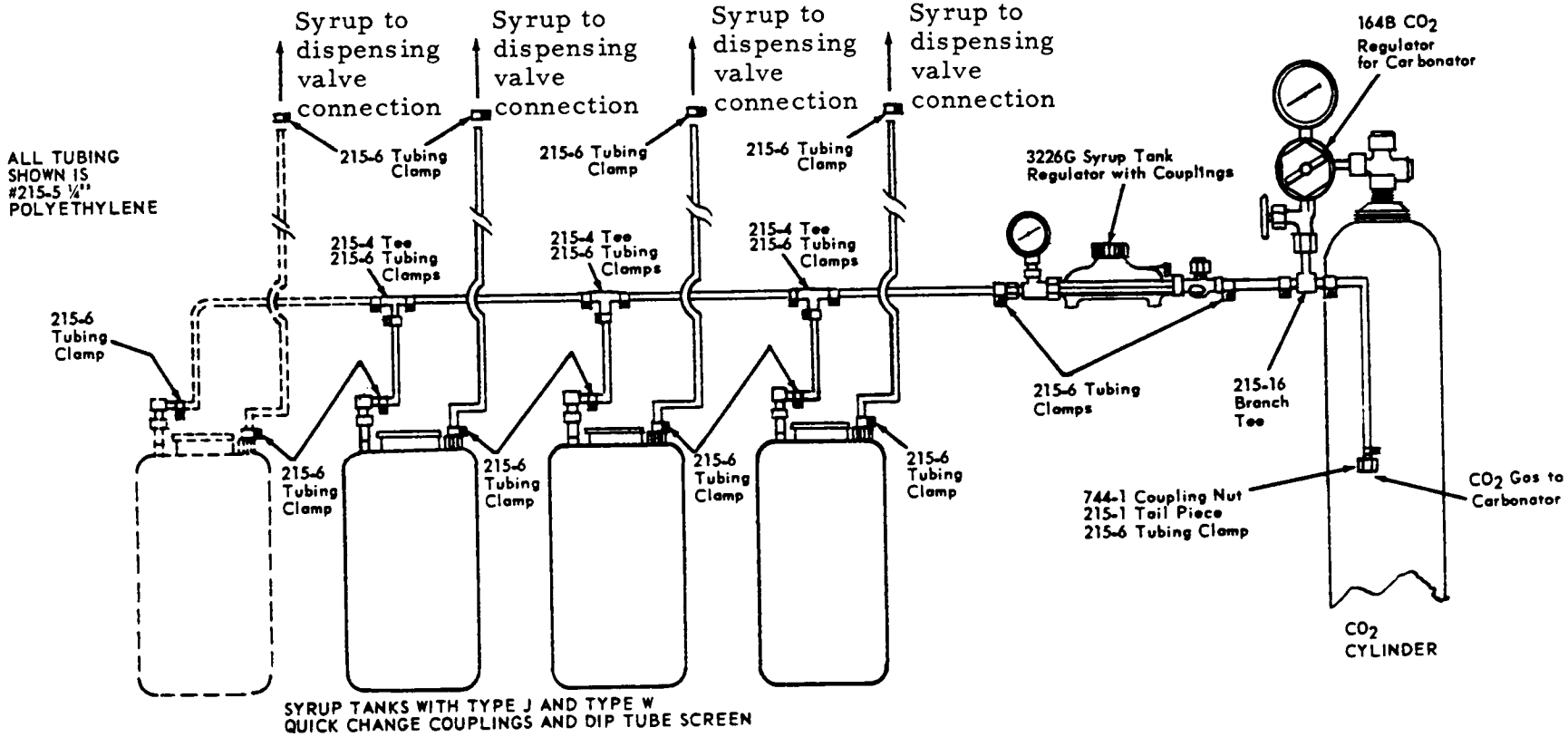

Typical layout for use on pressure type dispensing heads - kits -

Source: Excellall Products Div.
Bastian Blessing Co.
4201 W. Peterson Ave.,
Chicago, Illinois

CARBONATION SYSTEM

HOW IT WORKS (See Sketch Page 45)

Water enters the cabinet and goes directly to the strainer mounted on the carbonator pump. After passing through the strainer, part of the water goes to the reservoir of the ice machine. The remainder of the water goes through the pump to the cold plate. Water may go through the check valve in the pump when the pump is not operating. The water passes through the cold plate and is cooled, leaving the cold plate the water enters a tee. At this point the water may go to the dispensing equipment to provide cold drinking water or cold water for non-carbonated drinks. The rest of the water coming from the tee goes to the carnator tank. The water inlet to the carbonator tank has a check valve, therefore the water enters the tank only when the pump is running and the water pressure is above the CO_2 pressure in the tank. A water jet breaks up the water into a fine spray, the CO_2 atmosphere inside the tank mixes with the water to produce the carbonated water. The CO_2 gas enters the tank through check valves directly from the cabinet fitting. The carbonated water leaves the tank, makes a pass through the cold plate and goes to the dispensing equipment for use as carbonated water or carbonated drinks.

The water level in the tank and switching of the pump is controlled by electrodes in the carbonator tank and the liquid level control. Here's how it works.

At start up the pump motor contacts on the relay are closed and the relay is de-energized. Note that the secondary of the transformer which supplies power to the relay is a open circuit. As the water rises in the tank it comes in contact with the low level electrode. Nothing happens since the wire from the electrode goes to a open switch or contact on the relay. As the water continues to rise it then makes contact with the high level electrode. At this instant a electrical circuit is completed through relay and water. This circuit energizes the relay which opens the pump switch and closes the electrode switch. Now as carbonated water is used and the water breaks contact with the high level control the pump will stay off since there is still a electrical circuit through the relay, electrode contacts and water by way of the low level electrode. As the carbonated water level continues to drop it breaks contact with the low level electrode, this de-energizes the relay and the pump starts filling the tank. This cycle continues over and over again always maintaining a carbonated water level between the tips of the two electrodes.

NOTE: On units above serial number 115872 the carbonator tank is changed to a tank with 1/4" flare fittings to check valves also a single dual purpose electrode replaces former tank-operation remains the same. See page 53

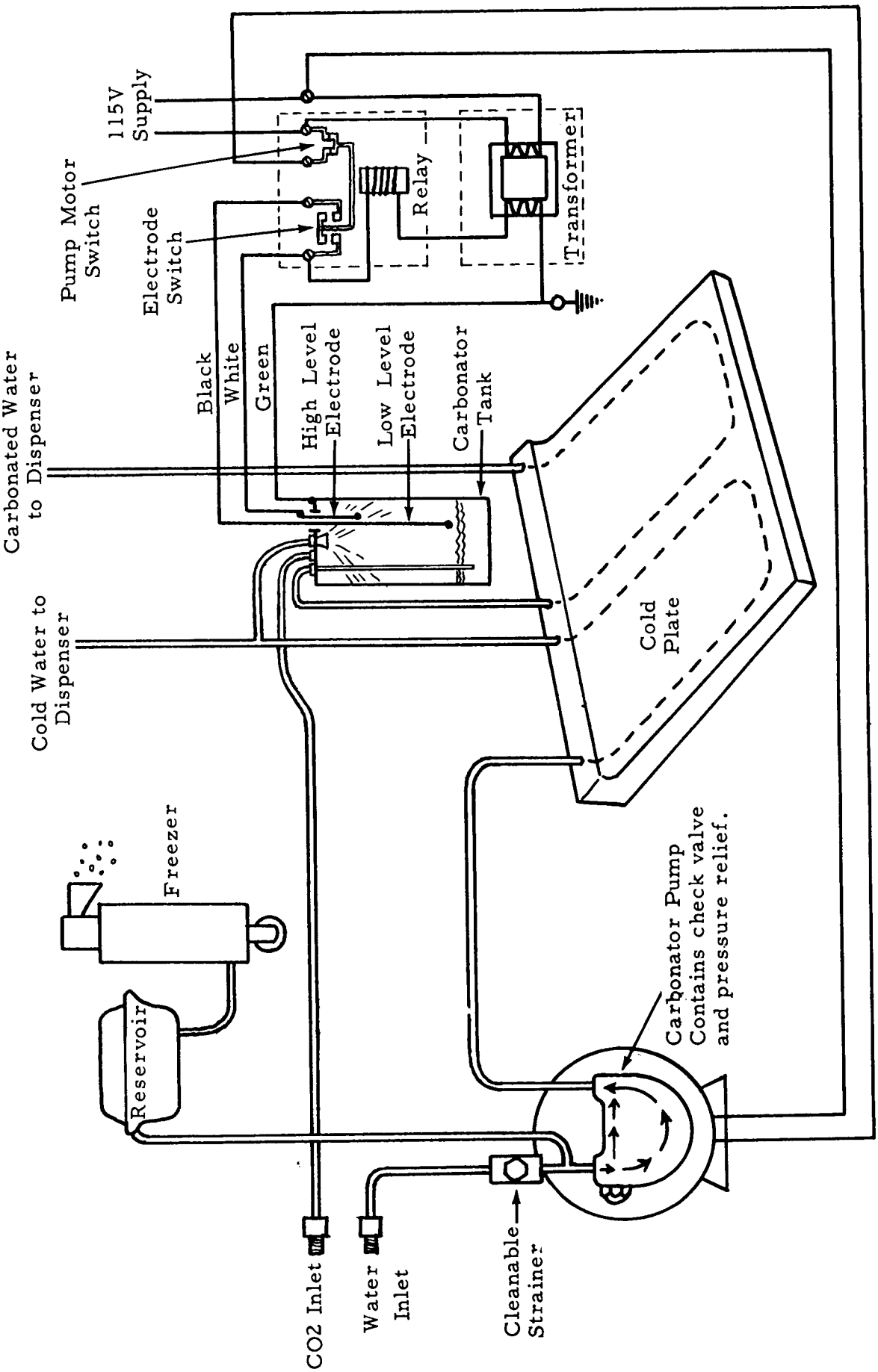

WATER SYSTEM SCHEMATIC

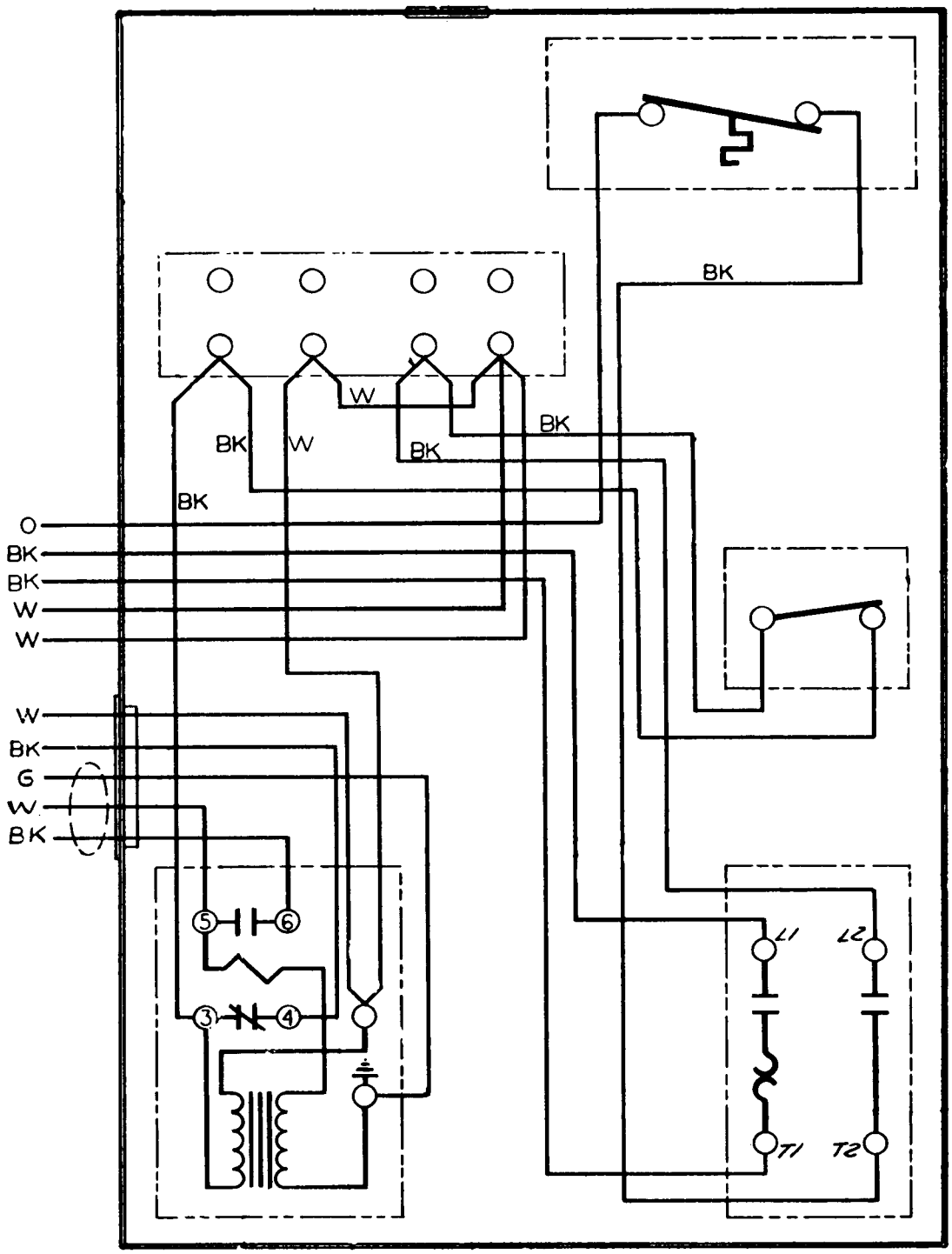

WIRING DIAGRAM
Carbonator Liquid Level Control
All SD-2H Models

CARBONATION SECTION
Service Analysis Chart

COMPLAINT	POSSIBLE CAUSE	CORRECTION
Milky carbonated water	Air in carbonator	Vent carbonator
	Pump sucking air	Check for loose fittings Replace pump
Gas only flows from dispenser valve	Water turned off	Turn on
	Electric motor not cutting on.	Check liquid level control Check carbonator tank electrode
Carbonator fills with water	Water pressure too high	Adjust if possible, or install pressure reducer
	Gas pressure too low	Set regulator key to deliver proper gas pressure
	Gas drum empty	Replace
Carbonated water backs up into city water line.	Dirty or worn back-pressure check valve	Clean or replace valve seats
Excessive pumping	Closed water supply valve	Open valve
	Water supply (building or city) shut off	Re-establish source
	Automatic switch out of order	Check switch, replace if necessary
	Water inlet screen clogged	Remove and clean screen
	Pump inlet or check valve out of order	Repair or replace
	Swollen washers in hose couplings obstruct flow of water	Replace washers
Carbonator pump pounds water running in spurts	Air in pump	Vent pump
	Water off	Turn water on
	Filter or strainer plugged	Clean or replace
	Inlet line too small	Must be 3/8" copper or larger

CARBONATION SECTION

Service Analysis Chart

COMPLAINT	POSSIBLE CAUSE	CORRECTION
No carbonated water (pump does not run)	Motor burnt out	Replace
	Liquid level control	Check relay wiring, contacts Repair or replace relay
	Carbonator Switch	Replace
	Tank electrode shorted	Repair or replace
No carbonated water (pump runs)	Pump running backwards	Reverse wiring inside motor
	Worn pump	Replace
	Pump check valve leaks	Clean or replace
	Pump relay valve opens too soon	Clean; valve is adjustable, set higher; or replace
	Clogged filter or inlet screen	Clean or replace
	Water line blocked	Check for smashed washer at fittings or plugged check valve on tank
Flat carbonated water	Gas drum empty or low	Replace drum
	Gas turned off	Turn on gas
	Regulator set too low	Increase pressure
	Gas line plugged by swollen washer	Replace washer
	Water pressure too high	Adjust if possible or install water pressure regulator
Metallic taste	Carbonated water backing up into city water line	Clean water back-pressure check valve, replace.
	Carbonated water line connected by mistake to brass or copper lines. Use proper beverage tubings.	Make proper connection using approved tubing.
Carbonated water off taste	Oil, dirt or grease inside carbonator	Clean carbonator
	Tainted gas.	Sniff gas at drum head to determine if drum should be replaced.

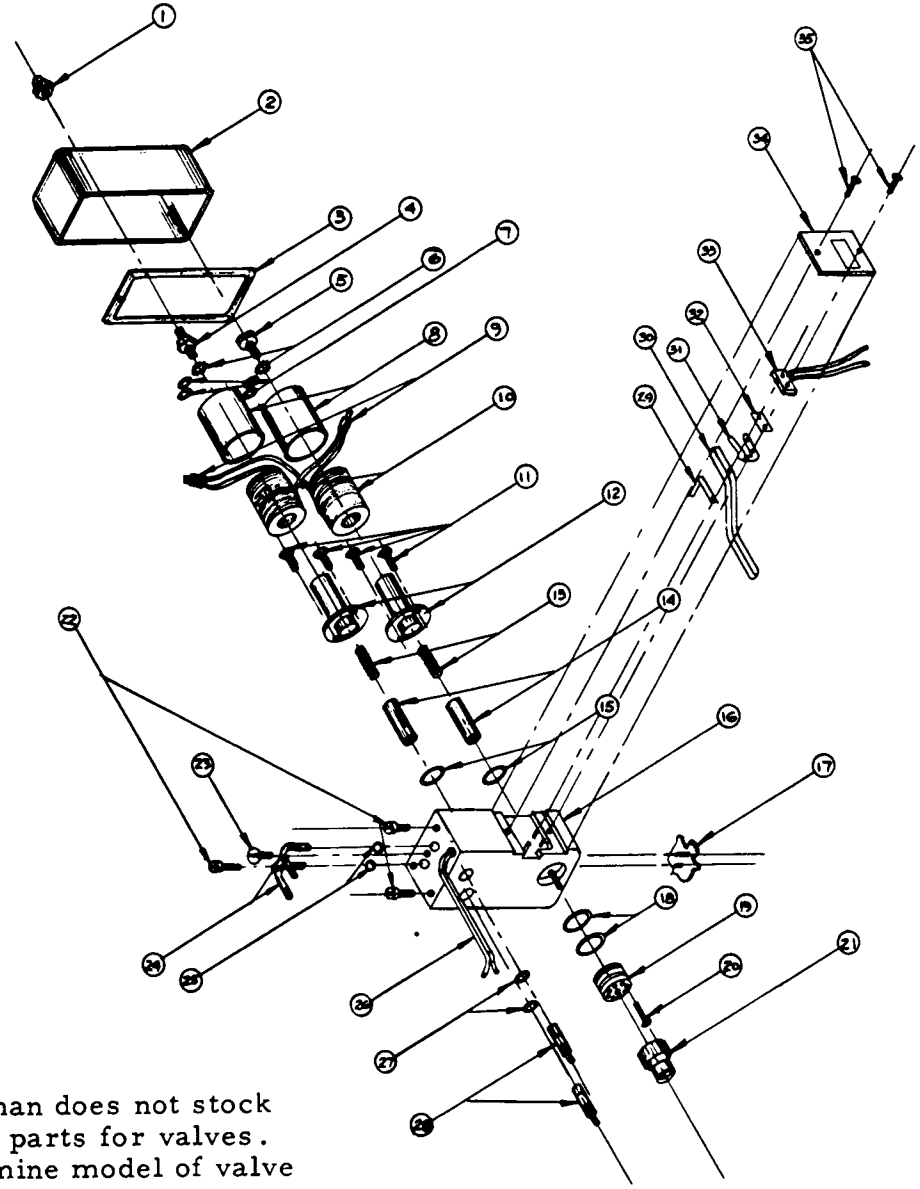

NOTES:
1. - MC-29 THRU MC-35
2. - MC-20 THRU MC-22
3. - MC-41, MC42 & MC43.

	NO.	PART NO.	DESCRIPTION
	35	MC-12	SCREW, SWITCH COVER
	34	MC-11	PLATE, SWITCH COVER
	33	MC-9	MICRO-SWITCH
	32	MC-8	INSULATOR, MICRO-SWITCH
	31	MC-7	ACTUATOR, MICRO-SWITCH
	30	MC-10	LEVER, ACTUATING
	29	MC-46	GROUNDING STRAP
	28	MC-2	STEM, METERING
	27	MC-3	"O" RING, METERING STEM
	26	MC-13	SERVICE CORD
	25	MC-39	"O" RING, INLET FITTING
3	24	MC-43	INLET FITTING
	23	MC-38	SCREW, RETAINER
	22	MC-37	SCREW, MOUNTING
	21	MC-40	SPOUT
	20	MC-6	SCREW, DIFFUSER
	19	MC-4	DIFFUSER
	18	MC-5	"O" RING, DIFFUSER
	17	MC-47	McCANN CREST
	16	MC-1	BASE, FAUCET
	15	MC-14	"O" RING, PLUNGER HOUSING
	14	MC-15	PLUNGER, SOLENOID
	13	MC-16	SPRING, SOLENOID PLUNGER
	12	MC-17	HOUSING, PLUNGER
	11	MC-19	SCREW, PLUNGER HOUSING
2	10	MC-20	COIL, SOLENOID
	9	MC-44	NUTS, STA-KON WIRE
	8	MC-23	HOUSING, COIL
	7	MC-24	GROMMET, COIL HOUSING
	6	MC-26	LOCKWASHER, SOLENOID VALVE STEM
	5	MC-27	SCREW, SOLENOID VALVE STEM
	4	MC-25	STUD, SOLENOID VALVE STEM
	3	MC-28	GASKET, COVER
1	2	MC-29	COVER, TOUCH-O-MATIC
	1	MC-36	ACORN NUT, COVER

TOUCH-O-MATIC FAUCET
MODEL NO. TMC-10

McCANN'S
ENGINEERING AND MFG. CO.
430 W. CYPRESS ST., GLENDALE, CALIF.

NOTE: Scotsman does not stock repair parts for valves. Determine model of valve on your unit and order parts from:

McCann's Engineering & Mfg. Co.
430 W. Cypress Street
Glendale, California

I. PRINCIPLE OF OPERATION

When the operator presses a glass against the main actuating lever (30) of the faucet, this lever in turn depresses the actuating button on the electric Micro-switch (33). The switch then completes the circuit, allowing electricity to flow immediately to both solenoid valve coils (10). With the coils energized, they immediately act as electro magnets by creating a magnetic force that raises the plungers (14) located in the center of the coils. When these two plungers are in a raised position, syrup and water are then permitted to flow through an orofice, into the spout (21) (mixing chamber) and finally end up in the operators glass blended perfectly.

II. METHOD OF SANITIZING OR CLEANING FAUCET

The faucet need not be dismantled in order to be cleansed. All that is required is simply fill a spare syrup tank with your cleaning agent, connect it to the syrup line to the desired faucet and flush it through faucet and syrup system with CO_2 pressure. A clean water rinse may be accomplished in the same manner.

The faucet spout should be removed and cleaned weekly.

III. POWER SOURCE

Our standard Touch-O-Matic Faucet is supplied with 115 Volt A.C. - 60 Cycle coils. However, they can be supplied with various voltages. Naturally each faucet is clearly marked regarding its required voltage, the coil housing (8) is also marked accordingly. The coil itself is color coded to identify its voltage as follows:

RED	LEADS indicate	-	115 VAC	- 60 Cycle
BLACK	LEADS indicate	-	12 VAC	- 60 Cycle
YELLOW	LEADS indicate	-	12 VDC	-
BLUE	LEADS indicate	-	6 VDC	

IV. METHOD OF DISMANTLING SOLENOID VALVE

1. Remove screw (5) and lock washer from plunger housing.
2. Remove coil housing (8).
3. Remove coil (10) by lifting only, do not cut wires.
4. Remove the 2 screws (11) from plunger housing base.
5. Remove plunger housing (12), lift straight up.
6. Remove plunger spring (13).
7. Remove plunger (14).

TO REASSEMBLE - REVERSE PROCEDURE.

NOTE!! Before removing a faucet from a dispenser or fountain, or before dismantling a solenoid valve that is mounted on a fountain, be sure to turn off the CO_2 pressure to the syrup tank and carbonator. Also, bleed off the CO_2 pressure on the syrup tank and carbonator, if there are no shut-off valves on the fountain.

V. SERVICE TIPS

1. When the 2 screws (11) that fasten the plunger housing (12) to the plastic valve base (16) are replaced, they should be screwed down all the way. In other words, be sure that the large stainless washer on the plunger housing (12) is pressed firmly against the plastic. If one screw was all the way in and the other was only half way in (for example), the plunger in the housing might "cock" and cause dripping - Caution - these screws do not have to be extra tight, just snug down.

2. When reassembling solenoid, with plunger spring (13), place in plunger (14), allow the plunger housing (12) to be placed over the plunger and spring and held together, thus preventing the plunger spring from falling out while assembling.

3. There is a difference between the Touch-O-Matic Non-Carbonated (NC) and the Carbonated faucet. The Non-Carbonated faucets are marked NC on the underside of the faucet. The NC faucet is designed for plain water. Since this pressure could vary from 10 to 100 psi at various locations throughout the same city, we arrived at a medium flow of water. On this faucet, we use a 3/16" orifice which will pass a sufficient amount of water at 10 psi. This faucet can work on pressure up to 50 psi, but no higher or the plunger will fail to open occasionally.

   The Carbonated faucet will operate on pressures up to 125 psi, by using a smaller 1/8" orifice.

4. RECOMMENDED OPERATING PRESSURES

   10 to 20 psi on syrup - average 15 psi.
   80 to 120 psi on carbonated water - average 100 psi.

5. RATE OF FLOW AND PROPER BLENDING

   The fastest rate of flow recommended for the Touch-O-Matic Faucet is 2 ounces per second of finished drink. In other words, a 6 ounce finished drink should take at least 3 seconds to pour. If a faster pour is used, the carbonation in the drink would be reduced.

   The typical blend used, is 1 ounce of syrup and 5 ounces of water for a finished 6 ounce drink. However, this may vary with the brand of syrup used, therefore check with your syrup supplier.

   To increase flow of syrup or water, turn metering screw out (counter-clockwise) and inward (clockwise) to decrease flow. These adjustments are sensitive and should be treated as such, by not turning more than an eighth of a turn at a time.

6. When replacing Spring Actuator (31) on micro-switch, pull switch straight out evenly. If switch is raised unevenly, it will bind and make it difficult to remove. When replacing switch, be sure to have actuating button of switch at top position not at the bottom. This will insure longer life of the actuating spring.

CARBONATOR PUMP ASSEMBLY

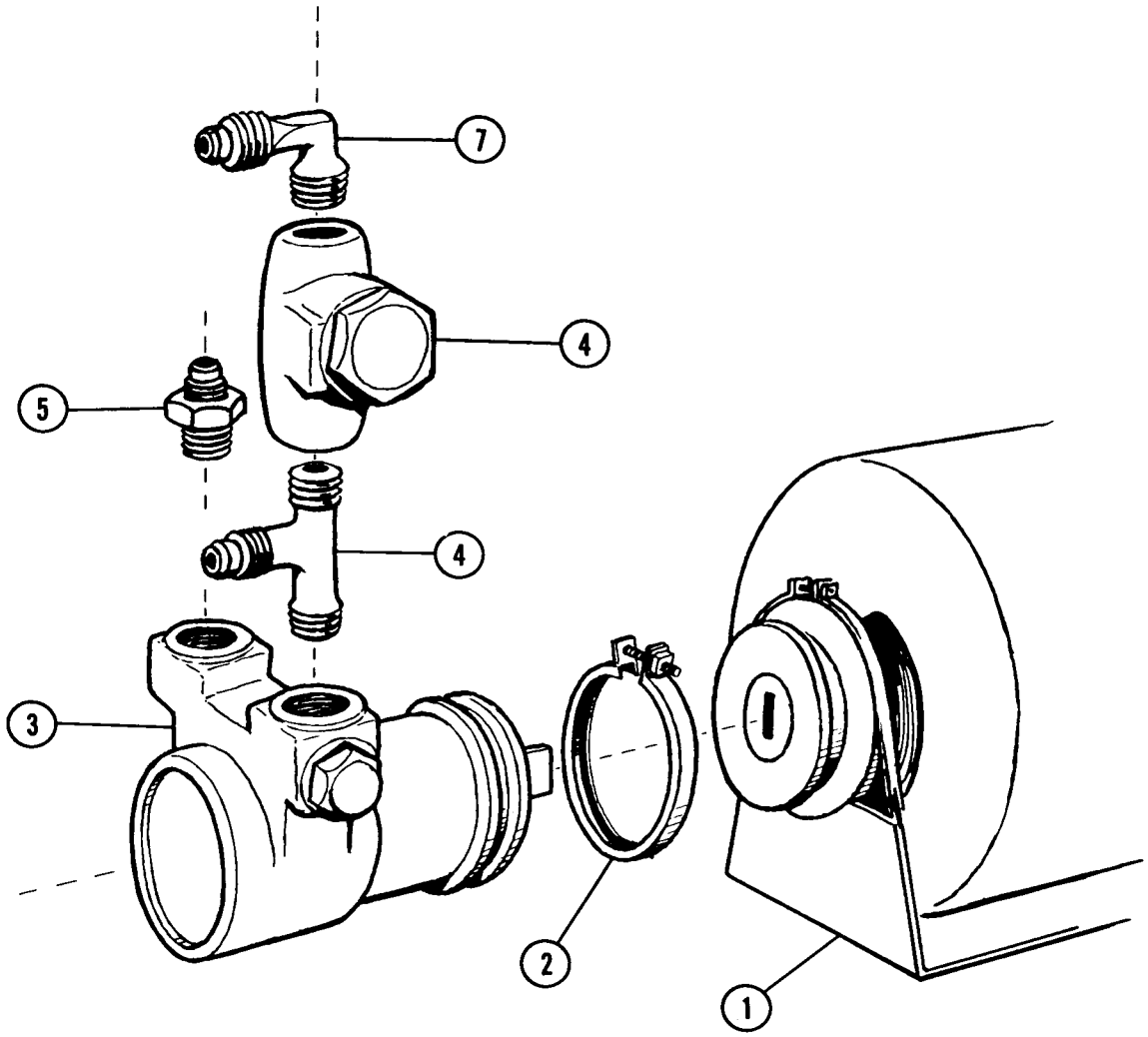

ITEM NO.	PART NO.	NAME
1.	12-1339-1	Motor 115/60/1
2.	2-1527	Coupling Clamp
3.	2-1526	Pump
4.	16-468	Tee 3/8" x 3/8" NPT x 1/4" Flare
5.	16-355	Union 3/8 NPT x 3/8 Flare
6.	16-162-1	Strainer
7.	16-401	Half Union Elbow

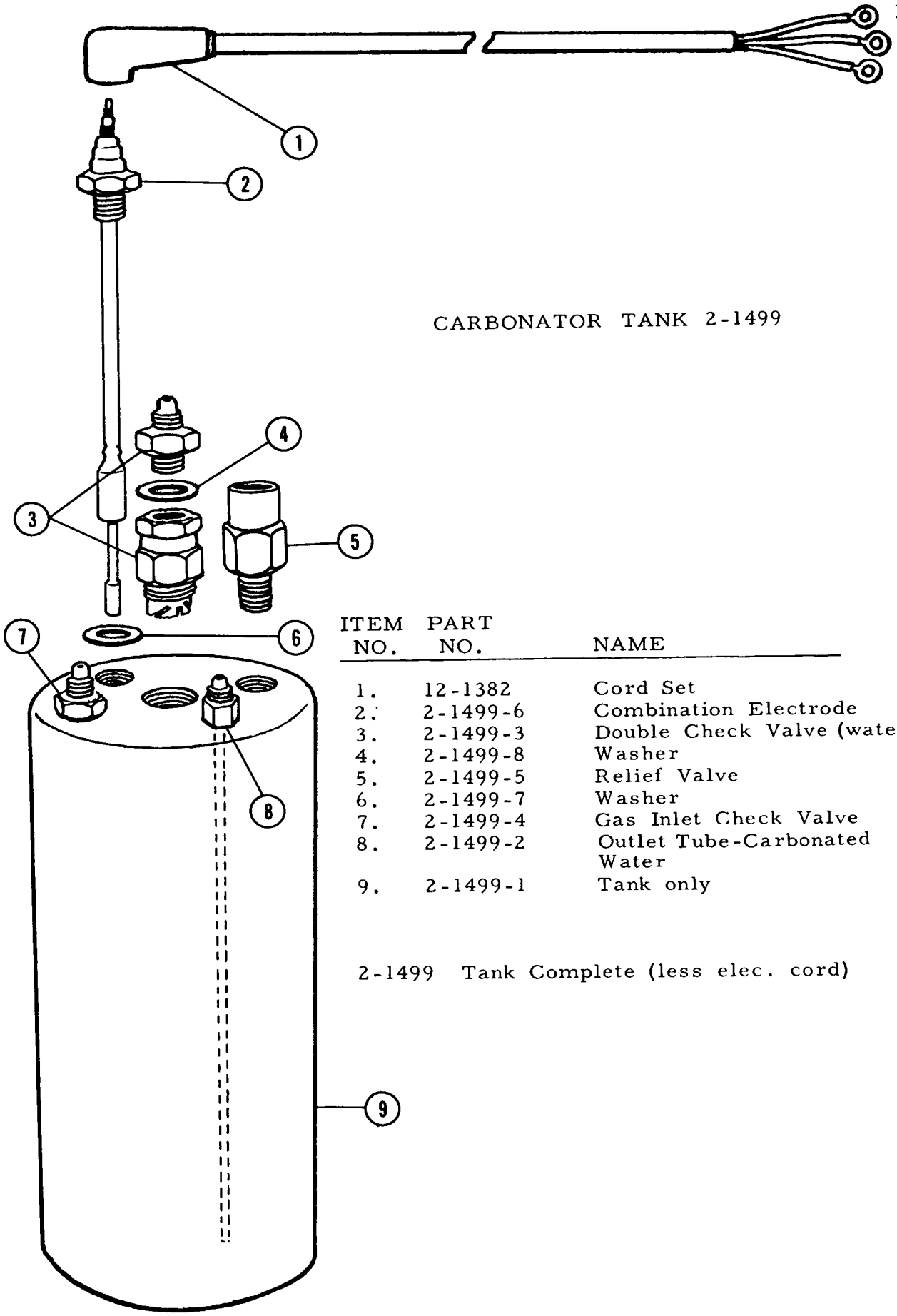

CARBONATOR TANK 2-1499

ITEM NO.	PART NO.	NAME
1.	12-1382	Cord Set
2.	2-1499-6	Combination Electrode
3.	2-1499-3	Double Check Valve (water)
4.	2-1499-8	Washer
5.	2-1499-5	Relief Valve
6.	2-1499-7	Washer
7.	2-1499-4	Gas Inlet Check Valve
8.	2-1499-2	Outlet Tube-Carbonated Water
9.	2-1499-1	Tank only

2-1499 Tank Complete (less elec. cord)

CONVERSION KIT

LOCATION - USAGE

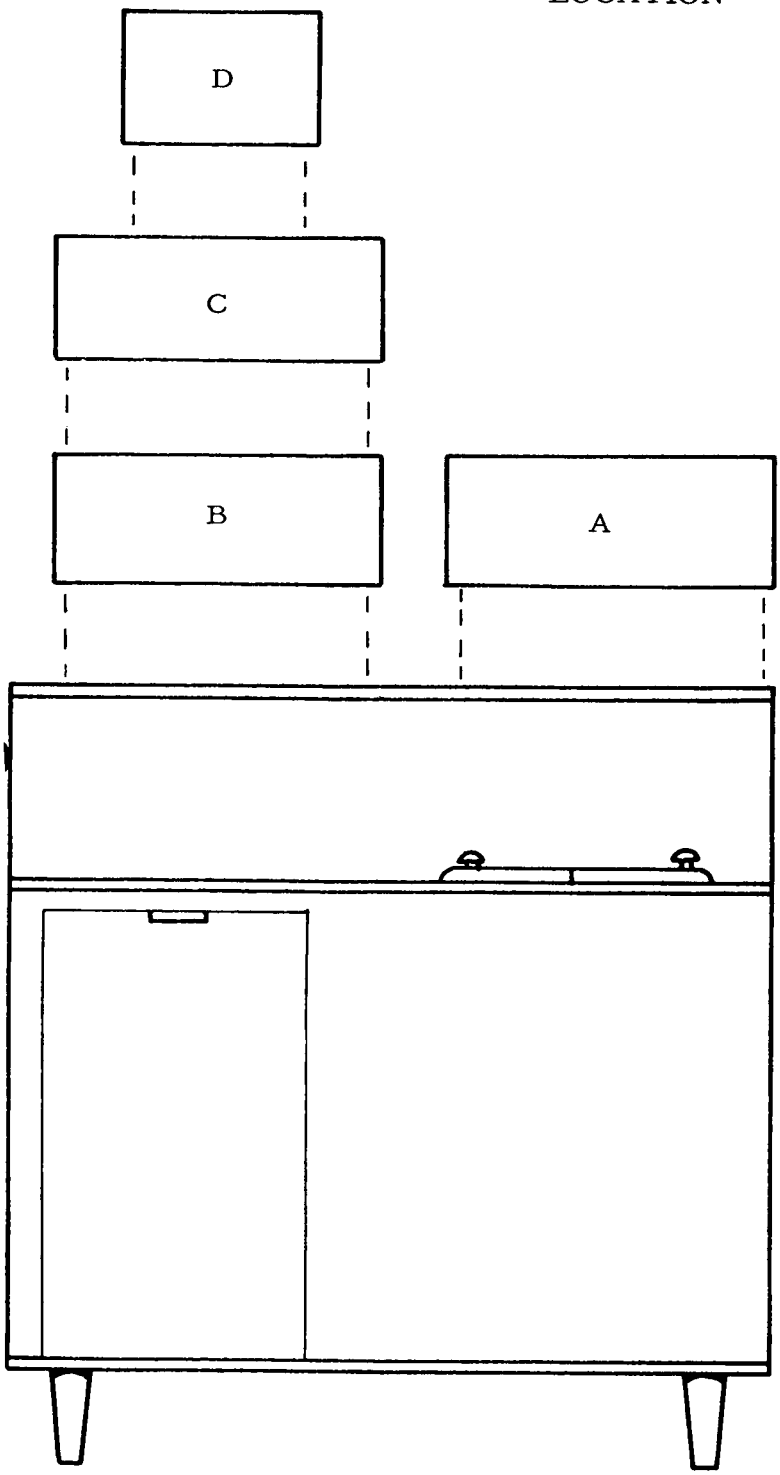

A. Syrup Rail Kit
part #K-43R

B. Satellite Kit
part #K-42S

C. Electric Valve Kit
Part #K-41E

D. Gravity Type Syrup Dispensing Heads Not Sold by SCOTSMAN. Purchase from supplier.

NOTE:

CO2 gas cylinders, syrup tanks and regulators are not part of the complete unit or the accessory kits.

Contact your SCOTSMAN Salesman for these items.

Suggested source:

EXCELALL PRODUCTS DIV.
Bastian-Blessing Co.
4201 W. Peterson Ave.
Chicago, Illinois

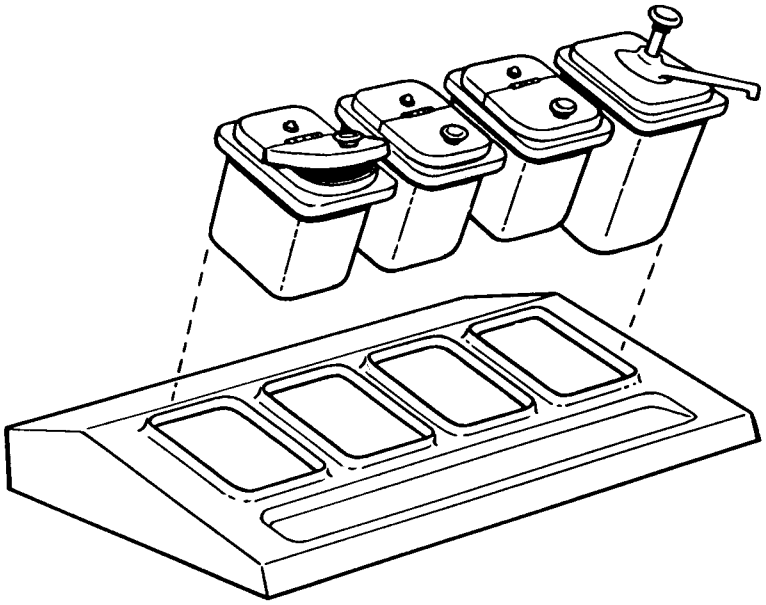

ILLUSTRATION A

K-43R Syrup Rail Kit

Kit does not include syrup or fruit jars

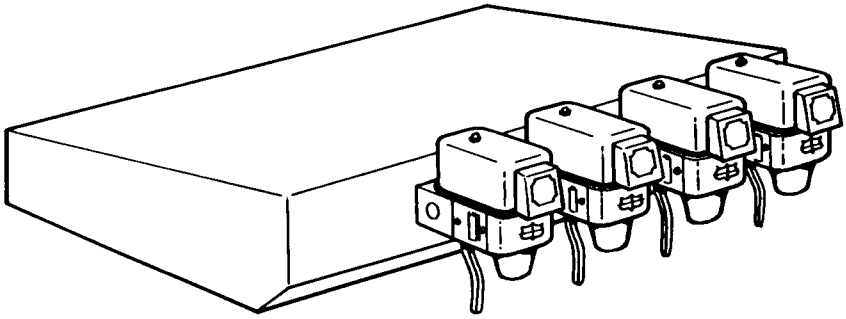

ILLUSTRATION B

K-41E Electric Valve Kit

Kit comes complete with valves installed.

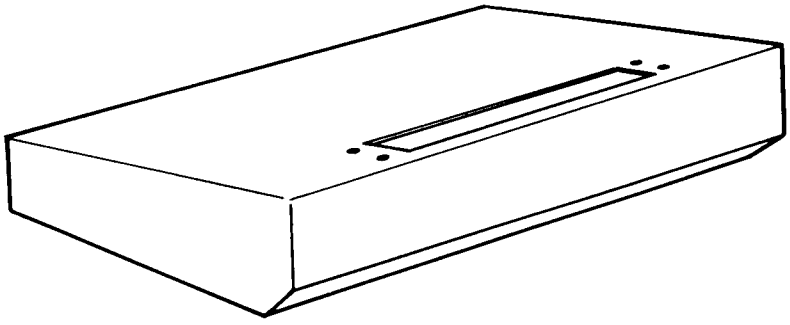

ILLUSTRATION C

K-42S Satellite Kit

Kit does not include Satellite head.

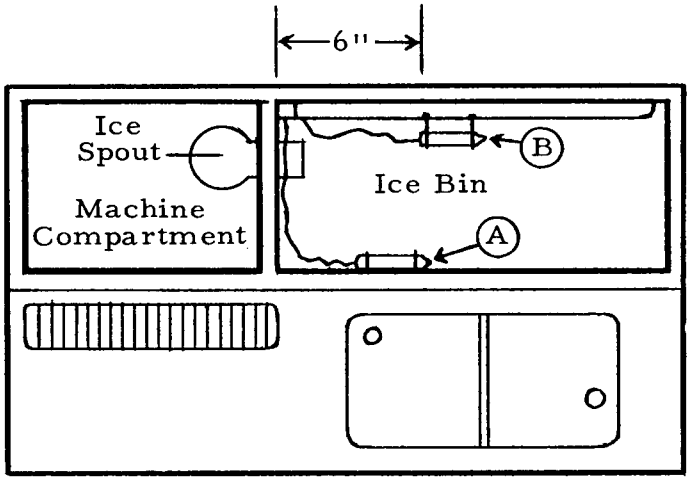

TOP VIEW SD1H or SD2H

When installing topping tanks and K-43R syrup rail, move thermostat from location Ⓐ to location Ⓑ. At location Ⓑ bulb thermostat holder is clipped on to the tube cover panel. If thermostat is not moved the ice filling the bin will push the topping tank up before the bin thermostat stops ice machine.

CONVERSION KIT CONTENTS
Usage

A. Syrup Rail Kit — Mounts Right Hood Top
Part #K 43R — Illustration "A"

This kit contains a tapered stainless steel framework that replaces right hood top panel. Frame rail will hold four standard size syrup or crushed fruit jars. The jars are not included in this kit and must be purchased seperately. Because of the location of the ice spout, the first two jars on the left as you face the unit must not exceed a depth of 6 1/2" from rail top.

B. Satellite Kit — Mounts Left Hood Top
Part # K 42S — Illustration "B"

This kit contains a stainless steel mounting station for use with Satellite head that replaces present left hood top panel. Kit also contains adaptor hardware and product lines. Kit does not include Satellite head, must be purchased seperately.

C. Electric Valve Kit — Mounts Left Hood Top
Part # K 41E — Illustration "C"

This kit contains a stainless steel mounting station that replaces present left hood top panel. Mounting station is pre-drilled to accept four(4) McCann electrically operated syrup dispensing valves. Supplied in kit are (2) two single lever carbonated valves, one (1), two lever carbonated valve and one(1) two lever sweet water valve.
All necessary product lines, fittings, etc. are also supplied in this kit.

D. Represents anyone of numerous manufacturer's gravity type, post-mix syrup dispensing heads that can be adopted to this unit.
Because of the large variety of dispensing heads available, Scotsman does not attempt to make a conversion bracket for each one. However, the left side stainless steel top panel, utilizing the stiffness channels packed in bin, can be used to support the particular dispensing head being used. Drill mounting, drain holes through this panel and secure to the underside using stiffness channels. Scotsman does not sell dispensing heads, order from supplier. Suggest when ordering gravity type dispensing heads that you specify one valve to have a split lever whereby cold water can be drained through head. There is no water station provided on complete unit although there is a flexible sweet water line provived.

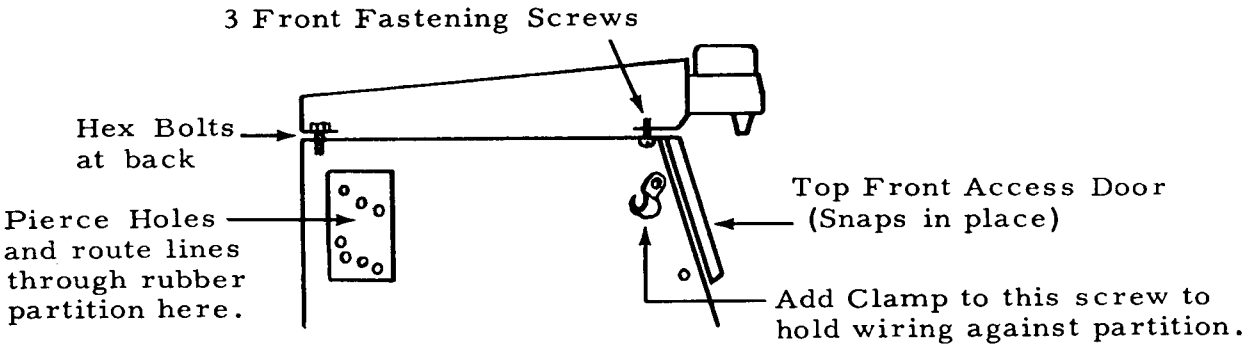

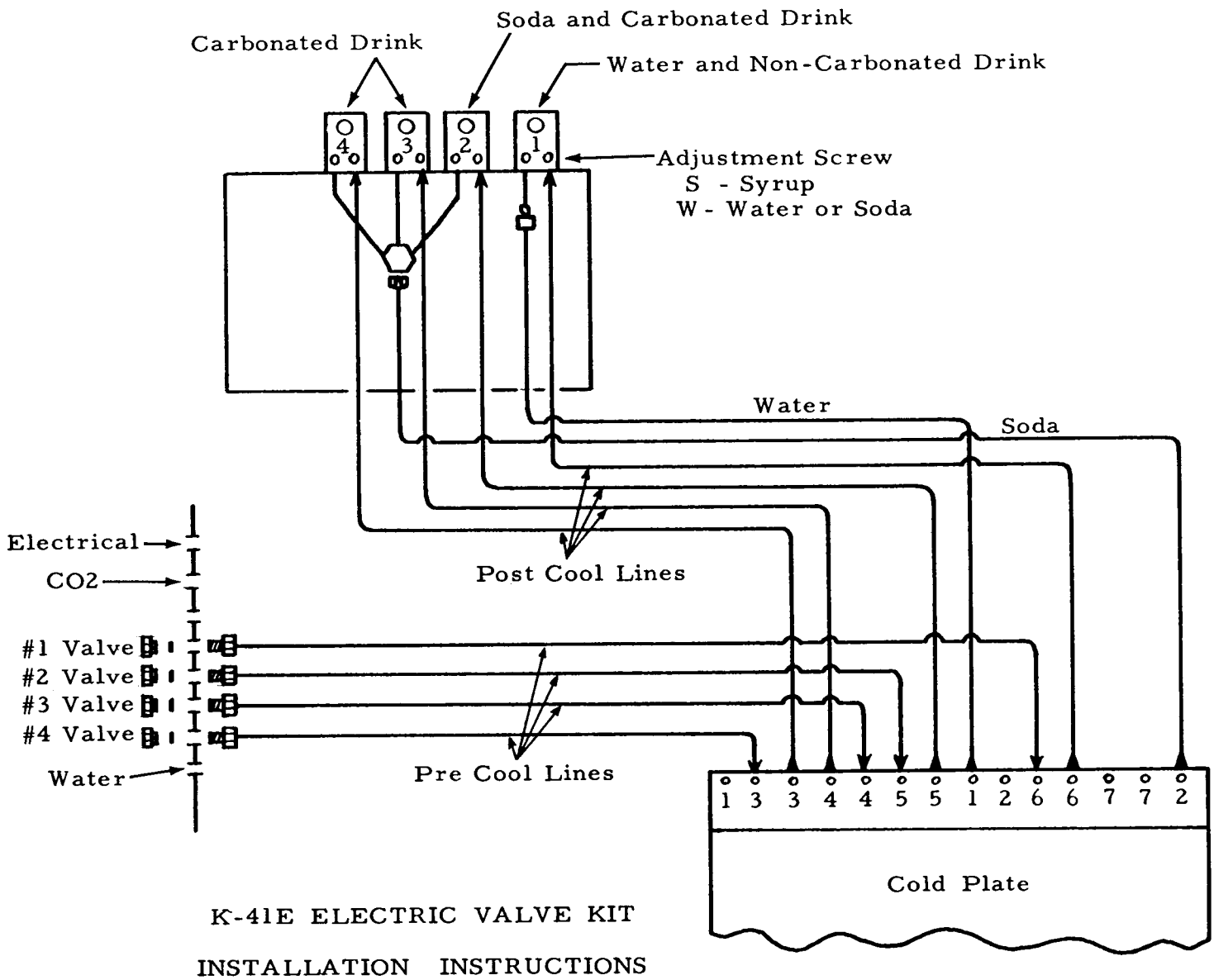

K-41E ELECTRIC VALVE KIT

INSTALLATION INSTRUCTIONS

INSTALLATION INSTRUCTIONS
K41E ELECTRIC VALVE KIT

1. Unpack carton and check material list.to insure all parts of list are included.
2. Remove icemaker top front access panel.
3. Remove both top panels by removing the 3 sheet metal screws from underside of front hood brace. Loosen 2 hex bolts at back lip and slide panel back and off.
4. Remove stainless steel syrup line protector panel from storage bin back wall. Held in place by open slots. Pull straight up and out.

5. Now take the four syrup pre-cool lines, Part A-17730 from kit, also needed will be four each fibre washers 3-579, and S-7044 nuts to secure male end of lines to rear cabinet bulk head. Remove rear service door and connect four lines putting male end through from inside cabinet bulkhead and securing to outside with first a fibre washer then the S-7044 back nut. See installation sketch, attach to proper circuit numbers on cold plate, run lines through sponge rubber opening next to ice delivery spout. Attach female ends of lines to plate using small plastic washer on each connection.
6. Now set valve kit assembly on top of unit to facilitate connections of lines to kit and through sponge rubber opening between machine compartment and line.
    a. Connect flexible soda water line to 3 way manifold on underside of valve kit. Soda line is capped off on end lying in machine compartment--other end is already attached to cold plate #2. See sketch.
    b. Flexible cold sweet water line is also capped off on end lying in machine compartment. Fasten to single sweet water valve connection on underside of valve kit per sketch. Other end is already connected to cold plate on center connection #1.

7. Run four syrup post-cool lines from valve kit through sponge rubber opening next to spout and attach to proper circuit on cold plate per sketch. Use plastic washers supplied on cold plate connections.

8. Run electric valve kit wiring through plastic clamp as shown, into control box and fasten to upper terminal strip per wiring diagram on control box cover.

9. Connect CO_2 pressure (30#) to all connections made, check for leaks with bubble soap.

10. Replace stainless steel syrup line protector panel on rear bin wall.

11. Install right side hood top panel and secure, also secure valve kit assembly to hood brackets.

12. Check operation of complete unit, replace all service doors, panels.

ELECTRONIC OR SATELLITE KITS

Install the conversion kit package or packages user requires per instruction given in this manual and packed in kit. After all connections are made within unit cabinetry, install the remote syrup tanks, lines and the CO_2 gas cylinder, hi and lo pressure gauges with lines leading to cabinet connections.

Make sure CO_2 regulators are in a normally closed or zero reading position before opening CO_2 cylinder valve.

Slowly open CO_2 cylinder valve and adjust high pressure guage feeding carbonator tank to a value of 85 - 100# gauge. Next adjust lo pressure regulator feeding remote syrup tanks to a value of 20 - 25# gauge reading. NOTE: Lo pressure system is used to force syrups from remote tanks through product lines, cold plate and up to dispensing valve. Most syrup tank manufacturers do not recommend CO_2 pressures in excess of 30# gauge therefore be sure and follow that particular manufacturers instructions on proper application.

Check for leaks at connections made from regulators up to back of dispensing valves with bubble soap. Repair any leaks found.

Shut off hand valve at CO_2 tank and bleed all pressure out of system.

Fill syrup tanks half full of clean water, replace tank covers and open CO_2 valve. Open water supply valve feeding complete unit, then turn on the carbonator switch in unit control box.

Now actuate dispensing valves and draw the clean water from syrup tanks through valves. Hold in carbonated water lever. Check to make sure the carbonator pump cycles correctly.

After flushing system, shut off CO_2 cylinder, carbonator switch and bleed off pressure. Dump any water left in syrup tanks.

Fill tanks with syrups of user's choice, replace covers, and open CO_2 cylinder valve.

Turn on both carbonator and ice maker switches. Actuate each dispensing valve until a full flow of syrup comes thru valves. Donot attempt to adjust dispensing valves until cold plate is completely covered with ice, then make adjustments as required.

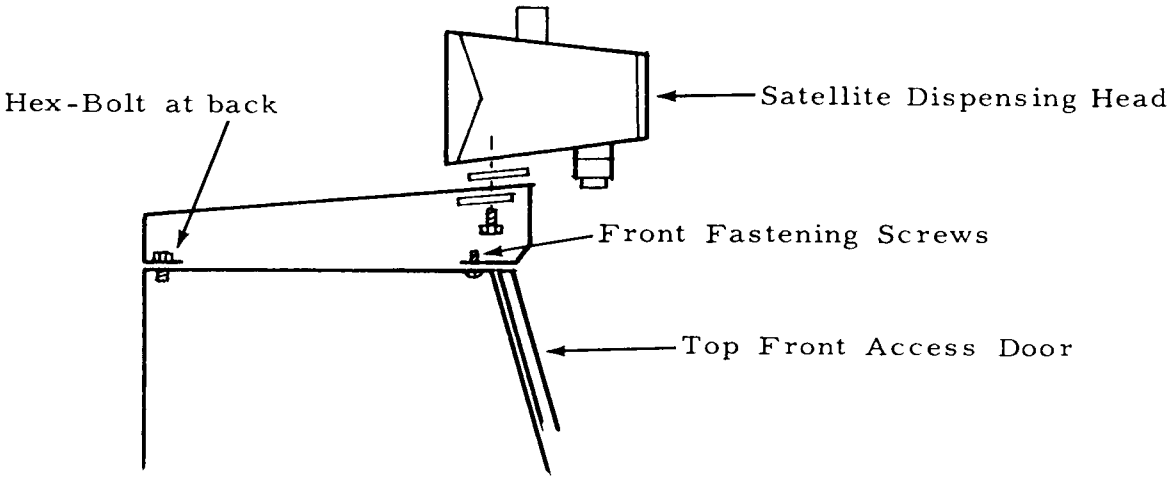

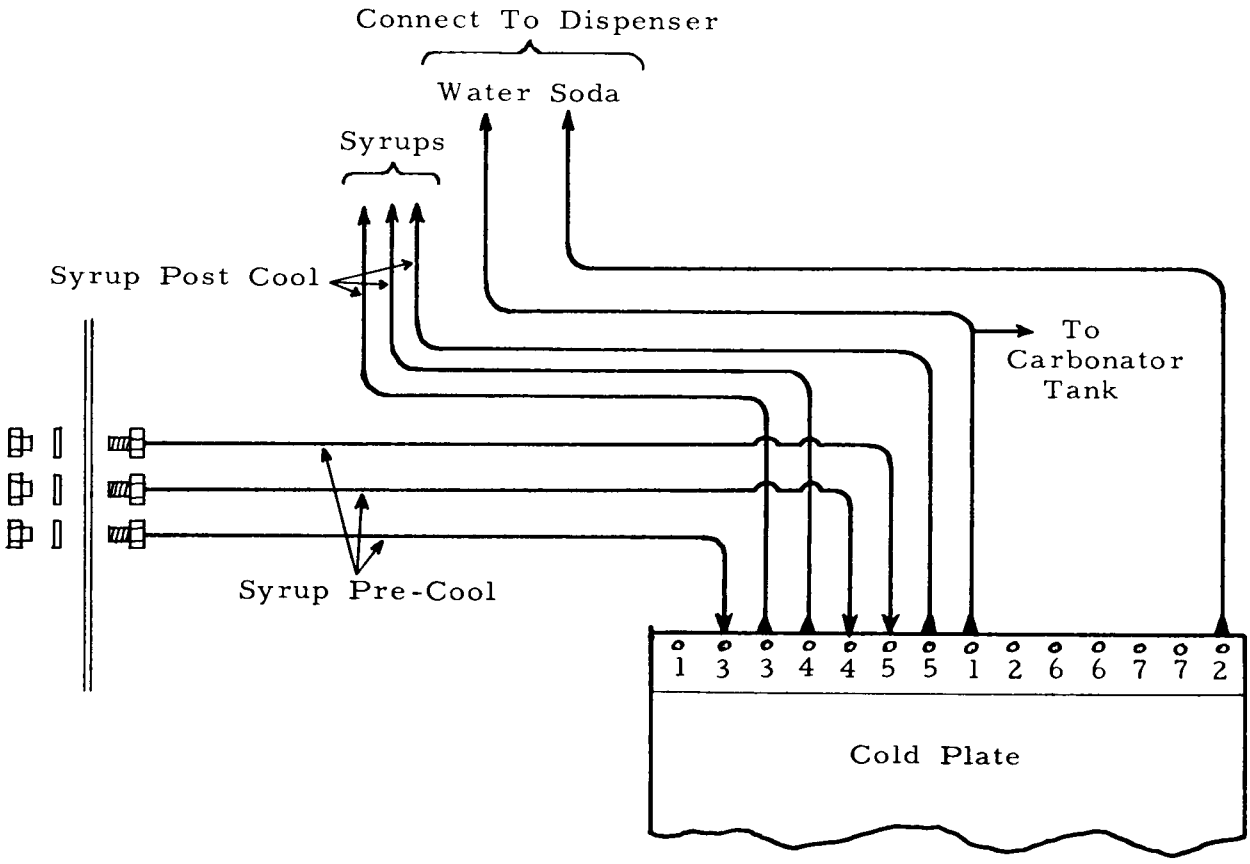

K-42S SATELLITE KIT

INSTALLATION INSTRUCTIONS

ADAPTING GRAVITY TYPE POST MIX DISPENSING HEADS

After choosing the particular head of your choice, same can be mounted directly on top of the stainless steel hood on the left as you face unit.

Holes have to be cut through this panel for drain and supply lines also for mounting holes. Channel support brackets are packed in storage bin, they should be attached to underside of left hood top panel to support weight of the dispensing head.

Drains from dispensing head can be teed into the clear plastic tubing attached to unit drip tray drain.

Carbonated water supply line from cold plate should be attached to appropriate fitting on dispensing head and checked for leaks.

Hook up CO_2 cylinder, hi pressure regulators to connection at unit back panel and set carbonator pressure at 85# gauge.

Turn on water and electrical supplies to complete unit, then turn on unit carbonator and ice maker switches. Open dispenser valves and draw water through valves, checking carbonator pump cycle. Pour syrup into head and draw off until clear flow comes through.

Do not attempt adjustments to valves until sufficient ice has been made to fill dispensing head and cover bin cold plate. Then make necessary adjustments.

SYRUP RAIL KIT

Since this is merely a stainless steel framework to hold standard size crushed fruit and syrup jars, you need only remove stainless steel right hood top panel and replace with this framework. Use same mounting holes and screws taken from hood top panel.

Care should be taken in selecting the first two fruit or syrup jars on the left as you face unit. Their length must not exceed 6 1/2" in depth as their relative location is in front of the ice discharge spout.

INSTALLATION INSTRUCTION SYRUP RAIL

1. Remove top front access door--held by friction catches.
2. Remove right-hand top by removing three screws along front, loosen Hex-Bolts at back and slide top back and off.
3. Reverse above operations to mount the syrup rail.
4. Note: The first two syrup jars used in the right-hand holes must not extend below top of ice spout.

CONVERSION OF MODELS SD- 1H AND SD-2H POST-MIX TO PREMIX

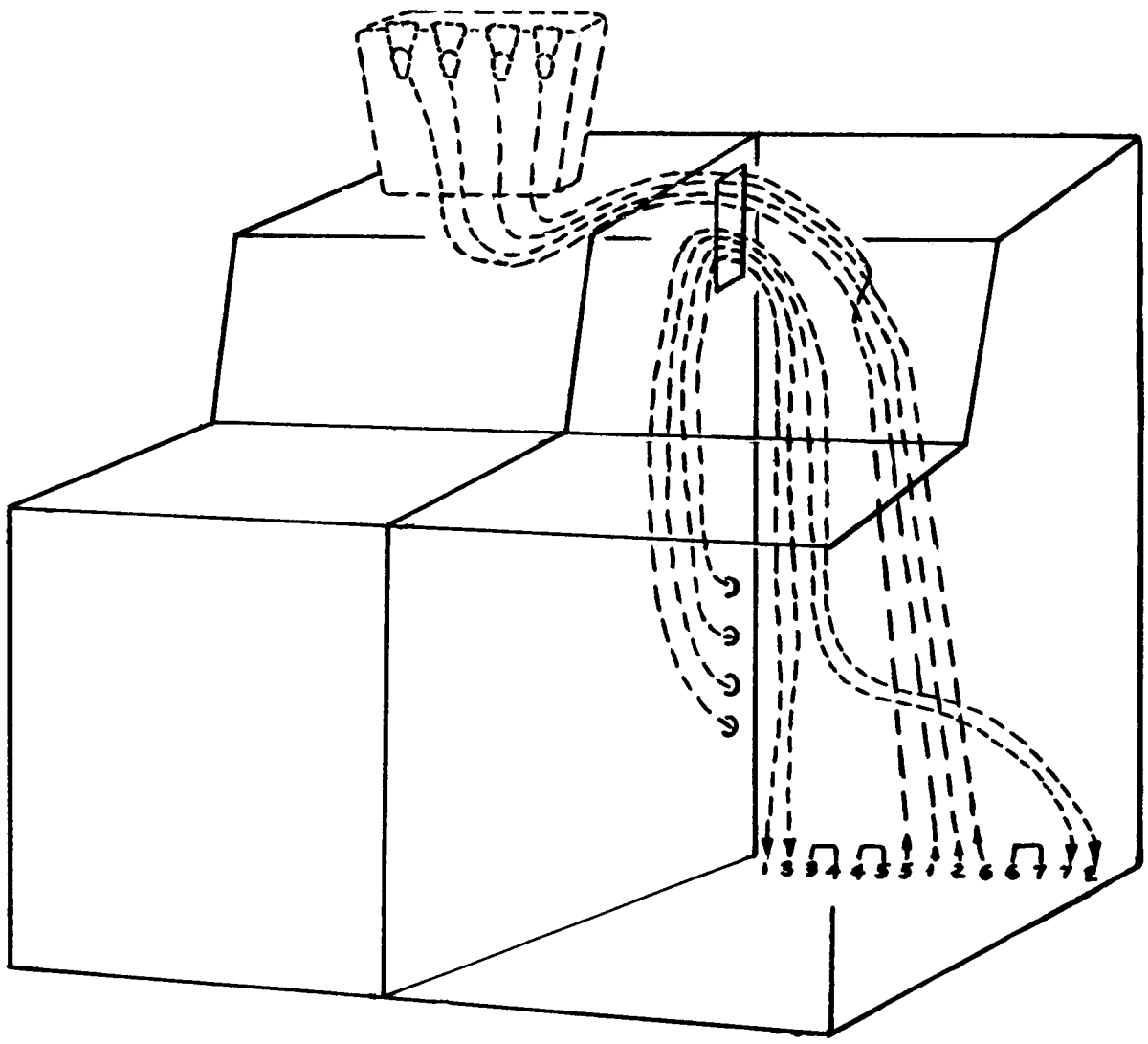

1. Remove all hose ass'y in storage bin.
2. Remove carbonator tank.
3. Cap outlet of carbonator pump.
4. Remove wire to carbonator - Dispensing switch.
5. Make pre-mix connections and route.
6. # 1 circuit 1W cold plate to be used for primary flavor.
7. Modify left top as required to fit premix dispensing head.
8. Insulate hoses between storage bin and dispensing head.
9. Insert jumpers between cold plate posts 3-4; 4-5 and 6-7.

CABINET PARTS

Description	Part No.
Rear Service Door	A-17754
Rear Panel-Case	A-17753
Rear Panel-Hood	A-17829
Drip Grill	2-1553
Right Top Panel-Hood	A-17812
Ice Bin Door	2-1550
Hood Assy-less Panels	A-17616
Right Panel-Case	A-17749
Scotsman Emblem	15-156-1
Front Panel-Hood	A-17608
Front Panel-Case	A-17766
Front Service Door	A-17615
Leg	A-15803-1
Leg Leveler	8-522-1
Left Panel-Case	A-19156

CARBONATOR PUMP ASSY.

Motor 115/60/1	12-1339-1
Coupling Clamp	2-1527
Carbonator Pump	2-1526
Tee 3/8 x 3/8 NPT x 1/4" Flare	16-468
Half Union Elbow	16-401
Strainer	16-162-1

FREEZER ASSY.

Freezer Complete	A-6991-3
Worm Shaft Cap	A-8581
Cap Screw	3-715
Worm Tube Washer	A-6273
Bearing Top	2-646
"O" Ring	2-560
Ice Breaker	A-8316
Worm Shaft	2-617
Worm Tube, Acc., Suction Line	A-6382
Washer	3-679
Spout Casting, Rear	A-18431
Spout Casting, Front	A-14269
Bolts	3-721
Water Seal	2-929
Lower Bearing	2-619
Worm Tube Nut	A-6153
Rubber Drip Pan	13-208
Drain Tube	A-8002

CO_2 AND WATER CIRCUIT

Description	Part No.
Flexible Line	A-17737
Water Line	A-17718
Soda Line	A-17743
Soda Line	A-17743-1
CO2 Line	A-17732
Bin and Cold Plate Assy.	A-17790
Carbonator Tank	2-1499
Electrode	2-1499-6
Water Check Valve	2-1499-3
Washer (check valve-water)	2-1499-8
Relief Valve	2-1499-5
Washer (Electrode)	2-1499-7
Gas Inlet Check Valve	2-1499-4
Outlet Tube-Carbonated Water	2-1499-2
Tank Only	2-1499-1

CARBONATOR PUMP CONTROL

Control (less case & cord)	12-634-5
Relay Coil	12-634-1
Primary Coil	12-634-2
Secondary Coil	12-634-3
Contact Points	12-792
Cord Assy.	12-1382

RESERVOIR ASSY.

Reservoir Cover	A-16012
Valve Pin	2-1259
Deflector	2-1320
Inlet Valve	S-8770
Rivet	3-1001
Valve Seat Holder	A-5777
Valve Seat	S-6947
Nut	S-7044
Bracket	A-12860
Stand Pipe	S-6715
Inlet Valve Assy.	S-8138
Bracket Nut	A-8055
Float & Arm Assy.	A-12067
Water Deflector	A-18418
Reservoir (less cover)	A-19035

CONDENSING UNIT

Condenser W.C.		18-368
Plain Gasket		18-262
Discharge Service Valve		18-337
Hi-Pressure Control		11-286-1
Valve Plate Kit		18-326
Compressor 115/60/1	W.C.	18-355
Compressor 115/60/1	A.C.	18-325
Klixon		18-347
Starting Capacitor		18-1901-7
Relay		18-1903-4
Water Valve		11-198
Water Hose, Comp. to Cond.		18-261
Manifold Cond. Gasket		18-263
Terminal Board		18-270
Terminal Assy.		18-241
Fan Blade		18-363
Fan Motor		18-333-1
Condenser A.C.		18-334
Condenser Shroud		A-1211
Fan Motor Bracket		18-388

TABLE OF CONTENTS

SD-3 & SD-4

Foreward	Page
Table of Contents	1
Model SD-3 Specifications	2
Model SD-3 Installation Dimensions	3
Model SD-4 Specifications	4
Model SD-4 Installation Dimensions	5
Description	6
Drink Dispenser General Specifications	7
Installation	8-10
SD-3 Assembly–Less Hood and Service Panels	11
SD-3 Cabinet Parts	12
SD-4 Assembly–Less Hood and Service Panels	13
SD-4 Cabinet Parts	14
ICE MAKER SECTION	15-18
Substitutes for 600 W Oil in Winsmith Gear Reducers	19
Worm Gear Reducers	20
Winsmith Gear Reducer (3TC) (Line Drawing)	21
Maintenance Instructions - Dispensers	22
SD-4 Freezer Assembly Line Drawing	23
SD-3 Freezer Assembly	24
Syrup Tank Hook-up	25
SD-3 & SD-4 Wiring Diagram (Air Cooled)	26
SD-4 Wiring Diagram (Water Cooled)	27
Service Analysis Chart	28-31
Carbonation	32-33
Temperature & Pressure Effects (Line Drawing)	34
Effect of Pressure	35-37
CARBONATOR SECTION	38-41
Line Drawing	42
Water & CO_2 Schematic	43
Principle of Operation	44-45
Carbonator Pump – Motor	46
Carbonated Water, Cooling Drawing	47
Cleaning of Cold Plates SD-3 & SD-4	48-49
Service Analysis Chart	50-51
DISPENSER SECTION	52
Dispenser Replacement Parts – How They Work	53-56
Line Drawing – Manifold	57
Parts List SD-3 & SD-4	58-62

THIS PAGE
INTENTIONALLY
LEFT BLANK

SCOTSMAN®

DRINK DISPENSER SD-3 SERIES

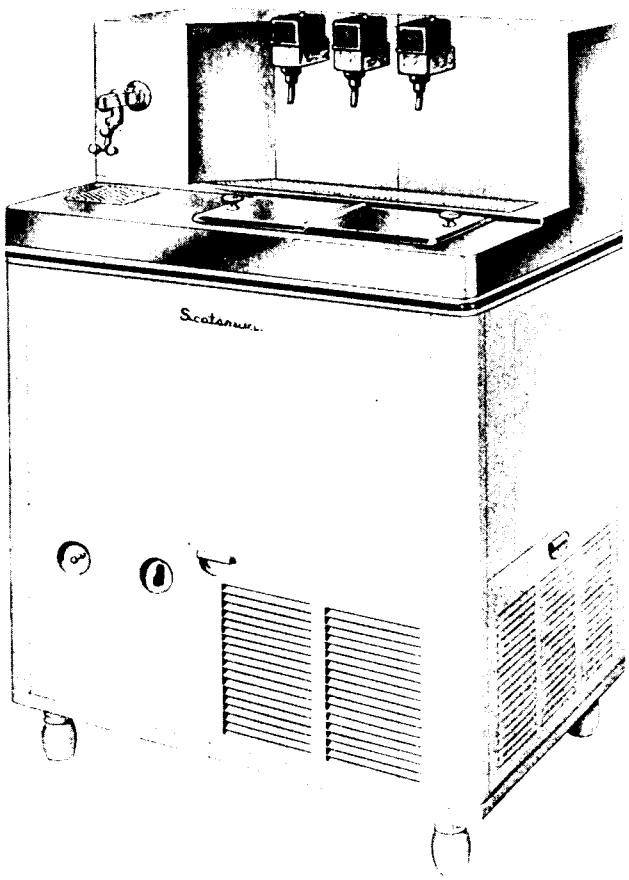

ice making capacity

Air Cooled Models

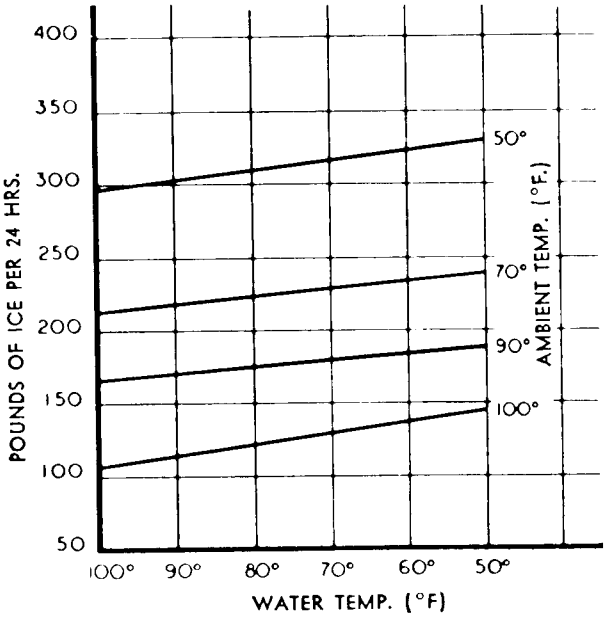

SPECIFICATIONS

COMBINATION ICE MACHINE AND DRINK DISPENSER	MODEL SD3	MODEL SD3 SS
Daily capacity up to 225 lbs.	X	X
Stainless steel bin liner	X	X
Air cooled condenser	X	X
Heavy duty ¼ HP. Compressor	X	X
Standard 115 V, 60 cy, 1 ph, AC—Optionals page 22	X	X
⅜" water inlet SAE Flare	X	X
¼" CO^2 inlet SAE Flare	X	X
3 product inlets ¼" SAE Flare	X	X
⅝" bin drain OD	X	X
⅞" condensate drain OD	X	X
Hammerloid grey exterior	X	
Stainless steel exterior		X
Stainless steel lined storage bin	X	X
48 ⅞" height (with legs)	X	X
44 ⅞" height (without legs)	X	X
34" width	X	X
24 ½" depth	X	X
Approximate shipping weight 450 lbs.	X	X

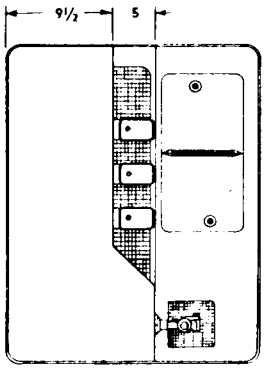

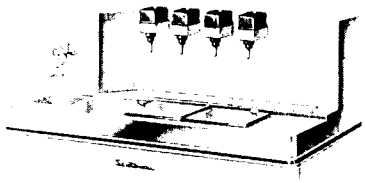

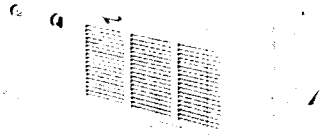

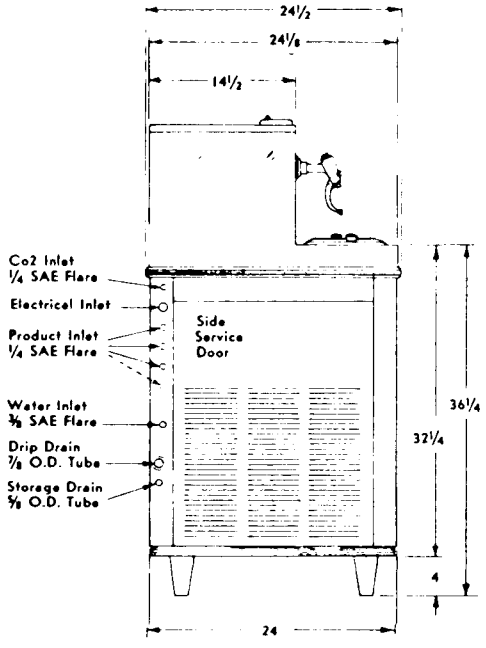

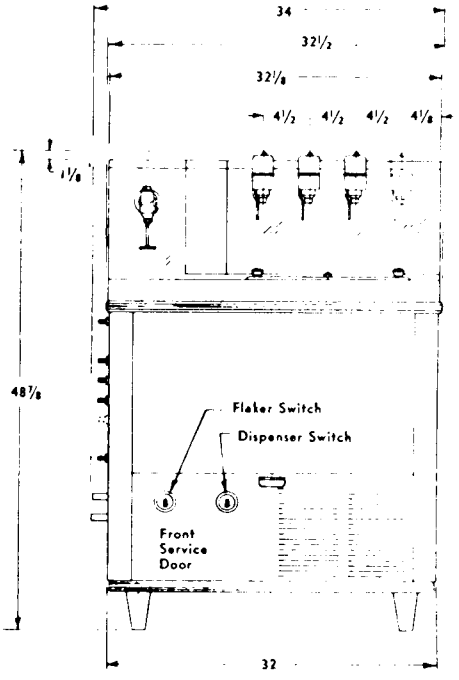

SCOTSMAN®

DRINK DISPENSER SD-4 SERIES

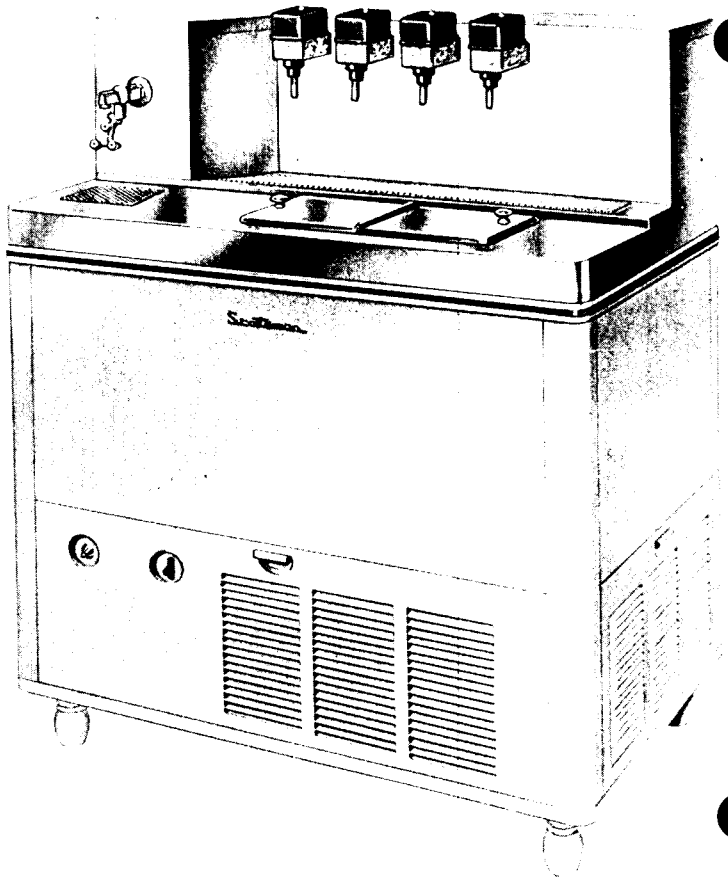

ice making capacity

Air Cooled Models

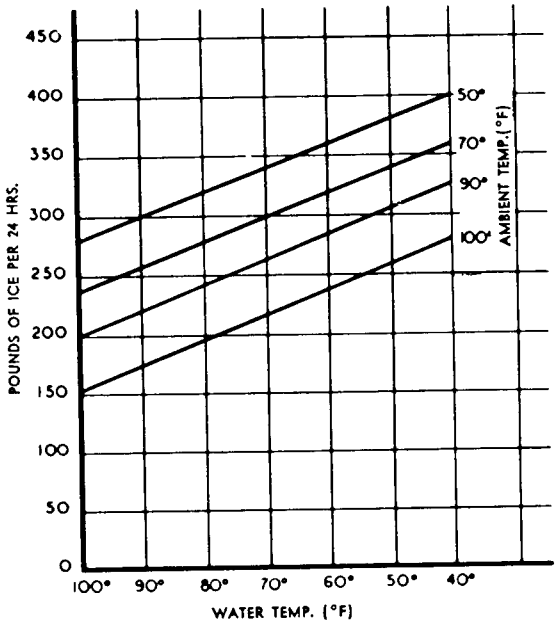

Water Cooled Models

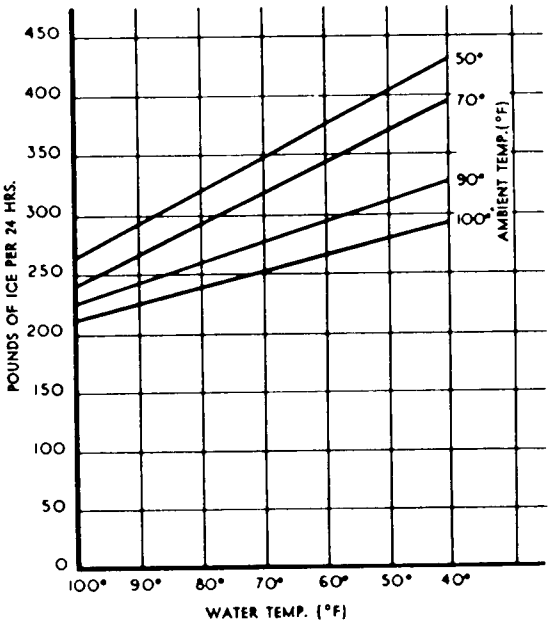

SPECIFICATIONS

COMBINATION ICE MACHINE AND DRINK DISPENSER	MODEL SD4	MODEL SD4W	MODEL SD4-SS	MODEL SD4W-SS
Daily capacity up to 350 lbs.	X	X	X	X
Stainless steel bin liner				
Air cooled condenser	X		X	
Water cooled condenser		X		X
Heavy duty 1/3 HP. Compressor	X	X	X	X
Standard 115 V, 60 cy, 1 ph, AC—Optionals page 22	X	X	X	X
3/8" water inlet SAE Flare	X		X	
3/8" water inlet NPT		X		X
4 product inlets 1/4" SAE Flare	X	X	X	X
1/4" CO^2 inlet SAE Flare	X	X	X	X
7/8" water condensate drain ID	X	X	X	X
5/8" bin drain OD				
1/2" ID water outlet tube		X		X
Hammerloid grey exterior	X	X		
Stainless steel exterior			X	X
48 7/8" height (with legs)	X	X	X	X
44 7/8" height (without legs)	X	X	X	X
40" width	X	X	X	X
24 1/2" depth	X	X	X	X
Approximate shipping weight	512	516	512	516

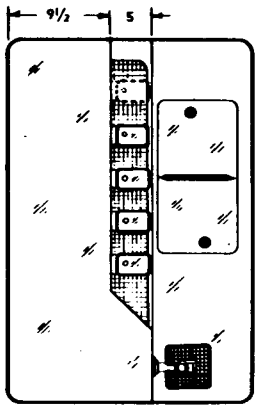

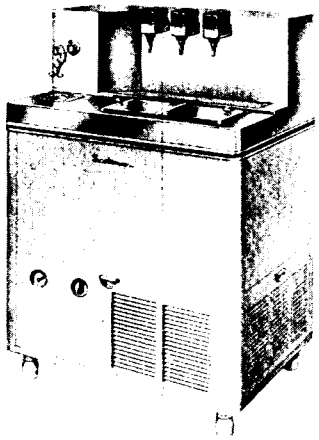

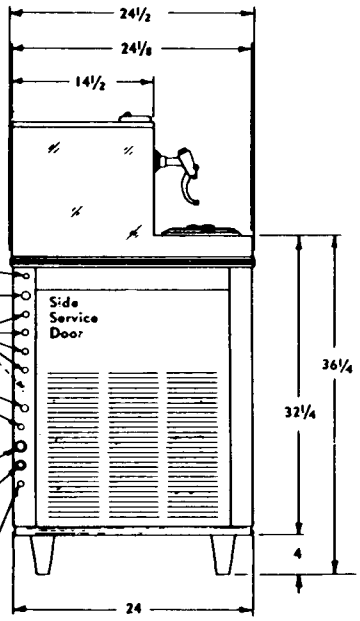

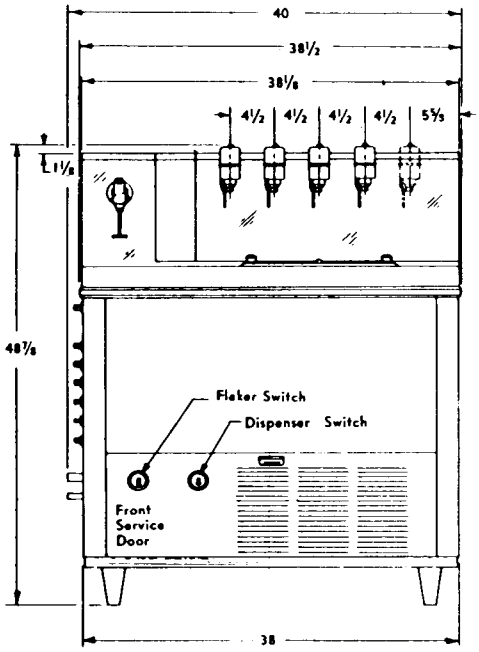

DESCRIPTION

The SCOTSMAN AUTOMATIC DRINK DISPENSER is designed for drug stores, restaurants, cafeterias, ball parks, drive-ins, amusement parks, theatres--in fact, any place where crowds gather and seek ice cold, thirst quenching refreshments in a hurry. The continuous flow dispensers, together with the concealed SCOTSMAN crushed ice maker, is designed for peak periods of traffic.

ATTRACTIVE COMPACT CABINET

Silver grey hammerloid finish with chrome trim, rounded corners, and removable panels for easy access to mechanical parts. Hood assembly of stainless steel attractively designed for front or back counter installation.

SEALED REFRIGERATION SYSTEM

Provides quiet, efficient operation of the machine. Compressor motor is spring mounted and the worm motor is rubber mounted for quiet operation.

SELF-CONTAINED STORAGE BIN

Stores its own ice supply in a heavily insulated, stainless steel storage bin with handy access door opening in hood-counter.

STANDARD OVER-ALL DIMENSIONS

Allows automatic drink dispenser to be installed in harmony with existing counter equipment.

HOW IT WORKS

The unit is completely automatic; water is circulated through a self-contained carbonator which guarantees a ready, abundant supply of perfect carbonated water at all times. Maximum cooling of both carbonated and non-carbonated water is then accomplished by using both a pre-cooling sweet water coil and a cooling carbonated water coil in the bottom of the ice bin. The continuous flow type dispenser allows the mixture of a set amount of syrup and carbonated water. A manual switch starts the ice machine and from then on ice is produced automatically in small uniform pieces. When the storage bin fills, a bin thermostat automatically shuts the machine off and causes it to start up again when ice is removed from the storage bin.

POST MIX SYRUP SYSTEM

Unquestionably the finest most efficient and economically designed drink producing system. Electronic, post mix valves assure a perfect beverage every time.

DRINK DISPENSER

General Specifications

ELECTRICAL RATING	SD-3	SD-4
Voltage	115 60/1	115 60/1
Amperage - Total	13.6	16.1
No. of Motors	3	3
HP - Largest Motor - Compressor	1/3	1/2
Amperage - Largest Motor	4.9	7.4
PLUMBING AND CO_2		
Water Inlet	3/8" Flare S.A.E.	3/8" Flare S.A.E.
Drain Overflow	7/8" O.D. Cu.	7/8" O.D. Cu.
Drain - Storage	5/8" O.D. Cu.	5/8" O.D. Cu.
CO_2 Connections	1/4" Flare	1/4" Flare
Product Inlet Connections	(3) 1/4" S.A.E. Male-Flare	(4) 1/4" S.A.E. Male Flare
ICE MAKER SECTION		
Compressor	1/4 HP	1/3 HP
Condenser	Air Cooled	Air or Water Cooled
Refrigerant	R-12	R-12
Refrigerant Control	Capillary tube	Capillary tube
Standard Voltage Characteristics	115, 60, 1	115, 60, 1
Drive Motor - Freezer	1/4 HP	1/4 HP
Ice Making Capacity	*225 lbs. per day	* 350 lbs. per day
Storage Capacity - (Normal Operating)	65 lbs.	85 lbs.
CARBONATOR SECTION		
Drive Motor Carbonator Pump	1/4 HP	1/4 HP
Pump Capacity	80 gph	80 gph
Switch-Pump Up	Electrodes in Tank	Electrodes in Tank
Voltage Characteristics	115, 60, 1	115, 60, 1
Cold Plates	17½" x 19½"	17½" x 19½"
Control - Pump Operation	Liquid Level-Relay	Liquid Level-Relay
DISPENSER SECTION		
Number of Electronic Heads	3	4
Number of Water Fillers	1	1
Number of Soda Arms - Optional	-	-
Syrup Capacity - Optional - Use 3 or 5 Gallon Tanks on each product line.		
Syrup Feed	Low Pressure CO_2	Low Pressure CO_2

* At 70° ambient and 50° water temperature. See capacity curves for exact amounts.

INSTALLATION

UNCRATING OF MACHINE

The entire unit comes in one crate. Remove crate by pulling nails driven through sides of crate into the bottom pallette. A nail puller is best suited here. Lift crate up and off. Next remove four bolts through bottom of pallette in machine base. Inspect for concealed damage. Remove box containing legs from lower machinery compartment. Remove compressor hold down bolts so it is floating free. Install legs as required.

PRE-INSTALLATION CLEANING

Before machine is in final location, remove warranty card and other information from machine and ice storage compartments. Remove hood service cover and water reservoir cover. Remove packing from float. Leave open to observe float adjustment after machine is installed.

NECESSARY ACCESSORIES - NOT FURNISHED

Your Scotsman Ice and Drink Dispenser is a complete unit at point of use, however, you will require a tank of CO_2 gas, a hi-lo gas pressure regulator, your 3 or 5 gallon remote style syrup tanks and the flexible product lines to connect the tanks to CO_2 and to the connections on the unit left side. Below are the names of two companies that furnish these items.

Bastian Blessing Co.
4201 W. Peterson
Chicago, Illinois

Kenco Products Corp.
Englewood, New Jersey

LOCATION

Select the location before delivering the unit to the job. The following points should be considered.

1. Convenience- Place the unit where it is practical to give speedy service. It can be located either in a back bar or in a front bar. It is designed to fit into a standard soda fountain line-up or it can be used as an individual counter unit. Keep in mind that the dispenser can serve a double function of providing crushed ice as well as carbonated beverages.

INSTALLATION

2. Servicing - Provisions should be made even in a line-up for access to the left end (viewed from serving side). Provide flexible plumbing and electrical lines so the unit can be moved out and serviced or allow provisions for a minimum of 18" at left end of unit.

3. Install only in room where temperature does not go below 50° F. or above 100° F.

PLUMBING

The recommended water supply line is 3/8" O.D. tubing for both SD-3 and SD-4. A 3/8" flare fitting is provided on the machine for water inlet. Connect to cold water supply line using a shut-off valve installed in an accessible place between supply and machine. A water strainer should be installed between the shut-off valve and the unit with the clean-out plug down and the arrow in the direction of flow. Most plumbing codes call for double check valves in this inlet water line. A wire mesh strainer is provided on the pump inlet connections as a protection against large particles of rust, scale, etc., which may be loosened in the water pipe at time of installation. This strainer will not prevent fine particles from damaging the pump, therefore, a good filter is recommended in any installation and is absolutely essential when the supply water contains solids. Maximum water supply pressure must be at least 20 pounds below operating CO_2 pressure. If supply pressure exceeds this, carbonator may flood. Install a water pressure regulator in the water supply line and adjust as required.

On water cooled models a separate connection to the unit will be required. Connections are made into a 3/8" water regulating valve located inside the machine compartment. Observe arrow on water regulating valve. Water supply must be installed to conform with local plumbing codes. In some cases a licensed plumber and/or a plumbing permit will be required.

Drains are brought out of the cabinet on the left side and are 5/8" O.D. and 7/8" copper. They can be sagely tied together below the floor level. 7/8" copper drain lines will be adequate in most instances. Care should be taken to allow no traps in the drain lines. If a level run of more than three feet is required, clean-out provisions should be made.

ELECTRICAL

Rating	
SD-3	SD-4
115 volts	115 volts
60 cycle, single phase	60 cycle, single phase
20 amp circuit	30 amp circuit
Use No. 12 wire for runs under 50 feet.	Use No. 10 wire for runs under 50 feet.

INSTALLATION

Be certain the SCOTSMAN DISPENSER is on its own circuit and individually fused. Separate switches are located in the front of the dispenser allowing the carbonator and the ice maker to operate independently of each other. All internal wiring is completed.

All external wiring should conform to National Underwriters and local electrical code requirements. An electrical permit and the services of a licensed electrician will usually be quired.

START-UP

When the machine is placed and inspected as per instructions and all plumbing and electrical connections are completed and tested, turn on the water supply. Be sure water reservoir is filled before starting ice maker. Water level should be 1/4 inch below the reservoir overflow. Connect CO_2. Check rotation of pump.

Check all internal water connections for leaks. Start carbonator by turning on left switch.

Install gauges and check refrigerant pressures at time of start-up. Flare connections can work loose during shipment. Add refrigerant as required - see ice maker section. Turn on the right manual switch in front of cabinet and machine is in automatic operation. In two or three minutes ice will start dropping off the worm shaft and out the ice chute. Let the machine operate for at least 30 minutes or until ice covers the bottom plate. Check for any excess noise in carbonator or ice maker.

Test the ice storage control bulb by holding a handful of ice around the bulb until the machine shuts off. One minute should be normal for the control to function. Within minutes after the ice is removed, the bulb will warm up and the machine will automatically start up. The control is factory set and should not be reset until this test is made. Normal setting of this control should be approximately 38 degrees cut-out and 45 degrees cut-in to prevent short cycling.

Check hand reset low pressure control setting. This safety device should normally be set 8 to 10 p s i below normal suction pressure to prevent cutting off when the compressor first starts up and still provide safety in case of interruption in water supply, shortage of refrigerant, low ambient or any other cause of abnormally low suction pressures on Models SD-4 only.

Adjust dispenser heads to give correct proportions of syrup and carbonated water. See dispenser section. Do not set until ice covers cold plates.

Explain the machine to the owner, showing him how the machine works and go over the owner's operating instructions. Answer all the owner's questions about the machine, and do not leave with any doubt in the owner's mind about the machine, how to operate it or where to reach the service man in case of need. Call back the next day to check the machine again and and answer any other questions the owner may have.

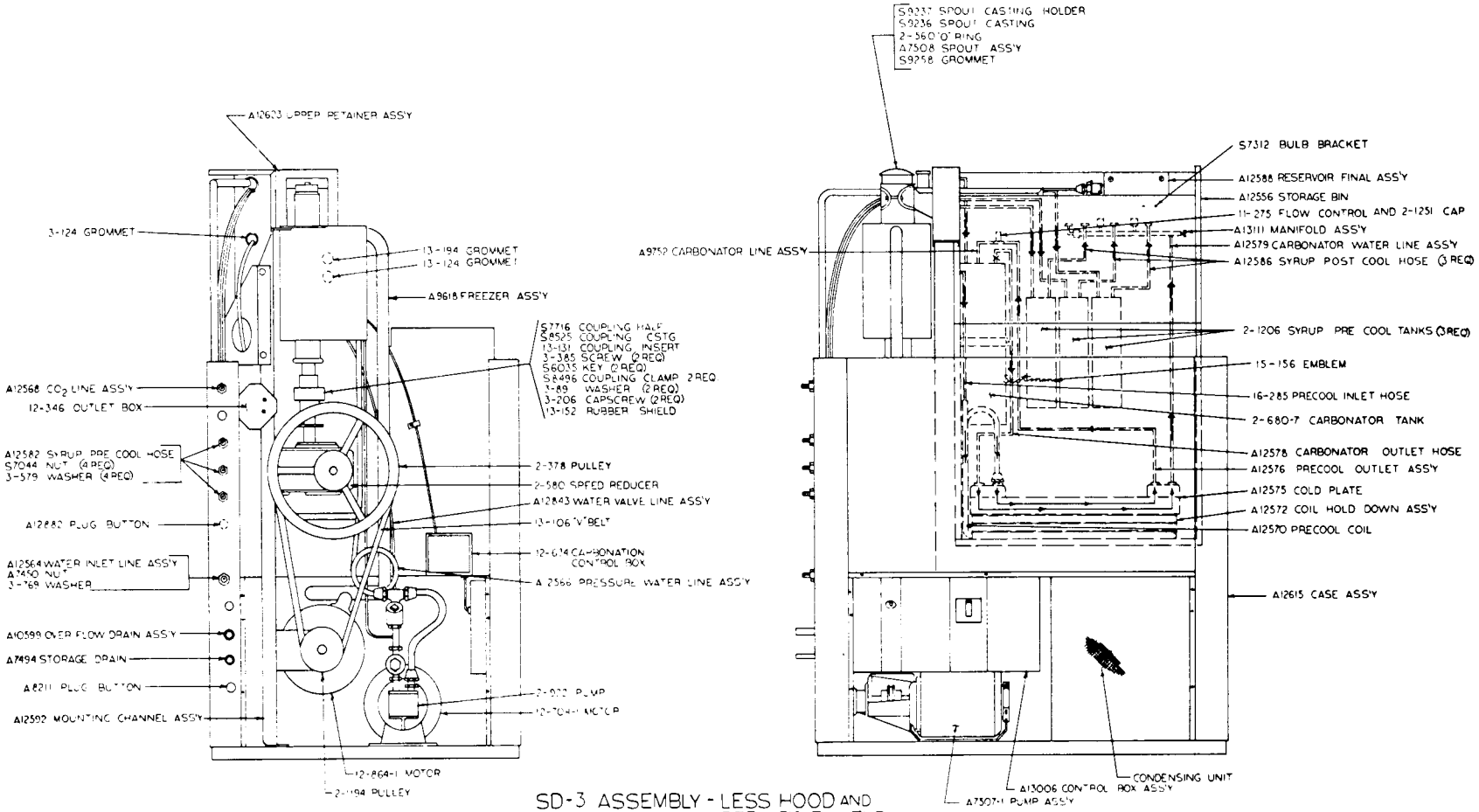

SD-3 ASSEMBLY - LESS HOOD AND SERVICE PANELS

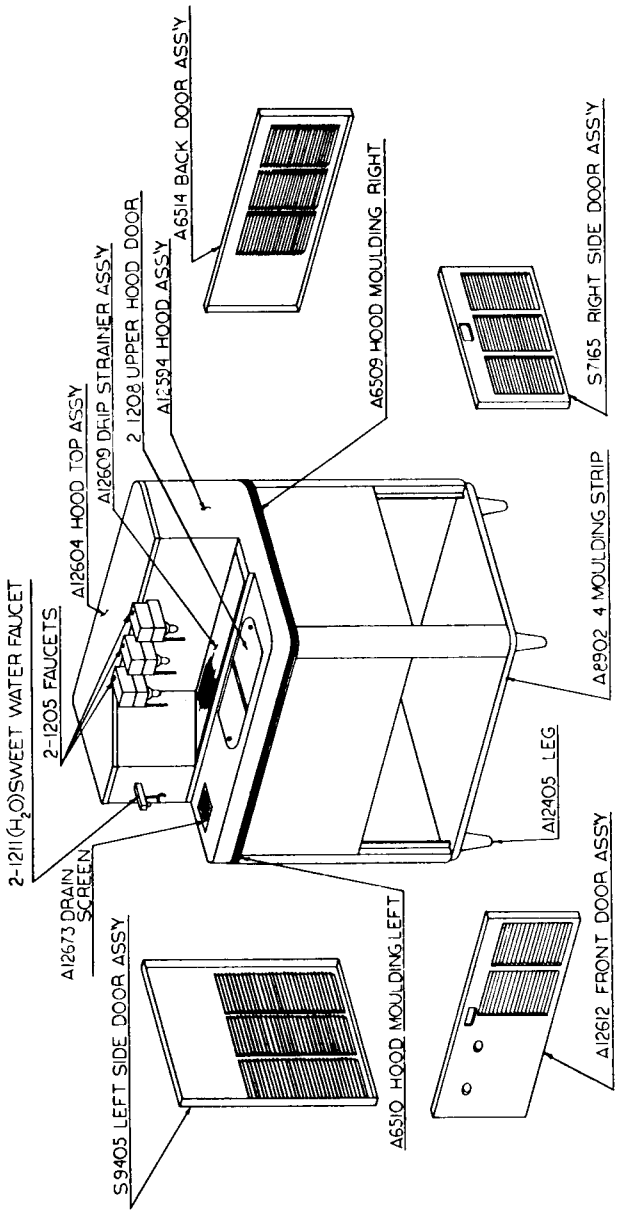

SD 3 CABINET PARTS

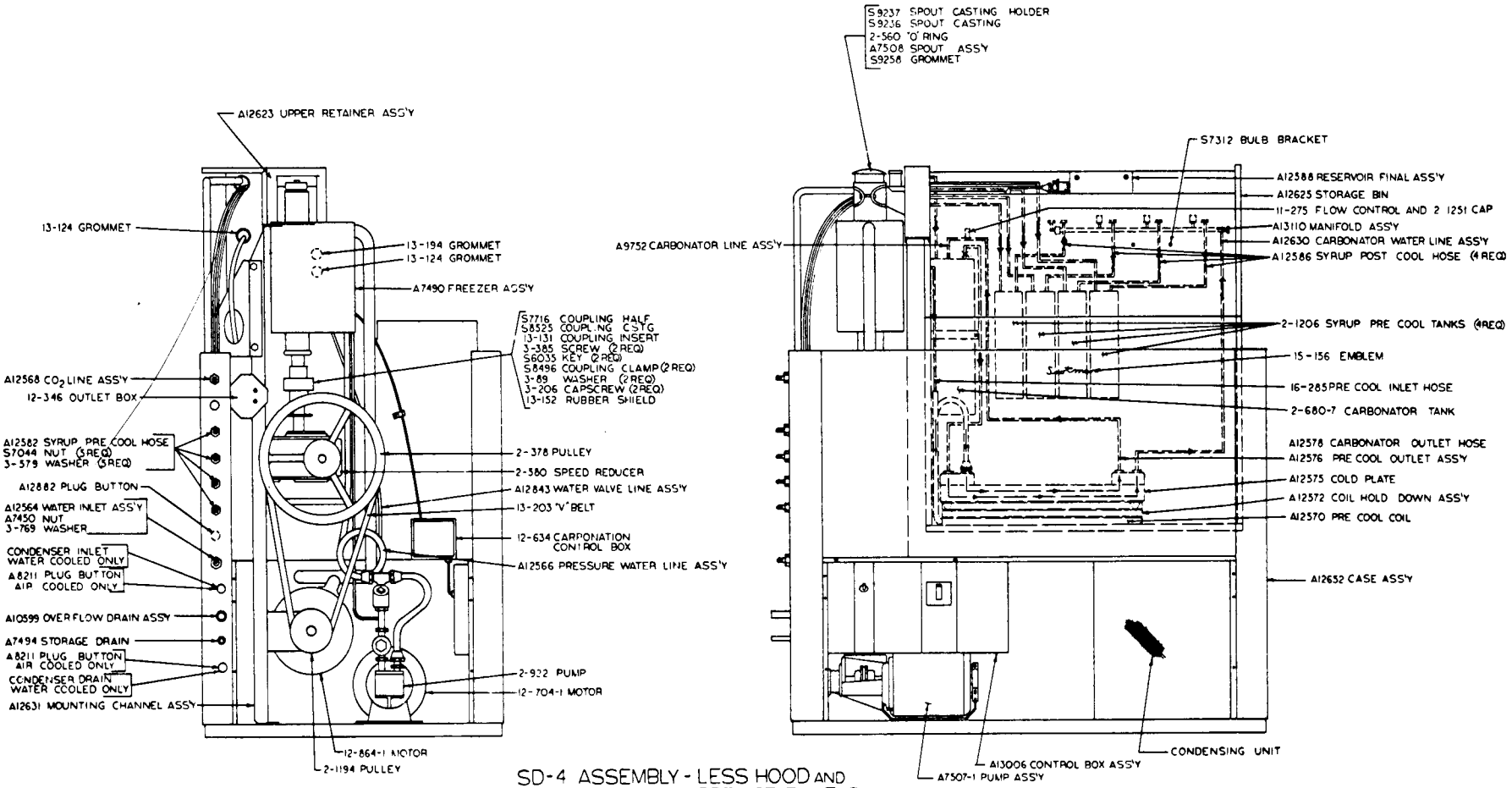

SD-4 ASSEMBLY - LESS HOOD AND SERVICE PANELS

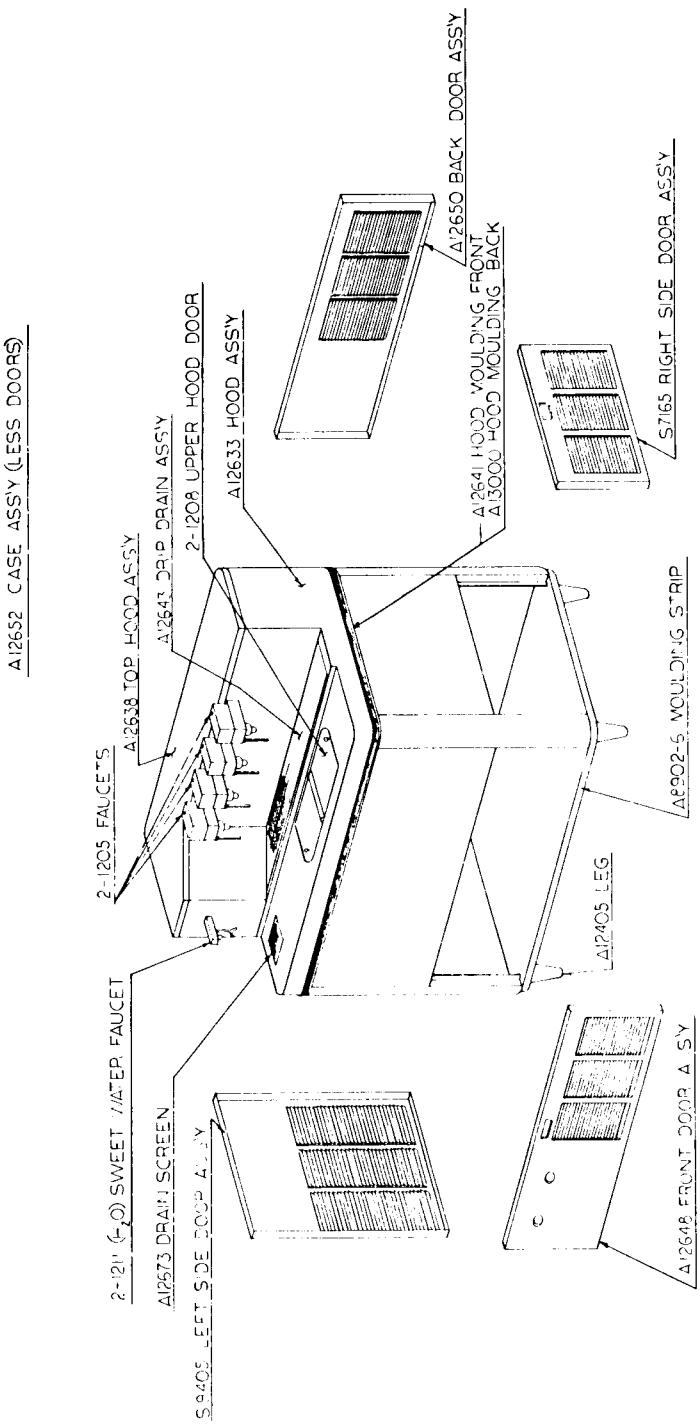

SD 4 CABINET PARTS

ICE MAKER SECTION

HOW IT WORKS

Water in the constant level float reservoir is fed to the bottom end of a freezing cylinder and turns to ice on the inside of this cylinder. The stainless steel auger inside of this evaporator is driven by a motor through a V belt and gear reduction drive. Ice is carried upward by the action of this auger and extruded past the ice breaker at the top of the cylinder.

A manual switch starts the machine and from then on ice is produced automatically in small uniform pieces of ice. When the storage bin fills, a thermostat shuts the machine off and causes it to start up again when ice is taken from the storage compartment.

The ice maker section operates independently of the carbonator section although it is built into the same cabinet.

MECHANICAL SPECIFICATIONS	SD-3	SD-4
Compressor	Bendix-Westinghouse BCI-25	Copeland HK-33I
Refrigerant	24 oz. F-12	26 oz. F-12
Refrigerant Control	Capillary tube, accumulator, heat exchanger type.	Capillary tube, accumulator, heat exchanger type.
Drive Motor	Resilient base, frame 48, CCW rotation, capacitor start.	Resilient base, frame 48, CCW rotation, capacitor start.
Gear Reducer	Winsmith 3CT Final Output 12 R.P.M.	Winsmith 3CT Final Output 12 R.P.M.
ELECTRICAL SPECIFICATIONS		
Compressor Motor	Hermetic	Semi-Hermetic
Voltage	115 V	115 V
Horsepower	1/4	1/3
Amperage Rating	4.9	7.4
Cycles	60	60
Phase	Single	Single
Drive Motor		
Voltage	115 V	115 V
Horsepower	1/4	1/4
Amperage Rating	4.5	4.5
Cycle	60	60
Phase	Single	Single

SERVICE - CONDENSING UNIT

Service gauge connections are available on both high and low-side service valves.

To install gauges to any of these connections, replace 1/8 inch IP plug with 1/8 inch MPT x 1/4 inch flare half union. Purge free of any non-condensable gases before starting any test operation.

PRESSURE SETTINGS

Check pressure settings at the time of start-up. On the water cooled models set the head pressure at 135 p s i. Some air cooled models use the reverse acting head pressure control and should be set on approximately 15 p s i differential, and to cut-in at 130 and out at 145 p s i head pressure. The frost line should extend at least 8 inches out of the accumulator if properly charged with refrigerant and suction pressure will range between 14 and 16 p s i with 50° F. inlet water.

REFRIGERANT CHARGE

The below refrigerant charge is approximate. When charging, set at 135 p s i head pressure and charge so that the frost line extends out of the accumulator after fifteen minutes of operation. Frost out of accumulator at least 8 inches and preferably 1/2 way to the compressor for best capacity and performance.

MODEL	FREON CHARGE	OIL LEVEL
SD-3 - air	24 oz. F-12	Oil level should be kept at 1/3 way up sight glass. Do not fill over 1/2.
SD-4 - air	24 oz. F-12	
SD-4 - water	24 oz. F-12	

WATER SYSTEM

A water level is maintained in the water reservoir by a float operated valve. Water is piped from the water reservoir to the freezing chamber by a gravity feed line maintaining an equal water level. A removable overflow pipe is installed in the water reservoir for cleaning the reservoir as well as preventing damage should the inlet water valve fail.

The water reservoir is equipped with a 2 inch air gap to prevent back siphoning and meet all health codes.

The water level in the water reservoir is adjusted by the float linkage adjustment. The water level should be set 1/4 inch below the overflow pipe. A condensate drip pan is connected to the drain circuit to automatically dispose of condensate moisture.

A water strainer must be installed in the supply line.

ICE MAKER SECTION

ELECTRICAL SYSTEM

The Dispenser model SD-3 and SD-4 are designed to work on standard voltage.

SD-3	115 volts	60 cycle	Single Phase
SD-4	115 volts	60 cycle	Single Phase

Special voltage requirements are available on special order. Therefore, always check nameplate for this information before checking electrical supply.

Nameplate voltage should not vary more than plus or minus 10 percent.

The electrical circuit consists of condensing unit, drive motor, hand reset combination or low pressure cut-out, storage bin thermostat, "on" and "off" switch, micro (safety) switches and head pressure control kit.

A. CONDENSING UNIT

The compressor terminal box houses the motor compressor terminal block, and the motor overload Klixon. To gain access to the terminal box, remove the two screws holding the beveled metal cover. The starting capacitors, running capacitors and starting relays are housed and fastened to the unit base.

B. DRIVE MOTOR - FREEZER

Model SD-3 and SD-4 Icemakers are equipped with standard 1/2 inch shaft, 1/4 HP, capacitor start, induction motors. These motors turn counter clockwise and may be replaced with any standard make motor corresponding to the nameplate rating. (Be sure motor runs counter clockwise viewed from the shaft end.)

C. HIGH-LOW PRESSURE CUT-OUT (Used on water cooled models only.)

Ranco control is located on the frame assembly. Factory settings cut-out 5 lbs. on low pressure and 180 p s i on high pressure. This control prevents operation at abnormal pressures.

D. LOW PRESSURE CUT-OUT (Hand reset on all air cooled models.)

Ranco control is located on the frame assembly. Factory settings cut-out at 5 p s i. Safety device to cut off machine and keep it off in case of water supply failure, loss of refrigerant, low ambient temperature or other causes of low pressure.

E. STORAGE BIN THERMOSTAT

White Rodgers control located on frame assembly. Factory settings 38° cut-out, 45° cut-in. This control shuts off complete machine when ice in storage bin builds up to control.

F. MICRO SAFETY SWITCH

The micro switch is located in the top of the ice chute. The switch is operated by ice pressure backing up in the chute should the storage bin thermostat fail. Micro switch will shut off the condensing unit only, when operated.

G. ON-OFF SWITCH

A General Electric on-off switch with built-in thermal overload protection to prevent drive motor failures is used. A 5 amp. heater element is standard on 115 volt drive motors.

H. HEAD PRESSURE CONTROL KIT - AIR COOLED MODELS ONLY

A Penn reverse acting high pressure control is used and connected electrically to the fan motor. As the head pressure drops below the cut out setting, the control opens allowing the current to pass entirely through a resistor in the line feeding the fan motor. This slows the shaded pole motor down to approximately 1/4 speed thus increasing the head pressure. When head pressure builds up to the setting on the top of control scale the control cuts in and full voltage again flows directly to the fan motor allowing it to operate at full speed.

I. DRIVE MOTOR - CARBONATOR PUMP

Models SD-3 and SD-4 dispensers use a 1/4 H.P., split phase, 48 frame motor, 1/2" drive shaft with flat for set screw and counter clockwise when viewed from shaft end.

PS-3-57
April-25-57

TO: ALL DISTRIBUTORS AND DEALERS

SUBJECT: ACCEPTABLE SUBSTITUTES FOR 600W OIL IN WINSMITH GEAR REDUCERS

In answer to many field requests, we are pleased to release the following chart showing the companies whose products are acceptable substitutes for the 600W supplies by Winsmith as factory recommended.

Note the third column which most accurately represents the normal temperature operating range. Also the Alemite or Zerk fitting to bearing is greased with Mobilgrease BRB No. 1, or any good ball bearing grease as obtained from local service stations.

600W oils and equivalents are classified as industrial oils and most likely will be found in bulk plants rather than local service stations.

SCOTSMAN-QUEEN PRODUCTS
Service Department
Ice Machine Division

WORM GEAR REDUCERS

CB-CT-CV-CBD-CTD-CVD-CBX-CTX-CVX-DBI-TSR

Ambient Temperature °F	-30 to 15	16 to 50	51 to 110	111 to 165
Maximum Operating Temp. °F	150	185	225	225
Viscosity @ 210°F, SUS	40 to 90	90 to 125	125 to 190	190 to 350
Compounded with	(Optional)	3 to 10% Acidless Tallow or E. P. Base	3 to 10% Acidless Tallow or E. P. Base	3 to 10% Acidless Tallow or E. P. Base
AGMA Lubricant		#7 Compound	#8 Compound	
Cities Service Oil Co.	Pacemaker Oil # 5	Optimus Oil # 10	Optimus Oil # 6	Optimus Oil # 12
Fiske Bros. Refining Co.	#3 Lubriplate	Lubriplate # 8	Lubriplate # 8	Lubriplate APG
Gulf Oil Corporation	Multipurpose Gear Lubricant	E. P. Lubricant #115	E. P. Lubricant #145	E. P. Lubricant #250
Shell Oil Company	Vitrea Oil 71	Valvata Oil #J 78	Valvata Oil #J 78	Valvata Oil #J 83
Sinclair Refining Co.	Duro Oil 160	#87 Heavy Duty Oil	#101 Super-Heat Valve Oil	#212 Super-Heat Valve Oil
Standard Oil Co.	Stanogear Compound # 1	Stanogear Compound # 4	Standard Worm Gear Oil	CalumetSH Cylinder Oil
Sun Oil Company	Sunep 70	Sunep # 110	Sunep # 150	HV Cyl. Oil
Socony Mobil Oil Co., Inc.	Vactra Oil # 1	Mobil Compound DD	Mobil Cylinder Oil #600W	Mobil Cylinder Oil #600W
The Texas Company	Meropa Lub. # 1	Meropa Lub. # 3	Meropa Lub. # 6	Meropa Lub. # 6

WINSMITH GEAR REDUCER (3CT)
QUEEN PART NO. 2-580
USED ON ALL MODELS SD-3—SD-4

NOTE: BOTH HIGH & SLOW SPEED BEARINGS, OIL SEALS & GASKETS ARE INCLUDED IN THE A-6397 GEAR REDUCER REPAIR KIT.

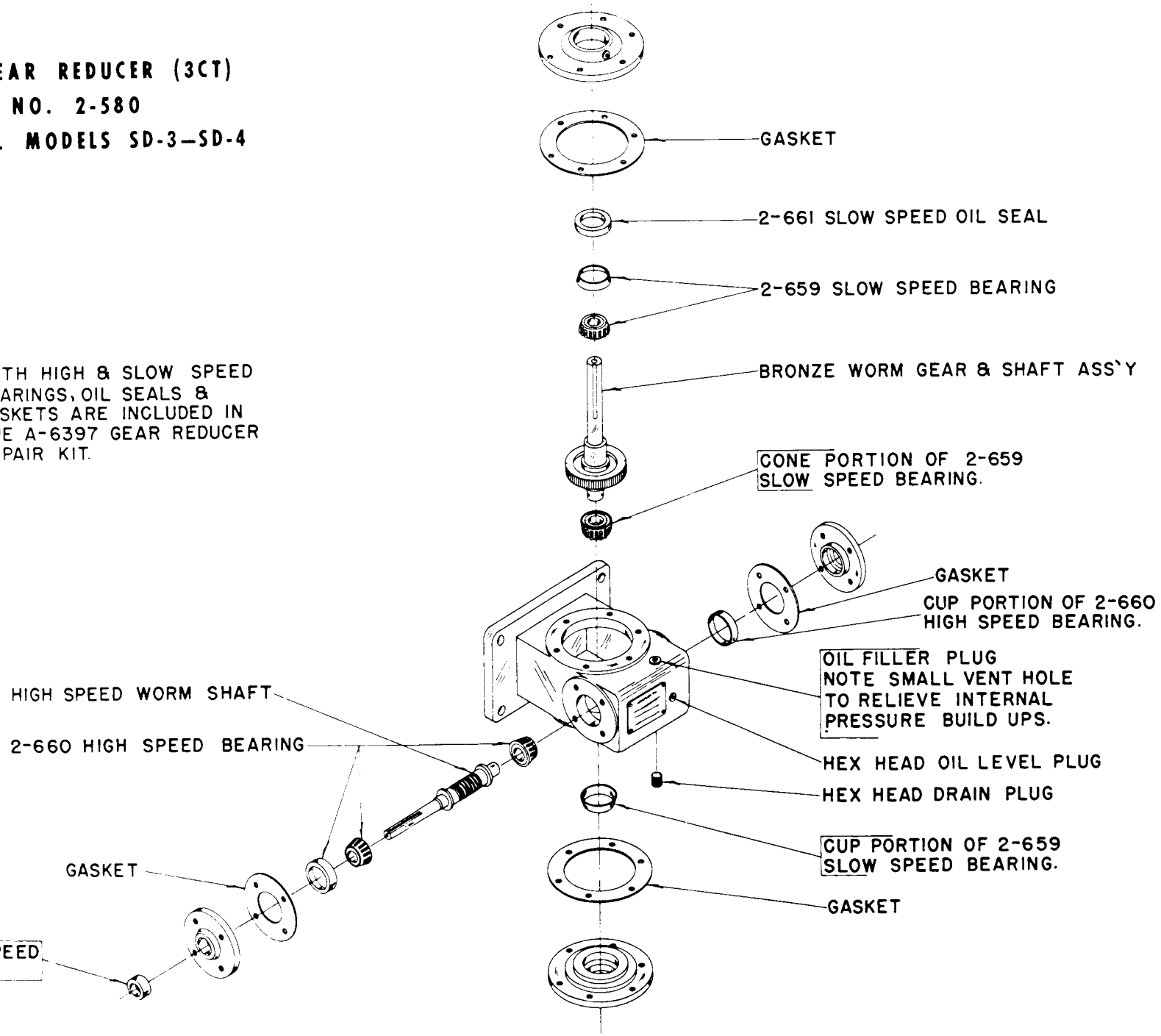

MAINTENANCE INSTRUCTIONS - DISPENSERS

THE FOLLOWING MAINTENANCE MUST BE ACCOMPLISHED TWO TIMES PER YEAR ON ALL SCOTSMAN DISPENSERS. CALL YOUR AUTHORIZED SCOTSMAN SERVICE DEPARTMENT.

1. Check and clean water strainers and float valve. Depress float valve to insure full stream of water.

2. Check water level and machine level. Keep water level below overflow, but as high as possible and still not run out of spout opening with machine off. Water should come out of spout with ice at all times. Adjust as required.

3. Clean reservoir and interior of freezer assembly using *SCOTSMAN* Ice Machine Cleaner.

   A. If machine has been cleaned regularly and no problems such as dry ice or chatter are noticed, clean by making ice from solution of 8 oz. of cleaner to 1 gallon of water.

   B. If heavy mineral deposits on auger and walls, or sediment at inlet to freezer are encountered, clean by pouring strong solution (½ acid- ½ water) into reservoir and operate drive motor only for agitation. Allow ½ hour or longer as required. Drain by disconnecting tygon at water inlet to freezer.

***NOTE:** Cleaning requirements vary according to local water conditions. Visual inspection of the auger before and after cleaning will indicate best procedure to be followed in local areas.*

4. Check high and low side pressures. On air-cooled models set head pressure between 130 and 145 P S I on R.A. high pressure control. On water cooled models, set pressure at 135 P S I. Suction pressure should be above 12 P S I and will range up to 16 P S I depending upon water and ambient temperatures.

5. Set hand reset low pressure control to cut off in event of water supply interruption or low ambient temperature at approximately 5 P S I.

6. Change oil in gear reducer. Use Mobiloil 600 W or equivalent good grade of gear oil with a viscosity of 125 to 190. For unit with grease fittings use Mobilgrease BRB No. 1 or any good grade ball bearing grease. Particularly important when there is evidence that water has gotten into gear housing. Remove gear reducer to facilitate.

7. Oil drive motor. Use SAE 20 oil.

8. Check top bearing of freezing tube. Remove retainer ring around edge of stamped brass cap. If moisture is around bearing, wipe up and remove grease. Add new grease. Use Beacon No. 325. To replace cap, reverse above.

9. Check and adjust belt tension.

10. Clean air cooled condenser. Inform customer to clean frequently. Always shut off machine when cleaning.

11. Oil condenser fan motor when possible.

12. Check for refrigerant leaks and proper frost line. Should frost out of accumulator at least one-half way to compressor, and in some areas back to service valve.

13. Check for water leaks. Tighten drain line connections. Run water down bin drain line to make sure it is open.

14. Check quality of ice. Ice should be wet when formed, but will cure rapidly to normal hardness in the bin.

15. Check thermostat and pressure plate cut off. Micro switch cuts off only compressor. Bin thermostat should be set at 10° differential and should keep entire machine off at least twenty minutes in high ambients *(longer in low)* during normal operation.

16. See cleaning of cold plate in carbonator section in this manual.

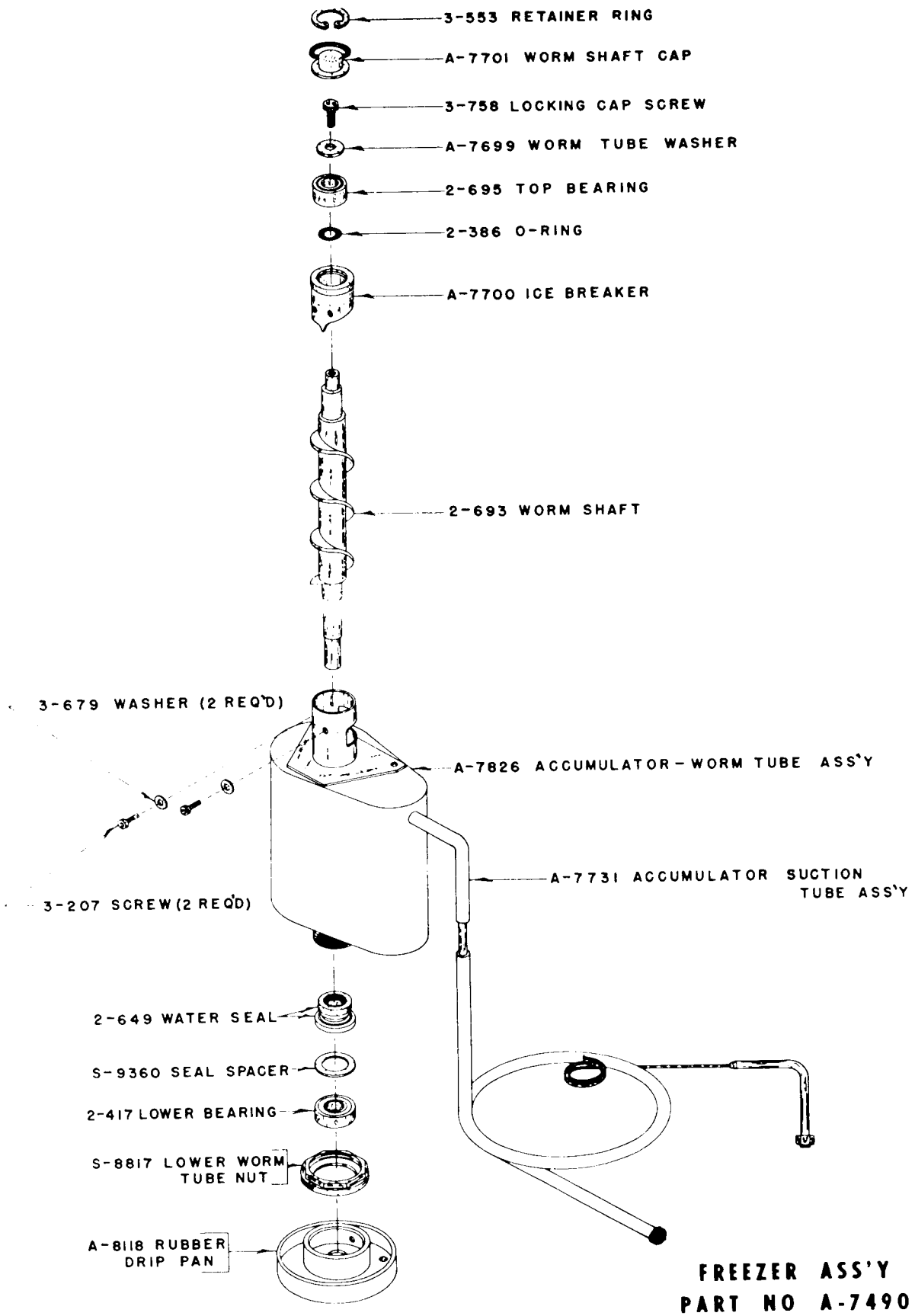

FREEZER ASS'Y
PART NO A-7490

USED ON
SD-4
BEGINING WITH SERIAL 76-35256

SD-3
FREEZER ASS'Y
PART #A-9618

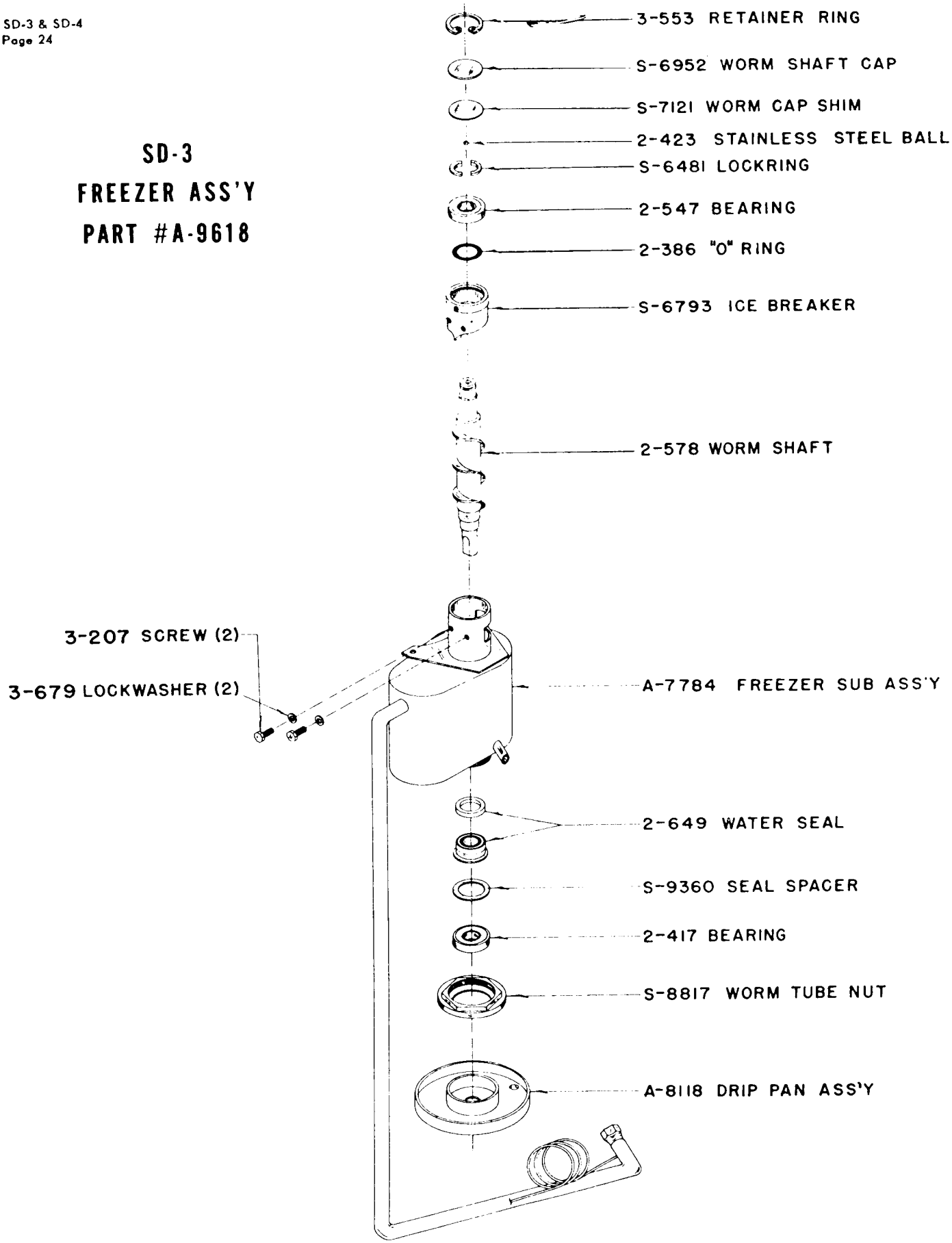

INSTALLATION INSTRUCTION

1. Uncrate and remove all bolts from bottom skids.
2. Loosen shipping bolt on compressor and allow to float free on spring mounts.
3. Remove legs from carton and install on base as desired.
4. Level machine.
5. Connect plumbing- Use 3/8 inch copper water inlet line and connect to 3/8 inch flare fitting provided at left of cabinet. Install strainer provided. Use licensed or qualified plumber in accordance with local codes.
6. Connect CO_2- Carbonator will not operate unless CO_2 is connected. Adjust high pressure regulator to 100 lbs. and low pressure regulator to 20 lbs.
7. Connect product lines and syrup tanks.
8. Check all refrigerant lines, product lines, water lines and CO_2 lines for rubbing or touching other surfaces.
9. Remove packing under float in water resevoir.
10. Refrigerant valves shipped open. Check all other valves.
11. Start ice maker first and cover cold plates in bottom of storage bin with ice before starting carbonator.
12. Fill syrup tanks with syrup.
13. Remove warranty card and other information from machine compartments
    IMPORTANT: Fill out warranty card immediately and send in as directed.
14. For adjustments call your authorized S C O T S M A N servicing dealer or distributor.

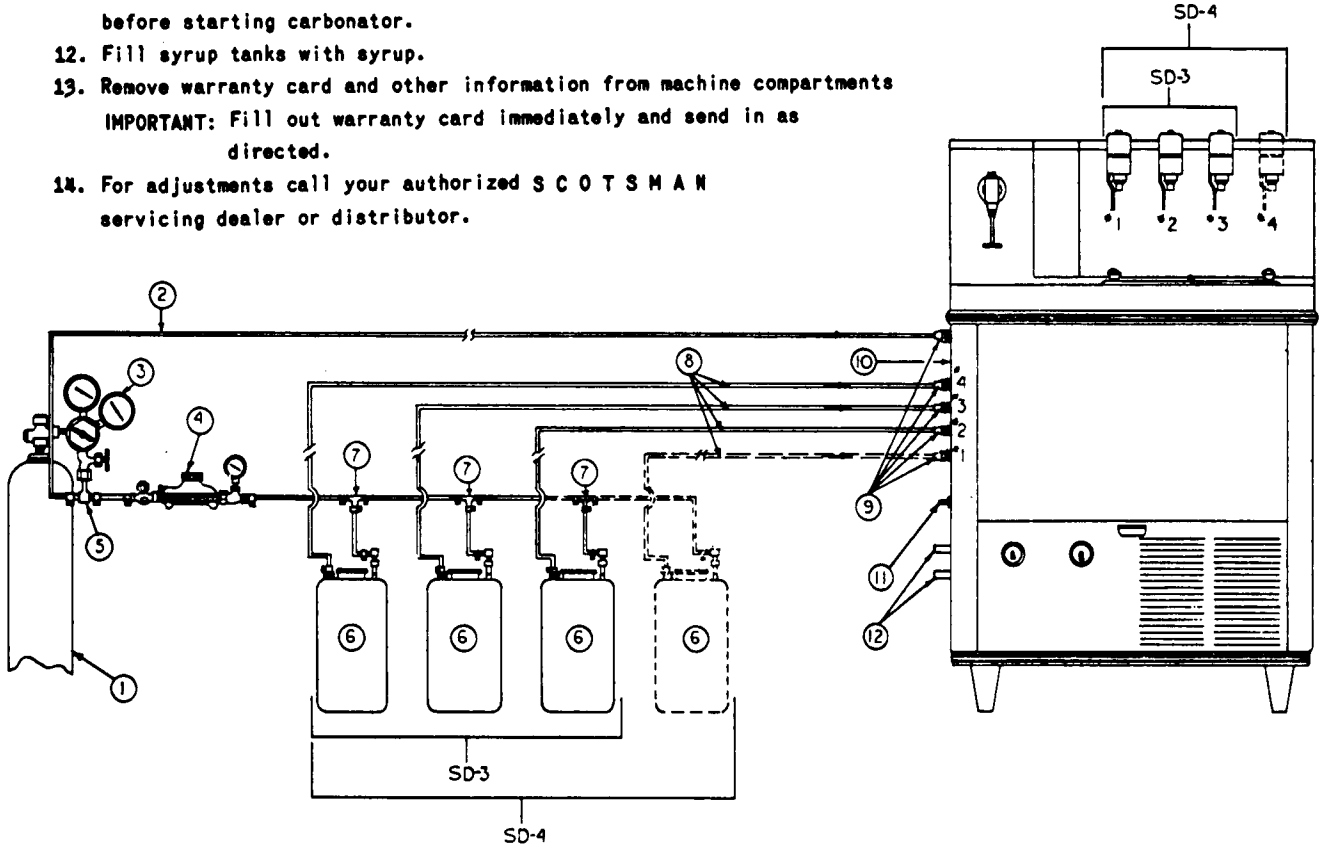

CODE

1. CO_2 CYLINDER
2. CO_2 LINE (COPPER, STAINLESS STEEL OR PLASTIC)
3. HIGH PRESSURE CO_2 REGULATOR FOR CARBONATOR
4. LOW PRESSURE CO_2 REGULATOR FOR SYRUP TANKS
5. BRANCH TEE
6. SYRUP TANKS
7. TEE
8. PRODUCT LINES STAINLESS STEEL OR PLASTIC)
9. 1/4 S.A.E. FLARE FITTING
10. ELECTRICAL INLET
11. WATER INLET 3/8 S.A.E. FLARE FITTING
12. DRAINS

TYPICAL POST MIX CARBONATED BEVERAGE SYSTEM

APPLICABLE TO THE SD-3 OR SD-4

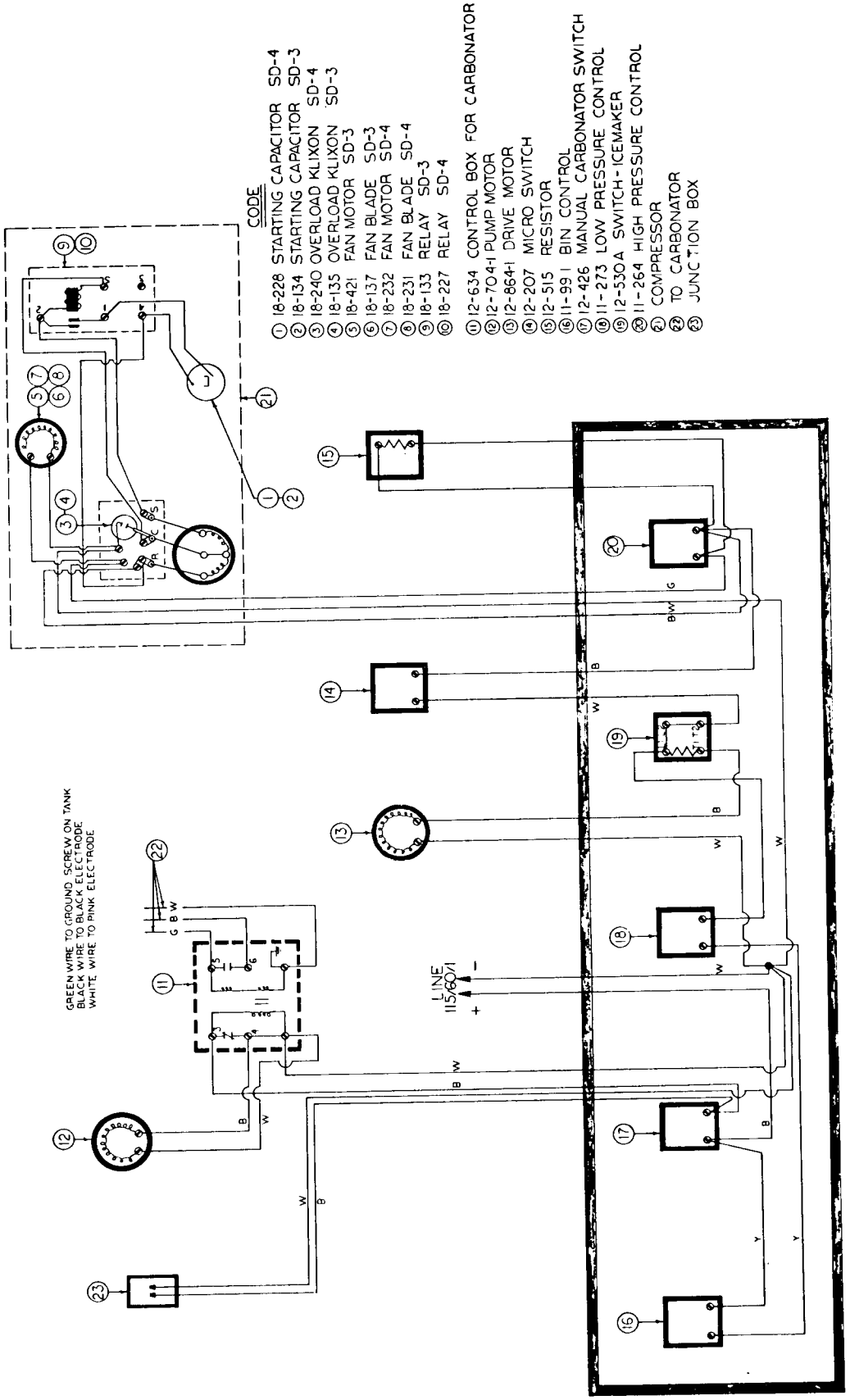

WIRING DIAGRAM
SD-3 AND SD-4
(AIR COOLED)

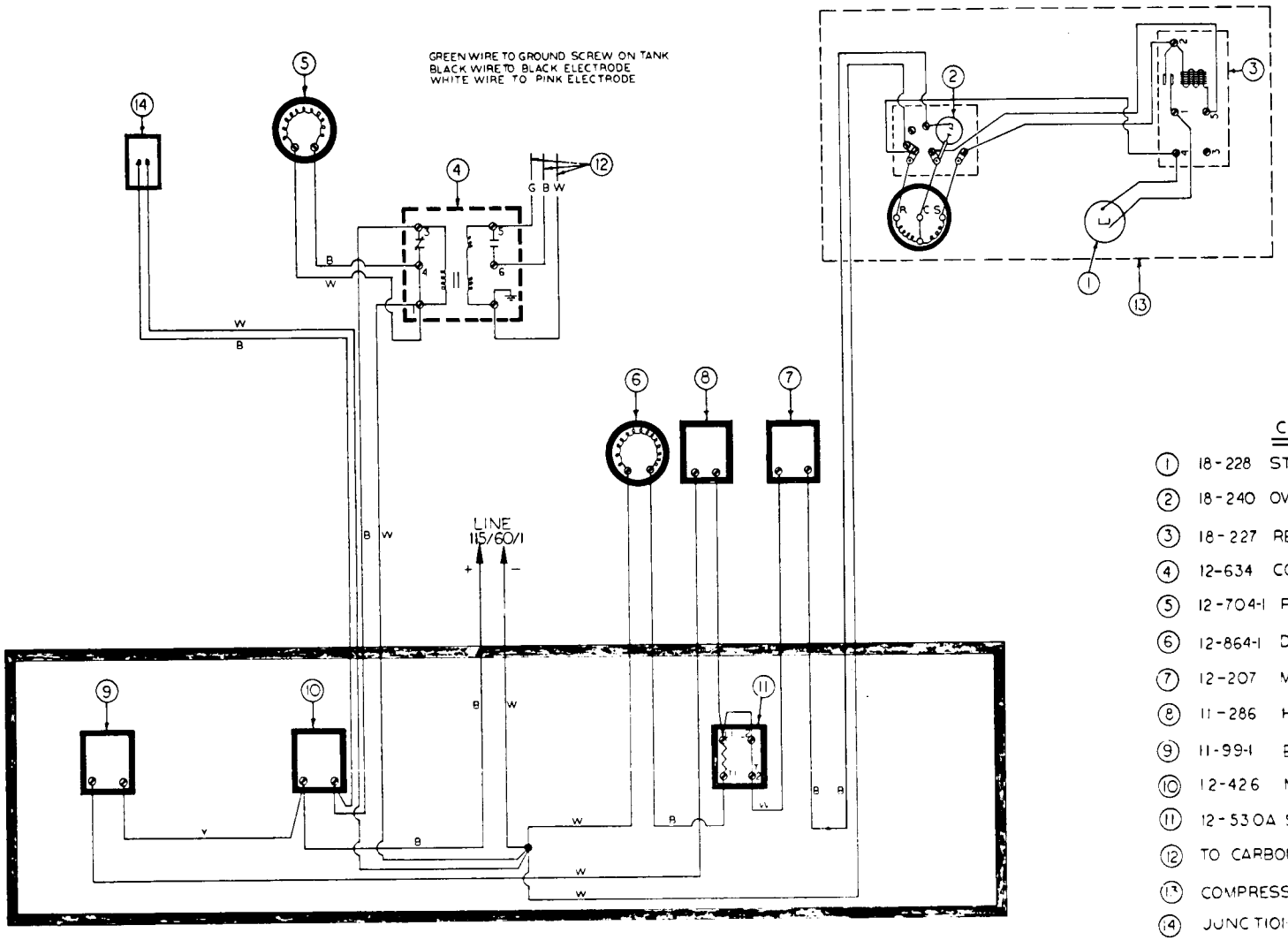

CODE

1. 18-228 STARTING CAPACITOR
2. 18-240 OVERLOAD KLIXON
3. 18-227 RELAY
4. 12-634 CONTROL BOX FOR CARBONATOR
5. 12-704-1 PUMP MOTOR
6. 12-864-1 DRIVE MOTOR
7. 12-207 MICRO SWITCH
8. 11-286 HIGH-LOW SWITCH
9. 11-99-1 BIN CONTROL
10. 12-426 MANUAL CARBONATOR SWITCH
11. 12-530A SWITCH ICEMAKER
12. TO CARBONATOR
13. COMPRESSOR
14. JUNCTION BOX

WIRING DIAGRAM
SD-4
(WATER COOLED)

ICE MAKER SECTION

Service Analysis Chart

COMPLAINT	POSSIBLE CAUSE	CORRECTION
Low ice production.	Loss of refrigerant. Under or over-charge of refrigerant.	Check and recharge with proper amount of refrigerant.
	Drive motor weak.	Replace.
	Dirty or plugged condenser.	Clean condenser.
	Low water level in water reservoir.	Adjust to 1/4 inch below spout opening.
	Overcharge of oil in system.	Check at oil hole and lower to 1 1/2 inch from top of hole or 1/3 full on crankcase sight glass.
	Partial restriction in capillary tube or drier.	Moisture in system. Over-charge of oil in system. Remove charge by blowing back through cap tube. Replace and recharge.
	Inlet water strainer partially plugged.	Remove screen and clean.
	Corroded or strained worm shaft due to water condition.	Remove worm shaft and clean, or use Scotsman Ice Machine Cleaner. See Maintenance Section.
	Slipping drive belt.	Adjust belt tension or replace worn belt.
	Defective gear reducer.	Check reducer driven shaft to freezer shaft. Should rotate at 12 R P M. Replace if worn.
Machine runs but makes no ice.	Loss or undercharge of refrigerant.	Check for leaks and recharge.
	Drive motor, belts, gear reducer on drive coupling inoperative.	Gear reducer and worm turn at 12 R P M. Check. Repair or replace.
	Pulleys loose on shafts.	Tighten, repair or replace.

ICE MAKER SECTION

Service Analysis Chart

COMPLAINT	POSSIBLE CAUSE	CORRECTION
Machine runs but makes no ice. (Cont.)	Water not entering freezing chamber.	Plugged strainer or supply line. Check and clean. Air lock in gravity feed line. Check and remove air lock.
	Moisture in system.	Check and remove charge and drier. Replace and recharge.
	Water seal leaking.	Replace seal. See section on maintenance.
	Defective manual overload switch.	Replace switch.
Water leaks.	Defective water seal.	Replace. See section on maintenance.
	Gravity feed line leaking.	Check hose clamps.
	'O' ring in spout casting leaking.	Remove spout casting and install new 'O' ring.
	Storage bin drain and connecting fittings.	Check and repair. Tighten fitting - replace 'O' ring.
	Water level in reservoir too high.	Adjust to 1/4 inch below overflow pipe.
Excessive noise or chattering.	Scale or mineral build-up on inside of freezer.	Clean with Scotsman Ice Machine Cleaner. See section on maintenance.
	Mineral deposit or scale on auger and cylinder walls.	Ice sticking and jamming inside. Clean with Ice Machine Cleaner or remove auger and polish.
	Low suction pressure.	Raise suction pressure. Adjust head pressure control to recommended setting or balance refrigerant charge.
	Intermittent water supply.	Check and clean water strainer. Check gravity feed line for air lock. Remove air lock.
	Water level in reservoir too low.	Adjust to 1/4 inch below overflow pipe, or raise reservoir.
	Mis-aligned coupling or worn insert.	Repair or replace.

ICE MAKER SECTION

Service Analysis Chart

COMPLAINT	POSSIBLE CAUSE	CORRECTION
Unit will not run.	Blown fuse in line.	Replace fuse and check for cause of blown fuse.
	Bin thermostat set too high.	Adjust thermostat. Set at 38° cut-out, 45° cut-in.
	Loose electrical connection.	Check wiring.
	Switch in 'Off' position.	Turn switch on.
	Inoperative master switch.	Replace switch or thermal overload.
	Off on manual reset low pressure control.	Reset.
Compressor cycles intermittently.	Low Voltage.	Check for overloading.
	Dirty condenser.	Clean.
	Air circulation blocked.	Move unit to correct.
	Inoperative condenser motor.	Replace.
	Non-condensable gases in system.	Purge off.
	Bin thermostat differential too small causing short cycling.	Widen differential 38° cut-out, 45° cut-in.
Making wet ice.	Surrounding air temperature too high.	Correct or move unit.
	Under or over-charge of refrigerant.	Recharge with proper amount. Should frost out of accumulator at least 8".
	High water level in water reservoir.	Lower to 1/4 inch below overflow pipe.
	Back pressure too high.	Overcharge of refrigerant, Faulty compressor or high head pressure. Lower as indicated.
	Faulty compressor or valve plate.	Repair or replace.

ICE MAKER SECTION

Service Analysis Chart

COMPLAINT	POSSIBLE CAUSE	CORRECTION
Excessive noise or chattering. (Cont.)	Low ambient temperature.	Set head pressure and resultant back pressure higher, or move to heated space.
	Gear reducer low on oil charge.	Check oil level and refill to oil level plug.
	Gear reducer loose on frame.	Tighten.
	Pulleys worn or loose on shaft.	Repair or replace.
	Belt cracked or worn.	Replace belt.
	Drive motor end-play or worn bearings.	Repair or replace.
	Motor compressor not floating on springs.	Loosen hold-down bolts.
Machine continues to run with full storage bin.	Storage bin thermostat not properly set or is defective.	Reset or replace. Reset to 38° cut out 45° cut in.

OPERATIONAL TABLE

AVERAGE VALUES

Refrigerant Head Pressure 135 #

Refrigerant Back Pressure 15#

Auger Speed in RPM 11.5

Refrigerant Control - Capillary Tube

Refrigerant R-12

Continuous ice ejection with small drops of water occasionally issued.

Electrical motors check to 75% rated amperage with amprobe.

Suction line flare nut at compressor cool, not frosted.

Compressor oil level shows 1/2 bullseye with compressor off.

CARBONATION

"THE LIFE OF THE DRINK"

No other single element in the Bottling Industry occupies the unique position of Carbonic gas. It is the foundation on which the industry has been built. The Sparkle of lively bubbles which attract the eye and enhance the taste is called "carbonation."

This important element is too often taken for granted. It deserves greater attention--proper and uniform carbonation is as important a taste element in bottled beverages as the flavors themselves.

The information and suggestions on the next few pages are offered to encourage more exact control for obtaining greater uniformity in carbonation.

SOME FACTS ABOUT CO_2

Carbonic Anhydride, Carbonic Gas, or Carbon Dioxide, as it is variously termed, has the chemical symbol CO_2. It is under normal conditions a colorless, odorless gas, one and one-half times heavier than air. Chemically it is the combustion product of the element Carbon. It occurs in nature as the result of all types of combustion.

Carbonated Water has been found in natural springs in many parts of the world. Such springs have been known for centuries and have been highly regarded for beverage purposes.

Many of the desirable characteristics of carbonated beverages are due to the carbonic gas contained in them. It is therefore most important to determine the proper amount of carbonation such beverages should contain and having done that to provide the necessary control to insure uniformity of the product in this respect at all times.

–PROPERTIES–

Color	None
Odor	Pungent
Latent Heat	120 BTU lb. at 0°F.
Critical Pressure	1,055 LBS. sq. in.
Critical Temperature	87.8°F.
Pressure in drums at 70°	839 lbs. sq. in.
1 lb. CO_2	8.50 Cu. ft. at atmospheric pressure and 50°F.
Solid CO_2 (Dry Ice)	110°F.

THE HISTORY OF CARBON DIOXIDE

Carbon dioxide has the distinction of being the first gas discovered. In the early part of the seventeenth century, Von Helmont, a Belgian, prepared it by burning wood and by treating mineral carbonates with acid. Black later discovered that carbon dioxide can combine with caustic alkalis and suggested the name "Fixed Air." It was not until 1781 that its real nature was demonstrated by Lavoisier--"Father of modern Chemistry."

The gas was first obtained in a liquid form by Faraday in 1834. But, of course, these were only laboratory scale experiments. It is claimed that a Prof. Vence of Montpelier, France, made the first soda water in 1750 by mixing a little soda and acid in a bottle of water. This is the orgin, no doubt, of the name "soda water."

The History of Carbon Dioxide

Joseph Priestly, another famous chemist, also made several artificially carbonated waters and in 1772 published a pamphlet entitled "Directions for Impregnating water with Fixed Air in Order to Communicate to it the Peculiar Spirit and Virtues of Pyrmont Water.

This was the beginning of great interest in the manufacture of artificial mineral waters. In England, after Priestly had shown the way, ginger beer came into popularity and later carbonated beverages made with sweet syrups as we know them today.

In America, Philadelphia claims the honor of having the first "soda water" manufacturer. Be that as it may, we find that by the middle of the 19th century, as the demand for CO_2 increased, many investigators were busy devising better and cheaper methods of preparing the gas for beverage purposes. While some of the gas then used was obtained from breweries, much was also obtained from the action of sulphuric acid (vitriol) on marble chips, or carbonate of soda.

Nearly every soft drink manufacturer had his own gas generating outfit and incorporated CO_2 into his beverages by agitation within closed vessels. Needless to say, aside from the cost involved, these operations were not only inefficient, but dangerous to a high degree.

In 1888 Jacob Baur, the founder of the liquid Corporation, conceived the idea of producing carbonic gas for coke gas, compressing it to a liquid state and marketing it in steel cylinders.

In May of 1889, the first cylinder of Red Diamond Gas was shipped from Liquid's first plant at 437 Illinois Street, Chicago. The company was then known as "The Liquid Carbonic Acid Manufacturing Company."

The convenience and economy of Carbonic Gas in cylinders was recognized by the industry and soon replaced the use of generator gas entirely.

CARBONATION AND THE FACTORS WHICH GOVERN IT

Carbonated water is largely a mechanical mixture of CO_2 and water and the term "carbonated water" is usually understood to mean water that contains gas to its capacity.

This capacity varies with pressure and temperature. The amount of gas water will absorb increases directly with the pressure. The amount of gas water will absorb also increases as the temperature decreases.

Therefore, any measure of the actual gas content of carbonated water will depend on the two factors--pressure and temperature.

The unit of measure that has been adopted as standard is "the volume."

One volume is the amount of gas that water will absorb at atmospheric pressure and at 60° Fahrenheit.

A volume of gas occupies the same space as does the water by which it is absorbed.

The pressure gauge on the carbonator or on the regulator or on the volume testing apparatus, does not show atmospheric pressure. This means that zero on the gauge is atmospheric pressure which is approximately fifteen pounds per square inch at sea level.

EFFECT OF TEMPERATURE 1

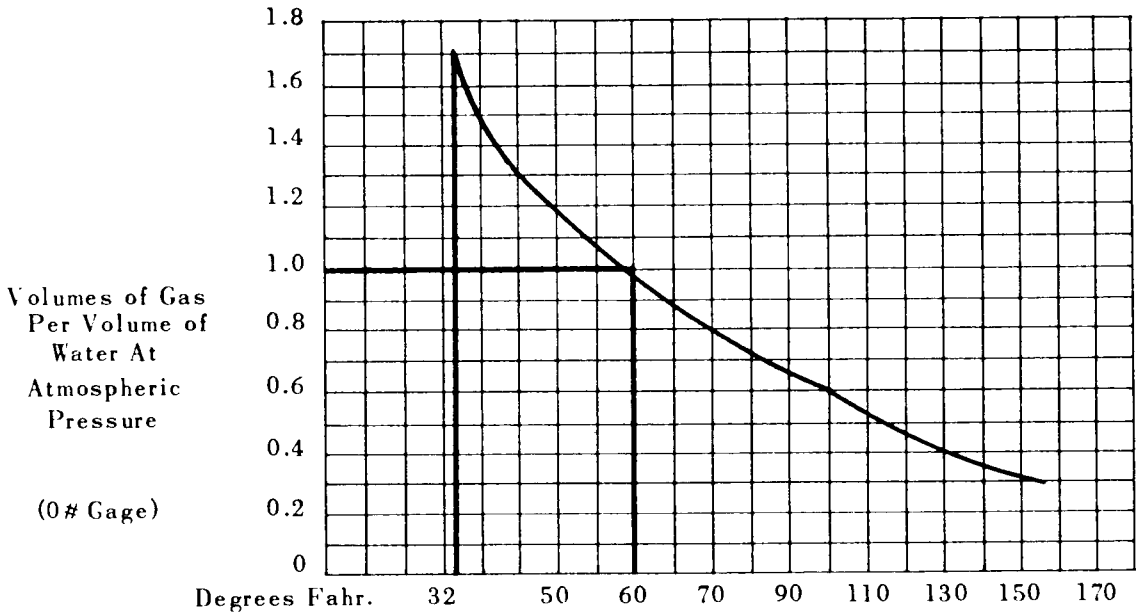

Chart No. 1 shows the effect of temperature change on the amount of gas water will absorb.

The pressure you will note, is constant--namely, atmospheric or 0 lbs. gauge. As the temperature of the water is lowered, the amount of gas it will absorb increases, until at 60°F. it is one volume. Note that from 60° to 150° the slope of the curve changes gradually, from 60° to 32° F., however, the curve changes more abruptly, and for each 10° difference in temperature, a decided increase in gas absorption is apparent, until at 32°, or slightly above the freezing point, we find that 1.7 volumes of gas is absorbed by the water at atmospheric pressure. From this curve it will be apparent that the cooler the water is, the more gas it will absorb.

EFFECT OF PRESSURE 2

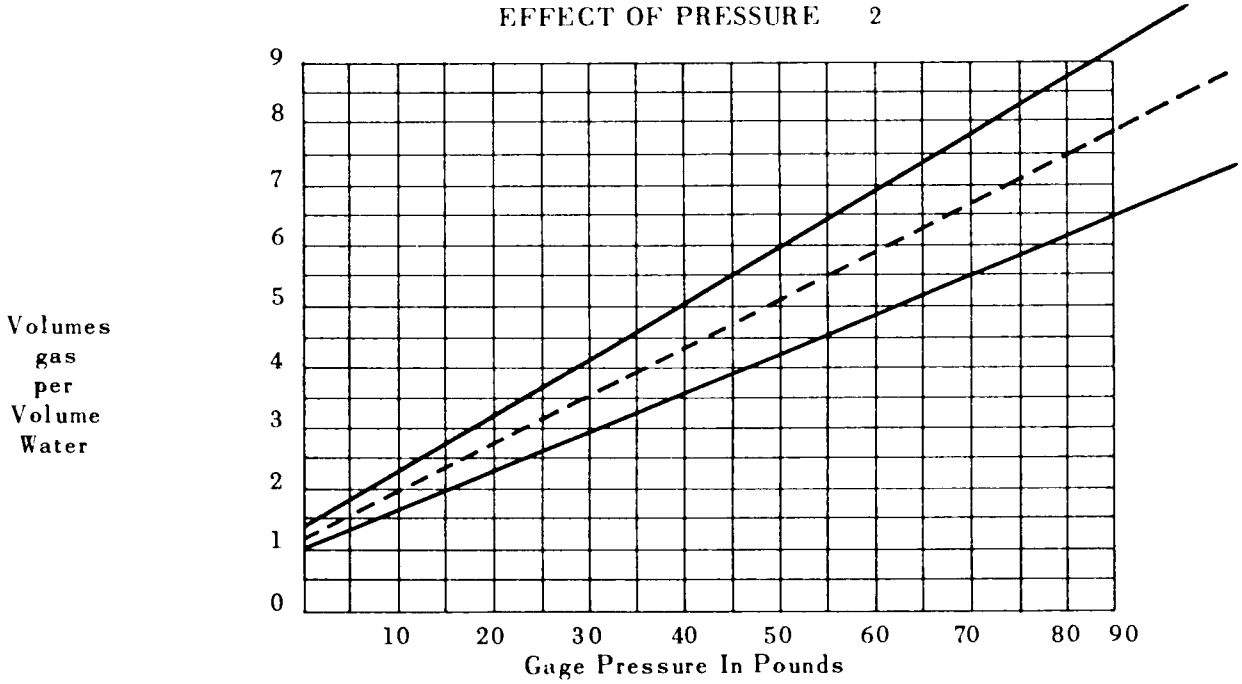

EFFECT OF PRESSURE

Chart No. 2 shows the effect of increasing pressures, temperature being constant, on the amount of gas water will absorb. You will note that the chart is a straight line, of the same slope throughout, indicating that as the pressure is increased, the gas volumes increase. Furthermore, the "gas volume" increase is directly proportional to the pressure. To illustrate--at 0 lbs. gauge and 60°F. we find that the water will absorb one volume of gas, at 15 lbs. increase in pressure, water at 60° will absorb one additional volume of gas. If the temperature of the water is 45°, then, for every 15 lbs. increase in pressure, the water will absorb 1.3 volumes of gas.

FOR A UNIFORM BEVERAGE
Control Carbonation

Carbonation is an important taste ingredient of your beverage. One of the vital attributes of any beverage is uniform taste--bottle after bottle. There are four elements that influence the taste of a beverage.--

1. FLAVOR 2. SWEETNESS 3. CARBONATION 4. TEMPERATURE

All but the final temperature of your drink are susceptible to direct control at your plant. Flavor and sweetness standards should be and probably are definitely established by means of exact formulas.

Carbonation standards should also be established for each flavor in your line--Sparkling water, ginger ales, and other "mixers" should be in the "high carbonation" bracket--the highest carbonation practically obtainable is the ideal to be sought for.

Cola drinks, root beer and other low acid drinks are in the next bracket usually carbonated to 3 or 3½ volumes--

Some bottlers prefer fruit drinks, especially Orange--at a lower carbonation. Determine a standard of carbonation for each flavor that you consider best for your market.

Set up definite instructions for maintaining these standards, just as you maintain standard formulas for the sugar f'avor, acid and other ingredients.

FLAVOR	CARBONATION STANDARD
Root Beer	3½ Volumes

Having determined the carbonation standards, it is important that all concerned know how to control the factors that will enable you to maintain them.

HOW TO PRODUCE UNIFORM BEVERAGES

Bottlers know the importance of developing the proper formula for a beverage. They fully realize that for any bottled beverage to achieve popular favor, it must be right--in flavor, in taste, and in gas content.

How To Produce Uniform Beverages

The development of the proper formula for a beverage is, of course, an essential step in establishing that beverage in popular favor. To keep its popularity, the beverage must be the same from day to day and month to month. The formula must be followed exactly and the beverage produced in just the same manner. This means that perfect control of variable factors is necessary to assure uniformity.

The number of volumes of gas in a finished beverage has a definite relationship to the taste of the beverage. Correct carbonation means a sparkling, pungent, thirst-quenching beverage that completely satisfies the consumer. Low carbonation leaves the beverage with a flat, insipid taste which is unsatisfactory. Finished beverages should be checked at frequent intervals to assure proper carbonation in the bottle.

The amount of sugar in a beverage determines, with a given acid content, its sweetness. The sugar also has another important function in the beverage. Sugar makes the "body" of the beverage and "body" is a necessary background for any flavor. A change in the body changes the taste of the beverage even though the same flavor is used. High quality extracts are, of course, a necessity.

Control of sugar content of the beverage is very important. It depends on the beaume of syrup used and the throw used. Variation in syrup density changes the finished beverage if the throw remains the same. Variation in the throw will also change the beverage if the syrup density is unchanged. By checking the beaume of the finished beverage a control is established where it does the most good.

Uniform finished beveraged can be made only by positive control over such variable factors in beverage production.

Check the density of your syrup with a beaume scale.

Check the actual throw in the bottle by measuring individual sample bottles.

Check the final result by using the finished drink tester on the completed beverage.

Check the carbonation in the finished beverage.

KNOW YOUR WATER

Water that is satisfactory for drinking purposes is generally satisfactory for carbonating. There are very few exceptions to this rule.

The water used for carbonating must be clean. That means free from suspended matter of all kinds including water organisms which may be too small to see except under a microscope.

All water should be properly filtered and it is advisable to use an activated carbon unit after the filter. The ideal set up is to follow the activated carbon unit with a paper filter. This will prevent particles of the carbon coming through with the water.

Chemical composition of the water does not affect carbonation within the limits of potable water. If enough material were in solution to interfere with carbonation, it would not be possible to use the water for drinking purposes.

Organic matter in solution can cause trouble if present in excessive quantities but this trouble is removed by activated carbon.

Know Your Water

It may be necessary to treat water chemically in some cases. Hardness can be removed by chemical treatment and that is sometimes advisable to prevent scale formation on machinery, particularly on soaker parts. Alkalinity can be reduced by chemical treatment and that is advisable if the alkalinity is high enough to affect the taste of the water or if it is sufficient to neutralize too much of the acid in the beverage. If objectionable material is present in the raw water, that may require chemical treatment.

Such treatment, properly handled, does not affect carbonation and it does not change the necessity for proper filtration. Chemical treatment should be followed by filtration.

FOES OF CARBONATION AND HOW TO COMBAT THEM

AIR

Too much air in the water interferes with proper carbonation and also causes the CO_2 gas to leave the water more quickly when the bottle of finished beverage is opened. It is therefore important to to reduce the amount of air present to the minimum.

Some air is present in the raw water supply. More may be added in the mechanical handling of the water. When such water reaches the carbonator, the CO_2 gas tends to drive it out of the water. If steps are not taken to remove it, this air will accumulate in the carbonator and much of it will be carried through in the water and into the finished beverage. That is why all liquid carbonators have an automatic air snift.

CARBONATOR SECTION

HOW IT WORKS

Most of the cold drinks served at a soda fountain are carbonated. Therefore, nothing is more important to the successful operation of a fountain than cold, properly carbonated water to make drinks sparkling, full flavored and fully satisfying in quality.

Water is carbonated by combining it with carbonic acid gas (CO_2). This is done in a sealed chamber by forcing gas from a drum through a pressure regulating valve into the water in this chamber. As the carbonated water is used from this chamber, it is replaced by a high pressure water pump. The operation of this pump is controlled by an automatic switch device which senses the water level.

Two conditions must be maintained in order to induce and hold carbonic gas in water. They are:

1. Pressure
2. Adequate refrigeration or cooling.

In the SCOTSMAN DISPENSER, pressure is supplied by the gas drum and is present throughout the system and keeps the water carbonated. Without adequate cooling, however, carbonation escapes rapidly after the water leaves the faucet and is no longer under pressure. Soft drinks should be dispensed at 40° F. or below. The colder the water the greater the carbonation. With the use of ice a temperature of 32° F. can be reached and held without the danger of freezing as is true with mechanical refrigeration systems. Thus, less CO_2 is used to achieve the same degree of carbonation in a drink.
CO_2 is used to achieve the same degree of carbonation in a drink.

THE GAS DRUM - Source of carbonation

Drums for carbonic acid gas are made of drawn steel tubing and are built to withstand great pressure. As delivered, they contain liquid gas reduced to liquid form by tremendous compression.

Each one is equipped with a safety valve set to blow out before internal pressure can explode the drum itself. Once this valve "pops off", the contents of a drum will escape. Drums, therefore, should always be stored in a cool place to keep the liquid from expanding and increasing pressure inside the gas drum.

Drums are classified by weight. They come, as a rule, in two sizes: 20-lb. drums and 50-lb. drums. These weights refer to the compressed liquid contents and are in addition to the tare weight usually indicated on the head of each drum.

CARBONATOR SECTION

THE REGULATOR GAUGE–ACCESSORY ITEM, NOT INCLUDED WITH DISPENSER

The regulator in the carbonating system is mounted at the outlet of the gas drum. The regulator reduces and controls the pressure of carbonic acid gas before it enters the carbonator . The regulator gauge indicates gas pressure at the regulator outlet valve.

TESTING REGULAR GAUGE - SEE ILLUSTRATION ON FOLLOWING PAGES

The regulator gauge should be tested every time a gas drum is changed and at least once every 60 to 90 days. Follow this procedure:

1. Close the drum head valve (clockwise).
2. Close the regulator outlet valve (clockwise).
3. Loosen the regulator coupling nut.
4. Turn regulator adjusting key clockwise until gas pressure in regulator is released and the needle on the regulator gauge drops to "0". Turn this adjusting key counter-clockwise until it is loose and free.
5. Tighten regulator coupling nut and open drum head valve slowly. (The regulator outlet valve remains closed.)
6. Check the reading of the needle on the gauge. If it remains at "0", the regulator is in good condition. If the needle rises but does not register more than 15 pounds pressure, the regulator is working satisfactorily within acceptable limits. If the needle creeps to 30 pounds pressure or more, the regulator needs immediate repair.

HOW TO FIND AND STOP GAS LEAKS

Whenever a fresh drum of CO_2 gas is connected to the carbonating system, open the drum valve until the regulator gauge reaches maximum pressure (approximately 120 to 125 lbs.) and then close drum valve.

If the needle of the gauge on the regulator continues to drop, there is a leak in the system. Due to some absorption of gas in the water in the carbonator, the needle may drop a few pounds, but it should then come to a stop if there is no leak.

If a leak is found by this method, proceed to locate it as follows:

You can test the carbonation system for gas leaks by applying shaving soap lather with a shaving brush to all joints, connections, and valves. If there is a leak, bubbles will appear.

If gas is escaping at the stem of the drum head valve, open valve all the way. Usually this closes a leak through the packing around valve stem. Also tighten packing nut to keep gas from escaping through packing.

CARBONATOR SECTION

Make sure that the regulator coupling nut and regulator valve coupling are tight and that both contain a good fiber washer.

Make sure that the water back-pressure check valve is functioning properly.

Sometimes it is difficult to detect a leak in the regulator gauge. In checking here apply the lather generously, and watch closely.

If a leak occurs near either end of a hose, cut off the defective end and refasten hose with clamps. Otherwise, replace hose.

OPERATION

Rotate pump coupling by hand to insure free operation of pump. Turn on CO_2 gas cylinder and adjust high pressure side to approximately 85 # P.S.I. This pressure goes to carbonator tank.

Adjust the low side pressure gauge to 20 # P.S.I. This pressure is fed to your syrup or product tanks through flexible tubing and serves to push the product up to the post mix points of use.

Open several electric valves for one-half minute to blow all air out of carbonator. Close valves, turn on water supply and turn on power supply to pump motor. When pump stops, open valves again until full stream of water is obtained. Draw several glasses of water and note pump operation. Pump will operate after approximately 14 ounces of carbonated water have been drawn. (If required carbonator can be purged of air by pulling up relief valve stem).

The carbonator will operate satisfactorily on CO_2 pressures from 60 to 120 pounds. Set regulator at 85 lbs. for maximum gas economy or adjust to suit requirements of the valve used.

The system is completely automatic in operation, and requires no attention except maintaining CO_2 supply, and periodic servicing of water supply line filter.

IMPORTANT: Insufficient water supply will cause noisy operation and eventual damage to pump. If strainer and filter are clear and line valves open, noisy pump operation indicates insufficient water supply.

WARNING: If the installation is idle and exposed to freezing temperatures, disconnect water supply line and blow all water out of carbonator tank. Either drain pump or fill it with a solution of one-part glycerine and one-part water.

CARBONATOR SECTION

CONTROL LEVEL SWITCH

The new carbonator tank made by Bastian-Blessing is operated by a control box or relay through two electrodes - one long and one short. When water level reaches short electrode, it shuts off pump - then when water level falls below the long electrode, the pump is automatically started up by means of the control box or relay.

HOW TO CHANGE A GAS DRUM - NEXT PAGE - SINGLE REGULATOR IS SHOWN

1. Close drum head valve (A) (clockwise).
2. Close regulator outlet valve (B) (clockwise).
3. Disconnect regulator from drum by removing regulator coupling nut (C). Gauge should drop to "0".
4. If gauge does not drop to "0", turn regulator key (D) clockwise to allow all gas to escape from the body of the regulator through the main connection.
5. Turn regulator key (D) counter-clockwise until it is free and loose and regulator is closed.
6. Put full drum in place of one being replaced. Couple regulator coupling nut (C) to new gas drum, first making certain that there is a good fiber washer at the connection.
7. Open drum head valve (A) all the way, turning it as far as it will go to bring packing up tight against the shoulder of the valve stem.
8. Turn regulator key (D) clockwise slowly until standard operating pressure, as indicated on the gauge, is reached. Unless you have a low pressure carbonator the standard operating pressure is 100 lbs., depending on the manufacturer's recommendation.
9. Open regulator outlet valve (B) slowly and release gas to carbonator. As pressure equalizes, open this valve all the way.

WASHERS: In gas connections and lines under high pressure, use fiber washers only. In lines carrying liquids or subject to relatively low pressures, rubber or leather washers should be used.

Keep gas turned on at all times to insure uniform well-carbonated water.

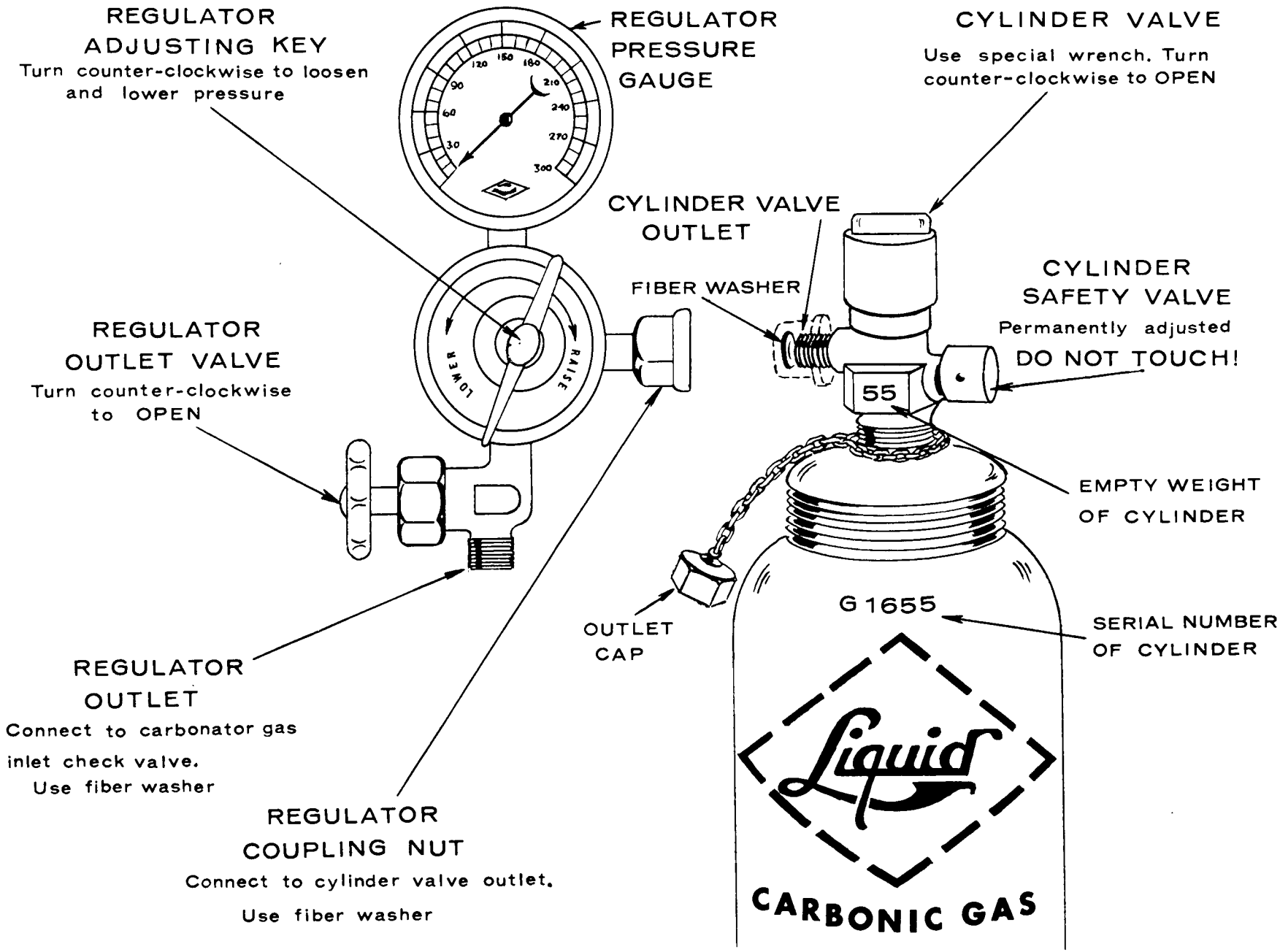
REGULATOR
ADJUSTING KEY
Turn counter-clockwise to loosen and lower pressure
REGULATOR
PRESSURE
GAUGE
CYLINDER VALVE
Use special wrench. Turn counter-clockwise to OPEN
CYLINDER VALVE
OUTLET
FIBER WASHER
CYLINDER
SAFETY VALVE
Permanently adjusted
DO NOT TOUCH!
REGULATOR
OUTLET VALVE
Turn counter-clockwise to OPEN
55
EMPTY WEIGHT
OF CYLINDER
OUTLET
CAP
G 1655
SERIAL NUMBER
OF CYLINDER
REGULATOR
OUTLET
Connect to carbonator gas inlet check valve.
Use fiber washer
REGULATOR
COUPLING NUT
Connect to cylinder valve outlet.
Use fiber washer
Liquid
CARBONIC GAS

DISPENSING SCHEMATIC

SD-3 & SD-4

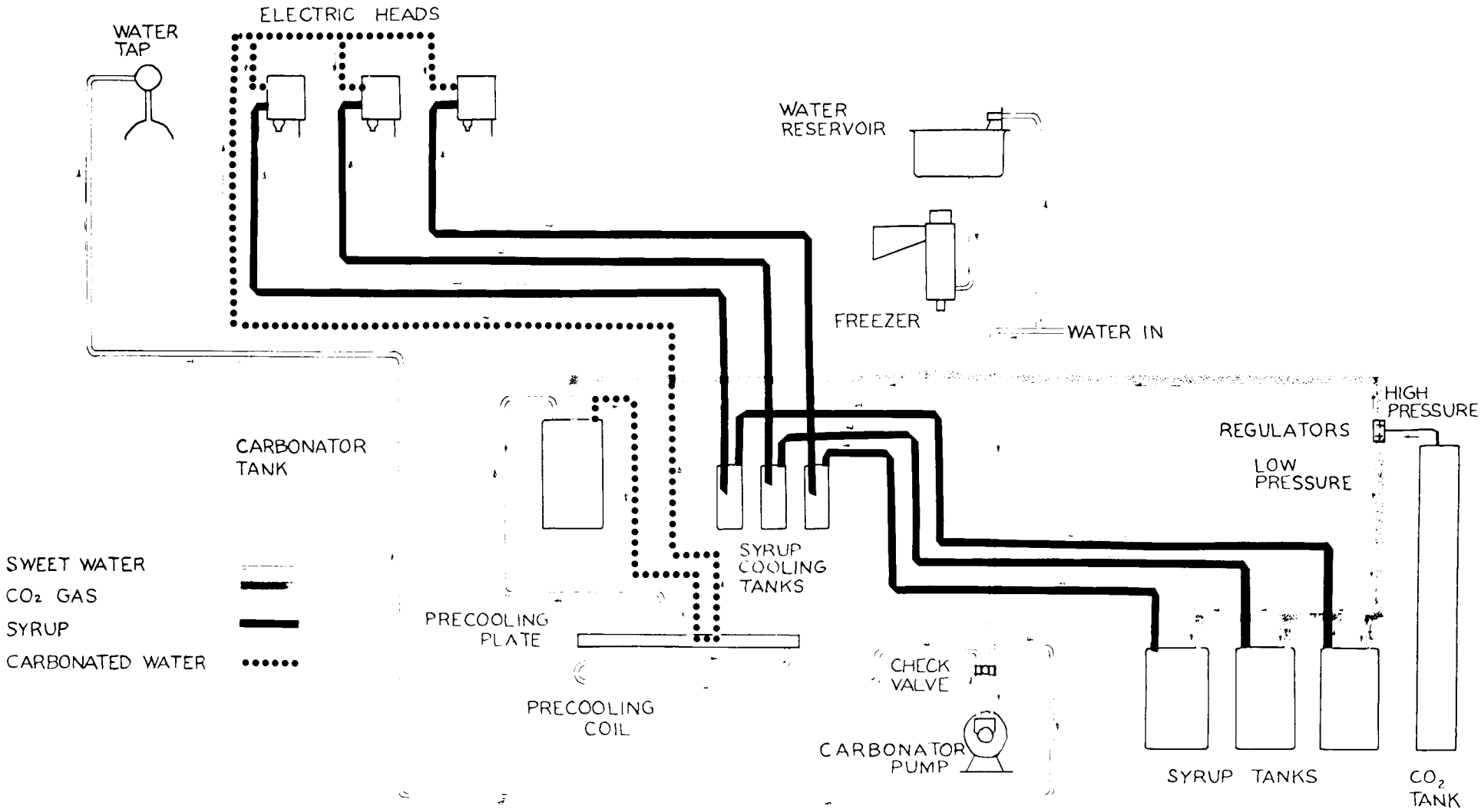

PRINCIPLE OF OPERATION

The operation of controlling liquid levels by means of electrodes is simple, accurate and positive. A combination of a matched relay and transformer, integrally mounted and connected to one or more insulated electrodes, arranged to contact the liquid surface at predetermined levels, actuates the opening and closing of electrical contacts on the relay, which may be used to control a motor, motorized valve, solenoid valve, alarm or other device.

Figures 1 and 2 illustrate the basic principle of operation in its simplest form. A relay with a single normally open load contact, a transformer, an electrode and liquid container are shown. In Figure 1, the liquid is not touching the electrode, hence the electrode circuit is open and no current flows through the relay coil to energize the relay and close the load contact. If the liquid

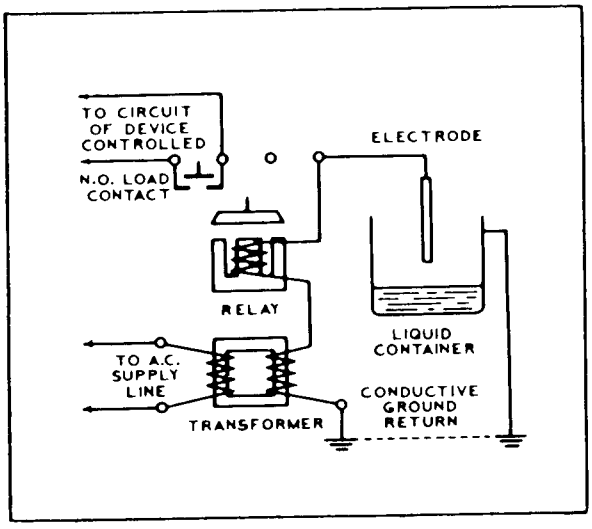

Figure 1

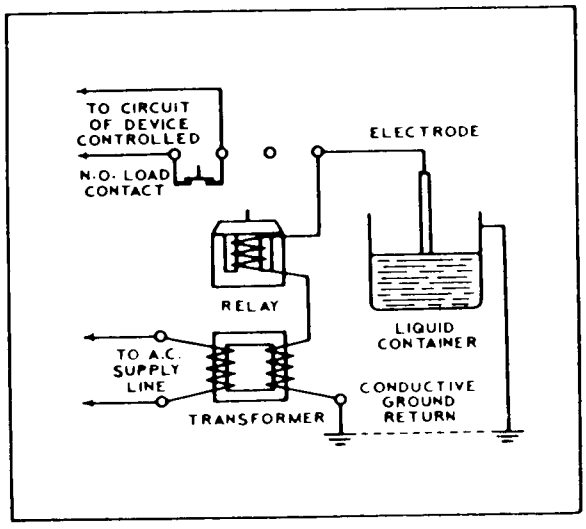

Figure 2

level rises until it touches the electrode, as shown in Figure 2, the liquid provides a conductive path between the electrode and liquid container, closing the circuit through the transformer secondary and relay coil. Thus, the relay is energized and operates to close the normally open load contact. It is evident that the liquid acts as a switch in the electrode circuit and the relay, with its load contact, responds to the position of the liquid level in relation to the electrode.

The control system just described, with one normally open load contact, is used as a high level alarm or low level cutoff. If a normally closed load contact replaces the normally open contact shown, the device then becomes a low level alarm or high level cutoff.

In a pumping operation it is desirable to start the pump at one level and stop at another. The control illustrated in Figures 1 and 2 would not be satisfactory for pumping service since the pump would start and stop rapidly as the liquid contacted and receded from the tip of the electrode. In order to obtain a pumping range a second electrode of greater length is connected to the first electrode through a normally open contact on the relay. This additional contact is known as a "holding contact", since it holds the electrode circuit closed through the long electrode after the level has fallen below the short electrode.

There are two pumping operations; pump down or lowering the level as in emptying a sump, and pump up or raising the level, as when filling a boiler or storage tank. The use of two electrodes and holding contact for controlling pump down and pump up operations is illustrated in in Figures 3 and 4, respectively.

In Figure 3, for pump down operation, the load contact is normally open. When the liquid touches the upper electrode the relay is closed, thus closing the load and holding contacts. The pump will start and although the liquid level immediately recedes from the high electrode, the relay will reamin closed by means of the circuit thru the low electrode and holding contact. This

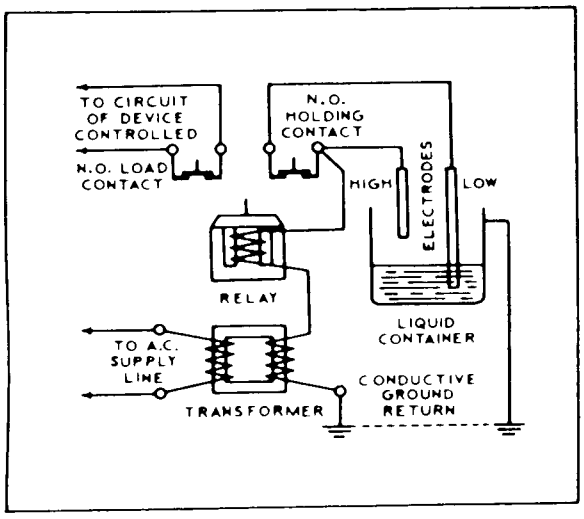

Figure 3

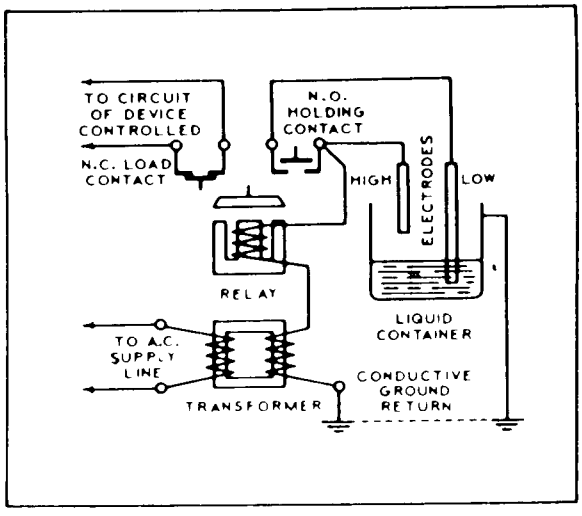

Figure 4

condition is maintained until the liquid recedes from the low electrode when the relay releases to open the load and holding contacts. As the liquid again rises, no action will occur when the low electrode is immersed because the holding contact to the low electrode is open. However, when the level reaches the high electrode, electrical contact is established and the relay closes to repeat the pumping cycle.

In Figure 4, for the pump up operation, the load contact is normally closed. When the liquid touches the high electrode the relay is closed, thus opening the normally closed load contact and closing the normally open holding contact. The pump will stop and although the liquid recedes from the high electrode, the relay will remain closed by means of the circuit thru the low electrode and holding contact. This condition is maintained until the level recedes from the low electrode, when the relay releases to close the load contact and open the holding contact. As the liquid again rises, by operation of the pump, no action will occur when the low electrode is immersed because the holding contact to the low electrode is open. However, when the level reaches the high electrode, electrical contact is established and the relay closes to stop the pump.

Where liquids are confined in non-metallic liquid containers the ground terminal on the control is connected either to a permanently submerged metallic object in the liquid container or to an additional "ground" electrode of length equal to or greater than the longest other electrode in the control system.

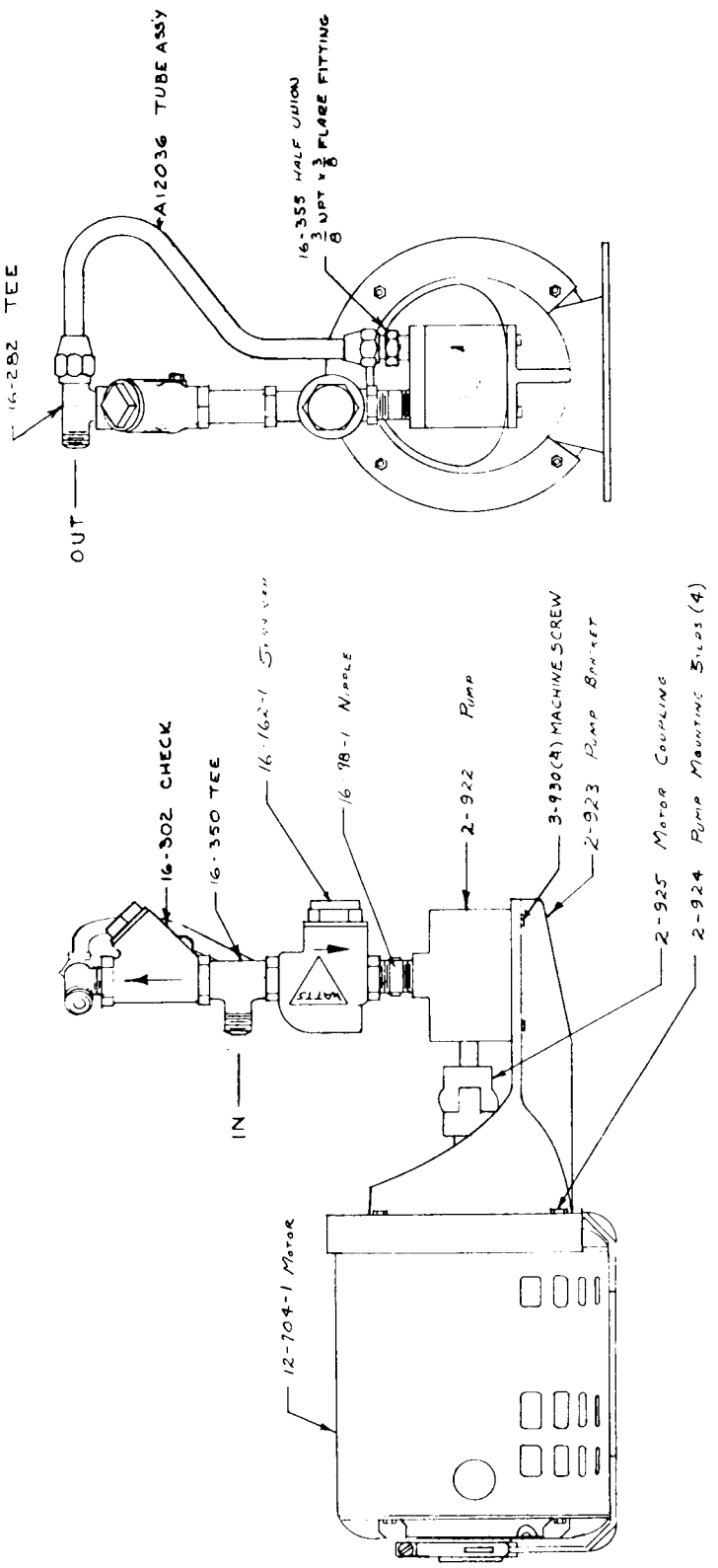

CARBONATOR PUMP, MOTOR, ASSEMBLY

SD-3, SD-4

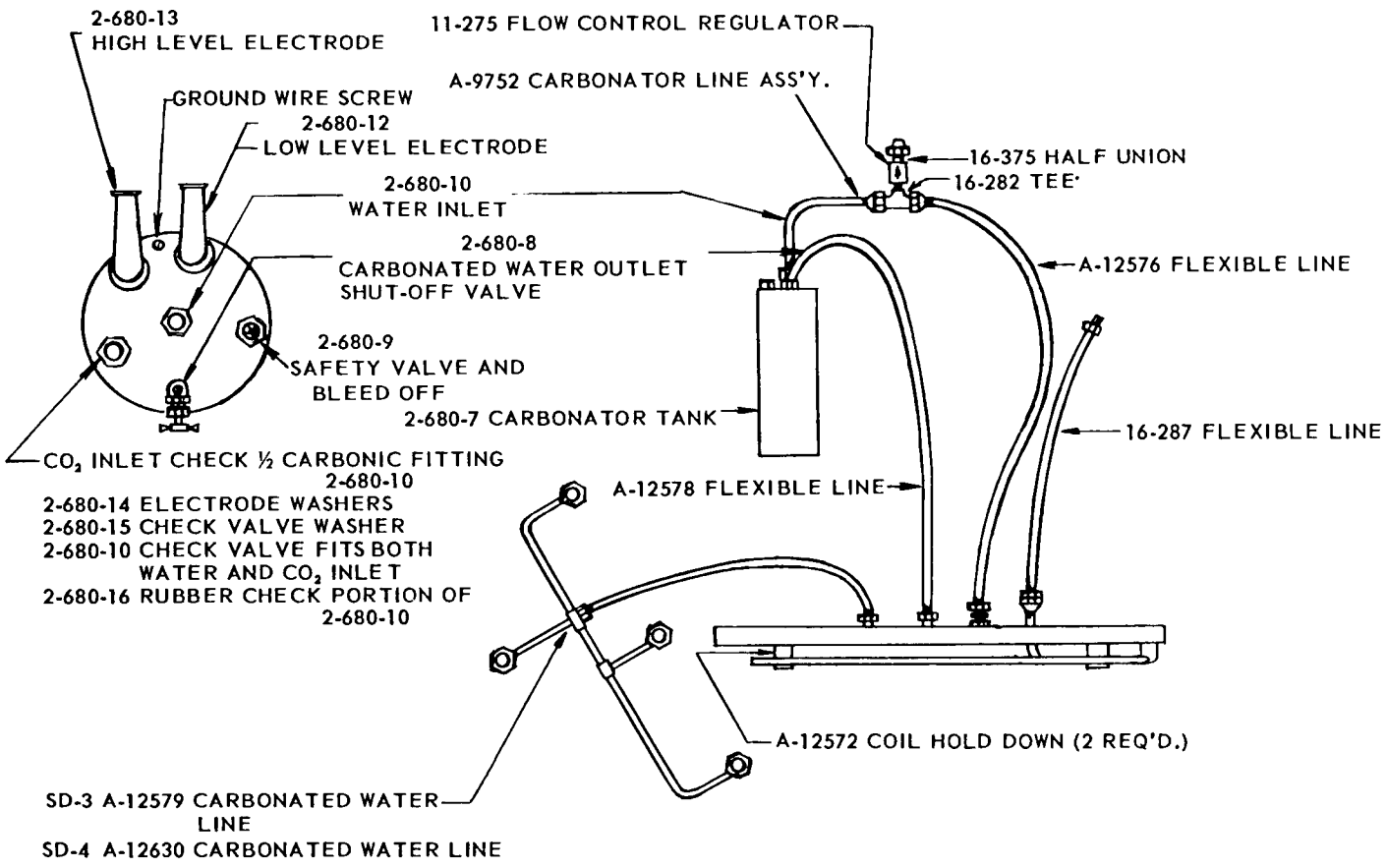

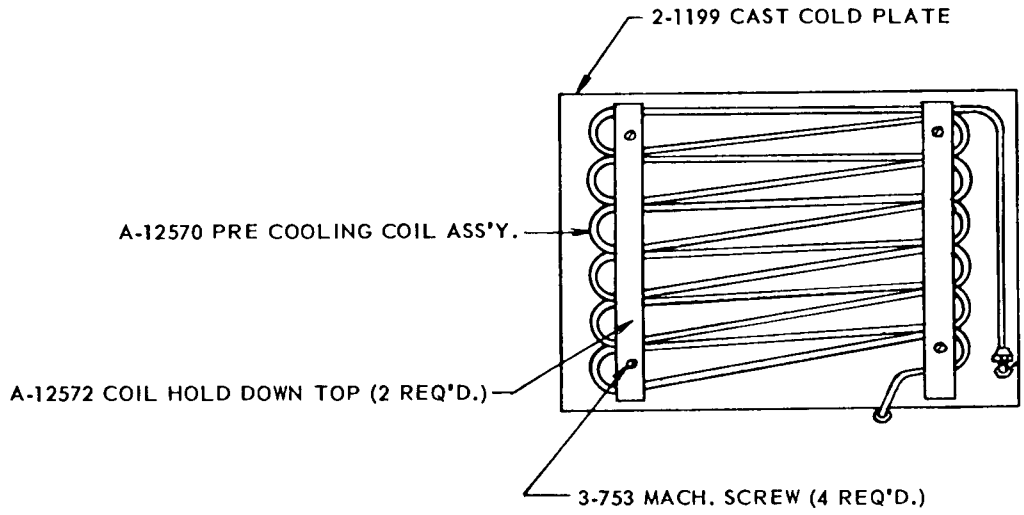

CARBONATED WATER COOLING
SD-3, SD-4

SUBJECT: CLEANING OF COLD PLATES SD-3 AND SD-4

Gentlemen:

There are several important items concerning the SD-1 and SD-2 Scotsman Drink Dispensers that have cropped up periodically through the years and for this reason, we are consolidating some of the more common complaints experienced as well as the solutions necessary.

Because of the similarity of the SD-3s and SD-4s in the manner of producing carbonated water, these problems and solutions apply equally well to these new models.

PROBLEM	SOLUTION
Lack of, or inadequate carbonation	Make sure CO_2 regulator is working and set at 95 to 115 pounds gauge
Leak in line from CO_2 bottle to carbonator tank	Repair
Trapped air or foreign gases in tank	Bleed off
Carbonated Water Throughout system	Excessive pressure on CO_2, reduce to 85 to 95 pounds
Leaking rubber check valve on Bastian-Blessing	Replace Rubber check valve only Part No. 2-680-16
Foaming Drinks	Dispensing nozzel too far from cup downfall causes foaming
	Not enough ice for cooling on plate
	Warm Syrup
Missing Bin Stand Pipe	Replace - Must hold head of water for pre-cooling coil
Algae Growth on bottom of cold plate and pre-cooling coil.	Requires a complete cleaning of cold plates and the bin, should be accomplished once per year, minimum
	Most common, bin stand pipe removed or misplaced in bottom of bin below cold plate

This growth not only is unsanitary but retards the cooling effect of water entering the pre-cooling coil and then the second half of the post-cooling coil, producing warm carbonated water and subsequently foaming and warm beverages.

Remove all ice from the large aluminum cold plate and tilt the cold plate up. This will disclose the bottom pre-cooling coil which is tinned copper attached to the bottom of the coil and you will note a tremendous amount of growth if this plate has not been cleaned recently. This could be cleaned off with a brush and hot water and a small amount of Scotsman ice machine cleaner and then the entire bin and cold plate completely washed down with a warm soda water mixture to neutralize any acid effects.

Then replace the stand pipe in the drain to keep a head of cold water on the pre-cooling coil, reposition the plate and lay flat in the bin.

Numerous complaints have been received regarding the quality of the drinks that have been traced to this cause and it is well to instruct the user to have this service performed at least once per year if not every six months, or on your regular Scotsman Planned Maintenance calls.

Service Department
SCOTSMAN
QUEEN PRODUCTS DIVISION
OF KING-SEELEY THERMOS CO.
505 Front Street
Albert Lea, Minnesota

CARBONATOR SECTION

Service Analysis Chart

COMPLAINT	POSSIBLE CAUSE	CORRECTION
No carbonated water.	Water supply shut off. Air-bound water pump. Worn pump checks. Clogged water inlet screen. Clogged filter.	Re-establish source. Vent pump. Replace. Clean. Clean. Replace cartridge.
Flat carbonated water.	Gas drum empty or low. Gas turned off. Regulator gauge set too low. Gas line closed by smashed washer. Agitator sprocket or pulleys loose. Water pressure too high (over 50 lbs)	Connect full drum. Turn on gas. Increase gas pressure. Replace fiber washer. Tighten. Adjust if possible or install pressure reducer.
Metallic taste.	Block-tin lining damaged. Carbonated water backing up into city water line. Carbonated water line connected by mistake to brass or copper water coils instead of block tin.	Repair lining. Clean water back-pressure check valve, replace washer. Make proper connection.
Carbonated water off taste.	Oil, dirt or grease inside carbonator. Tainted gas.	Clean carbonator. Sniff gas at drum head to determine if drum should be replaced.
Milky carbonated water.	Air in carbonator. Pump sucking air.	Vent carbonator. Adjust pump packing.
Carbonator fills with water.	Water pressure too high. Gas pressure too low. Gas drum empty.	Adjust if possible, or install pressure reducer. Set regulator key to deliver proper gas pressure. Replace.
Carbonated water backs up into city water line.	Dirty or worn back-pressure check valve.	Clean or replace valve seats.
Carbonator runs but only CO_2 gas comes out with syrup.	Pump running backwards.	Reverse rotation of motor by interchanging leads inside motor.

CARBONATOR SECTION

Service Analysis Chart

COMPLAINT	POSSIBLE CAUSE	CORRECTION
Excessive pumping.	Closed water supply valve.	Open valve.
	Water supply (building or city) shut off.	Re-establish source.
	Automatic switch out of order.	Check switch, replace if necessary.
	Water inlet screen clogged.	Remove and clean screen.
	Pump inlet or check valve out of order.	Repair or replace.
	Swollen washers in hose couplings obstruct flow of water.	Replace washers.
Carbonator pounds when running.	Air in pump.	Vent pump.
	Water inlet screen plugged.	Remove and clean.
	Scale in pipe.	Remove scale.
	Undetermined.	Try installing a short length of hose in water line to carbonator- this will cushion and absorb shock of water hammer.

SAFETY FIRST - Prevent accidents - Always turn off power before working on carbonator.

DISPENSER SECTION

NOTES:
△ - MC-29 THRU MC-35
△ - MC-20 THRU MC-22
△ - MC-41, MC42 & MC43.

NO.	PART NO.	DESCRIPTION
35	MC-12	SCREW, SWITCH COVER
34	MC-11	PLATE, SWITCH COVER
33	MC-9	MICRO-SWITCH
32	MC-8	INSULATOR, MICRO-SWITCH
31	MC-7	ACTUATOR, MICRO-SWITCH
30	MC-10	LEVER, ACTUATING
29	MC-46	GROUNDING STRAP
28	MC-2	STEM, METERING
27	MC-3	"O" RING, METERING STEM
26	MC-13	SERVICE CORD
25	MC-39	"O" RING, INLET FITTING
24	MC-43	INLET FITTING
23	MC-38	SCREW, RETAINER
22	MC-37	SCREW, MOUNTING
21	MC-40	SPOUT
20	MC-6	SCREW, DIFFUSER
19	MC-4	DIFFUSER
18	MC-5	"O" RING, DIFFUSER
17	MC-47	McCANN CREST
16	MC-1	BASE, FAUCET
15	MC-14	"O" RING, PLUNGER HOUSING
14	MC-15	PLUNGER, SOLENOID
13	MC-16	SPRING, SOLENOID PLUNGER
12	MC-17	HOUSING, PLUNGER
11	MC-19	SCREW, PLUNGER HOUSING
10	MC-20	COIL, SOLENOID
9	MC-44	NUTS, STA-KON WIRE
8	MC-23	HOUSING, COIL
7	MC-24	GROMMET, COIL HOUSING
6	MC-26	LOCKWASHER, SOLENOID VALVE STEM
5	MC-27	SCREW, SOLENOID VALVE STEM
4	MC-25	STUD, SOLENOID VALVE STEM
3	MC-28	GASKET, COVER
2	MC-29	COVER, TOUCH-O-MATIC
1	MC-36	ACORN NUT, COVER

TOUCH-O-MATIC FAUCET
MODEL NO. TMC-10

McCANN'S
ENGINEERING AND MFG. CO.
4300 W. CYPRESS ST., GLENDALE, CALIF.

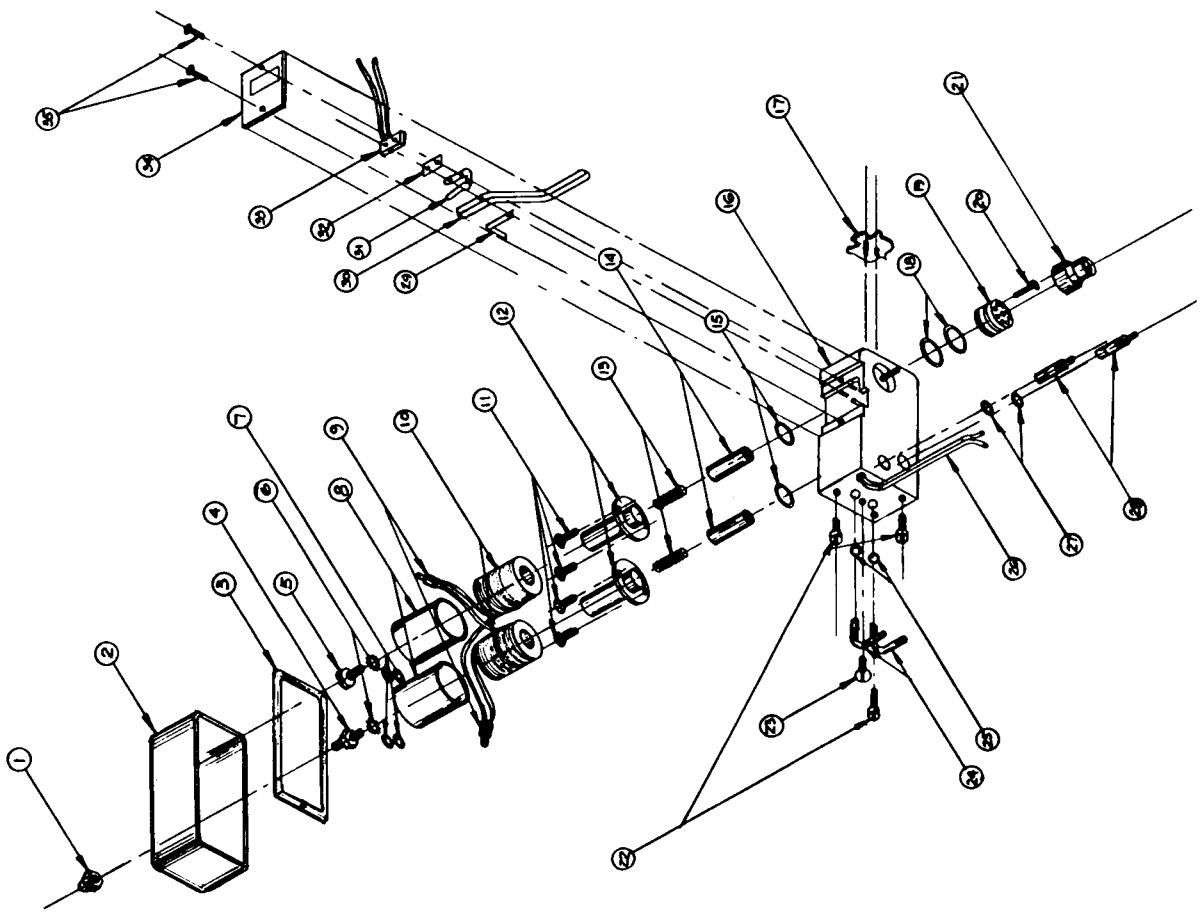

I. PRINCIPLE OF OPERATION

When the operator presses a glass against the main actuating lever (30) of the faucet, this lever in turn depresses the actuating button on the electric Micro-switch (33). The switch then completes the circuit, allowing electricity to flow immediately to both solenoid valve coils (10). With the coils energized, they immediately act as electro magnets by creating a magnetic force that raises the plungers (14) located in the center of the coils. When these two plungers are in a raised position, syrup and water are then permitted to flow through an orofice, into the spout (21) (mixing chamber) and finally end up in the operators glass blended perfectly.

II. METHOD OF SANITIZING OR CLEANING FAUCET

The faucet need not be dismantled in order to be cleansed. All that is required is simply fill a spare syrup tank with your cleaning agent, connect it to the syrup line to the desired faucet and flush it through faucet and syrup system with CO_2 pressure. A clean water rinse may be accomplished in the same manner.

The faucet spout should be removed and cleaned weekly.

III. POWER SOURCE

Our standard Touch-O-Matic Faucet is supplied with 115 Volt A.C. - 60 Cycle coils. Ilowever, they can be supplied with various voltages. Naturally each faucet is clearly marked regarding its required voltage, the coil housing (8) is also marked accordingly. The coil itself is color coded to identify its voltage as follows:

RED	LEADS indicate	-	115 VAC	- 60 Cycle
BLACK	LEADS indicate	-	12 VAC	- 60 Cycle
YELLOW	LEADS indicate	-	12 VDC	-
BLUE	LEADS indicate	-	6 VDC	

IV. METHOD OF DISMANTLING SOLENOID VALVE

1. Remove screw (5) and lock washer from plunger housing.
2. Remove coil housing (8).
3. Remove coil (10) by lifting only, do not cut wires.
4. Remove the 2 screws (11) from plunger housing base.
5. Remove plunger housing (12), lift straight up.
6. Remove plunger spring (13).
7. Remove plunger (14).

TO REASSEMBLE - REVERSE PROCEDURE.

NOTE!! Before removing a faucet from a dispenser or fountain, or before dismantling a solenoid valve that is mounted on a fountain, be sure to turn off the CO_2 pressure to the syrup tank and carbonator. Also, bleed off the CO_2 pressure on the syrup tank and carbonator, if there are no shut-off valves on the fountain.

V. SERVICE TIPS

1. When the 2 screws (11) that fasten the plunger housing (12) to the plastic valve base (16) are replaced, they should be screwed down all the way. In other words, be sure that the large stainless washer on the plunger housing (12) is pressed firmly against the plastic. If one screw was all the way in and the other was only half way in (for example), the plunger in the housing might "cock" and cause dripping - Caution - these screws do not have to be extra tight, just snug down.

2. When reassembling solenoid, with plunger spring (13), place in plunger (14), allow the plunger housing (12) to be placed over the plunger and spring and held together, thus preventing the plunger spring from falling out while assembling.

3. There is a difference between the Touch-O-Matic Non-Carbonated (NC) and the Carbonated faucet. The Non-Carbonated faucets are marked NC on the underside of the faucet. The NC faucet is designed for plain water. Since this pressure could vary from 10 to 100 psi at various locations throughout the same city, we arrived at a medium flow of water. On this faucet, we use a 3/16" orifice which will pass a sufficient amount of water at 10 psi. This faucet can work on pressure up to 50 psi, but no higher or the plunger will fail to open occasionally.

   The Carbonated faucet will operate on pressures up to 125 psi, by using a smaller 1/8" orifice.

4. RECOMMENDED OPERATING PRESSURES

   10 to 20 psi on syrup - average 15 psi.
   80 to 120 psi on carbonated water - average 100 psi.

5. RATE OF FLOW AND PROPER BLENDING

   The fastest rate of flow recommended for the Touch-O-Matic Faucet is 2 ounces per second of finished drink. In other words, a 6 ounce finished drink should take at least 3 seconds to pour. If a faster pour is used, the carbonation in the drink would be reduced.

   The typical blend used, is 1 ounce of syrup and 5 ounces of water for a finished 6 ounce drink. However, this may vary with the brand of syrup used, therefore check with your syrup supplier.

   To increase flow of syrup or water, turn metering screw out (counter-clockwise) and inward (clockwise) to decrease flow. These adjustments are sensitive and should be treated as such, by not turning more than an eighth of a turn at a time.

6. When replacing Spring Actuator (31) on micro-switch, pull switch straight out evenly. If switch is raised unevenly, it will bind and make it difficult to remove. When replacing switch, be sure to have actuating button of switch at top position not at the bottom. This will insure longer life of the actuating spring.

TROUBLE SHOOTING

	CORRECTION
I. SPOUT DIFFICULTIES	
a. Spout is difficult to remove.	Lubricate "O" ring on diffuser (19) with mutton tallow or pure white vasoline (small amount.)
b. Spout comes off too easily.	Remove spout and clean both spout and "O" ring on diffuser, then dry with cloth.
II. NOISY SOLENOID VALVE	
a. Dirt or particles in back of plunger.	Operate faucet several times to flush out, or remove plunger and clean.
III. MAIN ACTUATOR PRESSED IN, SYRUP DELIVERED, BUT NO WATER	
a. Water pressure too high.	Reduce pressure. See if it is a NC faucet being used as a carbonated.
b. Coil defective or bad connection. (Rear coil)	Check connections and or replace coil.
IV. MAIN ACTUATOR PRESSED IN, WATER DELIVERED, BUT NO SYRUP	
a. Coil defective or bad connection.	Check connections and or replace coil.
V. MAIN ACTUATOR PRESSED IN, NO WATER OR SYRUP IS DELIVERED	
a. Defective switch.	Replace switch.
b. Actuating spring bent.	Replace or repair spring actuator.
c. Actuating spring broken.	Replace spring actuator.
VI. INLET FITTINGS SHOW LEAKAGE (24)	
a. Nicked or cut "O" ring.	Replace "O" ring.
b. Dirt on "O" ring.	Clean "O" ring.
c. Worn "O" ring.	Replace "O" ring.

VII. METER STEM SHOWS LEAKAGE (28)

Same steps as VI.

VIII. PLUNGER HOUSING SHOWS LEAKAGE (12)

Same steps as VI.

IX. FAUCET DRIPS SYRUP OR WATER WHEN NOT IN OPERATION

a. Dirt or foreign matter on plunger rubber seat (14)	Operate faucet several times to flush out, or remove plunger from solenoid valve and clean.
b. Nick or cut in rubber seat of plunger.	Replace plunger. *(Factory exchange)
c. Broken or defective plunger spring (13).	Replace spring.

X. FAUCET ALLOWS DRINK TO BE DISPENSED WHEN NOT OPERATED

a. Defective switch	Replace switch.

*Plungers with worn out or defective rubber seats may be exchanged with the factory. The exchange price will be half price of the cost of a new plunger.

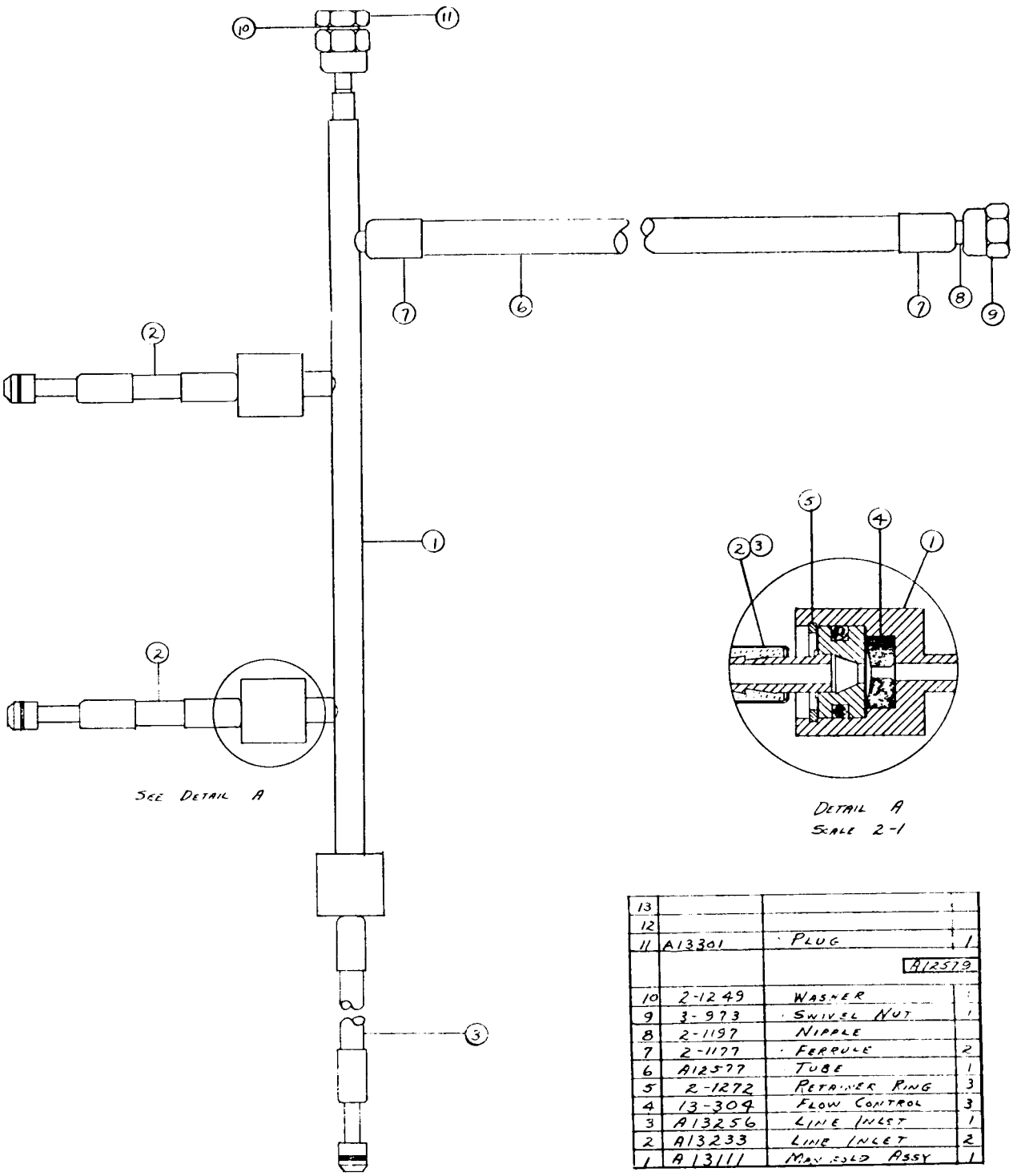

DETAIL A
SCALE 2-1

13			
12			
11	A13301	PLUG	1
		A12579	
10	2-1249	WASHER	1
9	3-973	SWIVEL NUT	1
8	2-1197	NIPPLE	
7	2-1177	FERRULE	2
6	A12577	TUBE	1
5	2-1272	RETAINER RING	3
4	13-304	FLOW CONTROL	3
3	A13256	LINE INLET	1
2	A13233	LINE INLET	2
1	A13111	MANIFOLD ASSY	1

CARBONATED WATER MANIFOLD ASSEMBLY

PARTS LIST

DESCRIPTION	PART NO. SD-3	PART NO. SD-4
CABINET PARTS		
Case Assembly	A-12615-30	A-12652-30
Front Door Assembly	A-12612-30	A-12648-30
Right Side Door Assembly	S-7165	Same
Rear Door Assembly	A-6514	A-12650-30
Left Side Door Assembly	S-9405	S-9405
Emblem	S-3188	Same
Moulding Strip Case Bottom 2/Unit	A-8902-4	A-8902-6
Legs	A-12405	Same
Hood Assembly - No Top	A-12594	A-12633
Hinged Bin Door Assembly	2-1208	Same
Hood Top Assembly	A-12604	A-12638
Moulding Strip Back 24"	A-6509	A-13000
Moulding Strip Front 87 1/4	A-6510	A-12641
Moulding Insert (Black)	A-3640 Order by Foot	Same
Drip Tray Grill Syrup	A-12609	A-12643
Drip Tray Grill Water	A-12673	A-12673
Storage Bin Assembly	A-12556	A-12625
Storage Drain Fitting (Male)	A-7657	Same
"O" Ring	2-530	Same
Storage Drain Assembly	A-6446	Same
Storage Drain Fitting (Female)	A-6447	Same
Bin Standpipe Strainer	A-7445	Same
Grommet	13-125	Same
Grommet	13-194	Same
Grommet	13-124	Same
Bulb Bracket	S-7312	Same
CO_2 AND WATER CIRCUIT		
Water Inlet Line Assembly	A-12564	Same
Plastic Clip, Water Line	2-631	Same
Pressure Water Line Assembly	A-12566	Same
Water CO_2 Line Assembly (Outlet)	A-12578	Same
Carbonator Line Assembly	A-9752	A-9752
Glass Filler Line Assembly	A-12843	Same
Carbonator Water Line Ass'y.	A-12568	Same
Reservoir Assembly Final	A-12588	Same
Water Inlet Valve	S-8138	Same
Valve Seat	S-6947	Same
Cotter Key	3-550	Same
Float Rod, with Float Ball	A-12509	A-12509
Valve Cover	A-5801	Same
Nut	S-7044	Same
Standpipe Assembly	S-6715	Same

PARTS LIST

DESCRIPTION	PART NO. SD-3	PART NO. SD-4
FREEZER ASSEMBLY		
Spout thru Bin/Grommet	S-9258	Same
Spout Casting Holder	S-9237	S-9237
Brass Screw, Casting Plate to Spout 1/4 x 20 x 5/8	3-207	Same
Spout Casting	S-9236	Same
"O" Ring	2-560	Same
Spout Assembly	A-7508	Same
Compression Spring	2-492	Same
Micro-Switch	12-207	Same
Brass Machine Screw 1/4 - 20 x 1 - 1/4"	3-671	Same
Freezer Assembly	A-9618	A-7490
Lift Hook	None	A-8162
Freezer Brass Cap	S-6952	A-7701
Bearing (Upper)	2-547	2-695
Worm Tube Washer	None	A-7699
Spacer Washer	S-7121	A-6273
Locking Cap Screw	S-6481	3-758
Retaining Ring	3-553	Same
Ice Breaker	S-6793	A-7700
"O" Ring	2-386	2-386
Worm Shaft	2-578	2-693
Water Seal	2-649	2-649
Seal Spacer	S-9360	Same
"O" Ring	None	2-647
Bearing (Lower)	2-417	Same
Worm Tube Nut	S-8817	S-8817
Drip Pan Assembly (Rubber)	13-213	13-213
Steel Ball - Shaft End	2-423	
CARBONATOR ASSEMBLY		
Pre-Cooling Coil Assembly - Tinned Tubing	A-12570	Same
Cast Cold Plate	2-1199	Same
Coil Hold Down	A-12572	Same
Flexible Line (Pre-Cool Out)	A-12576	Same
Flexible Line 3/8" female flare (Pre-Cool In)	16-287	Same
Carbonated Water Header Complete	A-12579	A-12630
Stainless Steel Manifold	A-13111	A-13110
Manifold O-Ring	13-306	13-306
Valve Body O-Ring	2-1204	2-1204
Flow Control Regulator - Sweet Water	11-275	Same
Flow Control Regulator - Carbonated Water	13-304	Same
Heater Elements for 12-530A	12-708	Same
Pumps - Carbonator B&B	2-922	Same
Pump Adaptor to Motor B&B	2-923	Same
1/4 HP Motor - Carbonator	12-704-1	Same
Couplings Motor to Carbonator	2-925	Same
Water Outlet Line - Carbonator Pump	A-12036	Same
Tee - 3/8 x 3/8" flare x 3/8 NPT	16-282	Same
Check Valve	16-302	Same
Retainer Rings	2-1272	Same
Water Strainer (Watts)	16-162-1	Same

DESCRIPTION	PART NO. SD-3	PART NO. SD-4
CARBONATOR TANK ASSEMBLY B&B		
Carbonator Tank Complete	2-680-7	Same
Soda Outlet Valve	2-680-8	Same
Safety-Pure Valve	2-680-9	Same
Check Valve Complete Soda or Water	2-680-10	Same
Electrode Long	2-680-12	Same
Electrode Short	2-680-13	Same
Electrode Washer	2-680-14	Same
Check Valve Washer	2-680-15	Same
Rubber Check (For 2-680-10)	2-680-16	Same
CARBONATOR PUMP RELAY AND CONTROL BOX		
Relay Box Assembly	12-634	Same
Relay Coil (4800-39AC)	12-634-1	Same
Primary Coil (1850-32TAC767)	12-634-2	Same
Secondary Coil (5000-36AC-362)	12-634-3	Same
PRE-COOL SYRUP TANKS		
Syrup Pre-Cool Hose (Tank-In)	A-12582	Same
Syrup Post-Cool Hose (Tank-Out)	A-12586	Same
Syrup Pre-Cool Tanks (St. Steel)	2-1206	Same
Washer	2-685-19	Same
Syrup Tank Support	A-12885	A-12885
COMPLETE VALVES		
*Touch-O-Matic Valve (TMC-10)	2-1205	Same
Glass Filler Valve Sweet Water	2-1211	Same
REPAIR PARTS		
Flavor Medallion Set	2-1250	Same
DRIVE ASSEMBLY		
Drive Motor	12-864-1	Same
Pulley (3 1/4) Drive Motor	2-1194	Same
Set Screw	3-385	Same
V Belt	13-106	13-203
Pulley (10") Gear Reducer	2-378	Same
Gear Reducer	2-580	Same
Coupling (Gear Reducer, Half)	S-7716	Same
Insert - Rubber	13-131	Same
Coupling (Freezer Half)	S-8525	Same
Clamp 2 Per Coupling	S-8496	Same

*All repair parts for Touch-O-Matic Dispensing Valves should be ordered direct from supplier. McCanns Mfg. Co., 430 W. Cypress, Glendale 4, California.

DESCRIPTION	PART NO. SD-3	PART NO. SD-4
DRIVE ASSEMBLY		
Cap Screw 2 Per Coupling	3-206	Same
Set Screw	3-385	Same
Key	S-6035	Same
Rubber Shield	13-152	Same
ELECTRICAL COMPONENTS		
Switch, Manual (Ice Maker)	12-530A	Same
Switch Overload Heater	12-708	Same
Switch, Manual (Carbonator)	12-426	Same
Bin Control, White Rodgers	11-99-1	Same
Low Pressure Control	11-273	Same
Control Box Cover	A-12555	Same
Dual Pressure Control, water cooled models	11-220	Same
Penn Water Regulating Valve, water cooled models	11-198	Same
Head Pressure Control } Air Cooled Models	11-264	Same
Resistor for 11-264 } Air Cooled Models	12-515	12-515
ACCESSORY ITEMS		
Ice Machine Cleaner 8 oz. bottle	19-343	Same
Ice Scoop - Plastic	2-540	Same
Water Filter	2-1027	Same
Touch Up Paint (Grey Sprayon)	10-153	Same
Plywood Crate	1-576	1-578
Hose Clamp Fits 5/8" Hose	2-534	2-534
Hose Clamp Fits 3/4" Hose	2-693	Same
Hose Clamp Fits 7/8" Hose	2-536	Same
Hose Clamp Fits 1-1/8" Hose	2-932	Same
CONDENSING UNITS		
Motor Compressor Only 115/60/1 Air Cooled	18-132	18-221
Valve Plate and Gasket Kit	None	18-222
Relay	18-133	18-227
Starting Capacitor	18-134	18-228
Condenser Fan Only	18-137	18-231
Condenser Motor Only	18-421	18-232
Mounting Bracket, Condenser Fan Motor	None	18-233
Air Cooled Condenser	18-140	18-234
Condenser Shroud	18-141	18-235
Klixon Thermal Overload	18-135	18-240
Electrical Terminal Assembly, includes three complete terminals & board		18-241
Motor Compressor Only 115/60/1 Water Cooled		18-257
Valve Plate and Gasket Kit		18-222
Cylinder Head		18-271
Relay (115/60/1)		18-227
Starting Capacitor (115/60/1)		18-228
Water Cooled Condenser		18-259

DESCRIPTION	PART NO. SD-3	PART NO. SD-4
CONDENSING UNITS		
Water Cooled Condenser Gasket - Plain End		18-262
Water Cooled Condenser Gasket - Manifold End		18-263
Klixon Thermal Overload 115/60/1		18-240
Electrical Terminal Assembly, Includes 3 Complete Terminals & Board		18-241
Compressor to Water Valve Hose Assembly		18-260
Compressor to Condenser Hose Assembly		18-261
Water Regulating Valve - Penn		11-198
Ranco Hi-Lo Dual Pressure Control		11-286
Refrigerant Drier	2-350	2-350
REPAIR PARTS FOR GEAR REDUCER		
Slo-Speed Shaft and Worm Gear	2-580-20	Same
Hi-Speed Shaft and Worm Gear	2-580-21	Same
Bearing and Seal Repair Kit	A-6397	A-6397
Pint 600W Oil	19-359	19-359

TABLE OF CONTENTS

SD-3 & SD-4

Foreward	Page
Table of Contents	1
Model SD-3 Specifications	2
Model SD-3 Installation Dimensions	3
Model SD-4 Specifications	4
Model SD-4 Installation Dimensions	5
Description	6
Drink Dispenser General Specifications	7
Installation	8-10
SD-3 Assembly–Less Hood and Service Panels	11
SD-3 Cabinet Parts	12
SD-4 Assembly–Less Hood and Service Panels	13
SD-4 Cabinet Parts	14
ICE MAKER SECTION	15-18
Substitutes for 600 W Oil in Winsmith Gear Reducers	19
Worm Gear Reducers	20
Winsmith Gear Reducer (3TC) (Line Drawing)	21
Maintenance Instructions - Dispensers	22
SD-4 Freezer Assembly Line Drawing	23
SD-3 Freezer Assembly	24
Syrup Tank Hook-up	25
SD-3 & SD-4 Wiring Diagram (Air Cooled)	26
SD-4 Wiring Diagram (Water Cooled)	27
Service Analysis Chart	28-31
Carbonation	32-33
Temperature & Pressure Effects (Line Drawing)	34
Effect of Pressure	35-37
CARBONATOR SECTION	38-41
Line Drawing	42
Water & CO_2 Schematic	43
Principle of Operation	44-45
Carbonator Pump – Motor	46
Carbonated Water, Cooling Drawing	47
Cleaning of Cold Plates SD-3 & SD-4	48-49
Service Analysis Chart	50-51
DISPENSER SECTION	52
Dispenser Replacement Parts – How They Work	53-56
Line Drawing – Manifold	57
Parts List SD-3 & SD-4	58-62

THIS PAGE
INTENTIONALLY
LEFT BLANK

SCOTSMAN®

DRINK DISPENSER SD-3 SERIES

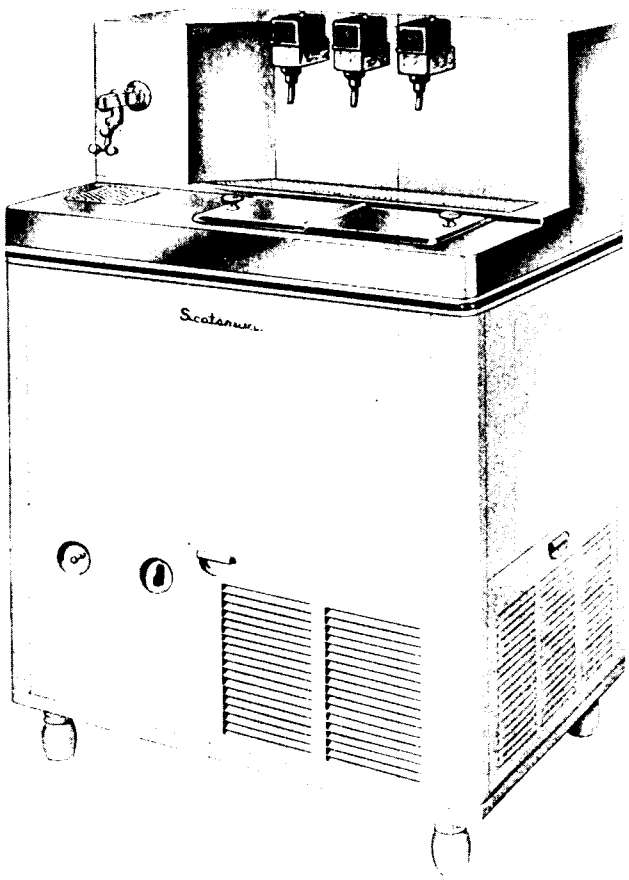

ice making capacity

Air Cooled Models

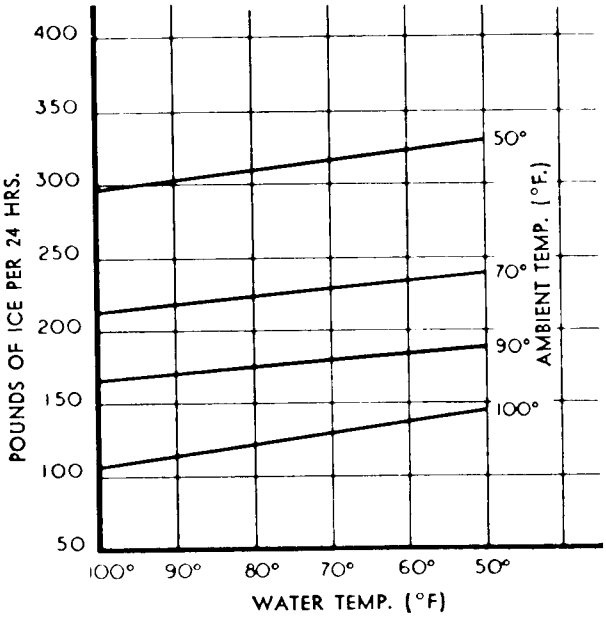

SPECIFICATIONS

COMBINATION ICE MACHINE AND DRINK DISPENSER	MODEL SD3	MODEL SD3 SS
Daily capacity up to 225 lbs.	X	X
Stainless steel bin liner	X	X
Air cooled condenser	X	X
Heavy duty ¼ HP. Compressor	X	X
Standard 115 V, 60 cy, 1 ph, AC—Optionals page 22	X	X
⅜" water inlet SAE Flare	X	X
¼" CO^2 inlet SAE Flare	X	X
3 product inlets ¼" SAE Flare	X	X
⅝" bin drain OD	X	X
⅞" condensate drain OD	X	X
Hammerloid grey exterior	X	
Stainless steel exterior		X
Stainless steel lined storage bin	X	X
48 ⅞" height (with legs)	X	X
44 ⅞" height (without legs)	X	X
34" width	X	X
24 ½" depth	X	X
Approximate shipping weight 450 lbs.	X	X

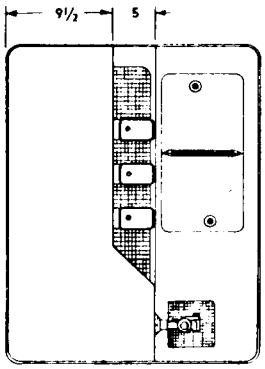

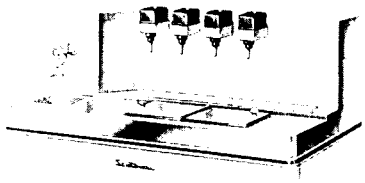

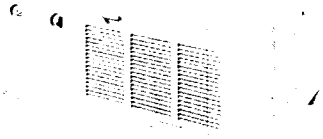

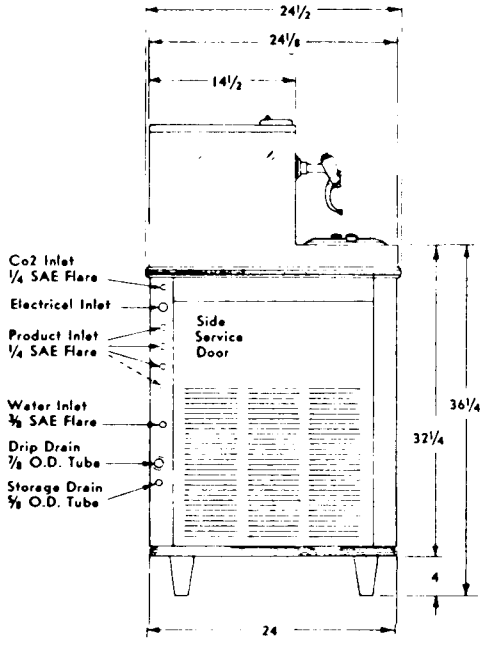

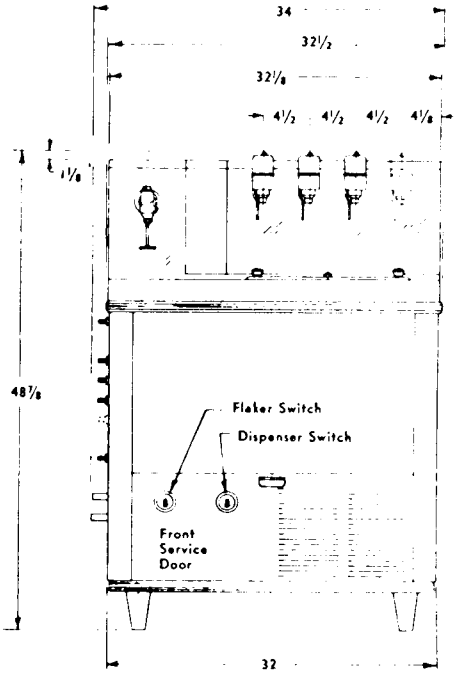

SCOTSMAN®

DRINK DISPENSER SD-4 SERIES

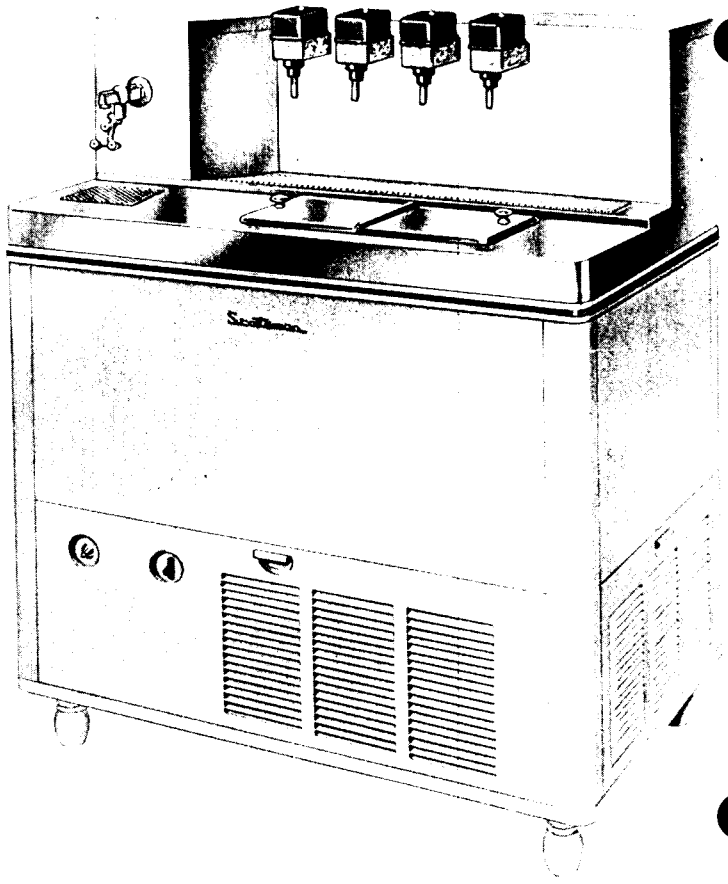

ice making capacity

Air Cooled Models

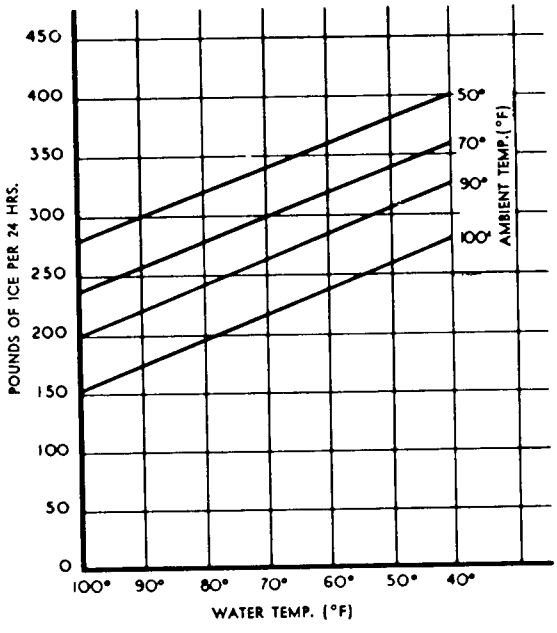

Water Cooled Models

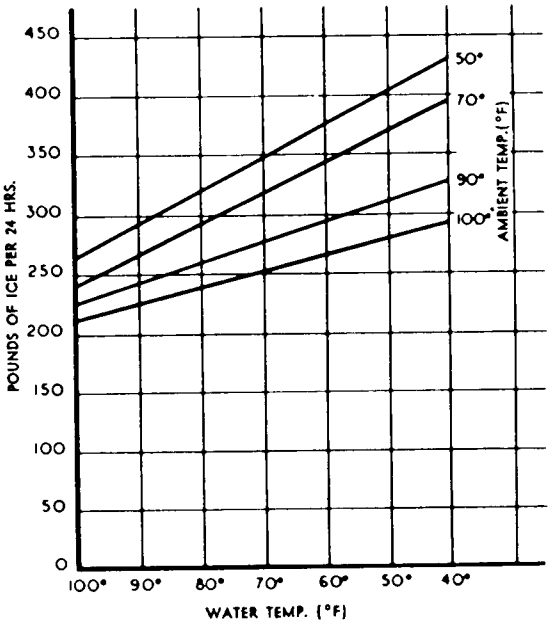

SPECIFICATIONS

COMBINATION ICE MACHINE AND DRINK DISPENSER	MODEL SD4	MODEL SD4W	MODEL SD4-SS	MODEL SD4W-SS
Daily capacity up to 350 lbs.	X	X	X	X
Stainless steel bin liner				
Air cooled condenser	X		X	
Water cooled condenser		X		X
Heavy duty 1/3 HP. Compressor	X	X	X	X
Standard 115 V, 60 cy, 1 ph, AC—Optionals page 22	X	X	X	X
3/8" water inlet SAE Flare	X		X	
3/8" water inlet NPT		X		X
4 product inlets 1/4" SAE Flare	X	X	X	X
1/4" CO^2 inlet SAE Flare	X	X	X	X
7/8" water condensate drain ID	X	X	X	X
5/8" bin drain OD				
1/2" ID water outlet tube		X		X
Hammerloid grey exterior	X	X		
Stainless steel exterior			X	X
48 7/8" height (with legs)	X	X	X	X
44 7/8" height (without legs)	X	X	X	X
40" width	X	X	X	X
24 1/2" depth	X	X	X	X
Approximate shipping weight	512	516	512	516

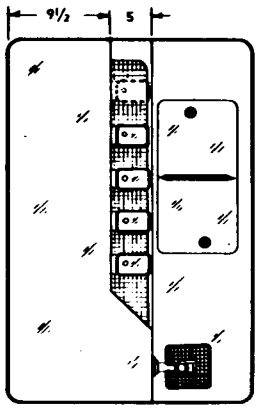

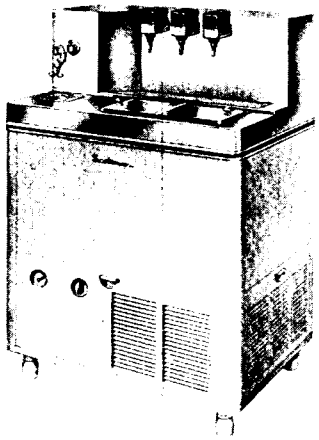

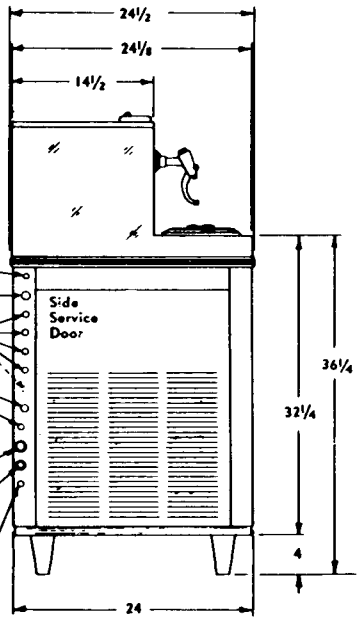

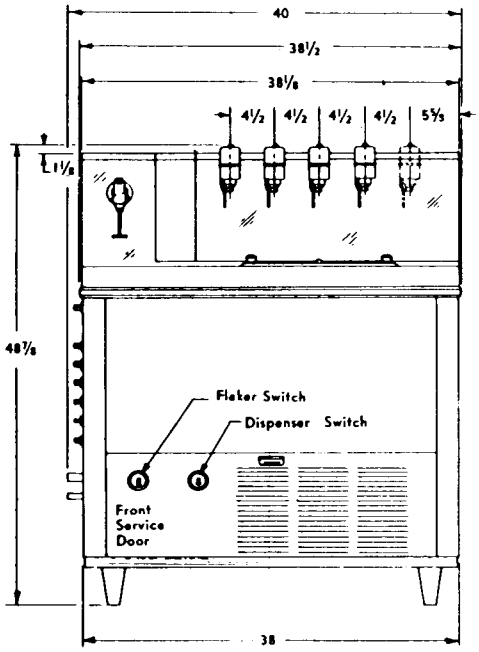

DESCRIPTION

The SCOTSMAN AUTOMATIC DRINK DISPENSER is designed for drug stores, restaurants, cafeterias, ball parks, drive-ins, amusement parks, theatres--in fact, any place where crowds gather and seek ice cold, thirst quenching refreshments in a hurry. The continuous flow dispensers, together with the concealed SCOTSMAN crushed ice maker, is designed for peak periods of traffic.

ATTRACTIVE COMPACT CABINET

Silver grey hammerloid finish with chrome trim, rounded corners, and removable panels for easy access to mechanical parts. Hood assembly of stainless steel attractively designed for front or back counter installation.

SEALED REFRIGERATION SYSTEM

Provides quiet, efficient operation of the machine. Compressor motor is spring mounted and the worm motor is rubber mounted for quiet operation.

SELF-CONTAINED STORAGE BIN

Stores its own ice supply in a heavily insulated, stainless steel storage bin with handy access door opening in hood-counter.

STANDARD OVER-ALL DIMENSIONS

Allows automatic drink dispenser to be installed in harmony with existing counter equipment.

HOW IT WORKS

The unit is completely automatic; water is circulated through a self-contained carbonator which guarantees a ready, abundant supply of perfect carbonated water at all times. Maximum cooling of both carbonated and non-carbonated water is then accomplished by using both a pre-cooling sweet water coil and a cooling carbonated water coil in the bottom of the ice bin. The continuous flow type dispenser allows the mixture of a set amount of syrup and carbonated water. A manual switch starts the ice machine and from then on ice is produced automatically in small uniform pieces. When the storage bin fills, a bin thermostat automatically shuts the machine off and causes it to start up again when ice is removed from the storage bin.

POST MIX SYRUP SYSTEM

Unquestionably the finest most efficient and economically designed drink producing system. Electronic, post mix valves assure a perfect beverage every time.

DRINK DISPENSER

General Specifications

ELECTRICAL RATING	SD-3	SD-4
Voltage	115 60/1	115 60/1
Amperage - Total	13.6	16.1
No. of Motors	3	3
HP - Largest Motor - Compressor	1/3	1/2
Amperage - Largest Motor	4.9	7.4
PLUMBING AND CO_2		
Water Inlet	3/8" Flare S.A.E.	3/8" Flare S.A.E.
Drain Overflow	7/8" O.D. Cu.	7/8" O.D. Cu.
Drain - Storage	5/8" O.D. Cu.	5/8" O.D. Cu.
CO_2 Connections	1/4" Flare	1/4" Flare
Product Inlet Connections	(3) 1/4" S.A.E. Male-Flare	(4) 1/4" S.A.E. Male Flare
ICE MAKER SECTION		
Compressor	1/4 HP	1/3 HP
Condenser	Air Cooled	Air or Water Cooled
Refrigerant	R-12	R-12
Refrigerant Control	Capillary tube	Capillary tube
Standard Voltage Characteristics	115, 60, 1	115, 60, 1
Drive Motor - Freezer	1/4 HP	1/4 HP
Ice Making Capacity	*225 lbs. per day	* 350 lbs. per day
Storage Capacity - (Normal Operating)	65 lbs.	85 lbs.
CARBONATOR SECTION		
Drive Motor Carbonator Pump	1/4 HP	1/4 HP
Pump Capacity	80 gph	80 gph
Switch-Pump Up	Electrodes in Tank	Electrodes in Tank
Voltage Characteristics	115, 60, 1	115, 60, 1
Cold Plates	17½" x 19½"	17½" x 19½"
Control - Pump Operation	Liquid Level-Relay	Liquid Level-Relay
DISPENSER SECTION		
Number of Electronic Heads	3	4
Number of Water Fillers	1	1
Number of Soda Arms - Optional	-	-
Syrup Capacity - Optional - Use 3 or 5 Gallon Tanks on each product line.		
Syrup Feed	Low Pressure CO_2	Low Pressure CO_2

* At 70° ambient and 50° water temperature. See capacity curves for exact amounts.

INSTALLATION

UNCRATING OF MACHINE

The entire unit comes in one crate. Remove crate by pulling nails driven through sides of crate into the bottom pallette. A nail puller is best suited here. Lift crate up and off. Next remove four bolts through bottom of pallette in machine base. Inspect for concealed damage. Remove box containing legs from lower machinery compartment. Remove compressor hold down bolts so it is floating free. Install legs as required.

PRE-INSTALLATION CLEANING

Before machine is in final location, remove warranty card and other information from machine and ice storage compartments. Remove hood service cover and water reservoir cover. Remove packing from float. Leave open to observe float adjustment after machine is installed.

NECESSARY ACCESSORIES - NOT FURNISHED

Your Scotsman Ice and Drink Dispenser is a complete unit at point of use, however, you will require a tank of CO_2 gas, a hi-lo gas pressure regulator, your 3 or 5 gallon remote style syrup tanks and the flexible product lines to connect the tanks to CO_2 and to the connections on the unit left side. Below are the names of two companies that furnish these items.

Bastian Blessing Co.
4201 W. Peterson
Chicago, Illinois

Kenco Products Corp.
Englewood, New Jersey

LOCATION

Select the location before delivering the unit to the job. The following points should be considered.

1. Convenience- Place the unit where it is practical to give speedy service. It can be located either in a back bar or in a front bar. It is designed to fit into a standard soda fountain line-up or it can be used as an individual counter unit. Keep in mind that the dispenser can serve a double function of providing crushed ice as well as carbonated beverages.

INSTALLATION

2. Servicing - Provisions should be made even in a line-up for access to the left end (viewed from serving side). Provide flexible plumbing and electrical lines so the unit can be moved out and serviced or allow provisions for a minimum of 18" at left end of unit.

3. Install only in room where temperature does not go below 50° F. or above 100° F.

PLUMBING

The recommended water supply line is 3/8" O.D. tubing for both SD-3 and SD-4. A 3/8" flare fitting is provided on the machine for water inlet. Connect to cold water supply line using a shut-off valve installed in an accessible place between supply and machine. A water strainer should be installed between the shut-off valve and the unit with the clean-out plug down and the arrow in the direction of flow. Most plumbing codes call for double check valves in this inlet water line. A wire mesh strainer is provided on the pump inlet connections as a protection against large particles of rust, scale, etc., which may be loosened in the water pipe at time of installation. This strainer will not prevent fine particles from damaging the pump, therefore, a good filter is recommended in any installation and is absolutely essential when the supply water contains solids. Maximum water supply pressure must be at least 20 pounds below operating CO_2 pressure. If supply pressure exceeds this, carbonator may flood. Install a water pressure regulator in the water supply line and adjust as required.

On water cooled models a separate connection to the unit will be required. Connections are made into a 3/8" water regulating valve located inside the machine compartment. Observe arrow on water regulating valve. Water supply must be installed to conform with local plumbing codes. In some cases a licensed plumber and/or a plumbing permit will be required.

Drains are brought out of the cabinet on the left side and are 5/8" O.D. and 7/8" copper. They can be sagely tied together below the floor level. 7/8" copper drain lines will be adequate in most instances. Care should be taken to allow no traps in the drain lines. If a level run of more than three feet is required, clean-out provisions should be made.

ELECTRICAL

Rating	
SD-3	SD-4
115 volts	115 volts
60 cycle, single phase	60 cycle, single phase
20 amp circuit	30 amp circuit
Use No. 12 wire for runs under 50 feet.	Use No. 10 wire for runs under 50 feet.

INSTALLATION

Be certain the SCOTSMAN DISPENSER is on its own circuit and individually fused. Separate switches are located in the front of the dispenser allowing the carbonator and the ice maker to operate independently of each other. All internal wiring is completed.

All external wiring should conform to National Underwriters and local electrical code requirements. An electrical permit and the services of a licensed electrician will usually be quired.

START-UP

When the machine is placed and inspected as per instructions and all plumbing and electrical connections are completed and tested, turn on the water supply. Be sure water reservoir is filled before starting ice maker. Water level should be 1/4 inch below the reservoir overflow. Connect CO_2. Check rotation of pump.

Check all internal water connections for leaks. Start carbonator by turning on left switch.

Install gauges and check refrigerant pressures at time of start-up. Flare connections can work loose during shipment. Add refrigerant as required - see ice maker section. Turn on the right manual switch in front of cabinet and machine is in automatic operation. In two or three minutes ice will start dropping off the worm shaft and out the ice chute. Let the machine operate for at least 30 minutes or until ice covers the bottom plate. Check for any excess noise in carbonator or ice maker.

Test the ice storage control bulb by holding a handful of ice around the bulb until the machine shuts off. One minute should be normal for the control to function. Within minutes after the ice is removed, the bulb will warm up and the machine will automatically start up. The control is factory set and should not be reset until this test is made. Normal setting of this control should be approximately 38 degrees cut-out and 45 degrees cut-in to prevent short cycling.

Check hand reset low pressure control setting. This safety device should normally be set 8 to 10 p s i below normal suction pressure to prevent cutting off when the compressor first starts up and still provide safety in case of interruption in water supply, shortage of refrigerant, low ambient or any other cause of abnormally low suction pressures on Models SD-4 only.

Adjust dispenser heads to give correct proportions of syrup and carbonated water. See dispenser section. Do not set until ice covers cold plates.

Explain the machine to the owner, showing him how the machine works and go over the owner's operating instructions. Answer all the owner's questions about the machine, and do not leave with any doubt in the owner's mind about the machine, how to operate it or where to reach the service man in case of need. Call back the next day to check the machine again and and answer any other questions the owner may have.

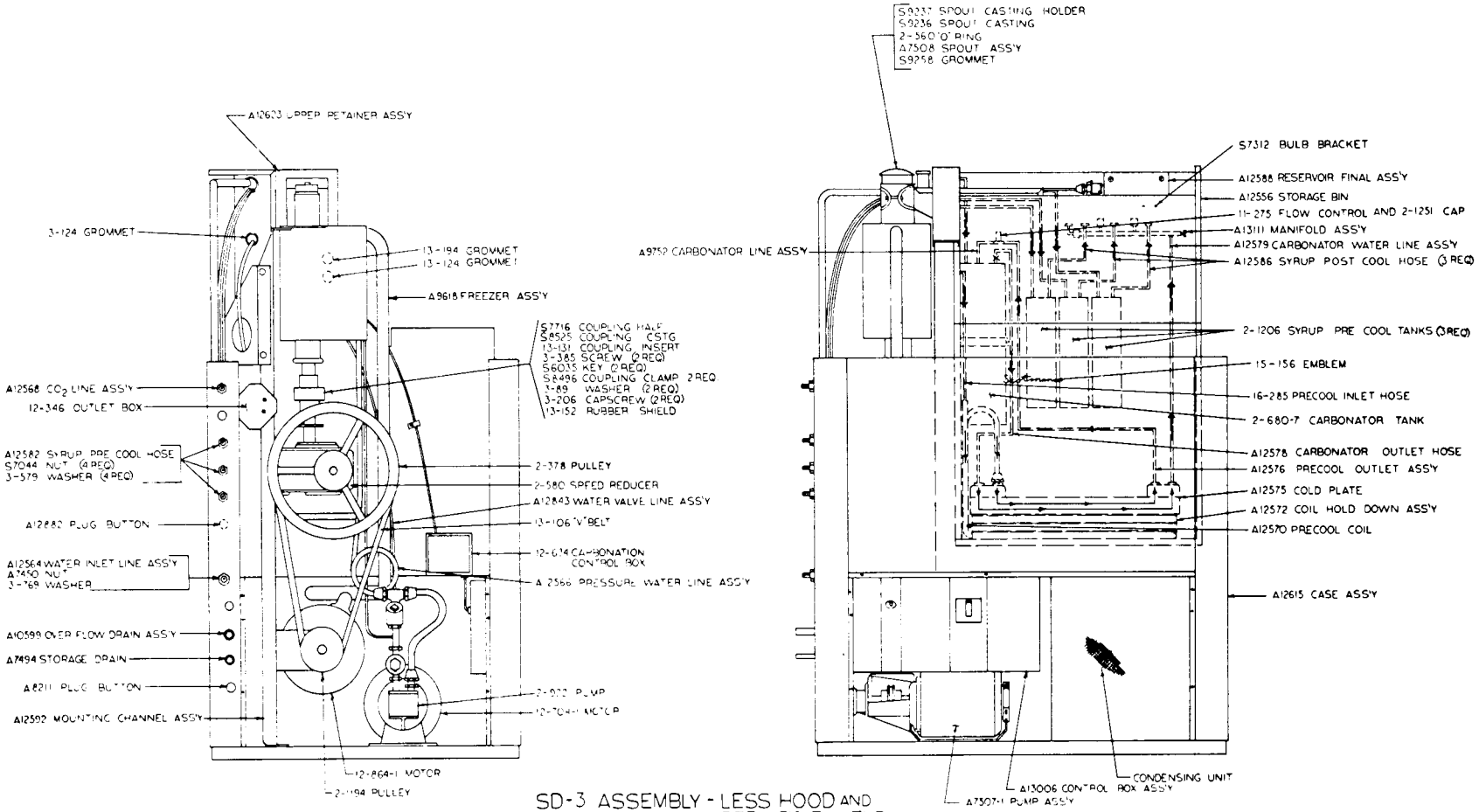

SD-3 ASSEMBLY - LESS HOOD AND SERVICE PANELS

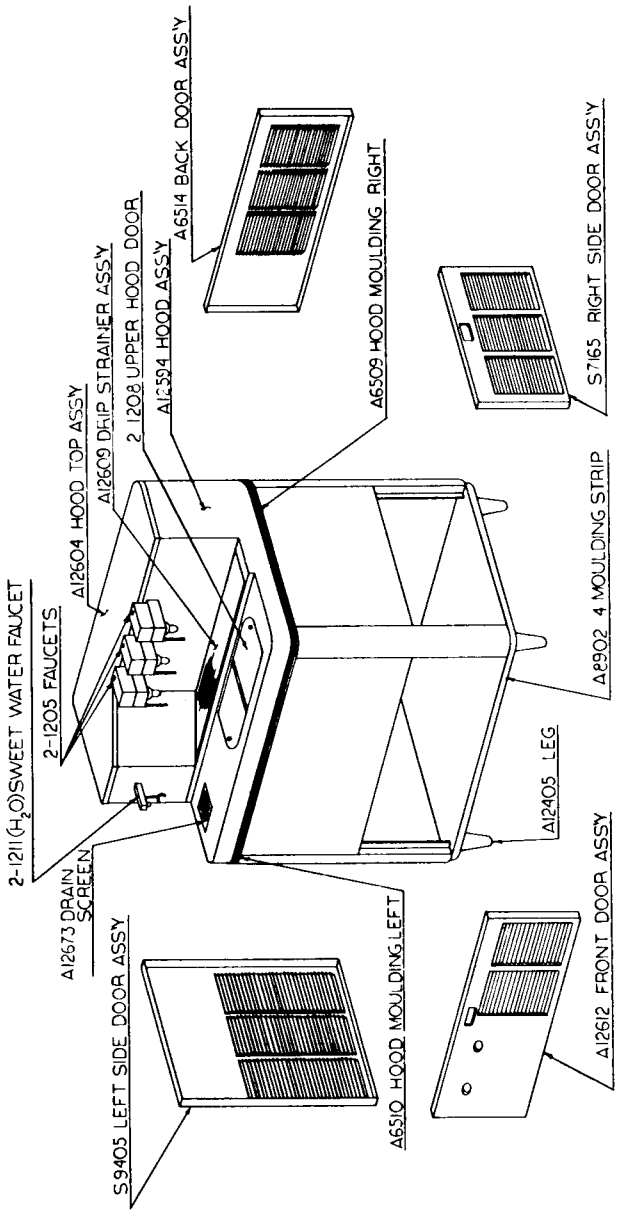

SD 3 CABINET PARTS

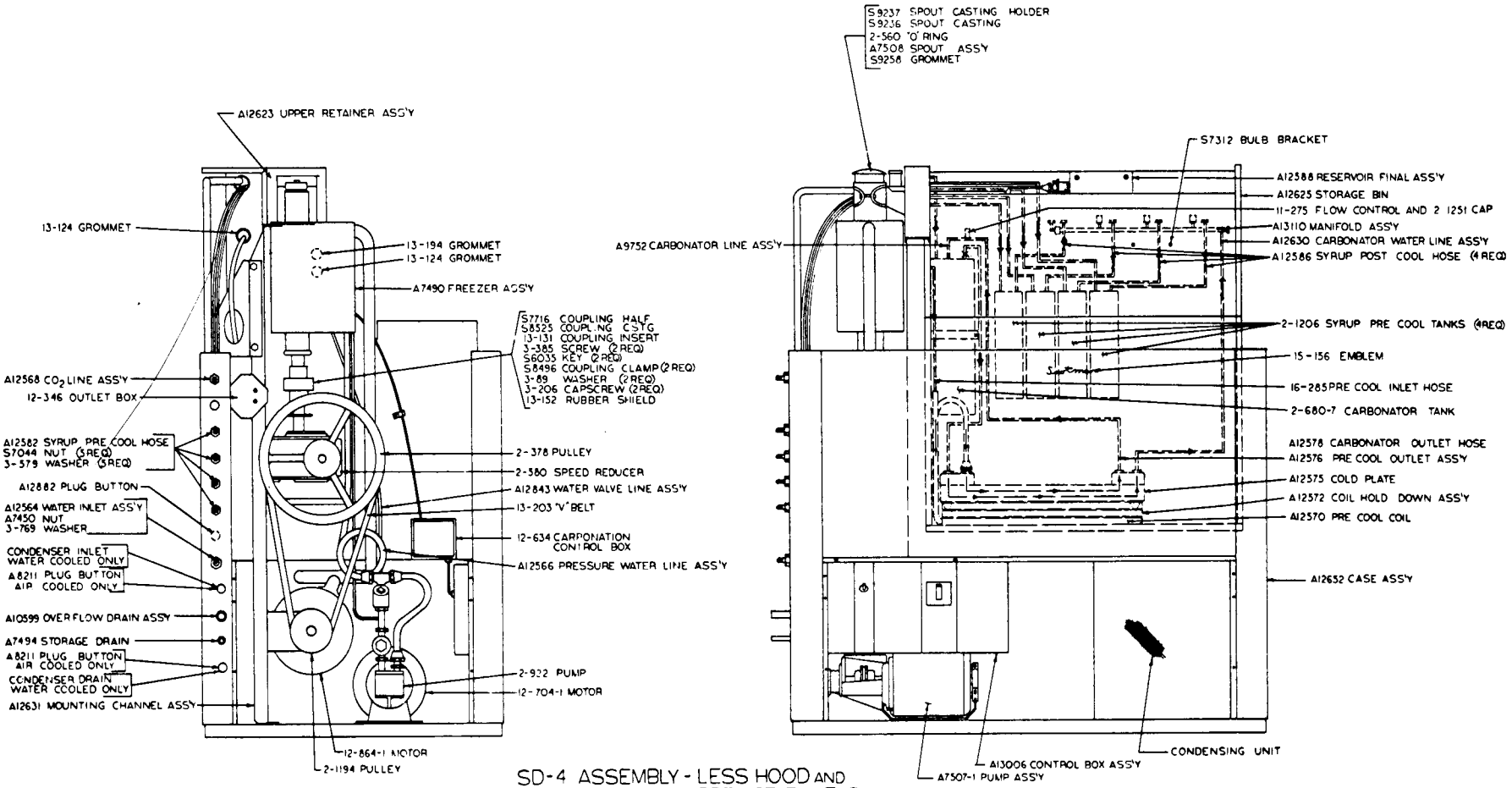

SD-4 ASSEMBLY - LESS HOOD AND SERVICE PANELS

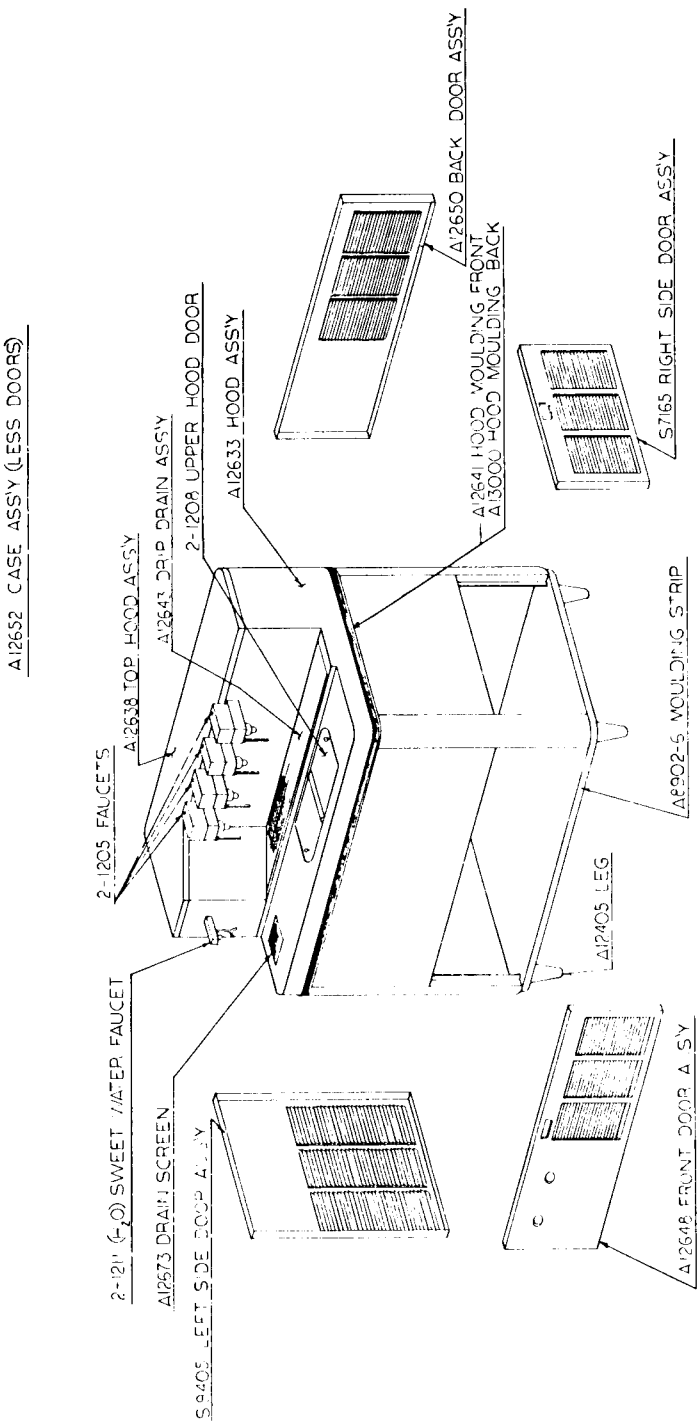

SD 4 CABINET PARTS

ICE MAKER SECTION

HOW IT WORKS

Water in the constant level float reservoir is fed to the bottom end of a freezing cylinder and turns to ice on the inside of this cylinder. The stainless steel auger inside of this evaporator is driven by a motor through a V belt and gear reduction drive. Ice is carried upward by the action of this auger and extruded past the ice breaker at the top of the cylinder.

A manual switch starts the machine and from then on ice is produced automatically in small uniform pieces of ice. When the storage bin fills, a thermostat shuts the machine off and causes it to start up again when ice is taken from the storage compartment.

The ice maker section operates independently of the carbonator section although it is built into the same cabinet.

MECHANICAL SPECIFICATIONS	SD-3	SD-4
Compressor	Bendix-Westinghouse BCI-25	Copeland HK-33I
Refrigerant	24 oz. F-12	26 oz. F-12
Refrigerant Control	Capillary tube, accumulator, heat exchanger type.	Capillary tube, accumulator, heat exchanger type.
Drive Motor	Resilient base, frame 48, CCW rotation, capacitor start.	Resilient base, frame 48, CCW rotation, capacitor start.
Gear Reducer	Winsmith 3CT Final Output 12 R.P.M.	Winsmith 3CT Final Output 12 R.P.M.
ELECTRICAL SPECIFICATIONS		
Compressor Motor	Hermetic	Semi-Hermetic
Voltage	115 V	115 V
Horsepower	1/4	1/3
Amperage Rating	4.9	7.4
Cycles	60	60
Phase	Single	Single
Drive Motor		
Voltage	115 V	115 V
Horsepower	1/4	1/4
Amperage Rating	4.5	4.5
Cycle	60	60
Phase	Single	Single

SERVICE - CONDENSING UNIT

Service gauge connections are available on both high and low-side service valves.

To install gauges to any of these connections, replace 1/8 inch IP plug with 1/8 inch MPT x 1/4 inch flare half union. Purge free of any non-condensable gases before starting any test operation.

PRESSURE SETTINGS

Check pressure settings at the time of start-up. On the water cooled models set the head pressure at 135 p s i. Some air cooled models use the reverse acting head pressure control and should be set on approximately 15 p s i differential, and to cut-in at 130 and out at 145 p s i head pressure. The frost line should extend at least 8 inches out of the accumulator if properly charged with refrigerant and suction pressure will range between 14 and 16 p s i with 50° F. inlet water.

REFRIGERANT CHARGE

The below refrigerant charge is approximate. When charging, set at 135 p s i head pressure and charge so that the frost line extends out of the accumulator after fifteen minutes of operation. Frost out of accumulator at least 8 inches and preferably 1/2 way to the compressor for best capacity and performance.

MODEL	FREON CHARGE	OIL LEVEL
SD-3 - air	24 oz. F-12	Oil level should be kept at 1/3 way up sight glass. Do not fill over 1/2.
SD-4 - air	24 oz. F-12	
SD-4 - water	24 oz. F-12	

WATER SYSTEM

A water level is maintained in the water reservoir by a float operated valve. Water is piped from the water reservoir to the freezing chamber by a gravity feed line maintaining an equal water level. A removable overflow pipe is installed in the water reservoir for cleaning the reservoir as well as preventing damage should the inlet water valve fail.

The water reservoir is equipped with a 2 inch air gap to prevent back siphoning and meet all health codes.

The water level in the water reservoir is adjusted by the float linkage adjustment. The water level should be set 1/4 inch below the overflow pipe. A condensate drip pan is connected to the drain circuit to automatically dispose of condensate moisture.

A water strainer must be installed in the supply line.

ICE MAKER SECTION

ELECTRICAL SYSTEM

The Dispenser model SD-3 and SD-4 are designed to work on standard voltage.

SD-3	115 volts	60 cycle	Single Phase
SD-4	115 volts	60 cycle	Single Phase

Special voltage requirements are available on special order. Therefore, always check nameplate for this information before checking electrical supply.

Nameplate voltage should not vary more than plus or minus 10 percent.

The electrical circuit consists of condensing unit, drive motor, hand reset combination or low pressure cut-out, storage bin thermostat, "on" and "off" switch, micro (safety) switches and head pressure control kit.

A. CONDENSING UNIT

The compressor terminal box houses the motor compressor terminal block, and the motor overload Klixon. To gain access to the terminal box, remove the two screws holding the beveled metal cover. The starting capacitors, running capacitors and starting relays are housed and fastened to the unit base.

B. DRIVE MOTOR - FREEZER

Model SD-3 and SD-4 Icemakers are equipped with standard 1/2 inch shaft, 1/4 HP, capacitor start, induction motors. These motors turn counter clockwise and may be replaced with any standard make motor corresponding to the nameplate rating. (Be sure motor runs counter clockwise viewed from the shaft end.)

C. HIGH-LOW PRESSURE CUT-OUT (Used on water cooled models only.)

Ranco control is located on the frame assembly. Factory settings cut-out 5 lbs. on low pressure and 180 p s i on high pressure. This control prevents operation at abnormal pressures.

D. LOW PRESSURE CUT-OUT (Hand reset on all air cooled models.)

Ranco control is located on the frame assembly. Factory settings cut-out at 5 p s i. Safety device to cut off machine and keep it off in case of water supply failure, loss of refrigerant, low ambient temperature or other causes of low pressure.

E. STORAGE BIN THERMOSTAT

White Rodgers control located on frame assembly. Factory settings 38° cut-out, 45° cut-in. This control shuts off complete machine when ice in storage bin builds up to control.

F. MICRO SAFETY SWITCH

The micro switch is located in the top of the ice chute. The switch is operated by ice pressure backing up in the chute should the storage bin thermostat fail. Micro switch will shut off the condensing unit only, when operated.

G. ON-OFF SWITCH

A General Electric on-off switch with built-in thermal overload protection to prevent drive motor failures is used. A 5 amp. heater element is standard on 115 volt drive motors.

H. HEAD PRESSURE CONTROL KIT - AIR COOLED MODELS ONLY

A Penn reverse acting high pressure control is used and connected electrically to the fan motor. As the head pressure drops below the cut out setting, the control opens allowing the current to pass entirely through a resistor in the line feeding the fan motor. This slows the shaded pole motor down to approximately 1/4 speed thus increasing the head pressure. When head pressure builds up to the setting on the top of control scale the control cuts in and full voltage again flows directly to the fan motor allowing it to operate at full speed.

I. DRIVE MOTOR - CARBONATOR PUMP

Models SD-3 and SD-4 dispensers use a 1/4 H.P., split phase, 48 frame motor, 1/2" drive shaft with flat for set screw and counter clockwise when viewed from shaft end.

PS-3-57
April-25-57

TO: ALL DISTRIBUTORS AND DEALERS

SUBJECT: ACCEPTABLE SUBSTITUTES FOR 600W OIL IN WINSMITH GEAR REDUCERS

In answer to many field requests, we are pleased to release the following chart showing the companies whose products are acceptable substitutes for the 600W supplies by Winsmith as factory recommended.

Note the third column which most accurately represents the normal temperature operating range. Also the Alemite or Zerk fitting to bearing is greased with Mobilgrease BRB No. 1, or any good ball bearing grease as obtained from local service stations.

600W oils and equivalents are classified as industrial oils and most likely will be found in bulk plants rather than local service stations.

SCOTSMAN-QUEEN PRODUCTS
Service Department
Ice Machine Division

WORM GEAR REDUCERS

CB-CT-CV-CBD-CTD-CVD-CBX-CTX-CVX-DBI-TSR

Ambient Temperature °F	-30 to 15	16 to 50	51 to 110	111 to 165
Maximum Operating Temp. °F	150	185	225	225
Viscosity @ 210°F, SUS	40 to 90	90 to 125	125 to 190	190 to 350
Compounded with	(Optional)	3 to 10% Acidless Tallow or E. P. Base	3 to 10% Acidless Tallow or E. P. Base	3 to 10% Acidless Tallow or E. P. Base
AGMA Lubricant		#7 Compound	#8 Compound	
Cities Service Oil Co.	Pacemaker Oil # 5	Optimus Oil # 10	Optimus Oil # 6	Optimus Oil # 12
Fiske Bros. Refining Co.	#3 Lubriplate	Lubriplate # 8	Lubriplate # 8	Lubriplate APG
Gulf Oil Corporation	Multipurpose Gear Lubricant	E. P. Lubricant #115	E. P. Lubricant #145	E. P. Lubricant #250
Shell Oil Company	Vitrea Oil 71	Valvata Oil #J 78	Valvata Oil #J 78	Valvata Oil #J 83
Sinclair Refining Co.	Duro Oil 160	#87 Heavy Duty Oil	#101 Super-Heat Valve Oil	#212 Super-Heat Valve Oil
Standard Oil Co.	Stanogear Compound # 1	Stanogear Compound # 4	Standard Worm Gear Oil	CalumetSH Cylinder Oil
Sun Oil Company	Sunep 70	Sunep # 110	Sunep # 150	HV Cyl. Oil
Socony Mobil Oil Co., Inc.	Vactra Oil # 1	Mobil Compound DD	Mobil Cylinder Oil #600W	Mobil Cylinder Oil #600W
The Texas Company	Meropa Lub. # 1	Meropa Lub. # 3	Meropa Lub. # 6	Meropa Lub. # 6

WINSMITH GEAR REDUCER (3CT)
QUEEN PART NO. 2-580
USED ON ALL MODELS SD-3—SD-4

NOTE: BOTH HIGH & SLOW SPEED BEARINGS, OIL SEALS & GASKETS ARE INCLUDED IN THE A-6397 GEAR REDUCER REPAIR KIT.

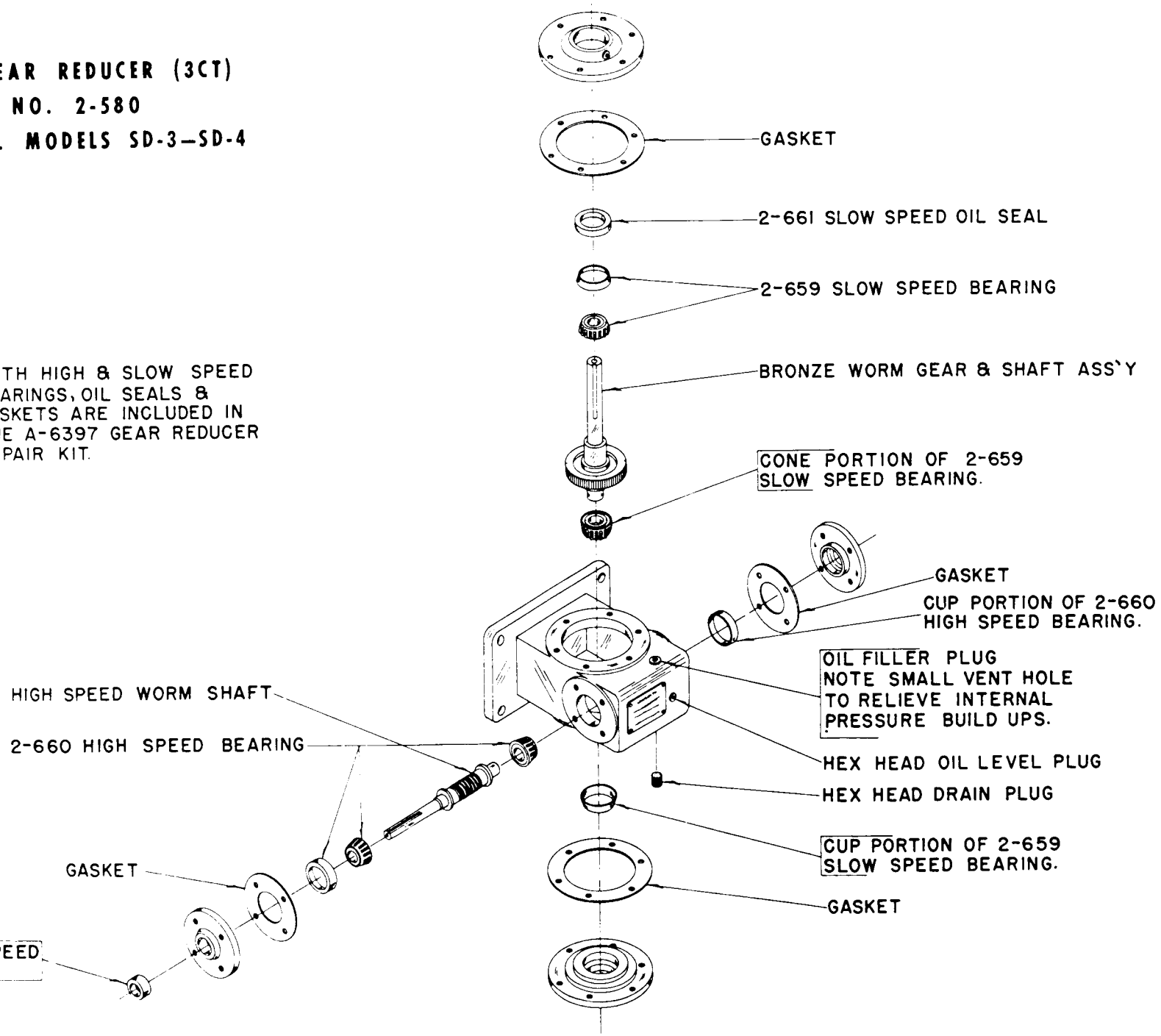

MAINTENANCE INSTRUCTIONS - DISPENSERS

THE FOLLOWING MAINTENANCE MUST BE ACCOMPLISHED TWO TIMES PER YEAR ON ALL SCOTSMAN DISPENSERS. CALL YOUR AUTHORIZED SCOTSMAN SERVICE DEPARTMENT.

1. Check and clean water strainers and float valve. Depress float valve to insure full stream of water.

2. Check water level and machine level. Keep water level below overflow, but as high as possible and still not run out of spout opening with machine off. Water should come out of spout with ice at all times. Adjust as required.

3. Clean reservoir and interior of freezer assembly using *SCOTSMAN* Ice Machine Cleaner.

   A. If machine has been cleaned regularly and no problems such as dry ice or chatter are noticed, clean by making ice from solution of 8 oz. of cleaner to 1 gallon of water.

   B. If heavy mineral deposits on auger and walls, or sediment at inlet to freezer are encountered, clean by pouring strong solution (½ acid- ½ water) into reservoir and operate drive motor only for agitation. Allow ½ hour or longer as required. Drain by disconnecting tygon at water inlet to freezer.

***NOTE:** Cleaning requirements vary according to local water conditions. Visual inspection of the auger before and after cleaning will indicate best procedure to be followed in local areas.*

4. Check high and low side pressures. On air-cooled models set head pressure between 130 and 145 P S I on R.A. high pressure control. On water cooled models, set pressure at 135 P S I. Suction pressure should be above 12 P S I and will range up to 16 P S I depending upon water and ambient temperatures.

5. Set hand reset low pressure control to cut off in event of water supply interruption or low ambient temperature at approximately 5 P S I.

6. Change oil in gear reducer. Use Mobiloil 600 W or equivalent good grade of gear oil with a viscosity of 125 to 190. For unit with grease fittings use Mobilgrease BRB No. 1 or any good grade ball bearing grease. Particularly important when there is evidence that water has gotten into gear housing. Remove gear reducer to facilitate.

7. Oil drive motor. Use SAE 20 oil.

8. Check top bearing of freezing tube. Remove retainer ring around edge of stamped brass cap. If moisture is around bearing, wipe up and remove grease. Add new grease. Use Beacon No. 325. To replace cap, reverse above.

9. Check and adjust belt tension.

10. Clean air cooled condenser. Inform customer to clean frequently. Always shut off machine when cleaning.

11. Oil condenser fan motor when possible.

12. Check for refrigerant leaks and proper frost line. Should frost out of accumulator at least one-half way to compressor, and in some areas back to service valve.

13. Check for water leaks. Tighten drain line connections. Run water down bin drain line to make sure it is open.

14. Check quality of ice. Ice should be wet when formed, but will cure rapidly to normal hardness in the bin.

15. Check thermostat and pressure plate cut off. Micro switch cuts off only compressor. Bin thermostat should be set at 10° differential and should keep entire machine off at least twenty minutes in high ambients *(longer in low)* during normal operation.

16. See cleaning of cold plate in carbonator section in this manual.

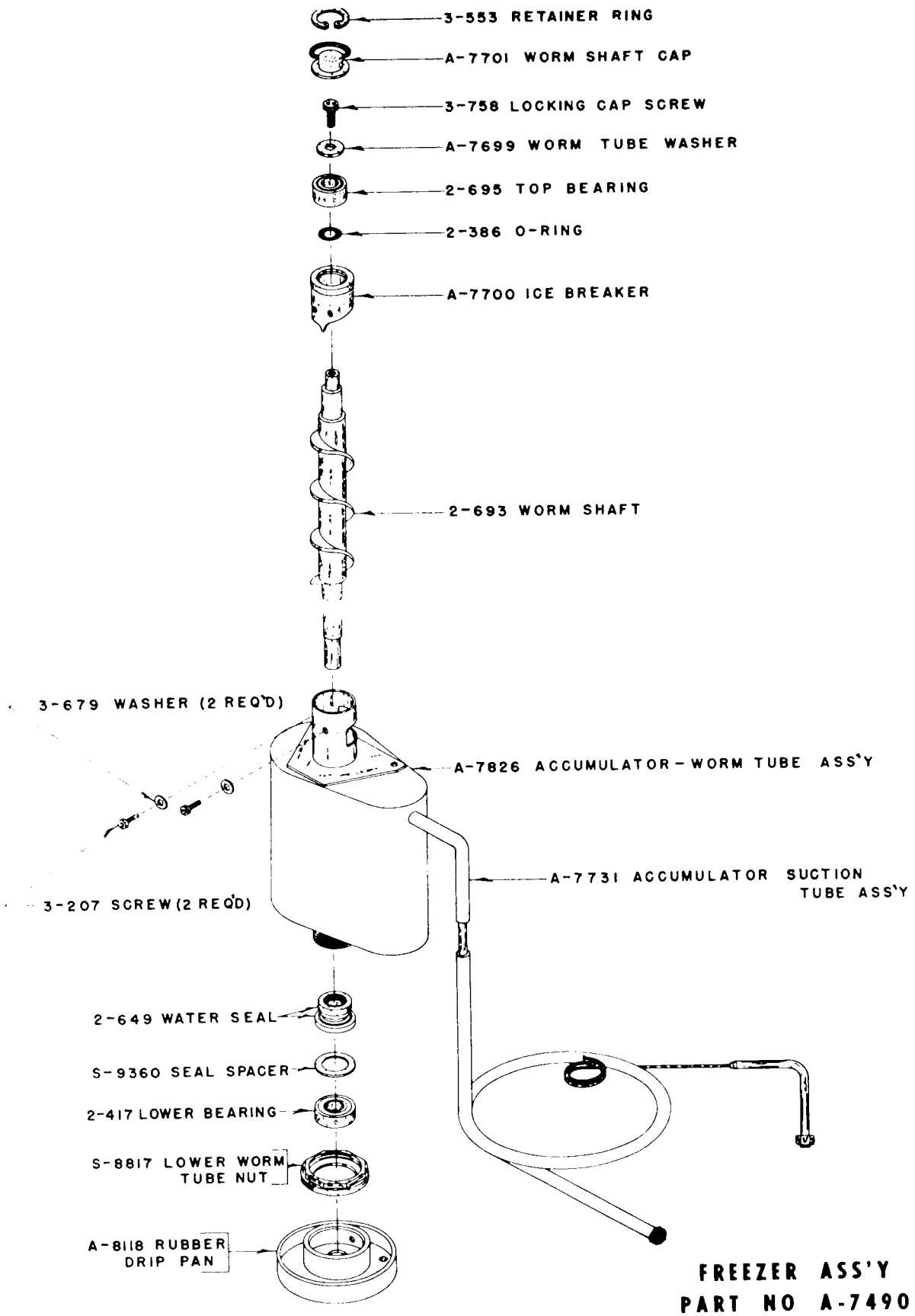

FREEZER ASS'Y
PART NO A-7490

USED ON
SD-4
BEGINING WITH SERIAL 76-35256

SD-3
FREEZER ASS'Y
PART #A-9618

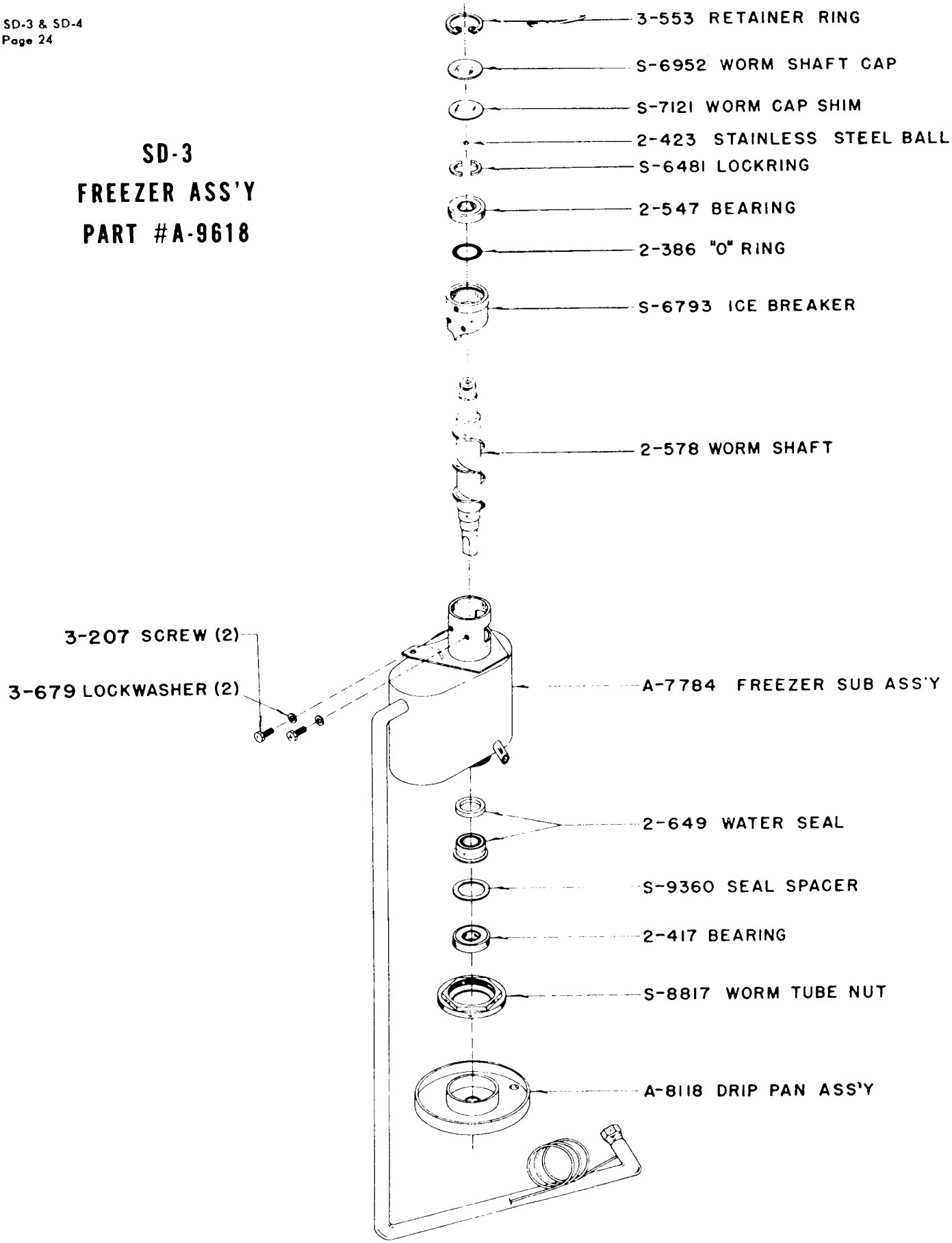

INSTALLATION INSTRUCTION

1. Uncrate and remove all bolts from bottom skids.
2. Loosen shipping bolt on compressor and allow to float free on spring mounts.
3. Remove legs from carton and install on base as desired.
4. Level machine.
5. Connect plumbing- Use 3/8 inch copper water inlet line and connect to 3/8 inch flare fitting provided at left of cabinet. Install strainer provided. Use licensed or qualified plumber in accordance with local codes.
6. Connect CO_2- Carbonator will not operate unless CO_2 is connected. Adjust high pressure regulator to 100 lbs. and low pressure regulator to 20 lbs.
7. Connect product lines and syrup tanks.
8. Check all refrigerant lines, product lines, water lines and CO_2 lines for rubbing or touching other surfaces.
9. Remove packing under float in water resevoir.
10. Refrigerant valves shipped open. Check all other valves.
11. Start ice maker first and cover cold plates in bottom of storage bin with ice before starting carbonator.
12. Fill syrup tanks with syrup.
13. Remove warranty card and other information from machine compartments
    IMPORTANT: Fill out warranty card immediately and send in as directed.
14. For adjustments call your authorized S C O T S M A N servicing dealer or distributor.

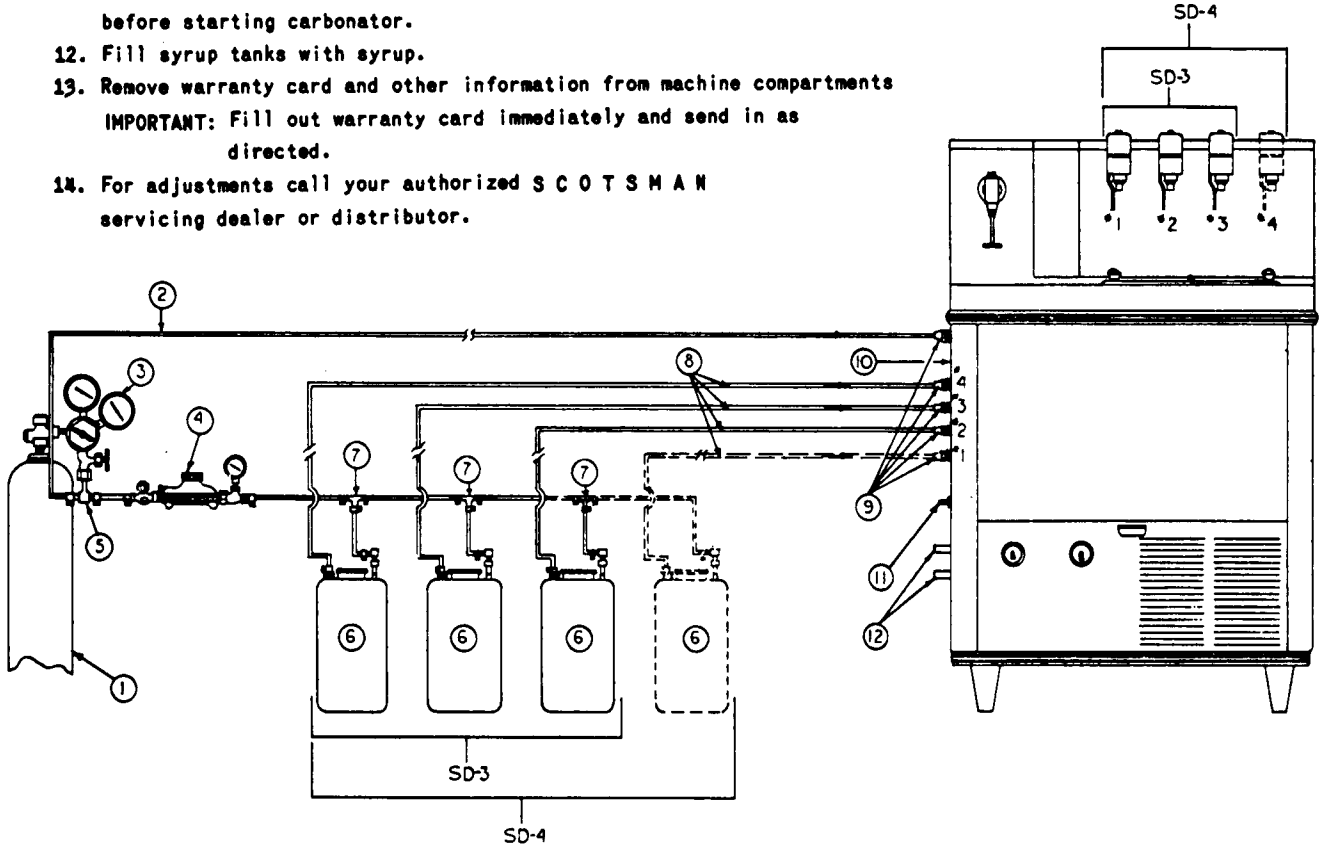

CODE

1. CO_2 CYLINDER
2. CO_2 LINE (COPPER, STAINLESS STEEL OR PLASTIC)
3. HIGH PRESSURE CO_2 REGULATOR FOR CARBONATOR
4. LOW PRESSURE CO_2 REGULATOR FOR SYRUP TANKS
5. BRANCH TEE
6. SYRUP TANKS
7. TEE
8. PRODUCT LINES STAINLESS STEEL OR PLASTIC)
9. 1/4 S.A.E. FLARE FITTING
10. ELECTRICAL INLET
11. WATER INLET 3/8 S.A.E. FLARE FITTING
12. DRAINS

TYPICAL POST MIX CARBONATED BEVERAGE SYSTEM

APPLICABLE TO THE SD-3 OR SD-4

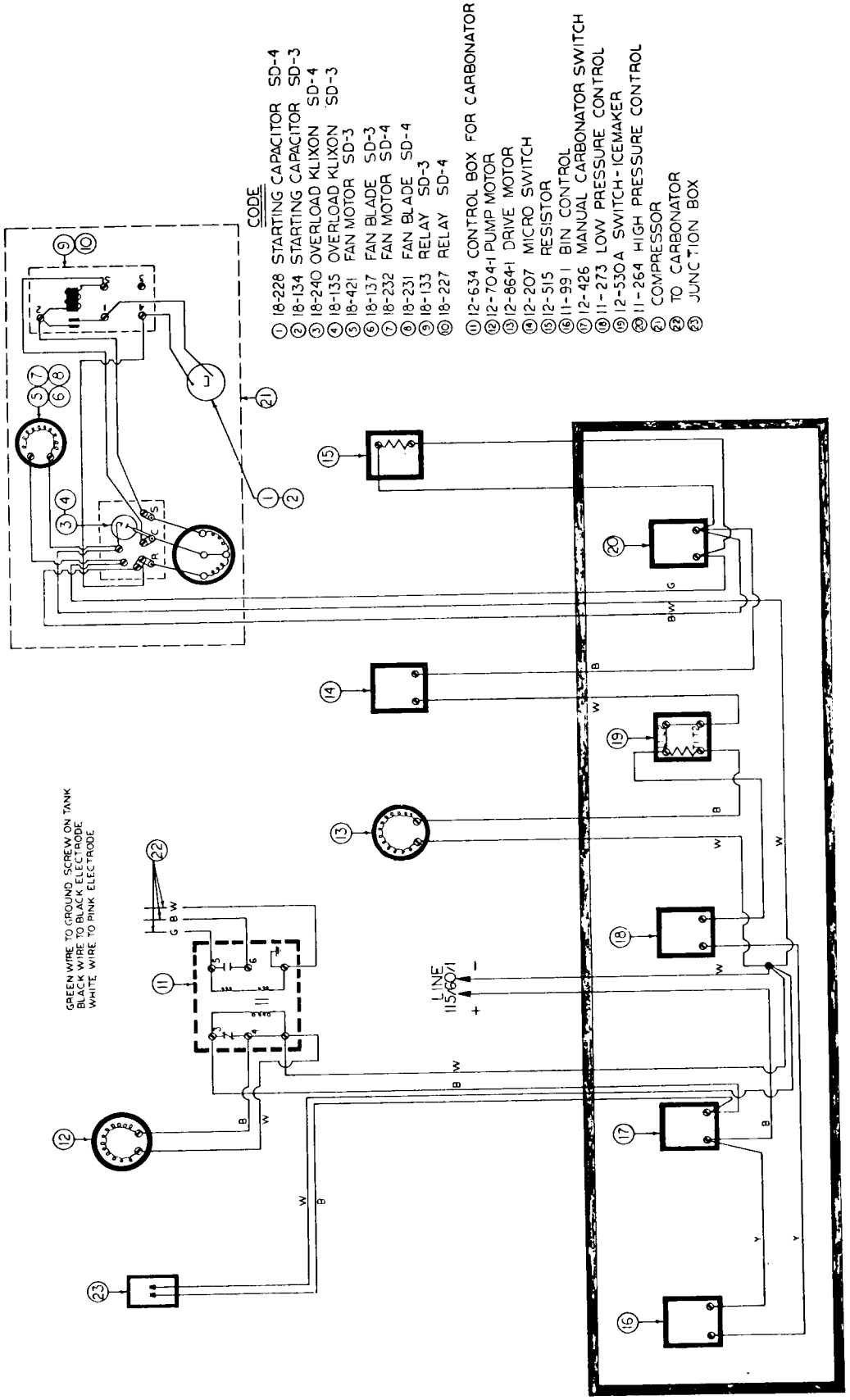

WIRING DIAGRAM
SD-3 AND SD-4
(AIR COOLED)

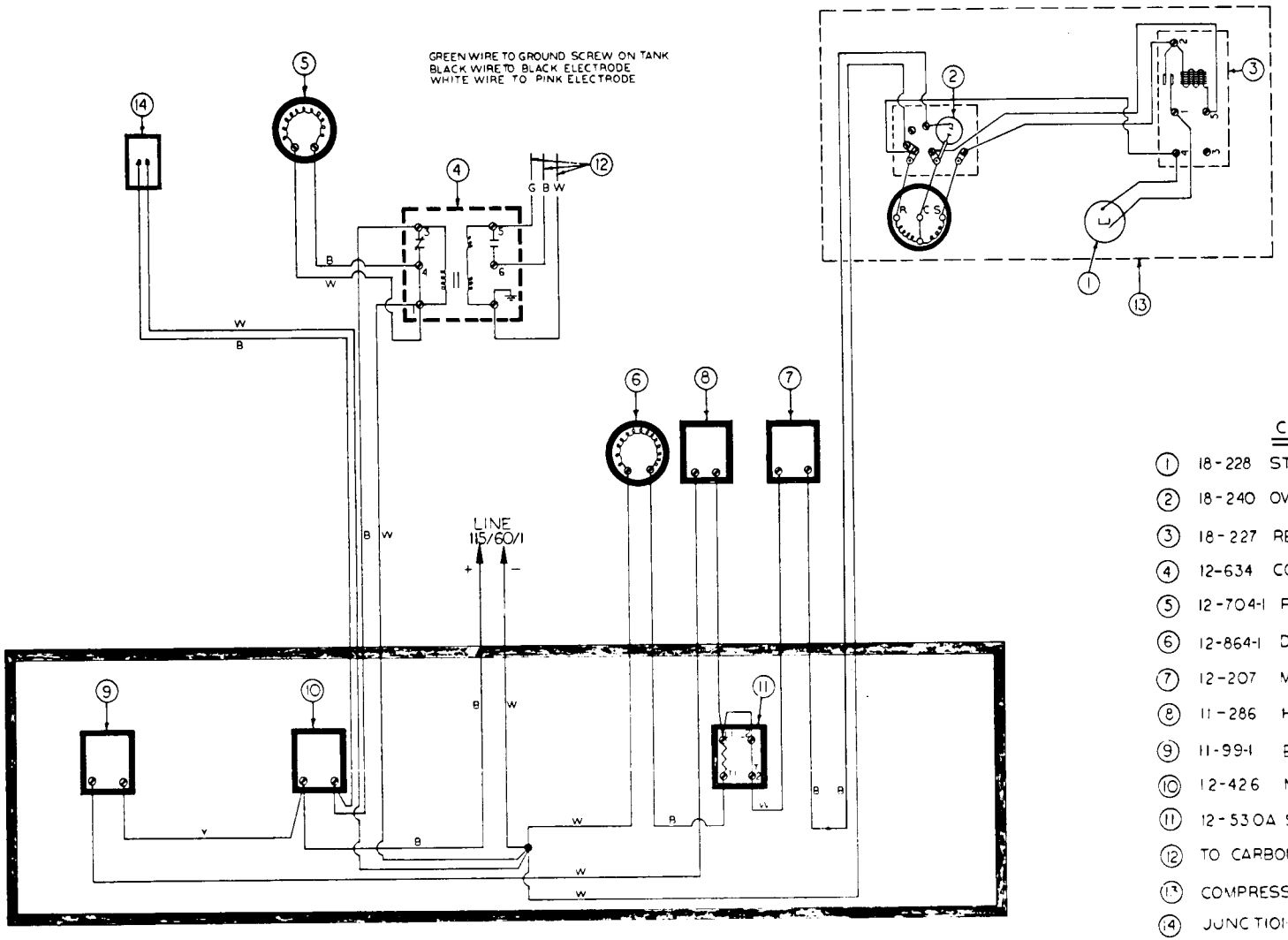

CODE

1. 18-228 STARTING CAPACITOR
2. 18-240 OVERLOAD KLIXON
3. 18-227 RELAY
4. 12-634 CONTROL BOX FOR CARBONATOR
5. 12-704-1 PUMP MOTOR
6. 12-864-1 DRIVE MOTOR
7. 12-207 MICRO SWITCH
8. 11-286 HIGH-LOW SWITCH
9. 11-99-1 BIN CONTROL
10. 12-426 MANUAL CARBONATOR SWITCH
11. 12-530A SWITCH ICEMAKER
12. TO CARBONATOR
13. COMPRESSOR
14. JUNCTION BOX

WIRING DIAGRAM
SD-4
(WATER COOLED)

ICE MAKER SECTION

Service Analysis Chart

COMPLAINT	POSSIBLE CAUSE	CORRECTION
Low ice production.	Loss of refrigerant. Under or over-charge of refrigerant.	Check and recharge with proper amount of refrigerant.
	Drive motor weak.	Replace.
	Dirty or plugged condenser.	Clean condenser.
	Low water level in water reservoir.	Adjust to 1/4 inch below spout opening.
	Overcharge of oil in system.	Check at oil hole and lower to 1 1/2 inch from top of hole or 1/3 full on crankcase sight glass.
	Partial restriction in capillary tube or drier.	Moisture in system. Over-charge of oil in system. Remove charge by blowing back through cap tube. Replace and recharge.
	Inlet water strainer partially plugged.	Remove screen and clean.
	Corroded or strained worm shaft due to water condition.	Remove worm shaft and clean, or use Scotsman Ice Machine Cleaner. See Maintenance Section.
	Slipping drive belt.	Adjust belt tension or replace worn belt.
	Defective gear reducer.	Check reducer driven shaft to freezer shaft. Should rotate at 12 R P M. Replace if worn.
Machine runs but makes no ice.	Loss or undercharge of refrigerant.	Check for leaks and recharge.
	Drive motor, belts, gear reducer on drive coupling inoperative.	Gear reducer and worm turn at 12 R P M. Check. Repair or replace.
	Pulleys loose on shafts.	Tighten, repair or replace.

ICE MAKER SECTION

Service Analysis Chart

COMPLAINT	POSSIBLE CAUSE	CORRECTION
Machine runs but makes no ice. (Cont.)	Water not entering freezing chamber.	Plugged strainer or supply line. Check and clean. Air lock in gravity feed line. Check and remove air lock.
	Moisture in system.	Check and remove charge and drier. Replace and recharge.
	Water seal leaking.	Replace seal. See section on maintenance.
	Defective manual overload switch.	Replace switch.
Water leaks.	Defective water seal.	Replace. See section on maintenance.
	Gravity feed line leaking.	Check hose clamps.
	'O' ring in spout casting leaking.	Remove spout casting and install new 'O' ring.
	Storage bin drain and connecting fittings.	Check and repair. Tighten fitting - replace 'O' ring.
	Water level in reservoir too high.	Adjust to 1/4 inch below overflow pipe.
Excessive noise or chattering.	Scale or mineral build-up on inside of freezer.	Clean with Scotsman Ice Machine Cleaner. See section on maintenance.
	Mineral deposit or scale on auger and cylinder walls.	Ice sticking and jamming inside. Clean with Ice Machine Cleaner or remove auger and polish.
	Low suction pressure.	Raise suction pressure. Adjust head pressure control to recommended setting or balance refrigerant charge.
	Intermittent water supply.	Check and clean water strainer. Check gravity feed line for air lock. Remove air lock.
	Water level in reservoir too low.	Adjust to 1/4 inch below overflow pipe, or raise reservoir.
	Mis-aligned coupling or worn insert.	Repair or replace.

ICE MAKER SECTION

Service Analysis Chart

COMPLAINT	POSSIBLE CAUSE	CORRECTION
Unit will not run.	Blown fuse in line.	Replace fuse and check for cause of blown fuse.
	Bin thermostat set too high.	Adjust thermostat. Set at 38° cut-out, 45° cut-in.
	Loose electrical connection.	Check wiring.
	Switch in 'Off' position.	Turn switch on.
	Inoperative master switch.	Replace switch or thermal overload.
	Off on manual reset low pressure control.	Reset.
Compressor cycles intermittently.	Low Voltage.	Check for overloading.
	Dirty condenser.	Clean.
	Air circulation blocked.	Move unit to correct.
	Inoperative condenser motor.	Replace.
	Non-condensable gases in system.	Purge off.
	Bin thermostat differential too small causing short cycling.	Widen differential 38° cut-out, 45° cut-in.
Making wet ice.	Surrounding air temperature too high.	Correct or move unit.
	Under or over-charge of refrigerant.	Recharge with proper amount. Should frost out of accumulator at least 8".
	High water level in water reservoir.	Lower to 1/4 inch below overflow pipe.
	Back pressure too high.	Overcharge of refrigerant, Faulty compressor or high head pressure. Lower as indicated.
	Faulty compressor or valve plate.	Repair or replace.

ICE MAKER SECTION

Service Analysis Chart

COMPLAINT	POSSIBLE CAUSE	CORRECTION
Excessive noise or chattering. (Cont.)	Low ambient temperature.	Set head pressure and resultant back pressure higher, or move to heated space.
	Gear reducer low on oil charge.	Check oil level and refill to oil level plug.
	Gear reducer loose on frame.	Tighten.
	Pulleys worn or loose on shaft.	Repair or replace.
	Belt cracked or worn.	Replace belt.
	Drive motor end-play or worn bearings.	Repair or replace.
	Motor compressor not floating on springs.	Loosen hold-down bolts.
Machine continues to run with full storage bin.	Storage bin thermostat not properly set or is defective.	Reset or replace. Reset to 38° cut out 45° cut in.

OPERATIONAL TABLE

AVERAGE VALUES

Refrigerant Head Pressure 135 #

Refrigerant Back Pressure 15#

Auger Speed in RPM 11.5

Refrigerant Control - Capillary Tube

Refrigerant R-12

Continuous ice ejection with small drops of water occasionally issued.

Electrical motors check to 75% rated amperage with amprobe.

Suction line flare nut at compressor cool, not frosted.

Compressor oil level shows 1/2 bullseye with compressor off.

CARBONATION

"THE LIFE OF THE DRINK"

No other single element in the Bottling Industry occupies the unique position of Carbonic gas. It is the foundation on which the industry has been built. The Sparkle of lively bubbles which attract the eye and enhance the taste is called "carbonation."

This important element is too often taken for granted. It deserves greater attention--proper and uniform carbonation is as important a taste element in bottled beverages as the flavors themselves.

The information and suggestions on the next few pages are offered to encourage more exact control for obtaining greater uniformity in carbonation.

SOME FACTS ABOUT CO_2

Carbonic Anhydride, Carbonic Gas, or Carbon Dioxide, as it is variously termed, has the chemical symbol CO_2. It is under normal conditions a colorless, odorless gas, one and one-half times heavier than air. Chemically it is the combustion product of the element Carbon. It occurs in nature as the result of all types of combustion.

Carbonated Water has been found in natural springs in many parts of the world. Such springs have been known for centuries and have been highly regarded for beverage purposes.

Many of the desirable characteristics of carbonated beverages are due to the carbonic gas contained in them. It is therefore most important to determine the proper amount of carbonation such beverages should contain and having done that to provide the necessary control to insure uniformity of the product in this respect at all times.

–PROPERTIES–

Color	None
Odor	Pungent
Latent Heat	120 BTU lb. at 0°F.
Critical Pressure	1,055 LBS. sq. in.
Critical Temperature	87.8°F.
Pressure in drums at 70°	839 lbs. sq. in.
1 lb. CO_2	8.50 Cu. ft. at atmospheric pressure and 50°F.
Solid CO_2 (Dry Ice)	110°F.

THE HISTORY OF CARBON DIOXIDE

Carbon dioxide has the distinction of being the first gas discovered. In the early part of the seventeenth century, Von Helmont, a Belgian, prepared it by burning wood and by treating mineral carbonates with acid. Black later discovered that carbon dioxide can combine with caustic alkalis and suggested the name "Fixed Air." It was not until 1781 that its real nature was demonstrated by Lavoisier--"Father of modern Chemistry."

The gas was first obtained in a liquid form by Faraday in 1834. But, of course, these were only laboratory scale experiments. It is claimed that a Prof. Vence of Montpelier, France, made the first soda water in 1750 by mixing a little soda and acid in a bottle of water. This is the orgin, no doubt, of the name "soda water."

The History of Carbon Dioxide

Joseph Priestly, another famous chemist, also made several artificially carbonated waters and in 1772 published a pamphlet entitled "Directions for Impregnating water with Fixed Air in Order to Communicate to it the Peculiar Spirit and Virtues of Pyrmont Water.

This was the beginning of great interest in the manufacture of artificial mineral waters. In England, after Priestly had shown the way, ginger beer came into popularity and later carbonated beverages made with sweet syrups as we know them today.

In America, Philadelphia claims the honor of having the first "soda water" manufacturer. Be that as it may, we find that by the middle of the 19th century, as the demand for CO_2 increased, many investigators were busy devising better and cheaper methods of preparing the gas for beverage purposes. While some of the gas then used was obtained from breweries, much was also obtained from the action of sulphuric acid (vitriol) on marble chips, or carbonate of soda.

Nearly every soft drink manufacturer had his own gas generating outfit and incorporated CO_2 into his beverages by agitation within closed vessels. Needless to say, aside from the cost involved, these operations were not only inefficient, but dangerous to a high degree.

In 1888 Jacob Baur, the founder of the liquid Corporation, conceived the idea of producing carbonic gas for coke gas, compressing it to a liquid state and marketing it in steel cylinders.

In May of 1889, the first cylinder of Red Diamond Gas was shipped from Liquid's first plant at 437 Illinois Street, Chicago. The company was then known as "The Liquid Carbonic Acid Manufacturing Company."

The convenience and economy of Carbonic Gas in cylinders was recognized by the industry and soon replaced the use of generator gas entirely.

CARBONATION AND THE FACTORS WHICH GOVERN IT

Carbonated water is largely a mechanical mixture of CO_2 and water and the term "carbonated water" is usually understood to mean water that contains gas to its capacity.

This capacity varies with pressure and temperature. The amount of gas water will absorb increases directly with the pressure. The amount of gas water will absorb also increases as the temperature decreases.

Therefore, any measure of the actual gas content of carbonated water will depend on the two factors--pressure and temperature.

The unit of measure that has been adopted as standard is "the volume."

One volume is the amount of gas that water will absorb at atmospheric pressure and at 60° Fahrenheit.

A volume of gas occupies the same space as does the water by which it is absorbed.

The pressure gauge on the carbonator or on the regulator or on the volume testing apparatus, does not show atmospheric pressure. This means that zero on the gauge is atmospheric pressure which is approximately fifteen pounds per square inch at sea level.

EFFECT OF TEMPERATURE 1

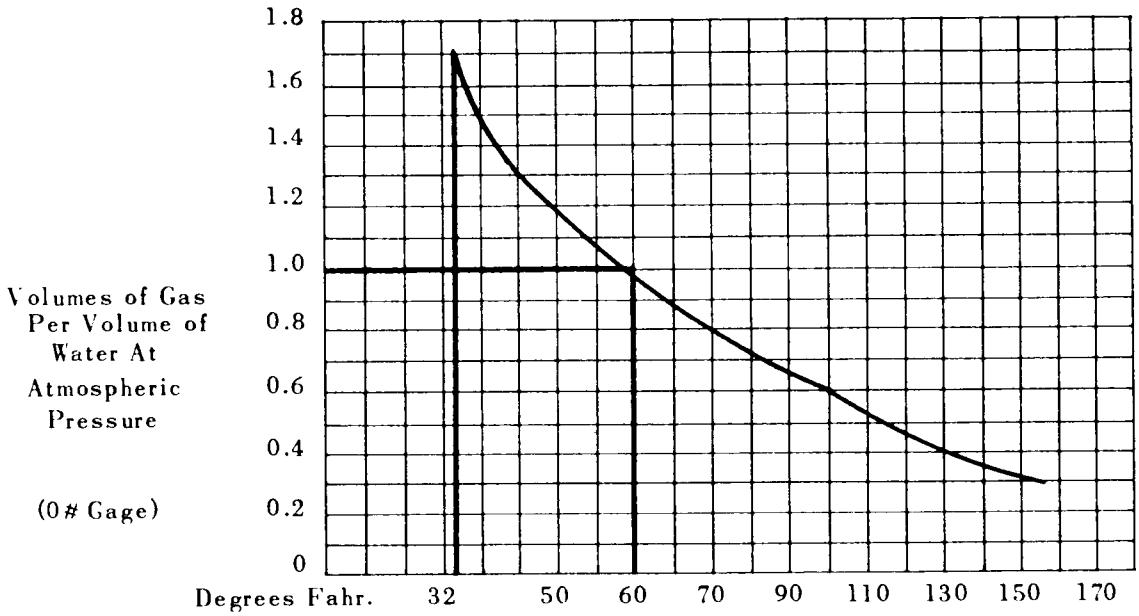

Chart No. 1 shows the effect of temperature change on the amount of gas water will absorb.

The pressure you will note, is constant--namely, atmospheric or 0 lbs. gauge. As the temperature of the water is lowered, the amount of gas it will absorb increases, until at 60°F. it is one volume. Note that from 60° to 150° the slope of the curve changes gradually, from 60° to 32° F., however, the curve changes more abruptly, and for each 10° difference in temperature, a decided increase in gas absorption is apparent, until at 32°, or slightly above the freezing point, we find that 1.7 volumes of gas is absorbed by the water at atmospheric pressure. From this curve it will be apparent that the cooler the water is, the more gas it will absorb.

EFFECT OF PRESSURE 2

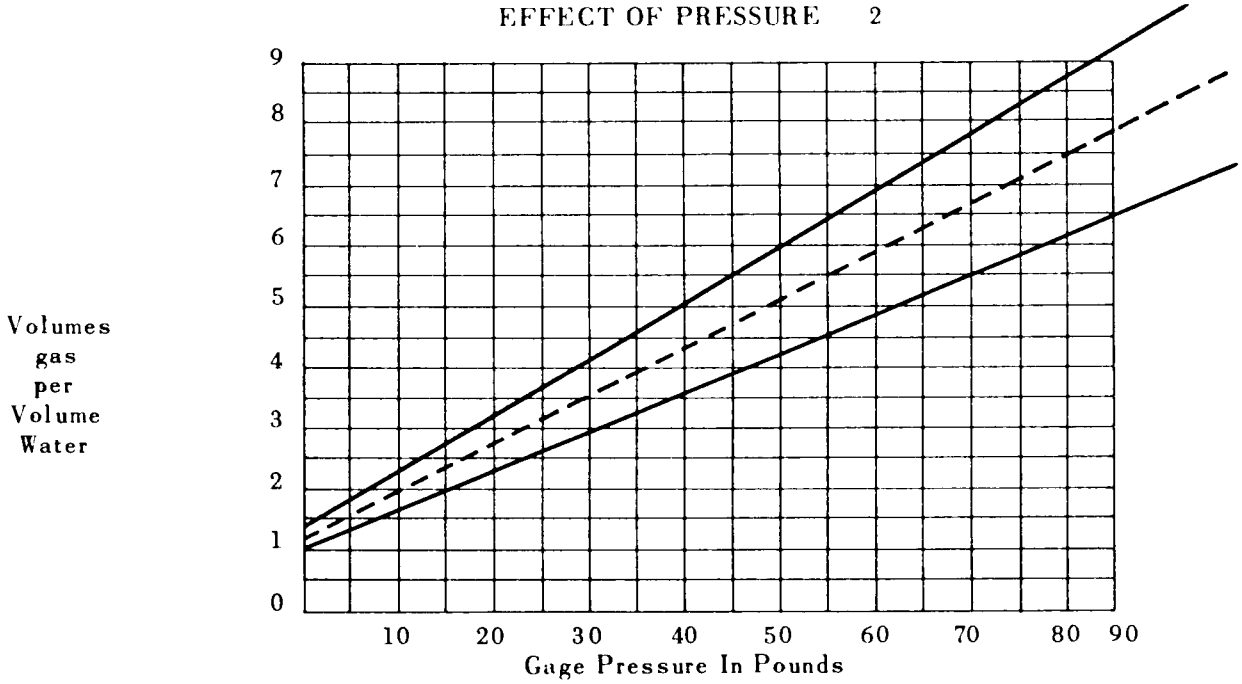

EFFECT OF PRESSURE

Chart No. 2 shows the effect of increasing pressures, temperature being constant, on the amount of gas water will absorb. You will note that the chart is a straight line, of the same slope throughout, indicating that as the pressure is increased, the gas volumes increase. Furthermore, the "gas volume" increase is directly proportional to the pressure. To illustrate--at 0 lbs. gauge and 60°F. we find that the water will absorb one volume of gas, at 15 lbs. increase in pressure, water at 60° will absorb one additional volume of gas. If the temperature of the water is 45°, then, for every 15 lbs. increase in pressure, the water will absorb 1.3 volumes of gas.

FOR A UNIFORM BEVERAGE
Control Carbonation

Carbonation is an important taste ingredient of your beverage. One of the vital attributes of any beverage is uniform taste--bottle after bottle. There are four elements that influence the taste of a beverage.--

1. FLAVOR 2. SWEETNESS 3. CARBONATION 4. TEMPERATURE

All but the final temperature of your drink are susceptible to direct control at your plant. Flavor and sweetness standards should be and probably are definitely established by means of exact formulas.

Carbonation standards should also be established for each flavor in your line--Sparkling water, ginger ales, and other "mixers" should be in the "high carbonation" bracket--the highest carbonation practically obtainable is the ideal to be sought for.

Cola drinks, root beer and other low acid drinks are in the next bracket usually carbonated to 3 or 3½ volumes--

Some bottlers prefer fruit drinks, especially Orange--at a lower carbonation. Determine a standard of carbonation for each flavor that you consider best for your market.

Set up definite instructions for maintaining these standards, just as you maintain standard formulas for the sugar f'avor, acid and other ingredients.

FLAVOR	CARBONATION STANDARD
Root Beer	3½ Volumes

Having determined the carbonation standards, it is important that all concerned know how to control the factors that will enable you to maintain them.

HOW TO PRODUCE UNIFORM BEVERAGES

Bottlers know the importance of developing the proper formula for a beverage. They fully realize that for any bottled beverage to achieve popular favor, it must be right--in flavor, in taste, and in gas content.

How To Produce Uniform Beverages

The development of the proper formula for a beverage is, of course, an essential step in establishing that beverage in popular favor. To keep its popularity, the beverage must be the same from day to day and month to month. The formula must be followed exactly and the beverage produced in just the same manner. This means that perfect control of variable factors is necessary to assure uniformity.

The number of volumes of gas in a finished beverage has a definite relationship to the taste of the beverage. Correct carbonation means a sparkling, pungent, thirst-quenching beverage that completely satisfies the consumer. Low carbonation leaves the beverage with a flat, insipid taste which is unsatisfactory. Finished beverages should be checked at frequent intervals to assure proper carbonation in the bottle.

The amount of sugar in a beverage determines, with a given acid content, its sweetness. The sugar also has another important function in the beverage. Sugar makes the "body" of the beverage and "body" is a necessary background for any flavor. A change in the body changes the taste of the beverage even though the same flavor is used. High quality extracts are, of course, a necessity.

Control of sugar content of the beverage is very important. It depends on the beaume of syrup used and the throw used. Variation in syrup density changes the finished beverage if the throw remains the same. Variation in the throw will also change the beverage if the syrup density is unchanged. By checking the beaume of the finished beverage a control is established where it does the most good.

Uniform finished beveraged can be made only by positive control over such variable factors in beverage production.

Check the density of your syrup with a beaume scale.

Check the actual throw in the bottle by measuring individual sample bottles.

Check the final result by using the finished drink tester on the completed beverage.

Check the carbonation in the finished beverage.

KNOW YOUR WATER

Water that is satisfactory for drinking purposes is generally satisfactory for carbonating. There are very few exceptions to this rule.

The water used for carbonating must be clean. That means free from suspended matter of all kinds including water organisms which may be too small to see except under a microscope.

All water should be properly filtered and it is advisable to use an activated carbon unit after the filter. The ideal set up is to follow the activated carbon unit with a paper filter. This will prevent particles of the carbon coming through with the water.

Chemical composition of the water does not affect carbonation within the limits of potable water. If enough material were in solution to interfere with carbonation, it would not be possible to use the water for drinking purposes.

Organic matter in solution can cause trouble if present in excessive quantities but this trouble is removed by activated carbon.

Know Your Water

It may be necessary to treat water chemically in some cases. Hardness can be removed by chemical treatment and that is sometimes advisable to prevent scale formation on machinery, particularly on soaker parts. Alkalinity can be reduced by chemical treatment and that is advisable if the alkalinity is high enough to affect the taste of the water or if it is sufficient to neutralize too much of the acid in the beverage. If objectionable material is present in the raw water, that may require chemical treatment.

Such treatment, properly handled, does not affect carbonation and it does not change the necessity for proper filtration. Chemical treatment should be followed by filtration.

FOES OF CARBONATION AND HOW TO COMBAT THEM

AIR

Too much air in the water interferes with proper carbonation and also causes the CO_2 gas to leave the water more quickly when the bottle of finished beverage is opened. It is therefore important to to reduce the amount of air present to the minimum.

Some air is present in the raw water supply. More may be added in the mechanical handling of the water. When such water reaches the carbonator, the CO_2 gas tends to drive it out of the water. If steps are not taken to remove it, this air will accumulate in the carbonator and much of it will be carried through in the water and into the finished beverage. That is why all liquid carbonators have an automatic air snift.

CARBONATOR SECTION

HOW IT WORKS

Most of the cold drinks served at a soda fountain are carbonated. Therefore, nothing is more important to the successful operation of a fountain than cold, properly carbonated water to make drinks sparkling, full flavored and fully satisfying in quality.

Water is carbonated by combining it with carbonic acid gas (CO_2). This is done in a sealed chamber by forcing gas from a drum through a pressure regulating valve into the water in this chamber. As the carbonated water is used from this chamber, it is replaced by a high pressure water pump. The operation of this pump is controlled by an automatic switch device which senses the water level.

Two conditions must be maintained in order to induce and hold carbonic gas in water. They are:

1. Pressure
2. Adequate refrigeration or cooling.

In the SCOTSMAN DISPENSER, pressure is supplied by the gas drum and is present throughout the system and keeps the water carbonated. Without adequate cooling, however, carbonation escapes rapidly after the water leaves the faucet and is no longer under pressure. Soft drinks should be dispensed at 40° F. or below. The colder the water the greater the carbonation. With the use of ice a temperature of 32° F. can be reached and held without the danger of freezing as is true with mechanical refrigeration systems. Thus, less CO_2 is used to achieve the same degree of carbonation in a drink.
CO_2 is used to achieve the same degree of carbonation in a drink.

THE GAS DRUM - Source of carbonation

Drums for carbonic acid gas are made of drawn steel tubing and are built to withstand great pressure. As delivered, they contain liquid gas reduced to liquid form by tremendous compression.

Each one is equipped with a safety valve set to blow out before internal pressure can explode the drum itself. Once this valve "pops off", the contents of a drum will escape. Drums, therefore, should always be stored in a cool place to keep the liquid from expanding and increasing pressure inside the gas drum.

Drums are classified by weight. They come, as a rule, in two sizes: 20-lb. drums and 50-lb. drums. These weights refer to the compressed liquid contents and are in addition to the tare weight usually indicated on the head of each drum.

CARBONATOR SECTION

THE REGULATOR GAUGE–ACCESSORY ITEM, NOT INCLUDED WITH DISPENSER

The regulator in the carbonating system is mounted at the outlet of the gas drum. The regulator reduces and controls the pressure of carbonic acid gas before it enters the carbonator . The regulator gauge indicates gas pressure at the regulator outlet valve.

TESTING REGULAR GAUGE - SEE ILLUSTRATION ON FOLLOWING PAGES

The regulator gauge should be tested every time a gas drum is changed and at least once every 60 to 90 days. Follow this procedure:

1. Close the drum head valve (clockwise).
2. Close the regulator outlet valve (clockwise).
3. Loosen the regulator coupling nut.
4. Turn regulator adjusting key clockwise until gas pressure in regulator is released and the needle on the regulator gauge drops to "0". Turn this adjusting key counter-clockwise until it is loose and free.
5. Tighten regulator coupling nut and open drum head valve slowly. (The regulator outlet valve remains closed.)
6. Check the reading of the needle on the gauge. If it remains at "0", the regulator is in good condition. If the needle rises but does not register more than 15 pounds pressure, the regulator is working satisfactorily within acceptable limits. If the needle creeps to 30 pounds pressure or more, the regulator needs immediate repair.

HOW TO FIND AND STOP GAS LEAKS

Whenever a fresh drum of CO_2 gas is connected to the carbonating system, open the drum valve until the regulator gauge reaches maximum pressure (approximately 120 to 125 lbs.) and then close drum valve.

If the needle of the gauge on the regulator continues to drop, there is a leak in the system. Due to some absorption of gas in the water in the carbonator, the needle may drop a few pounds, but it should then come to a stop if there is no leak.

If a leak is found by this method, proceed to locate it as follows:

You can test the carbonation system for gas leaks by applying shaving soap lather with a shaving brush to all joints, connections, and valves. If there is a leak, bubbles will appear.

If gas is escaping at the stem of the drum head valve, open valve all the way. Usually this closes a leak through the packing around valve stem. Also tighten packing nut to keep gas from escaping through packing.

CARBONATOR SECTION

Make sure that the regulator coupling nut and regulator valve coupling are tight and that both contain a good fiber washer.

Make sure that the water back-pressure check valve is functioning properly.

Sometimes it is difficult to detect a leak in the regulator gauge. In checking here apply the lather generously, and watch closely.

If a leak occurs near either end of a hose, cut off the defective end and refasten hose with clamps. Otherwise, replace hose.

OPERATION

Rotate pump coupling by hand to insure free operation of pump. Turn on CO_2 gas cylinder and adjust high pressure side to approximately 85 # P.S.I. This pressure goes to carbonator tank.

Adjust the low side pressure gauge to 20 # P.S.I. This pressure is fed to your syrup or product tanks through flexible tubing and serves to push the product up to the post mix points of use.

Open several electric valves for one-half minute to blow all air out of carbonator. Close valves, turn on water supply and turn on power supply to pump motor. When pump stops, open valves again until full stream of water is obtained. Draw several glasses of water and note pump operation. Pump will operate after approximately 14 ounces of carbonated water have been drawn. (If required carbonator can be purged of air by pulling up relief valve stem).

The carbonator will operate satisfactorily on CO_2 pressures from 60 to 120 pounds. Set regulator at 85 lbs. for maximum gas economy or adjust to suit requirements of the valve used.

The system is completely automatic in operation, and requires no attention except maintaining CO_2 supply, and periodic servicing of water supply line filter.

IMPORTANT: Insufficient water supply will cause noisy operation and eventual damage to pump. If strainer and filter are clear and line valves open, noisy pump operation indicates insufficient water supply.

WARNING: If the installation is idle and exposed to freezing temperatures, disconnect water supply line and blow all water out of carbonator tank. Either drain pump or fill it with a solution of one-part glycerine and one-part water.

CARBONATOR SECTION

CONTROL LEVEL SWITCH

The new carbonator tank made by Bastian-Blessing is operated by a control box or relay through two electrodes - one long and one short. When water level reaches short electrode, it shuts off pump - then when water level falls below the long electrode, the pump is automatically started up by means of the control box or relay.

HOW TO CHANGE A GAS DRUM - NEXT PAGE - SINGLE REGULATOR IS SHOWN

1. Close drum head valve (A) (clockwise).
2. Close regulator outlet valve (B) (clockwise).
3. Disconnect regulator from drum by removing regulator coupling nut (C). Gauge should drop to "0".
4. If gauge does not drop to "0", turn regulator key (D) clockwise to allow all gas to escape from the body of the regulator through the main connection.
5. Turn regulator key (D) counter-clockwise until it is free and loose and regulator is closed.
6. Put full drum in place of one being replaced. Couple regulator coupling nut (C) to new gas drum, first making certain that there is a good fiber washer at the connection.
7. Open drum head valve (A) all the way, turning it as far as it will go to bring packing up tight against the shoulder of the valve stem.
8. Turn regulator key (D) clockwise slowly until standard operating pressure, as indicated on the gauge, is reached. Unless you have a low pressure carbonator the standard operating pressure is 100 lbs., depending on the manufacturer's recommendation.
9. Open regulator outlet valve (B) slowly and release gas to carbonator. As pressure equalizes, open this valve all the way.

WASHERS: In gas connections and lines under high pressure, use fiber washers only. In lines carrying liquids or subject to relatively low pressures, rubber or leather washers should be used.

Keep gas turned on at all times to insure uniform well-carbonated water.

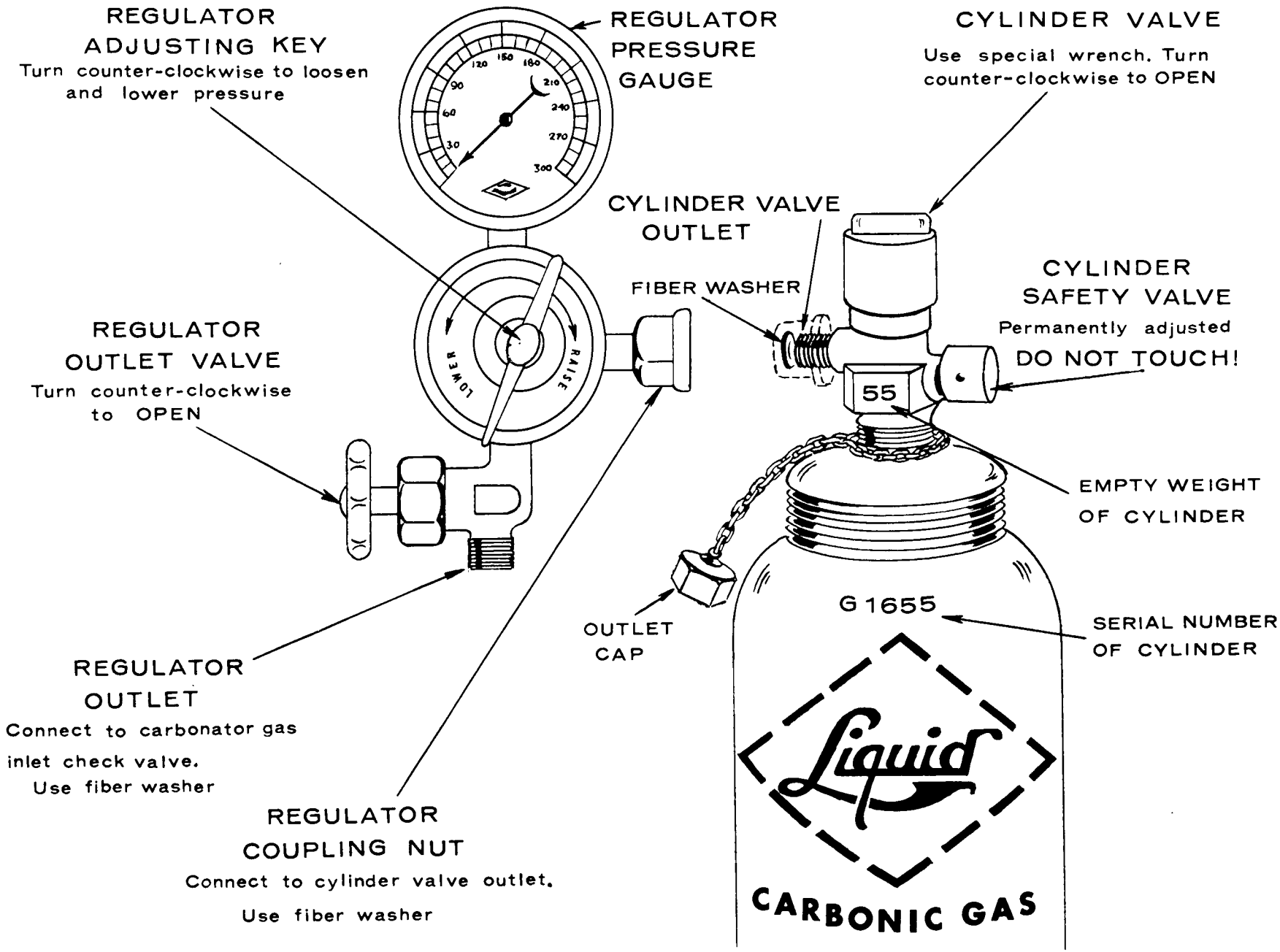
REGULATOR
ADJUSTING KEY
Turn counter-clockwise to loosen and lower pressure
REGULATOR
PRESSURE
GAUGE
CYLINDER VALVE
Use special wrench. Turn counter-clockwise to OPEN
CYLINDER VALVE
OUTLET
FIBER WASHER
CYLINDER
SAFETY VALVE
Permanently adjusted
DO NOT TOUCH!
REGULATOR
OUTLET VALVE
Turn counter-clockwise to OPEN
55
EMPTY WEIGHT
OF CYLINDER
OUTLET
CAP
G 1655
SERIAL NUMBER
OF CYLINDER
REGULATOR
OUTLET
Connect to carbonator gas inlet check valve.
Use fiber washer
REGULATOR
COUPLING NUT
Connect to cylinder valve outlet.
Use fiber washer
Liquid
CARBONIC GAS

DISPENSING SCHEMATIC

SD-3 & SD-4

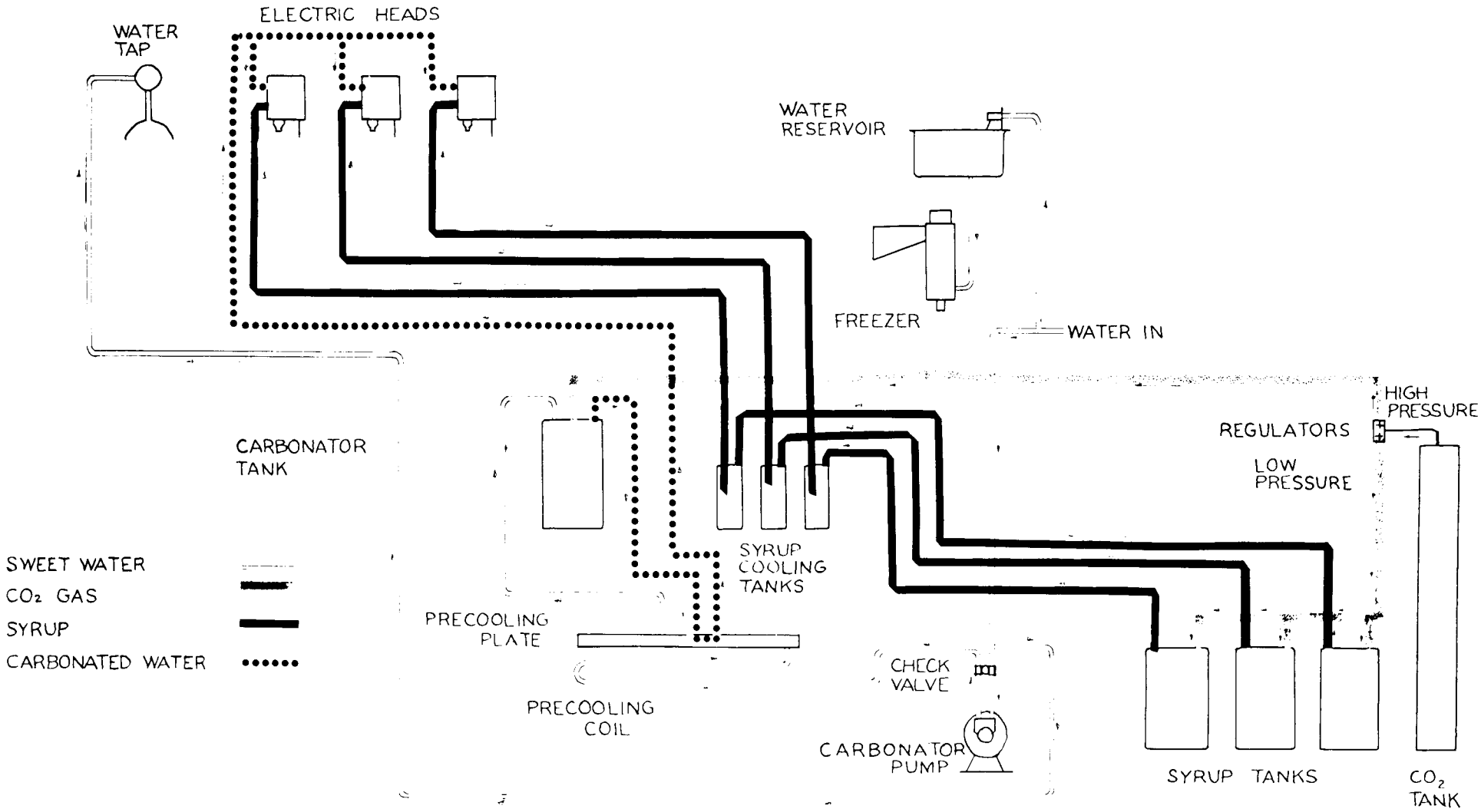

PRINCIPLE OF OPERATION

The operation of controlling liquid levels by means of electrodes is simple, accurate and positive. A combination of a matched relay and transformer, integrally mounted and connected to one or more insulated electrodes, arranged to contact the liquid surface at predetermined levels, actuates the opening and closing of electrical contacts on the relay, which may be used to control a motor, motorized valve, solenoid valve, alarm or other device.

Figures 1 and 2 illustrate the basic principle of operation in its simplest form. A relay with a single normally open load contact, a transformer, an electrode and liquid container are shown. In Figure 1, the liquid is not touching the electrode, hence the electrode circuit is open and no current flows through the relay coil to energize the relay and close the load contact. If the liquid

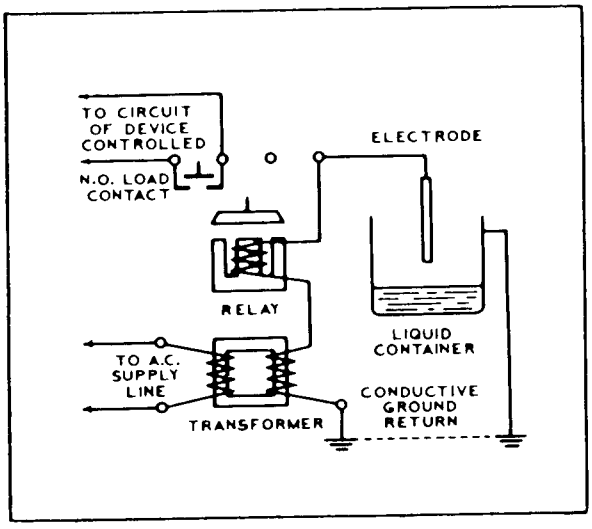

Figure 1

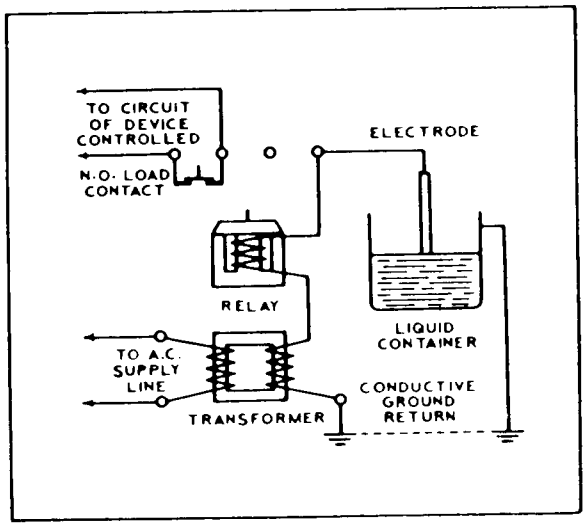

Figure 2

level rises until it touches the electrode, as shown in Figure 2, the liquid provides a conductive path between the electrode and liquid container, closing the circuit through the transformer secondary and relay coil. Thus, the relay is energized and operates to close the normally open load contact. It is evident that the liquid acts as a switch in the electrode circuit and the relay, with its load contact, responds to the position of the liquid level in relation to the electrode.

The control system just described, with one normally open load contact, is used as a high level alarm or low level cutoff. If a normally closed load contact replaces the normally open contact shown, the device then becomes a low level alarm or high level cutoff.

In a pumping operation it is desirable to start the pump at one level and stop at another. The control illustrated in Figures 1 and 2 would not be satisfactory for pumping service since the pump would start and stop rapidly as the liquid contacted and receded from the tip of the electrode. In order to obtain a pumping range a second electrode of greater length is connected to the first electrode through a normally open contact on the relay. This additional contact is known as a "holding contact", since it holds the electrode circuit closed through the long electrode after the level has fallen below the short electrode.

There are two pumping operations; pump down or lowering the level as in emptying a sump, and pump up or raising the level, as when filling a boiler or storage tank. The use of two electrodes and holding contact for controlling pump down and pump up operations is illustrated in in Figures 3 and 4, respectively.

In Figure 3, for pump down operation, the load contact is normally open. When the liquid touches the upper electrode the relay is closed, thus closing the load and holding contacts. The pump will start and although the liquid level immediately recedes from the high electrode, the relay will reamin closed by means of the circuit thru the low electrode and holding contact. This

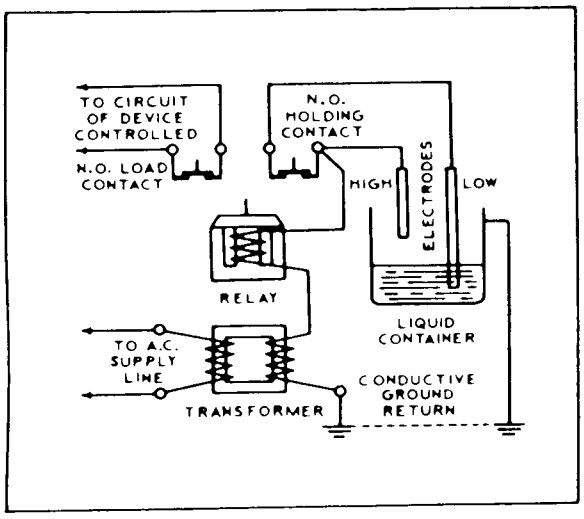

Figure 3

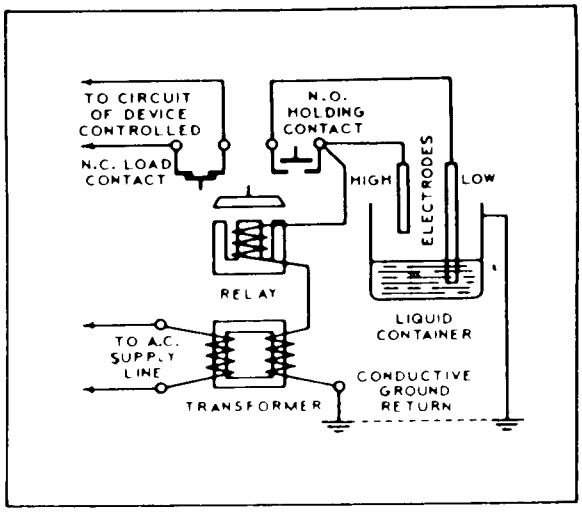

Figure 4

condition is maintained until the liquid recedes from the low electrode when the relay releases to open the load and holding contacts. As the liquid again rises, no action will occur when the low electrode is immersed because the holding contact to the low electrode is open. However, when the level reaches the high electrode, electrical contact is established and the relay closes to repeat the pumping cycle.

In Figure 4, for the pump up operation, the load contact is normally closed. When the liquid touches the high electrode the relay is closed, thus opening the normally closed load contact and closing the normally open holding contact. The pump will stop and although the liquid recedes from the high electrode, the relay will remain closed by means of the circuit thru the low electrode and holding contact. This condition is maintained until the level recedes from the low electrode, when the relay releases to close the load contact and open the holding contact. As the liquid again rises, by operation of the pump, no action will occur when the low electrode is immersed because the holding contact to the low electrode is open. However, when the level reaches the high electrode, electrical contact is established and the relay closes to stop the pump.

Where liquids are confined in non-metallic liquid containers the ground terminal on the control is connected either to a permanently submerged metallic object in the liquid container or to an additional "ground" electrode of length equal to or greater than the longest other electrode in the control system.

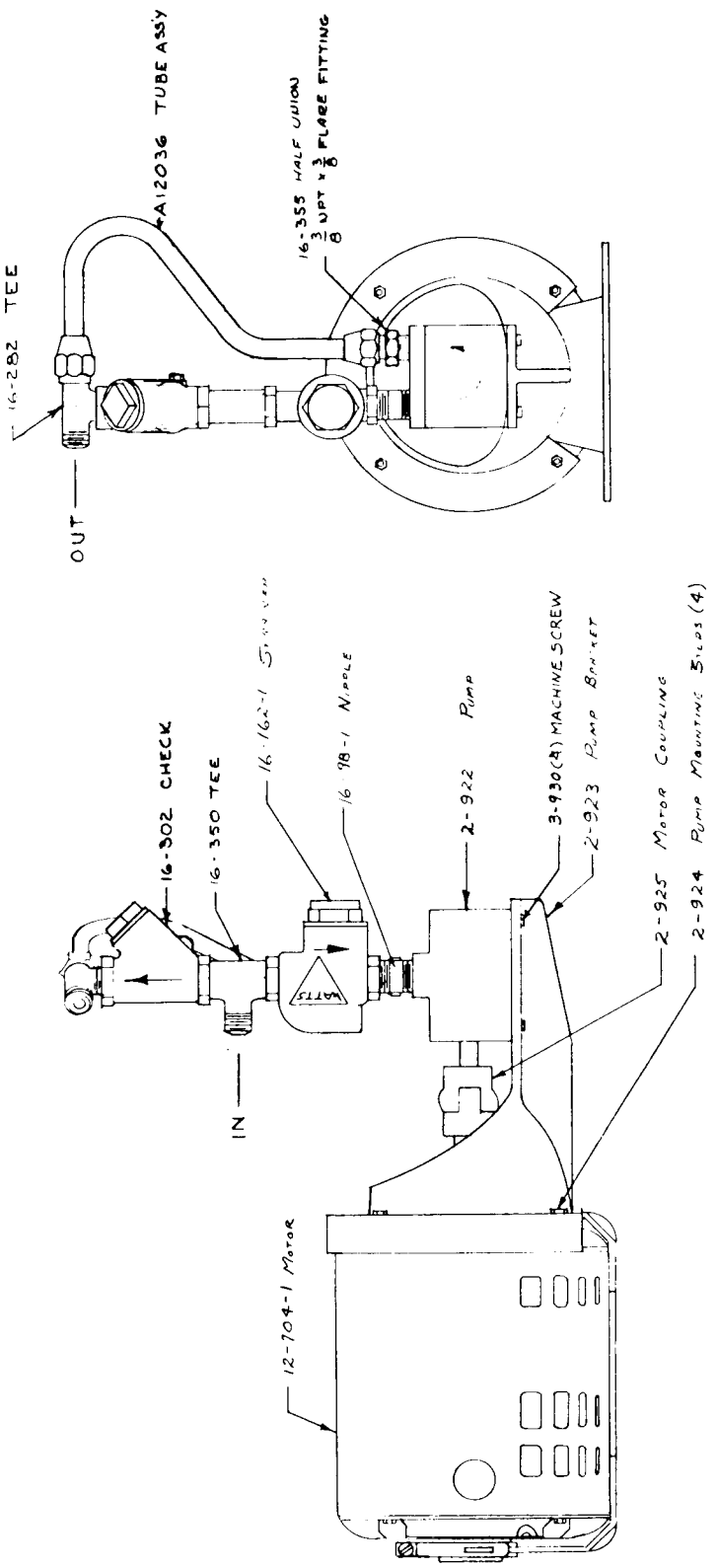

CARBONATOR PUMP, MOTOR, ASSEMBLY

SD-3, SD-4

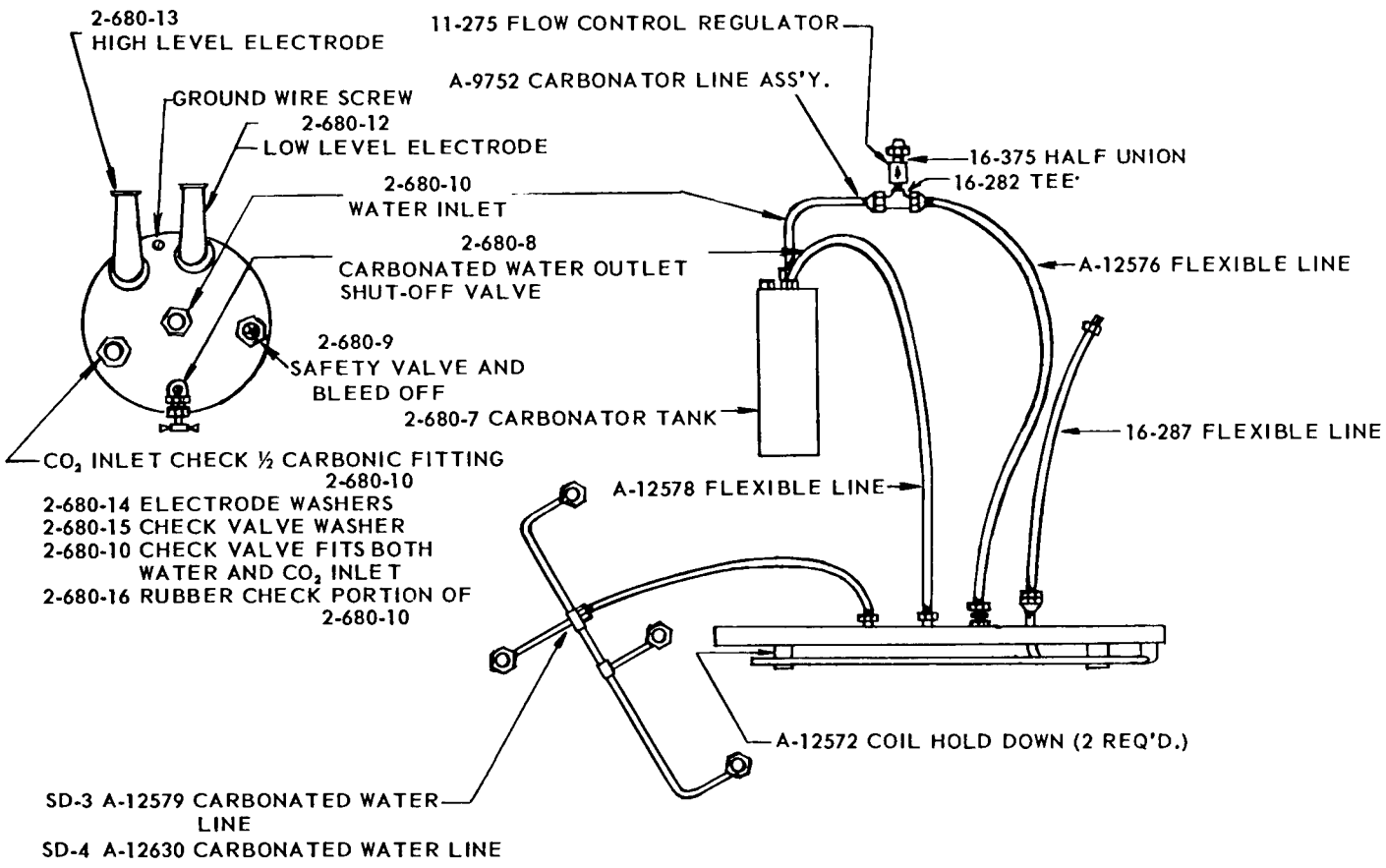

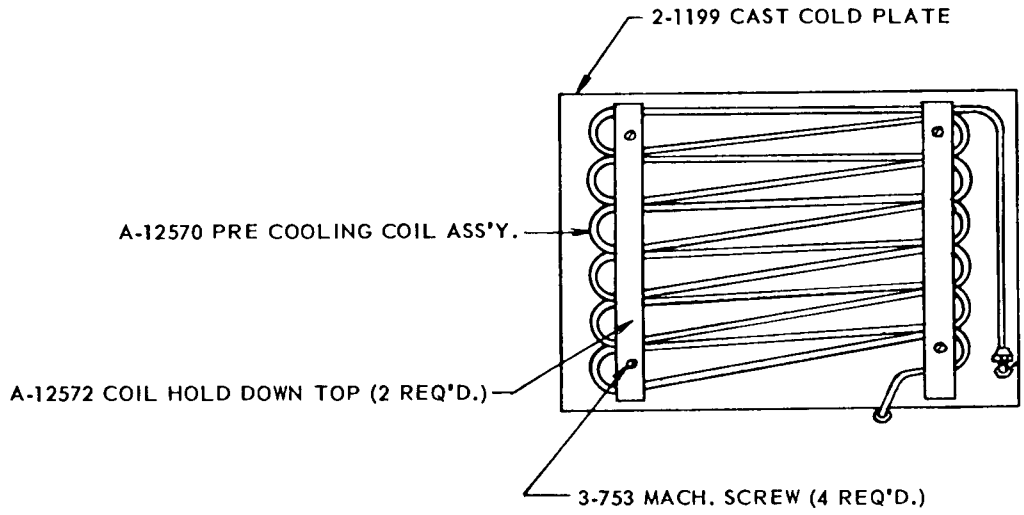

CARBONATED WATER COOLING
SD-3, SD-4

SUBJECT: CLEANING OF COLD PLATES SD-3 AND SD-4

Gentlemen:

There are several important items concerning the SD-1 and SD-2 Scotsman Drink Dispensers that have cropped up periodically through the years and for this reason, we are consolidating some of the more common complaints experienced as well as the solutions necessary.

Because of the similarity of the SD-3s and SD-4s in the manner of producing carbonated water, these problems and solutions apply equally well to these new models.

PROBLEM	SOLUTION
Lack of, or inadequate carbonation	Make sure CO_2 regulator is working and set at 95 to 115 pounds gauge
Leak in line from CO_2 bottle to carbonator tank	Repair
Trapped air or foreign gases in tank	Bleed off
Carbonated Water Throughout system	Excessive pressure on CO_2, reduce to 85 to 95 pounds
Leaking rubber check valve on Bastian-Blessing	Replace Rubber check valve only Part No. 2-680-16
Foaming Drinks	Dispensing nozzel too far from cup downfall causes foaming
	Not enough ice for cooling on plate
	Warm Syrup
Missing Bin Stand Pipe	Replace - Must hold head of water for pre-cooling coil
Algae Growth on bottom of cold plate and pre-cooling coil.	Requires a complete cleaning of cold plates and the bin, should be accomplished once per year, minimum
	Most common, bin stand pipe removed or misplaced in bottom of bin below cold plate

This growth not only is unsanitary but retards the cooling effect of water entering the pre-cooling coil and then the second half of the post-cooling coil, producing warm carbonated water and subsequently foaming and warm beverages.

Remove all ice from the large aluminum cold plate and tilt the cold plate up. This will disclose the bottom pre-cooling coil which is tinned copper attached to the bottom of the coil and you will note a tremendous amount of growth if this plate has not been cleaned recently. This could be cleaned off with a brush and hot water and a small amount of Scotsman ice machine cleaner and then the entire bin and cold plate completely washed down with a warm soda water mixture to neutralize any acid effects.

Then replace the stand pipe in the drain to keep a head of cold water on the pre-cooling coil, reposition the plate and lay flat in the bin.

Numerous complaints have been received regarding the quality of the drinks that have been traced to this cause and it is well to instruct the user to have this service performed at least once per year if not every six months, or on your regular Scotsman Planned Maintenance calls.

Service Department
SCOTSMAN
QUEEN PRODUCTS DIVISION
OF KING-SEELEY THERMOS CO.
505 Front Street
Albert Lea, Minnesota

CARBONATOR SECTION

Service Analysis Chart

COMPLAINT	POSSIBLE CAUSE	CORRECTION
No carbonated water.	Water supply shut off. Air-bound water pump. Worn pump checks. Clogged water inlet screen. Clogged filter.	Re-establish source. Vent pump. Replace. Clean. Clean. Replace cartridge.
Flat carbonated water.	Gas drum empty or low. Gas turned off. Regulator gauge set too low. Gas line closed by smashed washer. Agitator sprocket or pulleys loose. Water pressure too high (over 50 lbs)	Connect full drum. Turn on gas. Increase gas pressure. Replace fiber washer. Tighten. Adjust if possible or install pressure reducer.
Metallic taste.	Block-tin lining damaged. Carbonated water backing up into city water line. Carbonated water line connected by mistake to brass or copper water coils instead of block tin.	Repair lining. Clean water back-pressure check valve, replace washer. Make proper connection.
Carbonated water off taste.	Oil, dirt or grease inside carbonator. Tainted gas.	Clean carbonator. Sniff gas at drum head to determine if drum should be replaced.
Milky carbonated water.	Air in carbonator. Pump sucking air.	Vent carbonator. Adjust pump packing.
Carbonator fills with water.	Water pressure too high. Gas pressure too low. Gas drum empty.	Adjust if possible, or install pressure reducer. Set regulator key to deliver proper gas pressure. Replace.
Carbonated water backs up into city water line.	Dirty or worn back-pressure check valve.	Clean or replace valve seats.
Carbonator runs but only CO_2 gas comes out with syrup.	Pump running backwards.	Reverse rotation of motor by interchanging leads inside motor.

CARBONATOR SECTION

Service Analysis Chart

COMPLAINT	POSSIBLE CAUSE	CORRECTION
Excessive pumping.	Closed water supply valve.	Open valve.
	Water supply (building or city) shut off.	Re-establish source.
	Automatic switch out of order.	Check switch, replace if necessary.
	Water inlet screen clogged.	Remove and clean screen.
	Pump inlet or check valve out of order.	Repair or replace.
	Swollen washers in hose couplings obstruct flow of water.	Replace washers.
Carbonator pounds when running.	Air in pump.	Vent pump.
	Water inlet screen plugged.	Remove and clean.
	Scale in pipe.	Remove scale.
	Undetermined.	Try installing a short length of hose in water line to carbonator- this will cushion and absorb shock of water hammer.

SAFETY FIRST - Prevent accidents - Always turn off power before working on carbonator.

DISPENSER SECTION

NOTES:
△ - MC-29 THRU MC-35
△ - MC-20 THRU MC-22
△ - MC-41, MC42 & MC43.

NO.	PART NO.	DESCRIPTION
35	MC-12	SCREW, SWITCH COVER
34	MC-11	PLATE, SWITCH COVER
33	MC-9	MICRO-SWITCH
32	MC-8	INSULATOR, MICRO-SWITCH
31	MC-7	ACTUATOR, MICRO-SWITCH
30	MC-10	LEVER, ACTUATING
29	MC-46	GROUNDING STRAP
28	MC-2	STEM, METERING
27	MC-3	"O" RING, METERING STEM
26	MC-13	SERVICE CORD
25	MC-39	"O" RING, INLET FITTING
24	MC-43	INLET FITTING
23	MC-38	SCREW, RETAINER
22	MC-37	SCREW, MOUNTING
21	MC-40	SPOUT
20	MC-6	SCREW, DIFFUSER
19	MC-4	DIFFUSER
18	MC-5	"O" RING, DIFFUSER
17	MC-47	McCANN CREST
16	MC-1	BASE, FAUCET
15	MC-14	"O" RING, PLUNGER HOUSING
14	MC-15	PLUNGER, SOLENOID
13	MC-16	SPRING, SOLENOID PLUNGER
12	MC-17	HOUSING, PLUNGER
11	MC-19	SCREW, PLUNGER HOUSING
10	MC-20	COIL, SOLENOID
9	MC-44	NUTS, STA-KON WIRE
8	MC-23	HOUSING, COIL
7	MC-24	GROMMET, COIL HOUSING
6	MC-26	LOCKWASHER, SOLENOID VALVE STEM
5	MC-27	SCREW, SOLENOID VALVE STEM
4	MC-25	STUD, SOLENOID VALVE STEM
3	MC-28	GASKET, COVER
2	MC-29	COVER, TOUCH-O-MATIC
1	MC-36	ACORN NUT, COVER

TOUCH-O-MATIC FAUCET
MODEL NO. TMC-10

McCANN'S
ENGINEERING AND MFG. CO.
4300 W. CYPRESS ST., GLENDALE, CALIF.

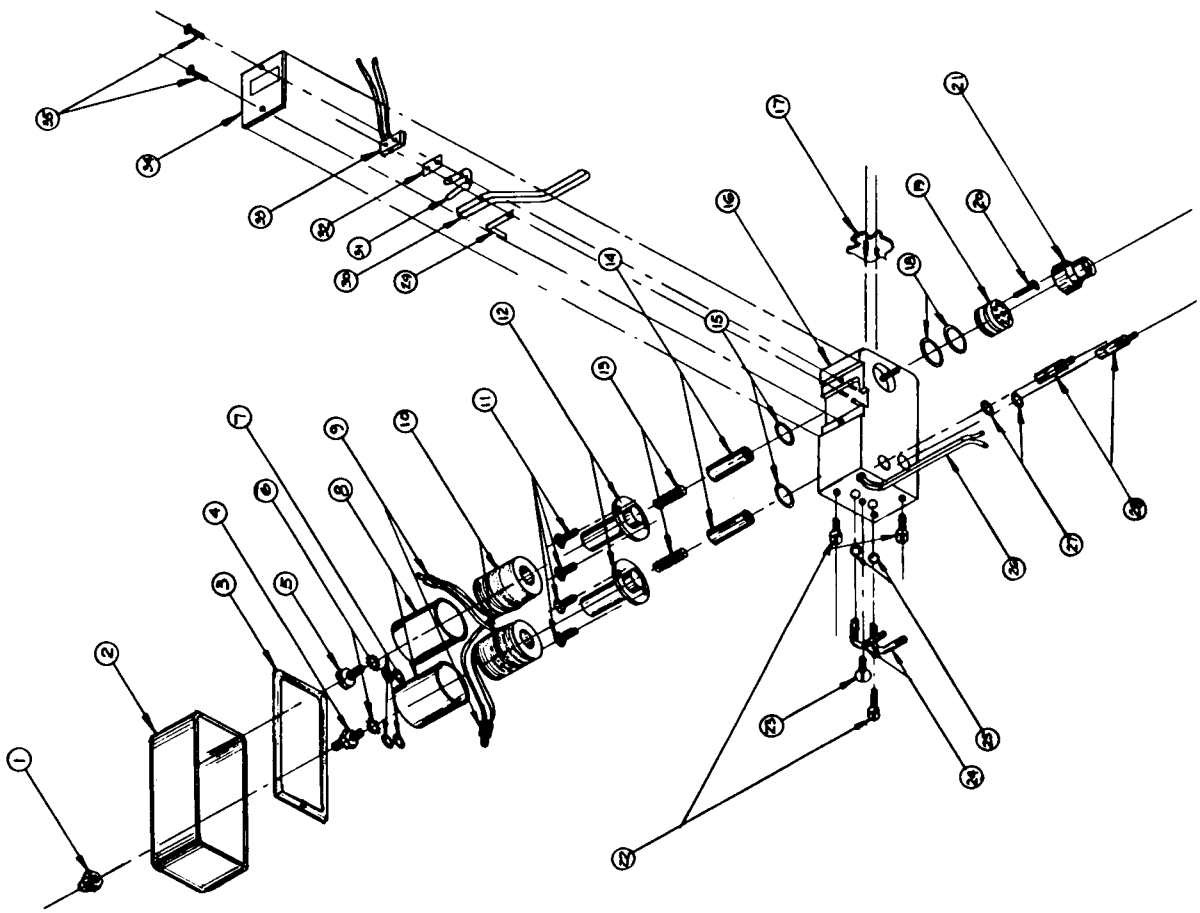

I. PRINCIPLE OF OPERATION

When the operator presses a glass against the main actuating lever (30) of the faucet, this lever in turn depresses the actuating button on the electric Micro-switch (33). The switch then completes the circuit, allowing electricity to flow immediately to both solenoid valve coils (10). With the coils energized, they immediately act as electro magnets by creating a magnetic force that raises the plungers (14) located in the center of the coils. When these two plungers are in a raised position, syrup and water are then permitted to flow through an orofice, into the spout (21) (mixing chamber) and finally end up in the operators glass blended perfectly.

II. METHOD OF SANITIZING OR CLEANING FAUCET

The faucet need not be dismantled in order to be cleansed. All that is required is simply fill a spare syrup tank with your cleaning agent, connect it to the syrup line to the desired faucet and flush it through faucet and syrup system with CO_2 pressure. A clean water rinse may be accomplished in the same manner.

The faucet spout should be removed and cleaned weekly.

III. POWER SOURCE

Our standard Touch-O-Matic Faucet is supplied with 115 Volt A.C. - 60 Cycle coils. Ilowever, they can be supplied with various voltages. Naturally each faucet is clearly marked regarding its required voltage, the coil housing (8) is also marked accordingly. The coil itself is color coded to identify its voltage as follows:

RED	LEADS indicate	-	115 VAC	- 60 Cycle
BLACK	LEADS indicate	-	12 VAC	- 60 Cycle
YELLOW	LEADS indicate	-	12 VDC	-
BLUE	LEADS indicate	-	6 VDC	

IV. METHOD OF DISMANTLING SOLENOID VALVE

1. Remove screw (5) and lock washer from plunger housing.
2. Remove coil housing (8).
3. Remove coil (10) by lifting only, do not cut wires.
4. Remove the 2 screws (11) from plunger housing base.
5. Remove plunger housing (12), lift straight up.
6. Remove plunger spring (13).
7. Remove plunger (14).

TO REASSEMBLE - REVERSE PROCEDURE.

NOTE!! Before removing a faucet from a dispenser or fountain, or before dismantling a solenoid valve that is mounted on a fountain, be sure to turn off the CO_2 pressure to the syrup tank and carbonator. Also, bleed off the CO_2 pressure on the syrup tank and carbonator, if there are no shut-off valves on the fountain.

V. SERVICE TIPS

1. When the 2 screws (11) that fasten the plunger housing (12) to the plastic valve base (16) are replaced, they should be screwed down all the way. In other words, be sure that the large stainless washer on the plunger housing (12) is pressed firmly against the plastic. If one screw was all the way in and the other was only half way in (for example), the plunger in the housing might "cock" and cause dripping - Caution - these screws do not have to be extra tight, just snug down.

2. When reassembling solenoid, with plunger spring (13), place in plunger (14), allow the plunger housing (12) to be placed over the plunger and spring and held together, thus preventing the plunger spring from falling out while assembling.

3. There is a difference between the Touch-O-Matic Non-Carbonated (NC) and the Carbonated faucet. The Non-Carbonated faucets are marked NC on the underside of the faucet. The NC faucet is designed for plain water. Since this pressure could vary from 10 to 100 psi at various locations throughout the same city, we arrived at a medium flow of water. On this faucet, we use a 3/16" orifice which will pass a sufficient amount of water at 10 psi. This faucet can work on pressure up to 50 psi, but no higher or the plunger will fail to open occasionally.

   The Carbonated faucet will operate on pressures up to 125 psi, by using a smaller 1/8" orifice.

4. RECOMMENDED OPERATING PRESSURES

   10 to 20 psi on syrup - average 15 psi.
   80 to 120 psi on carbonated water - average 100 psi.

5. RATE OF FLOW AND PROPER BLENDING

   The fastest rate of flow recommended for the Touch-O-Matic Faucet is 2 ounces per second of finished drink. In other words, a 6 ounce finished drink should take at least 3 seconds to pour. If a faster pour is used, the carbonation in the drink would be reduced.

   The typical blend used, is 1 ounce of syrup and 5 ounces of water for a finished 6 ounce drink. However, this may vary with the brand of syrup used, therefore check with your syrup supplier.

   To increase flow of syrup or water, turn metering screw out (counter-clockwise) and inward (clockwise) to decrease flow. These adjustments are sensitive and should be treated as such, by not turning more than an eighth of a turn at a time.

6. When replacing Spring Actuator (31) on micro-switch, pull switch straight out evenly. If switch is raised unevenly, it will bind and make it difficult to remove. When replacing switch, be sure to have actuating button of switch at top position not at the bottom. This will insure longer life of the actuating spring.

TROUBLE SHOOTING

	CORRECTION
I. SPOUT DIFFICULTIES	
a. Spout is difficult to remove.	Lubricate "O" ring on diffuser (19) with mutton tallow or pure white vasoline (small amount.)
b. Spout comes off too easily.	Remove spout and clean both spout and "O" ring on diffuser, then dry with cloth.
II. NOISY SOLENOID VALVE	
a. Dirt or particles in back of plunger.	Operate faucet several times to flush out, or remove plunger and clean.
III. MAIN ACTUATOR PRESSED IN, SYRUP DELIVERED, BUT NO WATER	
a. Water pressure too high.	Reduce pressure. See if it is a NC faucet being used as a carbonated.
b. Coil defective or bad connection. (Rear coil)	Check connections and or replace coil.
IV. MAIN ACTUATOR PRESSED IN, WATER DELIVERED, BUT NO SYRUP	
a. Coil defective or bad connection.	Check connections and or replace coil.
V. MAIN ACTUATOR PRESSED IN, NO WATER OR SYRUP IS DELIVERED	
a. Defective switch.	Replace switch.
b. Actuating spring bent.	Replace or repair spring actuator.
c. Actuating spring broken.	Replace spring actuator.
VI. INLET FITTINGS SHOW LEAKAGE (24)	
a. Nicked or cut "O" ring.	Replace "O" ring.
b. Dirt on "O" ring.	Clean "O" ring.
c. Worn "O" ring.	Replace "O" ring.

VII. METER STEM SHOWS LEAKAGE (28)

Same steps as VI.

VIII. PLUNGER HOUSING SHOWS LEAKAGE (12)

Same steps as VI.

IX. FAUCET DRIPS SYRUP OR WATER WHEN NOT IN OPERATION

a. Dirt or foreign matter on plunger rubber seat (14)	Operate faucet several times to flush out, or remove plunger from solenoid valve and clean.
b. Nick or cut in rubber seat of plunger.	Replace plunger. *(Factory exchange)
c. Broken or defective plunger spring (13).	Replace spring.

X. FAUCET ALLOWS DRINK TO BE DISPENSED WHEN NOT OPERATED

a. Defective switch	Replace switch.

*Plungers with worn out or defective rubber seats may be exchanged with the factory. The exchange price will be half price of the cost of a new plunger.

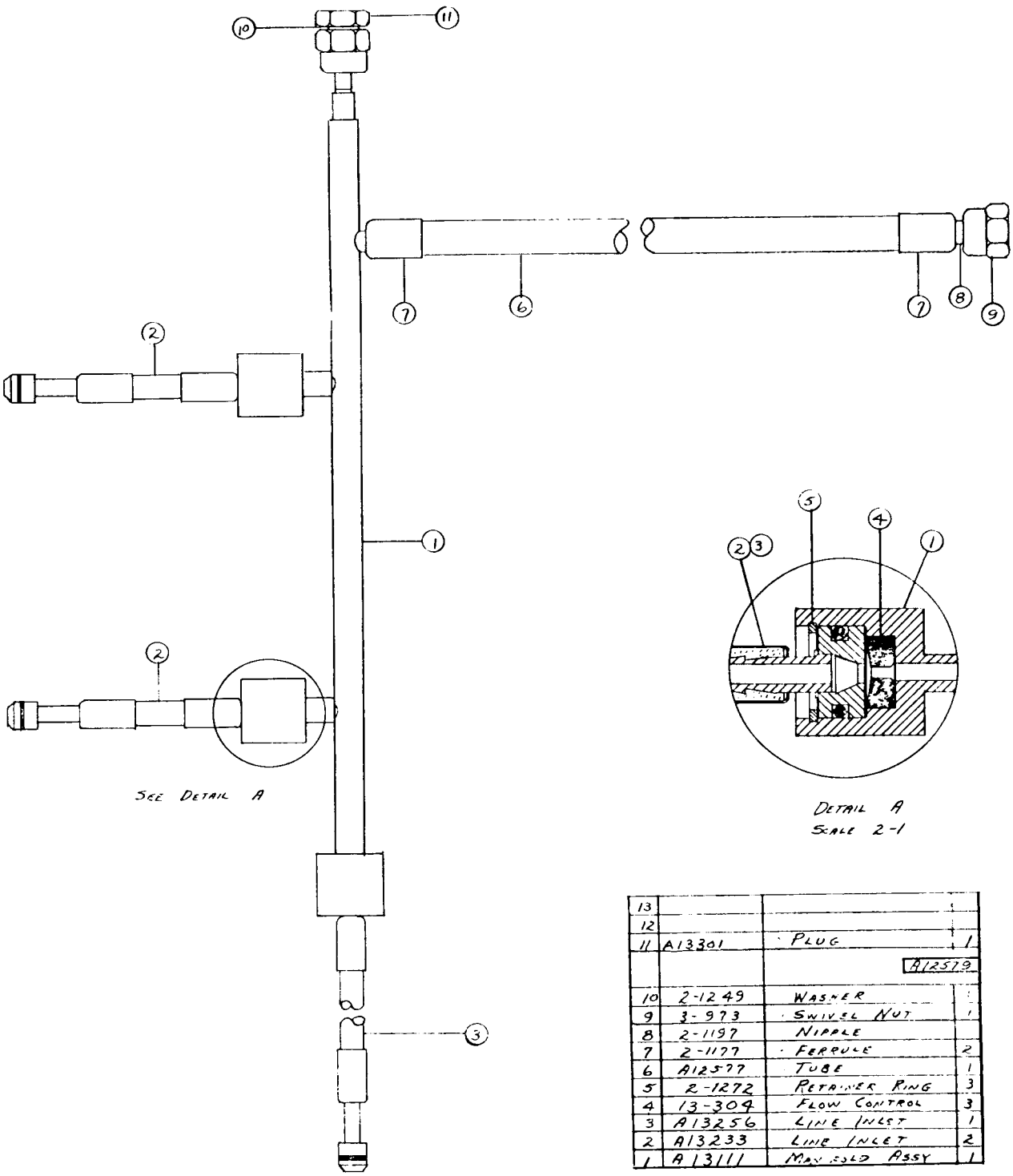

DETAIL A
SCALE 2-1

13			
12			
11	A13301	PLUG	1
		A12579	
10	2-1249	WASHER	1
9	3-973	SWIVEL NUT	1
8	2-1197	NIPPLE	
7	2-1177	FERRULE	2
6	A12577	TUBE	1
5	2-1272	RETAINER RING	3
4	13-304	FLOW CONTROL	3
3	A13256	LINE INLET	1
2	A13233	LINE INLET	2
1	A13111	MANIFOLD ASSY	1

CARBONATED WATER MANIFOLD ASSEMBLY

PARTS LIST

DESCRIPTION	PART NO. SD-3	PART NO. SD-4
CABINET PARTS		
Case Assembly	A-12615-30	A-12652-30
Front Door Assembly	A-12612-30	A-12648-30
Right Side Door Assembly	S-7165	Same
Rear Door Assembly	A-6514	A-12650-30
Left Side Door Assembly	S-9405	S-9405
Emblem	S-3188	Same
Moulding Strip Case Bottom 2/Unit	A-8902-4	A-8902-6
Legs	A-12405	Same
Hood Assembly - No Top	A-12594	A-12633
Hinged Bin Door Assembly	2-1208	Same
Hood Top Assembly	A-12604	A-12638
Moulding Strip Back 24"	A-6509	A-13000
Moulding Strip Front 87 1/4	A-6510	A-12641
Moulding Insert (Black)	A-3640 Order by Foot	Same
Drip Tray Grill Syrup	A-12609	A-12643
Drip Tray Grill Water	A-12673	A-12673
Storage Bin Assembly	A-12556	A-12625
Storage Drain Fitting (Male)	A-7657	Same
"O" Ring	2-530	Same
Storage Drain Assembly	A-6446	Same
Storage Drain Fitting (Female)	A-6447	Same
Bin Standpipe Strainer	A-7445	Same
Grommet	13-125	Same
Grommet	13-194	Same
Grommet	13-124	Same
Bulb Bracket	S-7312	Same
CO_2 AND WATER CIRCUIT		
Water Inlet Line Assembly	A-12564	Same
Plastic Clip, Water Line	2-631	Same
Pressure Water Line Assembly	A-12566	Same
Water CO_2 Line Assembly (Outlet)	A-12578	Same
Carbonator Line Assembly	A-9752	A-9752
Glass Filler Line Assembly	A-12843	Same
Carbonator Water Line Ass'y.	A-12568	Same
Reservoir Assembly Final	A-12588	Same
Water Inlet Valve	S-8138	Same
Valve Seat	S-6947	Same
Cotter Key	3-550	Same
Float Rod, with Float Ball	A-12509	A-12509
Valve Cover	A-5801	Same
Nut	S-7044	Same
Standpipe Assembly	S-6715	Same

PARTS LIST

DESCRIPTION	PART NO. SD-3	PART NO. SD-4
FREEZER ASSEMBLY		
Spout thru Bin/Grommet	S-9258	Same
Spout Casting Holder	S-9237	S-9237
Brass Screw, Casting Plate to Spout 1/4 x 20 x 5/8	3-207	Same
Spout Casting	S-9236	Same
"O" Ring	2-560	Same
Spout Assembly	A-7508	Same
Compression Spring	2-492	Same
Micro-Switch	12-207	Same
Brass Machine Screw 1/4 - 20 x 1 - 1/4"	3-671	Same
Freezer Assembly	A-9618	A-7490
Lift Hook	None	A-8162
Freezer Brass Cap	S-6952	A-7701
Bearing (Upper)	2-547	2-695
Worm Tube Washer	None	A-7699
Spacer Washer	S-7121	A-6273
Locking Cap Screw	S-6481	3-758
Retaining Ring	3-553	Same
Ice Breaker	S-6793	A-7700
"O" Ring	2-386	2-386
Worm Shaft	2-578	2-693
Water Seal	2-649	2-649
Seal Spacer	S-9360	Same
"O" Ring	None	2-647
Bearing (Lower)	2-417	Same
Worm Tube Nut	S-8817	S-8817
Drip Pan Assembly (Rubber)	13-213	13-213
Steel Ball - Shaft End	2-423	
CARBONATOR ASSEMBLY		
Pre-Cooling Coil Assembly - Tinned Tubing	A-12570	Same
Cast Cold Plate	2-1199	Same
Coil Hold Down	A-12572	Same
Flexible Line (Pre-Cool Out)	A-12576	Same
Flexible Line 3/8" female flare (Pre-Cool In)	16-287	Same
Carbonated Water Header Complete	A-12579	A-12630
Stainless Steel Manifold	A-13111	A-13110
Manifold O-Ring	13-306	13-306
Valve Body O-Ring	2-1204	2-1204
Flow Control Regulator - Sweet Water	11-275	Same
Flow Control Regulator - Carbonated Water	13-304	Same
Heater Elements for 12-530A	12-708	Same
Pumps - Carbonator B&B	2-922	Same
Pump Adaptor to Motor B&B	2-923	Same
1/4 HP Motor - Carbonator	12-704-1	Same
Couplings Motor to Carbonator	2-925	Same
Water Outlet Line - Carbonator Pump	A-12036	Same
Tee - 3/8 x 3/8" flare x 3/8 NPT	16-282	Same
Check Valve	16-302	Same
Retainer Rings	2-1272	Same
Water Strainer (Watts)	16-162-1	Same

DESCRIPTION	PART NO. SD-3	PART NO. SD-4
CARBONATOR TANK ASSEMBLY B&B		
Carbonator Tank Complete	2-680-7	Same
Soda Outlet Valve	2-680-8	Same
Safety-Pure Valve	2-680-9	Same
Check Valve Complete Soda or Water	2-680-10	Same
Electrode Long	2-680-12	Same
Electrode Short	2-680-13	Same
Electrode Washer	2-680-14	Same
Check Valve Washer	2-680-15	Same
Rubber Check (For 2-680-10)	2-680-16	Same
CARBONATOR PUMP RELAY AND CONTROL BOX		
Relay Box Assembly	12-634	Same
Relay Coil (4800-39AC)	12-634-1	Same
Primary Coil (1850-32TAC767)	12-634-2	Same
Secondary Coil (5000-36AC-362)	12-634-3	Same
PRE-COOL SYRUP TANKS		
Syrup Pre-Cool Hose (Tank-In)	A-12582	Same
Syrup Post-Cool Hose (Tank-Out)	A-12586	Same
Syrup Pre-Cool Tanks (St. Steel)	2-1206	Same
Washer	2-685-19	Same
Syrup Tank Support	A-12885	A-12885
COMPLETE VALVES		
*Touch-O-Matic Valve (TMC-10)	2-1205	Same
Glass Filler Valve Sweet Water	2-1211	Same
REPAIR PARTS		
Flavor Medallion Set	2-1250	Same
DRIVE ASSEMBLY		
Drive Motor	12-864-1	Same
Pulley (3 1/4) Drive Motor	2-1194	Same
Set Screw	3-385	Same
V Belt	13-106	13-203
Pulley (10") Gear Reducer	2-378	Same
Gear Reducer	2-580	Same
Coupling (Gear Reducer, Half)	S-7716	Same
Insert - Rubber	13-131	Same
Coupling (Freezer Half)	S-8525	Same
Clamp 2 Per Coupling	S-8496	Same

*All repair parts for Touch-O-Matic Dispensing Valves should be ordered direct from supplier. McCanns Mfg. Co., 430 W. Cypress, Glendale 4, California.

DESCRIPTION	PART NO. SD-3	PART NO. SD-4
DRIVE ASSEMBLY		
Cap Screw 2 Per Coupling	3-206	Same
Set Screw	3-385	Same
Key	S-6035	Same
Rubber Shield	13-152	Same
ELECTRICAL COMPONENTS		
Switch, Manual (Ice Maker)	12-530A	Same
Switch Overload Heater	12-708	Same
Switch, Manual (Carbonator)	12-426	Same
Bin Control, White Rodgers	11-99-1	Same
Low Pressure Control	11-273	Same
Control Box Cover	A-12555	Same
Dual Pressure Control, water cooled models	11-220	Same
Penn Water Regulating Valve, water cooled models	11-198	Same
Head Pressure Control } Air Cooled Models	11-264	Same
Resistor for 11-264 } Air Cooled Models	12-515	12-515
ACCESSORY ITEMS		
Ice Machine Cleaner 8 oz. bottle	19-343	Same
Ice Scoop - Plastic	2-540	Same
Water Filter	2-1027	Same
Touch Up Paint (Grey Sprayon)	10-153	Same
Plywood Crate	1-576	1-578
Hose Clamp Fits 5/8" Hose	2-534	2-534
Hose Clamp Fits 3/4" Hose	2-693	Same
Hose Clamp Fits 7/8" Hose	2-536	Same
Hose Clamp Fits 1-1/8" Hose	2-932	Same
CONDENSING UNITS		
Motor Compressor Only 115/60/1 Air Cooled	18-132	18-221
Valve Plate and Gasket Kit	None	18-222
Relay	18-133	18-227
Starting Capacitor	18-134	18-228
Condenser Fan Only	18-137	18-231
Condenser Motor Only	18-421	18-232
Mounting Bracket, Condenser Fan Motor	None	18-233
Air Cooled Condenser	18-140	18-234
Condenser Shroud	18-141	18-235
Klixon Thermal Overload	18-135	18-240
Electrical Terminal Assembly, includes three complete terminals & board		18-241
Motor Compressor Only 115/60/1 Water Cooled		18-257
Valve Plate and Gasket Kit		18-222
Cylinder Head		18-271
Relay (115/60/1)		18-227
Starting Capacitor (115/60/1)		18-228
Water Cooled Condenser		18-259

DESCRIPTION	PART NO. SD-3	PART NO. SD-4
CONDENSING UNITS		
Water Cooled Condenser Gasket - Plain End		18-262
Water Cooled Condenser Gasket - Manifold End		18-263
Klixon Thermal Overload 115/60/1		18-240
Electrical Terminal Assembly, Includes 3 Complete Terminals & Board		18-241
Compressor to Water Valve Hose Assembly		18-260
Compressor to Condenser Hose Assembly		18-261
Water Regulating Valve - Penn		11-198
Ranco Hi-Lo Dual Pressure Control		11-286
Refrigerant Drier	2-350	2-350
REPAIR PARTS FOR GEAR REDUCER		
Slo-Speed Shaft and Worm Gear	2-580-20	Same
Hi-Speed Shaft and Worm Gear	2-580-21	Same
Bearing and Seal Repair Kit	A-6397	A-6397
Pint 600W Oil	19-359	19-359

SD55 and SD110 CLEANING INSTRUCTIONS

CLEANING AND SANITIZING ICE BIN

IMPORTANT: Only qualified personnel should perform cleaning and sanitizing procedure.

The ice bin interior should be cleaned and sanitized every 90-days following Sanitizer Manufacturer's recommendations. Use Chlor-Tergent (Oakite Products Inc.) or equivalent sanitizer. Follow Sanitizer Manufacturer's application instructions, and warning labels.

WARNING: Ice bin contains hazardous moving part.

1. Unplug unit power cord from electrical outlet.
2. Remove ice bin cover.
3. Using warm water, melt ice inside ice bin.
4. Remove ice chute by removing screws. Remove agitator assembly from inside ice by by lifting straight up.

CAUTION: *DO NOT* USE CHLORINE CLEANSING POWDERS FOR CLEANING. Use of chlorine cleaning powders will cause corrosive action on ice bin walls and metal components inside ice bin.

NOTE: Lime and scale deposits may be removed from ice bin walls and metal components inside bin by using a cleaner such as Scotsman Ice Machine Cleaner.

5. Using a nylon brush (DO NOT USE WIRE BRUSH) and detergent soap solution, scrub the interior surfaces of the ice bin, sink, ice discharge chute and top rim of ice bin.
6. Rinse ice bin interior with plain water.
7. Using a nylon brush (DO NOT USE WIRE BRUSH) and detergent soap solution, scrub all the parts of ice chute as well as the ice bin cover, thumb screws, and agitator assembly.

SD55 and SD110 CLEANING INSTRUCTIONS

8. Rinse all the loose parts cleaned in step 7 with plain water.

9. In a five gallon bucket, mix a sanitizing solution of 4 ounces Chlor-Tergent (Oakite Products Inc.) and 4 gallons of warm (90-120° F.) water. Place all small loose parts into the sanitizer and allow them to soak for 10 to 15 minutes. (Thumb screws, shelf, drain grill, ice chute and cut off assembly.)

10. In a second five gallon bucket mix a sanitizing solution of 4 ounces Chlor-Tergent (Oakite Products Inc.) and 4 gallons of warm (90-120° F.) water. Using a nylon brush and the sanitizing solution, sanitize the interior surfaces of the ice bin, ice discharge chute, top rim of ice bin, bin cover, rotator assembly, bottom washer, and ring and hub assembly. Allow to air dry.

11. Using the end of a wash cloth, plug up the drain opening.

12. Reassemble the agitator assembly.

13. Remove wash cloth from drain and allow sanitizer to drain away.

14. Install drain grill.

15. Install agitator assembly.

16. Install ice chute using 2 thumb screws.

17. Using a mechanical spray bottle and the remaining sanitizer, spray all surfaces handled during reassembly of items 22 through 25. Allow to air dry.

18. Fill bin with ice as instructed.

19. Replace bin cover.

20. Plug power cord into electrical outlet.

SERVICE MANUAL FOR SANITARY ICE DISPENSER MODELS SD-55 and SD-110

PRINCIPLES OF OPERATION

The Scotsman Automatic Ice Dispenser utilizes an efficient and sanitary method for dispensing cracked, or cubelet ice. By filling the dispenser with 55 or 110 lbs. of ice, time is saved on the handling of ice from YOU to the customer. By lightly pressing a cup, glass or pitcher against the operating lever, ice drops directly into the cup, glass or pitcher, thus providing sanitary automatic dispensing with only one-hand operation. Note: This dispenser will not dispense flaked ice.

INSTALLATION INSTRUCTIONS

Dispenser should be installed as level as possible to maintain a proper draining of ice melt down. Connect to the ½" pipe drain fitting, which is located in back of cabinet, install rigid drain using ½" or larger tubing. Drain line must be pitched downward to an open drain, allowing no traps, as this is a gravity-flow drain. Connect power cord to ground-type prong receptacle, 115 volt, single phase, 60 cycle. Model SD-55 and Model SD-110 draw 3.0 Amps. Unit is now ready for test operation.

FOR THE USER

GENERAL OPERATING INSTRUCTIONS

Fill hopper with ice. To dispense a steady flow of ice, press operating lever in front of cabinet. Unit will d spense ice until lever is released or storage bin is empty.

Periodically, check the storage bin for ice level, and clean sink of accumulated ice as required.

SERVICE MANUAL FOR SCOTSMAN AUTOMATIC ICE DISPENSER MODELS SD-55 and SD-110

SERVICE PROBLEMS, CAUSES, AND SOLUTIONS

Problem:

Failure to dispense ice.

Cause:

A) Power failure
B) Broken agitator motor or defective motor run capacitor
C) Defective dispensing micro switch behind operating lever

Solution:

A) Check power source.
B) Check agitator motor for broken gears or shaft; check capacitor for wire connections at terminals, or defective run capacitor.
C) Check dispensing switch for sticking or open contacts and for sticking button.
D) Check power to solenoid.

Problem:

Ice dispensing continuously.

Cause:

A) Stuck dispensing switch behind operating lever at panel.

Solution:

A) Check dispensing switch for sticking or welded-together contacts.

WARNING

Unplug unit prior to beginning removal and replacement procedures.

Dispenser Door Assembly.

1. Remove upper front panel.
2. Remove cotter pin, and small rod from door.
3. Unscrew door hinge from mounting plate, and remove assembly.
4. Reverse to reassemble.

Spring for Door Assembly.

1. Do steps 1 - 3 above.
2. Remove C clip from door rod, pull rod out, remove spring.
3. Install new spring. NOTE: Spring must be preloaded prior to insertion. Wind it up against its tension, so that it will push the door closed tightly.
4. Reverse steps 1 - 3 to reassembly.

Gear Motor Assembly.

1. Remove splash panel.
2. Remove agitator.
3. Remove 4 Allen head screws mounting gearmotor to hopper.
4. Remove 3 screws securing mounting plate to motor.
5. Remove gearmotor heater.
6. Disconnect electrical leads at control box.
7. Check shaft seal in hopper. Replace if required by:
   a. Scraping away the insulation.
   b. Pry out the old seal.
   c. Snap the new seal into the groove molded in the hopper, seal with silicone rubber at the outside edge.
8. Reverse steps 1 - 7 to reassemble. Use new foam seals.

SD55 and SD110 ILLUSTRATED PARTS LISTING

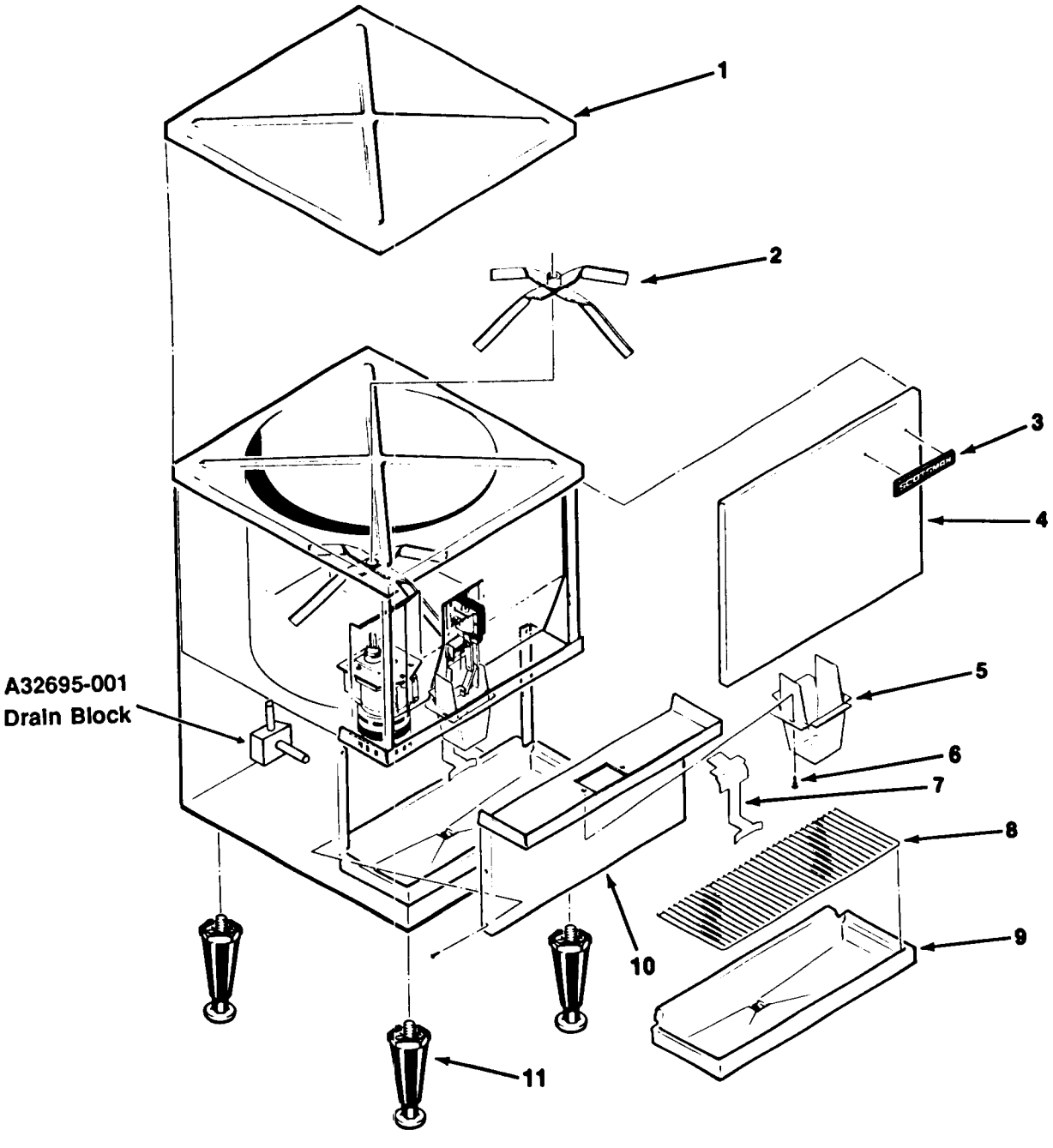

ITEM NUMBER	SD55 PART NUMBER	SD110 PART NUMBER	DESCRIPTION
1	A32666-001	A32667-001	Lid
2	A32714-001	A32715-001	Agitator
3	15-0718-00	15-0718-00	Scotsman Logo
4	A32702-001	A32703-001	Upper Panel
5	A33245-001	A33245-001	Chute
6	03-1403-16	03-1403-16	Screw
7	A32717-001	A32717-001	Depressor Plate
8	A32676-001	A32677-001	Sink Grill
9	A32722-001	A32723-001	Sink, Foamed
10	A32704-001	A32705-001	Splash Panel
11	A32678-001	A32678-001	Leg

SD55 and SD110 ILLUSTRATED PARTS LISTING

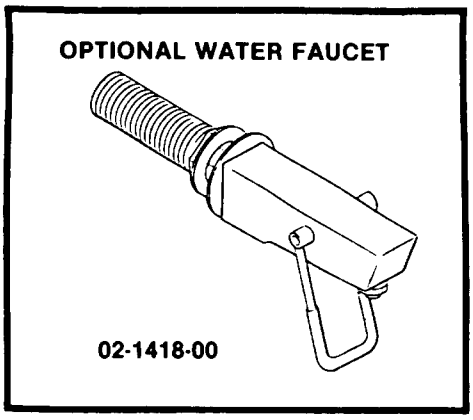

////////////////////////CAUTION////////////////////////

DO NOT TORQUE GEARMOTOR BOLTS (ITEM 10) MORE THAN 4 FOOT-POUNDS.

//

ITEM NUMBER	SD55 PART NUMBER	SD110 PART NUMBER	DESCRIPTION
1	A32689-001	A32689-001	Door Gasket
2	A32698-001	A32698-001	Seal
3	A32693-001	A32693-001	Foam Seal (Round)
4	A32692-001	A32692-001	Foam Seal
5	03-1418-15	03-1418-15	Screw
6	A34017-001	A34017-001	Plate
7	A32672-001	A32672-001	Gearmotor, Heater
8	A32718-001	A32718-001	Gearmotor, Agitator
9	A32741-001	A32741-001	Key
10	03-1406-08	03-1406-08	Nut
11	18-3701-01	18-3701-01	Capacitor
12	12-1570-00	12-1570-00	Dispensing Switch
13	A34013-001	A34013-001	Gearmotor Support-Bot.
14	A34014-001	A34014-001	Gearmotor Support-Top
15	03-1645-01	03-1645-01	Screw

SD55 and SD110 ILLUSTRATED PARTS LISTING

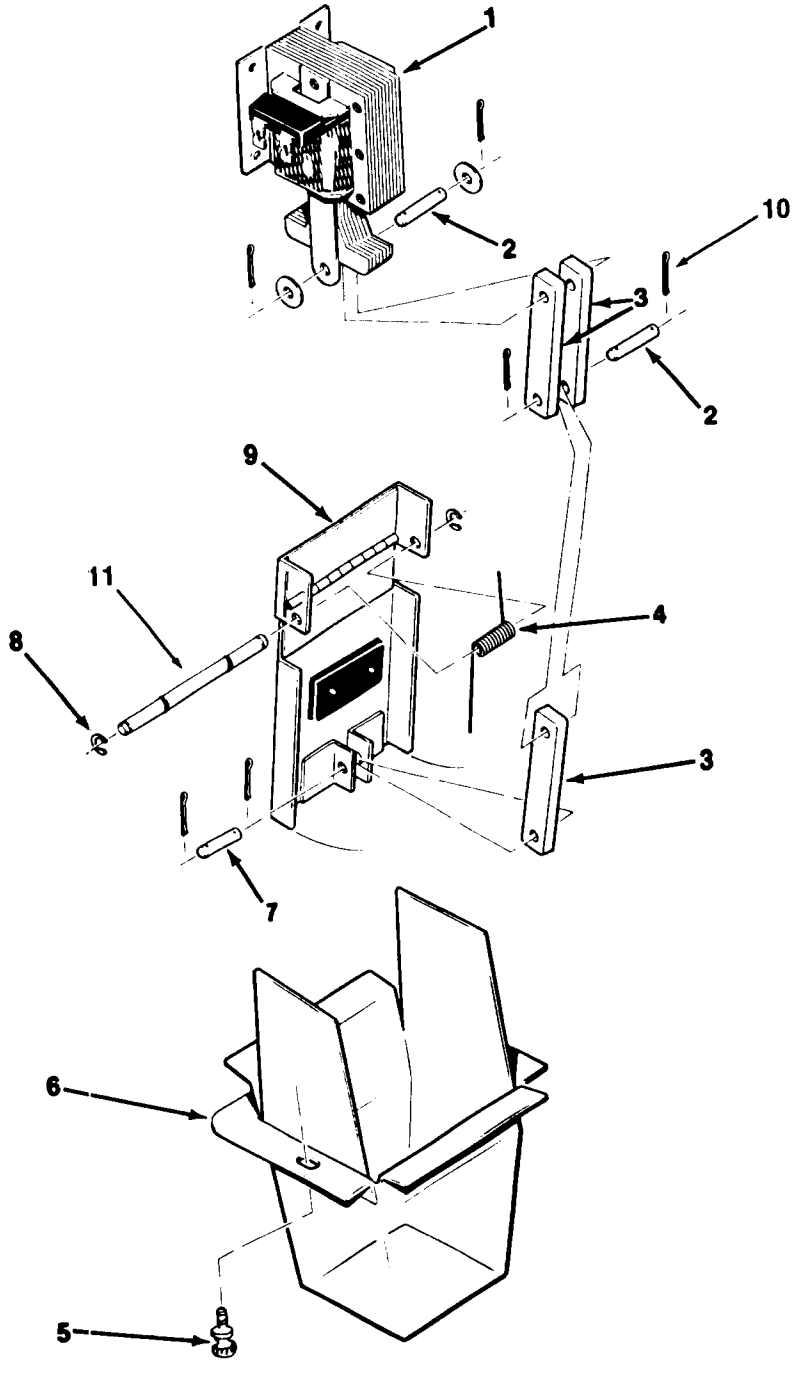

ITEM NUMBER	PART NUMBER	SD55 and SD110 DESCRIPTION
1	A32683-001	Door-Solenoid
2	A32685-001	Linkage pins-Medium
3	A32688-001	Solenoid Linkage
4	A32690-001	Door Spring (1)
5	03-1403-16	Screws
6	A33245-001	Ice Chute
7	A32687-001	Linkage pins-Small
8	03-1539-09	"C" clip
9	A32713-001	Dispensing Door
10	03-0396-01	Cotter pin
11	A32684-001	Long Axle

SD55 and SD110 PARTS LIST

PART NO.	DESCRIPTION	SD-55S USES	SD-110S USES
A32666-001	Plastic Lid	1	
A32667-001	Plastic Lid		1
03-1403-16	Screw	2	2
A32676-001	Sink Grille	1	
A32677-001	Sink Grille		1
A32718-001	Agitator Motor	1	1
A32672-001	Agitator Motor Heater	1	1
A32673-001	Spring for Heater	1	1
A32722-001	Plastic Sink — Foamed	1	
A32723-001	Plastic Sink — Foamed		1
A32714-001	Agitator Arm	1	
A32715-001	Agitator Arm		1
A32682-001	Dispensing Switch	1	1
A32693-001	Motor Shaft Seal Round	2	2
A32683-001	Door Solenoid	1	1
A32688-001	Solenoid Links	3	3
A32713-001	Dispenser Door	1	1
A32690-001	Spring for Dispenser Door	1	1
A32689-001	Gasket for Dispenser Door	1	1
18-3701-01	Run Capacitor — Motor	1	1
A32678-001	4 inch Cabinet Legs	4	4
A32717-001	Depressor Plate	1	1
A32741-001	Woodruff Key — Agitator Arm Coupling	1	1
A33245-001	Chute	1	1
A32685-001	Linkage Pins — Med.	2	2
A32687-001	Linkage Pins — Short	1	1
A32698-001	Motor Shaft Seal Only (Teflon)	1	1
03-1539-09	C Clip for Door Rod	4	4
A32692-001	Square Motor Gasket	1	1
A34017-001	Plate	1	1
03-1406-08	Nut	4	4
03-1418-15	Machine Screw, Motor Plate	3	3
A32703-001	Upper Front Panel		1
A32705-001	Lower Splash Panel		1
A32702-001	Upper Front Panel	1	
A32704-001	Lower Splash Panel	1	
A32684-001	Door Rod Long	1	1
A34013-001	Gearmotor Support-Bot.	1	1
A34014-001	Gearmotor Support-Top	1	1

SD55 and SD110 WIRING DIAGRAMS

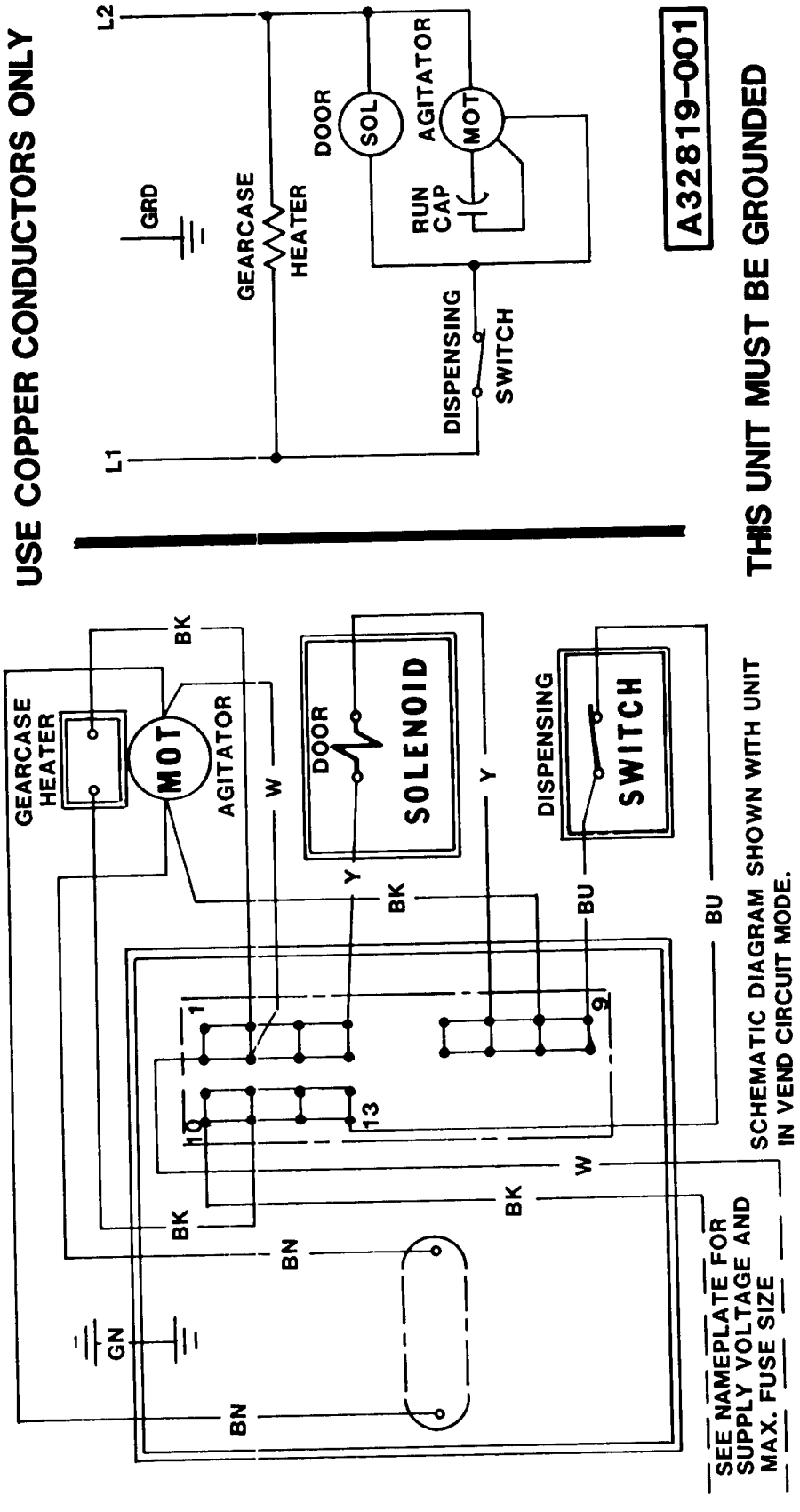

TABLE OF CONTENTS

IMPORTANT: ***To the user of this manual*** **— This manual is a guide for installing, operating, and maintaining this equipment. Refer to Table of Contents for page location of detailed informationl pertaining to questions that arise during installation, operation, service and maintenance, or trouble-shooting this equipment.**

	Page
FOR THE INSTALLER	
General Information and Specifications	2
FOR THE OPERATOR	4
Installation	10
Use and Cleaning	12
COMPONENT LOCATION	14
CLEANING AND MAINTENANCE	19
SERVICE DIAGNOSIS	
Removal and Replacement	22
Parts List and Wiring Diagram	
LIST OF ILLUSTRATIONS	3
Layout Drawing	5
Countertop Installation	6, 7
Flow Diagrams	8
Tubing Installation	11
Soda Valve	12, 13
Component Location	15
Syrup Diversion Tank	17
Gas Check Valve	18
Soda Valve	22
Removal of Soda Valve	

Parts Lists and Wiring Diagram are in the center of this manual, printed on yellow paper.

THIS PAGE
INTENTIONALLY
LEFT BLANK

FOR THE INSTALLER

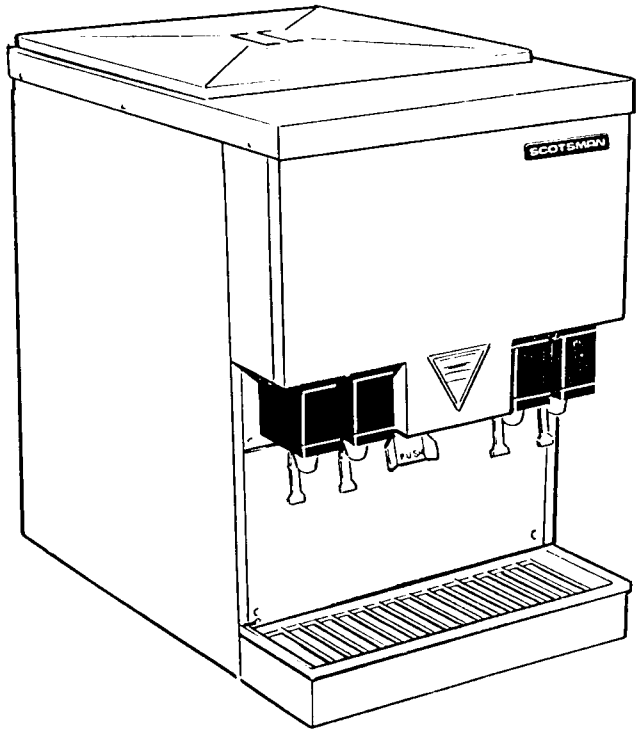

GENERAL DESCRIPTION

This section gives the unit description and design data for the six-flavor SD-100 and the four-flavor SD-60 Ice and Soft Drink Post-Mix Dispenser, with Cornelious Electric Dispensing Valves.

UNIT DESCRIPTION

The unit is compact and may be island-mounted or installed on front or rear counter. Dispensed product is cooled by a sealed-in aluminum eight-circuit cold plate that is easily cleaned. Adjustments on dispensing valves are easily accessible to control Water-to-Syrup "Ratio" of dispensed drinks.

Installation of LOOSE-SHIPPED PARTS, installation of unit on countertop, connections to remote carbonator, and syrup supplies, filling ice bin with ice, plugging unit power cord into electrical outlet, and adjusting dispensing valves for Water-to-Syrup "Ratio" of dispensed drinks is all that is required for unit operation.

SPECIFICATIONS

Model Number	(Height - w/o Legs) Dimensions H" x W" x D"	Bin Cap.	Ice Prod. Cap. 24 Hrs. *	Cube Size	Cond. Unit	Finish	Basic Electrical	Comp. H.P.	No. of Wires	Min. Circuit Ampacity †	Max. Fuse Size	Ship. Wt. lbs./kg.
SD100S-1A SELF SERVE ICE DISPENSER												
SD100S-1A-CP	36¾ x 30 x 28	100	—	—	—	SS	115/60/1	—	2	4.0	15	225/102
SD60S-1A SELF SERVE ICE DISPENSER												
SD60S-1A-CP	32½ x 20⅜ x 28½	60	—	—	—	SS	115/60/1	—	2	4.0	15	180/82

Scotsman Ice Systems are designed and manufactured with the highest regard for safety and performance.

Scotsman assumes no liability or responsibility of any kind for products manufactured by Scotsman that have been altered in any way, including the use of any parts and/or other components not specifically approved by Scotsman.

Scotsman reserves the right to make design changes and/or improvements at any time. Specifications and designs are subject to change without notice.

CAUTION: Before shipping, relocating, or storing unit, syrup coils must be flushed with potable water, all water purged from syrup and water coils, and ice in ice bin melted and all water drained from ice bin. A freezing ambient environment will cause residual water remaining inside syrup and water coils to freeze resulting in damage to unit.

MODEL SD-60

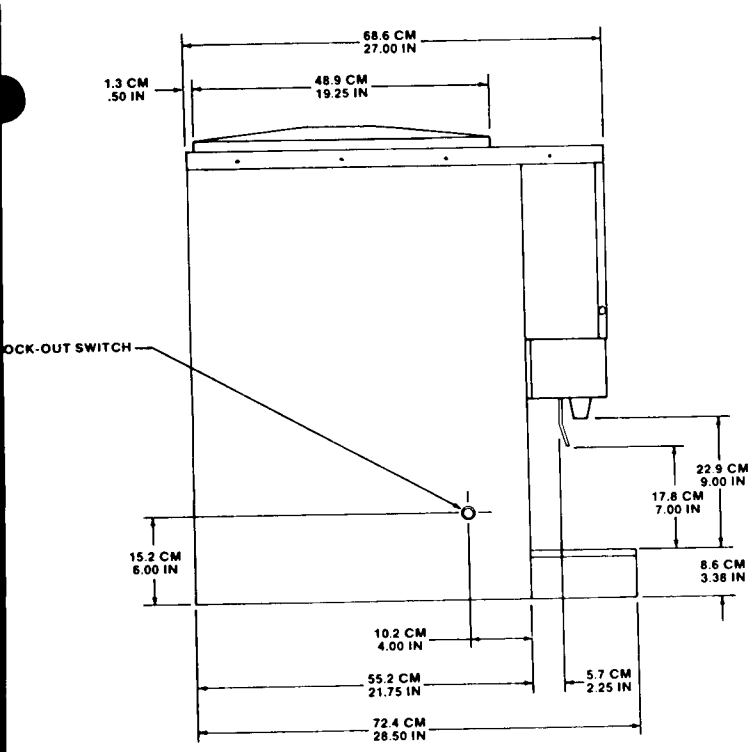

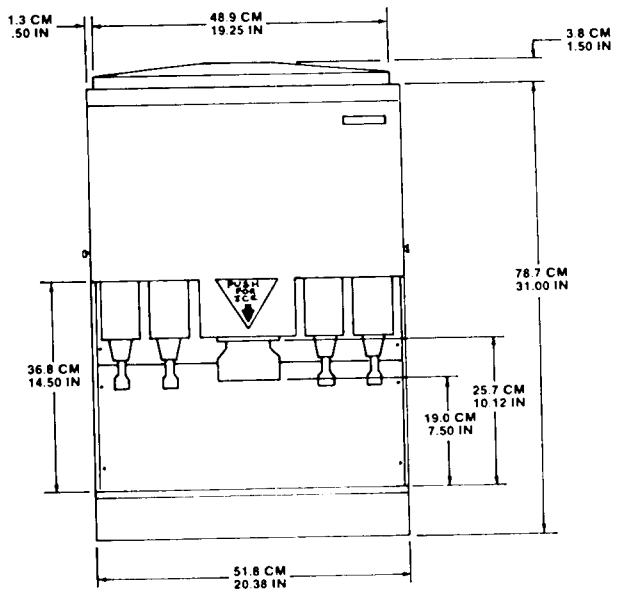

6' ELECTRICAL CORD INCLUDED

MODEL SD-100

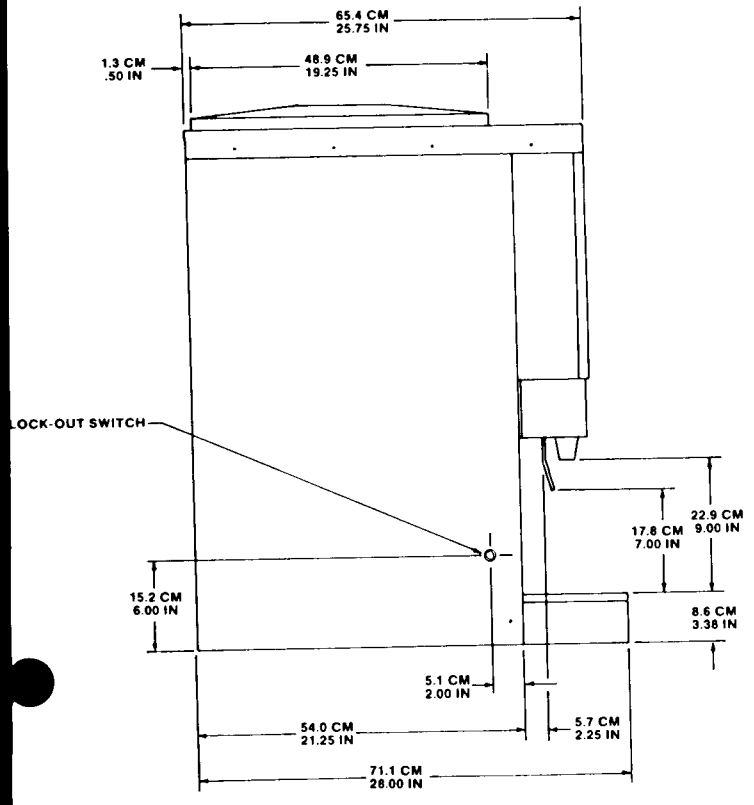

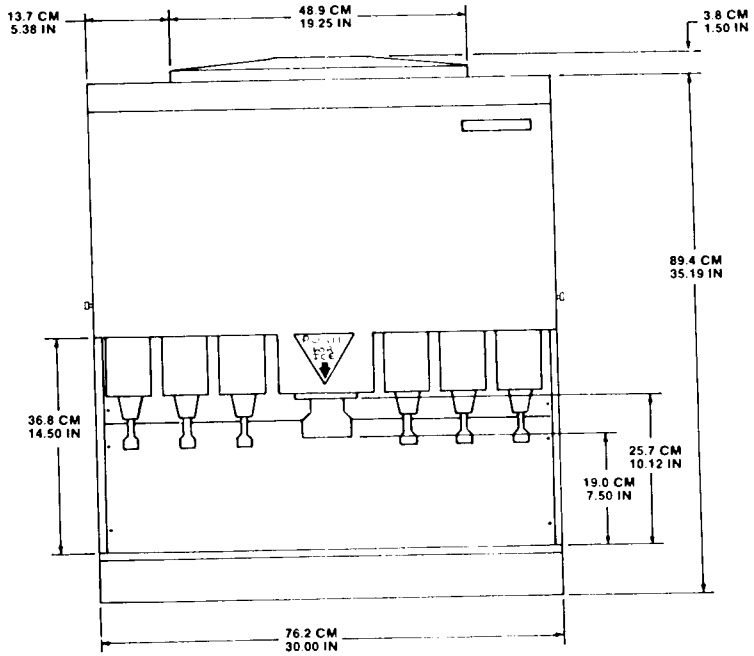

FOR THE INSTALLER

INSTALLATION

This section covers unpacking and inspection, selecting location, installing unit, preparing unit for operation, and unit operation.

UNPACKING AND INSPECTION

NOTE: The unit was thoroughly inspected before leaving factory and the carrier has inspected and signed for it. Any damage or irregularities should be noted at time of delivery and immediately reported to the delivering carrier. Request a written inspection report from Claims Inspector to substantiate any necessary claim. File claim with the delivering carrier.

1. After unit has been unpacked, remove shipping tape and other packing material.
2. Unpack LOOSE-SHIPPED PARTS. Make sure all items are present and in good condition.

LOOSE-SHIPPED PARTS

Item No.	Name	Qty.
1	Leveling Leg, 4-in.	4
2	Drain Hose, Drip Tray, 72-in.	1
3	Tee Fitting, Drain Hose	1
4	Tubing Clamp, Gear	7
5	Cleaning Brush, 1/4-in. Dia.	1

NOTE: Item 1 is not with SD-100.
Legs are not recommended for the SD-100.

SELECTING LOCATION

This unit may be island-mounted or installed on a front or rear counter. Locate unit so the following requirements are satisfied.

1. Near a properly grounded electrical outlet with proper electrical requirements. Circuit should be fused and no other electrical appliance should be connected to this circuit. ALL ELECTRICAL WIRING MUST CONFORM TO NATIONAL AND LOCAL ELECTRICAL CODES.
2. Allow sufficient clearance above unit for removal of ice bin cover to replenish ice supply.

INSTALLING UNIT

PLACING UNIT IN OPERATING POSITION

1. Remove drip tray from unit.
2. Remove two screws securing front access panel, then remove panel.
3. Unit inlet supply lines, power cord, and ice bin and drip tray drain hoses must be routed through hole cut in countertop under unit. Move unit into operating position on countertop, mark hole location on countertop, then move unit off to one side. Cut 4-inch hole in countertop.

NOTE: A 6-inch hole will be required for gear motor removal unless the 4-inch Leg Kit is used. If you are going to seal to the counter, be sure to cut a 6-inch hole.

NOTE: An alternate to sealing unit base to countertop is to install optional Four-Inch Leg Kit (SD-60 only).

4. To comply with National Sanitation Foundation (NSF) requirements, unit base must be sealed to countertop as follows, or above leg kit used.
   a. Place unit in operating position on countertop.
   b. Tilt unit up to expose bottom of unit base.
   c. Liberally apply silastic sealant such as Dow Corning (RTV 731) or equivalent on unit base bottom edges.

Do Not Lift Unit by the Sink Frame

NOTE: Do not move unit after positioning or seal from unit base to countertop will be broken.

5. Lower unit into operating position to complete seal from unit base to counter. Apply additional sealant around bottom of base. Seal must have a minimum radious of 1/2-inch to prevent cracks and crevices and to insure a complete seal.
6. Route unit power cord and ice bin drain hose through hole cut in countertop. DO NOT PLUG UNIT POWER CORD INTO ELECTRICAL OUTLET AT THIS TIME.
7. Connect ice bin drain hose to permanent drain.

FOR THE INSTALLER

CONNECTING SYRUP AND CARBONATED WATER SOURCE LINES TO UNIT

All unit **internal** syrup and carbonated water connections between cold plate outlets and dispensing valves have been made at the factory. Perform the following to connect syrup and carbonated water, source lines to cold plate inlets.

The best position to place the unit in for the hookup is on its side, or upside down. Carefully lay the unit down, using cardboard to protect the cabinet.

1. Route, and label for indentification on both ends, syrup source, lines (.265 I.D. minimum) from syrup tanks to inside of unit.
2. Remove caps from cold plate connections.
3. Connect syrup source line labeled No. 1 to No. 1 syrup inlet fitting on left side (facing dispensing valve side of unit) of cold plate. Secure connection with TUBING CLAMP.

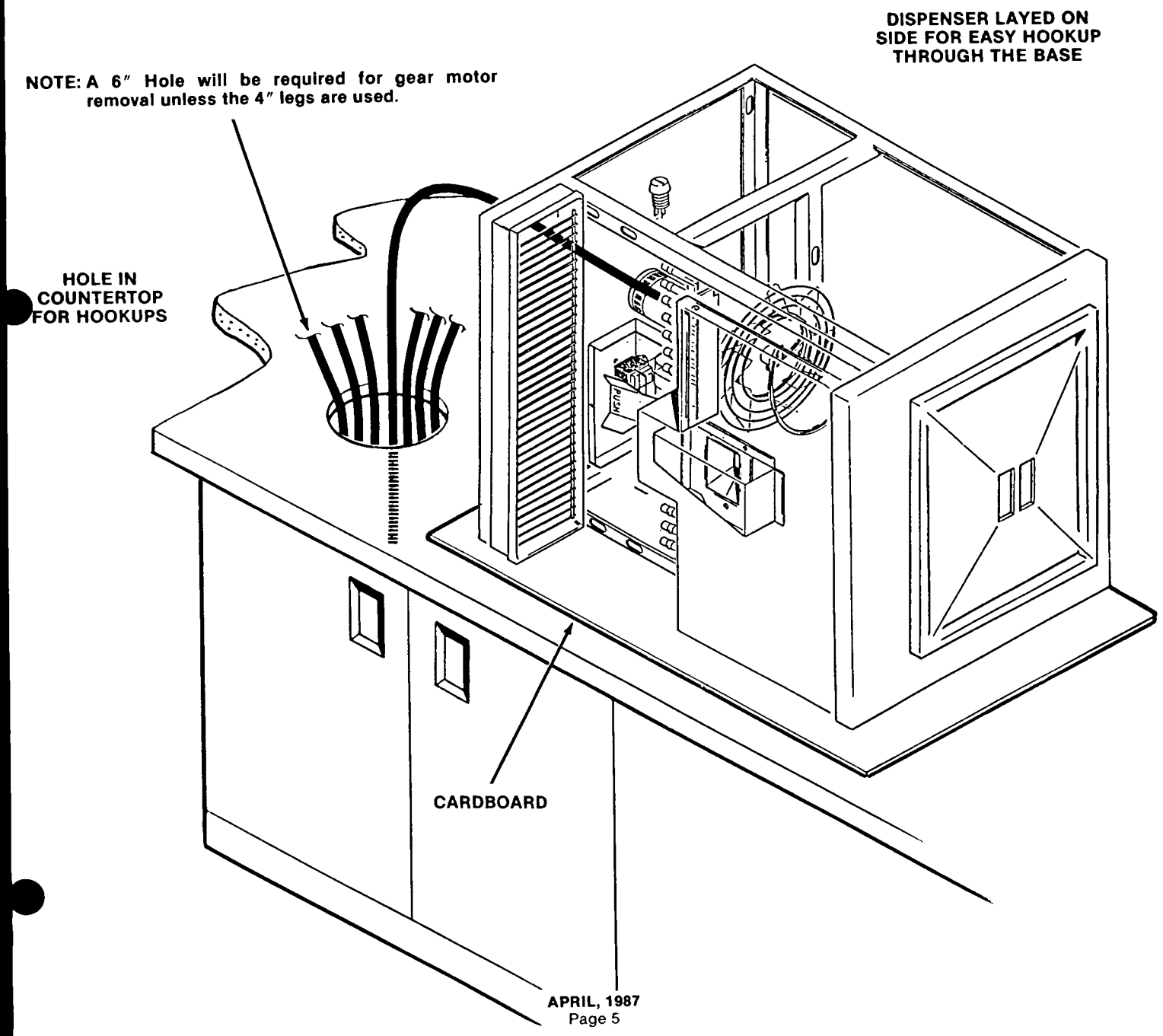

SD100 FLOW DIAGRAM — FOR THE INSTALLER

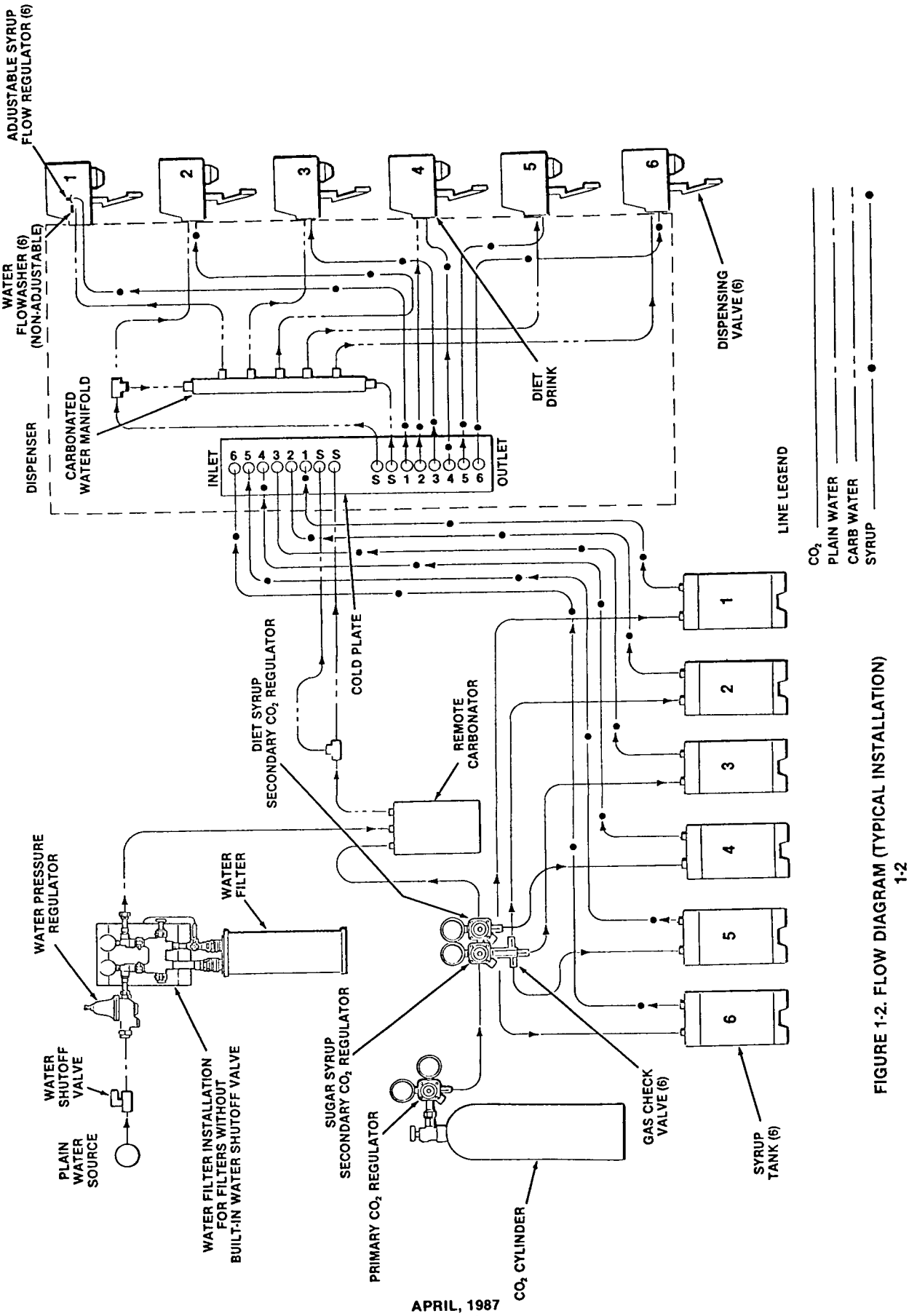

FIGURE 1-2. FLOW DIAGRAM (TYPICAL INSTALLATION)

1-2

SD60 FLOW DIAGRAM — FOR THE INSTALLER

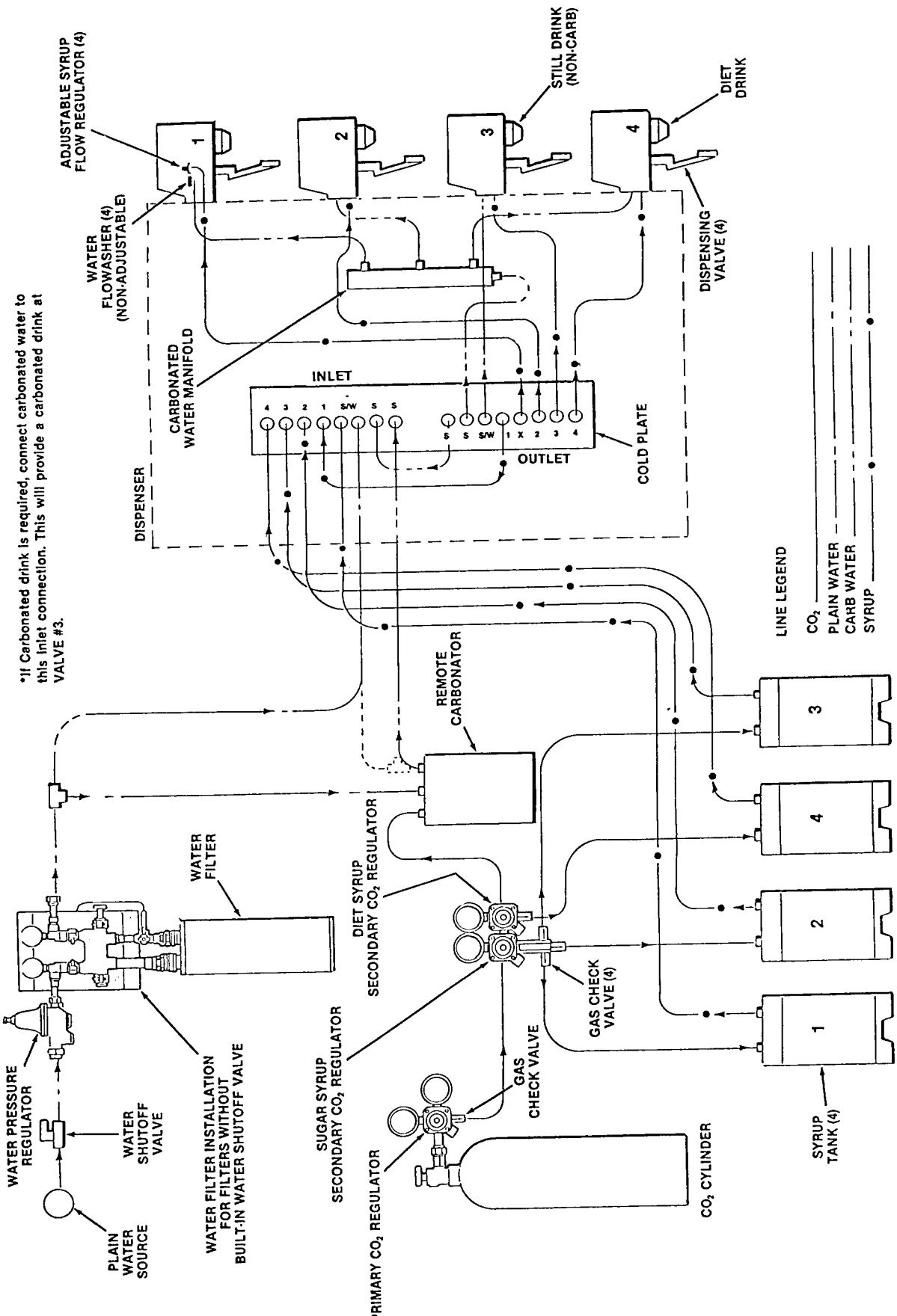

FIGURE 1-2. FLOW DIAGRAM (TYPICAL INSTALLATION)

1-2

FOR THE INSTALLER

INSTRUCTIONS FOR CRIMPING TUBE CLAMPS

SLIDE CLAMPS ON TUBING BEFORE INSTALLING TUBING ON FITTING

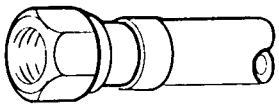

POSITION CLAMP BEHIND FIRST BARB FITTING FOR CRIMPING

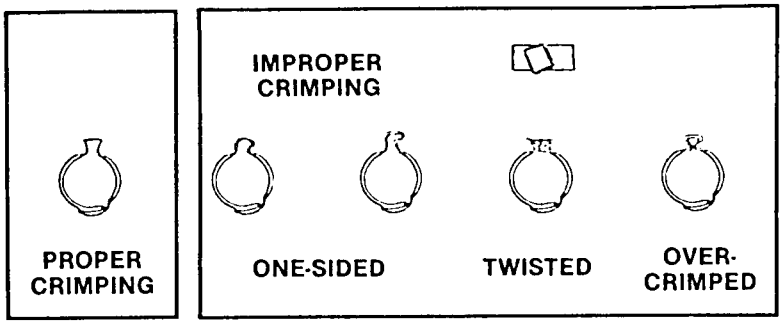

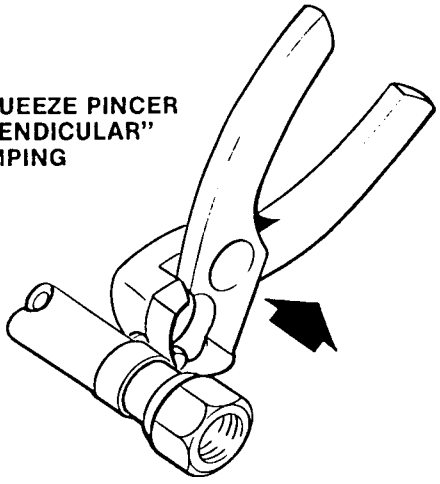

PULL AND SQUEEZE PINCER FOR "PERPENDICULAR" CRIMPING

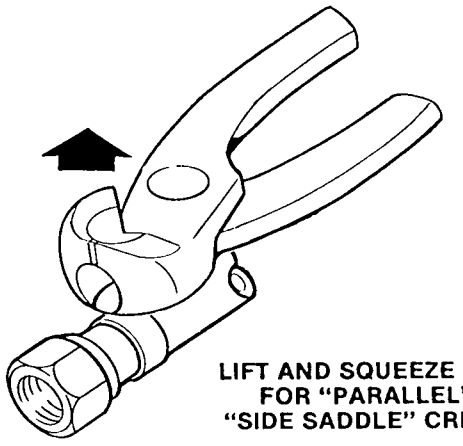

LIFT AND SQUEEZE PINCER FOR "PARALLEL" OR "SIDE SADDLE" CRIMPING

FOR THE INSTALLER

3. Connect syrup source lines, labeled No. 2 through 6, to cold plate syrup inlet fittings by repeating preceding step 2). Secure connections with TUBING CLAMPS (item 3).
4. Route, and label on both ends for identification, carbonated water source lines (.265 I.D. minimum). from remote carbonator to inside of unit.
5. Connect carbonated water source lines to cold plate carbonated water inlet fittings. Secure connections with TUBING CLAMPS (item 3).
6. To comply with National Sanitation Foundation (NSF) requirements the carbonated water source must be equipped with back flow prevention device.

CONNECTING AND ROUTING DRIP TRAY DRAIN HOSES

NOTE: Drip tray drain hoses may be connected to ice bin drain hose using TEE FITTINGS, DRAIN HOSES (item 2). Consult local health codes before doing so.

1. Place drip tray up close to front of unit.
2. Connect DRAIN HOSES, DRIP TRAY (item 1) to barbed fittings on bottom of drip tray.
3. Route other end of drip tray hoses to and connect to permanent drain.
4. *Very carefully,* install drip tray in unit. MAKE SURE THERE ARE NO KINKS PRESENT IN ICE BIN AND DRIP TRAY DRAIN HOSES.

PREPARING UNIT FOR OPERATION

1. Plug unit power cord into electrical outlet.
2. Turn keyed lock-out switch on side of unit (see Figure 4-1) to "ON" position.
3. Push ICE DISPENSE LEVER on front of unit (see Figure 4-1) to check for proper operation of rotator inside ice bin, then release lever.
4. Momentarily push each dispensing valve lever and note if electric solenoid valve on each dispensing valve is operating.
5. Adjust primary CO_2 regulator for carbonator and secondary CO_2 regulators for syrup tanks (see Figure 1-2) to specified pressures as instructed.

IMPORTANT: All syrup systems *must* be sanitized and unit ice bin *must* be thoroughly cleaned before unit is put into operation.

6. Sanitize all syrup systems and thoroughly clean ice bin interior as instructed.
7. Fill unit ice bin with ice as instructed, then install ice bin cover.
8. Activate carbonated water source to unit.
9. Dispense from each dispensing valve until all air is purged from carbonated water system and carbonated water is dispensed.
10. Connect full syrup tanks into syrup systems.
11. Dispense from each dispensing valve until all air is purged from syrup systems and syrup is dispensed.
12. Check cold plate line connections for leaks and repair if evident.
13. Lift drip tray up and out of unit.
14. Install front panel and secure with two screws.
15. *Very carefully,* install drip tray in unit. MAKE SURE THERE ARE NO KINKS PRESENT IN ICE BIN AND DRIP TRAY DRAIN HOSES.
16. Adjust each dispensing valve for Water-to-Syrup ("Ratio") of dispensed product as instructed.

OPERATION

1. Press cup or glass against ICE DISPENSE LEVER long enough to dispense desired amount of ice in cup or glass, then release lever.
2. Place cup or glass against dispensing valve lever and dispense until cup or glass is full of product, then release lever.

FOR THE OPERATOR

This section covers operating controls, daily pre-operation check, unit operation, adjustments, replenishing CO_2 and syrup supplies, cleaning and sanitizing, and inspecting and servicing gas check valves in system.

OPERATING CONTROLS (See Figure 4-1)

DISPENSING VALVES KEYED LOCK-OUT SWITCH

Dispensing valves keyed lock-out switch, located on side of unit, must be in "ON" position to operate electric dispensing valves. Switch in "OFF" position turns off electrical power to dispensing valves preventing dispensing.

DISPENSING VALVE LEVER

Dispensing valves levers, located below dispensing valves, need only to be pressed with cup or glass to dispense product.

DISPENSING VALVE CARBONATED WATER ONLY LEVER

Dispensing valve carbonated water only lever, located on side of dispensing valve cover, will dispense only carbonated water when actuated.

ICE DISPENSE LEVER

Pressing cup or glass against ice dispense lever will dispense ice into cup or glass.

UNIT OPERATION

1. Press cup or glass against ice dispense lever and dispense until desired amount of ice has been dispensed, then release lever.
2. Press cup or glass against dispensing valve lever and dispense product until cup or glass is full, then release lever.

   If carbonated water only is desired, place cup or glass under dispensing valve with lever on its side. Actuate lever and dispense until cup or glass is full of carbonated water, then release lever.

DAILY PRE-OPERATION CHECK

1. Make sure CO_2 cylinder primary CO_2 regulator assembly 1800-psi gauge indicator is not in shaded ("change CO_2 cylinder") portion of dial. If so, CO_2 cylinder is almost empty and must be replaced as instructed.
2. Sufficient syrup supply in all syrup tanks. If not, replenish syrup supply as instructed.
3. Make sure ice supply in ice bin is adequate. If not, replenish ice supply as instructed.
4. Make sure drip tray is clean and clean cup rest is in place in drip tray.

REPLENISHING CO_2 SUPPLY

NOTE: When indicator on CO_2 cylinder regulator assembly 1800-psi gauge is in shaded ("change CO_2 cylinder") portion of dial, CO_2 cylinder is almost empty and should be changed.

1. Fully close (clockwise) CO_2 cylinder valve.
2. Slowly loosen CO_2 regulator assembly coupling nut allowing CO_2 pressure to escape, then remove regulator assembly from empty CO_2 cylinder.
3. Unfasten safety chain and remove empty CO_2 cylinder.

⚠ WARNING: To avoid personal injury and/or property damage, always secure CO_2 cylinder with safety chain to prevent it from falling over. Should the valve become accidentally damaged or broken off, CO_2 cylinder can cause serious personal injury.

4. Position CO_2 cylinder and secure with safety chain.
5. Make sure gasket is in place inside CO_2 regulator coupling nut, then install regulator on CO_2 cylinder.
6. Open (counterclockwise) CO_2 cylinder valve slightly to allow lines to slowly fill with gas, then open valve fully to back-seat valve. (Back-seating valve prevents leakage around valve shaft.)
7. Check CO_2 connections for leaks. Tighten loose connections.

REPLENISHING SYRUP SUPPLY

1. Remove CO_2 disconnect (grey) and syrup disconnect (black) from empty syrup tank, then remove tank.
2. Place full syrup tank in position, then connect CO_2 disconnect (grey) and syrup disconnect (black) to full syrup tank.

SYRUP FLAVOR CHANGE

Sanitize applicable syrup system as instructed, then install full tank of new flavor syrup.

FOR THE OPERATOR

FILLING ICE BIN WITH ICE

⚠ WARNING: Ice bin contains hazardous moving parts. *DO NOT* operate ice dispensing system while ice bin cover is removed.

IMPORTANT: *Do not* use hard-frozen ice. After ice is removed from freezer, allow ice to sit at room temperature for approximately 1/2 hour before placing in ice bin.

1. Remove ice bin cover.

NOTE: Ice to be used to fill ice bin *must* be in the form of small cubes, chunklets, or cracked ice *(DO NOT* USE FLAKE OR CRUSHED ICE).

2. Observe preceding IMPORTANT note, fill ice bin with small cubes, chunklets, or cracked ice.
3. Install ice bin cover.

CLEANING AND SANITIZING

DAILY CLEANING OF UNIT EXTERIOR

1. Remove cup rest from drip tray.
2. Wash out drip tray, then rinse tray with warm water allowing water to run down drain hose.
3. Wash cup rest, then rinse cup rest with clean water. Install cup rest in drip tray.
4. Clean all external surfaces of unit with sponge. Rinse out sponge with clean water, then wring excess water out of sponge and wipe off external surfaces of unit. Wipe unit dry with clean soft cloth. DO NOT USE ABRASIVE TYPE CLEANERS.

WEEKLY CLEANING OF DISPENSING VALVES

1. Loosen dispensing valve cover screw until screw disengages from valve, then remove cover.
2. Remove nozzle and baffle from dispensing valve. Wash nozzle, baffle, and cover in warm potable water.

IMPORTANT: When washing dispensing valve, care must be taken not to get water on electrical solenoid coil.

3. Hold appropriate container under dispensing valve. Being careful not to get water on electrical solenoid coil, slowly pour warm potable water over portion of dispensing valve ahead of solenoid coil.
4. Install nozzle and baffle on dispensing valve.
5. Install dispensing valve cover and secure with screw.

OPERATION

A CO_2 cylinder delivers carbon dioxide (CO_2) gas through adjustable CO_2 regulators to syrup tanks and remote carbonator. Plain water enters carbonator tank and is carbonated by regulated CO_2 gas also entering tank. When dispensing valves are opened, CO_2 pressure exerted upon syrup tanks pushes syrup from tanks, through unit cold plate coils, and on to dispensing valves. Carbonated water is pushed from carbonator tank by CO_2 head pressure and is pushed through unit cold plate cooling coils to dispensing valves. Syrup and carbonated water meet at dispensing valves resulting in carbonated drinks being dispensed. Pressing cup or glass against ice dispense lever starts rotator motor which turns rotator in bottom of ice bin. Rotator pushes ice out through opening in bottom front of ice bin and drops down through chute into cup or glass. Ice dispensing will stop with lever is released.

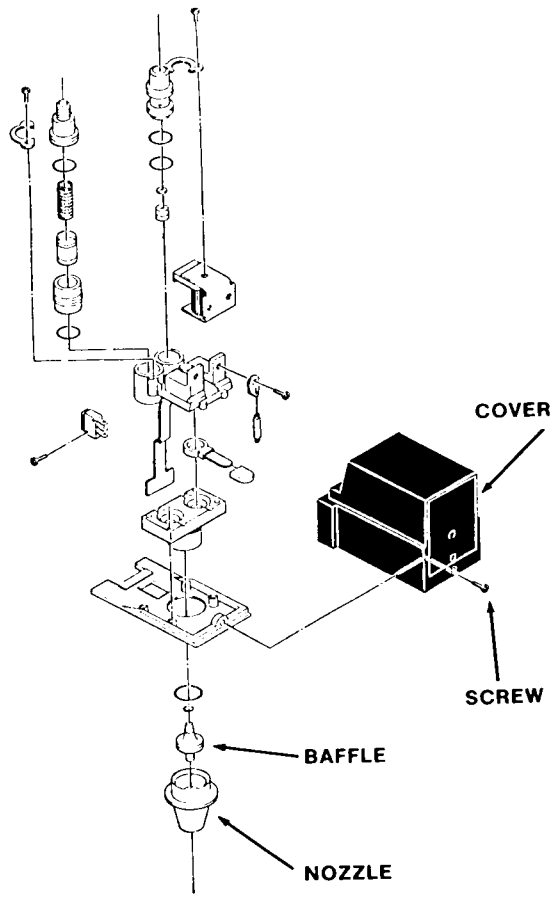

SD60 COMPONENT LOCATION

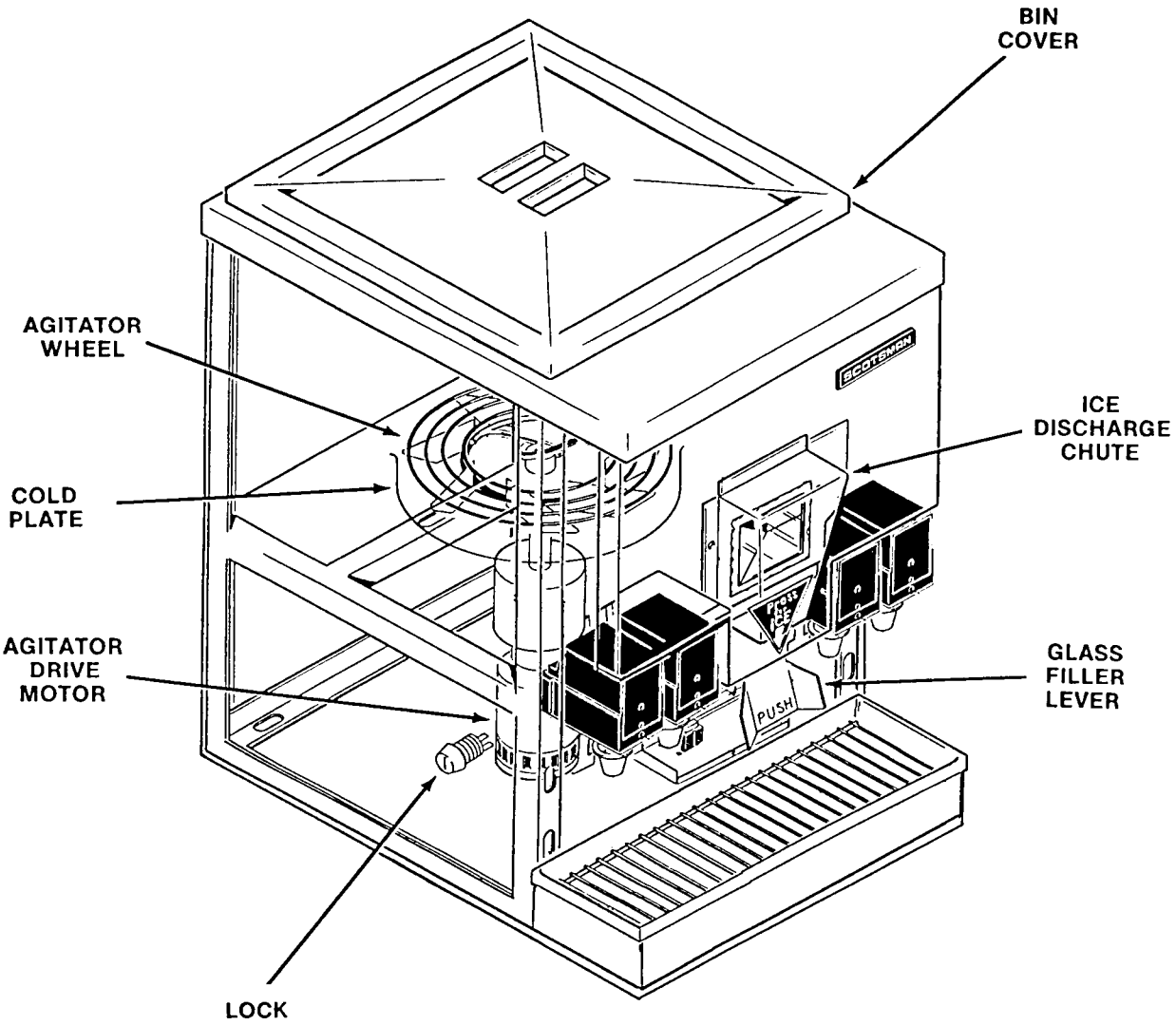

SD100 COMPONENT LOCATION

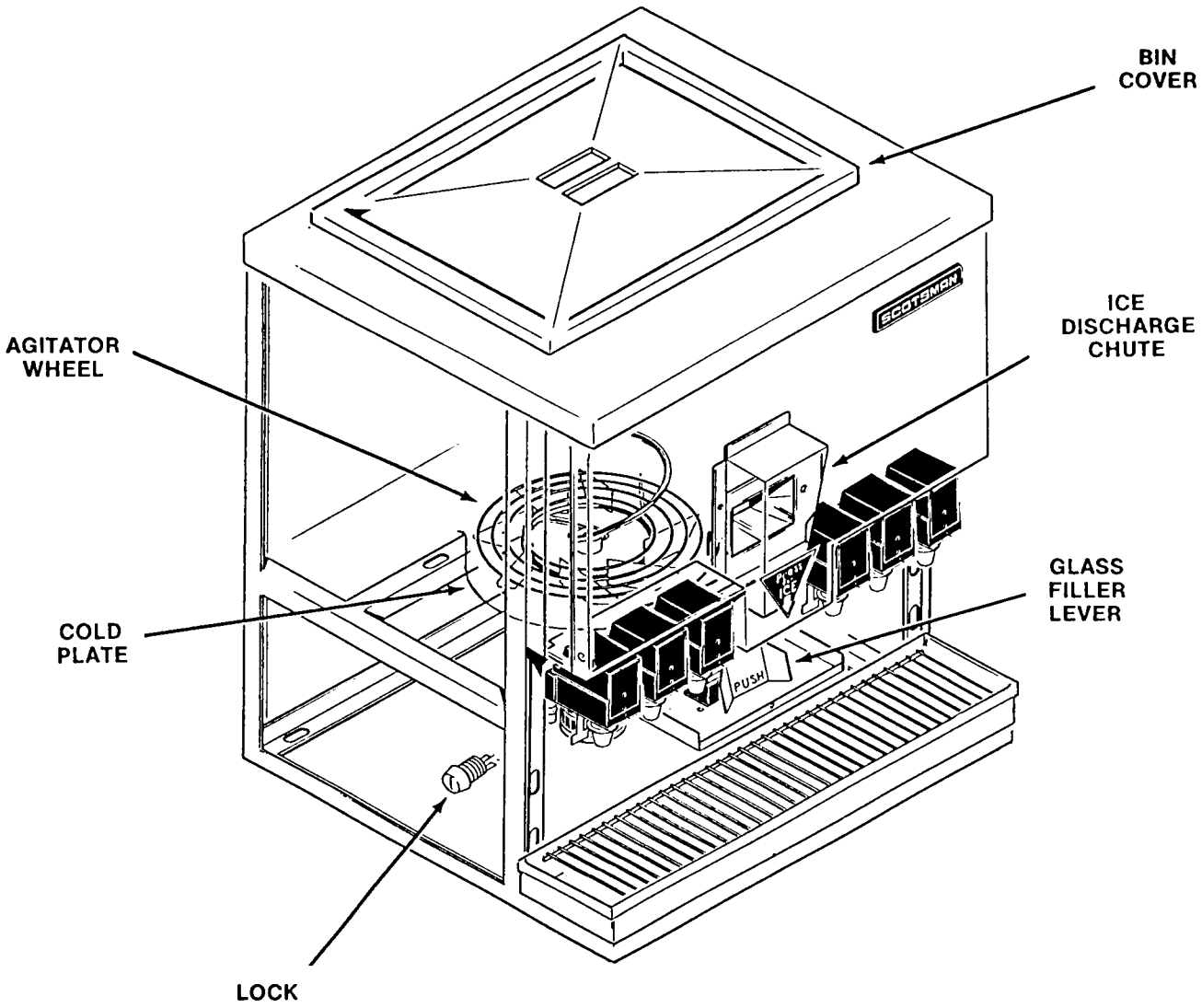

FOR MAINTENANCE

SERVICE AND MAINTENANCE

This section describes service and maintenance procedures to be performed on the unit and system.

IMPORTANT: Only qualified personnel should service internal components or electrical wiring.

PREPARING UNIT FOR SHIPPING, RELOCATING OR STORING

CAUTION: Before shipping, relocating, or storing unit, syrup coils must be flushed with potable water, all water purged from syrup and carbonated water coils, and ice in ice bin melted and all water drained from ice bin. A freezing ambient environment will cause residual water remaining inside syrup and water coils to freeze resulting in damage to unit.

ICE BIN COVER, FRONT PANEL, AND DRIP TRAY REMOVAL

ICE BIN COVER

Lift ice bin cover straight up off unit to remove.

DRIP TRAY

Lift drip tray up out of unit to remove.

FRONT PANEL

1. Remove drip tray from unit.
2. Remove two screws securing front panel, then remove panel.

PERIODIC INSPECTION

Check dispensing valves for dripping that indicates valve is leaking and repair is necessary.

ADJUSTMENTS

ADJUSTING CO_2 REGULATORS (see Figure 1-2)

NOTE: To readjust CO_2 regulator to a lower setting, loosen adjusting screw lock nut, then turn screw to the left (counterclockwise) until pressure gauge reads 5-psi lower than new setting will be. Turn adjusting screw to the right (clockwise) until gauge registers new setting, then tighten lock nut.

Carbonator Primary CO_2 Regulator.

Refer to manual provided with carbonator and adjust primary CO_2 regulator for carbonator operating pressure.

Sugar Syrup Tanks Secondary CO_2 Regulator.

Adjust sugar syrup tanks secondary CO_2 regulator at 40-psig for syrup lines up to 10-feet in length plus one pound for each additional length of 10-feet, plus one pound for each 2-feet of vertical lift. For example: if syrup line total length is 30-feet and total vertical lift is 6-feet, then 40-psig + 2-psig (1-pound for every 2-feet of vertical lift which is 6-feet); total equals 40 + 2 + 3 = 45-psig CO_2 regulator setting. Loosen lock nut on CO_2 regulator adjusting screw, turn adjusting screw to the right (clockwise) until gauge registers desired pressure, then tighten lock nut.

Low-Calorie (diet) Syrup Tank Secondary CO_2 Regulator.

Adjust low-calorie (diet) soft drink tank secondary CO_2 regulator at 10-psig for syrup lines up to 30-feet in length. Syrup lines longer than 30-feet in length may require a slightly higher CO_2 regulator setting to 12-psig maximum. Excessive CO_2 pressure may cause low-calorie carbonation resulting in foam.

ADJUSTING WATER-TO-SYRUP "RATIO" OF DISPENSED PRODUCT

Adjusting Water-to-Syrup "Ratio" of dispensed product by using Ratio Cup and Syrup Diversion Tube Assembly as follows (see Figure 4-2).

1. Loosen dispensing valve cover screw until screw disengages from valve, then remove cover.
2. Install syrup diversion tube assembly on dispensing valve by pushing rubber end of syrup diversion tube up on baffle inside nozzle.

NOTE: Refer to syrup manufacturer's recommendations on syrup package for Water-to-Syrup "Ratio".

3. Hold container under dispensing valve. Open dispensing valve and dispense just enough to fill syrup diversion tube with syrup.
4. Hold large chamber of ratio cup under dispensing valve nozzle. Place free end of syrup diversion tube into syrup chamber marked for proper ratio. Open dispensing valve and dispense approximately five ounces of water into ratio cup. Water and syrup levels should be even in ratio cup.
5. If water and syrup levels are not even in ratio cup, turn dispensing valve syrup flow regulator labeled "SYRUP" adjusting screw to the left (counterclockwise) no more than 1/4-turn at a time for less syrup or to the right (clockwise) no more than 1/4-turn at a time for more syrup.

FOR MAINTENANCE

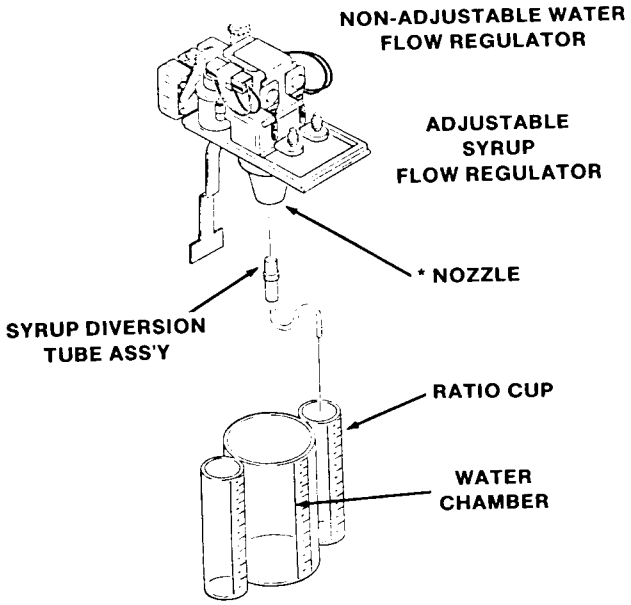

* Baffle (syrup distributor) may be removed by first removing nozzle, then pull baffle down and off valve.

RATIO CUP AND SYRUP DIVERSION TUBE ASSEMBLY

6. Repeat Water-to-Syrup "Ratio" test and adjust syrup flow regulator as many times as necessary until proper ratio of dispensed drink is achieved.
7. Remove syrup diversion tube assembly from dispensing valve.

CLEANING AND SANITIZING, ICE BIN

IMPORTANT: Only qualified personnel should perform cleaning and sanitizing procedure.

The ice bin interior should be cleaned and sanitized every 90-days following Sanitizer Manufacturer's recommendations. Use Chlor-Tergent (Oakite Products Inc.) or equivalent sanitizer.

Follow Sanitizer Manufacturer's application instructions, and warning labels.

⚠ WARNING: Ice bin contains hazardous moving part. Ice rotator is automatically timed to start and move a short distance every 128 minutes (2 hours and 8 minutes) to break up ice in ice bin. *Do not* remove ice bin cover without first unplugging unit power cord from electrical outlet.

1. Unplug unit power cord from electrical outlet.
2. Remove ice bin cover.
3. Using warm water, melt ice inside ice bin.
4. Remove front panel.
5. Remove ice chute assembly by removing thumb screws.
6. Remove 3 thumb screws securing stainless steel shelf inside ice bin, then remove shelf.
7. Remove rotator assembly from inside ice bin by lifting straight up on lower rotator ring.
8. Remove bottom washer by lifting straight up.
9. Remove ring and hub assembly by lifting straight up on the shaft.
10. Remove cold plate drain grille by lifting grille straight up.

CAUTION: *DO NOT* USE CHLORINE CLEANSING POWDERS FOR CLEANING. Use of chlorine cleaning powders will cause corrosive action on ice bin walls and metal components inside ice bin.

NOTE: Lime and scale deposits may be removed from ice bin walls and metal components inside bin by using a cleaner such as Scotsman Ice Machine Cleaner.

10. Using a nylon brush (DO NOT USE WIRE BRUSH) and detergent soap solution, scrub the interior surfaces of the ice bin, cold plate, sides and top of cold plate sink, ice discharge chute and top rim of ice bin.
11. Rinse ice bin interior with plain water.
12. Disassemble ice chute and cutoff assembly.
13. Using a nylon brush (DO NOT USE WIRE BRUSH) and detergent soap solution scrub all the parts of ice chute and cut off assembly as well as the ice bin cover, (6) thumb screws, shelf, rotator assembly, bottom washer, ring and hub assembly and cold plate drain grille.
14. Rinse all the loose parts cleaned in step 13 with plain water.
15. Reassemble the ice chute and cut off assembly.

16. In a five gallon bucket, mix a sanitizing solution of 4 ounces Chlor-tergent (Oakite Products Inc.) and 4 gallons of warm (90-120° F) water. Place all small loose parts into the sanitizer and allow them to soak for 10 to 15 minutes. (Thumb screws, shelf, drain grille, ice chute and cut off assembly.)
17. In a second five gallon bucket mix a sanitizing solution of 4 ounces Chlor-Tergent (Oakite Products Inc.) and 4 gallons of warm (90-120° F) water. Using a nylon brush and the sanitizing solution sanitize the interior surfaces of the ice bin, ice discharge chute, top rim of ice bin, bin cover, rotator assembly, bottom washer, and ring and hug assembly. Allow to air dry.
18. Using the end of a wash cloth, plug up the drain opening and position the remaining cloth into the slot cut into the cold plate.
19. Reassemble the ring and hub assembly and bottom washer.
20. Pour both buckets of sanitizer solution into the ice bin until the sanitizer spills out the end of the ice chute (6 to 7 gallons). Allow to soak for 15 minutes.
21. Remove wash cloth from drain and allow sanitizer to drain away.
22. Install drain grille.
23. Install rotator assembly.
24. Install shelf and 4 thumb screws.
25. Install ice chute and cut off assembly and 2 thumb screws.
26. Using a mechanical spray bottle and the remaining sanitizer spray all surfaces handled during reassembly of items 22 through 25. Allow to air dry.
27. Fill bin with ice as instructed.
28. Replace bin cover.
29. Plug power cord into electrical outlet.

SANITIZING SYRUP SYSTEM

IMPORTANT: If necessary to disassemble and clean dispensing valves syrup flow regulators, do not intermix their pistons and cylinders as they are precision matched sets.

1. Remove all ice from ice bin.
2. Remove quick disconnect from syrup tank.
3. Using a nylon brush (DO NOT use wire brush) and detergent soap solution scrub both halves of the disconnect, rinse with clean water.
4. Using a mechanical spray bottle and a sanitizing solution (1 oz. per gallon of Chlor-Tergent (Oakite Products Inc.) to water at a temperature of 90 to 120° F spray both halves of the quick disconnect, allow to air dry.
5. Connect hose half of disconnect to a clean syrup tank filled with the sanitizing solution described in step 3.
6. Place waste container under applicable dispensing valve. Open dispensing valve to permit sanitizing solution to purge syrup out of syrup system and dispensing valve. Continue to draw from dispensing valve until only sanitizing solution is dispensed from system, then close valve.
7. Remove dispensing valve spouts (twist and pull down) and pull out center mixing baffle.
8. Using nylon brush and detergent soap solution scrub the spout, mixing baffle, bottom of dispensing valve, and cup lever. Rinse with clean water.
9. Reassemble mixing baffle and spout.
10. Open dispensing valve and allow 1/2 gallon of sanitizer to be dispensed.
11. Remove tank containing sanitizing solution from syrup system and connect tank containing syrup into syrup system.

WARNING: Flush sanitizing solution from syrup systems as instructed. Residual sanitizing solution left in systems could create a health hazard.

Place waste container under dispensing valve. Open dispensing valve to permit syrup to purge sanitizing solution from syrup system and dispensing valve. Continue to draw from dispensing valve until only syrup is dispensed from system, then close valve.

12. Repeat steps 2 through 11 for each syrup circuit.
13. Clean exterior of unit as instructed in DAILY CLEANING OF UNIT EXTERIOR.

14. Using spray bottle of sanitizer from step 4 spray the underside of all the dispensing valves, valve spouts, and cup levers. Allow to air dry.

WARNING: Ice bin contains hazardous moving part. Ice rotator is automatically timed to start and move a short distance every 128 minutes (2 hours and 8 minutes) to break up ice in ice bin. *Do not* remove ice bin cover without first unplugging unit power cord from electrical outlet.

15. Unplug unit power cord from electrical outlet.
16. Fill ice bin with ice as instructed.
17. Install ice bin cover on unit, then plug unit power cord into electrical outlet.

CLEANING SYSTEM GAS CHECK VALVES (Field Supplied)

The CO_2 system gas check valves must be inspected and serviced at least once a year under normal conditions and after any servicing or disruption of the CO_2 system. ALWAYS REPLACE QUAD RING SEAL EACH TIME GAS CHECK VALVES ARE SERVICED.

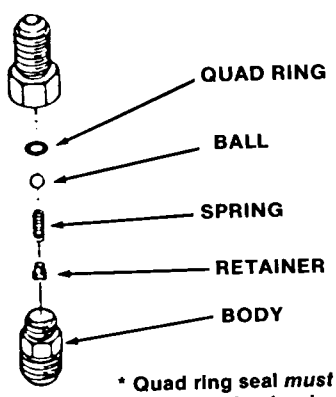

*** Quad ring seal *must* be replaced each time check valve is serviced.**

FOR MAINTENANCE

Item No.	Description
1	Cover Ass'y
2	Machine Screw
3	Screw, Thread Cutting
4	Bottom Cover
5	Spring
6	Inlet Valve
7	Nib, Short, Syrup Nib, Long, Water
8	Valve Block
9	Setscrew, Hex Socket
10	Machine Screw
11	Solenoid Coil
12	Micro Switch
13	Machine Screw
14	Plate
15	Screw, Thread Cutting
16	O-Ring
17	Housing
18	Flowasher
19	Retainer
20	Top Flow Control
21	Spring
22	Piston
23	Cylinder
24	Body
25	O-Ring
26	Baffle
27	O-Ring
28	Nozzle

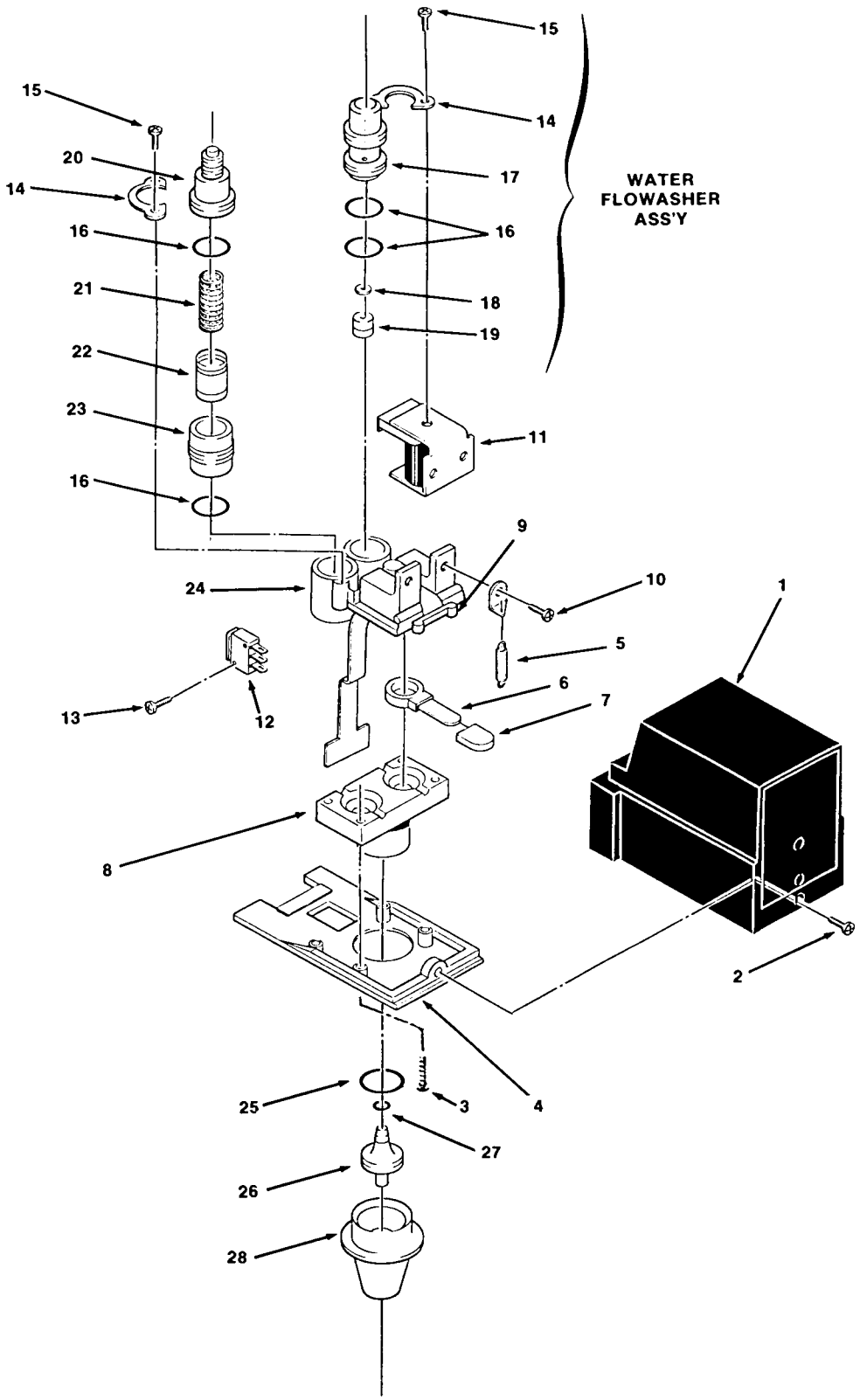

DISPENSING VALVE (CORNELIUS)

FOR SERVICE

IMPORTANT: Only qualified personnel should service internal components or electrical wiring.

WARNING: Disconnect electrical power to unit before attempting any electrical repairs to internal components. If repairs are to be made to CO_2, syrup, carbonated water, or plain water systems, shut off plain water and CO_2 supplies, disconnect carbonator power cord, disconnect syrup tanks, and bleed systems pressures before proceeding.

Trouble	Probable Cause	Remedy
TROUBLESHOOTING PRODUCT DISPENSING SYSTEM		
WATER-TO-SYRUP "RATIO" TOO LOW OR TOO HIGH.	1. Dispensing valve syrup flow regulator not properly adjusted. 2. CO_2 gas pressure to syrup tanks insufficient to push syrup out of tank.	1. Adjust Water-to-Syrup "Ratio" as instructed. 2. Adjust syrup tanks secondary CO_2 regulator as instructed.
ADJUSTMENT OF DISPENSING VALVE SYRUP FLOW REGULATOR DOES NOT INCREASE TO DESIRED WATER-TO-SYRUP "RATIO".	1. No syrup supply. 2. Syrup tank quick disconnects not secure. 3. Syrup tanks secondary CO_2 regulator out of adjustment. 4. Dispensing valve syrup flow regulator, syrup tank quick disconnect, or syrup line restricted. 5. Improper syrup Baume. 6. Dirty or inoperative piston or spring in dispensing valve syrup flow regulator. 7. Tapered nylon washer inside tube swivel nut connector (if applicable) distored from being overtightened. **IMPORTANT: If necessary to disassemble and clean dispensing valves syrup flow regulators, do not intermix their pistons and cylinders as they are precision matched sets.**	1. Replenish syrup supply as instructed. 2. Secure quick disconnects. 3. Adjust syrup tanks secondary CO_2 regulator as instructed. 4. Sanitize syrup system as instructed. 5. Replace syrup supply as instructed. 6. Disassemble and clean dispensing valve syrup flow regulator (see IMPORTANT, note). 7. Replace nylon washer and make sure it seats properly.

Trouble	Probable Cause	Remedy
ADJUSTMENT OF DISPENSING VALVE SYRUP FLOW REGULATOR DOES NOT DECREASE TO DESIRED WATER-TO-SYRUP "RATIO".	1. Dirty or inoperative piston or spring in dispensing valve syrup flow regulator. **IMPORTANT: If necessary to disassemble and clean dispensing valves syrup flow regulators, do not intermix their pistons and cylinders as they are precision matched sets.**	1. Disassemble and clean dispensing valve syrup flow regulator (see IMPORTANT, note).
DISPENSED PRODUCT CARBONATION TOO LOW.	1. Carbonator primary CO_2 regulator out of adjustment for existing water conditions or temperature. 2. Air in carbonator tank. 3. Water, oil, or dirt, in CO_2 supply.	1. Adjust carbonator primary CO_2 regulator (Reference manual provided with carbonator). 2. Vent air out of carbonator tank through relief valve. Actuate dispensing valve carbonated water lever to make carbonator pump cycle on. 3. Remove contaminated CO_2. Clean CO_2 system (lines, regulators, etc.) using a mild detergent. Install a clean CO_2 supply.
DISPENSED PRODUCT COMES OUT OF DISPENSING VALVE CLEAR BUT FOAMS IN CUP OR GLASS.	1. Oil film or soap scum in cup or glass. 2. Ice used for finished drink is sub-cooled.	1. Use clean cups and glasses. 2. Do not use ice directly from freezer. Allow ice to become "wet" before using.
DISPENSED PRODUCT PRODUCES FOAM AS IT LEAVES DISPENSING VALVE.	1. Insufficient ice supply in ice bin. 2. Carbonator CO_2 regulator pressure too high for existing water conditions or temperature. 3. Syrup over-carbonated with CO_2 as indicated by bubbles in inlet syrup lines leading to unit. 4. Dispensing valve restricted or dirty. 5. Tapered nylon washer inside carbonated water line swivel nut connector distored restricting carbonated water flow. 6. Dirty water supply. **NOTE: If water supply is dirty, be sure to flush lines and carbonator completely. It may be necessary to remove lines to carbonator tank, invert tanks, and flush tank and all inlet lines to remove any foreign particles or dirt.**	1. Replenish ice supply as instructed. 2. Reduce carbonator CO_2 regulator pressure setting. Reference manual provided with carbonator. 3. Remove syrup tanks quick disconnects. Relieve tank CO_2 pressure, shake tank vigorously, then relieve tank CO_2 pressure as many times as necessary to remove over-carbonation. 4. Sanitize syrup system as instructed. 5. Replace nylon washer. Make sure it is properly seated. 6. Check water filter. Replace cartridge. (See NOTE)

FOR SERVICE

Trouble	Probable Cause	Remedy
NO PRODUCT DISPENSING FROM ALL DISPENSING VALVES.	1. Dispensing valves keyed lock-out switch in "OFF" position. 2. No electrical power to unit. 3. Disconnected or broken wiring to dispensing valves. 4. Inoperative transformer.	1. Turn switch to "ON" position. 2. Plug in unit power cord. 3. Connect or replace wiring. 4. Replace transformer.
NO PRODUCT DISPENSED FROM ONE DISPENSING VALVE.	1. Broken or disconnected wiring. 2. Inoperative dispensing valve solenoid coil. 3. Inoperative dispensing valve micro switch.	1. Repair or connect wiring. 2. Replace solenoid coil. 3. Replace micro switch.
ONLY CARBONATED WATER DISPENSED.	1. Quick disconnects not secure on syrup tanks. 2. Out of syrup. 3. Syrup tanks secondary CO_2 regulator not properly adjusted. 4. Inoperable dispensing valve. 5. Dispensing valve syrup flow regulator not properly adjusted. 6. Dispensing valve syrup flow regulator, syrup tank quick disconnect, or syrup lines restricted. **IMPORTANT: If necessary to disassemble and clean dispensing valves syrup flow regulators, do not intermix their pistons and cylinders as they are precision matched sets.**	1. Secure quick disconnects on syrup tanks. 2. Replenish syrup supply as instructed. 3. Adjust syrup tanks secondard CO_2 regulator as instructed. 4. Repair dispensing valve. 5. Adjust dispensing valve syrup flow regulator (Water-to-Syrup "Ratio") as instructed. 6. Sanitize syrup system as instructed. (See IMPORTANT, note).
ONLY SYRUP DISPENSED.	1. Plain water inlet supply line shutoff valve closed. 2. Carbonator power cord unplugged from electrical outlet. 3. Carbonator primary CO_2 regulator not properly adjusted.	1. Open plain water inlet supply line shutoff valve. 2. Plug carbonator power cord into electrical outlet. 3. Adjust carbonator primary CO_2 regulator (Reference manual provided with carbonator).
TROUBLESHOOTING ICE DISPENSING SYSTEM		
NO ICE DISPENSED	1. Insufficient ice supply in ice bin. 2. Ice bridged over cold plate. 3. No electrical power to unit. 4. Ice dispensing micro switch operative. 5. Inoperative ice rotator motor. 6. Inoperative relay.	1. Replenish ice supply as instructed. 2. Gently tap on ice to break it loose. 3. Plug in unit power cord. 4. Replace micro switch. 5. Replace motor. 6. Replace relay.

REMOVAL AND REPLACEMENT

DISPENSING VALVE

1. Shut off CO_2 and water supply and press working valve lever to discharge pressure.
2. Unplug unit from electrical supply.
3. Remove cover from valve in question.
4. Remove upper front panel.
5. Remove panel covering valves.
6. Push upon lever at the rear of the valve, and pull valve out of machine.
7. Reverse steps to reassemble.

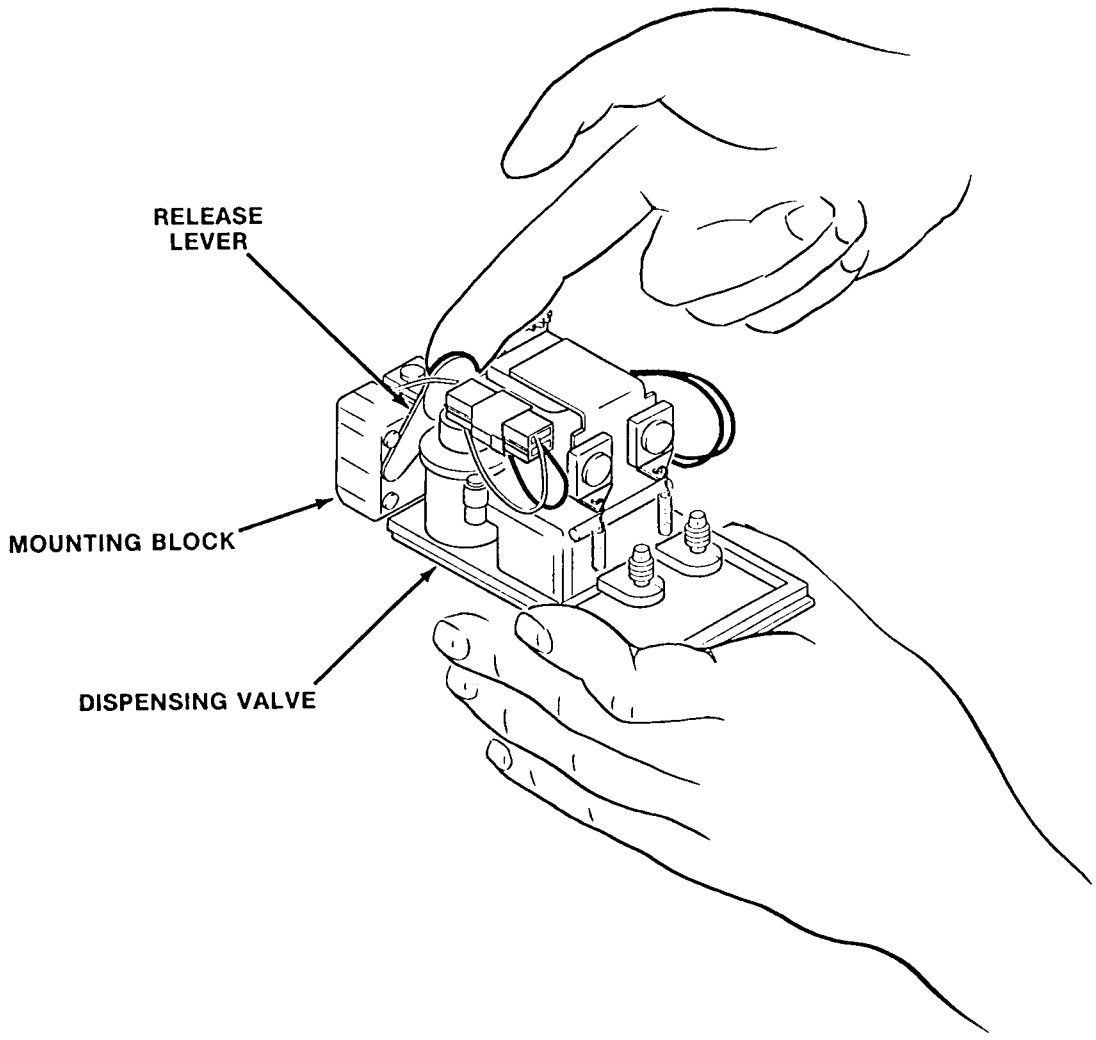

SD60/SSD100 PARTS ILLUSTSRATIONS AND PARTS LISTS

This section contains the Parts Illustrations and Parts Lists for both the SD60 and SD100 dispensers.

A *No Number* designation, when used in the part number column indicates the unit is not available from SCOTSMAN as an assembly. This designation is used only for clarity of division in making the list.

When ordering parts of assemblies, to avoid costly delays and errors in shipment, give the part number, the complete description shown in the list, and the quantity of each part of assembly required.

A wiring diagram for the SD60 and SD110 is included at the end of this section.

SD60 PARTS ILLUSTRATIONS AND PARTS LISTS

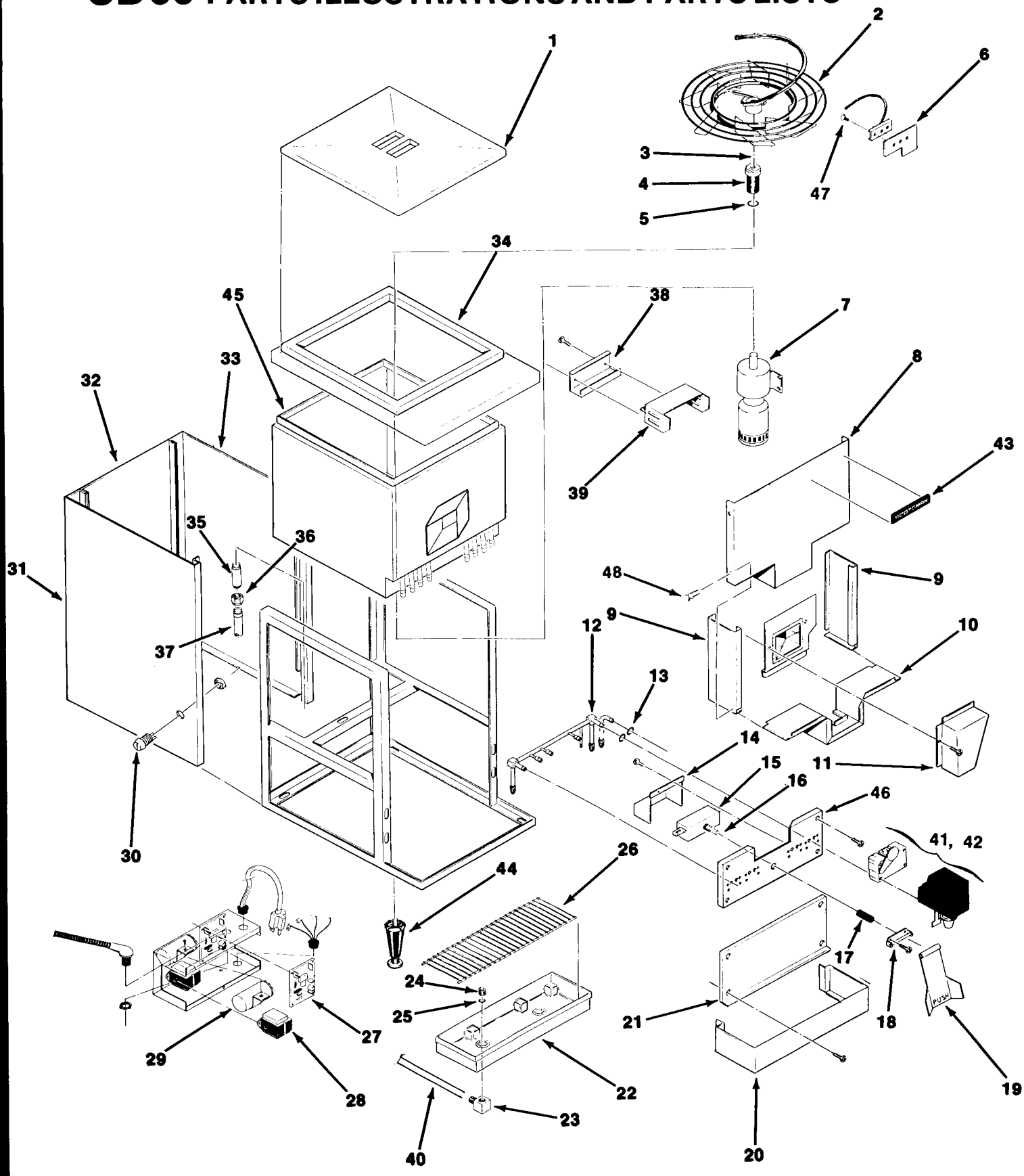

SD60 PARTS ILLUSTRATIONS AND PARTS LISTS

SD60

ITEM NUMBER	PART NUMBER	DESCRIPTION
1	A33130-001	Lid
2	A33131-001	Rotator
3	A33132-001	O-Ring
4	A33133-001	Bearing Shaft
5	A33134-001	O-Ring
6	A33136-001	Shelf
7	A33137-001	Motor
8	A33178-001	Front Panel
9	A33179-001	Side Panel L & R
10	A33180-001	Access Panel
11	A33181-001	Chute
12	A33182-001	Manifold
13	A33143-001	O-Ring
14	A33144-001	Switch Cover
15	A33145-001	Switch
16	A33146-001	Switch Boot
17	A33147-001	Spring
18	A33148-001	Lever Bkt.
19	A33149-001	Lever
20	A33183-001	Tray - Skirt
21	A33184-001	Splash Panel
22	A33185-001	Drain Tray
23	A33153-001	Drain Fitting
24	A33155-001	Drain Top
25	A33154-001	Washer
26	A33186-001	Grill
27	A33157-001	Circuit Board
28	A33158-001	Transformer
29	A33159-001	Capacitor
30	A33160-001	Lock & Switch (with Key)
31	A33187-001	L. Side Panel
32	A33188-001	Rear Panel
33	A33189-001	R. Side Panel
34	A33190-001	Rim Ass'y
35	A33164-001	Nipple
36	A33165-001	Adaptor
37	A33166-001	Drain Hose (72")
38	A33168-001	Hook
39	A33169-001	Adjuster
40	A33173-001	Drain Hose
41	A33170-001	Valve & Valve Block with Lever
42	A33171-001	Valve & Valve Block w/o Lever
43	15-0718-00	Logo
44	A33191-001	Leg
45	A33192-001	Bin & Cold Plate
46	A33193-001	Valve Panel
47	A33177-001	Thumb Screw
48	A33176-001	Thumb Screw

SD100 PARTS ILLUSTRATIONS AND PARTS LISTS

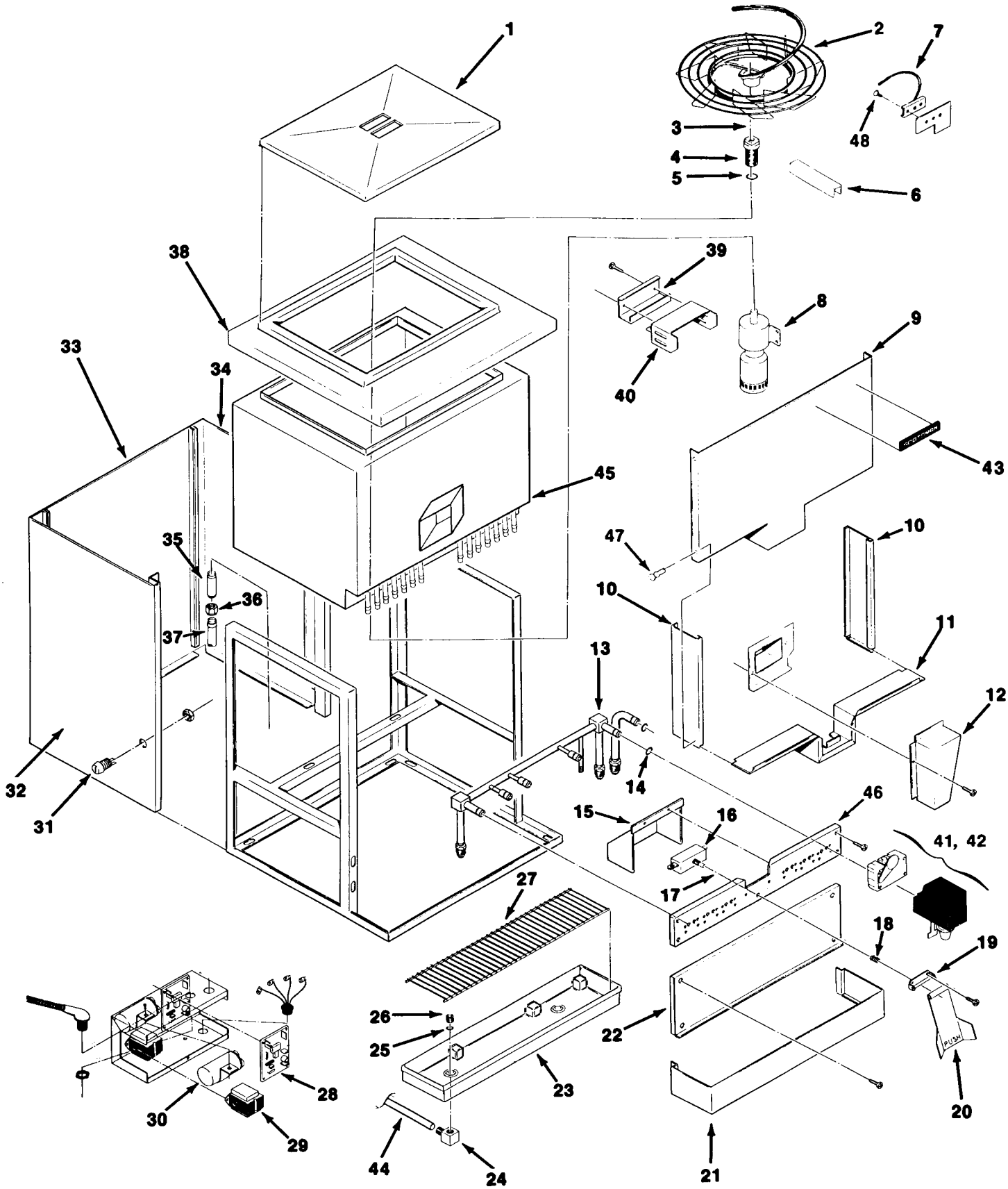

SD100 PARTS ILLUSTRATIONS AND PARTS LISTS

SD100

ITEM NUMBER	PART NUMBER	DESCRIPTION
1	A33130-001	Lid
2	A33131-001	Rotator
3	A33132-001	O-Ring
4	A33133-001	Bearing
5	A33134-001	O-Ring
6	A33135-001	Drain Screen
7	A33136-001	Shelf
8	A33137-001	Motor
9	A33138-001	Front Panel
10	A33139-001	Side Panel
11	A33140-001	Access Panel
12	A33141-001	Chute
13	A33142-001	Manifold
14	A33143-001	O-Ring
15	A33144-001	Switch Cover
16	A33145-001	Switch
17	A33146-001	Switch Boot
18	A33147-001	Spring
19	A33148-001	Lever Bkt.
20	A33149-001	Lever
21	A33150-001	Tray - Skirt
22	A33151-001	Splash Panel
23	A33152-001	Drain Tray
24	A33153-001	Drain
25	A33154-001	Washer
26	A33155-001	Drain Top
27	A33156-001	Grill
28	A33157-001	Circuit Board
29	A33158-001	Transformer
30	A33159-001	Capacitor
31	A33160-001	Lock & Key
32	A33161-001	Left Side Panel
33	A33162-001	Back Panel
34	A33163-001	Right Panel
35	A33164-001	Nipple
36	A33165-001	Adaptor
37	A33166-001	Drain Tube (144")
38	A33167-001	Rim Ass'y
39	A33168-001	Hook
40	A33169-001	Adjuster
41	A33170-001	Valve & Valve Block with Lever
42	A33171-001	Valve & Valve Block w/o Lever
43	15-0718-00	Logo
44	A33173-001	Drain Tube
45	A33174-001	Bin/Cold Plate
46	A33175-001	Valve Panel
47	A33176-001	Thumb Screw
48	A33177-001	Thumb Screw

SD60/SD100 WIRING DIAGRAM

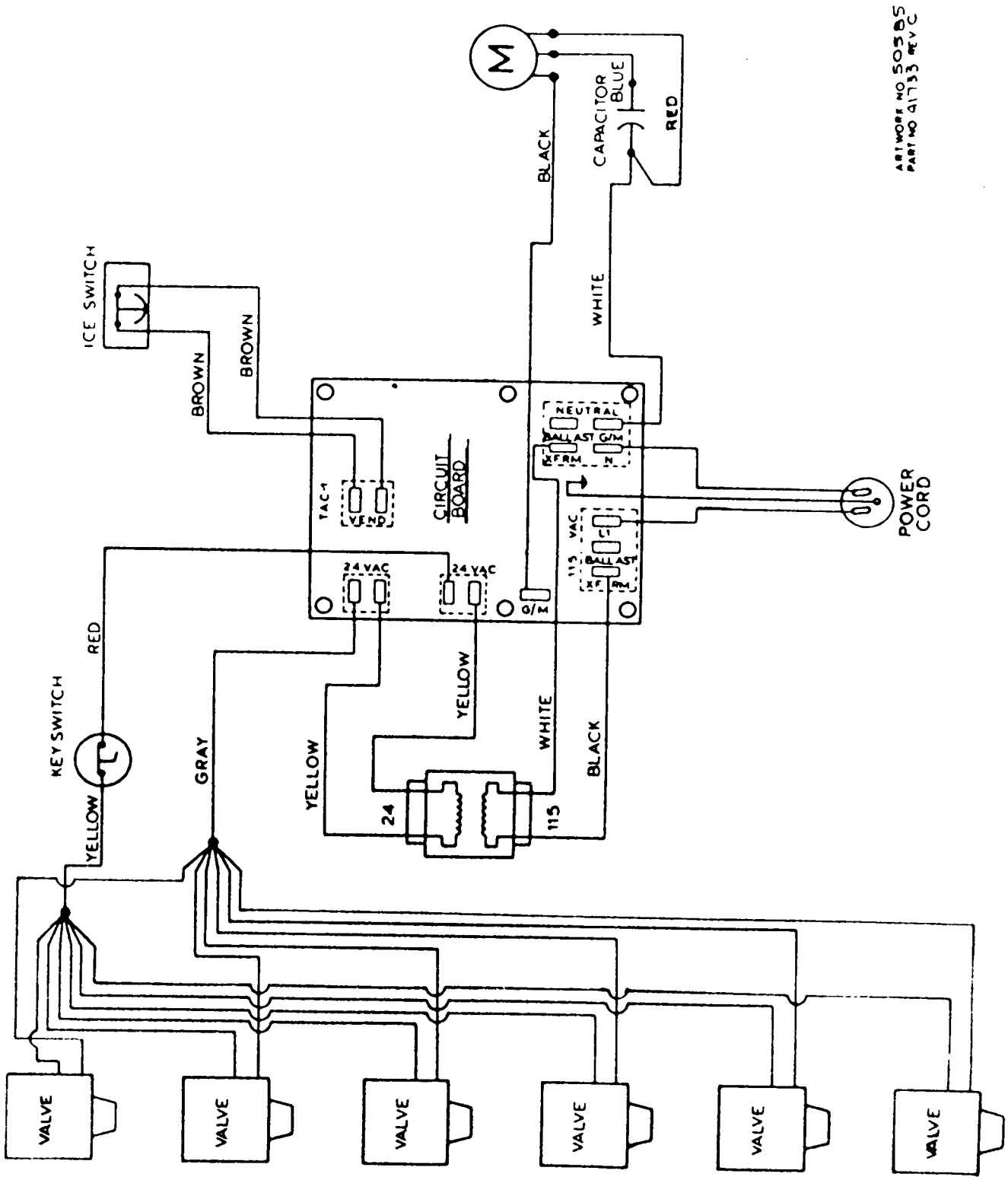

TABLE OF CONTENTS

FOREWARD I
TABLE OF CONTENTS .....
SPECIFICATIONS
Mechancal Specifications 3
Continuous Flow Capacity Chart 4
Specifications Chart 5
Specifications Chart 6
INSTALLATION
Preparation for installation 7
Selection of Location 8
Installation Practice 9
Installation Limitations 10
Installation - Electrical 11
Refrigeration Cycle 12
Water Schematic 13
Wiring Diagram - Air Cooled 14
Wiring Diagram - Water Cooled 15
Control Box - Air Cooled 16
Control Box - Water Cooled 17
Final Check List 18

SERVICE
Starting the Machine 19
Low Pressure Control 20
Water System 21
Electrical System 21-22
Removal and Installation of Parts 23
Service Information 24-25-26
Chassis - Front View - Water Cooled 27
Chassis - Rear View - Water Cooled 28
Chassis - Front View - Air Cooled 29
Chassis - Rear View - Air Cooled 30
Freezer Assembly 31
Reservoir Assembly 32
Gear Motor Assembly 33
Case and Hood Assembly 34
Service Analysis 35-36
Maintenance Instructions 37-38
Storage Bin Cleaning 39

THIS PAGE
INTENTIONALLY
LEFT BLANK

THIS PAGE
INTENTIONALLY
LEFT BLANK

MECHANICAL SPECIFICATIONS

	SF1 Air Cooled	SF1W Water Cooled
Compressor	1/2 HP Copelaweld	Same
Condenser	Air Cooled	Water Cooled
Refrigerant	20 oz. R 12	18 oz. R 12
Refrigerant Control	Capillary Tube	Same
Power Consumption - Compressor	11.0 Amps.	Same
Power Consumption - Gear Motor	4.0 Amps.	Same
Current	115 V, 60 Hertz, 1 Ph.	Same
Gear Motor Drive	1/10 HP	Same
Worm-R.P.M.	10.5	Same
Water Consumption - Freezer	2.5 Gallons per hour	Same
Water Consumption - Condenser		Varies from .75 to 2 G.P.M.
CABINET DIMENSIONS	SF1	SF1W
Width	381/2	38 1/2"
Depth	24 1/2"	24 1/2"
Height	40"	40"
Height With 6" legs	46"	46"
SHIPPING WEIGHT		
Approx. shipping weight	312	312

SCOTSMAN® ICE MACHINES

PRODUCT NAME:

SCOTSMAN® FLAKER MODEL SF1 SERIES

MANUFACTURER:

QUEEN PRODUCTS DIVISION
KING-SEELEY THERMOS CO.
ALBERT LEA, MINNESOTA 56007

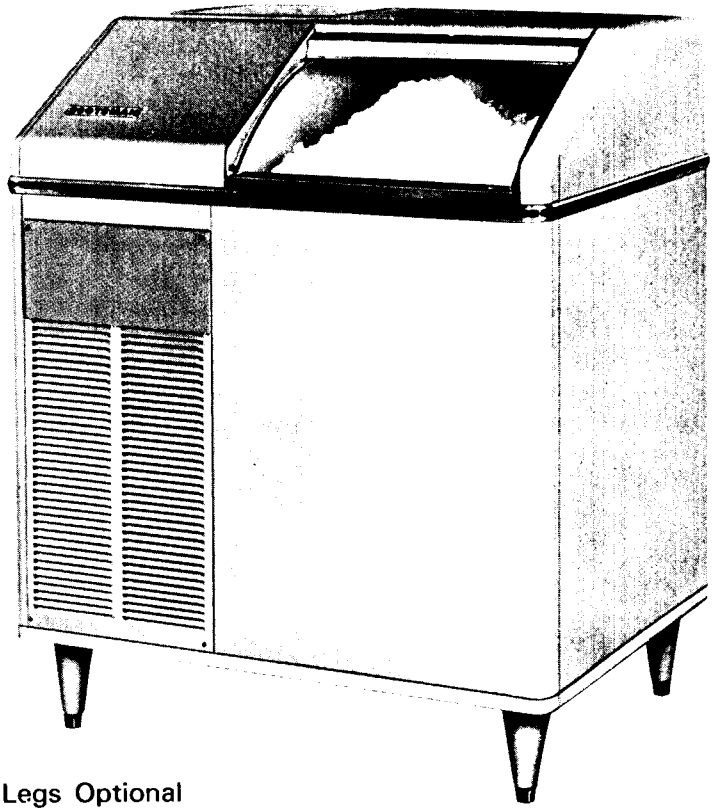

Legs Optional

KLP2E Leg Kit
KLP2S Leg Kit

ice making capacity

Daily Ice Capacity is directly related to condenser air inlet temperature, water temperature, and age of machine.

NOTE: To keep your SCOTSMAN FLAKER performing at it's maximum capacity, it is necessary to perform periodic maintenance as outlined in this maual.

MANUFACTURER:

QUEEN PRODUCTS DIVISION
KING-SEELEY THERMOS CO.
ALBERT LEA, MINNESOTA 56007

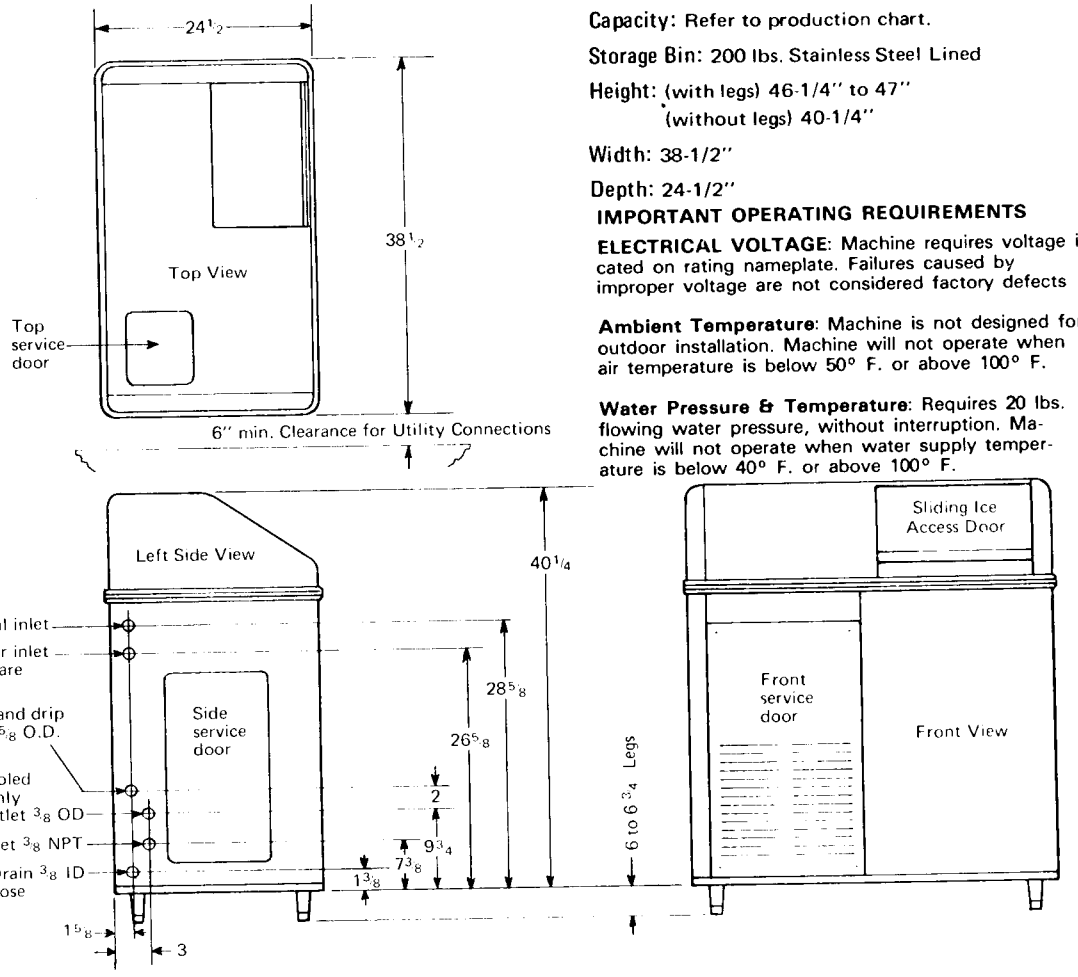

Capacity: Refer to production chart.

Storage Bin: 200 lbs. Stainless Steel Lined

Height: (with legs) 46-1/4" to 47"
(without legs) 40-1/4"

Width: 38-1/2"

Depth: 24-1/2"

IMPORTANT OPERATING REQUIREMENTS

ELECTRICAL VOLTAGE: Machine requires voltage indicated on rating nameplate. Failures caused by improper voltage are not considered factory defects

Ambient Temperature: Machine is not designed for outdoor installation. Machine will not operate when air temperature is below 50° F. or above 100° F.

Water Pressure & Temperature: Requires 20 lbs. flowing water pressure, without interruption. Machine will not operate when water supply temperature is below 40° F. or above 100° F.

SPECIFICATIONS:

Model	Condensing Unit	Compressor Horsepower	Finish (P-painted) (SS-Stainless Steel)	Shipping Weight (lbs.)
SF1WSJ	Air	1/2	P	312
SF1WSJSS	Air	1/2	SS	312
SF1WWSJ	Water	1/2	P	312
SF1WWSJSS	Water	1/2	SS	312

Basic Electricals	Minimum Wire Sizes (w-wire) (g-gauge)	Total Amperages
Air Cooled 115/60/1	2w 12g	16.5
Water Cooled 115/60/1	2w 12g	16.0

Specifications subject to change without notice.

SPECIFICATIONS

SCOTSMAN Flakers are designed for restaurants, super markets, soda fountains, hospitals, bakeries, fish markets, poultry stores, packing plants, etc. It is the finest Ice Maker on the market today. It will work 24 hours a day for you, or only as needed. It produces the highest quality ice available at any price.

Approximately 500 pounds of SCOTSMAN crushed ice is delivered each 24 hours to the storage bin for immediate use.

SCOTSMAN Flakers are easily installed requiring only standard water, drain and electrical connections.

ATTRACTIVE COMPACT CABINET. Sandlewood or stainless steel finish with chrome trim, rounded corners, and removable panels for easy access to mechanical parts. Adjustable and removable legs are under cabinet.*

SEALED REFRIGERATION SYSTEM. Provides quiet, efficient operation of the machine. Compressor motor is internally spring mounted for quiet operation. Compressor is covered by a full 5-Year Parts Only Warranty.

HOW IT WORKS. An exclusive patented ice-making system, wherein water in the constant level float reservoir is fed to the bottom end of the freezing cylinder and turns to ice on the inside of this cylinder. Ice from the refrigerated walls of this cylinder is extruded past the ice breaker at the top of the cylinder through a side opening by means of a stainless steel auger driven by a gearmotor drive.

ALL SCOTSMAN SF1 series are completely automatic. A manual switch on the front starts the machine, and from then on, produces flakes automatically. When the storage bin fills, the machine automatically shuts off and starts up agian when ice is taken from the storage compartment.

*Accessory Item

SCOTSMAN SUPER FLAKERS
PREPARATION FOR INSTALLATION

1. UNCRATING

   The entire unit comes in one cardboard carton. Upon delivery a visual inspection of the carton should be made and any severe damage noted should be reported to the delivering carrier and a concealed damage claim filed subject to internal inspection with carrier representative present. Remove carton by pulling staples driven through sides of carton into the bottom skid and lift carton straight up and off. Next remove (4) four bolts from underside of skid which connect to complete unit base. Unit now free from all crating.

2. Remove all service doors and panels.

3. NOTE: Standard models SF1 are complete without legs. If you wish to mount your machine on standard 6" legs, this may be accomplished by ordering the optional leg kit, KLPE for painted models or KLPS for stainless steel models.

4. Check motor compressor hold down nuts to insure motor compressor rides snug on mounting pads.

5. Remove water strainer from storage bin for installation on unit or in water supply line feeding unit.

6. Open electrical control box and prepare for hook up, use knock outs, cord connectors etc. Then check unit nameplate voltage against building source voltage and make sure they correspond. Caution - Improper voltage supplied to units will void your warranty protection.

7. Select unit location prior to hook up of water drain and electricals in accordance with local and national codes. Minimum room temperatures is 50° Fahrenheit. On air cooled models, select well ventilated location.

8. Remove warranty card in Users manual from storage bin, then wipe bin clean with damp cloth.

9. Fill out warranty card completely including model and serial numbers as taken from aluminum plate found behind front service panel and forward to Scotsman Factory using self mailing card.

10. Level unit with adjustable legs.*

*Accessory Item

SELECTING LOCATION

UNDER BAR INSTALLATIONS: Locate, if possible, so left end panel is accessible. Locate so proper circulation can be attained around the unit and behind it at least four inches.

KITCHEN INSTALLATIONS: As a rule, the kitchen is not the most practical place to install an air-cooled condensing unit, as grease is almost always present and makes cleaning of the condensing unit difficult. Do not locate near range or steam table or other heating devices that may be used in the kitchen.

STOREROOM INSTALLATIONS: Be sure storeroom is of adequate size and properly ventilated. A small, poorly ventilated room will greatly impair the efficiency of the unit. The storeroom must be kept above 50 degrees in the winter months.

BASEMENT INSTALLATIONS: Locate machine in the coolest place. Locate machine in a dry place. Keep away from furnace and boiler room. Keep away from service chutes and runways; also coal or other dust of any kind. If the machine is set over a floor drain, block the machine up enough to level it. If there is any chance of basement flooding, block the machine up enough to eliminate any possible damage to the machine.

WATER SUPPLY: The recommended water supply line is 1/4 inch I.D. copper tubing for SF-1. Connect to cold water supply line with regular plumbling fittings, with a shut-off valve installed in a accessible place between supply line and machine. A water strainer must be installed with the unit and mounted with clean-out plug down. Locate the strainer next to the machine with the arrow in the direction of the flow. Most plumbing codes also call for double check valves in the supply water line, particularly for water-cooled madels. Minimum temperature of inlet water 40° F.

On air-cooled models the water supply line connects to the 1/4 inch flare fitting on the machine. On water-cooled models connections are made to a 3/8 inch male pipe nipple inside of the machine compartment. Incoming water goes through the water regulating valve first and then to the water-cooled condenser. Observe arrow on water regulating valve. Water supply must be installed to conform with local code. In some cases a licensed plumber and/or a plumbing permit will be required.

DRAIN: The recommended drain from the bin is 5/8 inch OD copper tubing. Must be run to an open trapped and vented drain. If drain is a long run, allow 1/4 inch pitch per foot. Drain must be installed to conform with local code. Run separate line for condenser discharge water on water-cooled models.

INSTALLATION PRACTICE

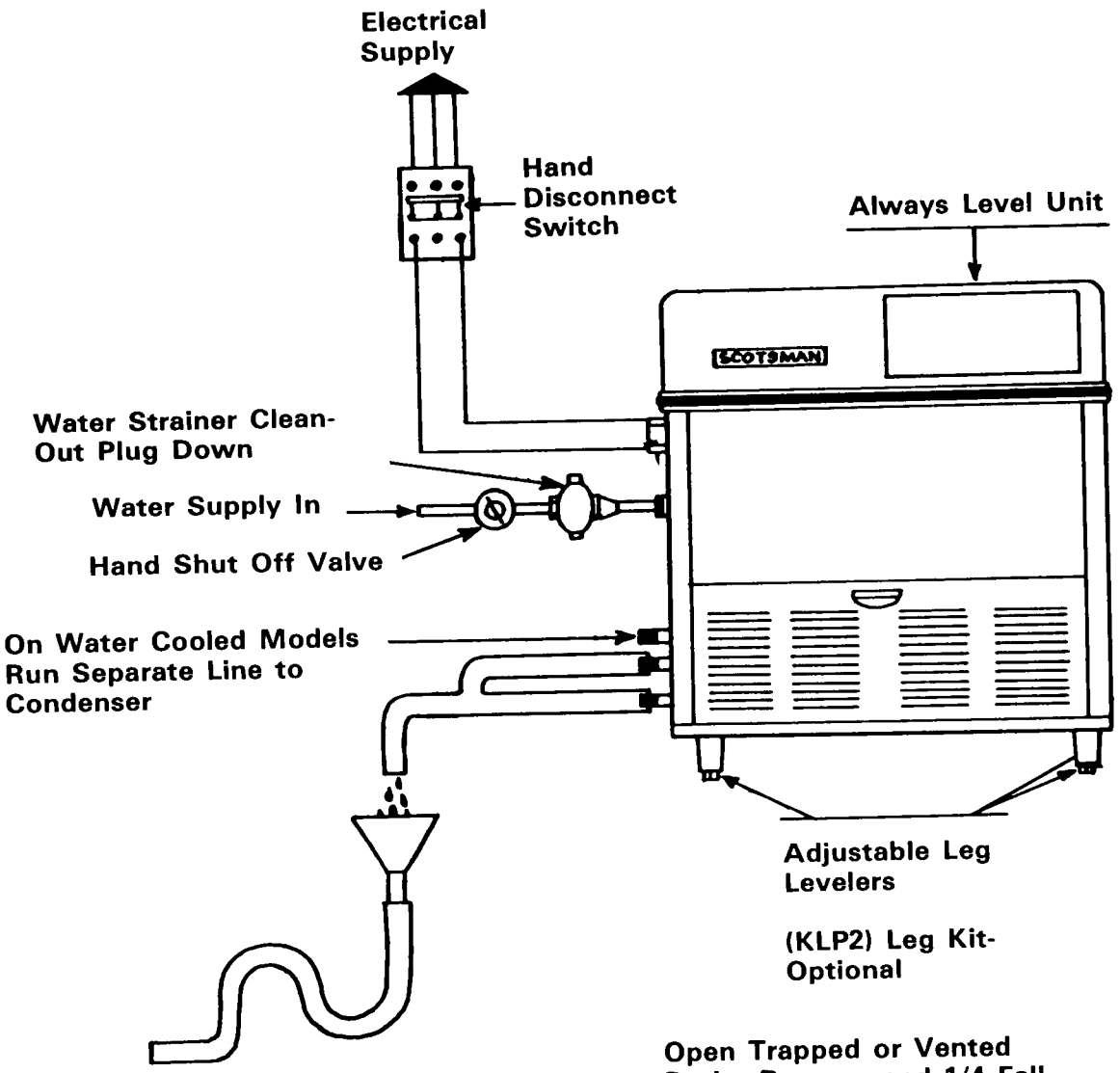

INSTALLATION LIMITATIONS

Electrical

1. Scotsman, like most manufacturers, purchases electrical motors that are rated to operate within 10% variance above or below nameplate ratings.

2. Improper voltages applied to Scotsman equipment can cause premature failures and burnouts. Failures of this type are not considered as factory fault or defect.

Ambient

WARNING — This machine is not designed for outdoor installations. This machine will not operate when air temperatures are below 50° F. or above 100° F.

This unit was not fabricated nor intended to be installed outdoors.

Water

3. Scotsman Ice Systems require 20 pounds flowing water pressure to operate satisfactorily. Pressures lower than 20 pounds or interruptions in the water supply can cause serious mechanical damage to this product.

   This machine will not operate when water supply temperatures are below 40° F. or above 100° F.

INSTALLATION

ELECTRICAL CONNECTIONS:

SF1 SERIES

SF1

Basic Electricals		Total Amps	No. of Wires	Max. Fuse Size
Air-Cooled:	115/60/1	16.5	2	20
Water-Cooled	115/60/1	16.0	2	20

Be certain that the Flaker is on its own circuit and individually fused. The maximim allowable voltage variation should not exceed 10 per cent of the nameplate rating even under starting conditions. Low voltage can cause erratic operation and may be responsible for serious damage to the overload switch and motor windings.

All external wiring should conform to the National Underwriters and local Electrical Code requirements. Usually an electrical permit and the services of a licensed electrician will be required.

Compressor	1/2 HP	Copelaweld: RSN2-0050-1AA-207 2 pole, 3500 RPM
	Voltage	115
	Amp. rating F.L.A.	12.0
	Hertz	60
	Phase	Single
Gear Drive Motor	1/10 HP	Queen Products
	Voltage	115
	Amp. rating	4.0
	Hertz	60
	Phase	Single Thermally Protected

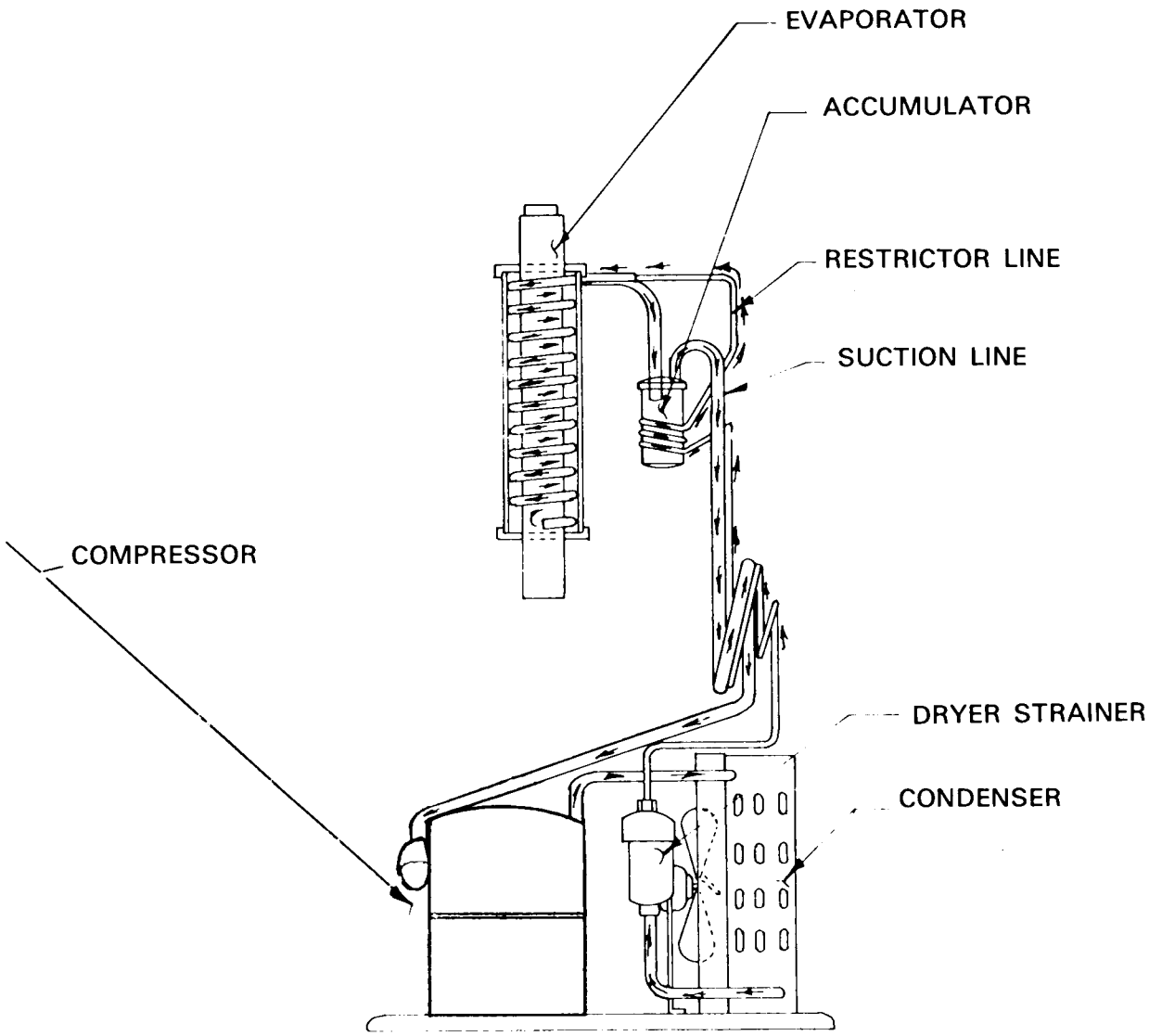

REFRIGERATION CYCLE SF1 ALL MODELS

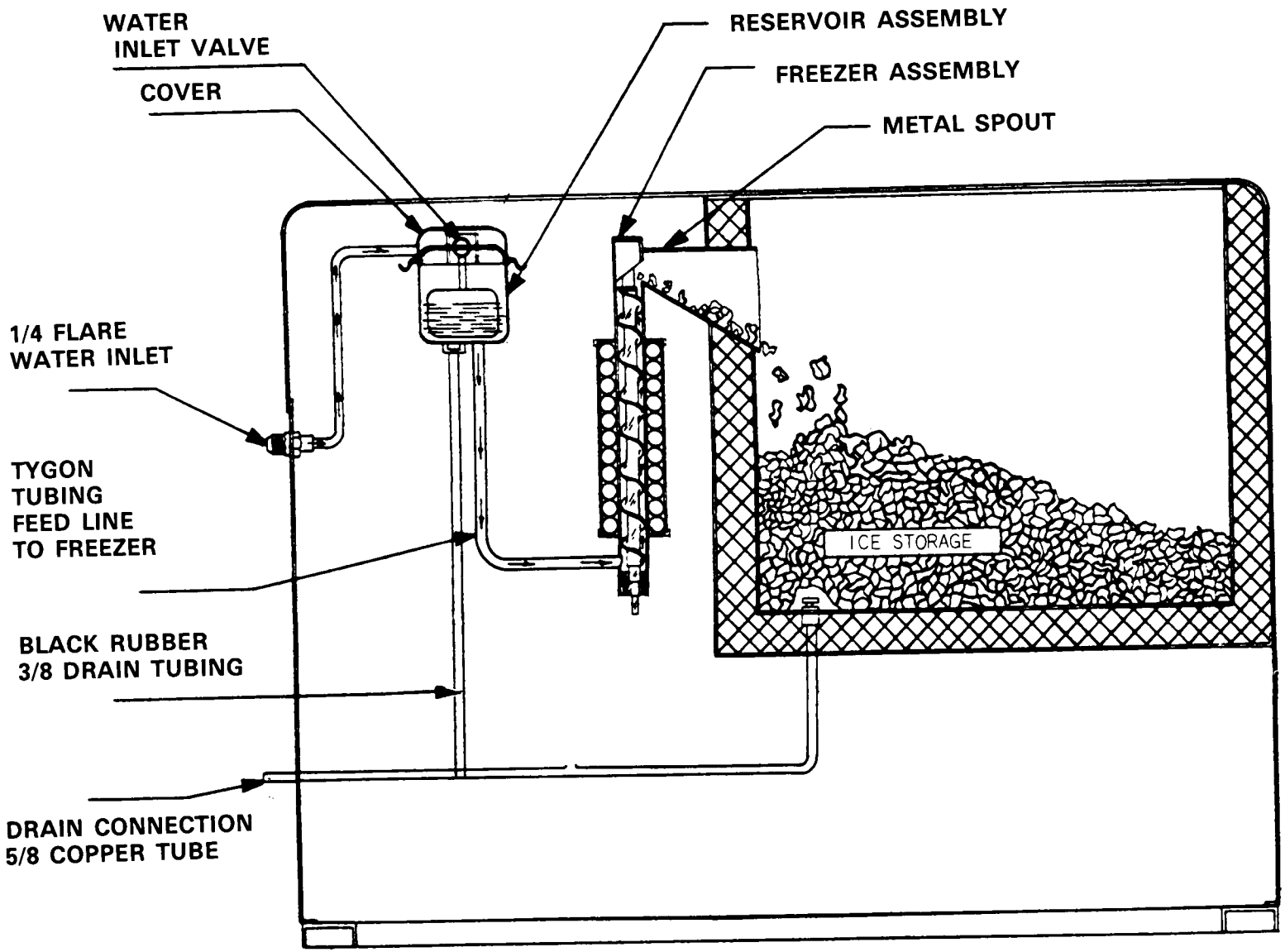

WATER SCHEMATIC

SF1 SERIES

A27038-001

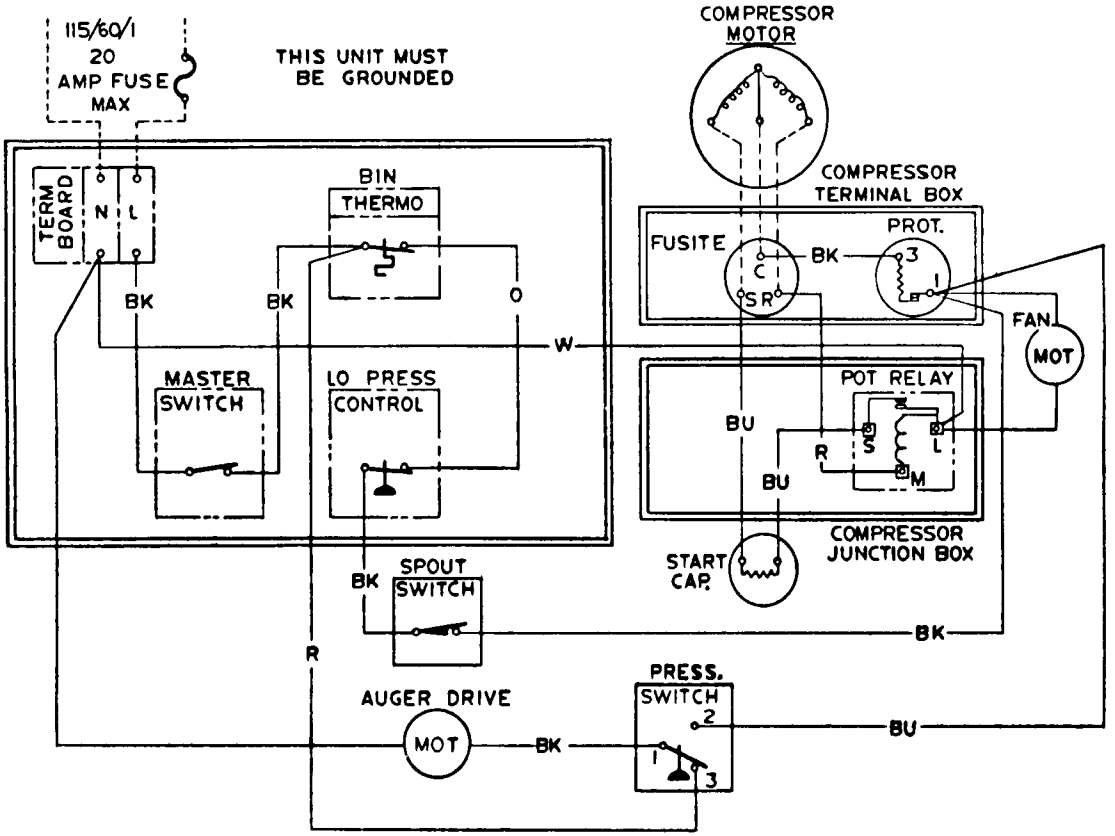

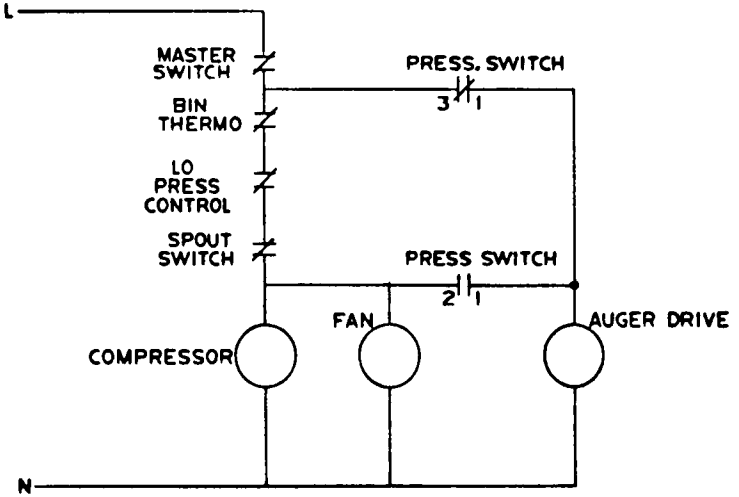

ALL CONTROLS SHOWN IN NORMAL ICE MAKING MODE

WIRING DIAGRAM

Air Cooled SF1 Series

115/60/1

A26006-001

WIRING DIAGRAM
Water Cooled
SF1W Series

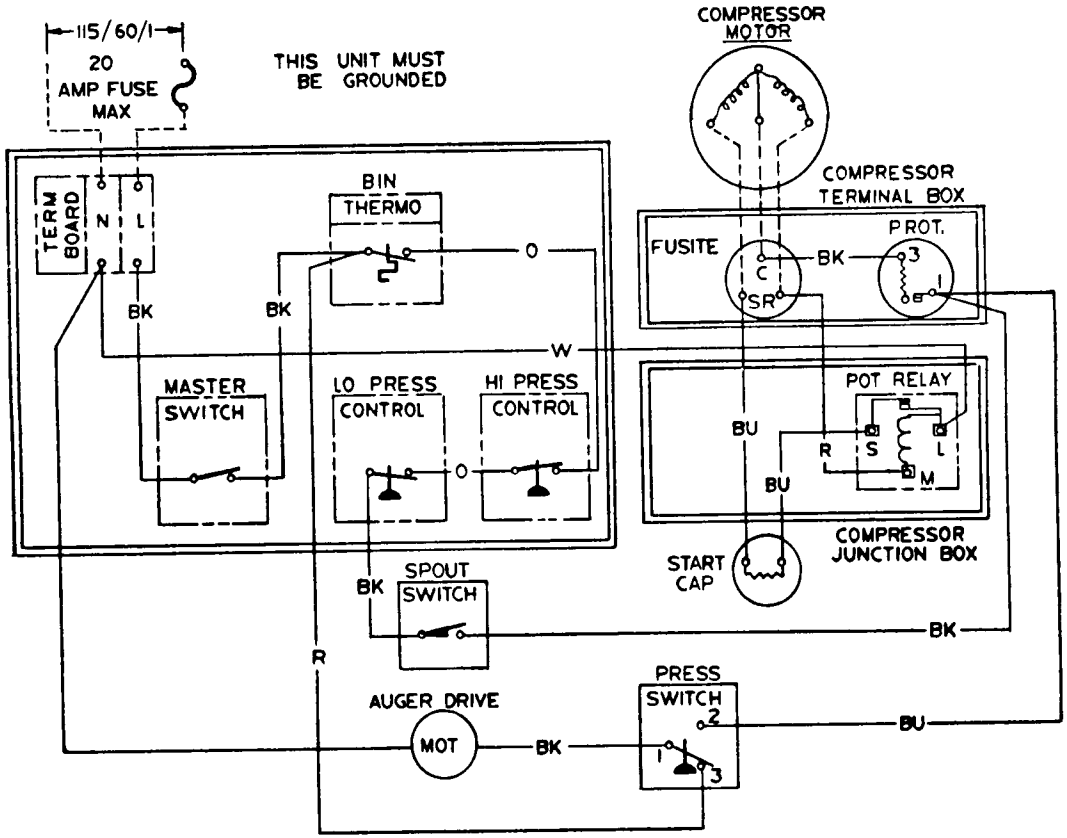

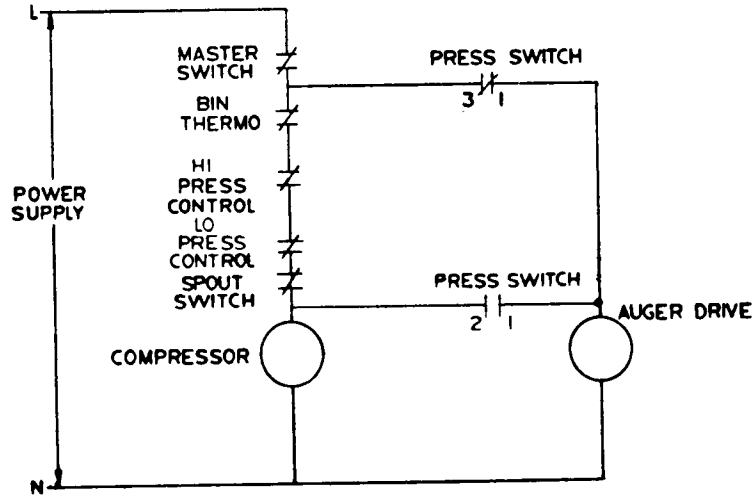

ALL CONTROLS SHOWN IN NORMAL ICE MAKING MODE

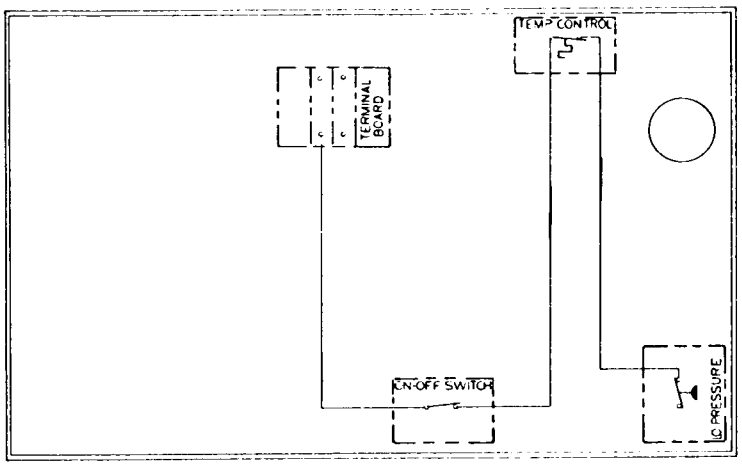

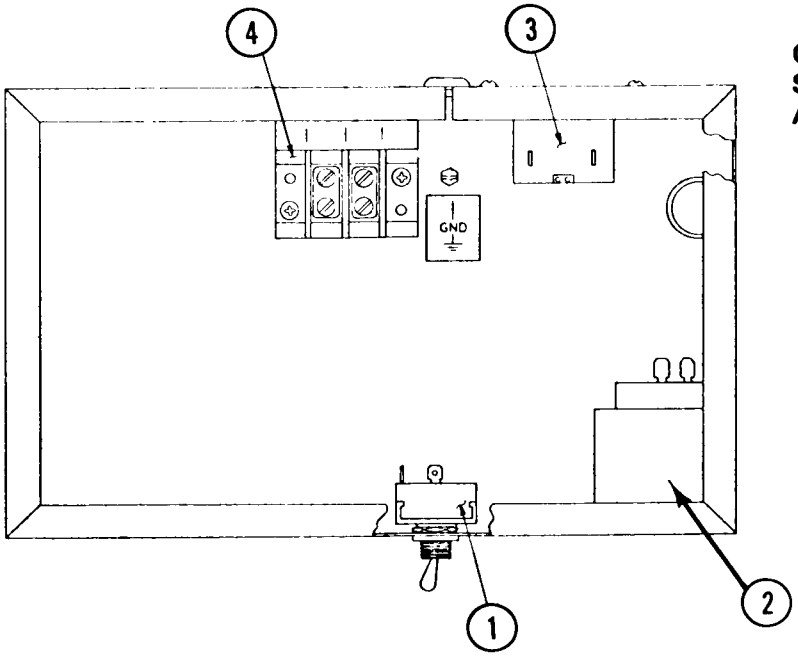

CONTROL BOX
SF1 SERIES
AIR COOLED 115/60/1

ITEM NO.	PART NO.	DESCRIPTION
1.	12-0426-01	Switch
2.	11-0358-01	Lo-Pressure Control
3.	11-0354-00	Temp Control
4.	12-0813-04	Terminal Board

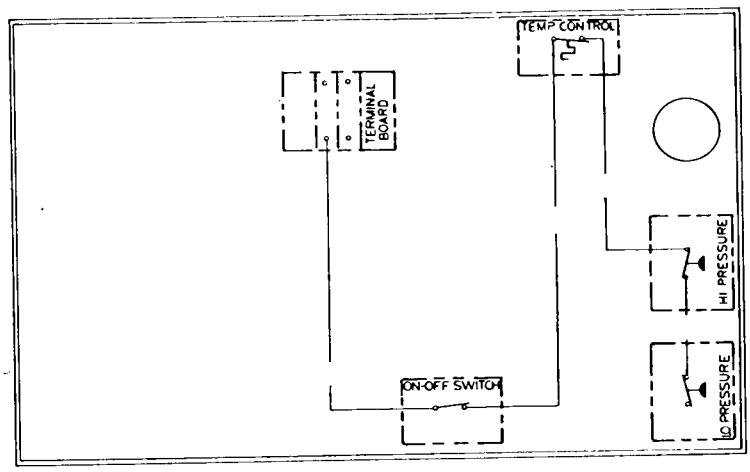

CONTROL BOX
SF1 SERIES
WATER COOLED 115/60/1

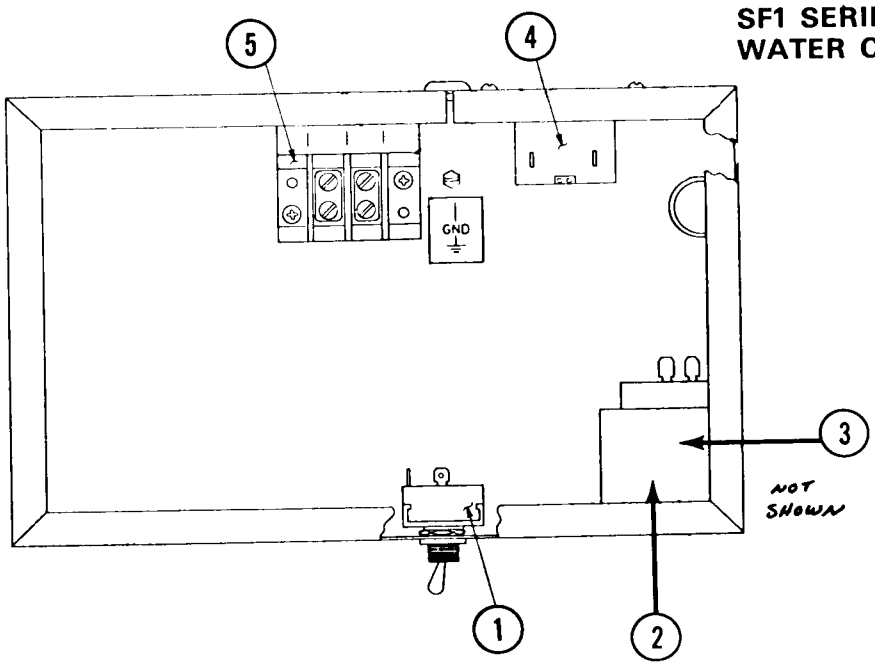

ITEM NO.	PART NO.	DESCRIPTION
1.	12-0426-01	Switch
2.	11-0358-01	Lo-Pressure Control
3.	11-0388-02	Hi-Pressure Control (Water Cooled Only)
4.	11-0354-00	Temp Cont
5.	12-0813-04	Terminal Board

FINAL CHECK LIST

1. Is the unit level? (IMPORTANT)
2. Have all electrical and piping connections been made?
3. Has the voltage been tested and checked against the nameplate rating?
4. Is the water supply valve open and the electric power on?
5. Is the water reservoir filled and shut off?
6. Have unit and bin been wiped clean?
7. Has user been given the Owners manual, and has he been instructed on how to operate the machine?
8. Have the installation warranty card been filled out and mailed to the factory?
9. Check all refrigerant and conduit lines to guard against vibration and possible failure.
10. Installed in a well ventilated room where ambient temperatures do not fall below 50° Fahrenheit.
11. Is unit installed with a minimum 4" air space around side and back?
12. Minimum inlet water temperature 40° F.

SERVICE

STARTING THE MACHINE: When the machine is placed and inspected as per instructions and all plumbing and electrical connections are completed and tested, turn on the water supply. Be sure the float cover is removed to check on the float operation and water level in the water reservoir. Be sure the water reservoir is filled before starting the machine. Water level should be 1/4 inch below the reservoir overflow.

When this is completed, turn on the manual switch on the front of the cabinet and the machine is in automatic operation. In two to three minutes ice will start dropping off the worm shaft and out the ice chute. Let the machine operate for at least 30 minutes and check for any excess noise other than the normal compressor noise. Test the ice storage control bulb by holding a handful of ice around the bulb until the macnine shuts off. One minute should be normal for the control to function. Within minutes after the ice is removed, the bulb will warm up and the macnine will automatically start up. The control is factory set and should not be reset until this test is made. Normal setting of this control should be approximately 35 degrees cut-out and 45 degrees cut-in.

Check pressure settings at the time of start-up. On the water cooled models set the head pressure at 135 PSI. On the air-cooled models the head pressure will vary between 130 and 145 PSI head pressure. The frost line should extend out of the accumulator if properly charged with refrigerant and suction pressure will range between 14 and 16 PSI with 50° F inlet water.

Service gauge connections are available on both high and low side service valves on water cooled and air cooled models.

To install gauges to any of these connections, use lines with tire type service valve adapter. Purge free of any non-condensable gases before starting any test operation.

REFRIGERANT CHARGE: The below refrigerant charge is approximate. When charging, set at 135 PSI head pressure and charge so that the frost line extends out of the evaporator and into the accumulator after fifteen minutes of operation.

Model	Charge
Air-Cooled	20 oz. R-12
Water-Cooled	18 oz. R-12

LOW PRESSURE CONTROL SWITCH

b. On all Scotsman units using a 1/15 or 1/10 H.P. gear motor, the centrifugal switch mechanism, mounted on top of the motor, was removed and replaced, in the system, with a low pressure control switch. This is a single pole double throw (SPDT) switch manufactured by Texas Instruments. (Queen Products Part No. 11-0396-01*).

*Refer to a typical wiring diagram, showing contacts, for description of switch function.

On all Queen Products wiring diagrams, the controls are shown in the ice making mode. Thus, the 1-3 contacts are shown as closed. On machine start up the 1-3 contacts are open and the 1-2 contacts are closed. As the unit begins to run, the low side pressure starts to fall from the stabilized or "at rest" pressure. As soon as the pressure drops to 21 Psig, the 1-2 contacts open and the 1-3 contacts close. This removes the operating controls, such as the bin thermostat, from the "gear motor circuit". If one of the operating controls opens, it will shut off the "compressor circuit". The gear motor will run unitl the low side pressure rises to 29 Psig. At this point the 1-3 contacts open and turns the gear motor off. This usually takes 1-3 minutes depending on ambient conditions. This length of time allows the auger to transport all the ice out of the freezing chamber. Consequently, when called on to start up again, there is no load to start up against. On start up, again, the 1-3 contacts are open and the 1-2 contacts closed.

*Function 11-0396-01 Low Pressure Control Switch

1-3 Contacts - Open on Pressure Rise
Opens at 29 Psig
Closes at 21 Psig

1-2 Contacts - Open on Pressure Fall
Opens at 21 Psig
Closes at 29 Psig

ALL CONTROLS SHOWN IN NORMAL ICE MAKING MODE

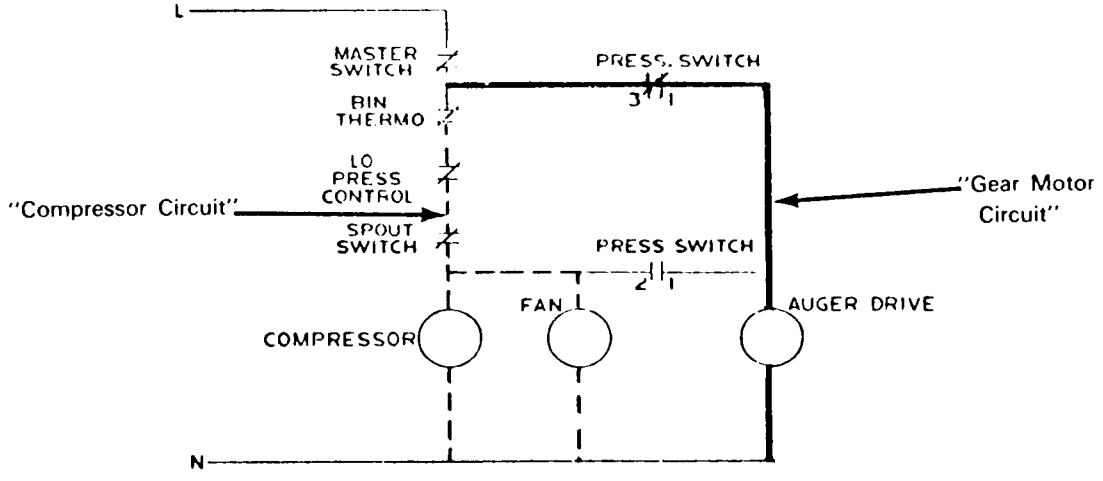

SERVICE

WATER SYSTEM: A water level is maintained in the water reservoir by a float operated valve. W ater is piped from the water reservoir to the freezing chamber by a gravity feed line maintaining an equal water level.

The water reservoir is equipped with an air gap to prevent back siphoning and meet all health codes.

The water level in the water reservoir is adjusted by bending float arm. The water level should be set 1/4 inch below the moulded in overflow well.

A water strainer must be installed in the supply line. Use strainer sent with machine.

ELECTRICAL SYSTEM: The Flaker Model SF1 is designed to work on standard electrical supply 115 volts, 60 Hertz single phase.

Supply voltage should not vary more than plus or minus 10 percent over nameplate rating.

Special voltage requirements are available on special order. Therefore, always check nameplate for this information before connecting electrical supply.

The electrical circuit consists of condensing unit, freezer gear motor, storage bin thermostat ON and OFF switch and spout micro (safety) switch.

A. CONDENSING UNIT: The starting capacitor and starting relay are housed and fastened to the motor compressor.

B. STORAGE BIN THERMOSTAT: Thermostat control body is located in electrical control box. The thermostat sensing tube is threaded into the ice storage bin where it automatically stops the icemaker when ice bin fills to sensing tube level and restarts icemaker when ice is removed. Factory settings are 35° cut out, 45° cut in.

Altitude correction begins at 2,000 feet, cut in and cut out screws should be adjusted equally, not more that 1/4 turn at a time.

C. MICRO SAFETY SWITCH: The micro switch is located in the top of the ice chute. The switch is operated by a pressure plate inside the ice chute. Ice backs up in the chute if the storage bin thermostat fails. Micro switch will shut off the condensing unit only, when operated.

D. ON-OFF SWITCH: A manual on-off switch is located in control box.

E. SAFETY CONTROL: High head pressure. On water cooled models only. Factory set to stop entire icemaker if head pressure reaches 190# PSIG. Manual reset, adjustable.

F. SAFETY CONTROL: Low back pressure. Used on both models, this control is set to electrically "open" at 2# PSIG, stopping entire icemaker. Manual reset, non adjustable.

REMOVAL & INSTALLATION OF PARTS

CABINET TOP (HOOD)

1. Remove two back end screws of chrome strip.
2. Pull out tape concealing screws.
3. Remove balance of screws in chrome strip.
4. Lift off hood.

HOOD SERVICE DOOR TOP

1. Remove screws from edges.
2. Lift out door.

CABINET SIDE SERVICE DOOR

1. Remove four screws on edges.
2. Lift out door.

CABINET FRONT SERVICE DOOR

1. Front door pulls out. 4 screws

CABINET REAR SERVICE DOOR

1. Remove four screws on corners of rear service door.
2. Pull door out.

ICE STORAGE DOOR

1. Lift door up, slide back 6''. Remove thumb screw that attaches safety lanyard to back of door.
2. Door will now slide out. Lift front edge slightly to clear hood lip.

ICE STORABE DOOR FRAME

1. Remove six screws at bottom and sides.
2. Remove screw in frame back.
3. Frame will now lift out.

MOTOR COMPRESSOR

1. Remove gas charge.
2. Disconnect wiring from the compressor.
3. Loosen suction and discharge lines and cap off.
4. Remove the compressor hold-down nuts and lift compressor out of the unit.
5. Reverse steps 1 through 4 in replacing compressor.

SERVICE

FREEZER ASSEMBLY

1. In most instances, it will be faster to remove freezer by first removing cabinet top or hood. (See Removing and Installing Cabinet Parts.) Assembly can be changed if necessary through hood top panel.
2. Shut off water supply to unit, remove top and left side service panels.
3. Disconnect water inlet line at reservoir. Remove water supply tube at freezer and drain freezer.
4. Purge off refrigerant, unsweat section line, disconnect capillary line at drier. Cap off all lines so no moisture can enter system.
5. Remove insulation pieces around spout, also the spout proper.
6. Remove 3 bolts holding adapter base to gearmotor top cover, lift freezer out of cabinet.
7. Remove adaptor spout front and back plates from old freezer and install on new replacement.
8. Re-install in reverse of above.

FREEZER WORM SHAFT

1. Turn unit off, before removing worm shaft.
2. Shut off water supply to unit.
3. Remove hood service doors.
4. Remove top and bottom straps around spout insulation pieces, remove pieces.
5. Remove two slotted head screws which fit through top chamber wall into ice breaker.
6. Tap spline coupling loose on bottom end of freezer worm shaft.
7. Complete worm shaft with ice breaker attached will now come out by lifting up on freezer cap pull ring. NOTE: Top half of water seal will come with worm shaft.
8. To remove ice breaker from shaft, first remove retainer ring in top of ice breaker.
9. Remove freezer cap and pull ring from ice breaker.
10. Remove cap screw holding shaft through bearing and pull worm shaft free from ice breaker and bearing.
11. If shaft is defective, remove water seal top half and put on new worm shaft before reassembling—when reassembling, by reversing above, put a small amount of Vaseline on shaft end. This will allow shaft to slide smoothly through rubber bottom half of water seal without tearing it.

WATER SEAL

1. To replace water seal, follow steps 1 through 7 under Worm Shaft Removel.
2. Remove 3 bolts holding freezer to mounting adapter.
3. Lift freezer off adapter just high enough to allow bottom bearing and bottom half of water seal to be removed from bottom of freezer tube.
4. Lightly grease bottom half of new water seal and insert face up approximately 1/2" in bottom of freezer tube.
5. Insert bottom bearing in bottom of freezer tube, force approximately 1/8" past bottom tube end. This will allow the positioning ring on adaptor to properly position freezer tube when tightening up the three mounting bolts.
6. After securing mounting bolts, put new top half of water seal on worm shaft the same way as the old seal was removed.
7. Carefully insert worm shaft assembly in freezer tube and into spline coupling on bottom.
8. Replace ice breaker screws, insulation pieces and unit is ready to resume operation.

SERVICE

STORAGE BIN THERMOSTAT:

1. Disconnect electrical supply.
2. Remove bin thermostat bulb from bin location along with its capillary tube.
3. Remove control box cover.
4. Disconnect two spade type electrical leads.
5. Loosen two screws in control mounting bracket.
6. Replace with new control and reassemble in reverse of above.
7. CAUTION: Always check new control power element charge before installation to assure receiving an operative control. A handful of ice on bulb will register an audible 'click' at cut off.

WATER RESERVOIR

1. Remove service panel in cabinet hood.
2. Turn off water supply and drain reservoir.
3. Remove 1/4 inch inlet water line.
4. Remove 1/2 inch plastic feed line to freezer.
5. Remove wing nut holding reservoir to bracket.
6. Lift out reservoir.
7. To replace, reverse procedure.

SERVICE

MICRO SWITCH IN SPOUT

1. Remove hood service panel.
2. Remove insulation pieces around freezer spout.
3. Remove micro box cover, loosen two screws at rear of box holding switch in place, lift up.
4. Disconnect electric leads.
5. Reassemble with new micro switch.

MANUAL ON AND OFF SWITCH

1. Remove front service door.
2. Remove two screws holding switch to bracket.
3. Disconnect electrical leads from switch.
4. Remove switch.
5. To replace, revers procedure.

FREEZER GEARMOTOR

1. The easiest way to change the gearmotor is to remove complete cabinet hood as explained earlier in this section. If necessary because of location you can change by removing top service panel.
2. Pull off left side service panel and look up on underside of left side cabinet panel: 4 screws secure this gearmotor to frame.
3. Remove the four wire leads (2 on micro switch on top of motor, 2 from motor into control box.)
4. Remove 3 bolts thru adapter into gearmotor cover and the 4 bolts holding gearmotor to mounting base.
5. Lift freezer adapter assembly off gearmotor and pull gearmotor out thru left side.

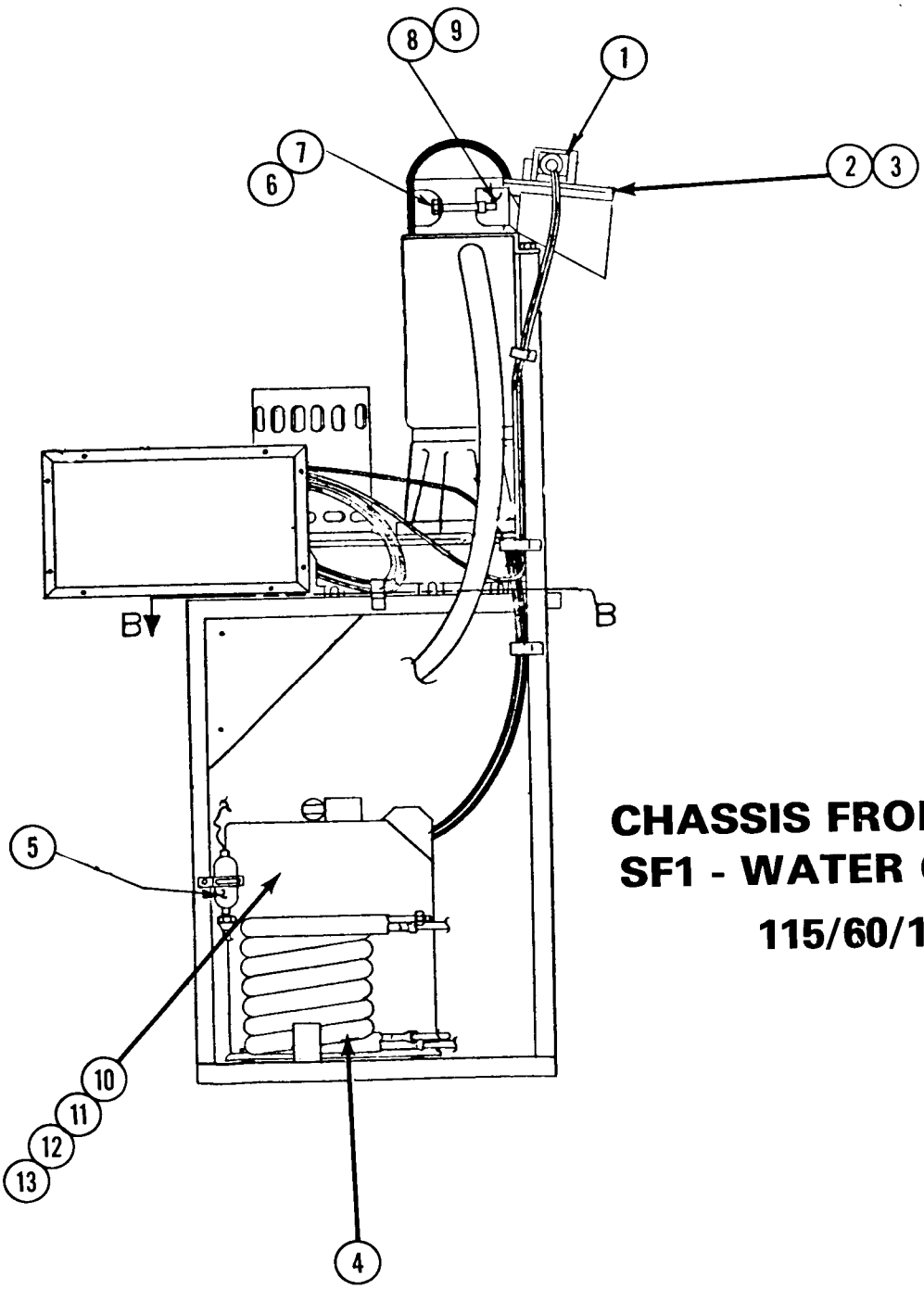

CHASSIS FRONT VIEW
SF1 - WATER COOLED
115/60/1

ITEM NO.	PART NO.	DESCRIPTION
1.	12-1018-00	Spout Micro Switch
2.	A16360-000	Spout Pressure Plate
3.	02-1321-00	Spring
4.	18-3303-02	Condensor Water Cooled
5.	02-0831-00	Refrigerant Drier
6.	03-1403-35	Screws (2)
7.	03-1417-07	Lockwasher (2)
8.	A14254-000	Spout Casting
9.	13-0679-00	Gasket
10.	18-2200-01	Compressor
11.	18-2200-26	Compressor Relay
12.	18-1901-10	Start Capacitor
13.	18-2200-25	Compressor Overload

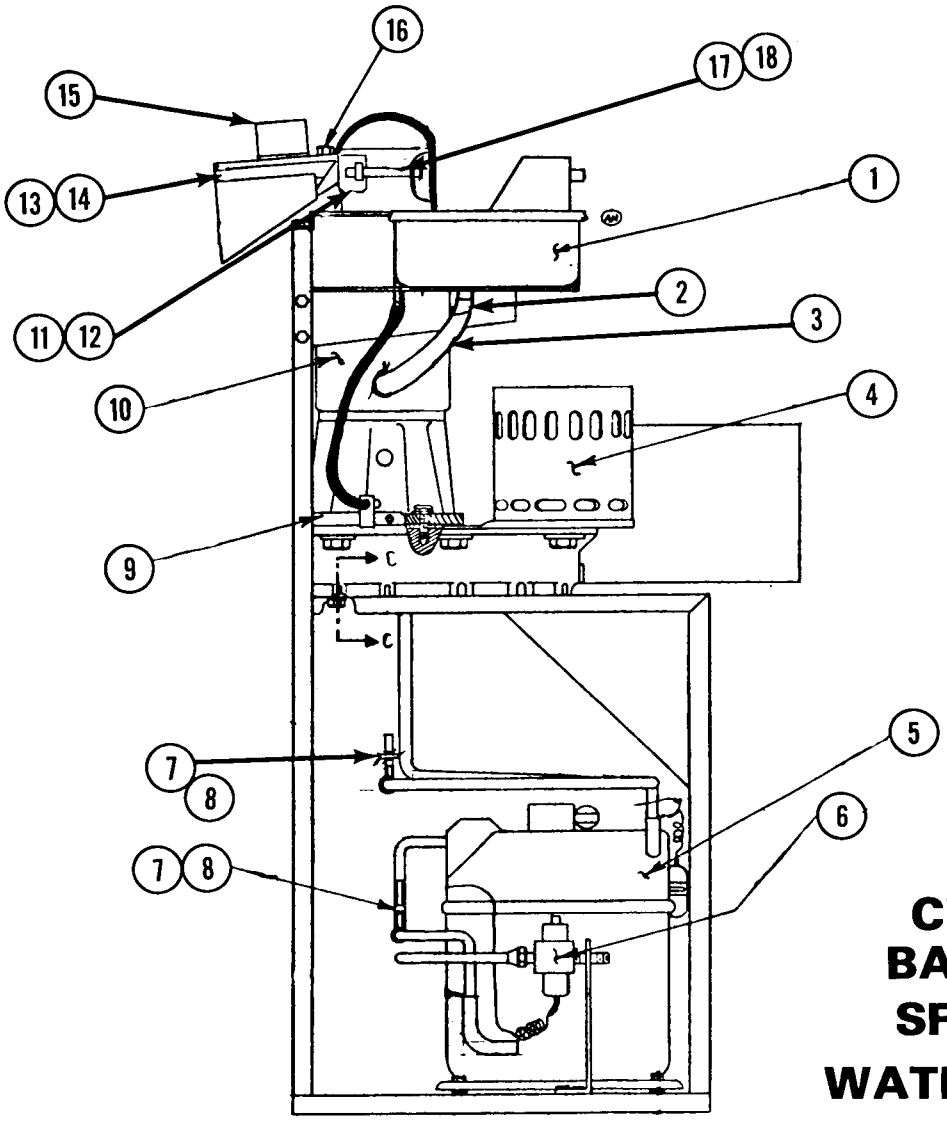

CHASSES BACK VIEW SF1 SERIES WATER COOLED 115/60/1

ITEM NO.	PART NO.	DESCRIPTION
1.	02-2217-01	Reservoir (Complete)
2.	02-0535-00	Hose Clamp
3.	A21574-018	Plastic Tube (Water)
4.	A25995-021	Gear Motor Assy.
5.	18-2200-01	Compressor
6.	11-0198-00	Water Regulater Valve
7.	16-0560-00	Valve Core
8.	16-0563-00	Valve Cap
9.	A18153-000	Drip Pan
10.	See Page 31	Evaporator
11.	A14254-000	Spout Casting
12.	13-0679-00	Gasket
13.	A16360-000	Spout Pressure Plate
14.	02-1321-00	Spring
15.	12-1018-00	Spout Micro Switch
16.	A14256-000	Mounting Nut
17.	03-1403-35	Screws (2)
18.	03-1417-07	Lockwasher (2)

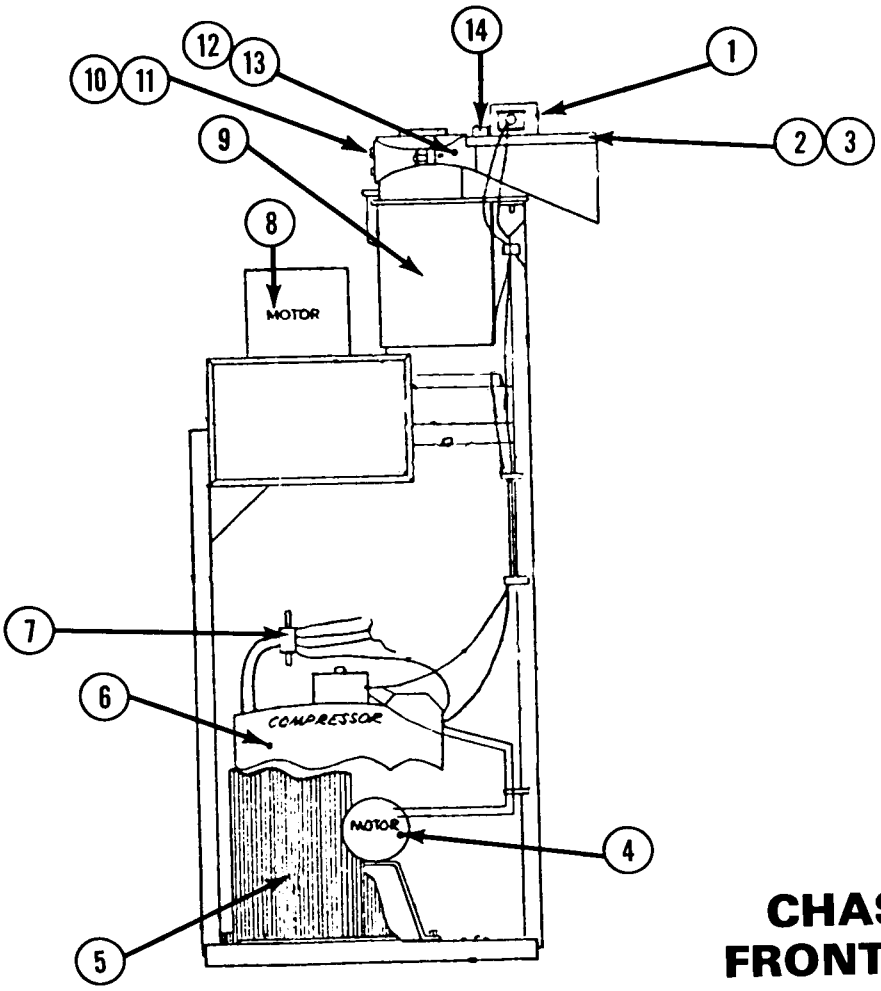

CHASSIS FRONT VIEW SF1 SERIES AIR COOLED 115/60/1

ITEM NO.	PART NO.	DESCRIPTION
1.	12-1018-00	Spout Micro Switch
2.	A16360-000	Spout Pressure Plate
3.	02-1321-00	Spring
4.	12-1575-01	Fan Motor
5.	18-0234-00	Condensor Air Cooled
6.	18-2200-01	Compressor
7.	11-0396-01	Low Pressure Switch
8.	A25995-021	Gear Motor Assy.
9.	See Page 31	Evaporator
10.	03-1403-35	Screws (2) Req.
11.	03-1417-07	Lockwasher (2) Req.
12.	A14254-000	Spout Casting
13.	13-0679-00	Gasket
14.	A14256-000	Mounting Nut

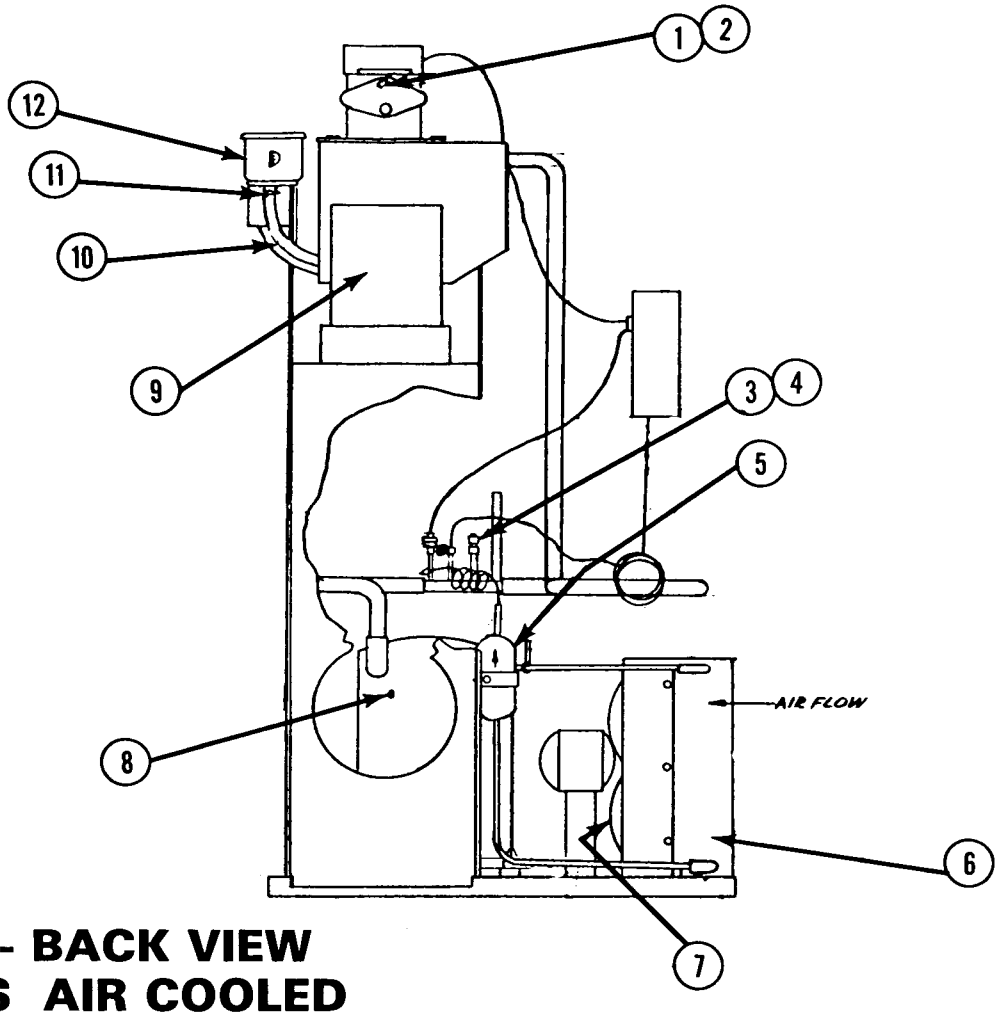

CHASSIS - BACK VIEW
SF1 SERIES AIR COOLED
115/60/1

ITEM NO.	PART NO.	DESCRIPTION
1.	03-1403-35	Screws (2) Req.
2.	03-1417-07	Lockwasher (2) Req.
3.	16-0560-00	Valve. Core
4.	16-0563-00	Valve Cap
5.	02-0831-00	Refrigerant Drier
6.	18-0234-00	Condensor Air Cooled
7.	18-0231-00	Fan Blade
8.	18-2200-01	Compressor
9.	See Page 31	Evaporator
10.	A21574-018	Plastic Hose (Water)
11.	02-0535-00	Hose Clamp
12.	02-2217-01	Reservoir (Complete)

FREEZER ASSEMBLY
SF-1 MODELS

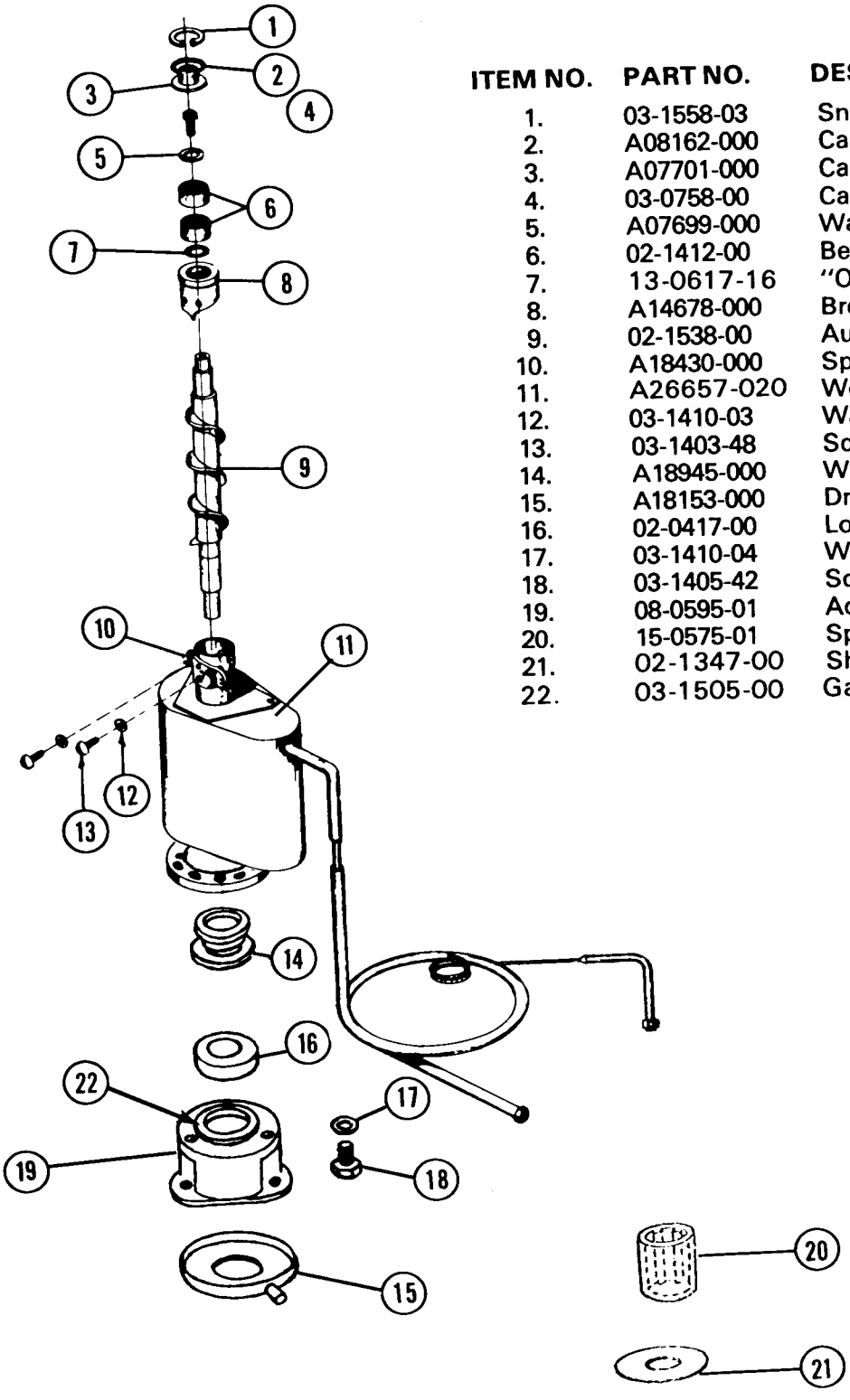

ITEM NO.	PART NO.	DESCRIPTION
1.	03-1558-03	Snap Ring
2.	A08162-000	Cap Hook
3.	A07701-000	Cap
4.	03-0758-00	Cap Screw
5.	A07699-000	Washer
6.	02-1412-00	Bearing
7.	13-0617-16	"O" Ring
8.	A14678-000	Breaker With Bearing and "O" Ring
9.	02-1538-00	Auger
10.	A18430-000	Spout Plate
11.	A26657-020	Worm Tube—Suction LIne
12.	03-1410-03	Washer
13.	03-1403-48	Screws
14.	A18945-000	Water Seal
15.	A18153-000	Drip Pan
16.	02-0417-00	Lower Bearing
17.	03-1410-04	Washer
18.	03-1405-42	Screw
19.	08-0595-01	Adapter
20.	15-0575-01	Spline Drive Coupling
21.	02-1347-00	Shaft Drip Shield Rubber
22.	03-1505-00	Gasket - Freezer to Adaptor

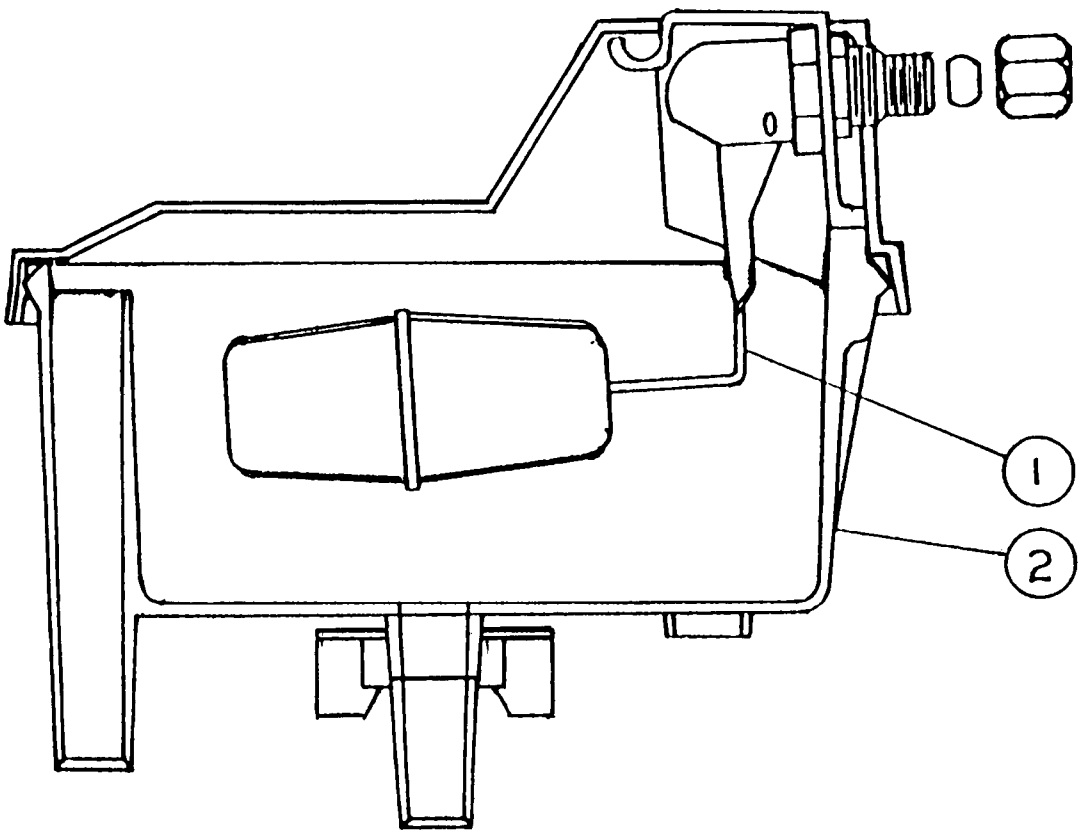

RESERVOIR ASSEMBLY

ITEM NO.	PART NO.	DESCRIPTION
1.	02-2217-02	Valve Assy
2.	02-2217-01	Reservoir Complete

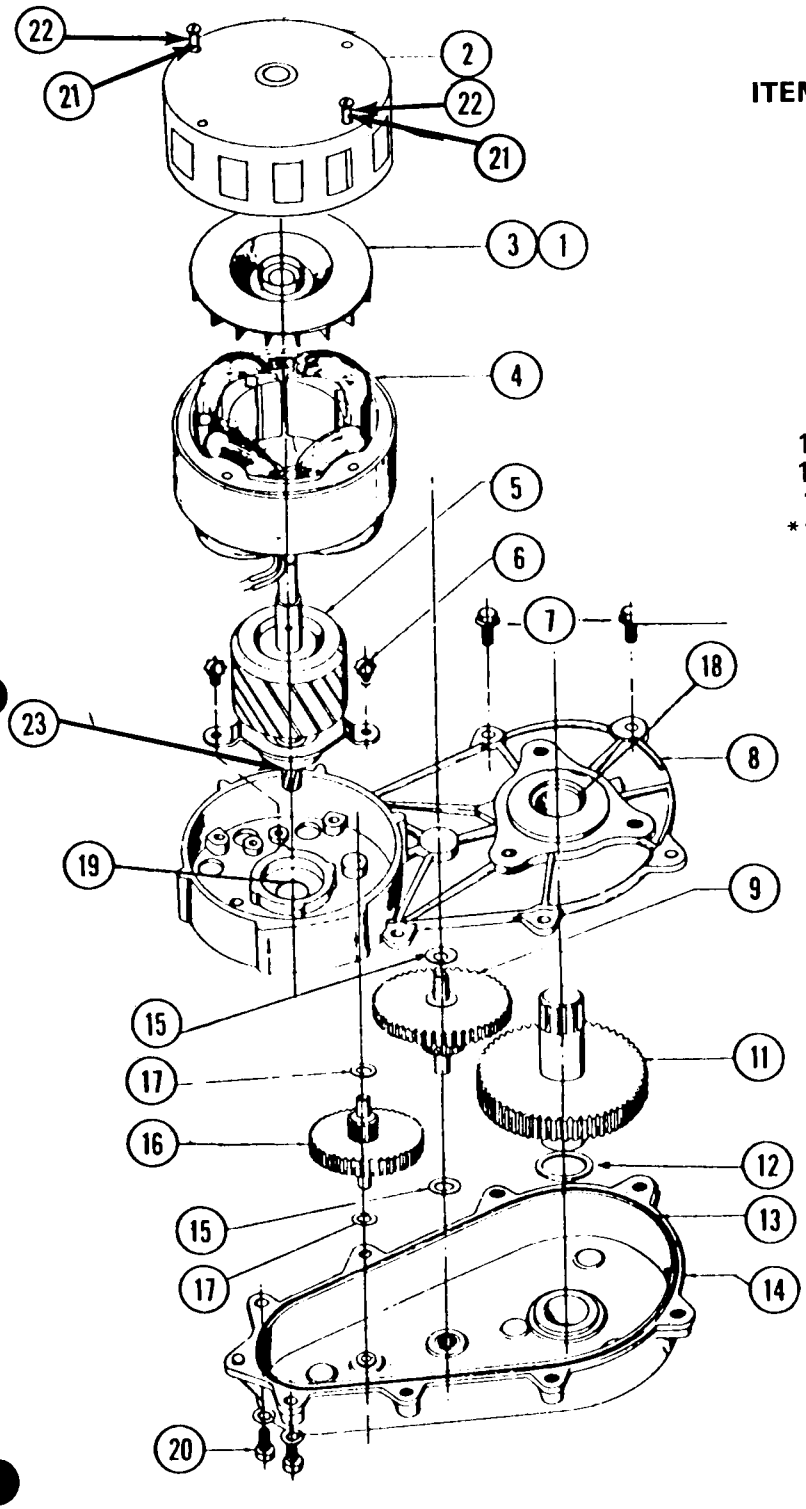

ITEM NO.	PART NO.	DESCRIPTION
1.	03-1246-00	Set Screw (2)
2.	A17047-000	Motor Housing
3.	A16915-000	Cooling Fan
4.	12-1400-01	Stator Assy
5.	A25605-002	Rotor Assy & First Gear
6.	03-1245-00	Screws (2)
7.	03-1251-00	Flange Screws (6)
8.	A16920-021	Gear Case Cover
9.	02-1521-00	Gear and Pinion
11.	A26650-001	Gear and Output Shaft
12.	03-1408-21	Washer (2)
13.	02-1505-00	"O" Ring
*14.	A24184-001	Gear Case Assy Kit
15.	03-1408-06	Washer (3)
16.	A26454-001	1st Gear and Pinion
17.	03-1408-19	Washer (2)
18.	02-1503-00	Grease Seal
19.	02-1504-00	Grease Seal
20.	03-1252-00	Screw (2)
21.	03-1417-05	Star Washer
22.	03-1403-43	Motor Bolts
23.	13-0617-04	Slinger Ring

* Includes Items #8-13-15-17-18-19 (1) can oil

GEAR MOTOR ASSEMBLY

1/10 H.P.

115/60/1

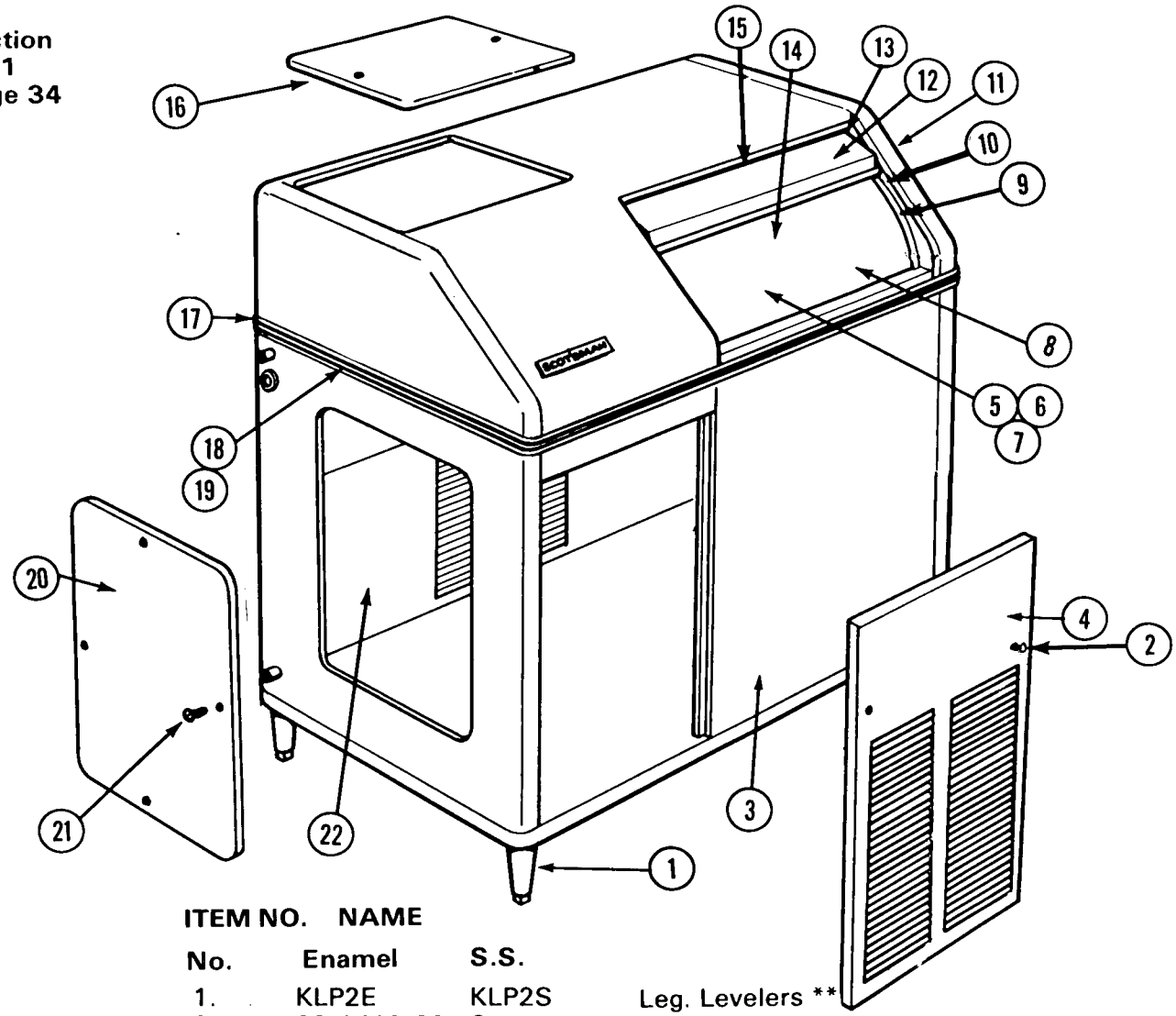

ITEM NO. NAME

No.	Enamel	S.S.	
1.	KLP2E	KLP2S	Leg. Levelers **
2.	03-1419-09	Same	Screw
3.	A20586-008	A20586-002	Case Assembly
4.	A15791-008	A15791-002	Front Door
5.	02-1741-00	Same	Drain Top*
6.	02-1742-00	Same	Drain Bottom *
7.	13-0617-11	Same	O-Ring (Drain) *
8.	A19046-000	Same	Storage Bin Assy.
9.	03-0640-00	Same	Door Glidees (Door)*
10.	03-1195-00	Same	Door Glidees (Hood) *
11.	A20924-008	A20924-001	Case Hood Assy.
12.	02-1735-01	A15559-000	Sliding Door
13.	A16208-000	Same	Door Track
14.	03-1415-00	Same	Bulb Holder *
15.	02-1736-00	Same	Door Stop *
16.	A07676-008	A07676-00S	Top Door
17.	A05796-000	Same	Rear Trim
18.	15-0324-00	Same	Plastic Moulding - Trim
19.	S03646-000	Same	Front Moulding Strip
20.	S06713-008	S06713-00S	Side Door
21.	03-1419-09	Same	Screws
22.	A08740-008	A08740-00S	Rear Door
23.	15-0156-00	Same	Emblem
24.	03-0271-00	Same	Speednuts *

* Not Shown
** Optional

SERVICE ANALYSIS

SYMPTOM	POSSIBLE CAUSE	CORRECTION
Unit will not run	Blown Fuse	Replace fuse and check for cause of blown fuse.
	Thermostat set too high	Adjust thermostat. 35° cut-out and 45° cut-in.
	Loose electrical connection	Check wiring.
	Switch in OFF position	Turn switch to ON.
	Inoperative master switch	Replace switch.
Compressor cycles intermittently	Low voltage	Check for overloading.
	Dirty Condenser	Clean.
	Air circulation blocked	Move unit to correct.
	Inoperative condenser motor	Replace.
	Non-condensable gases in system	Purge Off.
Making wet ice	Surrounding air temperature	Correct or move unit to cooler location
	Under or over-charge of refrigerant	Recharge with the proper amount.
	High water level in water reservoir	Lower to 1/4 inch below overflow pipe.
	Faulty compressor	Repair or replace.
Low ice production	Loss of refrigerant, under or over-charge of refrigerant.	Check and recharge with proper amount of refrigerant.
	Dirty or plugged condenser	Clean condenser
	Low water level in water reservoir	Adjust to 1/4 inch below overflow pipe.
	Partial restriction in capillary tube or drier	Moisture in system. Overcharge of oil in system. Remove charge and drier. Replace and recharge system.
	Inlet water strainer partially plugged.	Remove screen and clean.
	Corroded or stained worm shaft due to water condition	Remove worm shaft and clean.
Machine runs but makes no ice	Loss or under-charge of regrigerant	Check for leaks and recharge
	Drive gearmotor or drive coupling stripped.	Check. Repair and/or replace
	Water not entering freezing chamber	Plugged strainer or supply line Check and clean. Air lock in gravity feed line. Check and remove air lock.
	Moisture in system	Check and remove charge and Drier. Replace and recharge.
	Water seal leaking	Replace seal.
	Water supply to unit off	Restore water supply to icemaker

SERVICE ANALYSIS

SYMPTOM	POSSIBLE CAUSE	CORRECTION
Water Leaks	Defective water seal	Replace
	Gravity feed line leaking	Check hose clamps
	"O" Ring in spout casting leaking	Remove spout casting and install new "O" ring
	Storage bin drain & connecting fittings leaking.	Check and repair.
	Water level in reservoir too high	Adjust to 1/4 inch below overflow pipe.
Excessive noise or chattering	Mineral or scale deposit on auger and inner freezing chamber walls.	Remove and manually polish auger, polish inner chamber walls of freezer barrel.
		For lighter concentrations use Scotsman Ice Machine Cleaner periodically.
	Low suction	Add gas to raise suction pressure.
	Intermittent water supply	Check & clean water strainer. Check gravity feed line for air lock. Remove air lock.
	Water level in reservoir too low	Adjust to 1/4 inch below overflow pipe.
	Gear motor loose on frame	Tighten.
	Gear motor end-play or worn bearings.	Repair or replace.
Machine continues to run with full storage bin	Storage bin thermostat not properly set	Reset or replace. 35° Cut-put, 45° cut-in Check operation with handful of ice.
Gearmotor	Low on oil.	Remove case cover to check for proper oil level. Top of gears should be covered. Use 600 W or Equivilent.

MAINTENANCE INSTRUCTIONS - FLAKERS

THE FOLLOWING MAINTENANCE SHOULD BE SCHEDULED THREE TIMES PER YEAR ON ALL SCOTSMAN FLAKERS. CALL YOUR AUTHORIZED SCOTSMAN SERVICE DEPARTMENT.

1. Check and clean water strainers and float valve. Depress float valve to insure full stream of water.
2. Check water level and machine level, keep water level below overflow, but as high as possible and still not run out of spout opening with machine off. Water droplets come out of spout with ice at all times. Adjust as required.
3. Clean reservoir and interior of freezer using SCOTSMAN Ice Machine Cleaner.
   A. If machine has been cleaned regularly and no problems such as dry ice or chatter are noticed, clean as per the following instructions:

   a. Set main switch to OFF.
   b. Remove all ice from storage bin.
   c. Turn off water supply or block float. Drain reservoir by disconnecting tube between reservoir and freezer. After draining, reconnect tubing.
   d. Set main switch to ON and pour cleaning solution into reservoir. Do not fill above overflow tube.
      Models SF1—Use 4 oz. of Scotsman cleaner and 1 qt. hot water.
   e. Continue to make ice on solution until the solution is used up and reservoir is empty.
   f. Set main switch to Off. Remove overflow tube, wash and rinse reservoir, replace overflow tube, turn water on or remove float block.
   g. Turn MAIN SWITCH to ON. Let unit run for at least (15) minutes to flush out any cleaning fluid. Check ice for acid taste.—run until ice tastes sweet.
   h. Turn MAIN SWITCH to OFF. Add hot water to ice bin, using this melt water, thoroughly wash and rinse all surfaces within the storage bin.
   i. Turn MAIN SWITCH to On. Replace Service Door. Unit is ready for normal operation.

MAINTENANCE INSTRUCTIONS (Continued)

NOTE: Cleaning requirements vary according to local water conditions. Visual inspections of the auger before and after cleaning will indicate best procedure to be followed in local areas.

4. Check high and low side pressures. On air-cooled models head pressures range between 130 and 145 PSI. Suction pressure should be above 12 PSI and will range up to 16 PSI depending upon water and ambient temperatures.
5. Check gearmotor operation. Normal running temperatures are in the area of 160%farenheit, which is hot to the touch.
6. Check top bearing of freezing tube. Remove retainer ring around edge of stamped brass cap. If moisture is around bearing, wipe up and remove grease. Add new grease. Use Beacon No. 325. Replace cap and retainer ring.
7. Clean air-cooled condenser. Inform customer to clean frequently. Always shut off machine when cleaning.
8. Oil condenser fan motor when possible.
9. Check for refrigerant leaks and proper frost line. Should frost out of accumulator at least one-half way to compressor, and in some areas back to service valve.
10. Check for water leaks. Tighten drain line connections. Run water down bin drain line to make sure it is open.
11. Check quality of ice. Ice should be wet when formed, but will cure rapidly to normal hardness in bin.
12. Check thermostat and pressure plate cut off in spout. Micro switch cuts off only compressor. Bin thermostat should be set at 10° differential and should keep entire machine off at least twenty minutes in high ambients (longer in low) during normal operation. Settings are 35° cut out, 45° cut in.

CLEANING OF A STAINLESS STEEL BIN LINER

Because of the brown staining or rusting is due to expelled material during ice-making, **every bin liner should be cleaned periodically,** to prevent this staining from causing pitting of the stainless steel. The time between cleanings will depend on the water conditions, type of ice machine, etc. **It may be necessary only every 3 to 6 months.**

1. **General Cleaning** — When the staining is light, it can usually be removed by washing with ordinary cleaning powder, such as Bon-Ami, or Copper-Glo, and water. (Do not use cleaners that contain bleaching agents, as most of these are compounds of chlorine.) After cleaning, rinse thoroughly with clear water.

   It may be necessary to use a **stainless steel** wool to remove bad stains. DO NOT USE plain steel wool, as the steel particles will get imbedded in the liner and cause more serious rusting.

2. **Cleaning of heavy deposits** — If the liner has not been cleaned for a long time, and heavy deposits and pitting have occured, a chemical cleaner may be necessary. Several of these are as follows:

   Oakite No. 33 , Oakite Products, Inc., 19 Rector St., New York, N.Y. **Texo No. 12, and Texo-NY,** Texo Corp., 2200 Dana Ave., Cincinnati 7, Ohio. **Metalprep No. 10,** Nelson Chem. Co., 6564 Benson St., Detroit 7, Mich. **Dilac,** Diversey Corp., 1820 Roscoe St., Chicago 13, Illinois.

   A solution of one part cleaner and two parts water is used. First, wash the bin liner thoroughly with water and soap as described above. Then simply swab the solution on the area to be cleaned, and allow to stand for about 20 minutes. Rinse with clear water. If this doesn't completely remove the deposit, repeat the procedure.

   Synthetic rubber gloves should be used by the operator, and goggles and sprons are advisable even though the solutionis relatively nonhazardous.

   These cleaners may possibly harm paint, wood, or fabrics. They will probably cause a dull grey color on galvanized steel and should not be allowed to remain long in contact with rubber. Therefore, provision should be made to avoid contact with such materials when cleaning stainless.

3. **Protection of Stainless Steel against further staining** — After the stainless steel has been cleaned, installation where the staining is recurring so frequently, the surface should be rejuvenated. This process restores the characteristic to the surface of the stainless, that best prevents corrosion.

   First, be sure that the liner is clean and is thoroughly rinsed with water. Then use a **nitric acid** solution of two parts water to one part nitric acid (by volume). Swab this on the liner and allow to stand for about 30 minutes. Rinse the liner with clean water. This will then provide maximum corrosion resistance.

CARE OF STAINLESS STEEL STORAGE BIN LINERS

All commercial grades of stainless steel will corrode or rust when in contact with certain chemicals or salts. **One element that attacks stainless steel readily, is chlorine,** and most compounds of chlorine, such as hydrocholic acid, and certain salts containing chlorine. The "speed" with which this corrosion takes place depends on the concentration of the chlorine, and the length of time it is left in contact with the stainless steel.

ICE BIN LINER RUSTING

In many ice bin applications, **a rust stain, or brown deposit, will appear at the top of the side and rear walls of the bin liner, and also on any exposed stainless parts inside the bin, which do not normally get covered with ice; such as stainless steel door back pans.** The lower portions of the liner walls usually stay clean if the bin is being used regularly, due to the "washing" action of the ice and meltage water draining down these walls. This brown staining on the liner may appear more rapidly in some installations than other, depending on the way the ice is being made in the ice machine, and the water conditions.

This staining or rusting, can come from basically two sources:

1. **Foreign materials** — For example, **many ice machine casings are made of painted steel. If this steel should be exposed at the joint where the ice machine sits on the bin, it could rust,** and the rust stain could "drip" down the liner walls. Also, particles of plain steel could fall down into the bin and, in turn, start rusting.

2. **Materials expelled during ice making** — Practically all icemakers produce a clear ice by "freezing out the impurities" normally found in tap water. Chlorine gas, other gases and solids, are expelled during the making of ice. Being heavier than air, these foreign materials drop down into the bin through the same opening that the ice enters the bin. (This oftentimes explains why this staining is more noticeable on an installation where the opening on the bottom of the ice machine is quite large). **The chlorine gas will combine with water vapor and condense on the liner wall as a mild hydrochloric acid.** Above the normal ice level, this never gets removed by the action of the ice, and will eventually form a brown stain.

TABLE OF CONTENTS

	PAGE
FOREWORD	1
TABLE OF CONTENTS	2
SPECIFICATIONS--Mechanical	3
PHOTO AND ICE MAKING CAPACITY, Continuous Flow	4-5
PHOTO AND ICE MAKING CAPACITY, With Storage	6-7
SPECIFICATIONS	
How It Works	8
INSTALLATIONS	
Preparation for Installation	9
Uncrating of Machine	10
Water Supply	10
Drain	10
Electrical Connections & Installations	11
REFRIGERATION CYCLE	12
WATER SCHEMATIC	13
WIRING DIAGRAM (Air-Cooled)	14
WIRING DIAGRAM (Water-Cooled)	15
SERVICE	
Starting Machine	16
Refrigerant Charge	16
Water System	17
Electrical System	17
Condensing Unit	17
Drive Motor	17
High-Low Pressure Cut-Out	17
Storage Bin Thermostat	17
Micro Safety Switch	17
On-Off Switch	18
REMOVAL & INSTALLATION OF PARTS	18-21
CHASSIS ASSEMBLY FOR SF-1F & SF-1WSF	22
FREEZER ASSEMBLY	23
SF-1WSH CASE ASSEMBLY	24
SF-1H CASE ASSEMBLY	25
RESERVOIR ASSEMBLY	26
CONDENSING UNIT, W.C.	27
CONDENSING UNIT, A.C.	28
WINSMITH GEAR REDUCER	29
GEAR REDUCER MEMO AND CHART	30
MAINTENANCE INSTRUCTIONS	31-32
SERVICE ANALYSIS	33-34
PARTS LIST	35-37
OVERLOAD CHART	38

THIS PAGE
INTENTIONALLY
LEFT BLANK

THIS PAGE
INTENTIONALLY
LEFT BLANK

MECHANICAL SPECIFICATIONS

	SF-1H, SF-1WSH	SF-1WH, SF-1WWSH
Compressor	1/3 HP	1/3 HP
Condenser	Air-Cooled	Water-Cooled
Refrigerant	26 oz. R 12	24 oz. R 12
Refrigerant Control	Capillary Tube	Capillary Tube
Power Consumption	11 Amps.	11 Amps.
Current	115 V, 60 cycle 1 ph.	115 V, 60 cycle, 1 ph.
Worm Drive Motor NEMA # 48	1/4 HP	1/4 HP
Worm - R.P.M.	12	12
Water Consumption - Freezer	2 Gals. per hour	2 Gals. per hour
Water Consumption - Condensing Unit		Varies .75 to 2 G.P.M.
	SF-1H	SF-1WSH
DIMENSIONS		
Width	17 7/8"	38 1/2"
Depth	24 1/2"	24 1/2"
Height	40"	40"
Height with Legs	46"	46"
Approximate Shipping Weight	316	420

SCOTSMAN

SUPER FLAKER
SF-1
SERIES
Continuous Flow

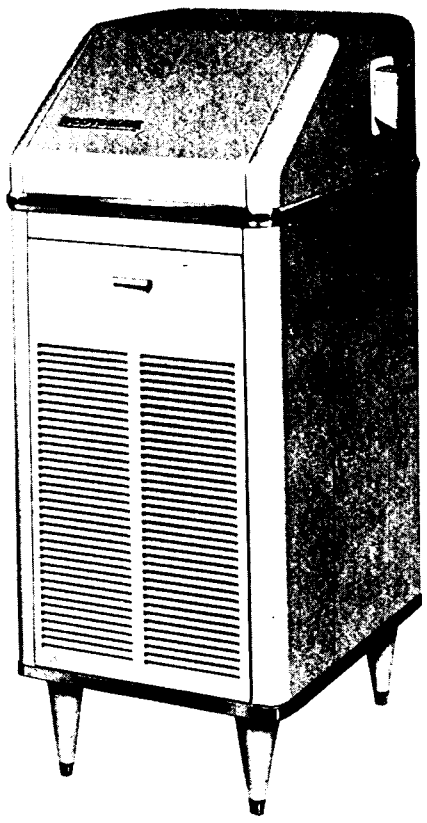

ice making capacity

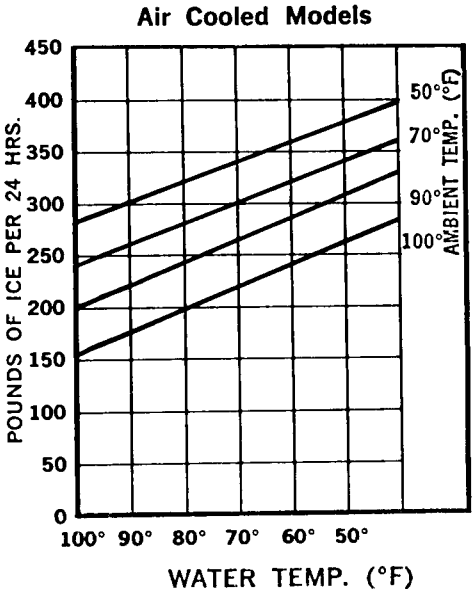

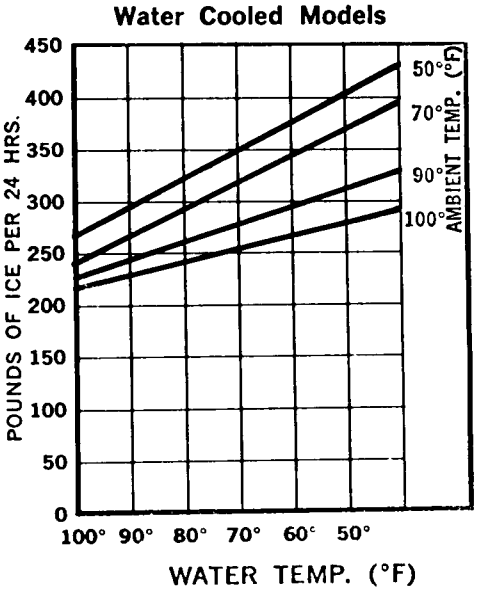

SPECIFICATIONS

SUPER FLAKER SF-1 SERIES (Cont. Flow)	MODEL SF-1H	MODEL SF-1H-SS	MODEL SF-1WH	MODEL SF-1WH-SS
Daily capacity up to 350 lbs.	X	X	X	X
Air cooled condenser	X	X		
Water cooled condenser			X	X
Heavy duty 1/3 HP. Compressor	X	X	X	X
Standard 115 V, 60 cy, 1 ph, AC	X	X	X	X
1/4" water inlet SAE Flare	X	X	X	X
3/8" water inlet NPT			X	X
3/8" water condensate drain ID	X	X	X	X
3/8" ID water outlet tube			X	X
Hammerloid grey exterior	X		X	
Stainless steel exterior		X		X
46" height (with legs)	X	X	X	X
40" height (without legs)	X	X	X	X
17 7/8" width	X	X	X	X
24 1/2" depth	X	X	X	X
Approximate Shipping weight	316	316	316	316

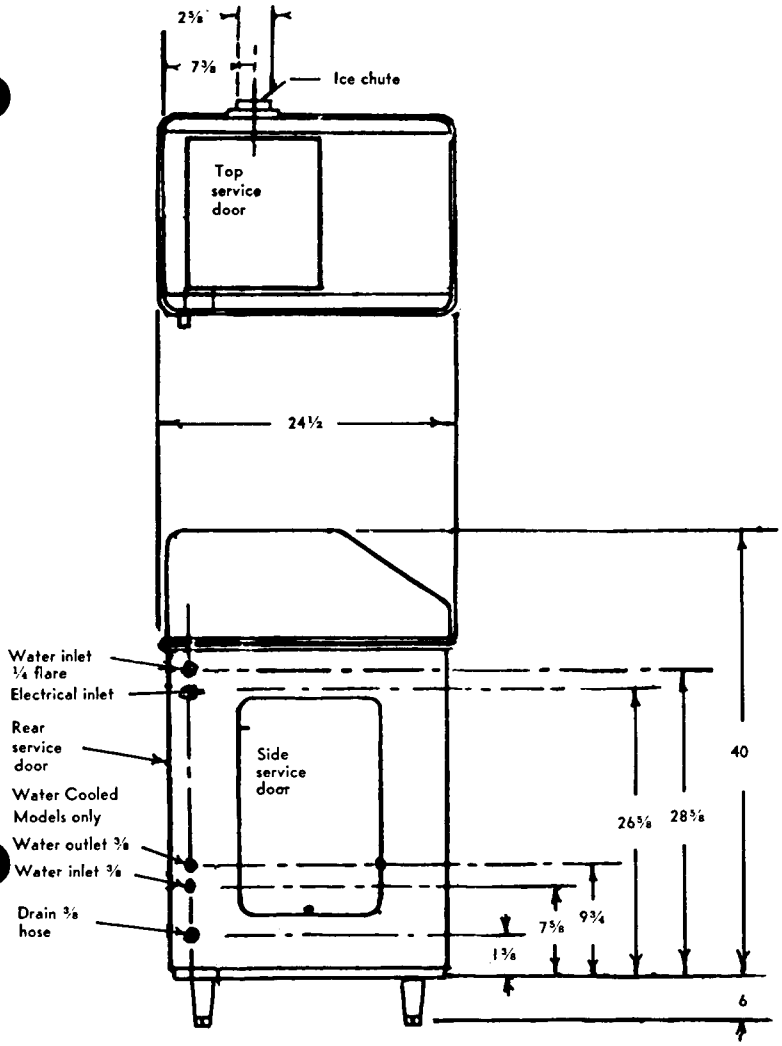

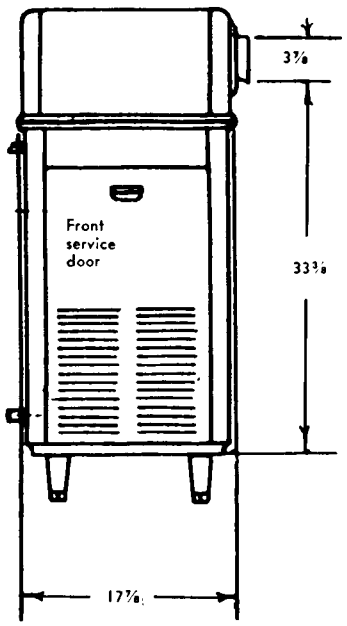

SCOTSMAN®

SUPER FLAKER
SF-1
SERIES
Storage Type

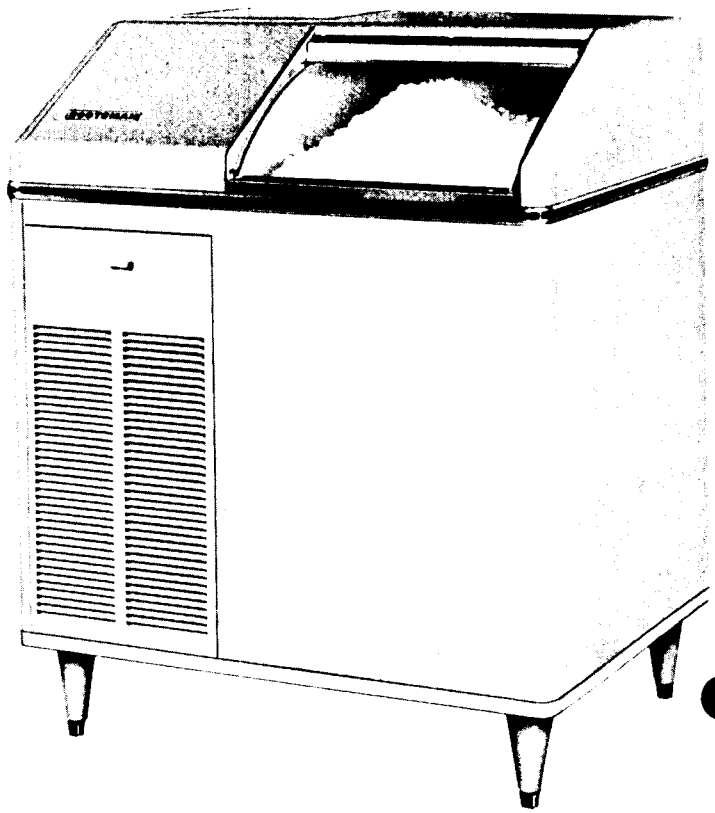

ice making capacity

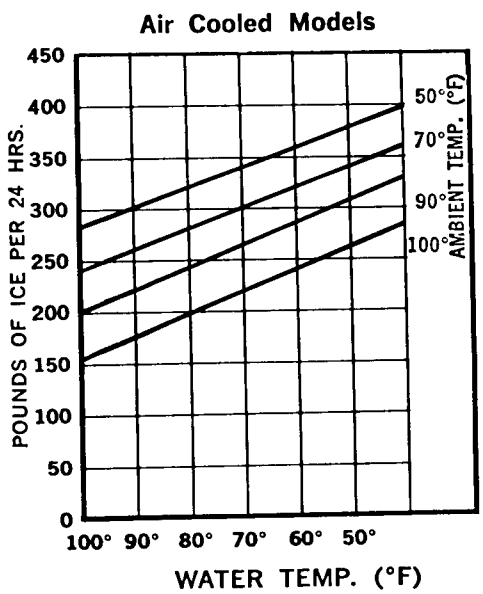

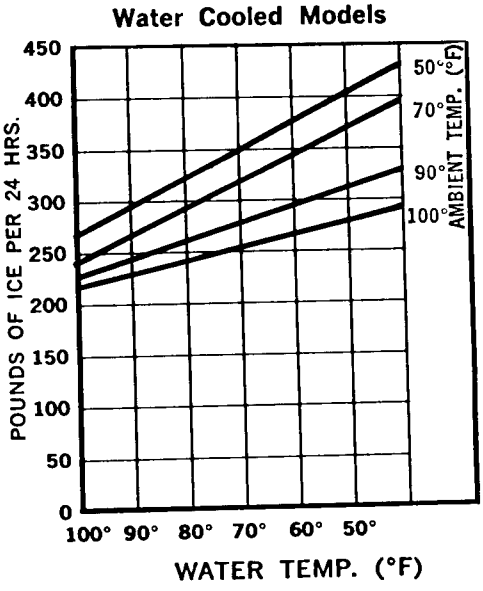

SPECIFICATIONS

SUPER FLAKER SF-1H SERIES (Storage Type)	MODEL SF-1WSH	MODEL SF-1WWSH	MODEL SF-1WSH-SS	MODEL SF-1WWSH-SS
Daily capacity up to 350 lbs.	X	X	X	X
200 lb. ice storage bin	X	X	X	X
Stainless steel bin	X	X	X	X
Air cooled condenser	X		X	
Water cooled condenser		X		X
Heavy duty 1/3 HP. Compressor	X	X	X	X
Standard 115 V, 60 cy, 1 ph, AC—	X	X	X	X
1/4" water inlet SAE Flare	X	X	X	X
3/8" water inlet NPT		X		X
5/8" bin drain OD	X	X	X	X
3/8" water outlet OD		X		X
Hammerloid grey exterior	X	X		
Stainless steel exterior			X	X
46 height (with legs)	X	X	X	X
40 height (without legs)	X	X	X	X
38 1/2" width	X	X	X	X
24 1/2" depth	X	X	X	X
Approximate shipping weight	420	420	420	420

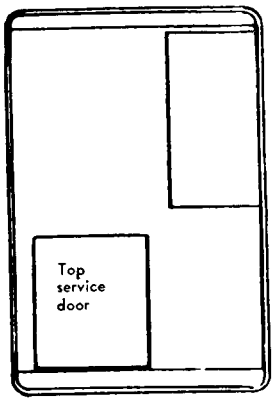

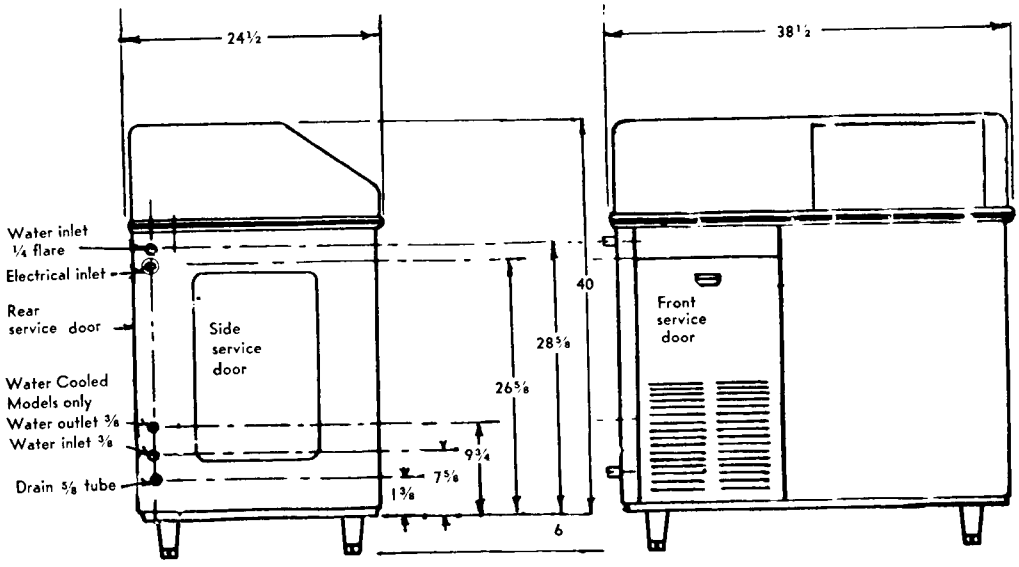

SPECIFICATIONS

SCOTSMAN Super Flakers are designed for restaurants, super markets, soda fountains, hospitals, bakeries, fish markets, poultry stores, packing plants, etc. It is the finest Ice Maker on the market today. It will work 24 hours a day for you, or only as needed. It produces the highest quality ice available at any price.

Approximately 350 pounds of SCOTSMAN crushed ice is delivered each 24 hours to the storage bin for immediate use.

SCOTSMAN Super Flakers are easily installed requiring only standard water, drain and electrical connections.

ATTRACTIVE COMPACT CABINET. Grey hammerloid finish with chrome trim, rounded corners, and removable panels for easy access to mechanical parts. Adjustable and removable legs are under cabinet.

SEALED REFRIGERATION SYSTEM. Provides quiet, efficient operation of the machine. Compressor motor is spring mounted and the worm motor is rubber mounted for quiet operation. Compressor motor is covered by a full 5-Year Warranty.

HOW IT WORKS. An exclusive patented ice-making system, wherein water in the constant level float reservoir is fed to the bottom end of the freezing cylinder and turns to ice on the inside of this cylinder. Ice from the refrigerated walls of this cylinder is extruded past the ice breaker at the top of the cylinder through a side opening by means of a stainless steel auger driven by a motor through a V belt and gear reduction drive.

All SCOTSMAN Models SF-1H and SF-1WSH are completely automatic. A manual switch on the front starts the machine, and from then on, produces flakes automatically. When the storage bin fills, the machine automatically shuts off and starts up again when ice is taken from the storage compartment.

Model No. SF-1H is a continuous flow type machine, and is manually started by an OFF and ON switch located on the front of the cabinet as are the SF-1WSH models. Since the SF-1H does not have its own attached bin, it is necessary to use an auxillary bin such as the Model SB-500 SCOTSMAN Super Bin for ice storage. A bin thermostat is mounted in each SF-1H continuous flow type machine for the purpose of mounting control bulb from machine to bin.

SCOTSMAN SUPER FLAKERS
PREPARATION FOR INSTALLATION

1. UNCRATING

   The entire unit comes in one crate. Upon delivery a visual inspection of the crate should be made and any severe damage noted should be reported to the delivering carrier and a concealed damage claim filed subject to internal inspection with carrier representative present. Remove crate by pulling nails driven through sides of crate into the bottom skid. A nail puller is best suited here. Next remove (4) four bolts from underside of skid which connect to complete unit base. Unit now free from all crating.

2. Remove all service doors and panels.

3. Remove water reservoir cover and take out paper packing around float ball. Make sure plastic overflow standpipe is securely in place.

4. Remove leg packages in compartment base and install 4 legs in unit base sockets. On continuous flow models with separate storage bins, legs are put on companion machine stand, not on Ice Maker.

5. Loosen motor compressor hold down nuts until motor compressor rides freely on mounting springs.

6. Remove water strainer from storage bin for installation on unit or in water supply line feeding unit.

7. Open electrical control box and prepare for hook up, use knock outs, cord connectors etc. Then check unit nameplate voltage against building source voltage and make sure they correspond. Caution - Improper voltage supplied to units will void your warranty protection.

8. Select unit location prior to hook up of water drain and electricals in accordance with local and national codes. Minimum room temperatures is 50° Fahrenheit. On air cooled models, select well ventilated location.

9. Remove warranty card and Users manual from storage bin, then wipe bin clean with damp cloth.

10. Fill out warranty card completely including model and serial numbers as taken from aluminum plate found behind front service panel and forward to Scotsman Factory using self mailing card.

11. Level unit with adjustable legs.

INSTALLATIONS

UNDER BAR INSTALLATIONS: Locate, if possible, so left end panel is accessible. Locate so proper circulation can be attained around the unit and behind it at least four inches.

KITCHEN INSTALLATIONS: As a rule, the kitchen is not the most practical place to install an air-cooled condensing unit, as grease is almost always present and makes cleaning of the condensing unit difficult. Do not locate near range or steam table or other heating devices that may be used in the kitchen..

STOREROOM INSTALLATIONS: Be sure storeroom is of adequate size and properly ventilated. A small, poorly ventilated room will greatly impair the efficiency of the unit. The storeroom must be kept above 50 degrees in the winter months.

BASEMENT INSTALLATIONS: Locate machine in the coolest place. Locate machine in a dry place. Keep away from furnace and boiler room. Keep away from service chutes and runways; also coal or other dust of any kind. If the machine is set over a floor drain, block the machine up enough to level it. If there is any chance of basement flooding, block the machine up enough to eliminate any possible damage to the machine.

WATER SUPPLY: The recommended water supply line is 1/4 inch OD copper tubing for SF-1. Connect to cold water supply line with regular plumbing fittings, with a shut-off valve installed in an accessible place between supply line and machine. A water strainer must be installed with the unit and mounted with clean-out plug down. Locate the strainer next to the machine with the arrow in the direction of the flow. Most plumbing codes also call for double check valves in the supply water line, particularly for water-cooled models.

On air-cooled models the water supply line connects to the 1/4 inch flare fitting on the machine. On water-cooled models connections are made to a 3/8 inch male pipe nipple inside of the machine compartment. Incoming water goes through the water regulating valve first and then to the water-cooled condenser. Observe arrow on water regulating valve. Water supply must be installed to confrom with local code. In some cases a licensed plumber and/or a plumbing permit will be required.

DRAIN: The recommended drain from the bin is 5/8 inch OD copper tubing. Must be run to an open trapped and vented drain. If drain is a long run, allow 1/4 inch pitch per foot. Drain must be installed to conform with local code. Run separate line for condenser discharge water on water-cooled models.

INSTALLATION

ELECTRICAL CONNECTIONS:

SF-1

115 Volts, 60 Cycle, 1 Phase

15 Amp. Circuit

Be certain that the Super Flaker is on its own circuit and individually fused. The maximum allowable voltage variation should not exceed 10 percent of the nameplate rating even under starting conditions. Low voltage can cause erratic operation and may be responsible for serious damage to the overload switch and motor windings.

All external wiring should conform to the National Underwriters and local Electrical Code requirements. Usually an electrical permit and the services of a licensed electrician will be required.

ELECTRICAL INSTALLATION:

SF-1H

Compressor	H.P.	1/3
	Voltage	115
	Amp. rating	5.0
	Cycle	60
	Phase	Single
Drive Motor	H.P.	1/4 NEMA Size 48
	Voltage	115
	Amp. rating	4.5
	Cycle	60
	Phase	Single

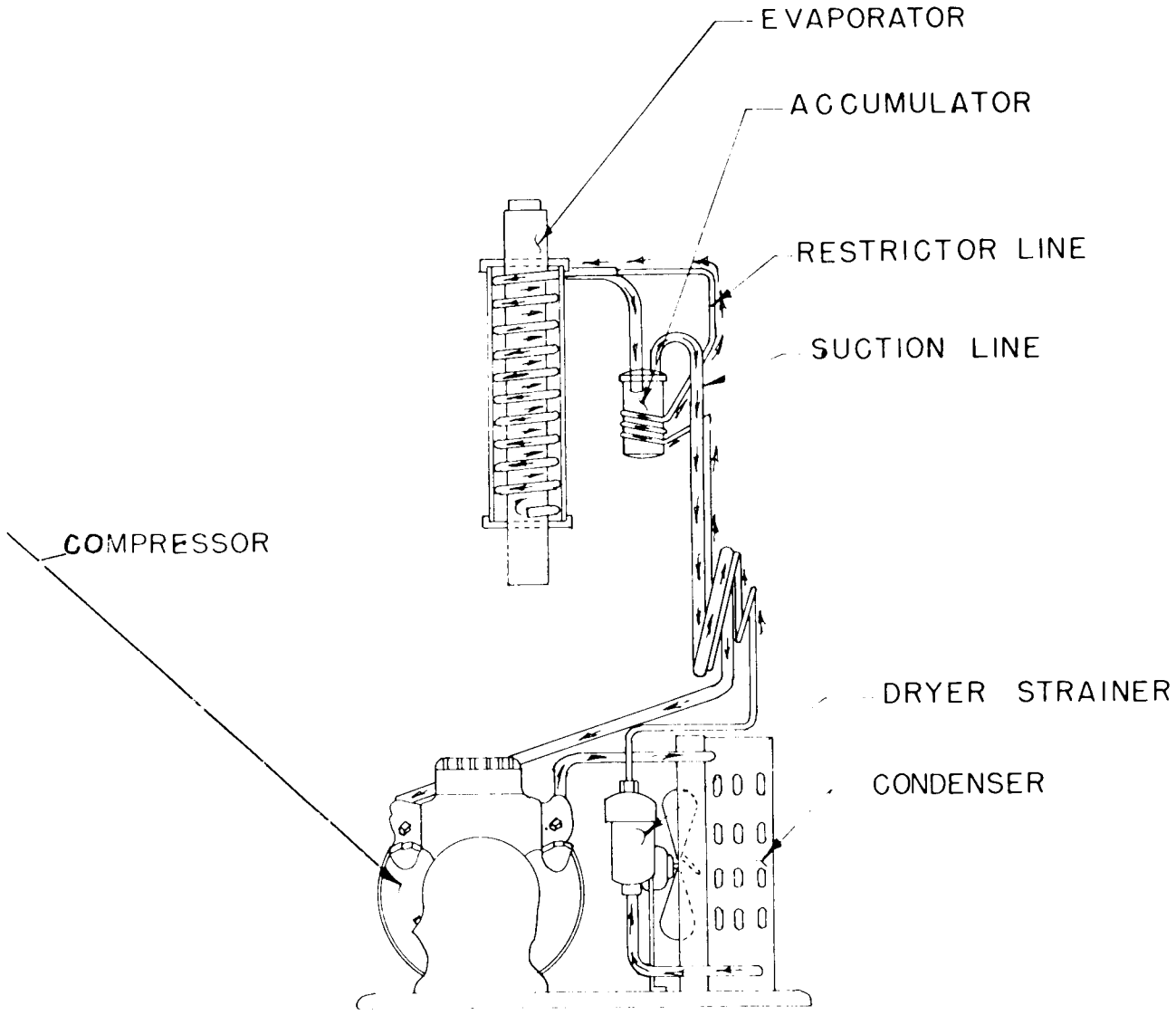

REFRIGERATION CYCLE SF-1 ALL MODELS

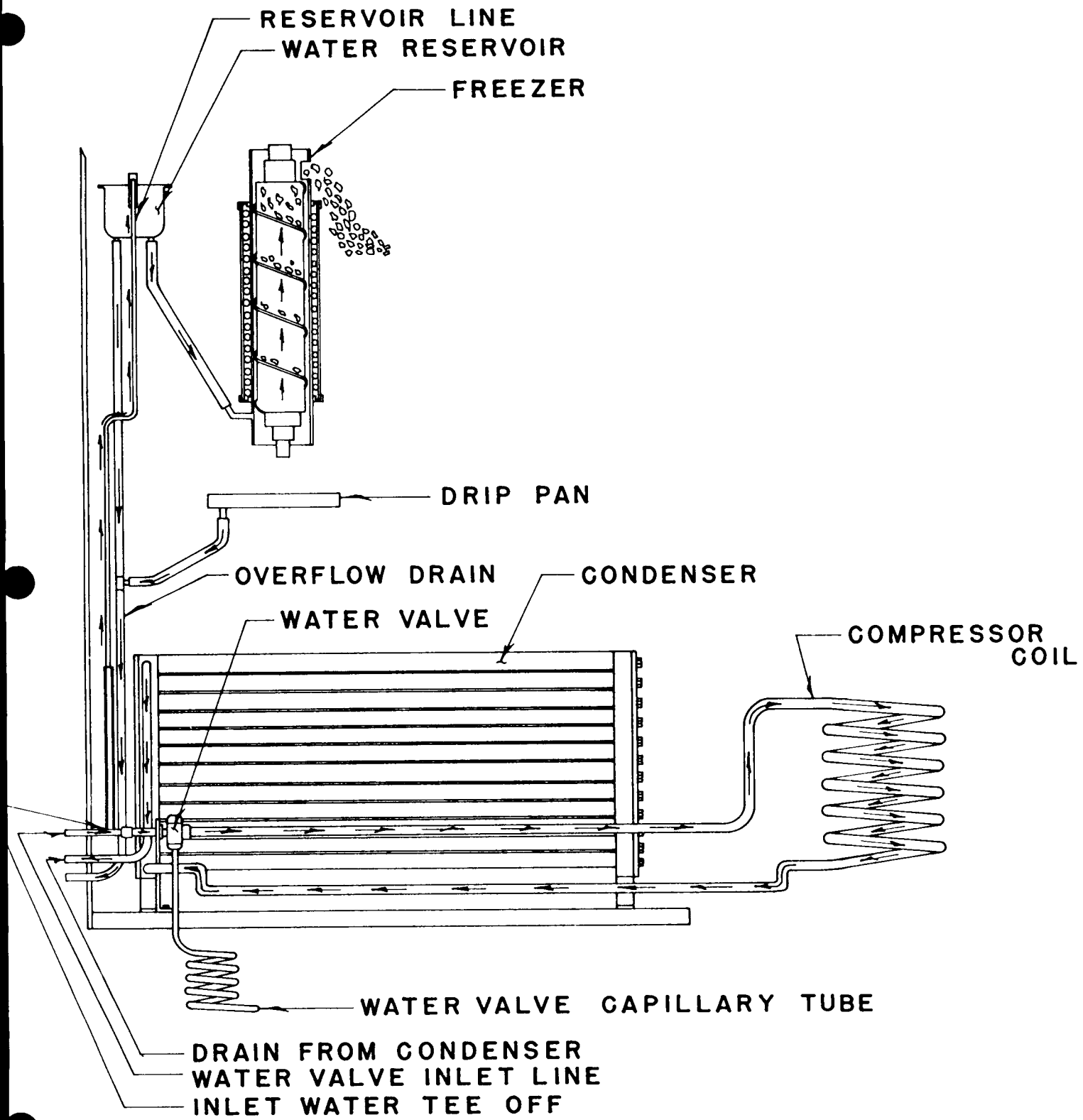

WATER SCHEMATIC SF-WH & SF-1WWSH

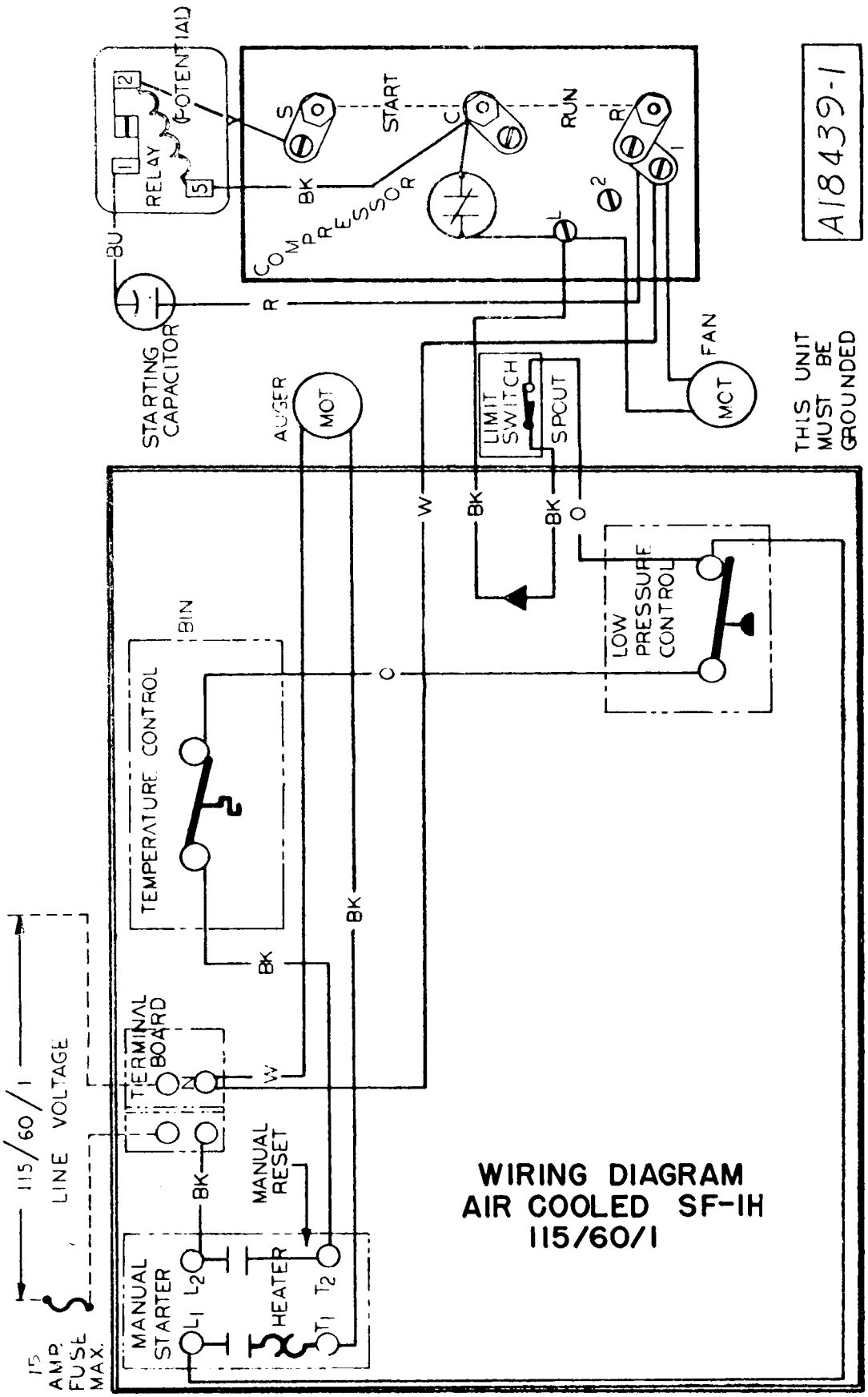

WIRING DIAGRAM
AIR COOLED SF-IH
115/60/1

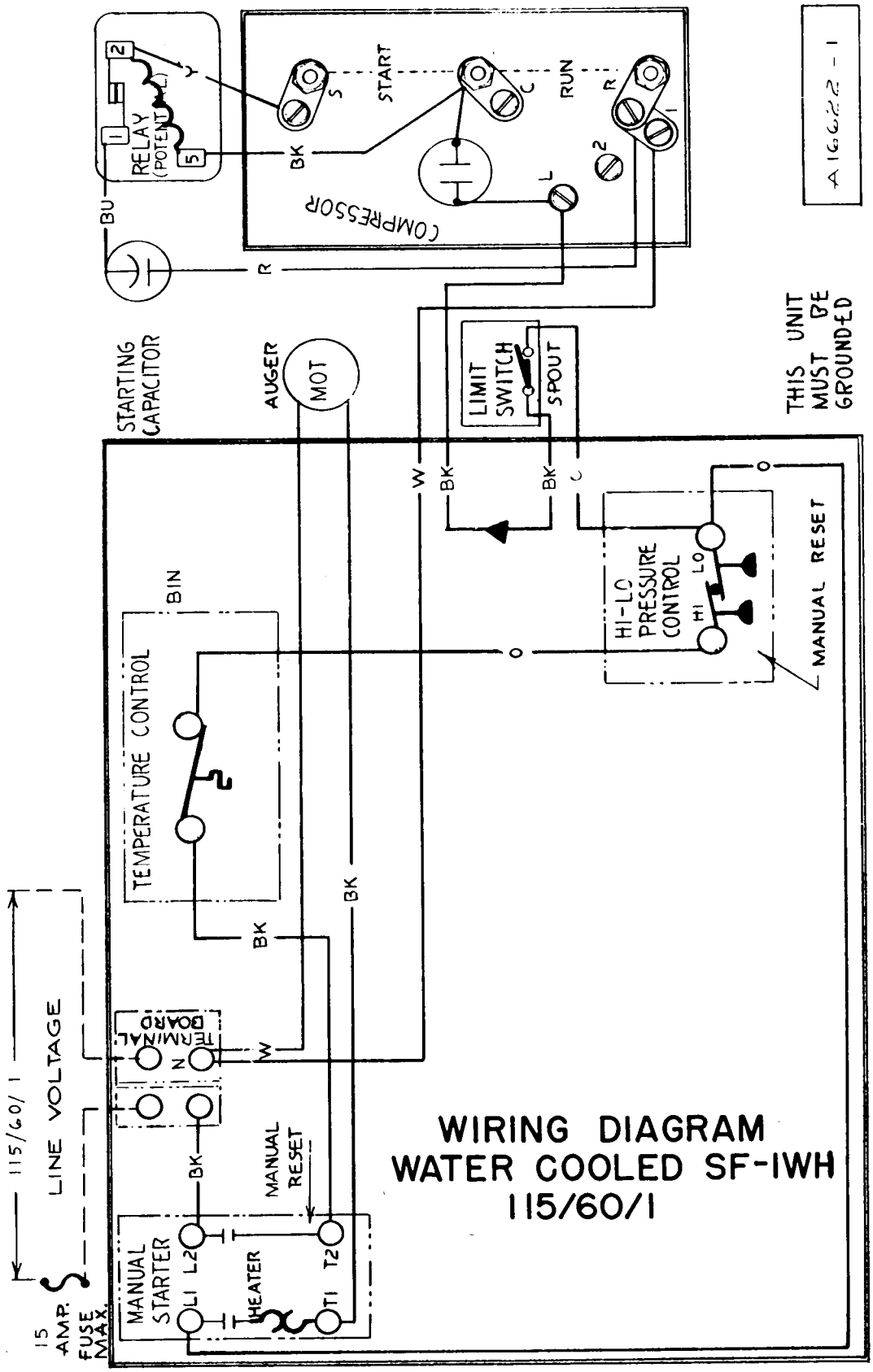

WIRING DIAGRAM
WATER COOLED SF-1WH
115/60/1

SERVICE

STARTING THE MACHINE: When the machine is placed and inspected as per instructions and all plumbing and electrical connections are completed and tested, turn on the water supply. Be sure the float cover is removed to check on the float operation and water level in the water reservoir. Be sure the water reservoir is filled before starting the machine. Water level should be 1/4 inch below the reservoir overflow.

When this is completed, turn on the manual switch on the front of the cabinet and the machine is in automatic operation. In two to three minutes ice will start dropping off the worm shaft and out the ice chute. Let the machine operate for at least 30 minutes and check for any excess noise other than the normal compressor noise. Test the ice storage control bulb by holding a handful of ice around the bulb until the machine shuts off. One minute should be normal for the control to function. Within minutes after the ice is removed, the bulb will warm up and the machine will automatically start up. The control is factory set and should not be reset until this test is made. Normal setting of this control should be approximately 35 degrees cut-out and 45 degrees cut-in.

Check pressure settings at the time of start-up. On the water-cooled models set the head pressure at 135 PSI. On the air-cooled models the head pressure will vary between 130 and 145 PSI head pressure. The frost line should extend out of the accumulator if properly charged with refrigerant and suction pressure will range between 14 and 16 PSI with 50° F inlet water.

Check the hand reset low pressure control setting. This safety device should be set at approximately 5 PSI below normal operating suction pressure and should cut off in case of interruption in water supply, shortage of refrigerant, low ambient or any other cause of abnormally low suction pressure.

Explain the machine to the owner, showing him how the machine works and go over the owner's instruction sheet with him. Answer all the owner's questions about the machine, and do not leave with any doubt in the owner's mind about the machine, how to operate it or where to reach you should he need service on the machine. Call back the next day to check the machine again and answer any other questions the owner may have.

Service guage connections are available on both high and low side service valves.

To install guages to any of these connections, replace 1/8 inch IP plug with 1/8 inch MPT x 1/4 inch flare half union. Purge free of any non-condensable gases before starting any test operation.

REFRIGERANT CHARGE: The below refrigerant charge is approximate. When charging, set at 135 PSI head pressure and charge so that the frost line extends out of the evaporator and into the accumulator after fifteen minutes of operation.

Model	Freon Charge	Motor Compressor Oil Level
Air-Cooled	26 oz. R-12	Oil level should be kept at 1/3 way up sight glass. Do not fill over 1/2.
Water-Cooled	24 oz. R-12	

SERVICE

WATER SYSTEM: A water level is maintained in the water reservoir by a float operated valve. Water is piped from the water reservoir to the freezing chamber by a gravity feed line maintaining an equal water level. A removable overflow pipe is installed in the water reservoir for cleaning the reservoir as well as preventing damage should the inlet water valve fail.

The water reservoir is eauipped with a 2 inch air gap to prevent back siphoning and meet all health codes.

The water level in the water reservoir is adjusted by the float linkage adjustment. The water level should be set 1/4 inch below the overflow pipe. A condensate drip pan is connected to the drain circuit to automatically dispose of condensate moisture.

A water strainer must be installed in the supply line. Use strainer sent with machine.

ELECTRICAL SYSTEM: The Super Flaker Model SF-1 is designed to work on standard voltage - 115/60/1

Special voltage requirements are available on special order. Therefore, always check nameplate for this information before checking electrical supply.

Nameplate voltage should not vary more than plus or minus 10 percent.

The electrical circuit consists of condensing unit, drive motor, hand reset combination or low pressure cut-out, storage bin thermostat. ON and OFF switch, micro (safety) switch.

A. CONDENSING UNIT: The compressor terminal box houses the motor compressor terminal block, and the motor overload Klixon. To gain access to the terminal box, remove the two screws holding the beveled metal cover. The starting capacitors, running capacitors and starting relays are housed and fastened to the unit base under the drive motor.

B. DRIVE MOTOR: Model SF-1 Flakers are equipped with standard 1/2 inch shaft, 1/4 HP, capacitor start, induction motors. These motors turn counter-clockwise and may be replaced with any standard make motor corresponding to the nameplate rating. (Be sure motor runs counter-clockwise viewed from the shaft end.) NEMA frame size 48.

C.HIGH-LOW PRESSURE CUT OUT: Hand reset on water cooled models only. Ranco control is located in control box. Factory setting cut-out 8 pounds on low pressure and 180 PSI on high pressure. This control prevents operation at abnormal pressures.

D. STORAGE BIN THERMOSTAT: Control located in control box. Factory settings 35° cut-out, 45° cut-in. This control shuts off complete machine when ice in storage bin builds up to control. Removing ice from bulb causes unit to start up.

E. MICRO SAFETY SWITCH: The micro switch is located in the top of the ice chute. The switch is operated by a plate in top of the ice chute by the ice backing up in the chute should the storage bin thermostat fail. Micro switch will shut off the condensing unit only, when operated.

F. ON-OFF SWITCH: A manual on-off switch with built-in thermal overload protection to prevent drive motor failures is used. See page 38 for overload size.

REMOVAL & INSTALLATION OF PARTS

CABINET TOP (HOOD)

1. Remove two back end screws of chrome strip.
2. Pull out tape concealing screws.
3. Remove balance of screws in chrome strip.
4. Lift off hood.

HOOD SERVICE DOOR

1. Remove screw on front edges.
2. Lift door up and back.

CABINET SIDE SERVICE DOOR

1. Remove four screws on edges.
2. Lift out door.

CABINET FRONT SERVICE DOOR

1. Front door pulls out.

CABINET REAR SERVICE DOOR.

1. Remove four screws on corners of rear service door.
2. Pull door out.

ICE STORAGE DOOR

1. Raise and push door six inches rear of track. Hold up on underside of door - pull forward.
2. Door will now slide out.

ICE STORAGE DOOR FRAME

1. Remove six screws at bottom and sides.
2. Frame will now lift out.

MOTOR COMPRESSOR

1. Front seat both suction service valve and discharge service vlave on valve compressor.
2. Disconnect wiring from the compressor.
3. Remove the bolts holding the service valve to the compressor.
4. Remove the compressor hold-down nuts and lift compressor out of the units.
5. Reverse steps 1 through 4 in replacing compressor.
6. Check the oil in the compressor before connecting lines. Sight glass not over 1/2 full.

FREEZER ASSEMBLY

1. In most instances, it will be faster to faciltate freezer removal by removing cabinet top or hood. (See Removing & Installing Cabinet Parts.) Assembly can be changed if necessary through hood top panel.
2. Shut off water supply and drain water reservoir.
3. Remove refrigerant from system.
4. Remove suction and liquid line connections. (CAUTION: Plug all connections to prevent moisture from entering system.)
5. Remove tygon tube to water inlet connection at base on freezing chamber.
6. Loosen knurled nut holding spout to freezer and remove.
7. Remove two bolts holding freezer chamber to frame.
8. Lift freezer assembly up and out of unit.
9. Remove rubber drip pan from defective assembly and install it on new assembly.
10. Reverse above procedure to install new assembly.

WORM SHAFT

1. Turn unit off, before removing worm shaft.
2. Shut off water supply to unit.
3. Remove hood service door.
4. Remove two slotted head screws which fit through cnamber wall into ice breaker.
5. Complete worm shaft with ice breaker attached will now come out by lifting up on freezer cap pull ring. NOTE: Top half of water seal will come out with worm shaft.
6. To remove ice breaker from shaft, first remove retainer ring in top of ice breaker.
7. Remove freezer cap and pull ring from ice breaker.
8. Loosen hex head bolt holding shaft through bearing and pull worm shaft free from ice breaker and bearing.
9. If shaft is defective, remove water seal top half and put on new worm shaft before reassembling - when reassembling, by reversing above, put a small amount of Vaseline on squared shaft end. This will allow shaft to slide smoothly through rubber bottom half of water seal without tearing it. See freezer assembly Page 23.

WATER SEAL

1. To replace water seal, follow steps 1 through 6 under Worm Shaft Removal.
2. Next slide three-jaw drive coupling down on reducer or else remove top half of coupling.
3. Pull rubber drip pan down.
4. Remove large brass nut holding lower bearing and lower portion of water seal in place.
5. Lightly force lower bearing out.
6. Reach in and pull bottom portion of water seal out.
7. Reassembly is reverse of above.

SERVICE

STORAGE BIN THERMOSTAT

1. Disconnect electrical supply.
2. Remove bin thermostat bulb from bin location along with its capillary tube.
3. Remove control box cover.
4. Loosen solid conduit connector nut which will drop control away from the frame.
5. Disconnect two leads.
6. Replace with new control and reassemble in reverse of above.
7. CAUTION: Always check new control power element charge before installation to assure receiving an operative control. A handful of ice on the bulb will register an audible 'click' at cut-off. Settings 35° cut-out, 45° cut-in.

WATER RESERVOIR

1. Remove service panel in cabinet hood.
2. Turn off water supply and drain reservoir.
3. Remove 1/4 inch copper inlet water line.
4. Remove 1/2 inch plastic feed line to freezer.
5. Lift out reservoir.
6. To replace, reverse procedure.

HAND RE-SET LOW PRESSURE CUT-OUT SWITCH

1. Disconnect electrical supply.
2. Remove control cover.
3. Put jumper across control wires if needed. Connect electrical supply and pump down to one pound PSI on lowside guage.
4. Disconnect electrical supply again, then remove electrical lead to the control.
5. Loosen cap tube from crankcase and remove complete control. Cap up 1/4 inch flare fitting.
6. Install new control, being sure to purge at crankcase fitting when tightening up refrigerant connection.

SERVICE

MICRO SWITCH IN SPOUT

1. Remove hood service panel.
2. Remove micro box cover, loosen two screws at rear of box holding switch in place, lift up.
3. Disconnect electric leads.
4. Reassemble with new micro switch.

DRIVE MOTOR

1. Remove case hood - See Cabinet Top Removal Section.
2. Remove electrical connections.
3. Remove four base bolts.
4. Remove drive belt.
5. Lift out defective motor.
6. Remove pulley and install on new motor.
7. To replace, reverse procedure.
8. CAUTION: Drive motor rotation is COUNTER-CLOCKWISE facing shaft end.

MANUAL ON AND OFF SWITCH

1. Remove front service door.
2. Remove control box cover.
3. Remove two screws holding switch box bracket.
4. Disconnect electrical leads from switch.
5. Remove switch.
6. To replace, reverse procedure.

GEAR REDUCER AND COUPLING

1. Remove rear door if accessible.
2. Remove drive pulley.
3. Loosen drive coupling set screw and slide down on gear reducer shaft.
4. Loosen four mounting bolts.
5. Lift out from rear of machine.
6. To replace, reverse procedure.
7. Check new gear reducer for proper oil level.
8. Remove shipping plug from oil vent plug.

"H" MODELS
CHASSIS ASSEMBLY

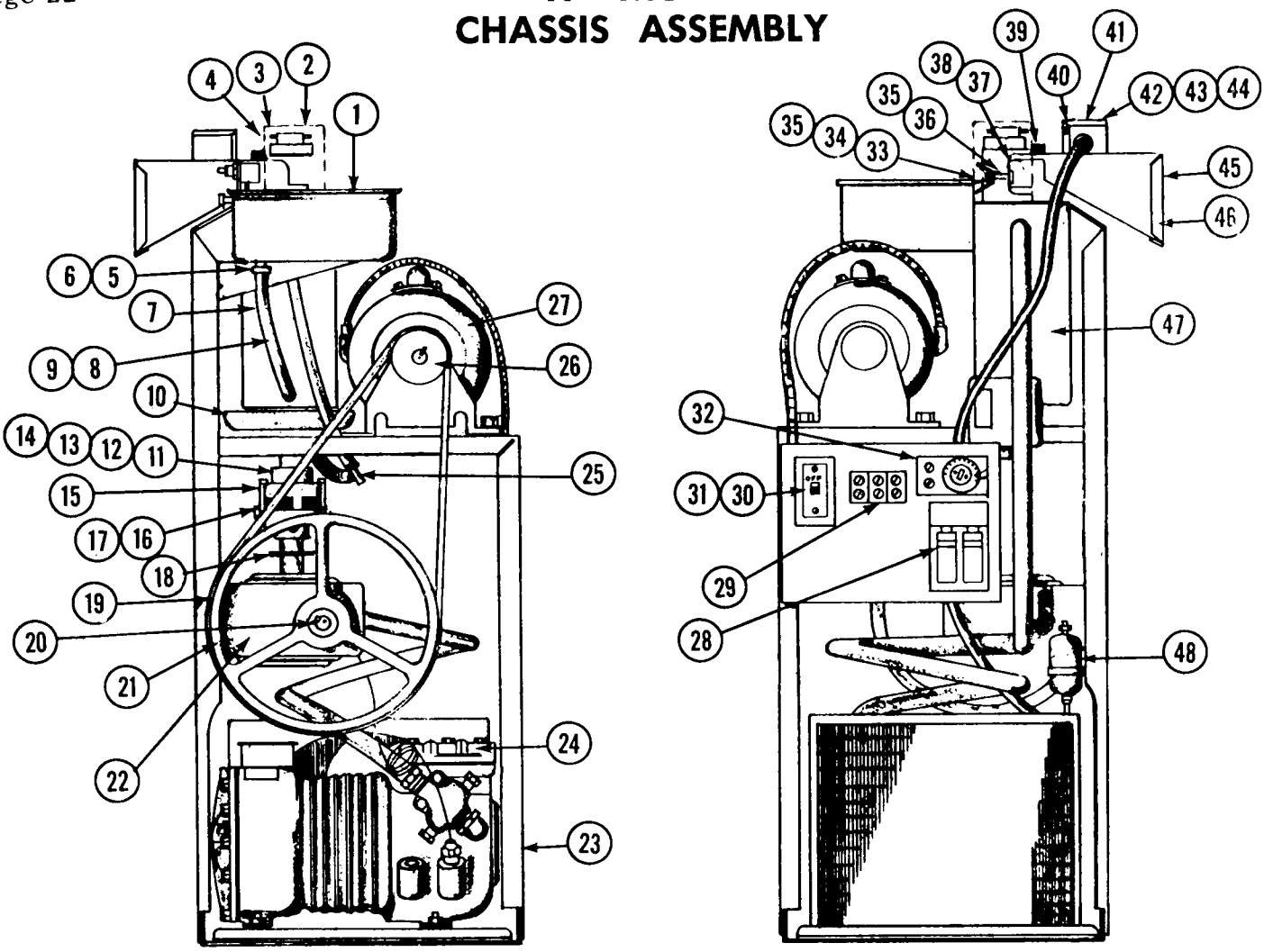

ITEM NO.	PART NO.	NAME	
1.	A-8339	Reservoir Assy.	
2.	A-15070	Spout Insulation-left	
3.	A-15071	Spout Insulation-right	
4.	A-8736	Strap	
5.	2-694	Clamp	
6.	2-535	Clamp	
7.	5-186	Tygon Hose	per foot
8.	13-79	Tubing	per foot
9.	2-534	Clamps	
10.	13-213	Drip Pan	
11.	S-8525	Top Coupling	
12.	13-131	Rubber Insert	
13.	S-7716	Bottom Coupling	
14.	3-585	Set Screw	
15.	S-8496	Clamp (2)	
16.	3-206	Screw	
17.	3-89	Washer	
18.	13-152	Rubber Shield	
19.	13-558	V Belt	
20.	S-6035	Key	
21.	2-1463	Pulley	
22.	2-337	Reducer	
23.	A-15976	Frame	
24.	18-257	Compressor	
25.	A-7387	Tee	

ITEM NO.	PART NO.	NAME
26.	2-1462	Pulley
27.	12-864-1	Drive Motor 115/60/1
28.	11-273-1	Low Press. Control A.C.
	11-286-1	Hi-Lo Press. Control W.C
29.	12-813-4	Terminal Board AC.
	12-1308	Terminal Board W.C.
30.	12-1220A	Switch
31.	12-1221	Overload (state motor mfg.)
32.	11-99-1	Bin Control
33.	S-9237	Spout Casting, back
34.	3-207	Screws
35.	3-679	Washers
36.	3-671	Screws 2 1/2"
37.	A-14254	Spout Casting, front
38.	2-560	"O" Ring
39.	A-14256	Knurled Nut
40.	A-14241	Limit Box Cover
41.	3-698	Screws (2)
42.	12-1018	Switch
43.	3-886	Speed Nut
44.	3-698	Screws (2)
45.	A-16360	Pressure Plate
46.	2-1321	Spring
47.	A-14886-1	Freezer Assy.
48.	2-350	Drier

discontinued
But a supplier has been located

Service Eng. Co
P.O. Box 25021
Raleigh, NC.
27611
919-834-1275

* See overload chart page 38 for correct dash no.

SF-1 FREEZER

Part No. A-14886-1

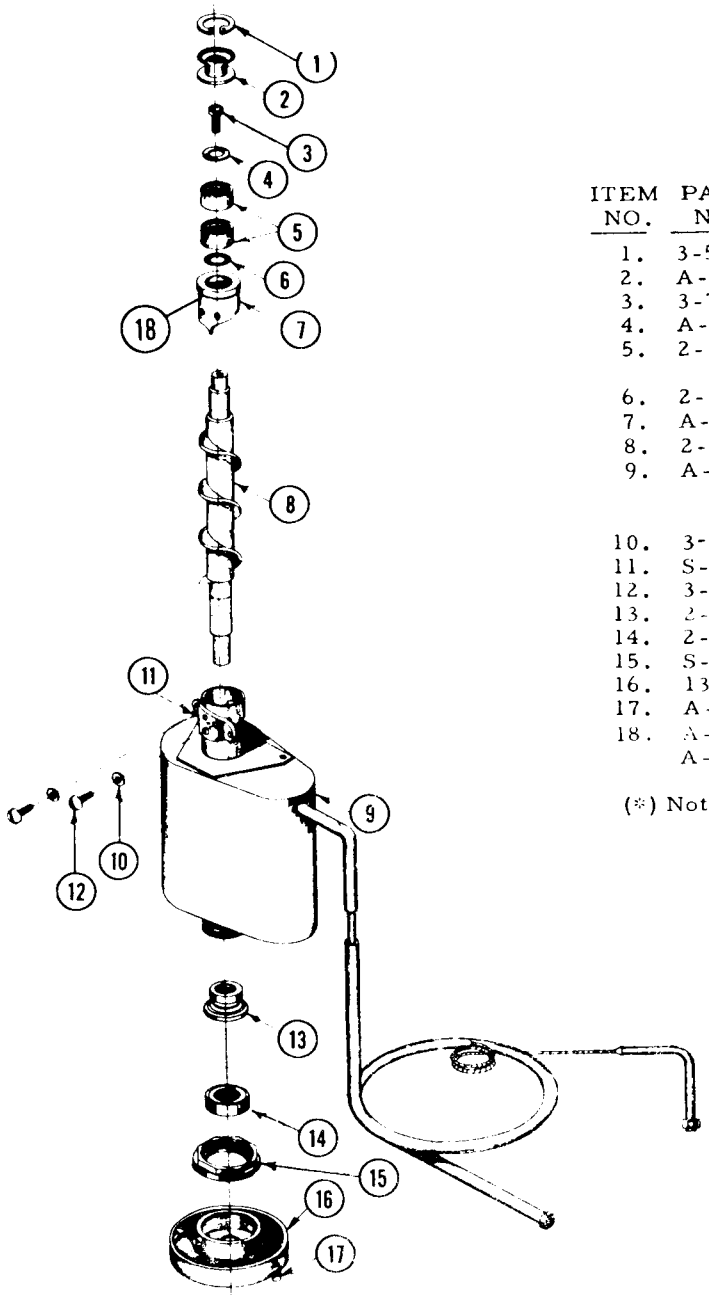

ITEM NO.	PART NO.	NAME
1.	3-553	Snap Ring
2.	A-7701	Worm Shaft Cap
3.	3-758	Cap Screw
4.	A-7699	Worm Tube Washer
5.	2-1412	Bearing (matched set of two)
6.	2-386	'O' Ring
7.	A-14591	Ice Breaker
8.	2-1413	Worm Shaft
9.	A-7826	Worm Tube, Accumulator, Suction, & Cap Tube Assembly
10.	3-679	Washer (2 reqd.)
11.	S-9237	Casting (spout)
12.	3-207	Bolt (2 reqd.)
13.	2-1300	Water Seal
14.	2-417	Lower Bearing
15.	S-8817	Worm Tube Nut
16.	13-213	Rubber Drip Pan
17.	A-8002	Drain Tube (copper) (*)
18.	A-14678	Breaker & Bearing Ass'y
	A-14886-1	Freezer Complete

(*) Not Shown

SF-1 "WSH" Models

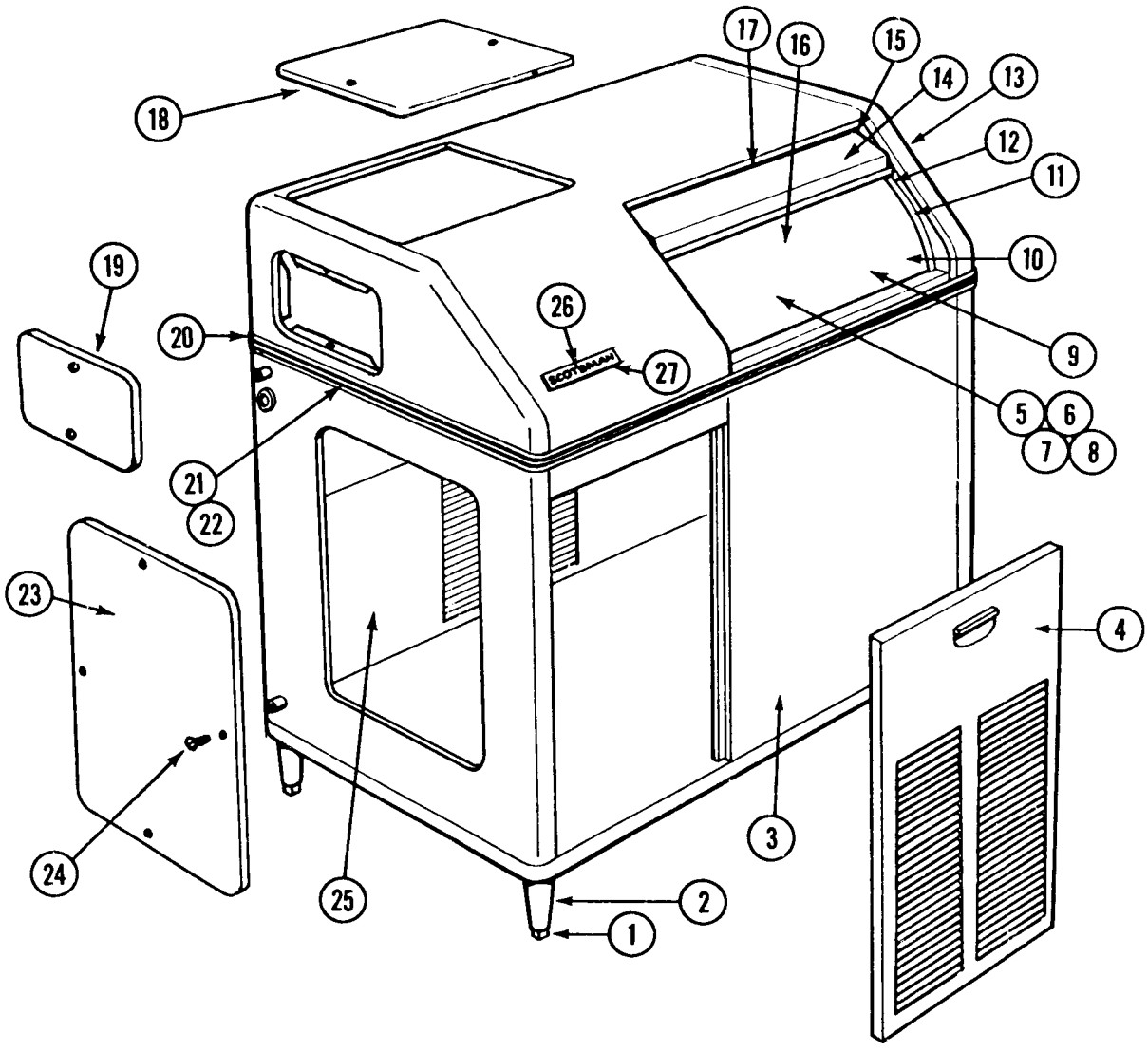

ITEM NO.	PART NO.	NAME
1.	8-522	Leg Levelers
2.	A-15803	Legs
3.	A-15932	Case Assembly
4.	A-15791	Front Door
5.	A-18093	Drain Assembly *
6.	2-530	"O" Ring (drain) *
7.	A-18090	Storage Bin Drain (male) *
8.	A-6448	Drain Screen *
9.	A-15729	Storage Bin Assy. *
10.	A-15735	Insulation Layout *
11.	3-640	Door Glides (door)*
12.	3-1195	Door Glides (hood)*
13.	A-15600	Case Hood Assy.

ITEM NO.	PART NO.	NAME
14.	A-15559	Sliding Door
15.	A-16208	Door Track
16.	3-1212	Bulb Holder *
17.	A-16209	Door Catch *
18.	A-7676	Top Door
19.	A-6530	Top Side Door
20.	A-5796	Rear Trim
21.	15-324	Plastic Moulding-trim
22.	S-3646	Front Moulding Strip
23.	S-6713	Side Door
24.	2-775	Screw (stainless)
25.	A-8740	Rear Door
26.	15-156	Emblem
27.	3-271	Speednuts *

* Not Shown

SF-1H CASE ASSEMBLY

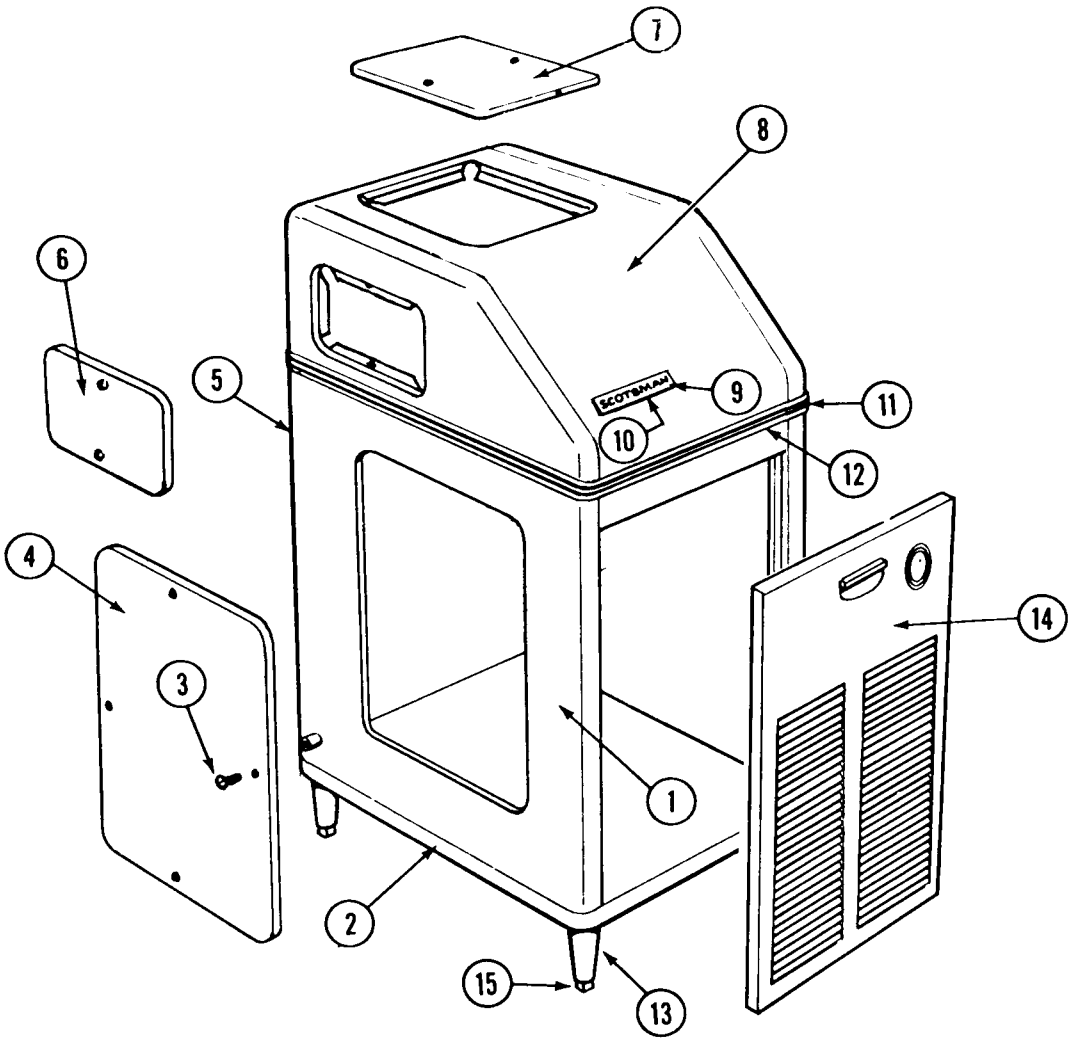

ITEM NO.	PART NO.	NAME
1.	A-15933	Case Assembly (less doors)
2.	A-8902-1	Moulding Strip (bottom) (2 reqd.)
3.	3-775	Screw (s,s)
4.	S-6713	Side Door
5.	A-8740	Rear Door (*)
6.	A-6530	Top Side Door
7.	A-7676	Top Door
8.	A-16236	Case Hood (less doors)
9.	15-156	Scotsman Emblem
10.	3-271	Speed Nuts
11.	15-324	Plastic Trim Insert
12.	S-6218	Moulding Strip (top)
13.	A-15803	Legs (4 reqd.)
14.	A-15791	Front Door
15.	8-522	Leg Levelers

(*) Not Shown

SF-1
RESERVOIR ASSEMBLY
Part No. A-8339

ITEM NO.	PART NO.	NAME
1.	A-8341	Reservoir Cover
2.	2-1259	Valve Pin
3.	2-1320	Deflector
4.	S-8770	Inlet Valve
5.	3-1001	Rivet
6.	A-5777	Valve Seat Holder
7.	S-6947	Valve Seat
8.	S-7044	Nut
9.	A-12869	Bracket
10.	S-6715	Stand Pipe
11.	S-8138	Inlet Valve Ass'y
12.	A-13409	Reservoir Body
13.	A-8055	Bracket Nut
14.	A-12067	Float and Arm Ass'y
15.	A-18418	Water Deflector
	A-8339	Complete (less cover)

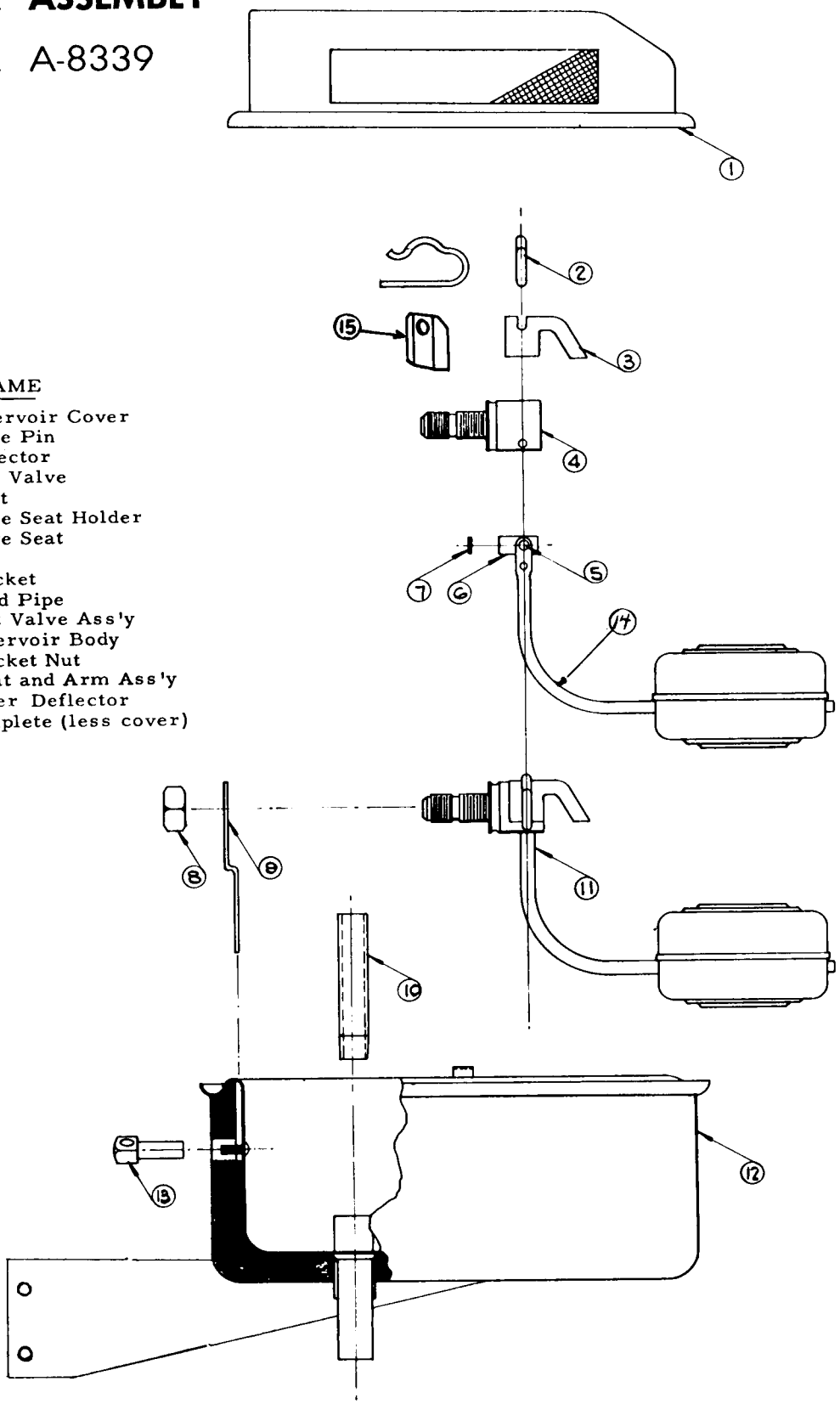

SF-1
CONDENSING UNIT
⅓ HP Water Cooled, Copeland

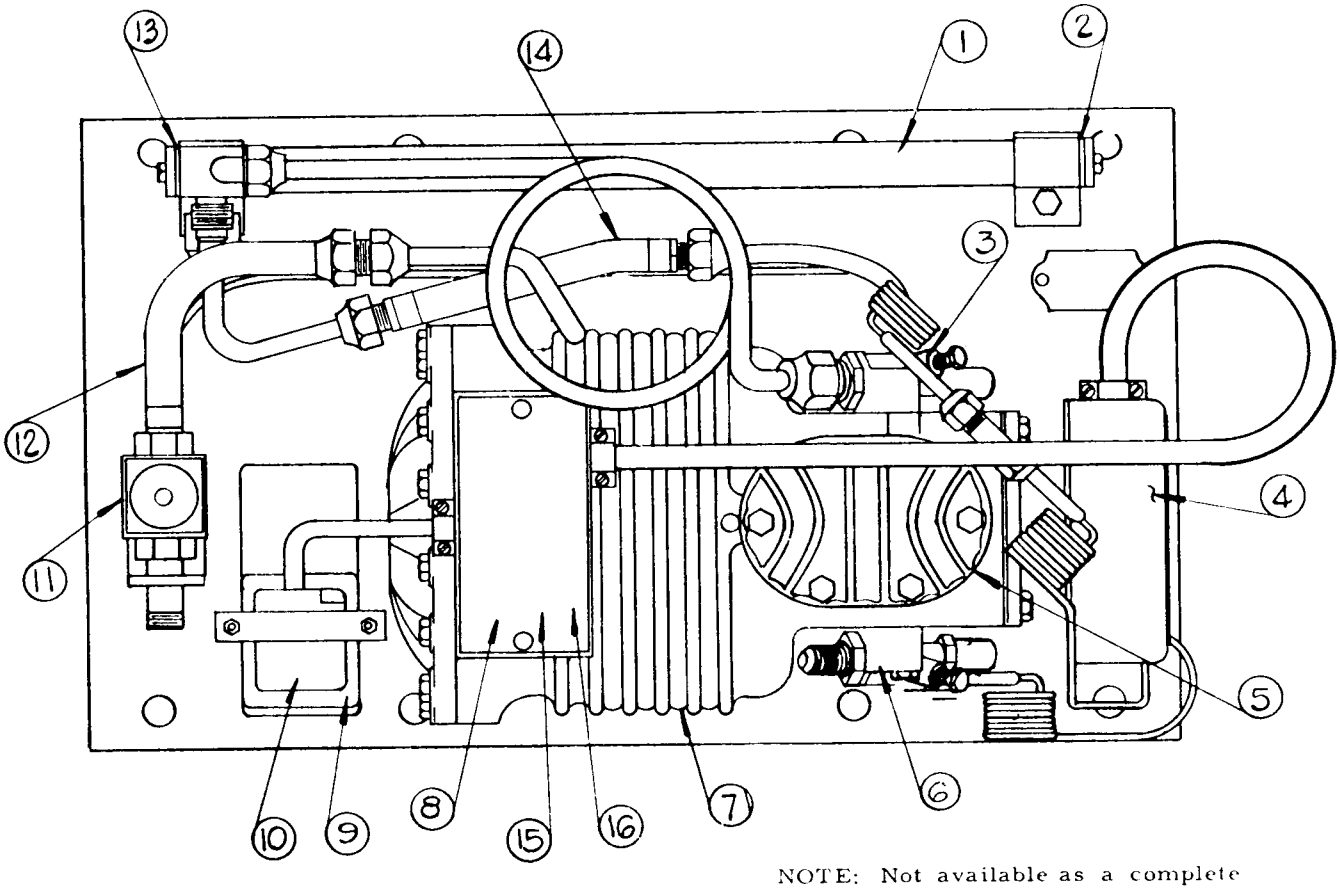

NOTE: Not available as a complete mounted assembly.

ITEM NO.	PART NO.	NAME
1.	18-259	Condenser
2.	18-262	Plain Gasket
3.	18-237	Discharge Service Valve
4.	11-286-1	High-Pressure Control
5.	18-222	Valve Plate & Gasket Kit Assembly (*)
6.	18-237	Suction Service Valve
7.	18-257	Motor Compressor 115/60/1 WC
8.	18-240	Klixon (overload) (*)
9.	18-1901-4	Starting Capacitor
10.	18-1903-4	Relay
11.	11-198	Water Valve
12.	18-260	Compressor to Valve Water Hose
13.	18-263	Manifold Gasket
14.	18-261	Compressor to Condenser Water Hose
15.	18-270	Terminal Board (*)
16.	18-241	Terminal Ass'y

(*) Not Shown

SF-1
CONDENSING UNIT

1/3 HP Air Cooled, Copeland

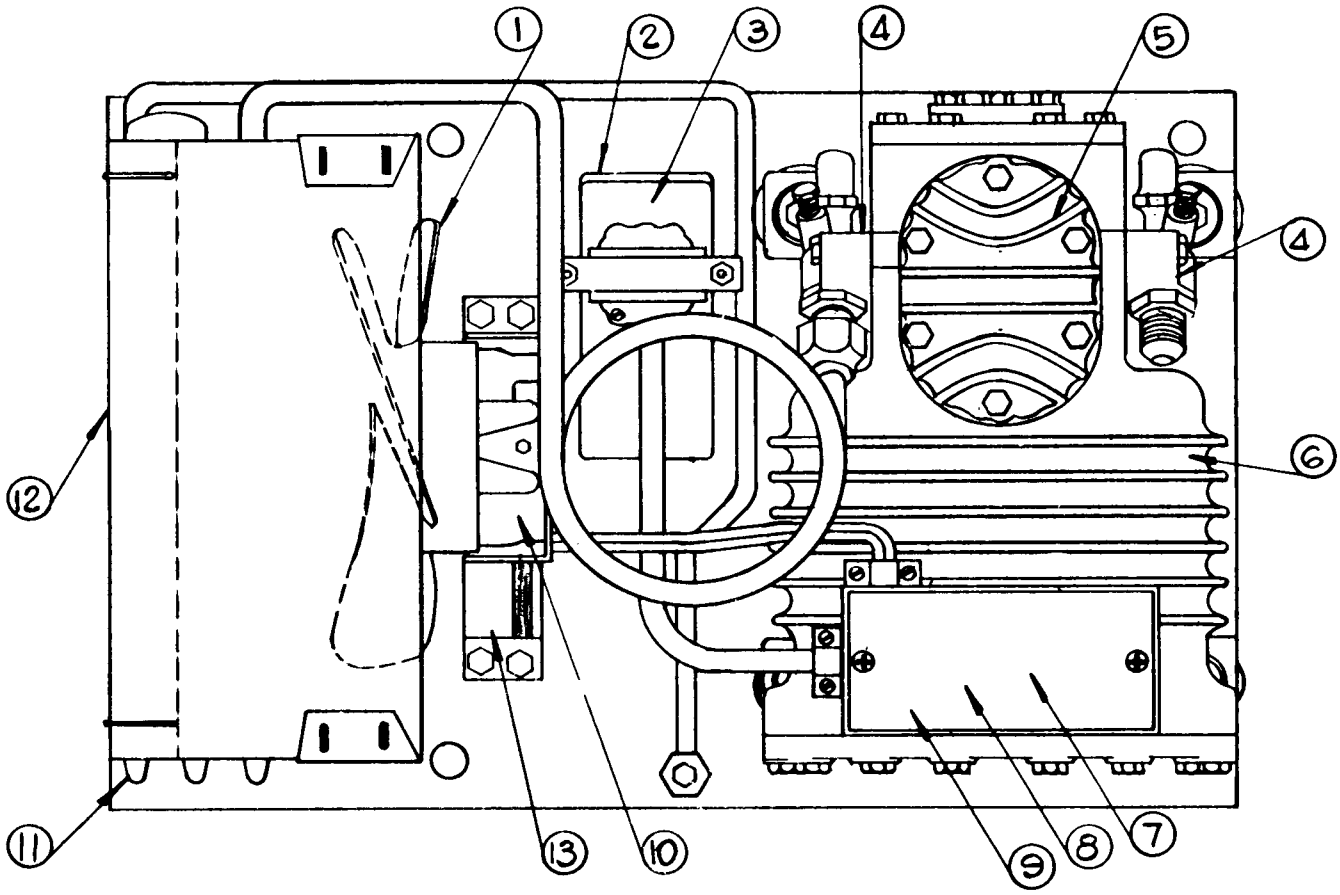

NOTE: Not available as a complete mounted assembly.

ITEM NO.	PART NO.	NAME
1.	18-231	Fan Blade
2.	18-1901-4	Starting Capacitor
3.	18-1903-4	Relay
4.	18-237	Suction & Discharge Service Valves
5.	18-222	Valve Plate & Gasket Kt Kit Assembly (*)
6.	18-221	Motor Compressor 115/60/1 AC
7.	18-240	Overload Klixon
8.	18-241	Terminal Ass'y) (*)
9.	18-270	Terminal Board (*)
10.	18-150-1	Fan Motor
11.	18-234	Condenser
12.	A-12109	Shroud
13.	18-422	Fan Motor Bracket

(*) Not Shown

GEAR REDUCER

Part No. 2-337

Winsmith Part No. (3CTS)

ITEM NO.	PART NO.	NAME
1.	2-580-28	Slow-Speed Gasket (2)
2.	2-580-24	Slow-Speed Seal (2)
3.	2-580-26	Slow-Speed Bearing (2)
4.	2-337-20	Slow-Speed Gear & Shaft
5.	2-768-25	High-Speed Gasket (2)
6.	2-337-23	High-Speed Bearing (2)
7.	2-768-20	High-Speed Seal
8.	2-337-21	High-Speed Gear & Shaft (integral)
9.	2-580-27	Slow-Speed Spacers (2)
	2-337	Complete Reducer

Note: Both hi and low speed bearing, oil seals and gaskets are included in repair kit. Part # A-6398.

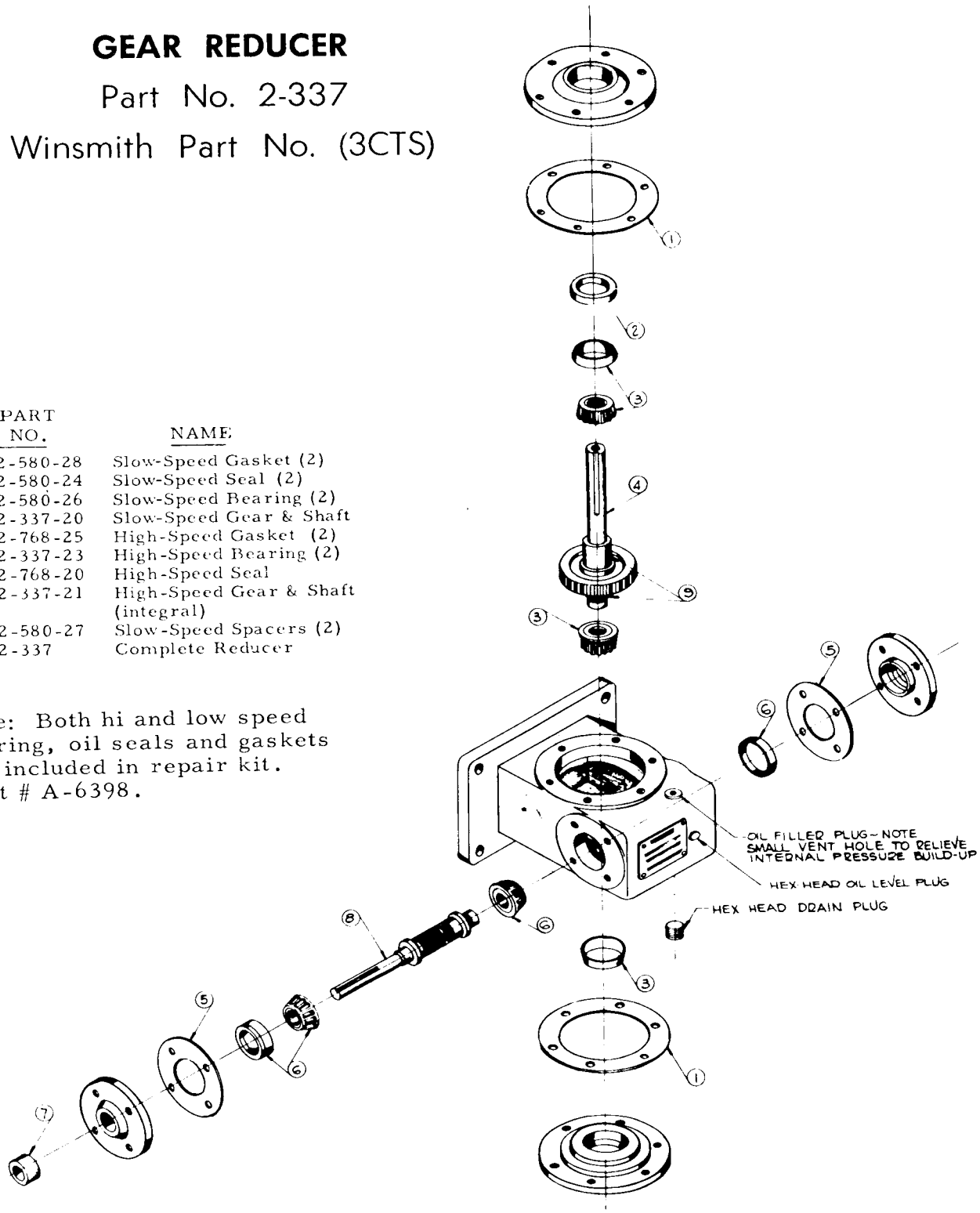

In answer to many field requests, we are pleased to release the following chart showing the companies whose products are acceptable substitutes for the 600W supplies by Winsmith as factory recommended.

Note the third column which most accurately represents the normal temperature operating range. Also the Alemite or Zerk fitting to bearing is greased with Mobilgrease BRB No. 1, or any good grade ball bearing grease as obtained from local service stations.

600W oils and equivalents are classified as industrial oils and most likely will be found in bulk plants rather than local service stations.

WORM GEAR REDUCERS

CB-CT-CV-CBD-CVD-CBX-CTX-CVX-DBI-TSR

Ambient Temperature °F	-30 to 15	16 to 50	51 to 110	111 to 165
Maximum Operating Temperature °F	150	185	225	225
Viscosity @ 210°F, SUS	40 to 90	90 to 125	125 to 190	190 to 350
Compounded with	(Optional)	3 to 10% Acidless Tallow or E.P. Base	3 to 10% Acidless Tallow or E.P. Base	3 to 10% Acidless Tallow or E.P. Base
AGMA Lubricant		#7 Compound	#8 Compound	
Cities Service Oil Co.	Pacemaker Oil #5	Optimus Oil #10	Optimus Oil #6	Optimus Oil #12
Fiske Bros. Refining Co.	#3Lubriplate	#8Lubriplate	#8Lubriplate	APG Lubriplate
Gulf Oil Corporation	Multipurpose Gear Lubricant	E.P. Lubricant #115	E.P. Lubricant #145	E.P. Lubricant #250
Shell Oil Company	Vitrea Oil 71	Valvata Oil #J 78	Valvata Oil #J 78	Valvata Oil #J 83
Sinclair Refining Co.	Duro Oil 160	#87 Heavy Duty Oil	#101 Super-Heat Valve Oil	#212 Super-Heat Valve Oil
Standard Oil Co.	Stanogear Compound #1	Stanogear Compound #4	Standard Worm Gear Oil	Calumet SH Cyclinder Oil
Sun Oil Company	Sunep 70	Sunep #110	Sunep #150	HV Cyl. Oil
Socony Mobil Oil Co., Inc.	Vactra Oil #1	Mobil Compound DD	Mobil Cylinder Oil #600W	Mobil Cylinder Oil # 600W
The Texas Company	Meropa Lub. #1	Meropa Lub. #3	Meropa Lub. #6	Meropa Lub. #6

MAINTENANCE INSTRUCTIONS

FOR

SCOTSMAN SUPER FLAKERS

The following services must be accomplished a minimum of two (2) times per year on all Scotsman Super Flakers.

1. Check and clean water strainers and float valves. Depress float valve to insure full stream of water.
2. Check water level and machine level. Keep water level below overflow but as high as possible and still not run out of spout opening with machine off. Water should come out of spout with ice at all times. Adjust as required.
3. Clean reservoir and interior of freezer assembly using Scotsman Ice Machine Cleaner.
   A. CLEANING INSTRUCTIONS
      1. Set main switch to OFF.
      2. Remove all ice from storage bin.
      3. Turn off water supply or block float. Drain reservoir by removing overflow tube (gray plastic tube) in reservoir. Replace overflow tube.
      4. Set main switch to ON and pour cleaning solution into reservoir. Do not fill above overflow tube.
         Models SF1 & SF75 -- Use 4 oz. of Scotsman cleaner and 1 qt. hot water.
      5. Continue to make ice on solution until the solution is used up and reservoir is empty.
      6. Set main switch to OFF. Remove overflow tube, wash and rinse reservoir, replace overflow tube, turn water on or remove float block.
      7. Turn MAIN SWITCH to ON. Let unit run for at least (15) minutes to flush out any cleaning fluid. Check ice for acid taste -- run until ice tastes sweet.
      8. Turn MAIN SWITCH to OFF. Add hot water to ice bin, using this melt water, thoroughly wash and rinse all surfaces within the storage bin.
      9. Turn MAIN SWITCH to ON. Replace Service Door. Unit is ready for normal operation.
   B. If heavy mineral deposits on auger and walls, or sediment at inlet to freezer are encountered, clean by pouring strong solution (1/2 acid - 1/2 water) into reservoir and operate drive motor only for agitation. Allow 1/2 hour or longer as required. Drain by disconnecting tygon at water inlet to freezer.

   Note: Cleaning requirements vary according to local water conditions. Visual inspection of the auger before and after cleaning will indicate best procedure to be followed in local areas.
4. Check high and low side pressures. On air cooled models head pressures range between 130 and 145 PSI. On water cooled models, set pressure at 130 PSI. Suction pressure should be above 12 PSI and will range up to 16 PSI depending upon ambient and water temperatures.

5. Set hand reset low pressure control to cut off in event of water supply interruption or low ambient temperature at approximately 5PSI.
6. Change oil in gear reducer. Use 600W or grease with BRB No.1 or equivalent when grease fittings are evident. Particularly important when there is evidence that water has gotten into gear housing. Remove gear reducer to facilitate.
7. Oil drive motor. Use SAE 20 oil.
8. Check top bearing of freezing tube. Remove retainer ring and stamped brass cap. If moisture is around bearing, wipe up and remove grease. Add new grease. Use lubriplate No. 5.
9. Check and adjust belt tension.
10. Clean air cooled condenser. Inform customer to clean frequently. Always shut off machine when cleaning.
11. Oil condenser fan motor when possible.
12. Check for refrigerant leaks and proper frost line. Should frost out of accumulator approximately two feet.

If unit is to be operated in an excessively low ambient a head pressure control kit should be added. Scotsman Part No. A-18440-1.

This kit consists of a reverse acting hi-pressure control connected electrically to the fan motor. As the head pressure drops below the cut in setting the control opens allowing the current to pass thru a resistor in the line feeding the fan motor. This slows the shaded pole motor down to approximately 1/4 speed, thus increasing the head pressure. When the control cuts in the full voltage again flows to the fan motor allowing it to operate at full speed.

SERVICE ANALYSIS

SYMPTOM	POSSIBLE CAUSE	CORRECTION
Unit will not run	Blown Fuse	Replace fuse and check for cause of blown fuse.
	Thermostat set too high	Adjust thermostat. 35° cut-out and 45° cut-in.
	Loose electrical connection	Check wiring.
	Switch in OFF position	Turn switch to ON.
	Inoperative master switch	Replace switch.
Compressor cycles intermittently	Low voltage	Check for overloading.
	Dirty Condenser	Clean.
	Air circulation blocked	Move unit to correct.
	Inoperative condenser motor	Replace.
	Non-condensable gases in system	Purge off.
Making wet ice	Surrounding air temperature	Correct or move unit.
	Under or over-charge of refrigerant	Recharge with the proper amount.
	High water level in water reservoir	Lower to 1/4 inch below over-flow pipe.
	Faulty compressor	Repair or replace.
Low ice production	Loss of refrigerant, under or over-charge of refrigerant.	Check and recharge with proper amount of refrigerant.
	Dirty or plugged condenser	Clean condenser
	Low water level in water reservoir	Adjust to 1/4 inch below over-flow pipe.
	Partial restriction in capil-lary Tube or drier	Moisture in system. Over-charge of oil in system. Re-move charge and drier. Re-place and recharge system.
	Inlet water strainer partially plugged.	Remove screen and clean.
	Corroded or stained worm shaft due to water condition	Remove worm shaft and clean.
Machine runs but makes no ice	Loss or under-charge of refrigerant	Check for leaks and recharge
	Drive motor, belts, gear reducer or drive coupling inoperative	Check. Repair and/or replace.
	Pulleys loose on shafts	Tighten - repair or replace.
	Water not entering freezing chamber	Plugged strainer or supply line. Check and clean. Air lock in gravity feed line. Check and remove air lock.
	Moisture in system	Check and remove charge and drier. Replace and recharge.
	Water seal leaking	Replace seal.
	Defective manual overload switch.	Replace switch.

SERVICE ANALYSIS

SYMPTOM	POSSIBLE CAUSE	CORRECTION
Water leaks	Defective water seal	Replace.
	Gravity feed line	Check hose clamps.
	'O' ring in spout casting leaking	Remove spout casting and install new 'O' ring.
	Storage bin drain & connecting fittings	Check & repair.
	Water level in reservoir too high	Adjust to 1/4 inch below overflow pipe.
Excessive noise or chattering	Mineral or scale deposit on auger and inner freezing chamber walls	Remove and manually polish auger, polish inner chamber walls of freezer barrel.
		For lighter concentrations use Scotsman Ice Machine Cleaner periodically.
	Low suction pressure	Add gas to raise suction pressure. Raise head pressure control setting.
	Intermittent water supply	Check & clean water strainer. Check gravity feed line for air lock. Remove air lock.
	Water level in reservoir too low	Adjust to 1/4 inch below overflow pipe.
	Misaligned coupling or worn insert	Repair or replace.
	Gear reducer low on oil change	Check oil level and refill to oil level plug.
	Gear reducer loose on frame	Tighten.
	Pulleys worn or loose on shaft	Repair or replace.
	Belt cracked or worn	Replace belt.
	Drive motor end-play or worn bearings	Reapir or replace.
	Motor compressor not floating on springs	Loosen hold-down bolts.
Machine continues to run with full storage bin	Storage bin thermostat not properly set	Reset or replace. 35° cut out, 45° cut in.

PARTS LIST

SF-1H & SF-1WSH

	SF-1H & SF-1WSH
FREEZER ASSEMBLY, COMPLETE	A-14886-1
Ice Breaker	A-14591
'O' Ring	2-386
Top Bearing	2-1412 (set of 2)
Unit Cap	A-7701
Cap Screw	3-758
Washer	A-7699
Worm Shaft	2-1413
Retainer Ring	3-553
Water Seal	2-1300
Lower Bearing	2-417
Worm Tube Nut	S-8817
Drip Pan Assembly	13-213
SPOUT ASSEMBLY - STAINLESS STEEL (ONLY)	A-14194
Spout Casting Holder	S-9237
Spout Casting	A-14254
'O' Ring - Spout Casting	2-560
Spring for Spout Pressure Plate	2-1321
Screws - 1/4x2x1-1/4	3-671
Lockwashers	3-679
Nut, Knurled	A-14256
Pressure Plate, Spout	A-16360
Micro Switch Box	A-14243
Micro Box Cover	A-14241

PARTS LIST

SF-1H & SF-1WSH

ELECTRICAL COMPONENTS

Bin Thermostat	11-99-1
Low Pressure Control - Ranco - Hand Reset	11-273-1
Micro Switch for Spout - Stainless Steel	12-1018
On - Off Overload Switch	12-1220A
Overload Heater for Switch, See overload chart Page 38	12-1221

CONDENSING UNITS

	AIR COOLED	WATER COOLED
Drier	2-350	Same
Motor Compressor Only 115/60/1 1/3 HP	18-221	18-257
Valve Plate & Gasket Kit	18-222	Same
Cylinder Head	18-225	Same
Relay	18-1903-4	Same
Starting Capacitor	18-1901-4	18-258
Fan Blade	18-231	
Fan Motor Only	18-150-1	
Condenser	18-234	
Condenser Shroud	A-12109	
Klixon Thermal Overload	18-240	Same
Terminal Assembly	18-241	Same
Service Valve Gasket	18-242	Same
Compressor to Water Valve Hose		18-260
Compressor to Condenser Hose		18-261
Plain Gasket - Water-Cooled Condenser		18-262
Manifold Gasket - Water-Cooled Condenser		18-263
Water Regulating Valve		11-198
Dual Pressure Control		11-286-1

MISCELLANEOUS

Ice Scoop	2-540
Ice Machine Cleaner - 8 oz. Bottle	19-343
Grey Spray-On Touch-Up Paint	10-153
Upper Bearing Grease-Freezer Ass'y - Pt. Cans Only	19-309
600W Gear Reducer Transmission Oil - Pt. Cans Only	19-359
Tygon Tubing (1/2" ID X 3/4" OD) Per Foot	5-186
Rubber Tubing (3/8" ID) Per Foot Black	13-79
Clamp (For Tygon Tubing - Freezer End)	2-694
Clamp (For Tygon Tubing - Reservoir End)	2-535
Clamp (For Rubber Tubing - Reservoir End)	2-534
Clamp (For Rubber Tubing - Tee End)	2-538

PARTS LIST

SF-1H & SF-1WSH

CABINET PARTS	SF-1H	SF-1WSH
Case Assembly	A-15933	A-15932
Storage Bin Assembly		A-15729
Storage Bin Bulb Bracket		3-1212
Drain Fitting, (Male)		A-18090
Drain 'O' Ring		2-530
Case Hood Assembly	A-16236	A-15600
Large Hood Top Door	A-7676	A-7676
Door Slide Assembly		A-16208
Sliding Door		A-15559
Left Side Door Panel	S-6713	S-6713
Front Door Panel	A-15791	A-15791
Rear Door Panel	A-8740	A-8740
Rear Moulding Strip		A-5796
Front Moulding Strip	S-6218	S-3646
SCOTSMAN Emblem	15-156	15-156
Legs for Raising Base	A-15803	A-15803
Plywood Crate	1-648	1-649
Leg Levelers	8-522	8-522
WATER CIRCUIT		
Water Reservoir Assembly	A-8339	Same
Water Inlet Valve	S-8138	Same
Rubber Valve Seat For S-8138	S-6947	Same
Valve Pin	2-1259	Same
Deflector, plastic	2-1320	Same
Float Ball and Arm	A-12067	Same
Standpipe	S-6715	Same
Reservoir Cover Assembly	A-16012	Same
Water Strainer, Supply Line	16-162	Same
DRIVE CIRCUIT		
Gear Reducer	2-337	Same
Gear Reducer Repair Kit	A-6398	Same
Three-jaw Coupling - Bottom Half	S-7716	Same
Three-jaw Coupling - Top Half	S-8525	Same
Rubber Coupling Insert	13-131	Same
Allen Set Screw	3-385	Same
Clamp - 2 per coupling	S-8496	Same
Cap Screw - 2 per coupling	3-206	Same
Rubber Drip Shield - Gear Reducer Shaft	13-152	Same
Drive Belt	13-558	Same
1/4 HP Drive Motor	12-864	Same
Pulley for Drive Motor 2 1/2"	2-1462	Same
Pulley for Gear Reducer 8"	2-1463	Same

OVERLOAD HEATER CHART FOR MANUAL STARTER SWITCH

QUEEN PART NO. 12-530, GE PART NO. CR101H1, QUEEN PART NO. 12-1221 AND WESTINGHOUSE PART NO. MST02SN

Queen Motor No.	Manufacturer	Electrical Characteristics	Manuf. Part No.	Queen Part No. for G.E. Overload	Manuf. Part No.	Queen Part No. For Westing-house Overload	Manuf. Part No.
12-864-1	G. E.	115/60/1 ¼ HP	KC35KG312	12-708-29	123H6.25A	12-1221-27	MSH6.0A
12-864-1	Westinghouse	115/60/1 ¼ HP	S309P520	12-708-27	123H5.29A	12-1221-27	MSH6.0A
12-864-1	Century	115/60/1 ¼ HP	CSF48HKA	12-708-26	123H4.86A	12-1221-25	MSH5.0A
12-864-2	G. E.	230/60/1 ¼ HP	KC35KG319	12-708-21	123H3.17A	12-1221-20	MSH3.1A
12-864-2	Westinghouse	230/60/1 ¼ HP	S309P334	12-708-20	123H2.91A	12-1221-19	MSH2.8A
12-864-2	Century	230/60/1 ¼ HP	CSF48HKA	12-708-18	123H2.45A	12-1221-19	MSH2.8A
12-864-7	G. E.	208/60/1 ¼ HP	KC35KG317	12-708-22	123H3.46A	12-1221-21	MSH3.4A
12-864-7	Westinghouse	208/60/1 ¼ HP	S309P334	12-708-19	123H2.67A	12-1221-18	MSH2.5A
12-864-7	Century	208/60/1 ¼ HP	CSF48HKA	12-708-20	123H2.91A	12-1221-19	MSH2.8A
12-649-1	Westinghouse	115/60/1 1/3 HP	311P096	12-708-33	123H8.73A	12-1221-31	MSH8.8A
12-649-1	Century	115/60/1 1/3 HP	CSJ56-KKA	12-708-29	123H6.25A	12-1221-27	MSH6.0A
12-649-1	G. E.	115/60/1 1/3 HP	5KC42JG24	12-708-30	123H6.80A	12-1221-28	MSH6.6A
12-649-2	Westinghouse	230/60/1 1/3 HP	311P061	12-708-25	123H4.46A	12-1221-24	MSH4.5A
12-649-2	Century	230/60/1 1/3 HP	CSJ56-KKA	12-708-21	123H3.17A	12-1221-20	MSH3.1A
12-649-2	G. E.	230/60/1 1/3 HP	5KC42JG2	12-708-22	123H3.46A	12-1221-21	MSH3.4A
12-649-7	Century	208/60/1 1/3 HP	CSJ56-KKA	12-708-22	123H3.46A	12-1221-21	MSH3.4A
12-649-7	G. E.	208/60/1 1/3 HP	5KC42JG31E	12-708-22	123H3.46A	12-1221-21	MSH3.4A
12-649-7	Westinghouse	208/60/1 1/3 HP	311P061	12-708-24	123H4.10A	12-1221-31	MSH8.8A

NOTE: The overloads as listed are in accordance with Underwriters requirements. Any deviation will be in violation.

TABLE OF CONTENTS

	PAGE
FOREWARD	1
TABLE OF CONTENTS	2
SPECIFICATIONS	
Mechanical Specifications	3
Continuous Flow-Capacity Chart	4
Specifications Chart	5
Storage Type-Capacity Chart	6
Specifications-Chart	7
How It Works	8
INSTALLATION	
Preparation for Installation	9
Selection of Location	10
Installation Practice	11
Installation-Electrical	12
Refrigeration Cycle	13
Water Schematic	14
Wiring Diagram-Air Cooled	15
Wiring Diagram-Water Cooled	16
Final Check List	17
SERVICE	
Starting the Machine	18
Refrigerant Charge	18
Water System	19
Electrical System	19-20
Removal and Installation of Parts	21-24
Chassis-Front View-Water Cooled	25
Chassis-RearView-Water Cooled	26
Chassis-Front View-Air Cooled	27
Chassis-Rear View-Air Cooled	28
Freezer Assembly	29
Reservoir Assembly	30
Gear Motor Assembly	31
Case and Hood Assembly	32
Case Assembly	33
Service Analysis	34-35
Maintenance Instructions	36-37
Parts List	38-40

THIS PAGE
INTENTIONALLY
LEFT BLANK

THIS PAGE
INTENTIONALLY
LEFT BLANK

MECHANICAL SPECIFICATIONS

	SF-1WSJ	SF-1WWSJ
Compressor	1/2 HP Copelaweld	Same
Condenser	Air Cooled	Water Cooled
Refrigerant	26 oz. R 12	24 oz. R 12
Refrigerant Control	Capillary Tube	Same
Power Consumption - Compressor	11.0 Amps.	Same
Power Consumption - Gear Motor	4.0 Amps.	Same
Current	115 V, 60 cycle, 1 Ph.	Same
Gear Motor Drive	1/10 HP	Same
Worm - R.P.M.	10.5	Same
Water Consumption - Freezer	2.5 Gallons per hour	Same
Water Consumption - Condenser		Varies from .75 to 2 G.P.M.
CABINET DIMENSIONS	SF1J	SF1WSJ
Width	17 7/8"	38 1/2"
Depth	24 1/2"	24 1/2"
Height	40"	40"
Height with 6" legs	46"	46"
SHIPPING WEIGHT		
Approx. shipping weight	220	314

SCOTSMAN®

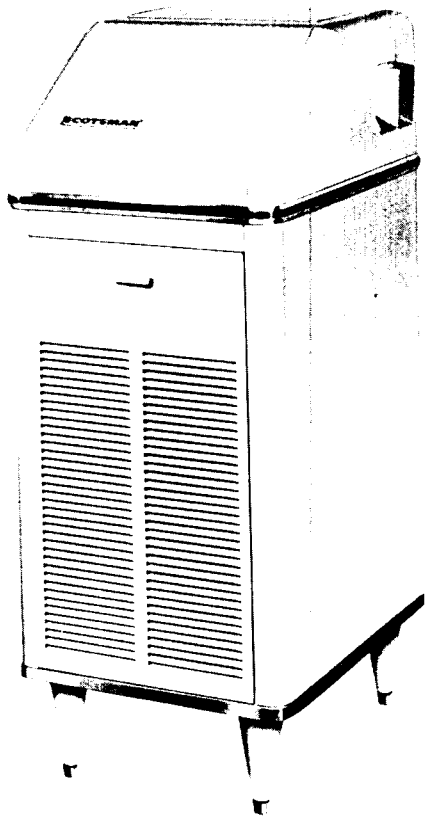

SUPER FLAKER
SF-1
SERIES
Continuous Flow

ice making capacity

Air Cooled Models

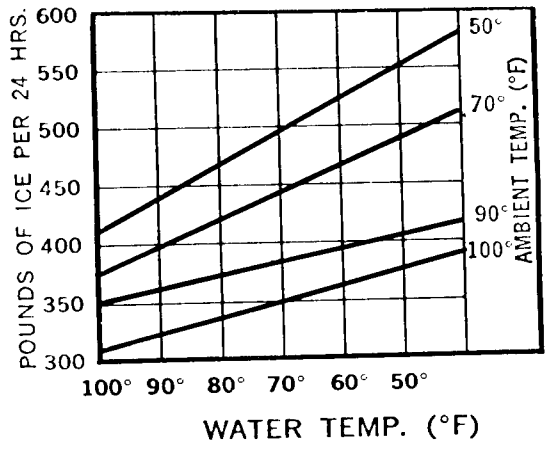

Water Cooled Models

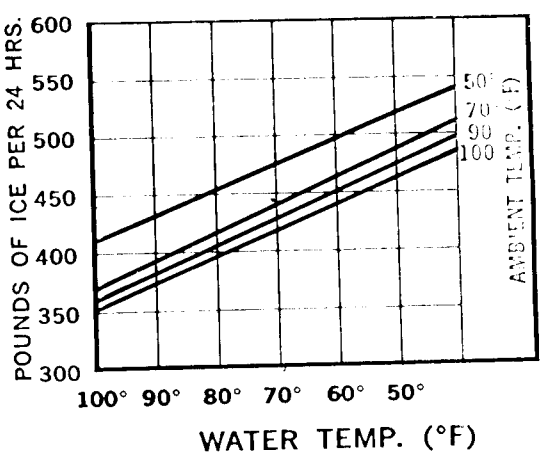

SPECIFICATIONS

SUPER FLAKER SF-1 SERIES (Cont. Flow)	MODEL SF-1J	MODEL SF-1WJ
Daily capacity up to 500 lbs.	X	X
Air cooled condenser	X	
Water cooled condenser		X
Heavy duty ½ HP. Compressor	X	X
Standard 115 V, 60 cy, 1 ph	X	X
¼" water inlet SAE Flare	X	X
⅜" water inlet NPT		X
⅜" water condensate drain ID	X	X
⅜" ID water outlet tube		X
Hammerloid grey exterior	X	X
Stainless steel exterior		
46" to 46¾" height (with legs)	X	X
40" height (without legs)	X	X
17 ⅞" width	X	X
24 ½" depth	X	X
Shipping weight	220	223

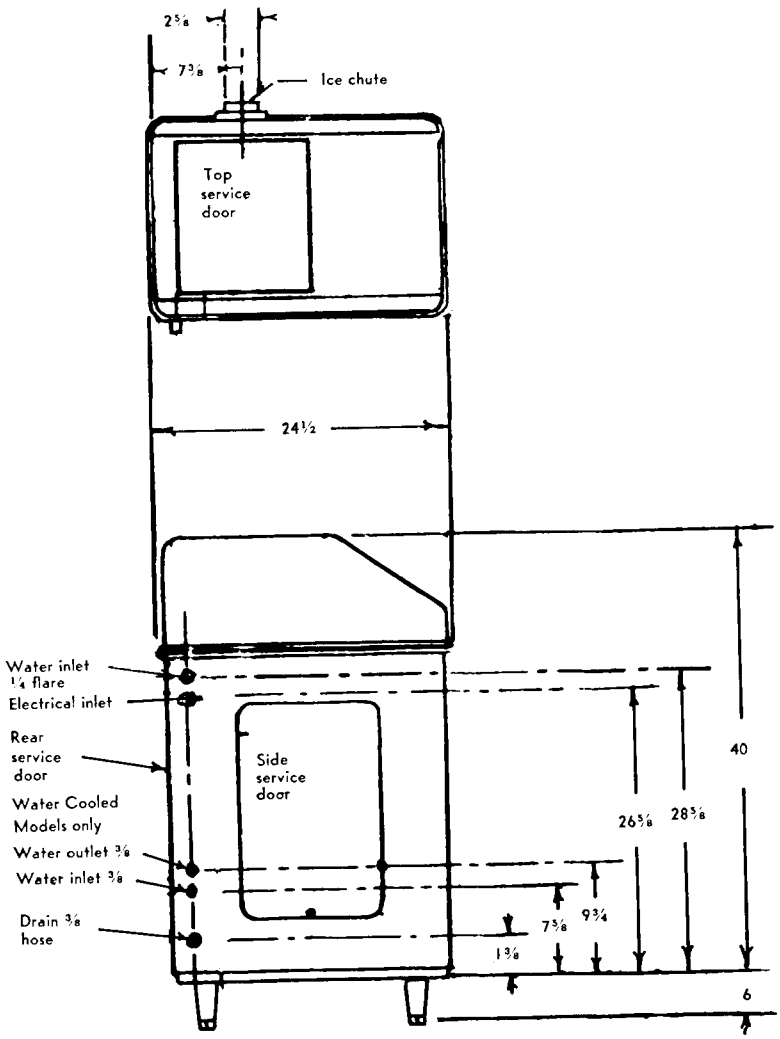

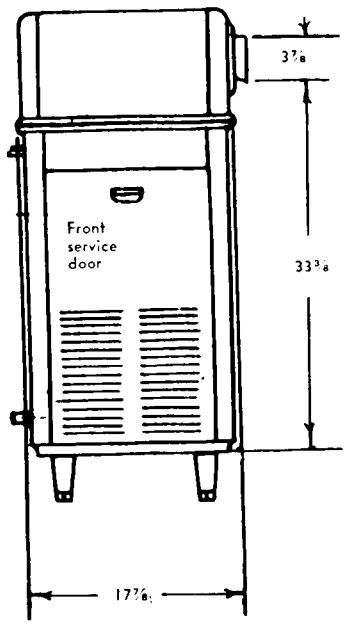

SCOTSMAN®

SUPER FLAKER
SF-1
SERIES
Storage Type

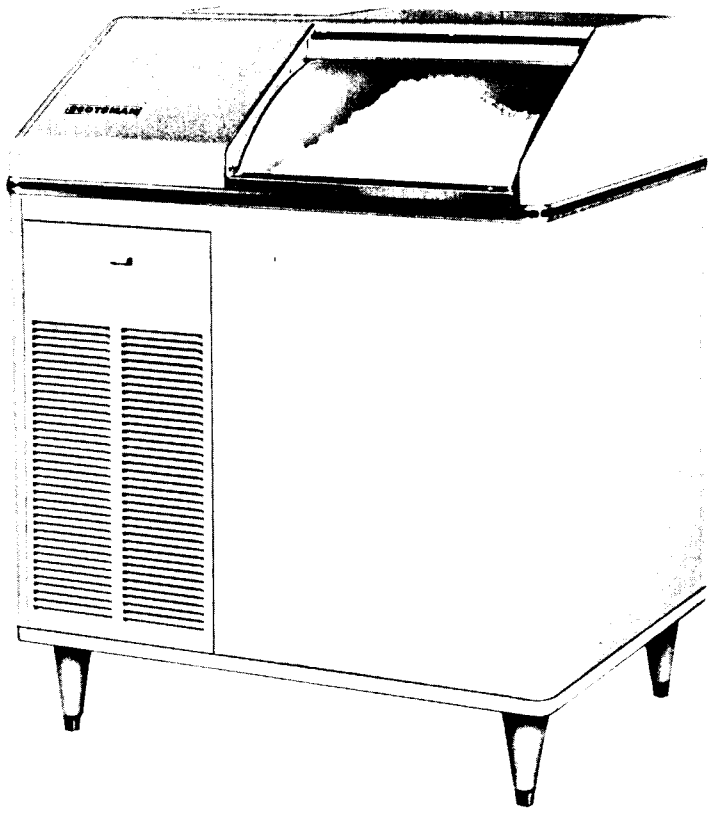

ice making capacity

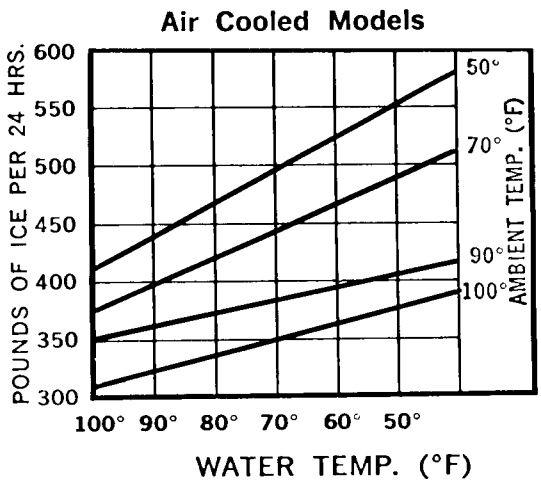

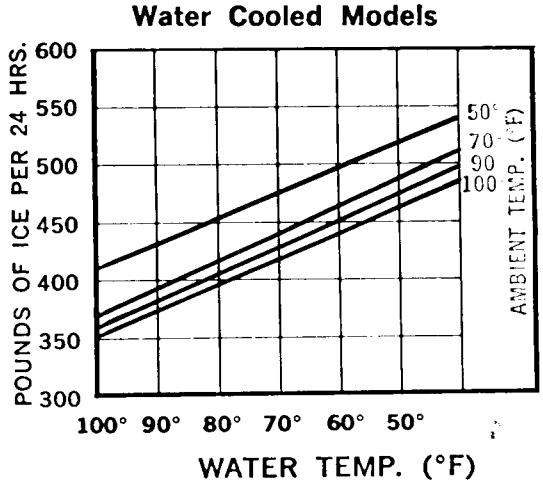

SPECIFICATIONS

SUPER FLAKER SF-1WSJ SERIES (Storage Type)	MODEL SF-1WSJ	MODEL SF-1WWSJ	MODEL SF-1WSJ-SS	MODEL SF-1WWSJ-SS
Daily capacity up to 500 lbs.	X	X	X	X
200 lb. ice storage bin	X	X	X	X
Stainless steel bin	X	X	X	X
Air cooled condenser	X		X	
Water cooled condenser		X		X
Heavy Duty ½ HP. Compressor	X	X	X	X
Standard 115 V, 60 cy, 1 ph,	X	X	X	X
¼" water inlet SAE Flare	X	X	X	X
⅜" water inlet NPT		X		X
⅝" bin drain OD	X	X	X	X
⅜" water outlet OD		X		X
Hammerloid grey exterior	X	X		
Stainless steel exterior			X	X
46" to 46¾" height (with legs)	X	X	X	X
40 height (without legs)	X	X	X	X
38 ½" width	X	X	X	X
24 ½" depth	X	X	X	X
Shipping weight	314	317	317	320

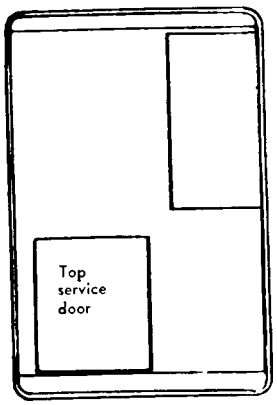

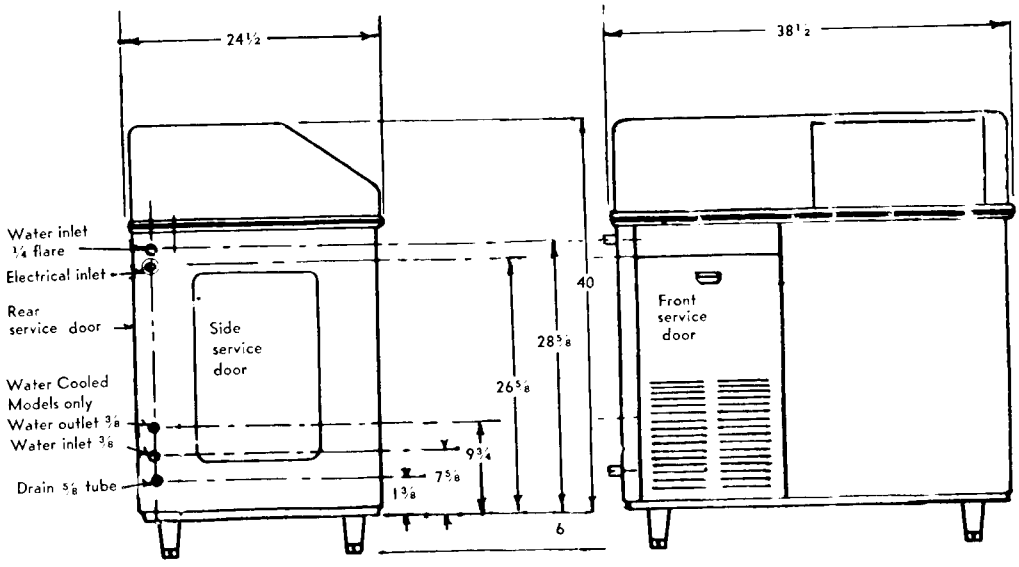

SPECIFICATIONS

SCOTSMAN Super Flakers are designed for restaurants, super markets, soda fountains, hospitals, bakeries, fish markets, poultry stores, packing plants, etc. It is the finest Ice Maker on the market today. It will work 24 hours a day for you, or only as needed. It produces the highest quality ice available at any price.

Approximately 500 pounds of SCOTSMAN crushed ice is delivered each 24 hours to the storage bin for immediate use.

SCOTSMAN Super Flakers are easily installed requiring only standard water, drain and electrical connections.

ATTRACTIVE COMPACT CABINET. Grey hammerloid finish with chrome trim, rounded corners, and removable panels for easy access to mechanical parts. Adjustable and removable legs are under cabinet.

SEALED REFRIGERATION SYSTEM. Provides quiet, efficient operation of the machine. Compressor motor is internally spring mounted for quiet operation. Compressor motor is covered by a full 5-Year Warranty.

HOW IT WORKS. An exclusive patented ice-making system, wherein water in the constant level float reservoir is fed to the bottom end of the freezing cylinder and turns to ice on the inside of this cylinder. Ice from the refrigerated walls of this cylinder is extruded past the ice breaker at the top of the cylinder through a side opening by means of a stainless steel auger driven by a gearmotor drive.

All SCOTSMAN Models SF1J and SF1WSJ are completely automatic. A manual switch on the front starts the machine, and from then on, produces flakes automatically. When the storage bin fills, the machine automatically shuts off and starts up again when ice is taken from the storage compartment.

Model No. SF1J is a continuous flow type machine, and is manually started by an OFF and ON switch located on the front of the cabinet as are the SF-1WSJ models. Since the SF-1J does not have its own attached bin, it is necessary to use an auxillary bin such as the Model SB-500 SCOTSMAN Super Bin for ice storage. A bin thermostat is mounted in each SF-1J continuous flow type machine for the purpose of mounting control bulb from machine to bin.

SCOTSMAN SUPER FLAKERS
PREPARATION FOR INSTALLATION

1. UNCRATING

   The entire unit comes in one crate. Upon delivery a visual inspection of the crate should be made and any severe damage noted should be reported to the delivering carrier and a concealed damage claim filed subject to internal inspection with carrier representative present. Remove crate by pulling nails driven through sides of crate into the bottom skid. A nail puller is best suited here. Next remove (4) four bolts from underside of skid which connect to complete unit base. Unit now free from all crating.

2. Remove all service doors and panels.

3. Remove water reservoir cover and take out paper packing around float ball.

4. Remove leg packages in compartment base and install 4 legs in unit base sockets. On continuous flow models with separate storage bins, legs are put on companion machine stand, not on Ice Maker.

5. Check motor compressor hold down nuts to insure motor compressor rides snug on mounting pads.

6. Remove water strainer from storage bin for installation on unit or in water supply line feeding unit.

7. Open electrical control box and prepare for hook up, use knock outs, cord connectors etc. Then check unit nameplate voltage against building source voltage and make sure they correspond. Caution - Improper voltage supplied to units will void your warranty protection.

8. Select unit location prior to hook up of water drain and electricals in accordance with local and national codes. Minimum room temperatures is 50° Fahrenheit. On air cooled models, select well ventilated location.

9. Remove warranty card and Users manual from storage bin, then wipe bin clean with damp cloth.

10. Fill out warranty card completely including model and serial numbers as taken from aluminum plate found behind front service panel and forward to Scotsman Factory using self mailing card.

11. Level unit with adjustable legs.

SELECTING LOCATION

UNDER BAR INSTALLATIONS: Locate, if possible, so left end panel is accessible. Locate so proper circulation can be attained around the unit and behind it at least four inches.

KITCHEN INSTALLATIONS: As a rule, the kitchen is not the most practical place to install an air-cooled condensing unit, as grease is almost always present and makes cleaning of the condensing unit difficult. Do not locate near range or steam table or other heating devices that may be used in the kitchen..

STOREROOM INSTALLATIONS: Be sure storeroom is of adequate size and properly ventilated. A small, poorly ventilated room will greatly impair the efficiency of the unit. The storeroom must be kept above 50 degrees in the winter months.

BASEMENT INSTALLATIONS: Locate machine in the coolest place. Locate machine in a dry place. Keep away from furnace and boiler room. Keep away from service chutes and runways; also coal or other dust of any kind. If the machine is set over a floor drain, block the machine up enough to level it. If there is any chance of basement flooding, block the machine up enough to eliminate any possible damage to the machine.

WATER SUPPLY: The recommended water supply line is 1/4 inch I.D. copper tubing for SF-1. Connect to cold water supply line with regular plumbing fittings, with a shut-off valve installed in an accessible place between supply line and machine. A water strainer must be installed with the unit and mounted with clean-out plug down. Locate the strainer next to the machine with the arrow in the direction of the flow. Most plumbing codes also call for double check valves in the supply water line, particularly for water-cooled models.

On air-cooled models the water supply line connects to the 1/4 inch flare fitting on the machine. On water-cooled models connections are made to a 3/8 inch male pipe nipple inside of the machine compartment. Incoming water goes through the water regulating valve first and then to the water-cooled condenser. Observe arrow on water regulating valve. Water supply must be installed to confrom with local code. In some cases a licensed plumber and/or a plumbing permit will be required.

DRAIN: The recommended drain from the bin is 5/8 inch OD copper tubing. Must be run to an open trapped and vented drain. If drain is a long run, allow 1/4 inch pitch per foot. Drain must be installed to conform with local code. Run separate line for condenser discharge water on water-cooled models.

INSTALLATION PRACTICE

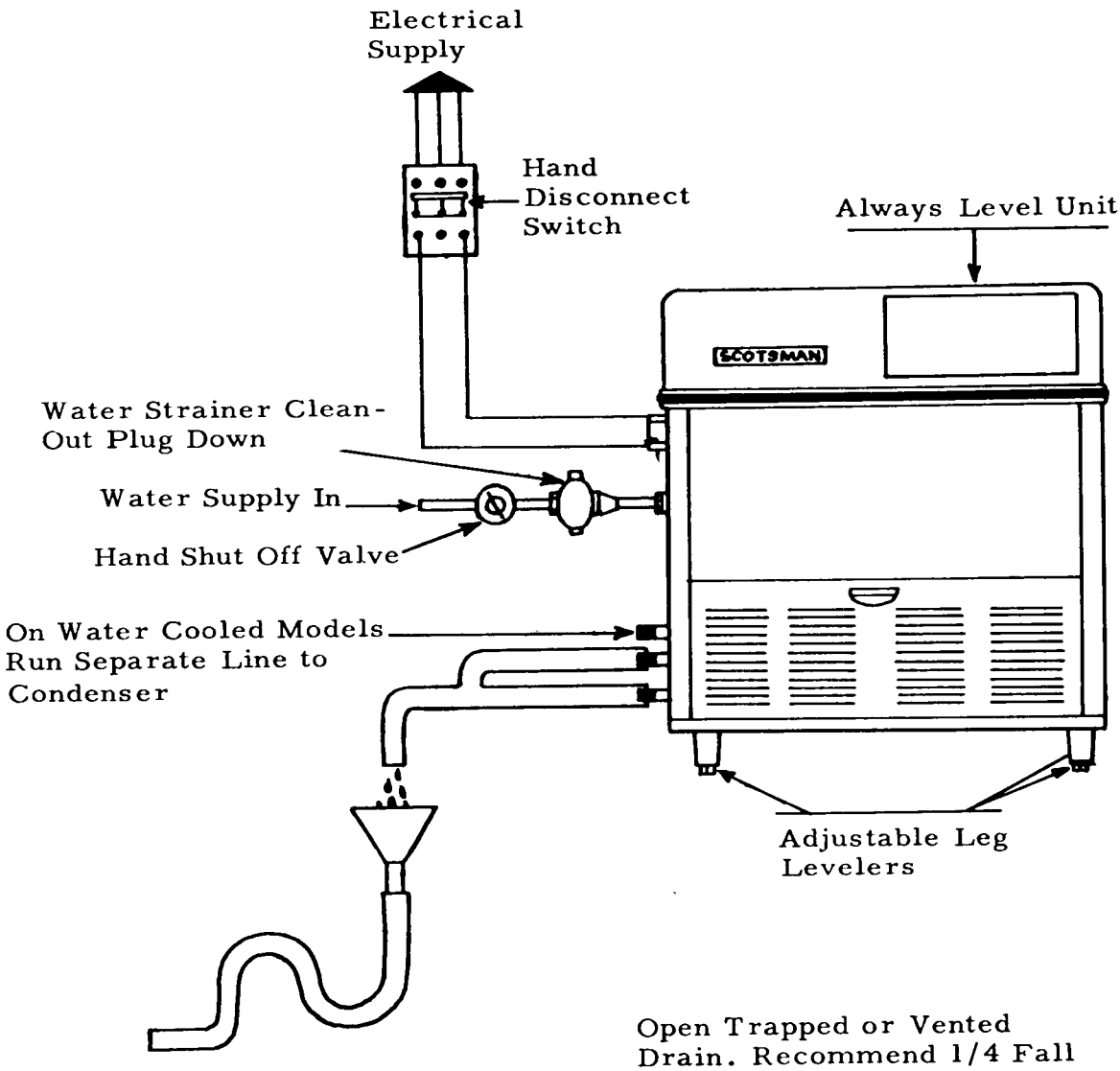

INSTALLATION

ELECTRICAL CONNECTIONS:

SF1WSJ

115 Volts, 60 Cycle, 1 Phase

20 Amp. Circuit

12 Gauge wire should be used for electrical hook-up. Conductors with third or ground wire are desirable.

Be certain that the Super Flaker is on its own circuit and individually fused. The maximum allowable voltage variation should not exceed 10 per cent of the nameplate rating even under starting conditions. Low voltage can cause erratic operation and may be responsible for serious damage to the overload switch and motor windings.

All external wiring should conform to the National Underwriters and local Electrical Code requirements. Usually an electrical permit and the services of a licensed electrician will be required.

ELECTRICAL INSTALLATION:

	SF1WSJ	
Compressor	1/2 HP	Copelaweld: RSF2-0050-1AA-207 2 pole, 3500 RPM
	Voltage	115
	Amp. rating F.L.A.	10.0
	Cycle	60
	Phase	Single
Gear Drive Motor	1/10 HP	Queen Products
	Voltage	115
	Amp. rating	4.0
	Cycle	60
	Phase	Single Thermally Protected

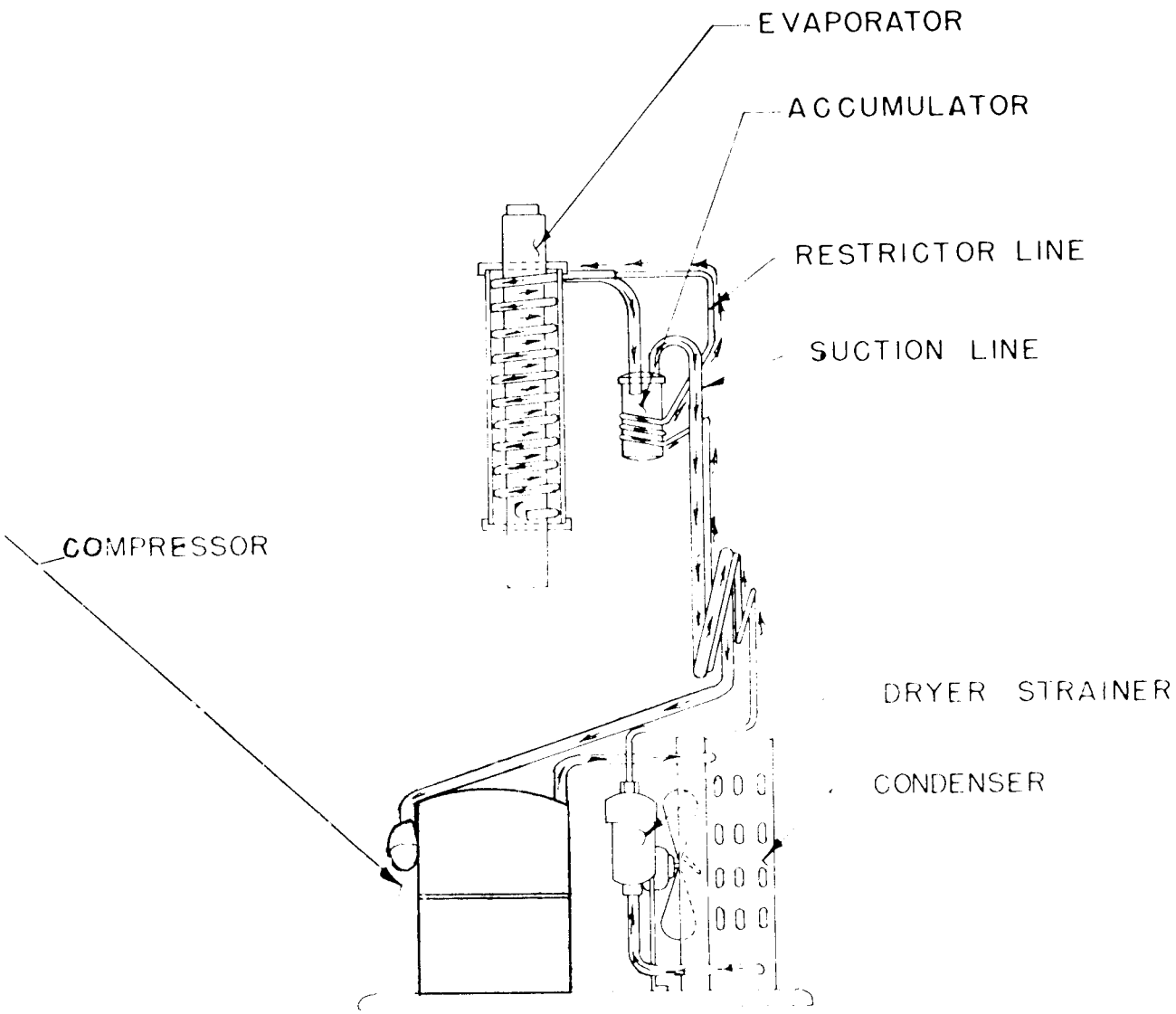

REFRIGERATION CYCLE SF-1 ALL MODELS

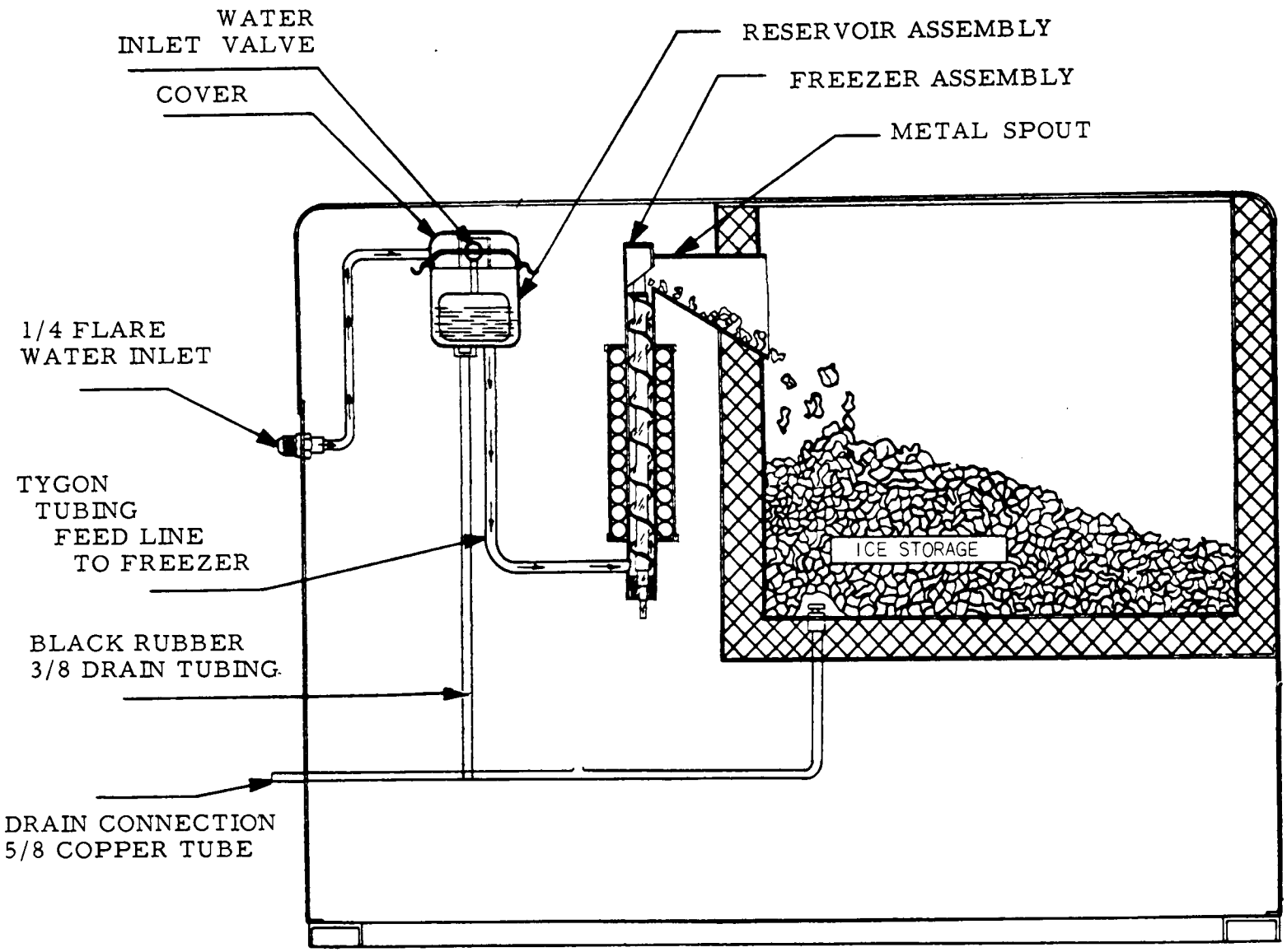

WATER SCHEMATIC

SF-1WSJ

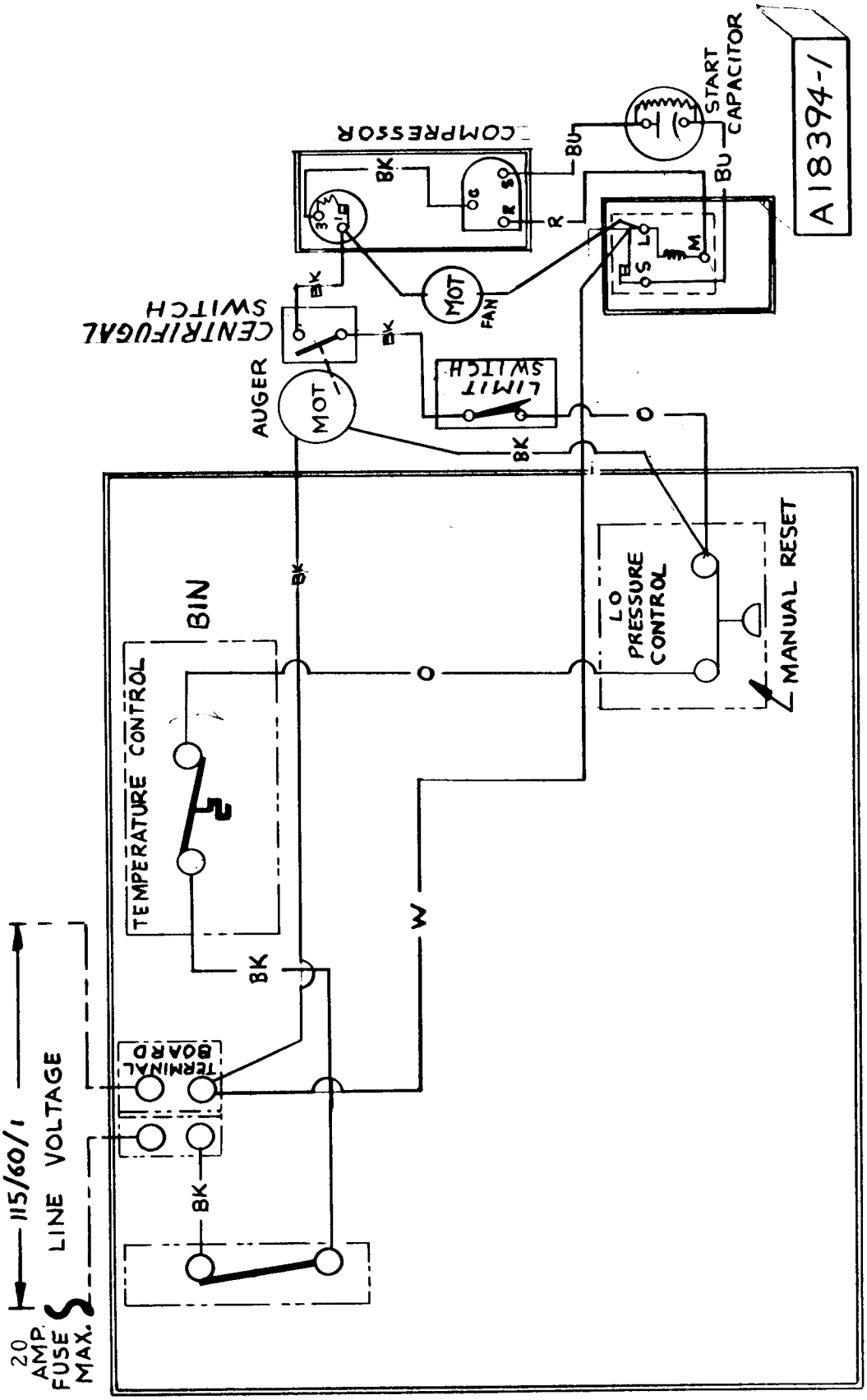

WIRING DIAGRAM

Air Cooled SF1J

115/60/1

WIRING DIAGRAM

Water Cooled SF1WJ

115/60/1

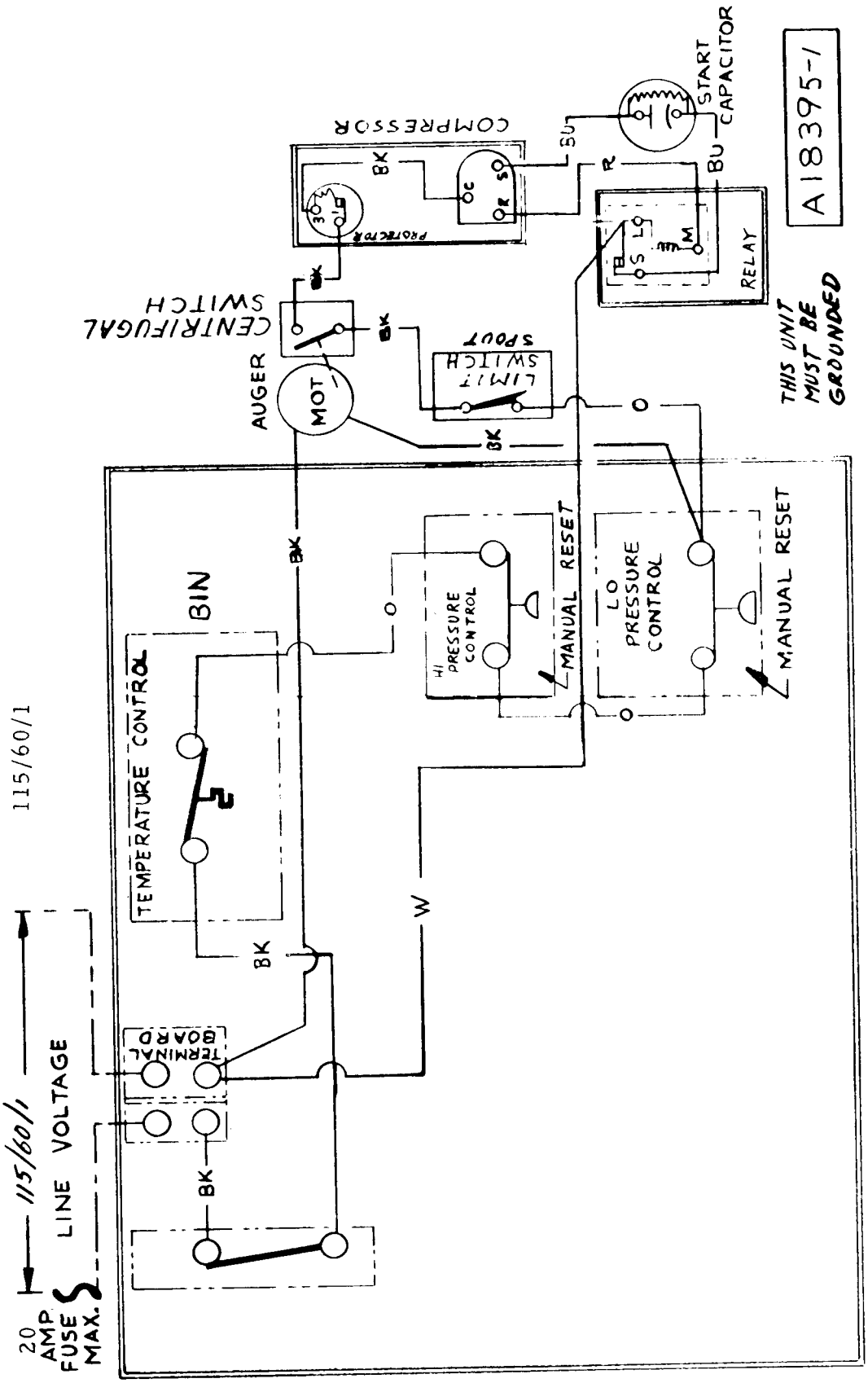

FINAL CHECK LIST

1. Is the unit level? (IMPORTANT)
2. Have all electrical and piping connections been made?
3. Has the voltage been tested and checked against the nameplate rating?
4. Is the water supply valve open and the electric power on?
5. Is the water reservoir filled and shut off? All packing removed?
6. Have unit and bin been wiped clean?
7. Has owner been given the Operating Instruction Sheet, and has he been instructed on how to operate the machine?
8. Have the installation and warranty cards been filled out and mailed to the factory?
9. Check all refrigerant and conduit lines to guard against vibration and possible failure.
10. Installed in a well ventilated room where ambient temperatures do not fall below 50° Fahrenheit.
11. Is unit installed with a minimum 4" air space around sides and back?

SERVICE

STARTING THE MACHINE: When the machine is placed and inspected as per instructions and all plumbing and electrical connections are completed and tested, turn on the water supply. Be sure the float cover is removed to check on the float operation and water level in the water reservoir. Be sure the water reservoir is filled before starting the machine. Water level should be 1/4 inch below the reservoir overflow.

When this is completed, turn on the manual switch on the front of the cabinet and the machine is in automatic operation. In two to three minutes ice will start dropping off the worm shaft and out the ice chute. Let the machine operate for at least 30 minutes and check for any excess noise other than the normal compressor noise. Test the ice storage control bulb by holding a handful of ice around the bulb until the machine shuts off. One minute should be normal for the control to function. Within minutes after the ice is removed, the bulb will warm up and the machine will automatically start up. The control is factory set and should not be reset until this test is made. Normal setting of this control should be approximately 35 degrees cut-out and 45 degrees cut-in.

Check pressure settings at the time of start-up. On the water-cooled models set the head pressure at 135 PSI. On the air-cooled models the head pressure will vary between 130 and 145 PSI head pressure. The frost line should extend out of the accumulator if properly charged with refrigerant and suction pressure will range between 14 and 16 PSI with 50° F inlet water.

Check the hand reset low pressure control setting. This safety device should be set at approximately 5 PSI below normal operating suction pressure and should cut off in case of interruption in water supply, shortage of refrigerant, low ambient or any other cause of abnormally low suction pressure.

Explain the machine to the owner, showing him how the machine works and go over the owner's instruction sheet with him. Answer all the owner's questions about the machine, and do not leave with any doubt in the owner's mind about the machine, how to operate it or where to reach you should he need service on the machine. Call back the next day to check the machine again and answer any other questions the owner may have.

Service gauge connections are available on both high and low side service valves on water cooled models, suction valve only on air cooled models.

To install gauges to any of these connections, use lines with tire type service valve adapter. Purge free of any non-condensable gases before starting any test operation.

REFRIGERANT CHARGE: The below refrigerant charge is approximate. When charging, set at 135 PSI head pressure and charge so that the frost line extends out of the evaporator and into the accumulator after fifteen minutes of operation.

Model	Freon Charge
Air-Cooled	26 oz. R-12
Water-Cooled	24 oz. R-12

SERVICE

WATER SYSTEM: A water level is maintained in the water reservoir by a float operated valve. Water is piped from the water reservoir to the freezing chamber by a gravity feed line maintaining an equal water level.

The water reservoir is equipped with a 2 inch air gap to prevent back siphoning and meet all health codes.

The water level in the water reservoir is adjusted by bending float arm. The water level should be set 1/4 inch below the moulded in overflow well.

A water strainer must be installed in the supply line. Use strainer sent with machine.

ELECTRICAL SYSTEM: The super Flaker Model SF-1J is designed to work on standard electrical supply 115 volts, 60 cycle single phase.

Supply voltage should not vary more than plus or minus 10 percent over nameplate rating.

Special voltage requirements are available on special order. Therefore, always check nameplate for this information before connecting electrical supply.

The electrical circuit consists of condensing unit, freezer gear motor, storage bin thermostat ON and Off switch and spout micro (safety) switch.

A. CONDENSING UNIT: The starting capacitor and starting relay are housed and fastened to the motor compressor.

B. GEAR MOTOR TO FREEZER: Models SF1J are equipped with a 1/10 horsepower direct drive gearmotor. A speed sensing switch mounted on top of the motor of the gear unit will open and stop the compressor when the RPM of the gearmotor is less than 900. At 1200 RPM it will close, starting the compressor.

In an actual operation any condition that may cause excessively hard ice and overloads within the freezer assembly, water interruptions, cold ambients, etc. is transmitted to the gearmotor reducing it's speed. When gearmotor slows down to approximately 900 RPM the speed sensing switch opens the electrical circuit to the compressor. The compressor stops and no more ice is produced, meanwhile the gearmotor continues to run, clearing the overload condition and gradually resumes full speed. At 1200 RPM gearmotor speed sensing switch closes compressor circuit causing the normal icemaking process to begin once more.

Any freeze up possibility is therby automatically cleared out by the gearmotor.

C. STORAGE BIN THERMOSTAT: Thermostat control body is located in electrical control box. The thermostat sensing tube is threaded into the ice storage bin where it automatically stops the icemaker when ice bin fills to sensing tube level and restarts icemaker when ice is removed. Factory settings are 35° cut out, 45° cut in.

Altitude correction begins at 2,000 feet, cut in and cut out screws should be adjusted equally, not more than 1/4 turn at a time.

D. MICRO SAFETY SWITCH: The micro switch is located in the top of the ice chute. The switch is operated by a pressure plate inside the ice chute. Ice backs up in the chute if the storage bin thermostat fails. Micro switch will shut off the condensing unit only, when operated.

E. ON-OFF SWITCH: A manual on-off switch is located in control box.

F. SAFETY CONTROL: High head pressure. On water cooled models only. Factory set to stop entire icemaker if head pressure reaches 190# PSIG. Manual reset, adjustable.

G. SAFETY CONTROL:- Low back pressure. Used on both models, this control is set to electrically "open" at 2# PSIG, stopping entire icemaker. manual reset, non adjustable.

REMOVAL & INSTALLATION OF PARTS

CABINET TOP (HOOD)

1. Remove two back end screws of chrome strip.
2. Pull out tape concealing screws.
3. Remove balance of screws in chrome strip.
4. Lift off hood.

HOOD SERVICE DOOR TOP

1. Remove screws from edges.
2. Lift out door.

CABINET SIDE SERVICE DOOR

1. Remove four screws on edges.
2. Lift out door.

CABINET FRONT SERVICE DOOR

1. Front door pulls out.

CABINET REAR SERVICE DOOR

1. Remove four screws on corners of rear service door.
2. Pull door out.

ICE STORAGE DOOR

1. Lift door up, slide back 6". Remove thumb screw that attaches safety lanyard to back of door.
2. Door will now slide out. Lift front edge slightly to clear hood lip.

ICE STORAGE DOOR FRAME

1. Remove six screws at bottom and sides.
2. Remove screw in frame back.
3. Frame will now lift out.

MOTOR COMPRESSOR

1. Remove gas charge .
2. Disconnect wiring from the compressor.
3. Loosen suction and discharge lines and cap off.
4. Remove the compressor hold-down nuts and lift compressor out of the unit.
5. Reverse steps 1 through 4 in replacing compressor.

SERVICE

FREEZER ASSEMBLY

1. In most instances, it will be faster to remove freezer by first removing cabinet top or hood. (See Removing and Installing Cabinet Parts.) Assembly can be changed if necessary through hood top panel.
2. Shut off water supply to unit, remove top and left side service panels.
3. Disconnect water inlet line at reservoir. Remove water supply tube at freezer and drain freezer.
4. Purge off refrigerant, unsweat suction line, disconnect capillary line at drier. Cap off all lines so no moisture can enter system.
5. Remove insulation pieces around spout, also the spout proper.
6. Remove 3 bolts holding fiber adapter base to gearmotor top cover, lift freezer out of cabinet.
7. Remove fiber adaptor spout front and back plates from old freezer and install on new replacement.
8. Re-install in reverse of above.

FREEZER WORM SHAFT

1. Turn unit off, before removing worm shaft.
2. Shut off water supply to unit.
3. Remove hood service doors.
4. Remove top and bottom straps around spout insulation pieces, remove pieces.
5. Remove two slotted head screws which fit through top chamber wall into ice breaker.
6. Tap spline coupling loose on bottom end of freezer worm shaft.
7. Complete worm shaft with ice breaker attached will now come out by lifting up on freezer cap pull ring. NOTE: Top half of water seal will come with worm shaft.
8. To remove ice breaker from shaft, first remove retainer ring in top of ice breaker.
9. Remove freezer cap and pull ring from ice breaker.
10. Remove cap screw holding shaft through bearing and pull worm shaft free from ice breaker and bearing.
11. If shaft is defective, remove water seal top half and put on new worm shaft before reassembling--when reassembling, by reversing above, put a small amount of Vaseline on shaft end. This will allow shaft to slide smoothly through rubber bottom half of water seal without tearing it.

WATER SEAL

1. To replace water seal, follow steps 1 through 7 under Worm Shaft Removal.
2. Remove 3 bolts holding freezer to fiber mounting adapter.
3. Lift freezer off adapter just high enough to allow bottom bearing and bottom half of water seal to be removed from bottom of freezer tube.
4. Lightly grease bottom half of new water seal and insert face up approximately 1/2" in bottom of freezer tube.
5. Insert bottom bearing in bottom of freezer tube, force approximately 1/8" past bottom tube end. This will allow the positioning ring on fiber adaptor to properly position freezer tube when tightening up the three mounting bolts.
6. After securing mounting bolts, put new top half of water seal on worm shaft the same way as the old seal was removed.
7. Carefully insert worm shaft assembly in freezer tube and into spline coupling on bottom.
8. Replace ice breaker screws, insulation pieces and unit is ready to resume operation.

SERVICE

STORAGE BIN THERMOSTAT:

1. Disconnect electrical supply.
2. Remove bin thermostat bulb from bin location along with its capillary tube.
3. Remove control box cover.
4. Disconnect two spade type electrical leads.
5. Loosen two screws in control mounting bracket.
6. Replace with new control and reassemble in reverse of above.
7. CAUTION: Always check new control power element charge before installation to assure receiving an operative control. A handful of ice on bulb will register an audible 'click' at cut off.

WATER RESERVOIR

1. Remove service panel in cabinet hood.
2. Turn off water supply and drain reservoir.
3. Remove 1/4 inch nylon inlet water line..
4. Remove 1/2 inch plastic feed line to freezer.
5. Remove two screws holding reservoir bracket to wall.
6. Lift out reservoir.
7. To replace, reverse procedure.

SERVICE

MICRO SWITCH IN SPOUT

1. Remove hood service panel.
2. Remove insulation pieces around freezer spout.
3. Remove micro box cover, loosen two screws at rear of box holding switch in place, lift up.
4. Disconnect electric leads.
5. Reassemble with new micro switch.

MANUAL ON AND OFF SWITCH

1. Remove front service door.
2. Remove two screws holding switch to bracket.
3. Disconnect electrical leads from switch.
4. Remove switch.
5. To replace, reverse procedure.

FREEZER GEARMOTOR

1. The easiest way to change the gearmotor is to remove complete cabinet hood as explained earlier in this section. If necessary because of location you can change by removing top service panel.
2. Pull off left side service panel and look up on underside of left side cabinet panel: 4 screws secure this gearmotor to frame.
3. Remove the four wire leads (2 on micro switch on top of motor, 2 from motor into control box.)
4. Remove 3 bolts thru fiber adapter into gearmotor cover and the 4 bolts holding gearmotor to mounting base.
5. Lift freezer adapter assembly off gearmotor and pull gearmotor out thru left side.

CHASSIS FRONT VIEW

SF1WWSJ - Water Cooled

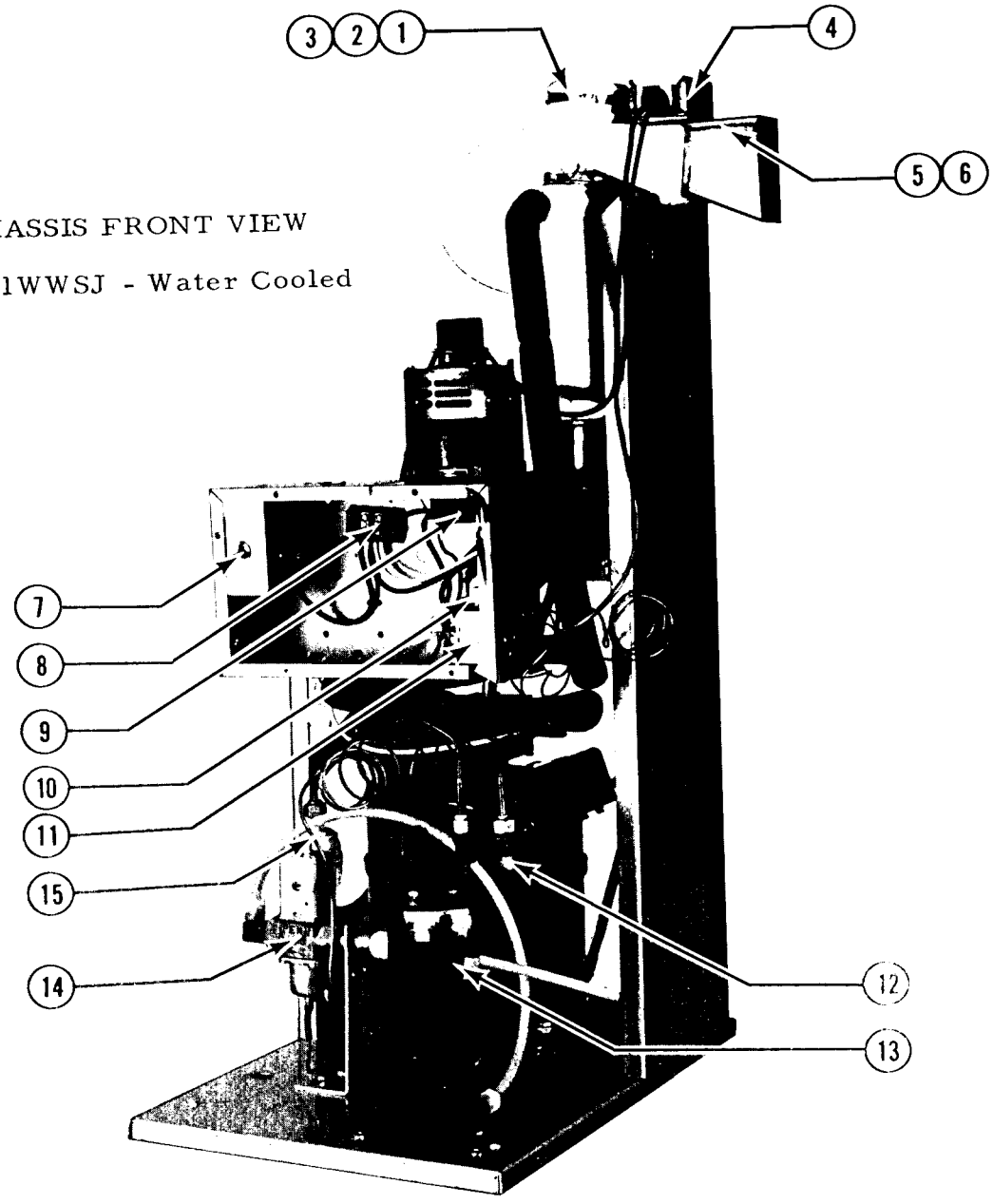

ITEM NO.	PART NO.	DESCRIPTION
1.	A-15070	Insulation - left
2.	A-15071	Insulation - right
3.	A-8736	Insulation - straps
4.	12-1018	Spout Micro Switch
5.	A-16360	Spout Pressure Plate
6.	2-1321	Pressure Plate Spring
7.	12-426-1	On - Off Switch
8.	12-813-4	Terminal Board
9.	11-354	Bin Thermostat
10.	11-357	Hi Pressure Control
11.	11-358	Low Pressure Control
12.		Hi Side Service Valve
13.	18-699-3	Water Cooled Condenser - (Packless)
14.	11-198	Water Regulating Valve
15.	2-350	Refrigerant Drier

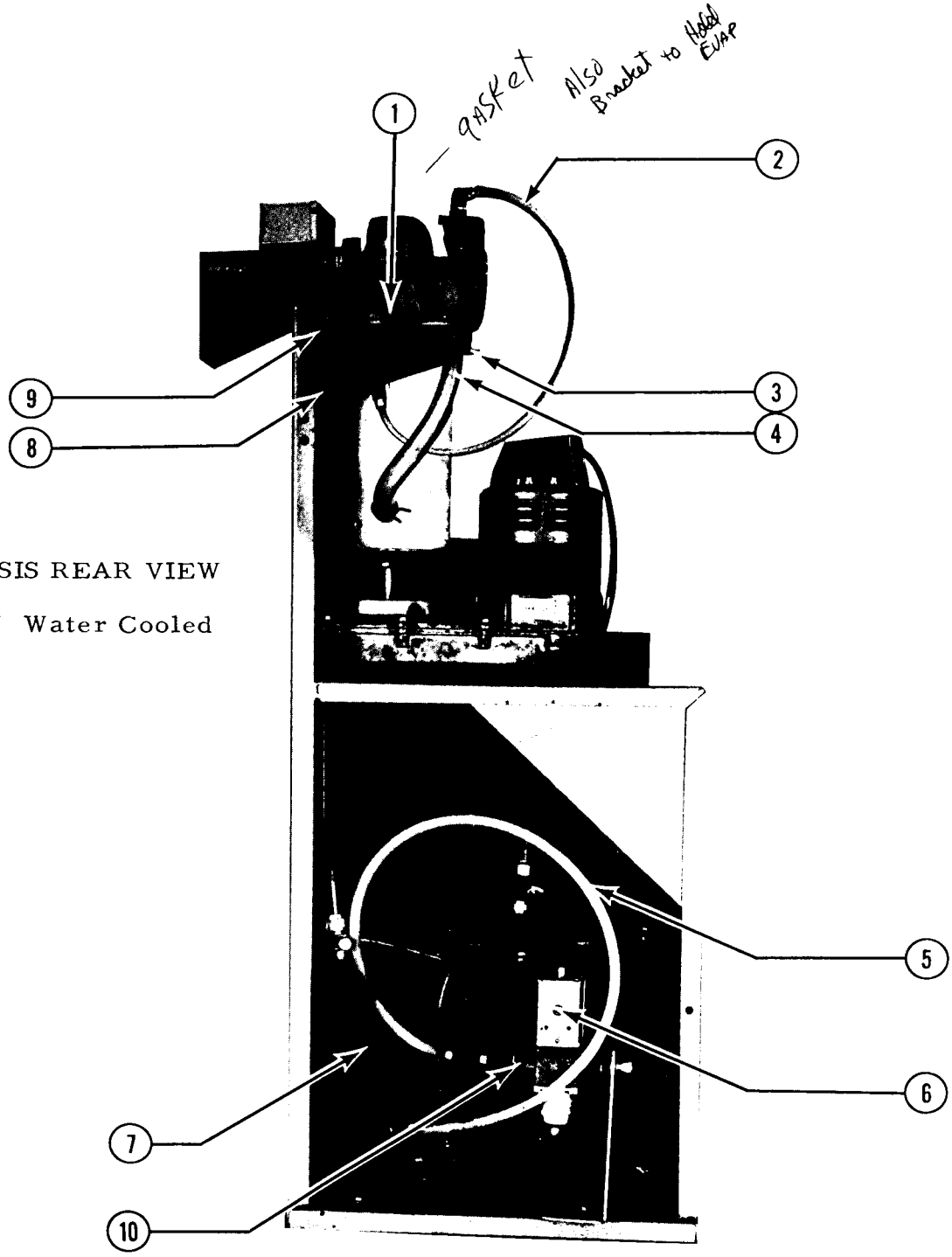

CHASSIS REAR VIEW

SF1WWSJ Water Cooled

ITEM NO.	PART NO.	DESCRIPTION
1.	2-1793-1	Reservoir
2.	5-397-1	1/4" Nylon Tubing
3.	2-694	Hose Clamps
4.	13-674-9	Plastic Tubing
5.	5-397-2	3/8" Nylon Tubing
6.	11-198	Water Regulating Valve
7.	18-283	Water Cooled Condenser (Halstead - Mitchell)
8.	13-79-3	Drain Tube
9.	2-535	Hose Clamp
10.	16-588-3	Male Adapter

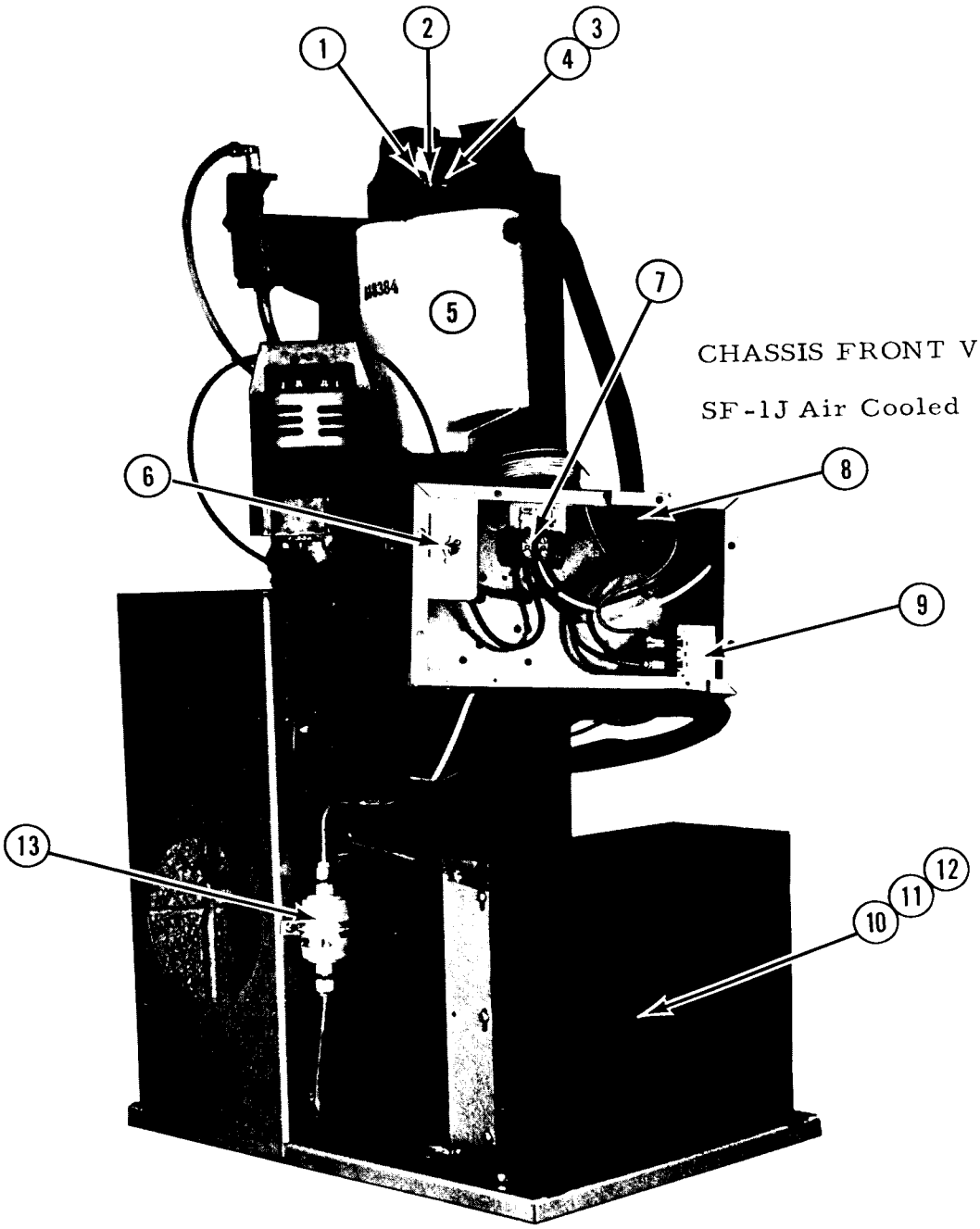

CHASSIS FRONT VIEW

SF-1J Air Cooled

ITEM NO.	PART NO.	DESCRIPTION
1.	A-18430	Spout Plate
2.	3-1403-53	Mounting Screws
3.	A-14254	Spout Casting
4.	13-679	Spout Casting - O-Ring
5.	A-18384-2	Freezer Assembly
6.	12-426-1	On-Off Switch
7.	12-813-4	Terminal Board
8.	11-354	Bin Thermostat
9.	11-358	Lo Pressure Safety Control
10.	18-234	Air Cooled Condenser
11.	18-231	Fan Blade
12.	12-1575-1	Fan Motor
13.	2-350	Drier

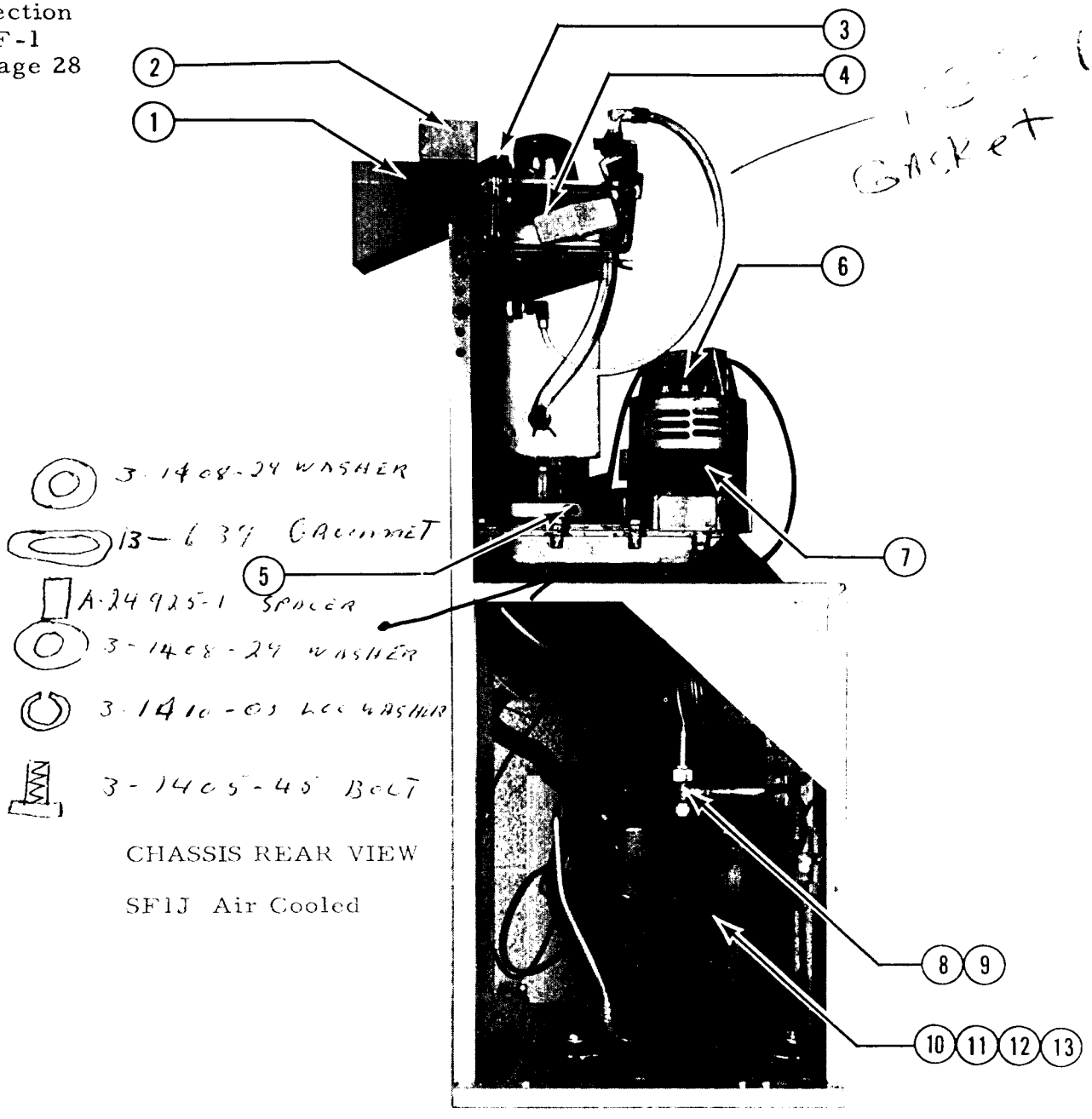

CHASSIS REAR VIEW

SF1J Air Cooled

ITEM NO.	PART NO.	DESCRIPTION
1.	A-21307	Spout Body only
2.	12-1018	Spout Micro Switch
3.	A-14256	Spout Knurled Nut
4.	2-1793-1	Plastic Reservoir
5.	A-18153	Drip Pan
6.	12-1644	Switch
7.	A-18380-1	Gear Motor Drive
8.	16-560	Suction Valve Core
9.	16-563	Suction Valve Cap
10.	~~18-2210~~ 18-2200-31	Motor Compressor
11.	18-2200-26	Compressor Relay
12.	18-2200-29	Starting Capacitor
13.	18-2200-25	Compressor Overload

FREEZER ASSEMBLY

SF-1J MODELS

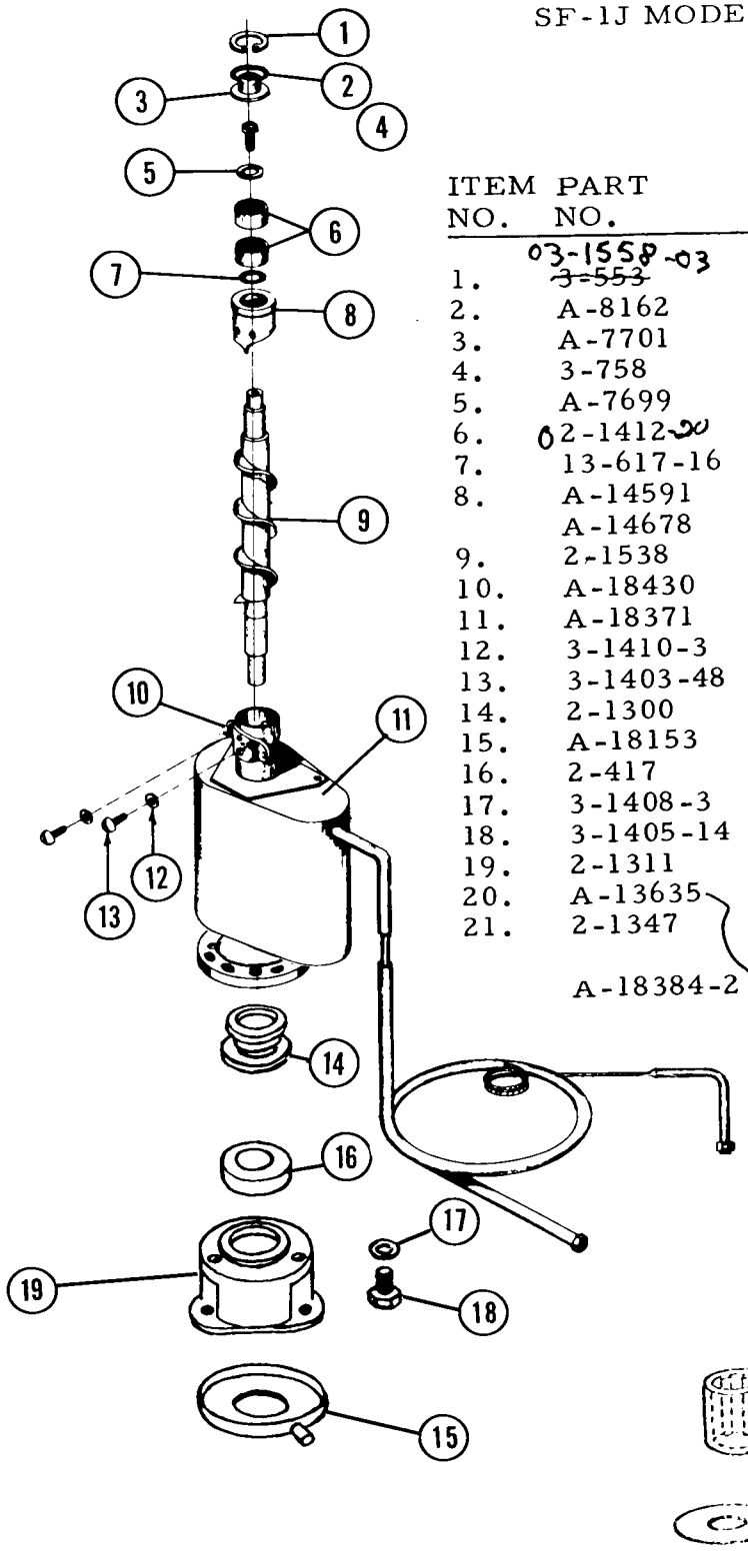

ITEM NO.	PART NO.	DESCRIPTION
1.	03-1558-03 ~~3-553~~	Snap Ring
2.	A-8162	Cap Hook
3.	A-7701	Cap
4.	3-758	Cap Screw
5.	A-7699	Washer
6.	02-1412-20	Bearing -
7.	13-617-16	"O" Ring
8.	A-14591	Breaker
	A-14678	Breaker with bearing
9.	2-1538	Auger
10.	A-18430	Spout Plate
11.	A-18371	Worm Tube--Suction Line
12.	3-1410-3	Washer
13.	3-1403-48	Screws
14.	2-1300	Water Seal
15.	A-18153	Drip Pan
16.	2-417	Lower Bearing
17.	3-1408-3	Washer
18.	3-1405-14	Screw
19.	2-1311	Adapter
20.	A-13635	Spline Drive Coupling
21.	2-1347	Shaft Drip Shield Rubber
	A-18384-2	Freezer Complete

AD8915-002

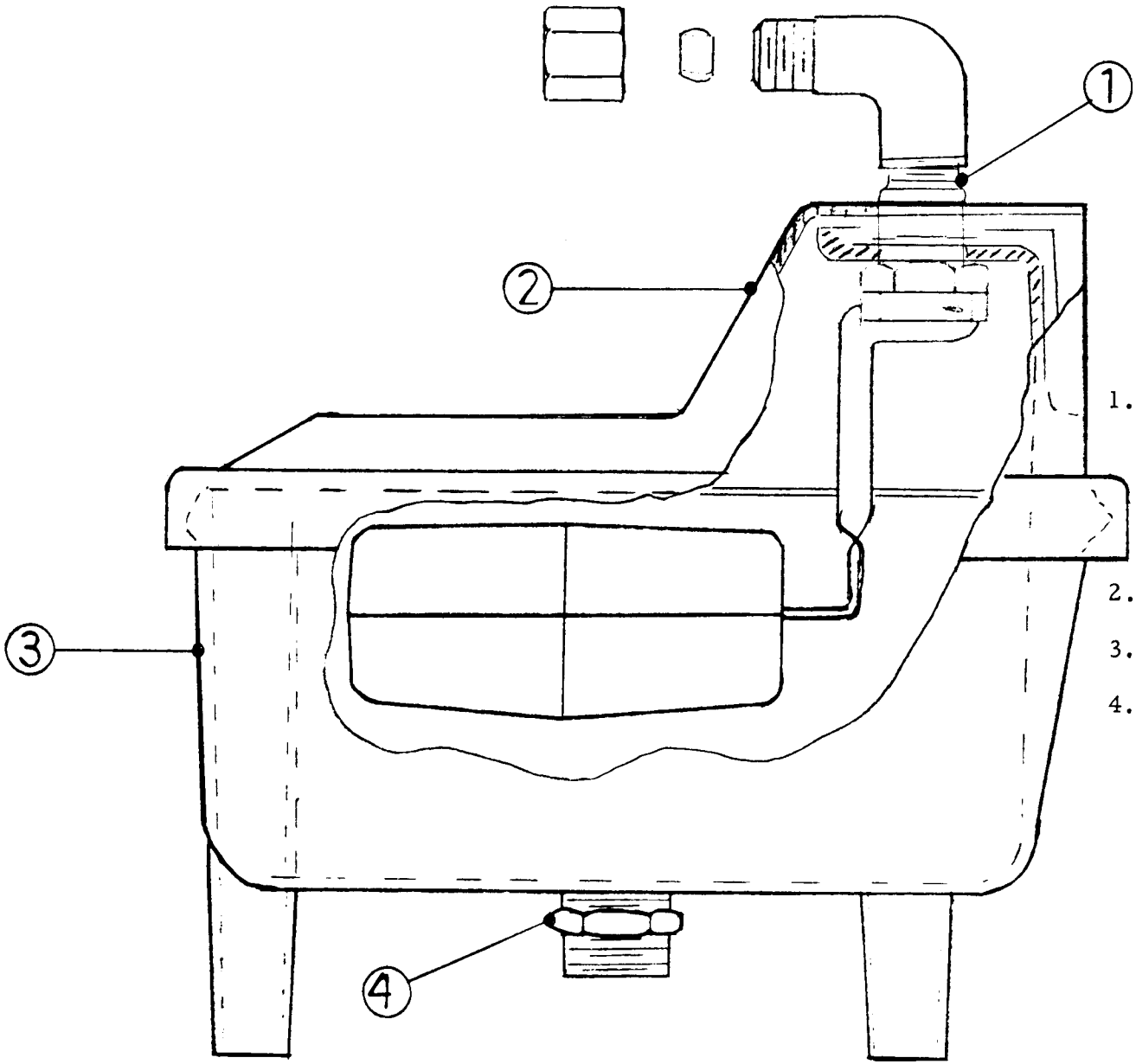

RESERVOIR ASSY. 2-1793-1

1. 2-1793-2 Valve Assembly consisting of:
   Inlet Ell
   Straight Compression nut
   Compression Sleeve
   Valve Assembly with Float
2. 2-1793-3 Reservoir Cover
3. 2-1793-4 Reservoir Body
4. 2-1793-5 Reservoir mounting nut 3/8-18

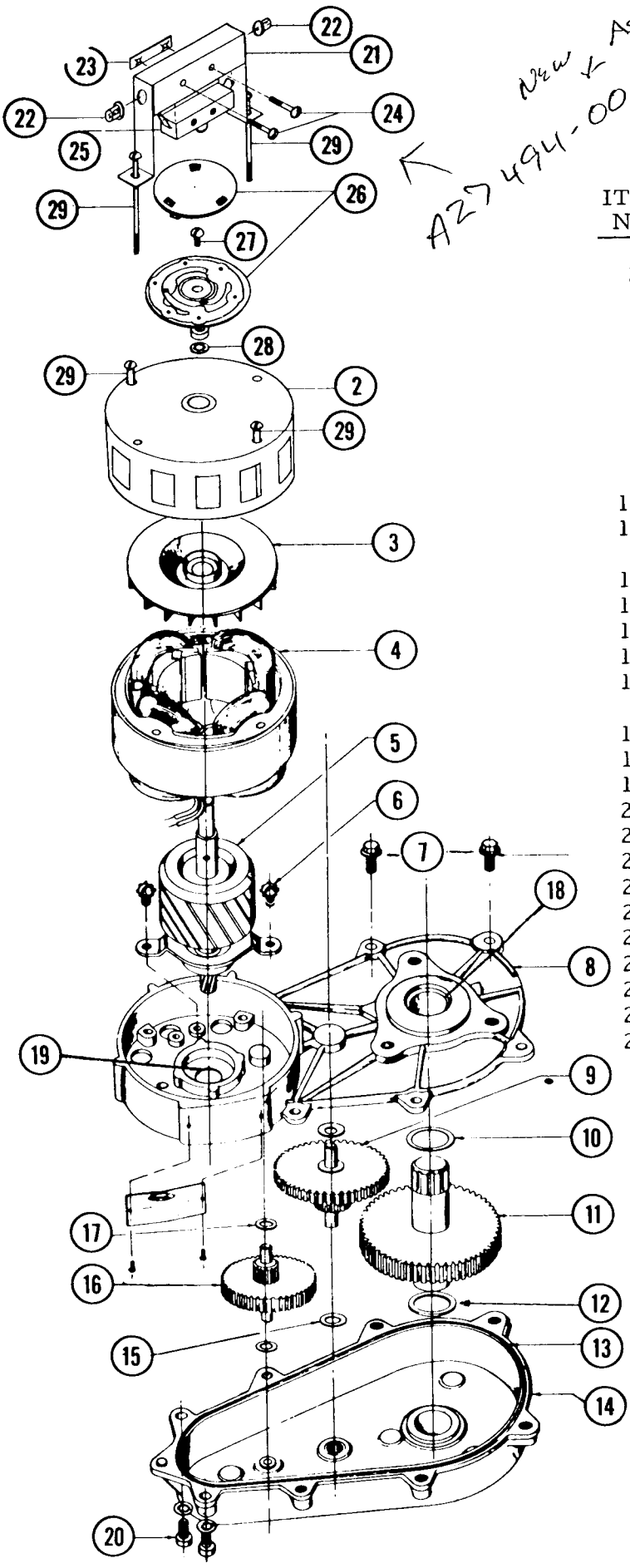

New Assy
A27494-001 SF1J GEAR MOTOR ASSY.

ITEM NO.	PART NO.	NAME
2.	A-17047	Motor Housing
3.	A-16915	Cooling Fan
4.	12-1400-1	Stator Assy.
5.	A-19884-2	Rotor Assy.
6.	3-1245	Screws
7.	3-1251	Flange Screws
8.	A-16920	Gear Case Cover
9.	2-1521	Gear & Pinion
10.	3-1408-5	Washer
11.	2-1513	Gear & Output Shaft
12.	3-1408-4	Washer
13.	2-1505	"O" Ring
14.	A-16919	Gear Case Assy.
15.	3-1408-6	Washer
16.	2-1520	1st Gear & Pinion
17.	3-1408-7	Washer
18.	2-1503	Grease Seal
19.	2-1504	Grease Seal
20.	3-1252	Screw
21.	8-579	Switch Bracket
22.	12-1213-3	Snap Bushings
23.	3-886	Twin Speed Nut
24.	3-1403-9	Screws
25.	12-1644	Switch
26.	A19898	Synchro Snap Assy.
27.	3-1403-10	Screw
28.	3-1417-6	Washer
29.	3-1403-43	Motor Bolts

A-18380-001 Gear Motor Assy. Complete

Output Shaft turns at 10 RPM

SF-1WSJ Models

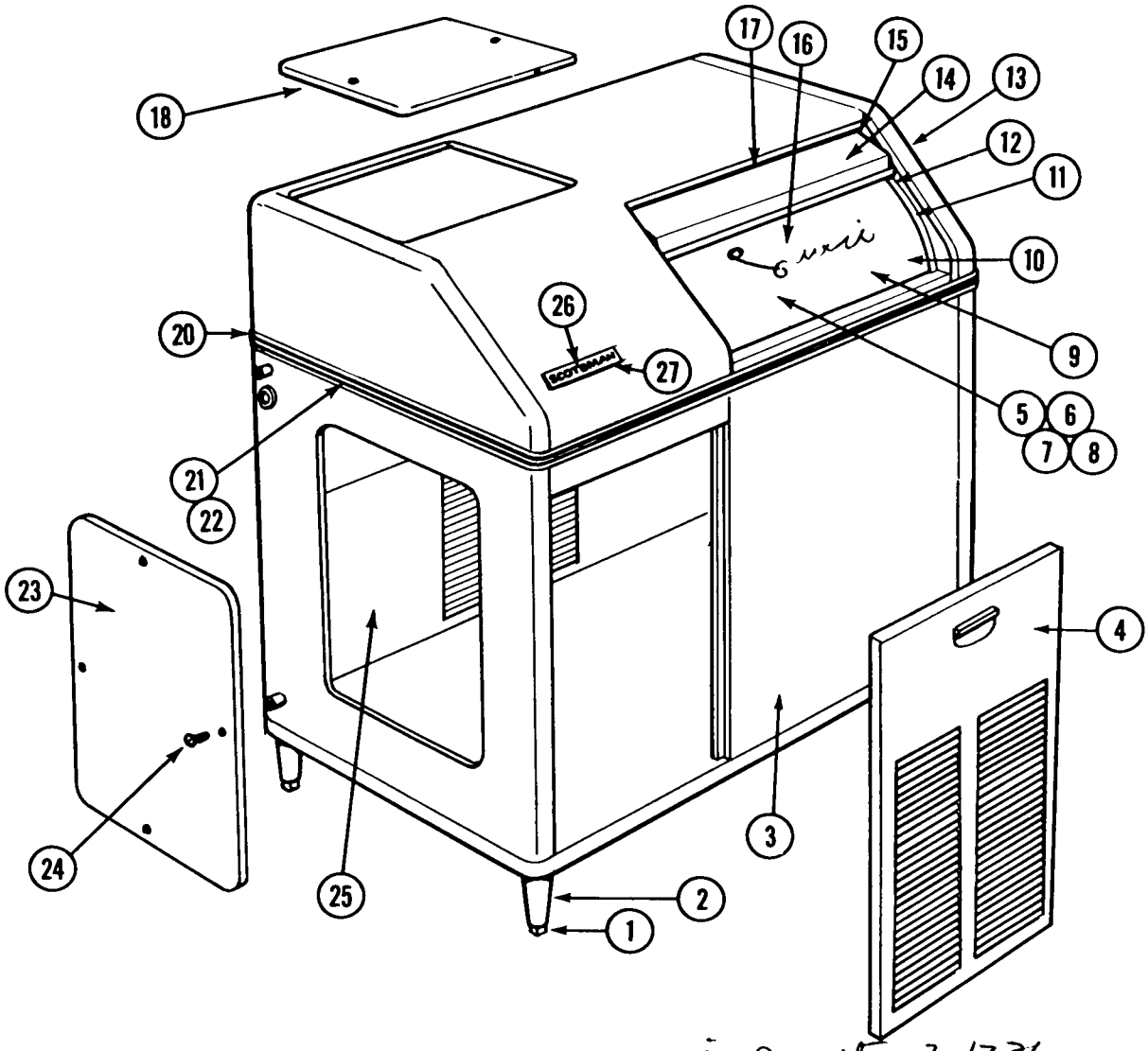

with Door stop 2-1736

ITEM NO.	PART NO.	NAME
1.	8-522	Leg Levelers
2.	A-15803	Legs
3.	A-20586	Case Assembly
4.	A-15791	Front Door
5.	A-18093	Drain Assembly *
6.	2-530	"O" Ring (drain) *
7.	A-18090	Storage Bin Drain (male) *
8.	A-6448	Drain Screen *
9.	~~A-19044~~	Storage Bin Assy. * A19046
10.	A-15735	Insulation Layout *
11.	3-640	Door Glides (door)*
12.	3-1195	Door Glides (hood)*
13.	A-20924	Case Hood Assy.

ITEM NO.	PART NO.	NAME
14.	A-15559	Sliding Door
15.	A-16208	Door Track
16.	3-1212	Bulb Holder *
17.	A-16209	Door Catch *
18.	A-7676	Top Door
20.	A-5796	Rear Trim
21.	15-324	Plastic Moulding-trim
22.	S-3646	Front Moulding Strip
23.	S-6713	Side Door
24.	2-775	Screw (stainless)
25.	A-8740	Rear Door
26.	15-156	Emblem
27.	3-271	Speednuts *

* Not Shown

SF-1J CASE ASSEMBLY

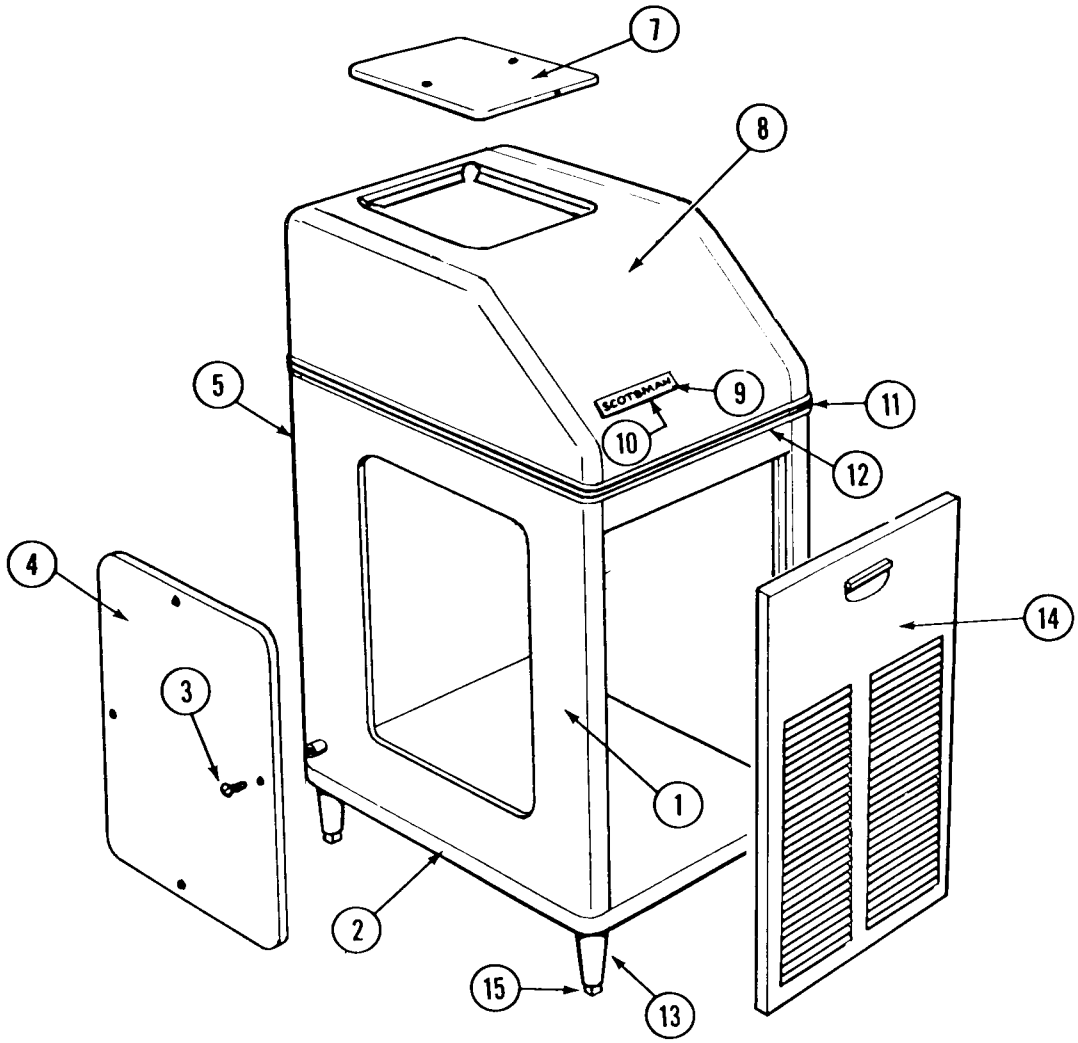

ITEM NO.	PART NO.	NAME
1.	A-20585	Case Assembly (less doors)
2.	A-8902-1	Moulding Strip (bottom) (2 reqd.)
3.	3-775	Screw (s,s)
4.	S-6713	Side Door
5.	A-8740	Rear Door (*)
7.	A-7676	Top Door
8.	A-20925	Case Hood (less doors)
9.	15-156	Scotsman Emblem
10.	3-271	Speed Nuts
11.	15-324	Plastic Trim Insert
12.	S-6218	Moulding Strip (top)
13.	A-15803	Legs (4 reqd.)
14.	A-15791	Front Door
15.	8-522	Leg Levelers

(*) Not Shown

SERVICE ANALYSIS

SYMPTOM	POSSIBLE CAUSE	CORRECTION
Unit will not run	Blown Fuse	Replace fuse and check for cause of blown fuse.
	Thermostat set too high	Adjust thermostat. 35° cut-out and 45° cut-in.
	Loose electrical connection	Check wiring.
	Switch in OFF position	Turn switch to ON.
	Inoperative master switch	Replace switch.
Compressor cycles intermittently	Low voltage	Check for overloading.
	Dirty Condenser	Clean.
	Air circulation blocked	Move unit to correct.
	Inoperative condenser motor	Replace.
	Non-condensable gases in system	Purge off.
Making wet ice	Surrounding air temperature	Correct or move unit to cooler location
	Under or over-charge of refrigerant	Recharge with the proper amount.
	High water level in water reservoir	Lower to 1/4 inch below overflow pipe.
	Faulty compressor	Repair or replace.
Low ice production	Loss of refrigerant, under or over-charge of refrigerant.	Check and recharge with proper amount of refrigerant.
	Dirty or plugged condenser	Clean condenser
	Low water level in water reservoir	Adjust to 1/4 inch below overflow pipe.
	Partial restriction in capillary tube or drier	Moisture in system. Overcharge of oil in system. Remove charge and drier. Replace and recharge system.
	Inlet water strainer partially plugged.	Remove screen and clean.
	Corroded or stained worm shaft due to water condition	Remove worm shaft and clean.
Machine runs but makes no ice	Loss or under-charge of refrigerant	Check for leaks and recharge
	Drive gearmotor or drive coupling stripped.	Check. Repair and/or replace
	Water not entering freezing chamber	Plugged strainer or supply line. Check and clean. Air lock in gravity feed line. Check and remove air lock.
	Moisture in system	Check and remove charge and drier. Replace and recharge.
	Water seal leaking	Replace seal.
	Water supply to unit off	Restore water supply to icemaker

SERVICE ANALYSIS

SYMPTOM	POSSIBLE CAUSE	CORRECTION
Water Leaks	Defective water seal	Replace
	Gravity feed line leaking	Check hose clamps
	'O' ring in spout casting leaking	Remove spout casting and install new 'O' ring
	Storage bin drain & connecting fittings leaking.	Check and repair.
	Water level in reservoir too high	Adjust to 1/4 inch below overflow pipe.
Excessive noise or chattering	Mineral or scale deposit on auger and inner freezing chamber walls.	Remove and manually polish auger, polish inner chamber walls of freezer barrel.
		For lighter concentrations use Scotsman Ice Machine Cleaner periodically.
	Low suction	Add gas to raise suction pressure.
	Intermittent water supply	Check & clean water strainer. Check gravity feed line for air lock. Remove air lock.
	Water level in reservoir too low	Adjust to 1/4 inch below overflow pipe.
	Gear motor loose on frame	Tighten.
	Gearmotor end-play or worn bearings.	Repair or replace.
Machine continues to run with full storage bin	Storage bin thermostat not properly set	Reset or replace. 35° cut-out, 45° cut-in Check operation with handful of ice.
Gearmotor noise	Low on oil	Remove case cover to check for proper oil level. Top of gears should be covered. Use Sun Oil Co. Prestige 50 AEP.

MAINTENANCE INSTRUCTIONS - FLAKERS

THE FOLLOWING MAINTENANCE SHOULD BE SCHEDULED THREE TIMES PER YEAR ON ALL SCOTSMAN SUPER FLAERS. CALL YOUR AUTHORIZED SCOTSMAN SERVICE DEPARTMENT.

1. Check and clean water strainers and float valve. Depress float valve to insure full stream of water.
2. Check water level and machine level, keep water level below overflow, but as high as possible and still not run out of spout opening with machine off. Water droplets come out of spout with ice at all times. Adjust as required.
3. Clean reservoir and interior of freezer using SCOTSMAN Ice Machine Cleaner.
   A. If machine has been cleaned regularly and no problems such as dry ice or chatter are noticed, clean as per the following instructions:

   a. Set main switch to OFF.
   b. Remove all ice from storage bin.
   c. Turn off water supply or block float. Drain reservoir by disconnecting tube between reservoir and freezer. After draining, reconnect tubing.
   d. Set main switch to ON and pour cleaning solution into reservoir. Do not fill above overflow tube.
      Models SF1 & SF75--Use 4 oz. of Scotsman cleaner and 1 qt. hot water.
   e. Continue to make ice on solution until the solution is used up and reservoir is empty.
   f. Set main switch to Off. Remove overflow tube, wash and rinse reservoir, replace overflow tube, turn water on or remove float block.
   g. Turn MAIN SWITCH to ON. Let unit run for at least (15) minutes to flush out any cleaning fluid. Check ice for acid taste.-- run until ice tastes sweet.
   h. Turn MAIN SWITCH to OFF. Add hot water to ice bin, using this melt water, thoroughly wash and rinse all surfaces within the storage bin.
   i. Turn MAIN SWITCH to On. Replace Service Door. Unit is ready for normal operation.

MAINTENANCE INSTRUCTIONS (Continued)

NOTE: Cleaning requirements vary according to local water conditions. Visual inspection of the auger before and after cleaning will indicate best procedure to be followed in local areas.

4. Check high and low side pressures. On air-cooled models head pressures range between 130 and 145 PSI. Suction pressure should be above 12 PSI and will range up to 16 PSI depending upon water and ambient temperatures.
5. Check gearmotor operation. Normal running temperatures are in the area of 160° farenheit, which is hot to the touch. Check operation of centrifugal switch and the micro switch it actuates. When micro switch is actuated, compressor stops, gearmotor continues to run.
6. Check top bearing of freezing tube. Remove retainer ring around edge of stamped brass cap. If moisture is around bearing, wipe up and remove grease. Add new grease. Use Beacon No. 325. Replace cap and retainer ring.
7. Clean air-cooled condenser. Inform customer to clean frequently. Always shut off machine when cleaning.
8. Oil condenser fan motor when possible.
9. Check for refrigerant leaks and proper frost line. Should frost out of accumulator at least one-half way to compressor, and in some areas back to service valve.
10. Check for water leaks. Tighten drain line connections. Run water down bin drain line to make sure it is open.
11. Check quality of ice. Ice should be wet when formed, but will cure rapidly to normal hardness in bin.
12. Check thermostat and pressure plate cut off in spout. Micro switch cuts off only compressor. Bin thermostat should be set at 10° differential and should keep entire machine off at least twenty minutes in high ambients (longer in low) during normal operation. Settings are 35° cut out, 45° cut in.

PARTS LIST
SF1WSJ

ELECTRICAL COMPONENTS

Bin Thermostat	11-354
Micro Switch-Spout	12-1018
On/Off Switch	12-426
Terminal Board	12-813-4

CONDENSING UNIT (Copelaweld 115/60/1 1/2 HP)

Motor-Compressor	18-2210
Dryer	2-350
Relay	18-2200-26
Starting Capacitor	18-2200-29
Overload	18-2200-25
Fan Motor	12-1575-1
Fan Motor Wire Lead	12-1573-2
Fan Blade	18-231
Fan Shroud	A-12109
Tire Type Service Valve Cap	16-563
Tire Type Service Valve - core only	16-560

MISCELLANEOUS

Spring Clamp Pliers	50-46
Worm Tube Nut Wrench	A-8497
Ice Scoop	2-540
Ice Machine Cleaner - 8 oz. bottle	19-343
Grey Spray-On Touch-Up Paint	10-153
Tygon Tubing - 9/16" ID	5-179
Tygon Tubing - 1/2" ID	5-186
Rubber Tubing - 3/8" ID	13-79
Clamp (for 5-179)	2-536
Clamp (for 5-186)	2-536
Clamp (for 5/8 drain tube)	2-534
Clamp (for 11/16 drain tube - Green)	2-535
Retainer Ring Plier	50-637

PARTS LIST
SF1-J

DRIVE CIRCUIT

Gearmotor assembly	A-18380-1
Spline Coupling	A-13635
Fiber Adaptor Bracket	2-1311
Rubber Drip Shield - Fits Gearmotor Shaft	2-1347
Sliding Door - Ice Storage (Stainless Steel)	A-15559
Sliding Door - Ice Storage(Plastic)	2-1735
Door Stop Lanyard	2-1736
Wing Screw to Door	3-1276
Pan Screw to Frame	3-1403

FREEZER ASSEMBLY COMPLETE

Freezer Assembly Complete	A-18384-2
Ice Breaker	A-14591
"O" Ring	13-617-16
Top Bearing	2-1412
Cap Screw	3-758
Worm Tube Washer	A-7699
Worm Tube Cap	A-7701
Retainer Ring	3-553
Worm Shaft	2-1538
Water Seal	2-1300
Bearing, Bottom	2-417

PARTS LIST
SF1-J

CABINET PARTS	SF1J	SF1WSJ
Machine Case (less doors)	A-20585	A-18291
Storage Bin Assembly	None	A-19046
Drain Assembly, Female	None	2-1742
Drain "O" Ring	None	13-617-11
Thermo Bulb Studs (2)	None	2-1615
Storage Drain Fitting (male)	None	2-1741
Case Hood Assembly (less doors)	A-20925	A-20924
Door Slide Assembly	None	A-16208
Bin Drain Screen	None	2-1741
Sliding Door - Stainless Steel	None	A-15599
Sliding Door - Plastic	None	2-1735
Door Glides (4)	None	3-640
Front Door	A-15791	A-15791
Rear Door	A-8740	A-8740
Left Side Door	S-6713	S-6713
Hood Top Door Assembly	A-7676	A-7676
Rear Moulding Strip	S-6218	S-3646
Front Moulding Strip	A-8902-1	A-5796
Emblem	15-156	15-156
Leg	A-15803	A-15803
Leg Leveler	8-522	8-522
Plywood Crate	1-648	1-649
WATER CIRCUIT		
Water Reservoir Assembly Complete		2-1793-1
Water Inlet Valve with Float		2-1793-2
Reservoir Cover		2-1793-3
Water Strainer		16-162
Reservoir Body only		2-1793-4

TABLE OF CONTENTS
F5-2 SECTION

	Page
FORWARD	
WARRANTY	
GENERAL	
Specifications	1
SPECIFICATIONS	
Dimensions SF-2F	2
Dimensions SF-2WSF	3
Capacity	4
INSTALLATION	
Uncrating	5
Location	6
Erection, Stands, Chutes	7
Plumbing	8
Electrical	8
Instructions	9
SERVICE	
Starting Machine	10
Refrigerant Charge	11
Water Level	11
Electrical System	12
Controls	12-13
Refrigeration Cycle	14
Water Cycle	15
Cabinet Water Schematic	16
Chassis	17
Freezer Assembly	18-19
Wiring Diagrams	20-21
Service Analysis Chart	22-24
Winsmith Gear Reducer	25
MAINTENANCE INSTRUCTIONS	26
CHANGES AND MODIFICATIONS	27-28
PARTS LIST	29-32
OBSOLETE FREEZERS	33-34

SPECIFICATIONS

SCOTSMAN SF-2 Super Flaker is designed for restaurants, super markets, bakeries, dairies, fish markets, hospitals, cafeterias, poultry stores, soda fountains, etc. and will deliver a continuous flow of ice flakes at a capacity up to 650 lbs. per day.

ATTRACTIVE COMPACT CABINET. Silver grey hammerloid finish with chrome trim, rounded corners, and removable panels for easy access to mechanical parts.

SEALED REFRIGERATION SYSTEM. Provides quiet, efficient operation of the machine. Compressor motor is spring mounted and the worm motor is rubber mounted for quiet operation.

HOW IT WORKS. Water in the constant level float reservoir is fed to the bottom end of a freezing cylinder and turns to ice on the inside of this cylinder. The stainless steel auger inside of this evaporator is driven by a motor through a V belt and gear reduction drive. Ice is carried upward by the action of this auger and extruded past the ice breaker at the top of the cylinder.

A manual switch starts the machine, and from then on ice is produced automatically in small uniform pieces of ice. When the storage bin fills, a thermostat shuts the machine off and causes it to start up again when ice is taken from the storage compartment.

SF-2F CONTINUOUS FLOW

INSTALLATION DIMENSIONS

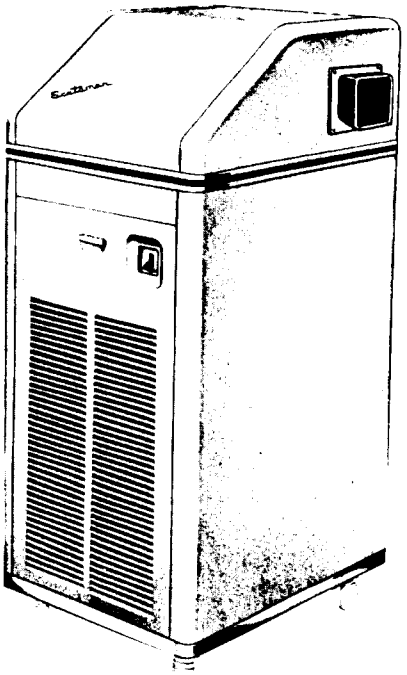

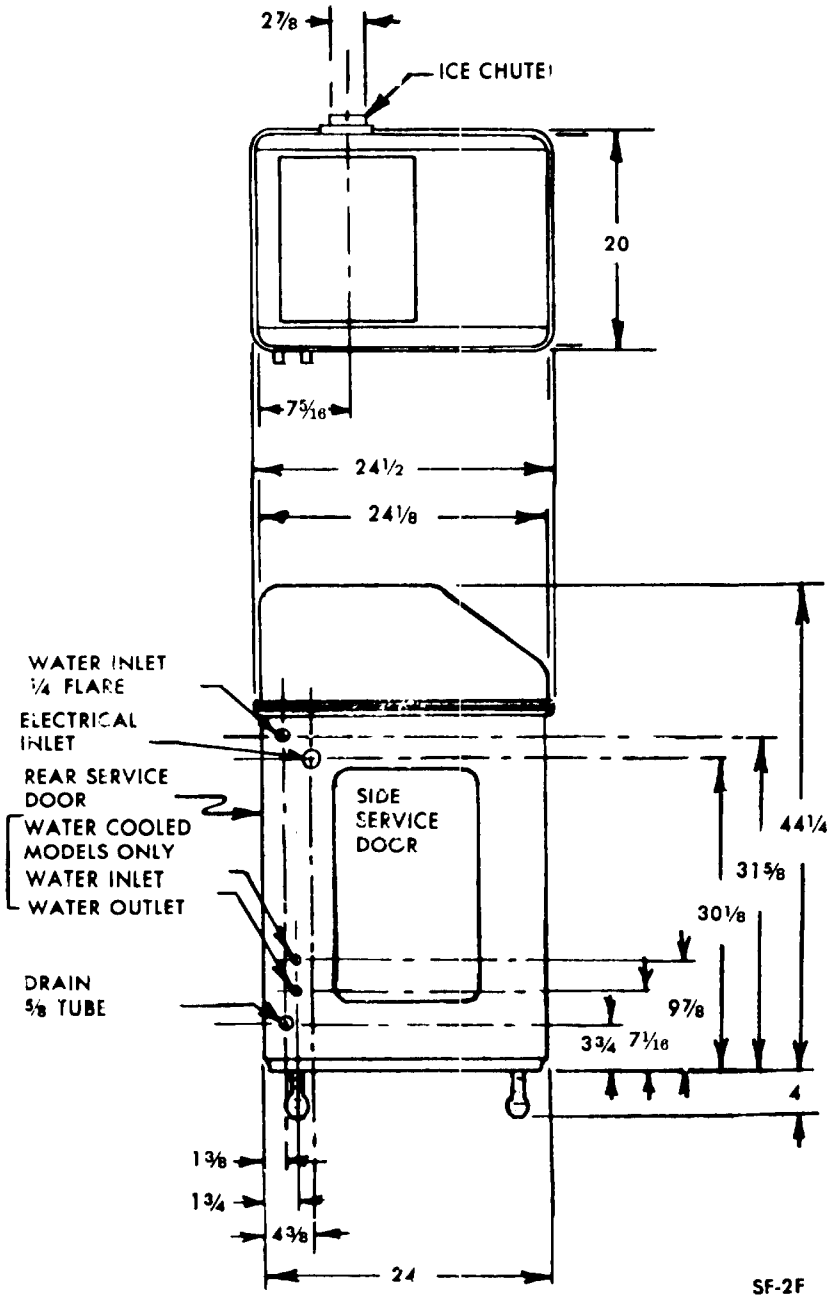

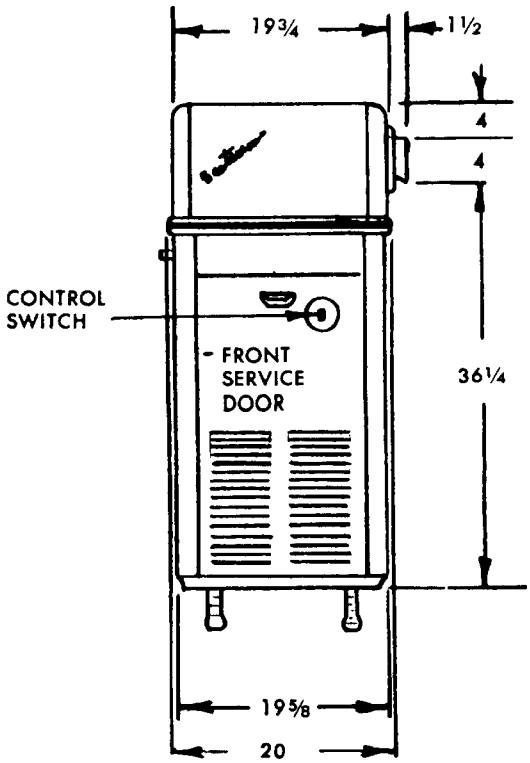

SF-2F

SF-2WSF AUTOMATIC STORAGE

INSTALLATION DIMENSIONS

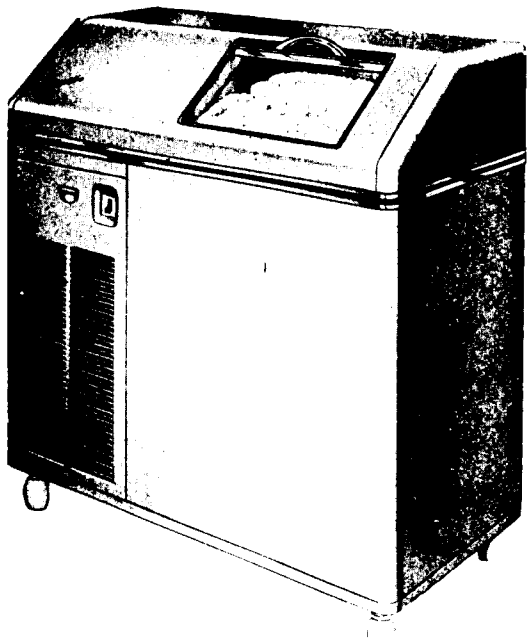

SF2-WSF

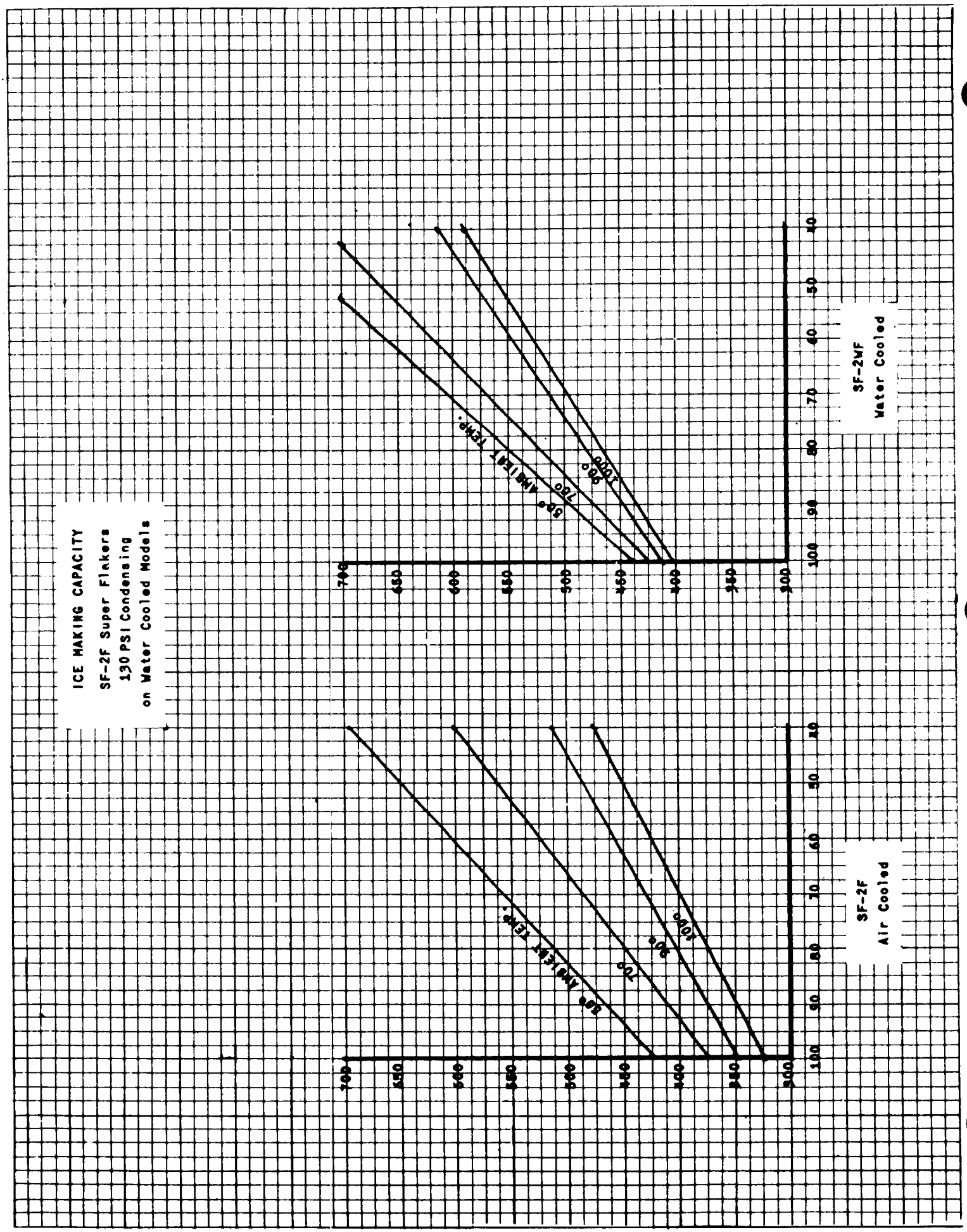
ICE MAKING CAPACITY
SF-2F Super Flakers
130 PSI Condensing
on Water Cooled Models
SF-2WF
Water Cooled
SF-2F
Air Cooled
65° AMBIENT TEMP.
70°
90°
100°

INSTALLATION

UNCRATING OF MACHINE

The complete machine comes in one crate. After the crate is removed, inspect for concealed damage. When installing the machine, remove the bottom skids by removing all bolts. Then cut all wires holding support packing from refrigerant lines. Then loosen shipping bolts on the compressor. Be sure the compressor is floating free on spring mounts. Remove leg levelers from the carton and install on base as desired. Then check all refrigerant lines for rubbing or touching other surfaces. Also check for possible transportation damage. Check for free movement of ice worm.

PRE-INSTALLATION CLEANING

Before machine is in final location, remove warranty card and other information from machine compartment. Remove top service door, water reservoir cover and packing under float. Then leave cover off for float adjustment after machine is installed.

LOCATION OF THE SUPER FLAKER

Select the location before delivering Super Flaker to the job. The following points should be considered when making selection.

1. Convenience. Place the unit as close as possible to the place of ice consumption.

2. Servicing. Install the machine on continuous flow models so it can be serviced from all three sides except the side containing the ice chute opening. Important to leave 24" access to front (containing on-off switch) and left side on both with storage and continuous flow models.

3. Room Temperature. Minimum - 50 degrees. Maximum - 100 degrees.

4. Continuous Flow Models.

   A. Bins. Care should be exercised in proper bin selection. Too small a bin will give unsatisfactory performance. A bin should have a minimum of 1/2 of machine's capacity per day, when the machine shuts off on thermostat. Make

INSTALLATION

sure that user's demands are met by proper bin as well as by proper machine selection. Plan relative location of the machine so as to enter the bin as close to the top as possible. Bins should also be higher than their width and length dimensions, so the maximum ice can be stored in the minimum cubic feet of space A Scotsman bin is designed in this fashion and will be the most convenient to the user. Too large a bin can cause trouble. Excessive melting of ice will occur if the bin is larger than required. Proper bin selection is important to the success of the ice machine installation.

B. Stands. A Scotsman Machine stand should be used if the machine is located beside the Scotsman bin. In designing the installation, plan for servicing of the machine from front, top, and sides.

C. Erection. For elevations in excess of four feet or in close quarters, chain falls should be used. For locations under four feet, the use of skid boards and rollers are practical.

D. Bin Thermostat. Locate the thermostat bulb as high as possible in the bin and still allow the machine to cut off before ice builds up in the chute. If this occurs, ice can stick in the chute keeping the machine off after there is a need for ice production. The capillary can usually enter through the chute opening. Keep the bulb and capillary line away from shovels.

E. Ice Chutes. If the outlet of the machine is remote from the bin, a chute will be required. Stainless steel is an excellent material for this purpose where its' cost is not prohibitive. Angles or ledges of less than 45° should not be used. Ice will cling to this surface and either melt excessively or jam in the chute. The sharper the drop the better. If straight down, do not insulate, unless necessary.

SPECIFICATIONS

SUPER FLAKER SF-2 SERIES (Storage Type)	MODEL SF-2WSH	MODEL SF-2WWSH	MODEL SF-2WSH-SS	MODEL SF-2WWSH-SS
Daily capacity up to 650 lbs.	X	X	X	X
350 lb. ice storage bin	X	X	X	X
Stainless steel bin	X	X	X	X
Air cooled condenser	X		X	
Water cooled condenser		X		X
Heavy duty ½HP. Compressor	X	X	X	X
Standard 115 V, 60 cy, 1 ph, AC—	X	X	X	X
¼" water inlet SAE Flare	X	X	X	X
⅜" condenser water inlet NPT		X		X
⅜" condensate drain ID				
⅝" bin drain outlet OD	X	X	X	X
⅜" water outlet OD		X		X
Hammerloid grey exterior	X	X		
Stainless steel exterior			X	X
49" height (with legs)	X	X	X	X
43" height (without legs)				
48 ½" width	X	X	X	X
24 ½" depth	X	X	X	X
Approximate shipping weight	502	502	502	502

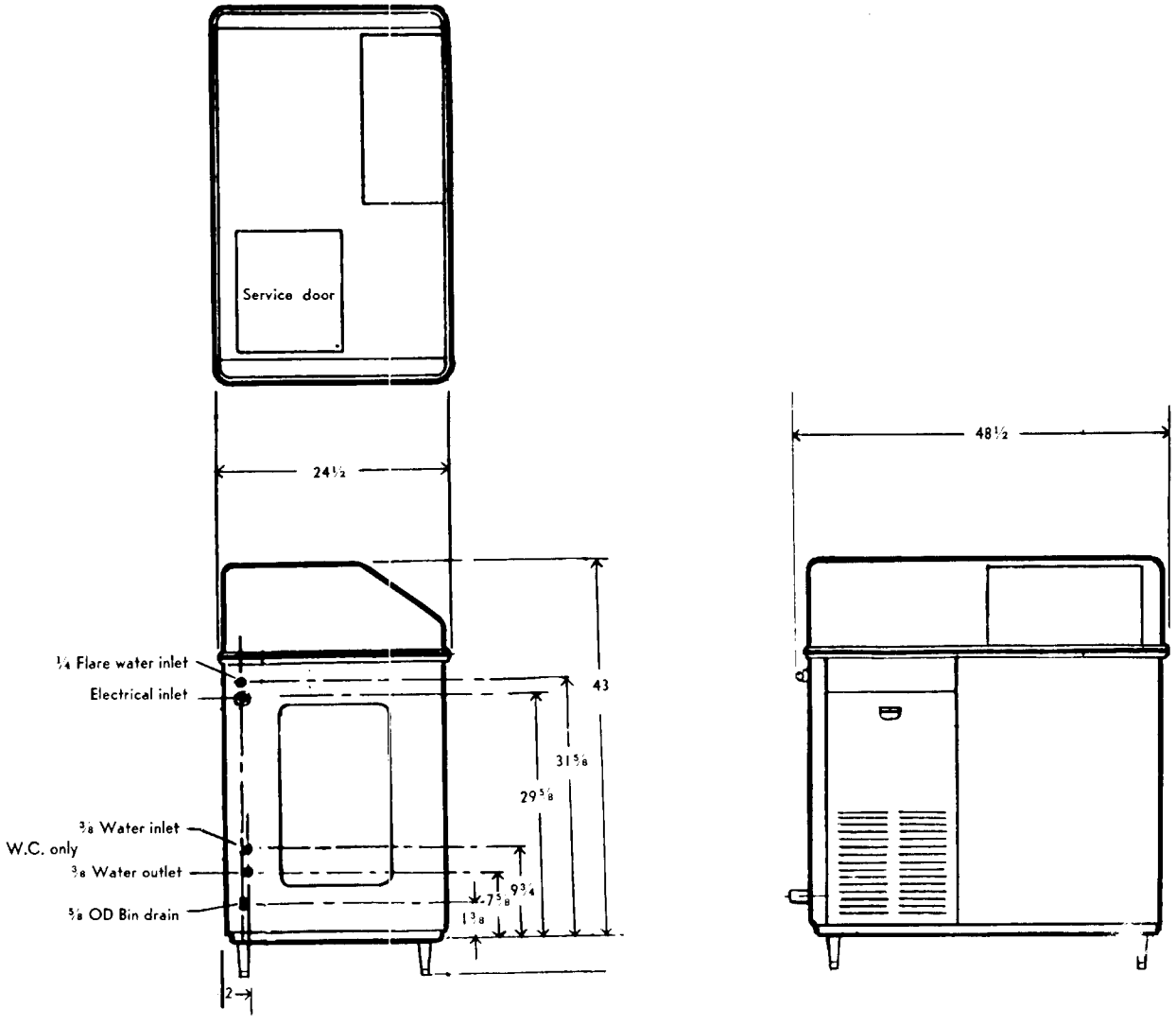

SPECIFICATIONS

SCOTSMAN SF-2 Super Flaker is designed for restaurants, super markets, bakeries, dairies, fish markets, hospitals, cafeterias, poultry stores, soda fountains, etc. and will deliver a continuous flow of ice flakes at a capacity up to 650 lbs. per day.

ATTRACTIVE COMPACT CABINET. Silver grey hammerloid finish with chrome trim, rounded corners, and removable panels for easy access to mechanical parts.

Also available in stainless steel cabinet.

SEALED REFRIGERATION SYSTEM. Provides quiet, efficient operation of the machine. Compressor motor is spring mounted and the worm motor is rubber mounted for quiet operation.

HOW IT WORKS. Water in the constant level float reservoir is fed to the bottom end of a freezing cylinder and turns to ice on the inside of this cylinder. The stainless steel auger inside of this evaporator is driven by a motor through a V belt and gear reduction drive. Ice is carried upward by the action of this auger and extruded past the ice breaker at the top of the cylinder.

A manual switch starts the machine, and from then on ice is produced automatically in small uniform pieces of ice. When the storage bin fills, a thermostat shuts the machine off and causes it to start up again when ice is taken from the storage compartment.

Model No. SF-2H is a continuous flow type machine, and is manually started by an OFF and ON switch located behind the front service door as are the SF-2WSH models. Since the SF-2H does not have its own attached bin, it is necessary to use an auxillary bin such as the Model SB-500 SCOTSMAN Super Bin for ice storage. A bin thermostat is mounted in each SF-2H continuous flow type machine for the purpose of mounting control bulb from machine to bin.

INSTALLATION

UNCRATING OF MACHINE

The complete machine comes in one crate. After the crate is removed, inspect for concealed damage. When installing the machine, remove the bottom skids by removing all bolts. Then cut all wires holding support packing from refrigerant lines. Then loosen shipping bolts on the compressor. Be sure the compressor is floating free on spring mounts. Remove leg levelers from the carton and install on base as desired. Then check all refrigerant lines for rubbing or touching other surfaces. Also check for possible transportation damage. Check for free movement of ice worm.

PRE-INSTALLATION

Before machine is in final location, remove warranty card and other information from machine compartment. Remove top service door, water reservoir cover and packing under float. Then leave cover off for float adjustment after machine is installed.

LOCATION OF THE SUPER FLAKER

Select the location before delivering Super Flaker to the job. The following points should be considered when making selection.

1. Convenience. Place the unit as close as possible to the place of ice consumption.
2. Servicing. Install the machine on continuous flow models so it can be serviced from all three sides except the side containing the ice chute opening. Important to leave 24" access to front (containing on-off switch) and left side on both with storage and continuous flow models.

3. Room Temperature. Minimum - 50 degrees. Maximum - 100 degrees.

4. Continuous Flow Models.

A. Bins. Care should be exercised in proper bin selection. Too small a bin will give unsatisfactory performance. A bin should have a minimum of 1/2 of machine's capacity per day, when the machine shuts off on thermostat. Make sure that user's demands are met by proper bin as well as by proper machine selection. Plan relative location of the machine so as to enter the bin as close to the top as possible. Bins should also be higher than their width and length dimensions, so the maximum ice can be stored in the minimum cubic feet of space. A Scotsman bin is designed in this fashion and will be the most convenient to the user. Too large a bin can cause trouble. Excessive melting of ice will occur if the bin is larger than required. Proper bin selection is important to the success of the ice machine installation.

B. Stands. A Scotsman Machine stand should be used if the machine is located beside the Scotsman bin. In designing the installation, plan for servicing of the machine from the front, top, and sides.

C. Erection. For elevations in excess of four feet or in close quarters, chain falls should be used. For locations under four feet, the use of skid boards and rollers are practical.

D. Bin Thermostat. Locate the thermostat bulb as high as possible in the bin and still allow the machine to cut off before ice builds up in the chute. If this occurs, ice can stick in the chute keeping the machine off after there is a need for ice production. The capillary can usually enter through the chute opening. Keep the bulb and capillary line away from shovels.

INSTALLATION

E. Ice Chutes. If the outlet of the machine is remote from the bin, a chute will be required. Stainless steel is an excellent material for this purpose where its' cost is not prohibitive. Angles or ledges of less than 45° should not be used. Ice will cling to this surface and either melt excessively or jam in the chute. The sharper the drop the better. If straight down, do not insulate, unless necessary.

WATER SUPPLY

The recommended water supply line is 3/8" OD Copper Tubing for SF-2. connect to cold water supply line with regular plumbing fittings, with a shut-off valve installed in an accessible place between supply line and machine. A water strainer must be installed with the unit and mounted with clean-out plug down. Locate the strainer next to the machine with the arrow in the direction of the flow. Most plumbing codes also call for double check valves in the supply water line, particularly for water cooled models.

The water supply line for water reservoir connects to the 1/4" flare fitting on the machine. On water cooled models connections are made to a 3/8" male pipe nipple inside of the machine compartment for the condensor water. Incoming water goes through the water regulating valve first and then to the water cooled condensor. Observe arrow on water regulating valve. Water supply must be installed to conform with local code. In some cases a licensed plumber and/or a plumbing permit will be required.

DRAIN

The recommended drain from the bin is 5/8" OD Copper Tubing. Must be run to an open trapped and vented drain. If drain is a long run, allow a 1/4" pitch per foot. Drain must be installed to conform with local code. Run separate line for condensor discharge water on water cooled models.

INSTALLATION PRACTICE

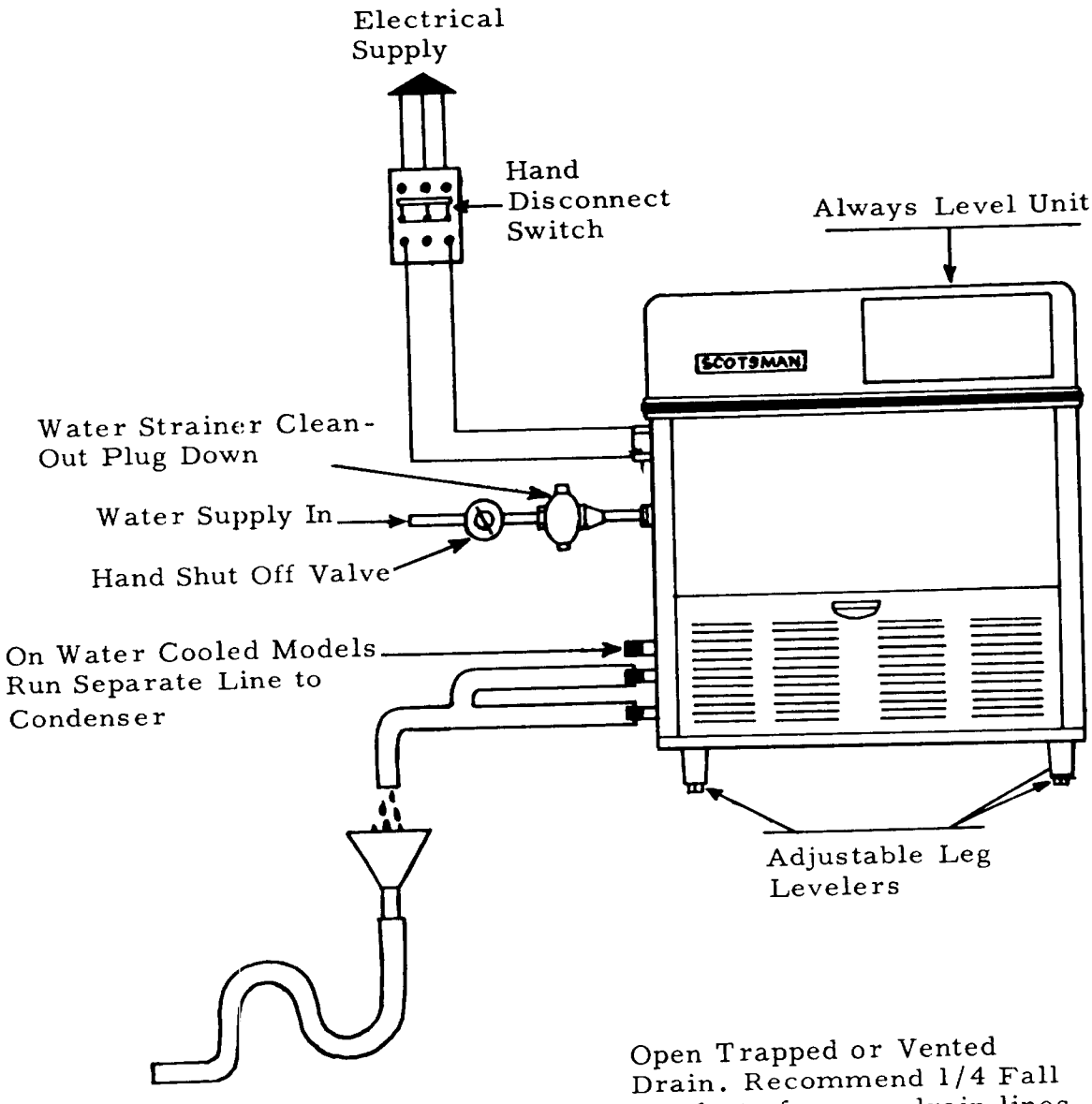

INSTALLATION

ELECTRICAL INSTALLATION:

		SF-2
Compressor	H.P.	1/2
	Voltage	115
	Amp. Rating	7.4
	Cycle	60
	Phase	Single
Drive Motor	H.P.	1/4
	Voltage	115
	Amp. Rating	4.5
	Cycle	60
	Phase	Single

ELECTRICAL CONNECTIONS:

SF-2-1

115 Volts

60 Cycle, 1 Phase

20 Amp. Circuit

Be certain that the Super Flakers are on their own circuit and individually fused. The maximum allowable voltage variation should not exceed 10 percent of the nameplate rating even under starting conditions. Low voltage can cause erratic operation and may be responsible for serious damage to the overload switch and motor windings.

All external wiring should conform to National Underwriters and Local Electrical Code requirements. Usually an electrical permit and the services of a licensed electrician will be required.

Open electrical control box and prepare for hook up, use knock outs, cord connectors etc. Then check unit name plate voltage against building source voltage and make sure they correspond. Caution--Improper voltage supplied to units will void your warranty protection.

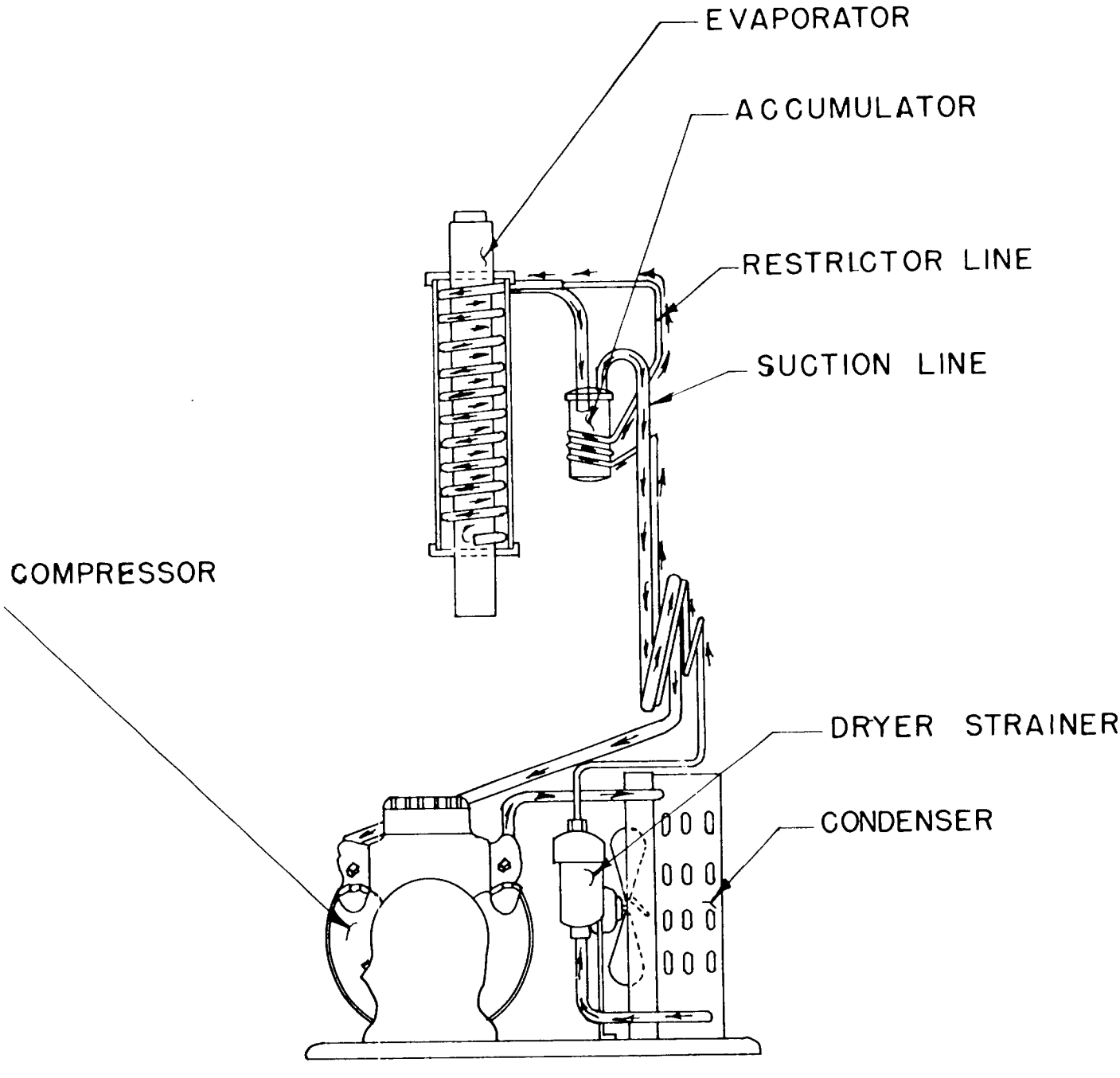

REFRIGERATION CYCLE SF-2 ALL MODELS

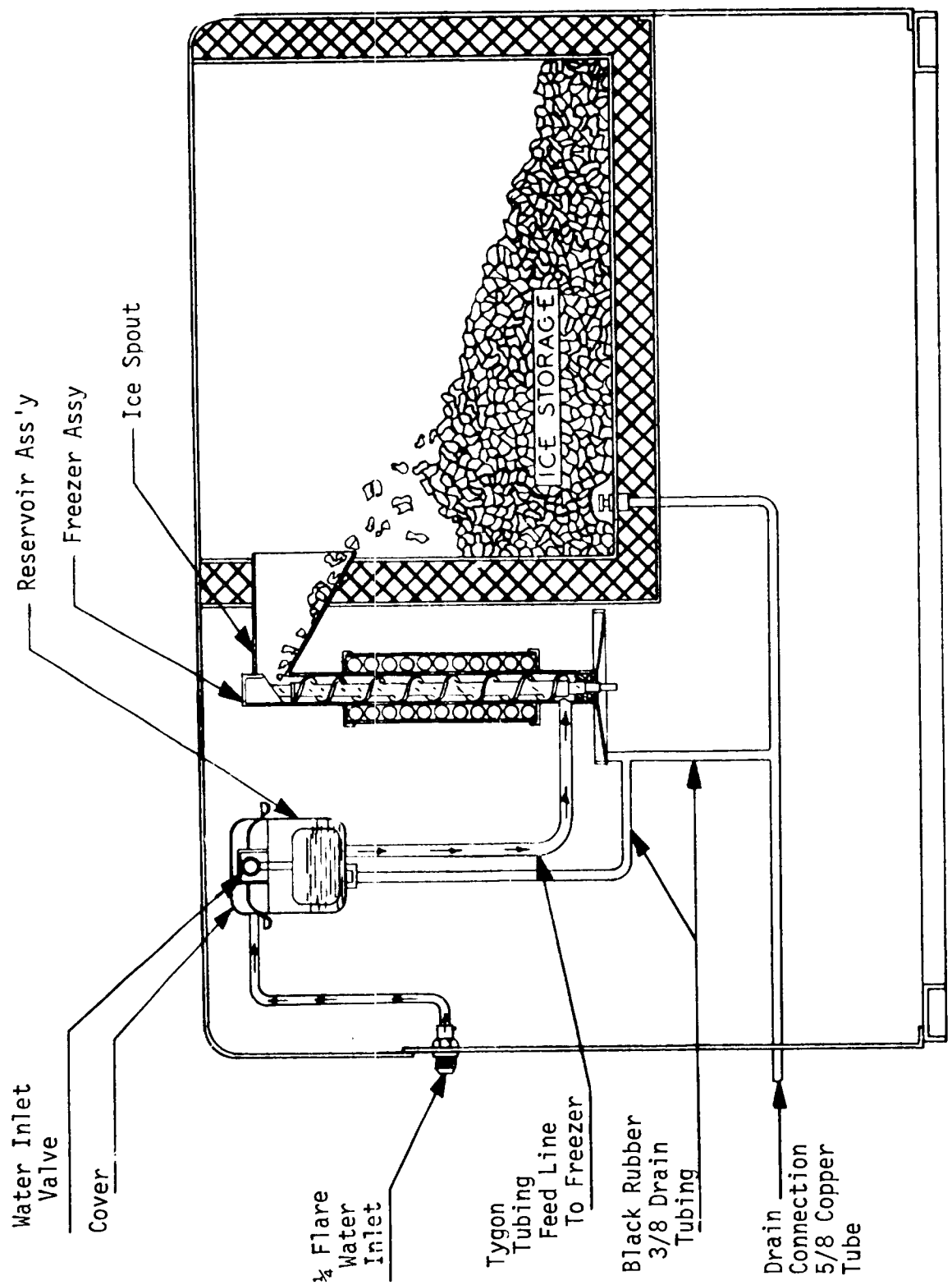

WATER SCHEMATIC

SF-2WSH

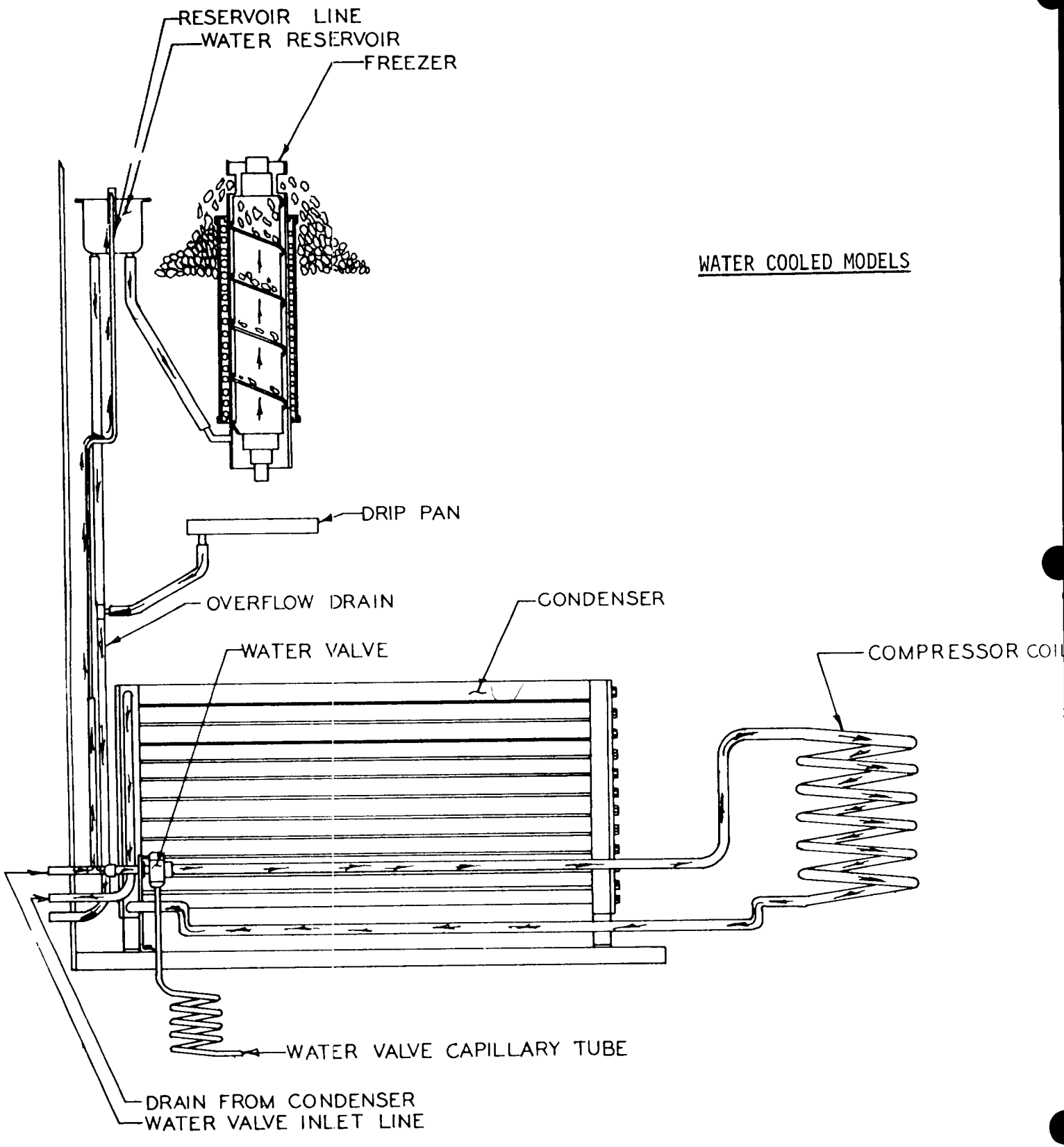
RESERVOIR LINE
WATER RESERVOIR
FREEZER
WATER COOLED MODELS
DRIP PAN
OVERFLOW DRAIN
CONDENSER
WATER VALVE
COMPRESSOR COIL
WATER VALVE CAPILLARY TUBE
DRAIN FROM CONDENSER
WATER VALVE INLET LINE

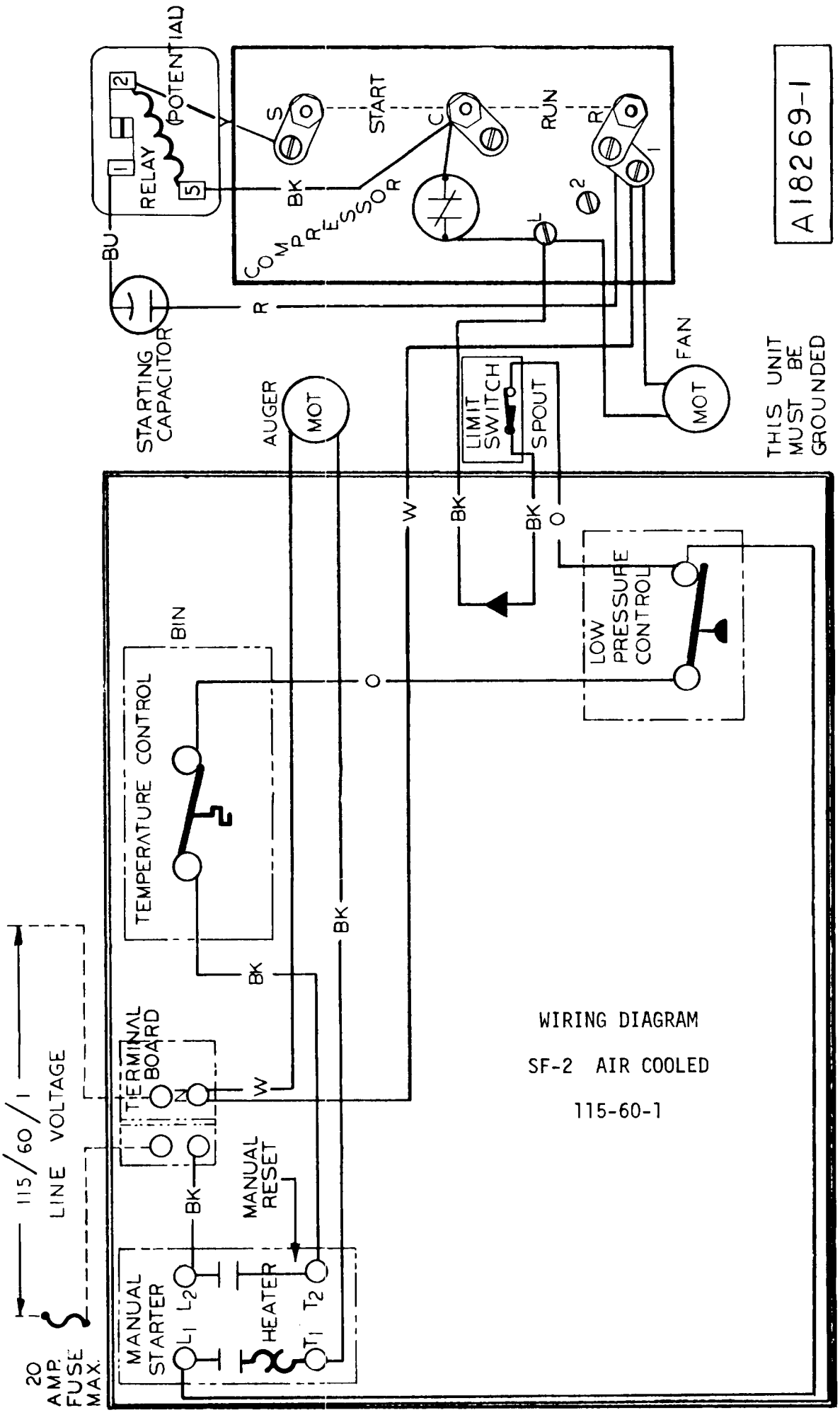

WIRING DIAGRAM

SF-2 AIR COOLED

115-60-1

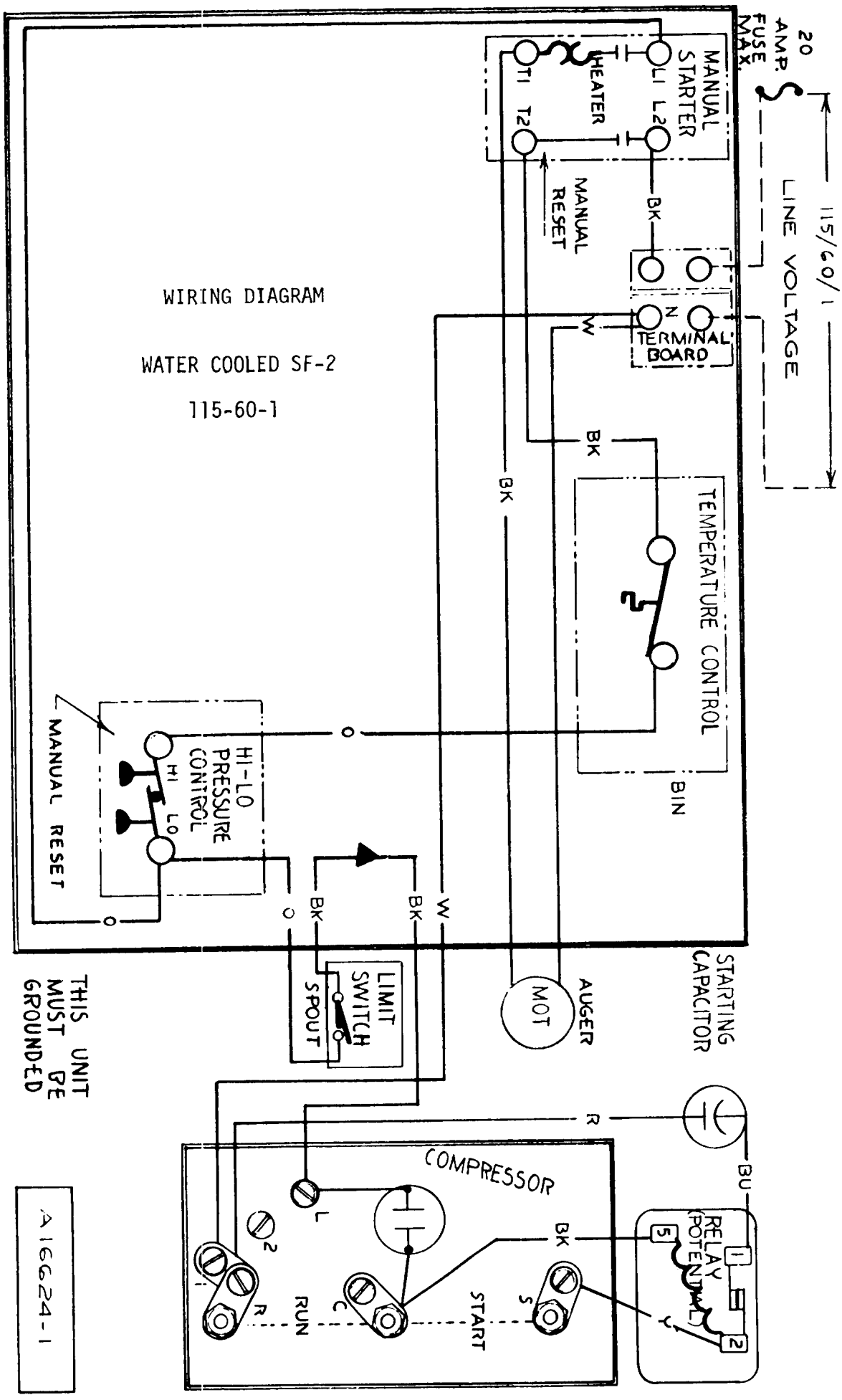
WIRING DIAGRAM
WATER COOLED SF-2
115-60-1
20 AMP. FUSE MAX.
LINE VOLTAGE
115/60/1
MANUAL STARTER
HEATER
T1
T2
L1
L2
MANUAL RESET
BK
W
N
L
TERMINAL BOARD
TEMPERATURE CONTROL
BIN
MANUAL RESET
HI-LO PRESSURE CONTROL
HI
LO
LIMIT SWITCH
SPOUT
MOT
AUGER
STARTING CAPACITOR
THIS UNIT MUST BE GROUNDED
R
BU
COMPRESSOR
L
2
1
R
RUN
C
START
S
RELAY (POTENTIAL)
5
1
2
A16624-1

STARTING THE MACHINE

When the machine is placed and inspected as per instructions and all plumbing and electrical connections are completed and tested, turn on the water supply. Be sure the float cover is removed to check on the float operation and water level in the water reservoir. Be sure the water reservoir is filled before starting the machine. Water level should be 1/4 inch below the reservoir overflow.

When this is completed, turn on the manual switch on the front of the cabinet and the machine is in automatic operation. In two to three minutes ice will start dropping off the worm shaft and out the ice chute. Let the machine operate for at least 30 minutes, and check for any excess noise other than the normal compressor noise. Test the ice storage control bulb by holding a handful of ice around the bulb until the machine shuts off. One minute should be normal for the control to function. Within minutes after the ice is removed, the bulb will warm up and the machine will automatically start up. The control is factory set and should not be reset until this test is made. Normal setting of this control should be approximately 35 degrees cut-out and 45 degrees cut-in.

Check pressure settings at the time of start-up. On the water cooled models set the head pressure at 135 PSI. On the air cooled models the head pressure should be approximately 130 to 145 PSI head pressure. The frost line should extend 8" out of the accumulator if properly charged with refrigerant and suction pressure will range between 15 and 16 PSI with 50°F. inlet water.

Check the hand reset low pressure control setting. This safety device should be set at approximately 10 PSI below normal operating suction pressure and should cut off in case of interruption in water supply, shortage of refrigerant, low ambient or any other cause of abnormally low suction pressures. Observe pressure that machine pulls down to when first starting up. Set just below this pressure to avoid nuisance calls.

Explain the machine to the owner, showing him how the machine works and go over the owner's instruction sheet with him. Answer all the owner's questions about the machine, and do not leave with any doubt in the owner's mind about the machine, how to operate it or where to reach you should he need service on the machine. Call back the next day to check the machine again and answer any other questions the owner may have.

SERVICE

Service gauge connections are available on both high and low-side service valves.

To install gauges to any of these connections, replace 1/8 inch IP plug with1/8 inch MPT x 1/4 inch flare half union. Purge free of any non-condensable gases before starting any test operation.

REFRIGERANT CHARGE

The below refrigerant charge is approximate. When charging, set at 135 PSI head pressure and charge so that the frost line extends out of the evaporator and into the accumulator after fifteen minutes of operation. Frost out of accumulator approximately 8 inches for best capacity.

Model	Freon Charge	Oil Level
SF-2	33 oz. R-12	Oil level should be kept at 1/3 way up sight glass. Do not fill over 1/2.

WATER SYSTEM

A water level is maintained in the water reservoir by a float operated valve. Water is piped from the water reservoir to the freezing chamber by a gravity feed line maintaining an equal water level. A removable overflow pipe is installed in the water reservoir for cleaning the reservoir as well as preventing damage should the inlet water valve fail.

The water reservoir is equipped with a 2 inch air gap to prevent back siphoning and meet all health codes.

The water level in the water reservoir is adjusted by bending float arm. The water level should be set 1/4 inch below the overflow pipe. A condensate drip pan is connected to the drain circuit to automatically dispose of condensate moisture.

A water strainer must be installed in the supply line.

SERVICE

ELECTRICAL SYSTEM

The Super Flaker model SF-2 is designed to work on standard voltage.

SF-2-1	115 volts	60 cycle	Single Phase

Special voltage requirements are available on special order. Therefore, always check nameplate for this information before checking electrical supply.

Nameplate voltage should not vary more than plus or minus 10 percent.

The electrical circuit consists of condensing unit, drive motor, hand reset combination or low pressure cut-out, storage bin thermostat, "on" and "off" switch, micro (safety) switches.

A. Condensing Unit

The compressor terminal box houses the motor compressor terminal block, and the motor overload Klixon. To gain access to the terminal box, remove the two screws holding the beveled metal cover. The starting capacitors, running capacitors and starting relays are housed and fastened to the chassis frame.

B. Drive Motor

Model SF-2 Flakers are equipped with standard 1/2 inch shaft, 1/4 HP., capacitor start, induction motors. These motors turn counter clockwise and may be replaced with any standard make motor corresponding to the nameplate rating. (Be sure motor runs counter clockwise viewed from the shaft end.) Nema 48 frame size.

C. High-Low pressure Cut-Out (Hand reset on water cooled models only.)

Ranco control is located on the frame assembly. Factory settings cut-out 5 lbs. on low pressure and 180 PSI on high pressure. This control prevents operation at abnormal pressures, temperatures or lack of water.

D. Low Pressure Cut-Out (Hand reset on all air cooled models.)

Ranco control is located in the control box. Factory settings cut-out at 5PSI. Safety devices to cut off machine and keep it off in case of water supply failure, loss of refrigerant, low ambient temperature or other causes of low pressure.

E. Storage Bin Thermostat

Control located in control box. Factory settings 35° cut-out, 45° cut-in. This control shuts off complete machine when ice in storage bin builds up to control bulb, automatically starts machine upon ice removal.

F. Micro Safety Switch

The micro switch is located in the top of the ice chute. The switch is operated by a plate in top of the ice chute by the ice backing up in the chute should the storage bin thermostat fail. Micro switch will shut off the condensing unit only, when operated, drive motor continues to run.

G. On-Off Switch -- Manual

A General Electric or Westinghouse on-off switch with built in thermal overload protection to prevent drive motor failures is used. Since any one of three makes of motors may be used, consult chart in parts section of this manual for correct overload protector usage.

REMOVAL & INSTALLATION OF PARTS

CABINET TOP (HOOD)

1. Remove two back end screws of chrome strip.
2. Pull out tape concealing screws.
3. Remove balance of screws in chrome strip.
4. Lift off hood.

HOOD SERVICE DOOR

1. Remove two screws on top edges.
2. Lift off door.

CABINET SIDE SERVICE DOOR

1. Remove four screws on edges.
2. Lift out door.

CABINET FRONT SERVICE DOOR

1. Front door pulls out.

CABINET REAR SERVICE DOOR

1. Remove four screws on corners of rear service door.
2. Pull door out.

ICE STORAGE DOOR

1. Raise and push door six inches rear of track. Hold up on underside of door - pull forward.
2. Door will now slide out.

ICE STORAGE DOOR FRAME

1. Remove six screws at bottom and sides.
2. Frame will now lift out.

MOTOR COMPRESSOR

1. Front seat both suction service valve and discharge service valve on compressor.
2. Disconnect wiring from the compressor. Also any control capillaries.
3. Remove the bolts holding the service valve to the compressor.
4. Remove the compressor hold-down nuts and lift compressor out of the units.
5. Reverse steps 1 through 4 in replacing compressor.
6. Check the oil in the compressor before connecting lines. Sight glass not over 1/2 full.

SERVICE

MICRO SWITCH IN SPOUT

1. Remove hood service panel.
2. Remove micro box cover, loosen two screws at rear of box holding switch in place, lift up.
3. Disconnect electric leads.
4. Reassemble with new micro switch.

DRIVE MOTOR

1. Remove case hood - See Cabinet Top Removal Section.
2. Remove electrical connections.
3. Remove four base bolts.
4. Remove drive belt.
5. Lift out defective motor.
6. Remove pulley and install new motor.
7. To replace, reverse procedure.
8. CAUTION: Drive motor rotation is COUNTER-CLOCKWISE facing shaft end.

MANUAL ON AND OFF SWITCH

1. Remove front service door.
2. Remove control box cover.
3. Remove two screws holding switch box bracket.
4. Disconnect electrical leads from switch.
5. Remove switch.
6. To replace, reverse procedure.

GEAR REDUCER AND COUPLING

1. Remove rear door.
2. Remove drive pulley.
3. Loosen drive coupling set screw and slide down on gear reducer shaft.
4. Loosen four mounting bolts.
5. Lift out from rear of machine.
6. To replace, reverse procedure.
7. Check new gear reducer for proper oil level.

FREEZER ASSEMBLY

1. In most instances, it will be faster to faciltate freezer removal by removing cabinet top or hood. (See Removing & Installing Cabinet Parts.) Assembly can be changed if necessary through hood top panel.
2. Shut off water supply and drain water reservoir.
3. Remove refrigerant from system.
4. Remove suction and liquid line connections. (CAUTION: Plug all connections to prevent moisture from entering system.)
5. Remove tygon tube to water inlet connection at base on freezing chamber.
6. Loosen knurled nut holding spout to freezer and remove.
7. Remove two bolts holding freezer chamber to frame.
8. Lift freezer assembly up and out of unit.
9. Remove rubber drip pan from defective assembly and install it on new assembly.
10. Reverse above procedure to install new assembly.

WORM SHAFT

1. Turn unit off, before removing worm shaft.
2. Shut off water supply to unit.
3. Remove hood service door. Remove straps and insulation halves on freezer top.
4. Remove two slotted head screws which fit through chamber wall into ice breaker. See page 28 items 11, 12.
5. Complete worm shaft with ice breaker attached will now come out by lifting up on freezer cap pull ring. NOTE: Top half of water seal will come out with worm shaft.
6. To remove ice breaker from shaft, first remove retainer ring in top of ice breaker.
7. Remove freezer cap and pull ring from ice breaker.
8. Loosen hex head bolt holding shaft through bearing and pull worm shaft free from ice breaker and bearing.
9. If shaft is defective, remove water seal top half and put on new worm shaft before reassembling - when reassembling, by reversing above, put a small amount of Vaseline on squared shaft end. This will allow shaft to slide smoothly through rubber bottom half of water seal without tearing it.

WATER SEAL

1. To replace water seal, follow steps 1 through 6 under Worm Shaft Removal.
2. Next slide three-jaw drive coupling down on reducer or else remove top half of coupling.
3. Pull rubber drip pan down.
4. Remove large brass nut holding lower bearing and lower portion of water seal in place.
5. Lightly force lower bearing out.
6. Reach in and pull bottom portion of water seal out.
7. Reassembly is reverse of above.

SERVICE

STORAGE BIN THERMOSTAT

1. Disconnect electrical supply.
2. Remove bin thermostat bulb from bin location along with its capillary tube.
3. Remove control box cover.
4. Remove two screws in control mounting bracket.
5. Disconnect two leads.
6. Replace with new control and reassemble in reverse of above.
7. CAUTION: Always check new control power element charge before installation to assure receiving an operative control. A handful of ice on bulb will register an audible 'click' at cut-off. Settings 35° cut-out, 45° cut-in.

WATER RESERVOIR

1. Remove service panel in cabinet hood.
2. Turn off water supply and drain reservoir.
3. Remove 1/4 inch copper inlet water line.
4. Remove 1/2 inch plastic feed line to freezer.
5. Lift out reservoir after removing two screws holding bracket to frame.
6. To replace, reverse procedure.

HAND RE-SET LOW PRESSURE CUT-OUT SWITCH

1. Disconnect electrical supply.
2. Remove control cover.
3. Put jumper across control wires if needed. Connect electrical supply and pump down to one pound PSI on lowside gauge. Front seat suction service valve.
4. Disconnect electrical supply again, then remove electrical lead to the control.
5. Loosen cap tube from crankcase and remove complete control. Cap up 1/4 inch flare fitting.
6. Install new control, being sure to purge at crankcase fitting when tightening up refrigerant connection. Back seat suction service valve.

SF-2 H CHASSIS ASSEMBLY

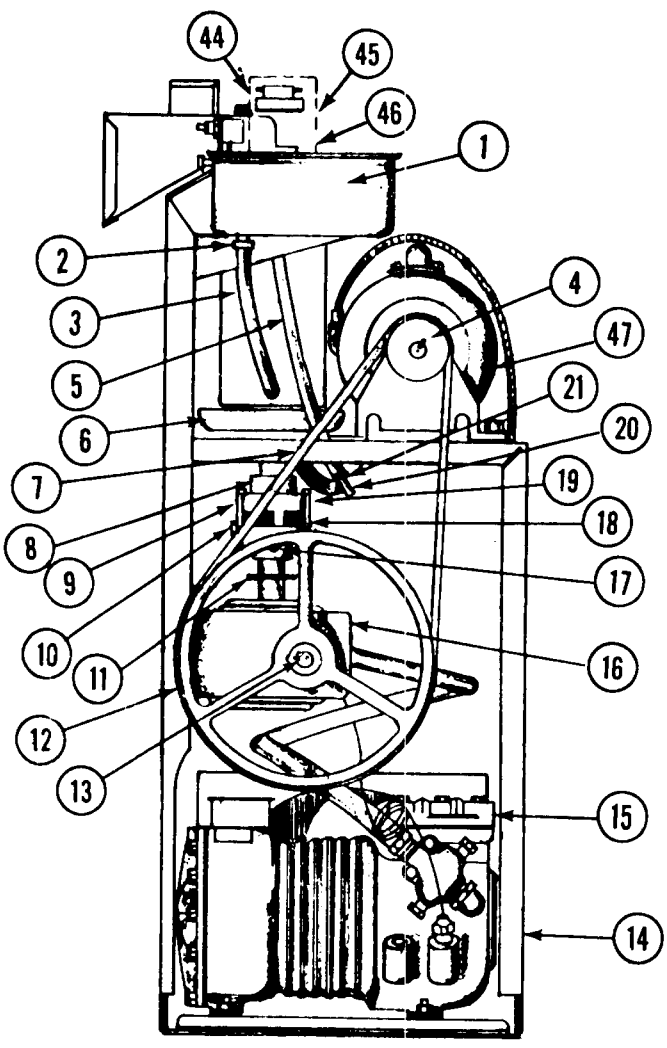

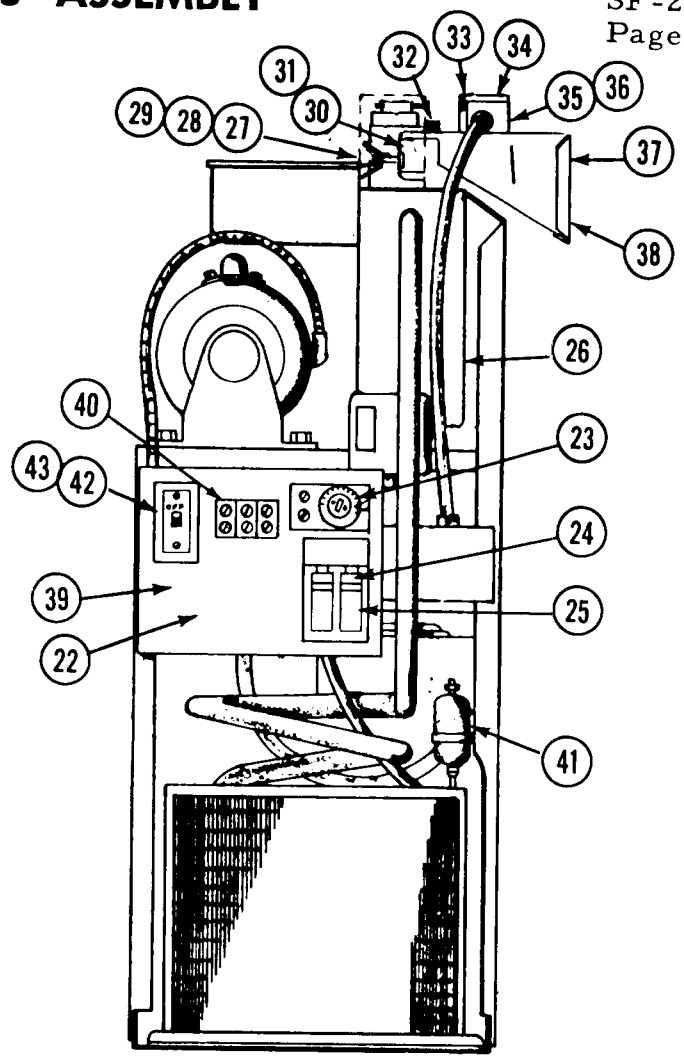

ITEM NO.	PART NO.	NAME
1.	A-8339	Reservoir Assembly
2.	2-694	Clamp
3.	5-186	Tygon Tubing (1/2 ID x 3/4 OD (per foot)
4.	2-1462	Pulley 2.5" Pitch Diameter
5.	13-79	Tubing (rubber) (per foot
6.	13-208	Rubber Drip Pan
7.	13-558	Belt
8.	A-6165	Coupling, top
9.	S-8496	Coupling clamp (2)
10.	3-206	Cap Screws (2)
11.	13-152	Rubber Shield
12.	2-1463	Pulley (8")
13.	S-6035	Key
14.	A-15977	Frame
15.	18-525	Motor Compressor 115/60/1 AC
	18-355	Motor Compressor 115/60/1 WC
16.	2-337	Gear Reducer
17.	3-385	Set Screw
18.	S-7716	Coupling, bottom
19.	13-131	Coupling Insert
20.	A-7387	Tee Assembly (7/16")
21.	2-535	Clamp
22.	11-264*	High-Pressure Control (*)
23.	11-99	Bin Control
24.	A-15384	Cover Resistor **
25.	12-474	Resistor (***)
26.	A-6981-3	Freezer

ITEM NO.	PART NO.	NAME
27.	A-6665	Casting Spout Holder
28.	3-679	Lockwasher (2) C3-1417-67
29.	3-721	Screw (2) ~~C3-1417-67~~ C3-1403-55
30.	2-1437	"O" Ring
31.	A-14269	Casting
32.	A-14256	Nut, knurled
33.	3-173	Screws (2)
34.	A-14241	Limit Box Cover
35.	12-1018	Micro Switch (**)
36.	A-14975	Limit Box
37.	A-16353	Pressure Plate (**)
38.	A-16350	Spout
39.	11-273-1 *	Low-Pressure Control
40.	12-1308	Terminal Board
41.	2-544	Drier
42.	12-1220	Manual Switch (w/case) **
	12-1220A	Manual Switch (less case)
43.	12-1221	Overload ***
44.	A-15081	Left Spout Insulation
45.	A-15080	Right Spout Insulation
46.	A-8736	Clamps (2)
47.	12-864-1	Drive Motor 115/60/1
	12-864-2	"48" Frame 230/60/1

(*) Not on water cooled
(**) Not shown
(***) See Overload chart on page 44 for correct dash no.

FREEZER ASSEMBLY SF-2H

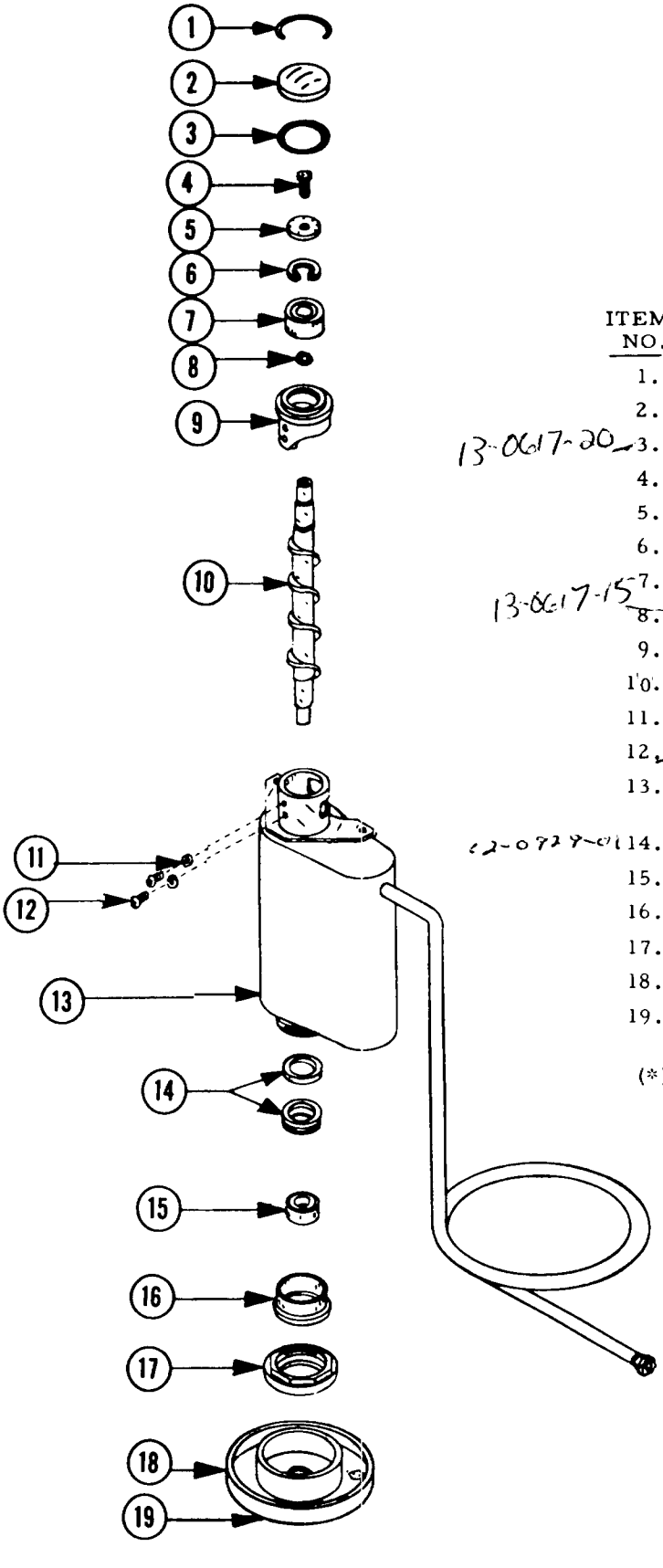

ITEM NO.	PART NO.	NAME
1.	A-8582	Cap Hook
2.	A-8581	Worm Tube Cap
3.	~~2-560~~ 13-0617-20	'O' Ring
4.	3-715	Cap Screw
5.	A-6273-003	Worm Tube Washer
6.	3-712	Snap Ring
7.	2-646	Top Bearing
8.	~~2-643~~ 13-0617-15	'O' Ring
9.	~~A-8316~~ → A26704-001	Ice Breaker
10.	2-617	Worm Shaft
11.	3-679	Lock Washers
12.	~~3-732~~	Screws (brass 1/4x20x5/8)
13.	A-6382	Suction Line, Worm Tube, Cap Tube Assembly
14.	~~2-929~~ 12-0727-01	Water Seal
15.	2-619	Bearing, lower
16.	A-10591	Bearing Retainer
17.	A-6153	Worm Tube Nut
18.	13-208	Rubber Drip Pan
19.	A-8002	Drain Tube (*)
	A-6991-3	Freezer Complete

(*) Not Shown

RESERVOIR ASSEMBLY
Part No. A-8339

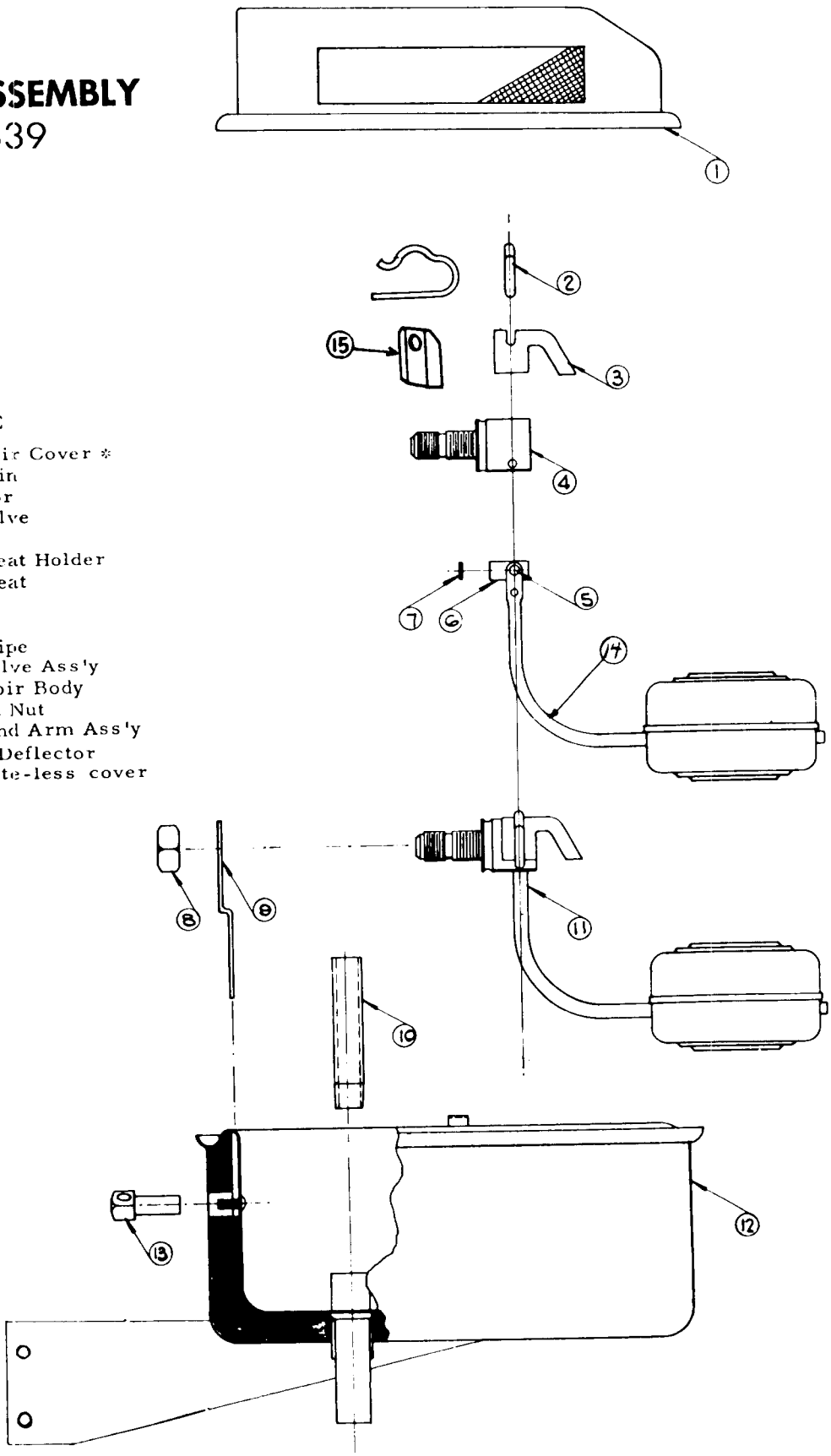

ITEM NO.	PART NO.	NAME
1.	A-16012	Reservoir Cover *
2.	2-1259	Valve Pin
3.	2-1320	Deflector
4.	S-8770	Inlet Valve
5.	3-1001	Rivet
6.	A-5777	Valve Seat Holder
7.	S-6947	Valve Seat
8.	S-7044	Nut
9.	A-12869	Bracket
10.	S-6715	Stand Pipe
11.	S-8138	Inlet Valve Ass'y
12.	A-13409	Reservoir Body
13.	A-8055	Bracket Nut
14.	A-12067	Float and Arm Ass'y
15.	A-18418	Water Deflector
	A-8339	Complete-less cover

GEAR REDUCER

Part No. 2-337
Winsmith Part No. (3CTS)

ITEM NO.	PART NO.	NAME
1.	2-580-28	Slow-Speed Gasket (2)
2.	2-580-24	Slow-Speed Seal (2) (02-0580-24)
3.	2-580-26	Slow-Speed Bearing (2)
4.	2-337-20	Slow-Speed Gear & Shaft
5.	2-768-25	High-Speed Gasket (2)
6.	2-337-23	High-Speed Bearing (2)
7.	2-768-20	High-Speed Seal (02-0768-20)
8.	2-337-21	High-Speed Gear & Shaft (integral)
9.	2-580-27	Slow-Speed Spacers (2)
	2-337	Complete Reducer

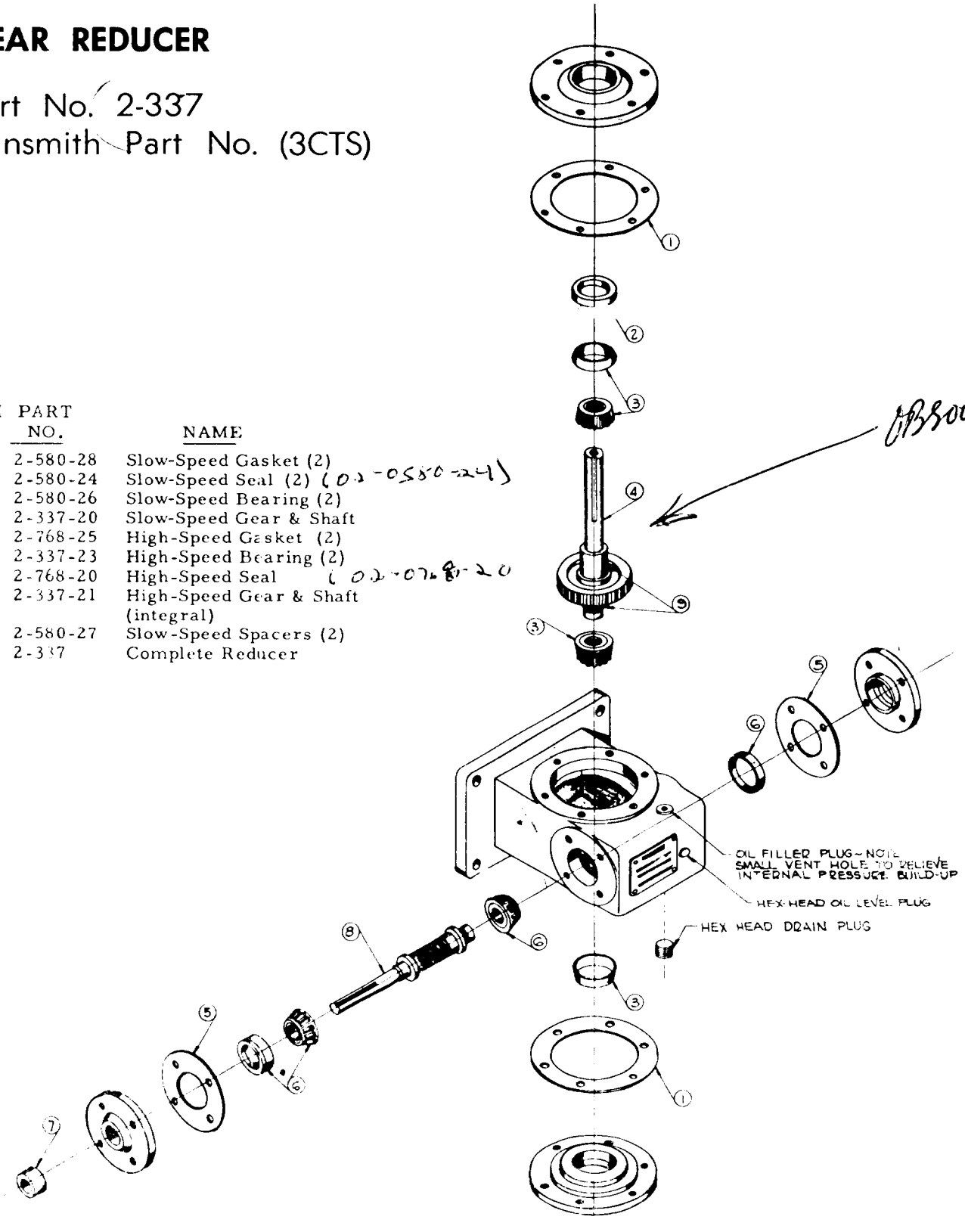

In answer to many field requests, we are pleased to release the following chart showing the companies whose products are acceptable substitutes for the 600W supplies by Winsmith as factory recommended.

Note the third column which most accurately represents the normal temperature operating range. Also the Alemite or Zerk fitting to bearing is greased with Mobilgrease BRB No. 1, or any good ball bearing grease as obtained from local service stations.

600W oils and equivalents are classified as industrial oils and most likely will be found in bulk plants rather than local service stations.

WORM GEAR REDUCERS

CB-CT-CV-CBD-CTD-CVD-CBX-CTX-CVX-DBI-TSR

Ambient Temperature °F	-30 to 15	16 to 50	51 to 110	111 to 165
Maximum Operating Temp. °F	150	185	225	225
Viscosity @ 210°F, SUS	40 to 90	90 to 125	125 to 190	190 to 350
Compounded with	(Optional)	3 to 10% Acidless Tallow or E. P. Base	3 to 10% Acidless Tallow or E. P. Base	3 to 10% Acidless Tallow or E. P. Base
AGMA Lubricant		#7 Compound	#8 Compound	
Cities Service Oil Co.	Pacemaker Oil # 5	Optimus Oil # 10	Optimus Oil # 6	Optimus Oil # 12
Fiske Bros. Refining Co.	#3 Lubriplate	Lubriplate # 8	Lubriplate # 8	Lubriplate APG
Gulf Oil Corporation	Multipurpose Gear Lubricant	E. P. Lubricant #115	E. P. Lubricant #145	E. P. Lubrican #250
Shell Oil Company	Vitrea Oil 71	Valvata Oil #J 78	Valvata Oil #J 78	Valvata Oil #J 83
Sinclair Refining Co.	Duro Oil 160	#87 Heavy Duty Oil	#101 Super-Heat Valve Oil	#112 Super-Heat Valve Oil
Standard Oil Co.	Stanogear Compound # 1	Stanogear Compound # 4	Standard Worm Gear Oil	[illegible] Oil
Sun Oil Company	Sunep 70	Sunep # 110	Sunep [illegible]	[illegible]
Socony Mobil Oil Co., Inc.	Vactra Oil # 1	Mobil Compound DD	Mobil Cylinder Oil #600W	Mobil Cylinder Oil #600W
Texas Company	Meropa Lub. # 1	Meropa Lub. # 3	Meropa Lub. # 6	Meropa Lub. # 6

SF-2WSH CASE ASSEMBLY

2-1736

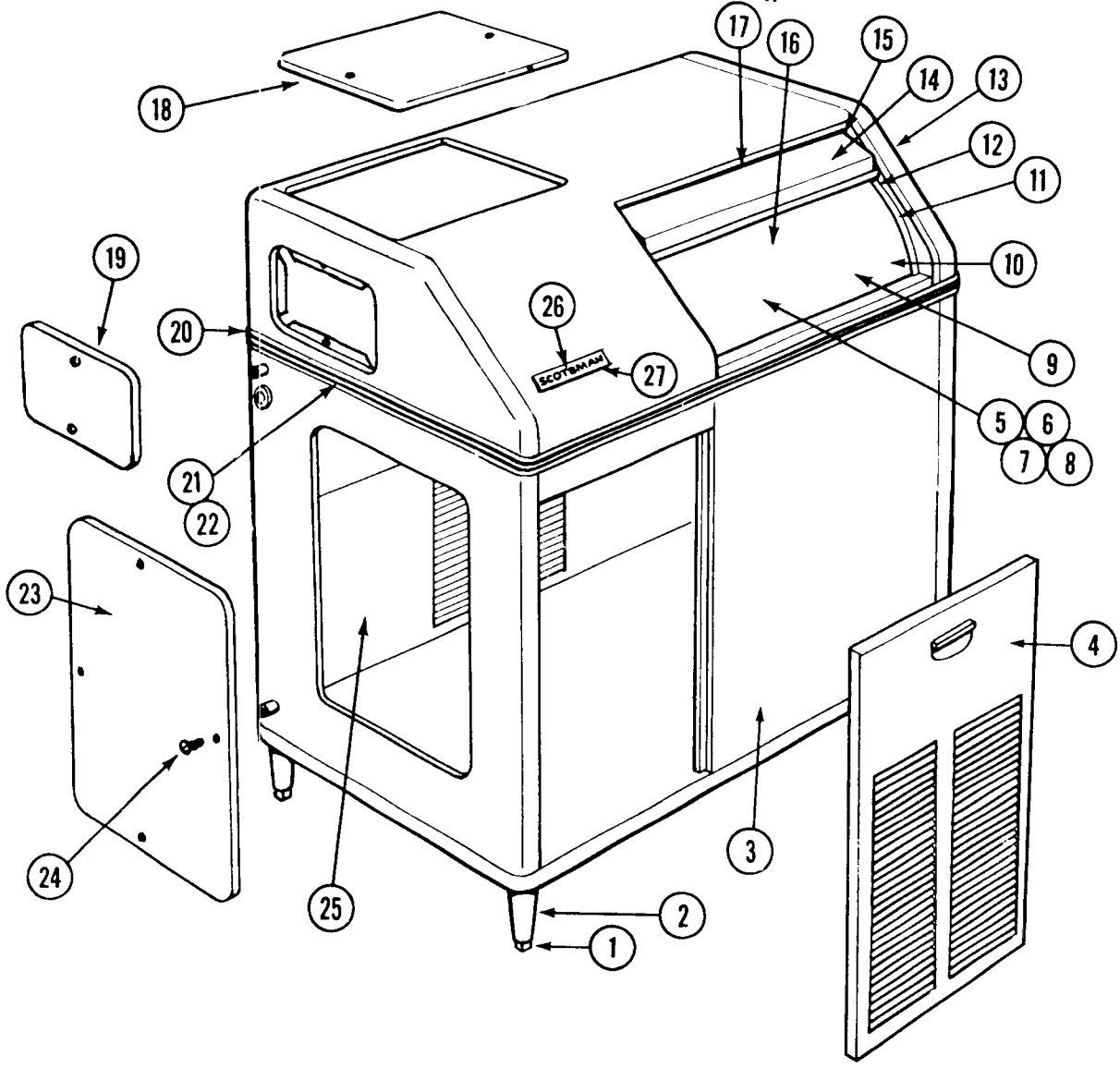

ITEM NO.	PART NO.	NAME
1.	8-522	Leg Leveler
2.	A-15803	Leg
3.	A-16078	Case Assy.
4.	A-15793	Front Door
5.	A-18093	Drain Assy. *
6.	2-530	"O" Ring *
7.	A-18090	Storage Bin Fitting *
8.	A-6448	Drain Screen *
9.	A-15774	Storage Bin Assy. *
10.	A-15779	Insulation Layout
11.	3-640	Door Glides (door)
12.	3-1195	Door Glides (hood)
13.	A-15601	Case Hood Assy.
14.	A-15559	Sliding Door

ITEM NO.	PART NO.	NAME
15.	A-16208	Door Track
16.	3-1212	Bulb Holder *
17.	~~A-16209~~	Door Catch * A-16166
18.	A-7676	Top Door
19.	A-6530	Top Side Door
20.	A-5829	Rear Trim Strip *
21.	15-324	Plastic Moulding-trim
22.	S-6413	Front Moulding Strip
23.	S-6713	Side Door
24.	3-775	Screw S.S.
25.	A-8741	Rear Door
26.	15-156	Emblem
27.	3-271	Speednut

*Not Shown

SF-2H CASE ASSEMBLY

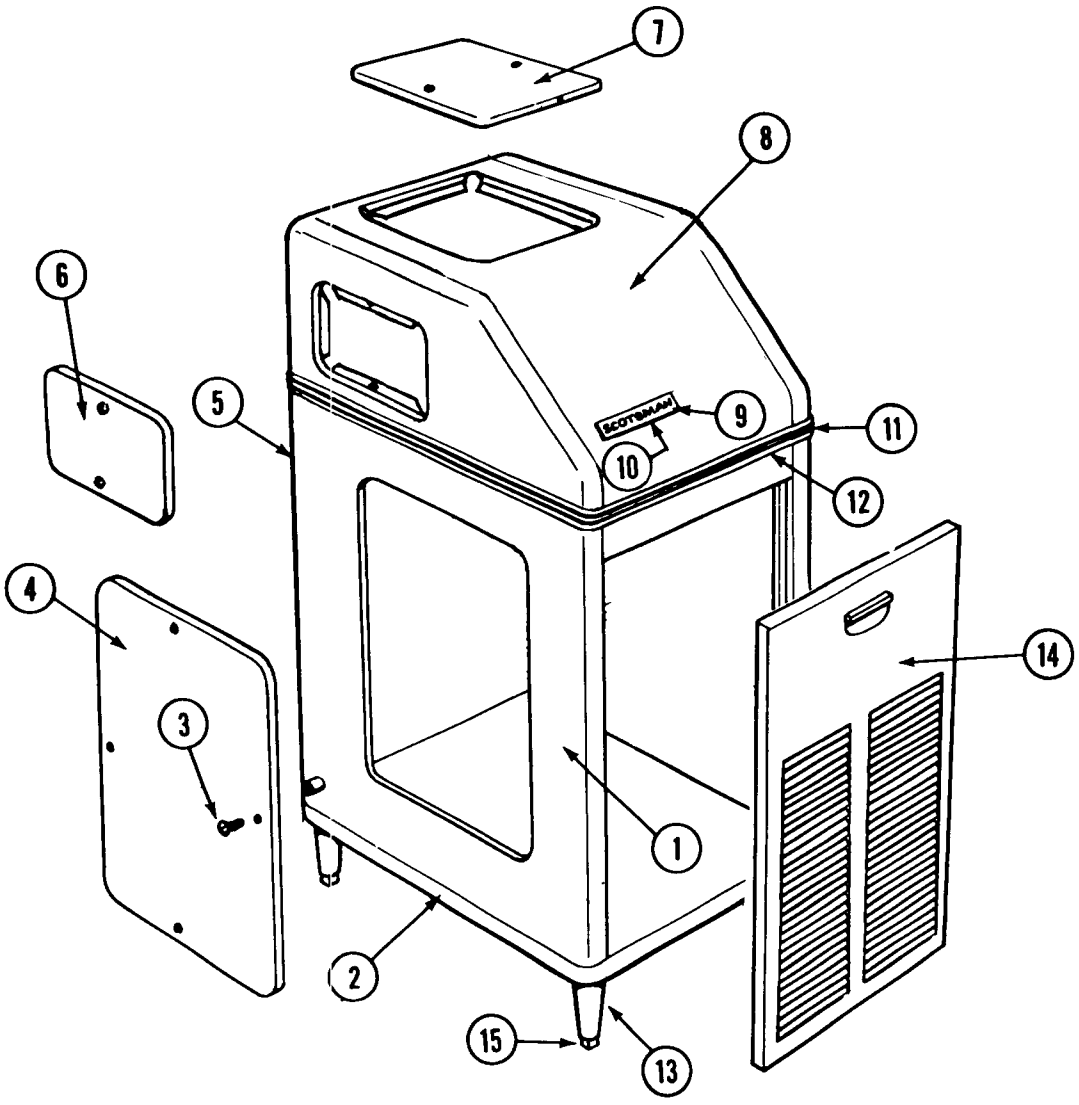

ITEM NO.	PART NO.	NAME
1.	A-16077	Case Assembly (less doors)
2.	A-8902-2	Moulding Strip (bottom) (2 reqd.)
3.	3-775	Screw (s.s.)
4.	S-6713	Side Door
5.	A-8741	Rear Door (*)
6.	A-6530	Top Side Door
7.	A-7676	Top Door
8.	A-16194	Case Hood (less doors)
9.	15-156	Scotsman Emblem
10.	3-271	Speed Nuts
11.	15-324	Plastic Trim Insert
12.	S-6211	Moulding Strip (top)
13.	A-15803	Legs (4 reqd.)
14.	A-15793	Front Door
15.	8-522	Leg Levelers (4 reqd.)

(*) Not Shown

CONDENSING UNIT

½ HP Water Cooled, Copeland

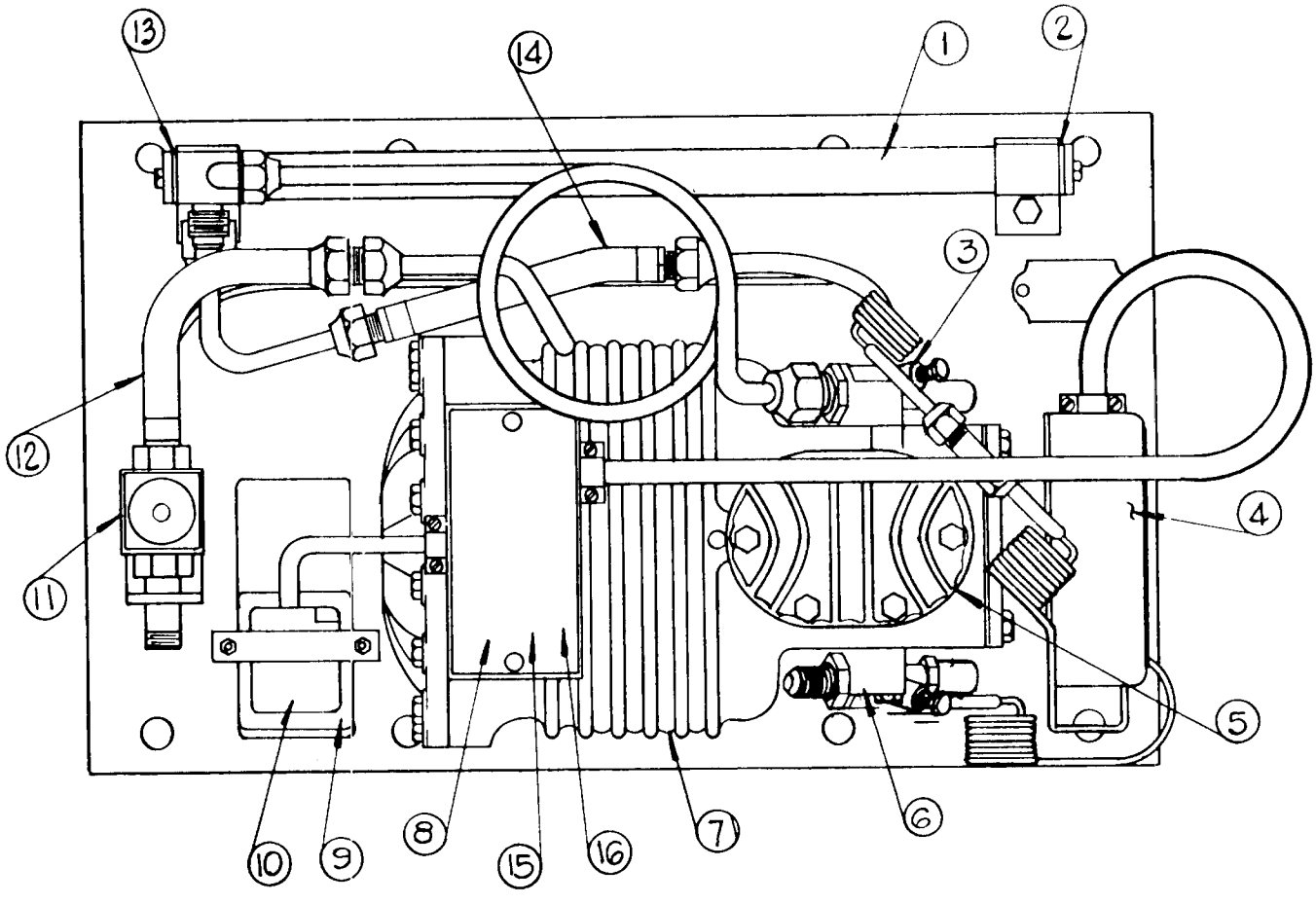

NOTE: Not available as a complete mounted assembly.

ITEM NO.	PART NO.	NAME
1.	18-368	Condenser
2.	18-262	Plain Gasket
3.	18-237	Discharge Service Valve
4.	11-286	High Pressure Control
5.	18-326	Valve Plate & Gasket Kit Assembly (*)
6.	18-337	Suction Service Valve
7.	18-355	Motor Compressor 115/60/1
8.	18-347	Klixon Overload (*)
9.	18-1901-7	Starting Capacitior
10.	18-1903-4	Relay
11.	11-198	Water Valve
12.	18-260	Compressor tc Valve Water Hose
13.	18-263	Manifold Gasket
14.	18-261	Compressor to Condener Water Hose
15.	18-270	Terminal Board (*)
16.	18-241	Terminal Assembly (*)

If Possible Use Copeland Part No When Ordering Capacitors & Relays.

(*) Not Shown

CONDENSING UNIT

½ HP Air Cooled, Copeland

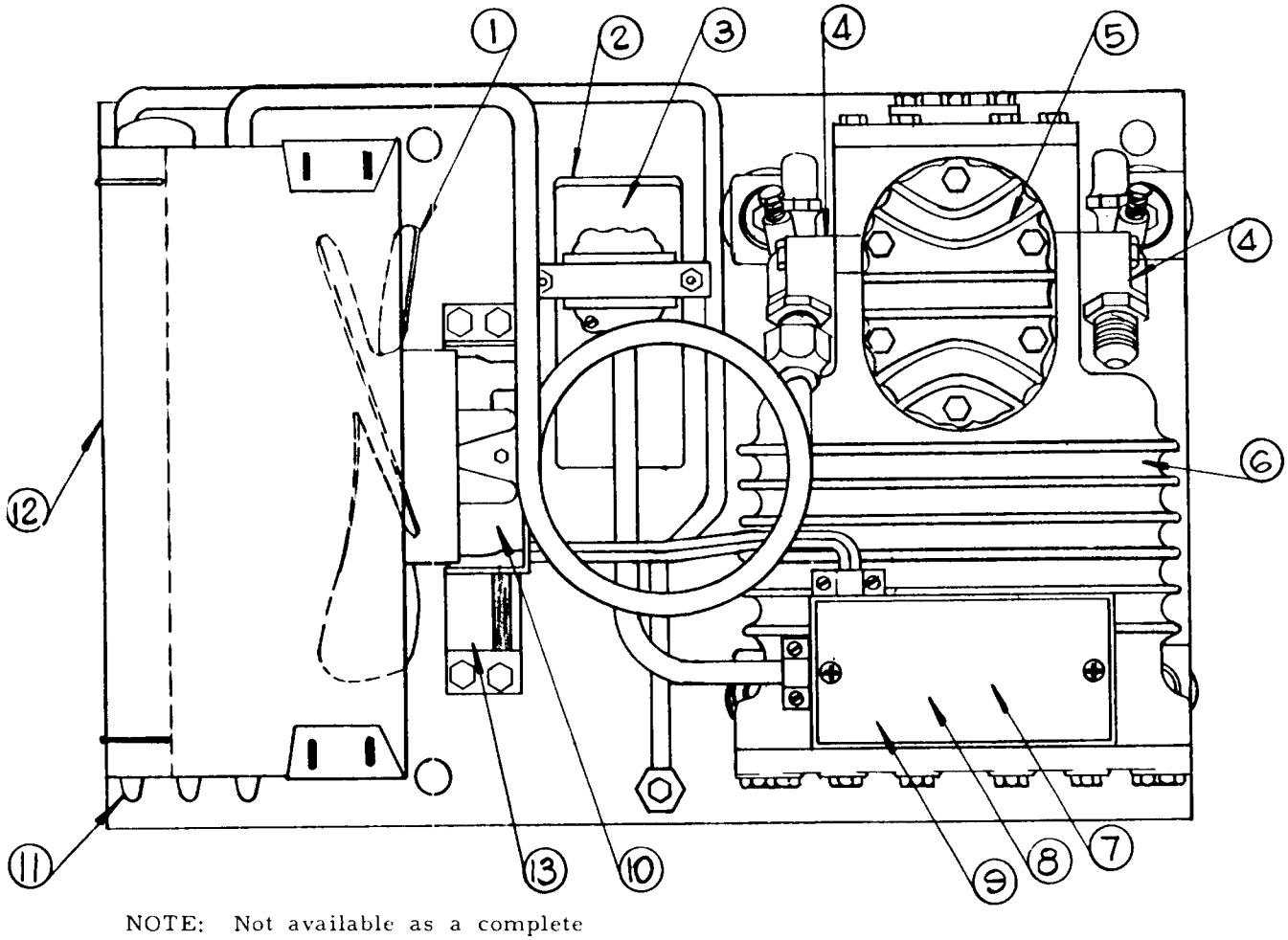

NOTE: Not available as a complete mounted assembly.

ITEM NO.	PART NO.	NAME
1.	18-363	Fan Blade
2.	18-1901-7	Starting Capacitor
3.	18-1903-4	Relay
4.	18-337	Suction, Service Valve (18-237 Discharge Valve)
5.	18-326	Valve Plate & Gasket Kit Assembly (*)
6.	18-325	Motor Compressor 115/60/1
7.	18-347	Overload Klixon (*)
8.	18-241	Terminal Assembly (*)
9.	18-270	Terminal Board (*)
10.	18-333-1	Fan Motor
11.	18-334	Condenser
12.	A-12111	Shroud
13.	18-388	Fan Motor Bracket

NOTE: Overload Not Used On Units That Are Inherent Protected. If Possible Use Copeland Part No. When Ordering Capacitors & Relays

(*) Not Shown

MAINTENANCE INSTRUCTIONS

The following services must be accomplished in a minimum of two (2) times per year on all Icemakers.

1. Check and clean water strainers and float valves. Depress float valve to insure full stream of water.
2. Check water level and machine level. Keep water level below overflow but as high as possible and still not run out of spout opening with machine off. Water should come out of spout with ice at all times. Adjust as required.
3. Clean reservoir and interior of freezer assembly using Ice Machine Cleaner.

   A. 1. Set main switch to OFF.
      2. Remove all ice from storage bin.
      3. Turn off water supply or block float. Drain reservoir by removing overflow tube (gray plastic tube) in reservoir. Replace overflow tube.
      4. Set main switch to ON and pour cleaning solution into reservoir. Do not fill above overflow tube. Models SF2 & SF3 -- Use 6 oz. of Scotsman cleaner and 1 1/2 qt. hot water.
      5. Continue to make ice on solution until the solution is used up and reservoir is empty.
      6. Set main switch to OFF. Remove overflow tube, wash and rinse reservoir, replace overflow tube, turn water on or remove float block.
      7. Turn MAIN SWITCH to ON. Let unit run for at least (15) minutes to flush out any cleaning fluid. Check ice for acid taste -- run until ice tastes sweet.
      8. Turn MAIN SWITCH to OFF. Add hot water to ice bin, using this melt water, thoroughly wash and and rinse all surfaces within the storage bin.
      9. Turn MAIN SWITCH to ON. Replace Service Door. Unit is ready for normal operation.

   B. If heavy mineral deposits on auger and walls, or sediment at inlet to freezer are encountered, clean by pouring strong solution (1/2 acid - 1/2 water) into reservoir and operate drive motor only for agitation. Allow 1/2 hour or longer as required. Drain by disconnecting tygon at water inlet to freezer.

   Note: Cleaning requirements vary according to local water conditions. Visual inspection of the auger before and after cleaning will indicate best procedure to be followed in local areas.

4. Check high and low side pressures. On air cooled models set high pressure between 130 and 145 PSI. On water cooled models, set pressure at 130 PSI. Suction pressure should be above 12 PSI and will range up to 16 PSI depending upon ambient and water temperatures.

5. Set hand reset low pressure control to cut off in event of water supply interruption or low ambient temperature at approximately 5 PSI.

6. Change oil in gear reducer. Use 600W. Grease with BRB No. 1 or equivalent when grease fittings are evident. Particularly important when there is evidence that water has gotten into gear housing. Remove gear reducer to facilitate.

7. Oil drive motor. Use SAE 20 oil.

8. Check top bearing of freezing tube. Pry upward around edge of stamped brass cap. If moisture is around bearing, wipe up and remove grease. Add new grease. Use lubriplate No. 5. To replace cap, insert small wire under cap edge to vent air and remove when cap is on tight.

9. Check and adjust belt tension.

10. Clean air cooled condenser. Inform customer to clean frequently. Always shut off machine when cleaning.

11. Oil condenser fan motor when possible.

12. Check for refrigerant leaks and proper frost line. Should frost out of accumulator approximately two feet.

13. Check for water leaks. Tighten drain line connections. Run water down bin drain line to make sure it is open.

14. Check quality of ice. Ice should be wet when formed but will cure rapidly to normal hardness in the bin.

15. Check thermostat and pressure plate cut off. Micro-switch cuts off only compressor. Bin thermostat should be set at 10° differential and should keep entire machine off at least twenty minutes in high ambients (longer in low) during normal operation. Set cut out at 35°, cut in 45°.

If unit is to be operated in an excessively low ambient a head pressure control kit should be added. Scotsman part no. A-18271-1.

This kit consists of a reverse acting hi-pressure control connected electrically to the fan motor. As the head pressure drops below the cut in setting the control opens allowing the current to pass thru a resistor in the line feeding the fan motor. This slows the shaded pole motor down to approximately 1/4 speed thus increasing the head pressure. When the control cuts in the full voltage again flows to the fan motor allowing it to operate at full speed.

SERVICE ANALYSIS

SYMPTOM	POSSIBLE CAUSE	CORRECTION
Unit will not run	Blown fuse	Replace fuse and check for cause of blown fuse.
	Thermostat set too high	Adjust thermostat. Set between 35° - 45°.
	Loose electrical connection	Check wiring
	Switch in OFF position	Turn switch to ON
	Inoperative master switch	Replace switch
	OFF on the hand reset low pressure control	Push hand reset.
Compressor cycles intermittently	Low voltage	Check for overloading.
	Dirty condensor	Clean.
	Air circulation blocked	Move unit to correct.
	Non-condensable gases in system	Purge off.
Making wet ice	Surrounding air temperature above 100° F.	Correct or move unit to cooler location.
	Under or over-charge of refrigerant.	Recharge with proper amount.
	High water level in water reservoir	Lower to 1/4 inch below overflow pipe.
	Faulty compressor valve plate	Repair or replace.
Low ice production	Loss of refrigerant, under or over-charge of refrigerant	Check and recharge with proper amount of refrigerant.
	Dirty or plugged condensor	Clean condensor
	Low water level in water reservoir.	Adjust to 1/4 inch below overflow.
	Overcharge of oil in system	Check at oil sight glass. Lower to 1/2 sight glass.
	Partial restriction in capillary tube or drier	Moisture in system. Overcharge of oil in system. Remove charge and drier. Replace and recharge system.
	Inlet water strainer partially plugged	Remove screen and clean
	Corroded or stained worm shafts due to water condition.	Remove worm shafts and clean.

SERVICE ANALYSIS

SYMPTOM	POSSIBLE CAUSE	CORRECTION
Machine runs but makes no ice	Loss or under-charge of refrigerant	Check for leaks and recharge.
	Drive motor, gear reducer or drive coupling inoperative	Check. Repair or replace.
	Water not entering freezing chamber	Plugged strainer or supply line. Check and clean. Air lock in gravity feed line. Check and remove air lock.
	Moisture in system	Check and remove charge and drier. Replace and recharge.
	Water seal leaking	Replace seal.
	Defective manual overload switch	Replace switch
Water leaks	Defective water seal	Replace
	Gravity feed line leaking	Check hose clamps.
	Water level in reservoir too high	Adjust to 1/4 inch below overflow pipe.
Excessive noise or chattering	Mineral or scale deposit on auger and inner freezing chamber walls	Remove and manually polish auger, sand inner chamber walls of freezer barrel with approx. 100 grit paper. Use vertical strokes. For lighter concentrations use Scotsman Ice Machine Cleaner periodically.
	Low suction pressure	Add gas to raise suction pressure. Raise head pressure control setting.
	Intermittent water supply	Check and clean water strainer Check gravity feed line for air lock. Remove air lock.
	Water level in reservoir too low	Adjust to 1/4 inch below overflow pipe.
	Misaligned drive coupling	Repair or replace
	Gear reducer low on oil charge	Check oil level and refill to oil level plug.
	Gear reducer loose on frame	Tighten
	Drive motor end-play or worn bearings	Repair or replace
	Motor compressor not floating on springs	Loosen hold-down bolts.
Machine continues to run with full storage bin	Storage bin thermostat not properly set	Reset or replace, 45° in, 35° out.

PARTS LIST

SF-2H

CABINET PARTS	SF-2H	SF-2WSH
Description	Part No.	Part No.
Case Assembly (Less Doors)	A-16077	A-16078
Case Hood Assembly	A-16194	A-15601
Door Slide Assembly	None	A-16208
Sliding Door Assembly	None	A-15559
Left Side Door Assembly	S-6713	S-6713
Rear Door Assembly	A-8741	A-8741
Front Door Assembly	A-15793	A-15793
Top Door Assembly (Hood Side)	A-6530	A-6530
Top Door Assembly (Over Reservoir)	A-7676	A-7676
Moulding Strip 85"	S-6211	None
Moulding Strip 101" Front	None	S-6413
Moulding Strip 42" Rear	None	A-5829
Legs 4 required	A-15803	A-15803
Emblem	15-156	15-156
Plywood Crate	1-648	1-649
Base Trim Strips 2/unit	A-8902-2	None
Ice Storage Tank Assembly	None	A-15774
Leg Levelers	8-522	8-522

Note: For above cabinet parts in stainless steel, add 'S' as a prefix to above part numbers.

WATER CIRCUIT		
Description	Part No.	Part No.
Water Reservoir Assembly	A-8339	A-8339
Reservoir Body	A-13409	A-13409
Stand Pipe Assembly	S-6715	S-6715
Reservoir Cover	A-16012	A-16012
Inlet Valve & Arm Assembly	S-8138	S-8138
Water Deflector	2-1320	2-1320
Rubber Seat	S-6947	S-6947
Water Valve Bracket	A-12869	A-12869
Float Assembly	A-12067	A-12067
Water Supply Strainer	16-162	16-162

PARTS LIST

SF-2H

WATER CIRCUIT	SF-2H	SF-2WSH
Description	Part No.	Part No.
Ice Shortage Tank Drain Assembly, Male	None	A-18090
Drain Assembly Strainer	None	A-6448
'O' Ring	None	2-530
Water-Tygon Tubing		
Reservoir to Freezer		
Per Foot	5-186	5-186
Bin Thermal Bulb Bracket	None	3-1212
Rubber Tubing		
Drip Pan Drain Hose, per foot	13-79	13-79
Fittings and Clamps		
Rubber Tubing Clamp	2-538	2-538
Tygon Tubing Clamp (with 5-186 tube)	None	2-535

FREEZER ASSEMBLY	SF-2H SF-2WSH
Description	Part No.
Freezer Assembly	A-6991-3
Ice Breaker	A-8316
Worm Shaft	2-617
Lock Washer	3-679
Brass Machine Screw (Part of Ice Breaker)	3-732
Freezer Cap	A-8581
Freezer Cap Hook	A-8582
Hex Cap Screw	3-715
Washer - Over Top Bearing	A-6273
Top Bearing	2-646
'O' Ring, Shaft	2-643
'O' Ring, Cap	2-560
Retaining Ring	3-712
Worm Tube, Coil and Housing Assembly	A-6382
Water Seal Assembly	2-929
Bottom Bearing	2-619
Bearing Retainer	A-10591
Worm Tube Nut	A-6153
Drip Pan Assembly - Rubber	13-208
Refrigerant Drier	2-544

PARTS LIST

ELECTRICAL COMPONENTS	SF-2H SF-2WSH
Description	Part No.
Manual Overload Switch	See Page 44
Ranco - Manual Re-set Lo Pressure Control	11-273
White Rodgers Bin Thermostat	11-99
Penn Reverse Acting Head Pressure Control - Used on Air Cooled Models only. In kit A-18271-1	11-264
Lectrohm Resistor	12-474

CONDENSING UNITS	
Description	Part No.
Complete Condensing Unit - Air Cooled 115/60/1	
Motor Compressor Only 115/60/1	18-325
Valve Plate and Gasket Kit	18-326
Relay	18-1903-4
Starting Capacitor	18-1901-7
Condenser Fan Only	18-363
Condenser Motor Only	18-331-1
Mounting Bracket, Condenser Fan Motor	18-388
Air Cooled Condenser	18-334
Condenser Shroud	A-12111
Klixon Thermal Overload	18-347
Electrical Terminal Assembly, Includes three complete terminals & board	18-241
Complete Condensing Unit - Water Cooled 115/60/1	
Motor Compressor Only 115/60/1	18-355
Valve Plate and Gasket Kit	18-326
Cylinder Head	18-329
Relay (115/60/1)	18-1903-4
Starting Capacitor (115/60/1)	18-1901-7
1/2 H.P. Water Cooled Condenser	18-368
Water Cooled Condenser Gasket - Plain End	18-262
Water Cooled Condenser Gasket - Manifold End	18-263
Klixon Thermal Overload 115/60/1	18-347
Electrical Terminal Assembly, Includes 3 Complete Terminals & Board	18-241
Compressor to Water Valve Hose Assembly	18-260
Compressor to Condenser Hose Assembly	18-261
Water Regulating Valve - Penn	11-198
Ranco Hi-Lo Dual Pressure Control	11-286

PARTS LIST

DRIVE ASSEMBLY	SF-2H SF-2WSH
Description	Part No.
Drive Motor -- 1/4 HP -- 115/60/1	12-864-1
Drive Motor -- 1/4 HP -- 230/60/1	12-864-2
Pulley -- 2 1/2"	2-1462
Pulley -- 8"	2-1463
V Belt	13-165
Coupling Half Bottom	S-7716
Coupling Half Top	A-6165
Inserts (Coupling)	13-131
Set Screws (Coupling)	3-384
Cap Screw (Coupling) (2)	3-206
Clamp (Coupling) (2)	S-8496
Rubber Shield	13-152
Gear Reducer	2-337
Gear Reducer Repair Kit	A-6398
Slow Spead Bearing (2)	2-580-26
High Speed Bearing (2)	2-337-23
Slow Speed Oil Seal	2-580-24
High Speed Oil Seal	2-768-20
High Speed Gasket	2-768-25
Slow Speed Gasket	2-580-28
Slow Speed Bronze Worm Gear and Shaft	2-337-20
High Speed Gear and Shaft	2-337-21

MISCELLANEOUS	
Description	Part No.
Ice Machine Cleaner -- Per Case	19-343-1
Ice Scoops	2-540
Paint -- touch up cans	10-153
Gear Reducer Oil -- 600W	19-359
Upper Bearing Grease -- Lubriplate No. 5	19-309

OVERLOAD HEATER CHART FOR MANUAL STARTER SWITCH

QUEEN PART NO. 12-530, GE PART NO. CR101H1, QUEEN PART NO. 12-1221 AND WESTINGHOUSE PART NO. MST02SN

Queen Motor No.	Manufacturer	Electrical Characteristics	Manuf. Part No.	Queen Part No. for G.E. Overload	Manuf. Part No.	Queen Part No. For Westing-house Overload	Manuf. Part No.
12-864-1	G. E.	115/60/1 ¼ HP	KC35KG312	12-708-29	123H6.25A	12-1221-27	MSH6.0A
12-864-1	Westinghouse	115/60/1 ¼ HP	S309P520	12-708-27	123H5.29A	12-1221-27	MSH6.0A
12-864-1	Century	115/60/1 ¼ HP	CSF48HKA	12-708-26	123H4.86A	12-1221-25	MSH5.0A
12-864-2	G. E.	230/60/1 ¼ HP	KC35KG319	12-708-21	123H3.17A	12-1221-20	MSH3.1A
12-864-2	Westinghouse	230/60/1 ¼ HP	S309P334	12-708-20	123H2.91A	12-1221-19	MSH2.8A
12-864-2	Century	230/60/1 ¼ HP	CSF48HKA	12-708-18	123H2.45A	12-1221-19	MSH2.8A
12-864-7	G. E.	208/60/1 ¼ HP	KC35KG317	12-708-22	123H3.46A	12-1221-21	MSH3.4A
12-864-7	Westinghouse	208/60/1 ¼ HP	S309P334	12-708-19	123H2.67A	12-1221-18	MSH2.5A
12-864-7	Century	208/60/1 ¼ HP	CSF48HKA	12-708-20	123H2.91A	12-1221-19	MSH2.8A
12-649-1	Westinghouse	115/60/1 1/3 HP	311P096	12-708-33	123H8.73A	12-1221-31	MSH8.8A
12-649-1	Century	115/60/1 1/3 HP	CSJ56-KKA	12-708-29	123H6.25A	12-1221-27	MSH6.0A
12-649-1	G. E.	115/60/1 1/3 HP	5KC42JG24	12-708-30	123H6.80A	12-1221-28	MSH6.6A
12-649-2	Westinghouse	230/60/1 1/3 HP	311P061	12-708-25	123H4.46A	12-1221-24	MSH4.5A
12-649-2	Century	230/60/1 1/3 HP	CSJ56-KKA	12-708-21	123H3.17A	12-1221-20	MSH3.1A
12-649-2	G. E.	230/60/1 1/3 HP	5KC42JG2	12-708-22	123H3.46A	12-1221-21	MSH3.4A
12-649-7	Century	208/60/1 1/3 HP	CSJ56-KKA	12-708-22	123H3.46A	12-1221-21	MSH3.4A
12-649-7	G. E.	208/60/1 1/3 HP	5KC42JG31E	12-708-22	123H3.46A	12-1221-21	MSH3.4A
12-649-7	Westinghouse	208/60/1 1/3 HP	311P061	12-708-24	123H4.10A	12-1221-31	MSH8.8A

NOTE: The overloads as listed are in accordance with Underwriters requirements. Any deviation will be in violation.

TABLE OF CONTENTS

Table of Contents 1
Mechanical Specifications 2
Specifications — with Storage 3-4
Specifications 5
Preparation for Installation 6
Installation Limitations 7
Selecting Location 8
Installation 9-10
Wiring Diagram — Water Cooled 13
Wiring Diagram — Air Cooled 14
Final Check List 15
Service:
- Starting Machine 16
- Refrigerent Charge 16
- Water System 17
- Electrical System 17

Disassembly Procedures:
Cabinet Assy 18
- Water Reservoir 18

Freezer Assy
Disassembly Procedures:
- Cabinet Assy 18
- Water Reservoir 18
- Freezer Assy 19
- Freezer Worm Shaft 19

Water Seal 19
- Electrical Components 20
- Freezer Gearmotor 20
- Compressor 20

Parts Breakdown
- Control Box 21
- Reservoir Assy 22
- Gear Motor Assy 23
- Freezer Assy 24
- Chassis Assy - Water Cooled 25
- Chassis Assy - Air Cooled 26
- Case Assy With Storage - Scotsman 27
- Case Assy With Storage PH-2, CC2A 28-29

Service Analysis 30-31
Maintenance Instructions 32

THIS PAGE
INTENTIONALLY
LEFT BLANK

MECHANICAL SPECIFICATIONS

	SF-2A	SF-2WA
Compressor	3/4 HP	3/4 HP
Condenser	Air Cooled	Water Cooled
Refrigerant	27 oz. R-12	23 oz. R-12
Refrigerant Control	Capillary Tube	Capillary Tube
Power Consumption - Amps.	19.45	18.60 Voltage - Std. Unit
Voltage-Std Unit	115V - 60 Hertz	115V - 60 Hertz
Gear Drive Motor	1/4 HP	1/4 HP

*Copelaweld model No. RSL2-0075-1AA-218

DIMENSIONS	SF-2WSA
Width	49-1/4"
Depth	24-1/2"
Height less legs	43-1/2"
Height w/legs	49-1/2 to 50-1/4"
Shipping Weight	415 lbs.

SCOTSMAN®
COMMERCIAL ICE SYSTEMS/HOME ICE MAKERS

SF 2 series flaker with storage

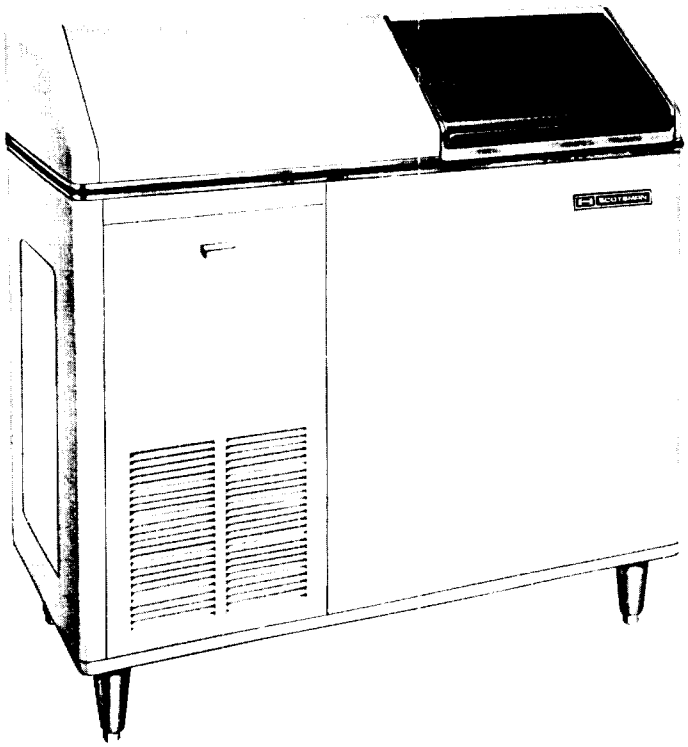

(Leg Kit Optional)

If you need volume ice production and storage in a single unit, the Scotsman SF2 Series Flaker will provide both. Available with either air or water cooled condensers to meet your installation requirements. The SF2 produces flake ice made by Scotsman's unique freezing method. Where sparkle and clean refreshing color are necessary, as in a salad bar, Scotsman dry, hard bits of ice are a perfect solution. They melt slowly, last a long time in food displays and present an attractive setting. Access to ice is convenient through the large bin opening. The access door slides up, out of the way, and closes to a tight seal. A sensitive thermostat inside the bin shuts the machine off when bin is full and re-starts it automatically when ice is removed.

Scotsman is the largest manufacturer of ice making equipment . . . furnishing dependable, efficient and economical ice systems around the world.

ice making capacity

Daily Ice Capacity is directly related to condenser air inlet temperature, water temperature, and age of machine.

NOTE: To keep your SCOTSMAN FLAKER performing at it's maximum capacity, it is necessary to perform periodic maintenance as outlined in this manual.

SF 2 series flaker with storage

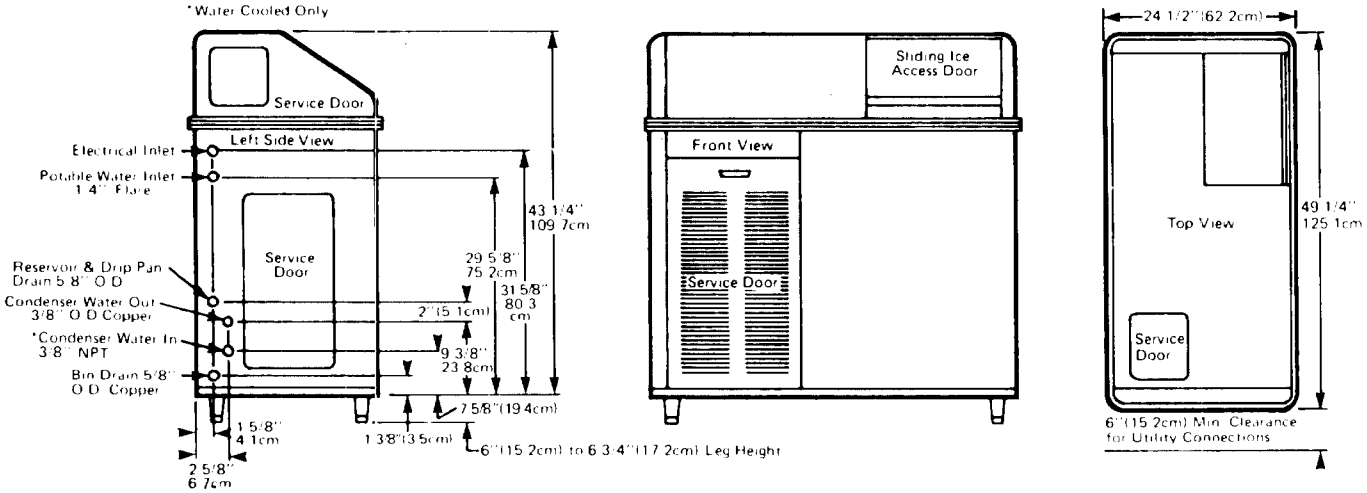

Storage Bin: 350 lbs. (159 kg)
Height: 43-1/4" (109.7 cm) w/o legs
Width: 49-1/4" (125.1 cm) **Depth:** 24-1/2" (62.2 cm)
Shipping Wt: 388 lbs. (175 kg)

OPTIONAL LEG KIT

Four metal legs screw into mounting plates on cabinet base. Provide 6" minimum height including adjustable leveling foot.N.S.F. approved.

KLP2E: Black enamel finish. Recommended for enamel cabinets.

KLP2S: Nickel plated, brushed metal finish with stainless steel foot. Recommended for stainless steel cabinets.

IMPORTANT OPERATING REQUIREMENTS

Electrical Voltage: Machine requires voltage indicated on rating name plate. Failure caused by improper voltage are not considered factory defect.

Ambient Temperature: Machine is not designed for outdoor installation. Machine will not operate when air temperature is below 50° F or above 100° F.

Water Pressure & Temperature: Requires 20-lbs. flowing water pressure, without interruption. Machine will not operate when water supply temperature is below 40° F or above 100° F.

Model Number	Condensing Unit	Compressor Horsepower	Finish*	Shp. Wt. lbs./kgs.
SF2WSA	Air	3/4	Enamel	388/175
SF2WSASS	Air	3/4	Stainless Steel	388/175
SF2WWSA	Water	3/4	Enamel	388/175
SF2WWSASS	Water	3/4	Stainless Steel	388/175

*Sandalwood baked enamel finish or all heavy guage stainless steel.

Basic Electricals		Max. Oper. Amps	No. of Wires	Max. Fuse Size
Air-Cooled:	115/60/1	19.5	2	30
Water-Cooled:	115/60/1	18.6	2	30

We reserve the right to make product improvements at any time. Specifications and design are subject to change without notice.

SPECIFICATIONS

SCOTSMAN Flakers are designed for restaurants, super markets, soda fountains, hospitals, bakeries, fish markets, poultry stores, packing plants, etc. It is the finest Ice Maker on the market today. It will work 24 hours a day for you, or only as needed. It produces the highest quality ice available at any price.

SCOTSMAN Flakers are easily installed requiring only standard water, drain and electrical connections.

ATTRACTIVE COMPACT CABINET. Sandlewood or stainless steel finish with chrome trim, rounded corners, and removable panels for easy access to mechanical parts. Adjustable and removable legs are under cabinet.

SEALED REFRIGERATION SYSTEM. Provides quiet, efficient operation of the machine. Compressor motor is internally spring mounted for quiet operation. Compressor motor is covered by a limited 5-Year Warranty.

HOW IT WORKS. An exclusive patented ice-making system, wherein water in the constant level float reservoir is fed to the bottom end of the freezing cylinder and turns to ice on the inside of this cylinder. Ice from the refrigerated walls of this cylinder is extruded past the ice breaker at the top of the cylinder through a side opening by means of a stainless steel auger driven by a gearmotor drive.

All SCOTSMAN Mdels SF2A are completely automatic. A manual switch in control box starts the machine, and from then on, produces flakes automatically. When the storage bin fills, the machine automatically shuts off and starts up again when ice is taken from the storage compartment.

INSTALLATION INSTRUCTIONS

The following installation instructions were written for use by an authorized tradesman only, not the user or customer. We suggest you call your local authorized Scotsman Service Agency for hook-up, start-up, and check out. He's listed under "Ice Making Machinery & Equipment" in your telephone book, yellow pages.

*Standard Models SF-2 do not include legs. Sales department carries leg package under accessory items.

PREPARATION FOR INSTALLATION

1. UNCRATING
   The entire unit comes in one carton. Upon delivery a visual inspection of the carton should be made and any severe damage noted should be reported to the delivering carrier and a concealed damage claim filed subject to internal inspection with carrier representative present. Remove carton by cutting through sides of carton into the bottom skid. Next remove (4) four bolts from underside of skid which connect to complete unit base. Unit now free.

2. Remove all service doors and panels.

3. Remove water reservoir cover and take out paper packing around float ball.

4. If optional legs are used, install at this time being sure to properly level unit using adjustable leg levelers.

5. Remove water strainer from storage bin for installation on unit or in water supply line feeding unit.

7. Open electrical control box and prepare for hook up, use knock outs, cord connectors etc. Then check unit nameplate voltage against building source voltage and make sure they correspond. Caution - Improper voltage supplied to units will void your warranty protection.

8. Select unit location prior to hook up of water drain and electricals in accordance with local and national codes. Minimum room temperatures is 50° Fahrenheit. On air cooled models, select well ventilated location.

9. Remove Users manual from storage bin, then wipe bin clean with damp cloth.

10. Fill out registration card completely including model and serial numbers as taken from serial plate found behind front service panel and forward to Scotsman Factory using self mailing card.

INSTALLATION LIMITATIONS

ELECTRICAL

1. Scotsman, like most manufacturers, purchases electrical motors that are rated to operate within 10% variance above or below nameplate ratings.

2. Improper voltages applied to Scotsman equipment can cause premature failures and burnouts. Failures of this type are not considered as factory fault or defect.

AMBIENT

WARNING — This machine is not designed for outdoor installations. This machine will not operate when air temperatures are below 50° F. or above 100° F.

This unit was not fabricated nor intended to be installed outdoors.

WATER

3. Scotsman Ice Systems require 20 pounds flowing water pressure to operate satisfactorily. Pressures lower than 20 pounds or interruptions in the water supply can cause serious mechanical damage to this product.

   This machine will not operate when water supply temperatures are below 40° F. or above 100° F.

SELECTING LOCATION

UNDER BAR INSTALLATIONS: Locate, if possible, so left end panel is accessible. Locate so proper circulation can be attained around the unit and behind it at least four inches.

KITCHEN INSTALLATIONS: As a rule, the kitchen is not the most practical place to install an air-cooled condensing unit, as grease is almost always present and makes cleaning of the condensing unit difficult. So not locate near range or steam table or other heating devices that may be used in the kitchen.

STOREROOM INSTALLATIONS: Be sure storeroom is of adequate size and properly ventilated. A small, poorly ventilated room will greatly impair the efficiency of the unit. the storeroom must be kept above 50 degrees in the winter months.

BASEMENT INSTALLATIONS: Locate machine in the coolest place. Locate machine in a dry place. Keep away from furnace and boiler room. Keep away from service chutes and runways; also coal or other dust of any kind. If the machine is set over a floor drain, block the machine up enough to level it. If there is any chance of basement flooding, block the machine up enough to eliminate any possible damage to the machine.

WATER SUPPLY: The recommended water supply line is 1/4 inch I.D. copper tubing for SF-2. Connect to cold water supply line and machine. A water strainer must be installed with the unit and mounted with clean-out plug down. Locate the strainer next to the machine with the arrow in the direction of the flow. Most plumbing codes also call for double check valves in the supply water line, particularly for water-cooled models.

On air-cooled models the water supply line connects to the 1/4 inch flare fitting on the machine. On water-cooled models connections are made to a 3/8 inch male pipe nipple inside of the machine compartment. Incoming water goes through the water regulating valve first and then to the water-cooled condenser. Observe arrow on water regulating valve. Water supply must be installed to conform with local code. In some cases a licensed plumber and/or a plumbing permit will be required.

DRAIN: The recommended drain from the bin is 5/8 inch ODcopper tubing. Must be run to an open trapped and vented drain. If drain is a long run, allow 1/4 inch pitch per foot. Drain must be installed to conform with local code. Run separate line for condenser discharge water on water-cooled models.

INSTALLATION

ELECTRICAL CONNECTIONS:

SF2A
115 Volts, 60 Hertz, 1 Phase
30 Amp. Circuit

Suitable wire should be used for electrical hook-up. Conductors with a solid ground wire are desirable.

Be certain that the ice system is on its own circuit and individually fused. The maximum allowable voltage variation should not exceed 10 per cent of the nameplate rating even under starting conditions. Low voltage can cause erratic operation and may be responsible for serious damage to the overload switch and motor windings.

All external wiring should conform to the National Underwriters and local Electrical Code requirements. Usually an electrical permit and the services of a licensed electrician will be required.

ELECTRICAL INSTALLATION:

SF2A

Compressor	3/4 HP	Copelaweld: RSL2-0075-1AA-233 2 pole, 3500 RPM
	Voltage	115
	Amp. rating F.L.A.	14.0
	Hertz	60
	Phase	Single
Gear Drive Motor	1/4 HP	Queen Products
	Voltage	115
	Amp. Rating	4.6
	Hertz	60
	Phase	Single Thermally Protected

INSTALLATION PRACTICE

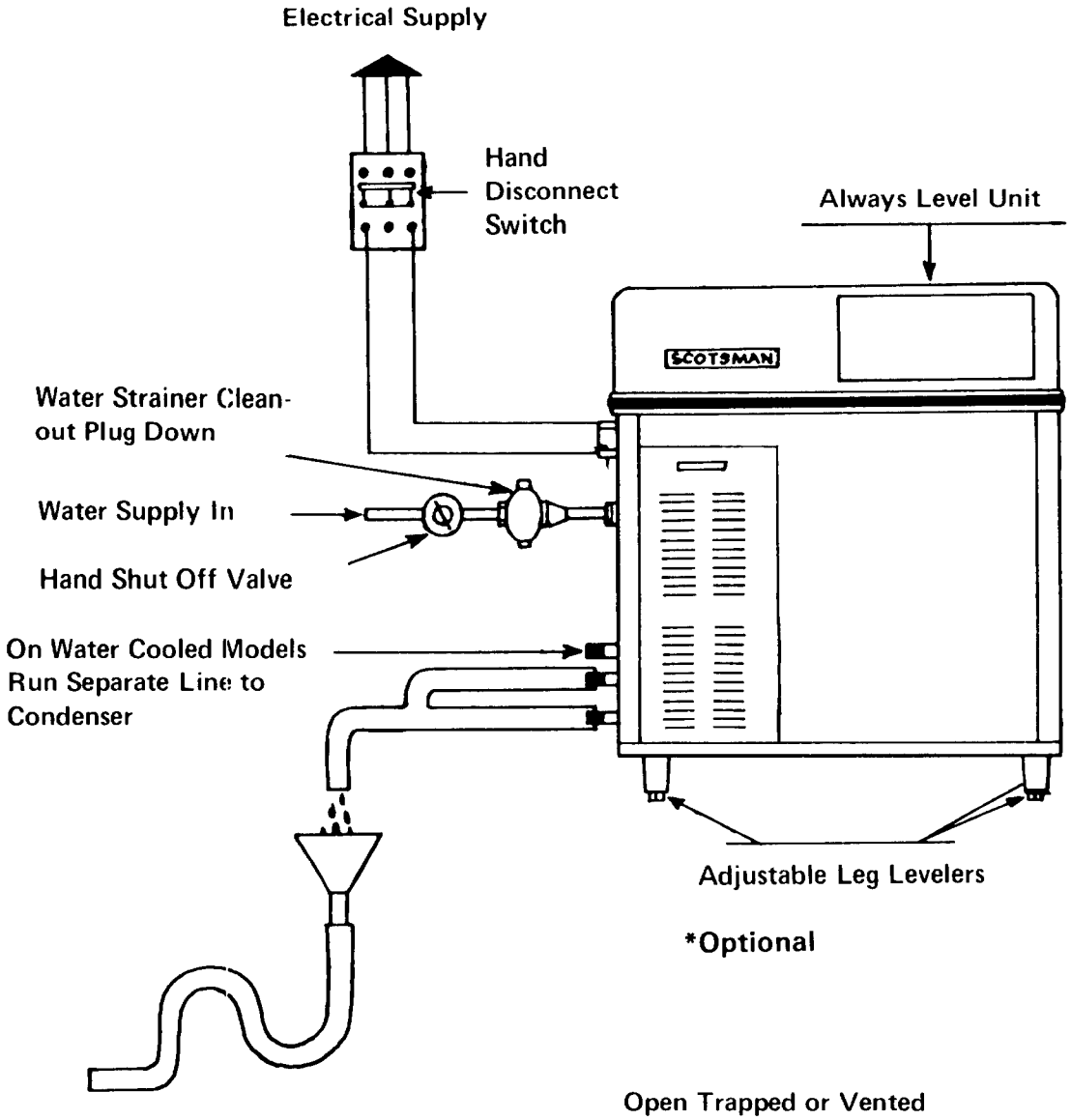

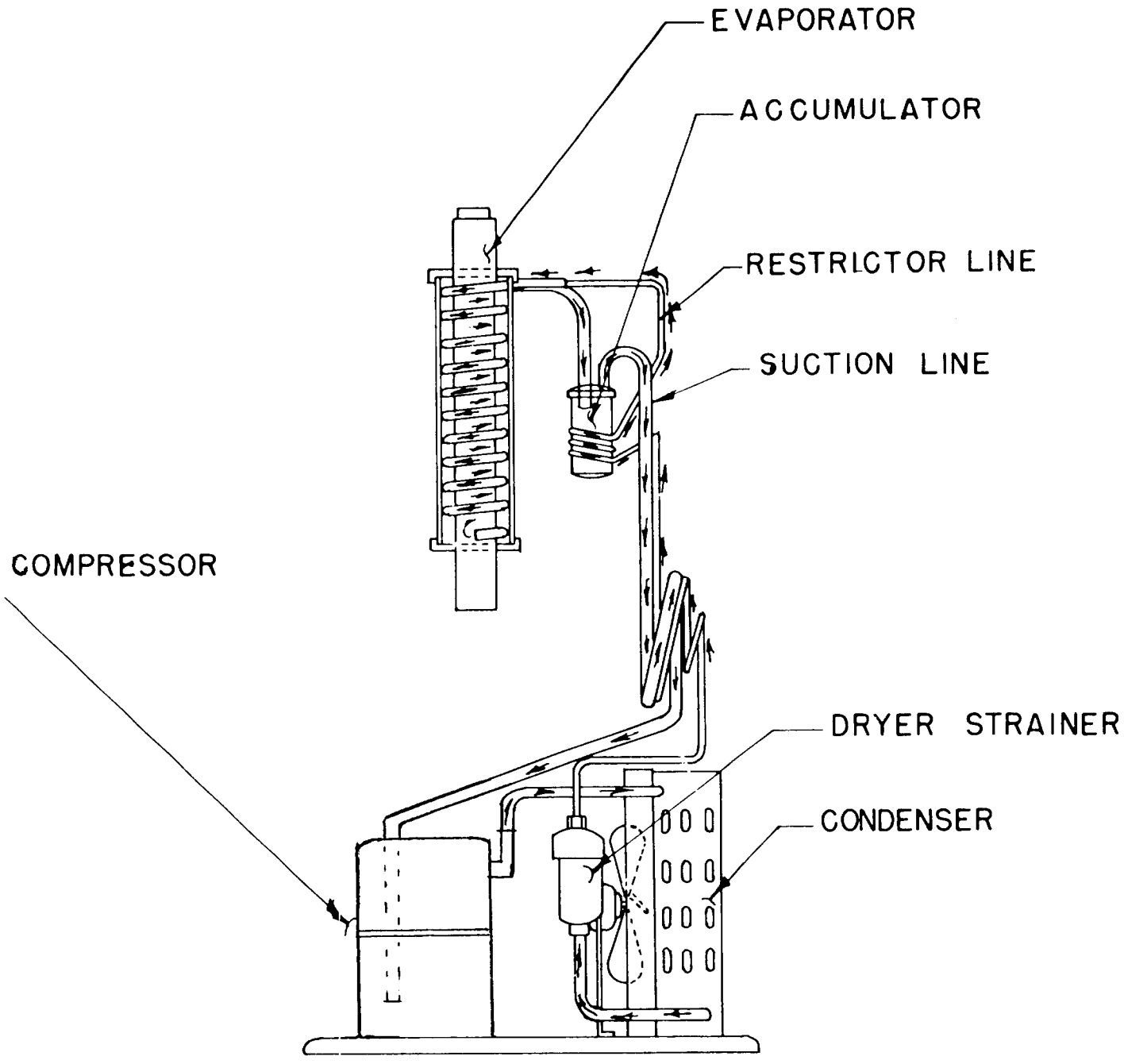

REFRIGERATION CYCLE SF-2 ALL MODELS

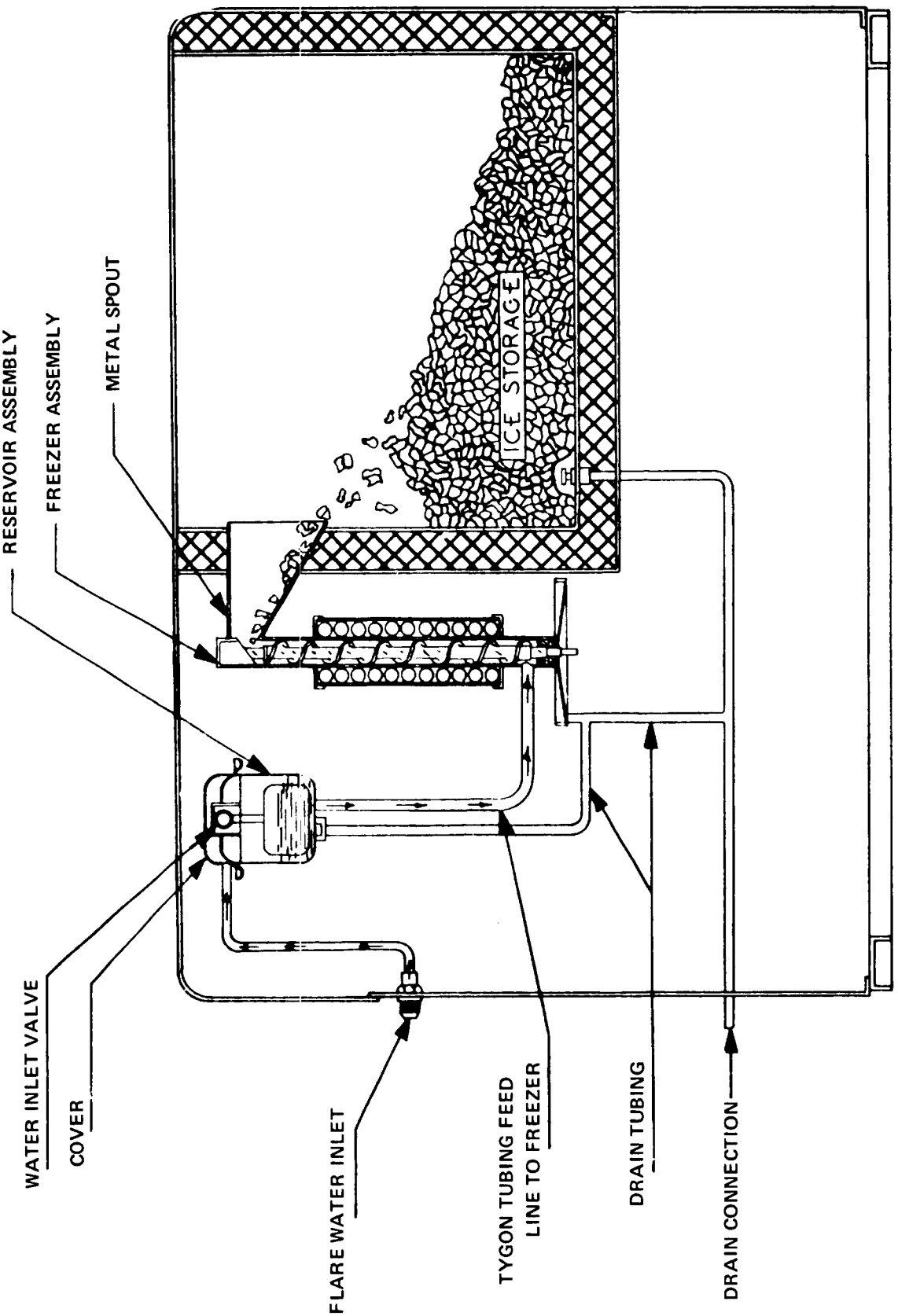

WATER SCHEMATIC
SF-2WSA

WIRING DIAGRAM
SF2A - Water Cooled

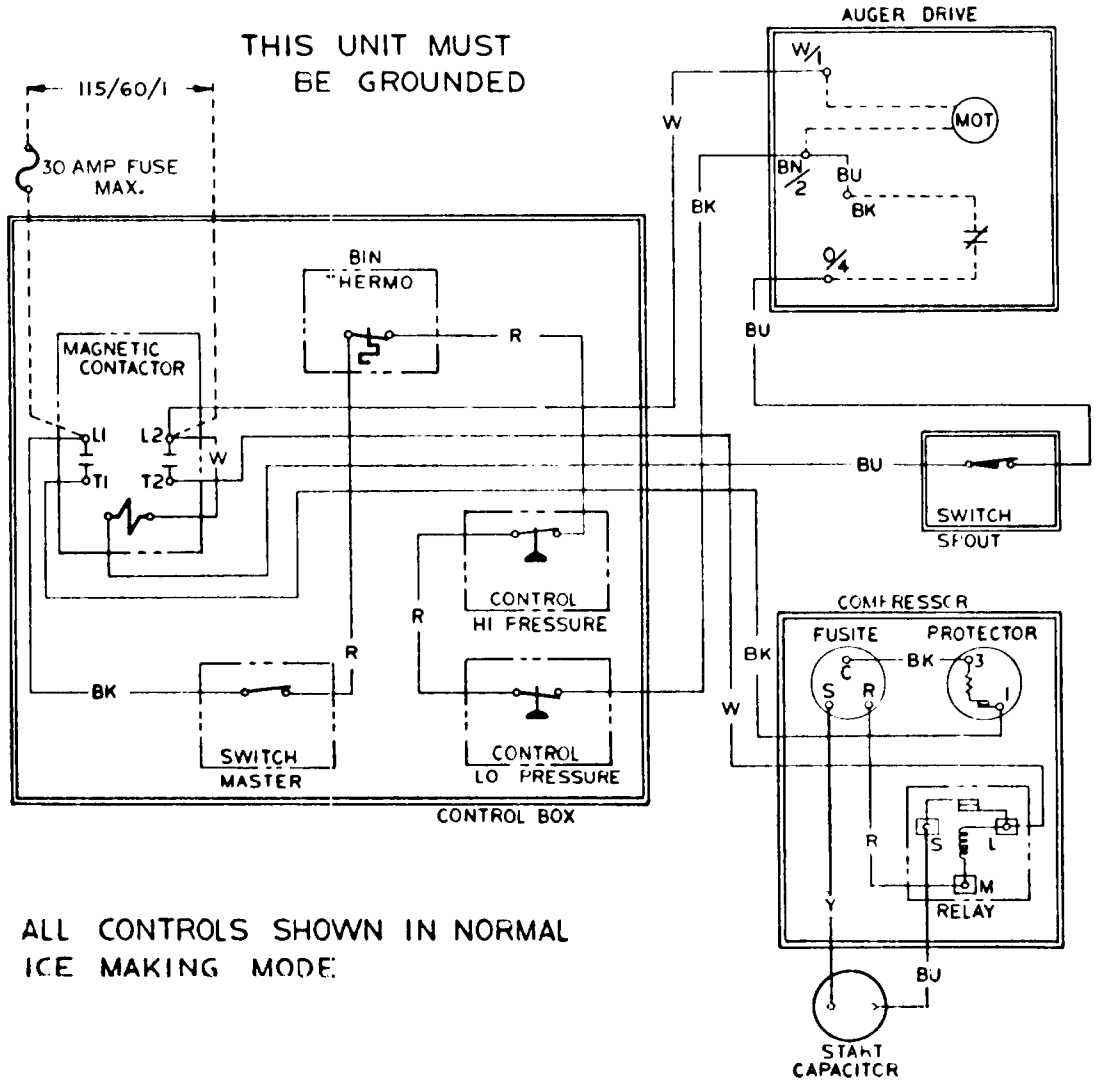

ALL CONTROLS SHOWN IN NORMAL ICE MAKING MODE.

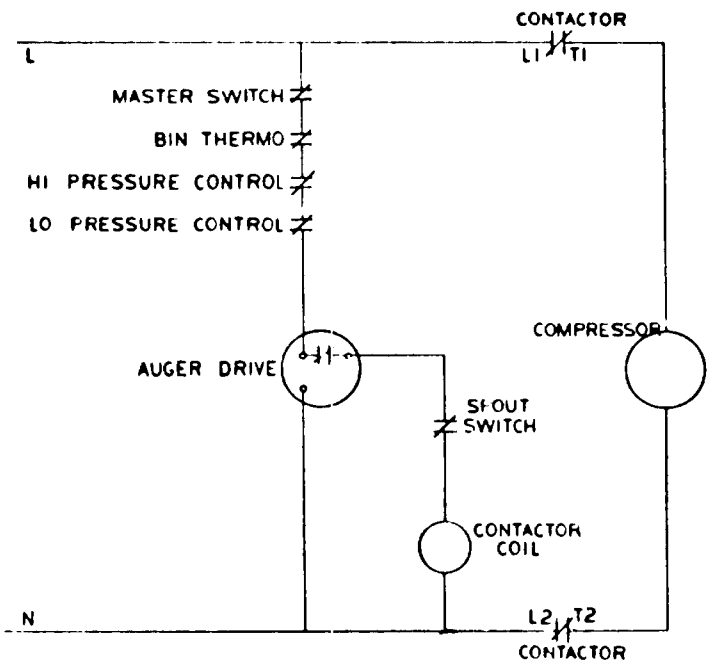

A25358-001

WIRING DIAGRAM
SF2A - Air Cooled

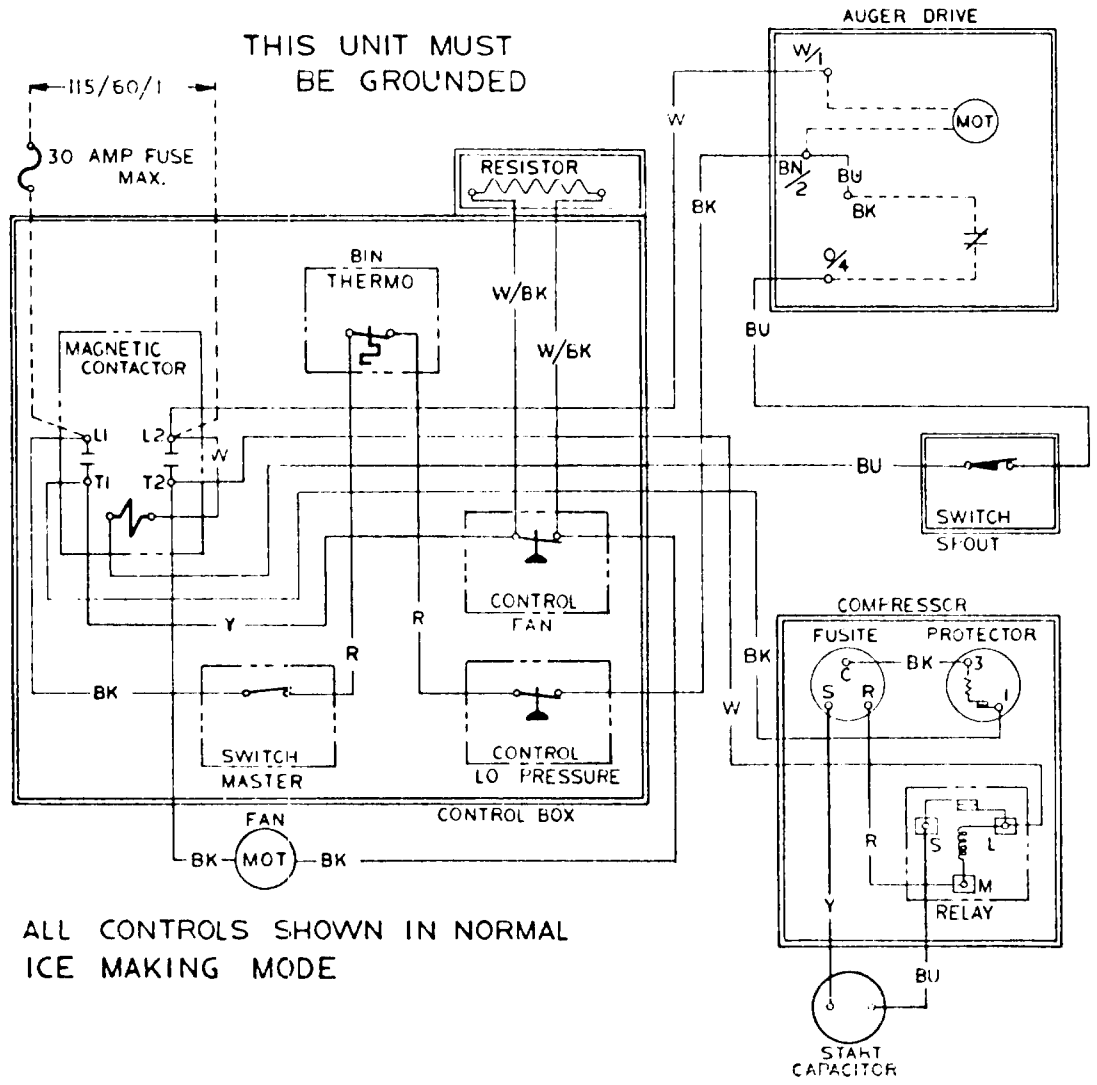

ALL CONTROLS SHOWN IN NORMAL ICE MAKING MODE

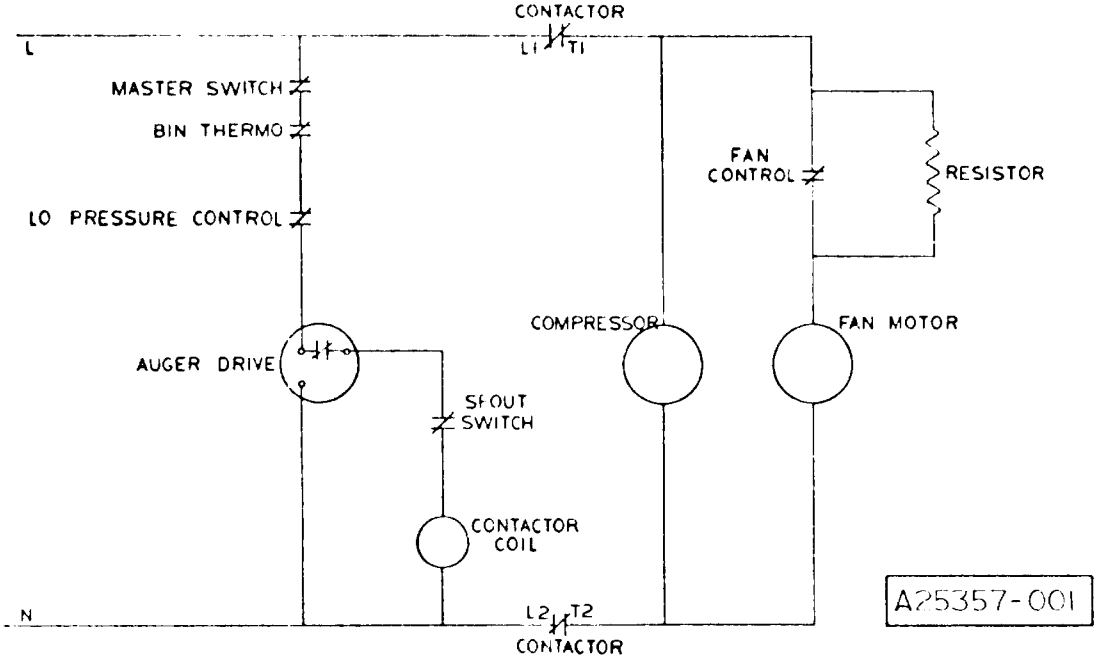

FINAL CHECK LIST

1. It is the unit level? (IMPORTANT)
2. Have all electrical and piping connections been made?
3. Has the voltage been tested and checked against the nameplate rating?
4. Is the water supply valve open and the electric power on?
5. Is the water reservoir filled and shut off?
6. Have unit and bin been wiped clean?
7. Has owner been given the users manual, and has he been instructed on how to operate the machine?
8. Have the installation and warranty cards been filled out and mailed to the factory?
9. Check all refrigerant and conduit lines to guard against vibration and possible failure.
10. Installed in a well ventilated room where ambient temperatures do not fall below 50° Fahrenheit.
11. Is unit installed with a minimum 4" air space around sides and back?
12. Has water supply pressure been checked to insure at least a minimum pressure of 20 pounds?

SERVICE

STARTING THE MACHINE: When the machine is placed and inspected as per instructions and all plumbing and electrical connections are completed and tested, turn on the water supply. Be sure the float cover is removed to check on the float operation and water level in the water reservoir. Be sure the water reservoir is filled before starting the machine. Water level should be 1/4 inch below the reservoir overflow.

When this is completed, turn on the manual switch on the front of the cabinet and the machine is in automatic operation. In two to three minutes ice will start dropping off the worm shaft and out the ice chute. Let the machine operate for at least 20 minutes and check for any excess noise other than the normal compressor noise. Test the ice storage control bulb by holding a handful of ice around the bulb until the machine shuts off. One minute should be normal for the control to function. Within minutes after the ice is removed, the bulb will warm up and the machine will automatically start up. The control is factory set and should not be reset until this test is made. Normal setting of this control should be approximately 35 degrees cut-out and 45 degrees cut-in.

Check pressure settings at the time of start-up. On the water-cooled models set the head pressure at 135 PSI. On the air-cooled models the head pressure will vary between 130 and 145 PSI head pressure. The frost line should extend out of the accumulator if properly charged with refrigerant and suction pressure will range between 14 and 16 PSI with 50° F inlet water.

Check the hand reset low pressure control setting. This safety device should be set at approximately 5 PSI below normal operating suction pressure and should cut off in case of interruption in water supply, shortage of refrigerant, low ambient or any other cause of abnormally low suction pressure.

Explain the machine to the owner, showing him how the machine works and go over the owner's instruction sheet with him. Answer all the owner's questions about the machine, and do not leave with any doubt in the owner's mind about the machine, how to operate it or where to reach you should he need service on the machine. Call back the next day to check the machine again and answer any other questions the owner may have.

Service gauge connections are available on both high and low side service valves.

To install gauges to any of these connections, use lines with tire type service valve adapter. Purge free of any non-condensable gases before starting any test operation.

REFRIGERANT CHARGE: The below refrigerant charge is approximate. when charging, set at 135 PSI head pressure and charge so that the frost line extends out of the evaporator and into the accumulator after fifteen minutes of operation.

Model	Freon Charge
Air-Cooled	27 oz. R-12
Water-Cooled	23 oz. R-12

SERVICE

WATER SYSTEM: A water level is maintained in the water reservoir by a float operated valve. Water is piped from the water reservoir to the freezing chamber by a gravity feed line maintaining an equal water level.

The water reservoir is equipped with an air gap to prevent back siphoning and meet all health codes.

The water level in the water reservoir is adjusted by bending float arm. The water level should be set 1/4 inch below the moulded in overflow well.

A water strainer must be installed in the supply line. Use strainer sent with machine.

ELECTRICAL SYSTEM: The electrical circuit consists of condensing unit, gear motor, hand reset combination or low pressure cut-out, storage bin thermostat, on and off switch, micro (safety) switches and head pressure control.

A. Condensing Unit. The compressor terminal box houses the motor compressor terminal block, and the overload Klixon. To gain access to the terminal box, remove the two screws holding the beveled metal cover. The starting capacitors, running capacitors and starting relays are housed and fastened to the unit chassis frame.

B. Gear Motor. All Model SF2A series flakers are equipped with a direct dirve gearmotor to freezer shaft. 1/4 Housepower motors are split phase, output shaft turns at 10 R.P.M. manufactured by Queen Products.

C. High Pressure Cut-Out. (Manual reset on water cooled models only.) Factory settings 250 PSI on high pressure. This control prevents operation at abnormal pressures.

D. Low Pressure Cut-Out. (Hand reset on all air cooled models.) Control is located in the control box. Factory settings cut-out at 4 PSI. Safety device to cut off machine and keep it off in case of water supply failure, loss of refrigerant, low ambient temperature or other causes of low pressure.

E. Storage Bin Thermostat. Control located on frame assembly. Factory settings 35° cut-out, 45° cut-in. This control shuts off complete machine when ice in storage bin builds up to control.

F. Micro Safety Switch. The micro switch is located in the top of the ice chute. The switch is operated by a plate in top of the ice chute by the ice backing up in the chute should the thermostat fail. Micro switch will shut off the condensing unit only, when operated.

G. ON-OFF SWITCH: A manual on-off switch is located in control box.

Air cooled Models

H. Head pressure Control Kit. A reverse acting high pressure control is used and connected electrically to the fan motor. As the head pressure drops below the cut-out setting, the control opens allowing the current to pass entirely through a resistor in the line feeding the fan motor. This slows the shaded pole motor down to approximately 1/4 speed thus increasing the head pressure. When the control cuts in the full voltage again flows directly to the fan motor allowing it to operate at full speed. This feature protects unit against low ambient conditions.

REMOVAL & INSTALLATION OF PARTS

CABINET TOP (HOOD)

1. Remove two back end screws of chrome strip.
2. Pull out tape concealing screws.
3. Remove balance of screws in chrome strip.
4. Lift off hood.

HOOD SERVICE DOOR TOP

1. Remove screws from edges.
2. Lift out door.

CABINET SIDE SERVICE DOOR

1. Remove four screws on edges.
2. Lift out door.

CABINET FRONT SERVICE DOOR

1. Remove 2 screws on edges.

CABINET REAR SERVICE DOOR

1. Remove four screws on corners of rear service door.
2. Pull door out.

ICE STORAGE DOOR

1. Lift door up, slide back 6". Remove thumb screw that attaches safety lanyard to back of door.
2. Door will now slide out. Lift front edge slightly to clear hood lip.

ICE STORAGE DOOR FRAME

1. Remove six screws at bottom and sides.
2. Remove screw in frame back.
3. Frame will now lift out.

WATER RESERVOIR

1. Remove service panel in cabinet hood.
2. Turn off water supply and drain reservoir.
3. Remove 1/4 inch copper inlet water line.
4. Remove 1/2 inch plastic feed line to freezer.
5. Remove two screws holding reservoir bracket to wall.
6. Lift out reservoir.
7. To replace, reverse procedure.

SERVICE

FREEZER ASSEMBLY

1. Remove cabinet top (Hood). (See Removing and Installing Cabinet Parts.)
2. Shut off water supply to unit, remove top and left side service panels.
3. Disconnect water inlet line at reservoir. Remove water supply tube at freezer and drain freezer.
4. Purge off refrigerant, unsweat suction line, disconnect capillary line at drier. Cap off all lines so no moisture can enter system.
5. Remove insulation pieces around spout, also the spout proper.
6. Remove 3 bolts holding fiber adapter base to gearmotor top cover, lift freezer out of cabinet.
7. Remove fiber adaptor, spout front and back plates from old freezer and install on new replacement.
8. Re-install in reverse of above.

FREEZER WORM SHAFT

1. Turn unit off, before removing worm shaft.
2. Shut off water supply to unit.
3. Remove hood service doors.
4. Remove top and bottom straps around spout insulation pieces, remove pieces.
5. Remove two slotted head screws which fit through top chamber wall into ice breaker.
6. Tap drive coupling loose on bottom end of freezer worm shaft.
7. Complete worm shaft with ice breaker attached will now come out by lifting up on freezer cap pull ring. NOTE: Top half of water seal will come with worm shaft.
8. To remove ice breaker from shaft, first remove retainer ring in top of ice breaker.
9. Remove freezer cap and pull ring from ice breaker.
10. Remove cap screw holding shaft through bearing and pull worm shaft free from ice breaker and bearing.
11. If shaft is defective, remove water seal top half and put on new worm shaft before reassembling — when reassembling, by reversing above, put a small amount of Vaseline on shaft end. This will allow shaft to slide smoothly through rubber bottom half of water seal without tearing it.

WATER SEAL

1. To replace water seal, follow steps 1 through 7 under Worm Shaft Removal.
2. Remove 3 bolts holding freezer to fiber mounting adapter.
3. Lift freezer off adapter just high enough to allow bottom bearing and bottom half of water seal to be removed from bottom of freezer tube.
4. Lightly grease bottom half of new water seal and insert face up approximately 1/2" in bottom of freezer tube.
5. Insert bottom bearing in bottom of freezer tube, force approximately 1/8" past bottom tube end. This will allow the positioning ring on fiber adaptor to properly position freezer tube when tightening up the three mounting bolts.
6. After securing mounting bolts, put new top half of water seal on worm shaft the same way as the old seal was removed.
7. Carefully insert worm shaft assembly in freezer tube and into drive coupling on bottom.
8. Replace ice breaker screws, insulation pieces and unit is ready to resume operation.

STORAGE BIN THERMOSTAT:

1. Disconnect electrical supply.
2. Remove bin thermostat bulb from bin location along with its capillary tube.
3. Remove control box cover.
4. Disconnect two spade type electrical leads.
5. Loosen two screws in control mounting bracket.
6. Replace with new control and reassemble in reverse of above.
7. CAUTION: Always check new control power element charge before installation to assure receiving an operative control. A handful of ice on bulb will register an audible 'click' at cut off.

MICRO SWITCH IN SPOUT

1. Remove hood service panel.
2. Remove insulation pieces around freezer spout.
3. Remove micro box cover, loosen two screws at rear of box holding switch in place, lift up.
4. Disconnect electric leads.
5. Reassemble with new micro switch.

MANUAL ON AND OFF SWITCH

1. Remove front service door.
2. Remove two screws holding switch to bracket.
3. Disconnect electrical leads from switch.
4. Remove switch.
5. To replace, reverse procedure.

FREEZER GEARMOTOR

1. The easiest way to change the gearmotor is to remove complete cabinet hood as explained earlier in this section. If necessary because of location you can change by removing top service panel.
2. Pull off left side service panel and look up on underside of left side cabinet panel: 4 screws secure this gearmotor to frame.
3. Remove the four wire leads (2 on micro switch on top of motor, 2 from motor into control box.)
4. Remove 3 bolts thru fiber adapter into gearmotor cover and the 4 bolts holding gearmotor to mounting base.
5. Lift freezer adapter assembly off gearmotor and pull gearmotor out thru left side.

MOTOR COMPRESSOR

1. Remove gas charge.
2. Disconnect wiring from the compressor.
3. Loosen suction and discharge lines and cap off.
4. Remove the compressor hold-down nuts and lift compressor out of the unit.
5. Reverse steps 1 through 4 in replacing compressor.

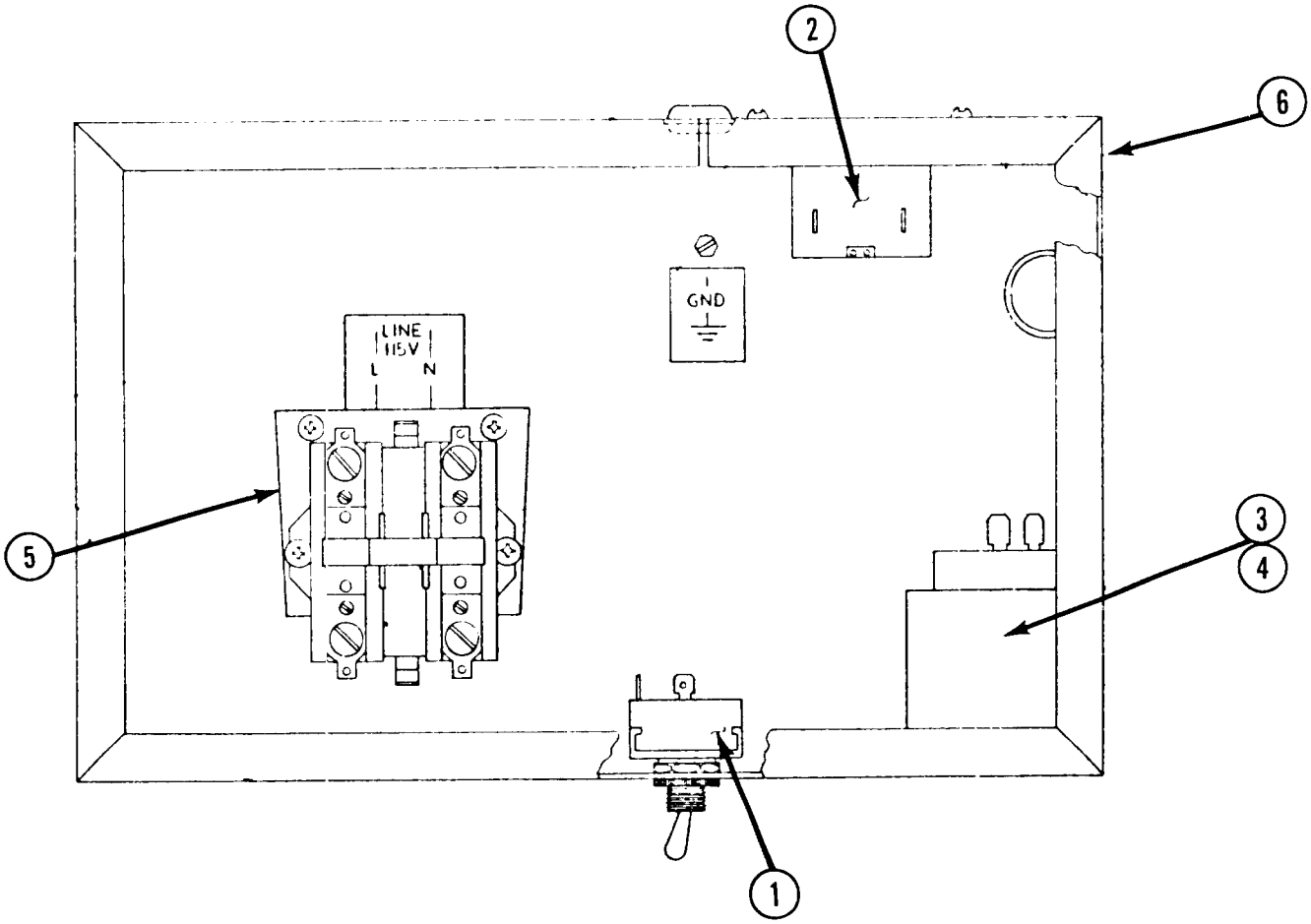

ITEM NO.	PART NO.	DESCRIPTION
1.	12-0426-01	Switch — On-Off
2.	11-0354-00	Bin Thermostat
3.	11-0362-01	Fan Speed Control (Air Cooled Only)
3.	11-0388-02	High Pressure Control(Water Cooled Only)
4.	11-0358-01	Low Pressure Control
5.	12-0820-01	115/60/1 Contactor
6.	12-0474-00	Resistor - Fan Speed 115/60/1 — Air Cooled Only
	12-0562-00	Resistor - Fan Speed 230/60/1

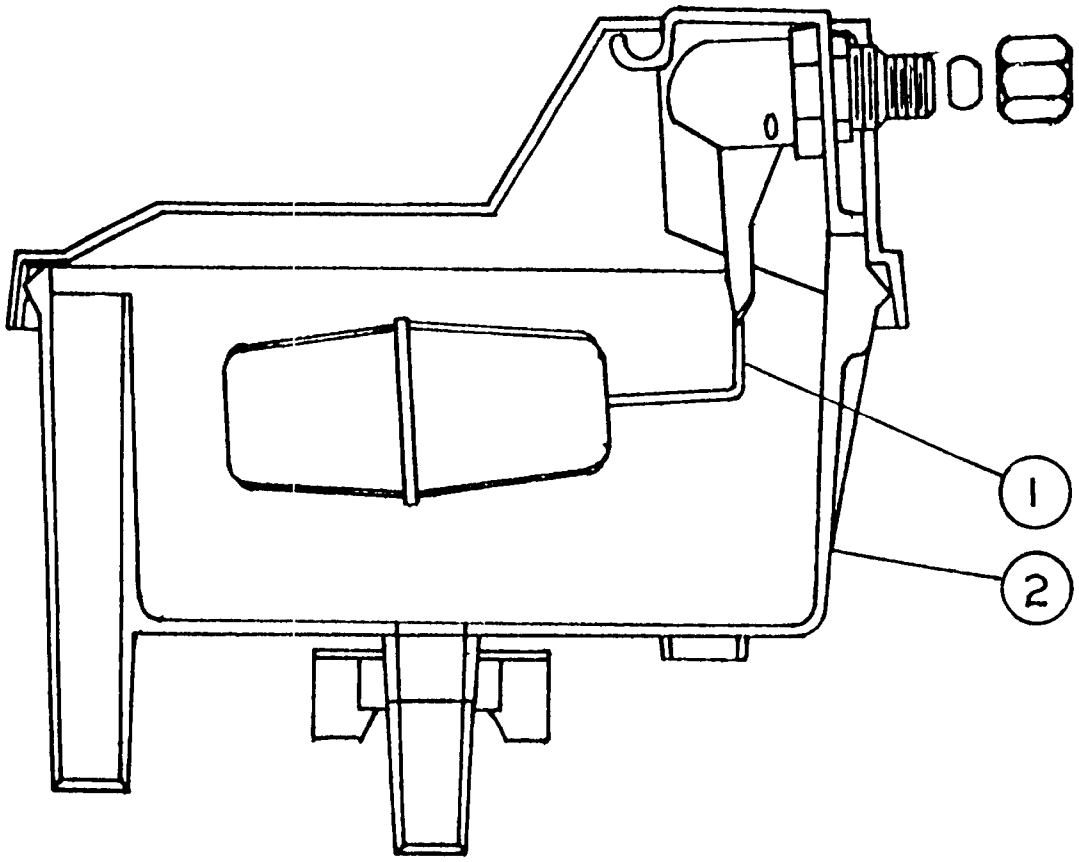

RESERVOIR ASSEMBLY

ITEM NO.	PART NO.	DESCRIPTION
1.	02-2217-02	Valve Assy.
2.	02-2217-01	Reservoir Complete

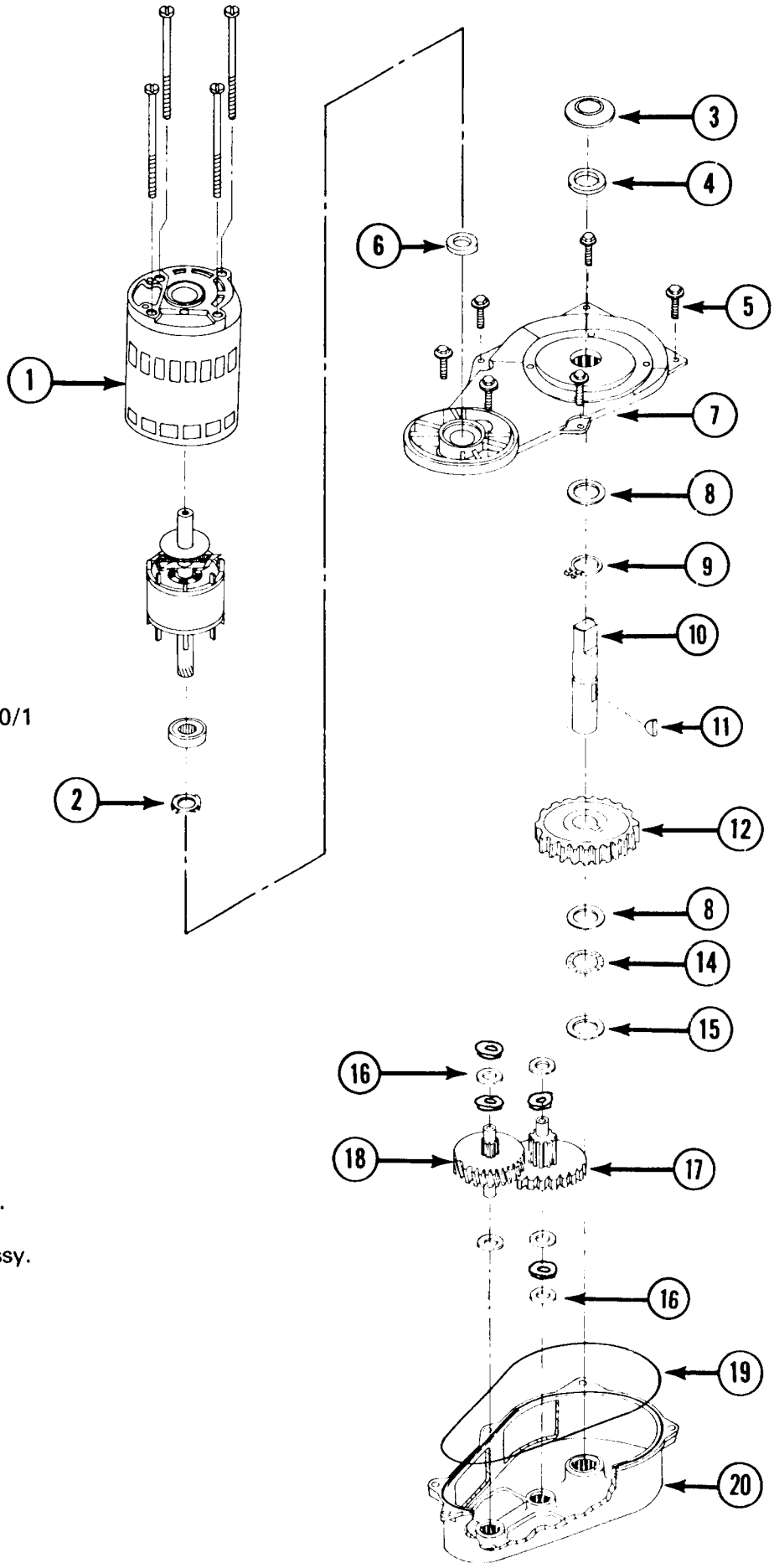

A22750-021
GEAR MOTOR ASSEMBLY
1/4 HP
OUTPUT SHAFT TURNS
AT 10 RPM

ITEM NO.	PART NO.	DESCRIPTION
1.	A26455-001	Drive Motor 115/60/1
2.		
3.	13-0709-02	Water Shed
4.	02-1607-00	Oil Seal
5.	03-1251-01	Screws (6 Req'd)
6.	02-1606-00	Oil Seal
7.	A22200-000	Gear Case Cover Assembly
8.	02-1681-00	Thrust Race (2)
9.	03-1363-00	Retaining Ring
10.	02-1652-00	Output Shaft
11.	03-1364-00	Key
12.	02-1653-00	Output Gear
13.		
14.	02-1680-00	Bearing
15.	02-1679-00	Thrust Race
16.	03-1408-24	Washer (9 Req'd)
17.	02-1604-00	Second Gear and Third Pinion Assy.
18.	02-1603-00	First Gear and Second Pinion Assy.
19.	A26103-001	"O" Ring
20.	A22199-000	Gear Case Assy.

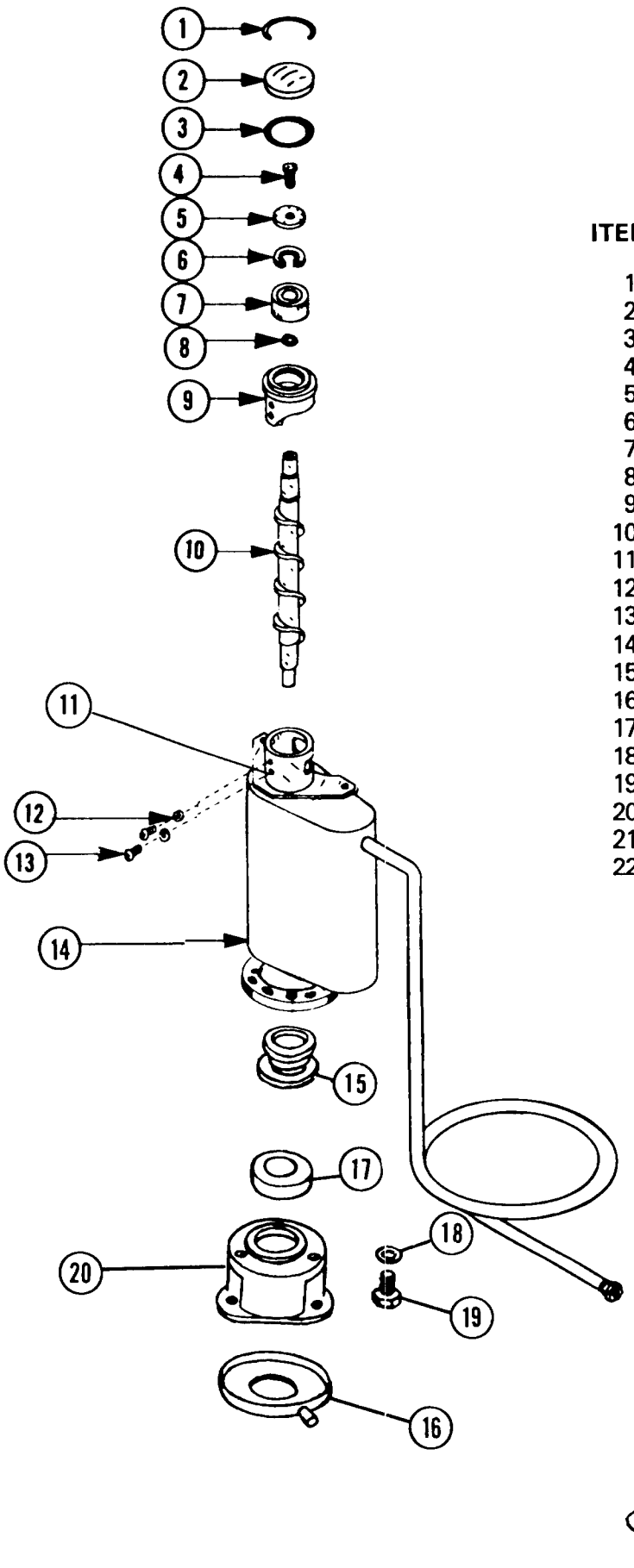

FREEZER ASSEMBLY
SF2A

ITEM NO.	PART NO.	DESCRIPTION
1.	A08582-000	Cap Hook
2.	A08581-000	Cap
3.	13-0617-20	"O" Ring
4.	03-1405-36	Cap Screw
5.	A06273-000	Washer
6.	03-1558-04	Snap Ring
7.	02-0646-000	Bearing
8.	13-0617-15	"O" Ring
9.	A26704-001	Breaker with Bearing
10.	02-0617-00	Auger
11.	A18431-000	Spout Plate
12.	A26679-001	Worm Tube — Suction Line
13.	03-1410-03	Washer
14.	03-1403-48	Screw
15.	A22569-000	Water Seal
16.	A24156-001	Drip Pan
17.	02-0619-00	Lower Bearing
18.	03-1410-4	Washer
19.	03-1405-41	Screw
20.	02-1629-00	Adapter
21.	15-0573-01	Drive Coupling
22.	13-0709-02	Shaft Drip Shield Rubber

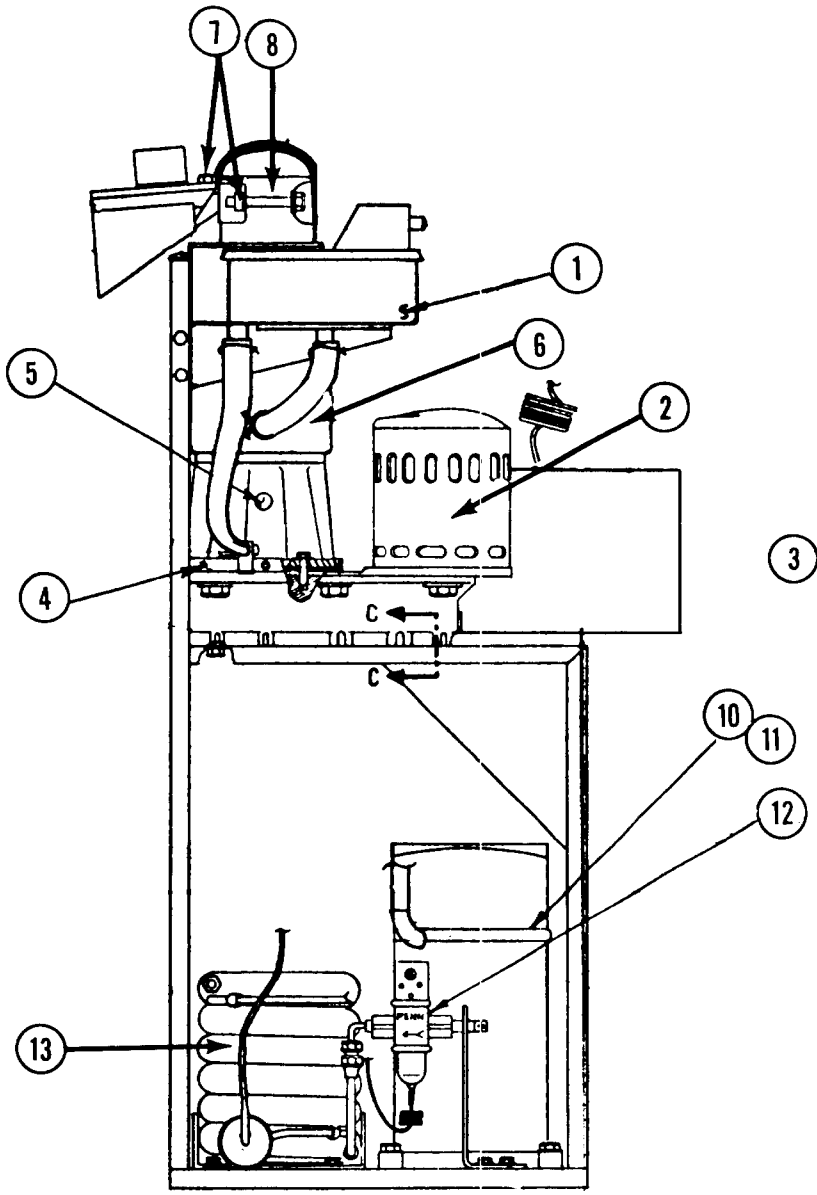

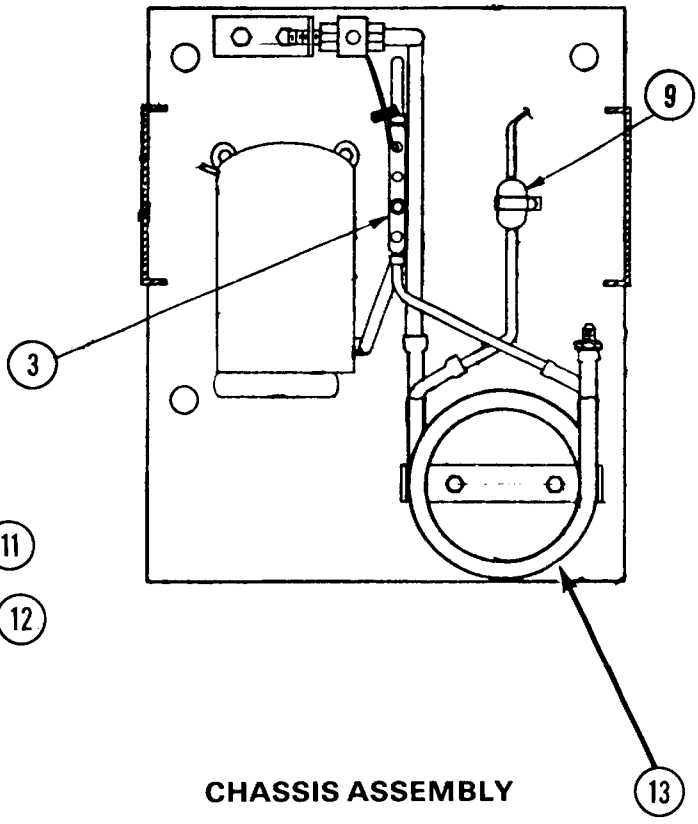

CHASSIS ASSEMBLY

SF2A WATER COOLED

ITEM NO.	PART NO.	DESCRIPTION
1.	02-2217-01	Water Reservoir
2.	A22750-021	Gear Motor Assy.
3.	16-0673-08	Process Header
3.	16-563-00	Brass Cap
3.	16-0560-00	Valve Core
4.	A24156-001	Drip Pan
4.	13-0704-00	Gasket
5.	02-1629-00	Fiber Adapter
5.	15-0573-01	Coupling
5.	03-1405-41	Screws Into Gear Motor (4)
5.	03-1417-13	Lockwashers For Above
6.	See Breakdown	Freezer Assy.
7.	A14256-000	Knurled Nut
7.	A14269-000	Front Spout Casting
8.	03-1403-55	Screws Thru Casting Halves
9.	02-0544-01	Drier
10.	18-1900-01	Compressor
11.	18-2400-25	Overload
11.	18-2410-00	Relay
11.	18-2420	Start Capacitor
12.	11-0198-02	Water Regulating Valve
13.	18-3305-02	Condenser

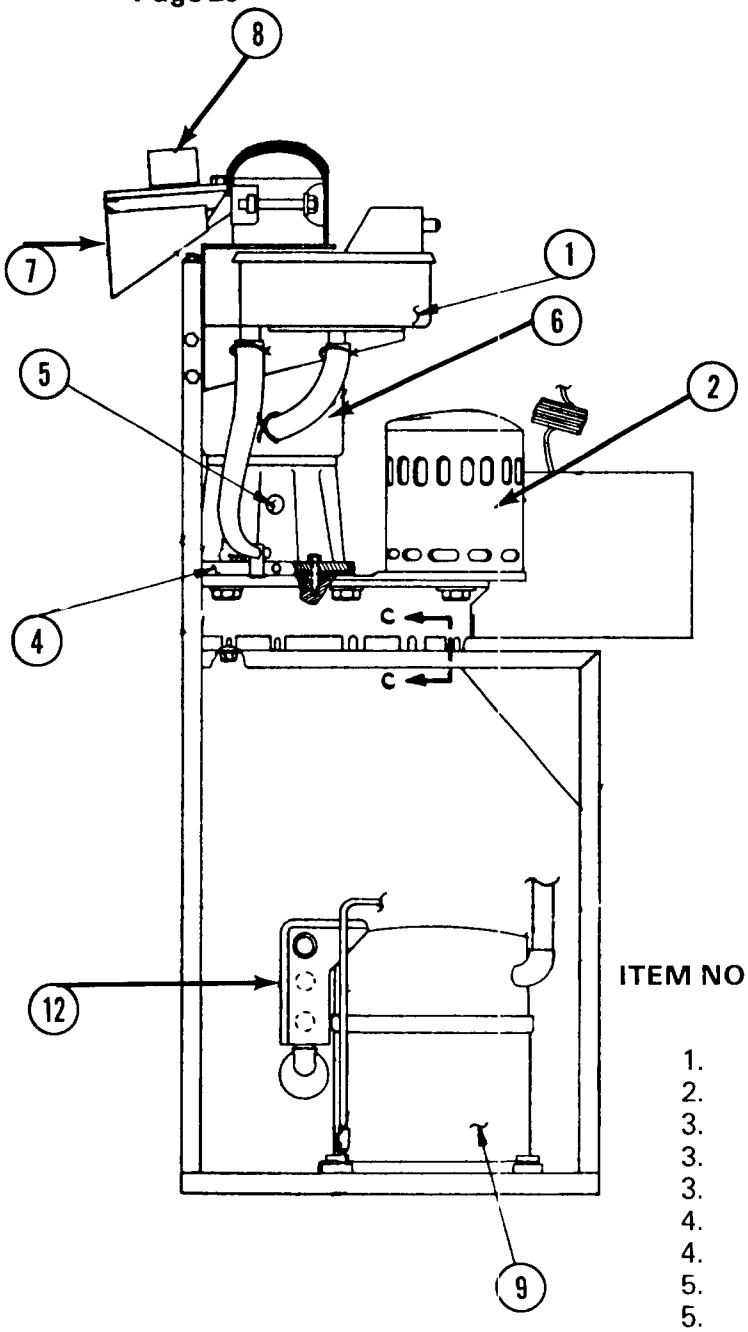

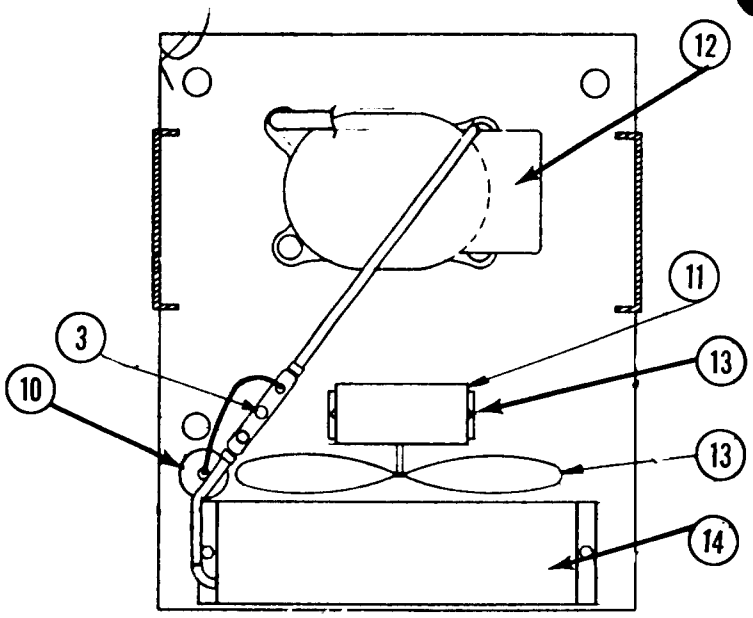

CHASSIS ASSEMBLY

SF2A AIR COOLED

ITEM NO.	PART NO.	DESCRIPTION
1.	02-2217-01	Water Reservoir
2.	A22750-021	Gear Motor Assy.
3.	16-0673-04	Process Header
3.	16-0563-00	Brass Cap
3.	16-0560-00	Valve Core
4.	A24156-001	Drip Pan
4.	13-0704-00	Gasket
5.	02-1629-00	Fiber Adapter
5.	15-0573-01	Coupling Assembly
5.	03-1405-41	Screws Into Gear Motor (4 ea.)
5.	03-1417-13	Lock Washer For Above
6.	See Breakdown	Freezer Assy.
7.	A16350-000	Spout
8.	12-1018-00	Spout Micro Switch
9.	18-3900-01	Compressor 115/60/1
9.	18-3900-02	Compressor 208/230/60/1
10.	02-544-01	Drier
11.	12-1576-01	Fan Motor
12.	18-2420-00	Capacitor 115V
12.	18-2421-00	Capacitor 208-230V
12.	18-2410-00	Relay 115V
12.	18-2200-34	Relay 208-230V
12.	18-2400-25	Overload (115V)
12.	2400-26	Overload 208-230V
13.	18-0363-00	Fan Blade
13.	A25548-001	Motor Mount
14.	18-0396-01	Condenser
14.	A23825-001	Condenser Shoud

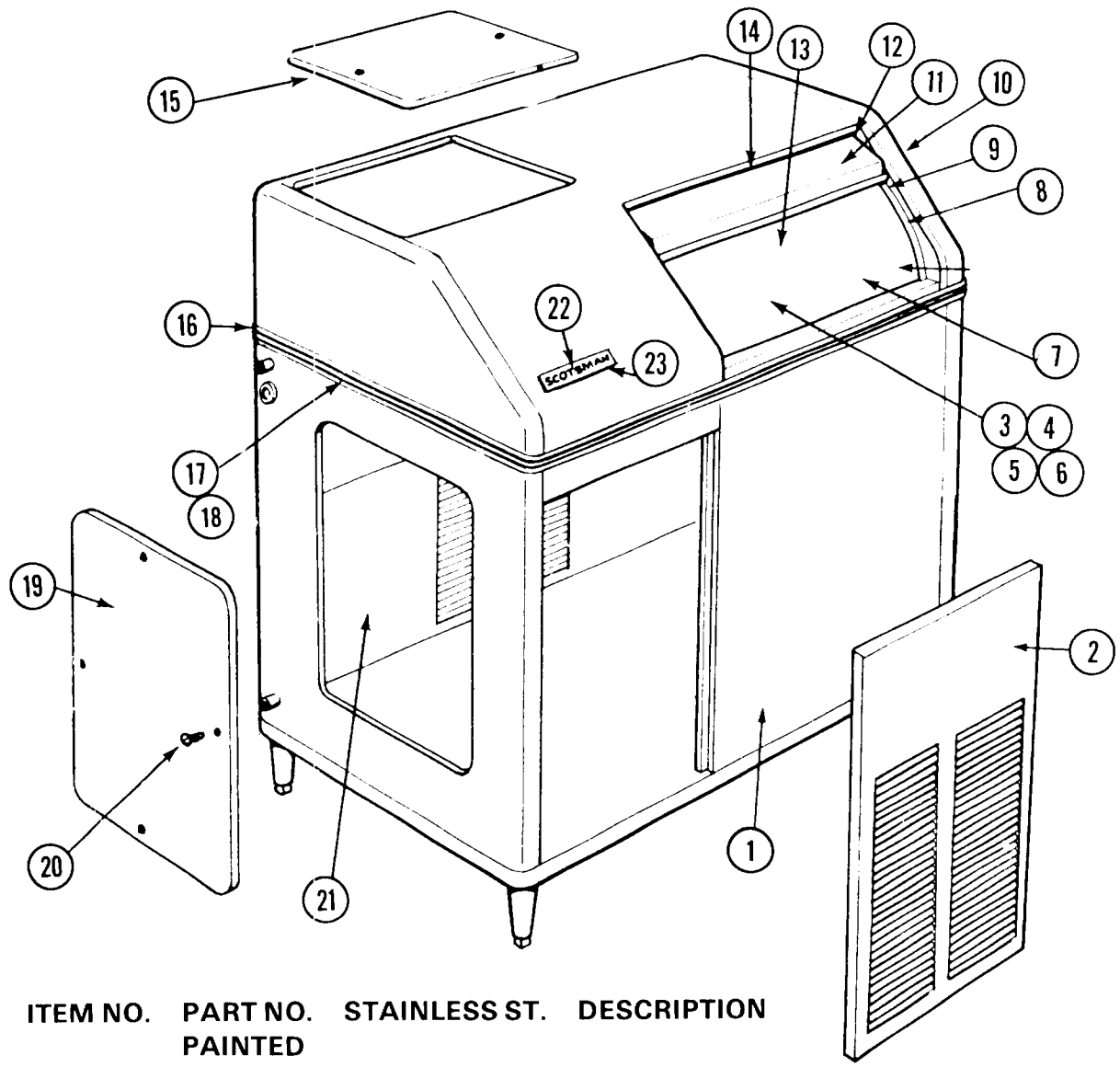

ITEM NO.	PART NO. PAINTED	STAINLESS ST.	DESCRIPTION
2.	A20288-008	A20288-001	Case Assy.
2.	A15793-008	A15793-002	Front Door
3.			Drain Assy
4.	13-0617-11		O-Ring
5.	02-1741-00		Drain Top
6.	02-1742-00		Drain (Bottom)
7.	A19736-000		Storage Bin. Assy.
8.	A16208-000		Door Glides (Door)
9.	03-1195-00		Door Glides (Hood)
10.	A20992-008,	A20992-001	Case Hood Assy.
11.	02-1735-01.	A15559-001	Sliding Door
12.	A16208		Door Track
13.	03-1415-00		Bulb Holder
14.	02-1736-00		Door Stop
15.	A07676-005,	A07676-00S	Top Door
16.	A05829-000		Rear Trim Strip
17.	15-0324-00		Plastic Moulding Strip
18.	S06413-000		Front Moulding Strip
19.	S06713-008,	S06713-00S	Side Door
20.	03-1419-09		Screw S.S.
21.	A08741-008,	A08741-00S	Rear Door
22.	15-0156-00		Emblem
23.	03-0271-00		Speednut

PH2-A CASE & HOOD ASSY.

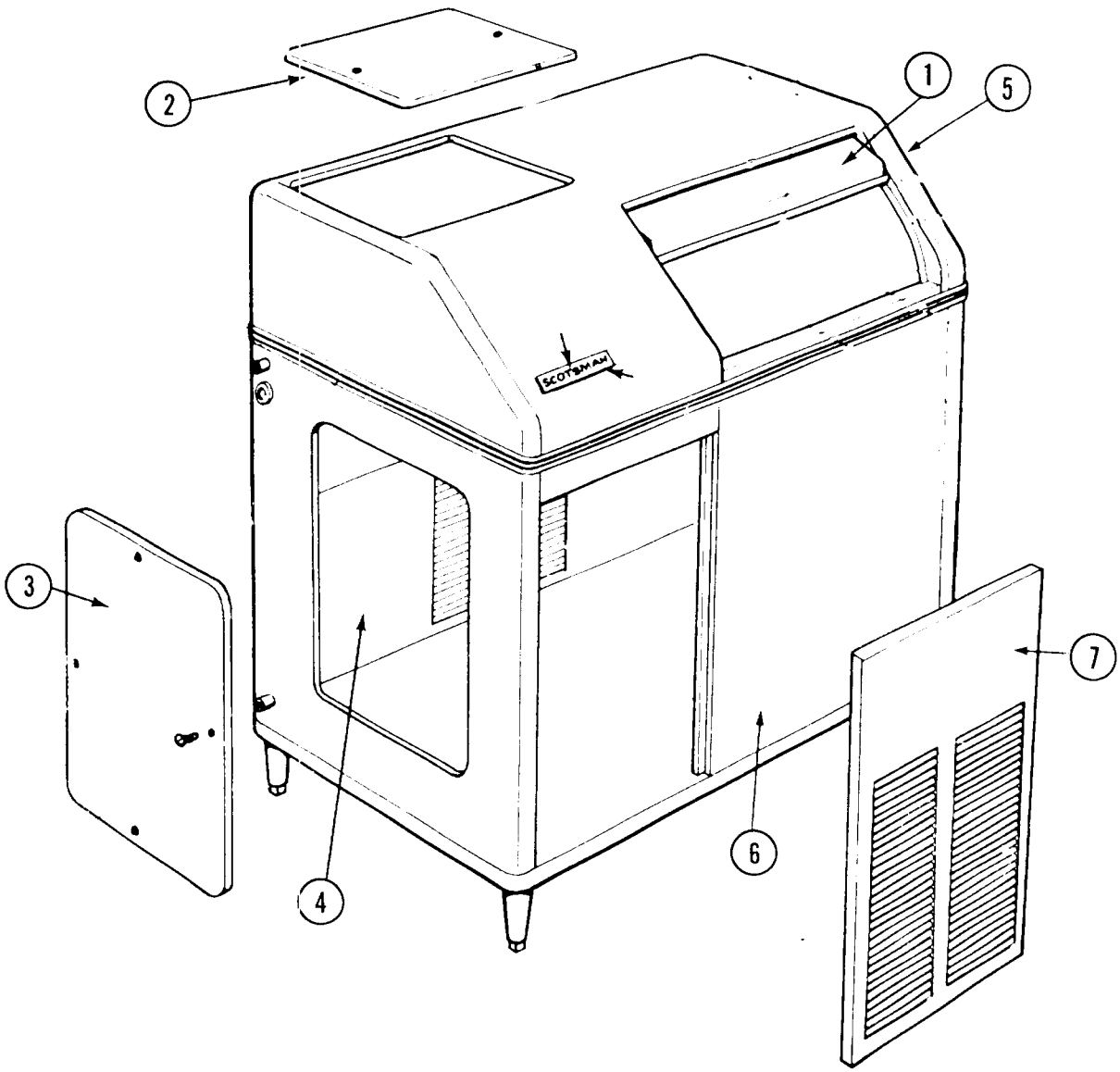

ITEM NO.	PART NO.	DESCRIPTION
1.	02-1735-01	Ice Access Door
2.	A07676-005	Top Service Door
3.	S06713-008	Side Door
4.	A08741-008	Rear Door
5.	A20992-008	Case Hood Assy.
6.	A20288-010	Case Fab Assy.
7.	A21250-008	Front Door Panel

*All other parts are common to SF2A Model Flaker.

Model PH2A is for Pizza Hut units.

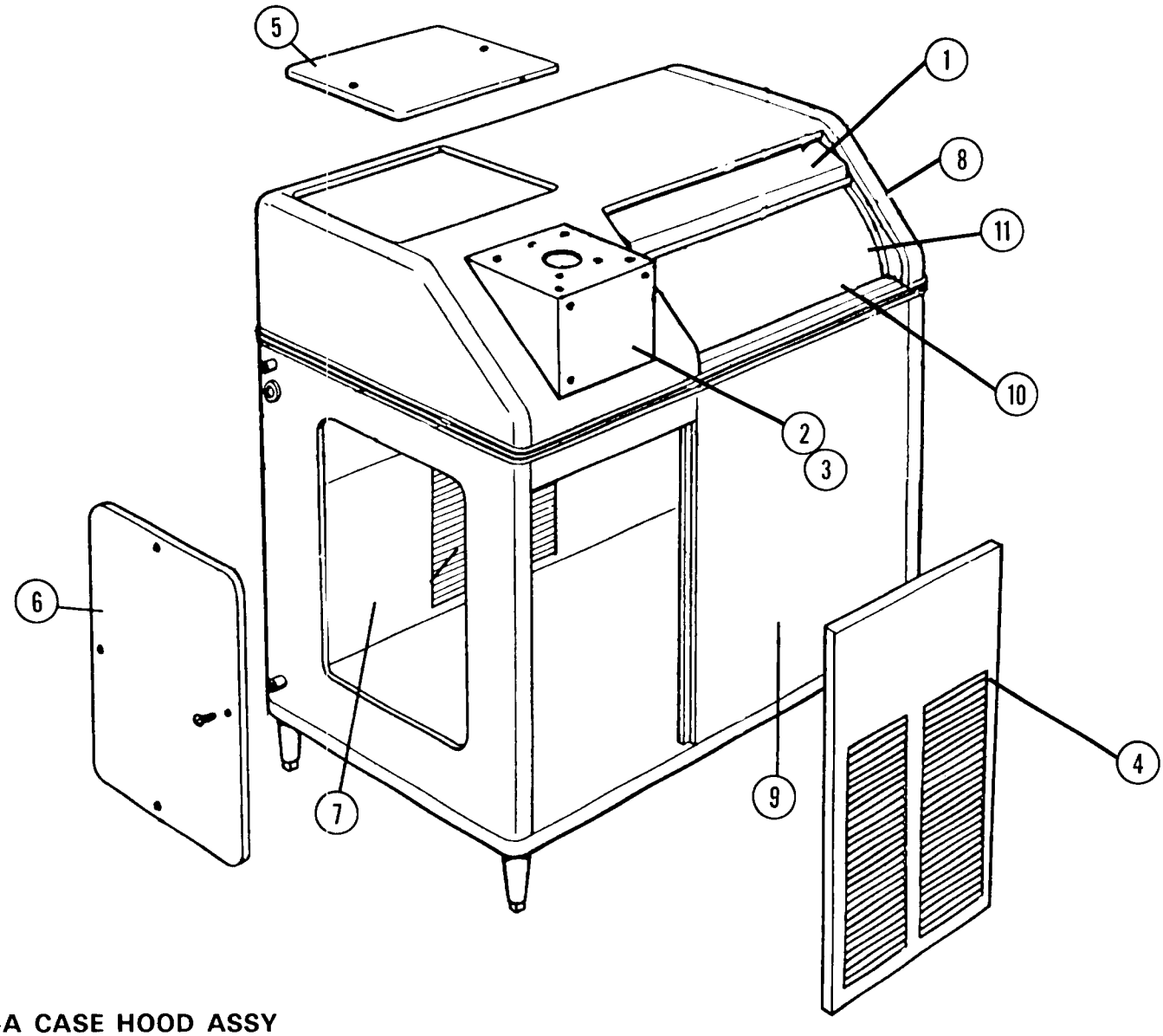

CC2-A CASE HOOD ASSY

ITEM NO.	PART NO.	DESCRIPTION
1.	A15559-000	Ice Access Door
2.	A17497-000	Cover
3.	A18001-000	Top Mounting Plate
4.	A21250-001	Front Door Panel
5.	A07676-002	Top Service Door
6.	S06713-001	Side Door
7.	A08741-001	Rear Door
8.	A20994-000	Case Hood Ass'y.
9.	A20288-002	Case Fab Ass'y.
10.	A18207-000	Cold Plate Support
11.	A19738-000	Storage Bin

Model CC2A is for Coca Cola units - Red Painted Cabinet

SERVICE ANALYSIS

SYMPTOM	POSSIBLE CAUSE	CORRECTION
Unit will not run	Blown Fuse	Replace fuse and check for cause of blown fuse.
	Thermostat set too high	Adjust thermostat. 35° cut-out and 45° cut-in.
	Loose electrical connection	Check wiring.
	Switch in OFF position	Turn switch to ON.
	Inoperative master switch	Replace switch.
Compressor cycles intermittently	Low voltage	Check for overloading.
	Dirty Condenser	Clean.
	Air circulation blocked	Move unit to correct.
	Inoperative condenser motor	Replace.
	Non-condensable gases in system	Purge off.
Making wet ice	Surrounding air temperature	Correct or move unit to cooler location.
	Under or over-charge of refrigerant	Recharge with the proper amount.
	High water level in water reservoir	Lower to ¼ inch below overflow pipe.
	Faulty compressor	Repair or replace.
Low ice production	Loss of refrigerant, under or over-charge of refrigerant.	Check and recharge with proper amount of refrigerant.
	Dirty or plugged condenser	Clean condenser
	Low water level in water	Adjust to ¼ inch below overflow pipe.
	Partial restriction in capillary tube or drier	Moisture in system. Overcharge of oil in system. Remove charge and drier. Replace and recharge system.
	Inlet water strainer partially plugged.	Remove screen and clean.
	Corroded or stained worm shaft due to water condition.	Remove worm shaft and clean
Machine runs but makes no ice	Loss or under-charge of refrigerant	Check for leaks and recharge
	Drive gearmotor or drive coupling stripped.	Check. Repair and/or replace.
	Water not entering freezing chamber	Plugged strainer or supply line. Check and clean. Air lock in gravity feed line. Check and remove air lock.
	Moisture in system	Check and remove charge and drier. Replace and recharge.
	Water seal leaking	Replace seal
	Water supply to unit off	Restore water supply to icemaker.

SERVICE ANALYSIS

SYMPTOM	POSSIBLE CAUSE	CORRECTION
Water Leaks	Defective water seal	Replace.
	Gravity feed line leaking	Check hose clamps
	'O' ring in spout casting leaking	Remove spout casting and install new 'O' ring.
	Storage bin drain & connecting fittings leaking.	Check and repair.
	Water level in reservoir too high	Adjust to ¼ inch below overflow pipe.
Excessive noise or chattering	Mineral or scale deposit on auger and inner freezing chamber walls.	Remove and manually polish auger, polish inner chamber walls of freezer barrel. For lighter concentrations use Scotsman Ice Machine Cleaner periodically.
	Low suction	Add gas to raise suction pressure.
	Intermittent water supply	Check & clean water strainer. Check gravity feed line for air lock. Remove air lock
	Water level in reservoir too low.	Adjust to ¼ inch below overflow pipe.
	Gear motor loose on frame	Tighten
	Gearmotor end-play or worn bearings.	Repair or replace.
Machine continues to run with full storage bin	Storage bin thermostat not properly set.	Reset or replace. 35° cut-out, 45° cut-in Check operation with handful of ice.
Gearmotor noise	Low on oil	Remove case cover to check for proper oil level. Top of gears should be covered. Use Sun Oil Co. Prestige 50 EP.

MAINTENANCE INSTRUCTIONS — FLAKERS

THE FOLLOWING MAINTENANCE SHOULD BE SCHEDULED THREE TIMES PER YEAR ON ALL SCOTSMAN FLAKERS. CALL YOUR AUTHORIZED SCOTSMAN SERVICE DEPARTMENT.

1. Check and clean water strainers and float valve. Depress float valve to insure full stream of water.
2. Check water level and machine level, keep water level below overflow, but as high as possible and still not run out of spout opening with machine off. Water droplets come out of spout with ice at all times. Adjust as required.
3. Clean reservoir and interior of freezer using SCOTSMAN Ice Machine Cleaner.
   A. If machine has been cleaned regularly and no problems such as dry ice or chatter are noticed, clean as per the following instructions:
   a. Set main switch to OFF.
   b. Remove all ice from storage bin.
   c. Turn off water supply or block float. Drain reservoir.
   d. Set main switch to ON and pour cleaning solution into reservoir. Do not fill above overflow tube.
      Use 6 oz. of Scotsman cleaner and 1-1/2 qt. hot water.
   e. Continue to make ice on solution until the solution is used up and reservoir is empty.
   f. Set main switch to Off. Wash and rinse reservoir, turn water on or remove float block.
   g. Turn MAIN SWITCH to ON. Let unit run for at least (15) minutes to flush out any cleaning fluid. Check ice for acid taste. — run until ice tastes sweet.
   h. Turn MAIN SWITCH to OFF. Add hot water to ice bin, using this melt water, thoroughly wash and rinse all surfaces within the storage bin.
   i. Turn MAIN SWITCH to ON. Replace Service Door. Unit is ready for normal operation.

NOTE: Cleaning requirements vary according to local water conditions. Visual inspection of the auger before and after cleaning will indicate best procedure to be followed in local areas.

4. Check high and low side pressures. On air-cooled models head pressures range between 130 and 145 PSI. Suction pressure should be above 12 PSI and will range up to 15 PSI depending upon water and ambient temperatures.
5. Check gearmotor operation. Normal running temperatures are in the area of 160° Farenheit, which is hot to the touch.
6. Check top bearing of freezing tube. Remove retainer ring around edge of stamped brass cap. If moisture is around bearing, wipe up and remove grease. Add new grease. Replace cap and retainer ring.
7. Clean air-cooled condenser. Inform customer to clean frequently. Always shut off machine when cleaning.
8. Oil condenser fan motor when possible.
9. Check for refrigerant leaks and proper frost line. Should frost out of accumulator at least one-half way to compressor, and in some areas back to service valve.
10. Check for water leaks. Tighten drain line connections. Run water down bin drain line to make sure it is open.
11. Check quality of ice. Ice should be wet when formed, but will cure rapidly to normal hardness in bin.
12. Check thermostat and pressure plate cut off in spout. Microswitch cuts off only compressor. Bin thermostat should be set at 10°differential = 35° cut out, 45° cut in.

CARE OF STAINLESS STEEL STORAGE BIN LINERS

All commercial grades of stainless steel will corrode or rust when in contact with certain chemicals or salts. **One element that attacks stainless readily, is chlorine,** and most compounds of chlorine, such as hydrocholic acid, and certain salts containing chlorine. The "speed" with which this corrosion takes place depends on the concentration of the chlorine, and the length of time it is left in contact with the stainless steel.

ICE BIN LINER RUSTING

In many ice bin applications, **a rust stain, or brown deposit, will appear at the top of the side and rear walls of the bin liner, and also on any exposed stainless parts inside the bin, which do not normally get covered with ice; such as stainless steel door back pans.** The lower portions of the liner walls usually stay clean if the bin is being used regularly, due to the "washing" action of the ice and meltage water draining down these walls. This brown staining on the liner may appear more rapidly in some installation than other, depending on the way the ice is being made in the ice machine, and the water conditions.

This staining or rusting, can come from basically two sources:

1. **Foreign materials** — For example, **many ice machine casings are made of painted steel. If this steel should be exposed at the joint where the ice machine sits on the bin, it could rust,** and the rust stain could "drip" down the liner walls. Also, particles of plain steel could fall down into the bin and, in turn, start rusting.

2. **Materials expelled during ice making** — Practically all icemakers produce clear ice by "freezing out the impurities" normally found in tap water. Chlorine gas, other gases and solids, are expelled during the making of ice. Being heavier than air, these foreign materials drop down into the bin through the same opening that the ice enters the bin. (This oftentimes explains why this staining is more noticeable on an installation where the opening on the bottom of the ice machine is quite large). **The chlorine gas will combine with water vapor and condense on the liner walls as a mild hydrochloric acid.** Above the normal ice level, this never gets removed by the action of the ice, and will eventually form a brown stain.

CLEANING OF A STAINLESS STEEL BIN LINER

Because the brown staining or rusting is due to expelled material during ice-making, **every bin liner should be cleaned periodically,** to prevent this staining from causing pitting of the stainless steel. The time between cleanings will depend on the water conditions, type of ice machine, etc. **It may be necessary only every 3 to 6 months.**

1. **General Cleaning** — When the staining is light, it can usually be removed by washing with ordinary cleaning powder, such as Bon-Ami, or Copper-Glo, and water. (Do not use cleaners that contain bleaching agents, as most of these are compounds of chlorine.) After cleaning, rinse thoroughly with clear water.

   It may be necessary to use a stainless steel wool to remove bad stains. DO NOT USE plain steel wool, as the steel particles will get imbedded in the liner and cause more serious rusting.

2. **Cleaning of heavy deposits** — If the liner has not been cleaned for a long time, and heavy deposits and pitting have occurred, a chemical cleaner may be necessary. Several of these are as follows:

   Oakite No. 33, Oakite Products, Inc., 19 Rector St., New York, N.Y. Texo No. 12, and Texo-NY, Texo Corp., 2200 Dana Ave. Cincinnati 7, Ohio. Metalprep No. 10, Nelson chem. Co., 6564 Benson St., Detroit 7, Mich, Dilac, Diversey Corp., 1820 Roscoe St., Chicago 13, Illinois.

   A solution of one part cleaner and two parts water is used. First, wash the bin liner thoroughly with water and soap as described above. Then simply swab the solution on the area to be cleaned, and allow to stand for about 20 minutes. Rinse with clear water. If this doesn't completely remove the deposit, repeat the procedure.

   Synthetic rubber gloves should be used by the operator, and goggles and aprons are advisable even though the solution is relatively nonhazardous.

   These cleaners may possibly harm paint, wood, or fabrics. They will probably cause a dull grey color on galvanized steel and should not be allowed to remain long in contact with rubber. Therefore, provision should be made to avoid contact with such materials when cleaning stainless.

3. **Protection of Stainless Steel against further staining** — After the stainless steel has been cleaned, installations where the staining is recurring so frequently, the surface should be rejuvenated. This process restores the characteristic to the surface of the stainless, that best prevents corrosion.

   First, be sure that the liner is clean and is thoroughly rinsed with water. Then use a nitric acid solution of two parts water to one part nitric acid (by volume). Swab this on the liner and allow to stand for about 30 minutes. Rinse the liner with clean water. This will then provide maximum corrosion resistance.

TABLE OF CONTENTS

Table of Contents 1
Mechanical Specifications 2
Specifications – Continuous Flow 3
Photo – Continuous Flow 4
Specifications with Storage 6
Machine Description 7
Preparation for Installation 8
Selecting Location 9
Installation 10-11
Refrigerent Cycle 12
Water Schematic 13
Wiring Diagram – Air Cooled 14
Wiring Diagram – Water Cooled 15
Final Check List 16
Service:
- Starting Machine 17
- Refrigerent Charge 17
- Water System 18
- Electrical System 18

Disassembly Procedures:
- Cabinet Assy 19
- Water Reservoir 19
- Freezer Assy 20
- Freezer Worm Shaft 20
- Water Seal 20
- Electrical Components 21
- Freezer Gearmotor 21
- Compressor 21

Parts Breakdown
- Control Box 22
- Reservoir Assy 23
- Gear Motor Assy 24
- Freezer Assy. 25
- Chassis Assy – Water Cooled 26
- Chassis Assy – Air Cooled 27
- Case Assy Cont. Flow 29
- Case Assy with Storage 29

Service Analysis 30-31
Maintenance Instructions 32

THIS PAGE
INTENTIONALLY
LEFT BLANK

MECHANICAL SPECIFICATIONS

	SF-2J	SF-2WJ
Compressor	3/4 HP	3/4 HP
Condenser	Air Cooled	Water Cooled
Refrigerant	33 oz. R-12	30 oz. R-12
Refrigerant Control	Capillary Tube	Capillary Tube
Power Consumption - Amps.	19.45	18.60 Voltage - Std. Unit
Voltage-Std Unit	115V - 60 cycle	115V - 60 cycle
Gear Drive Motor	1/4 HP	1/4 HP

* Copelaweld model No. RSL2-0075-1AA-218

DIMENSIONS	SF-2J	SF-2WSJ
Width	20"	49-1/4"
Depth	24-1/2"	24-1/2"
Height less legs	43-1/2"	43-1/2"
Height w/legs	49-1/2 to 50-1/4"	49-1/2 to 50-1/4"
Shipping Weight	295 lbs.	415 lbs.

SPECIFICATIONS

SUPER FLAKER SF-2 SERIES (Continuous Flow)	MODEL SF-2J	MODEL SF-2WJ	MODEL SF-2J-SS	MODEL SF-2WJ-SS
CONDENSER, Air Cooled	X		X	
CONDENSER, Water Cooled		X		X
COMPRESSOR 3/4 HP	X	X	X	X
FINISH, Hammerloid Grey	X	X		
FINISH, Stainless Steel			X	X
SHIPPING WEIGHT	290	295	290	295

STANDARD ELECTRICALS	MINIMUM WIRE SIZES	TOTAL AMPERAGES
115/60/1	2 wire 10 gauge	19.45 Amperes (Air)
115/60/1	2 wire 10 gauge	18.60 Amperes (Water)

CAPACITY: Refer to Production Chart
STORAGE BIN: 500, 750, or 1000 lb.
Stainless Steel Lined
DEPTH: 24-1/2"

WIDTH: 20"
HEIGHT: (with legs) 49-1/2" to 50-1/4"
HEIGHT: (without legs) 43-1/2"

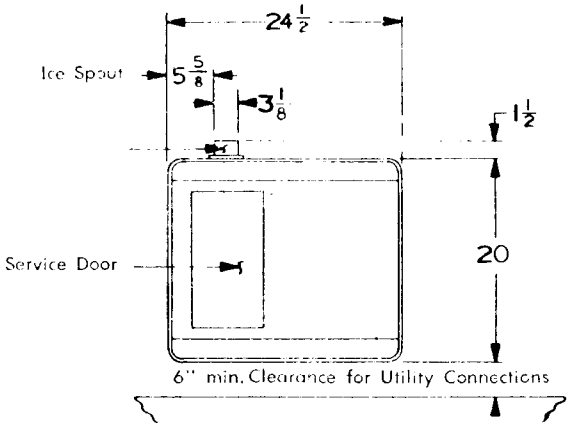

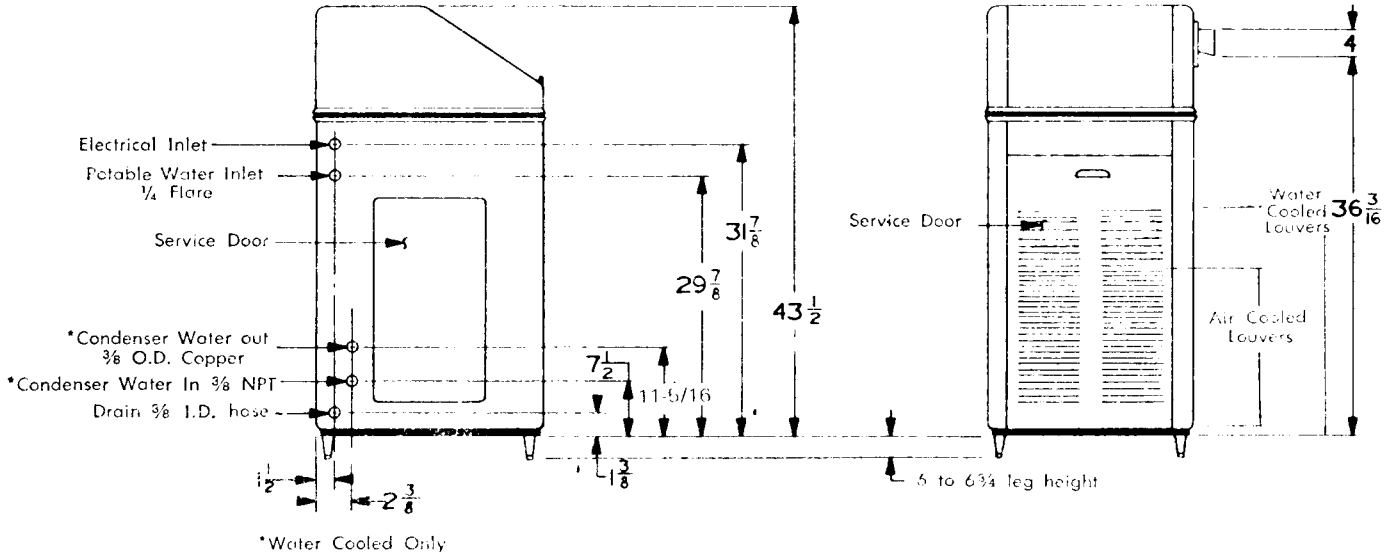

*Water Cooled Only

SCOTSMAN®

SUPER FLAKER

SF-2J

SERIES

Continuous Flow

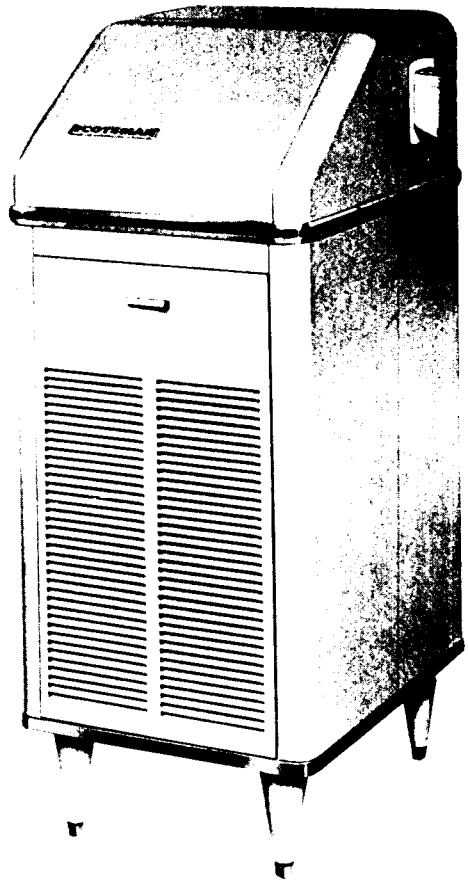

ice making capacity

Daily Ice Capacity is directly related to condenser air inlet temperature, water temperature, and age of machine. Average daily capacity at 90° air and 70° water is Air Cooled: 550 lbs. and Water Cooled: 640 lbs.

NOTE: To keep your SCOTSMAN SUPER FLAKER performing at it's maximum capacity, it is necessary to perform periodic maintenance as outlined on page 32 of this manual.

SCOTSMAN

SUPER FLAKER
SF-2J
SERIES
Storage Type

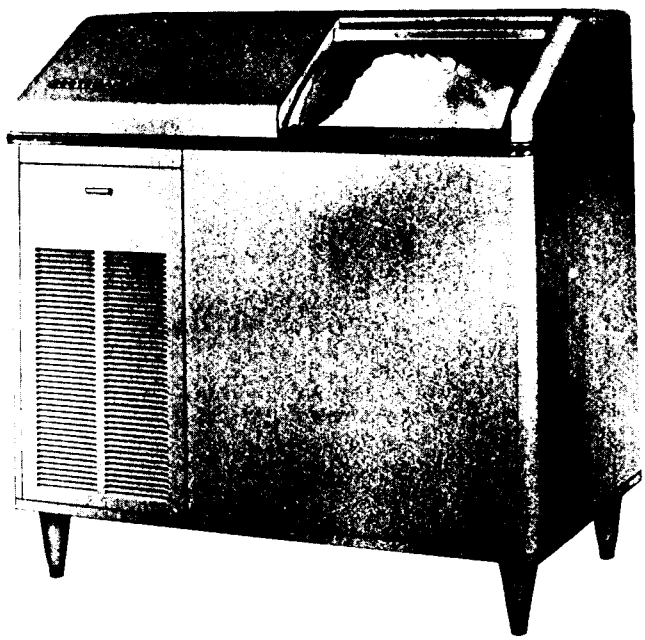

ice making capacity

Daily Ice Capacity is directly related to condenser air inlet temperature, water temperature, and age of machine. Average daily capacity at 90° air and 70° water is Air Cooled: 550 lbs. and Water Cooled: 640 lbs.

NOTE: To keep your SCOTSMAN SUPER FLAKER performing at it's maximum capacity, it is necessary to perform periodic maintenance as outlined on page 32 of this manual.

SPECIFICATIONS

SUPER FLAKER SF-2 SERIES (Storage Type)	MODEL SF-2WSJ	MODEL SF-2WWSJ	MODEL SF-2WSJ-SS	MODEL SF-2WWSJ-SS
CONDENSER, Air Cooled	X		X	
CONDENSER, Water Cooled		X		X
COMPRESSOR 3/4 HP	X	X	X	X
FINISH, Hammerloid Grey	X	X		
FINISH, Stainless Steel			X	X
SHIPPING WEIGHT	415	415	415	415

STANDARD ELECTRICALS	MINIMUM WIRE SIZES	TOTAL AMPERAGES
115/60/1	2 wire 10 gauge	19.45 Amperes (Air)
115/60/1	2 wire 10 gauge	18.60 Amperes (Water)

CAPACITY: Refer to Production Chart
STORAGE BIN: 350 lbs. Stainless Steel Lined
DEPTH: 24-1/2"
WIDTH: 49-1/4"
HEIGHT: (with legs) 49-1/2" to 50-1/4"
HEIGHT: (without legs) 43-1/2"

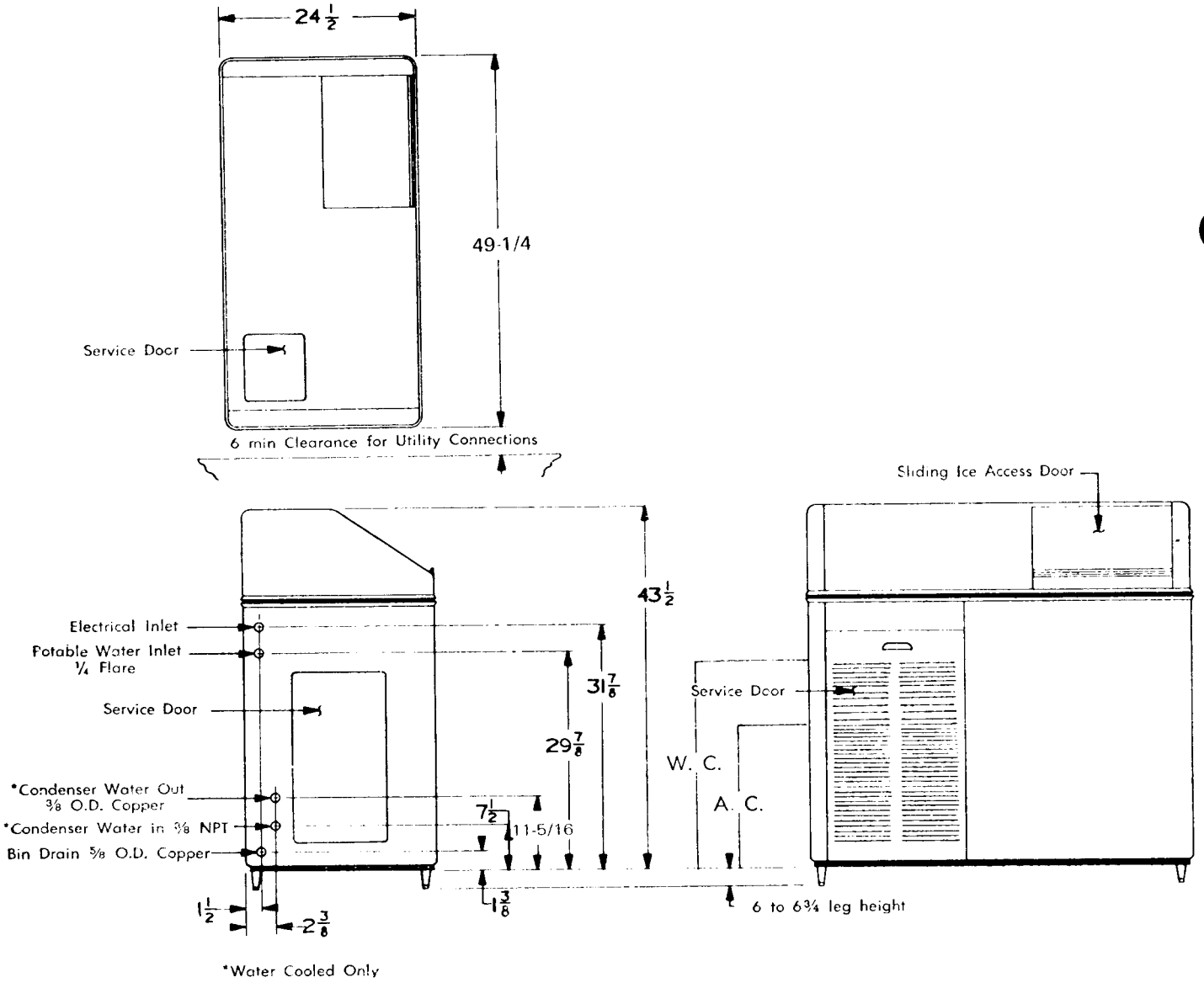

*Water Cooled Only

SPECIFICATIONS

SCOTSMAN Super Flakers are designed for restaurants, super markets, soda fountains, hospitals, bakeries, fish markets, poultry stores, packing plants, etc. It is the finest Ice Maker on the market today. It will work 24 hours a day for you, or only as needed. It produces the highest quality ice available at any price.

Approximately 600 pounds of SCOTSMAN crushed ice is delivered each 24 hours to the storage bin for immediate use.

SCOTSMAN Super Flakers are easily installed requiring only standard water, drain and electrical connections.

ATTRACTIVE COMPACT CABINET. Grey hammerloid finish with chrome trim, rounded corners, and removable panels for easy access to mechanical parts. Adjustable and removable legs are under cabinet.

SEALED REFREIGERATION SYSTEM. Provides quiet, efficient operation of the machine. Compressor motor is internally spring mounted for quiet operation. Compressor motor is covered by a full 5-Year Warranty.

HOW IT WORKS. An exclusive patented ice-making system, wherein water in the constant level float reservoir is fed to the bottom end of the freezing cylinder and turns to ice on the inside of this cylinder. Ice from the refrigerated walls of this cylinder is extruded past the ice breaker at the top of the cylinder through a side opening by means of a stainless steel auger driven by a gearmotor drive.

All SCOTSMAN Models SF2J and SF2WSJ are completely automatic. A manual switch in control box starts the machine, and from then on, produces flakes automatically. When the storage bin fills, the machine automatically shuts off and starts up again when ice is taken from the storage compartment.

Model No. SF2J is a continuous flow type machine, and is manually started by an OFF and ON switch located inside the cabinet as are the SF-2WSJ models. Since the SF-2J does not have its own attached bin, it is necessary to use an auxillary bin such as the Model SB-500 SCOTSMAN Super Bin for ice storage. A bin thermostat is mounted in each SF2J continuous flow type machine for the purpose of mounting control bulb from machine to bin.

SCOTSMAN SUPER FLAKERS
PREPARATION FOR INSTALLATION

1. UNCRATING
   The entire unit comes in one crate. Upon delivery a visual inspection of the crate should be made and any severe damage noted should be reported to the delivering carrier and a concealed damage claim filed subject to internal inspection with carrier representative present. Remove crate by pulling nails driven through sides of crate into the bottom skid. A nail puller is best suited here. Next remove (4) four bolts from underside of skid which connect to complete unit base. Unit now free from all crating.

2. Remove all service doors and panels.

3. Remove water reservoir cover and take out paper packing around float ball.

4. Remove leg packages in compartment base and install 4 legs in unit base sockets. On continuous flow models with separate storage bins, legs are put on companion machine stand, not on Ice Maker.

5. Check motor compressor hold down nuts to insure motor compressor rides snug on mounting pads.

6. Remove water strainer from storage bin for installation on unit or in water supply line feeding unit.

7. Open electrical control box and prepare for hook up, use knock outs, cord connectors etc. Then check unit nameplate voltage against building source voltage and make sure they correspond. Caution - Improper voltage supplied to units will void your warranty protection.

8. Select unit location prior to hook up of water drain and electricals in accordance with local and national codes. Minimum room temperatures is 50° Fahrenheit. On air cooled models, select well ventilated location.

9. Remove warranty card and Users manual from storage bin, then wipe bin clean with damp cloth.

10. Fill out warranty card completely including model and serial numbers as taken from aluminum plate found behind front service panel and forward to Scotsman Factory using self mailing card.

11. Level unit with adjustable legs.

SELECTING LOCATION

UNDER BAR INSTALLATIONS: Locate, if possible, so left end panel is accessible. Locate so proper circulation can be attained around the unit and behind it at least four inches.

KITCHEN INSTALLATIONS: As a rule, the kitchen is not the most practical place to install an air-cooled condensing unit, as grease is almost always present and makes cleaning of the condensing unit difficult. Do not locate near range or steam table or other heating devices that may be used in the kitchen.

STOREROOM INSTALLATIONS: Be sure storeroom is of adequate size and properly ventilated. A small, poorly ventilated room will greatly impair the efficiency of the unit. The storeroom must be kept above 50 degrees in the winter months.

BASEMENT INSTALLATIONS: Locate machine in the coolest place. Locate machine in a dry place. Keep away from furnace and boiler room. Keep away from service chutes and runways; also coal or other dust of any kind. If the machine is set over a floor drain, block the machine up enough to level it. If there is any chance of basement flooding, block the machine up enough to eliminate any possible damage to the machine.

WATER SUPPLY: The recommended water supply line is 1/4 inch I.D. copper tubing for SF-2. Connect to cold water supply line with regular plumbing fittings, with a shut-off valve installed in an accessible place between supply line and machine. A water strainer must be installed with the unit and mounted with clean-out plug down. Locate the strainer next to the machine with the arrow in the direction of the flow. Most plumbing codes also call for double check valves in the supply water line, particularly for water-cooled models.

On air-cooled models the water supply line connects to the 1/4 inch flare fitting on the machine. On water-cooled models connections are made to a 3/8 inch male pipe nipple inside of the machine compartment. Incoming water goes through the water regulating valve first and then to the water-cooled condenser. Observe arrow on water regulating valve. Water supply must be installed to conform with local code. In some cases a licensed plumber and/or a plumbing permit will be required.

DRAIN: The recommended drain from the bin is 5/8 inch OD copper tubing. Must be run to an open trapped and vented drain. If drain is a long run, allow 1/4 inch pitch per foot. Drain must be installed to conform with local code. Run separate line for condenser discharge water on water-cooled models.

INSTALLATION

ELECTRICAL CONNECTIONS:

SF2WSJ
115 Volts, 60 Cycle, 1 Phase
30 Amp. Circuit

10 Gauge wire should be used for electrical hook-up. Conductors with third or gound wire are desirable.

Be certain that the Super Flaker is on its own circuit and individually fused. The maximum allowable voltage variation should not exceed 10 per cent of the nameplate rating even under starting conditions. Low voltage can cause erratic operation and may be responsible for serious damage to the overload switch and motor windings.

All external wiring should conform to the National Underwriters and local Electrical Code requirements. Usually an electrical permit and the services of a licensed electrician will be required.

ELECTRICAL INSTALLATION:

SF2WSJ

Compressor	3/4 HP	Copelaweld: RSL2-0075-1AA-218
		2 pole, 3500 RPM
	Voltage	115
	Amp. rating F.L.A.	14.0
	Cycle	60
	Phase	Single
Gear Drive Motor	1/4 HP	Queen Products
	Voltage	115
	Amp. rating	4.6
	Cycle	60
	Phase	Single
		Thermally Protected

INSTALLATION PRACTICE

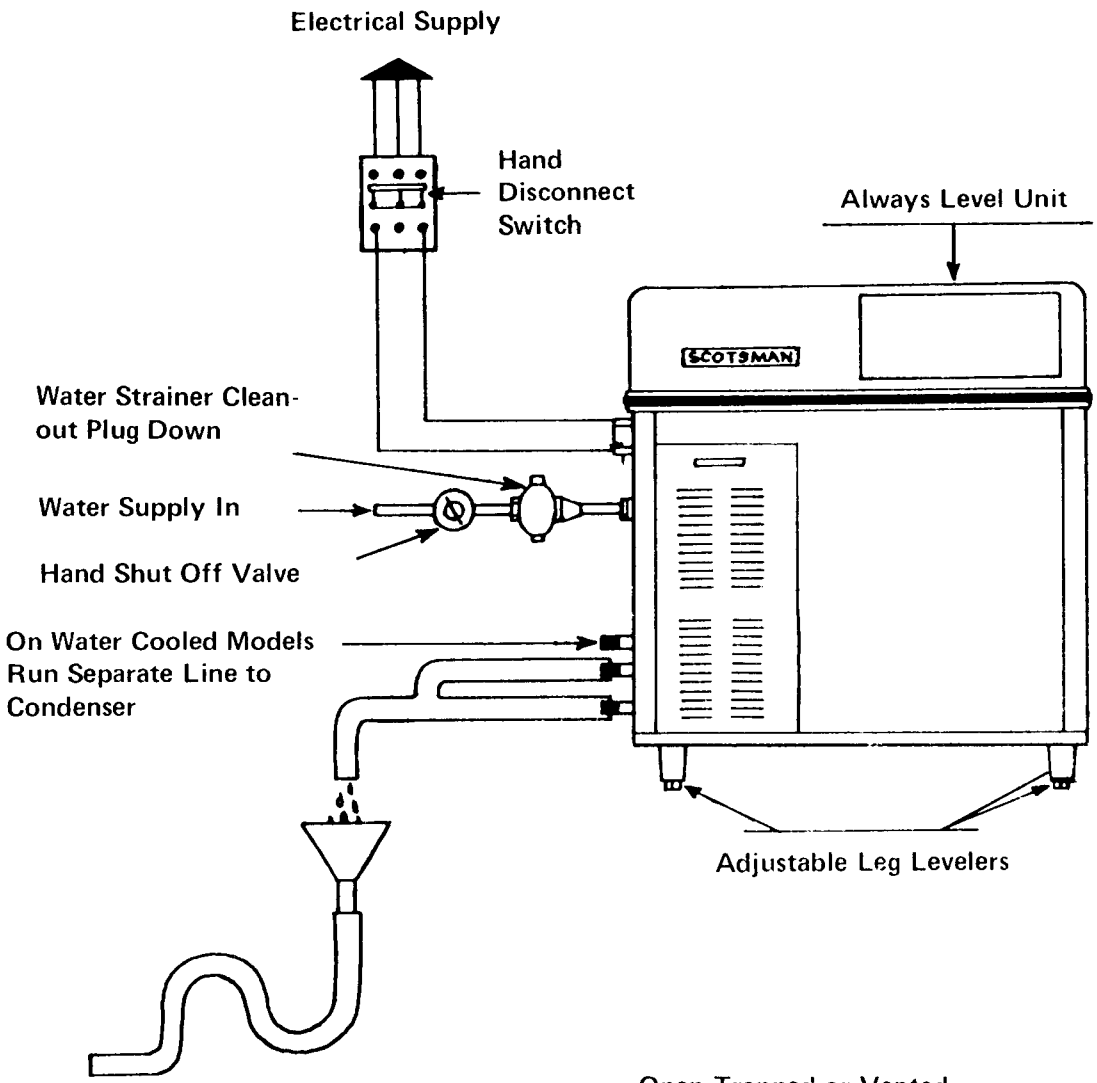

Open Trapped or Vented
Drain. Recommend 1/4 Fall
per foot of run on drain lines.

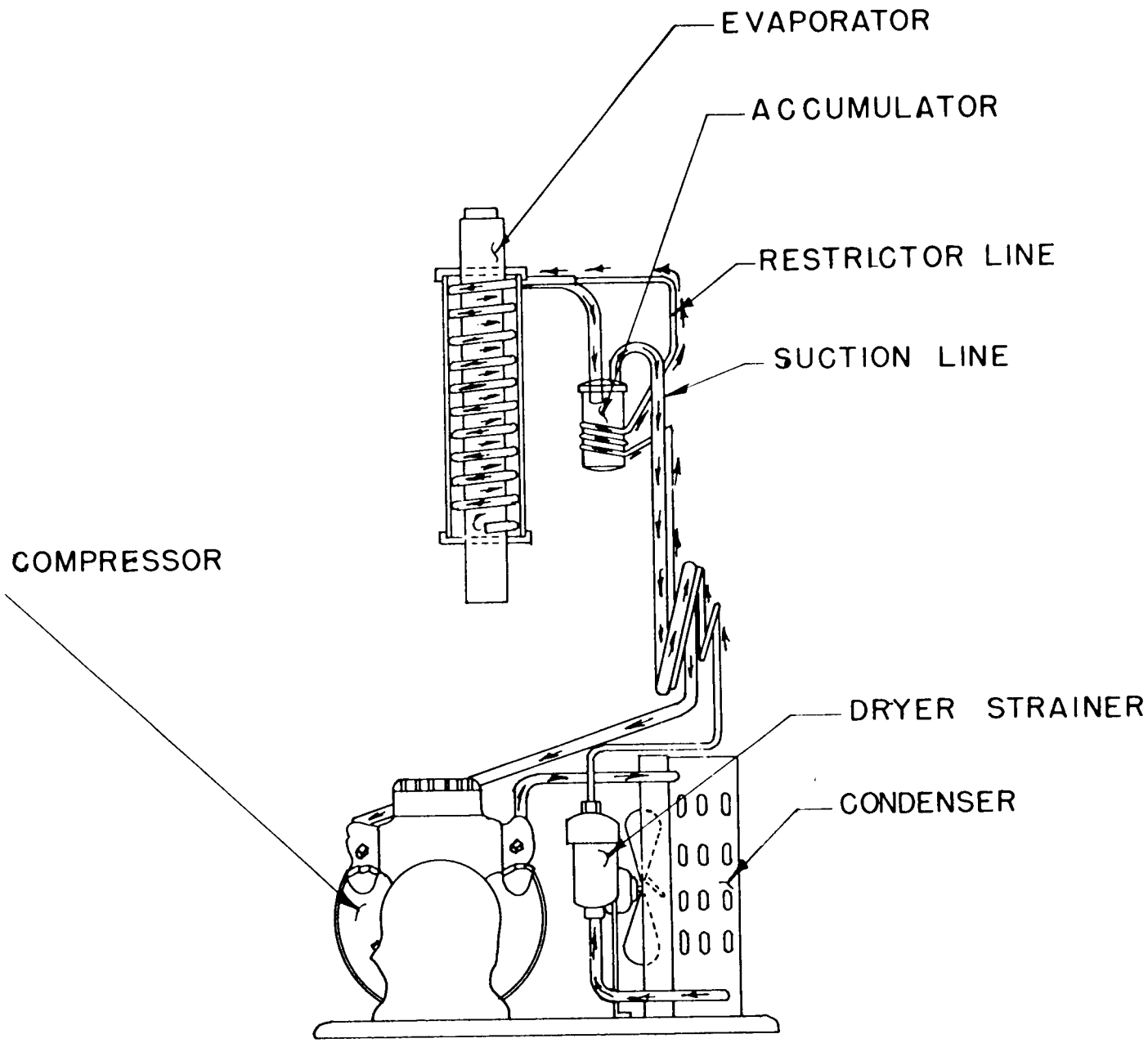

REFRIGERATION CYCLE SF-2 ALL MODELS

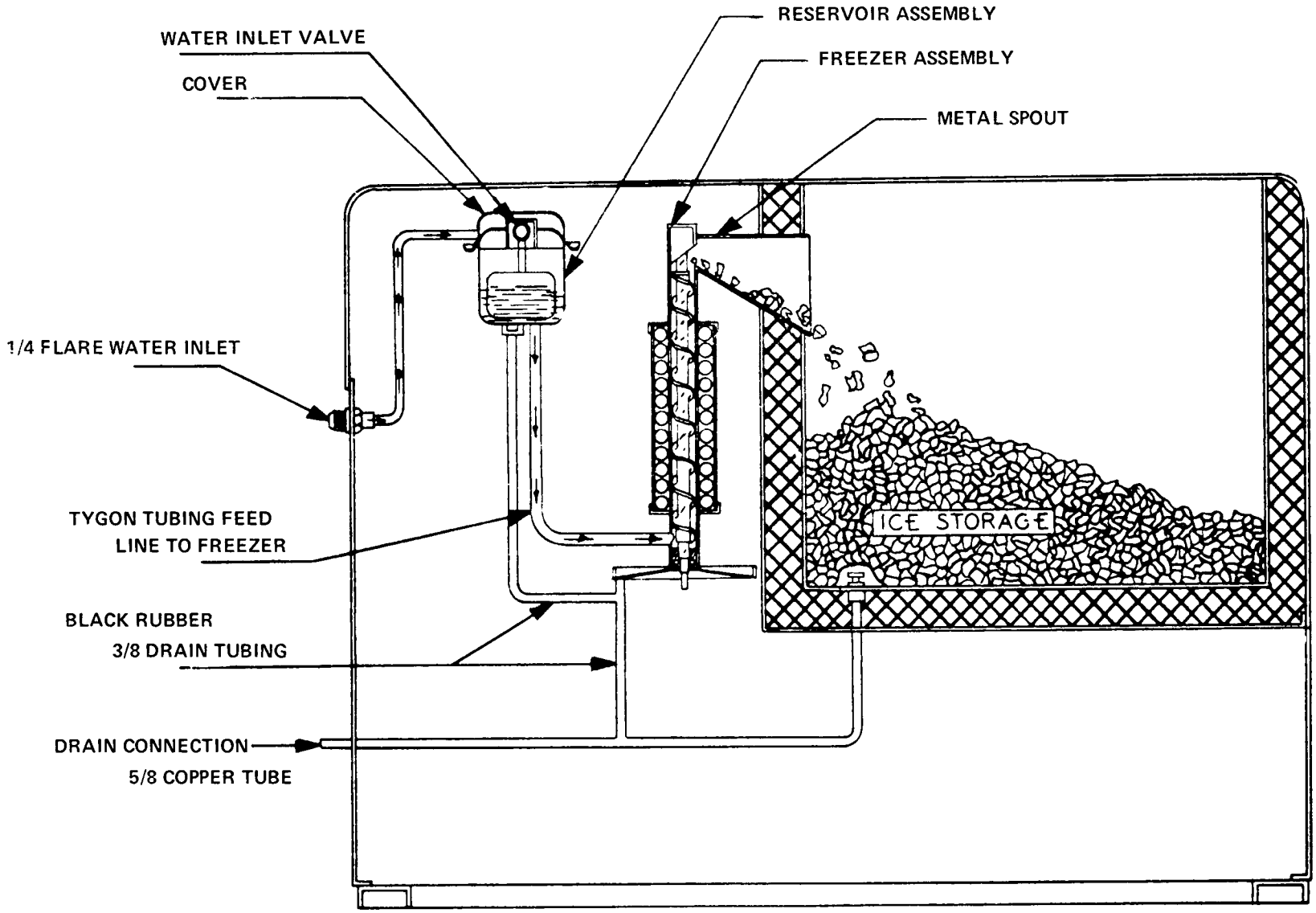

WATER SCHEMATIC
SF-2WSJ

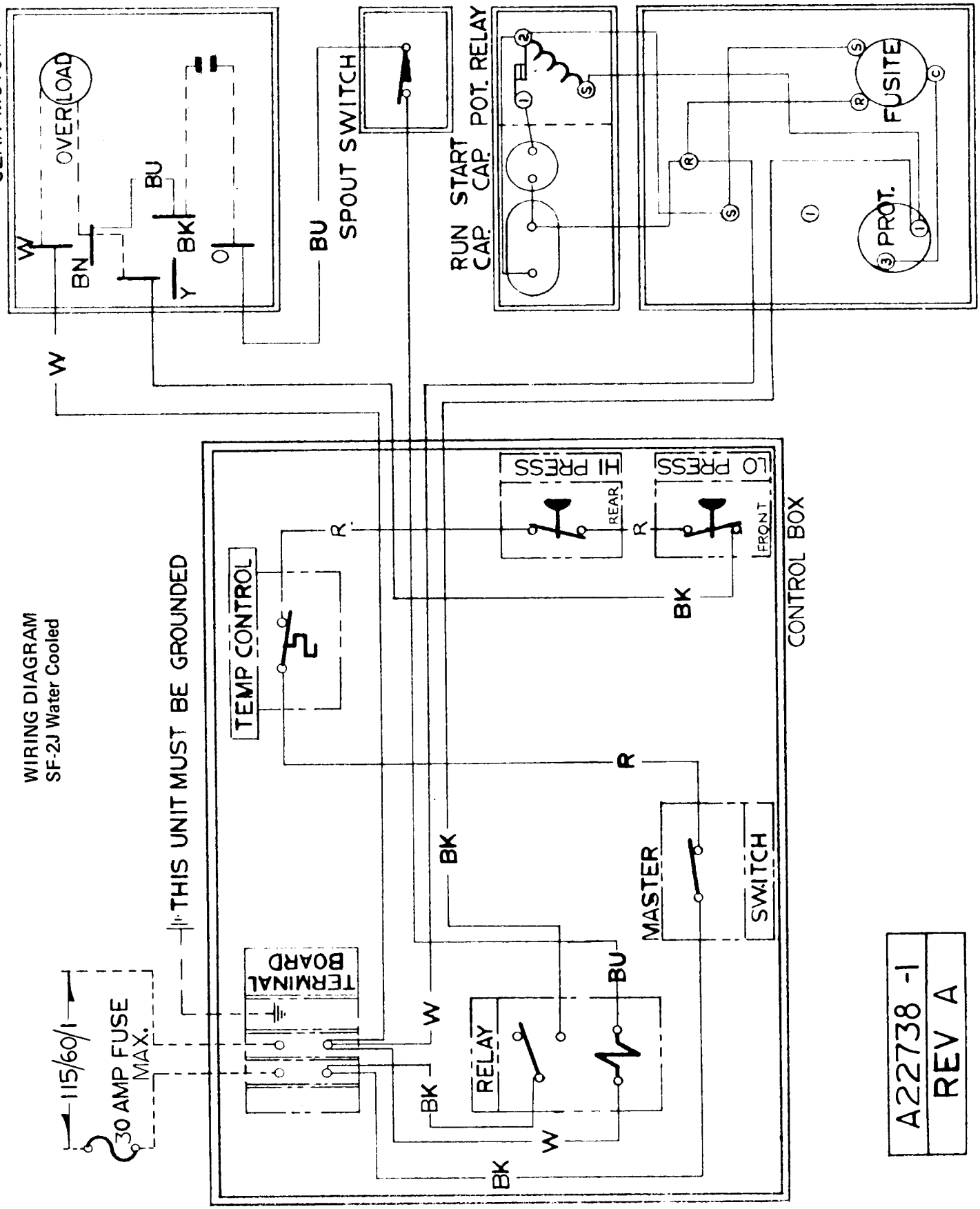
WIRING DIAGRAM
SF-2J Water Cooled
GEAR MOTOR
OVERLOAD
W
BN
BU
Y
BK
O
BU
SPOUT SWITCH
RUN CAP.
START CAP.
POT. RELAY
FUSITE
PROT.
THIS UNIT MUST BE GROUNDED
TEMP CONTROL
HI PRESS
REAR
LO PRESS
FRONT
R
BK
CONTROL BOX
TERMINAL BOARD
MASTER SWITCH
RELAY
115/60/1
30 AMP FUSE MAX.
A22738 -1
REV A

WIRING DIAGRAM
SF-2J Air Cooled

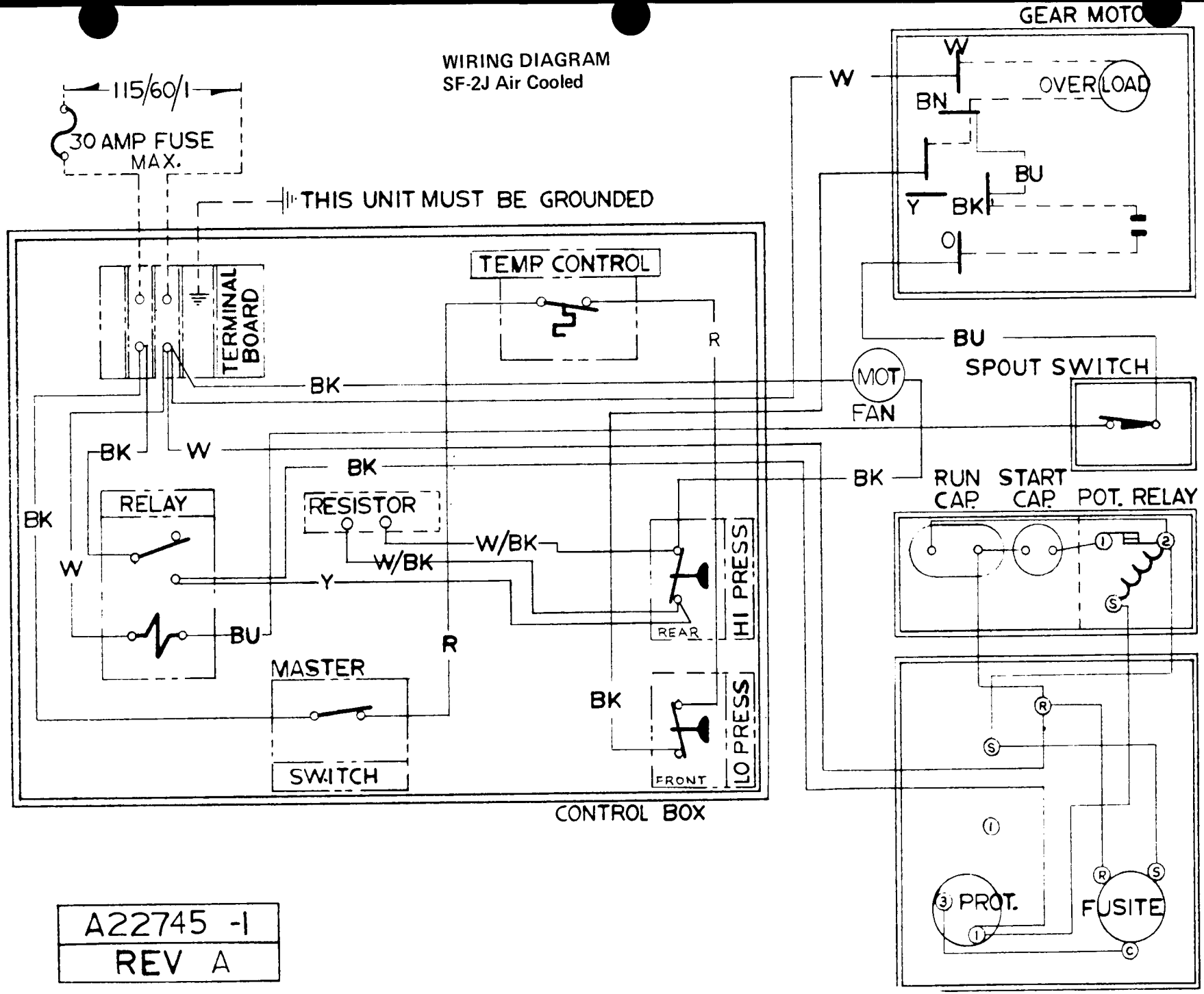

A22745 -1
REV A

FINAL CHECK LIST

1. Is the unit level? (IMPORTANT)
2. Have all electrical and piping connections been made?
3. Has the voltage been tested and checked against the nameplate rating?
4. Is the water supply valve open and the electric power on?
5. Is the water reservoir filled and shut off? All packing removed?
6. Have unit and bin been wiped clean?
7. Has owner been given the Operating Instruction Sheet, and has he been instructed on how to operate the machine?
8. Have the installation and warranty cards been filled out and mailed to the factory?
9. Check all refrigerant and conduit lines to guard against vibration and possible failure.
10. Installed in a well ventilated room where ambient temperatures do not fall below 50° Fahrenheit.
11. Is unit installed with a minimum 4" air space around sides and back?

SERVICE

STARTING THE MACHINE: When the machine is placed and inspected as per instructions and all plumbing and electrical connections are completed and tested, turn on the water supply. Be sure the float cover is removed to check on the float operation and water level in the water reservoir. Be sure the water reservoir is filled before starting the machine. Water level should be 1/4 inch below the reservoir overflow.

When this is completed, turn on the manual switch on the front of the cabinet and the machine is in automatic operation. In two to three minutes ice will start dropping off the worm shaft and out the ice chute. Let the machine operate for at least 30 minutes and check for any excess noise other than the normal compressor noise. Test the ice storage control bulb by holding a handful of ice around the bulb until the machine shuts off. One minute should be normal for the control to function. Within minutes after the ice is removed, the bulb will warm up and the machine will automatically start up. The control is factory set and should not be reset until this test is made. Normal setting of this control should be approximately 35 degrees cut-out and 45 degrees cut-in.

Check pressure settings at the time of start-up. On the water-cooled models set the head pressure at 135 PSI. On the air-cooled models the head pressure will vary between 130 and 145 PSI head pressure. The frost line should extend out of the accumulator if properly charged with refrigerant and suction pressure will range between 14 and 16 PSI with 50° F inlet water.

Check the hand reset low pressure control setting. This safety device should be set at approximately 5 PSI below normal operating suction pressure and should cut off in case of interruption in water supply, shortage of refrigerant, low ambient or any other cause of abnormally low suction pressure.

Explain the machine to the owner, showing him how the machine works and go over the owner's instruction sheet with him. Answer all the owner's questions about the machine, and do not leave with any doubt in the owner's mind about the machine, how to operate it or where to reach you should he need service on the machine. Call back the next day to check the machine again and answer any other questions the owner may have.

Service gauge connections are available on both high and low side service valves on water cooled models, suction valve only on air cooled models.

To install gauges to any of these connections, use lines with tire type service valve adapter. Purge free of any non-condensable gases before starting any test operation.

REFRIGERANT CHARGE: The below refrigerant charge is approximate. When charging, set at 135 PSI head pressure and charge so that the frost line extends out of the evaporator and into the accumulator after fifteen minutes of operation.

Model	Freon Charge
Air-Cooled	33 oz. R-12
Water-Cooled	30 oz. R-12

SERVICE

WATER SYSTEM: A water level is maintained in the water reservoir by a float operated valve. Water is piped from the water reservoir to the freezing chamber by a gravity feed line maintaining an equal water level.

The water reservoir is equipped with a 2 inch air gap to prevent back siphoning and meet all health codes.

The water level in the water reservoir is adjusted by bending float arm. The water level should be set 1/4 inch below the moulded in overflow well.

A water strainer must be installed in the supply line. Use strainer sent with machine.

ELECTRICAL SYSTEM: The electrical circuit consists of condensing unit, gear motor, hand reset combination or low pressure cut-out, storage bin thermostat, on and off switch, micro (safety) switches and head pressure control.

A. Condensing Unit. The compressor terminal box houses the motor compressor terminal block, and the overload Klixon. To gain access to the terminal box, remove the two screws holding the beveled metal cover. The starting capacitors, running capacitors and starting relays are housed and fastened to the unit chassis frame.

B. Gear Motor. All Model SF2J series flakers are equipped with a direct drive gearmotor to freezer shaft. 1/4 Horsepower motors are split phase, output shaft turns at 10 R.P.M. manufactured by Queen Products.

C. High-Low Pressure Cut-Out. (Automatic reset on water cooled models only.) Dual pressure control is located on the frame assembly. Factory settings cut-out 5 lbs. on low pressure and 180 PSI on high pressure. This control prevents operation at abnormal pressures. Some models utilize reset low pressure - automatic reset high pressure control.

D. Low Pressure Cut-Out. (Hand reset on all air cooled models.) Control is located in the control box. Factory settings cut-out at 5 PSI. Safety device to cut off machine and keep it off in case of water supply failure, loss of refrigerant, low ambient temperature or other causes of low pressure.

E. Storage Bin Thermostat. Control located on frame assembly. Factory settings 35° cut-out, 45° cut-in. This control shuts off complete machine when ice in storage bin builds up to control.

F. Micro Safety Switch. The micro switch is located in the top of the ice chute. The switch is operated by a plate in top of the ice chute by the ice backing up in the chute should the thermostat fail. Micro switch will shut off the condensing unit only, when operated.

G. ON-OFF SWITCH: A manual on-off switch is located in control box.

Air Cooled Models

H. Head pressure Control Kit. A reverse acting high pressure control is used and connected electrically to the fan motor. As the head pressure drops below th cut-out setting, the control opens allowing the current to pass entirely through a resistor in the line feeding the fan motor. This slows the shaded pole motor down to approximately 1/4 speed thus increasing the head pressure. When the control cuts in the full voltage again flows directly to the fan motor allowing it to operate at full speed. This feature protects unit against low ambient conditions.

REMOVAL & INSTALLATION OF PARTS

CABINET TOP (HOOD)

1. Remove two back end screws of chrome strip.
2. Pull out tape concealing screws.
3. Remove balance of screws in chrome strip.
4. Lift off hood.

HOOD SERVICE DOOR TOP

1. Remove screws from edges.
2. Lift out door.

CABINET SIDE SERVICE DOOR

1. Remove four screws on edges.
2. Lift out door.

CABINET FRONT SERVICE DOOR

1. Front door pulls out.

CABINET REAR SERVICE DOOR

1. Remove four screws on corners of rear service door.
2. Pull door out.

ICE STORAGE DOOR

1. Lift door up, slide back 6". Remove thumb screw that attaches safety lanyard to back of door.
2. Door will now slide out. Lift front edge slightly to clear hood lip.

ICE STORAGE DOOR FRAME

1. Remove six screws at bottom and sides.
2. Remove screw in frame back.
3. Frame will now lift out.

WATER RESERVOIR

1. Remove service panel in cabinet hood.
2. Turn off water supply and drain reservoir.
3. Remove 1/4 inch copper inlet water line.
4. Remove 1/2 inch plastic feed line to freezer.
5. Remove two screws holding reservoir bracket to wall.
6. Lift out reservoir.
7. To replace, reverse procedure.

SERVICE

FREEZER ASSEMBLY

1. Remove cabinet top (Hood). (See Removing and Installing Cabinet Parts.)
2. Shut off water supply to unit, remove top and left side service panels.
3. Disconnect water inlet line at reservoir. Remove water supply tube at freezer and drain freezer.
4. Purge off refrigerant, unsweat suction line, disconnect capillary line at drier. Cap off all lines so no moisture can enter system.
5. Remove insulation pieces around spout, also the spout proper.
6. Remove 3 bolts holding fiber adapter base to gearmotor top cover, lift freezer out of cabinet.
7. Remove fiber adaptor spout front and back plates from old freezer and install on new replacement.
8. Re-install in reverse of above.

FREEZER WORM SHAFT

1. Turn unit off, before removing worm shaft.
2. Shut off water supply to unit.
3. Remove hood service doors.
4. Remove top and bottom straps around spout insulation pieces, remove pieces.
5. Remove two slotted head screws which fit through top chamber wall into ice breaker.
6. Tap drive coupling loose on bottom end of freezer worm shaft.
7. Complete worm shaft with ice breaker attached will now come out by lifting up on freezer cap pull ring. NOTE: Top half of water seal will come with worm shaft.
8. To remove ice breaker from shaft, first remove retainer ring in top of ice breaker.
9. Remove freezer cap and pull ring from ice breaker.
10. Remove cap screw holding shaft through bearing and pull worm shaft free from ice breaker and bearing.
11. If shaft is defective, remove water seal top half and put on new worm shaft before reassembling – when reassembling, by reversing above, put a small amount of Vaseline on shaft end. This will allow shaft to slide smoothly through rubber bottom half of water seal without tearing it.

WATER SEAL

1. To replace water seal, follow steps 1 through 7 under Worm Shaft Removal.
2. Remove 3 bolts holding freezer to fiber mounting adapter.
3. Lift freezer off adapter just high enough to allow bottom bearing and bottom half of water seal to be removed from bottom of freezer tube.
4. Lightly grease bottom half of new water seal and insert face up approximately 1/2" in bottom of freezer tube.
5. Insert bottom bearing in bottom of freezer tube, force approximately 1/8" past bottom tube end. This will allow the positioning ring on fiber adaptor to properly position freezer tube when tightening up the three mounting bolts.
6. After securing mounting bolts, put new top half of water seal on worm shaft the same way as the old seal was removed.
7. Carefully insert worm shaft assembly in freezer tube and into drive coupling on bottom.
8. Replace ice breaker screws, insulation pieces and unit is ready to resume operation.

STORAGE BIN THERMOSTAT:

1. Disconnect electrical supply.
2. Remove bin thermostat bulb from bin location along with its capillary tube.
3. Remove control box cover.
4. Disconnect two spade type electrical leads.
5. Loosen two screws in control mounting bracket.
6. Replace with new control and reassemble in reverse of above.
7. CAUTION: Always check new control power element charge before installtion to assure receiving an operative control. A handful of ice on bulb will register an audible 'click' at cut off.

MICRO SWITCH IN SPOUT

1. Remove hood service panel.
2. Remove insulation pieces around freezer spout.
3. Remove micro box cover, loosen two screws at rear of box holding switch in place, lift up.
4. Disconnect electric leads.
5. Reassemble with new micro switch.

MANUAL ON AND OFF SWITCH

1. Remove front service door.
2. Remove two screws holding switch to bracket.
3. Disconnect electrical leads from switch.
4. Remove switch.
5. To replace, reverse procedure.

FREEZER GEARMOTOR

1. The easiest way to change the gearmotor is to remove complete cabinet hood as explained earlier in this section. If necessary because of location you can change by removing top service panel.
2. Pull off left side service panel and look up on underside of left side cabinet panel: 4 screws secure this gearmotor to frame.
3. Remove the four wire leads (2 on micro switch on top of motor, 2 from motor into control box.)
4. Remove 3 bolts thru fiber adapter into gearmotor cover and the 4 bolts holding gearmotor to mounting base.
5. Lift freezer adapter assembly off gearmotor and pull gearmotor out thru left side.

MOTOR COMPRESSOR

1. Remove gas charge.
2. Disconnect wiring from the compressor.
3. Loosen suction and discharge lines and cap off.
4. Remove the compressor hold-down nuts and lift compressor out of the unit.
5. Reverse steps 1 through 4 in replacing compressor.

CONTROL BOX

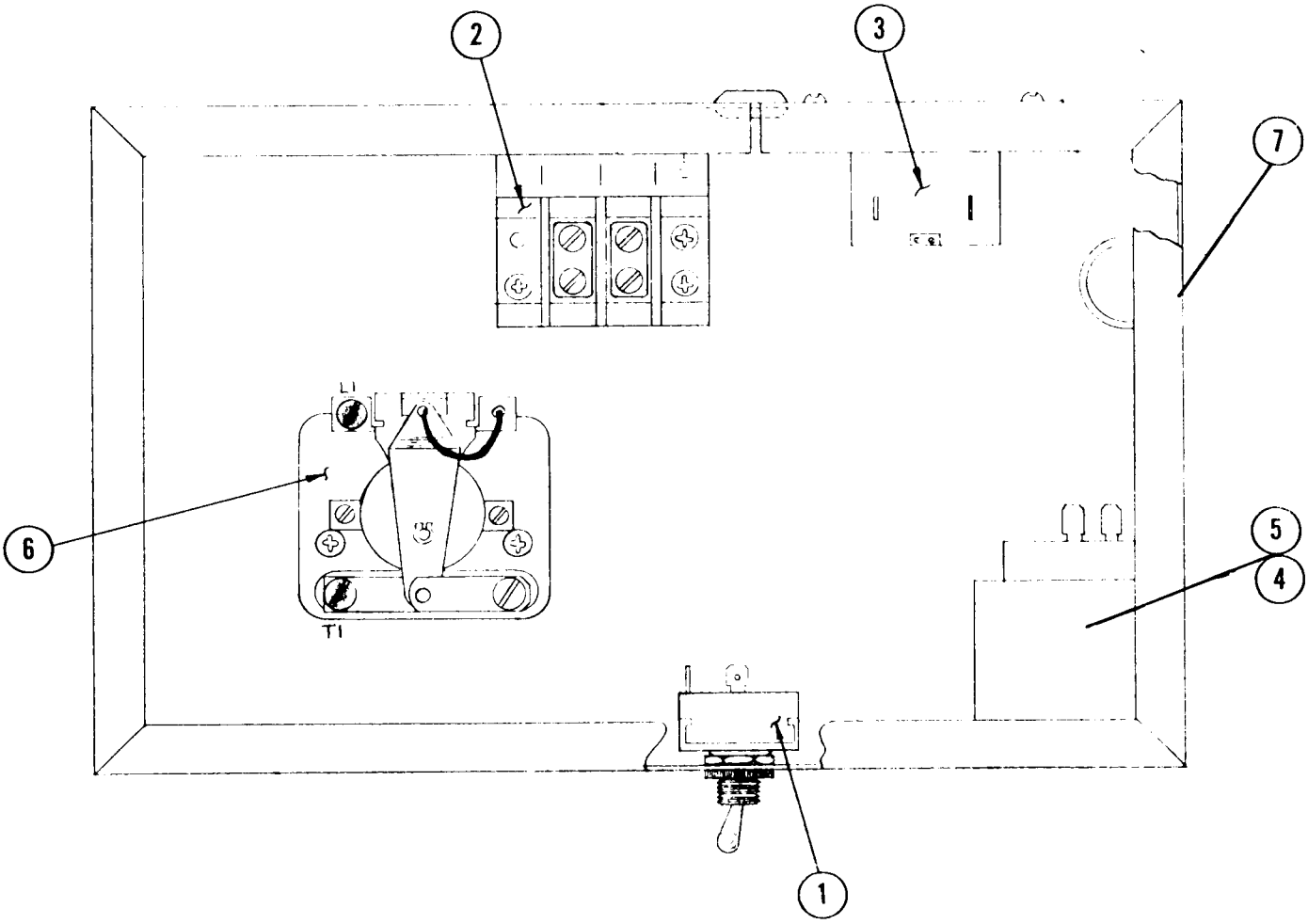

ITEM	PART NO.	DESCRIPTION
	A22737-1	Control Box Assembly (Water cooled) 115/60/1
	A22737-2	Control Box Assembly (Water Cooled) 230/60/1
	A22746-1	Control Box Assembly (Air Cooled) 115/60/1
	A22746-2	Control Box Assembly (Air Cooled) 230/60/1
1.	12-426-2	Switch – On-Off
2.	12-813-4	Terminal Board
3.	11-354	Bin Thermostat
4.	11-362	Fan Speed Control (Air Cooled only)
4.	11-357	High Pressure Control (Water Cooled only)
5.	11-358	Low Pressure Control
6.	12-419	Relay 115/60/1
7.	12-474	Resistor - Fan Speed 115/60/1 } Air Cooled Only
	12-562	Resistor - Fan Speed 230/60/1 }

RESERVOIR ASSEMBLY

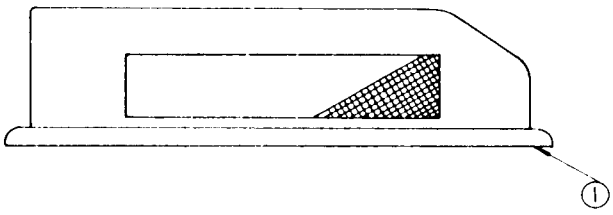

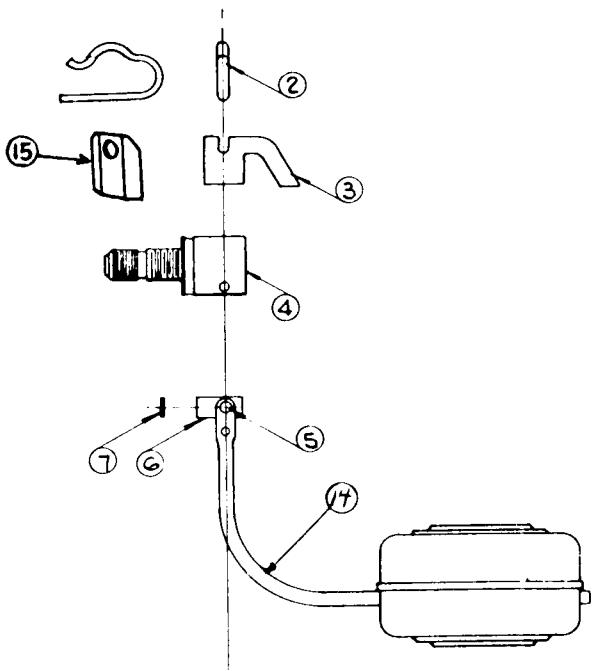

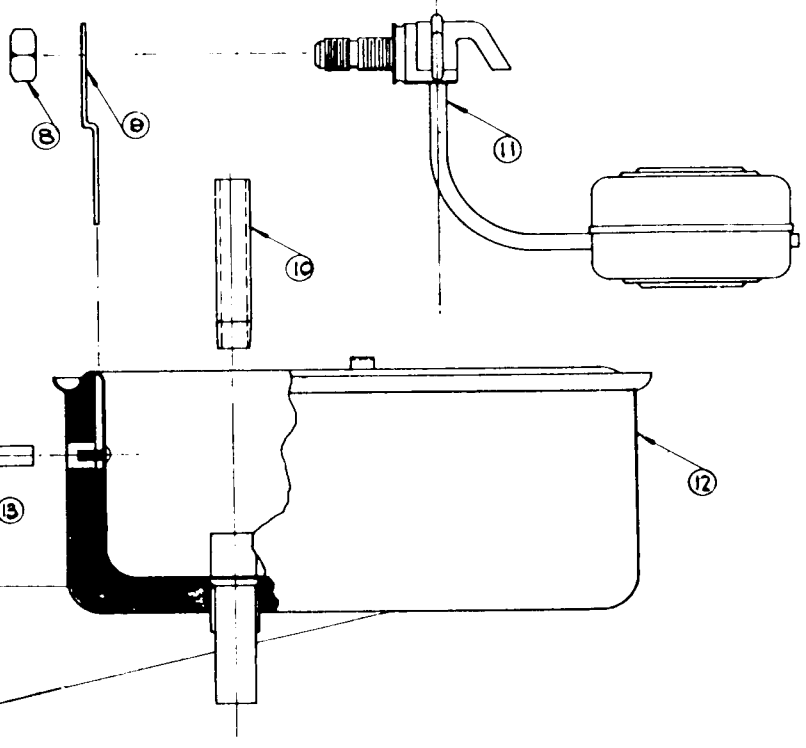

ITEM NO.	PART NO.	NAME
1.	A-16012	Reservoir Cover
2.	2-1259	Valve Pin
3.	2-1320	Deflector
4.	S-8770	Inlet Valve
5.	3-1001	Rivet
6.	A-5777	Valve Seat Holder
7.	S-6947	Valve Seat
8.	3-1394	Nut
9.	A-12869	Bracket
10.	S-6715	Stand Pipe
11.	S-8138	Inlet Valve Ass'y
12.	A-13409	Reservoir Body
13.	A-8055	Bracket Nut
14.	A-12067	Float and Arm Ass'y
15.	A-18418-1	Water Deflector
	A-8339	Complete-less cover

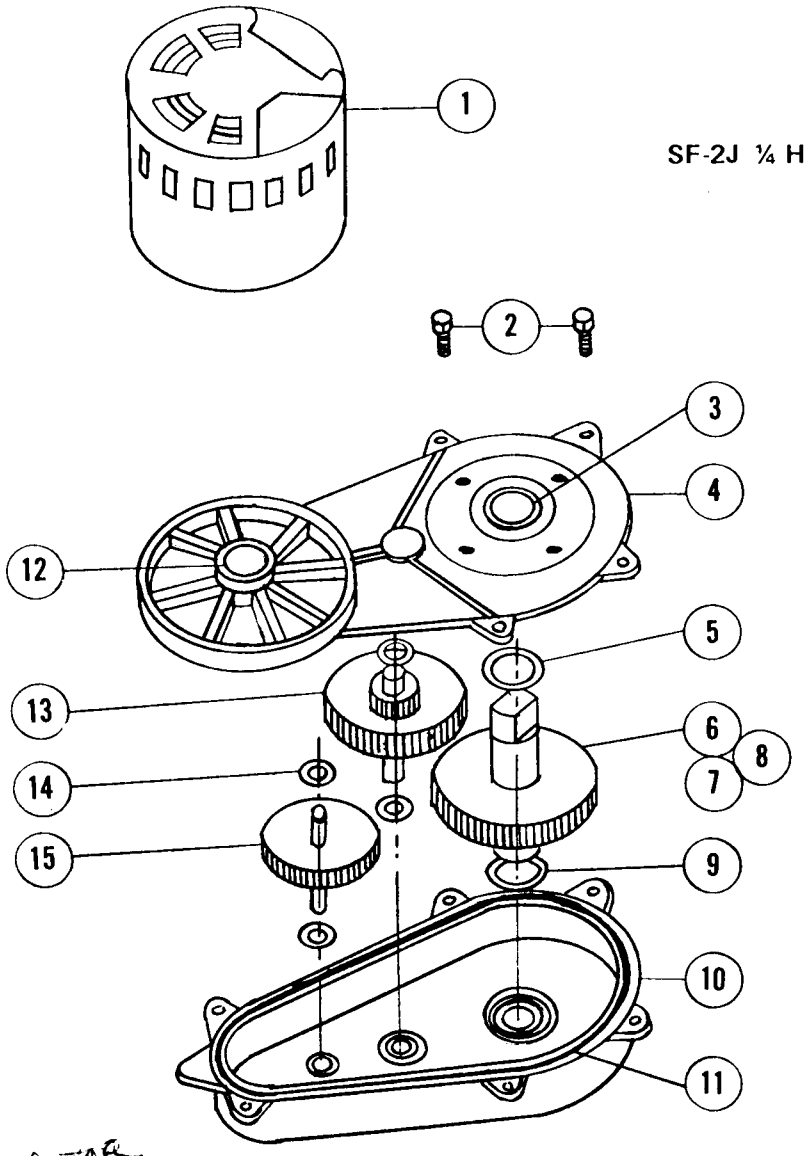

SF-2J ¼ HP GEAR MOTOR ASSY

MTR+ ROTOR
REPLACEMENT
A22475-001 115V
-002 230V

ITEM NO.	PART NO.	NAME
1.	12-1741-01	Drive Motor 115/60/1
	12-1641-05	Drive Motor 115/50/1
2.	03-1251-01	Flange Screws
3.	2-1607	Grease Seal
4.	A22200	Gear Case Cover
5.	02-1681-00	Washer
6.	2-1653	Gear
7.	2-1652	Shaft
8.	03-1364-00	Key
9.	2-1680	Washer
10.	A22199	Gear Case Assy.
11.	2-1608	O'Ring
12.	2-1606	Grease Seal
13.	2-1604	Gear and Pinion
14.	3-1321	Washer
15.	2-1603	Gear and Pinion
	A22750-1	Gear Motor Complete 115/60/1
	A22750-5	Gear Motor Complete 115/50/1

Output Shaft Turns at 10 RPM.

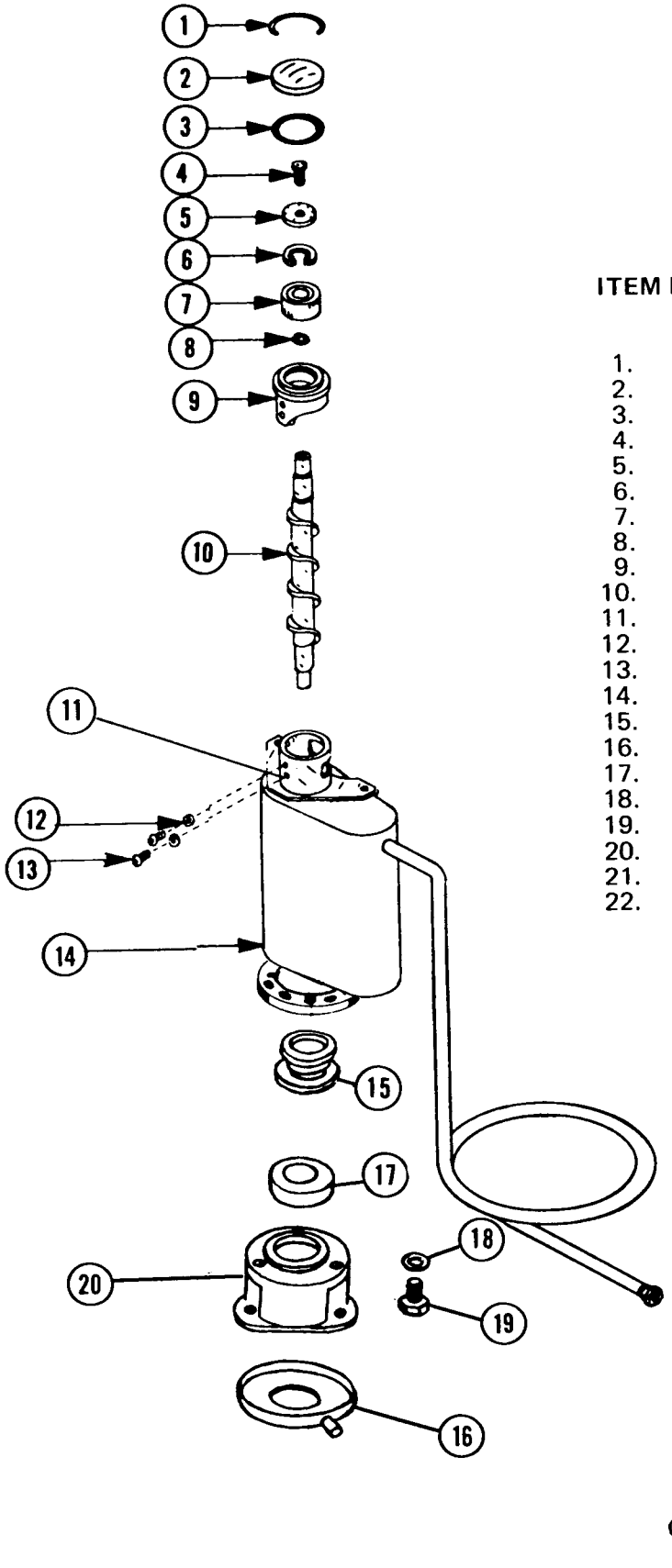

FREEZER ASSEMBLY
SF-2J MODELS

ITEM NO.	PART NO.	DESCRIPTION
1.	A8582	Cap Hook
2.	A8581	Cap
3.	13-617-20	O'Ring
4.	3-1405-36	Cap Screw
5.	A6273	Washer
6.	3-712	Snap Ring
7.	2-646	Bearing
8.	13-617-15	"O" Ring
9.	A8316	Breaker
10.	2-617	Auger
11.	A18431	Spout Plate
12.	A20278	Worm Tube – Suction Line
13.	3-1410-3	Washer
14.	3-1403-48	Screw
15.	2-929	Water Seal
16.	A21290	Drip Pan
17.	2-619	Lower Bearing
18.	3-1417-13	Washer
19.	3-1405-41	Screw
20.	2-1629	Adapter
21.	A23733	Drive Coupling
22.	13-704	Shaft Drip Shield Rubber
	A29279	Freezer Complete

CHASSIS ASSEMBLY

SF2WJ - Water Cooled

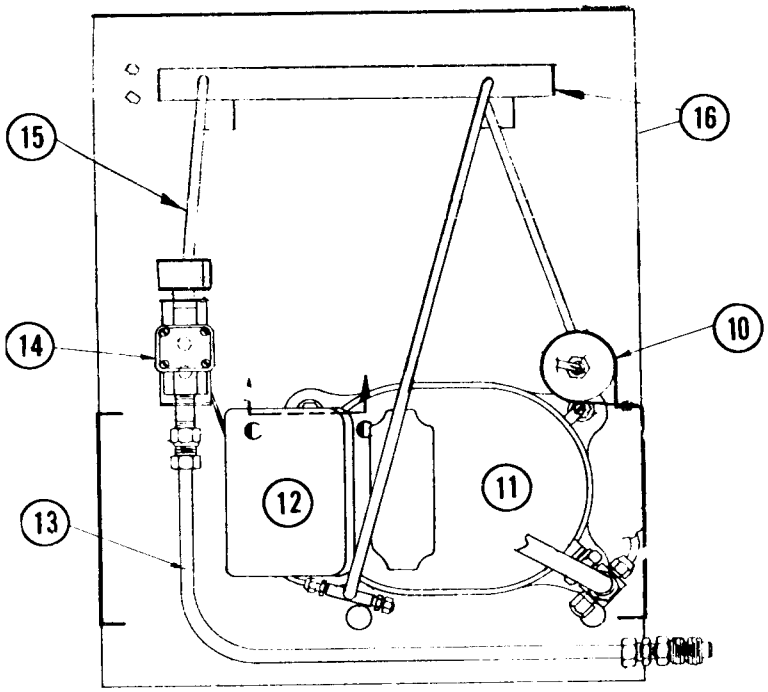

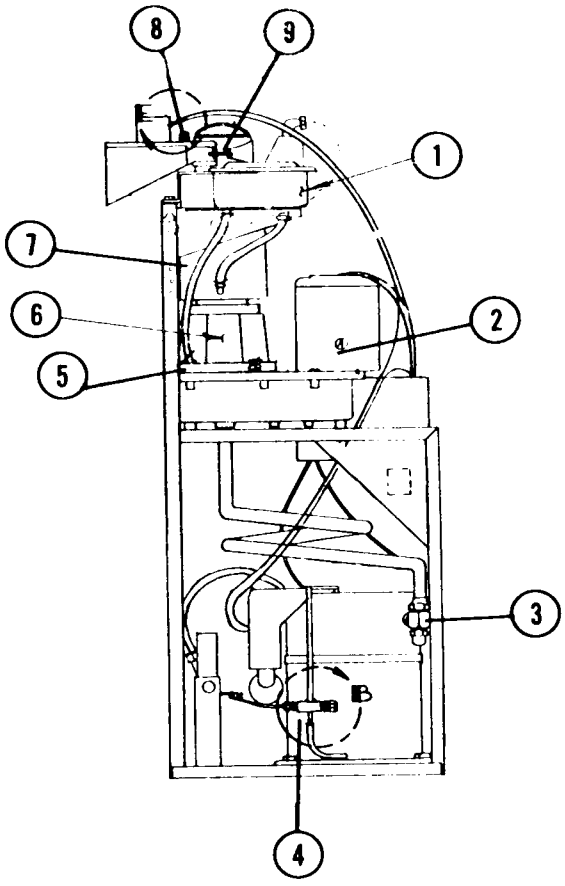

ITEM NO.	PART NO.	DESCRIPTION
1.	A23410-5	Water Reservoir
2.	A22750-1	Gear Motor
3.	18-2201-30	1/2" Flare, Suction Service Valve
4.	16-563	Discharge Valve Cap
	16-560	Discharge Valve Core
5.	A-21290	Drip Pan
	13-704	Gasket
6.	2-1629	Fiber Adapter
	A23733	Coupling Assembly
	3-1405-41	Screws Into Gearmotor (4/unit)
	3-1417-13	Lockwashers for above
7.	A-20279	Freezer Assembly
8.	A-14256	Knurled Nut
	A-14269	Front Spout Casting
9.	3-1403-55	Screws thru Casting Halves
10.	2-544	Drier
11.	18-2400-1	Motor Compressor
12.	18-2400-25	Compressor Overload
	18-2410	Compressor Relay
	18-2420	Starting Capacitor
13.	A23411	Water Inlet Line
14.	11-198	Water Regulating Valve
15.	A-21604-4	Condenser Inlet Line
16.	18-368	Condenser (Halstead-Mitchell)

CHASSIS ASSEMBLY
SF2J – Air Cooled

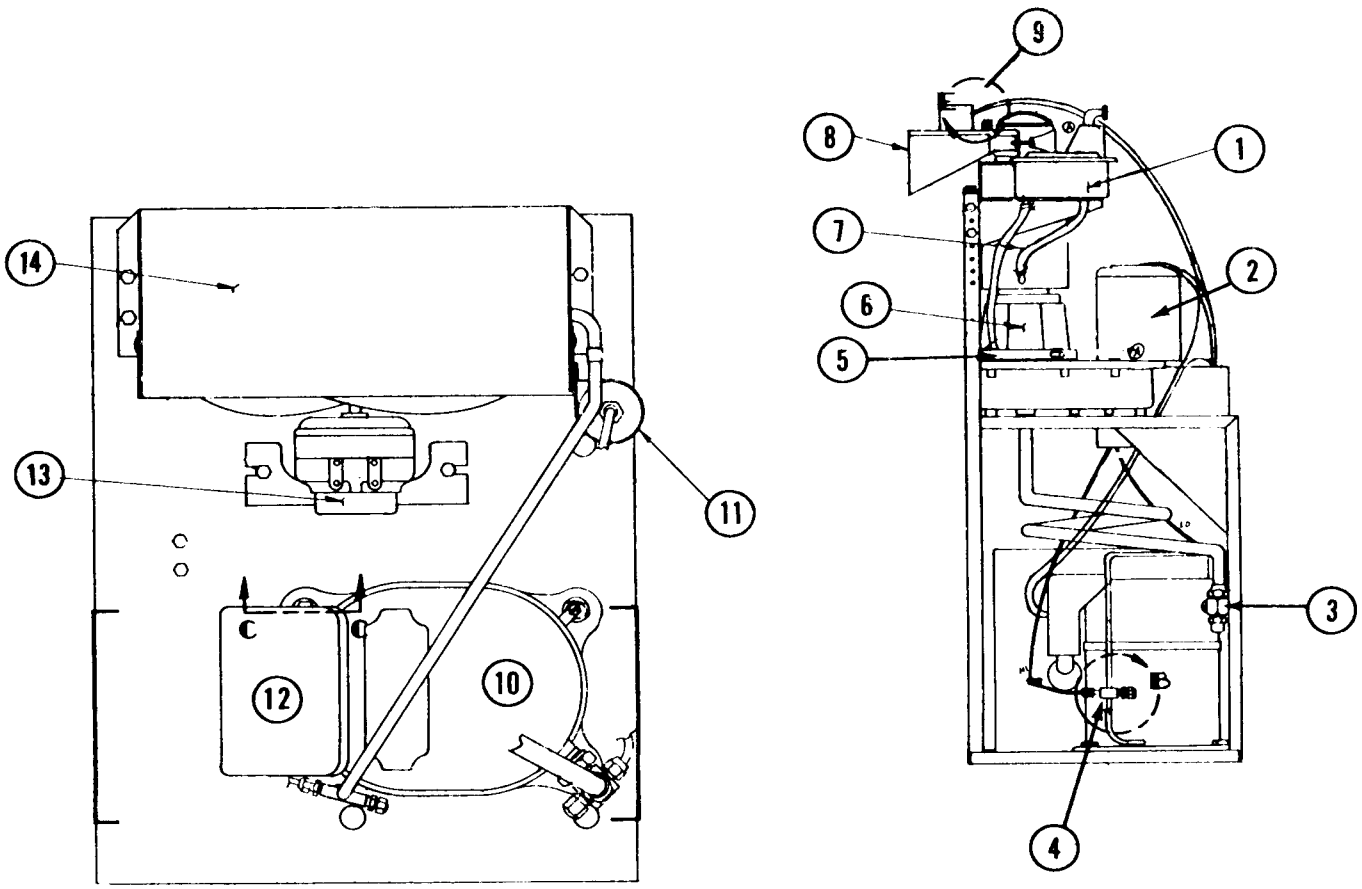

ITEM NO.	PART NO.	DESCRIPTION
1.	A23410-5	Water Reservoir
2.	A22750-1	Gear Motor
3.	18-2201-30	1/2" Flare Suction Service Valve.
4.	16-563	Discharge Valve Cap
	16-560	Discharge Valve Core
5.	A-21290	Drip Pan
	13-704	Gasket
6.	2-1629	Fibre Adapter
	A23733	Coupling Assembly
	3-1405-41	Screws into Gear Motor (4/unit)
	3-1417-13	Lockwasher for above
7.	A-20279	Freezer Assembly
8.	A16350	Spout
9.	12-1018	Spout Micro Switch
10.	18-2400-1	Compressor (50 & 60 cycle)
11.	2-1752-2	Drier
12.	12-1576-1	Fan Motor
	18-2420	Capacitor 115V
	18-2421	Capacitor 208-230V
	18-2410	Relay 113 V
	18-2411	Relay 208 - 230 V
13.	12-1573-3	Fan Motor Cord
	18-363	Fan Blade
	18-388	Motor Mount
14.	18-334	Condenser
	A-12111	Condenser Shroud

SF-2J CASE ASSEMBLY

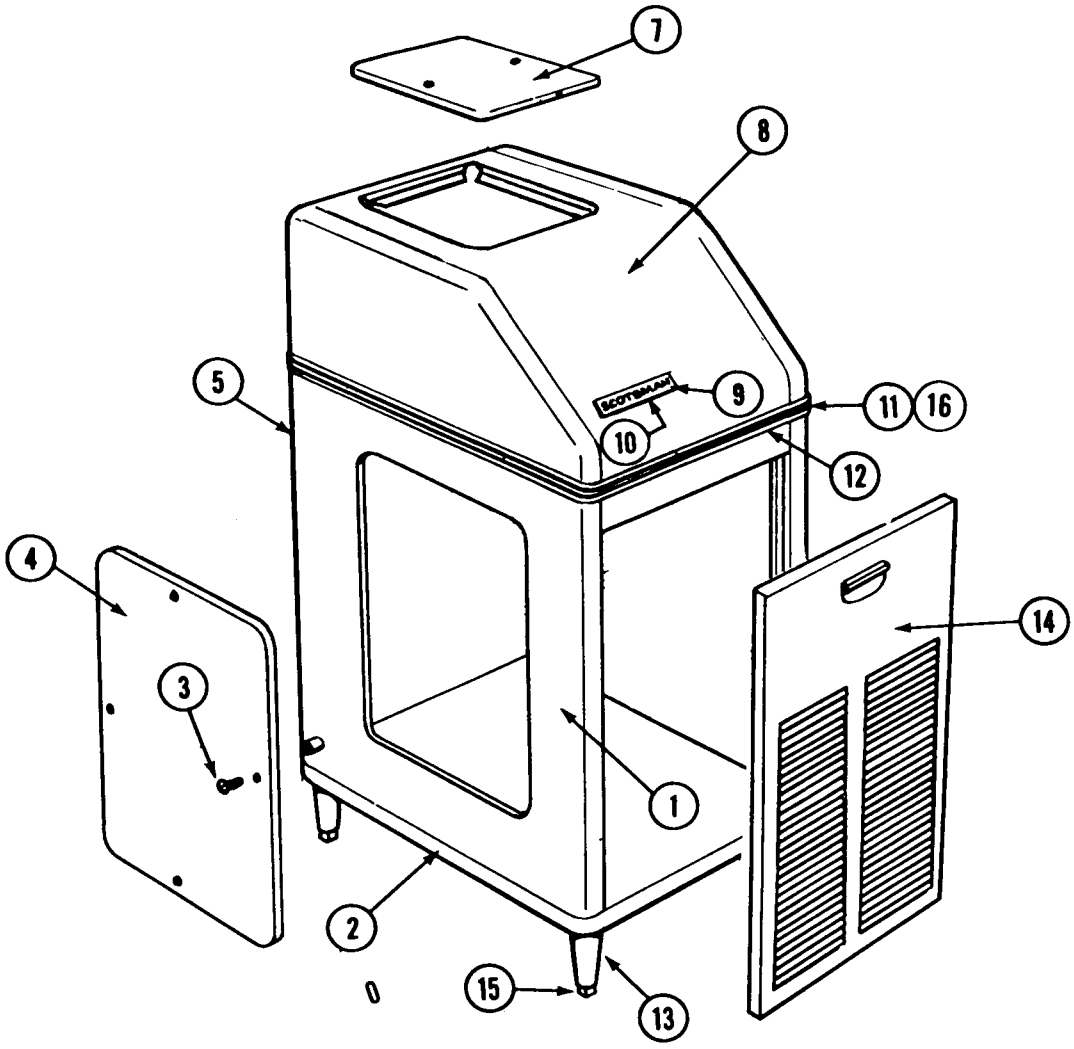

ITEM NO.	PARTS NO. Gray	S.S.	NAME
1.	A-20304	A-20304-1	Case Assembly (less doors)
2.	A8901-8		Moulding Strip (bottom)
3.	3-1419-9		Screw (s.s.)
4.	S-6713	S-6713-S	Side Door
5.	A-8741	A-8741-S	Rear Door (*)
7.	A-7676	A-7676-S	Top Door
8.	A-20991	A-20991-1	Case Hood (less doors)
9.	15-156		Scotsman Emblem
10.	3-271		Speed Nuts
11.	15-324		Plastic Trim Insert (per foot)
12.	S-6211		Moulding Strip (top)
13.	A-15803	A-15803-1	Legs (4 reqd.
14.	A-21250	A-21250-2	Front Door
15.	A18766	A18766-1	Leg Levelers (4 reqd.)
16.	A8901-4		Moulding Track

(*) Not Shown

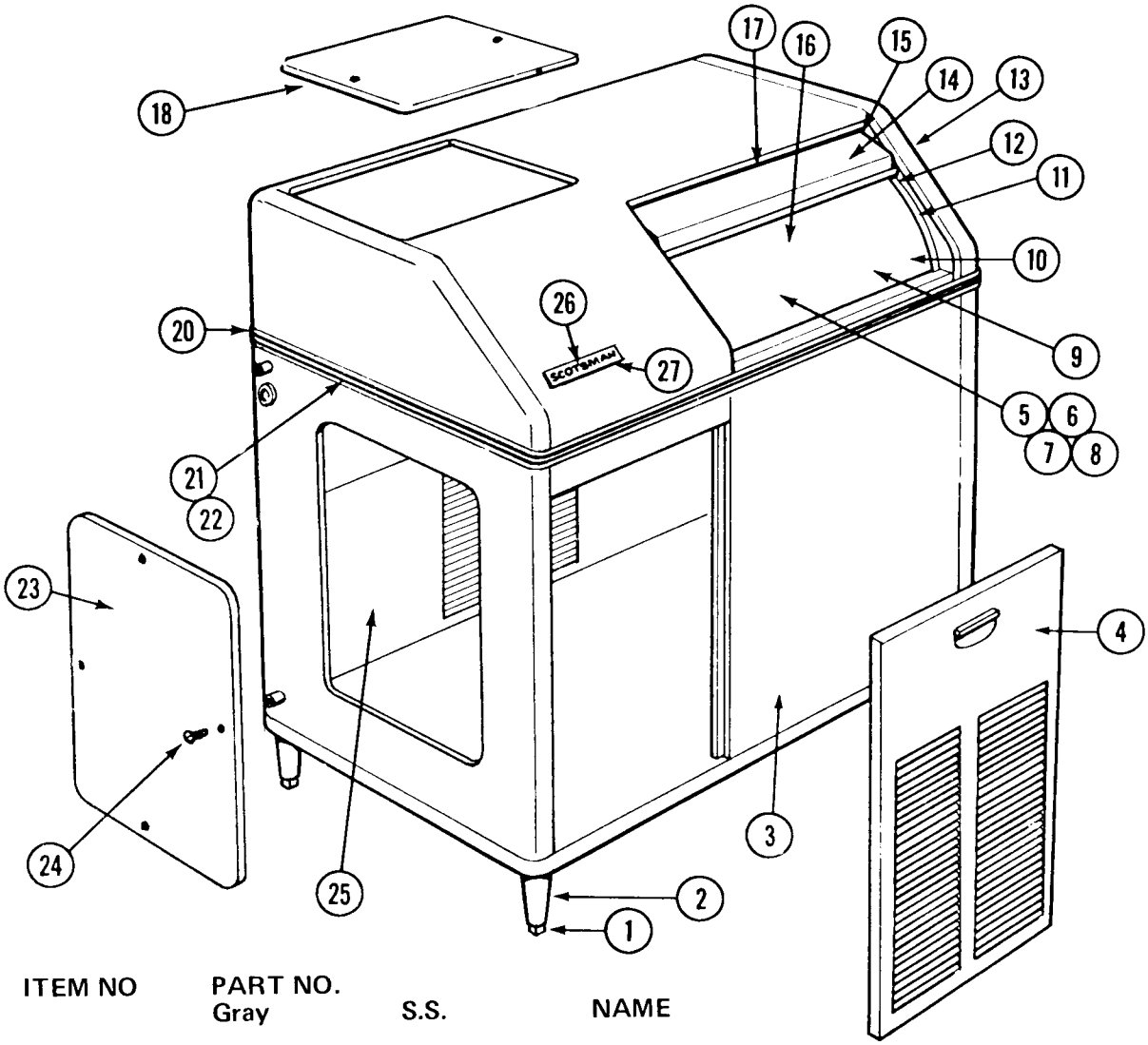

ITEM NO	PART NO. Gray	S.S.	NAME
1.	A18766	A18766-1	Leg Leveler
2.	A-15803	A-15803-1	Leg
3.	A-20288	A-20288-1	Case Assy.
4.	A21250	A-21250-2	Front Door
5.	A-21022		Drain Assy.*
6.	13-617-11		"O" Ring*
7.	2-1741		Drain (Top)*
8.	2-1742		Drain (Bottom)*
9.	A-19736		Storage Bin Assy.*
11.	3-640		Door Glides (door)
12.	3-1195		Door Glides (hood)
13.	A-20992	A-20992-1	Case Hood Assy.
14.	2-1735	A-15559	Sliding Door
15.	A-16208		Door Track
16.	2-1615		Bulb Holder*
17.	A-16209		Door Catch*
18.	A-7676	A-7676-S	Top Door
20.	A5829		Rear Trim Strip*
21.	15-324		Plastic Moulding Strip
22.	5-6413		Front Moulding Strip
23.	S-6713	S-6713-S	Side Door
24.	3-1419-9		Screw S.S.
25.	A-8741	A-8741-S	Rear Door
26.	15-156		Emblem
27.	3-271		Speednut

* Not Shown

SERVICE ANALYSIS

SYMPTOM	POSSIBLE CAUSE	CORRECTION
Unit will not run	Blown Fuse	Replace fuse and check for cause of blown fuse.
	Thermostat set too high	Adjust thermostat. 35° cut-out and 45° cut-in.
	Loose electrical connection	Check wiring.
	Switch in OFF position	Turn switch to ON.
	Inoperative master switch	Replace switch.
Compressor cycles intermittently	Low voltage	Check for overloading.
	Dirty Condenser	Clean.
	Air circulation blocked	Move unit to correct.
	Inoperative condenser motor	Replace.
	Non-condensable gases in system	Purge off.
Making wet ice	Surrounding air temperature	Correct or move unit to cooler location.
	Under or over-charge of refrigerant	Recharge with the proper amount.
	High water level in water reservoir	Lower to ¼ inch below overflow pipe.
	Faulty compressor	Repair or replace.
Low ice production	Loss of refrigerant, under or over-charge of refrigerant.	Check and recharge with proper amount of refrigerant.
	Dirty or plugged condenser	Clean condenser
	Low water level in water	Adjust to ¼ inch below overflow pipe.
	Partial restriction in capillary tube or drier	Moisture in system. Overcharge of oil in system. Remove charge and drier. Replace and recharge system.
	Inlet water strainer partially plugged.	Remove screen and clean.
	Corroded or stained worm shaft due to water condition.	Remove worm shaft and clean
Machine runs but makes no ice	Loss or under-charge of refrigerant	Check for leaks and recharge
	Drive gearmotor or drive coupling stripped.	Check. Repair and/or replace.
	Water not entering freezing chamber	Plugged strainer or supply line. Check and clean. Air lock in gravity feed line. Check and remove air lock.
	Moisture in system	Check and remove charge and drier. Replace and recharge.
	Water seal leaking	Replace seal
	Water supply to unit off	Restore water supply to icemaker.

SERVICE ANALYSIS

SYMPTOM	POSSIBLE CAUSE	CORRECTION
Water Leaks	Defective water seal	Replace.
	Gravity feed line leaking	Check hose clamps
	'O' ring in spout casting leaking	Remove spout casting and install new 'O' ring.
	Storage bin drain & connecting fittings leaking.	Check and repair.
	Water level in reservoir too high	Adjust to ¼ inch below overflow pipe.
Excessive noise or chattering	Mineral or scale deposit on auger and inner freezing chamber walls.	Remove and manually polish auger, polish inner chamber walls of freezer barrel. For lighter concentrations use Scotsman Ice Machine Cleaner periodically.
	Low suction	Add gas to raise suction pressure.
	Intermittent water supply	Check & clean water strainer. Check gravity feed line for air lock. Remove air lock
	Water level in reservoir too low.	Adjust to ¼ inch below overflow pipe.
	Gear motor loose on frame	Tighten
	Gearmotor end-play or worn bearings.	Repair or replace.
Machine continues to run with full storage bin	Storage bin thermostat not properly set.	Reset or replace. Rese 35° cut-out, 45° cut-in Check operation with handful of ice.
Gearmotor noise	Low on oil	Remove case cover to check for proper oil level. Top of gears should be covered. Use Sun Oil Co. Prestige 50 EP.

MAINTENANCE INSTRUCTIONS – FLAKERS

THE FOLLOWING MAINTENANCE SHOULD BE SCHEDULED THREE TIMES PER YEAR ON ALL SCOTSMAN SUPER FLAKERS. CALL YOUR AUTHORIZED. SCOTSMAN SERVICE DEPARTMENT.

1. Check and clean water strainers and float valve. Depress float valve to insure full stream of water.
2. Check water level and machine level, keep water level below overflow, but as high as possible and still not run out of spout opening with machine off. Water droplets come out of spout with ice at all times. Adjust as required.
3. Clean reservoir and interior of freezer using SCOTSMAN Ice Machine Cleaner.
   A. If machine has been cleaned regularly and no problems such as dry ice or chatter are noticed, clean as per the following instructions:
   a. Set main switch to OFF.
   b. Remove all ice from storage bin.
   c. Turn off water supply or block float. Drain reservoir by disconnecting tube between reservoir and freezer. After draining, reconnect tubing.
   d. Set main switch to ON and pour cleaning solution into reservoir. Do not fill above overflow tube.
      Use 6 oz. of Scotsman cleaner and 1-1/2 qt. hot water.
   e. Continue to make ice on solution until the solution is used up and reservoir is empty.
   f. Set main switch to Off. Remove overflow tube, wash and rinse reservoir, replace overflow tube, turn water on or remove float block.
   g. Turn MAIN SWITCH to ON. Let unit run for at least (15) minutes to flush out any cleaning fluid. Check ice for acid taste. – run until ice tastes sweet.
   h. Turn MAIN SWITCH to OFF. Add hot water to ice bin, using this melt water, thoroughly wash and rinse all surfaces within the storage bin.
   i. Turn MAIN SWITCH to On. Replace Service Door. Unit is ready for normal operation.

NOTE: Cleaning requirements vary according to local water conditions. Visual inspection of the auger before and after cleaning will indicate best procedure to be followed in local areas.

4. Check high and low side pressures. On air-cooled models head pressures range between 130 and 145 PSI. Suction pressure should be above 12 PSI and will range up to 15 PSI depending upon water and ambient temperatures.
5. Check gearmotor operation. Normal running temperatures are in the area of 160° Farenheit, which is hot to the touch.
6. Check top bearing of freezing tube. Remove retainer ring around edge of stamped brass cap. If moisture is around bearing, wipe up and remove grease. Add new grease. Use Beacon No. 325. Replace cap and retainer ring.
7. Clean air-cooled condenser. Inform customer to clean frequently. Always shut off machine when cleaning.
8. Oil condenser fan motor when possible.
9. Check for refrigerant leaks and proper frost line. Should frost out of accumulator at least one-half way to compressor, and in some areas back to service valve.
10. Check for water leaks. Tighten drain line connections. Run water down bin drain line to make sure it is open.
11. Check quality of ice. Ice should be wet when formed, but will cure rapidly to normal hardness in bin.
12. Check thermostat and pressure plate cut off in spout. Micro switch cuts off only compressor. Bin thermostat should be set at 10° differential = 35° cut out, 45° cut in.

TABLE OF CONTENTS
F5-2 SECTION

	Page
FORWARD	
WARRANTY	
GENERAL	
Specifications	1
SPECIFICATIONS	
Dimensions SF-2F	2
Dimensions SF-2WSF	3
Capacity	4
INSTALLATION	
Uncrating	5
Location	6
Erection, Stands, Chutes	7
Plumbing	8
Electrical	8
Instructions	9
SERVICE	
Starting Machine	10
Refrigerant Charge	11
Water Level	11
Electrical System	12
Controls	12-13
Refrigeration Cycle	14
Water Cycle	15
Cabinet Water Schematic	16
Chassis	17
Freezer Assembly	18-19
Wiring Diagrams	20-21
Service Analysis Chart	22-24
Winsmith Gear Reducer	25
MAINTENANCE INSTRUCTIONS	26
CHANGES AND MODIFICATIONS	27-28
PARTS LIST	29-32
OBSOLETE FREEZERS	33-34

SPECIFICATIONS

SCOTSMAN SF-2 Super Flaker is designed for restaurants, super markets, bakeries, dairies, fish markets, hospitals, cafeterias, poultry stores, soda fountains, etc. and will deliver a continuous flow of ice flakes at a capacity up to 650 lbs. per day.

ATTRACTIVE COMPACT CABINET. Silver grey hammerloid finish with chrome trim, rounded corners, and removable panels for easy access to mechanical parts.

SEALED REFRIGERATION SYSTEM. Provides quiet, efficient operation of the machine. Compressor motor is spring mounted and the worm motor is rubber mounted for quiet operation.

HOW IT WORKS. Water in the constant level float reservoir is fed to the bottom end of a freezing cylinder and turns to ice on the inside of this cylinder. The stainless steel auger inside of this evaporator is driven by a motor through a V belt and gear reduction drive. Ice is carried upward by the action of this auger and extruded past the ice breaker at the top of the cylinder.

A manual switch starts the machine, and from then on ice is produced automatically in small uniform pieces of ice. When the storage bin fills, a thermostat shuts the machine off and causes it to start up again when ice is taken from the storage compartment.

SF-2F CONTINUOUS FLOW

INSTALLATION DIMENSIONS

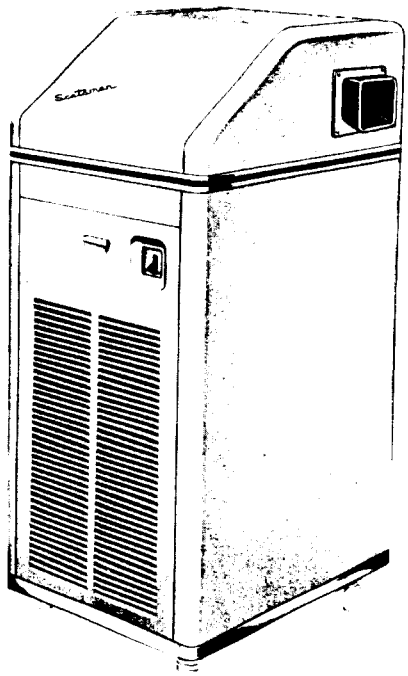

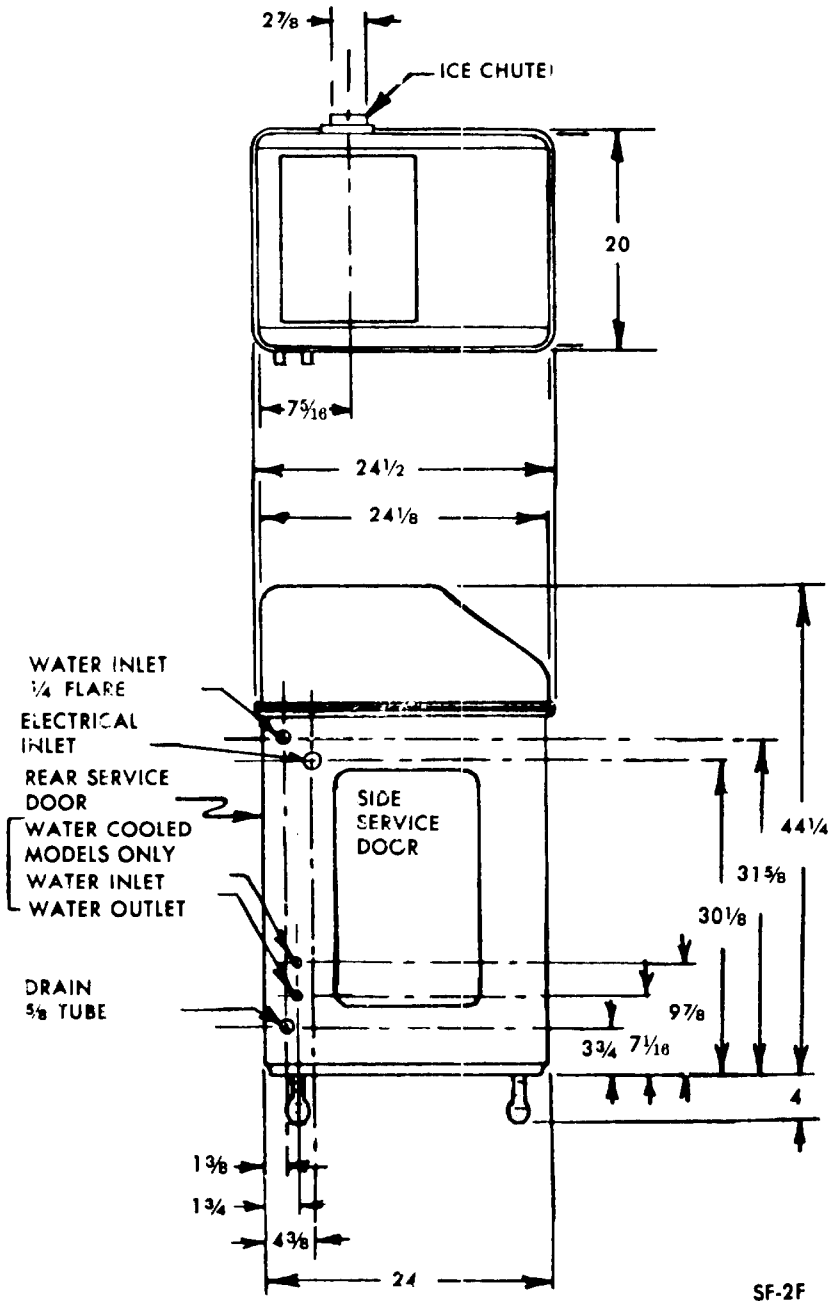

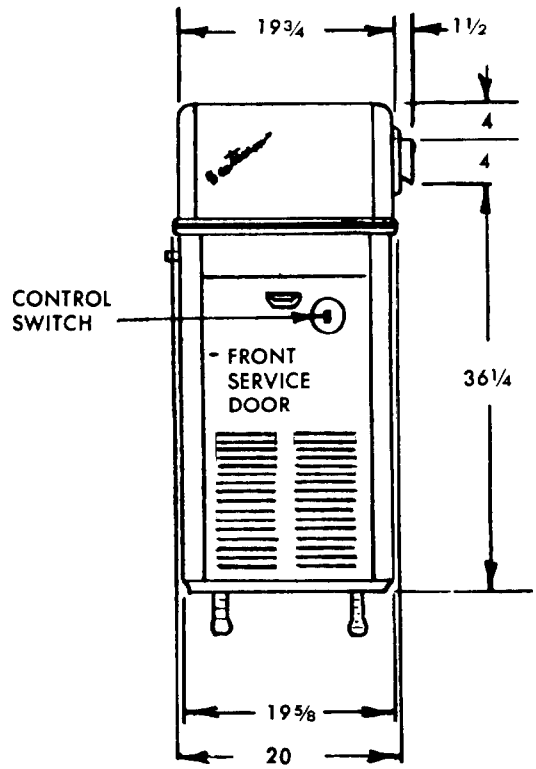

SF-2F

SF-2WSF AUTOMATIC STORAGE

INSTALLATION DIMENSIONS

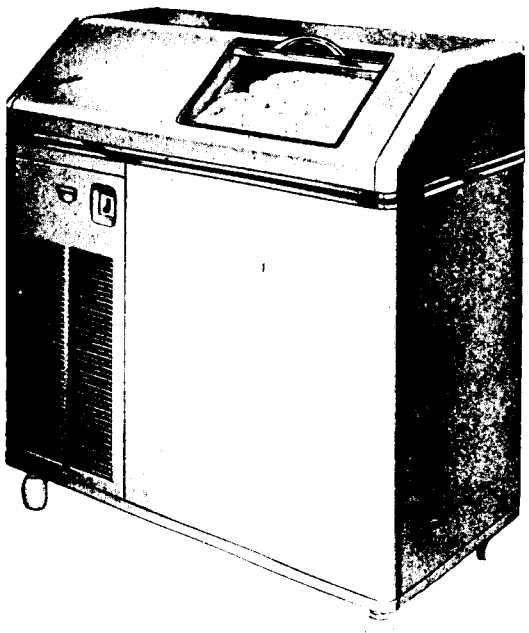

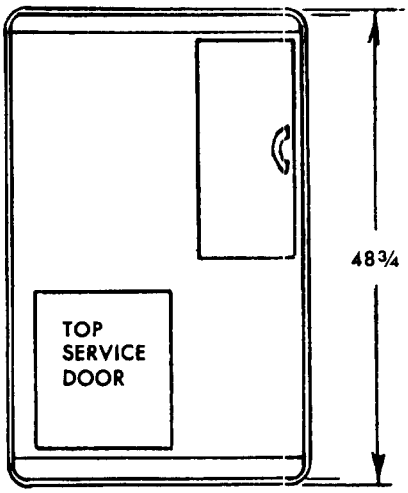

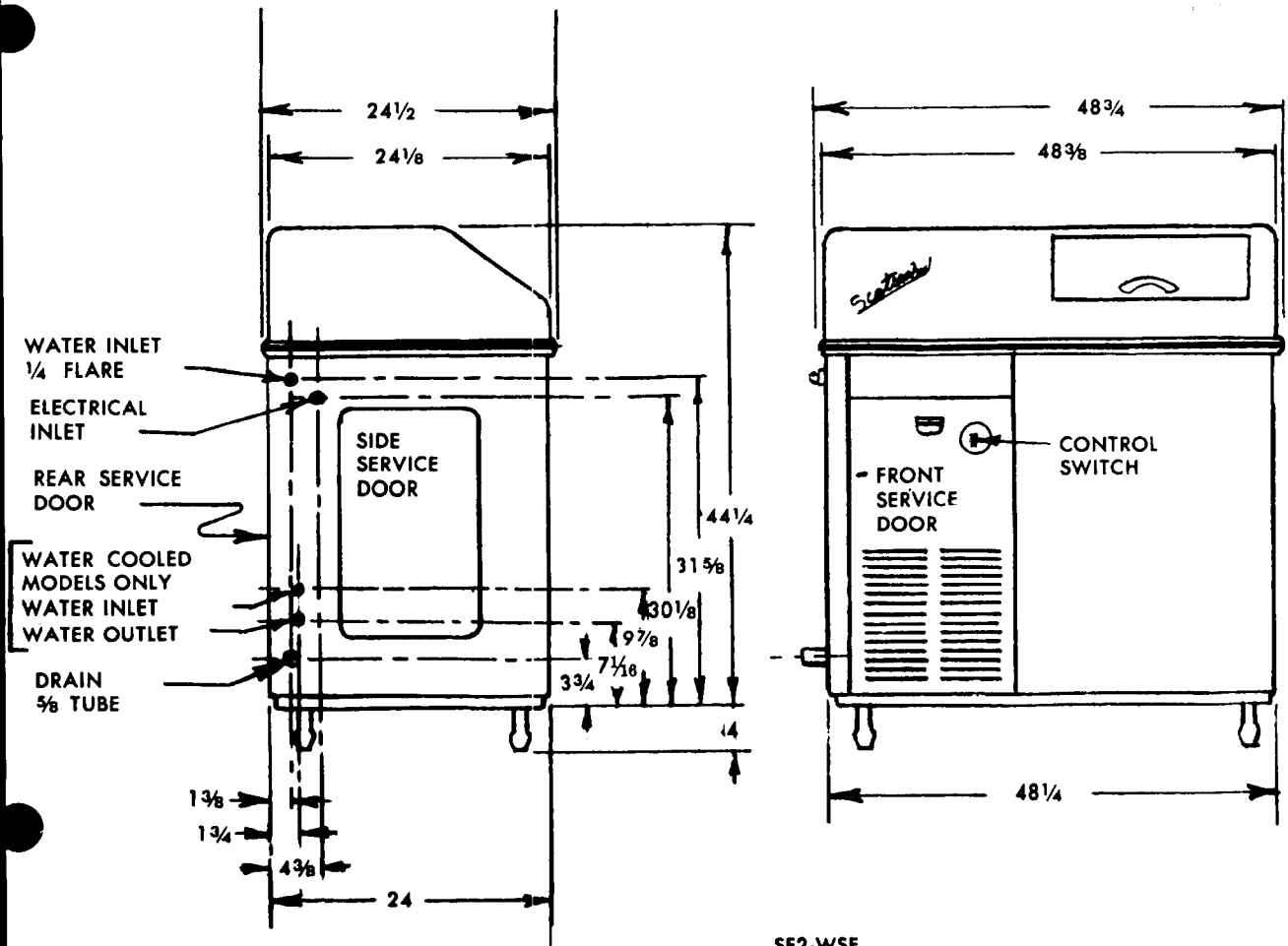

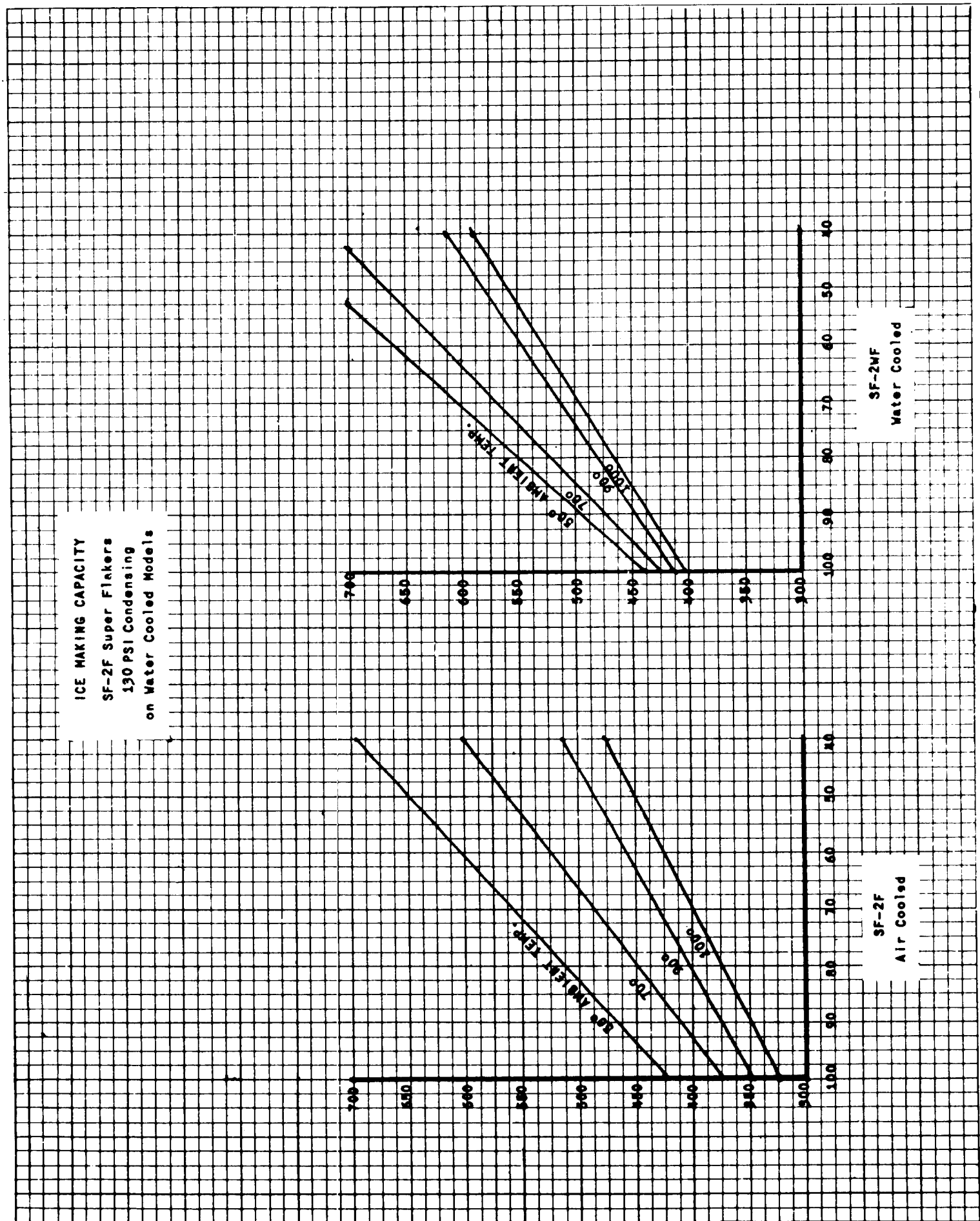
ICE MAKING CAPACITY
SF-2F Super Flakers
130 PSI Condensing
on Water Cooled Models
SF-2WF
Water Cooled
SF-2F
Air Cooled
100%
90%
70%
50° AMBIENT TEMP.
700
650
600
550
500
450
400
350
300
250
200
150
100
10
20
30
40
50
60
70
80
90
100

INSTALLATION

UNCRATING OF MACHINE

The complete machine comes in one crate. After the crate is removed, inspect for concealed damage. When installing the machine, remove the bottom skids by removing all bolts. Then cut all wires holding support packing from refrigerant lines. Then loosen shipping bolts on the compressor. Be sure the compressor is floating free on spring mounts. Remove leg levelers from the carton and install on base as desired. Then check all refrigerant lines for rubbing or touching other surfaces. Also check for possible transportation damage. Check for free movement of ice worm.

PRE-INSTALLATION CLEANING

Before machine is in final location, remove warranty card and other information from machine compartment. Remove top service door, water reservoir cover and packing under float. Then leave cover off for float adjustment after machine is installed.

LOCATION OF THE SUPER FLAKER

Select the location before delivering Super Flaker to the job. The following points should be considered when making selection.

1. Convenience. Place the unit as close as possible to the place of ice consumption.

2. Servicing. Install the machine on continuous flow models so it can be serviced from all three sides except the side containing the ice chute opening. Important to leave 24" access to front (containing on-off switch) and left side on both with storage and continuous flow models.

3. Room Temperature. Minimum - 50 degrees. Maximum - 100 degrees.

4. Continuous Flow Models.

   A. Bins. Care should be exercised in proper bin selection. Too small a bin will give unsatisfactory performance. A bin should have a minimum of 1/2 of machine's capacity per day, when the machine shuts off on thermostat. Make

sure that user's demands are met by proper bin as well as by proper machine selection. Plan relative location of the machine so as to enter the bin as close to the top as possible. Bins should also be higher than their width and length dimensions, so the maximum ice can be stored in the minimum cubic feet of space A Scotsman bin is designed in this fashion and will be the most convenient to the user. Too large a bin can cause trouble. Excessive melting of ice will occur if the bin is larger than required. Proper bin selection is important to the success of the ice machine installation.

B. Stands. A Scotsman Machine stand should be used if the machine is located beside the Scotsman bin. In designing the installation, plan for servicing of the machine from front, top, and sides.

C. Erection. For elevations in excess of four feet or in close quarters, chain falls should be used. For locations under four feet, the use of skid boards and rollers are practical.

D. Bin Thermostat. Locate the thermostat bulb as high as possible in the bin and still allow the machine to cut off before ice builds up in the chute. If this occurs, ice can stick in the chute keeping the machine off after there is a need for ice production. The capillary can usually enter through the chute opening. Keep the bulb and capillary line away from shovels.

E. Ice Chutes. If the outlet of the machine is remote from the bin, a chute will be required. Stainless steel is an excellent material for this purpose where its' cost is not prohibitive. Angles or ledges of less than 45° should not be used. Ice will cling to this surface and either melt excessively or jam in the chute. The sharper the drop the better. If straight down, do not insulate, unless necessary.

THERE IS NO DOCUMENT
FOR THESE NUMBERS

Page 7 thru Page 14

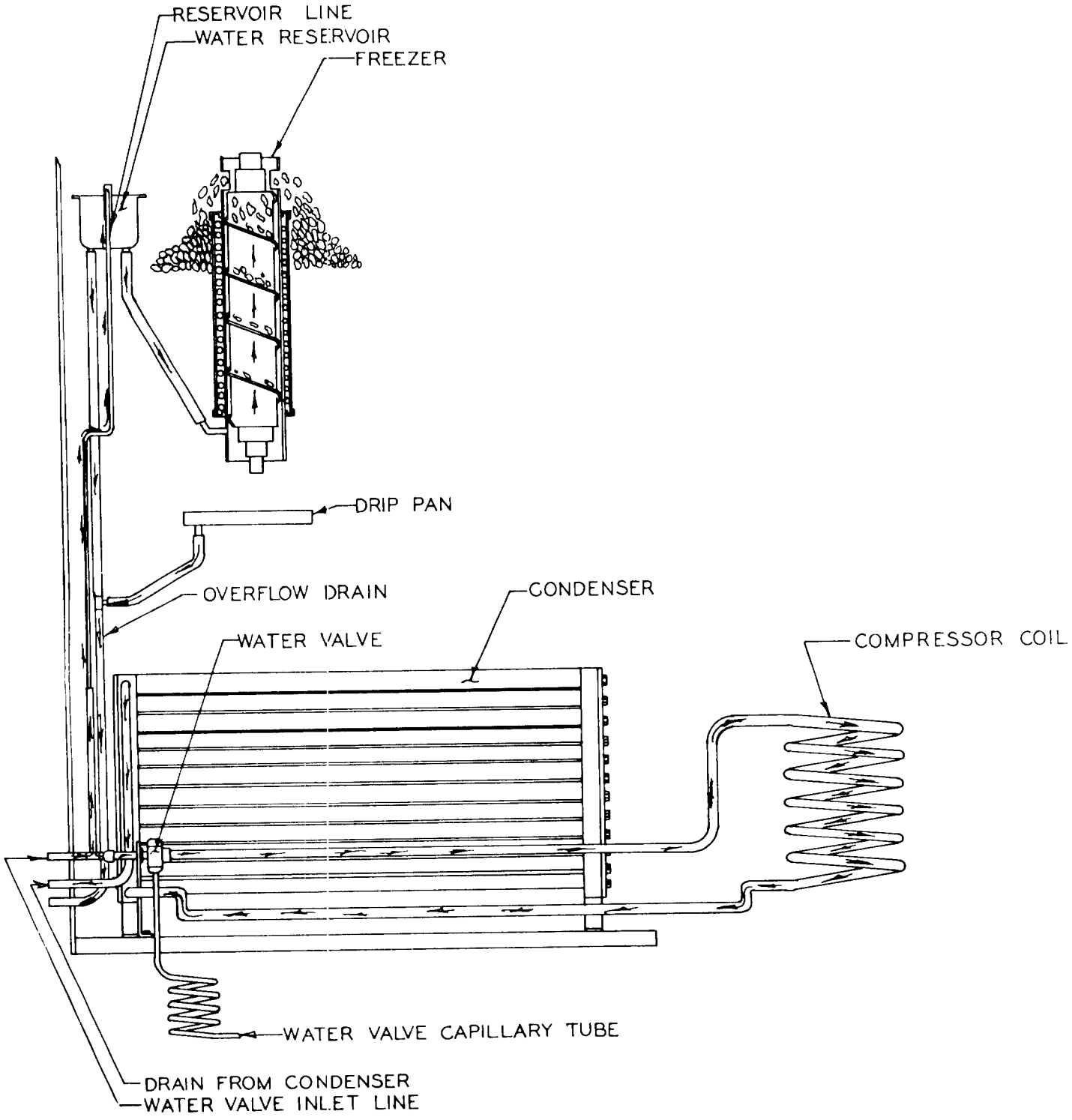

WATER COOLED MODELS

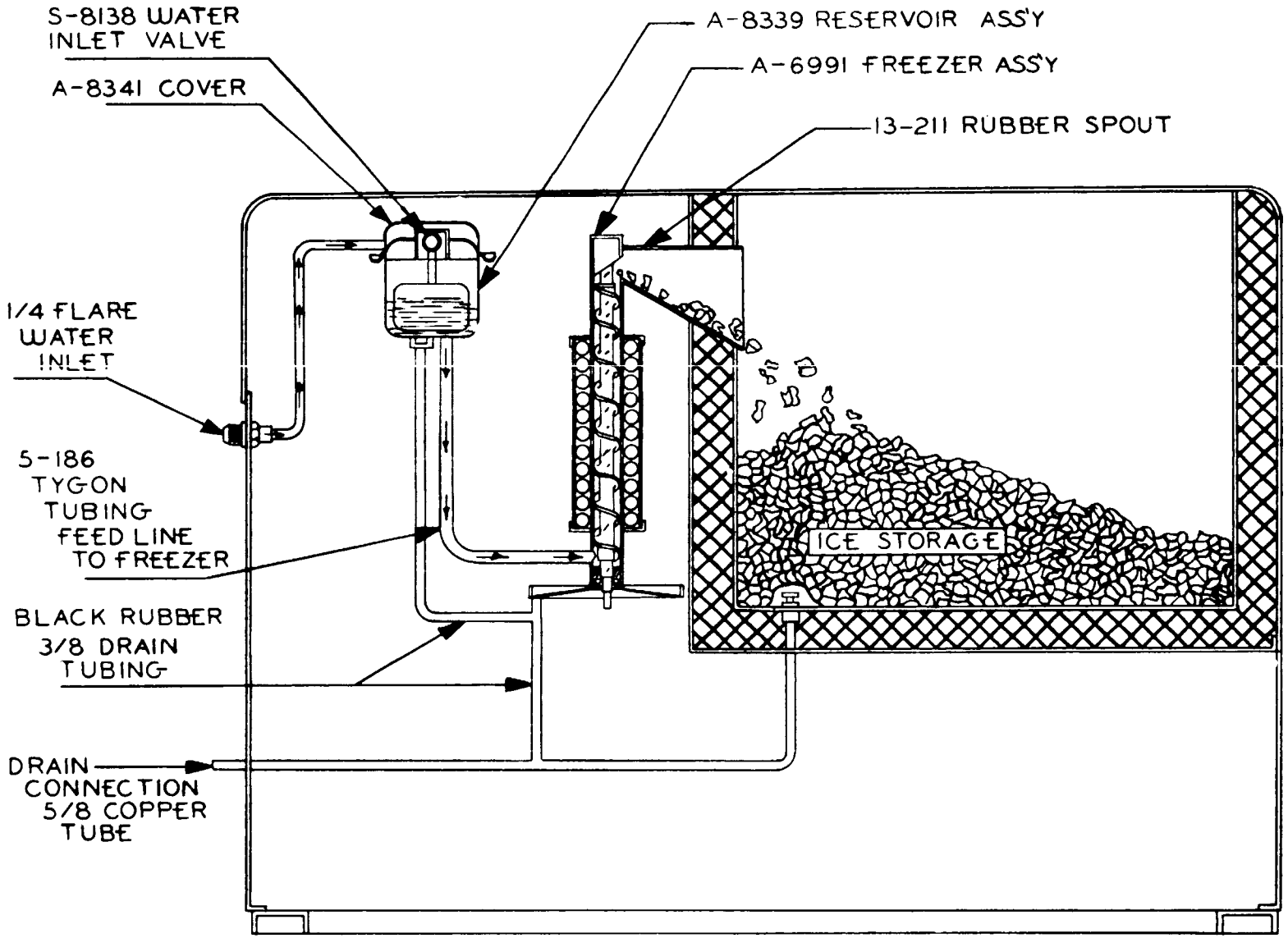

WATER SCHEMATIC

SF-2WSF

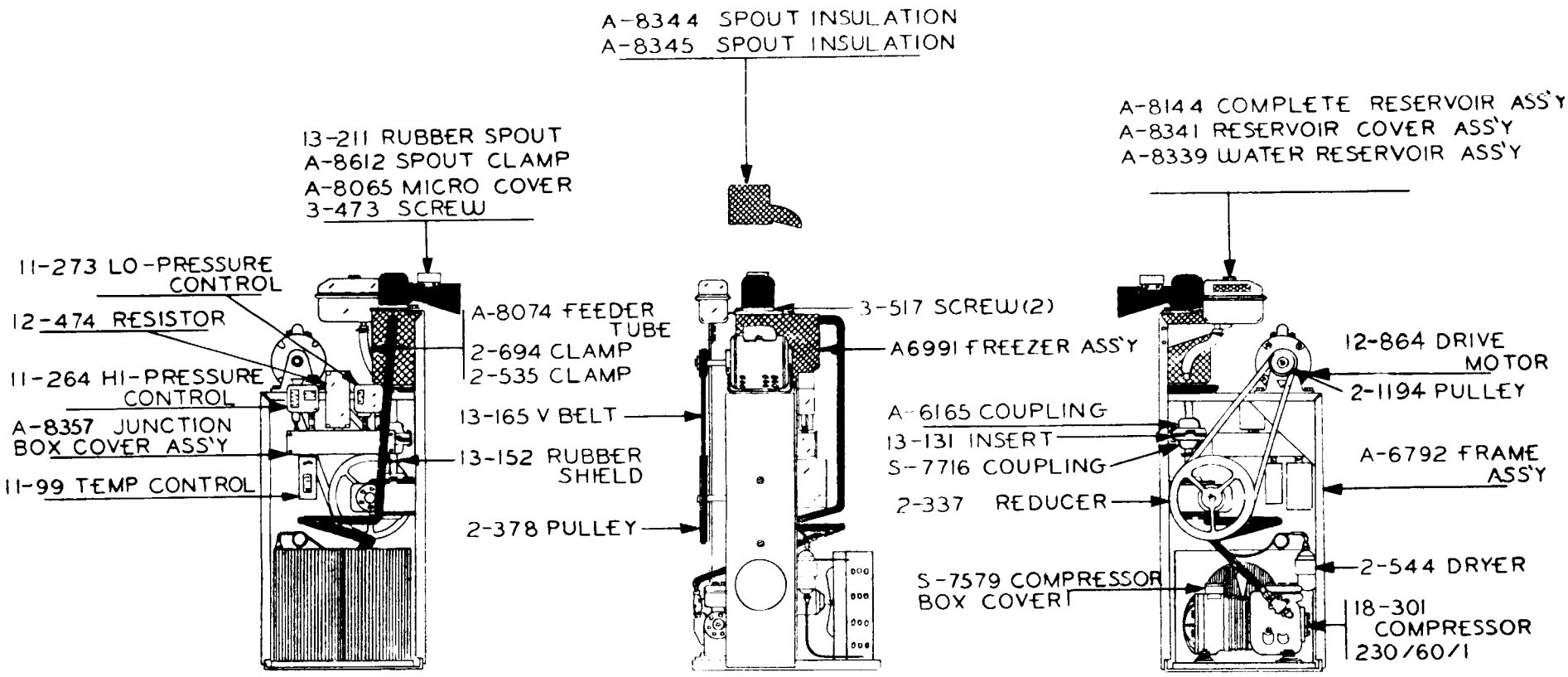

CHASSIS ASSEMBLY
AIR COOLED
SF-2F

SF-2F FREEZER ASSEMBLY

PART NO. A-6991

A change was made in the water seal and the bottom bearing retainer as is noted in the cut-away view.

This change went into effect starting with SF-2F, Serial No. 99-007484, and SF-2WSF, Serial No. 99-007629–SF-3F, Serial No. 910-006709 and SF-3WSF, Serial No. 910-006888.

In Mail Order stock, we still carry part no. 2-648 water seal as a replacement part, however, we do not carry any more A-6152 bearing retainers. New bearing retainer part no. A-10591, which is shorter in overall height must be used. It also then means that the new style part no. 2-929 water seal is required; this would apply to all the past freezers using the A-6152 retainer.

These parts are interchangeable insofar as they fit into all the old style SF-2F freezers as noted.

All mail order replacement freezers will also incorporate this change.

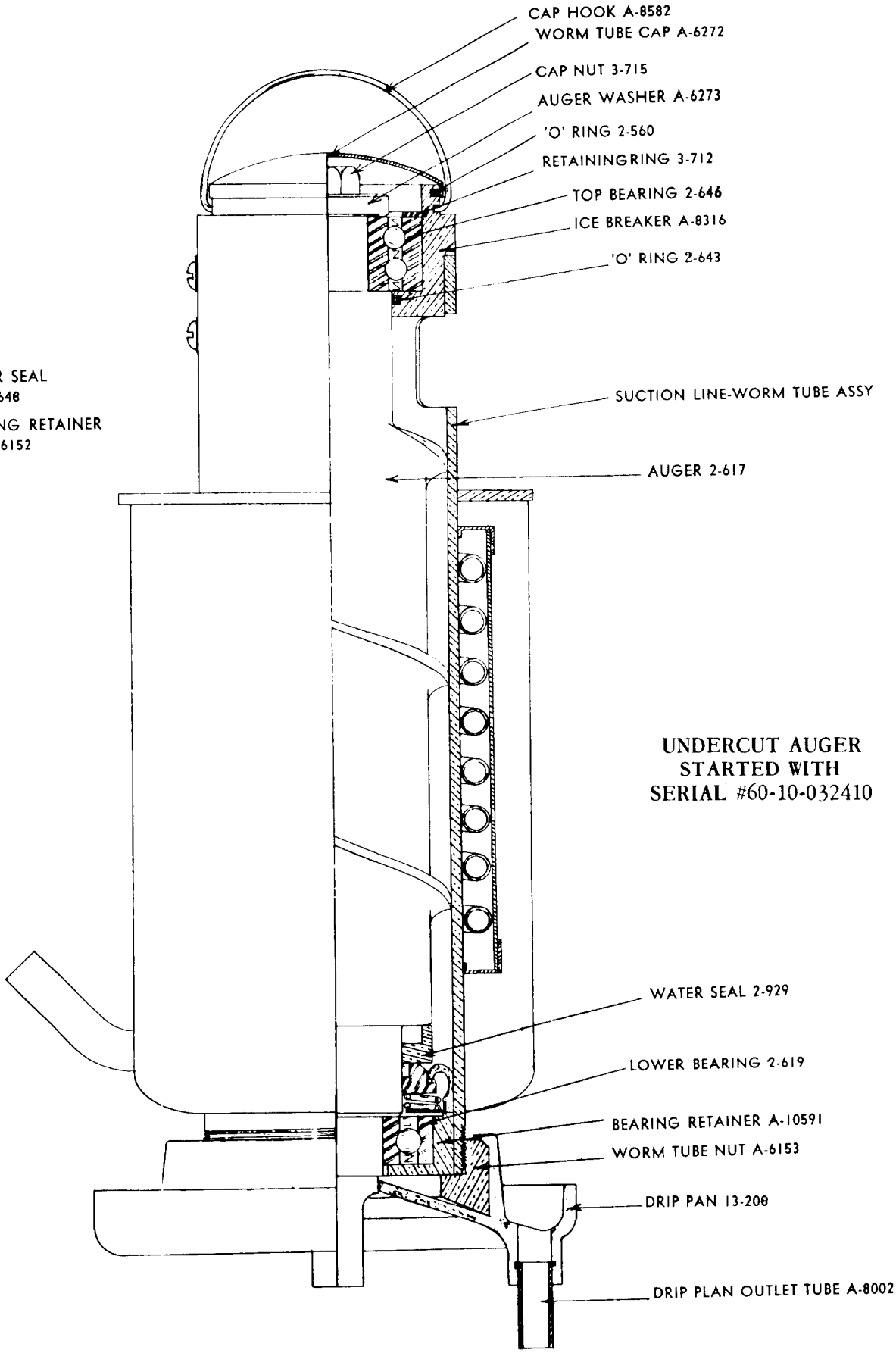

NOTE:
OBSOLETE WATER SEAL
WAS PART No. 2-648

OBSOLETE BEARING RETAINER
WAS PART No. A-6152

UNDERCUT AUGER
STARTED WITH
SERIAL #60-10-032410

FREEZER ASSEMBLY

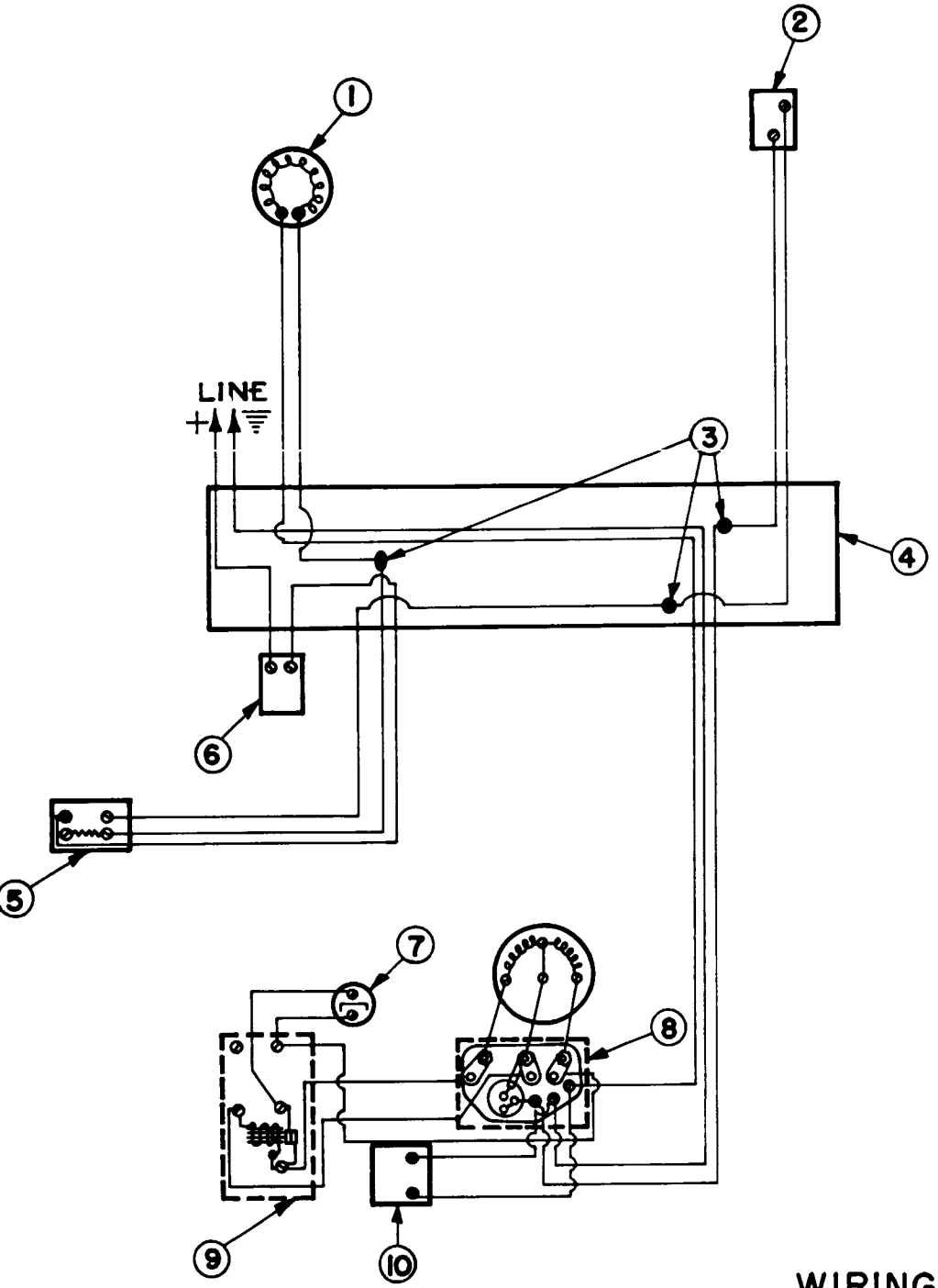

(1)	12-864	DRIVE MOTOR
(2)	12-524	MICRO SWITCH
(3)	12-31	WIRE NUT
(4)	A-8357	JUNCTION BOX ASS'Y
(5)	12-530 12-530-A	MANUAL THERMAL OVERLOAD SWITCH
(6)	11-99	BIN THERMOSTAT
(7)	18-331	STARTING CAPACITOR
(8)	18-355	MOTOR COMPRESSOR
(9)	18-227	COMPRESSOR RELAY
(10)	11-286	MANUAL HI-LOW CONTROL

WIRING DIAGRAM
WATER COOLED SF-2F
115/60/1

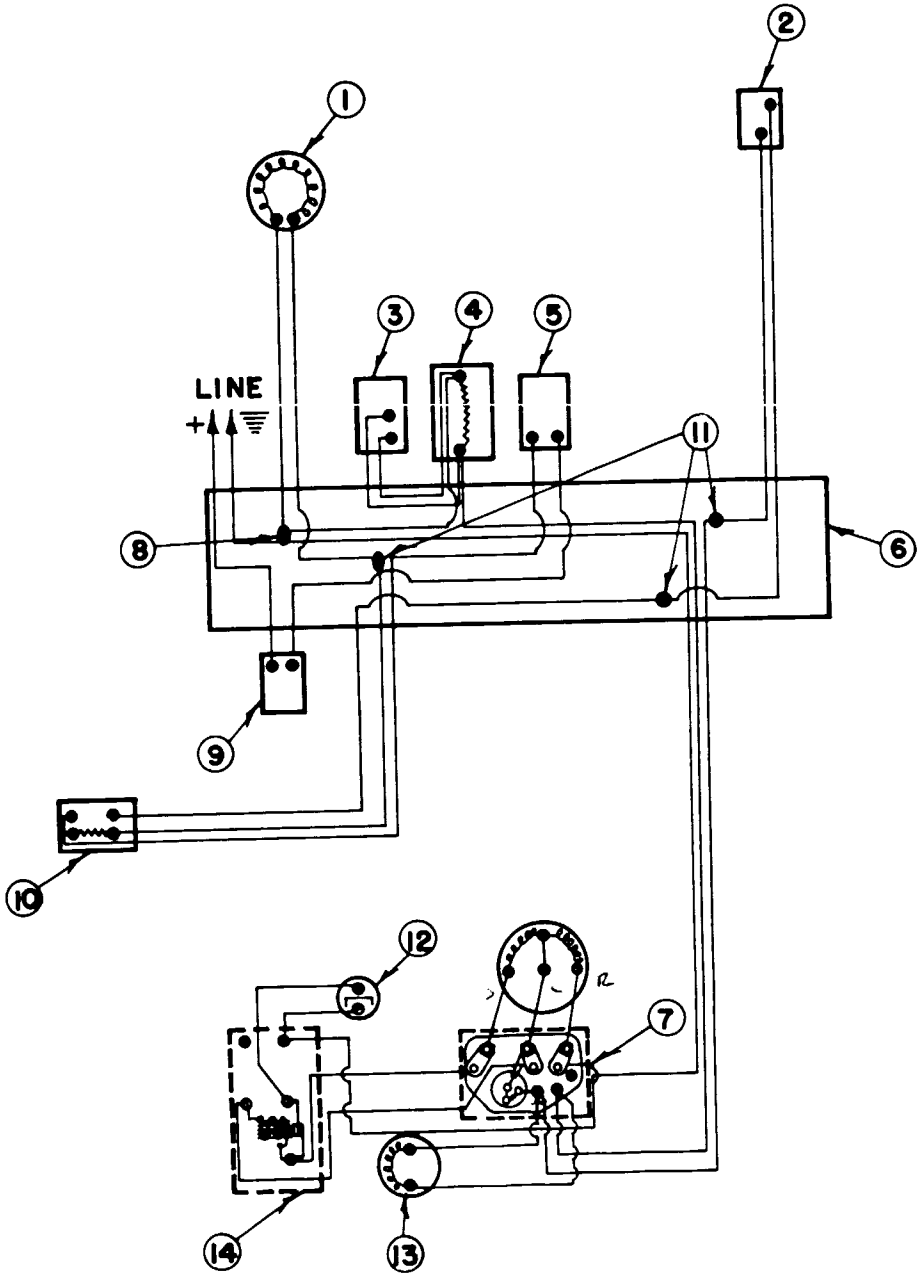

(1)	12-864	DRIVE MOTOR
(2)	12-524	MICRO SWITCH
(3)	11-264	HI PRESSURE CONTROL
(4)	12-474	RESISTOR 175 OHM
	A-7221	RESISTOR BOX
(5)	11-273	LO PRESSURE CONTROL HAND RESET
(6)	A-8356	JUNCTION BOX ASS'Y
(7)	18-325	MOTOR COMPRESSOR
(8)	12-184	WIRE NUT
(9)	11-99	BIN THERMOSTAT
(10)	12-530 12-530-A	MANUAL THERMAL OVERLOAD SWITCH
(11)	12-31	WIRE NUT
(12)	18-331	STARTING CAPACITOR
(13)	18-333	CONDENSER FAN MOTOR
(14)	18-227	COMPRESSOR RELAY

WIRING DIAGRAM
AIR COOLED SF-2F
115/60/1

SERVICE ANALYSIS CHART

COMPLAINT	POSSIBLE CAUSE	CORRECTION
Low ice production.	Loss of refrigerant. Under or over-charge of refrigerant.	Check and recharge with proper amount of refrigerant.
	Drive motor weak.	Replace.
	Dirty or plugged condenser.	Clean condenser.
	Low water level in water reservoir.	Adjust to 1/4 inch below spout opening.
	Overcharge of oil in system.	Check at oil hole and lower to 1 1/2 inch from top of hole or 1/3 full on crankcase sight glass.
	Partial restriction in capillary tube or drier.	Moisture in system. Overcharge of oil in system. Remove charge by blowing back through cap tube. Replace and recharge.
	Inlet water strainer partially plugged.	Remove screen and clean.
	Corroded or strained worm shaft due to water condition.	Remove worm shaft and clean, or use Scotsman Ice Machine Cleaner. See Maintenance Section.
	Slipping drive belt.	Adjust belt tension or replace worn belt.
	Defective gear reducer.	Check reducer driven shaft to freezer shaft. Should rotate at 12 R P M. Replace if worn.
Machine runs but makes no ice.	Loss or undercharge of refrigerant.	Check for leaks and recharge.
	Drive motor, belts, gear reducer on drive coupling inoperative.	Gear reducer and worm turn at 12 R P M. Check. Repair or replace.
	Pulleys loose on shafts.	Tighten, repair or replace.

SERVICE ANALYSIS CHART

COMPLAINT	POSSIBLE CAUSE	CORRECTION
Machine runs but makes no ice. (Cont.)	Water not entering freezing chamber.	Plugged strainer or supply line. Check and clean. Air lock in gravity feed line. Check and remove air lock.
	Moisture in system.	Check and remove charge and drier. Replace and recharge.
	Water seal leaking.	Replace seal. See section on maintenance.
	Defective manual overload switch.	Replace switch.
Water leaks.	Defective water seal.	Replace. See section on maintenance.
	Gravity feed line leaking.	Check hose clamps.
	'O' ring in spout casting leaking.	Remove spout casting and install new 'O' ring.
	Storage bin drain and connecting fittings.	Check and repair. Tighten fitting - replace 'O' ring.
	Water level in reservoir too high.	Adjust to 1/4 inch below overflow pipe.
Excessive noise or chattering.	Scale or mineral build-up on inside of freezer.	Clean with Scotsman Ice Machine Cleaner. See section on maintenance.
	Mineral deposit or scale on auger and cylinder walls.	Ice sticking and jamming inside. Clean with Ice Machine Cleaner or remove auger and polish.
	Low suction pressure.	Raise suction pressure. Adjust head pressure control to recommended setting or balance refrigerant charge.
	Intermittent water supply.	Check and clean water strainer. Check gravity feed line for air lock. Remove air lock.
	Water level in reservoir too low.	Adjust to 1/4 inch below overflow pipe, or raise reservoir.
	Mis-aligned coupling or worn insert.	Repair or replace

SERVICE ANALYSIS CHART

COMPLAINT	POSSIBLE CAUSE	CORRECTION
Excessive noise or chattering. (Cont.)	Low ambient temperature.	Set head pressure and resultant back pressure higher, or move to heated space.
	Gear reducer low on oil charge.	Check oil level and refill to oil level plug.
	Gear reducer loose on frame.	Tighten.
	Pulleys worn or loose on shaft.	Repair or replace.
	Belt cracked or worn.	Replace belt.
	Drive motor end-play or worn bearings.	Repair or replace.
	Motor compressor not floating on springs.	Loosen hold-down bolts.
Machine continues to run with full storage bin.	Storage bin thermostat not properly set or is defective.	Reset or replace. 35° cut-out, 45° cut-in.

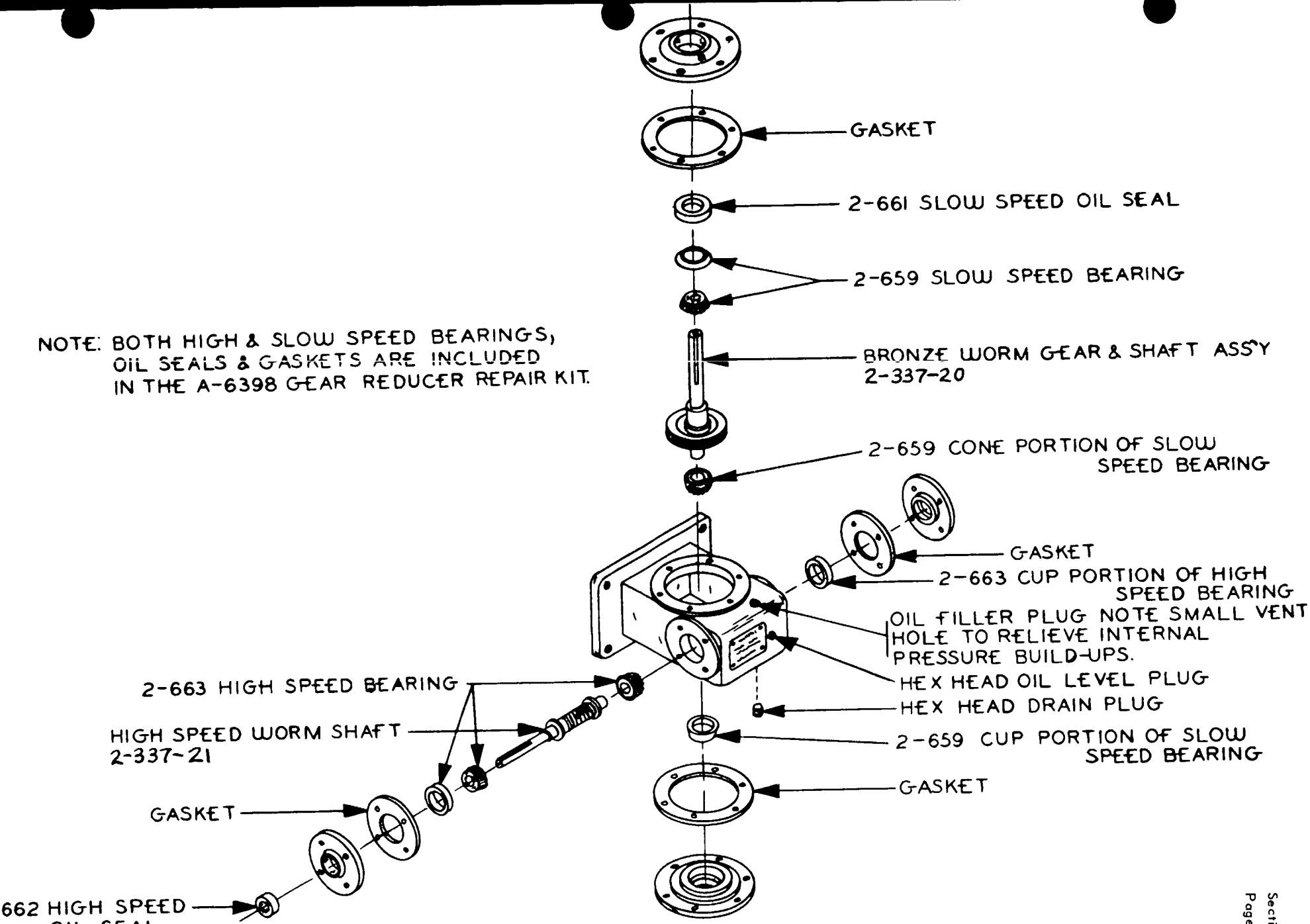

NOTE: BOTH HIGH & SLOW SPEED BEARINGS, OIL SEALS & GASKETS ARE INCLUDED IN THE A-6398 GEAR REDUCER REPAIR KIT.

WINSMITH GEAR REDUCER (3CTS)

QUEEN PART NO. 2-337

USED ON ALL MODELS SF-2F & SF-2WSF

MAINTENANCE INSTRUCTIONS
FOR
SCOTSMAN SUPER FLAKERS

The following services must be accomplished a minimum of two (2) times per year on all Scotsman Super Flakers.

1. Check and clean water strainers and float valves. Depress float valve to insure full stream of water.

2. Check water level and machine level. Keep water level below overflow but as high as possible and still not run out of spout opening with machine off. Water should come out of spout with ice at all times. Adjust as required.

3. Clean reservoir and interior of freezer assembly using Scotsman Ice Machine Cleaner.

   A. If machine has been cleaned regularly and no problems such as dry ice or chatter are noticed, clean by making ice from solution of 8 oz. of cleaner to one gallon of water.

   B. If heavy mineral deposits on auger and walls, or sediment at inlet to freezer are encountered, clean by pouring strong solution (1/2 acid - 1/2 water) into reservoir and operate drive motor only for agitation. Allow 1/2 hour or longer as required. Drain by disconnecting tygon at water inlet to freezer.

   Note: Cleaning requirements vary according to local water conditions. Visual inspection of the auger before and after cleaning will indicate best procedure to be followed in local areas.

4. Check high and low side pressures. On air cooled models set head pressure between 130 and 145 PSI on R.A. high pressure control. On water cooled models, set pressure at 130 PSI. Suction pressure should be above 12 PSI and will range up to 16 PSI depending upon ambient and water temperatures.

5. Set hand reset low pressure control to cut off in event of water supply interruption or low ambient temperature at approximately 5 PSI.

6. Change oil in gear reducer. Use 600W or grease with BRB No. 1 or equivalent when grease fittings are evident. Particularly important when there is evidence that water has gotten into gear housing. Remove gear reducer to facilitate.

7. Oil drive motor. Use SAE 20 oil.

8. Check top bearing of freezing tube. Pry upward around edge of stamped brass cap. If moisture is around bearing, wipe up and remove grease. Add new grease Use lubriplate No. 5. To replace cap, insert small wire under cap edge to vent air and remove when cap is on tight.

9. Check and adjust belt tension.

10. Clean air cooled condenser. Inform customer to clean frequently. Always shut off machine when cleaning.

11. Oil condenser fan motor when possible.

12. Check for refrigerant leaks and proper frost line. Should frost out of accumulator approximately two feet.

MAINTENANCE INSTRUCTIONS
FOR
SCOTSMAN SUPER FLAKERS

13. Check for water leaks. Tighten drain line connections. Run water down bin drain line to make sure it is open.

14. Check quality of ice. Ice should be wet when formed but will cure rapidly to normal hardness in the bin.

15. Check thermostat and pressure plate cut off. Micro-switch cuts off only compressor. Bin thermostat should be set at 10° differential and should keep entire machine off at least twenty minutes in high ambients (longer in low) during normal operation. Set cut out at 35°, cut in at 45°.

CHANGES AND MODIFICATIONS

Drive Motor is 1/4 Horsepower 115/60/1

CURRENT	OBSOLETE
Part Number - 12-864-1	12-712-1
Nema Frame Size - 48	56
Shaft Diameter - 1/2"	5/8"
Pulley to Shaft - 2-1194	2-388
Pulley Attachment to Shaft Set Screw on Flat	Keyway and Set Screw

The mounting brackets of the two motors are not interchangeable. On units with serial numbers lower than 62-2 prefix; order old style 56 frame motors. On newer units order only 48 frame motors.

CHANGES AND MODIFICATIONS

INLET VALVES

On all water inlet valves S-6941, S-8138, A-6771 and A-9101 we have incorporated a new type of float assembly. On past assemblies, the float ball was screwed onto an arm and adjusted by means of a set screw and tension spring. The new type float assembly is a one-piece affair that can be adjusted by merely bending the arm up or down. On this new type float assembly the arm and float will be available as a complete unit only. This will consist of the float ball, float arm, valve seat holder and rubber valve seat. The respective new type float assemblies are interchangeable on all water inlet valves used in the past.

On the old style water inlet valves where the float ball was screwed onto the arm, the float ball itself will continue to be carried as a field replacement part. However, when the present supply of water inlet valves using the old style float arms have been exhausted, the valves will all be equipped with the new type float arm assembly.

The basic part of the valve will not change and will continue to be carried under the same part numbers as in the past. The following list will outline the respective valves and replacement arm assemblies:

S-6941 - Water Inlet Valve Complete - All Early Model Flakers & Cubers
(Has short float arm.)

A. A-12511 Complete Float Arm Assembly
B. 2-463 Float Ball only - For old style float arm.

S-8138 - Water Inlet Valve Complete - All Current Model Flakers
(DF-4, SF-75, SF-1, SF-2, SF-3)

A. A-12509 Complete Float Arm Assembly
B. 2-463 Float Ball only - For old style float arm.

S-6237 – SLIDING DOOR

The sliding door used on all models, both flakers and cubers with storage, will now have a different arrangement for the hinge pin assembly. The hinge pins S-6019 and hinge pin holder S-6019 will no longer be used on the new door arrangement. Replacing the hinge pins and hinge pin holders will be a one piece brass rod A-11696 running completely through door and secured with two (2) cotter pins 3-196-1.

The new door assembly will still be carried under part no. S-6237, and is exactly interchangeable on all past with storage models. We will still carry the hinge pins and hinge pin holders in Mail Order stock for use on those doors presently equipped with same.

PARTS LIST

SF-2F

CABINET PARTS	SF-2F	SF-2WSF
Description	Part No.	Part No.
Case Assembly (Less Doors)	A-9763	A-9764
Case Hood Assembly	A-7176	S-9992
Door Slide Assembly	None	S-7710
Sliding Door Assembly	None	S-6237
Hinge Pin	None	A-11696
Door Handle	None	15-247
Left Side Door Assembly	S-6713	S-6713
Rear Door Assembly	A-8741	A-8741
Front Door Assembly	A-6998	A-6998
Top Door Assembly (Hood Side)	A-6530	A-6530
Top Door Assembly (Over Reservoir)	A-7676	S-6849
Moulding Strip 85"	S-6211	None
Moulding Strip 101" Front	None	S-6413
Moulding Strip 42" Rear	None	A-5829
Legs (4 in kit)	A-12442-1	A-12442-1
Emblem	S-3188	S-3188
Plywood Crate	1-387	1-343
Base Trim Strips 2/unit	A-8902-2	None
Ice Storage Tank Assembly	None	A-7001
Ice Storage Tank Assembly - Drain Tube	None	S-7045

Note: For above cabinet parts in stainless steel, add 'S' as a prefix to above part numbers.

WATER CIRCUIT	SF-2F	SF-2WSF
Description	Part No.	Part No.
Water Reservoir Assembly	A-8339	A-8339
Reservoir Body	A-13409	A-13409
Stand Pipe Assembly	S-6715	S-6715
Reservoir Cover	A-8341	S-8341
Inlet Valve & Arm Assembly	S-8138	S-8138
Water Deflector	2-1320	2-1320
Rubber Seat	S-6947	S-6947
Water Valve Bracket	A-12869	A-12869
Float Assembly	A-12509	A-12509
Water Supply Strainer	16-162	16-162

PARTS LIST

SF-2F

WATER CIRCUIT	SF-2F	SF-2WSF
Description	Part No.	Part No.
Ice Storage Tank Drain Assembly	None	A-6825
Drain Assembly Strainer	None	A-6448
'O' Ring	None	2-530
Water-Tygon Tubing		
Reservoir to Freezer		
Per foot	5-179	5-186
Bin Thermal Bulb Bracket	None	S-7312
Rubber Tubing		
Drip Pan Drain Hose, per foot	13-79	13-79
Fittings and Clamps		
Rubber Tubing Clamp	2-538	2-538
Tygon Tubing Clamp (with 5-186 tube)	None	2-535
Tygon Tubing Clamp (with 5-179 tube)	2-538	None

FREEZER ASSEMBLY	SF-2F SF-2WSF
Description	Part No.
Freezer Assembly	A-6991
Ice Breaker	A-8316
Worm Shaft	2-617
Lock Washer } Part of Ice Breaker	3-679
Brass Machine Screw } Part of Ice Breaker	3-732
Freezer Cap	A-8581
Freezer Cap Hook	A-8582
Hex Cap Screw	3-715
Washer - Over Top Bearing	A-6273
Top Bearing	2-646
'O' Ring, Shaft	2-643
'O' Ring, Cap	2-560
Retaining Ring	3-712
Worm Tube, Coil and Housing Assembly	A-6382
Water Seal Assembly	2-929
Bottom Bearing	2-619
Bearing Retainer	A-10591
Worm Tube Nut	A-6153
Drip Pan Assembly - Rubber	13-208
Refrigerant Drier	2-544
Rubber Spout	13-211
Spout Clamp	A-8612

PARTS LIST

ELECTRICAL COMPONENTS	SF-2F SF-2WSF
Description	**Part No.**
Manual Overload Switch	12-530
Ranco - Manual Re-set Lo Pressure Control	11-273
White Rodgers Bin Thermostat (Replaces 11-211)	11-99
Penn Reverse Acting Head Pressure Control - Used on Air Cooled Models only.	11-264
Lectrohm Resistor	12-474

CONDENSING UNITS	SF-2F SF-2WSF
Description	**Part No.**
Complete Condensing Unit - Air Cooled 115/60/1	18-301
Motor Compressor Only 115/60/1	18-325
Valve Plate and Gasket Kit	18-326
Relay	18-227
Starting Capacitor	18-331
Condenser Fan Only	18-363
Condenser Motor Only	18-333
Mounting Bracket, Condenser Fan Motor	18-233
Air Cooled Condenser	18-334
Condenser Shroud	18-335
Klixon Thermal Overload	18-347
Electrical Terminal Assembly, includes three complete terminals & board	18-241
Complete Condensing Unit - Water Cooled 115/60/1 (Formerly 12-387)	18-306
Motor Compressor Only 115/60/1	18-355
Valve Plate and Gasket Kit	18-326
Cylinder Head	18-329
Relay (115/60/1)	18-227
Starting Capacitor (115/60/1)	18-357
1/2 H.P. Water Cooled Condenser	18-368
Water Cooled Condenser Gasket - Plain End	18-262
Water Cooled Condenser Gasket - Manifold End	18-263
Klixon Thermal Overload 115/60/1	18-347
Electrical Terminal Assembly, Includes 3 Complete Terminals & Board	18-241
Compressor to Water Valve Hose Assembly	18-260
Compressor to Condenser Hose Assembly	18-261
Water Regulating Valve - Penn	11-198
Ranco Hi-Lo Dual Pressure Control	11-286

PARTS LIST

DRIVE ASSEMBLY	SF-2F SF-2WSF
Description	Part No.
Drive Motor - 1/4 H.P. - 115/60/1	12-864-1
Drive Motor - 1/4 H.P. - 230/60/1	12-864-2
Pulley - 3-1/4"	2-1194
Pulley - 10"	2-378
V Belt	13-165
Coupling Half Bottom	S-7716
Coupling Half Top	A-6165
Inserts (Coupling)	13-131
Set Screws (Coupling)	3-384
Cap Screw (Coupling) (2)	3-206
Clamp (Coupling) (2)	S-8496
Rubber Shield	13-152
Gear Reducer	2-337
Gear Reducer Repair Kit	A-6398
Slow Speed Bearing (2)	2-659
High Speed Bearing (2)	2-660
Slow Speed Oil Seal	2-661
High Speed Oil Seal	2-662
High Speed Gasket	2-672
Slow Speed Gasket	2-673
Slow Speed Bronze Worm Gear and Shaft	2-337-20
High Speed Gear and Shaft	2-337-21

MISCELLANEOUS	
Description	Part No.
Ice Machine Cleaner - Per Case	19-343-1
Ice Scoops	2-540
Paint - touch-up cans	10-153
Gear Reducer Oil - 600W	19-359
Upper Bearing Grease - Lubriplate No. 5	19-309
Transformer - (Step Up or Step Down, 115 to 230)	12-210

OBSOLETE #1

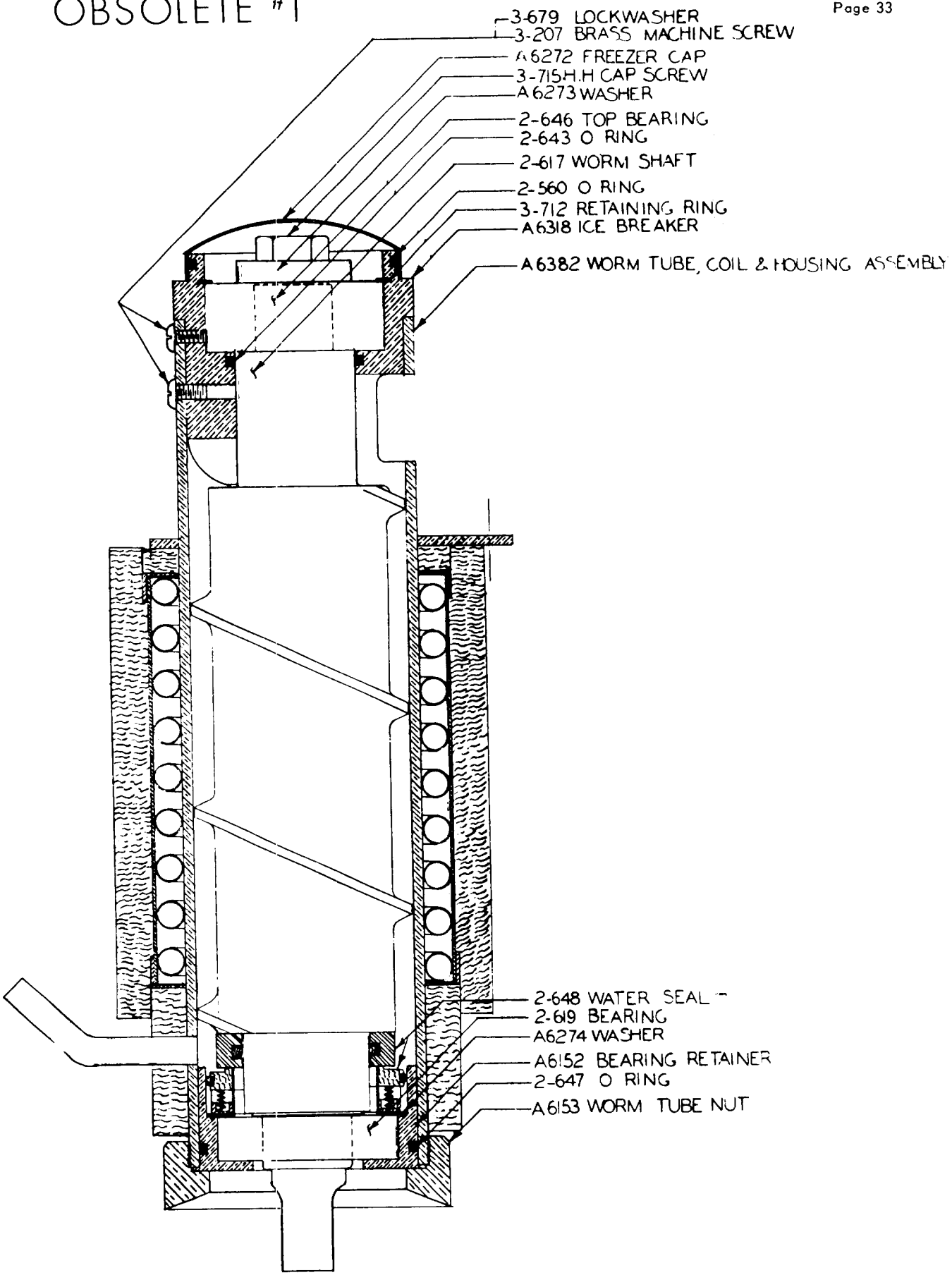

FREEZER ASSEMBLY

OBSOLETE #2

A-8582 CAP HOOK

A-8581 WORM SHAFT CAP

2-560 "O" RING

3-715 LOCKING CAP SCREW

A-6273 WORM TUBE WASHER

3-712 RETAINER RING

2-646 TOP BEARING

2-643 "O" RING

A-8316 ICE BREAKER

2-617 WORM SHAFT

USAGE STOPPED
SF2F SERIAL #99-07484
SF2WSF SERIAL #99-07629
CHANGED WATER SEAL
AND RETAINER

3-679 LOCKWASHER(2)

3-732 SCREW (2)

A-6382 WORM TUBE-
SUCTION LINE ASS'Y

2-648 WATER SEAL

A-6274 SEAL SPACER

2-619 LOWER BEARING

2-647 O RING

A-6152 BEARING RETAINER

A-6153 WORM TUBE NUT

13-208 RUBBER DRIP PAN

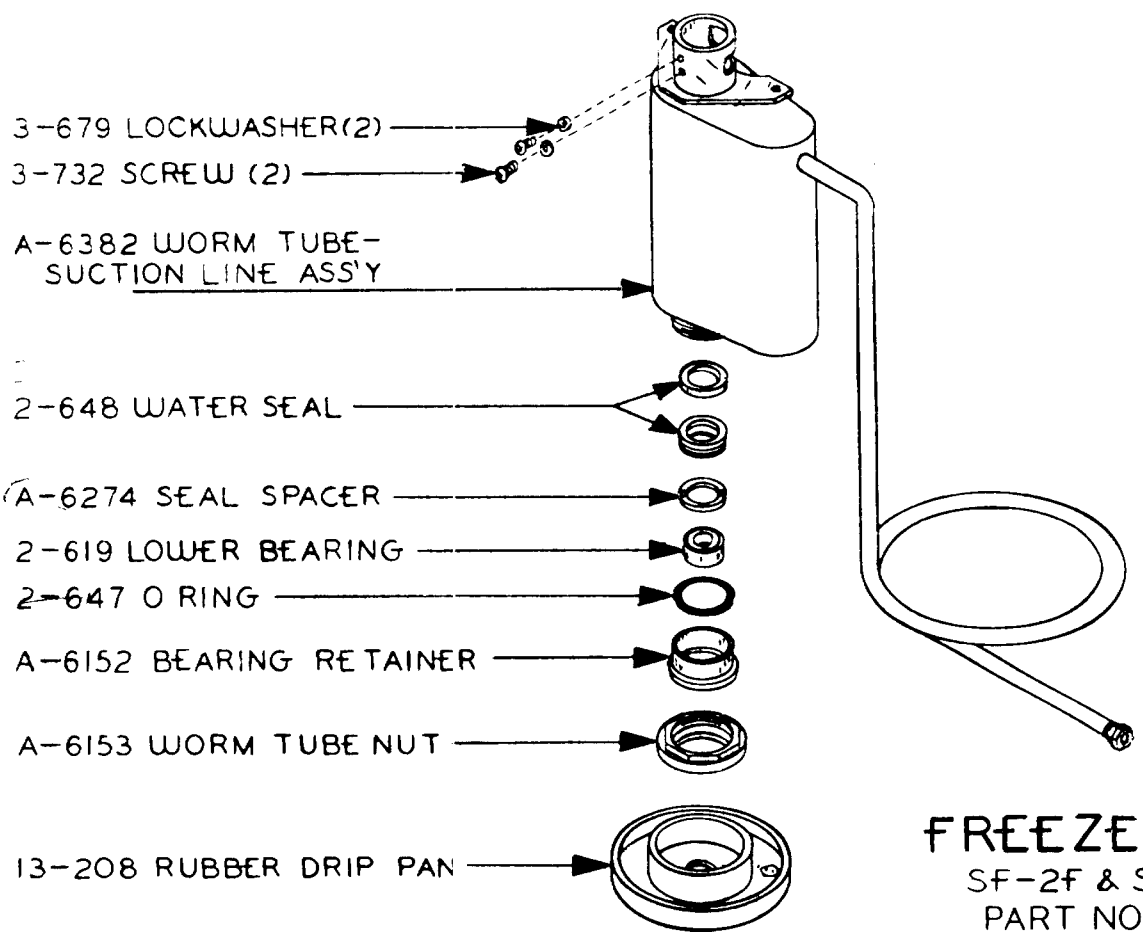

FREEZER ASS'Y
SF-2F & SF-2WSF
PART NO. A-6991

TABLE OF CONTENTS
F5-2 SECTION

	Page
FORWARD	
WARRANTY	
GENERAL	
Specifications	1
SPECIFICATIONS	
Dimensions SF-2F	2
Dimensions SF-2WSF	3
Capacity	4
INSTALLATION	
Uncrating	5
Location	6
Erection, Stands, Chutes	7
Plumbing	8
Electrical	8
Instructions	9
SERVICE	
Starting Machine	10
Refrigerant Charge	11
Water Level	11
Electrical System	12
Controls	12-13
Refrigeration Cycle	14
Water Cycle	15
Cabinet Water Schematic	16
Chassis	17
Freezer Assembly	18-19
Wiring Diagrams	20-21
Service Analysis Chart	22-24
Winsmith Gear Reducer	25
MAINTENANCE INSTRUCTIONS	26
CHANGES AND MODIFICATIONS	27-28
PARTS LIST	29-32
OBSOLETE FREEZERS	33-34

SPECIFICATIONS

SCOTSMAN SF-2 Super Flaker is designed for restaurants, super markets, bakeries, dairies, fish markets, hospitals, cafeterias, poultry stores, soda fountains, etc. and will deliver a continuous flow of ice flakes at a capacity up to 650 lbs. per day.

ATTRACTIVE COMPACT CABINET. Silver grey hammerloid finish with chrome trim, rounded corners, and removable panels for easy access to mechanical parts.

SEALED REFRIGERATION SYSTEM. Provides quiet, efficient operation of the machine. Compressor motor is spring mounted and the worm motor is rubber mounted for quiet operation.

HOW IT WORKS. Water in the constant level float reservoir is fed to the bottom end of a freezing cylinder and turns to ice on the inside of this cylinder. The stainless steel auger inside of this evaporator is driven by a motor through a V belt and gear reduction drive. Ice is carried upward by the action of this auger and extruded past the ice breaker at the top of the cylinder.

A manual switch starts the machine, and from then on ice is produced automatically in small uniform pieces of ice. When the storage bin fills, a thermostat shuts the machine off and causes it to start up again when ice is taken from the storage compartment.

SF-2F CONTINUOUS FLOW

INSTALLATION DIMENSIONS

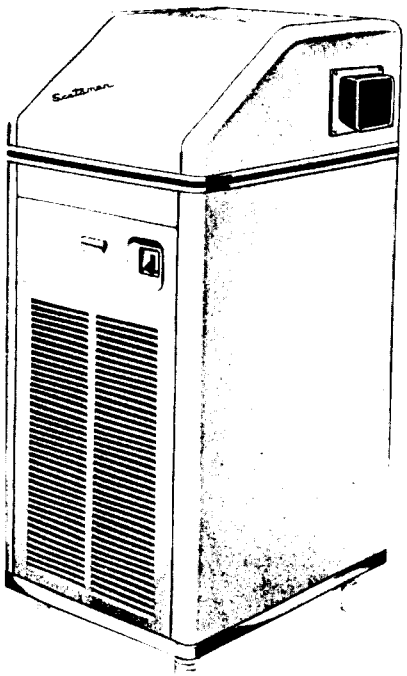

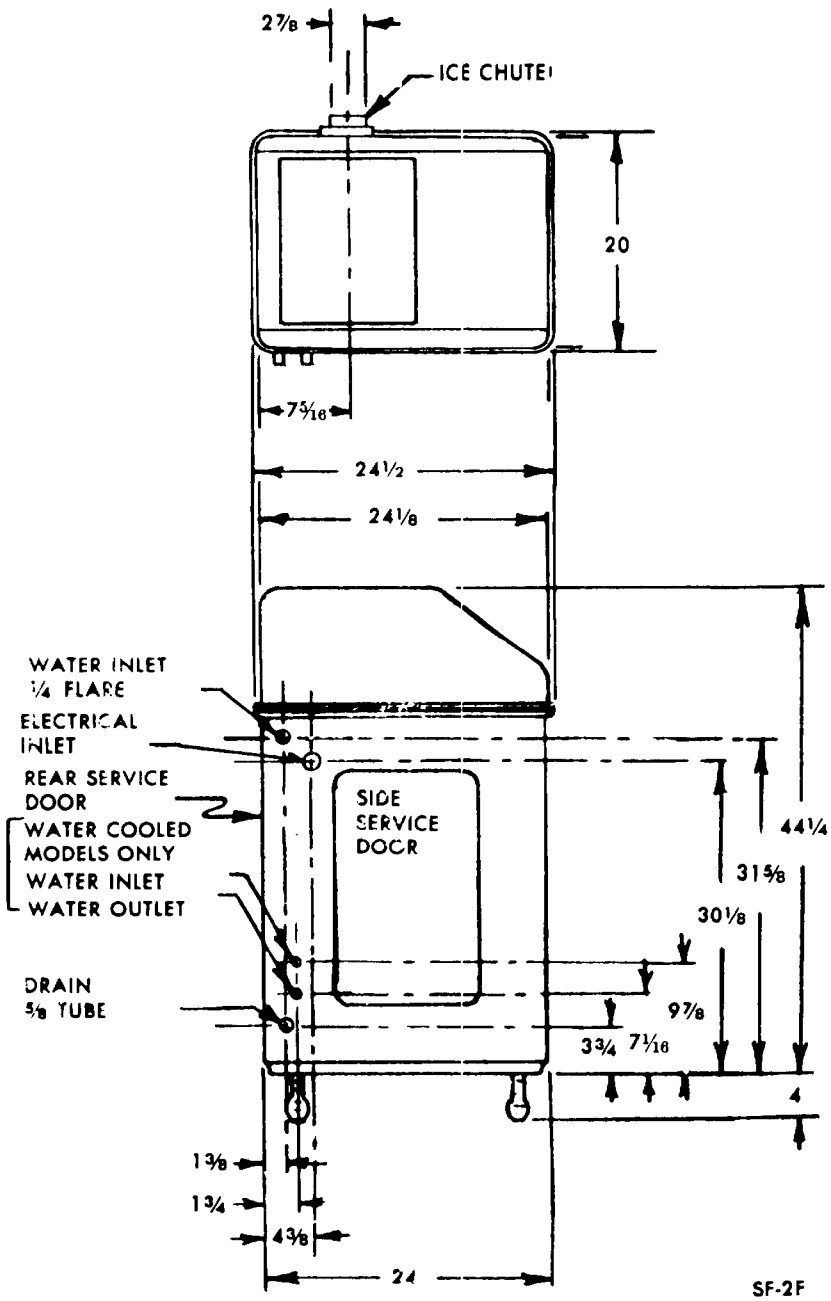

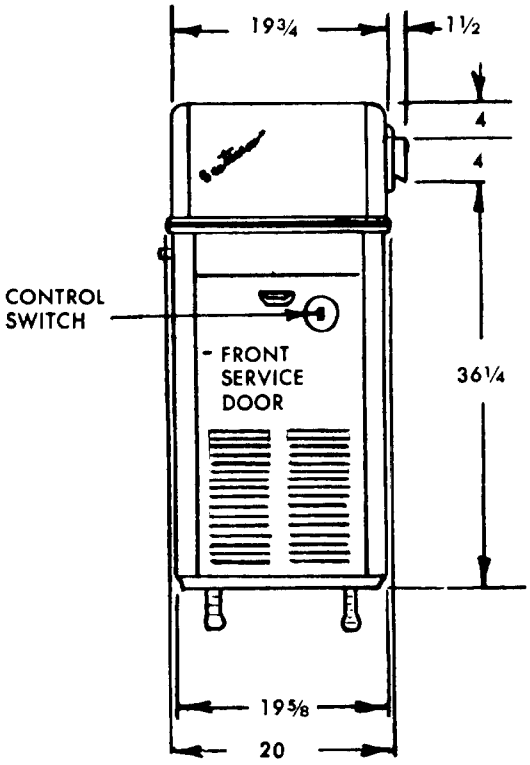

SF-2F

SF-2WSF AUTOMATIC STORAGE

INSTALLATION DIMENSIONS

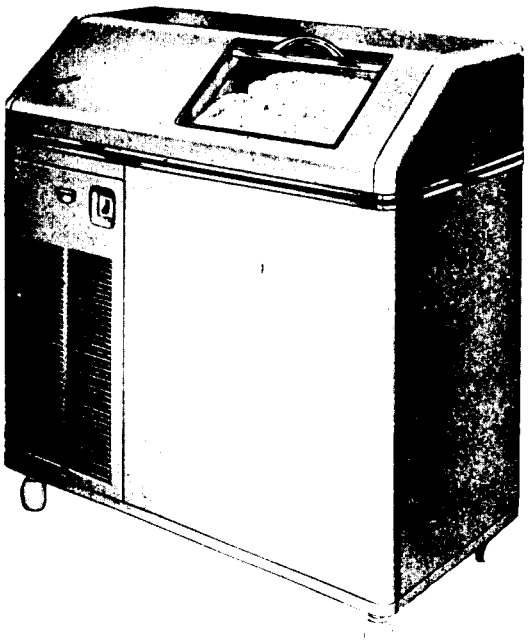

SF2-WSF

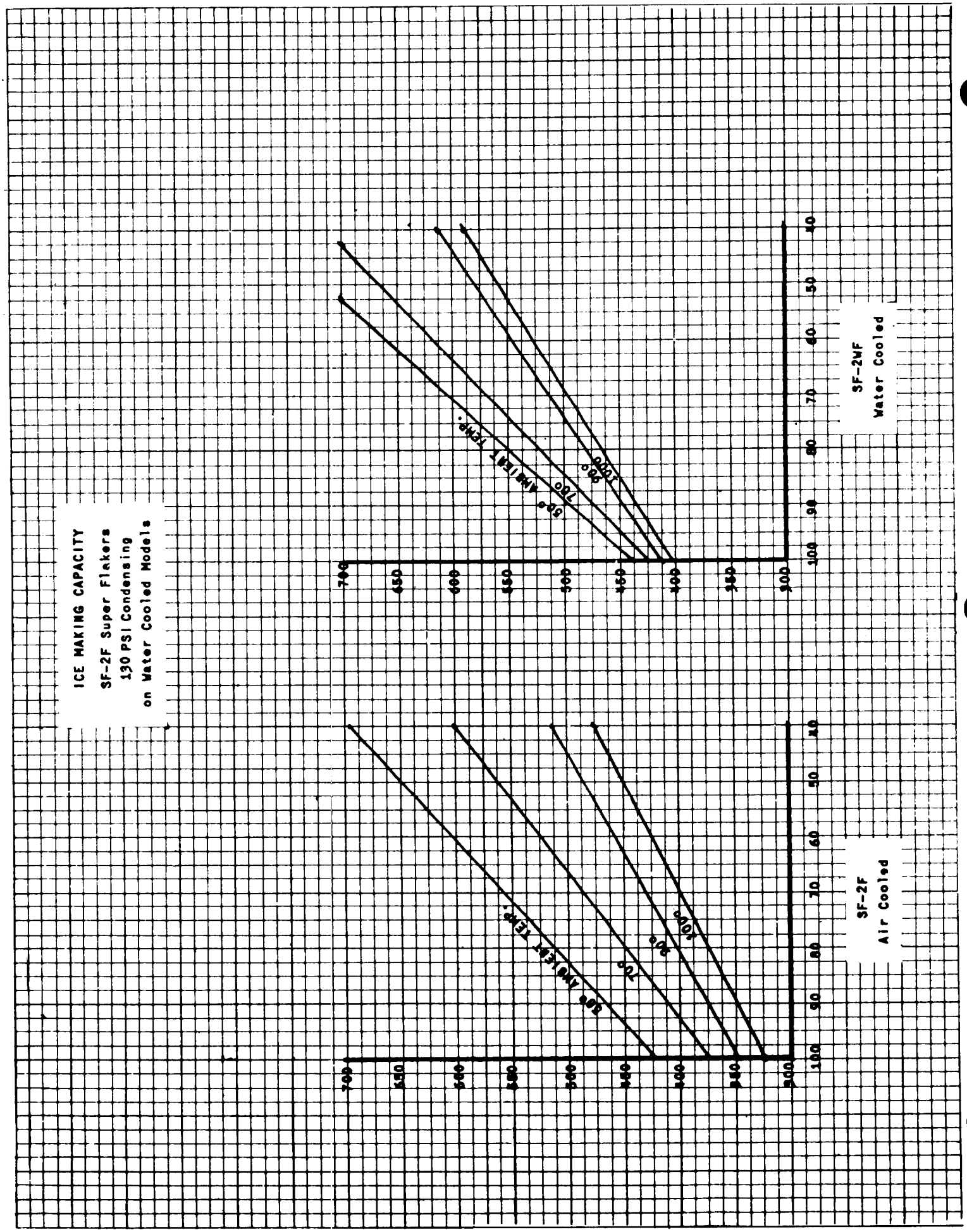
ICE MAKING CAPACITY
SF-2F Super Flakers
130 PSI Condensing
on Water Cooled Models
SF-2WF
Water Cooled
SF-2F
Air Cooled
AMBIENT TEMP.
60°
70°
80°
90°
100°
700
650
600
550
500
450
400
350
300
250
200
10
20
30
40
50
60
70
80
90
100

INSTALLATION

UNCRATING OF MACHINE

The complete machine comes in one crate. After the crate is removed, inspect for concealed damage. When installing the machine, remove the bottom skids by removing all bolts. Then cut all wires holding support packing from refrigerant lines. Then loosen shipping bolts on the compressor. Be sure the compressor is floating free on spring mounts. Remove leg levelers from the carton and install on base as desired. Then check all refrigerant lines for rubbing or touching other surfaces. Also check for possible transportation damage. Check for free movement of ice worm.

PRE-INSTALLATION CLEANING

Before machine is in final location, remove warranty card and other information from machine compartment. Remove top service door, water reservoir cover and packing under float. Then leave cover off for float adjustment after machine is installed.

LOCATION OF THE SUPER FLAKER

Select the location before delivering Super Flaker to the job. The following points should be considered when making selection.

1. Convenience. Place the unit as close as possible to the place of ice consumption.

2. Servicing. Install the machine on continuous flow models so it can be serviced from all three sides except the side containing the ice chute opening. Important to leave 24" access to front (containing on-off switch) and left side on both with storage and continuous flow models.

3. Room Temperature. Minimum - 50 degrees. Maximum - 100 degrees.

4. Continuous Flow Models.

   A. Bins. Care should be exercised in proper bin selection. Too small a bin will give unsatisfactory performance. A bin should have a minimum of 1/2 of machine's capacity per day, when the machine shuts off on thermostat. Make

sure that user's demands are met by proper bin as well as by proper machine selection. Plan relative location of the machine so as to enter the bin as close to the top as possible. Bins should also be higher than their width and length dimensions, so the maximum ice can be stored in the minimum cubic feet of space A Scotsman bin is designed in this fashion and will be the most convenient to the user. Too large a bin can cause trouble. Excessive melting of ice will occur if the bin is larger than required. Proper bin selection is important to the success of the ice machine installation.

B. Stands. A Scotsman Machine stand should be used if the machine is located beside the Scotsman bin. In designing the installation, plan for servicing of the machine from front, top, and sides.

C. Erection. For elevations in excess of four feet or in close quarters, chain falls should be used. For locations under four feet, the use of skid boards and rollers are practical.

D. Bin Thermostat. Locate the thermostat bulb as high as possible in the bin and still allow the machine to cut off before ice builds up in the chute. If this occurs, ice can stick in the chute keeping the machine off after there is a need for ice production. The capillary can usually enter through the chute opening. Keep the bulb and capillary line away from shovels.

E. Ice Chutes. If the outlet of the machine is remote from the bin, a chute will be required. Stainless steel is an excellent material for this purpose where its' cost is not prohibitive. Angles or ledges of less than 45° should not be used. Ice will cling to this surface and either melt excessively or jam in the chute. The sharper the drop the better. If straight down, do not insulate, unless necessary.

THERE IS NO DOCUMENT
FOR THESE NUMBERS

Page 7 thru Page 14

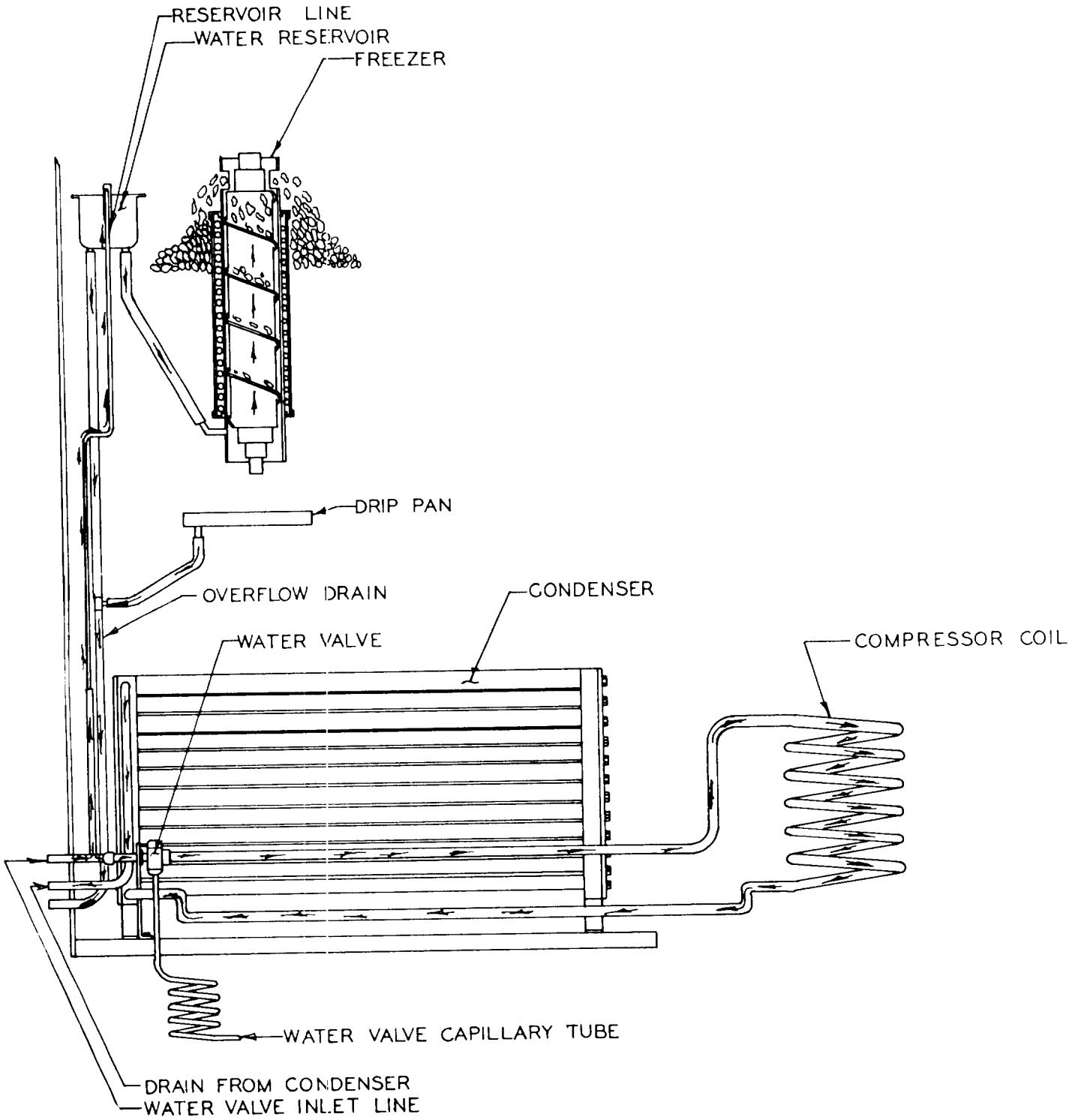

WATER COOLED MODELS

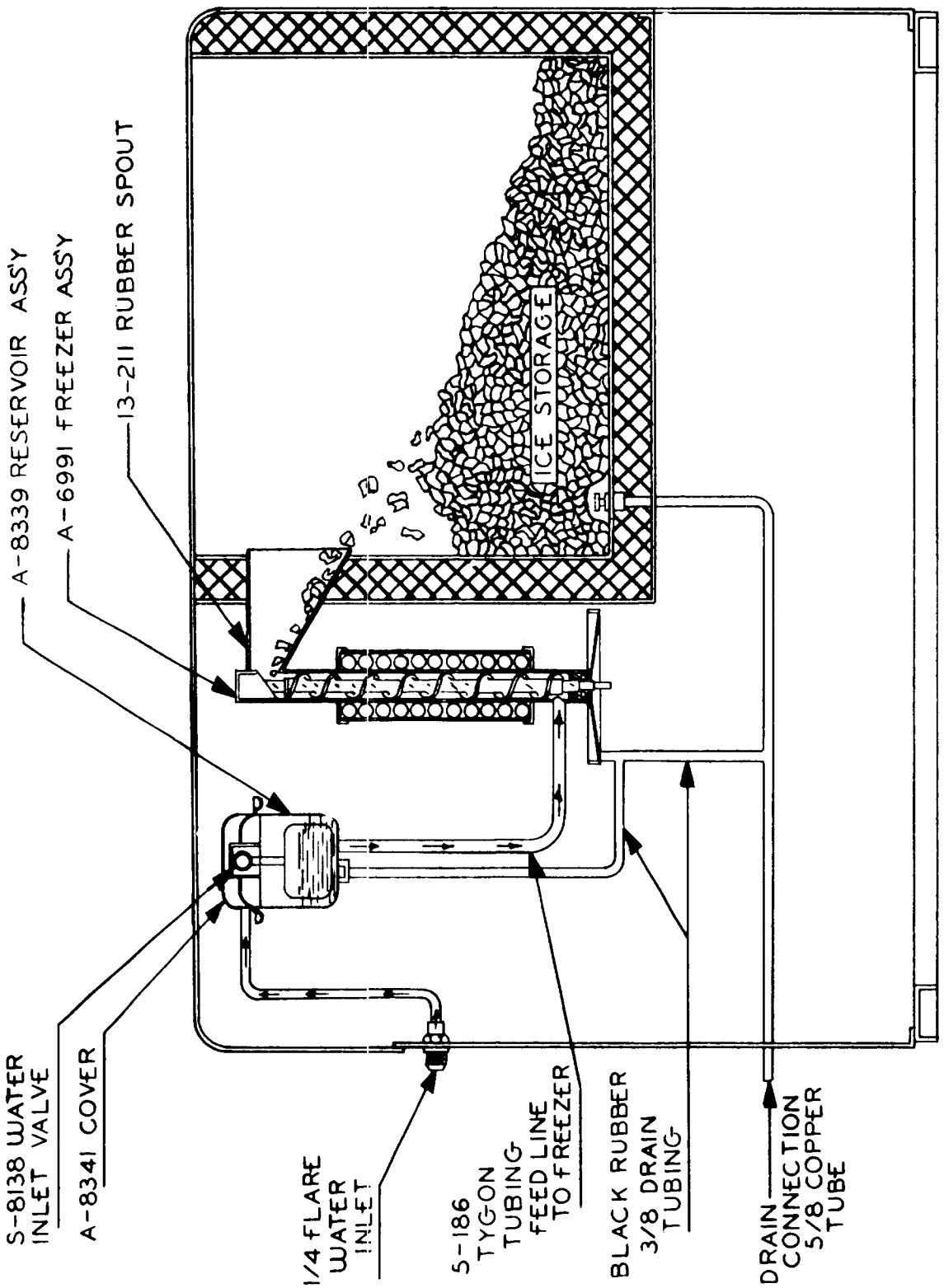

WATER SCHEMATIC
SF-2WSF

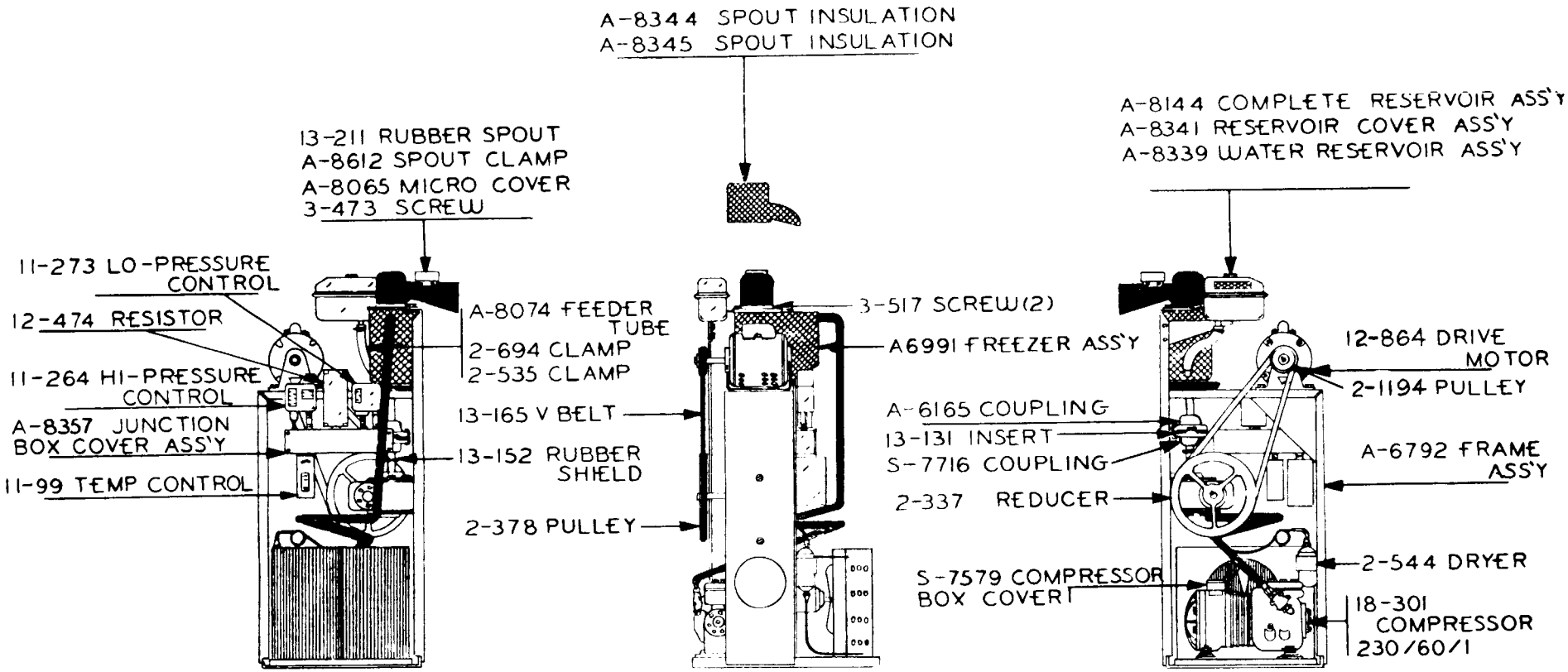

CHASSIS ASSEMBLY
AIR COOLED
SF-2F

SF-2F FREEZER ASSEMBLY

PART NO. A-6991

A change was made in the water seal and the bottom bearing retainer as is noted in the cut-away view.

This change went into effect starting with SF-2F, Serial No. 99-007484, and SF-2WSF, Serial No. 99-007629–SF-3F, Serial No. 910-006709 and SF-3WSF, Serial No. 910-006888.

In Mail Order stock, we still carry part no. 2-648 water seal as a replacement part, however, we do not carry any more A-6152 bearing retainers. New bearing retainer part no. A-10591, which is shorter in overall height must be used. It also then means that the new style part no. 2-929 water seal is required; this would apply to all the past freezers using the A-6152 retainer.

These parts are interchangeable insofar as they fit into all the old style SF-2F freezers as noted.

All mail order replacement freezers will also incorporate this change.

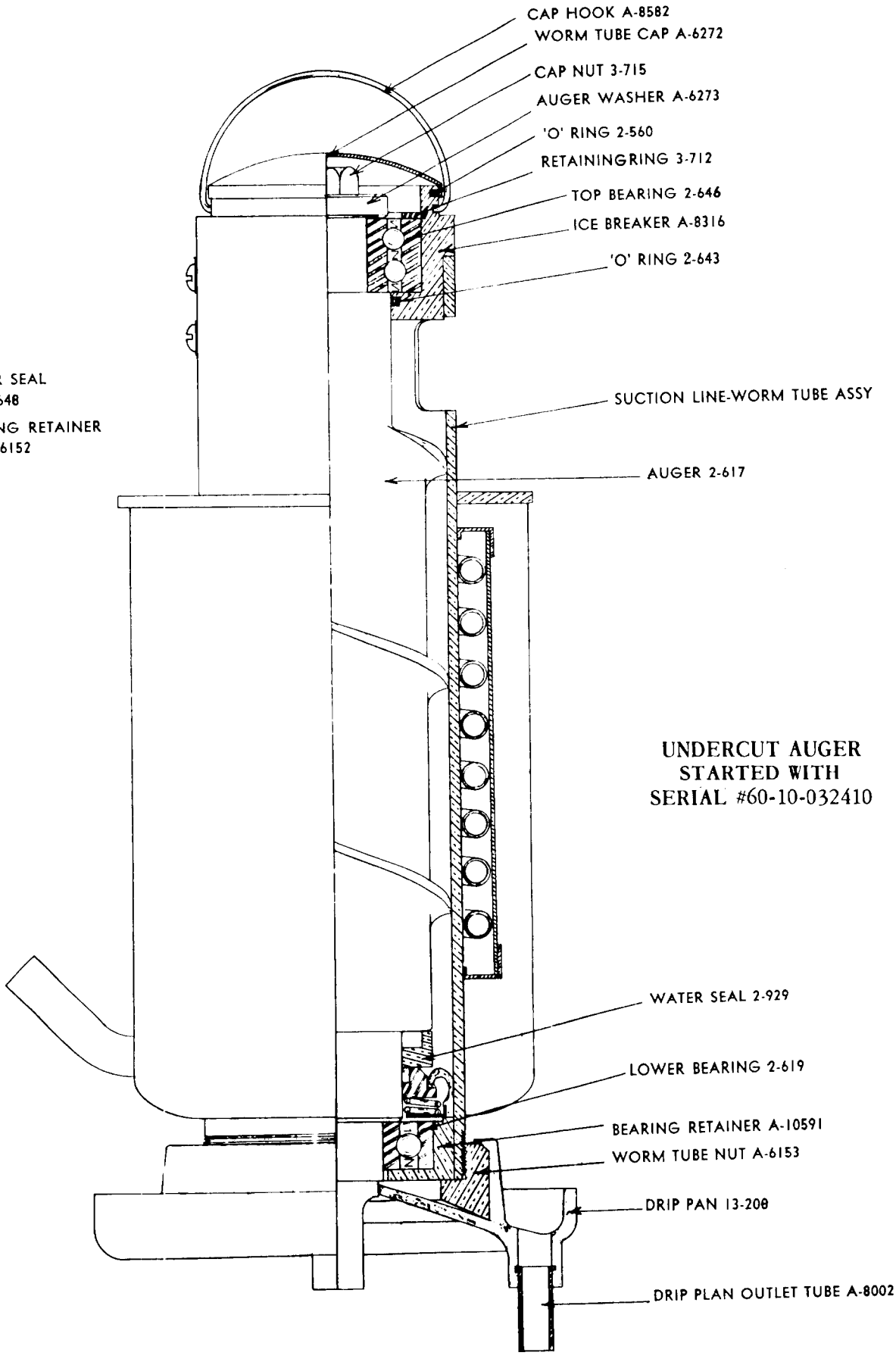

NOTE:
OBSOLETE WATER SEAL
WAS PART No. 2-648
OBSOLETE BEARING RETAINER
WAS PART No. A-6152

UNDERCUT AUGER
STARTED WITH
SERIAL #60-10-032410

FREEZER ASSEMBLY

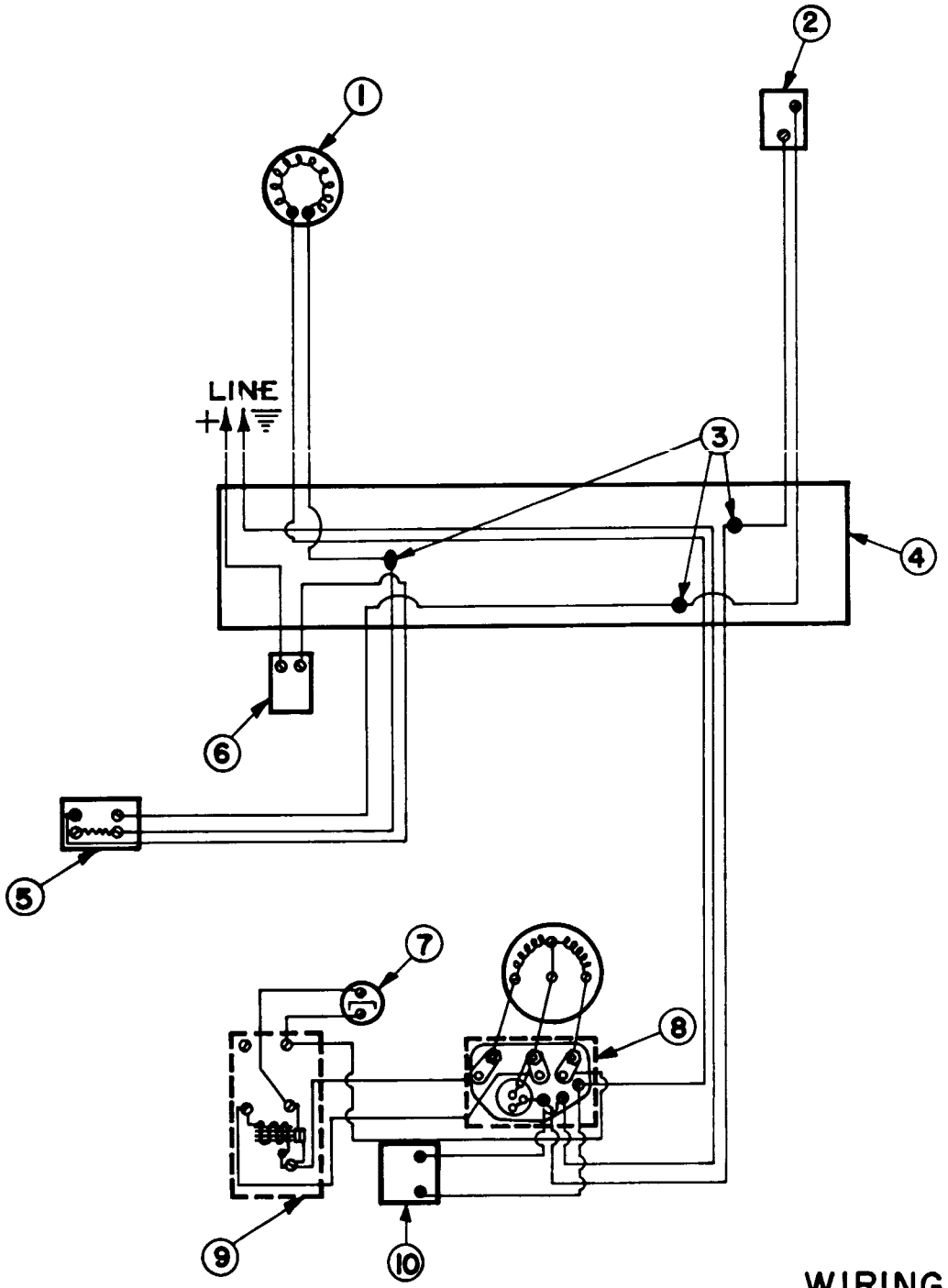

(1)	12-864	DRIVE MOTOR
(2)	12-524	MICRO SWITCH
(3)	12-31	WIRE NUT
(4)	A-8357	JUNCTION BOX ASS'Y
(5)	12-530 12-530-A	MANUAL THERMAL OVERLOAD SWITCH
(6)	11-99	BIN THERMOSTAT
(7)	18-331	STARTING CAPACITOR
(8)	18-355	MOTOR COMPRESSOR
(9)	18-227	COMPRESSOR RELAY
(10)	11-286	MANUAL HI-LOW CONTROL

WIRING DIAGRAM
WATER COOLED SF-2F
115/60/1

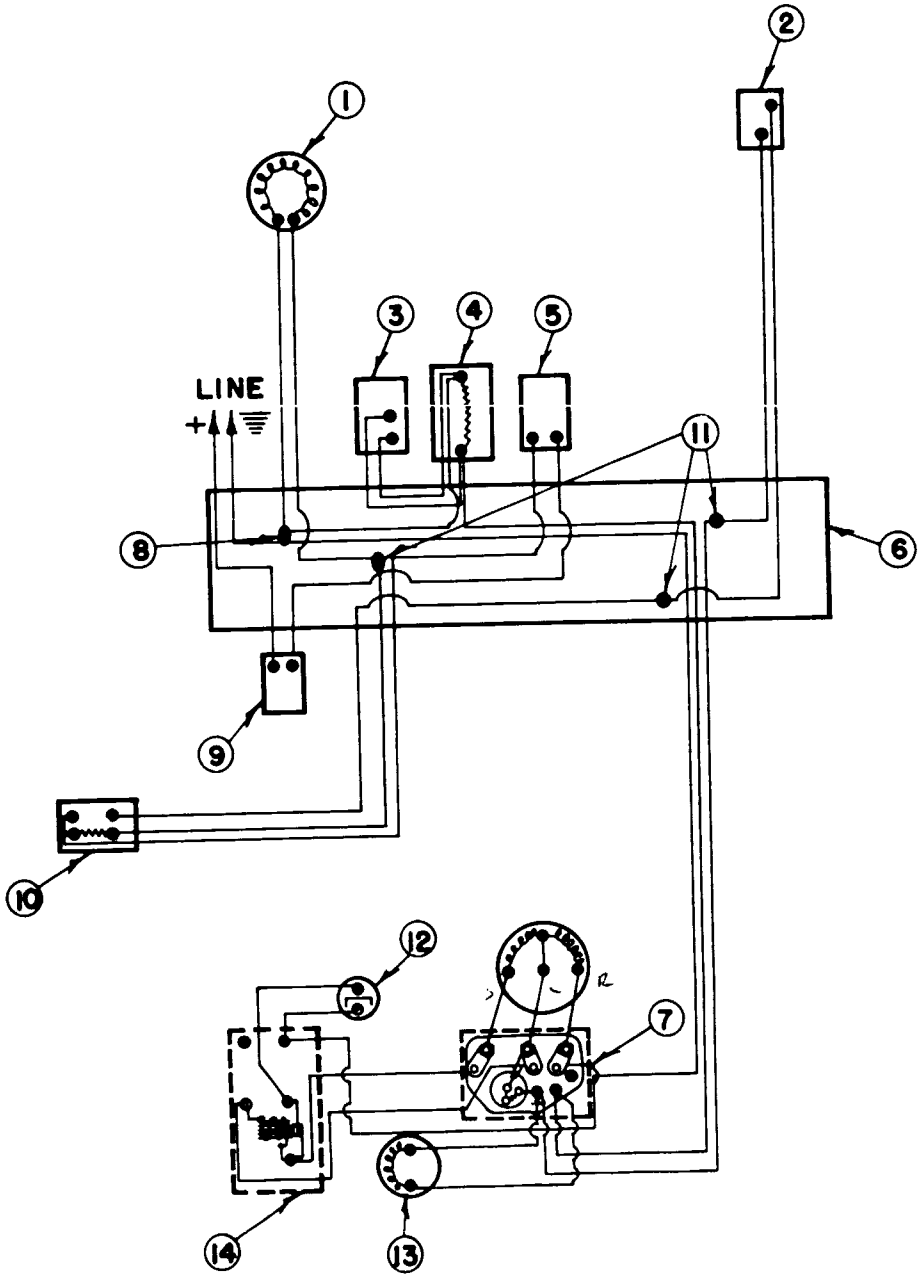

(1)	12-864	DRIVE MOTOR
(2)	12-524	MICRO SWITCH
(3)	11-264	HI PRESSURE CONTROL
(4)	12-474	RESISTOR 175 OHM
	A-7221	RESISTOR BOX
(5)	11-273	LO PRESSURE CONTROL HAND RESET
(6)	A-8356	JUNCTION BOX ASS'Y
(7)	18-325	MOTOR COMPRESSOR
(8)	12-184	WIRE NUT
(9)	11-99	BIN THERMOSTAT
(10)	12-530 12-530-A	MANUAL THERMAL OVERLOAD SWITCH
(11)	12-31	WIRE NUT
(12)	18-331	STARTING CAPACITOR
(13)	18-333	CONDENSER FAN MOTOR
(14)	18-227	COMPRESSOR RELAY

WIRING DIAGRAM
AIR COOLED SF-2F
115/60/1

SERVICE ANALYSIS CHART

COMPLAINT	POSSIBLE CAUSE	CORRECTION
Low ice production.	Loss of refrigerant. Under or over-charge of refrigerant.	Check and recharge with proper amount of refrigerant.
	Drive motor weak.	Replace.
	Dirty or plugged condenser.	Clean condenser.
	Low water level in water reservoir.	Adjust to 1/4 inch below spout opening.
	Overcharge of oil in system.	Check at oil hole and lower to 1 1/2 inch from top of hole or 1/3 full on crankcase sight glass.
	Partial restriction in capillary tube or drier.	Moisture in system. Over-charge of oil in system. Remove charge by blowing back through cap tube. Replace and recharge.
	Inlet water strainer partially plugged.	Remove screen and clean.
	Corroded or strained worm shaft due to water condition.	Remove worm shaft and clean, or use Scotsman Ice Machine Cleaner. See Maintenance Section.
	Slipping drive belt.	Adjust belt tension or replace worn belt.
	Defective gear reducer.	Check reducer driven shaft to freezer shaft. Should rotate at 12 R P M. Replace if worn.
Machine runs but makes no ice.	Loss or undercharge of refrigerant.	Check for leaks and recharge.
	Drive motor, belts, gear reducer on drive coupling inoperative.	Gear reducer and worm turn at 12 R P M. Check. Repair or replace.
	Pulleys loose on shafts.	Tighten, repair or replace.

SERVICE ANALYSIS CHART

COMPLAINT	POSSIBLE CAUSE	CORRECTION
Machine runs but makes no ice. (Cont.)	Water not entering freezing chamber.	Plugged strainer or supply line. Check and clean. Air lock in gravity feed line. Check and remove air lock.
	Moisture in system.	Check and remove charge and drier. Replace and recharge.
	Water seal leaking.	Replace seal. See section on maintenance.
	Defective manual overload switch.	Replace switch.
Water leaks.	Defective water seal.	Replace. See section on maintenance.
	Gravity feed line leaking.	Check hose clamps.
	'O' ring in spout casting leaking.	Remove spout casting and install new 'O' ring.
	Storage bin drain and connecting fittings.	Check and repair. Tighten fitting - replace 'O' ring.
	Water level in reservoir too high.	Adjust to 1/4 inch below overflow pipe.
Excessive noise or chattering.	Scale or mineral build-up on inside of freezer.	Clean with Scotsman Ice Machine Cleaner. See section on maintenance.
	Mineral deposit or scale on auger and cylinder walls.	Ice sticking and jamming inside. Clean with Ice Machine Cleaner or remove auger and polish.
	Low suction pressure.	Raise suction pressure. Adjust head pressure control to recommended setting or balance refrigerant charge.
	Intermittent water supply.	Check and clean water strainer. Check gravity feed line for air lock. Remove air lock.
	Water level in reservoir too low.	Adjust to 1/4 inch below overflow pipe, or raise reservoir.
	Mis-aligned coupling or worn insert.	Repair or replace.

SERVICE ANALYSIS CHART

COMPLAINT	POSSIBLE CAUSE	CORRECTION
Excessive noise or chattering. (Cont.)	Low ambient temperature.	Set head pressure and resultant back pressure higher, or move to heated space.
	Gear reducer low on oil charge.	Check oil level and refill to oil level plug.
	Gear reducer loose on frame.	Tighten.
	Pulleys worn or loose on shaft.	Repair or replace.
	Belt cracked or worn.	Replace belt.
	Drive motor end-play or worn bearings.	Repair or replace.
	Motor compressor not floating on springs.	Loosen hold-down bolts.
Machine continues to run with full storage bin.	Storage bin thermostat not properly set or is defective.	Reset or replace. 35° cut-out, 45° cut-in.

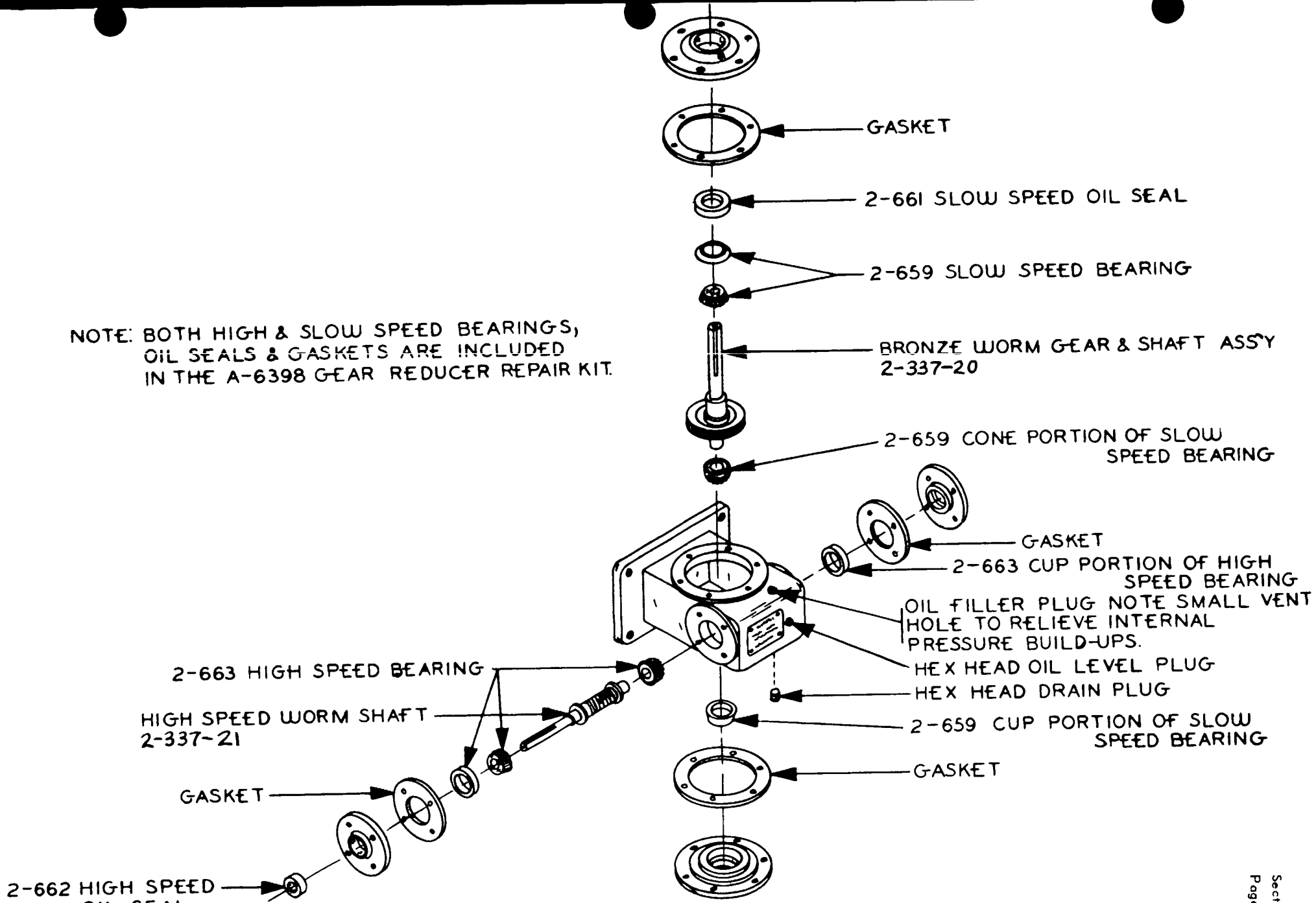

NOTE: BOTH HIGH & SLOW SPEED BEARINGS, OIL SEALS & GASKETS ARE INCLUDED IN THE A-6398 GEAR REDUCER REPAIR KIT.

WINSMITH GEAR REDUCER (3CTS)

QUEEN PART NO. 2-337

USED ON ALL MODELS SF-2F & SF-2WSF

MAINTENANCE INSTRUCTIONS
FOR
SCOTSMAN SUPER FLAKERS

The following services must be accomplished a minimum of two (2) times per year on all Scotsman Super Flakers.

1. Check and clean water strainers and float valves. Depress float valve to insure full stream of water.
2. Check water level and machine level. Keep water level below overflow but as high as possible and still not run out of spout opening with machine off. Water should come out of spout with ice at all times. Adjust as required.
3. Clean reservoir and interior of freezer assembly using Scotsman Ice Machine Cleaner.
   A. If machine has been cleaned regularly and no problems such as dry ice or chatter are noticed, clean by making ice from solution of 8 oz. of cleaner to one gallon of water.
   B. If heavy mineral deposits on auger and walls, or sediment at inlet to freezer are encountered, clean by pouring strong solution (1/2 acid - 1/2 water) into reservoir and operate drive motor only for agitation. Allow 1/2 hour or longer as required. Drain by disconnecting tygon at water inlet to freezer.

   Note: Cleaning requirements vary according to local water conditions. Visual inspection of the auger before and after cleaning will indicate best procedure to be followed in local areas.
4. Check high and low side pressures. On air cooled models set head pressure between 130 and 145 PSI on R.A. high pressure control. On water cooled models, set pressure at 130 PSI. Suction pressure should be above 12 PSI and will range up to 16 PSI depending upon ambient and water temperatures.
5. Set hand reset low pressure control to cut off in event of water supply interruption or low ambient temperature at approximately 5 PSI.
6. Change oil in gear reducer. Use 600W or grease with BRB No. 1 or equivalent when grease fittings are evident. Particularly important when there is evidence that water has gotten into gear housing. Remove gear reducer to facilitate.
7. Oil drive motor. Use SAE 20 oil.
8. Check top bearing of freezing tube. Pry upward around edge of stamped brass cap. If moisture is around bearing, wipe up and remove grease. Add new grease Use lubriplate No. 5. To replace cap, insert small wire under cap edge to vent air and remove when cap is on tight.
9. Check and adjust belt tension.
10. Clean air cooled condenser. Inform customer to clean frequently. Always shut off machine when cleaning.
11. Oil condenser fan motor when possible.
12. Check for refrigerant leaks and proper frost line. Should frost out of accumulator approximately two feet.

MAINTENANCE INSTRUCTIONS
FOR
SCOTSMAN SUPER FLAKERS

13. Check for water leaks. Tighten drain line connections. Run water down bin drain line to make sure it is open.

14. Check quality of ice. Ice should be wet when formed but will cure rapidly to normal hardness in the bin.

15. Check thermostat and pressure plate cut off. Micro-switch cuts off only compressor. Bin thermostat should be set at 10° differential and should keep entire machine off at least twenty minutes in high ambients (longer in low) during normal operation. Set cut out at 35°, cut in at 45°.

CHANGES AND MODIFICATIONS

Drive Motor is 1/4 Horsepower 115/60/1

CURRENT	OBSOLETE
Part Number - 12-864-1	12-712-1
Nema Frame Size - 48	56
Shaft Diameter - 1/2"	5/8"
Pulley to Shaft - 2-1194	2-388
Pulley Attachment to Shaft Set Screw on Flat	Keyway and Set Screw

The mounting brackets of the two motors are not interchangeable. On units with serial numbers lower than 62-2 prefix; order old style 56 frame motors. On newer units order only 48 frame motors.

CHANGES AND MODIFICATIONS

INLET VALVES

On all water inlet valves S-6941, S-8138, A-6771 and A-9101 we have incorporated a new type of float assembly. On past assemblies, the float ball was screwed onto an arm and adjusted by means of a set screw and tension spring. The new type float assembly is a one-piece affair that can be adjusted by merely bending the arm up or down. On this new type float assembly the arm and float will be available as a complete unit only. This will consist of the float ball, float arm, valve seat holder and rubber valve seat. The respective new type float assemblies are interchangeable on all water inlet valves used in the past.

On the old style water inlet valves where the float ball was screwed onto the arm, the float ball itself will continue to be carried as a field replacement part. However, when the present supply of water inlet valves using the old style float arms have been exhausted, the valves will all be equipped with the new type float arm assembly.

The basic part of the valve will not change and will continue to be carried under the same part numbers as in the past. The following list will outline the respective valves and replacement arm assemblies:

S-6941 - Water Inlet Valve Complete - All Early Model Flakers & Cubers
(Has short float arm.)

A. A-12511 Complete Float Arm Assembly
B. 2-463 Float Ball only - For old style float arm.

S-8138 - Water Inlet Valve Complete - All Current Model Flakers
(DF-4, SF-75, SF-1, SF-2, SF-3)

A. A-12509 Complete Float Arm Assembly
B. 2-463 Float Ball only - For old style float arm.

S-6237 – SLIDING DOOR

The sliding door used on all models, both flakers and cubers with storage, will now have a different arrangement for the hinge pin assembly. The hinge pins S-6019 and hinge pin holder S-6019 will no longer be used on the new door arrangement. Replacing the hinge pins and hinge pin holders will be a one piece brass rod A-11696 running completely through door and secured with two (2) cotter pins 3-196-1.

The new door assembly will still be carried under part no. S-6237, and is exactly interchangeable on all past with storage models. We will still carry the hinge pins and hinge pin holders in Mail Order stock for use on those doors presently equipped with same.

PARTS LIST

SF-2F

CABINET PARTS	SF-2F	SF-2WSF
Description	Part No.	Part No.
Case Assembly (Less Doors)	A-9763	A-9764
Case Hood Assembly	A-7176	S-9992
Door Slide Assembly	None	S-7710
Sliding Door Assembly	None	S-6237
Hinge Pin	None	A-11696
Door Handle	None	15-247
Left Side Door Assembly	S-6713	S-6713
Rear Door Assembly	A-8741	A-8741
Front Door Assembly	A-6998	A-6998
Top Door Assembly (Hood Side)	A-6530	A-6530
Top Door Assembly (Over Reservoir)	A-7676	S-6849
Moulding Strip 85"	S-6211	None
Moulding Strip 101" Front	None	S-6413
Moulding Strip 42" Rear	None	A-5829
Legs (4 in kit)	A-12442-1	A-12442-1
Emblem	S-3188	S-3188
Plywood Crate	1-387	1-343
Base Trim Strips 2/unit	A-8902-2	None
Ice Storage Tank Assembly	None	A-7001
Ice Storage Tank Assembly - Drain Tube	None	S-7045

Note: For above cabinet parts in stainless steel, add 'S' as a prefix to above part numbers.

WATER CIRCUIT	SF-2F	SF-2WSF
Description	Part No.	Part No.
Water Reservoir Assembly	A-8339	A-8339
Reservoir Body	A-13409	A-13409
Stand Pipe Assembly	S-6715	S-6715
Reservoir Cover	A-8341	S-8341
Inlet Valve & Arm Assembly	S-8138	S-8138
Water Deflector	2-1320	2-1320
Rubber Seat	S-6947	S-6947
Water Valve Bracket	A-12869	A-12869
Float Assembly	A-12509	A-12509
Water Supply Strainer	16-162	16-162

PARTS LIST

SF-2F

WATER CIRCUIT	SF-2F	SF-2WSF
Description	Part No.	Part No.
Ice Storage Tank Drain Assembly	None	A-6825
Drain Assembly Strainer	None	A-6448
'O' Ring	None	2-530
Water-Tygon Tubing		
Reservoir to Freezer		
Per foot	5-179	5-186
Bin Thermal Bulb Bracket	None	S-7312
Rubber Tubing		
Drip Pan Drain Hose, per foot	13-79	13-79
Fittings and Clamps		
Rubber Tubing Clamp	2-538	2-538
Tygon Tubing Clamp (with 5-186 tube)	None	2-535
Tygon Tubing Clamp (with 5-179 tube)	2-538	None

FREEZER ASSEMBLY	SF-2F SF-2WSF
Description	Part No.
Freezer Assembly	A-6991
Ice Breaker	A-8316
Worm Shaft	2-617
Lock Washer } Part of Ice Breaker	3-679
Brass Machine Screw } Part of Ice Breaker	3-732
Freezer Cap	A-8581
Freezer Cap Hook	A-8582
Hex Cap Screw	3-715
Washer - Over Top Bearing	A-6273
Top Bearing	2-646
'O' Ring, Shaft	2-643
'O' Ring, Cap	2-560
Retaining Ring	3-712
Worm Tube, Coil and Housing Assembly	A-6382
Water Seal Assembly	2-929
Bottom Bearing	2-619
Bearing Retainer	A-10591
Worm Tube Nut	A-6153
Drip Pan Assembly - Rubber	13-208
Refrigerant Drier	2-544
Rubber Spout	13-211
Spout Clamp	A-8612

PARTS LIST

ELECTRICAL COMPONENTS	SF-2F SF-2WSF
Description	Part No.
Manual Overload Switch	12-530
Ranco - Manual Re-set Lo Pressure Control	11-273
White Rodgers Bin Thermostat (Replaces 11-211)	11-99
Penn Reverse Acting Head Pressure Control - Used on Air Cooled Models only.	11-264
Lectrohm Resistor	12-474

CONDENSING UNITS	SF-2F SF-2WSF
Description	Part No.
Complete Condensing Unit - Air Cooled 115/60/1	18-301
Motor Compressor Only 115/60/1	18-325
Valve Plate and Gasket Kit	18-326
Relay	18-227
Starting Capacitor	18-331
Condenser Fan Only	18-363
Condenser Motor Only	18-333
Mounting Bracket, Condenser Fan Motor	18-233
Air Cooled Condenser	18-334
Condenser Shroud	18-335
Klixon Thermal Overload	18-347
Electrical Terminal Assembly, includes three complete terminals & board	18-241
Complete Condensing Unit - Water Cooled 115/60/1 (Formerly 12-387)	18-306
Motor Compressor Only 115/60/1	18-355
Valve Plate and Gasket Kit	18-326
Cylinder Head	18-329
Relay (115/60/1)	18-227
Starting Capacitor (115/60/1)	18-357
1/2 H.P. Water Cooled Condenser	18-368
Water Cooled Condenser Gasket - Plain End	18-262
Water Cooled Condenser Gasket - Manifold End	18-263
Klixon Thermal Overload 115/60/1	18-347
Electrical Terminal Assembly, Includes 3 Complete Terminals & Board	18-241
Compressor to Water Valve Hose Assembly	18-260
Compressor to Condenser Hose Assembly	18-261
Water Regulating Valve - Penn	11-198
Ranco Hi-Lo Dual Pressure Control	11-286

PARTS LIST

DRIVE ASSEMBLY	SF-2F SF-2WSF
Description	Part No.
Drive Motor - 1/4 H.P. - 115/60/1	12-864-1
Drive Motor - 1/4 H.P. - 230/60/1	12-864-2
Pulley - 3-1/4"	2-1194
Pulley - 10"	2-378
V Belt	13-165
Coupling Half Bottom	S-7716
Coupling Half Top	A-6165
Inserts (Coupling)	13-131
Set Screws (Coupling)	3-384
Cap Screw (Coupling) (2)	3-206
Clamp (Coupling) (2)	S-8496
Rubber Shield	13-152
Gear Reducer	2-337
Gear Reducer Repair Kit	A-6398
Slow Speed Bearing (2)	2-659
High Speed Bearing (2)	2-660
Slow Speed Oil Seal	2-661
High Speed Oil Seal	2-662
High Speed Gasket	2-672
Slow Speed Gasket	2-673
Slow Speed Bronze Worm Gear and Shaft	2-337-20
High Speed Gear and Shaft	2-337-21

MISCELLANEOUS	
Description	Part No.
Ice Machine Cleaner - Per Case	19-343-1
Ice Scoops	2-540
Paint - touch-up cans	10-153
Gear Reducer Oil - 600W	19-359
Upper Bearing Grease - Lubriplate No. 5	19-309
Transformer - (Step Up or Step Down, 115 to 230)	12-210

OBSOLETE #1

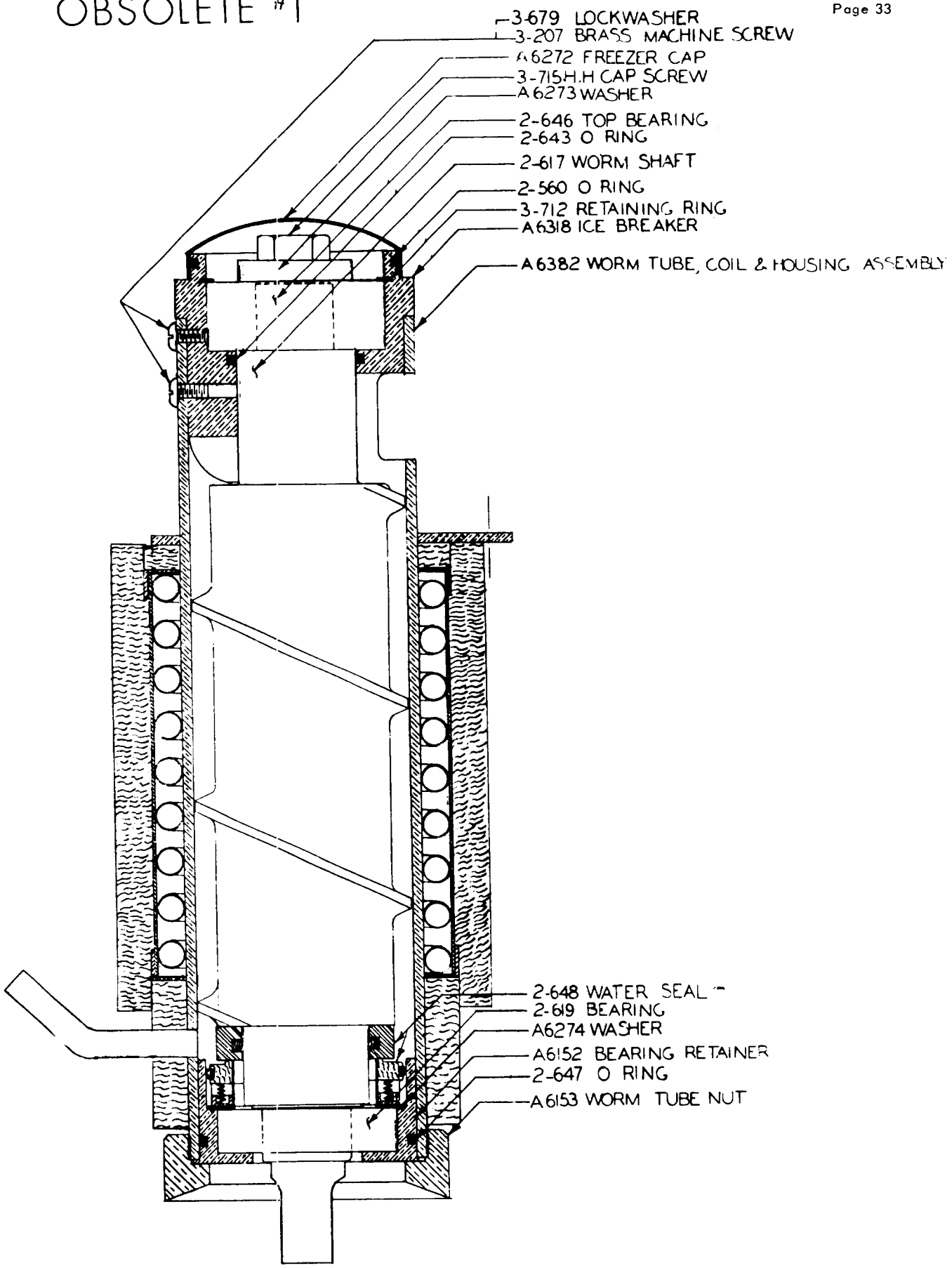

FREEZER ASSEMBLY

SF-2F

OBSOLETE #2

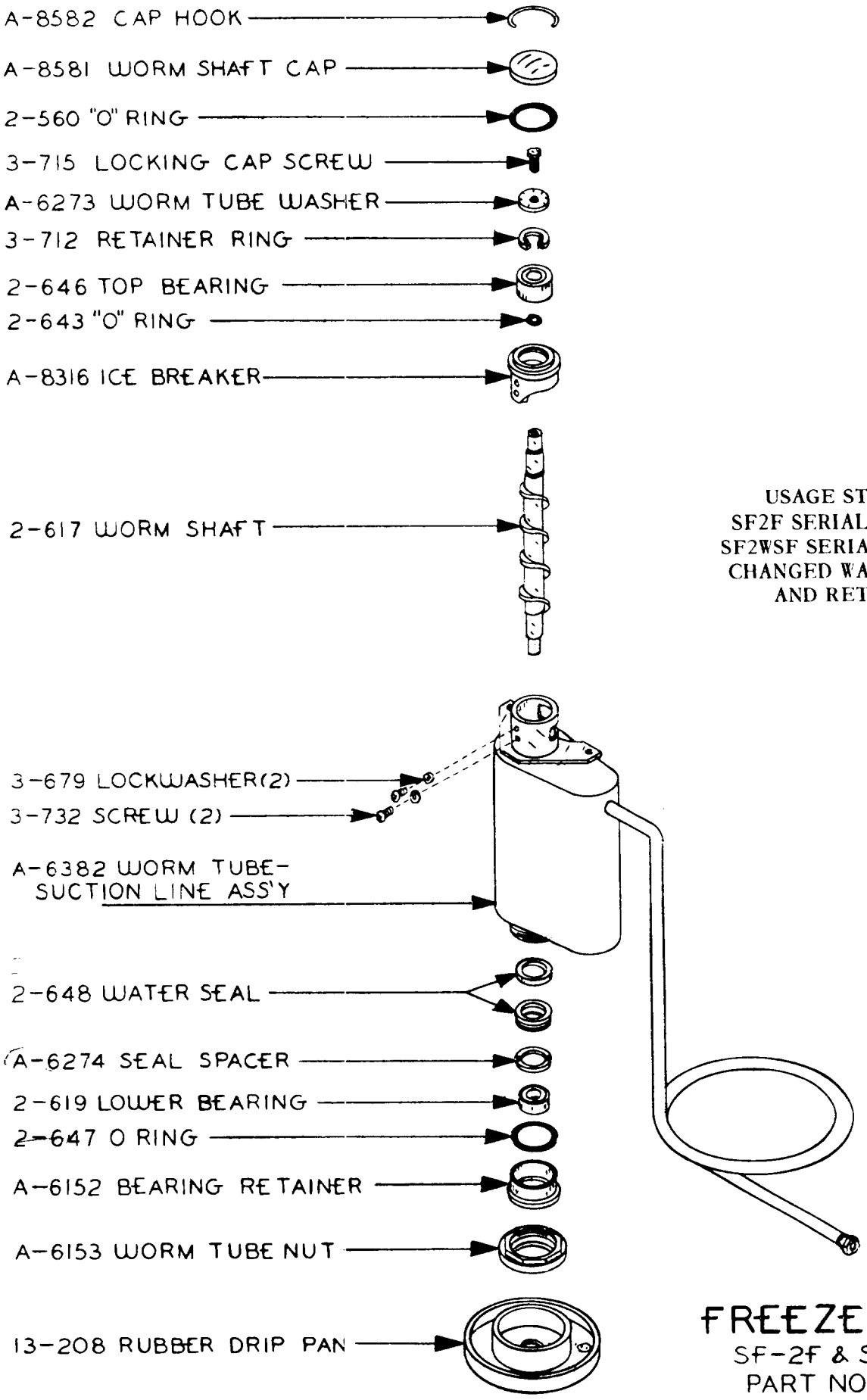

USAGE STOPPED
SF2F SERIAL #99-07484
SF2WSF SERIAL #99-07629
CHANGED WATER SEAL
AND RETAINER

FREEZER ASS'Y
SF-2F & SF-2WSF
PART NO. A-6991

TABLE OF CONTENTS

	Page
FOREWARD	1
TABLE OF CONTENTS	2
SPECIFICATIONS	3
PHOTO AND ICE MAKING CAPACITY, Cont. Flow	4-5
PHOTO AND ICE MAKING CAPACITY, with Storage	6-7
SPECIFICATIONS	8
How It Works	
INSTALLATIONS	
Preparation for Installation	9
Uncrating and Location	10
Water Supply	10
Drain	10-12
Electrical Connections & Installation	11
Installation Practice	12
REFRIGERATION CYCLE	13
WATER SCHEMATIC	14-15
WIRING DIAGRAMS, All models	16-21
SERVICE	
Starting the Machine	22
Refrigerant Charge	23
Water System	23
Electrical System	24
Condensing Unit	24
Drive Motor	24
High-Low Pressure Cut-Out	24
Storage Bin Thermostat	24
Micro Safety Switch	24
On-Off Switch	24
Head Pressure Control Kit	25
REMOVAL & INSTALLATION OF PARTS	26-29
CHASSIS ASSEMBLY (AC)	30
FREEZER ASSEMBLY	31
RESERVOIR	32
WINSMITH GEAR REDUCER	33
GEAR REDUCER MEMO AND CHART	34
Case Assembly, with Storage	35
Case Assembly, Cont. Flow	36
Condensing Unit W.C.	37
Condensing Unit A.C.	38
MAINTENANCE INSTRUCTIONS	39-40
SERVICE ANALYSIS	41-42
PARTS LIST	43-47
OVERLOAD CHART	48

THIS PAGE
INTENTIONALLY
LEFT BLANK

THIS PAGE
INTENTIONALLY
LEFT BLANK

MECHANICAL SPECIFICATIONS

	SF-3H, SF-3WSH	SF-3WH, SF-3WWSH
Compressor	1 HP	1 HP
Condenser	Air-Cooled	Water-Cooled
Refrigerant	37 oz. R 12	34 oz. R 12
Refrigerant Control	Capillary Tube	Capillary Tube
Power Consumption	7.8 Amps.	7.8 Amps.
Voltage- Standard Unit	230 V., 60 cycle 1 ph.	230 V., 60 cycle, 1ph.
Worm Drive Motor NEMA #56	1/3 HP	1/3 HP
Worm - R.P.M.	12	12
Water Consumption - Condensing Unit		1-2 G.P.M. Dependent on incoming water temperature

	SF-3H	SF-3WSH
DIMENSIONS		
Width	23"	48 1/2"
Depth	24 1/2"	26 1/2"
Height	49"	49"
Height With Legs	55"	55"
Approximate Shipping Weight	454	614

SPECIFICATIONS

SUPER FLAKER SF-3 SERIES (Cont. Flow)	MODEL SF-3H	MODEL SF-3WH	MODEL SF3H-SS	MODEL SF-3WH-SS
Daily capacity up to 1050 lbs.	X	X	X	X
Stainless steel bin liner				
Air cooled condenser	X		X	
Water cooled condenser		X		X
Heavy duty 1 HP. Compressor	X	X	X	X
Standard 230 V, 60 cy, 1 ph, 2 wire	X	X	X	X
¼" water inlet SAE Flare	X	X	X	X
⅜" condenser water inlet NPT		X		X
⅜" bin drain ID	X	X	X	X
⅝" bin drain OD				
⅜" water outlet OD		X		X
Hammerloid grey exterior	X	X		
Stainless steel exterior			X	X
55" height (with legs)	X	X	X	X
49" height (without legs)	X	X	X	X
23" width	X	X	X	X
24 ½" depth	X	X	X	X
Approximate shipping weight	454	454	454	454

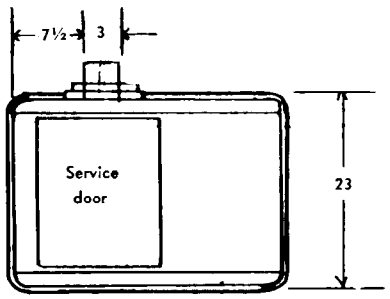

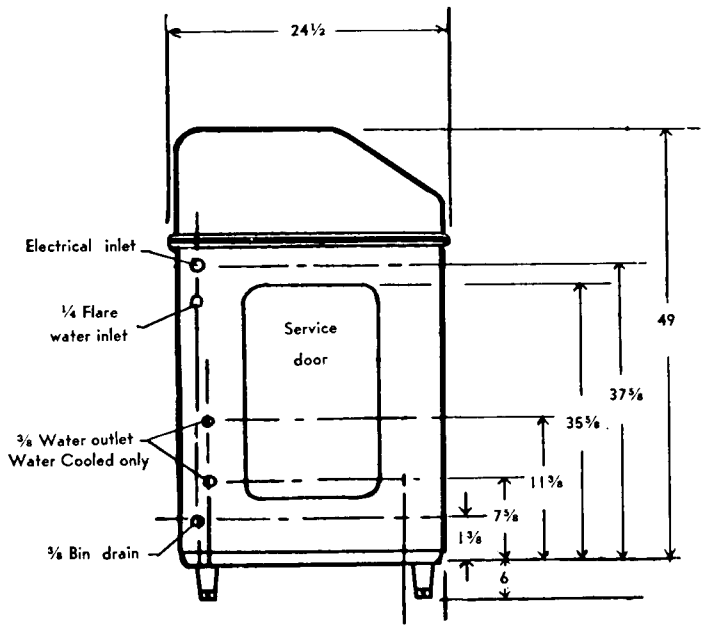

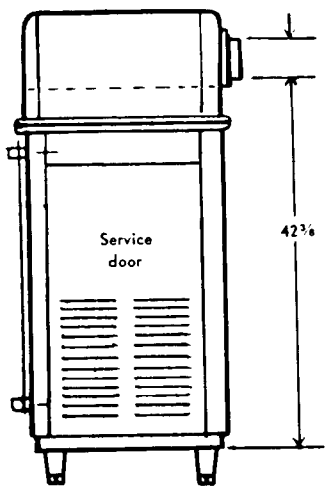

SCOTSMAN®

SUPER FLAKER
SF-3
SERIES
Continuous Flow

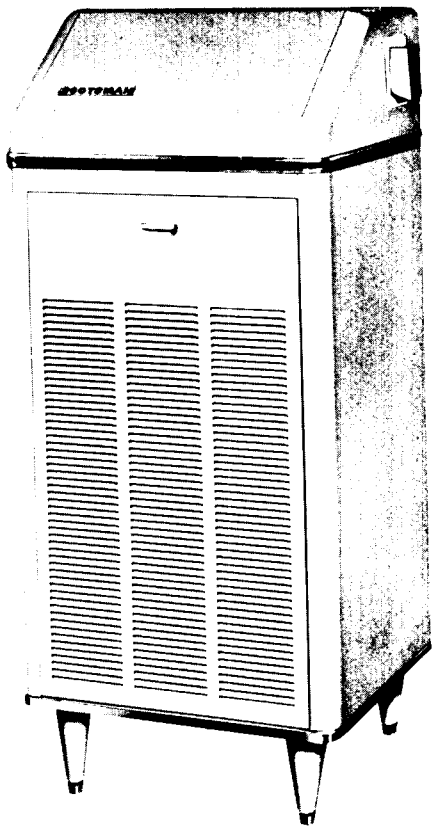

ice making capacity

Air Cooled Models

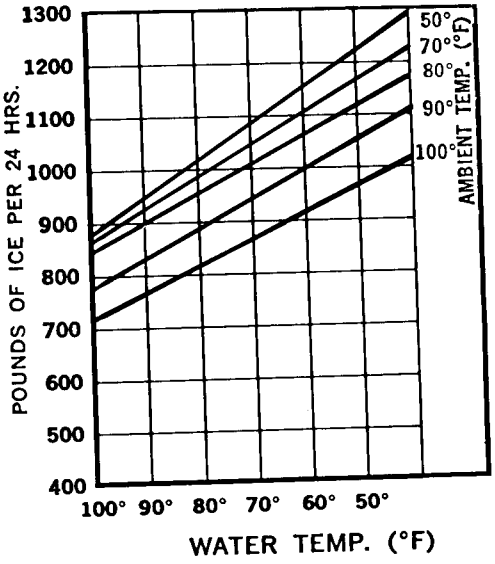

Water Cooled Models

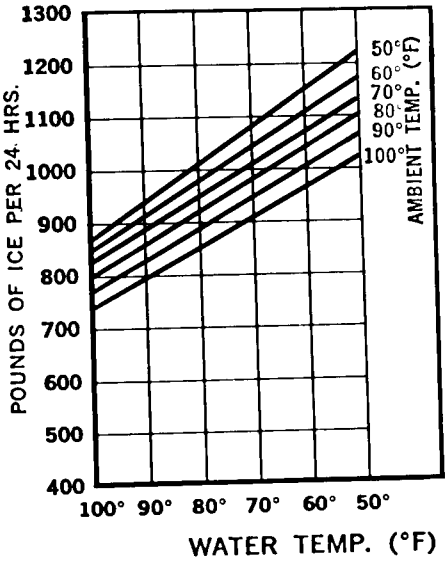

SCOTSMAN®

SUPER FLAKER
SF-3
SERIES
Storage Type

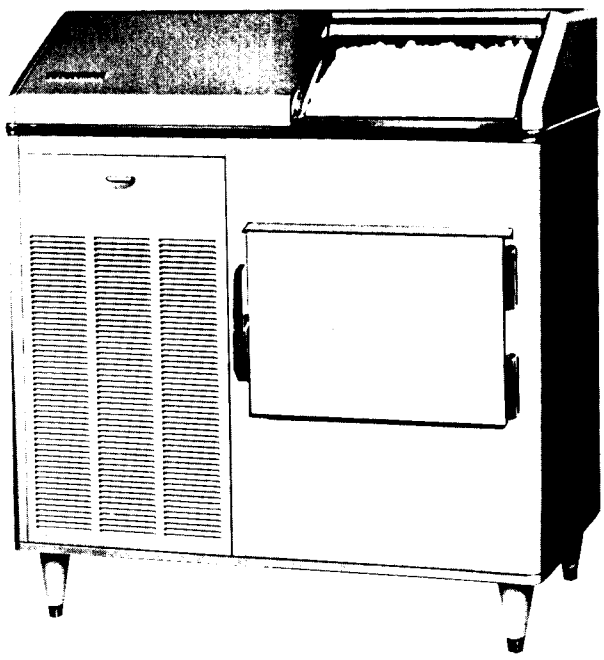

ice making capacity

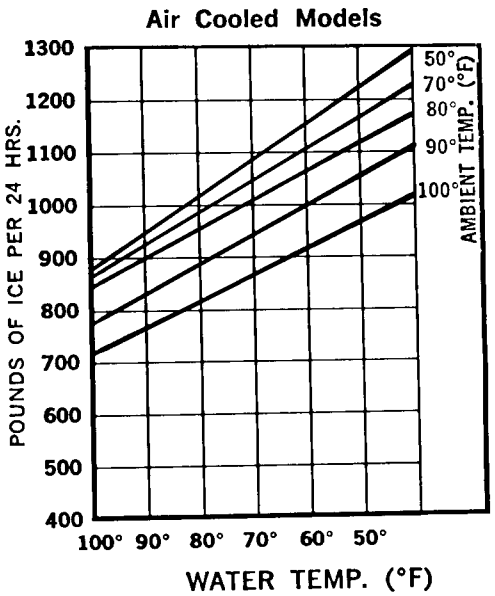

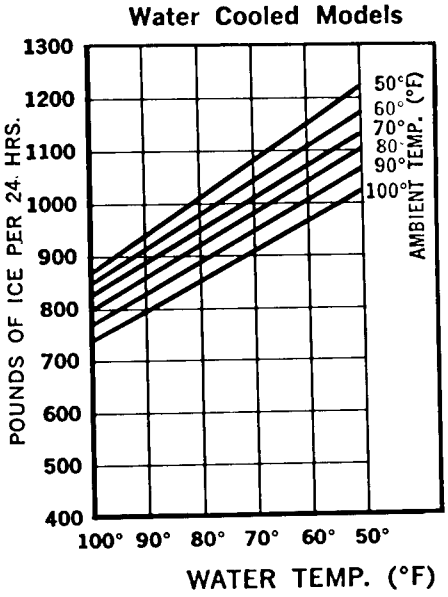

SPECIFICATIONS

SUPER FLAKER SF-3 SERIES (Storage Type)	MODEL SF-3WSH	MODEL SF-3WWSH	MODEL SF-3WSH-SS	MODEL SF-3WWSH-SS
Daily capacity up to 1050 lbs.	X	X	X	X
300 lb. storage bin capacity	X	X	X	X
Stainless steel bin	X	X	X	X
Air cooled condenser	X		X	
Water cooled condenser		X		X
Heavy duty 1 HP. Compressor	X	X	X	X
Standard 230 V, 60 cy, 1 ph, 2 wire	X	X	X	X
$\frac{1}{4}$" water inlet SAE Flare	X	X	X	X
$\frac{3}{8}$" condenser water inlet NPT		X		X
$\frac{5}{8}$" bin drain OD	X	X	X	X
$\frac{3}{8}$" water outlet OD		X		X
Hammerloid grey exterior	X	X		
Stainless steel exterior			X	X
55" height (with legs)	X	X	X	X
49" height (without legs)	X	X	X	X
48 ½" width	X	X	X	X
26½" depth	X	X	X	X
Approximate Shipping weight	614	614	614	614

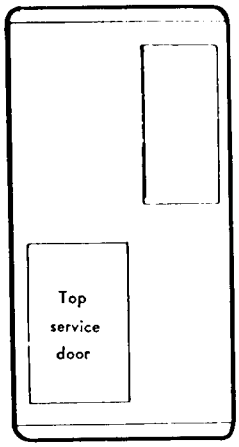

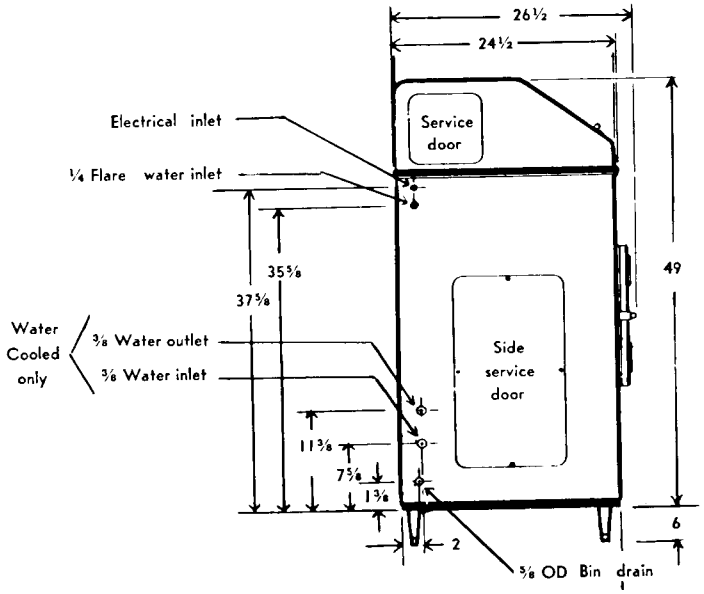

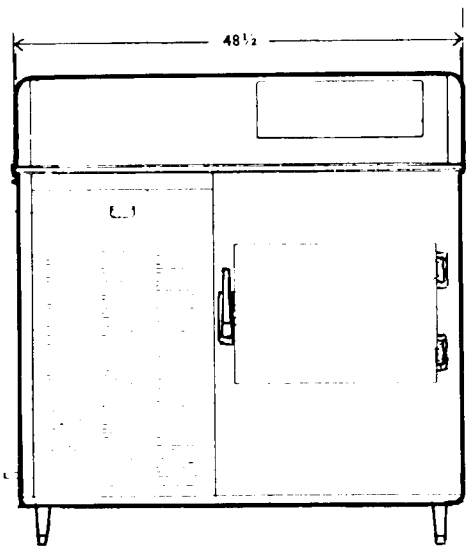

SPECIFICATIONS

SCOTSMAN SF-3 Super Flaker is designed for restaurants, super markets, bakeries, dairies, fish markets, hospitals, cafeterias, poultry stores, soda fountains, etc., and will deliver a continuous flow of ice flakes at a capacity up to 1,050 lbs. per day.

Attractive compact cabinet. Silver grey hammerloid finish with chrome trim, rounded corners, and removable panels for easy access to mechanical parts. Also available in clad stainless steel with a ground finish.

Sealed refrigeration system. Provides quiet, efficient operation of the machine. Compressor motor is spring mounted, and the worm motor is rubber mounted for quiet operation.

How it works. Water in the constant level float reservoir is fed to the bottom end of a freezing cylinder and turns to ice on the inside of this cylinder. The stainless steel auger inside of this evaporator is driven by a motor through a V belt and gear reduction drive. Ice is carried upward by the action of this auger and extruded past the ice breaker at the top of the cylinder.

A manual switch starts the machine, and from then on, ice is produced automatically in small, uniform pieces. When the storage bin fills, a thermostat shuts the machine off, and causes it to start up again when ice is taken from the storage compartment.

Model No. SF-3H is a continuous flow type machine, and is manually started by an OFF and ON switch located on the front of the cabinet as are the SF-3WSH models. Since the SF-3H does not have its own attached bin, it is necessary to use an auxillary bin such as the Model SB1500 SCOTSMAN Super Bin for ice storage. A bin thermostat is mounted in each 3F-3H continuous flow type machine for the purpose of mounting control bulb from machine to bin.

When using a SCOTSMAN Vertical Bin in conjunction with continuous flow models .SF-3H. A machine stand SCOTSMAN model MS-3 is required.

INSTALLATION

UNCRATING OF MACHINE

The complete machine comes in one crate. After the crate is removed, inspect for concealed damage. When installing the machine, remove the bottom skids by removing all bolts. Then cut all wires holding support packing from refrigerant lines. Then loosen the hold-down bolts on the compressor so that the compressor is floating free on spring mounts. Remove leg levelers from the carton and install on base as desired. Then check all refrigerant lines for rubbing or touching other surfaces. Also check for possible transportation damage. Check free movement of ice worm.

PRE-INSTALLATION CLEANING

Before machine is in final location, remove warranty card and other information from machine compartment. Remove top service door, water reservoir cover and packing under float. Then leave cover off for float adjustment after machine is installed.

LOCATION OF THE SUPER FLAKER

Select the location before delivering Super Flaker to the job. The following points should be considered when making selection:

1. Convenience. Place the unit as close as possible to the place of ice consumption.

2. Servicing. Install the machine on continuous flow models so it can be serviced from all three sides except the side containing the ice chute opening. Important to leave 24 inches access to front (containing on-off switch) and left side on both with storage and continuous flow models.

3. Room Temperature. Minimum - 50 degrees. Maximum - 100 degrees.

4. Continuous Flow Models.

   A. Bins. Care should be exercised in proper bin selection. Too small a bin will give unsatisfactory performance. A bin should have a minimum of 1/2 of machine's capacity per day, when the machine shuts off on thermostat. Make sure that user's demands are met by proper bin as well as by proper machine selection. Plan relative location of the machine so as to enter the bin as close to the top as possible. Bins should also be higher than their width and length dimensions, so the maximum ice can be stored in the minimum cubic feet of space. A Scotsman bin is designed in this fashion and will be the most convenient to the user. Too large a bin can cause trouble. Excessive melting of ice will occur if the bin is larger than required. Proper bin selection is important to the success of the ice machine installation.

B. Stands. A Scotsman Machine stand should be used if the machine is located beside the Scotsman bin. In designing the installation, plan for servicing of the machine from front, top, and sides.

C. Erection. For elevations in excess of four feet or in close quarters, chain falls should be used. For locations under four feet, the use of skid boards and rollers are practical.

D. Bin Thermostat. Locate the thermostat bulb as high as possible in the bin and still allow the machine to cut off before ice builds up in the chute. If this occurs, ice can stick in the chute keeping the machine off after there is a need for ice production. The capillary can usually enter through the chute opening. Keep the bulb and capillary line away from shovels.

E. Ice Chutes. If the outlet of the machine is remote from the bin, a chute will be required. Stainless steel is an excellent material for this purpose where its cost is not prohibitive. Angles or ledges of less than 45° should not be used. Ice will cling to this surface and either melt exceesively or jam in the chute. The sharper the drop, the better. If straight down, do not insulate, unless necessary.

WATER SUPPLY

The recommended water supply line is 3/8 inch OD copper tubing for SF-3. Connect to cold water supply line with regular plumbing fittings, with a shut-off valve installed in an accessible place between supply line and machine. A water strainer must be installed with the unit and mounted with clean-out plug down. Locate the strainer next to the machine with the arrow in the direction of the flow. Most plumbing codes also call for double check valves in the supply water line, particularly for water cooled models.

On air cooled models the water supply line connects to the 1/4 inch flare fitting on the machine. On water cooled models connections are made to a 3/8 inch male pipe nipple inside of the machine compartment. Incoming water goes through the water regulating valve first and then to the water cooled condensor. Observe arrow on water regulating valve. Water supply must be installed to conform with local code. In some cases, a licensed plumber and/or a plumbing permit will be required.

DRAIN

The recommended drain from the bin is 5/8 inch OD copper tubing. Must be run to an open trapped and vented drain. If drain is a long run, allow a 1/4 inch pitch per foot. Drain must be installed to conform with local code. Run separate line for condensor discharge water on water cooled models.

INSTALLATION

ELECTRICAL CONNECTIONS

Be certain that the Super Flakers are on their own circuit and individually fused. The maximum allowable voltage variation should not exceed 10 per cent of the nameplate rating even under starting conditions. Low voltage can cause erratic operation and may be responsible for serious damage to the overload switch and motor windings.

All external wiring should conform to National Underwriters and local electrical code requirements. Usually an electrical permit and the services of a licensed electrician will be required.

	SF-3-2
Voltage	230 volts
Phase	Single
Amperage - Total	7.8
Number of Motors	2
H.P. of largest Motor	1
Amperage Rating (Largest Motor)	5.0
Cycle	60

Open electrical control box and prepare for hook up, use knock outs, cord connectors, etc. Then check unit nameplate voltage against building source voltage and make sure they correspond. Caution - Improper voltage supplied to units will void your warranty protection.

Note: Check wiring diagrans pages 16 thru 21 for proper amperage fusing on all voltages.

INSTALLATION PRACTICE

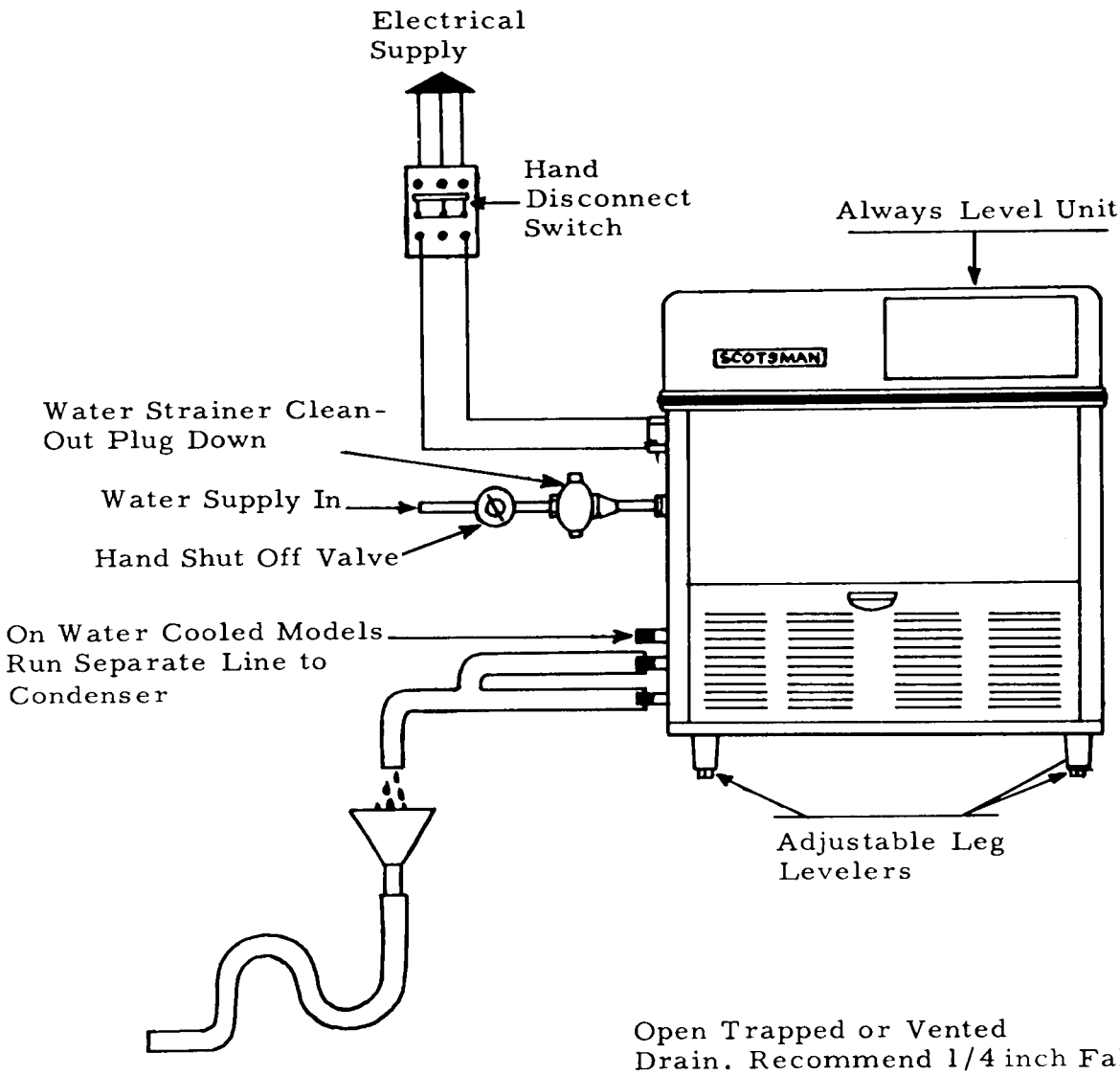

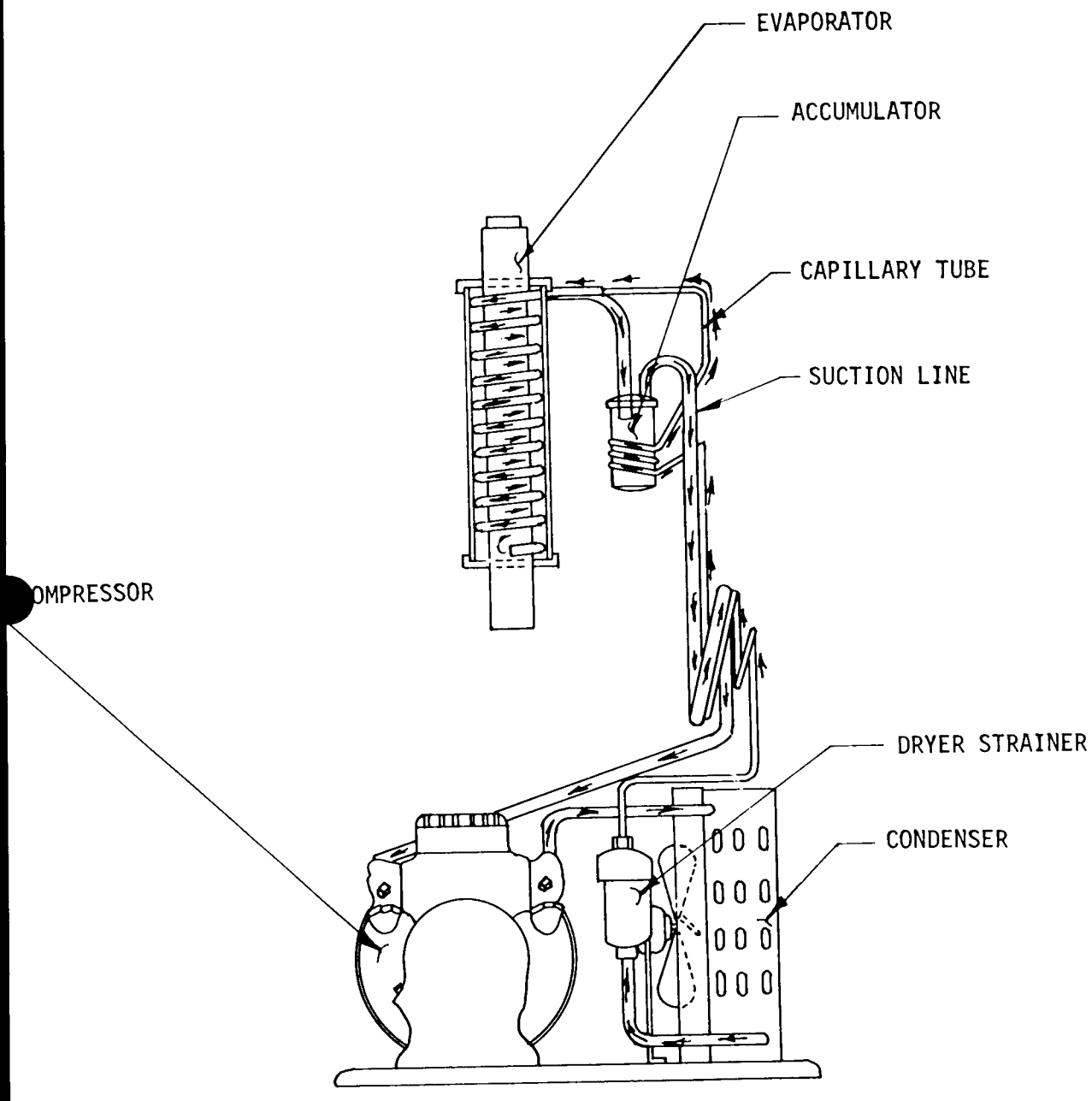

REFRIGERATION CYCLE SF-3 ALL MODELS

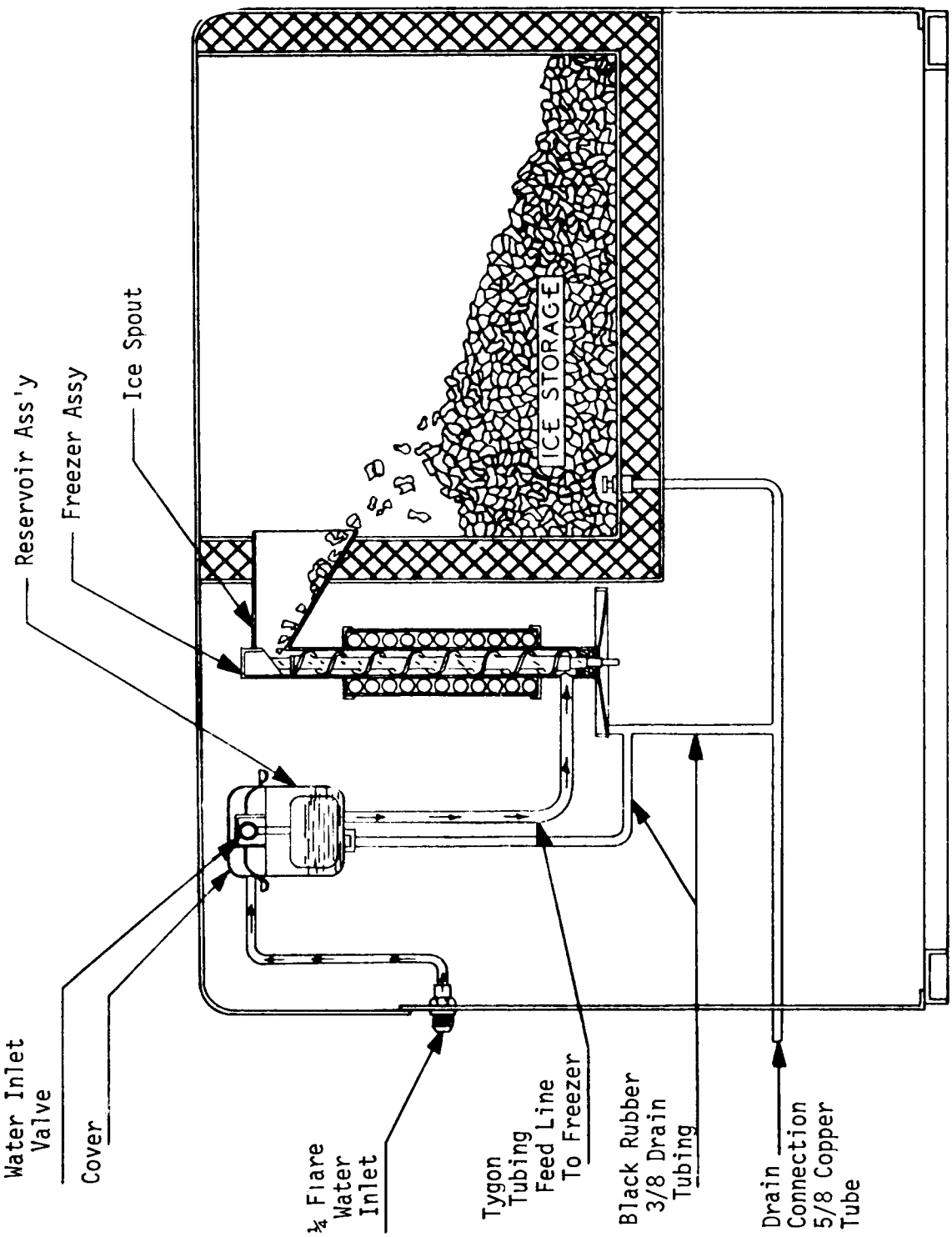

WATER SCHEMATIC

SF-3WSH

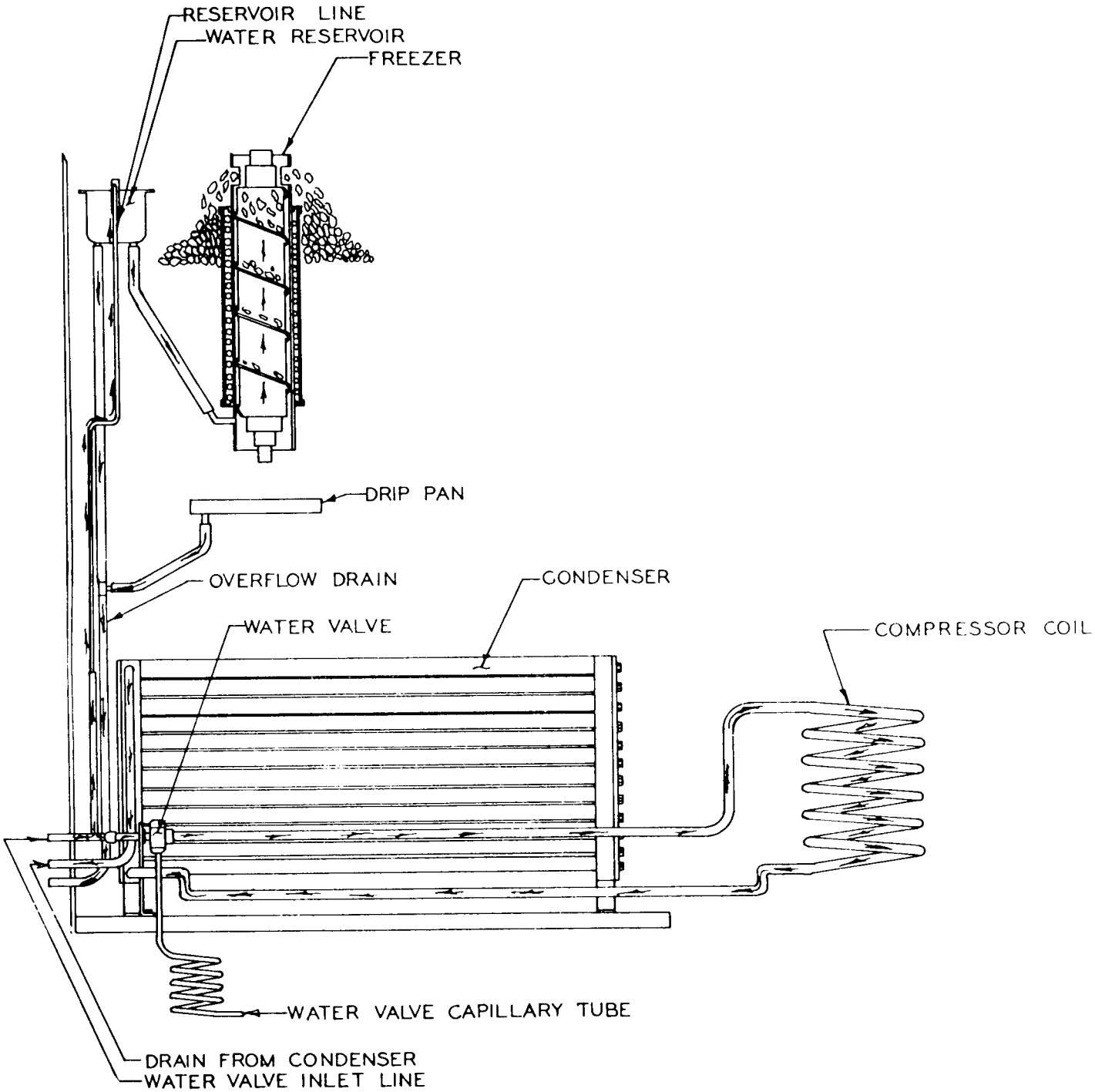

WATER CYCLE SF-3 WATER COOLED MODELS

WIRING DIAGRAM

SF-3 WATER COOLED

208/220/60/3

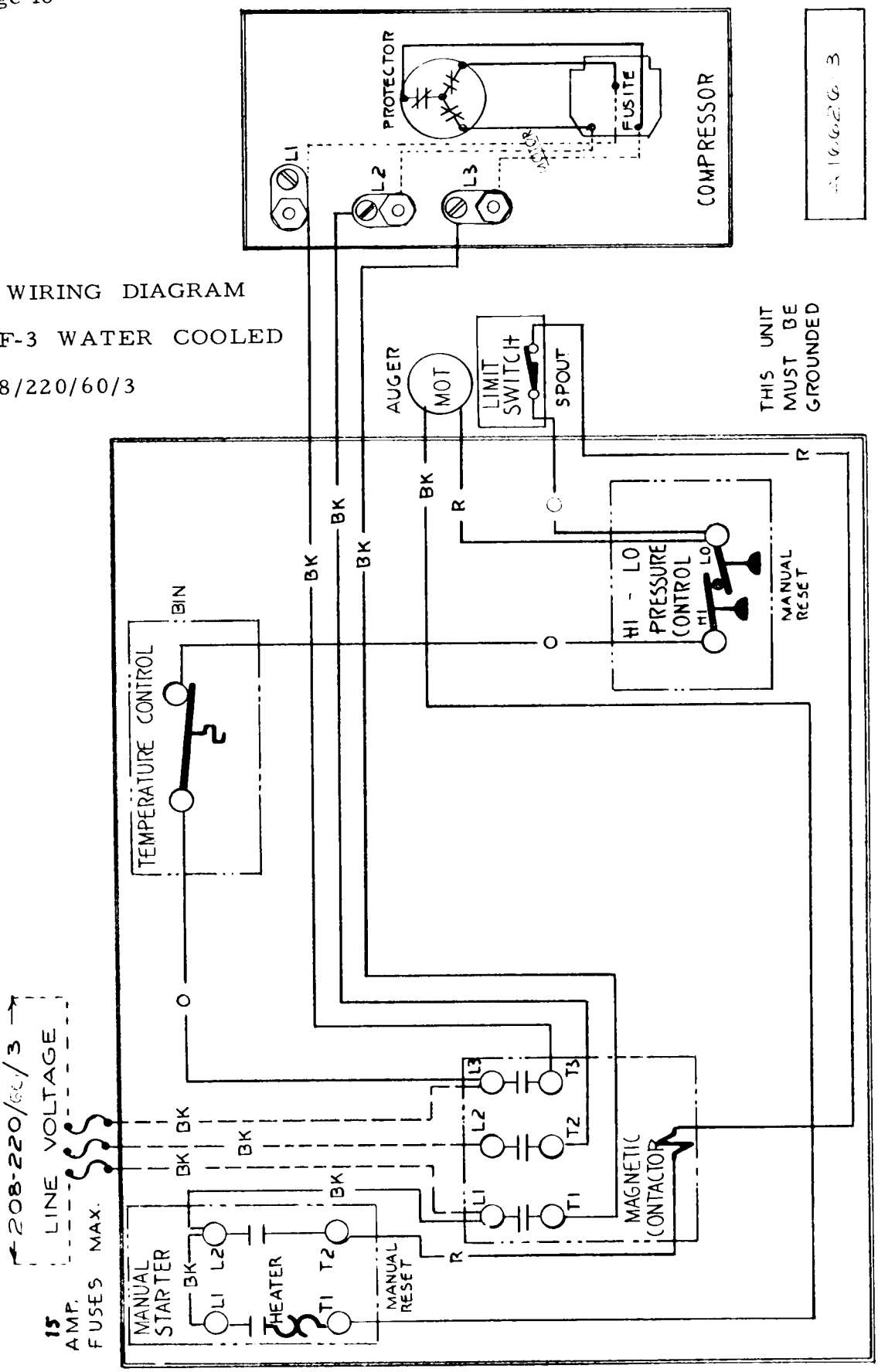

WIRING DIAGRAM

SF-3 AIR COOLED

208/220/60/3

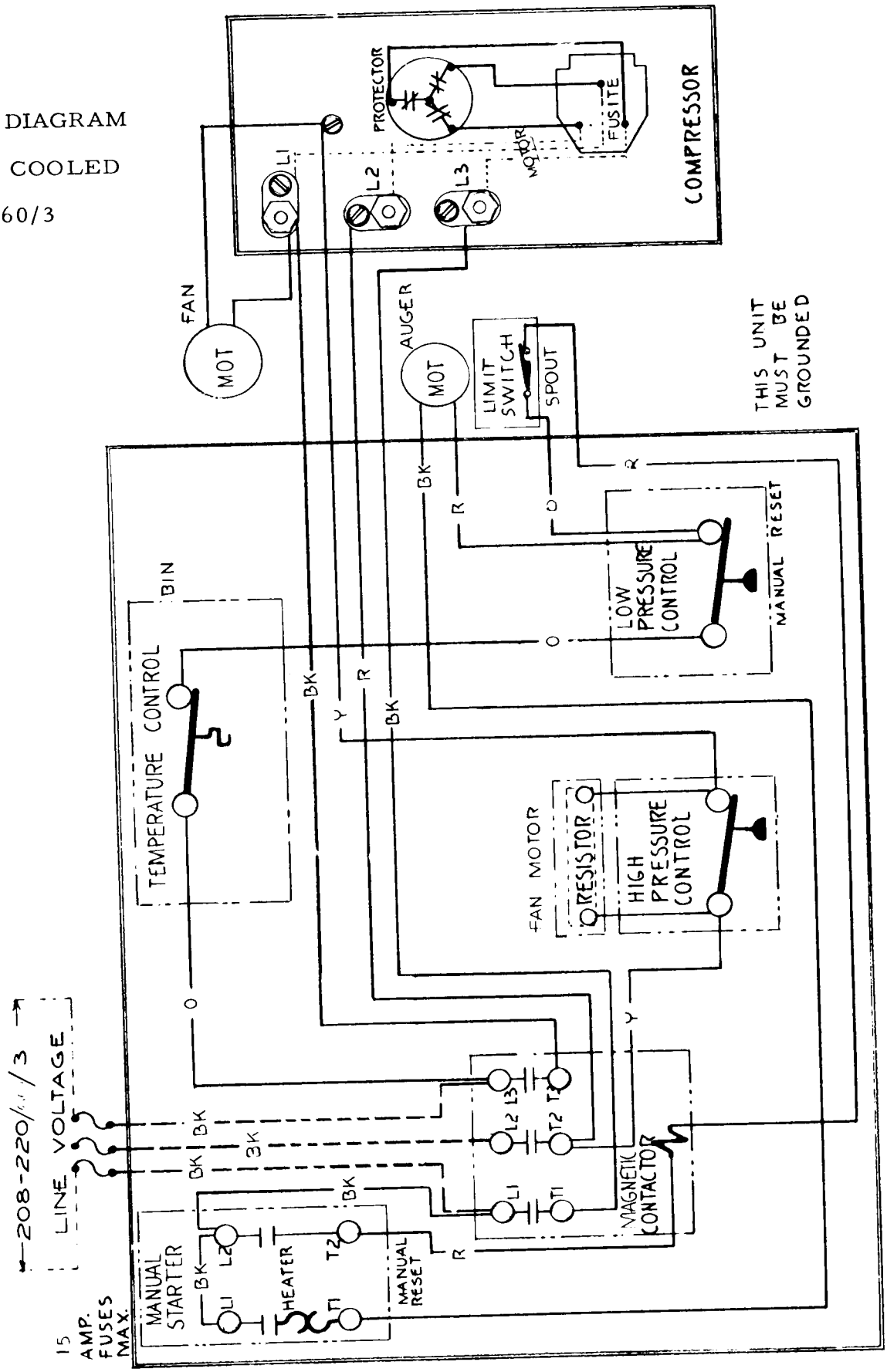

WIRING DIAGRAM

SF-3 WATER COOLED

230/60/1

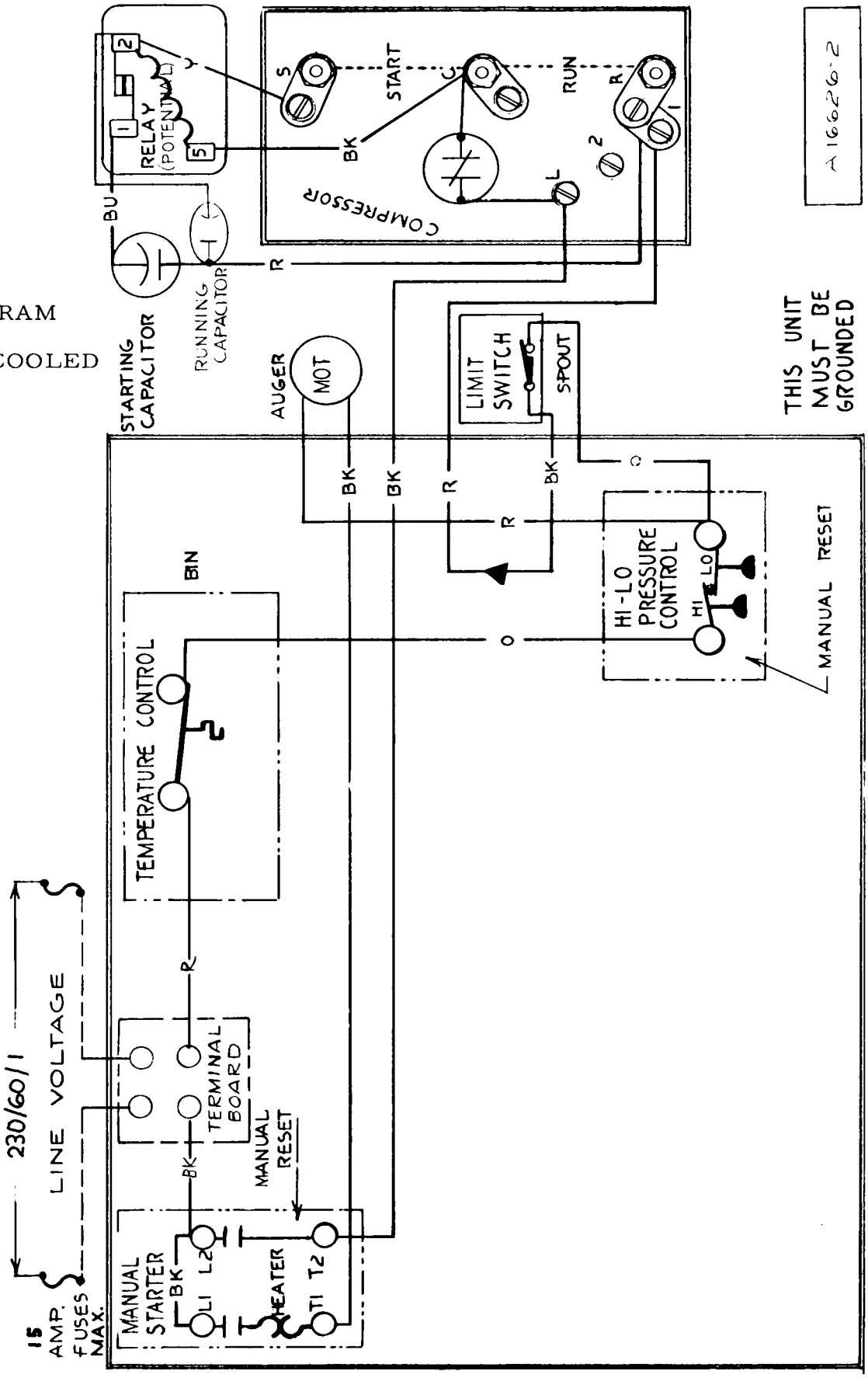

WIRING DIAGRAM

SF-3 AIR COOLED
230/60/1

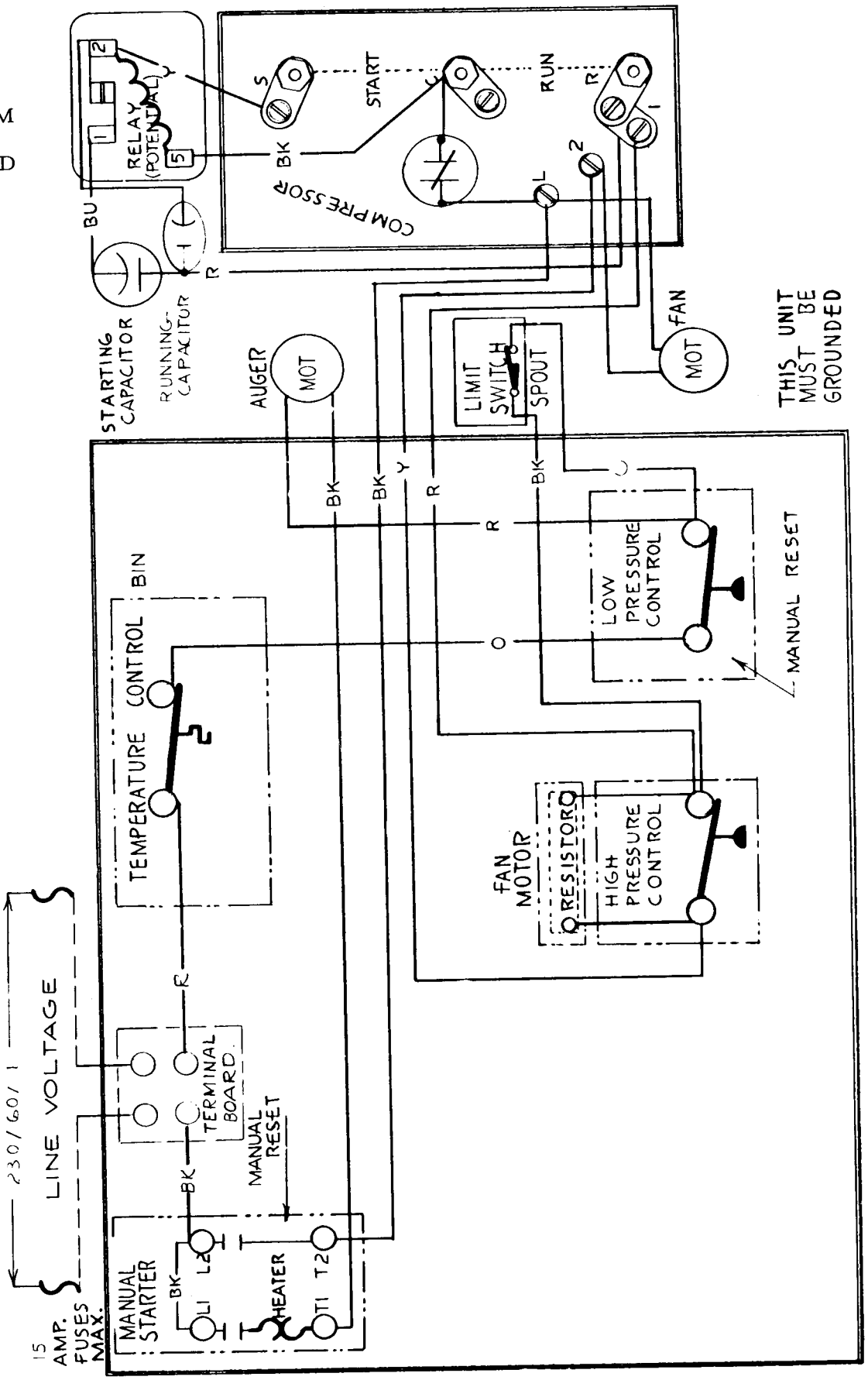

WIRING DIAGRAM

SF-3 AIR COOLED

208/60/1

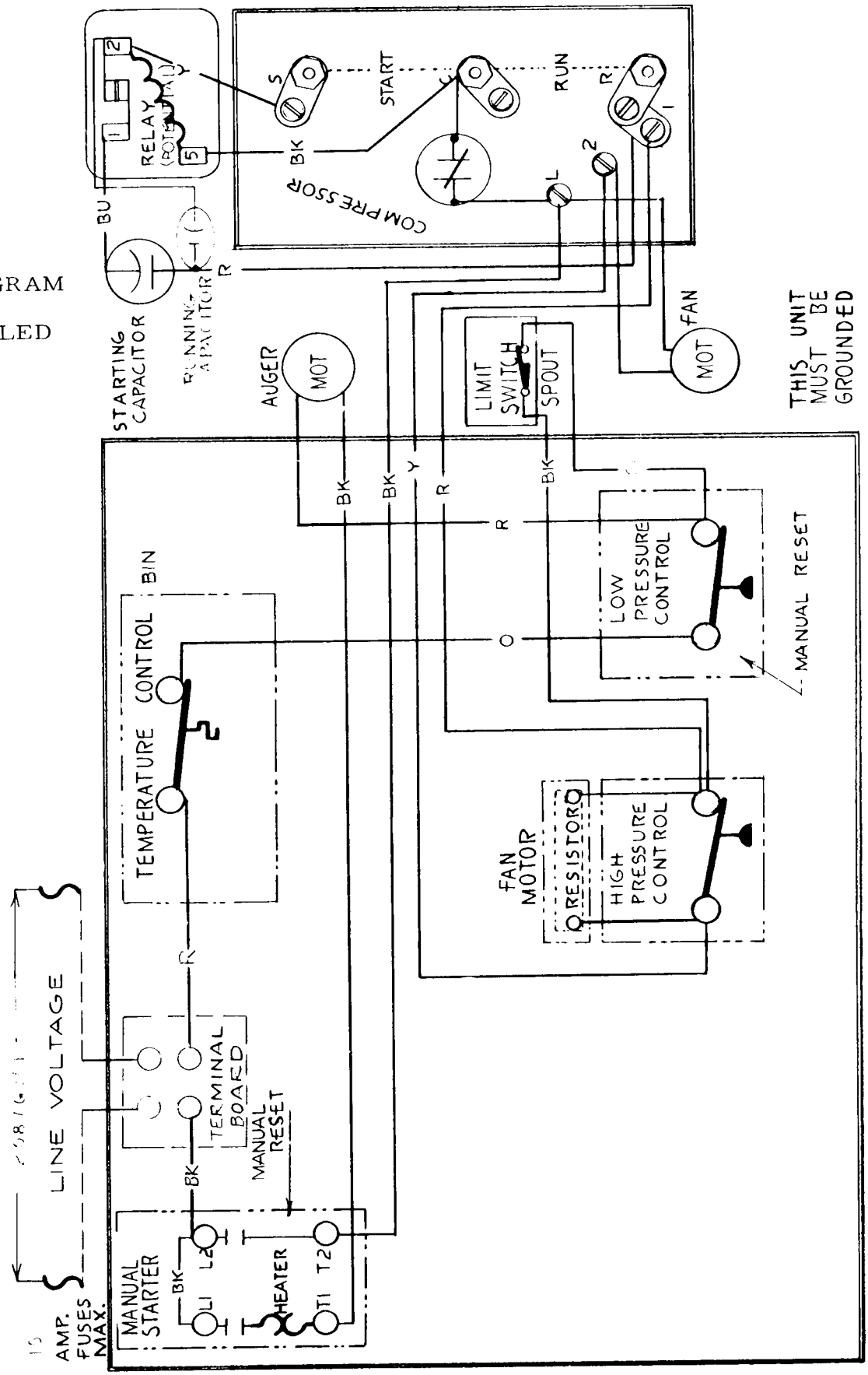

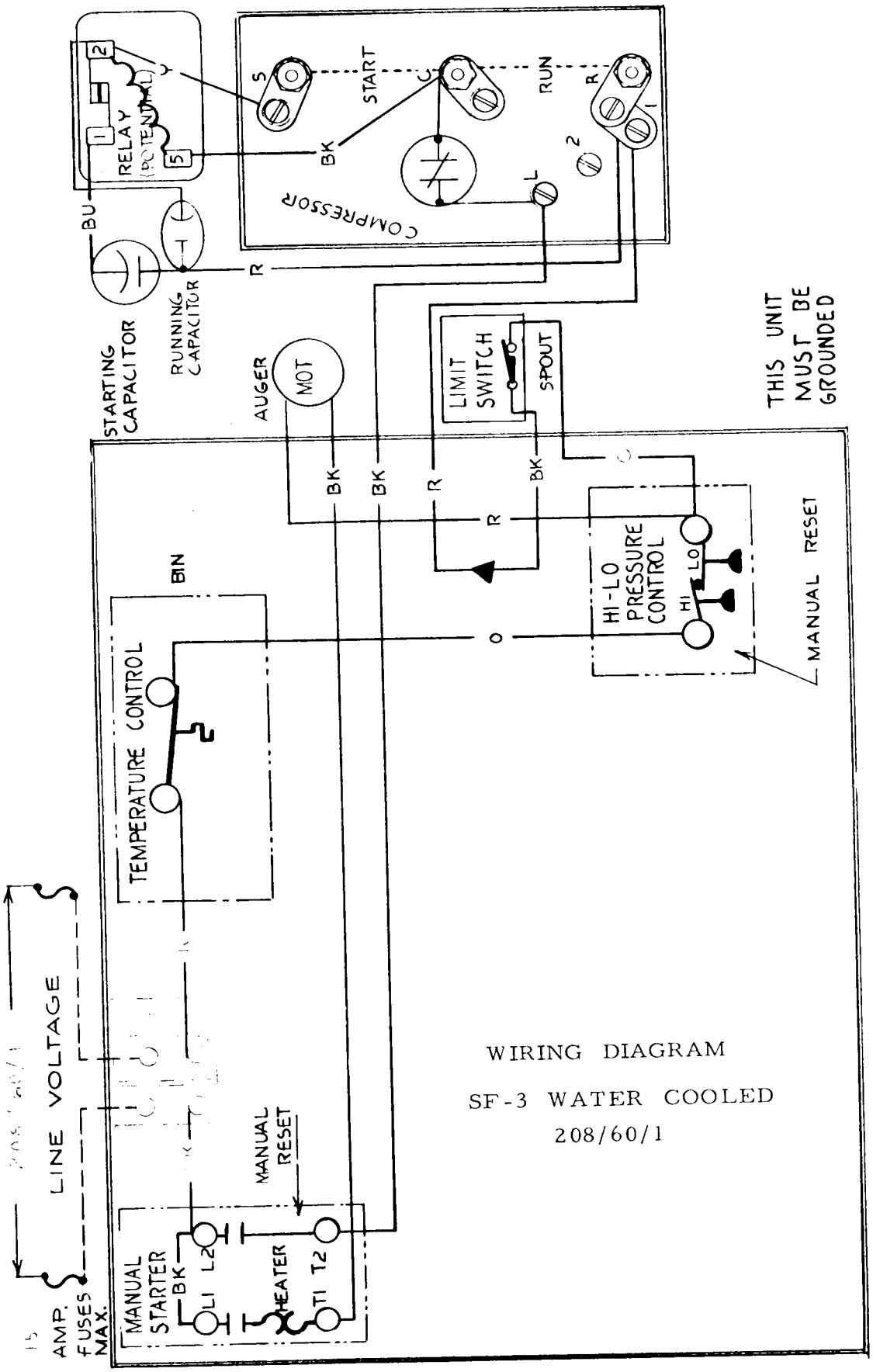

WIRING DIAGRAM

SF-3 WATER COOLED

208/60/1

SERVICE

STARTING THE MACHINE

When the machine is placed and inspected as per instructions and all plumbing and electrical connections are completed and tested, turn on the water supply. Be sure the float cover is removed to check on the float operation and water level in the water reservoir. Be sure the water reservoir is filled before starting the machine. Water level should be 1/4 inch below the reservoir overflow.

When this is completed, turn on the manual switch behind front service door and the machine is in automatic operation. In two to three minutes ice will start dropping off the worm shaft and out the ice chute. Let the machine operate for at least 30 minutes, and check for any excess noise other than the normal compressor noise. Test the ice storage control bulb by holding a handful of ice around the bulb until the machine shuts off. One minute should be normal for the control to function. Within minutes after the ice is removed, the bulb will warm up and the machine will automatically start up. The control is factory set and should not be reset until this test is made. Normal setting of this control should be approximately 35 degrees cut-out and 45 degrees cut-in.

Check pressure settings at the time of start-up. On the water cooled models set the head pressure at 135 P S I. On the air cooled models the reverse acting high pressure control should be set on approximately 15 P S I differential and to cut in at 130 and out at 145 P S I head pressure. The frost line should extend 18 inches out of the accumulator if properly charged with refrigerant and suction pressure will range between 15 and 16 P S I with 50° F. inlet water.

Check the hand reset low pressure control setting. This safety device should be set at approximately 8 P S I below normal operating suction pressure and should cut off in case of interruption in water supply, shortage of refrigerant, low ambient, or any other cause of abnormally low suction pressures. Observe pressure that machine pulls down to when first starting up. Set just below this pressure to avoid nuisance calls.

Explain the machine to the owner, showing him ho the machine works and go over the owner's instruction sheet with him. Answer all the owner's questions about the machine, and do not leave with any doubt in the owner's mind about the machine, how to operate it or where to reach you should he need service on the machine. Call back the next day to check the machine again and answer any other questions the owner may have.

SERVICE

Service gauge connections are available on both high and low side service valves.

To install gauges to any of these connections, replace 1/8 inch I P plug with 1/8 inch M P T x 1/4 inch flare half union. Purge free of any non-condensable gases before starting any test operation.

REFRIGERANT CHARGE

The below refrigerant charge is approximate. When charging, set at 135 P S I head pressure and charge so the frost line extends 18 inches down suction line after fifteen minutes of operation. Frost out of accumulator at least 18 inches and up to one-half way to compressor for best results.

Model	Refrigerant Charge	Oil Level
SF-3H - air cooled	37 oz. R-12	Oil level should be kept at 1/3 way up sight glass. Do not fill over 1/2.
SF-3H - water cooled	34 oz. R-12	

WATER SYSTEM

A water level is maintained in the water reservoir by a float operated valve. Water is piped from the water reservoir to the freezing chamber by a gravity feed line maintaining an equal water level. A removable overflow pipe is installed in the water reservoir for cleaning the reservoir as well as preventing damage should the inlet water valve fail.

The water reservoir is equipped with a 2 inch air gap to prevent back siphoning and meet all health codes.

The water level in the water reservoir is adjusted by the float linkage adjustment. The water level should be set 1/4 inch below the overflow pipe. A condensate drip pan is connected to the drain circuit to automatically dispose of condensate moisture.

A water strainer must be installed in the supply line.

SERVICE

ELECTRICAL SYSTEM

The electrical circuit consists of condensing unit, drive motor, hand reset combination or low pressure cut-out, storage bin thermostat, on and off switch, micro (safety) switches and head pressure control.

A. Condensing Unit. The compressor terminal box houses the motor compressor terminal block, and the overload Klixon. To gain access to the terminal box, remove the two screws holding the beveled metal cover. The starting capacitors, running capacitors and starting relays are house and fastened to the unit chassis frame.

B. Drive Motor. Model SF-3 Flakers are equipped with standard 5/8 inch shaft. 1/3 HP, capacitor start, induction motors. These motors turn counter-clockwise and may be replaced with any standard make motor corresponding to the nameplate rating. (Be sure motor runs counter-clockwise viewed from the shaft end.) Nema - 56 Frame Size.

C. High-Low Pressure Cut-Out. (Automatic reset on water cooled models only.) Dual pressure control is located on the frame assembly. Factory settings cut-out 5 lbs. on low pressure and 180 P S I on high pressure. This control prevents operation at abnormal pressures. Some models utilize reset low pressure - automatic reset high pressure control.

D. Low Pressure Cut-Out. (Hand reset on all air cooled models.) Ranco control is located in the control box. Factory settings cut-out at 5 P S I. Safety device to cut off machine and keep it off in case of water supply failure, loss of refrigerant, low ambient temperature or other causes of low pressure.

E. Storage Bin Thermostat. White Rodgers control located on frame assembly. Factory settings 35° cut-out, 45° cut-in. This control shuts off complete machine when ice in storage bin builds up to control.

F. Micro Safety Switch. The micro switch is located in the top of the ice chute. The switch is operated by a plate in top of the ice chute by the ice backing up in the chute should the thermostat fail. Micro switch will shut off the condensing unit only, when operated.

G. Switches.

1. The manual on-off switch also has an inherent overload feature wired into the drive motor circuit. Excessive current draw on drive motor will cause this switch to trip out, see page 48 for correct overload.

2. A two pole contactor carries the electrical load on the single phase units, a three pole contactor is used on the three phase units since the motor compressors are now inherently protected by the manufacturers.

Air Cooled Models

H. Head Pressure Control Kit. A reverse acting high pressure control is used and connected electrically to the fan motor. As the head pressure drops below the cut-out setting, the control opens allowing the current to pass entirely through a resistor in the line feeding the fan motor. This slows the shaded ploe motor down to approximately 1/4 speed thus increasing the head pressure. When the control cuts in the full voltage again flows directly to the fan motor allowing it to operate at full speed. This feature protects unit against low ambient conditions.

REMOVAL & INSTALLATION OF PARTS

CABINET TOP (HOOD)

1. Remove two back end screws in chrome strip.
2. Pull out tape concealing screws.
3. Remove balance of screws in chrome strip.
4. Lift off hood.

HOOD SERVICE DOOR

1. Remove screws on front edges.
2. Lift door up and back.

CABINET SIDE SERVICE DOOR

1. Remove four screws on edges.
2. Lift out door.

CABINET FRONT SERVICE DOOR

1. Front door pulls out.

CABINET REAR SERVICE DOOR

1. Remove four screws on corners of rear service door.
2. Pull door out.

ICE STORAGE DOOR

1. Raise and push door six inches rear of track. Hold up on underside of door - pull forward.
2. Door will now slide out.

ICE STORAGE DOOR FRAME

1. Remove six screws at bottom and sides.
2. Frame will now lift out.

MOTOR COMPRESSOR - Power off at fuse box.

1. Front seat both suction service valve and discharge service valve on compressor.
2. Disconnect wiring from the compressor.
3. Remove the bolts holding the service valve to the compressor.
4. Remove the compressor hold-down nuts and lift compressor out of the units.
5. Reverse steps 1 through 4 in replacing compressor.
6. Check the oil in the compressor before connecting lines. Sight glass not over 1/2 full.

SERVICE

MICRO SWITCH IN SPOUT

1. Remove hood service panel.
2. Remove micro box cover, loosen two screws at rear of box holding switch in place, lift up.
3. Disconnect electric leads.
4. Reassemble with new micro switch.

DRIVE MOTOR

1. Remove case hood - See Cabinet Top Removal Section.
2. Remove electrical connections.
3. Remove four base bolts.
4. Remove drive belt.
5. Lift out defective motor.
6. Remove pulley and install on new motor.
7. To replace, reverse procedure.
8. CAUTION: Drive motor rotation is COUNTER-CLOCKWISE facing shaft end.

MANUAL ON AND OFF SWITCH

1. Remove front service door.
2. Remove control box cover.
3. Remove two screws holding switch box bracket.
4. Disconnect electrical leads from switch.
5. Remove switch.
6. To replace, reverse procedure.

GEAR REDUCER AND COUPLING

1. Remove rear door if accessible.
2. Remove drive pulley.
3. Loosen drive coupling set screw and slide down on gear reducer shaft.
4. Loosen four mounting bolts.
5. Lift out from rear of machine.
6. To replace, reverse procedure.
7. Check new gear reducer for proper oil level.

FREEZER ASSEMBLY

1. In most instances, it will be faster to faciltate freezer removal by removing cabinet top or hood. (See Removing & Installing Cabinet Parts.) Assembly can be changed if necessary through hood top panel.
2. Shut off water supply and drain water reservoir.
3. Remove refrigerant from system.
4. Remove suction and liquid line connections. (CAUTION: Plug all connections to prevent moisture from entering system.)
5. Remove tygon tube to water inlet connection at base on freezing chamber.
6. Loosen knurled nut holding spout to freezer and remove.
7. Remove two bolts holding freezer chamber to frame.
8. Lift freezer assembly up and out of unit.
9. Remove rubber drip pan from defective assembly and install it on new assembly.
10. Reverse above procedure to install new assembly.

WORM SHAFT

1. Turn unit off, before removing worm shaft.
2. Shut off water supply to unit.
3. Remove hood service door.
4. Remove two slotted head screws which fit through chamber wall into ice breaker.
5. Complete worm shaft with ice breaker attached will now come out by lifting up on freezer cap pull ring. NOTE: Top half of water seal will come out with worm shaft.
6. To remove ice breaker from shaft, first remove retainer ring in top of ice breaker.
7. Remove freezer cap and pull ring from ice breaker.
8. Loosen hex head bolt holding shaft through bearing and pull worm shaft free from ice breaker and bearing.
9. If shaft is defective, remove water seal top half and put on new worm shaft before reassembling - when reassembling, by reversing above, put a small amount of Vaseline on squared shaft end. This will allow shaft to slide smoothly through rubber bottom half of water seal without tearing it.

WATER SEAL

1. To replace water seal, follow steps 1 through 6 under Worm Shaft Removal.
2. Next slide three-jaw drive coupling down on reducer or else remove top half of coupling.
3. Pull rubber drip pan down.
4. Remove large brass nut holding lower bearing and lower portion of water seal in place.
5. Lightly force lower bearing out.
6. Reach in and pull bottom portion of water seal out.
7. Reassembly is reverse of above.

SERVICE

STORAGE BIN THERMOSTAT

1. Disconnect electrical supply.
2. Remove bin thermostat bulb from bin location along with its capillary tube.
3. Remove control box cover.
4. Remove screws in control mounting bracket.
5. Disconnect leads.
6. Replace with new control and reassemble in reverse of above.
7. CAUTION: Always check new control power element charge before installion to assure receiving an operative control. A handful of ice on bulb will register an audible 'click' at cut-off.

WATER RESERVOIR

1. Remove service panel in cabinet hood.
2. Turn off water supply and drain reservoir.
3. Remove 1/4 inch copper inlet water line.
4. Remove 1/2 inch plastic feed line to freezer.
5. Lift out reservoir.
6. To replace, reverse procedure.

FAN CONTROL RESISTOR

1. Remove cover to box.
2. Disconnect two connections.
3. Install new resistor, reversing above steps.

HAND RE-SET LOW PRESSURE CUT-OUT SWITCH

1. Disconnect electrical supply.
2. Remove control box cover.
3. Put jumper across control wires if needed. Connect electrical supply and pump down to one pound PSI on lowside gauge.
4. Disconnect electrical supply again, then remove electrical lead to the control.
5. Loosen cap tube from crankcase and remove complete control. Cap up 1/4 inch flare fitting.
6. Install new control, being sure to purge at crankcase fitting when tightening up refrigerant connection.

REVERSE ACTING HEAD PRESSURE CONTROL

1. Disconnect electrical supply.
2. Remove control box cover.
3. Front seat discharge service valve.
4. Remove capillary control to compressor head connection and wire leads to control.
5. Replace with new control reversing above steps.

SF-3 H CHASSIS ASSEMBLY

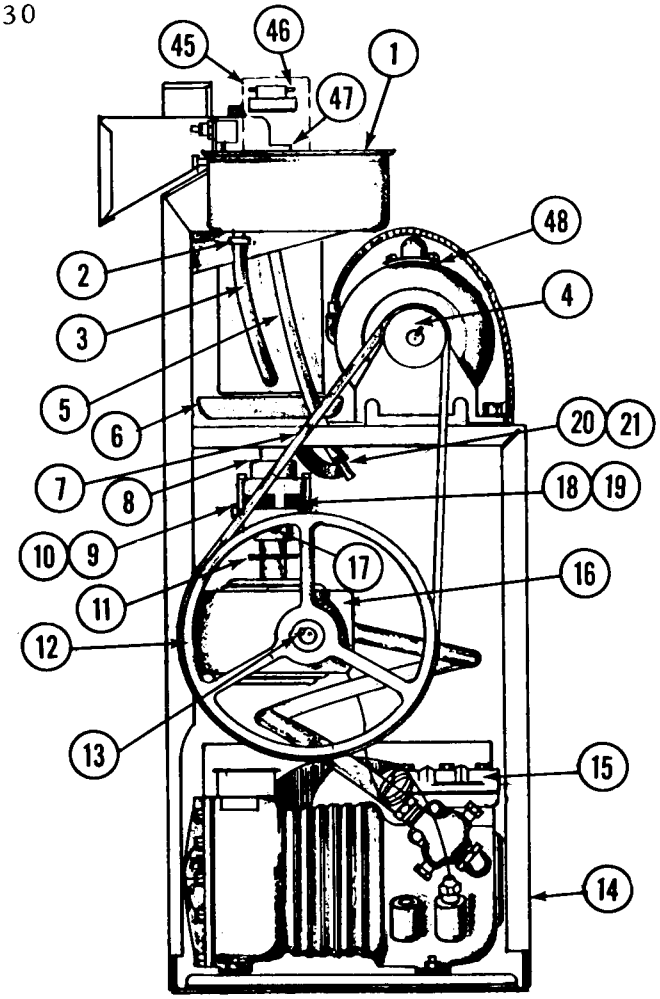

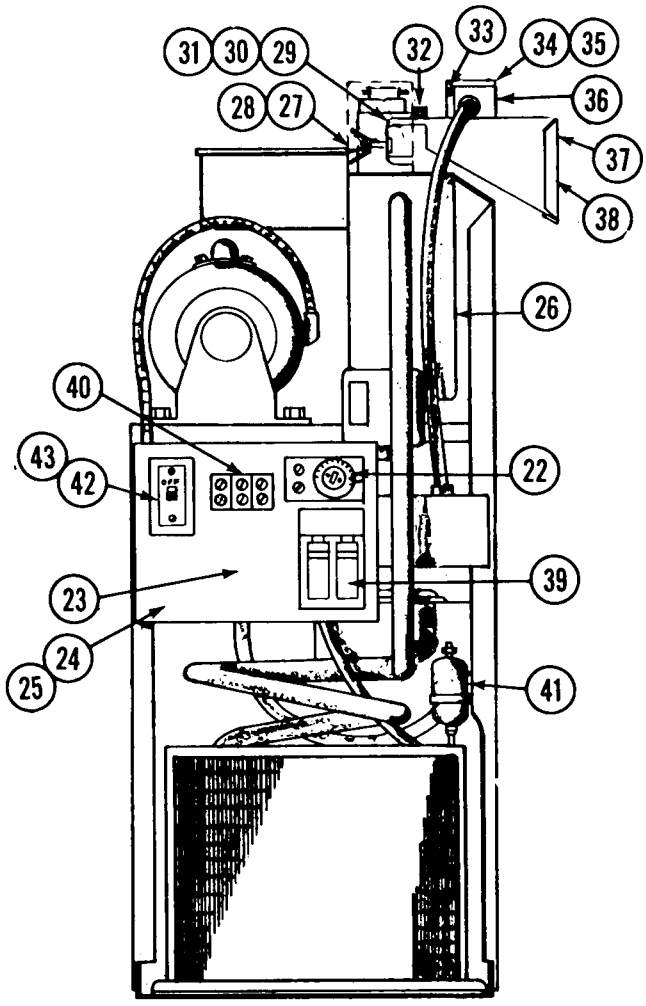

ITEM NO.	PART NO.	NAME
1.	A-8339	Reservoir Assy.
2.	2-694	Clamp
3.	5-186	Tygon Tubing 1/2 ID x 3/4 OD (per foot)
4.	2-1491	Pulley
5.	13-79	Tubing (rubber)
6.	13-208	Rubber Drip Pan
7.	13-583	Belt
8.	A-8594	Coupling, top
9.	S-8496	Coupling clamp (2)
10.	3-206	Cap Screws (2)
11.	13-152	Rubber Shield
12.	2-1492	Pulley (10" dia.)
13.	S-6035	Key
14.	A-15979	Frame
15.	18-521	Motor Compressor 230/60/1 AC
	18-555	Motor Compressor 230/60/1 WC
16.	2-641	Gear Reducer
17.	3-385	Set Screw
18.	A-8593	Coupling, bottom
19.	13-217	Coupling Insert (rubber)
20.	A-7387	Tee Assy. (7/16")
21.	2-534	Clamp (4)
22.	11-99	Bin Control
23.	11-346	High-Pressure Control (not on water cooled)
24.	A-14369	Cover Resistor (not on water cooled) *

ITEM NO.	PART NO.	NAME
25.	12-481	Resistor (not on water cooled) *
26.	A-8592-3	Freezer
27.	A-14275	Casting, Spout Holder
28.	3-679	Lockwasher (2)
29.	3-721	Screw (2)
30.	2-1437	"O" Ring
31.	A-14269	Casting, Spout
32.	A-14256	Nut, Knurled
33.	3-173	Screw (2)
34.	A-14241	Limit Box Cover
35.	12-1018	Micro Switch (*)
36.	A-14976	Limit Box
37.	A-16353	Pressure Plate (*)
38.	A-16350	Spout
39.	11-273-1	Low-Pressure Control (not on water cooled)
40.	12-1308-1	Terminal Board
41.	2-544	Drier
42.	12-530	Manual Switch (w/case) (*)
	12-530A	Manual Switch (less case)(*)
43.	12-708**	Overload(state mfg.) (*)
44.	A-15078	Left Spout Insulation
45.	A-15079	Right Spout Insulation
46.	A-8733	Clamps (2)
47.	12-649-2	Drive Motor 230/60/1
	12-649-7	Drive Motor 208/60/1

(*) Not Shown
(**) See Overload chart on page 48 for correct dash no.

SF-3 H FREEZER ASSEMBLY

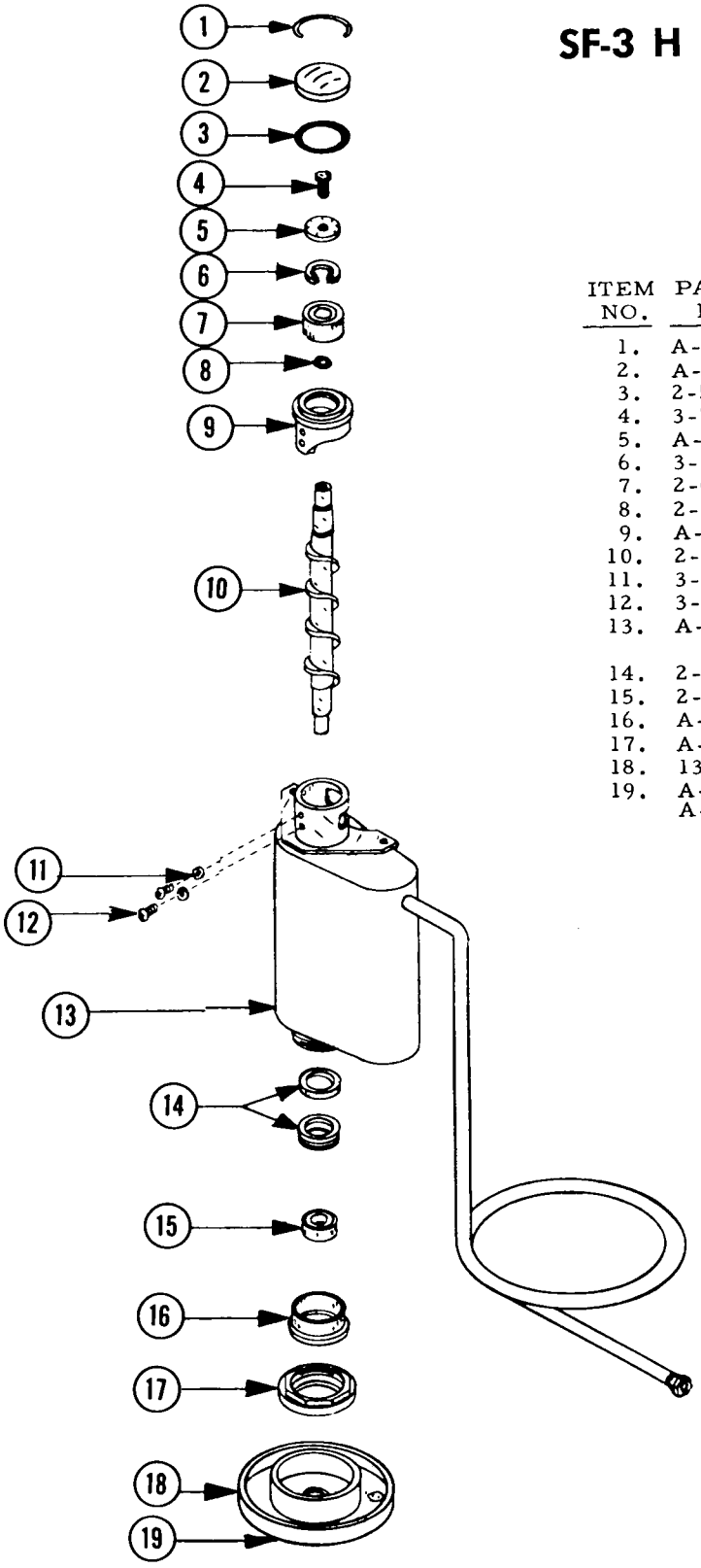

ITEM NO.	PART NO.	NAME
1.	A-8582	Cap Hook
2.	A-8581	Worm Shaft Cap
3.	2-560	'O' Ring
4.	3-715	Cap Screw
5.	A-6273	Washer
6.	3-712	Retainer Ring
7.	2-646	Top Bearing
8.	2-643	'O' Ring
9.	A-8585	Ice Breaker
10.	2-751	Worm Shaft
11.	3-679	Lock Washer (2)
12.	3-207	Brass Screws (2)
13.	A-8587	Worm Tube-Suction Line Assembly
14.	2-929	Water Seal
15.	2-619	Lower Bearing
16.	A-10591	Bearing Retainer
17.	A-6153	Worm Tube Nut
18.	13-208	Rubber Drip Pan
19.	A-8002	Drain Tube
	A-8592-3	Complete Freezer

RESERVOIR ASSEMBLY

Part No. A-8339

LESS COVER

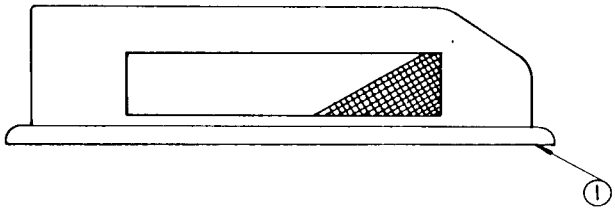

thru "H"

ITEM NO.	PART NO.	NAME
1.	A-16012	Reservoir Cover
2.	2-1259	Valve Pin
3.	2-1320	Deflector
4.	S-8770	Inlet Valve
5.	3-1001	Rivet
6.	A-5777	Valve Seat Holder
7.	S-6947	Valve Seat
8.	S-7044	Nut
9.	A-12869	Bracket
10.	S-6715	Stand Pipe
11.	S-8138	Inlet Valve Ass'y.
12.	A-13409	Reservoir Body
13.	A-8055	Bracket Nut
14.	A-12067	Float and Arm Ass'y
15.	A-18418	Water Deflector

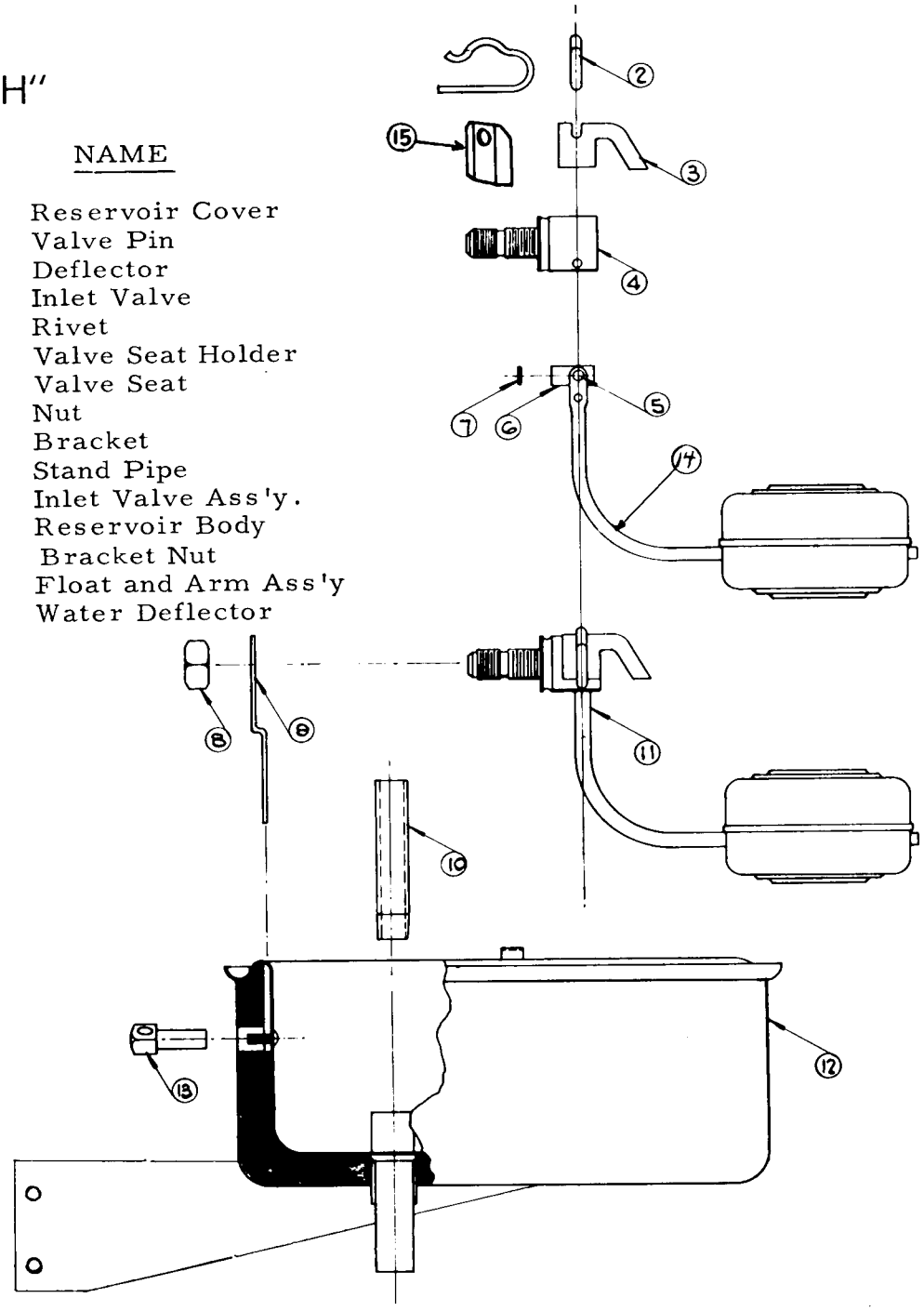

GEAR REDUCER

Part No. 2-641

Winsmith Part No. (4CT)

ITEM NO.	PART NO.	NAME
1.	2-641-29	Slow Speed Gasket (2)
2.	2-641-25	Slow Speed Oil Seal (2)
3.	2-768-23	Slow Speed Bearing (2)
4.	2-641-20	Slow Speed Gear & Shaft Assembly
5.	2-641-28	High Speed Gasket (2)
6.	2-641-26	High Speed Bearing (2)
7.	2-641-24	High Speed Oil Seal
8.	2-641-23	High Speed Worm & Shaft (integral)
9.	2-641-27	Slow Speed Spacer (2)
	2-641	Reducer Complete

Note:
NOTE: A-6710 Repair Kit contains bearing, seals and gaskets.

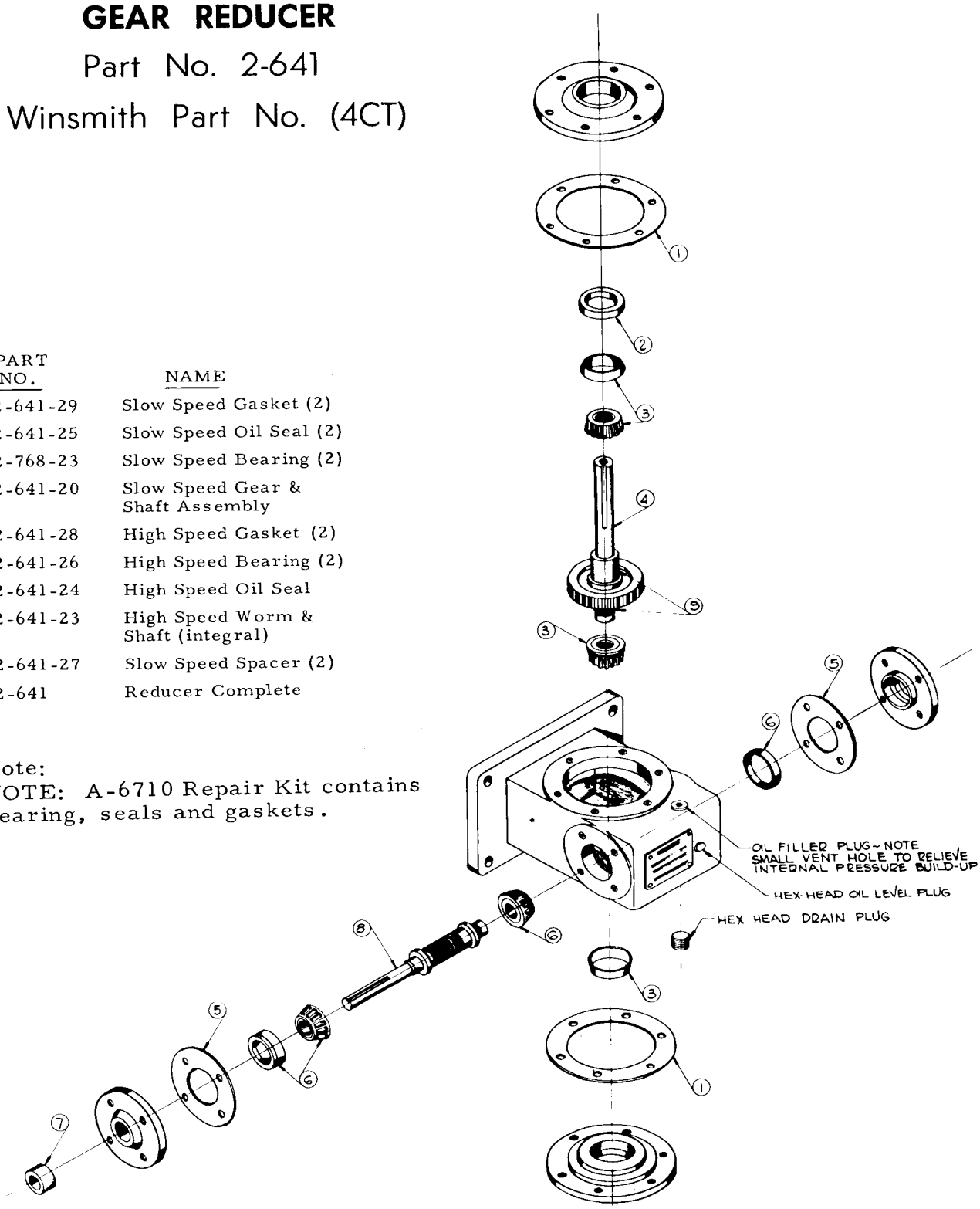

GEAR REDUCER

In answer to many field requests, we are pleased to release the following chart showing the companies whose products are acceptable substitutes for the 600W supplies by Winsmith as factory recommended.

Note the third column which most accurately represents the normal temperature operating range. Also the Alemite or Zerk fitting to bearing is greased with Mobilgrease BRB No. 1, or any good ball bearing grease as obtained from local service stations.

600W oils and equivalents are classified as industrial oils and most likely will be found in bulk plants rather than local service stations.

WORM GEAR REDUCERS

CB-CT-CV-CBD-CTD-CVD-CBX-CTX-CVX-DBI-TSR

Ambient Temperature °F	-30 to 15	16 to 50	51 to 110	111 to 165
Maximum Operating Temp. °F	150	185	225	225
Viscosity @ 210°F, SUS	40 to 90	90 to 125	125 to 190	190 to 350
Compounded with	(Optional)	3 to 10% Acidless Tallow or E. P. Base	3 to 10 % Acidless Tallow or E. P. Base	3 to 10% Acidless Tallow or E. P. Base
AGMA Lubricant		#7 Compound	# 8 Compound	
Cities Service Oil Co.	Pacemaker Oil # 5	Optimus Oil # 10	Optimus Oil # 6	Optimus Oil # 12
Fiske Bros. Refining Co.	#3 Lubriplate	Lubriplate # 8	Lubriplate # 8	Lubriplate APG
Gulf Oil Corporation	Multipurpose Gear Lubricant	E. P. Lubricant # 115	E.P. Lubricant # 145	E.P. Lubricant # 250
Shell Oil Company	Vitrea Oil 71	Valvata Oil #J 78	Valvata #J 78	Valvata #J 83
Sinclair Refining Co.	Duro Oil 160	#87 Heavy Duty Oil	#101 Super-Heat Valve Oil	#212 Super-Heat Valve Oil
Standard Oil Co.	Stanogear Compound #1	Stanogear Compound #4	Standard Worm Gear Oil	Calumet SH Cylinder Oil
Sun Oil Company	Sunep 70	Sunep # 110	Sunep #150	HV Cyl. Oil
Socony Mobil Oil Co., Inc.	Vactra Oil # 1	Mobil Compound DD	Mobil Cyl. Oil #600W	Mobil Cyl. Oil #600W
The Texas Company	Meropa Lub. # 1	Meropa Lub. # 3	Meropa Lub. # 6	Meropa Lub. # 6

SF3 WSH CASE ASSEMBLY

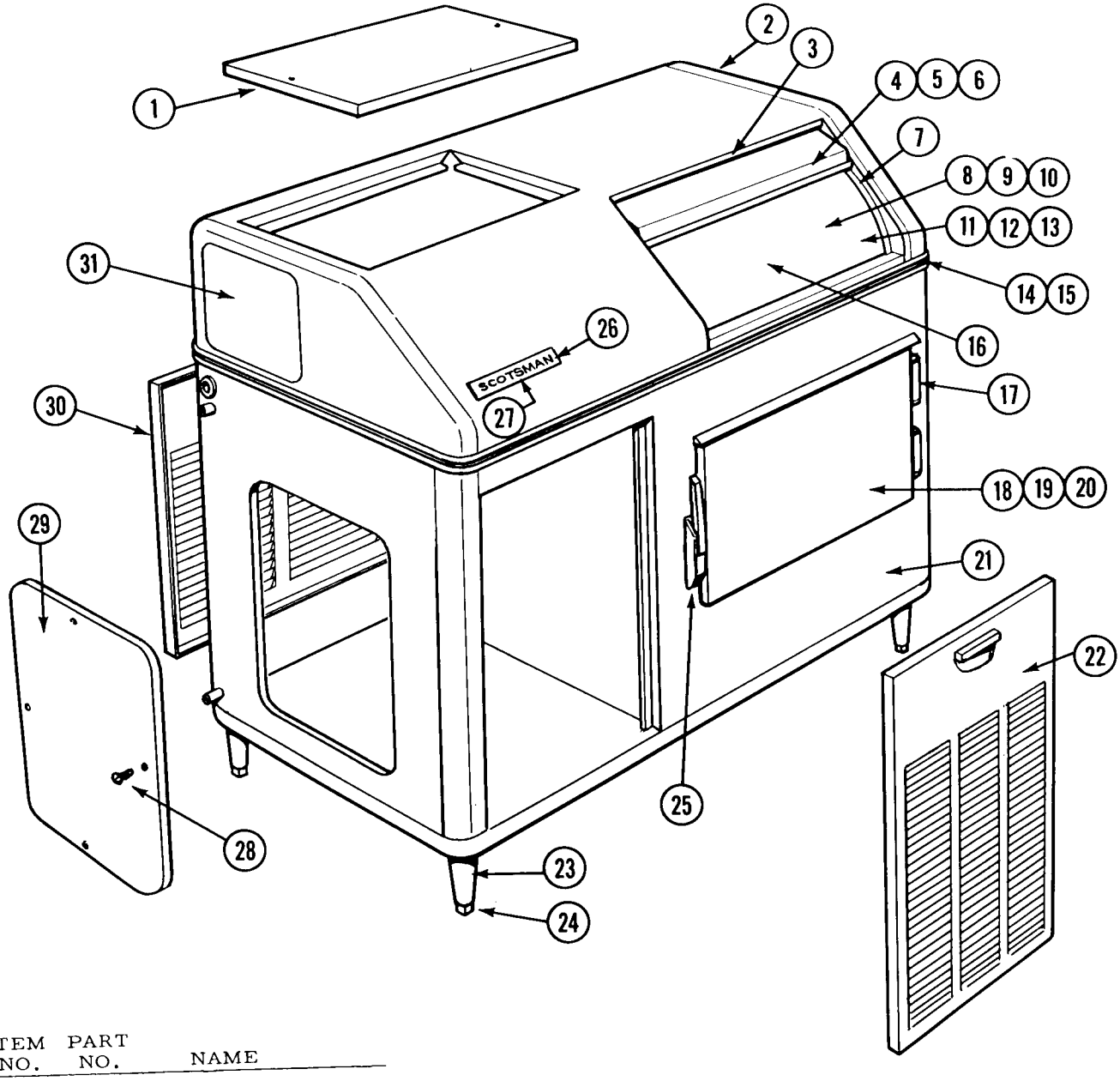

ITEM NO.	PART NO.	NAME
1.	A-7676	Top Door
2.	A-15602	Hood Assy.
3.	A-16209	Door Catch
4.	A-15559	Sliding Door
5.	3-640	Door Glides (door)
6.	3-1195	Door Glides (hood)
7.	A-16208	Door Track
8.	A-15780	Storage Bin
9.	A-15785	Insulation Layout
10.	A-18093	Drain Assy.
11.	2-530	"O" Ring
12.	A-18090	Drain Fitting (male)
13.	A-6448	Strainer
14.	15-324	Plastic Trim (per ft.)
15.	S-6413	Front Moulding Strip
16.	3-1212	Bulb Holder
17.	2-1569	Hinge (2 reqd.)
18.	A-18300	Door Assy. Complete

ITEM NO.	PART NO.	NAME
19.	13-264	Door Gasket
20.	2-1000	Door Liner
21.	A-18298	Case Assy. (less doors)
22.	A-15864	Front Door
23.	A-15803	Leg
24.	8-522	Leg Leveler
25.	2-1568	Door Latch
26.	15-156	Emblem
27.	3-271	Speednut
28.	3-775	Screw
29.	S-6713	Side Door
30.	A-7247	Rear Door
31.	A-6530	Top Side Door

SF-3H CASE ASSEMBLY

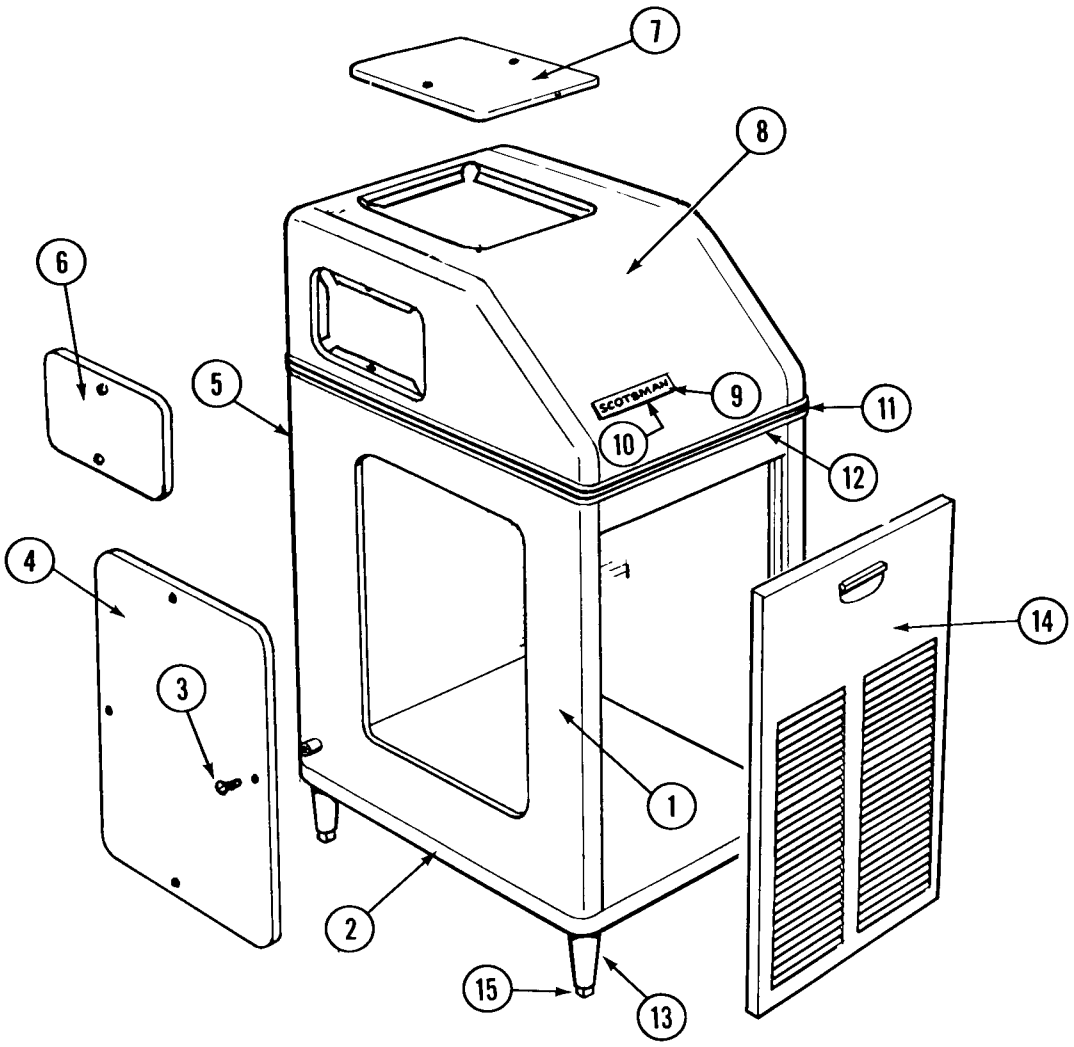

ITEM NO.	PART NO.	NAME	
1.	A-16079	Case Assembly (less doors)	
2.	A-8902-3	Moulding Strip (bottom) (2 reqd.)	
3.	3-775	Screw (s.s.)	
4.	S-6713	Side Door	
5.	A-7247	Rear Door (*)	
6.	A-6530	Top Side Door	
7.	A-7676	Top Door	
8.	A-16606	Case Hood (less doors)	
9.	15-156	Scotsman Emblem	
10.	3-271	Speed Nuts	
11.	15-324	Plastic Trim Insert	(per foot)
12.	S-6686	Moulding Strip (top)	
13.	A-15803	Legs (4 reqd.)	
14.	A-15864	Front Door	
15.	8-522	Leg Levelers	

(*) Not Shown

CONDENSING UNIT SF-3

1 HP Water Cooled, Copeland

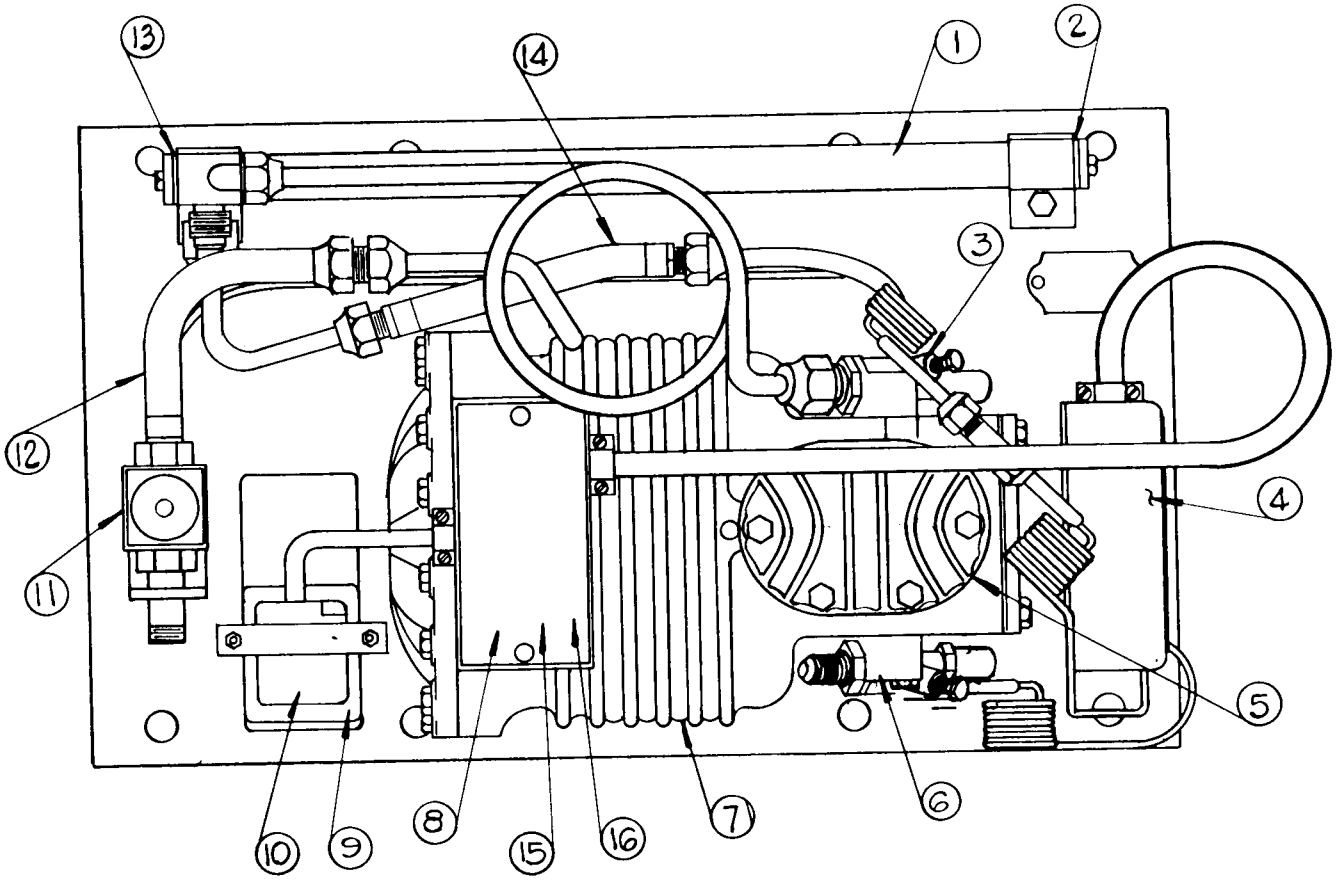

NOTE: Not available as a complete mounted assembly.

ITEM NO.	PART NO.	NAME
1.	18-354	Condensor
2.	18-548	Plain Gasket
3.	18-1908	Discharge Service Valve
4.	11-286-1	High Pressure Control ***
5.	18-326	Valve Plate & Gasket Kit Assembly (*)
6.	18-561	Suction Service Valve
7.	18-555	Motor Compressor 230/60/1
	18-569	208-220/60/3 ***
	18-553	208/60/1
8.	18-533	Klixon Overload (*)
9.	18-1901-15	Starting Capacitor (**)
	18-1902-17	Running Capacitor
10.	18-1903-18	Relay (**)
11.	11-198	Water Valve
12.	18-260	Compressor to Valve Water Hose
13.	18-549	Manifold Gasket
14.	18-261	Compressor to Condensor Water Hose
15.	18-270	Terminal Board (*)
16.	18-241	Terminal Assembly (*)
17.	18-1902-17	Running Capacitor

NOTE: If possible use Copeland Part No. when ordering capacitors and relays. Overload not used on units that are inherent protected.

***
11-286 — High Pressure Control located in main control box on "H" models

(*) Not Shown

CONDENSING UNIT

1 HP Air Cooled, Copeland

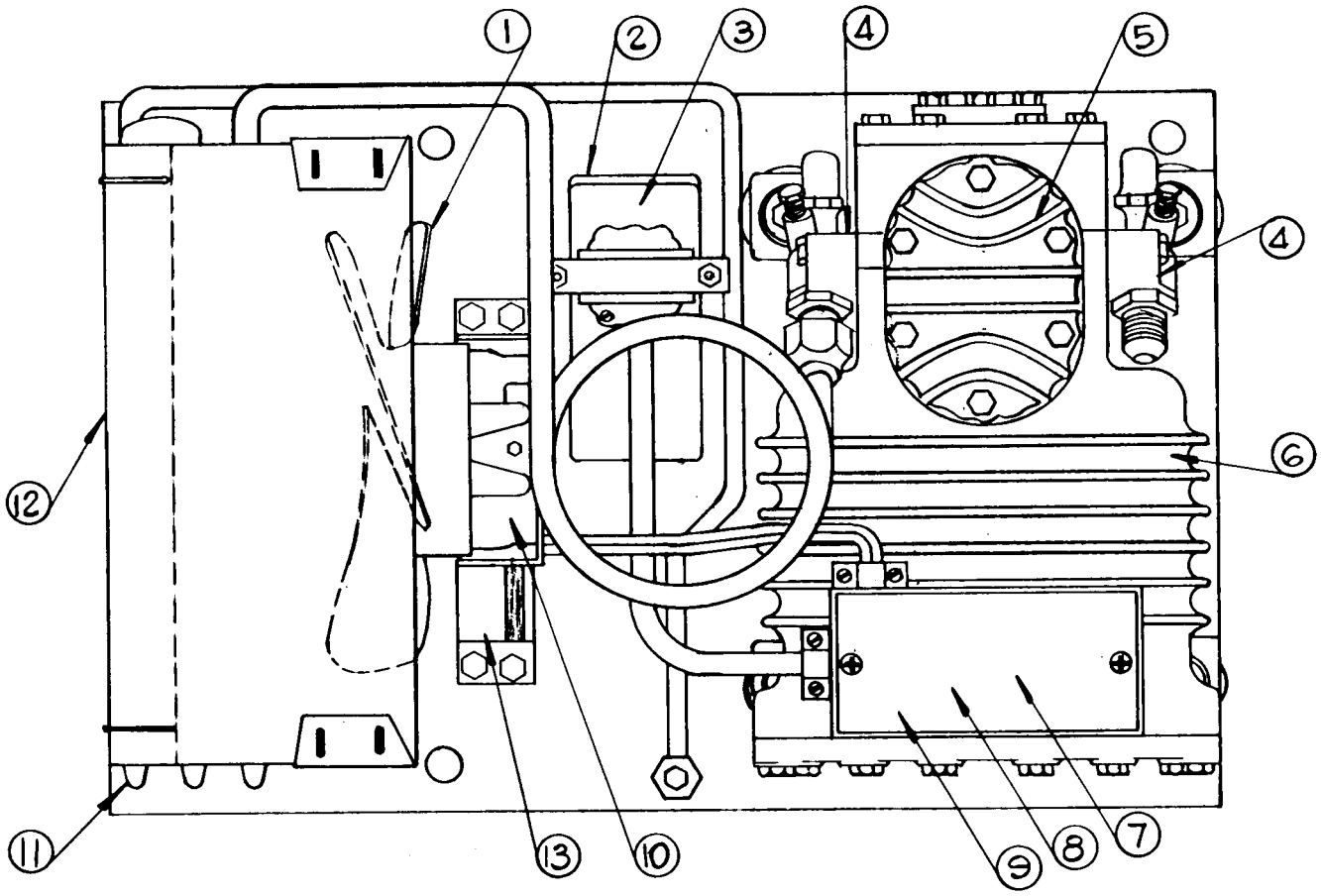

NOTE: Not available as a complete mounted assembly.

ITEM NO.	PART NO.	NAME
1.	18-751	Fan Blade
2.	18-1901-15	Starting Capacitor **
3.	18-1903-18	Relay **
4.	18-561	Suction Service Valve (18-237 discharge valve)
5.	18-326	Valve Plate & Gasket Kit Assembly *
6.	18-521	Motor Compressor 230/60/1
	18-573	208-220/60/3
	18-534	208/60/1
7.	18-533	Overload Klixon (*)
8.	18-241	Terminal Assembly (*)
9.	18-270	Terminal Board (*)
10.	18-595-2	Fan Motor

ITEM NO.	PART NO.	NAME
11.	18-530	Condensor
12.	A-17901	Shroud
13.	18-597	Fan Motor Bracket
14.	18-1902-17	Running Capacitor (*)

NOTE: Overload not used on units that are inherent protected. If possible use Copeland Part No. when ordering capacitors and relays.

(*) Not Shown

MAINTENANCE INSTRUCTIONS

FOR

SCOTSMAN SUPER FLAKERS

The following services must be accomplished a mimimum of two (2) times per year on all Scotsman Super Flakers.

1. Check and clean water strainers and float valves. Depress float valve to insure full stream of water.
2. Check water level and machine level. Keep water level below overflow, but as high as possible and still not run out of spout opening with machine off. Water should come out of spout with ice at all times. Adjust as required.
3. Clean reservoir and interior of freezer assembly using Scotsman Ice Machine Cleaner.
   A. 1. Set main switch to OFF.
      2. Remove all ice from storage bin.
      3. Turn off water supply or block float. Drain reservoir by removing overflow tube (gray plastic tube) in reservoir. Replace overflow tube.
      4. Set main switch to ON and pour cleaning solution into reservoir. Do not fill above overflow tube.
         Models SF2 & SF3 -- Use 6 oz. of Scotsman cleaner 1 qt hot water.
      5. Continue to make ice on solution until the solution is used up and reservoir is empty.
      6. Set main switch to OFF. Remove overflow tube, wash and rinse reservoir, replace overflow tube, turn water on or remove block float.
      7. Turn MAIN SWITCH to ON. Let unit run for at least (15) minutes to flush out any cleaning fluid. Check ice for acid taste -- run until ice tastes sweet.
      8. Turn MAIN SWITCH to OFF. Add hot water to ice bin, using this melt water, thoroughly wash and rinse all surfaces within the storage bin.
      9. Turn MAIN SWITCH to ON. Replace Service Door. Unit is ready for normal operation.
   B. If heavy mineral deposits on auger and walls, or sediment at inlet to freezer are encountered, clean by pouring strong solution (1/2 acid - 1/2 water) into reservoir and operate drive motor only for agitation. Allow 1/2 hour or longer as required. Drain by disconnecting tygon at water inlet to freezer.

   NOTE: Cleaning requirements vary according to local water conditions. Visual inspection of the auger before and after cleaning will indicate best procedure to be followed in local areas.
4. Check high and low side pressures. On air cooled models, set pressure at 135 P S I. Suction pressure should be above 12 P S I and will range up to 16 P S I depending upon water and ambient temperatures.

5. Set hand reset low pressure control to cut off in event of water supply interruption or low ambient temperature at approximately 5 P S I.
6. Change oil in gear reducer. Use Mobiloil 600 W or equivalent good grade of gear oil with a viscosity of 125 to 190. For unit with grease fittings use Mobilgrease BRB No. 1 or any good grade ball bearing grease. Particularly important when there is evidence that water has gotten into gear housing. Remove gear reducer to facilitate.
7. Oil drive motor. Use S A E Oil.
8. Check top bearing of freezing tube. Pry upward around edge of stamped brass cap. If moisture is around bearing, wipe up and remove grease. Add new grease. To replace cap, insert small wire under cap edge to vent air and remove when cap is on tight.
9. Check and adjust belt tension.
10. Clean air cooled condenser. Inform customer to clean frequently. Always shut off machine when cleaning.
11. Oil condenser fan motor when possible.
12. Check for refrigerant leaks and proper frost line. Should frost out of accumulator approximately one-half way to compressor.
13. Check for water leaks. Tighten drain line connections. Run water down bin drain line to make sure it is open.
14. Check quality of ice. Ice should be wet when formed, but will cure rapidly to normal hardness in the bin.
15. Check thermostat and pressure plate cut off. Micro - switch cuts off only compressor. Bin thermostat should be set at 10° differential and should keep entire machine off at least twenty minutes in high ambients (longer in low) during normal operations.

SERVICE ANALYSIS

SYMPTOM	POSSIBLE CAUSE	CORRECTION
Unit will not run	Blown fuse	Replace fuse and check for cause of blown fuse.
	Thermostat set too high	Adjust thermostat. Set between 35° - 45°.
	Loose electrical connection	Check wiring
	Switch in OFF position	Turn switch to ON
	Inoperative master switch	Replace switch
	OFF on the hand reset low pressure control	Push hand reset.
Compressor cycles intermittently	Low voltage	Check for overloading.
	Dirty condensor	Clean.
	Air circulation blocked	Move unit to correct.
	Non-condensable gases in system	Purge off.
Making wet ice	Surrounding air temperature above 100° F.	Correct or move unit to cooler location.
	Under or over-charge of refrigerant.	Recharge with proper amount.
	High water level in water reservoir	Lower to 1/4 inch below overflow pipe.
	Faulty compressor valve plate	Repair or replace.
Low ice production	Loss of refrigerant, under or over-charge of refrigerant	Check and recharge with proper amount of refrigerant.
	Dirty or plugged condensor	Clean condensor
	Low water level in water reservoir.	Adjust to 1/4 inch below overflow.
	Overcharge of oil in system	Check at oil sight glass. Lower to 1/2 sight glass.
	Partial restriction in capillary tube or drier	Moisture in system. Overcharge of oil in system. Remove charge and drier. Replace and recharge system.
	Inlet water strainer partially plugged	Remove screen and clean
	Corroded or stained worm shafts due to water condition.	Remove worm shafts and clean.

SERVICE ANALYSIS

SYMPTOM	POSSIBLE CAUSE	CORRECTION
Machine runs but makes no ice	Loss or under-charge of refrigerant	Check for leaks and recharge.
	Drive motor, gear reducer or drive coupling inoperative	Check. Repair or replace.
	Water not entering freezing chamber	Plugged strainer or supply line. Check and clean. Air lock in gravity feed line. Check and remove air lock.
	Moisture in system	Check and remove charge and drier. Replace and recharge.
	Water seal leaking	Replace seal.
	Defective manual overload switch	Replace switch
Water leaks	Defective water seal	Replace
	Gravity feed line leaking	Check hose clamps.
	Water level in reservoir too high	Adjust to 1/4 inch below overflow pipe.
Excessive noise or chattering	Mineral or scale deposit on auger and inner freezing chamber walls	Remove and manually polish auger, sand inner chamber walls of freezer barrel with approx. 100 grit paper. Use vertical strokes. For lighter concentrations use Scotsman Ice Machine Cleaner periodically.
	Low suction pressure	Add gas to raise suction pressure. Raise head pressure control setting.
	Intermittent water supply	Check and clean water strainer Check gravity feed line for air lock. Remove air lock.
	Water level in reservoir too low	Adjust to 1/4 inch below overflow pipe.
	Misaligned drive coupling	Repair or replace
	Gear reducer low on oil charge	Check oil level and refill to oil level plug.
	Gear reducer loose on frame	Tighten
	Drive motor end-play or worn bearings	Repair or replace
	Motor compressor not floating on springs	Loosen hold-down bolts.
Machine continues to run with full storage bin	Storage bin thermostat not properly set	Reset or replace, 45° in, 35° out.

PARTS LIST

SF-3H

FREEZER ASSEMBLY

DESCRIPTION	PART NO.
Freezer Assembly- Complete	A-8592-3
Ice Breaker	A-8585
'O' Ring	2-560
'O' Ring	2-643
Top Bearing	2-646
Lock Washer	3-679
Unit Cap	A-8581
Cap Screw	3-715
Washer	A-6273
Worm Shaft	2-751
Retaining Ring	3-712
Water Seal	2-929
Lower Bearing	2-619
Bearing Retainer	A-10591
Worm Tube Nut	A-6153
Worm Tube Suction, Accumulator Assembly	A-8587
Drip Pan Assembly	13-208
Front Casting, Spout Holder	A-14269
Rear Casting, Spout	A-14275
Knurled Nut (Spout to Casting)	A-14256
'O' Ring-Spout Casting	2-1437
Spring-Spout	2-1321
SS Spout Only	A-16350
Brass Machine Screw-1/4-20x2 1/2 inches casting to casting	3-721
Spout Micro Switch	12-1018
Brass Machine Screw-1/4-20x5/8 inch-spout casting to ice breaker-top	3-207
Lockwasher-1/4 inch for screws above	3-679

PARTS LIST

SF-3H

CABINET PARTS	SF-3H	SF-3WSH
DESCRIPTION	PART NO.	PART NO.
Case Assembly	A-16079	A-18298
Case Door Assembly		A-18300
Storage Bin Assembly		A-15780
Case Door Liner, Plastic		2-1000
Drain Assembly, Male		A-18090
Latch and Strike		2-1568
Drain 'O' Ring		2-530
Hinge, Case Door		2-1569
Case Hood Assembly, Less Doors	A-16606	A-15602
Hood Reservoir Cover	A-7676	A-7676
Top Side Door	A-6530	A-6530
Door Slide Assembly		A-16208
Sliding Door		A-15559
Left Side Door Panel	S-6713	S-6713
Front Door Panel	A-15864	A-15864
Rear Door Panel	A-7247	A-7247
Rear Moulding Strip		A-5829
Front Moulding Strip	S-6686	S-6413
Scotsman Emblem	15-156	15-156
Leg for raising base	A-15803	A-15803
Plywood Crate	1-647	1-646
Leg Leveler	8-522	8-522
Insulation Layout		A-15785
WATER CIRCUIT		
Water Reservoir Assembly	A-8339	A-8339
Water Reservoir Body Only	A-13409	A-13409
Water Inlet Valve	S-8138	S-8138
Rubber Valve Seat for S-8138	S-6947	S-6947
Valve Seat Holder	A-5777	A-5777
Valve Pin	2-1259	2-1259
Float Arm Ass'y	A-12067	A-12067

PARTS LIST

SF-3H

WATER CIRCUIT (Continued) Description	SF-3H Part No.	SF-3WSH Part No.
Plastic Water Deflector	2-1320	2-1320
Standpipe	S-6715	S-6715
Inlet Water Bracket	A-12869	A-12869
Reservoir Cover Assembly	A-16012	A-16012
Water Strainer, Supply Line	16-162	16-162
Plastic Ice Scoop	2-540	2-540

DRIVE CIRCUIT	SF-3H & SF-3WSH
DESCRIPTION	PART NO.
Gear Reducer	2-641
Gear Reducer Repair Kit	A-6710
3 Jaw Coupling - Bottom Half	A-8593
3 Jaw Coupling - Top Half	A-8594
Rubber Coupling Insert	13-217
Allen Set Screw	3-385
Clamp - 2 per coupling	S-8496
Cap Screw - 2 per coupling	3-206
Rubber Drip Shield - Gear Reducer Shaft	13-152
Drive Belt	13-583
1/3 H P Drive Motor 230/60/1 208/60/1	12-649-2 12-649-7
Pulley - For Drive motor 2 1/2"	2-1491
Pulley - For Gear Reducer 8"	2-1492
ELECTRICAL COMPONENTS	
Bin Thermostat	11-99-1
Head Pressure Control - Penn	11-346
Resistor for Head Pressure Control Kit	12-481
Resistor Box Cover Only	A-14369
Low Pressure Control - Ranco - Hand Reset	11-273-1
Micro Switch for Spout	12-1018
Drive Motor Overload (See Page 48)	12-708
On -Off Toggle Switch (drive motor)	12-530A

PARTS LIST

SF-3H

ELECTRICAL COMPONENTS (Cont'd.)	SF-3H & SF-3WSH Part No.
Contactor 208/220/60/3	12-739-2
Water Regulating Valve - Water Cooled Units	11-198
CONDENSING UNITS	
Drier	2-544
Motor Compressor Only 230/60/1, 1 H P	18-521
Valve Plate	18-326
Cylinder Head	18-329
Relay	18-1903-18
Starting Capacitor	18-1901-15
Running Capacitor	18-1902-17
Motor, Fan	18-788-2
Fan Blade	18-787
Bracket for Fan Motor	18-597
Condenser - Air Cooled	18-530
Condenser Shroud	A-17901
Compressor Discharge Service Valve	18 - 327
Compressor Suction Service Valve	18-561
Klixon Thermal Overload	18-533
Terminal Assembly	18-241
Service Valve Gasket	18-242
Condensing Unit - Water Cooled -230-/60/1	
Uses same capacitor, relays, Klixon, etc., as above, does NOT same condenser, fan motor, etc.	
Motor Compressor only	18-555
Condenser	18-354
Compressor to Water Valve Hose	18-260
Compressor to Condenser Hose	18-261
Plain Gasket - Water Cooled Condenser	18-548
Manifold Gasket - Water Cooled Condenser	18-549
Water Regulating Valve	11-198
Dual Pressure Control	11-286

CONDENSING UNITS (Cont.) DESCRIPTION	SF-3H & SF-3WSH PART NO.
Air Cooled - 1 H P - 208/60/1	
1 H P Motor Compressor only - KK100C - 208/60/1	18-534
Valve Plate and Gasket Kit Assembly	18-326
Relay	18-1903-17
Starting Capacitor	18-1901-15
Running Capacitor	18-1901-17
Fan Motor	18-788-7
Fan Blade	18-787
Air Cooled Condenser	18-530
Condenser Shroud	A-17901
Complete Terminal Assembly	18-241
Air Cooled - 1 H P - 208 - 220/60/3	
1 H P Motor Compressor only	18-573
Valve Plate and Gasket Kit	18-326
Fan Blade	18-787
Motor	18-788-7
Condenser	18-530
Shroud	A-17901
Complete Terminal Assembly	18-241
NOTE: 3 phase use no relay, running or starting capacitors.	
MISCELLANEOUS	
Ice Scoop	2-540
Ice Machine Cleaner - 8 oz. bottle	19-343
Grey Spray - On Touch - Up Paint	10-153
Upper Bearing Grease - Freezer Assembly - Pint Cans Only	19-309
600 W Gear Reducer Transmission Oil - Pint Cans Only	19-359
Tygon Tubing (1/2" I D x 3/4" O D) Per ft.	5-186
Rubber Tubing (3/8" I D) Per ft.	13-79
Clamp (for tygon tubing - Freezer end)	2-694
Clamp (for tygon tubing - Reservoir end)	2-535
Clamp (for rubber tubing - Reservoir end)	2-534
Clamp (for rubber tubing - Tee end)	2-538

OVERLOAD HEATER CHART FOR MANUAL STARTER SWITCH

QUEEN PART NO. 12-530, GE PART NO. CR101H1, QUEEN PART NO. 12-1221 AND WESTINGHOUSE PART NO. MST02SN

Queen Motor No.	Manufacturer	Electrical Characteristics	Manuf. Part No.	Queen Part No. for G.E. Overload	Manuf. Part No.	Queen Part No. For Westing-house Overload	Manuf. Part No.
12-864-1	G. E.	115/60/1 ¼ HP	KC35KG312	12-708-29	123H6.25A	12-1221-27	MSH6.0A
12-864-1	Westinghouse	115/60/1 ¼ HP	S309P520	12-708-27	123H5.29A	12-1221-27	MSH6.0A
12-864-1	Century	115/60/1 ¼ HP	CSF48HKA	12-708-26	123H4.86A	12-1221-25	MSH5.0A
12-864-2	G. E.	230/60/1 ¼ HP	KC35KG319	12-708-21	123H3.17A	12-1221-20	MSH3.1A
12-864-2	Westinghouse	230/60/1 ¼ HP	S309P334	12-708-20	123H2.91A	12-1221-19	MSH2.8A
12-864-2	Century	230/60/1 ¼ HP	CSF48HKA	12-708-18	123H2.45A	12-1221-19	MSH2.8A
12-864-7	G. E.	208/60/1 ¼ HP	KC35KG317	12-708-22	123H3.46A	12-1221-21	MSH3.4A
12-864-7	Westinghouse	208/60/1 ¼ HP	S309P334	12-708-19	123H2.67A	12-1221-18	MSH2.5A
12-864-7	Century	208/60/1 ¼ HP	CSF48HKA	12-708-20	123H2.91A	12-1221-19	MSH2.8A
12-649-1	Westinghouse	115/60/1 1/3 HP	311P096	12-708-33	123H8.73A	12-1221-31	MSH8.8A
12-649-1	Century	115/60/1 1/3 HP	CSJ56-KKA	12-708-29	123H6.25A	12-1221-27	MSH6.0A
12-649-1	G. E.	115/60/1 1/3 HP	5KC42JG24	12-708-30	123H6.80A	12-1221-28	MSH6.6A
12-649-2	Westinghouse	230/60/1 1/3 HP	311P061	12-708-25	123H4.46A	12-1221-24	MSH4.5A
12-649-2	Century	230/60/1 1/3 HP	CSJ56-KKA	12-708-21	123H3.17A	12-1221-20	MSH3.1A
12-649-2	G. E.	230/60/1 1/3 HP	5KC42JG2	12-708-22	123H3.46A	12-1221-21	MSH3.4A
12-649-7	Century	208/60/1 1/3 HP	CSJ56-KKA	12-708-22	123H3.46A	12-1221-21	MSH3.4A
12-649-7	G. E.	208/60/1 1/3 HP	5KC42JG31E	12-708-22	123H3.46A	12-1221-21	MSH3.4A
12-649-7	Westinghouse	208/60/1 1/3 HP	311P061	12-708-24	123H4.10A	12-1221-31	MSH8.8A

NOTE: The overloads as listed are in accordance with Underwriters requirements. Any deviation will be in violation.

TABLE OF CONTENTS

Table of Contents 1
Specifications – Continuous Flow 2
Photo – Continuous Flow 3
Photo – With Storage 4
Specifications with Storage 5
Machine Description 6
Preparation for Installation 7
Selecting Location 8
Installation 9-10
Refrigerent Cycle 11
Water Schematic 12
Wiring Diagram – Air Cooled 230/60/1 13
Wiring Diagram – Water Cooled 230/60/1 14
Wiring Diagram – Air Cooled -208-220/60/3 15
Wiring Diagram – Water Cooled -208-220/60/3 16
Final Check List 17
Service:
- Starting Machine 18
- Refrigerant Charge 18
- Water System 19
- Electrical System 19

Disassembly Procedures:
- Cabinet Assy 20
- Water Reservoir 20
- Freezer Assy 21
- Freezer Worm Shaft 21
- Water Seal 21
- Electrical Components 22
- Freezer Gearmotor 22
- Compressor 22

Parts Breakdown
- Control Box 23
- Reservoir Assy 24
- Gear Motor Assy 25
- Freezer Assy. 26
- Chassis Assy – Water Cooled 27
- Chassis Assy – Air Cooled 29
- Case Assy Cont. Flow 29
- Case Assy with Storage 30

Service Analysis 31-32
Maintenance Instructions 33

THIS PAGE
INTENTIONALLY
LEFT BLANK

SPECIFICATIONS

SUPER FLAKER SF-3 SERIES (Continuous Flow)	MODEL SF-3J	MODEL SF-3WJ	MODEL SF-3J-SS	MODEL SF-3WJ-SS
CONDENSER, Air Cooled	X		X	
CONDENSER, Water Cooled		X		X
COMPRESSOR 1 HP	X	X	X	X
FINISH, Hammerloid Grey	X	X		
FINISH, Stainless Steel			X	X
SHIPPING WEIGHT	355	355	355	355

STANDARD ELECTRICALS	MINIMUM WIRE SIZES	TOTAL AMPERAGES
AIR COOLED		
230/60/1	2 wire 12 gauge	8.9 Amperes
208-220/60/3	3 wire 14 gauge	6.5 Amperes
208/60/1	2 wire 12 gauge	9.3 Amperes
WATER COOLED		
230/60/1	2 wire 12 gauge	8.1 Amperes
208-220/60/3	3 wire 14 gauge	5.8 Amperes
208/60/1	2 wire 12 gauge	8.5 Amperes

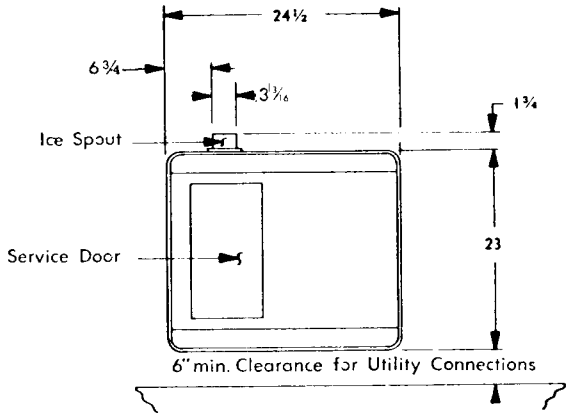

STORAGE BIN: 500, 750, 1000, 1500
Stainless Steel Lined
DEPTH: 24-1/2"
WIDTH: 23"
HEIGHT: (with legs) 55-3/8" to 56-1/8"
HEIGHT: (without legs) 49-3/8"

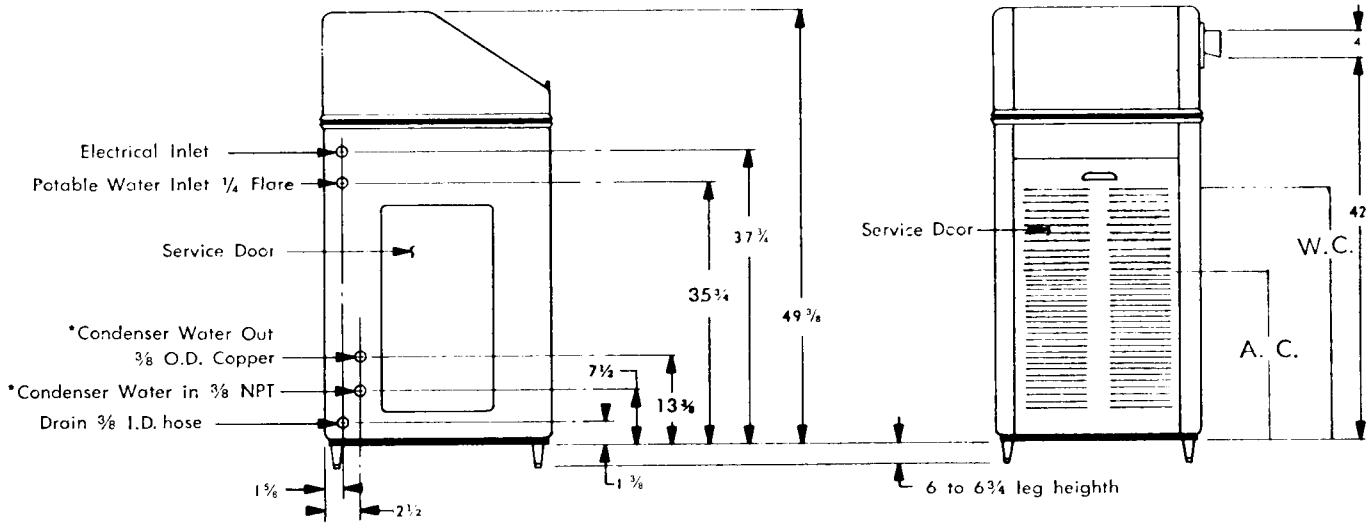

SCOTSMAN®

SUPER FLAKER
SF-3J
SERIES
Continuous Flow

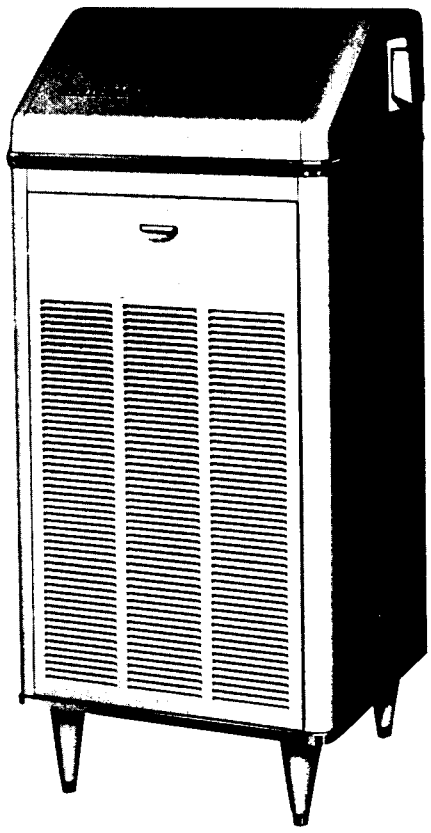

ice making capacity

Daily Ice Capacity is directly related to condenser air inlet temperature, water temperature, and age of machine. Average daily capacity at 90° air and 70° water is Air Cooled: 950 lbs. and Water Cooled: 970 lbs.

NOTE: To keep your SCOTSMAN SUPER FLAKER performing at it's maximum capacity, it is necessary to perform periodic maintenance as outlined on page 33 of this manual.

SCOTSMAN®

SUPER FLAKER
SF-3WSJ
SERIES
Storage Type

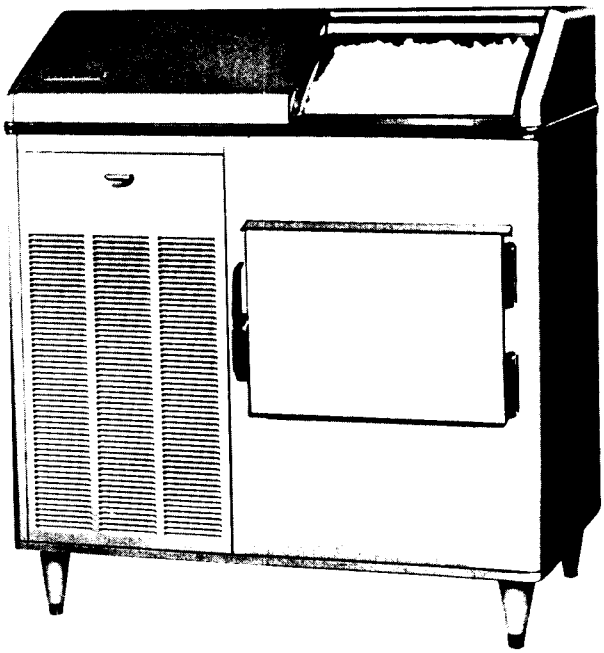

ice making capacity

Daily Ice Capacity is directly related to condenser air inlet temperature, water temperature, and age of machine. Average daily capacity at 90° air and 70° water is Air Cooled: 950 lbs. and Water Cooled: 970 lbs.

NOTE: To keep your SCOTSMAN SUPER FLAKER performing at it's maximum capacity, it is necessary to perform periodic maintenance as outlined on page 33 of this manual.

SPECIFICATIONS

SUPER FLAKER SF-3 SERIES (Storage Type)	MODEL SF-3WSJ	MODEL SF-3WWSJ	MODEL SF-3WSJ-SS	MODEL SF-3WWSJ-SS
CONDENSER, Air Cooled	X		X	
CONDENSER, Water Cooled		X		X
COMPRESSOR 1 HP	X	X	X	X
FINISH, Hammerloid Grey	X	X		
FINISH, Stainless Steel			X	X
SHIPPING WEIGHT	510	510	510	510

STANDARD ELECTRICALS	MINIMUM WIRE SIZES	TOTAL AMPERAGES
AIR COOLED		
230/60/1	2 wire 12 gauge	8.9 Amperes
208-220/60/3	3 wire 14 gauge	6.5 Amperes
208/60/1	2 wire 12 gauge	9.3 Amperes
WATER COOLED		
230/60/1	2 wire 12 gauge	8.1 Amperes
208-220/60/3	3 wire 14 gauge	5.8 Amperes
208/60/1	2 wire 12 gauge	8.5 Amperes

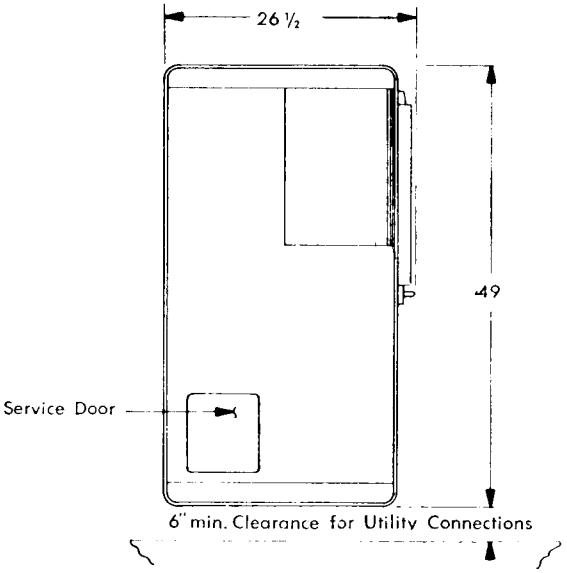

STORAGE BIN; 300 lbs. Stainless Steel Lined
DEPTH: 26-1/2"
WIDTH: 49-1/4"
HEIGHT: (with legs) 55-3/8" to 56-1/8"
HEIGHT: (without legs) 49-3/8"

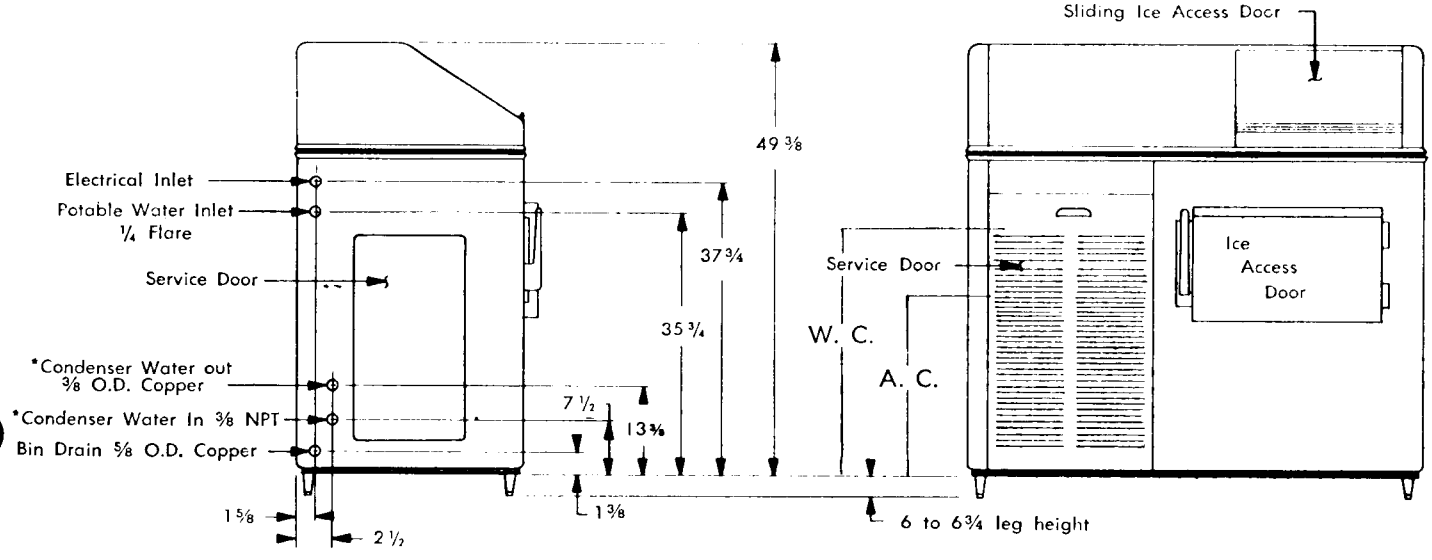

*Water Cooled Only

SPECIFICATIONS

SCOTSMAN Super Flakers are designed for restaurants, super markets, soda fountains, hospitals, bakeries, fish markets, poultry stores, packing plants, etc. It is the finest Ice Maker on the market today. It will work 24 hours a day for you, or only as needed. It produces the highest quality ice available at any price.

Approximately 1000 pounds of SCOTSMAN crushed ice is delivered each 24 hours to the storage bin for immediate use.

SCOTSMAN Super Flakers are easily installed requiring only standard water, drain and electrical connections.

ATTRACTIVE COMPACT CABINET. Grey hammerloid finish with chrome trim, rounded corners, and removable panels for easy access to mechanical parts. Adjustable and removable legs are under cabinet.

SEALED REFREIGERATION SYSTEM. Provides quiet, efficient operation of the machine. Compressor motor is internally spring mounted for quiet operation. Compressor motor is covered by a full 5-Year Warranty.

HOW IT WORKS. An exclusive patented ice-making system, wherein water in the constant level float reservoir is fed to the bottom end of the freezing cylinder and turns to ice on the inside of this cylinder. Ice from the refrigerated walls of this cylinder is extruded past the ice breaker at the top of the cylinder through a side opening by means of a stainless steel auger driven by a gearmotor drive.

All SCOTSMAN Models SF3J and SF3WSJ are completely automatic. A manual switch in control box starts the machine, and from then on, produces flakes automatically. When the storage bin fills, the machine automatically shuts off and starts up again when ice is taken from the storage compartment.

Model No. SF3J is a continuous flow type machine, and is manually started by an OFF and ON switch located inside the cabinet as are the SF-3WSJ models. Since the SF-3J does not have its own attached bin, it is necessary to use an auxillary bin such as the Model SB-500 SCOTSMAN Super Bin for ice storage. A bin thermostat is mounted in each SF3J continuous flow type machine for the purpose of mounting control bulb from machine to bin.

SCOTSMAN SUPER FLAKERS
PREPARATION FOR INSTALLATION

1. UNCRATING
   The entire unit comes in one crate. Upon delivery a visual inspection of the crate should be made and any severe damage noted should be reported to the delivering carrier and a concealed damage claim filed subject to internal inspection with carrier representative present. Remove crate by pulling nails driven through sides of crate into the bottom skid. A nail puller is best suited here. Next remove (4) four bolts from underside of skid which connect to complete unit base. Unit now free from all crating.

2. Remove all service doors and panels.

3. Remove water reservoir cover and take out paper packing around float ball.

4. Remove leg packages in compartment base and install 4 legs in unit base sockets. On continuous flow models with separate storage bins, legs are put on companion machine stand, not on Ice Maker.

5. Check motor compressor hold down nuts to insure motor compressor rides snug on mounting pads.

6. Remove water strainer from storage bin for installation on unit or in water supply line feeding unit.

7. Open electrical control box and prepare for hook up, use knock outs, cord connectors etc. Then check unit nameplate voltage against building source voltage and make sure they correspond. Caution - Improper voltage supplied to units can void your parts program protection.

8. Select unit location prior to hook up of water drain and electricals in accordance with local and national codes. Minimum room temperatures is 50º Fahrenheit. On air cooled models, select well ventilated location.

9. Remove registration card and Users manual from storage bin, then wipe bin clean with damp cloth.

10. Fill out manufacturers registration card completely including model and serial numbers as taken from aluminum plate found behind front service panel and forward to Scotsman Factory using self mailing card.

11. Level unit with adjustable legs.

SELECTING LOCATION

UNDER BAR INSTALLATIONS: Locate, if possible, so left end panel is accessible. Locate so proper circulation can be attained around the unit and behind it at least four inches.

KITCHEN INSTALLATIONS: As a rule, the kitchen is not the most practical place to install an air-cooled condensing unit, as grease is almost always present and makes cleaning of the condensing unit difficult. Do not locate near range or steam table or other heating devices that may be used in the kitchen.

STOREROOM INSTALLATIONS: Be sure storeroom is of adequate size and properly ventilated. A small, poorly ventilated room will greatly impair the efficiency of the unit. The storeroom must be kept above 50 degrees in the winter months.

BASEMENT INSTALLATIONS: Locate machine in the coolest place. Locate machine in a dry place. Keep away from furnace and boiler room. Keep away from service chutes and runways; also coal or other dust of any kind. If the machine is set over a floor drain, block the machine up enough to level it. If there is any chance of basement flooding, block the machine up enough to eliminate any possible damage to the machine.

WATER SUPPLY: The recommended water supply line is 1/4 inch I.D. copper tubing. Connect to cold water supply line with regular plumbing fittings, with a shut-off valve installed in an accessible place between supply line and machine. A water strainer must be installed with the unit and mounted with clean-out plug down. Locate the strainer next to the machine with the arrow in the direction of the flow. Most plumbing codes also call for double check valves in the supply water line, particularly for water-cooled models.

On air-cooled models the water supply line connects to the 1/4 inch flare fitting on the machine. On water-cooled models connections are made to a 3/8 inch male pipe nipple inside of the machine compartment. Incoming water goes through the water regulating valve first and then to the water-cooled condenser. Observe arrow on water regulating valve. Water supply must be installed to conform with local code. In some cases a licensed plumber and/or a plumbing permit will be required.

DRAIN: The recommended drain from the bin is 5/8 inch OD copper tubing. Must be run to an open trapped and vented drain. If drain is a long run, allow 1/4 inch pitch per foot. Drain must be installed to conform with local code. Run separate line for condenser discharge water on water-cooled models.

INSTALLATION

ELECTRICAL CONNECTIONS:

SF3WSJ
230 Volts, 60 Cycle, 1 Phase
20 Amp. Circuit

10 Gauge wire should be used for electrical hook-up. Conductors with third or gound wire are desirable.

Be certain that the Super Flaker is on its own circuit and individually fused. The maximum allowable voltage variation should not exceed 10 per cent of the nameplate rating even under starting conditions. Low voltage can cause erratic operation and may be responsible for serious damage to the overload switch and motor windings.

All external wiring should conform to the National, State and Local Electrical Code requirements. Usually an electrical permit and the services of a licensed electrician will be required.

ELECTRICAL INSTALLATION:

SF-3WSJ-2

Compressor	1 HP	Copelaweld SSE4-0100-CAB-207
		2 pole 3500 RPM
	Voltage	230
	Amp. rating F.L.A.	8.0
	Cycle	60
	Phase	Single
Gear Drive Motor	1/4 HP	Queen Products
	Voltage	230
	Amp. rating	4.6
	Cycle	60
	Phase	Single
		Thermally Protected

INSTALLATION PRACTICE

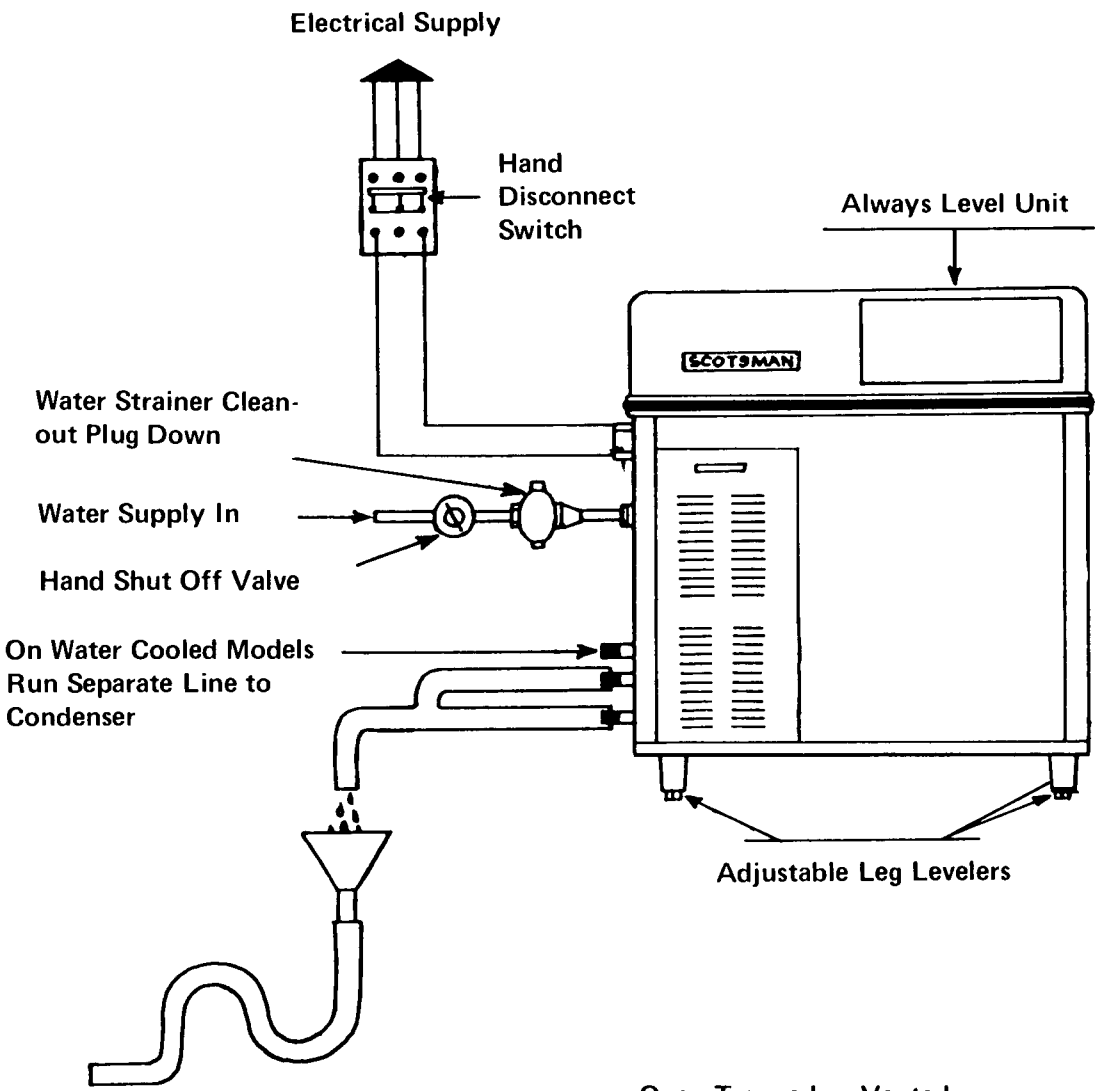

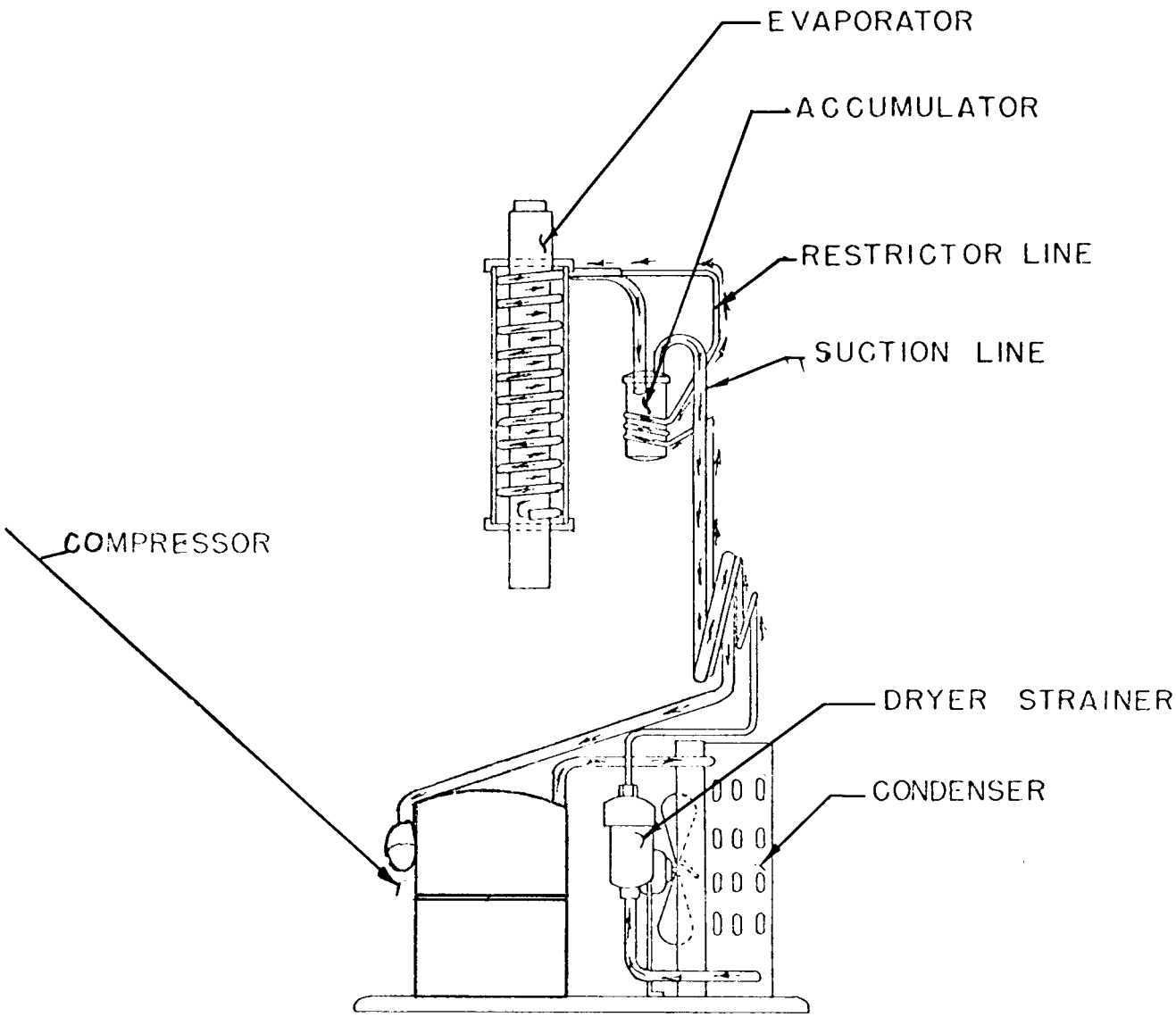

REFRIGERATION CYCLE SF-3 ALL MODELS

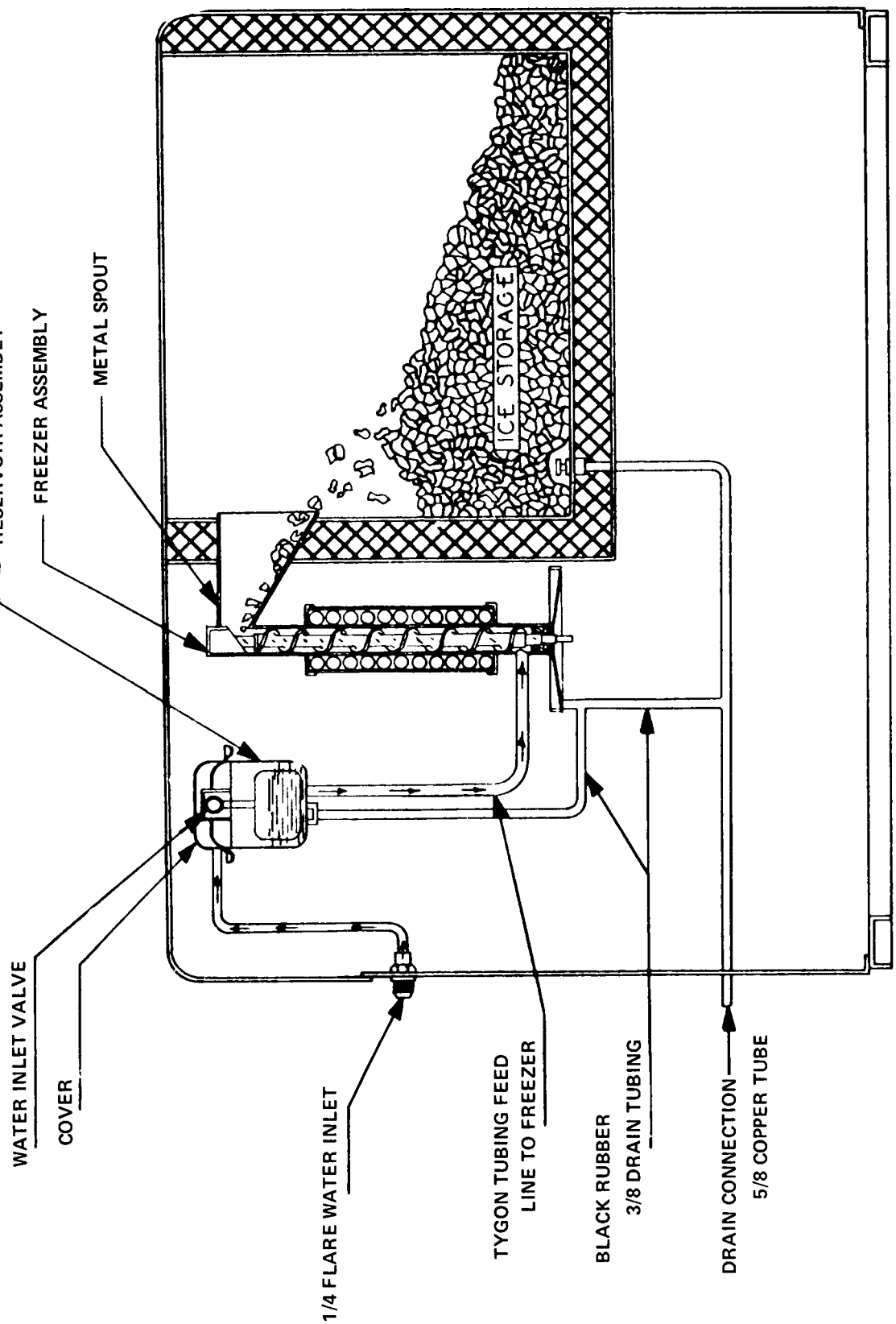

WATER SCHEMATIC

SF-3WSJ

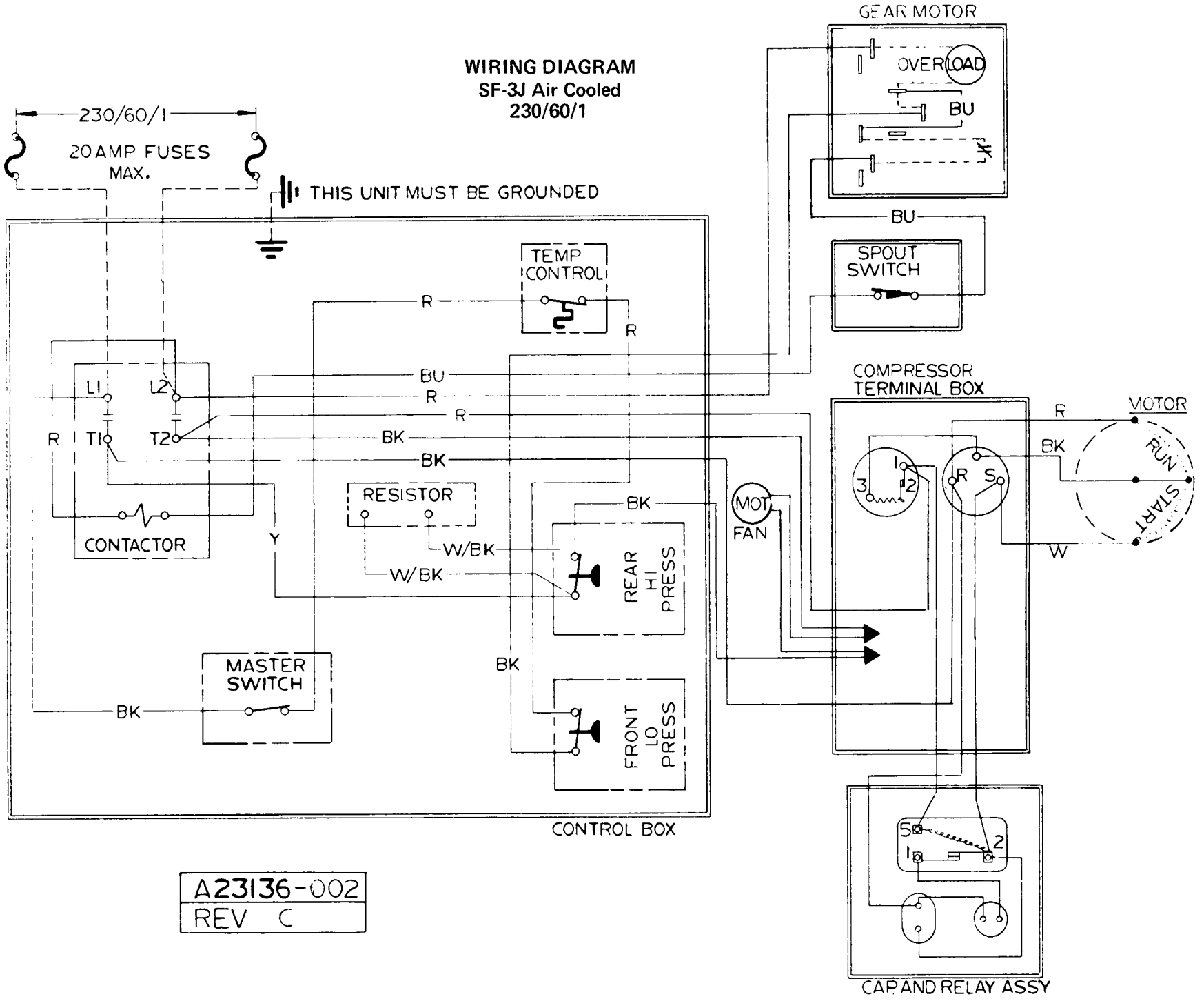

A23136-002
REV C

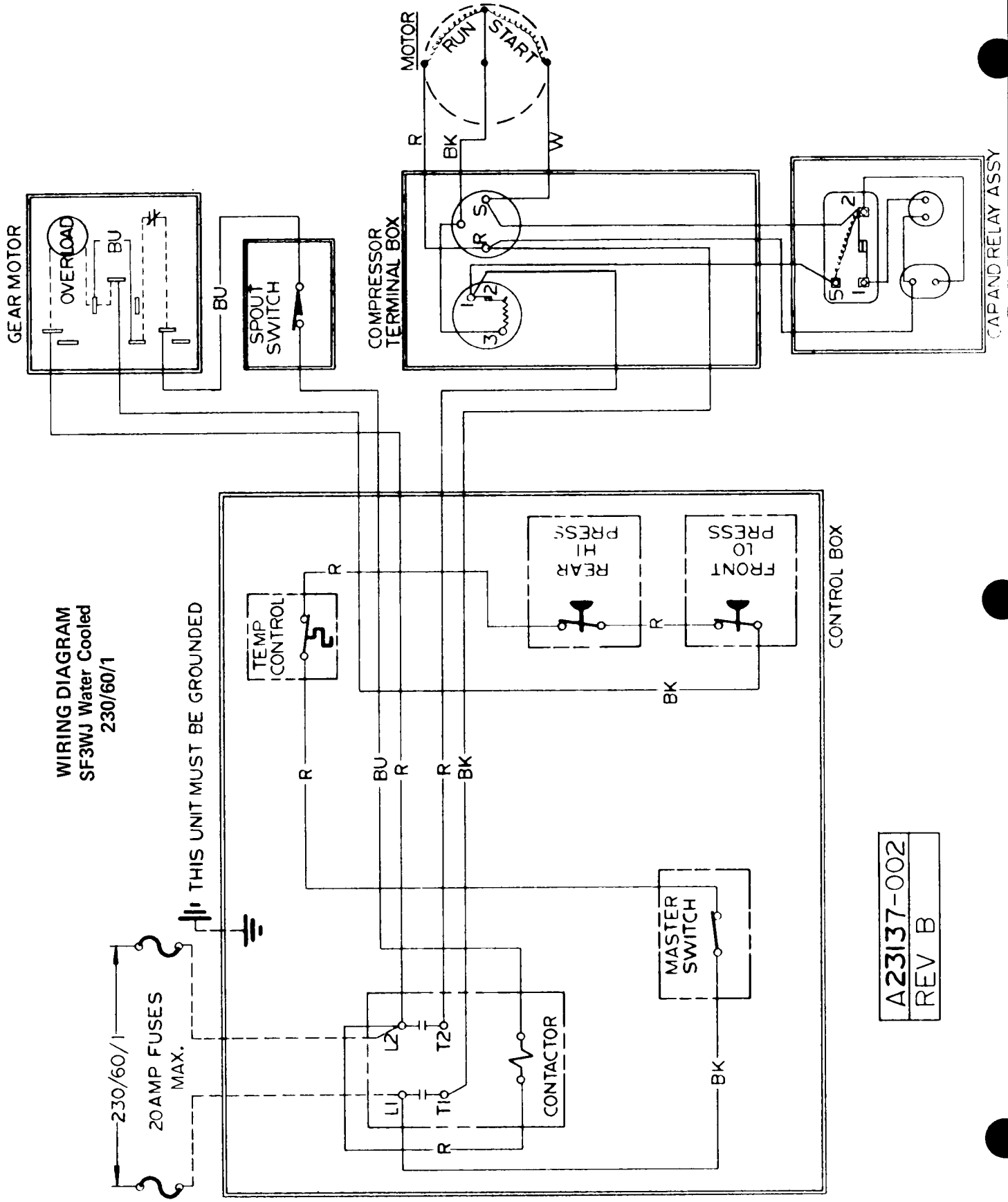
WIRING DIAGRAM
SF3WJ Water Cooled
230/60/1
THIS UNIT MUST BE GROUNDED
230/60/1
20AMP FUSES
MAX.
GEAR MOTOR
OVERLOAD
BU
SPOUT SWITCH
COMPRESSOR TERMINAL BOX
MOTOR
RUN
START
R
BK
W
CAP AND RELAY ASSY
TEMP CONTROL
REAR HI PRESS
FRONT LO PRESS
CONTROL BOX
MASTER SWITCH
CONTACTOR
L1
L2
T1
T2
A23137-002
REV B

WIRING DIAGRAM
SF-3J Air Cooled
208/220/60/3

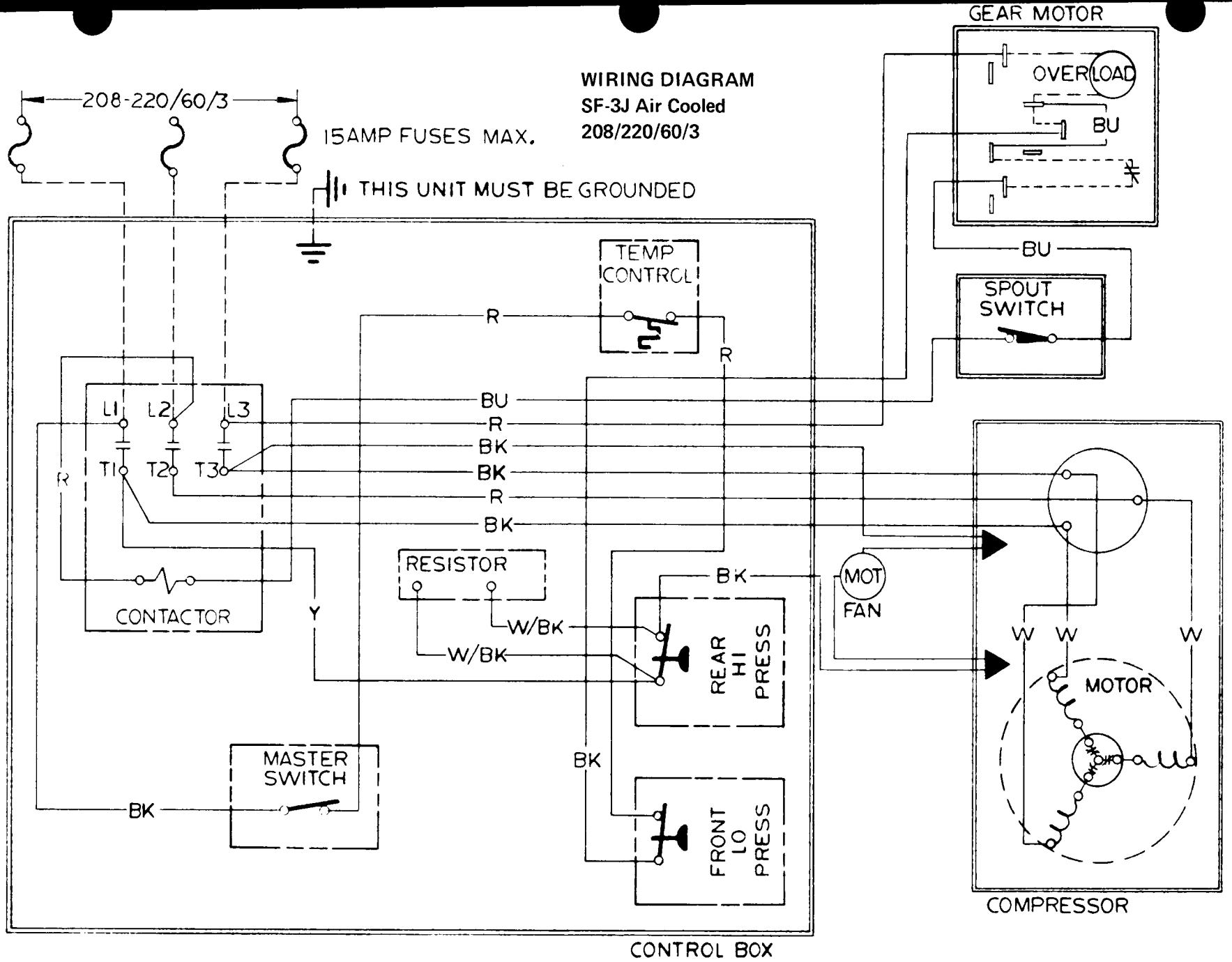

A23136-3
REV. B

WIRING DIAGRAM
SF-3WJ Water Cooled
208/220/60/3

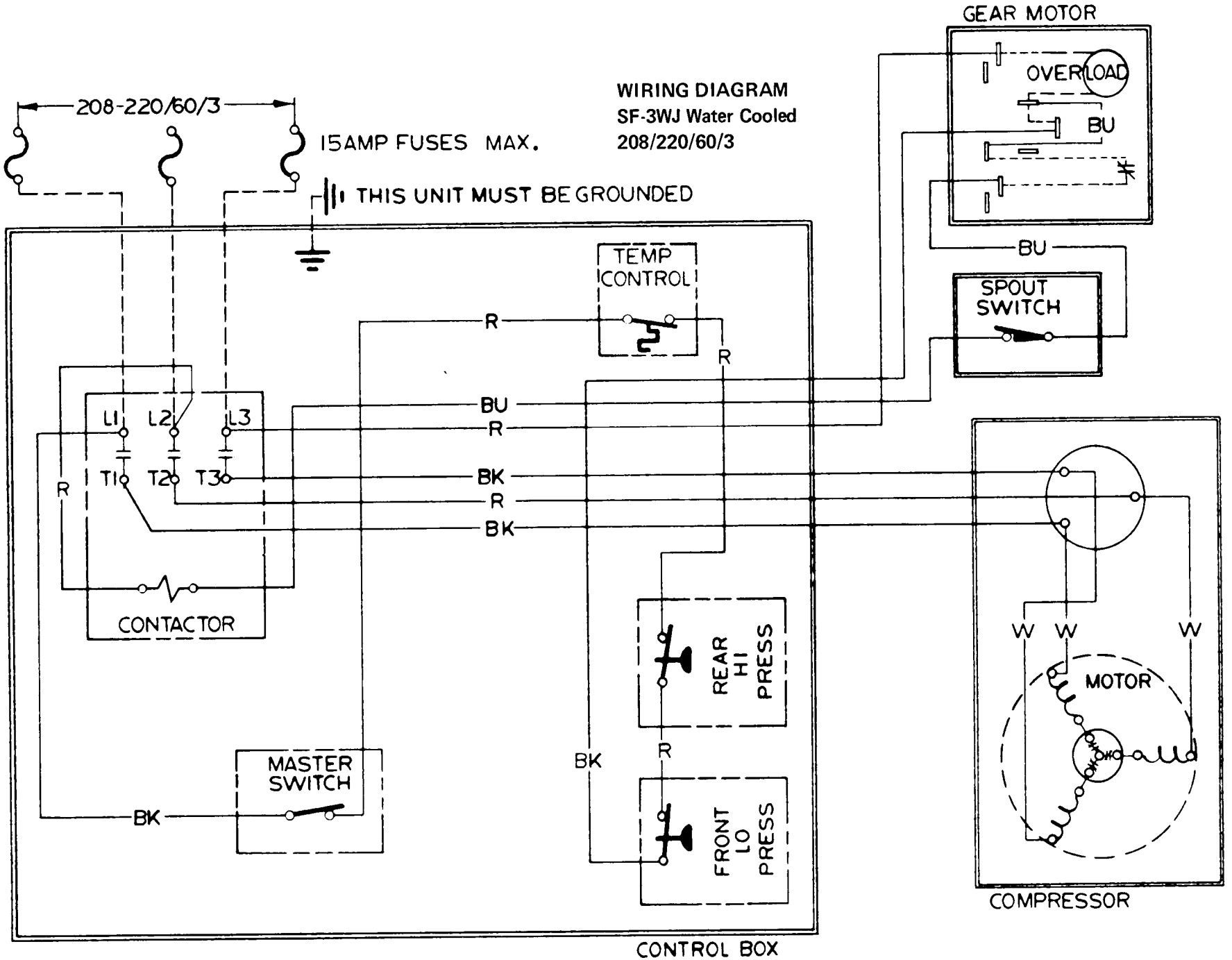

A23137-3
REV. A

FINAL CHECK LIST

1. Is the unit level? (IMPORTANT)
2. Have all electrical and piping connections been made?
3. Has the voltage been tested and checked against the nameplate rating?
4. Is the water supply valve open and the electric power on?
5. Is the water reservoir filled and shut off? All packing removed?
6. Have unit and bin been wiped clean?
7. Has owner been given the Operating Instruction Sheet, and has he been instructed on how to operate the machine?
8. Have the installation and registration cards been filled out and mailed to the factory?
9. Check all refrigerant and conduit lines to guard against vibration and possible failure.
10. Installed in a well ventilated room where ambient temperatures do not fall below 50° Fahrenheit.
11. Is unit installed with a minimum 4" air space around sides and back?

SERVICE

STARTING THE MACHINE: When the machine is placed and inspected as per instructions and all plumbing and electrical connections are completed and tested, turn on the water supply. Be sure the float cover is removed to check on the float operation and water level in the water reservoir. Be sure the water reservoir is filled before starting the machine. Water level should be 1/4 inch below the reservoir overflow.

When this is completed, turn on the manual switch on the front of the cabinet and the machine is in automatic operation. In two to three minutes ice will start dropping off the worm shaft and out the ice chute. Let the machine operate for at least 30 minutes and check for any excess noise other than the normal compressor noise. Test the ice storage control bulb by holding a handful of ice around the bulb until the machine shuts off. One minute should be normal for the control to function. Within minutes after the ice is removed, the bulb will warm up and the machine will automatically start up. The control is factory set and should not be reset until this test is made. Normal setting of this control should be approximately 35 degrees cut-out and 45 degrees cut-in.

Check pressure settings at the time of start-up. On the water-cooled models set the head pressure at 135 PSI. On the air-cooled models the head pressure will vary between 130 and 145 PSI head pressure. The frost line should extend out of the accumulator if properly charged with refrigerant and suction pressure will range between 14 and 16 PSI with 50° F inlet water.

Check the hand reset low pressure control setting. This safety device should be set at approximately 5 PSI below normal operating suction pressure and should cut off in case of interruption in water supply, shortage of refrigerant, low ambient or any other cause of abnormally low suction pressure.

Explain the machine to the owner, showing him how the machine works and go over the owner's instruction sheet with him. Answer all the owner's questions about the machine, and do not leave with any doubt in the owner's mind about the machine, how to operate it or where to reach you should he need service on the machine. Call back the next day to check the machine again and answer any other questions the owner may have.

Service gauge connections are available on both high and low side service valves on water cooled models, suction valve only on air cooled models.

To install gauges to any of these connections, use lines with tire type service valve adapter. Purge free of any non-condensable gases before starting any test operation.

REFRIGERANT CHARGE: The below refrigerant charge is approximate. When charging, set at 135 PSI head pressure and charge so that the frost line extends out of the evaporator and into the accumulator after fifteen minutes of operation.

Model	SF3J
Air-Cooled	40 oz. R-12
Water-Cooled	40 oz. R-12

* All Scotsman Flakers use capillary tube refrigerant metering device.

SERVICE

WATER SYSTEM: A water level is maintained in the water reservoir by a float operated valve. Water is piped from the water reservoir to the freezing chamber by a gravity feed line maintaining an equal water level.

The water reservoir is equipped with a 2 inch air gap to prevent back siphoning and meet all health codes.

The water level in the water reservoir is adjusted by bending float arm. The water level should be set 1/4 inch below the overflow pipe.

A water strainer must be installed in the supply line. Use strainer sent with machine.

ELECTRICAL SYSTEM: The electrical circuit consists of condensing unit, gear motor, hand reset combination or low pressure cut-out, storage bin thermostat, on and off switch, micro (safety) switches and head pressure control.

A. Condensing Unit. The compressor terminal box houses the motor compressor terminal block, and the overload Klixon. To gain access to the terminal box, remove the two screws holding the beveled metal cover. The starting capacitors, running capacitors and starting relays are housed and fastened to the unit chassis frame.

B. Gear Motor. All Model SF3J series flakers are equipped with a direct drive gearmotor to freezer shaft. 1/4 Horsepower motors are split phase, output shaft turns at 10 R.P.M. manufactured by Queen Products.

C. High-Low Pressure Cut-Out. (Automatic reset on water cooled models only.) Dual pressure control is located on the frame assembly. Factory settings cut-out 5 lbs. on low pressure and 180 PSI on high pressure. This control prevents operation at abnormal pressures. Some models utilize reset low pressure - automatic reset high pressure control.

D. Low Pressure Cut-Out. (Hand reset on all air cooled models.) Control is located in the control box. Factory settings cut-out at 5 PSI. Safety device to cut off machine and keep it off in case of water supply failure, loss of refrigerant, low ambient temperature or other causes of low pressure.

E. Storage Bin Thermostat. Control located on frame assembly. Factory settings 35° cut-out, 45° cut-in. This control shuts off complete machine when ice in storage bin builds up to control.

F. Micro Safety Switch. The micro switch is located in the top of the ice chute. The switch is operated by a plate in top of the ice chute by the ice backing up in the chute should the thermostat fail. Micro switch will shut off the condensing unit only, when operated.

G. ON-OFF SWITCH: A manual on-off switch is located in control box.

Air Cooled Models

H. Head pressure Control Kit. A reverse acting high pressure control is used and connected electrically to the fan motor. As the head pressure drops below the cut-out setting, the control opens allowing the current to pass entirely through a resistor in the line feeding the fan motor. This slows the shaded pole motor down to approximately 1/4 speed thus increasing the head pressure. When the control cuts in the full voltage again flows directly to the fan motor allowing it to operate at full speed. This feature protects unit against low ambient conditions.

REMOVAL & INSTALLATION OF PARTS

CABINET TOP (HOOD)

1. Remove two back end screws of chrome strip.
2. Pull out tape concealing screws.
3. Remove balance of screws in chrome strip.
4. Lift off hood.

HOOD SERVICE DOOR TOP

1. Remove screws from edges.
2. Lift out door.

CABINET SIDE SERVICE DOOR

1. Remove four screws on edges.
2. Lift out door.

CABINET FRONT SERVICE DOOR

1. Front door pulls out.

CABINET REAR SERVICE DOOR

1. Remove four screws on corners of rear service door.
2. Pull door out.

ICE STORAGE DOOR

1. Lift door up, slide back 6". Remove thumb screw that attaches safety lanyard to back of door.
2. Door will now slide out. Lift front edge slightly to clear hood lip.

ICE STORAGE DOOR FRAME

1. Remove six screws at bottom and sides.
2. Remove screw in frame back.
3. Frame will now lift out.

WATER RESERVOIR

1. Remove service panel in cabinet hood.
2. Turn off water supply and drain reservoir.
3. Remove 1/4 inch copper inlet water line.
4. Remove 1/2 inch plastic feed line to freezer.
5. Remove two screws holding reservoir bracket to wall.
6. Lift out reservoir.
7. To replace, reverse procedure.

SERVICE

FREEZER ASSEMBLY

1. Remove cabinet top (Hood). (See Removing and Installing Cabinet Parts.)
2. Shut off water supply to unit, remove top and left side service panels.
3. Disconnect water inlet line at reservoir. Remove water supply tube at freezer and drain freezer.
4. Purge off refrigerant, unsweat suction line, disconnect capillary line at drier. Cap off all lines so no moisture can enter system.
5. Remove insulation pieces around spout, also the spout proper.
6. Remove 3 bolts holding fiber adapter base to gearmotor top cover, lift freezer out of cabinet.
7. Remove fiber adaptor spout front and back plates from old freezer and install on new replacement.
8. Re-install in reverse of above.

FREEZER WORM SHAFT

1. Turn unit off, before removing worm shaft.
2. Shut off water supply to unit.
3. Remove hood service doors.
4. Remove top and bottom straps around spout insulation pieces, remove pieces.
5. Remove two slotted head screws which fit through top chamber wall into ice breaker.
6. Tap drive coupling loose on bottom end of freezer worm shaft.
7. Complete worm shaft with ice breaker attached will now come out by lifting up on freezer cap pull ring. NOTE: Top half of water seal will come with worm shaft.
8. To remove ice breaker from shaft, first remove retainer ring in top of ice breaker.
9. Remove freezer cap and pull ring from ice breaker.
10. Remove cap screw holding shaft through bearing and pull worm shaft free from ice breaker and bearing.
11. If shaft is defective, remove water seal top half and put on new worm shaft before reassembling – when reassembling, by reversing above, put a small amount of Vaseline on shaft end. This will allow shaft to slide smoothly through rubber bottom half of water seal without tearing it.

WATER SEAL

1. To replace water seal, follow steps 1 through 7 under Worm Shaft Removal.
2. Remove 3 bolts holding freezer to fiber mounting adapter.
3. Lift freezer off adapter just high enough to allow bottom bearing and bottom half of water seal to be removed from bottom of freezer tube.
4. Lightly grease bottom half of new water seal and insert face up approximately 1/2" in bottom of freezer tube.
5. Insert bottom bearing in bottom of freezer tube, force approximately 1/8" past bottom tube end. This will allow the positioning ring on fiber adaptor to properly position freezer tube when tightening up the three mounting bolts.
6. After securing mounting bolts, put new top half of water seal on worm shaft the same way as the old seal was removed.
7. Carefully insert worm shaft assembly in freezer tube and into drive coupling on bottom.
8. Replace ice breaker screws, insulation pieces and unit is ready to resume operation.

STORAGE BIN THERMOSTAT:

1. Disconnect electrical supply.
2. Remove bin thermostat bulb from bin location along with its capillary tube.
3. Remove control box cover.
4. Disconnect two spade type electrical leads.
5. Loosen two screws in control mounting bracket.
6. Replace with new control and reassemble in reverse of above.
7. CAUTION: Always check new control power element charge before installation to assure receiving an operative control. A handful of ice on bulb will register an audible 'click' at cut off.

MICRO SWITCH IN SPOUT

1. Remove hood service panel.
2. Remove insulation pieces around freezer spout.
3. Remove micro box cover, loosen two screws at rear of box holding switch in place, lift up.
4. Disconnect electric leads.
5. Reassemble with new micro switch.

MANUAL ON AND OFF SWITCH

1. Remove front service door.
2. Remove two screws holding switch to bracket.
3. Disconnect electrical leads from switch.
4. Remove switch.
5. To replace, reverse procedure.

FREEZER GEARMOTOR

1. The easiest way to change the gearmotor is to remove complete cabinet hood as explained earlier in this section.

2. Pull off left side service panel and look up on underside of left side cabinet panel: 4 screws secure this gearmotor to frame.
3. Remove the four wire leads (2 on micro switch on top of motor, 2 from motor into control box.)
4. Remove 3 bolts thru fiber adapter into gearmotor cover and the 4 bolts holding gearmotor to mounting base.
5. Lift freezer adapter assembly off gearmotor and pull gearmotor out thru left side.

MOTOR COMPRESSOR

1. Remove gas charge.
2. Disconnect wiring from the compressor.
3. Loosen suction and discharge lines and cap off.
4. Remove the compressor hold-down nuts and lift compressor out of the unit.
5. Reverse steps 1 through 4 in replacing compressor.

CONTROL BOX ASSEMBLY

SF-3J

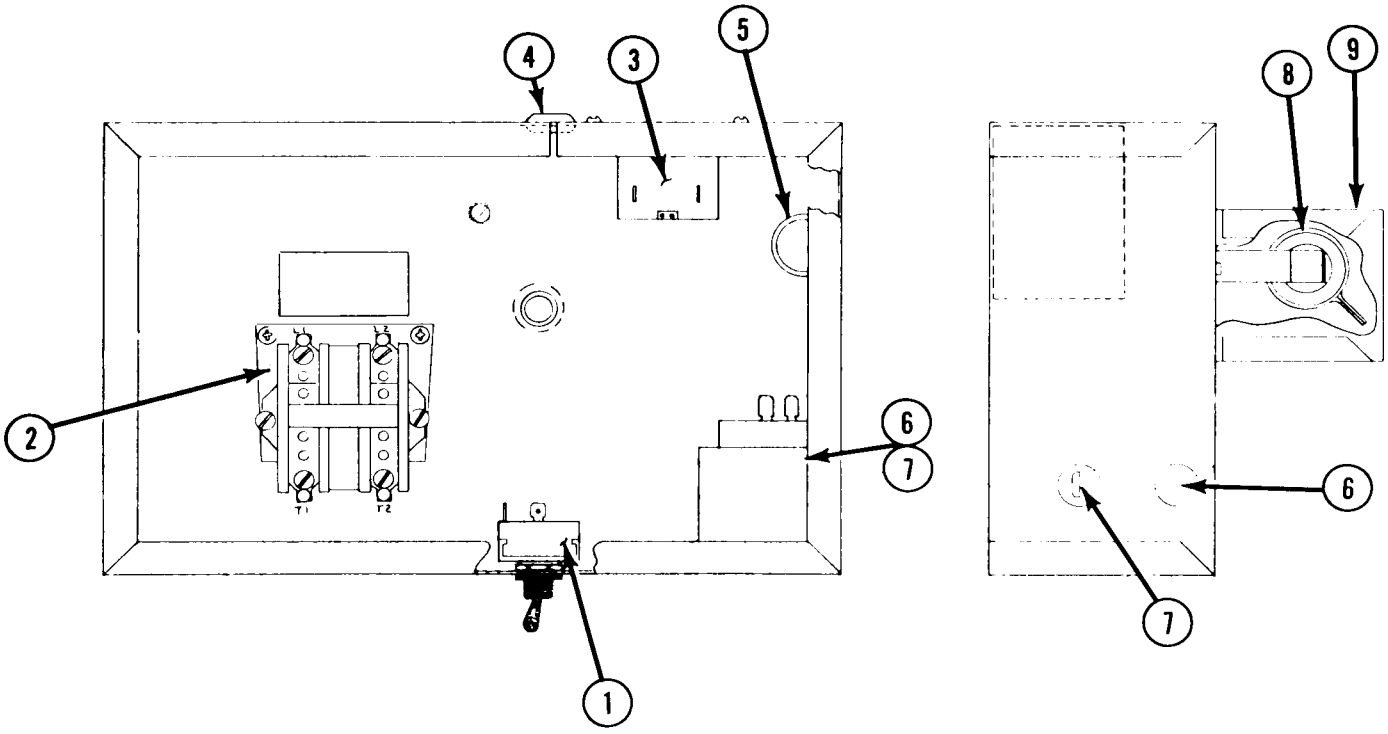

Item No.	Part No.	Name
1.	12-0426-01	Switch
2.	12-0820-02	Contactor
3.	11-0354-00	Bin Thermostat
4.	13-0557-00	Grommet
5.	12-1213-10	Snap Bushing
6.	11-0358-00	Lo Pressure Control
7.	11-0362-00	Hi Pressure Control
8.	12-0481-00	Resistor (Air Cooled Only)
9.	A-14369	Cover (Air Cooled Only)

RESERVOIR ASSEMBLY

ITEM NO.	PART NO.	NAME
1.	A-16012	Reservoir Cover
2.	2-1259	Valve Pin
3.	2-1320	Deflector
4.	S-8770	Inlet Valve
5.	3-1001	Rivet
6.	A-5777	Valve Seat Holder
7.	S-6947	Valve Seat
8.	3-1394	Nut
9.	A-12869	Bracket
10.	S-6715	Stand Pipe
11.	S-8138	Inlet Valve Ass'y
12.	A-13409	Reservoir Body
13.	A-8055	Bracket Nut
14.	A-12067	Float and Arm Ass'y
15.	A-18418-1	Water Deflector
	A-8339	Complete-less cover

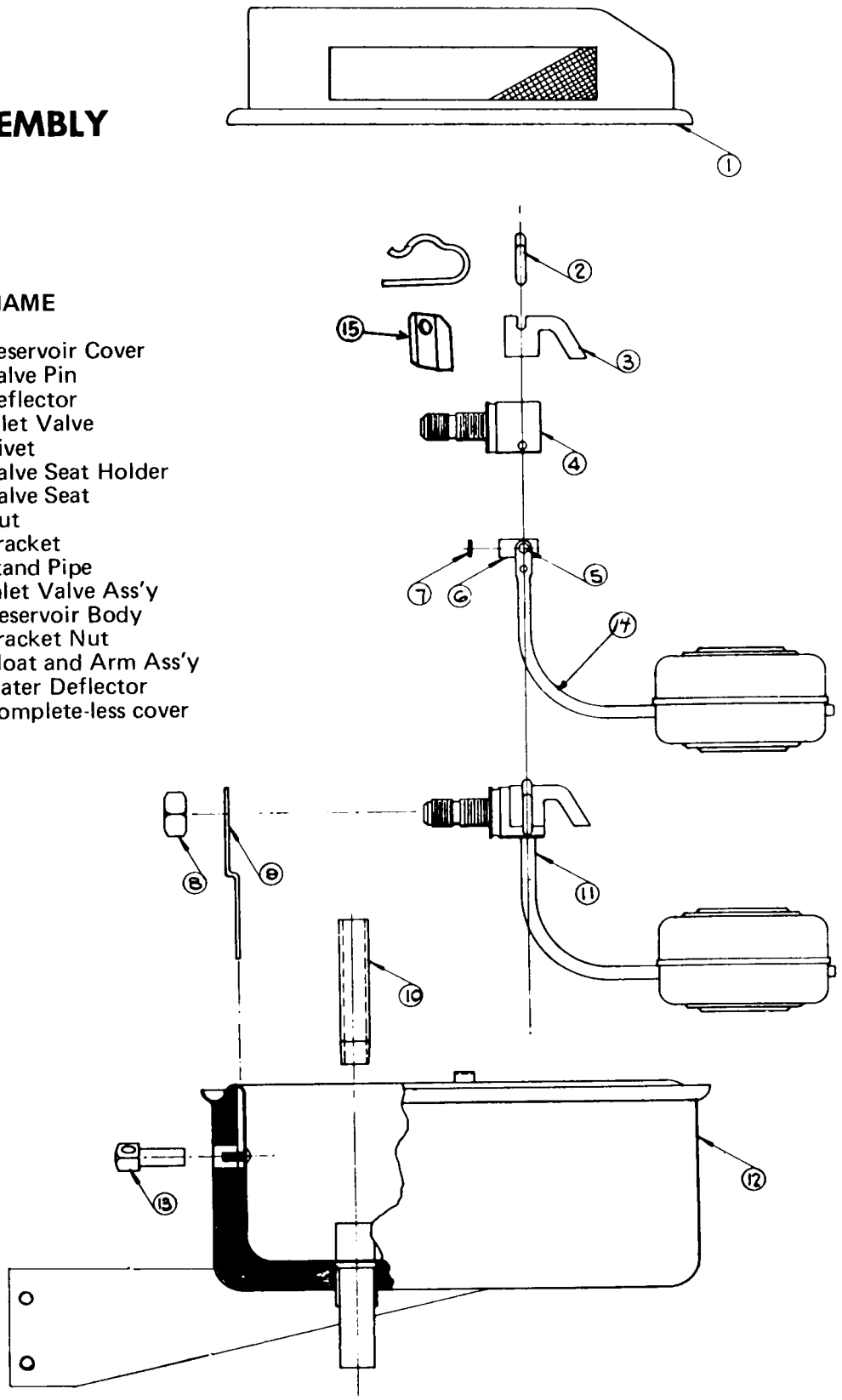

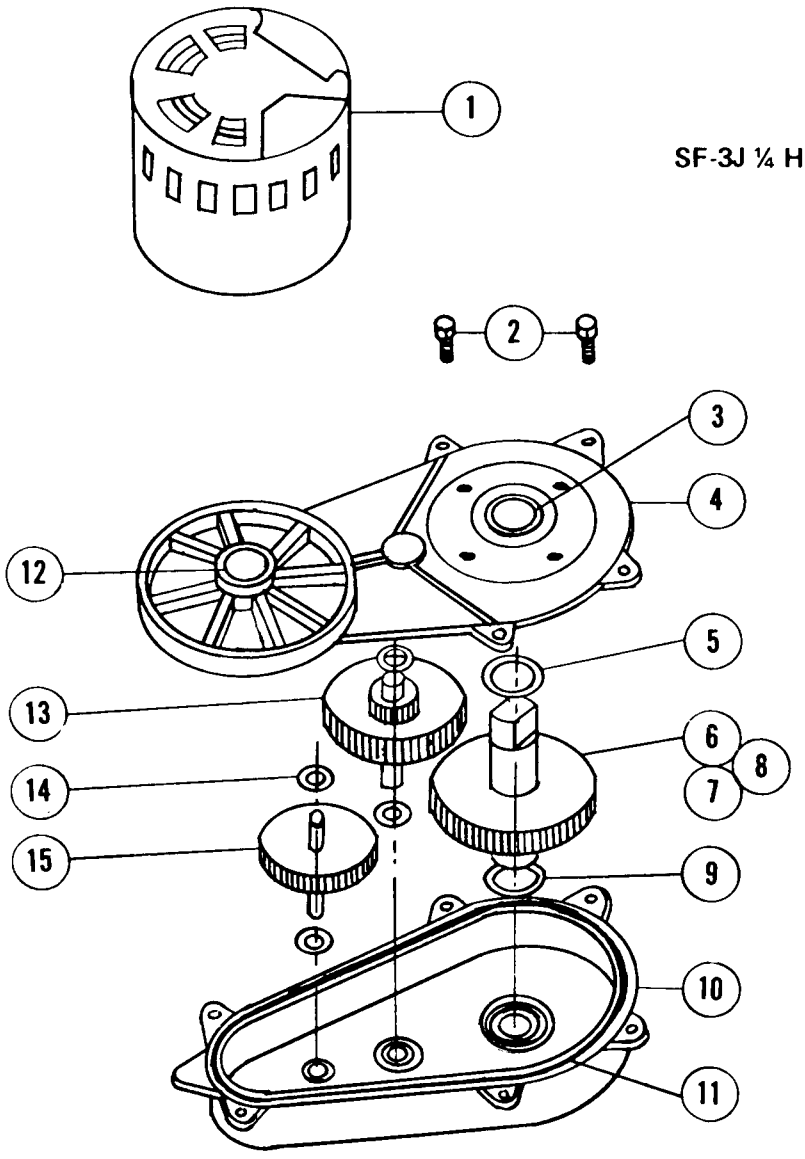

SF-3J ¼ HP GEAR MOTOR ASSY

ITEM NO.	PART NO.	NAME
1.	12-1741-02	Drive Motor 230/60/1
2.	03-1251-01	Flange Screws
3.	2-1607	Grease Seal
4.	A22200	Gear Case Cover
5.	02-1681-00	Washer
6.	2-1653	Gear
7.	2-1652	Shaft
8.	03-1364-00	Key
9.	2-1680	Washer
10.	A22199	Gear Case Assy.
11.	2-1608	O'Ring
12.	2-1606	Grease Seal
13.	2-1604	Gear and Pinion
14.	3-1321	Washer
15.	2-1603	Gear and Pinion
	A-22750-22	Gear Motor Complete 230/60/1

Output Shaft Turns at 10 RPM.

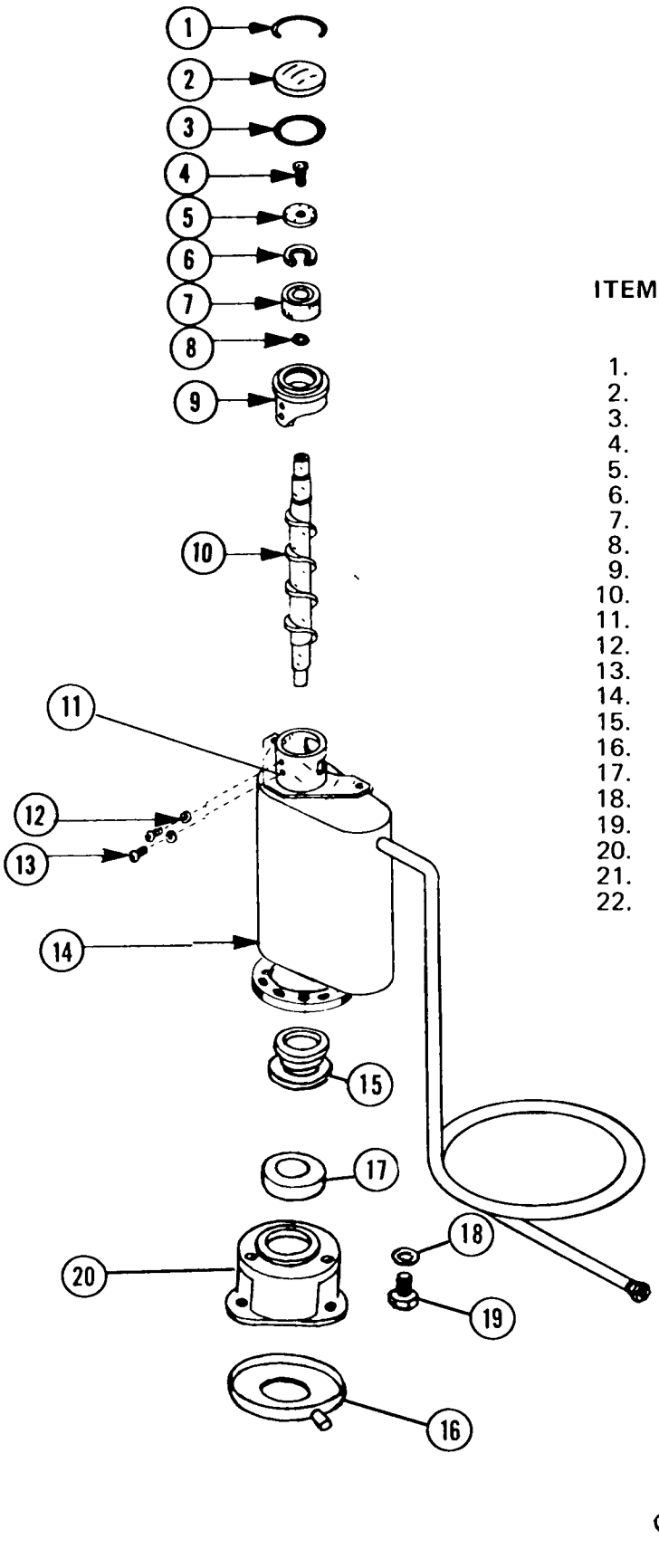

FREEZER ASSEMBLY
SF-3J MODELS

ITEM NO.	PART NO.	DESCRIPTION
1.	A8582	Cap Hook
2.	A8581	Cap
3.	13-617-20	O'Ring
4.	3-1405-36	Cap Screw
5.	A6273	Washer
6.	3-712	Snap Ring
7.	2-646	Bearing
8.	13-617-15	"O" Ring
9.	A8316	Breaker
10.	2-751	Auger
11.	A-18432	Spout Plate
12.	A-19912	Worm Tube – Suction Line
13.	3-1410-3	Washer
14.	3-1403-48	Screw
15.	A-22569	Water Seal
16.	A21290	Drip Pan
17.	2-619	Lower Bearing
18.	3-1417-13	Washer
19.	3-1405-41	Screw
20.	2-1629	Adapter
21.	A23733	Drive Coupling
22.	13-704	Shaft Drip Shield Rubber
	A-19911-1	Freezer Complete (Does not include items 16, 21 & 22)

CHASSIS ASSEMBLY
SF3WJ – Water Cooled

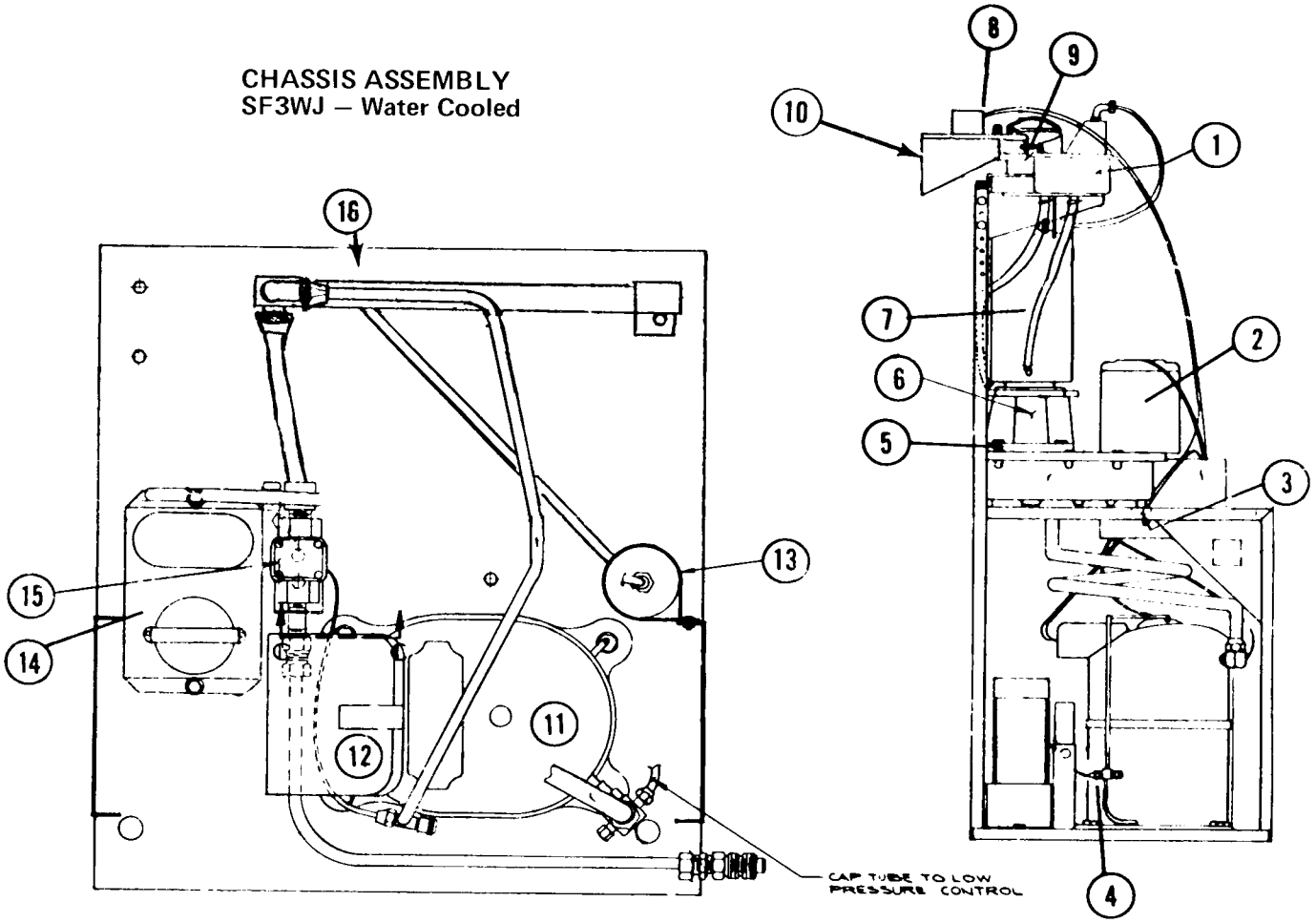

Item No.	Part No.	Name
1.	A-8339	Water Reservoir
2.	A-22750-2	Gear Motor 230/60/1
3.	3-1405-18	Mounting Screws (3/units)
	3-1410-4	Washers
4.	16-563	Service Valve Cap
	16-560	Service Valve Core
5.	A-21290	Drip Pan
	13-704	Gasket
6.	2-1629	Fibre Adapter
	A-23733	Coupling Freezer to Gear Motor
	3-1405-41	Screws into Gear Motor (4/unit)
	3-1417-13	Lockwashers for above
7.	A-19911	Freezer Assembly
8.	A-16350	Spout
9.	12-1018	Spout Micro Switch
10.	A-16563	Spout Pressure Plate
11.	18-2300-2	Compressor only
12.	18-2300-25	Compressor Overload
13.	2-544	Drier
14.	18-1901-30	Start Capacitor
	18-1902-29	Running Capacitor
	18-1903-29	Relay
15.	11-198	Water Regulating Valve
16.	18-354	Condenser

CHASSIS ASSEMBLY

SF-3J — Air Cooled

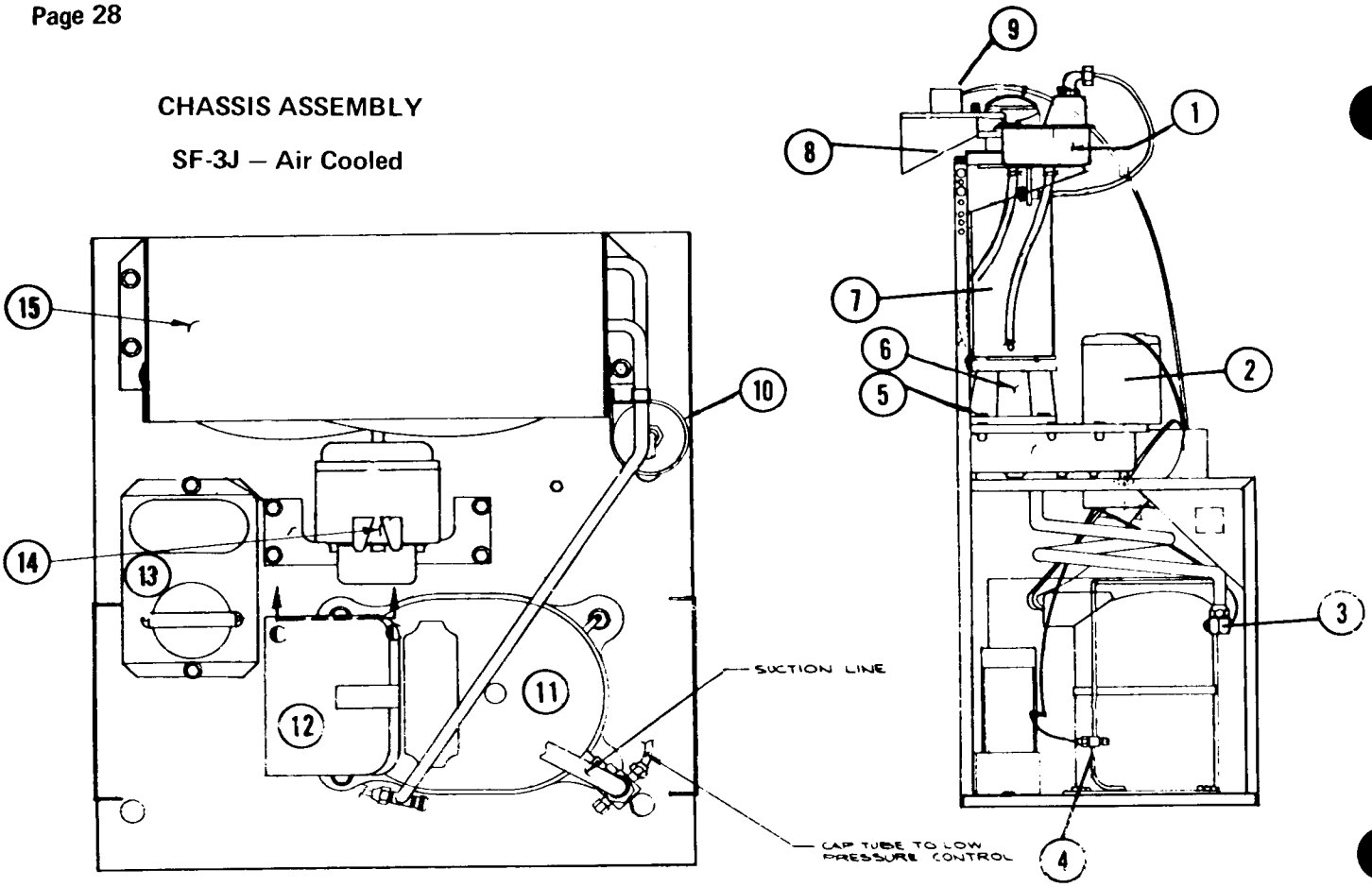

Item No.	Part No.	Name
1.	A-8339	Water Reservoir
2.	A-22750-2	Gear Motor 230/60/1
3.	18-2300-28	5/8" Flare Suction Service Valve
4.	16-563	Service Valve Cap
	16-560	Service Valve Core
5.	A-21290	Drip Pan
	13-704	Gasket
6.	2-1629	Fibre Adapter
	A-23733	Coupling — Freezer to Gear Motor
	3-1405-41	Screws - into Gear Motor (4/unit)
	3-1417-13	Lockwasher for above
7.	A-19911	Freezer Assembly
8.	A-16350	Spout
9.	12-1018	Spout Micro Switch
10.	2-544	Drier
11.	18-2300-2	Compressor only 230/60/1
12.	18-2300-25	Compressor Overload
13.	18-1901-30	Start Capacitor
	18-1902-29	Running Capacitor
	18-1903-29	Relay
14.	12-788-2	Fan Motor
	18-787	Fan Blade
15.	18-530	Condenser
	A-17901	Condenser Shroud

SF-3J CASE ASSEMBLY

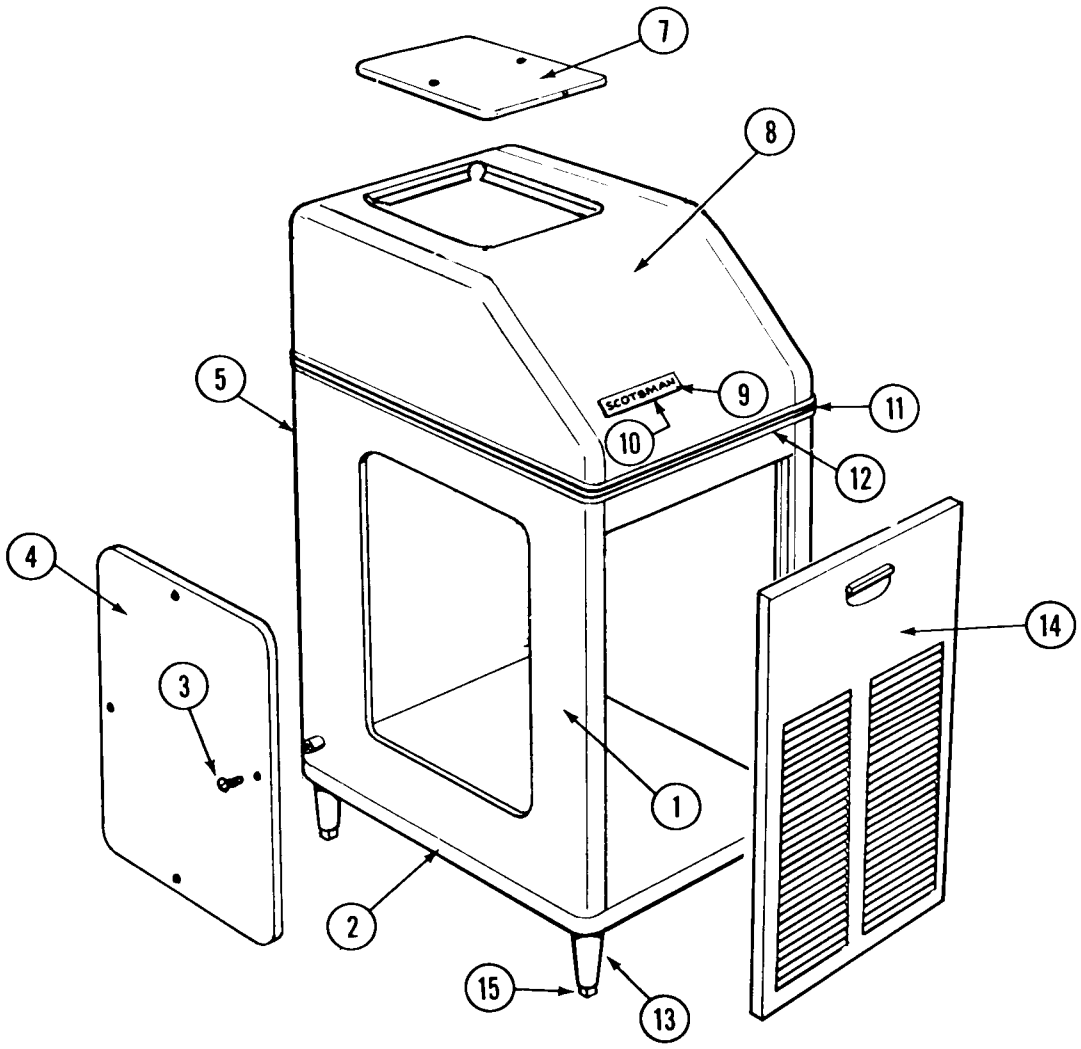

ITEM NO.	PARTS NO. Gray	S.S.	NAME	
1.	A-19927	A-19927-1	Case Assembly (less doors)	
2.	A-8902-3		Moulding Strip (bottom) (2 reqd.)	
3.	3-1419-9		Screw (s.s.)	
4.	S-6713	S-6713-S	Side Door	
5.	A-7247	A-7247-S	Rear Door (*)	
7.	A-7676	A-7676-S	Top Door	
8.	A-21027	A-21027-1	Case Hood (less doors)	
9.	15-156		Scotsman Emblem	
10.	3-271		Speed Nuts	
11.	15-324		Plastic Trim Insert	(per foot)
12.	S-6686		Moulding Strip (top)	
13.	A-15803	A-15803-1	Legs (4 reqd.)	
14.	A-15864	A-15864-2	Front Door	
15.	8-522	8-522-1	Leg Levelers	

(*) Not Shown

SF-3WSJ CASE ASSEMBLY

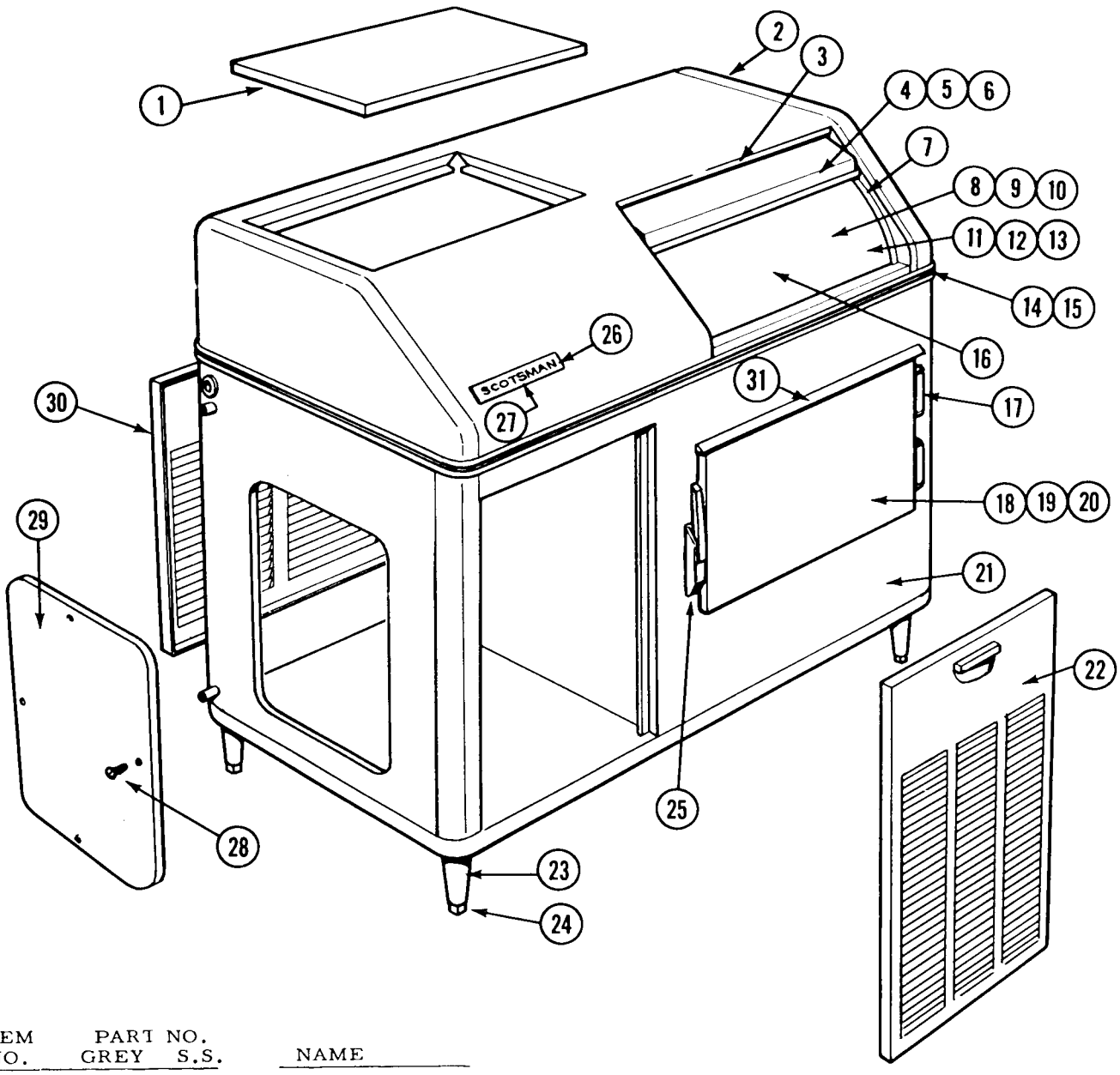

ITEM NO.	PART NO. GREY	PART NO. S.S.	NAME
1.	A-7676	A-7676-S	Top Door
2.	A-21026	A-21026-1	Hood Assy.
3.	2-1736		Door Stop
4.	2-1735	A-15559	Sliding Door
5.	3-640		Door Glides (door)
6.	3-1195		Door Glides (hood)
7.	A-16208		Door Track
8.	A-20176		Storage Bin
10.	A-21022		Drain Assy. *
11.	13-617-11		"O" Ring *
12.	2-1741		Drain Fitting (Top)*
13.	2-1742		Drain (Bottom)*
14.	15-324		Plastic Trim (per ft.)
15.	S-6413		Front Moulding Strip
16.	2-1615		Bulb Holders (2)
17.	2-1569		Hinge (2 reqd.)
18.	A-18300-5	A-18300-2	Door Assy. Complete

ITEM NO.	PART NO. GREY	PART NO. S.S	NAME
19.	13-264		Door Gasket
20.	2-1000		Door Liner
21.	A-19930	A-19930-1	Case Assy. (less doors)
22.	A-15864	A-15864-2	Front Door
23.	A-15803	A-15803-1	Leg
24.	8-522	8-522-1	Leg Leveler
25.	2-1568		Door Latch
26.	15-156		Emblem
27.	3-271		Speednut
28.	3-1419-9		Screw
29.	S-6713	S-6713-S	Side Door
30.	A-7247	A-7247-S	Rear Door
31.	A-16937	A-16937-1	Awning

SERVICE ANALYSIS

SYMPTOM	POSSIBLE CAUSE	CORRECTION
Unit will not run	Blown Fuse	Replace fuse and check for cause of blown fuse.
	Thermostat set too high	Adjust thermostat. 35° cut-out and 45° cut-in.
	Loose electrical connection	Check wiring.
	Switch in OFF position	Turn switch to ON.
	Inoperative master switch	Replace switch.
Compressor cycles intermittently	Low voltage	Check for overloading.
	Dirty Condenser	Clean.
	Air circulation blocked	Move unit to correct.
	Inoperative condenser motor	Replace.
	Non-condensable gases in system	Purge off.
Making wet ice	Surrounding air temperature	Correct or move unit to cooler location.
	Under or over-charge of refrigerant	Recharge with the proper amount.
	High water level in water reservoir	Lower to ¼ inch below overflow pipe.
	Faulty compressor	Repair or replace.
Low ice production	Loss of refrigerant, under or over-charge of refrigerant.	Check and recharge with proper amount of refrigerant.
	Dirty or plugged condenser	Clean condenser
	Low water level in water pan.	Adjust to ¼ inch below overflow pipe.
	Partial restriction in capillary tube or drier	Moisture in system. Overcharge of oil in system. Remove charge and drier. Replace and recharge system.
	Inlet water strainer partially plugged.	Remove screen and clean.
	Corroded or stained worm shaft due to water condition.	Remove worm shaft and clean
Machine runs but makes no ice	Loss or under-charge of refrigerant	Check for leaks and recharge
	Drive gearmotor or drive coupling stripped.	Check. Repair and/or replace.
	Water not entering freezing chamber	Plugged strainer or supply line. Check and clean. Air lock in gravity feed line. Check and remove air lock.
	Moisture in system	Check and remove charge and drier. Replace and recharge.
	Water seal leaking	Replace seal
	Water supply to unit off	Restore water supply to icemaker.

SERVICE ANALYSIS

SYMPTOM	POSSIBLE CAUSE	CORRECTION
Water Leaks	Defective water seal	Replace.
	Gravity feed line leaking	Check hose clamps
	'O' ring in spout casting leaking	Remove spout casting and install new 'O' ring.
	Storage bin drain & connecting fittings leaking.	Check and repair.
	Water level in reservoir too high	Adjust to ¼ inch below overflow pipe.
Excessive noise or chattering	Mineral or scale deposit on auger and inner freezing chamber walls.	Remove and manually polish auger, polish inner chamber walls of freezer barrel. For lighter concentrations use Scotsman Ice Machine Cleaner periodically.
	Low suction	Add gas to raise suction pressure.
	Intermittent water supply	Check & clean water strainer. Check gravity feed line for air lock. Remove air lock
	Water level in reservoir too low.	Adjust to ¼ inch below overflow pipe.
	Gear motor loose on frame	Tighten
	Gearmotor end-play or worn bearings.	Repair or replace.
Machine continues to run with full storage bin	Storage bin thermostat not properly set.	Reset or replace. Rese 35° cut-out, 45° cut-in Check operation with handful of ice.
Gearmotor noise	Low on oil	Remove case cover to check for proper oil level. Top of gears should be covered. Use Sun Oil Co. Prestige 50 EP.

MAINTENANCE INSTRUCTIONS – FLAKERS

THE FOLLOWING MAINTENANCE SHOULD BE SCHEDULED THREE TIMES PER YEAR ON ALL SCOTSMAN SUPER FLAKERS. CALL YOUR AUTHORIZED SCOTSMAN SERVICE DEPARTMENT.

1. Check and clean water strainers and float valve. Depress float valve to insure full stream of water.
2. Check water level and machine level, keep water level below overflow, but as high as possible and still not run out of spout opening with machine off. Water droplets come out of spout with ice at all times. Adjust as required.
3. Clean reservoir and interior of freezer using SCOTSMAN Ice Machine Cleaner.
   A. If machine has been cleaned regularly and no problems such as dry ice or chatter are noticed, clean as per the following instructions:
   a. Set main switch to OFF.
   b. Remove all ice from storage bin.
   c. Turn off water supply or block float. Drain reservoir by disconnecting tube between reservoir and freezer. After draining, reconnect tubing.
   d. Set main switch to ON and pour cleaning solution into reservoir. Do not fill above overflow tube.
      Use 6 oz. of Scotsman cleaner and 1-1/2 qt. hot water.
   e. Continue to make ice on solution until the solution is used up and reservoir is empty.
   f. Set main switch to Off. Remove overflow tube, wash and rinse reservoir, replace overflow tube, turn water on or remove float block.
   g. Turn MAIN SWITCH to ON. Let unit run for at least (15) minutes to flush out any cleaning fluid. Check ice for acid taste. – run until ice tastes sweet.
   h. Turn MAIN SWITCH to OFF. Add hot water to ice bin, using this melt water, thoroughly wash and rinse all surfaces within the storage bin.
   i. Turn MAIN SWITCH to On. Replace Service Door. Unit is ready for normal operation.

NOTE: Cleaning requirements vary according to local water conditions. Visual inspection of the auger before and after cleaning will indicate best procedure to be followed in local areas.

4. Check high and low side pressures. On air-cooled models head pressures range between 130 and 145 PSI. Suction pressure should be above 12 PSI and will range up to 15 PSI depending upon water and ambient temperatures.
5. Check gearmotor operation. Normal running temperatures are in the area of 160° Farenheit, which is hot to the touch.

6. Check top bearing of freezing tube. Remove retainer ring around edge of stamped brass cap. If moisture is around bearing, wipe up and remove grease. Add new grease. Use Beacon No. 325. Replace cap and retainer ring.
7. Clean air-cooled condenser. Inform customer to clean frequently. Always shut off machine when cleaning.
8. Oil condenser fan motor when possible.
9. Check for refrigerant leaks and proper frost line. Should frost out of accumulator at least one-half way to compressor, and in some areas back to service valve.
10. Check for water leaks. Tighten drain line connections. Run water down bin drain line to make sure it is open.
11. Check quality of ice. Ice should be wet when formed but will cure rapidly to normal hardness in bin.
12. Check thermostat and pressure plate cut off in spout. Micro switch cuts off only compressor. Bin thermostat should be set at 10° differential = 35° cut out, 45° cut in.

TABLE OF CONTENTS

SF-5 H MANUAL

	Page
FOREWORD	
TABLE OF CONTENTS	
SPECIFICATIONS	
How the SF-5H Flaker Works	3
Ice Capacity Chart and Photos	4-5
Mechanical Specifications	6
INSTALLATION	
Uncrating	7
Location	7
Bin Selection	8
Stands	8
Erection	8
Plumbing	9
Tower Application	9
Electrical Specification	10
Wiring Diagrams	11-14
Check List	15
SERVICE	
Starting Machine	16
General	17
Refrigeration System	17
Refrigerant Charge	18
Water System	18
Electrical	19
Refrigeration Cycle SF-5	21
Water Cycle	22
Water Cycle (water tower application)	23
MAINTENANCE	
Flexible Coubling Assembly	24
Freezer Assembly	25
Chassis Assembly-Left Side View A.C.	26
Chassis Assembly-Right Side View A.C.	27
Chassis Assembly-Left Side View W.C.	28
Chassis Assembly-Right Side View W.C.	29
Reservoir Assembly	30
Gear Reducer	31
Case Assembly	32
Reducer Grease Substitute Chart	33
Service Analysis	34-35
Maintenance Instructions	36
Parts List	37-39

THIS PAGE
INTENTIONALLY
LEFT BLANK

THIS PAGE
INTENTIONALLY
LEFT BLANK

SPECIFICATIONS

SCOTSMAN Super Flakers are designed for restaurants, super markets, soda fountains, hospitals, bakeries, fish markets, poultry stores, packing plants, etc. It is the finest Ice Maker on the market today. It will work 24 hours a day for you, or only as needed. It produces the highest quality ice available at any price.

Approximately 2000 pounds of SCOTSMAN crushed ice is delivered each 24 hours to the storage bin for immediate use.

SCOTSMAN Super Flakers are easily installed requiring only standard water, drain and electrical connections.

ATTRACTIVE COMPACT CABINET. Grey hammerloid finish with chrome trim, rounded corners, and removable panels for easy access to mechanical parts. Adjustable and removable legs are under cabinet.

SEALED REFRIGERATION SYSTEM. Provides quiet, efficient operation of the machine. Compressor motor is spring mounted and the worm motor is rubber mounted for quiet operation. Compressor motor is covered by a full 5-Year Warranty.

HOW IT WORKS. An exclusive patented ice-making system, wherein water in the constant level float reservoir is fed to the bottom end of the freezing cylinder and turns to ice on the inside of this cylinder. Crushed ice from the refrigerated walls of this cylinder is extruded past the ice breaker at the top of the cylinder by means of a stainless steel auger driven by a motor directly coupled to a double gear reduction drive.

All SCOTSMAN Models SF5H are completely automatic. A manual switch on the front starts the machine, and from then on, produces flakes automatically. When the storage bin fills, the machine automatically shuts off and starts up again when ice is taken from the storage compartment.

Since the SF-5H does not have its own attached bin, it is necessary to use an auxillary bin such as the Model SB-5-1500 SCOTSMAN Super Bin for ice storage. A bin thermostat is mounted in each SF-5H continuous flow type machine for the purpose of mounting control bulb from machine to bin.

SCOTSMAN®

SUPER FLAKER

SF-5

SERIES

Continuous Flow

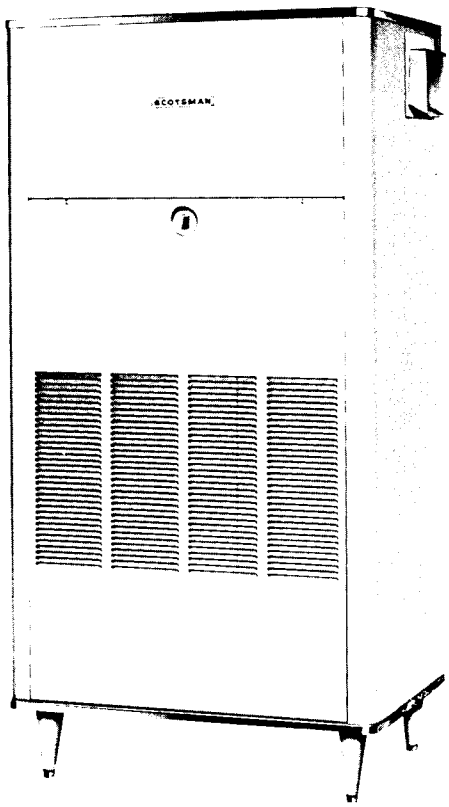

ice making capacity

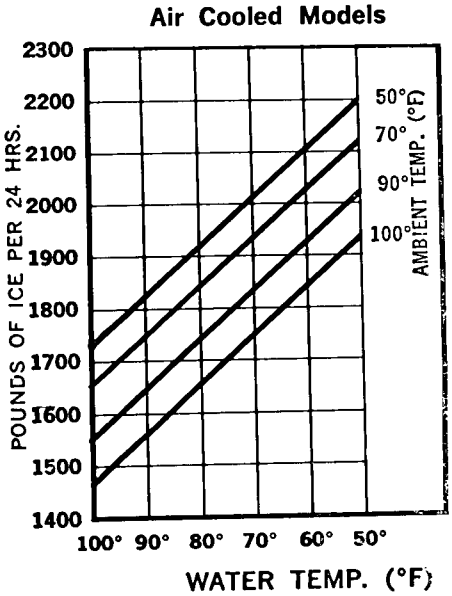

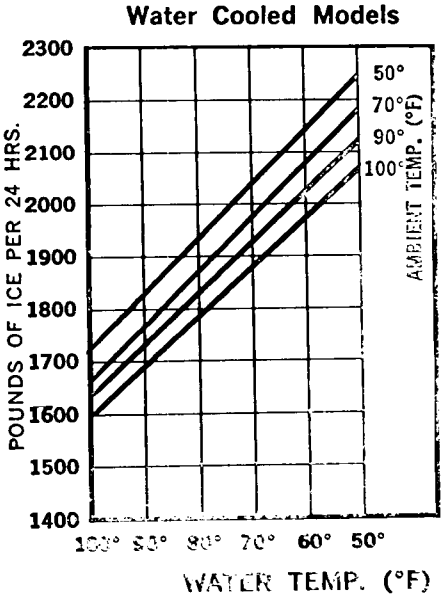

SPECIFICATIONS

SUPER FLAKER SF-5 SERIES (Cont. Flow)	MODEL SF-5H	MODEL SF-5H-SS	MODEL SF-5WH	MODEL SF-5WH-SS
Daily capacity up to 2,000 lbs.	X	X	X	X
Air cooled condenser	X	X		
Water cooled condenser			X	X
Heavy duty 2 HP. Compressor	X	X	X	X
Standard 208-220 V, 60 cy, 3 ph	X	X	X	X
¼" water inlet	X	X	X	X
¾" condenser water inlet NPT			X	X
¾" condenser drain NPT			X	X
¾" water outlet OD			X	X
⅜" water outlet NPT	X	X		
Hammerloid grey exterior	X		X	
Stainless steel exterior		X		X
67" height (with legs)	X	X	X	X
61" height (without legs)	X	X	X	X
32 ½" width	X	X	X	X
24 ½" depth	X	X	X	X
Approximate shipping weight	742	742	742	742

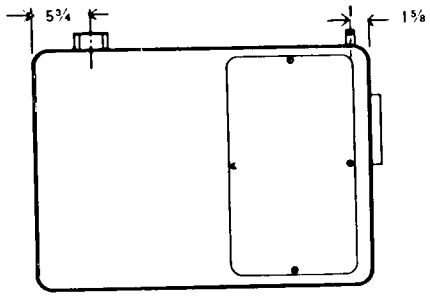

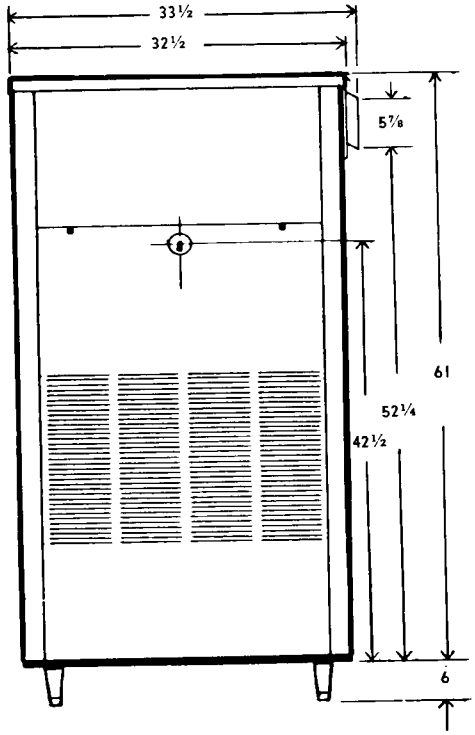

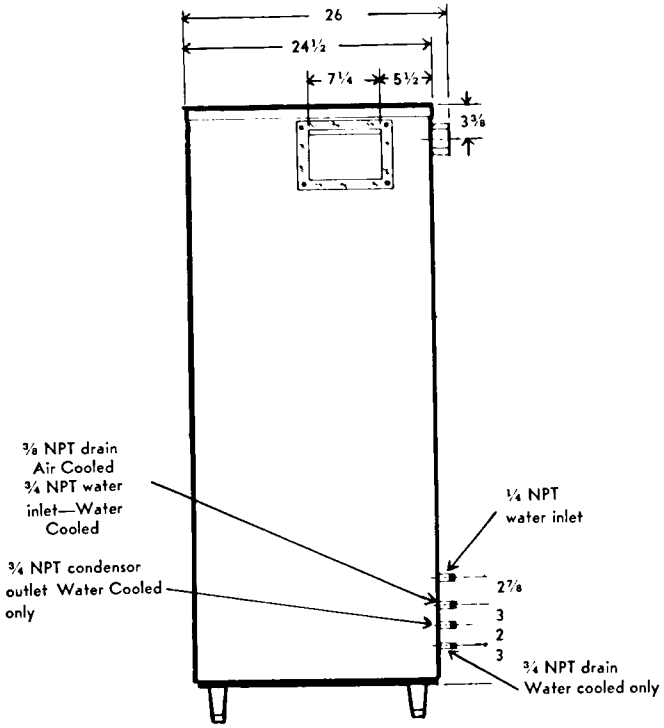

SPECIFICATIONS

	SF-5WH		SF-5-H
Compressor	2 HP		2 HP
Condensor	Water Cooled		Air Cooled
Refrigerant	R-12, 91 oz.		R-12, 91 oz.
Refrigerant Control	Capillary Tube		Capillary Tube
Voltage Characteristics			
Compressor Motor *	230 V - 1 Phase - 60 Cycle		208 V - 3 Phase - 60 Cycle
Worm Drive Motor *	230 V - 1 Phase - 60 Cycle		208 V - 1 Phase - 60 Cycle
Amperage Rating			
Compressor Motor	11.4 amps. 230/60/1		7.4 amps. 208-220/60/3
Worm Drive Motor	2.8 amps.		3.2 amps.
Worm Drive Motor	1/3 HP		1/3 HP
Worm - RPM	4		4
Water Consumption			
to Produce Ice	10 Gallons 1 Hour		10 Gallons 1 Hour
Used by Condensor	Up to 5 Gal. per Minute		
Ice Capacity	See Chart		See Chart
Storage Capacity	Use Remote Bin		Use Remote Bin
	SB5-1500		SB5-1500
Water Pressure Drop *			
Condensor	GPM	Psi-Pressure Drop	
	1.5	2.5	None
	3	8.5	None
	4.5	17.1	None
	6	28.0	
3/8" Water Regulating Valve	1.5		
	3	2.0	
	4.5	4.6	
	6	10.0	

* NOTE: Above Pressure Drops for standard hook-up. Pressure Drop can be reduced by splitting water circuits through condensor and compressor.

* These are listed as standard voltages, others available on request, contact Sales Department for Further Information.

INSTALLATION

UNCRATING OF MACHINE

1. The complete machine comes in one crate. After the crate is removed, inspect for concealed damage. Remove the bottom skid by removing all bolts. Then cut all wires holding support packing from refrigerant line. Then loosen shipping bolts on the compressor. Be sure the compressor is floating free on spring mounts. Then check all refrigerant lines for rubbing or touching other surfaces. Also check for possible transportation damage.

2. Remove all service doors and panels.

3. Remove water reservoir cover and take out paper packing around float ball. Make sure plastic overflow standpipe is securely in place.

4. Remove leg packages in compartment base and install 4 legs in unit base sockets. Level unit with adjustable legs.

5. Loosen motor compressor hold down nuts until motor compressor rides freely on mounting springs.

6. Remove water strainer from storage package for installation in water supply line feeding unit.

7. Open electrical control box and prepare for hook up, use knock outs, cord connectors etc. Then check unit nameplate voltage against building source voltage and make sure they correspond. Caution--Improper voltage supplied to units will void your warranty protection.

8. Select unit location prior to hook up of water drain and electricals in accordance with local and national codes. Minimum room temperatures is 50° Fahrenheit.

9. Remove warranty card and service manual from storage bin. Fill out warranty card completely including model and serial numbers as taken from aluminum plate found behind front service panel and forward to Scotsman Factory, using self-mailing card.

LOCATION OF THE SUPER FLAKER

Select the location before delivering Super Flaker to the job. The following points should be considered when making selection.

1. Convenience. Place the unit as close as possible to the place of ice consumption.

2. Servicing. Install the machine, so it can be serviced from all three sides except the side containing the ice chute opening. Important to leave 24" access to front (containing on-off switch) and left side.

3. Room Temperature. Minimum-50 degrees. Maximum-100 degrees.

4. Bins. Care should be exercised in proper bin selection. Too small a bin will give unsatifactory performance. A bin should have a minimum of 1/2 of machines capacity per day, when the machine shuts off on thermostat.

INSTALLATION

Make sure that users demands are met, by proper bin as well as by proper machine selection. Plan relative location of the machine, so as to enter the bin as close to the top as possible. An upper and a lower access door should be provided in all bins. Bins should also be higher than their width and length dimensions, so that the maximum ice can be stored in the minimum Cubic feet of space. A bin designed in this fashion, will be the most convenient to the user. Too large a bin can also cause trouble. Excessive melting of ice will occur if the bin is larger than required. Proper bin selection is important to the success of the ice machine installation. Suggest SCOTSMAN SB5-1500 bin be used.

5. Stands. A SCOTSMAN machine stand should be used if the machine is located beside the bin. Care was exercised in making the stand strong enough to support the weight. In designing the stand, plan for servicing of the machine from front, top, and sides. Care should be used in selecting a bin that has been specially reinforced. Standard Bins are usually not sufficiently reinforced for this purpose. An unsteady platform will cause excessive vibration. Specially built bins can provide proper support and allow for a servicing platform. Suggest SCOTSMAN MS15H-5 Stand.

6. Erection. For elevations in excess of four feet, or in close quarters, chain falls should be used. Three men will usually be necessary, unless an easy installation is encountered. For locations under four feet the use of skid boards and rollers are practical.

7. Bin Thermostat. Locate the thermostat bulb as high as possible in the bin and still allow the machine to cut off before ice builds up in the chute. If this occurs ice can stick in the chute, keeping the machine off, after there is a need for ice production. The capillary can usually enter through the chute opening. Keep the bulb and capillary line away from shovels.

8. Ice Chutes. If the outlet of the machine is remote from the bin, a chute will be required. Stainless steel is an excellent material for this purpose where its' cost is not prohibitive. Angles or ledges of less than 45° should not be used. Ice will cling to this surface and either melt excessively or jam in the chute. The sharper the drop the better. If straight down, do not insulate, unless necessary.

INSTALLATION

WATER SUPPLY

The recommended water supply line to ice freezer is 3/8" OD Copper tubing. Connect to cold water supply casting 1/4" N P T with regular plumbing fittings, with a shut-off valve installed with accessible place between supply line and machine. A water strainer should be installed with the unit and mounted with clean-out plug down. Locate the strainer next to the machine with the arrow in the direction of the flow. Most plumbing codes also call for double check valves in the water supply line.

On water cooled models the water inlet supply line to water cooled condenser should be 1/2" OD Copper tube or equivilant. Connect to the 3/4" female pipe casting on machine. Use care in connecting water line to the machine. Incoming water goes through the water regulating valve first and then to the water cooled condenser. Observe arrow on water regulating valve. Water supply must be installed to conform with local code. In some cases, a licensed plumber and/or a plumbing permit will be required.

If tower is used several precautions should be observed:

1. Leave Water Regulating Valve in the system.

2. Seperate the make-up water for the Reservoir from the Tower water. Only city water should be used for ice making.

3. Use 5/8" tower water lines or larger, depending on the length of run. Over 30' - use 7/8" OD lines.

4. Notice: A tower can freeze in the winter and the Scotsman Flaker will be in operation 12months per year. An indoor tower and pump can be used with outdoor air ducted in and out, if the fan cycles on water temperature to prevent freezing. An indoor sump can also be used. An auxilliary tower and city water hook-up will also prove satisfactory in some climates. City water in the winter and tower water in the summer. Consult your tower and pump manufacturers for proper sizing-see specifications, page 4. In no event should less than a nominal 2 ton tower, or less than 1/2 HP high pressure tower pump be used.

5. Split water circuit between compressor wrap-around and condensor.

DRAIN

The recommended drain from the auxillary bin is 1/2" OD Copper Tubing. Icemaker drain casting is female 3/4" N P T. All drains must be run to an open trapped vented drain. If drain is a long run, allow a 1/4" pitch per foot. Drain must be installed to conform with local code.

INSTALLATION

ELECTRICAL INSTALLATION:

		SF-5	SF-5 - 3
Compressor	H.P.	2	2
	Voltage	230	208-220
	Amp. Rating	11.4	7.4
	Watts Input	2020	1560
	Cycle	60	60
	Phase	Single	Three
Drive Motor	H.P.	1/3	1/3
	Voltage	230	208
	Amp. Rating	2.8	3.2
	Cycle	60	60
	Phase	Single	Three

ELECTRICAL CONNECTIONS:

SF-5	SF-5 - 3
230 Volts	208 Volts
60 Cycle, 1 Phase	60 Cycle, 3 Phase
30 Amp. Circuit	20 Amp. Circuit

Be certain that the Super Flakers are on their own circuit and individually fused. The maximum allowable voltage variation should not exceed 10 per cent of the nameplate rating even under starting conditions. Low voltage can cause erratic operation, and may be responsible for serious damage to the overload switch and motor windings.

All external wiring should conform to National Underwriters and Local Electrical Code requirements. Usually an electrical permit and the services of a licensed electrician will be required.

WIRING DIAGRAM

WATER COOLED

208-220/60/3

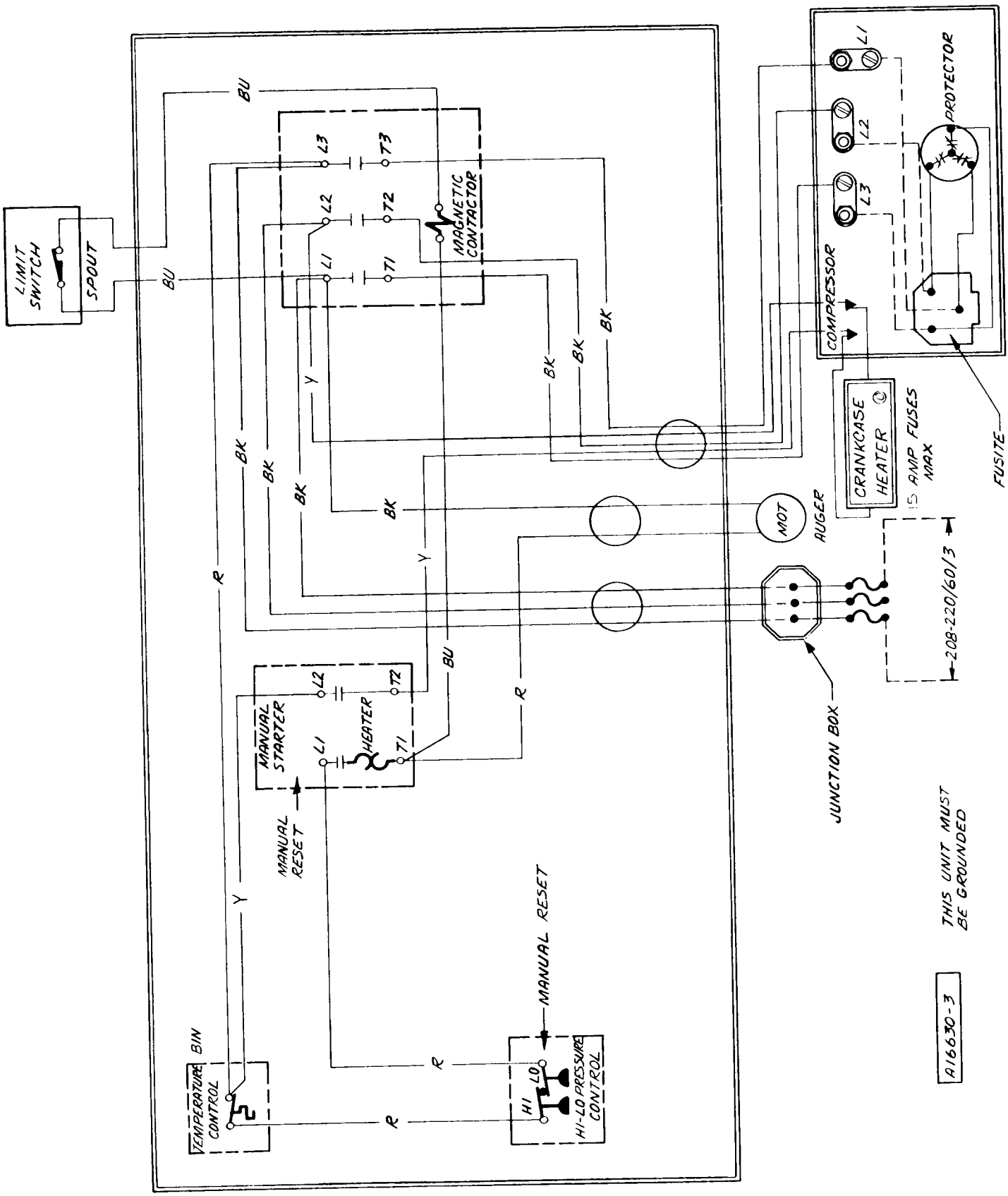

WIRING DIAGRAM

AIR COOLED

208-220/60/3

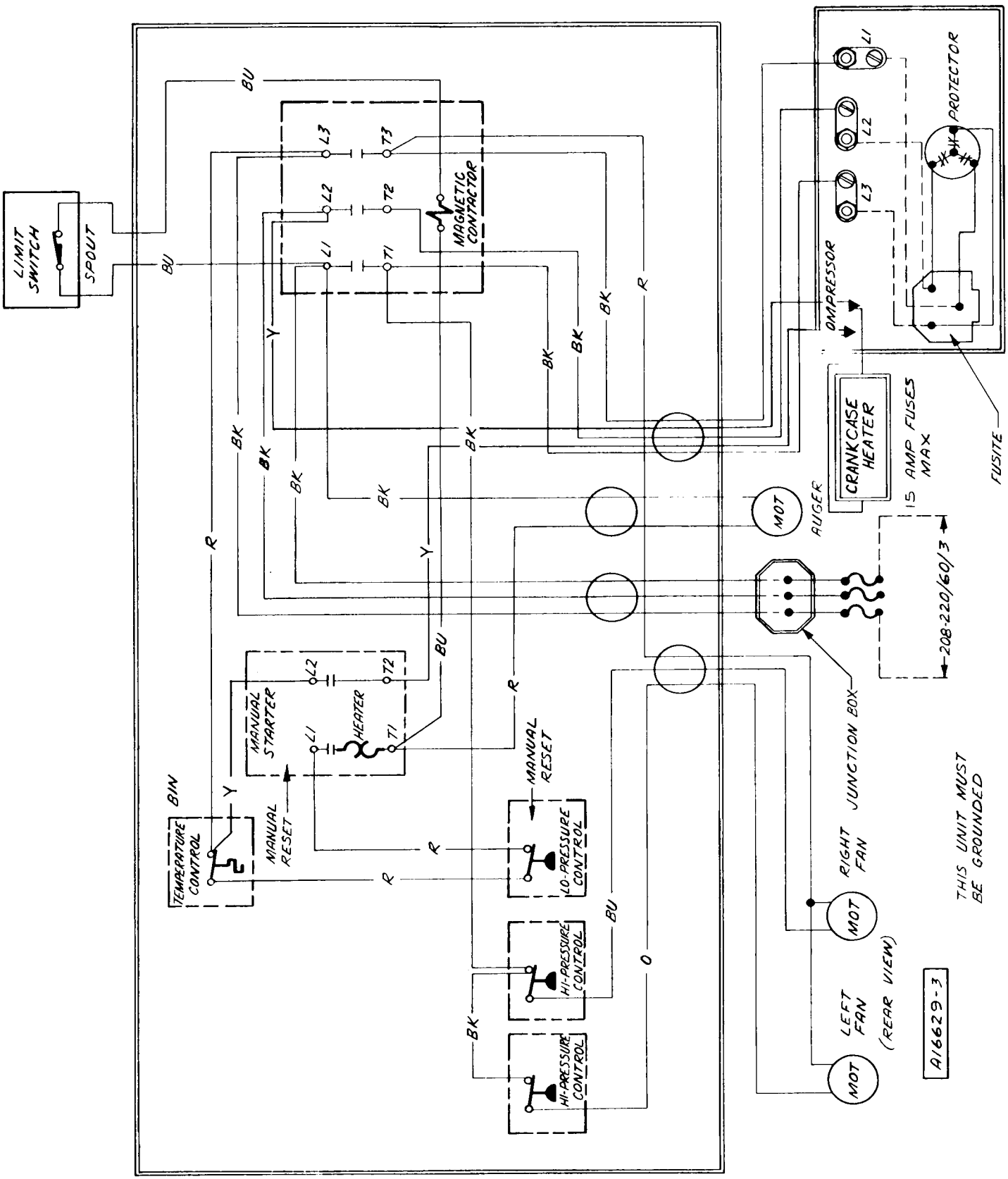

WIRING DIAGRAM

WATER COOLED

230/60/1

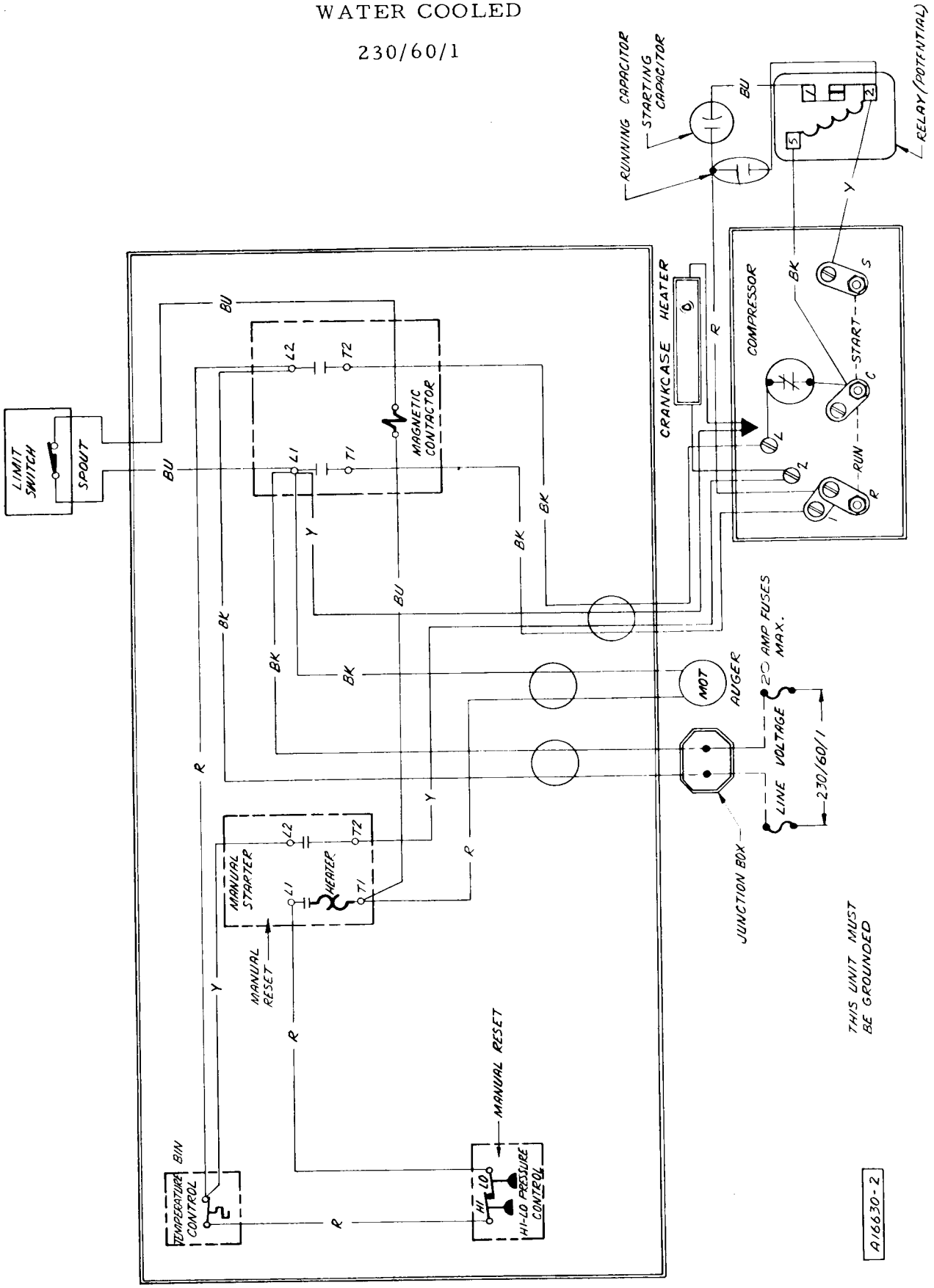

WIRING DIAGRAM

AIR COOLED

230/60/1

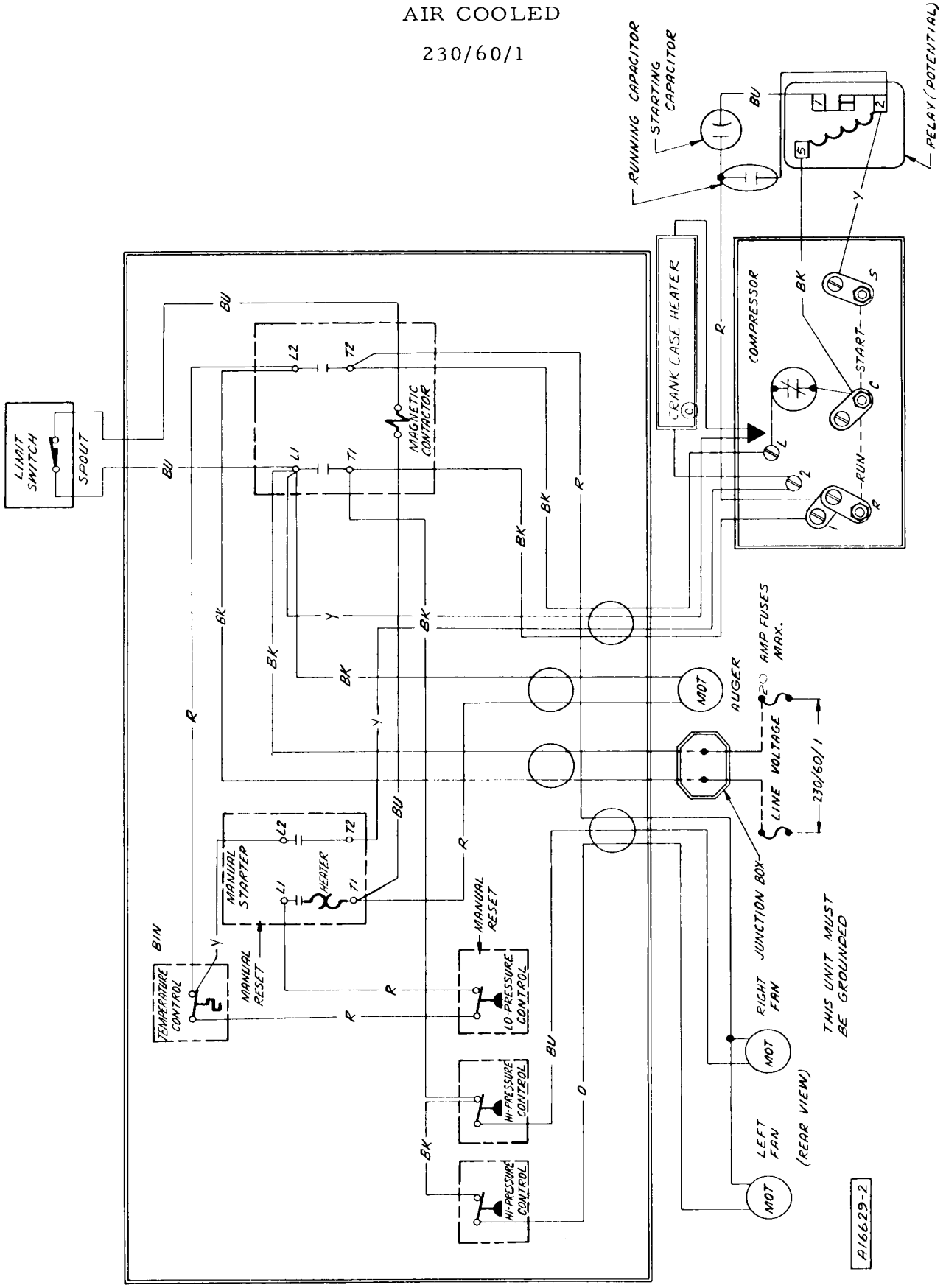

INSTALLATION

FINAL CHECK LIST

1. Is the unit level? (IMPORTANT)
2. Have all electrical and piping connections been made?
3. Has the voltage been tested and checked against the nameplate rating?
4. Have the compressor hold-down bolts been loosened so the compressor rides freely on its mounting springs.
5. Is the water supply valve open and the electric power on?
6. Is the water reservoir filled and shut off?
7. Is the unit clean?
8. Has the owner been given the operating manual, and has he been instructed on how to operate the machine?
9. Have the installation and warranty cards been filled out? This is the owner's protection as well as the sellers.
10. Check all refrigerant and conduit lines to guard against vibration and possible failure.
11. Have you left your Business name and phone number in case of emergency calls?

SERVICE

STARTING THE MACHINE

When the machine is placed and inspected as per instructions, and all plumbing and electrical connections are completed and tested, turn on the water supply. Be sure the float cover is removed to check on the float operation and water level in the water reservoir. Be sure the water reservoir is filled before starting the machine. Water level should be 1/4 inch below the reservoir overflow pipe.

When this is completed, turn on the manual switch on the front of the cabinet and the machine is in automatic operation. In two or three minutes ice will start dropping off the worm shafts and out the ice chute. Let machine operate for at least 30 minutes, and check for any excess noise other than the normal compressor noise. Test the ice storage control bulb by holding a handful of ice around the bulb until machine shuts off -- one minute should be normal for the control to function. Within minutes after the ice is removed, the bulb will warm up and machine will automatically start up. The control is factory set, and should not be reset until this test is made. Normal setting of this control should be approximately 35 degrees cut-out, and 45 degrees cut-in.

Check pressure settings at time of start-up. Set head pressure at 135 psi. Frost line should extend approximately 18" out of evaporators if properly charged with refrigerant and suction pressure will be near 14 psi with 70° F. inlet water.

Explain the machine to the owner, showing him how the machine works, and go over the owner's instruction sheet with him. Answer all the owner's questions about the machine, and do not leave with any doubt in the owner's mind about the machine, how to operate it or where to reach you should he need service on the machine. Call back the next day to check the machine again, and answer any other questions the owner may have.

SERVICE

The Scotsman Super Flakers are well designed, ruggedly constructed, automatic Ice Machines. The Scotsman Super Flaker incorporates the simplest ice making principle ever developed and have proved to give years of trouble free service. However, like any refrigeration equipment, the better user and serviceman understand it, the better the machine will perform. This section of the manual is devoted to service.

GENERAL INFORMATION

All models of the Super Flaker work on the same principle. The vertical freezing chambers are kept full of water by gravity feed lines from the water reservoir located in the machine compartment. A constant water level is maintained in the water reservoir by a float operated inlet valve. The freezing chambers are refrigerated around the outside by copper wound evaporator coil fed by a capillary tube refrigeration system. Inside the freezing chambers are stainless steel augers driven by a motor through a gear reducer. Connected by couplings, augers revolve at 4 RPM, carrying ice from the inner section of the freezing chambers, and extrudes the ice upward thru the top of the chamber for deposit in the storage compartment.

REFRIGERATION SYSTEM

The Super Flaker model SF-5 H is equipped with a capillary tube system, and is designed to operate at approximately 14 pounds suction pressure, 135 psi head pressure.

The freezing chamber on all models consist of an inner tube wrapped with a copper coil and enclosed by an outer shell. Refrigerant is fed in the wound evaporator at the top, traveling down through the coil, and out the bottom. The suction line is attached to the other tube and is not connected to the evaporator coil. The refrigerant travels back up the tube on the outside of the coil to the suction port, creating a highly efficient evaporator.

SERVICE

Service gauge connections are available on both high and low-side compressor service valves.

To install gauges to any of these connections, replace 1/8 inch IP plug with 1/8 inch MPT x 1/4 inch flare half union. Purge free of any non-condensable gases before attaching gauges.

REFRIGERANT CHARGE

The below refrigerant charge is approximate. When charging, set at 135 psi head pressure and charge so that frost line extends out of evaporator one half way to compressor after fifteen minutes of operation.

Model	Refrigerant Charge	Oil Level
SF-5 H	91 oz. R-12	Oil level should be kept at 1/3 way up sight glass. Do not fill over 1/2.

WATER SYSTEM

The water system consists of a water reservoir installed in the top front side of the machine.

A water level is maintained in the water reservoir by a float operated valve. The water is piped from water reservoir to the freezing chamber by a gravity feed line maintaining an equal water level. A removable overflow pipe is installed in the water reservoir for cleaning the reservoir as well as preventing damage should the inlet water valve fail.

The water reservoir is equipped with a 2 inch air gap to prevent back siphoning and meet all health codes.

The water level in the water reservoir is adjusted by bending float rod linkage adjustment. The water level should be set 1/4 inch below the overflow pipe.

A water strainer should be installed in supply line.

SERVICE

ELECTRICAL SYSTEM

The electrical circuit consists of condensing unit, drive motor, hi-low pressure cut-out, storage bin thermostat, "on" and "off" switch, micro (safety) switches, and starter switches.

A. Condensing Unit.

The compressor terminal box houses the motor compressor terminal block, and the motor overload Klixon. To gain access to the terminal box, remove the two screws holding the bevelled metal cover. On the single phase models the starting capacitors, running capacitors and starting relays are housed and fastened to the unit base.

B. Drive Motors.

Model SF-5 H Flakers are equipped with standard 5/8 inch shaft, 1/3 HP, capacitor start, induction motors. These motors turn counter clockwise and may be replaced with any standard make motor corresponding to the nameplate rating. (Be sure motor runs counter clockwise viewed from the shaft end.)

C. High-Low Pressure Cut-Out. Hand Reset.

Ranco control is located on the frame assembly. Factory settings cut-out 2 lbs.--cut in-27 lbs. on low pressure and 180 psi on high pressure. This control prevents operation at low refrigerant pressures. Shuts off entire unit in case of water failure to condensor.

D. Storage Bin Thermostat.

Bin control is located on frame assembly. Factory settings 35° cut-out--45° cut-in. This control shuts off complete machine when ice in storage bin builds up to control bulb.

SERVICE

E. Micro Safety Switch.

The micro switch is located in the top of the ice chute. The switch is operated by a plate in top of the ice chute by the ice backing up in the chute should the storage bin thermostat fail. Switch will shut off the condensing unit only, when operated.

F. Magnetic Starters.

One Allen Bradley three phase starter and one contactor are used on both the SF-5 and the SF-5-3 phase models. The contactor serves the motor compressor and the starter is used for the drive motor. Using 3 phase starters on the single phase motors allows for an extra set of contacts and relays to facilitate field repairs and helps with the stocking problem when both 3 phase and single phase units are used.

G. Couplings--Drive Motor to Gear Reducer.

Plastic high-speed couplings.

H. Gear Reducers.

Winsmith Series (5) C.V.D. Double reduction-Overall reduction 441. Primary reduction 24.5 to 1--Secondary reduction 18 to 1/4 RPM on output shaft. Input (Hi speed) shaft size 5/8" with Keyway. Output (Slo speed) shaft size 1 1/4" with Keyway.

I. Water Cooled Condensor.

Heat-X Model CIC-200 2 HP

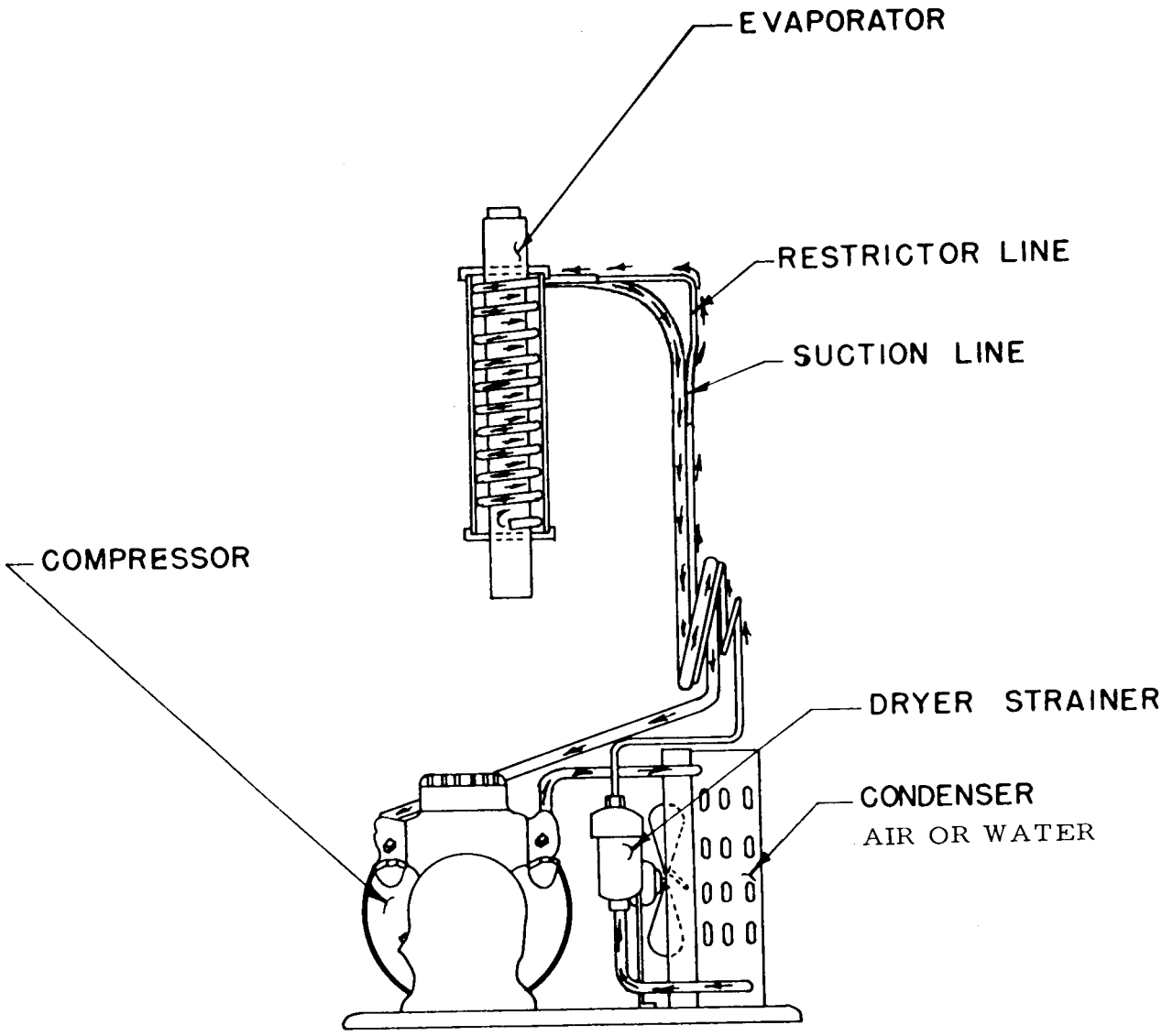

REFRIGERATION CYCLE

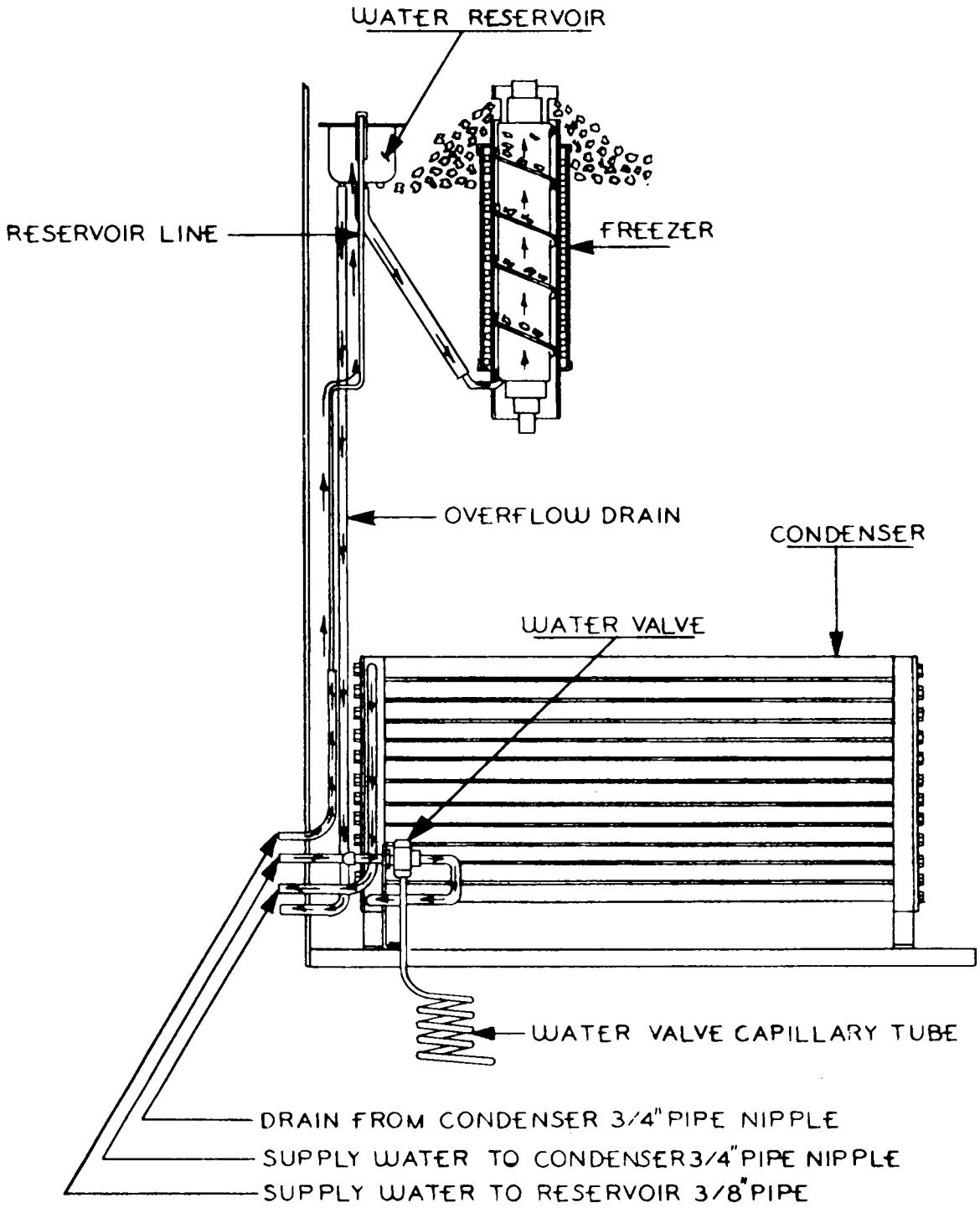
WATER RESERVOIR
RESERVOIR LINE
FREEZER
OVERFLOW DRAIN
CONDENSER
WATER VALVE
WATER VALVE CAPILLARY TUBE
DRAIN FROM CONDENSER 3/4" PIPE NIPPLE
SUPPLY WATER TO CONDENSER 3/4" PIPE NIPPLE
SUPPLY WATER TO RESERVOIR 3/8" PIPE

WATER CYCLE

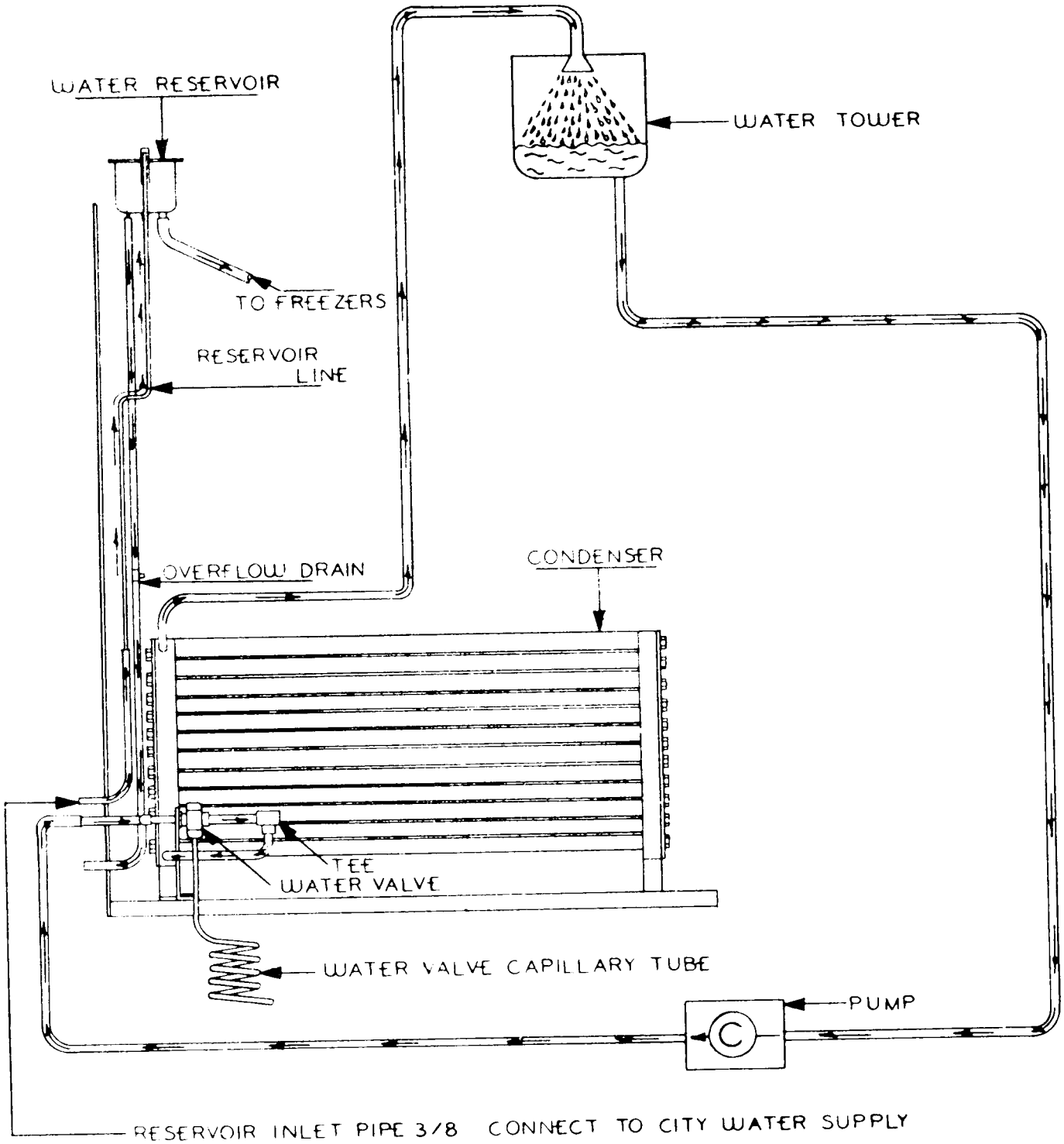
WATER RESERVOIR
WATER TOWER
TO FREEZERS
RESERVOIR LINE
OVERFLOW DRAIN
CONDENSER
TEE
WATER VALVE
WATER VALVE CAPILLARY TUBE
PUMP
RESERVOIR INLET PIPE 3/8 CONNECT TO CITY WATER SUPPLY

WATER CYCLE

SF-5 — FLEXIBLE COUPLING ASSEMBLY

Part #A-18341

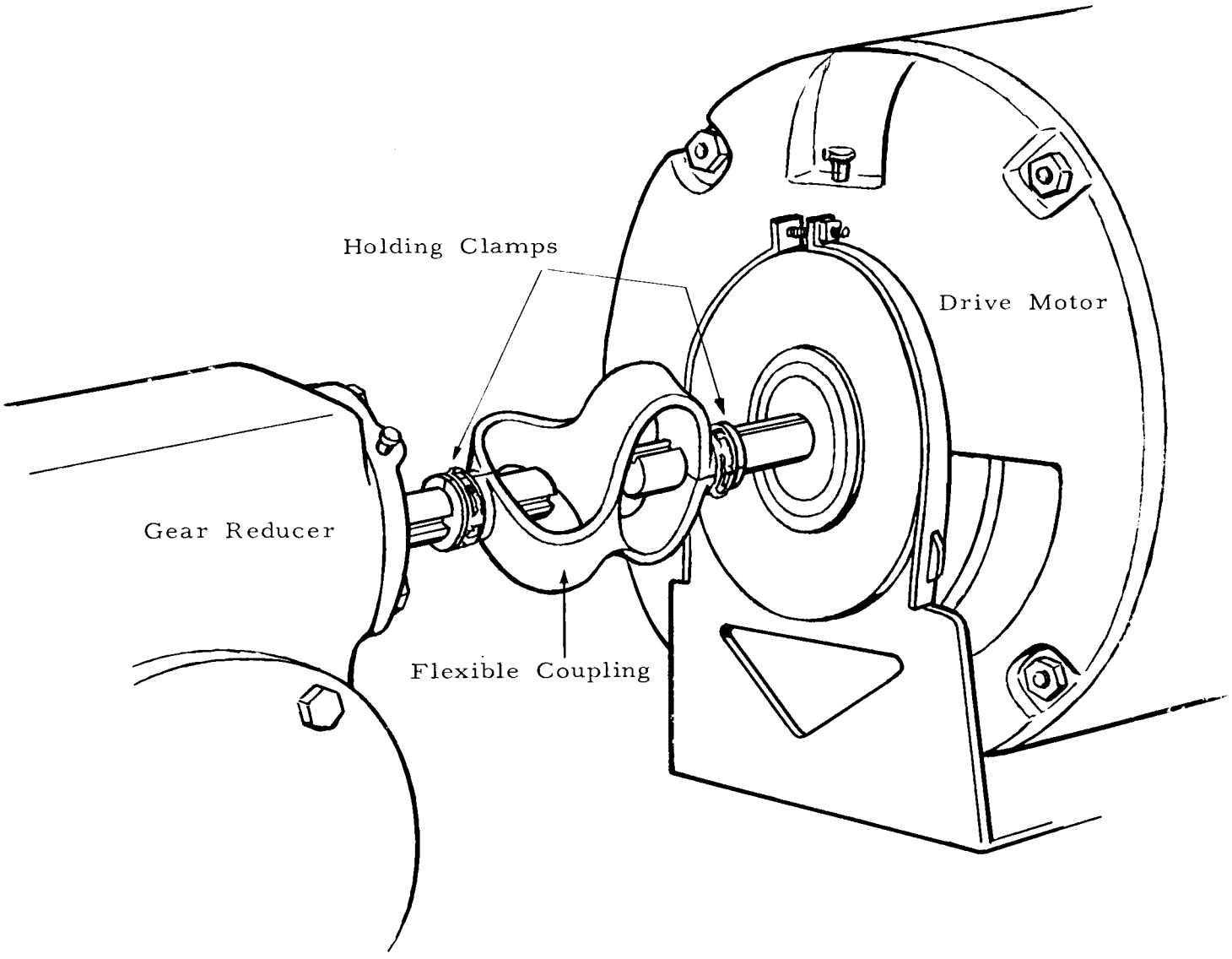

Flexible coupling allows larger tolerance of mis-alignment between drive motor and gear reducer shafts. Flexible coupling assembly is completely interchangeable with former metal coupling.

FREEZER ASSEMBLY
SF-5
Used on SF-5 "G" and "H" models

NOTE: ICE BREAKER HAS TEN HOLES AROUND CIRCUMFRENCE, SIX OF THESE ARE USED TO SECURE BREAKER TO FREEZER BARREL. THE FOUR REMAINING HOLES ARE THREADED AND ARE USED TO LIFT BREAKER AND WORM SHAFT UP. YOU REMOVE THE SIX HOLDING SCREWS, RE-INSERT (4) SCREWS INTO LIFTER OR THREADED HOLES, THESE HAVE NO BOTTOM ON BARREL AND BY EVENLY DRAWING THEM DOWN, ICE BREAKER AND WORM IS LIFTED UP.

NOTE: LOWER BEARING OR WATER SEAL CANNOT BE CHANGED FROM BOTTOM MUST BE PULLED OUT FROM ON TOP.

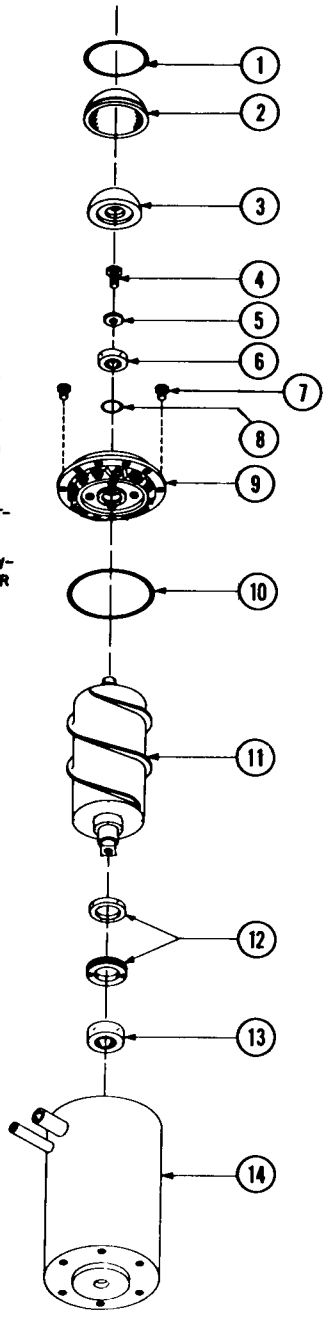

ITEM NO.	PART NO.	NAME
1.	2-991	'O' Ring
2.	13-231	Rubber Cap
3.	A-9047	Styrofoam Cap
4.	3-715	Screw
5.	A-6273	Washer
6.	2-619	Top Bearing
7.	3-785	Screws (6 required)
8.	2-643	'O' Ring
9.	A-8818	Ice Breaker
	A-11351	Ice Breaker (with bearing)
10.	2-778	'O' Ring
11.	A-9006	Worm Shaft Assembly
12.	2-776	Water Seal
13.	2-775	Lower Bearing
14.	A-8858	Freezer Worm Tube
	A-8853	Complete Freezer Ass'y (all above parts assembled)

SF-5 CHASSIS ASSEMBLY

Models "F", "G" and "H"
Left Side View Air Cooled

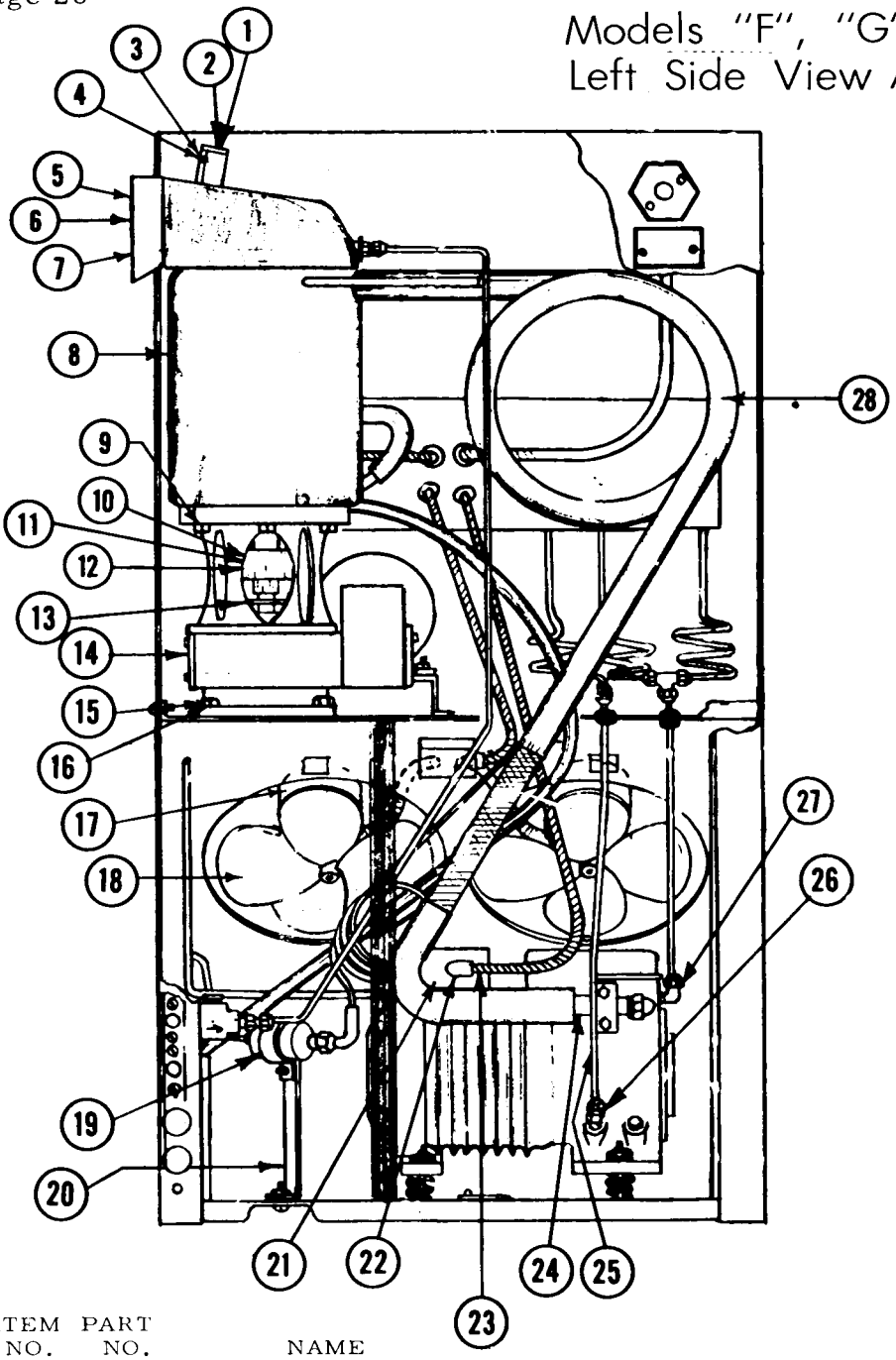

NOTE: "F" and "G" Models

A-13683	Micro Box
A-13684	Micro Box Cover
12-984	Micro Switch
A-13680	Pressure Plate
A-13674	Spout Complete

ITEM NO.	PART NO.	NAME
1.	A-14975	Micro Box
2.	A-14241	Micro Box Cover
3.	12-1018	Micro Switch (*)
4.	3-173	Screw
5.	A-16670	Pressure Plate (*)
6.	2-1321	Spring
7.	A-16668	Spout, Only te
8.	A-8853	Freezer Complete (less suction line)
9.	3-785	5/16x24x1" Screw (6)
10.	A-8895	Coupling
11.	A-6166	Key
12.	3-385	5/16x16 Set Screw
13.	13-152	Rubber Shield
14.	2-768	Gear Reducer
15.	3-372	1/2" Spring Washer (2)
16.	3-333	1/2x13x1-1/4" Bolt (4)

ITEM NO.	PART NO.	NAME
17.	18-752-2	Fan Motor (2) 230/60/1
	18-752-7	Fan Motor (2) 208/60/1
18.	18-751	Fan Blades (2)
19.	2-822	Drier
20.	A-6355	Drier Bracket
21.	18-734	Klixon (*)
22.	18-735	Terminal Assembly (*)
23.	18-749	Terminal Board (*)
24.	18-732	Suction Service Valve
25.	18-736	Suction Service Valve Gasket (*)
26.	16-165	Union
27.	16-190	Ell
28.	A-11805	Suction Line-Cap Tube Ass'y Assembly

(*) Not Shown

SF-5 CHASSIS ASSEMBLY

Models "F", "G", "H"

Right Side View Air Cooled

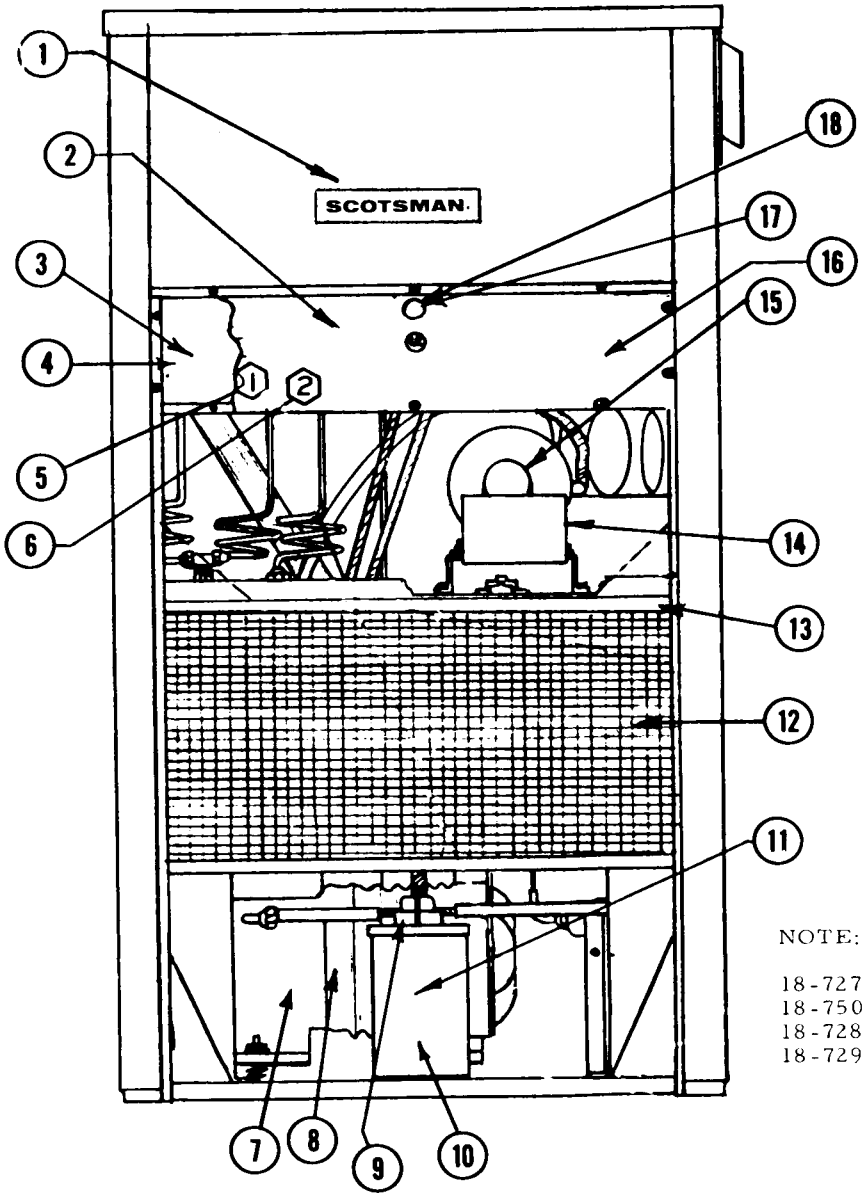

NOTE: Old Style

18-727 Relay
18-750 Starting Capacitor
18-728 Starting Capacitor (double)
18-729 Starting Capacitor (double)

ITEM NO.	PART NO.	NAME
1.	15-156	Emblem
2.	A-11886	Control Box Cover
3.	11-99-1	Bin Control (*)
4.	11-273-1	Low Pressore Control (*)
5.	11-343	High-Pressure Control (155# in and 135# out)
6.	11-342	High-Pressure Control (170# in and 150# out)
7.	18-721	Compressor 230/60/1
	18-767	Compressor $\frac{208}{220}$ 60/3
	18-756	Compressor 208/60/1
8.	18-1909	Discharge Service Valve
9.	18-1903-21	Relay
10.	18-1901-23	Starting Capacitor (single)*
11.	18-1902-23	Running Capacitor (*)
12.	18-753	Condenser
13.	A-11832	Evaporator Vase
14.	A-11823	Motor Mount Ass'y
15.	12-649-2	Drive Motor 230/60/1
	12-649-7	Drive Motor 208/60/1
16.	12-820-2	Contactor 230/60/1 (*)
	12-739-2	Contactor $\frac{208}{220}$ 60/1
17.	12-530A	Manual Switch (less case) *
	12-530	Switch (with Case)
18.	12-708	Overload (state motor man. and voltage when ordering)*
19.	A-18341	Coupling Assy., Motor

(*) Not Shown

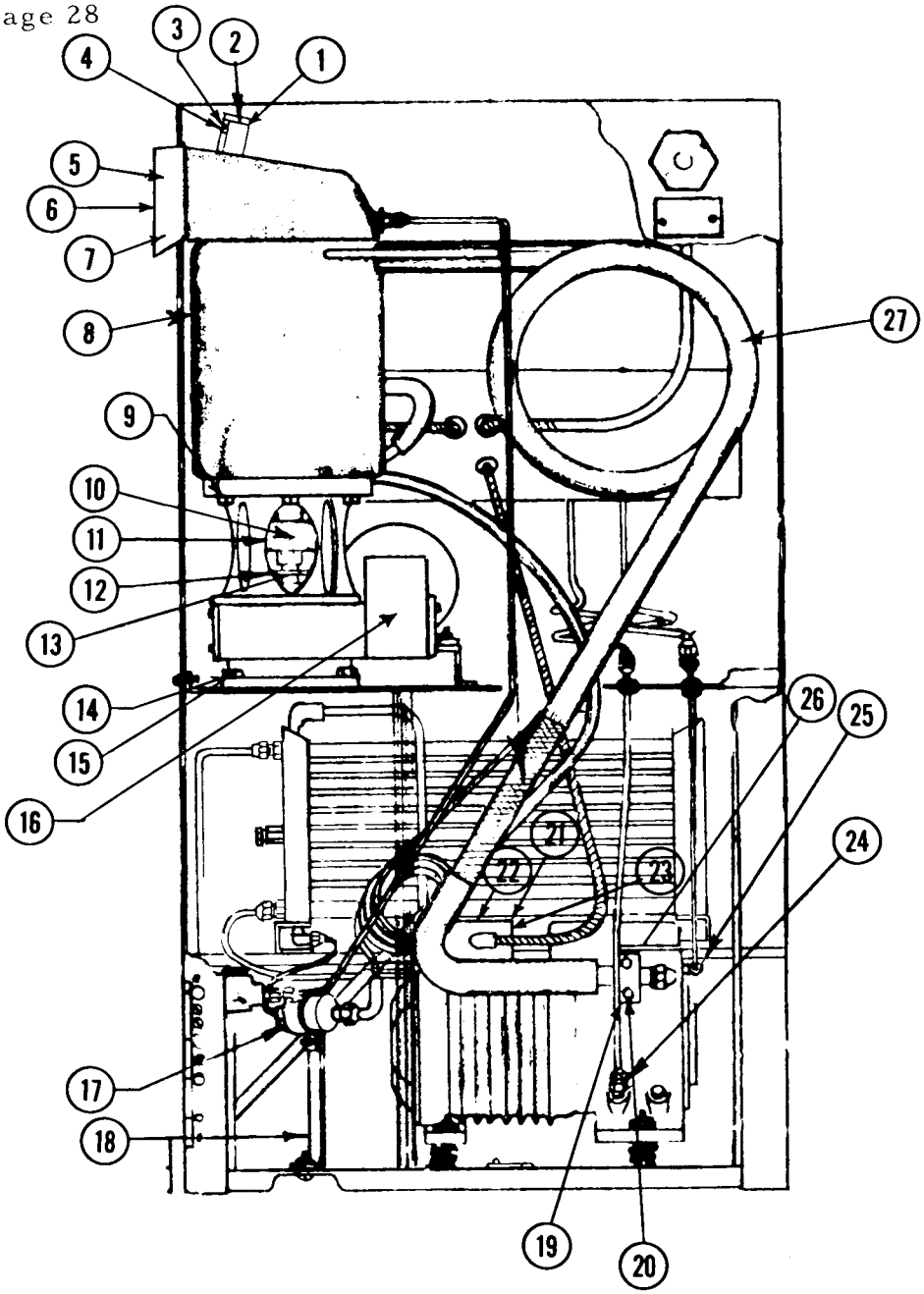

SF-5 CHASSIS ASSEMBLY

Models "F", "G" & "H"

Left Side View
Water Cooled

ITEM NO.	PART NO.	NAME
1.	A-14975	Micro Box
2.	A-14241	Micro Cover Ass'y
3.	12-1018	Micro Switch (*)
4.	3-173	Screw
5.	A-16670	Pressure Plate (*)
6.	2-1321	Spring
7.	A-16668	Spout only
8.	A-8853	Freezer Complete (less suction line)
9.	3-785	5/16x24x1" Screw (6)
10.	A-8895	Coupling
11.	A-6166	Key
12.	3-385	5/16x16 Set Screw
13.	13-152	Rubber Shield
14.	3-333	1/2x13x1-1/4 Bolt (4)
15.	3-372	1/2" Spring Washer (4)
16.	2-768	Gear Reducer

ITEM NO.	PART NO.	NAME
17.	2-822	Drier
18.	A-6355	Drier Bracket
19.	18-732	Suction Service Valve
20.	18-736	Suction Valve Gasket
21.	18-734	Klixon (*)
22.	18-735	Terminal Assembly (*)
23.	18-749	Terminal Board (*)
24.	16-165	Union
25.	16-182	Tee
26.	18-722	Valve Plate and Gasket Kit (*)
27.	A-11805	Suction Line-Cap Tube Assembly

(*) Not Shown

SF-5 CHASSIS ASSEMBLY

Models "F", "G" & "H"

Right Side View Water Cooled

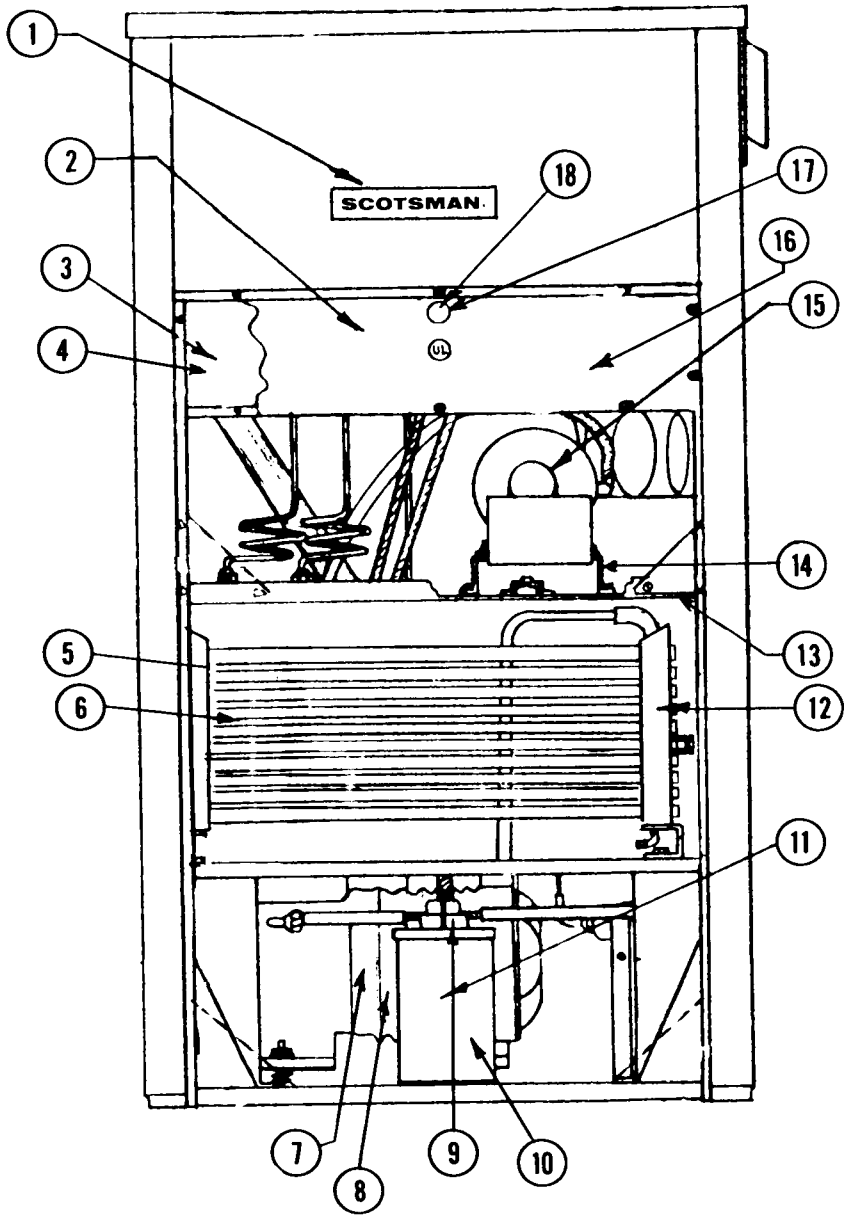

ITEM NO.	PART NO.	NAME
1.	15-156	Emblem
2.	A-11886	Control Box Cover
3.	11-99-1	Bin Control (*)
4.	11-286	Dual Pressure Control (*)
5.	18-754	Condenser
6.	18-740	Condenser, plain gasket (*
7.	18-738	Compressor 230/60/1 WC
	18-772	Compressor $\frac{208}{220}$ 60/3 WC
	18-743	Compressor 208/60/1 WC
8.	18-1909	Discharge Service Valve
9.	18-1903-21	Relay (single phase)
10.	18-1901-23	Starting Capacitor (single)

ITEM NO.	PART NO.	NAME
11.	18-1901-23	Running Capacitor (*)
12.	18-741	Condenser, manifold gasket *
13.	A-11832	Evaporator Base
14.	A-11823	Motor Mount Ass'y
15.	12-649-2	Drive Motor 230/60/1
	12-649-7	Drive Motor 208/60/1
16.	12-820-2	Contactor 230/60/1 (*)
	12-739-2	Contactor $\frac{208}{220}$ 60/3 (*)
17.	12-530A	Manual Switch (less case)
	12-530	Switch (with case)
18.	12-708	Overload (state motor mfg. and voltage when ordering)
19.	A-18341	Coupling Assy., Motor

(*) Not Shown

RESERVOIR ASSEMBLY SF-5
Models "F", "G" & "H"

ITEM NO.	PART NO.	NAME
1.	A-12870	Reservoir Cover
2.	2-1259	Valve Pin
3.	2-1320	Deflector
4.	A-8217	Inlet Valve
5.	3-1001	Rivet
6.	A-8054	Valve Seat Holder
7.	S-6947	Valve Seat
8.	S-7044	Nut
9.	A-12869	Bracket
10.	S-6715	Stand Pipe
11.	A-9101	Inlet Valve Assembly
12.	A-13413	Reservoir Body
13.	A-8055	Bracket Nut
	A-8868	Reservoir Complete (Less Cover)
14.	A-12073	Float Assy.
15.	A-18418	Water Deflector

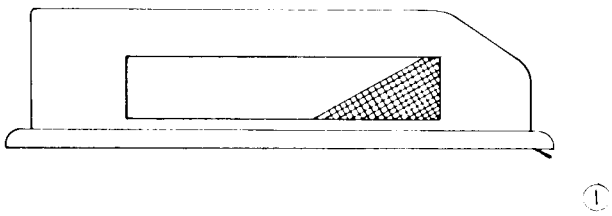

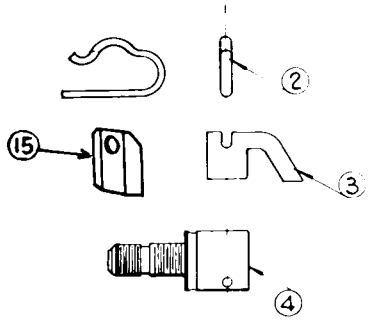

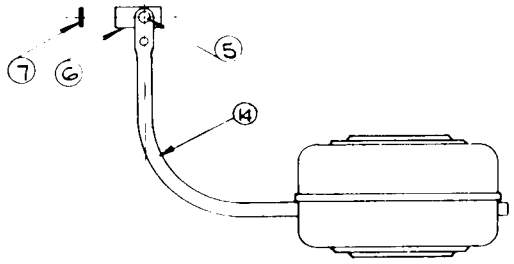

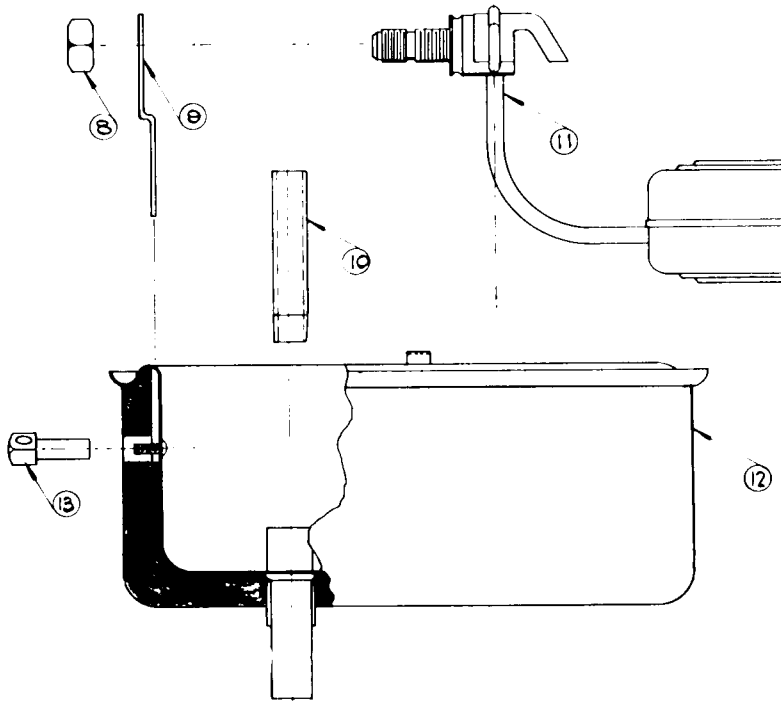

GEAR REDUCER SF-5

Models "F", "G" & "H"

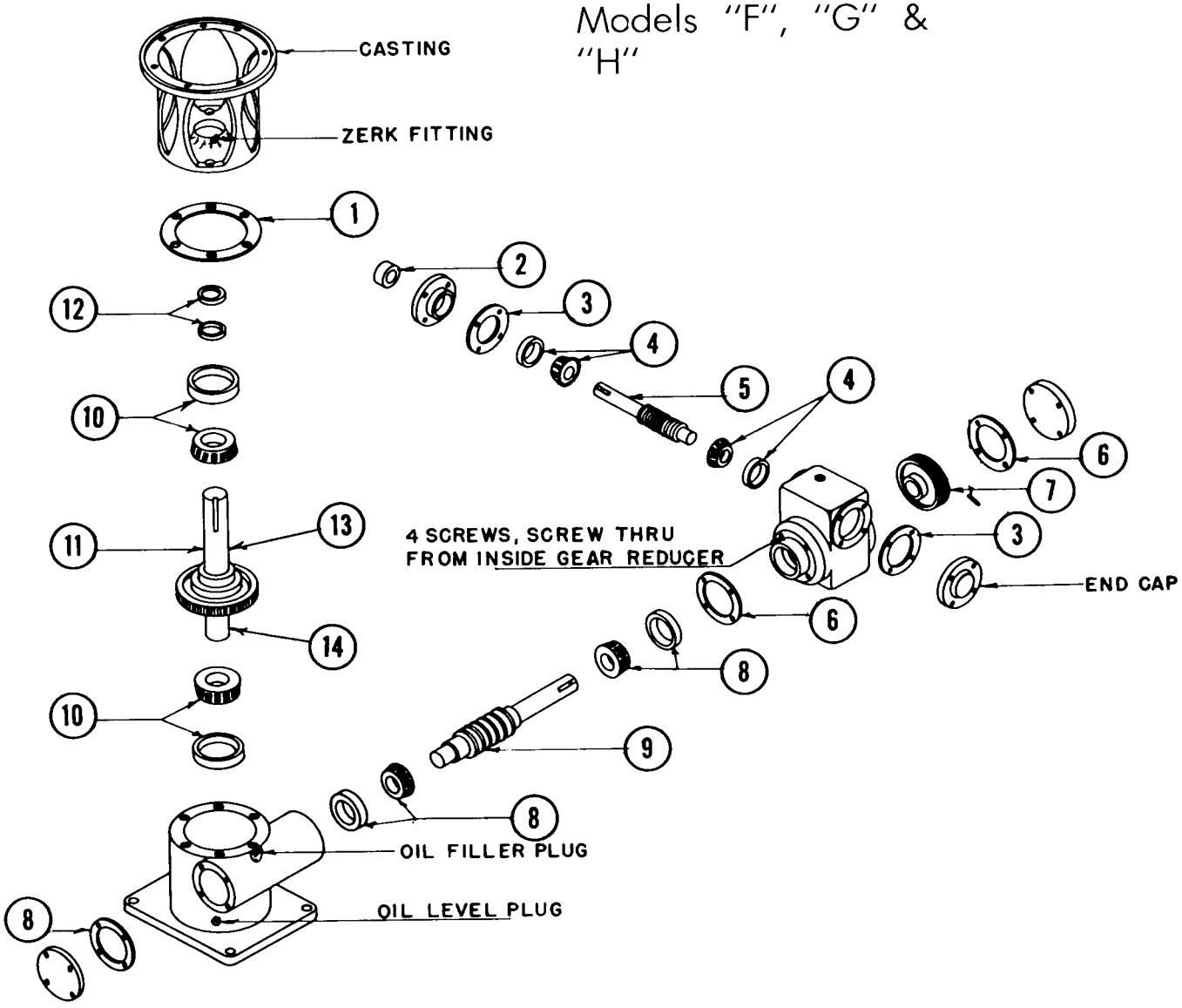

ITEM NO.	PART NO.	NAME
1.	2-768-28	Slow-Speed Cover Gasket
2.	2-768-20	High-Speed Oil Seal
3.	2-768-25	High-Speed Gasket
4.	2-768-24	High-Speed Bearing
5.	2-768-32	High-Speed Worm & Shaft, Integral
6.	2-768-27	Intermediate Gasket
7.	2-768-33	High-Speed Gear
8.	2-768-23	Intermediate Roller Bearing
9.	2-768-31	Intermediate Worm & Shaft, Integral
10.	2-768-22	Slow-Speed Bearing
11.	2-768-36	Slow-Speed Gear & Shaft Assembly
12.	2-768-21	Slow-Speed Oil Seal
13.	2-768-29	Slow-Speed Spacer (short)
14.	2-768-30	Slow-Speed Spacer (long)
	2-768	Complete Reducer

SF-5 CASE ASSEMBLY

Models "F", "G" & "H"

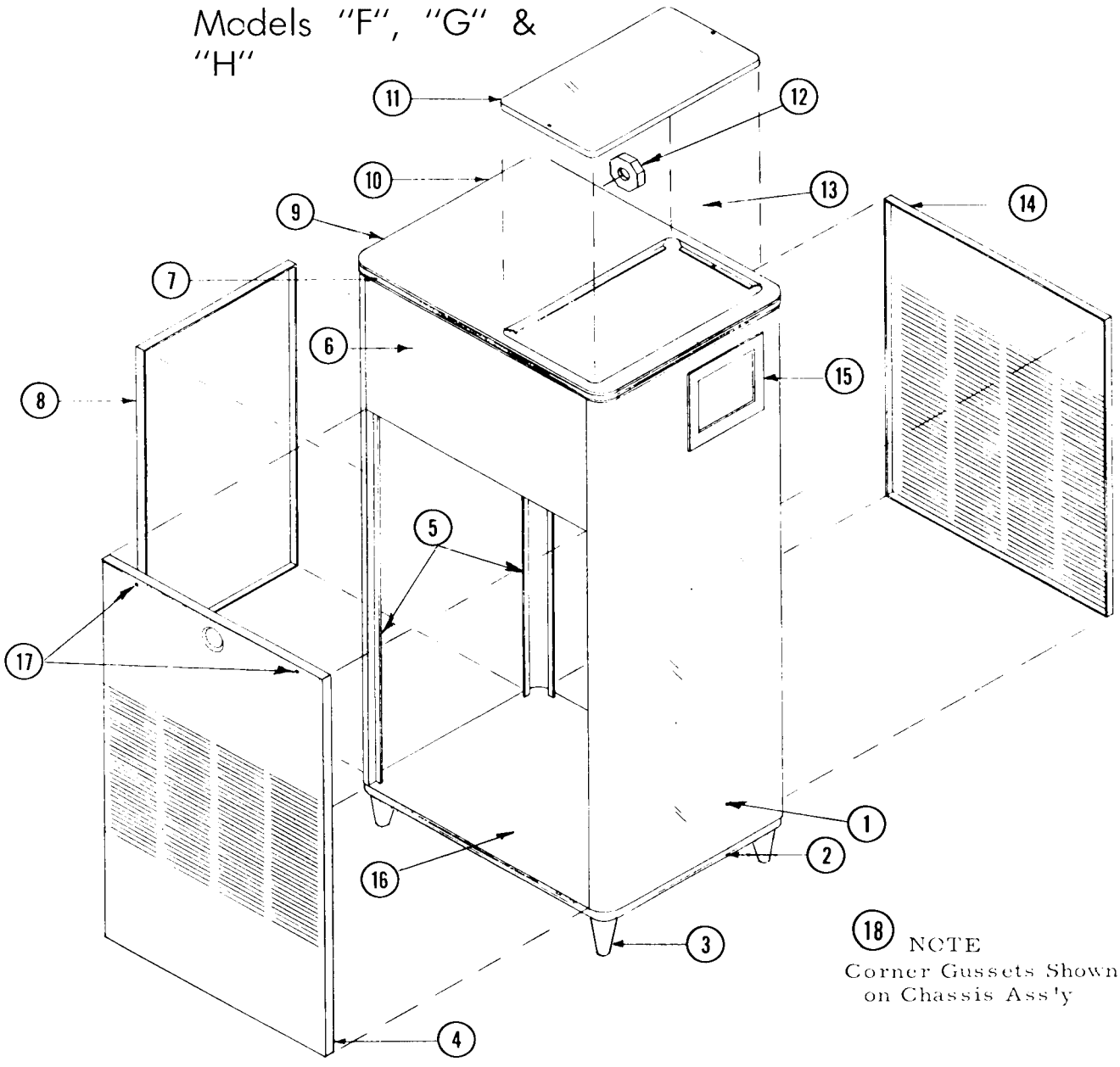

ITEM NO.	PART NO.	NAME
1.	A-11861	Right Cabinet Side
2.	A-8902-5	Bottom Moulding (2 required)
3.	A-15803	Leg (4 required)
4.	A-11872	Front Door
5.	A-11867	Leg Ass'y, (2 reqd.)
6.	A-11864	Front Panel
7.	A-8902-13	Top Moulding (2 required)
8.	A-11877	Left Door Ass'y
9.	A-17067	Left Panel (*)
10.	A-11868	Cabinet Top
11.	S-6713	Top Door
12.	S-8417	Junction Box & Cover
13.	A-17068	Back Panel (*)
14.	A-11875	Back Door Ass'y

ITEM NO.	PART NO.	NAME
15.	13-591	Spout Frame
16.	A-11832	Evaporator Base Assembly
17.	3-775	Screw (10 per unit all doors)
18.	A-12685	3 per unit right ass'y
	A-12687	3 per unit left ass'y
	A-12689	1 per unit right front
	A-12691	1 per unit left front
	A-12695	2 per unit right base
	A-12693	1 per unit left base

CORNER GUSSETS NEEDED FOR COMPLETE CASE

* Not Shown

In answer to many field requests, we are pleased to release the following chart showing the companies whose porducts are acceptable substitutes for the 600W supplies by Winsmith as factory recommended.

Note the third column which most accurately represents the normal temperature operating range. Also the Alemite or Zerk fitting to bearing is greased with Mobilgrease BRB No. 1, or any good grade ball bearing grease as obtained from local service stations.

600W oils and equivalents are classified as industrial oils and most likely will be found in bulk plants rather than local service stations.

WORM GEAR REDUCERS

CB-CT-CV-CBD-CVD-CBX-CTX-CVX-DBI-TSR

Ambient Temperature °F	-30 to 15	16 to 50	51 to 110	111 to 165
Maximum Operating Temperature °F	150	185	225	225
Viscosity @ 210°F, SUS	40 to 90 (Optional)	90 to 125	125 to 190	190 to 350
Compounded with		3 to 10% Acidless Tallow or E.P. Base	3 to 10% Acidless Tallow or E.P. Base	3 to 10% Acidless Tallow or E.P. Base
AGMA Lubricant		#7 Compound	#8 Compound	
Cities Service Oil Co.	Pacemaker Oil #5	Optimus Oil #10	Optimus Oil #6	Optimus Oil #12
Fiske Bros. Refining Co.	#3Lubriplate	#8Lubriplate	#8Lubriplate	APG Lubriplate
Gulf Oil Corporation	Multipurpose Gear Lubricant	E.P. Lubricant #115	E.P. Lubricant #145	E.P. Lubricant #250
Shell Oil Company	Vitrea Oil 71	Valvata Oil #J 78	Valvata Oil #J 78	Valvata Oil #J 83
Sinclair Refining Co.	Duro Oil 160	#87 Heavy Duty Oil	#101 Super-Heat Valve Oil	#212 Super-Heat Valve Oil
Standard Oil Co.	Stanogear Compound #1	Stanogear Compound #4	Standard Worm Gear Oil	Calumet SH Cyclinder Oil
Sun Oil Company	Sunep 70	Sunep #110	Sunep #150	HV Cyl. Oil
Socony Mobil Oil Co., Inc.	Vactra Oil #1	Mobil Compound DD	Mobil Cylinder Oil #600W	Mobil Cylinder Oil # 600W
The Texas Company	Meropa Lub. #1	Meropa Lub. #3	Meropa Lub. #6	Meropa Lub. #6

SERVICE ANALYSIS

SYMPTOM	POSSIBLE CAUSE	CORRECTION
Unit will not run	Blown fuse	Replace fuse and check for cause of blown fuse.
	Thermostat set too high	Adjust thermostat. Set between 35° - 45°.
	Loose electrical connection	Check wiring
	Switch in OFF position	Turn switch to ON
	Inoperative master switch	Replace switch
	OFF on the hand reset low pressure control	Push hand reset.
Compressor cycles intermittently	Low voltage	Check for overloading.
	Dirty condensor	Clean.
	Air circulation blocked	Move unit to correct.
	Non-condensable gases in system	Purge off.
Making wet ice	Surrounding air temperature above 100° F.	Correct or move unit to cooler location.
	Under or over-charge of refrigerant.	Recharge with proper amount.
	High water level in water reservoir	Lower to 1/4 inch below overflow pipe.
	Faulty compressor valve plate	Repair or replace.
Low ice production	Loss of refrigerant, under or over-charge of refrigerant	Check and recharge with proper amount of refrigerant.
	Dirty or plugged condensor	Clean condensor
	Low water level in water reservoir.	Adjust to 1/4 inch below overflow.
	Overcharge of oil in system	Check at oil sight glass. Lower to 1/2 sight glass.
	Partial restriction in capillary tube or drier	Moisture in system. Overcharge of oil in system. Remove charge and drier. Replace and recharge system.
	Inlet water strainer partially plugged	Remove screen and clean
	Corroded or stained worm shafts due to water condition.	Remove worm shafts and clean.

SERVICE ANALYSIS

SYMPTOM	POSSIBLE CAUSE	CORRECTION
Machine runs but makes no ice	Loss or under-charge of refrigerant	Check for leaks and recharge.
	Drive motor, gear reducer or drive coupling inoperative	Check. Repair or replace.
	Water not entering freezing chamber	Plugged strainer or supply line. Check and clean. Air lock in gravity feed line. Check and remove air lock.
	Moisture in system	Check and remove charge and drier. Replace and recharge.
	Water seal leaking	Replace seal.
	Defective manual overload switch	Replace switch
Water leaks	Defective water seal	Replace
	Gravity feed line leaking	Check hose clamps.
	Water level in reservoir too high	Adjust to 1/4 inch below overflow pipe.
Excessive noise or chattering	Mineral or scale deposit on auger and inner freezing chamber walls	Remove and manually polish auger, sand inner chamber walls of freezer barrel with approx. 100 grit paper. Use vertical strokes. For lighter concentrations use Scotsman Ice Machine Cleaner periodically.
	Low suction pressure	Add gas to raise suction pressure. Raise head pressure control setting.
	Intermittent water supply	Check and clean water strainer Check gravity feed line for air lock. Remove air lock.
	Water level in reservoir too low	Adjust to 1/4 inch below overflow pipe.
	Misaligned drive coupling	Repair or replace
	Gear reducer low on oil charge	Check oil level and refill to oil level plug.
	Gear reducer loose on frame	Tighten
	Drive motor end-play or worn bearings	Repair or replace
	Motor compressor not floating on springs	Loosen hold-down bolts.
Machine continues to run with full storage bin	Storage bin thermostat not properly set	Reset or replace, 45° in, 35° out.

MAINTENANCE INSTRUCTIONS — FLAKERS

THE FOLLOWING MAINTENANCE SHOULD BE ACCOMPLISHED TWO TIMES PER YEAR.

1. Check and clean water strainer and float valve. Depress float valve to insure full stream of water.
2. Check water level and machine level. Keep water below overflow, but as high as possible and still not run out of spout opening with machine off. Water droplets may come out of spout with ice at times. Adjust as required.
3. Clean reservoir and interior of freezer assembly using SCOTSMAN Ice Machine Cleaner. One cleaning per year should be a manual cleaning: Stainless steel auger should be pulled and buffed to a mirror-like finish. Use buffing wheel and jewelers rouge. Inner freezer barrel should be sanded using vertical strokes. Use 100 grit paper.

NOTE: Cleaning requirements vary according to local water conditions. Visual inspection of the auger before and after cleaning will indicate best procedure to be followed in local areas.

4. Check high and low side pressures. On water cooled models, set pressure at 135 psi. Suction pressure should be above 12 psi and will range up to 16 psi depending upon water and ambient temperatures.
5. Set hand reset low pressure control to cut off in event of water supply interruption or low ambient temperature at approximately 5 psi.
6. Change oil in gear reducer. Use Mobiloil 600W or equivalent good grade of gear oil with a viscosity of 125 to 190. For unit with grease fittings use Mobilgrease BRB No. 1 or any good grade ball bearing grease. Particularly important when there is evidence that water has gotten into gear housing. Remove gear reducer to facilitate.
7. Oil drive motors. Use SAE #10 oil.
8. Check top bearing on freezer. Remove rubber 'O' Ring, rubber cap and styrofoam cap. If moisture is around bearing, wipe up and remove grease. Add new grease. Use beacon No. 325 or equivalent.
9. Check and adjust drive motor couplings.
10. Check for refrigerant leaks and proper frost line. Should frost out of accumulator at least one-half way to compressor, and in some areas back to service valve.
11. Check for water leaks. Tighten drain line connections.
12. Check quality of ice. Ice should be wet when formed, but will cure rapidly to normal hardness in the bin.
13. Check thermostat and pressure plate cut off. Micro switch cuts off only compressor. Bin thermostat should be set at 10° differential and should keep entire machine off at least twenty minutes in high ambients (longer in low) during normal operation.

PARTS LIST

SF-5 H

CABINET PARTS

Cabinet Top Assembly	A-11868
Large Hood Top Door	S-6713
Right Side Panel	A-11861
Left Side Door	A-11877
Front Door	A-11872
Moulding Strip Top	A-8902-13
Moulding Strip Bottom	A-8902-5
SCOTSMAN Emblem	15-156
Legs	A-15803
Levelers--Bottom of Leg	8-522
Plywood Crate	1-651

WATER CIRCUIT

Water Reservoir Assembly, less cover	A-8868
Water Inlet Valve	A-9101
Rubber Valve Seat	S-6947
Float Arm and Float Assy.	A-12073
Valve Pin	2-1259
Plastic Water Deflector	2-1320
Standpipe	S-6715
Reservoir Cover Assembly	A-12870
Water Strainer, Supply Line	16-162-1

DRIVE CIRCUIT

Gear Reducer	2-768
Gear Reducer Coupling to Drive Motor	A-18341
Gear Reducer Coupling (one piece) to freezer	A-8895
Coupling Key	A-6166
Allen Set Screw	3-385
Rubber Drip Shield--Gear Reducer Shaft	13-152
1/3 HP Drive Motor 230/60/1	12-649-2
208/60/1	12-649-7

PARTS LIST
SF-5 H

FREEZER ASSEMBLY	A-8853
Screws--Ice Breaker--St. Steel	3-785
Ice Breaker	A-8818
Ice Breaker Cap--Rubber	13-231
'O' Ring--Cap	2-991
'O' Ring--Breaker	2-778
Top Bearing	2-619
'O' Ring Below Top Bearing	2-643
Styrofoam Cap	A-9047
Locking Cap Screw 1/2-20-1 Stainless	3-715
Washer--Brass	A-6273
Worm Shaft	A-9006
Water Seal	2-776
Lower Bearing	2-775
Suction Line Assembly	A-11805
Suction Line Vibration Eliminator	16-365
Refrigerant Drier	2-822
Freezer, Worm Tube Only	A-8858
SPOUT ASSEMBLY	
Spout Assembly Less Switch and Press Plate	A-16668
Spout Pressure Plate	A-16670
Screws Stainless Steel Spout Hold Down	3-794
Spring for Spout Pressure Plate	2-1321

PARTS LIST

SF-5 H

ELECTRICAL COMPONENTS

Contactor, compressor 230/60/1	12-820-2
Bin Thermostat	11-99-1
Manual Switch	12-530A
Manual Switch w/case	12-530
Hi-Pressure Control	11-343
Overload Heater Drive Motor, state motor and voltage.	12-708
Micro Switch for spout	12-1018
Hi-Pressure Control	11-342

CONDENSING UNITS W.C.	SF-5H	SF-5-3
Motor Compressor Only 3HP	18-738	18-772
Valve Plate & Gasket Kit	18-722	18-722
Cylinder Head	18-725	18-725
Relay	18-1903-21	
Starting Capacitor (2 per unit)	18-1901-23	
Running Capacitor (per unit-2)	18-1902-23	
Condensor--Water Cooled	18-754	18-754
Terminal Assembly	18-735	18-735
Service Valve Gasket (Suction)	18-736	18-736
Service Valve Gasket (Discharge)	18-736	18-736
Plain Gasket--Water Cooled condenser	18-740	18-740
Manifold Gasket-W.C. condenser	18-741	18-741
Water Regulating Valve, Penn 3/4"NPT	11-198	11-198
Dual Pressure Control-Hand Reset	11-286	11-286

MISCELLANEOUS

Ice Scoop	2-540
Ice Machine Cleaner--8 oz. bottle	19-343
Grey Spray-on Touch-up Paint	10-153
Upper Bearing Grease-Freezer Assy.-Pt. cans only	19-309
600 W Gear Reducer Transmission Oil-Pt. cans only	19-359
Tygon Tubing (1/2" ID x 3/4" OD) Per Ft.	5-186
Rubber Tubing (3/8" ID) Per Ft. Black	13-79

CONDENSING UNIT A.C.	SF-5	SF-5-3
Motor Compressor Only	18-721	18-767
Valve Plate & Gasket Kit	18-722	18-722
Cylinder Head	18-725	18-725
Relay	18-1903-21	
Starting Capacitor	18-1901-23	
Running Capacitor	18-1902-23	
Condenser	18-753	18-753
Terminal Assy.	18-735	18-735
Service Valve Gasket	18-736	18-736
Fan Motor	18-752-2	
Fan Blade	18-751	

TABLE OF CONTENTS

	PAGE
FORWARD	1
TABLE OF CONTENTS	2
SPECIFICATIONS	
Mechanical Specifications	3
How It Works	4
INSTALLATION	
Appearance and Specifications	5
Photo and Ice Making Capacity	6
Installation Instructions	
Preparation for Installation	7
Installation	8
Water Supply	8
Drain	8
Electrical Connections	9
Refrigeration Cycle	10
Water Schematic	11
Wiring Diagram	12
Final Check List	13
SERVICE	
Starting Machine	14
Refrigerant Charge	14
Water System	15
Electrical System	15
Removal and Installation of Parts	16-19
Chassis Assembly Schematic	20
Condensing Unit	21
Reservoir Assembly	22
Freezer Assembly	23
Case & Hood Assembly	24
Winsmith Gear Reducer	25
Winsmith Grease Substitute	26
Service Analysis	27-28
Over Load Heater Chart	29
Maintenance Instructions	30-31
Parts List	32-34

THIS PAGE
INTENTIONALLY
LEFT BLANK

THIS PAGE
INTENTIONALLY
LEFT BLANK

MECHANICAL SPECIFICATIONS

	SF 75 WSH
Compressor	1/4 HP Bendix Westinghouse
Condenser	Air-Cooled
Refrigerant	25 oz. R 12
Refrigerant Control	Capillary Tube
Power Consumption	10 Amps.
Current	115 V, 60 Cycle, 1 Ph.
Worm Drive Motor	1/4 HP NEMA 48 Frame
Worm - R. P. M.	12
Water Consumption - Freezer	2 Gallons per hour

CABINET DIMENSIONS

Depth	24 1/2"
Width	32 1/2"
Height	40"
Height with 6" legs	46"

SHIPPING WEIGHT

Uncrated	330
Crated	360

SPECIFICATIONS

SCOTSMAN Super Flakers are designed for restaurants, super markets, soda fountains, hospitals, bakeries, fish markets, poultry stores, packing plants, etc. It is the finest Ice Maker on the market today. It will work 24 hours a day for you, or only as needed. It produces the highest quality ice available at any price.

Approximately 225 pounds of SCOTSMAN crushed ice is delivered each 24 hours to the storage bin for immediate use.

SCOTSMAN Super Flakers are easily installed requiring only standard water, drain and electrical connections.

ATTRACTIVE COMPACT CABINET. Grey hammerloid finish with chrome trim, rounded corners, and removable panels for easy access to mechanical parts. Adjustable and removable legs are under cabinet.

SEALED REFRIGERATION SYSTEM. Provides quiet, efficient operation of the machine. Compressor motor is spring mounted and the worm motor is rubber mounted for quiet operation. Compressor motor is covered by a full 5-Year Warranty.

HOW IT WORKS. An exclusive patented ice-making system, wherein water in the constant level float reservoir is fed to the bottom end of the freezing cyclinder and turns to ice on the inside of this cyclinder. Ice from the refrigerated walls of this cyclinder is extruded past the ice breaker at the top of the cyclinder through a side opening by means of a stainless steel auger driven by a motor through a V belt and a gear reduction drive.

SCOTSMAN Model SF-75WSH is completely automatic. A manual switch on the front starts the machine, and from then on, produces flakes automatically. When the storage bin fills, the machine automatically shuts off and starts up again when ice is taken from the storage compartment.

SPECIFICATIONS

SUPER FLAKER SF-75 SERIES (Storage Type)	MODEL SF-75WSH	MODEL SF-75WSH-SS
Daily capacity up to 240 lbs.	X	X
Self contained 100 lb. storage bin	X	X
Air cooled condenser	X	X
Heavy duty ¼ HP. Compressor	X	X
Standard 115 V, 60 cy, 1 ph, AC	X	X
¼" water inlet SAE Flare	X	X
⅝" bin drain OD	X	X
Hammerloid grey exterior	X	
Stainless steel exterior		X
Stainless steel lined storage bin	X	X
46" height (with legs)	X	X
40" height (without legs)	X	X
22½" width	X	X
24 ½" depth	X	X
Approximate shipping weight 360 lbs.	360	360

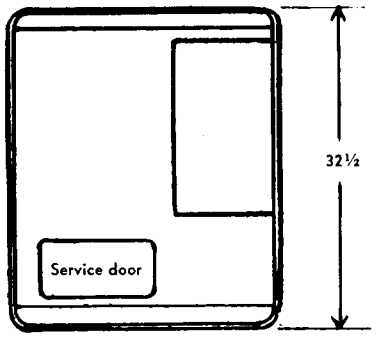

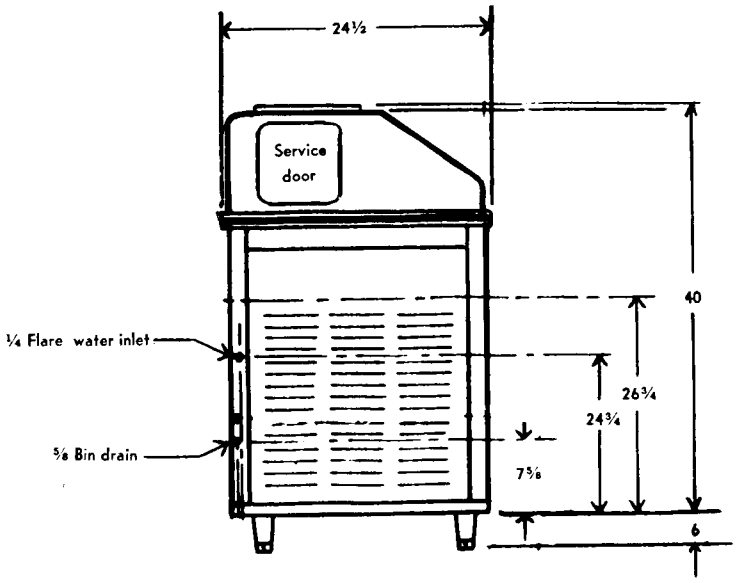

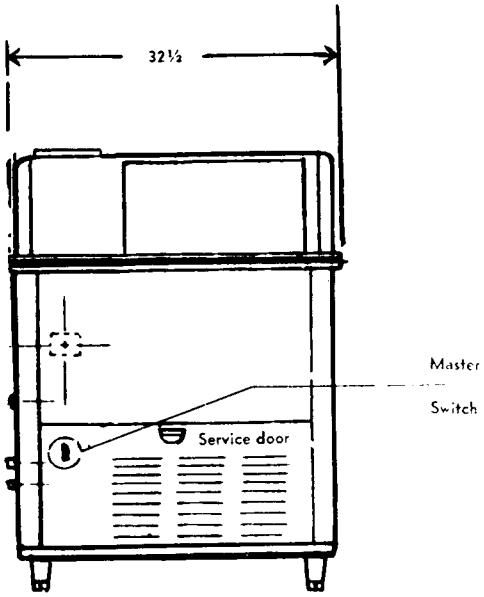

SCOTSMAN

SUPER FLAKER
SF-75
SERIES
Storage Type

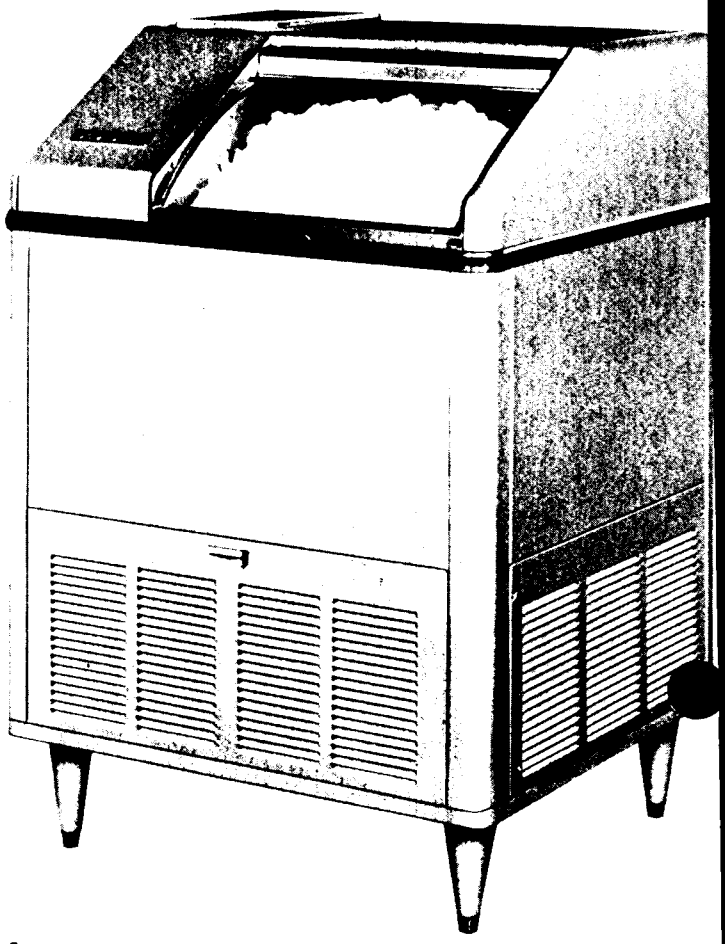

ice making capacity

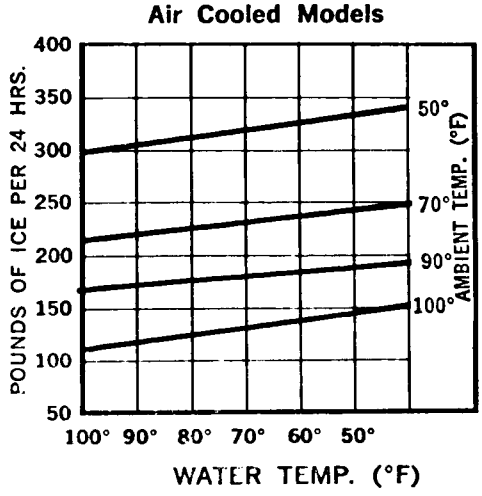

SCOTSMAN SUPER FLAKERS

PREPARATION FOR INSTALLATION

1. Inspect complete unit cabinetry for shipping damage. Notify carrier of concealed damage claims.

2. Remove all service doors and panels.

3. Remove water reservoir cover and take out paper packing around float ball. Make sure plastic overflow standpipe is securely in place.

4. Remove leg packages in compartment base and install 4 legs in unit base sockets.

5. Remove water strainer from storage bin for installation on unit or in water supply line feeding unit.

6. Open electrical control box and prepare for hook up, use knock outs, cord connectors etc. Then check unit nameplate voltage against building source voltage and make sure they correspond. Caution - Improper voltage supplied to units will void your warranty protection.

7. Select unit location prior to hook up of water drain and electricals in accordance with local and national codes. Minimum room temperatures is 50° Fahrenheit. On air cooled models, select well ventilated location.

8. Remove warranty card and Users manual from storage bin, then wipe bin clean with damp cloth.

9. Fill out warranty card completely including model and serial numbers as taken from aluminum plate found behind front service panel and forward to Scotsman Factory using self mailing card.

10. Level unit with adjustable legs then call your authorized Scotsman distributor or dealer for proper installation, start up and check out.

INSTALLATIONS

UNDER BAR INSTALLATIONS: Locate, if possible, so left end panel is accessible. Locate so proper circulation can be attained around the unit and behind it at least four inches.

KITCHEN INSTALLATIONS: As a rule, the kitchen is not the most practical place to install an air-cooled condensing unit, as grease is almost always present and makes cleaning of the condensing unit difficult. Do not locate near range or steam table or other heating devices that may be used in the kitchen.

STOREROOM INSTALLATIONS: Be sure storeroom is of adequate size and properly ventilated. A small, poorly ventilated room will greatly impair the efficiency of the unit. The storeroom must be kept above 50° in the winter months.

BASEMENT INSTALLATIONS: Locate machine in the coolest place. Locate machine in a dry place. Keep away from furnace and boiler room. Keep away from service chutes and runways; also coal and other dust of any kind. If the machine is set over a floor drain, block the machine up enough to level it. If there is any chance of basement flooding, block the machine up to eliminate any possible damage to the machine.

UNCRATING OF MACHINE: The complete machine comes in one crate. After the crate is removed, inspect for concealed damage. When installing the machine. Remove the bottom skids by removing all bolts Then check all refrigerant lines for rubbing or touching other surfaces. Also check for possible transportation damage. Check for free movement of ice worm.

PRE-INSTALLATION CLEANING: Before machine is in final location, remove warranty card and other information from machine compartment. Remove top service door, water reservoir cover, and packing under float. Then leave cover off for float adjustment after machine is installed.

WATER SUPPLY. The recommended water supply line is 1/4 inch OD copper tubing for SF-75WSF. Connect to cold water supply line with regular plumbing fittings, with shut-off valve installed in an accessible place between supply line and machine. A water strainer must be installed with the unit and mounted with clean-out plug down. Locate the strainer next to the machine with the arrow in the direction of the flow. Most plumbing codes also call for double check valves in the supply water line.

The water supply line connects to the 1/4 inch flare fitting on the machine. Water supply must be installed to conform with local code. In some cases a licensed plumber and/or a plumbing permit will be required.

DRAIN. The recommended drain from the bin is 5/8 inch OD copper tubing. Must be run to an open trapped and vented drain. If drain is a long run, allow a 1/4 inch pitch per foot. Drain must be installed to conform with local code.

INSTALLATION

ELECTRICAL CONNECTIONS:

SF-75WSH
115 Volts, 60 Cycle, 1 Phase
15 Amp. Circuit

Be certain that the Super Flaker is on its own circuit and individually fused. The maximum allowable voltage variation should not exceed 10 per cent of the nameplate rating even under starting conditions. Low voltage can cause erratic operation and may be responsible for serious damage to the overload switch and motor windings.

All external wiring should conform to the National Underwriters and local Electrical Code requirements. Usually an electrical permit and the services of a licensed electrician will be required.

ELECTRICAL INSTALLATION:

SF-75WSH

Compressor	HP	1/4 Bendix-Westinghouse
	Voltage	115
	Amp. rating	5.0
	Watts input	450
	Cycle	60
	Phase	Single
Drive Motor	HP	1/4 NEMA 48 Frame
	Voltage	115
	Amp. rating	4.5
	Cycle	60
	Phase	Single

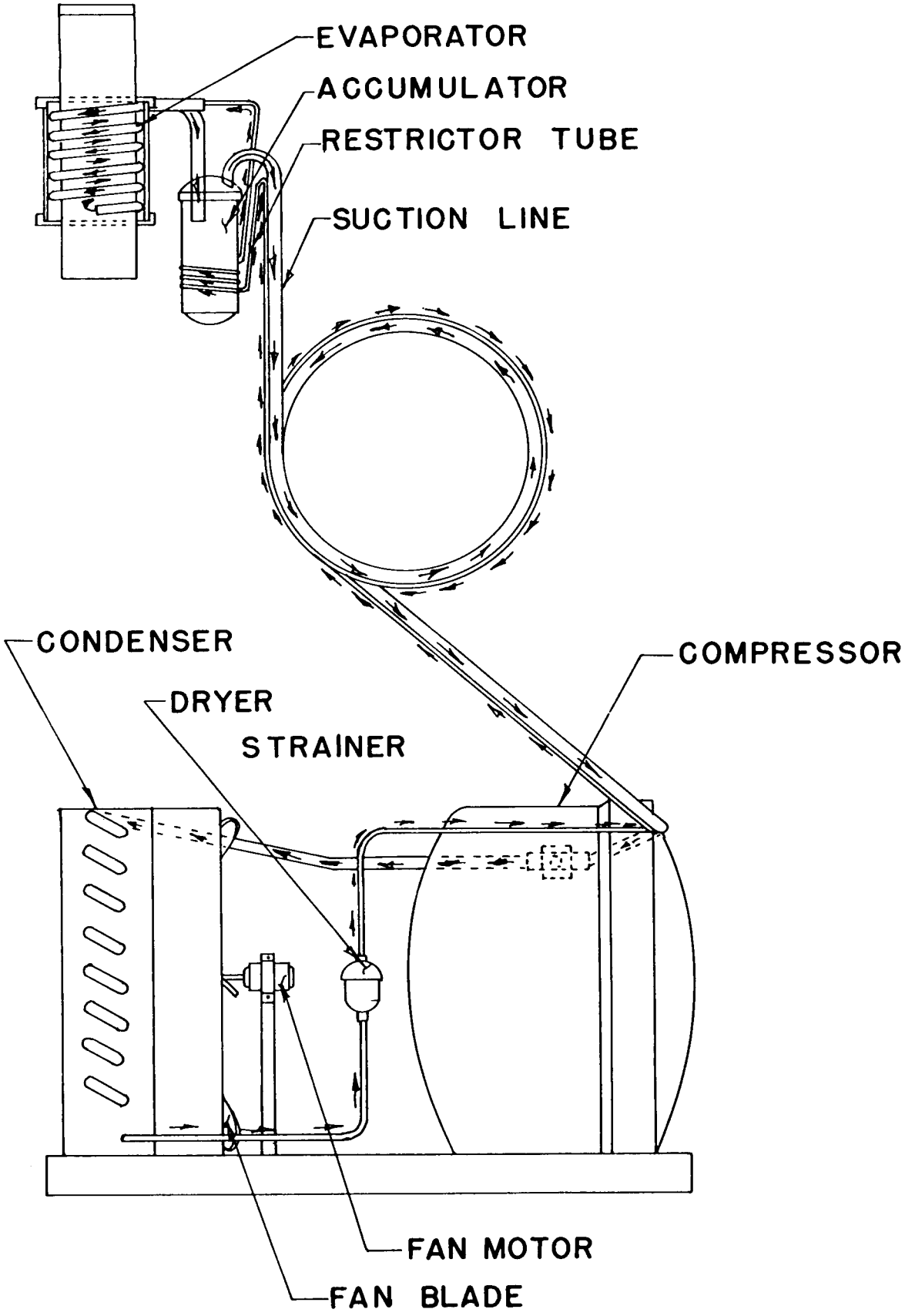

SF-75WSH
REFRIGERATION CYCLE

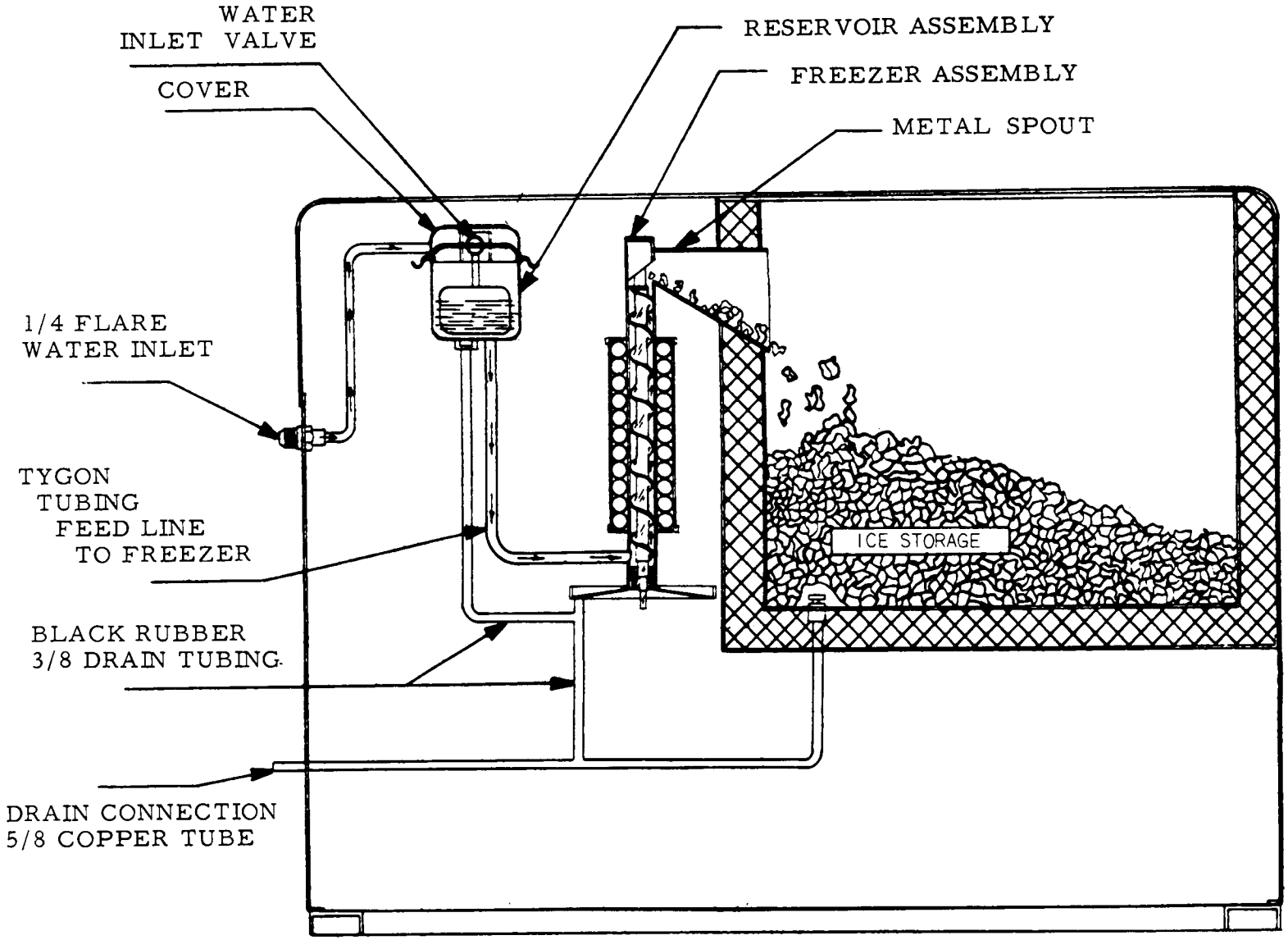

WATER SCHEMATIC

SF - 75WSH

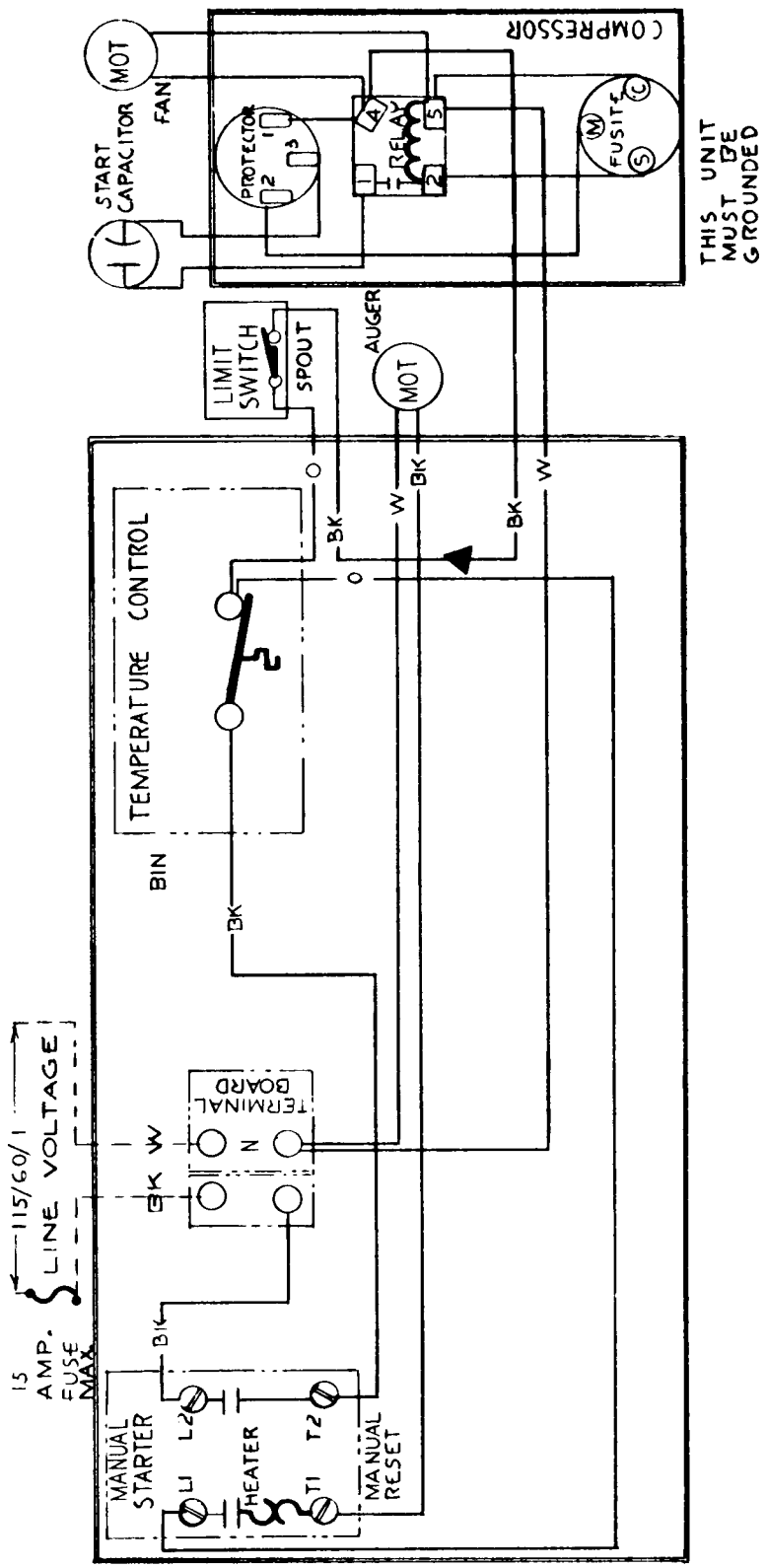

WIRING DIAGRAM
SF75-SWH

FINAL CHECK LIST

1. Is the unit level? (IMPORTANT)
2. Have all electrical and piping connections been made?
3. Has the voltage been tested and checked against the nameplate rating?
4. Is the water supply valve open and the electric power on?
5. Is the water reservoir filled and shut off? All packing removed?
6. Have unit and bin been wiped clean?
7. Has owner been given the Operating Instruction Sheet, and has he been instructed on how to operate the machine?
8. Have the installation and warranty cards been filled out? This is the owner's protection.
9. Check all refrigerant and conduit lines to guard against vibration and possible failure.
10. Installed in a well ventilated room where ambient temperatures do not fall below 50° Fahrenheit.
11. Is unit installed with a minimum 4" air space around sides and back?

SERVICE

STARTING THE MACHINE: When the machine is placed and inspected as per instructions and all plumbing and electrical connections are completed and tested, turn on the water supply. Be sure the float cover is removed to check on the float operation and water level in the water reservoir. Be sure the water reservoir is filled before starting the machine. Water level should be 1/4 inch below the reservoir overflow.

When this is completed, turn on the manual switch on the front of the cabinet and the machine is in automatic operation. In two to three minutes ice will start dropping off the worm shaft and out the ice chute. Let the machine operate for at least 30 minutes and check for any excess noise other than the normal compressor noise. Test the ice storage control bulb by holding a handful of ice around the bulb until the machine shuts off. One minute should be normal for the control to function. Within minutes after the ice is removed, the bulb will warm up and the machine will automatically start up. The control is factory set and should not be reset until this test is made. Normal setting of this control should be approximately 35 degrees cut out, 45 degrees cut in.

Check pressure settings at the time of start-up. Head pressure normal at 135 PSI. The frost line should extend 8" out of the accumulator if properly charged with refrigerant and suction pressure will range between 15 and 16 PSI with 50° F. inlet water.

Explain the machine to the owner, showing him how the machine works and go over the owner's instruction sheet with him. Answer all the owner's questions about the machine, and do not leave with any doubt in the owner's mind about the machine, how to operate it or where to reach you should he need service on the machine. Call back the next day to check the machine again and answer any other questions the owner may have.

Service gauge connection is available on low side service valve. Purge free of any non-condensable gases before starting any test operation.

REFRIGERANT CHARGE: The below refrigerant charge is approximate. When charging, set at 135 PSI head pressure and charge so that the frost line extends 8" out of the accumulator after fifteen minutes of operation. Factory charge 25 oz. refrigerant 12.

SERVICE

WATER SYSTEM: A water level is maintained in the water reservoir by a float operated valve. Water is piped from the water reservoir to the freezing chamber by a gravity feed line maintaining an equal water level. A removable overflow pipe is installed in the water reservoir for cleaning the reservoir as well as preventing damage should the inlet water valve fail.

The water reservoir is equipped with a 2 inch air gap to prevent back siphoning and meet all health codes.

The water level in the water reservoir is adjusted by bending float arm. The water level should be set 1/4 inch below the overflow pipe. A condensate drip pan is connected to the drain circuit to automatically dispose of condensate moisture.

A water strainer must be installed in the supply line. Use strainer sent with machine.

ELECTRICAL SYSTEM: The super Flaker Model SF-75 is designed to work on standard voltage--115/60/1.

Special voltage requirements are available on special order. Therefore, always check nameplate for this information before checking electrical supply.

Nameplate voltage should not vary more than plus or minus 10 percent.

The electrical circuit consists of condensing unit, drive motor, storage bin thermostat, ON and Off switch and micro (safety) switch.

A. CONDENSING UNIT: The starting capacitor and starting relay are housed and fastened to the motor compressor.

B. DRIVE MOTOR: Model SF-75 Flakers are equipped with standard 1/2" shaft, 1/4 HP, capacitor start, induction motors. These motors turn counter-clockwise and may be replaced with any standard make motor corresponding to the nameplate rating. (Be sure motor runs counter-clockwise viewed from the shaft end.) NEMA 48 Frame.

C. STORAGE BIN THERMOSTAT: White Rodgers control located on frame assembly. Factory settings 35° cut-out, 45° cut-in. This control shuts off complete machine when ice in storage bin builds up to control.

D. MICRO SAFETY SWITCH: The micro switch is located in the top of the ice chute. The switch is operated by a plate in top of the ice chute by the ice backing up in the chute should the storage bin thermostat fail. Micro switch will shut off the condensing unit only, when operated.

E. ON-OFF SWITCH: A manual on-off switch with built-in thermal overload protection to prevent drive motor failures is used. See overload chart for correct size. (Page No. 29)

REMOVAL & INSTALLATION OF PARTS

CABINET TOP (HOOD)

1. Remove two back end screws of chrome strip.
2. Pull out tape concealing screws.
3. Remove balance of screws in chrome strip.
4. Lift off hood.

HOOD SERVICE DOOR, TOP

1. Remove screw from front edge.
2. Lift up and back to unhook pin.

CABINET SIDE SERVICE DOOR

1. Remove four screws on edges.
2. Lift out door.

CABINET FRONT SERVICE DOOR

1. Front door pulls out.

CABINET REAR SERVICE DOOR

1. Remove four screws on corners of rear service door.
2. Pull door out.

ICE STORAGE DOOR

1. Lift door up, slide back 6". Lift up on door underside and pull forward.
2. Door will now slide out.

ICE STORAGE DOOR FRAME

1. Remove six screws at bottom and sides.
2. Frame will now lift out.

MOTOR COMPRESSOR

1. Remove gas charge.
2. Disconnect wiring from the compressor.
3. Loosen suction line to suction valve and cap off.
4. Remove the compressor hold-down nuts and lift compressor out of the unit.
5. Reverse steps 1 through 4 in replacing compressor.

SERVICE

FREEZER ASSEMBLY

1. In most instances, it will be faster to remove freezer by first removing cabinet top or hood. (See Removing & Installing Cabinet Parts.) Assembly can be changed if necessary through hood top panel.
2. Shut off water supply and drain water reservoir.
3. Remove refrigerant from system.
4. Remove suction and liquid line connections. (CAUTION: Plug all connections to prevent moisture from entering system.)
5. Remove tygon tube to water inlet connection at base on freezing chamber.
6. Loosen spout bolt holding spout to freezer and remove.
7. Remove two bolts holding freezer chamber to frame.
8. Lift freezer assembly up and out of unit.
9. Remove rubber drip pan from defective freezer and install it on new assembly.
10. Reverse above procedure to install new freezer.

FREEZER WORM SHAFT

1. Turn unit off, before removing worm shaft.
2. Shut off water supply to unit.
3. Remove hood service door.
4. Remove top and bottom straps around insulation pieces, remove pieces.
5. Remove two slotted head screws which fit through chamber wall into ice breaker.
6. Complete worm shaft with ice breaker attached will now come out by lifting up on freezer cap pull ring. NOTE: Top half of water seal will come with worm shaft.
7. To remove ice breaker from shaft, first remove retainer ring in top of ice breaker.
8. Remove freezer cap and pull ring from ice breaker.
9. Remove cap screw holding shaft through bearing and pull worm shaft free from ice breaker and bearing.
10. If shaft is defective, remove water seal top half and put on new worm shaft before reassembling--when reassembling, by reversing above, put a small amount of Vaseline on squared shaft end. This will allow shaft to slide smoothly through rubber bottom half of water seal without tearing it.

WATER SEAL

1. To replace water seal, follow steps 1 through 6 under Worm Shaft Removal.
2. Next slide three-jaw drive coupling down on reducer shaft or else remove top half of coupling.
3. Pull rubber drip pan down.
4. Remove large brass nut holding lower bearing and lower portion of water seal in place.
5. Lightly force lower bearing out.
6. Reach in and pull bottom portion of water seal out.
7. Reassembly is reverse of above.

SERVICE

STORAGE BIN THERMOSTAT:

1. Disconnect electrical supply.
2. Remove bin thermostat bulb from bin location along with its capillary tube.
3. Remove control box cover.
4. Remove thermostat cover, disconnect two leads.
5. Loosen two screws in control mounting bracket.
6. Replace with new control and reassemble in reverse of above
7. CAUTION: Always check new control power element charge before installation to assure receiving an operative control. A handful of ice on bulb will register an audible 'click' at cut'off.

WATER RESERVOIR

1. Remove service panel in cabinet hood.
2. Turn off water supply and drain reservoir.
3. Remove 1/4 inch copper inlet water line.
4. Remove 1/2 inch plastic feed line to freezer.
5. Remove two screws holding reservoir bracket to wall.
6. Lift out reservoir.
7. To replace, reverse procedure.

SERVICE

MICRO SWITCH IN SPOUT

1. Remove hood service panel.
2. Remove micro box cover, loosen two screws at rear of box holding switch in place, lift up.
3. Disconnect electric leads.
4. Reassemble with new micro switch.

DRIVE MOTOR

1. Remove case hood - See Cabinet Top Removal Section.
2. Remove electrical connections.
3. Remove four base bolts.
4. Remove drive belt.
5. Lift out defective motor.
6. Remove pulley and install on new motor.
7. To replace, reverse porcedure.
8. CAUTION: Drive motor rotation is COUNTER-CLOCKWISE facing shaft end.

MANUAL ON AND OFF SWITCH

1. Remove front service door.
2. Remove two screws holding switch to bracket.
3. Disconnect electrical leads from switch.
4. Remove switch.
5. To replace, reverse procedure.

GEAR REDUCER AND COUPLING

1. Remove rear door.
2. Remove drive pulley.
3. Loosen drive coupling set screw and slide down coupling on gear reducer shaft.
4. Loosen four mounting bolts.
5. Lift out from rear of machine.
6. To replace, reverse procedure.
7. Check new gear reducer for proper oil level.
8. Remove shipping plug (brass nail) from air vent hole in top plug.

SF-75 H CHASSIS

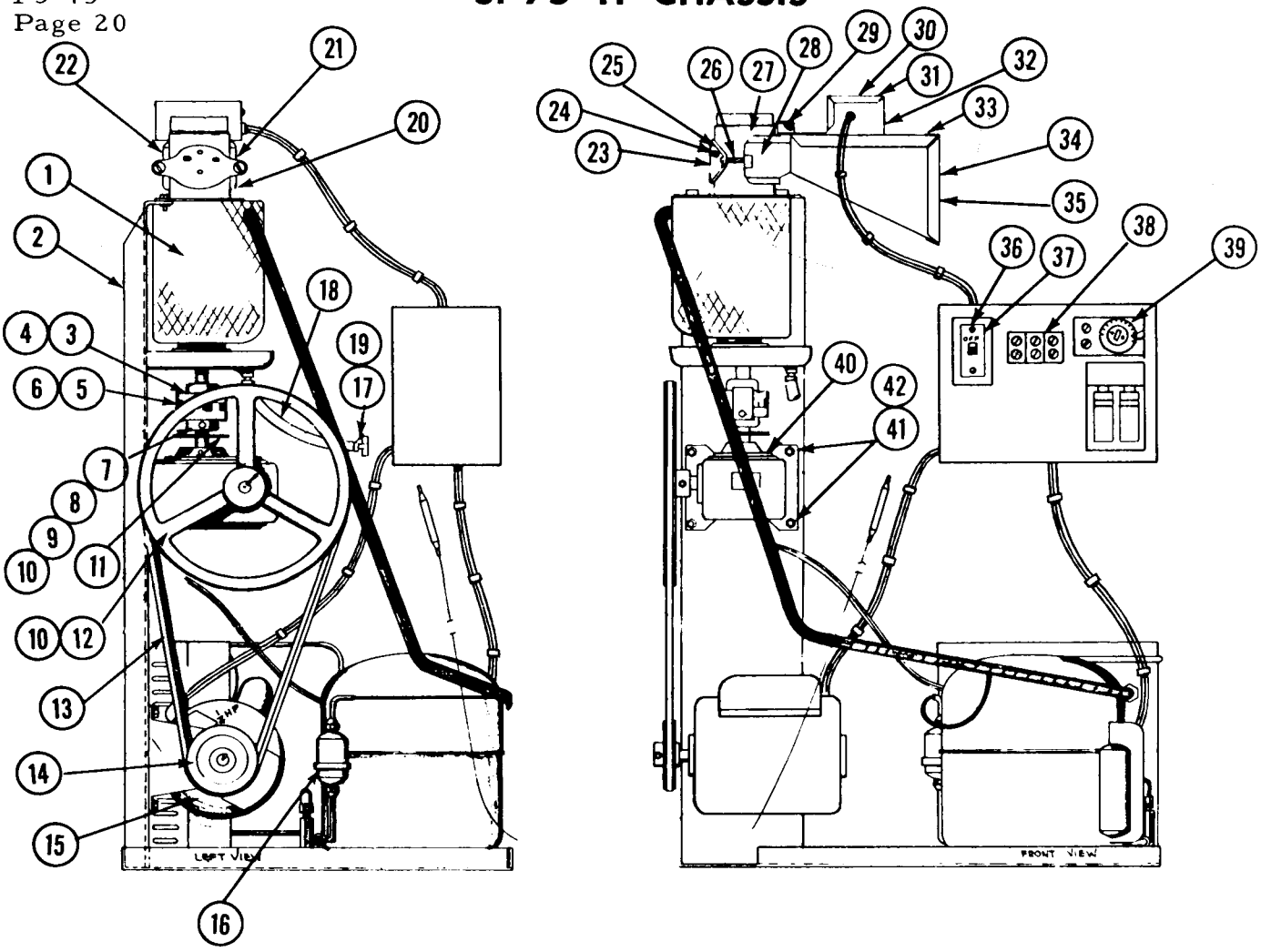

ITEM NO.	PART NO.	NAME
1.	A-16233-1	Freezer Assy.
2.	A-15974	Frame
3.	S-8525	Coupling, top
4.	13-131	Insert, rubber
5.	S-7716	Coupling, lower
6.	S-8496	Coupling Clamps (2)
7.	3-206	Screws (2)
8.	3-89	Lock Washers (2)
9.	3-385	Set Screw
10.	S-6035	Key *
11.	13-152	Rubber Shield
12.	2-1463	Pulley (large)
13.	13-582	Belt
14.	2-1462	Pulley (small)
15.	12-864-1	Motor 115/60/1
16.	2-350	Drier
17.	A-7387	Tee
18.	13-79	Tubing (per foot)
19.	2-534	Clamps
20.	A-8736	Clamps, Insulation *
21.	A-15070	Left Insulation *
22.	A-15071	Right Insulation

ITEM NO.	PART NO.	NAME
23.	S-9237	Spout Casting
24.	3-207	Screws (2)
25.	3-679	Washers (2)
26.	3-671	Screws (2)
27.	2-560	"O" Ring *
28.	A-14254	Front Casting
29.	A-14256	Nut
30.	A-14241	Cover
31.	3-173	Screws (2)
32.	12-1018	Switch
33.	A-16357	Spout
34.	A-16360	Press. Plate (with spring)*
35.	2-1321	Spring *
36.	12-530A	Switch
37.	12-708	Overload (state mfg.)**
38.	12-1308	Terminal Board *
39.	11-99-1	Temperature Control
40.	2-580	Gear Reducer
41.	3-265	Nut (4)
42.	3-371	Washer (4)

* Not Shown
** See Overload chart page 29 for correct dash no.

CONDENSING UNIT

¼ HP Air Cooled Bendix Westinghouse
Used from Serial No. 8-11-7644 and up.
Thru "H" Models

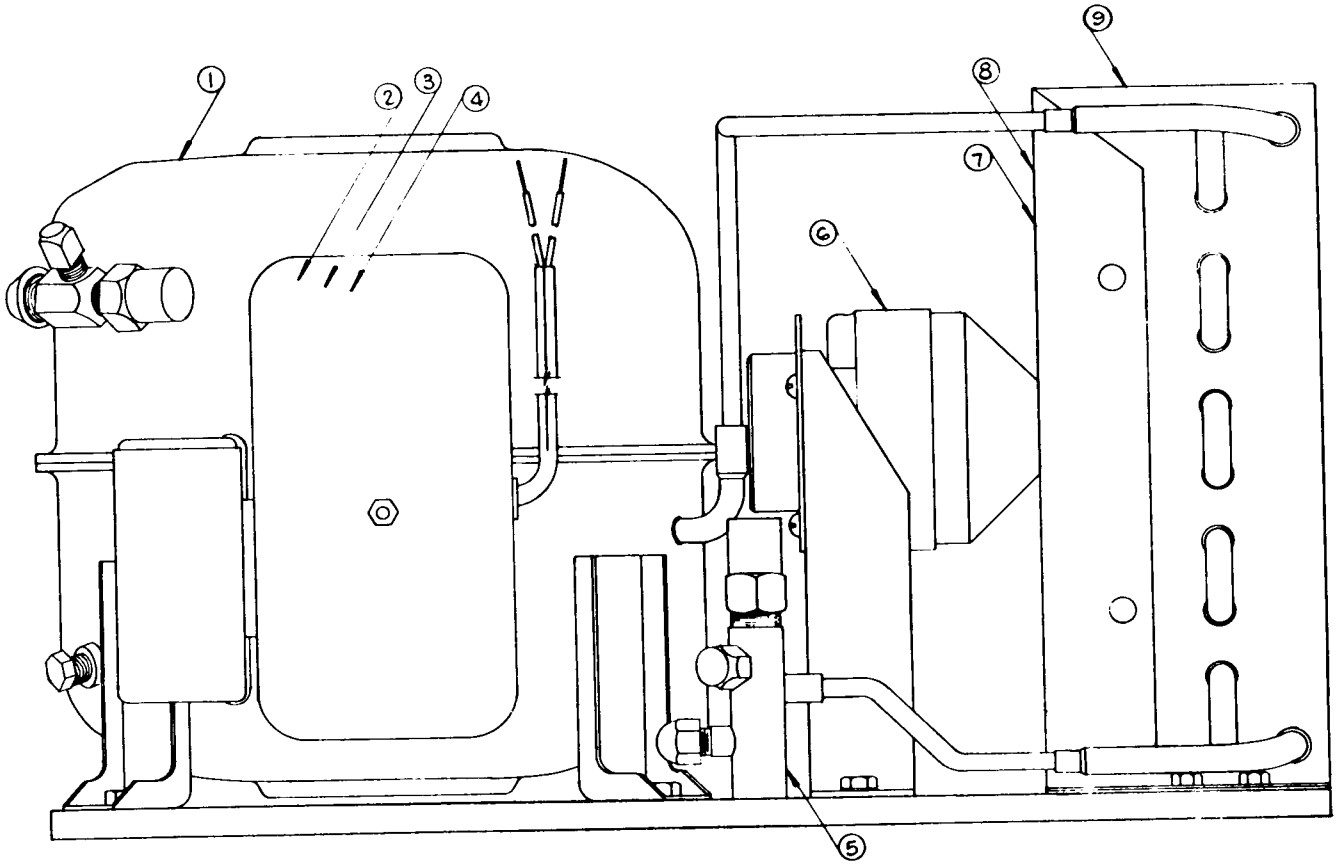

ITEM NO.	PART NO.	NAME
1.	18-132	Motor Compressor 115/60/1
2.	18-133	Relay *
3.	18-134	Starting Capacitor (*)
4.	18-135	Klixon (*)
5.	18-138	Base Valve (high side)
6.	18-150-1	Fan Motor
7.	18-231	Fan Blade (*)
8.	A-15621	Condenser Shroud
9.	18-140	Condenser Core

(*) Not Shown

Condenser Unit Complete Part A-18-103

Previous to "H" Models
18-421 Fan Motor
18-137 Fan Blade

RESERVOIR ASSEMBLY SF-75

Thru "H" Models *

ITEM NO.	PART NO.	NAME
1.	A-8341	Reservoir Cover Ass'y
2.	2-1259	Float Pin
3.	2-1320	Water Deflector
4.	S-8770	Water Inlet
5.	S-8772	Valve Seat
6.	A-5777	Valve Seat Holder
7.	3-1001	Rivet
8.	A-12067	Float Ass'y (includes arm)
9.	S-7044	Nut
10.	A-12869	Inlet Water Bracket
11.	S-8138	Inlet Water Valve Ass'y (includes valve seat, holder and float assembly)
12.	S-6715	Stand Pipe
13.	A-13408	Reservoir Body Ass'y
14.	A-8055	Bracket Nut
	A-8351	Reservoir Complete (Less Cover)
15.	A-18418	Water Deflector

* H Model SF-75 use
A-16012 Reservoir Cover

702-22170 1

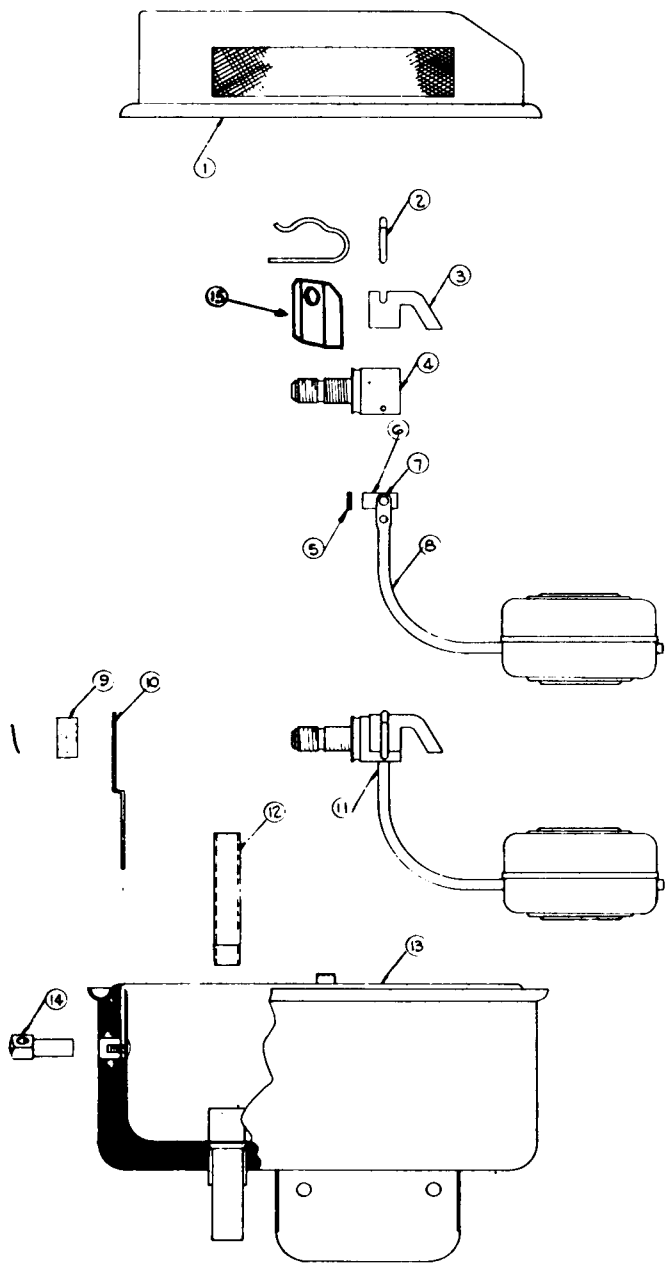

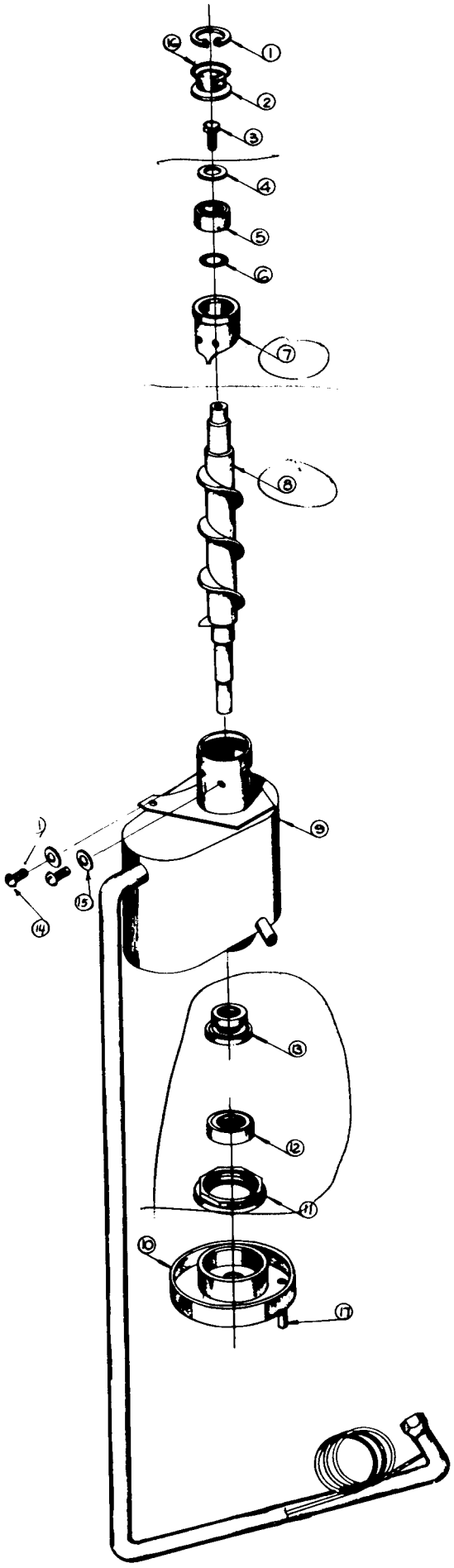

SF-75 WSH FREEZER

Part No. A-16233-1

Use on all models thru "H"

NOTE:

Will fit all model SF-75 thru H.
Will replace A-9618 and A-7782-1.

ITEM NO.	PART NO.	NAME
1.	3-553	Snap Ring
2.	A-7701	Worm Tube Cap
3.	3-758	Cap Screw
4.	A-7699	Worm Tube Washer
5.	2-547	Bearing, Upper
6.	2-386	'O' Ring
7.	A-9413	Ice Breaker
8.	2-1470	Worm Shaft
9.	A-9619	Worm Tube, Acc., Suction Line & Cap Tube
10.	13-213	Drip Pan, Rubber
11.	S-8817	Worm Tube Nut
12.	2-417	Lower Bearing
13.	2-1300	Water Seal
14.	3-207	Screws (2 required)
15.	3-679	Washer (2 required)
16.	A-8162	Cap Hook
17.	A-8002	Drain Tube (copper) (*)
	A-16233-1	Freezer Complete

SF-75 H CASE AND HOOD ASSEMBLY

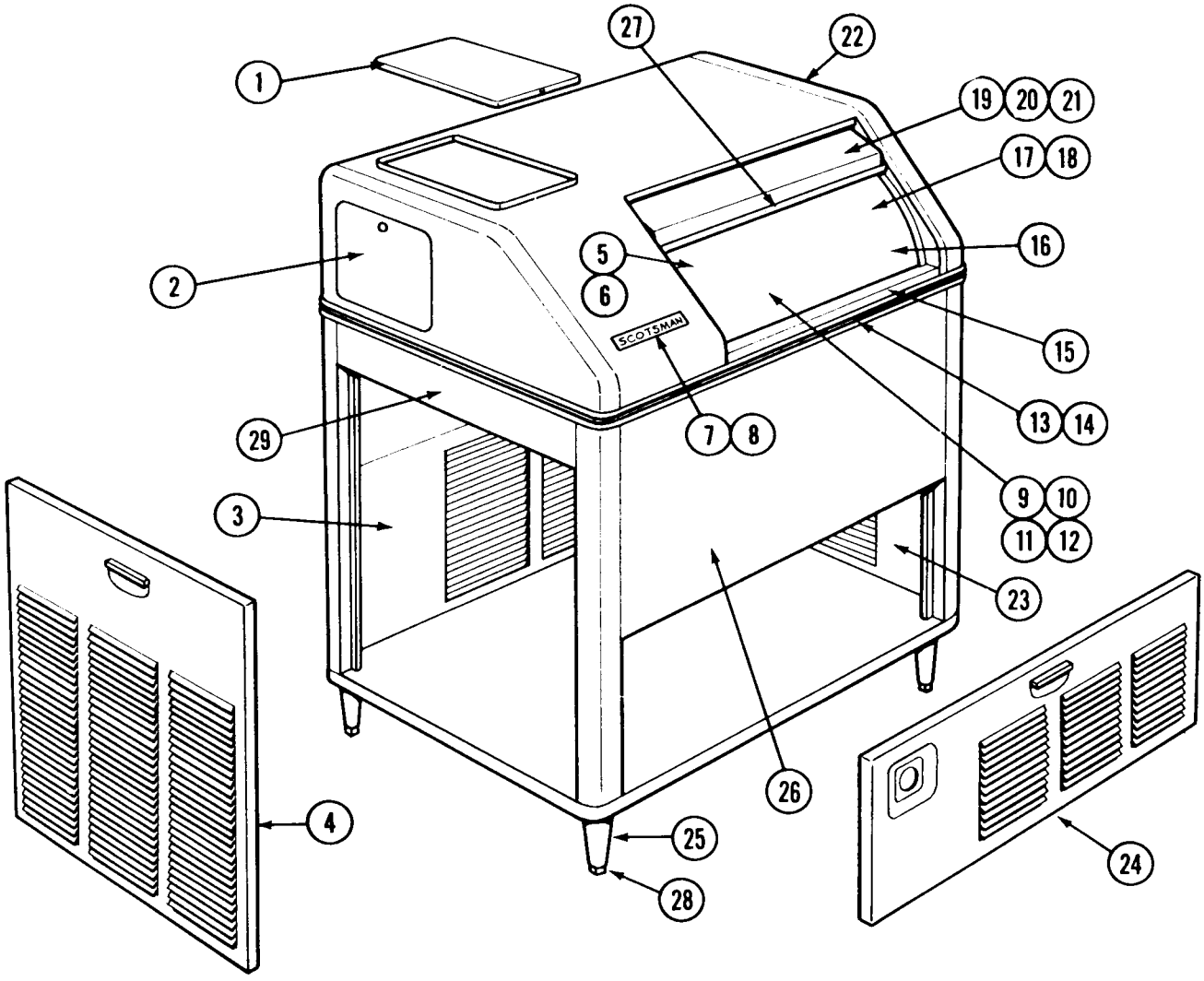

ITEM NO.	PART NO.	NAME
1.	A-6767	Top Door Assy.
2.	A-6530	Top Side Door
3.	A-16563	Back Door
4.	S-9405	Left Door
5.	3-1212	Bulb Holder *
6.	13-557	Grommets *
7.	15-156	Emblem
8.	3-271	Nuts
9.	A-15574	Storage Bin Assy.
10.	A-18088	Drain Assy.
11.	2-1581	Bottom Insulation *
12.	A-15573	Insulation Layout *
13.	A-6510	Front Moulding
14.	15-324	Insert
15.	A-16208	Door Track Assy.*

ITEM NO.	PART NO.	NAME
16.	A-18090	* Drain Fitting (female)
17.	A-6448	Drain Strainer *
18.	2-530	"O" Ring *
19.	A-15559	Door Assembly
20.	3-640	Door Glides *
21.	3-1195	Door Glides (hood)*
22.	A-15599	Hood Assembly
23.	A-16561	Right Door
24.	A-15789	Front Door
25.	A-15803	Leg
26.	A-16519	Case Assembly
27.	A-16209	Door Catch *
28.	8-522	Leg Leveler
29.	A-7714	Left Panel

* Not Shown
Add an "S" to panel Nos. for stainless steel

GEAR REDUCER

Scotsman Part No. 2-580
Winsmith Part No. (3CT)
SF-75 thru "H" Models

ITEM NO.	PART NO.	NAME
1.	2-580-28	Slow-Speed Gasket (2 per unit)
2.	2-580-24	Slow-Speed Oil Seal
3.	2-580-26	Slow-Speed Bearing (2 per unit)
4.	2-580-20	Slow-Speed Gear & Shaft Assembly
5.	2-768-25	Gasket (high-speed) (2 per unit)
6.	2-768-24	High-Speed Bearing (2 per unit)
7.	2-768-20	High-Speed Oil Seal
8.	2-580-21	High-Speed Worm & Shaft (integral)
9.	2-580-27	Slow-Speed Spacer (2 per unit)
10.	2-580	Reducer Complete

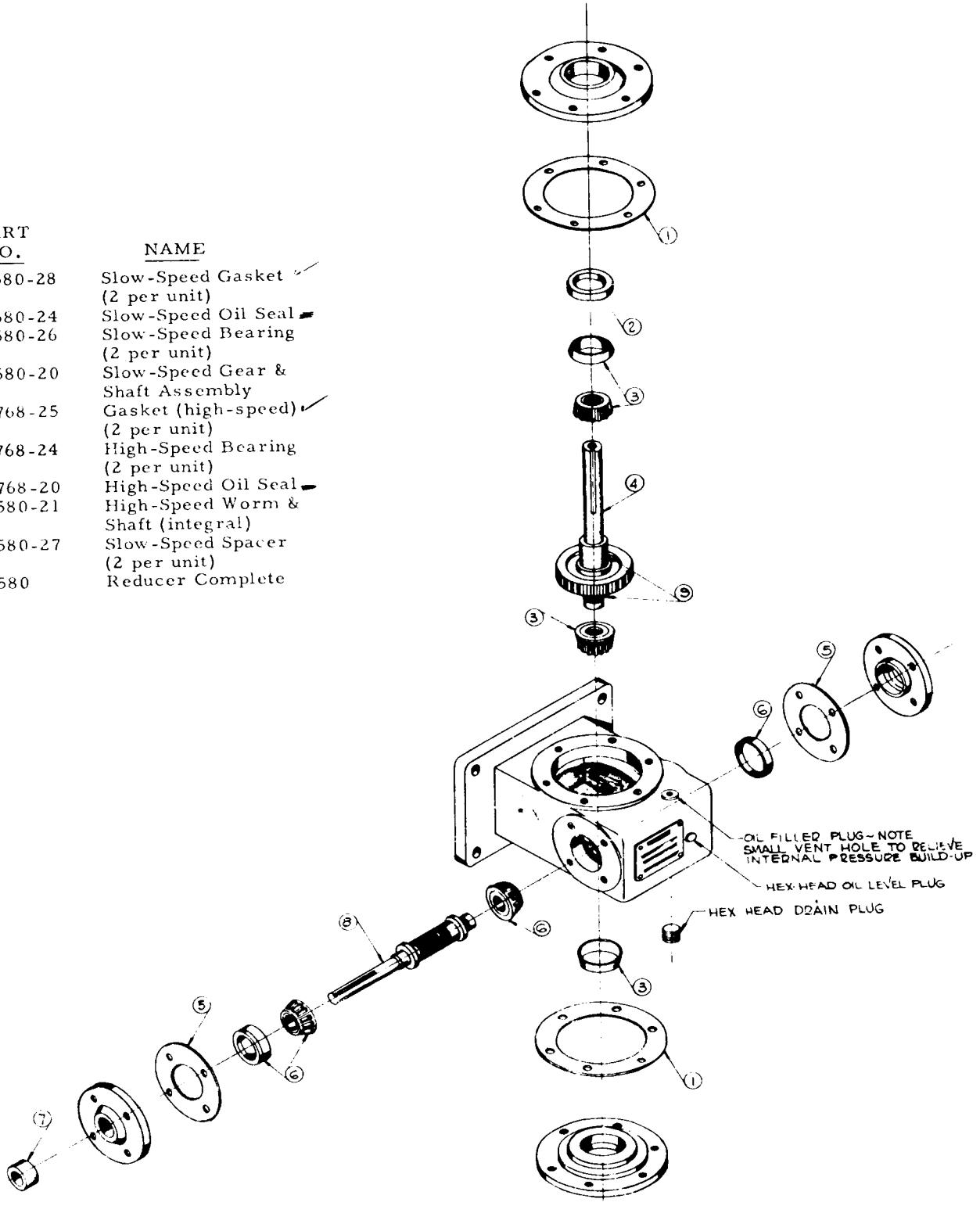

In answer to many field requests, we are pleased to release the following chart showing the companies whose products are acceptable substitutes for the 600W supplies by Winsmith as factory recommended.

Note the third column which most accurately represents the normal temperature operating range. Also the Alemite or Zerk fitting to bearing is greased with Mobilgrease BRB No. 1, or any good grade ball bearing grease as obtained from local service stations.

600W oils and equivalents are classified as industrial oils and most likely will be found in bulk plants rather than local service stations.

WORM GEAR REDUCERS

CB-CT-CV-CBD-CVD-CBX-CTX-CVX-DBI-TSR

Ambient Temperature °F	-30 to 15	16 to 50	51 to 110	111 to 165
Maximum Operating Temperature °F	150	185	225	225
Viscosity @ 210°F, SUS	40 to 90 (Optional)	90 to 125	125 to 190	190 to 350
Compounded with		3 to 10% Acidless Tallow or E.P. Base	3 to 10% Acidless Tallow or E.P. Base	3 to 10% Acidless Tallow or E.P. Base
AGMA Lubricant		#7 Compound	#8 Compound	
Cities Service Oil Co.	Pacemaker Oil #5	Optimus Oil #10	Optimus Oil #6	Optimus Oil #12
Fiske Bros. Refining Co.	#3Lubriplate	#8Lubriplate	#8Lubriplate	APG Lubriplate
Gulf Oil Corporation	Multipurpose Gear Lubricant	E.P. Lubricant #115	E.P. Lubricant #145	E.P. Lubricant #250
Shell Oil Company	Vitrea Oil 71	Valvata Oil #J 78	Valvata Oil #J 78	Valvata Oil #J 83
Sinclair Refining Co.	Duro Oil 160	#87 Heavy Duty Oil	#101 Super-Heat Valve Oil	#212 Super-Heat Valve Oil
Standard Oil Co.	Stanogear Compound #1	Stanogear Compound #4	Standard Worm Gear Oil	Calumet SH Cyclinder Oil
Sun Oil Company	Sunep 70	Sunep #110	Sunep #150	HV Cyl. Oil
Socony Mobil Oil Co., Inc.	Vactra Oil #1	Mobil Compound DD	Mobil Cylinder Oil #600W	Mobil Cylinder Oil # 600W
The Texas Company	Meropa Lub. #1	Meropa Lub. #3	Meropa Lub. #6	Meropa Lub. #6

SERVICE ANALYSIS

SYMPTOM	POSSIBLE CAUSE	CORRECTION
Jnit will not run	Blown Fuse	Replace fuse and check for cause of blown fuse.
	Thermostat set too high	Adjust thermostat. 35° cut-out and 45° cut-in.
	Loose electrical connection	Check wiring.
	Switch in OFF position	Turn switch to ON.
	Inoperative master switch	Replace switch.
Compressor cycles intermittently	Low voltage	Check for overloading.
	Dirty Condenser	Clean.
	Air circulation blocked	Move unit to correct.
	Inoperative condenser motor	Replace.
	Non-condensable gases in system	Purge off.
Making wet ice	Surrounding air temperature	Correct or move unit.
	Under or over-charge of refrigerant	Recharge with the proper amount.
	High water level in water reservoir	Lower to 1/4 inch below overflow pipe.
	Faulty compressor	Repair or replace.
Low ice production	Loss of refrigerant, under or over-charge of refrigerant.	Check and recharge with proper amount of refrigerant.
	Dirty or plugged condenser	Clean condenser
	Low water level in water reservoir	Adjust to 1/4 inch below overflow pipe.
	Partial restriction in capillary tube or drier	Moisture in system. Overcharge of oil in system. Remove charge and drier. Replace and recharge system.
	Inlet water strainer partially plugged.	Remove screen and clean.
	Corroded or stained worm shaft due to water condition	Remove worm shaft and clean.
Machine runs but makes no ice	Loss or under-charge of refrigerant	Check for leaks and recharge
	Drive motor, belts, gear reducer or drive coupling inoperative	Check. Repair and/or replace.
	Pulleys loose on shafts	Tighten - repair or replace.
	Water not entering freezing chamber	Plugged strainer or supply line. Check and clean. Air lock in gravity feed line. Check and remove air lock.
	Moisture in system	Check and remove charge and drier. Replace and recharge.
	Water seal leaking	Replace seal.
	Defective manual overload switch.	Replace switch.

SERVICE ANALYSIS

SYMPTOM	POSSIBLE CAUSE	CORRECTION
Water Leaks	Defective water seal	Replace
	Gravity feed line leaking	Check hose clamps
	'O' ring in spout casting leaking	Remove spout casting and install new 'O' ring
	Storage bin drain & connecting fittings	Check and repair.
	Water level in reservoir too high	Adjust to 1/4 inch below overflow pipe.
Excessive noise or chattering	Mineral or scale deposit on auger and inner freezing chamber walls.	Remove and manually polish auger, polish inner chamber walls of freezer barrel. For lighter concentrations use Scotsman Ice Machine Cleaner periodically.
	Low suction	Add gas to raise suction pressure.
	Intermittent water supply	Check & clean water strainer. Check gravity feed line for air lock. Remove air lock.
	Water level in reservoir too low	Adjust to 1/4 inch below overflow pipe.
	Misaligned coupling or worn insert	Repair or replace.
	Gear reducer low on oil charge	Check oil level and refill to oil level plug.
	Gear reducer loose on frame	Tighten.
	Pulleys worn or loose on shaft	Repair or replace.
	Belt cracked or worn	Replace belt.
	Drive motor end-play or worn bearings	Repair or replace.
Machine continues to run with full storage bin	Storage bin thermostat not properly set	Reset or replace. 35° cut-out, 45° cut-in Check operation with handful of ice.

OVERLOAD HEATER CHART FOR MANUAL STARTER SWITCH

QUEEN PART NO. 12-530, GE PART NO. CR101H1, QUEEN PART NO. 12-1221 AND WESTINGHOUSE PART NO. MST02SN

Queen Motor No.	Manufacturer	Electrical Characteristics	Manuf. Part No.	Queen Part No. for G.E. Overload	Manuf. Part No.	Queen Part No. For Westing-house Overload	Manuf. Part No.
12-864-1	G. E.	115/60/1 ¼ HP	KC35KG312	12-708-29	123H6.25A	12-1221-27	MSH6.0A
12-864-1	Westinghouse	115/60/1 ¼ HP	S309P520	12-708-27	123H5.29A	12-1221-27	MSH6.0A
12-864-1	Century	115/60/1 ¼ HP	CSF48HKA	12-708-26	123H4.86A	12-1221-25	MSH5.0A
12-864-2	G. E.	230/60/1 ¼ HP	KC35KG319	12-708-21	123H3.17A	12-1221-20	MSH3.1A
12-864-2	Westinghouse	230/60/1 ¼ HP	S309P334	12-708-20	123H2.91A	12-1221-19	MSH2.8A
12-864-2	Century	230/60/1 ¼ HP	CSF48HKA	12-708-18	123H2.45A	12-1221-19	MSH2.8A
12-864-7	G. E.	208/60/1 ¼ HP	KC35KG317	12-708-22	123H3.46A	12-1221-21	MSH3.4A
12-864-7	Westinghouse	208/60/1 ¼ HP	S309P334	12-708-19	123H2.67A	12-1221-18	MSH2.5A
12-864-7	Century	208/60/1 ¼ HP	CSF48HKA	12-708-20	123H2.91A	12-1221-19	MSH2.8A
12-649-1	Westinghouse	115/60/1 1/3 HP	311P096	12-708-33	123H8.73A	12-1221-31	MSH8.8A
12-649-1	Century	115/60/1 1/3 HP	CSJ56-KKA	12-708-29	123H6.25A	12-1221-27	MSH6.0A
12-649-1	G. E.	115/60/1 1/3 HP	5KC42JG24	12-708-30	123H6.80A	12-1221-28	MSH6.6A
12-649-2	Westinghouse	230/60/1 1/3 HP	311P061	12-708-25	123H4.46A	12-1221-24	MSH4.5A
12-649-2	Century	230/60/1 1/3 HP	CSJ56-KKA	12-708-21	123H3.17A	12-1221-20	MSH3.1A
12-649-2	G. E.	230/60/1 1/3 HP	5KC42JG2	12-708-22	123H3.46A	12-1221-21	MSH3.4A
12-649-7	Century	208/60/1 1/3 HP	CSJ56-KKA	12-708-22	123H3.46A	12-1221-21	MSH3.4A
12-649-7	G. E.	208/60/1 1/3 HP	5KC42JG31E	12-708-22	123H3.46A	12-1221-21	MSH3.4A
12-649-7	Westinghouse	208/60/1 1/3 HP	311P061	12-708-24	123H4.10A	12-1221-31	MSH8.8A

NOTE: The overloads as listed are in accordance with Underwriters requirements. Any deviation will be in violation.

MAINTENANCE INSTRUCTIONS - FLAKERS

THE FOLLOWING MAINTENANCE MUST BE ACCOMPLISHED TWO TIMES PER YEAR ON ALL SCOTSMAN SUPER FLAKERS. CALL YOUR AUTHORIZED SCOTSMAN SERVICE DEPART - MENT.

1. Check and clean water strainers and float valve. Depress float valve to insure full stream of water.
2. Check water level and machine level, keep water level below overflow, but as high as possible and still not run out of spout opening with machine off. Water droplets come out of spout with ice at all times. Adjust as required.
3. Clean reservoir and interior of freezer using SCOTSMAN Ice Machine Cleaner.
   A. If machine has been cleaned regularly and no problems such as dry ice or chatter are noticed, clean as per the following instructions:

1. Set main switch to OFF.
2. Remove all ice from storage bin.
3. Turn off water supply or block float. Drain reservoir by removing overflow tube (gray plastic tube) in reservoir. Replace overflow tube.
4. Set main switch to ON and pour cleaning solution into reservoir. Do not fill above overflow tube.
   Models SF1 & SF75--Use 4 oz. of Scotsman cleaner and 1 qt. hot water.
   Model SF2 & SF3--Use 6 oz. of Scotsman cleaner and 1 1/2 qt. hot water.
   Model SF5--Use 8 oz. of Scotsman cleaner & 2 qts. hot water.
   Model SF8--Use 16oz. of Scotsman cleaner & 4 qts. hot water.
5. Continue to make ice on solution until the solution is used up and reservoir is empty.
6. Set main switch to Off. Remove overflow tube, wash and rinse reservoir, replace overflow tube, turn water on or remove float block.
7. Turn MAIN SWITCH to ON. Let unit run for at least (15) minutes to flush out any cleaning fluid. Check ice for acid taste.-- run until ice tastes sweet.
8. Turn MAIN SWITCH to OFF. Add hot water to ice bin, using this melt water, thoroughly wash and rinse all surfaces within the storage bin.
9. Turn MAIN SWITCH to On. Replace Service Door. Unit is ready for normal operation.

MAINTENANCE INSTRUCTIONS (Continued)

B. If heavy mineral deposits on auger and walls, or sediment at inlet to freezer are encountered, clean by pouring strong solution (1/2 acid-1/2 water) into reservoir and operate drive motor only for agitation. Allow 1/2 hour or longer as required. Drain by disconnecting tygon at water inlet to freezer.

NOTE: Cleaning requirements vary according to local water conditions. Visual inspection of the auger before and after cleaning will indicate best procedure to be followed in local areas.

4. Check high and low side pressures. On air-cooled models head pressures range between 130 and 145 PSI. Suction pressure should be above 12 PSI and will range up to 16 PSI depending upon water and ambient temperatures.
5. Change oil in gear reducer. Use Mobiloil 600W or equivalent good grade of gear oil with a viscosity of 125 to 190. For unit with grease fittings use Mobilgrease BRB No. 1 or any good grade ball bearing grease. Particularly important when there is evidence that water has gotten into gear housing. Remove gear reducer to facilitate.
6. Oil drive motor. Use SAE10 oil.
7. Check top bearing of freezing tube. Remove retainer ring around edge of stamped brass cap. If moisture is around bearing, wipe up and remove grease. Add new grease. Use Beacon No. 325. Replace cap and retainer ring.
8. Check and adjust V belt tension.
9. Clean air-cooled condenser. Inform customer to clean frequently. Always shut off machine when cleaning.
10. Oil condenser fan motor when possible.
11. Check for refrigerant leaks and proper frost line. Should frost out of accumulator at least one-half way to compressor, and in some areas back to service valve.
12. Check for water leaks. Tighten drain line connections. Run water down bin drain line to make sure it is open.
13. Check quality of ice. Ice should be wet when formed, but will cure rapidly to normal hardness in bin.
14. Check thermostat and pressure plate cut off. Micro switch cuts off only compressor. Bin thermostat should be set at 10° differential and should keep entire machine off at least twenty minutes in high ambients (longer in low) during normal operation.

PARTS LIST
SF-75WSH

ELECTRICAL COMPONENTS	
Bin Thermostat	11-99-1
Micro Switch-Spout	12-1018
On/Off Switch	12-530A
Overload Heater for Switch - See overload chart pg. 29	12-708
CONDENSING UNIT (BENDIX-WESTINGHOUSE	
Motor-Compressor 115/60/1 1/4 HP)	18-132
Dryer	2-350
Relay	18-133
Starting Capacitor	18-134
Fan Motor	18-150-1
Fan Blade	18-231
Fan Shroud	A-15621
MISCELLANEOUS	
Spring Clamp Pliers	50-46
Worm Tube Nut Wrench	A-8497
Ice Scoop	2-540
Ice Machine Cleaner - 8 oz. bottle	19-343
Grey Spray-On Touch-Up Paint	10-153
600W Gear Reducer Oil - Pints	19-359
Tygon Tubing - 9/16" ID	5-179
Tygon Tubing - 1/2" ID	5-186
Rubber Tubing - 3/8" ID	13-79
Clamp (for 5-179)	2-536
Clamp (for 5-186)	2-536
Clamp (for 5/8 drain tube)	2-534
Clamp (for 11/16 drain tube - Green)	2-535
Retainer Ring Plier	50-637

PARTS LIST
SF-75 WSH

DRIVE CIRCUIT

Gear Reducer	2-580
Gear Reducer Repair Kit	A-6397
Three Jaw Coupling (bottom)	S-7716
Three Jaw Coupling (top)	S-8525
Insert, Coupling	13-131
Allen Set Screw	3-385
Clamp	S-8496
Cap Screw	3-206
Rubber Drip Shield	13-152
"v" Drive Belt - 48"	13-582
Drive Motor - 1/4 HP	12-864-1
Pulley - 2 1/2"	2-1462
Pulley - 8"	2-1463
Key	S-6035

FREEZER ASSEMBLY COMPLETE

Freezer Assembly Complete	A-16233-1
Ice Breaker	A-9413
'O' Ring	2-386
Top Bearing	2-547
Cap Screw	3-758
Worm Tube Washer	A-7699
Worm Tube Cap	A-7701
Retainer Ring	3-553
Worm Shaft	2-1470
Water Seal	2-1300
Bearing, Bottom	2-417
Worm Tube Nut	S-8817
Back Casting	S-9237
Rubber Drip Pan	13-213
Front Casting	A-14254
Spout only	A-16357
'O' Ring	2-560

PARTS LIST
SF-75WSH

CABINET PARTS

Machine Case (less doors)	A-16519
Storage Bin Assembly	A-15574
Drain Assembly, Female	A-18090
Drain 'O' Ring	2-530
Thermo Bulb Bracket	3-1212
Storage Drain Fitting (male)	A-18088
Case Hood Assembly (less doors)	A-15559
Door Slide Assembly	A-16208
Bin Drain Screen	A-6448
Sliding Door	A-15599
Front Door	A-15789
Right Side Door	A-16561
Rear Door	A-16563
Left Side Door	S-9405
Hood Top Door Assembly	A-6767
Hood Side Door Assembly	A-6530
Rear Moulding Strip - 24"	A-6509
Front Moulding Strip - 87 1/4"	A-6510
Emblem	15-156
Leg	A-15803
Leg Leveler	8-522
Plywood Crate	1-650

WATER CIRCUIT

Water Reservoir Assembly Complete, less cover	A-8351
Water Inlet Valve	S-8138
Float Assembly	A-12067
Rubber Valve Seats	S-6947
Float Pin	2-1254
Water Deflector	2-1320
Stand Pipe	S-6715
Reservoir Cover	A-16012
Water Strainer	16-162

TABLE OF CONTENTS

FORWARD 1

TABLE OF CONTENTS 2

SPECIFICATION
- Mechanical Specifications 3
- How It Works 4

INSTALLATION
- Appearance and Specifications 5
- Photo and Ice Making Capacity 6
- Installation Instructions
  - Installation Location - Preparation 7
  - Preparation for Installation 8
  - Limitations 9
  - Water Supply - Drain 10
- Refrigeration Cycle 11
- Water Schematic 12
- Wiring Diagram 13
- Final Check List 14

SERVICE
- Starting Machine 15
- Refrigerant Charge 15
- Water System 16
- Electrical System 17
- Removal and Installation of Parts 18-20
- Chassis Assembly Schematic 21-22
- Freezer Assembly 23
- Chassis Assembly B-Models 24
- Reservoir Assembly 25
- Case & Hood Assembly 26
- Gear Motor Assembly 27
- Service Analysis 28-29
- Maintenance Instructions 30-31
- Care - Stainless Steel Bin 32-33
- Compressor 34

THIS PAGE
INTENTIONALLY
LEFT BLANK

THIS PAGE
INTENTIONALLY
LEFT BLANK

MECHANICAL SPECIFICATIONS

	SF-75
Compressor	1/4 HP Tecumseh
Condenser	Air-Cooled
Refrigerant	19 oz. R 12
Refrigerant Control	Capillary Tube
Power Consumption - Compressor	5.2 Amps.
Power Consumption - Gear Motor	2.6 Amps.
Current	115 V, 60 Hertz, 1 Ph.
Gear Motor Drive	1/10 HP
Worm - R.P.M.	10.5
Water Consumption - Freezer	2 Gallons per hour
CABINET DIMENSIONS	
Depth	24 1/2"
Width	32 1/2"
Height	40"
Height with 6" legs	46"
SHIPPING WEIGHT	
Uncrated	330
Crated	360

SPECIFICATIONS

SCOTSMAN Flakers are designed for restaurants, super markets, soda fountains, hospitals, bakeries, fish markets, poultry stores, packing plants, etc. It is the finest Ice Maker on the market today. It will work 24 hours a day for you, or only as needed. It produces the highest quality ice available at any price.

SCOTSMAN ICE SYSTEMS are easily installed requiring only standard water, drain and electrical connections.

ATTRACTIVE COMPACT CABINET. *Sandlewood Micomatte with chrome trim, rounded corners, and removable panels for easy access to mechanical parts. *Adjustable and removable legs are under cabinet.

SEALED REFRIGERATION SYSTEM. Provides quiet, efficient operation of the machine. Compressor motor is internally spring mounted for quiet operation. Compressor motor is covered by a 5-Year Warranty.

HOW IT WORKS. An exclusive patented ice-making system, wherein water in the constant level float reservoir is fed to the bottom end of the freezing cylinder and turns to ice on the inside of this cylinder. Ice from the refrigerated walls of this cylinder is extruded past the ice breaker at the top of the cylinder through a side opening by means of a stainless steel auger directly driven by a motor gear reduction drive.

SCOTSMAN Model SF-75 are completely automatic. A manual switch on the front starts the machine, and from then on, produces flakes automatically. When the storage bin fills, the machine automatically shuts off and starts up again when ice is taken from the storage compartment.

*Also available in stainless steel cabinet.

NOTE: this unit is not supplied with legs
*Optional leg kit available thru sales department.

INSTALLATION INSTRUCTIONS

The following installation instructions were written for use by a authorized tradesman only, not the user or customer. We suggest you call your local authorized Scotsman Service Agency for hook-up, start-up, and check out. He's listed under "Ice Making Machinery & Equipment" in your telephone book, yellow pages.

SCOTSMAN®
COMMERCIAL ICE SYSTEMS/HOME ICE MAKERS

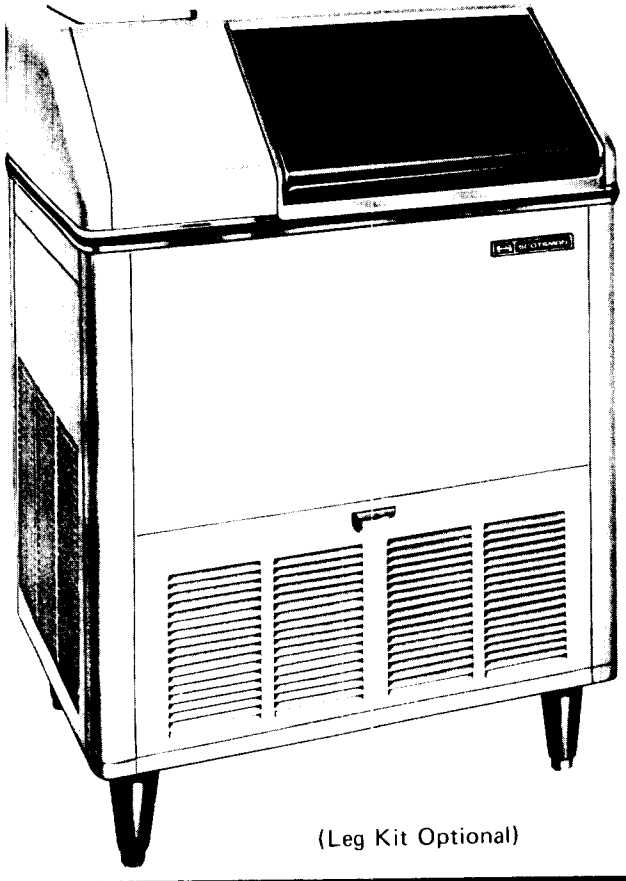

(Leg Kit Optional)

SF 75 series
flaker with storage

The SF75 has a compact, cabinet with big production and storage capacity. Ideal for small food operations or where multiple locations offer greater efficiency in ice handling.The SF75 is an air-cooled condenser unit which produces Scotsman flake ice. The bin is made of heavy gauge stainless steel, for easy cleaning and holds up to 100 pounds of ice. A sensitive thermostat, located inside the bin automatically shuts off the flaker when bin is full and re-starts unit when ice is removed. Scotsman has an exclusive, patented flaker mechanism which produces hard bits of ice .

ice making capacity

Daily Ice Capacity is directly related to condenser air inlet temperature, water temperature, and age of machine.

NOTE: To keep your SCOTSMAN FLAKER performing at it's maximum capacity, it is necessary to perform periodic maintenance as outlined on page 30 of this manual.

MANUFACTURER:

QUEEN PRODUCTS DIVISION
KING-SEELEY THERMOS CO.
ALBERT LEA, MINNESOTA 56007

SF 75 series flaker with storage

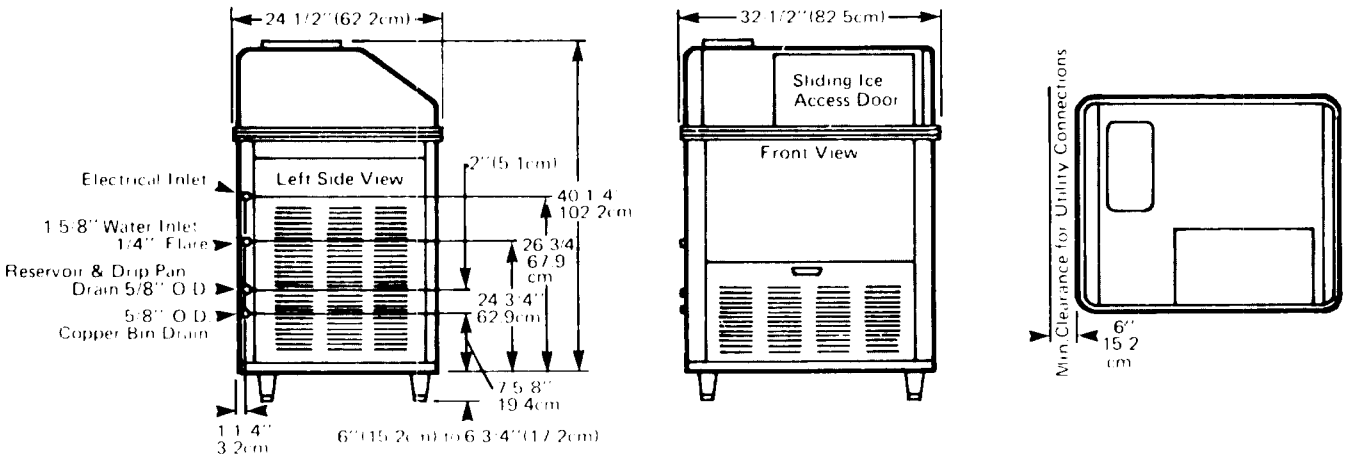

Storage Bin: 100 lbs. (45.02 kg.)
Height: 40-1/4" (102.2 cm) w/o legs
Width: 32-1/2" (82.5 cm)
Depth: 24-1/2" (62.2 cm)
Weight: 268 lbs. (121 kg.)

OPTIONAL LEG KITS

Four metal legs screw into mounting plates on cabinet base. Provide 6" minimum height including adjustable leveling foot. N.S.F. approved.

KLP2E: Black enamel finish. Recommended for enameled cabinets.

KLP2S: Nickel plated, brushed metal finish with stainless steel foot. Recommended for stainless steel cabinets.

IMPORTANT OPERATING REQUIREMENTS

Electrical Voltage: Machine requires voltage indicated on rating name plate. Failures caused by improper voltage are not considered factory defect.

Ambient Temperature: Machine is not designed for outdoor installation. Machine will not operate when air temperature is below 50° F or above 100° F.

Water Pressure & Temperature: Requires 20-lbs. flowing water pressure, without interruption. Machine will not operate when water supply temperature is below 40° F or above 100° F.

SPECIFICATIONS – SF75

Model Number	Condensing Unit	Compressor Horsepower	Finish*	Shp. Wt. lbs./kgs.
SF75WSJ	Air	1/4	Enamel	268/121
SF75WSJSS	Air	1/4	Stainless Steel	268/121

*Sandalwood baked enamel finish or all heavy guage stainless steel

Basic Electricals		Max. Oper. Amps	No. of Wires	Max. Fuse Size	
Air-Cooled:	115/60/1	9.8	2	15	

We reserve the right to make product improvements at any time. Specifications and design are subject to change without notice.

INSTALLATIONS

UNDER BAR INSTALLATIONS: Locate, if possible, so left end panel is accessible. Locate so proper circulation can be attained around the unit and behind it at least four inches.

KITCHEN INSTALLATIONS: As a rule, the kitchen is not the most practical place to install an air-cooled condensing unit, as grease is almost always present and makes cleaning of the condensing unit difficult. Do not locate near range or steam table or other heating devices that may be used in the kitchen.

STOREROOM INSTALLATIONS: Be sure storeroom is of adequate size and properly ventilated. A small, poorly ventilated room will greatly impair the efficiency of the unit. The storeroom must be kept above 50° in the winter months.

BASEMENT INSTALLATIONS: Locate machine in the coolest place. Locate machine in a dry place. Keep away from furnace and boiler room. Keep away from service chutes and runways; also coal and other dust of any kind. If the machine is set over a floor drain, block the machine up enough to level it. If there is any chance of basement flooding, block the machine up to eliminate any possible damage to the machine.

UNCRATING OF MACHINE: The complete machine comes in one carton. After the carton is removed, inspect for concealed damage. When installing the machine. Remove the bottom skids by removing all bolts. Then check all refrigerant lines for rubbing or touching other surfaces. Also check for possible transportation damage.

PRE-INSTALLATION CLEANING: Before machine is in final location, remove top service door, water reservoir cover, and leave cover off for float adjustment. Make adjustment (if necessary) and re-install.

PREPARATION FOR INSTALLATION

1. Inspect complete unit cabinetry for shipping damage. Notify carrier of concealed damage claims.

2. Remove all service doors and panels.

3. If optional legs are used, install at this time being sure to properly level unit using adjustable levelers.

4. Remove water strainer from storage bin for installation on unit or in water supply line feeding unit.

5. Open electrical control box and prepare for hook up, use knock outs, cord connectors etc. Then check unit nameplate voltage against building source voltage and make sure they correspond. Caution - Improper voltage supplied to units will void your warranty protection.

6. Select unit location prior to hook up of water drain and electricals in accordance with local and national codes. Minimum room temperatures is 50° Fahrenheit. On air cooled models, select well ventilated location.

7. Remove Users manual from storage bin, then wipe bin clean with damp cloth.

8. Fill out registration card completely including model and serial numbers as taken from serial plate found behind front service panel.

9. Level Unit.

INSTALLATION LIMITATIONS

ELECTRICAL

1. Scotsman, like most manufacturers, purchases electrical motors that are rated to operate within 10% variance above or below nameplate ratings.

2. Improper voltages applied to Scotsman equipment can cause premature failures and burnouts. Failures of this type are not considered as factory fault or defect.

AMBIENT

WARNING — This machine is not designed for outdoor installations. This machine will not operate when air temperatures are below 50° F. or above 100° F.

This unit was not fabricated nor intended to be installed outdoors.

WATER

3. Scotsman Ice Systems require 20 pounds flowing water pressure to operate satisfactorily. Pressures lower than 20 pounds or interruptions in the water supply can cause serious mechanical damage to this product.

   This machine will not operate when water supply temperatures are below 40° F. or above 100° F.

INSTALLATION PRACTICES

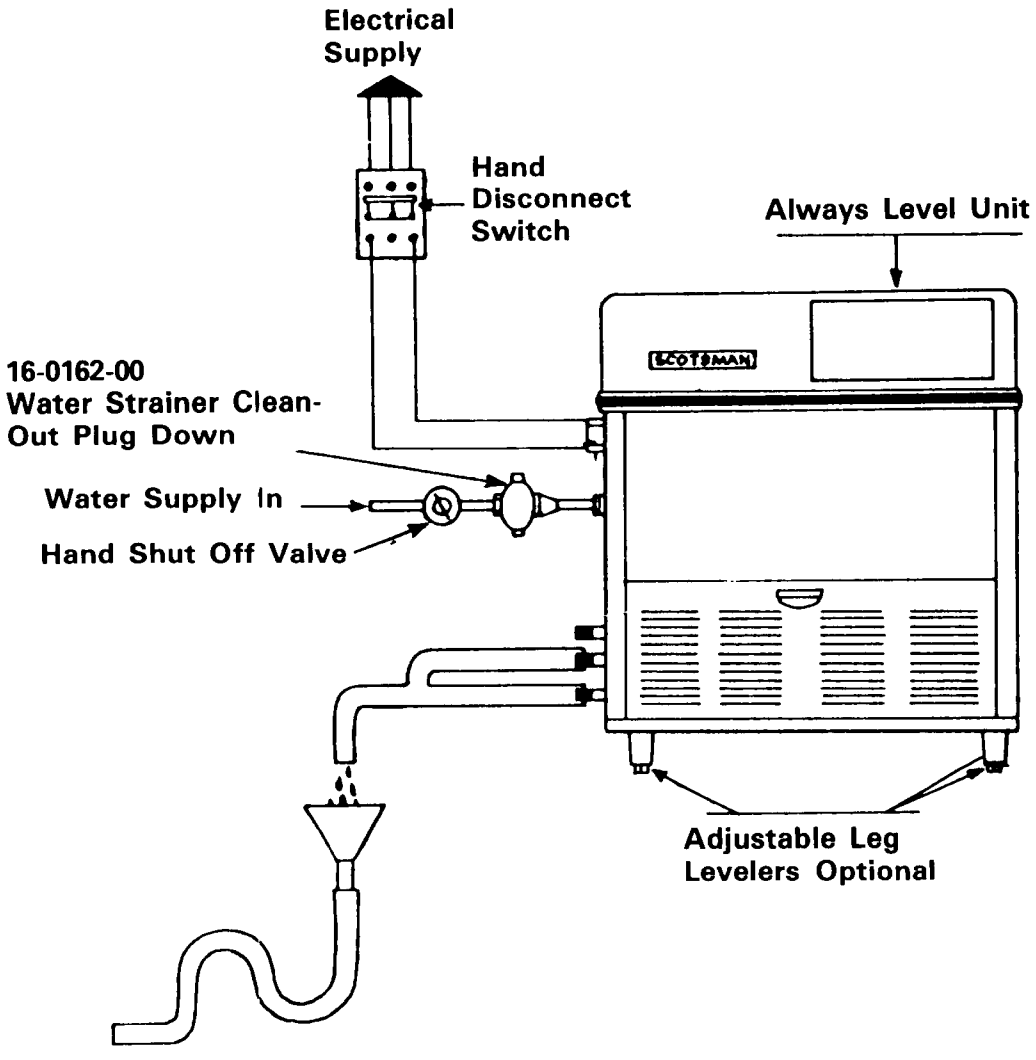

WATER SUPPLY. The recommended water supply line is 1/4 inch OD copper tubing. Connect to cold water supply line with regular plumbing fittings, with shut-off valve installed in an accessible place between supply line and machine. A water strainer must be installed with the unit and mounted with clean-out plug down. Locate the strainer next to the machine with the arrow in the direction of the flow. Most plumbing codes also call for double check valves in the supply water line.

The water supply line connects to the 1/4 inch flare fitting on the machine. Water supply must be installed to conform with local code. In some cases a licensed plumber and /or a plumbing permit will be required.

DRAIN. The recommended drain from the bin is 5/8 inch OD copper tubing. Must be run to an open trapped and vented drain. If drain is a long run, allow a 1/4 inch pitch per foot. Drain must be installed to conform with local code.

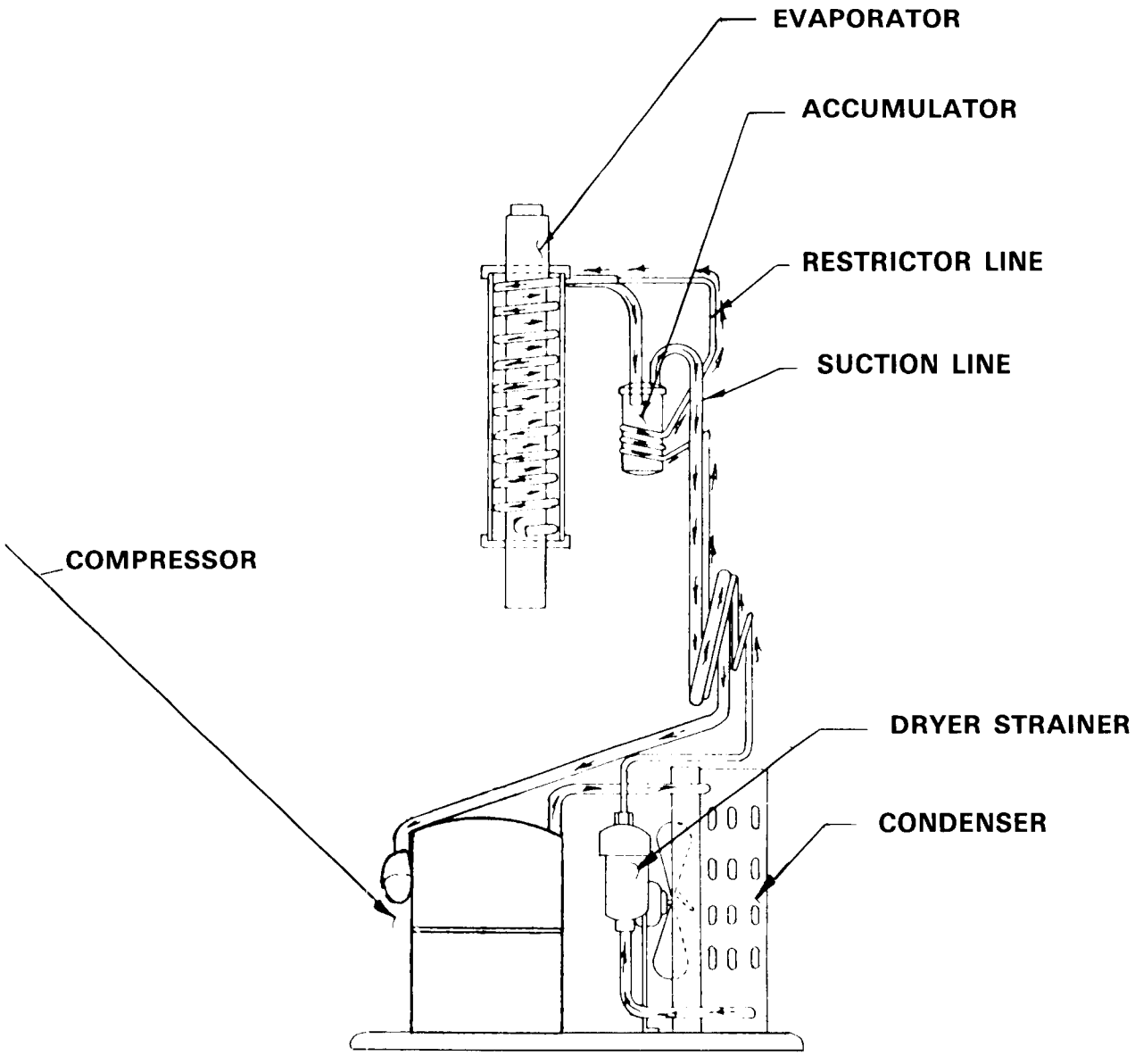

REFRIGERATION CYCLE

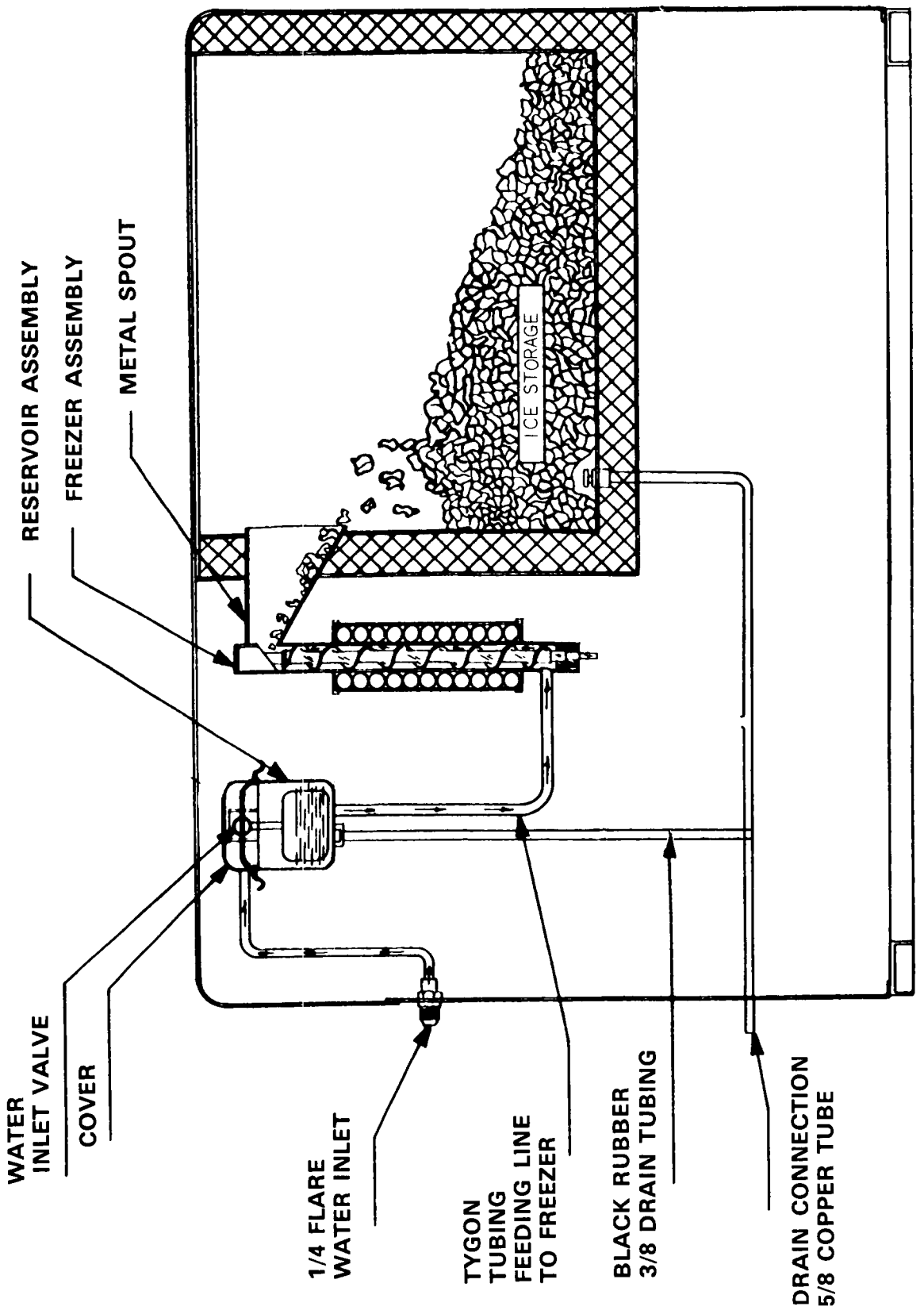

WATER SCHEMATIC

SF-75

A26803-001

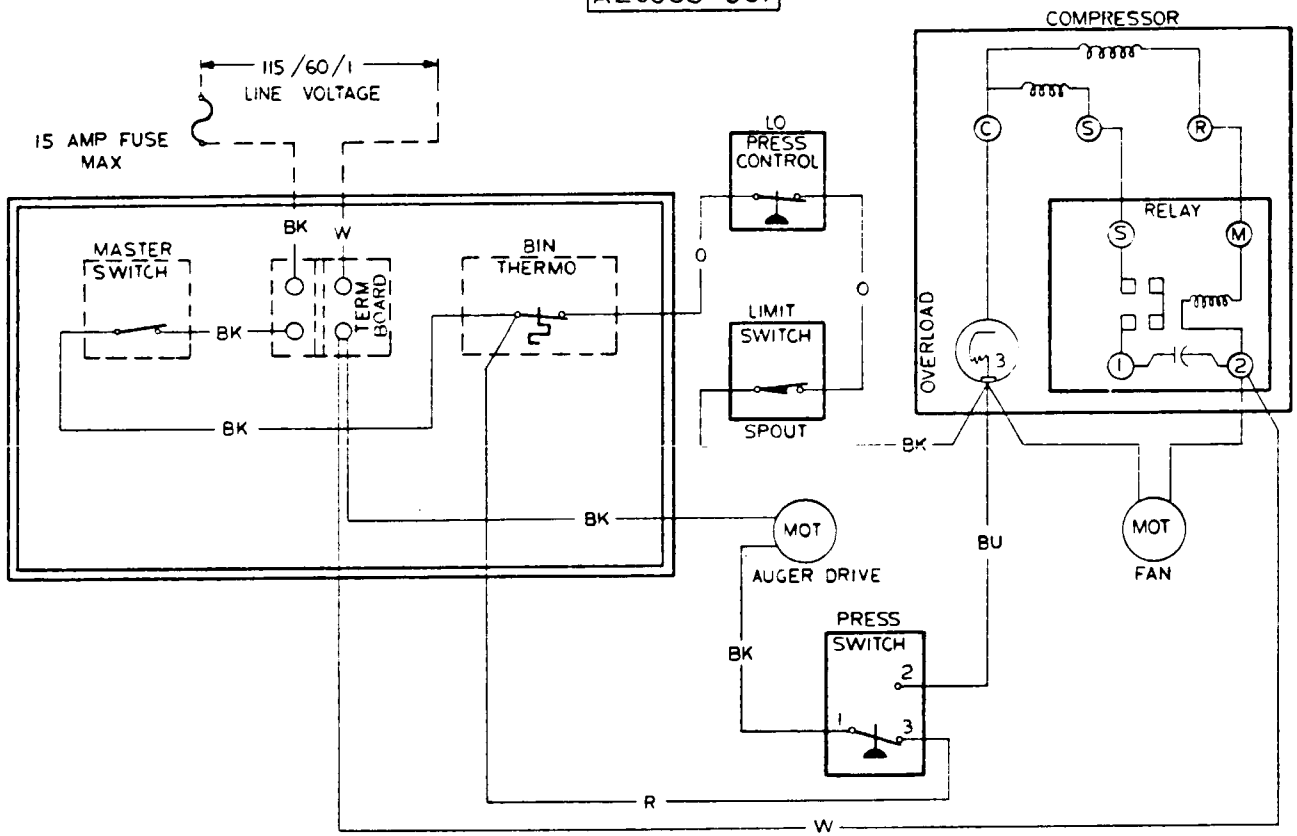

WIRING DIAGRAM

SF 75

115-60-1

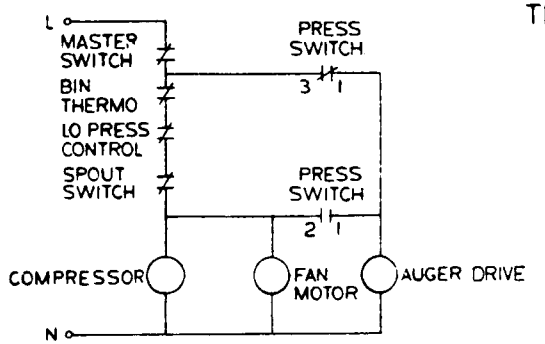

THIS UNIT MUST BE GROUNDED

ALL CONTROLS SHOWN IN NORMAL ICE MAKING MODE

FINAL CHECK LIST

1. Is the unit level? (IMPORTANT)
2. Have all electrical and piping connections been made?
3. Has the voltage been tested and checked against the nameplate rating?
4. Is the water supply valve open and the electric power on?
5. Is the water reservoir filled and shut off?
6. Have unit and bin been wiped clean?
7. Has owner been given the Users Manual, and has he been instructed on how to operate the machine?
8. Have the installation and registration cards been filled out? This is the owner's protection.
9. Check all refrigerant and conduit lines to guard against vibration and possible failure.
10. Installed in a well ventilated room where ambient temperatures do not fall below 50° Fahrenheit.
11. Is unit installed with a minimum 4" air space around sides and back?

SERVICE

STARTING THE MACHINE: When the machine is placed and inspected as per instructions and all plumbing and electrical connections are completed and tested, turn on the water supply. Be sure the float cover is removed to check on the float operation and water level in the water reservoir. Be sure the water reservoir is filled before starting the machine. Water level should be 1/4 inch below the reservoir overflow.

When this is completed, turn on the manual switch on the front of the cabinet and the machine is in automatic operation. In two to three minutes ice will start dropping off the worm shaft and out the ice chute. Let the machine operate for at least 30 minutes and check for any excess noise other than the normal compressor noise. Test the ice storage control bulb by holding a handful of ice around the bulb until the machine shuts off. One minute should be normal for the control to function. Within minutes after the ice is removed, the bulb will warm up and the machine will automatically start up. The control is factory set and should not be reset until this test is made. Normal setting of this control should be approximately 35 degrees cut out, 45 degrees cut in.

Check low pressure setting at the time of start-up. The frost line should extend 8'' out of the accumulator if properly charged with refrigerant and suction pressure will range between 15 and 16 PSI with 50° F. inlet water.

Explain the machine to the owner, showing him how the machine works and go over the owner's instruction sheet with him. Answer all the owner's questions about the machine, and do not leave with any doubt in the owner's mind about the machine, how to operate it or where to reach you should he need service on the machine. Call back the next day to check the machine again and answer any other questions the owner may have.

Service gauge connection is available on low side. Purge free of any non-condensable gases before starting any test operation.

REFRIGERANT CHARGE: The below refrigerant charge is approximate. Charge so that the frost line extends 8'' out of the accumulator after fifteen minutes of operation. Factory charge 19 oz. refrigerant 12.
Hi Side Pressure 135-145 P.S.I.

SERVICE

WATER SYSTEM: A water level is maintained in the water reservoir by a float operated valve. Water is piped from the water reservoir to the freezing chamber by a gravity feed line maintaining an equal water level. A safety overflow is in the water reservoir to prevent damage should the inlet water valve fail.

The water reservoir is equipped with an air gap to prevent back siphoning and meet all health codes.

The water level in the water reservoir is adjusted by bending float arm. The water level should be set 1/4 inch below the overflow pipe.

A water strainer must be installed in the supply line. Use strainer sent with machine.

ELECTRICAL SYSTEM: The SF-75 is designed to work on standard electrical supply 115 volts, 60 Hertz single phase.

Supply voltage should not vary more than plus or minus 10 percent over nameplate rating.

Special voltage requirements are available on special order. Therefore always check nameplate for this information before checking electrical supply.

The electrical circuit consists of compressor, freezer gear motor, storage bin thermostat, ON and OFF switch and spout micro (safety) switch, and low pressure control switch.

A. COMPRESSOR: The starting capacitor and starting relay are housed and fastened to the motor compressor. Some models do not use a start capacitor.

B. GEAR MOTOR TO FREEZER: Model SF75 is equipped with a 1/10 horsepower direct drive gearmotor.

C. STORAGE BIN THERMOSTAT: Thermostat control body is located in electrical control box. The thermostat sensing tube is threaded into the ice storage bin where it automatically stops the icemaker when ice bin fills to sensing tube level and restarts icemaker when ice is removed. Factory settings are 35° cut out, 45° cut in.

Altitude correction begins at 2,000 feet, cut in and cut out screws should be adjusted equally, not more than 1/4 turn at a time.

D. MICRO SAFETY SWITCH: The micro switch is located in the top of the ice chute. The switch is operated by a pressure plate inside the ice chute. Ice backs up in the chute if the storage bin thermostat fails. Micro switch will shut off the condensing unit only, when operated.

E. ON-OFF SWITCH: A muanual on-off switch is located in control box.

Description of the Function of the Texas Instruments Low Pressure Control Switch When Used on 1/10 H.P. Gear Motors

F. On all Scotsman units using a 1/10 H.P. gear motor, the centrifugal switch mechanism, mounted on top of the motor, was removed and replaced, in the system, with a low pressure control switch. This is a single pole double throw (SPDT) switch manufactured by Texas Instruments. (Queen Products Part No. 11-0396-01*).

*Refer to a typical wiring diagram, showing contacts, for description of switch function. Page 13

On all Queen Products wiring diagrams, the controls are shown in the ice making mode. Thus, the 1-3 contacts are shown as closed. On machine start up the 1-3 contacts are open and the 1-2 contacts are closed. As the unit begins to run, the low side pressure starts to fall from the stabilized or "at rest" pressure. As soon as the pressure drops to 21 Psig, the 1-2 contacts open and the 1-3 contacts close. This removes the operating controls, such as the bin thermostat, from the "gear motor circuit". If one of the operating controls opens, it will shut off the "compressor circuit". The gear motor will run until the low side pressure rises to 29 Psig. At this point the 1-3 contacts open and turns the gear motor off. This usually takes 1-3 minutes depending on ambient conditions. This length of time allows the auger to transport all the ice out of the freezing chamber. Consequently, when called on to start up again, there is no load to start up against. On start up, again, the 1-3 contacts are open and the 1-2 contacts closed.

*Function 11-0396-01 Low Pressure Control Switch

1-3 Contacts - Open on Pressure Rise
Opens at 29 Psig·
Closes at 21 Psig

1-2 Contacts - Open on Pressure Fall
Opens at 21 Psig
Closes at 29 Psig

REMOVAL & INSTALLATION OF PARTS

CABINET TOP (HOOD)

1. Remove two back end screws of chrome strip.
2. Pull out tape concealing screws.
3. Remove balance of screws in chrome strip.
4. Lift off hood.

HOOD SERVICE DOOR, TOP

1. Remove screw from front edge.
2. Lift up and back to unhook pin.

CABINET SIDE SERVICE DOOR

1. Remove four screws on edges.
2. Lift out door.

CABINET FRONT SERVICE DOOR

1. Remove two screws on edge.
2. Lift out door.

CABINET REAR SERVICE DOOR

1. Remove two screws on edge.
2. Pull door out.

ICE STORAGE DOOR

1. Lift door up, slide back 6". Remove thumb screw that attaches safety lanyard to back of door.
2. Door will now slide out. Lift front edge slightly to clear hood lip.

ICE STORAGE DOOR FRAME

1. Remove six screws at bottom and sides.
2. Remove screw in frame back.
3. Frame will now lift out.

MOTOR COMPRESSOR

1. Remove gas charge.
2. Disconnect wiring from the compressor.
3. Loosen suction and discharge lines and cap off.
4. Remove the compressor hold-down nuts and lift compressor out of the unit.
5. Reverse steps 1 through 4 in replacing compressor.

SERVICE

FREEZER ASSEMBLY

1. In most instances, it will be faster to remove freezer by first removing cabinet top or hood. (See Removing and Installing Cabinet Parts.) Assembly can be changed if necessary through hood top panel.
2. Shut off water supply to unit, remove top and left side service panels.
3. Disconnect water inlet line at reservoir. Remove water supply tube at freezer and drain freezer.
4. Purge off refrigerant, unsweat suction line, disconnect capillary line at drier. Cap off all lines so no moisture can enter system.
5. Remove insulation pieces around spout, also the spout proper.
6. Remove 3 bolts holding adapter base to gearmotor top cover, lift freezer out of cabinet.
7. Remove adaptor, spout front and back plates from old freezer and install on new replacement.
8. Re-install in reverse of above.

FREEZER WORM SHAFT

1. Turn unit off, before removing worm shaft.
2. Shut off water supply to unit.
3. Remove hood service doors.
4. Remove top and bottom straps around spout insulation pieces, remove pieces.
5. Remove two slotted head screws which fit through top chamber wall into ice breaker.
6. Tap spline coupling loose on bottom end of freezer worm shaft.
7. Complete worm shaft with ice breaker attached will now come out by lifting up on freezer cap pull ring. NOTE: Top half of water seal will come with worm shaft.
8. To remove ice breaker from shaft, first remove retainer ring in top of ice breaker.
9. Remove freezer cap and pull ring from ice breaker.
0. Remove cap screw holding shaft through bearing and pull worm shaft free from ice breaker and bearing.
1. If shaft is defective, remove water seal top half and put on new worm shaft before reassembling—when reassembling, by reversing above, put a small amount of Vaseline on shaft end. This will allow shaft to slide smoothly through rubber bottom half of water seal without tearing it.

WATER SEAL

1. To replace water seal, follow steps 1 through 7 under Worm Shaft Removal.
2. Remove 3 bolts holding freezer to fiber mounting adapter.
3. Lift freezer off adapter just high enough to allow bottom bearing and bottom half of water seal to be removed from bottom of freezer tube.
4. Lightly grease bottom half of new water seal and insert face up approximately 1/2" in bottom of freezer tube.
5. Insert bottom bearing in bottom of freezer tube, force approximately 1/8" past bottom tube end. This will allow the positioning ring on fiber adaptor to properly position freezer tube when tightening up the three mounting bolts.
6. After securing mounting bolts, put new top half of water seal on worm shaft the same way as the old seal was removed.
7. Carefully insert worm shaft assembly in freezer tube and into spline coupling on bottom.
8. Replace ice breaker screws, insulation pieces and unit is ready to resume operation.

SERVICE

STORAGE BIN THERMOSTAT:

1. Disconnect electrical supply.
2. Remove bin thermostat bulb from bin location along with its capillary tube.
3. Remove control box cover.
4. Disconnect two spade type electrical leads.
5. Loosen two screws in control mounting bracket.
6. Replace with new control and reassemble in reverse of above.
7. CAUTION: Always check new control power element charge before installation to assure receiving an operative control. A handful of ice on bulb will register an audible 'click' at cut off.

WATER RESERVOIR

1. Remove service panel in cabinet hood.
2. Turn off water supply and drain reservoir.
3. Remove 1/4 inch copper inlet water line.
4. Remove 1/2 inch plastic feed line to freezer.
5. Remove two screws holding reservoir bracket to wall.
6. Lift out reservoir.
7. To replace, reverse procedure.

CHASSIS ASSEMBLY

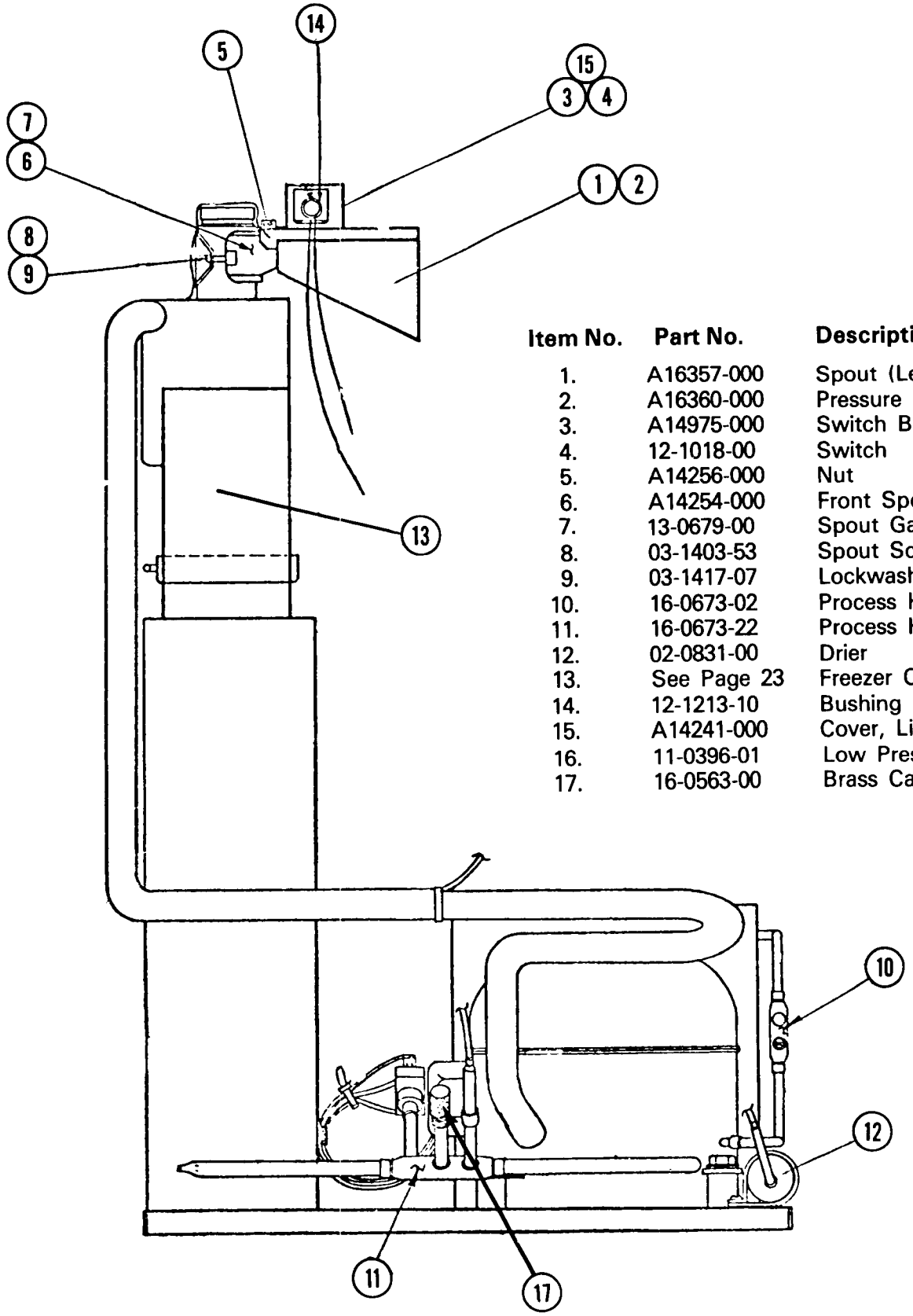

Item No.	Part No.	Description
1.	A16357-000	Spout (Less Pressure Plate)
2.	A16360-000	Pressure Plate, Spout
3.	A14975-000	Switch Box Assy.
4.	12-1018-00	Switch
5.	A14256-000	Nut
6.	A14254-000	Front Spout Casting
7.	13-0679-00	Spout Gasket
8.	03-1403-53	Spout Screw (2 req'd)
9.	03-1417-07	Lockwasher (2 req'd)
10.	16-0673-02	Process Header
11.	16-0673-22	Process Header
12.	02-0831-00	Drier
13.	See Page 23	Freezer Components
14.	12-1213-10	Bushing
15.	A14241-000	Cover, Limit Box
16.	11-0396-01	Low Pressure Switch
17.	16-0563-00	Brass Cap

CHASSIS ASSEMBLY

Item No.	Part No.	Description
1.	12-1575-01	Fan Motor
2.	18-0231-00	Fan Blade
3.	18-0422-00	Fan Mount
4.	A15621-001	Condenser Shroud
5.	18-0140-00	Condenser
6.	12-1573-17	Fan Motor Lead
7.	13-0639-00	Grommet (3 req'd)
8.	A24925-001	Spacer (3 req'd)
9.	03-1408-02	Washer (6 req'd)
10.	03-1410-03	Lockwasher (3 req'd)
11.	03-1405-45	Screw (3 req'd)
12.	A15071-000	Spout insulation
13.	A15070-000	Spout insulation
14.	See Page 34	Compressor & Mounting Hardware
15.	A08736-000	Strap
16.	See Page 27	Gear Reducer

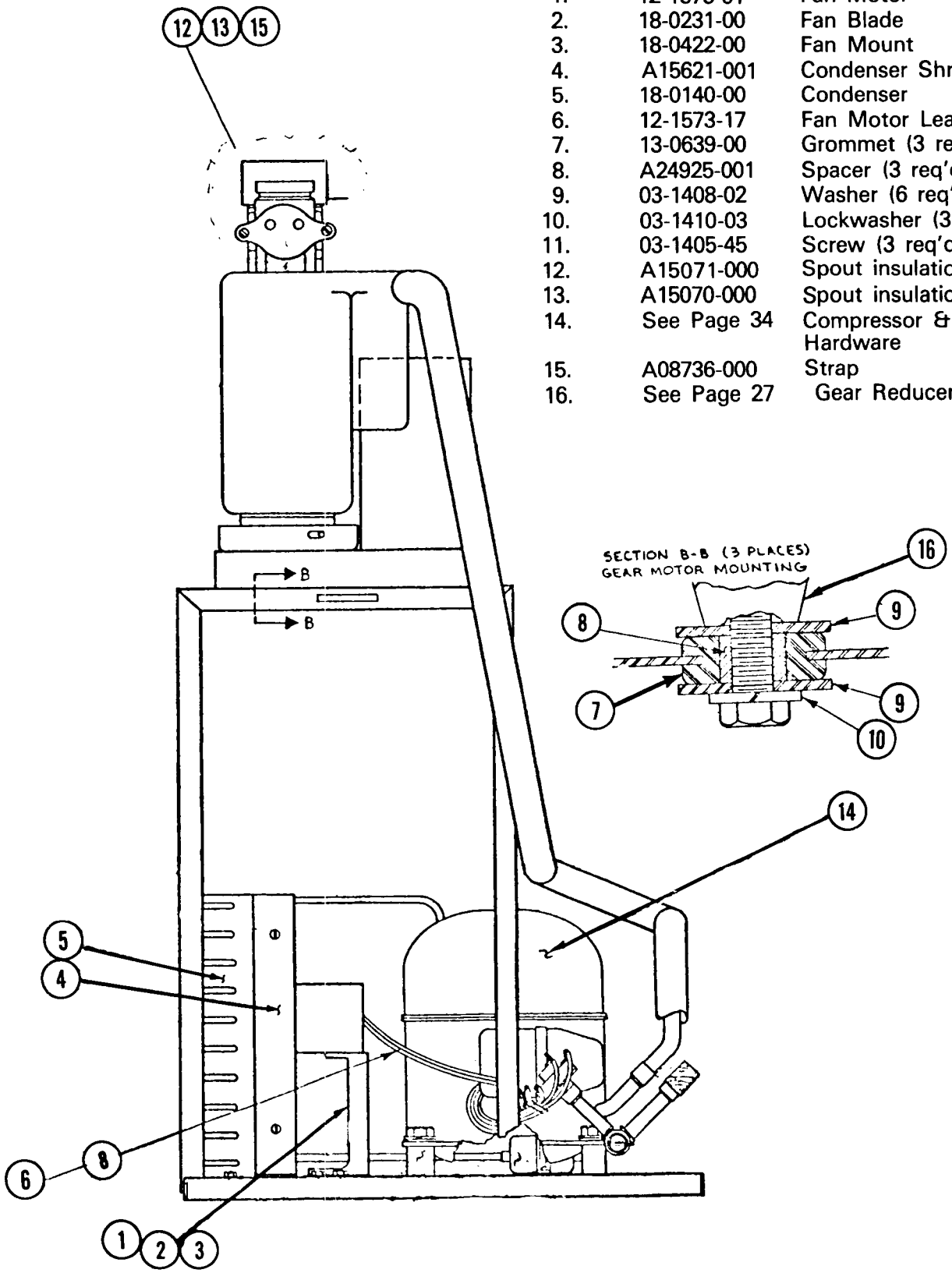

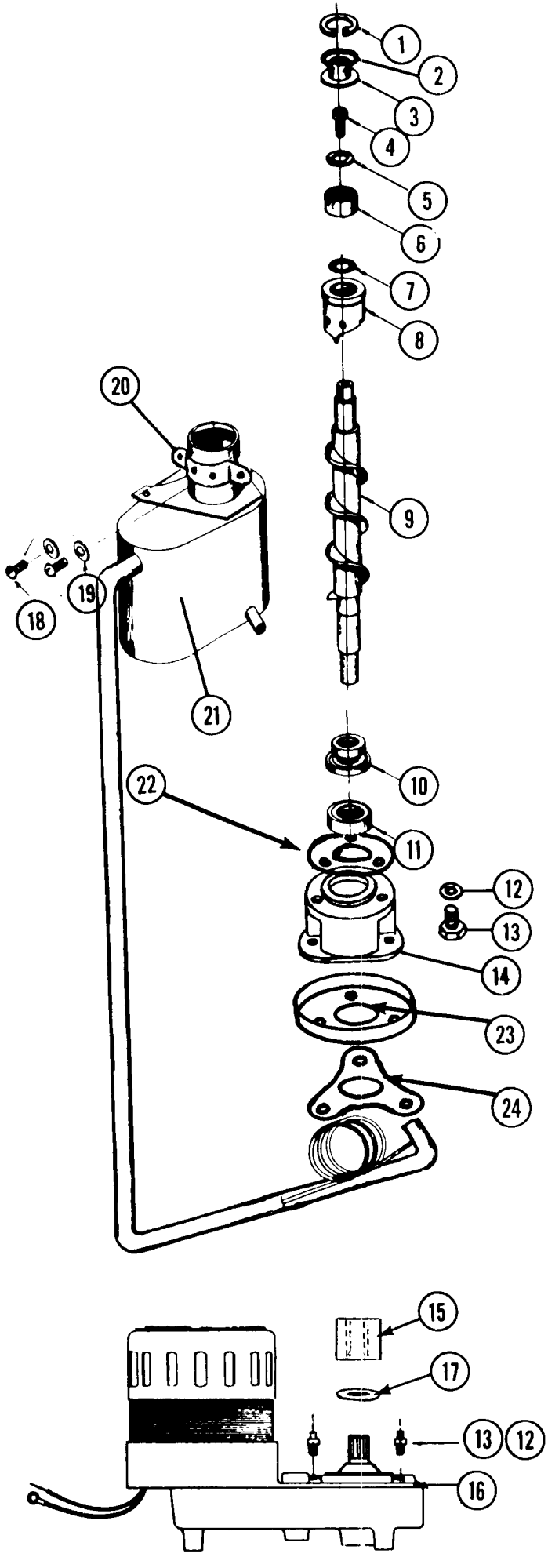

FREEZER ASSEMBLY
SF75 MODELS

Item No.	Part No.	Description
1.	03-1558-03	Snap Ring
2.	A08162-000	Cap Hook
3.	A07701-000	Cap
4.	03-0758-000	Cap Screw
5.	03-1410-03	Washer
6.	02-0547-01	Top Bearing
7.	13-0617-16	"O" Ring
8.	A26706-001	Breaker With Bearing
9.	02-1313-00	Auger
10.	A18945-000	Water Seal
11.	02-0417-00	Lower Bearing
12.	03-1410-04	Washer
13.	03-1405-42	Screw
14.	08-0595-01	Base Adapter
15.	15-0575-01	Spline Adapter
16.	A25995-021	Gear Reducer See Breakdown
17.	02-1347-00	Drip Shield
18.	03-1403-48	Screws
19.	03-1410-03	Washers
20.	A18430-000	Spout Plate
21.	A27212-020	Worm Tube Suction Line
22.	03-1505-00	Gasket
23.	A18153-000	Drip Pan
24.	13-0628-00	Gasket

*Breaker Comes With Bearing

SF-75 FLAKER CHASSIS
B-MODEL

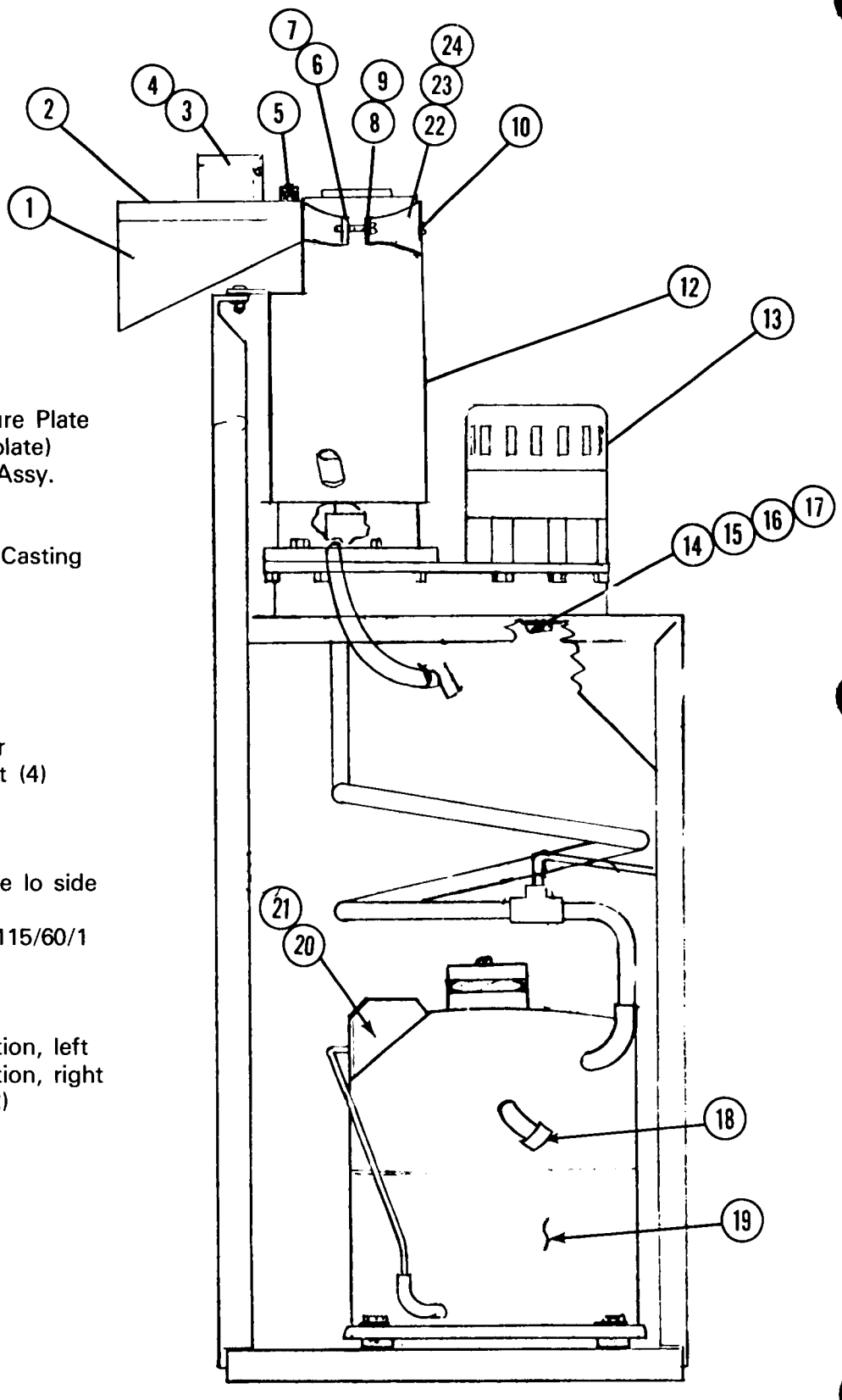

Item No.	Part No.	Name
1.	A16360-000	Spout Pressure Plate
2.	A16357-000	Spout (less plate)
3.	A14975-000	Switch Box Assy.
4.	12-1018-00	Switch
5.	A14256-000	Nut
6.	A14254-000	Front Spout Casting
7.	13-0679-00	"O" Ring
8.	03-1403-53	Screws
9.	03-1417-07	Washers
10.	A18430-000	Spout Plate
11.	022217-01	Reservoir
12.	A27212-020	Freezer
13.	A25995-021	Gear Reducer
14.	A18301-000	Shoulder Bolt (4)
15.	13-0115-00	Grommet (4)
16.	03-1407-005	Washer (4)
17.	03-1407-009	Washer (4)
18.	16-0560-00	Schader type lo side
19.	18-4700-01	valve core
20.	18-4700-30	Compressor 115/60/1
21.	18-4700-29	Relay
22.	A15050-000	Capacitor
23.	A15071-000	Overload
24.	A08736-000	Spout Insulation, left
		Spout Insulation, right
		Tin Straps (2)

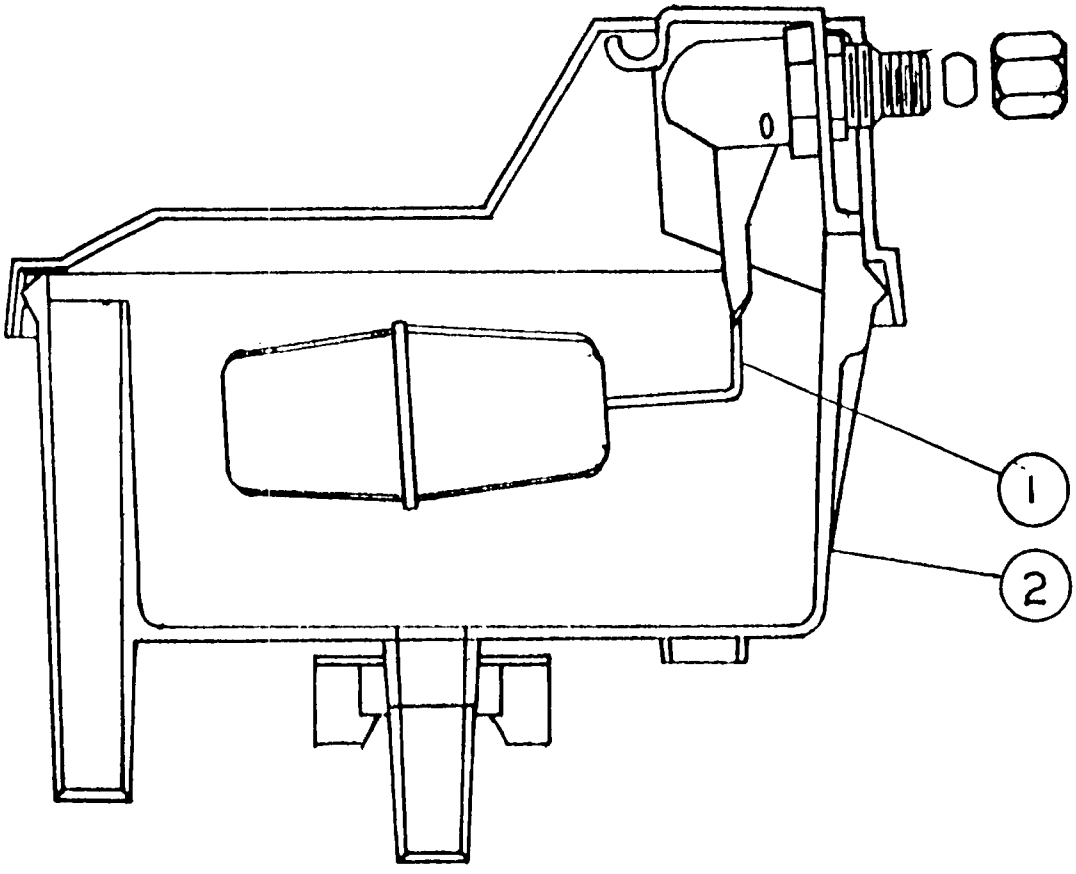

RESERVOIR ASSEMBLY

Item No.	Part No.	Description
1.	02-2217-02	Valve Assy.
2.	02-2217-01	Reservoir Complete

SF-75 CASE AND HOOD ASSEMBLY

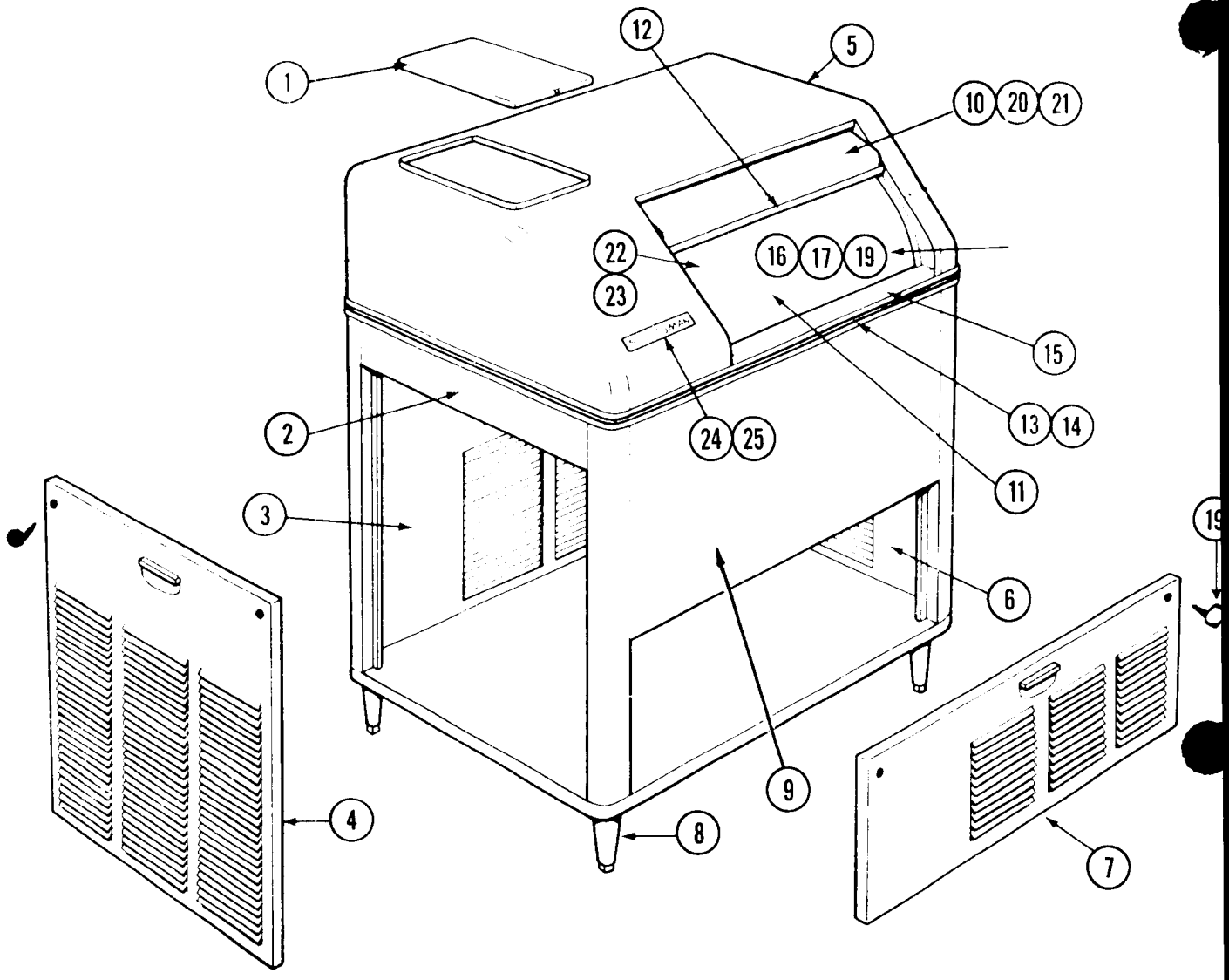

Item No.	Painted Part No.	S.S. Part No.	Description
1.	A06767-008	A06767-005	Top Door Assy.
2.	A07714-008	A07714-005	Left Panel
3.	A16563-008	A16563-002	Back Door
4.	S09405-008	S09405-005	Left Door
5.	A20939-008	A20939-001	Hood Assy.
6.	A16561-008	A16561-002	Right Door
7.	A16563-008	A16563-002	Front Door
8.	KLP2E	KLP2S	Legs Optional (4 in set)
9.	A18291-008	A18291-001	Case Assy.
10.	02-1735-01	A15559-000	Door Assy.
Common to all			
11.	A18891-000		Storage Bin Assy.
*12.	02-1616-00		Door Catch

Item No.	Painted Part No.	Description
13.	A06510-000	Front Moulding
14.	15-0324-00	Insert (order per foot)
15.	A16208-000	Door Track Assy.
*16.	02-1741-00	Drain Fitting, Top
*17.	02-1742-00	Drain Fitting, Bottom
*18.	13-0617-11	Drain 'O' Ring
19.	03-1419-09	Screws, Panel
*20.	03-0640-00	Door Glides
*21.	03-1195-00	Door Glides, Hood
22.	02-1615-00	Bulb Holder
23.	13-0557-00	Grommets
24.	15-0156-00	Emblem
25.	03-0271-00	Speed Nuts (2 req'd)

*Not Shown

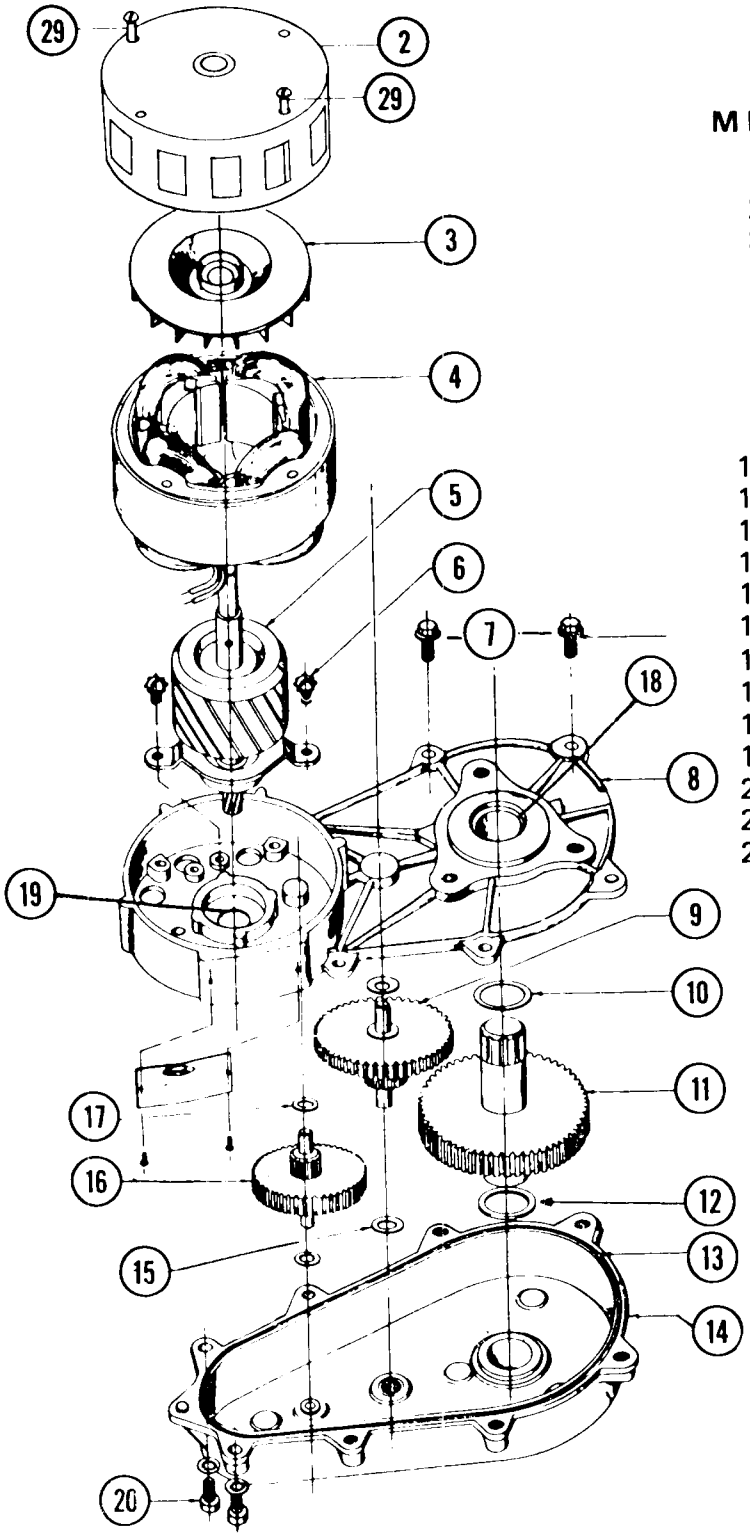

M NO.	PART NO.	DESCRIPTION
1.	03-1246-00	Set Screw (2)
2.	A17047-000	Motor Housing
3.	A16915-000	Cooling Fan
4.	12-1400-01	Stator Assy.
5.	A26454-001	Rotor Assy & 1st Gear
6.	03-1245-00	Screws (6)
7.	03-1251-00	Flange Screws
8.	A24184-001	Gear Case Cover
9.	02-1521-00	Gear and Pinion
10.	03-1408-25	Washer
11.	A26650-001	Gear and Output Shaft
13.	02-1505-00	"O" ring
14.	A16919-000	Gear Case Assy.
15.	03-1408-06	Washer
16.	02-2224-01	1st Gear and Pinion
17.	03-1408-20	Washer
17.	03-1407-19	Washer
18.	02-1503-00	Grease Seal
19.	02-1504-00	Grease Seal
20.	03-1252-00	Screw (2)
21.	08-0579-00	Switch Bracket
22.	03-1403-43	Motor Bolts

A25995-021 Gear Motor Assy. Complete

Output Shaft turns at 11.5 RPM

GEAR MOTOR ASSEMBLY

1/10 H.P.

115/60/1

SERVICE ANALYSIS

SYMPTOM	POSSIBLE CAUSE	CORRECTION
Unit will not run	Blown Fuse	Replace fuse and check for cause of blown fuse.
	Thermostat set too high	Adjust thermostat. 35° cut-out and 45° cut-in.
	Loose electrical connection	Check wiring.
	Switch in OFF position	Turn switch to ON.
	Inoperative master switch	Replace switch.
Compressor cycles intermittently	Low voltage	Check for overloading.
	Dirty Condenser	Clean.
	Air circulation blocked	Move unit to correct
	Inoperative condenser motor	Replace.
	Non-condensable gases in system	Purge off.
Making wet ice	Surrounding air temperature Over 100 Degrees	Correct or move unit to Cooler location
	Under or over-charge of refregerant	Recharge with the proper amount.
	High water level in water reservoir	Lower to 1/4 inch below over-flow pipe.
	Faulty compressor	Repair or replace.
Low ice production	Loss of refregerant, under or over-charge of refrigerant.	Check and recharge with proper amount of refregerant.
	Dirty or plugged condenser	Clean condenser
	Low water level in water reservoir reservoir	Adjust to 1/4 inch below over-flow pipe.
	Partial restriction in capil-lary tube or drier	Moisture in system. Over-charge of oil in system. Re-move charge and drier. Re-place and recharge system.
	Inlet water strainer partially plugged.	Remove screen and clean.
	Corroded or stained worm shaft due to water condition	Remove worm shaft and clean.
Machine runs but makes no ice	Loss or under-charge of refrigerant	Check for leaks and recharge
	Drive gearmotor or drive coupling stripped.	Check. Repair and/or replace
	Water not entering freezing chamber	Plugged strainer or supply line. Check and clean. Air lock in gravity feed line. Check and remove air lock.
	Moisture in system	Check and remove charge and Drier. Replace and recharge.
	Water seal leaking	Replace seal.

SERVICE ANALYSIS

SYMPTOM	POSSIBLE CAUSE	CORRECTION
Water Leaks	Defective water seal	Replace
	Gravity feed line leaking	Check hose clamps
	'O' ring in spout casting leaking	Remove spout casting and install new 'O' ring
	Storage bin drain & connecting fittings	Check and repair.
	Water level in reservoir too high	Adjust to 1/4 inch below overflow pipe.
Excessive noise or chattering	Mineral or scale deposit on auger and inner freezing chamber walls.	Remove and manually polish auger, polish inner chamber walls of freezer barrel. For lighter concentrations use Scotsman Ice Machine Cleaner periodically.
	Low suction	Add gas to raise suction pressure.
	Intermittent water supply	Check & clean water strainer. Check gravity feed line for air lock. Remove air lock.
	Water level in reservoir too low	Adjust to 1/4 inch below overflow pipe.
	Gear motor loose on frame	Tighten.
	Gearmotor end-play or worn bearings.	Repair or replace.
Machine continues to run with full storage bin	Storage bin thermostat not properly set	Reset or replace. 35° cut-out, 45° cut-in Check operation with handful of ice.

MAINTENANCE INSTRUCTIONS - FLAKERS

THE FOLLOWING MAINTENANCE MUST BE ACCOMPLISHED TWO TIMES PER YEAR ON ALL SCOTSMAN FLAKERS. CALL YOUR AUTHORIZED SCOTSMAN SERVICE DEPARTMENT.

1. Check and clean water strainers and float valve. Depress float valve to insure full stream of water.
2. Check water level and machine level, keep water level below overflow, but as high as possible and still not run out of spout opening with machine off. Water droplets come out of spout with ice at all times. Adjust as required.
3. Clean reservoir and interior of freezer using SCOTSMAN Ice Macnine Cleaner.
   A. If machine has been cleaned regularly and no problems such as dry ice or chatter are noticed, clean as per the following instructions:

   a. Set main switch to OFF.
   b. Remove all ice from storage bin.
   c. Turn off water supply or block float. Drain reservoir.
   d. Set main switch to ON and pour cleaning solution into reservoir. Do not fill above overflow tube.
      Models SF75—Use 4 oz. of Scotsman cleaner and 1 qt. hot water.

   e. Continue to make ice on solution until the solution is used up and reservoir is empty.
   f. Set main switch to Off. Wash and rinse reservoir, turn water on or remove float block.
   g. Turn MAIN SWITCH to ON. Let unit run for at least (15) minutes to flush out any cleaning fluid. Check ice for acid taste.—run until ice tastes sweet.
   h. Turn MAIN SWITCH to OFF. Add hot water to ice bin, using this melt water, thoroughly wash and rinse all surfaces within the storage bin.
   i. Turn MAIN SWITCH to On. Replace Service Door. Unit is ready for normal operation.

MAINTENANCE INSTRUCTIONS (Continued)

NOTE: Cleaning requirements vary according to local water conditions. Visual inspection of the auger before and after cleaning will indicate best procedure to be followed in local areas.

4. Check high and low side pressures. On air-cooled models head pressures range between 130 and 145 PSI. Suction pressure should be above 12 PSI and will range up to 16 PSI depending upon water and ambient temperatures.
5. Check gearmotor operation. Normal running temperatures are in the area of 160% Fahrenheit, which is hot to the touch.
6. Check top bearing of freezing tube. Remove retainer ring around edge of stamped brass cap. If moisture is around bearing, wipe up and remove grease. Add new grease. Replace cap and retainer ring.
7. Clean air-cooled condenser. Inform customer to clean frequently. Always shut off machine when cleaning.
8. Oil condenser fan motor when possible.
9. Check for refrigerant leaks and proper frost line. Should frost out of accumulator at least one-half way to compressor, and in some areas back to service valve.
10. Check for water leaks. Tighten drain line connections. Run water down bin drain line to make sure it is open.
11. Check quality of ice. Ice should be wet when formed, but will cure rapidly to normal hardness in bin.
12. Check thermostat and pressure plate cut off in spout. Micro switch cuts off only compressor. Bin thermostat should be set at 10° differential and should keep entire machine off at least twenty minutes in high ambients (longer in low) during normal operation. Settings are 35° cut out, 45° cut in.

CARE OF STAINLESS STEEL STORAGE BIN LINERS

All commercial grades of stainless steel will corrode or rust when in contact with certain chemicals or salts. One element that attacks stainless readily, is chlorine, and most compounds of chlorine, such as hydrocholic acid, and certain salts containing chlorine. The "speed" with which this corrosion takes place depends on the concentration of the chlorine, and the length of time it is left in contact with the stainless steel.

ICE BIN LINER RUSTING

In many ice bin applications, a rust stain, or brown deposit, will appear at the top of the side and rear walls of the bin liner, and also on any exposed stainless parts inside the bin, which do not normally get covered with ice; such as stainless steel door back pans. The lower portions of the liner walls usually stay clean if the bin is being used regularly, due to the "washing" action of the ice and meltage water draining down these walls. This brown staining on the liner may appear more rapidly in some installations than other, depending on the way the ice is being made in the ice machine, and the water conditions.

This staining or rusting, can come from basically two sources:

1. Foreign materials—For example; many ice machine casings are made of painted steel. If this steel should be exposed at the joint where the ice machine sits on the bin, it could rust, and the rust stain could "drip"down the liner walls. Also, particles of plain steel could fall down into the bin and, in turn, start rusting.

2. Materials expelled during ice making—Practically all icemakers produce clear ice by "freezing out the impurities"normally found in tap water. Chlorine gas, other gases and solids, are expelled during the making of ice. Being heavier than air, these foreign materials drop down into the bin through the same opening that the ice enters the bin. (This oftentimes explains why this staining is more noticeable on an installation where the opening on the bottom of the ice machine is quite large). The chlorine gas will combine with water vapor and condense on the liner walls as a mild hydrochloric acid. Above the normal ice level, this never gets removed by the action of the ice, and will eventually form a brown stain.

CLEANING OF A STAINLESS STEEL BIN LINER

Because the brown staining or rusting is due to expelled material during ice-making, **every bin liner should be cleaned periodically,** to prevent this staining from causing pitting of the stainless steel. The time between cleanings will depend on the water conditions, type of ice machine, etc. **It may be necessary only every 3 to 6 months.**

1. **General Cleaning** — When the staining is light, it can usually be removed by washing with ordinary cleaning powder, such as Bon-Ami, or Copper Glo, and water. (Do not use cleaners that contain bleaching agents, as most of these are compounds of chlorine.) After cleaning, rinse thoroughly with clear water.

   It may be necessary to use a stainless steel wool to remove bad stains. DO NOT USE plain steel wool, as the steel particles will get imbedded in the liner and cause more serious rusting.

2. **Cleaning of heavy deposits** — If the liner has not been cleaned for a long time, and heavy deposits and pitting have occurred, a chemical cleaner may be necessary. Several of these are as follows:

   Oakite No. 33, Oakite Products, Inc., 19 Rector St., New York, N.Y. Texo No. 12, and Texo-N.Y., Texo Corp., 2200 Dana Ave. Cincinnati 7, Ohio. Metalprep No. 10, Nelson Chem. Co., 6564 Benson St., Detroit 7, Mich, Dilac, Diversey Corp., 1820 Roscoe St., Chicago 13, Illinois.

   A solution of one part cleaner and two parts water is used. First, wash the bin liner thoroughly with water and soap as described above. Then simply swab the solution on the area to be cleaned, and allow to stand for about 20 minutes. Rinse with clear water. If this doesn't completely remove the deposit, repeat the procedure.

   Synthetic rubber gloves should be used by the operator, and goggles and aprons are advisable even though the solution is relatively nonhazardous.

   These cleaners may possible harm paint, wood, or fabrics, They will probably cause a dull grey color on galvanized steel and should not be allowed to remain long in contact with rubber. Therefore, provision should be made to avoid contact with such materials when cleaning stainless.

3. **Protection of Stainless Steel against further staining** — After the stainless steel has been cleaned, installations where the staining is recurring so frequently, the surface should be rejuvenated. This process restores the characteristic to the surface of the stainless, that best prevents corrosion.

   First, be sure that the liner is clean and is thoroughly rinsed with water. Then use a nitric acid solution of two parts water to one part nitric acid (by volume). Swab this on the liner and allow to stand for about 30 minutes. Rinse the liner with clean water. This will then provide maximum corrosion resistance.

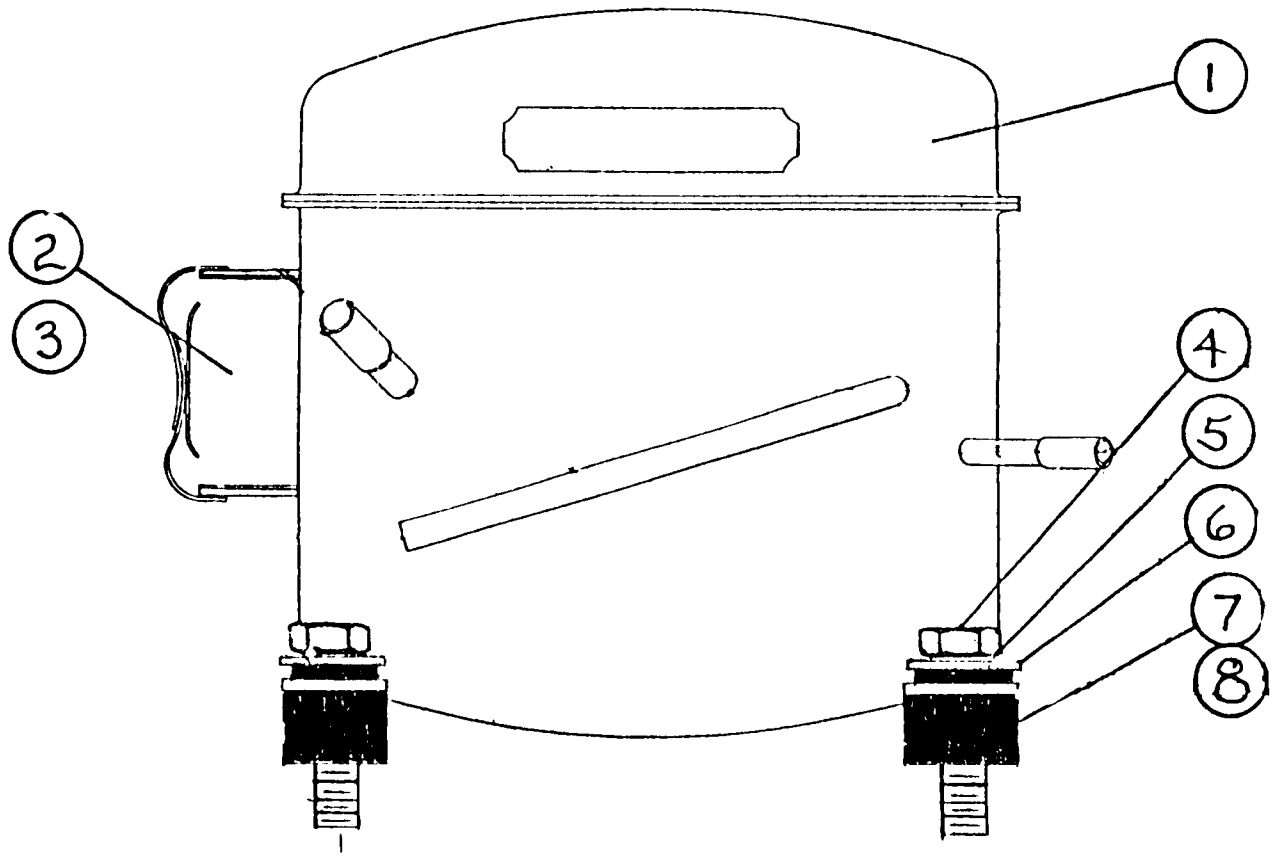

COMPRESSOR ASSEMBLY
115/60/1

ITEM NO.	PART NO.	DESCRIPTION		
1.	18-4700-01	Compressor		
2.	18-4700-30	Relay - Tecumseh	820RR12B11 82003CRB15	GE3ARR12-WR17 TI3CR211-179
3.	18-4700-29	Overload - Tecumseh	830MRTC21	TIMRT28AGK-298
4.	03-1405-20	Screw		
5.	03-1410-04	Lockwasher		
6.	03-1408-29	Flat Washer		
7.	18-4700-28	Mounting Grommet		
8.	18-4700-29	Mounting Sleeve		

TABLE OF CONTENTS

	PAGE
FORWARD	1
TABLE OF CONTENTS	2
SPECIFICATIONS	
Mechanical Specifications	3
How It Works	4
INSTALLATION	
Appearance and Specifications	5
Photo and Ice Making Capacity	6
Installation Instructions	
Preparation for Installation	7
Installation Location - Preparation	7-8
Water Supply- Drain	9
Electrical Connections	10
Refrigeration Cycle	111
Water Schematic	112
Wiring Diagram	113
Final Check List	114
SERVICE	
Starting Machine	15
Refrigerant Charge	15
Water System	16
Electrical System	16
Removal and Installation of Parts	17-20
Chassis Assembly Schematic	21
Freezer Assembly	22
Chassis Assembly	23
Reservoir Assembly	24
Case & Hood Assembly	25
Gear Motor Assembly	26
Service Analysis	27-28
Maintenance Instructions	29-30
Parts List	31-33

THIS PAGE
INTENTIONALLY
LEFT BLANK

THIS PAGE
INTENTIONALLY
LEFT BLANK

MECHANICAL SPECIFICATIONS

	SF-75-J
Compressor	1/4 HP Tecumseh
Condenser	Air-Cooled
Refrigerant	21 oz. R 12
Refrigerant Control	Capillary Tube
Power Consumption - Compressor	4.5 Amps.
Power Consumption - Gear Motor	4.0 Amps.
Current	115 V, 60 cycle, 1 Ph.
Gear Motor Drive	1/10 HP
Worm - R.P.M.	10.5
Water Consumption - Freezer	2 Gallons per hour
CABINET DIMENSIONS	
Depth	24 1/2"
Width	32 1/2"
Height	40"
Height with 6" legs	46"
SHIPPING WEIGHT	
Uncrated	330
Crated	360

SPECIFICATIONS

SCOTSMAN Super Flakers are designed for restaurants, super markets, soda fountains, hospitals, bakeries, fish markets, poultry stores, packing plants, etc. It is the finest Ice Maker on the market today. It will work 24 hours a day for you, or only as needed. It produces the highest quality ice available at any price.

SCOTSMAN Super Flakers are easily installed requiring only standard water, drain and electrical connections.

ATTRACTIVE COMPACT CABINET. *Grey hammerloid finish with chrome trim, rounded corners, and removable panels for easy access to mechanical parts. Adjustable and removable legs are under cabinet.

SEALED REFRIGERATION SYSTEM. Provides quiet, efficient operation of the machine. Compressor motor is internally spring mounted for quite operation. Compressor motor is covered by a full 5-Year Warranty.

HOW IT WORKS. An exclusive patented ice-making system, wherein water in the constant level float reservoir is fed to the bottom end of the freezing cyclinder and turns to ice on the inside of this cyclinder. Ice from the refrigerated walls of this cyclinder is extruded past the ice breaker at the top of the cyclinder through a side opening by means of a stainless steel auger directly driven by a motor gear reduction drive.

SCOTSMAN Model SF-75WSJ is completely automatic. A manual switch on the front starts the machine, and from then on, produces flakes automatically. When the storage bin fills, the machine automatically shuts off and starts up again when ice is taken from the storage compartment.

* Also available in stainless steel cabinet.

SPECIFICATIONS

SUPER FLAKER SF-75 SERIES (Storage Type)	MODEL SF-75WSJ	MODEL SF75WSJ-SS
Daily capacity up to 240 lbs.	X	X
Self contained 100 lb. storage bin	X	X
Air cooled condenser	X	X
Heavy duty ¼ HP. Compressor	X	X
Standard 115 V, 60 cy, 1 ph, AC	X	X
¼" water inlet SAE Flare	X	X
⅝" bin drain OD	X	X
Hammerloid grey exterior	X	
Stainless steel exterior		X
Stainless steel lined storage bin	X	X
46" height (with legs)	X	X
40" height (without legs)	X	X
32½" width	X	X
24 ½" depth	X	X
Approximate shipping weight 360 lbs.	360	360

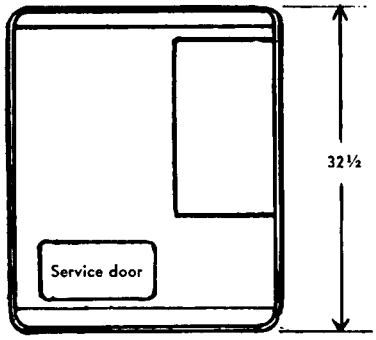

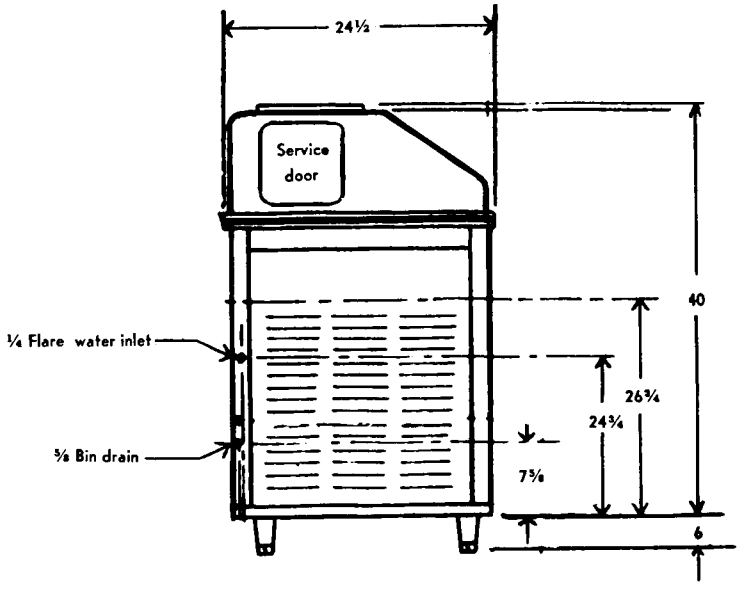

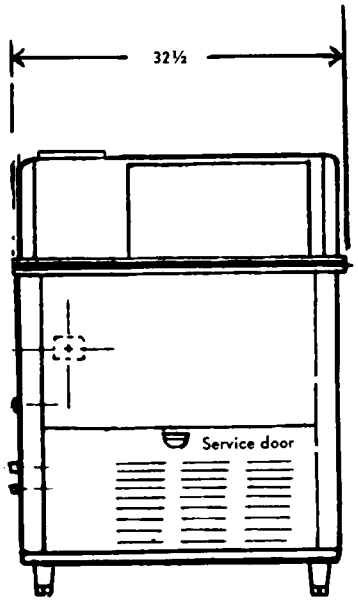

SCOTSMAN®

SUPER FLAKER
SF-75
SERIES
Storage Type

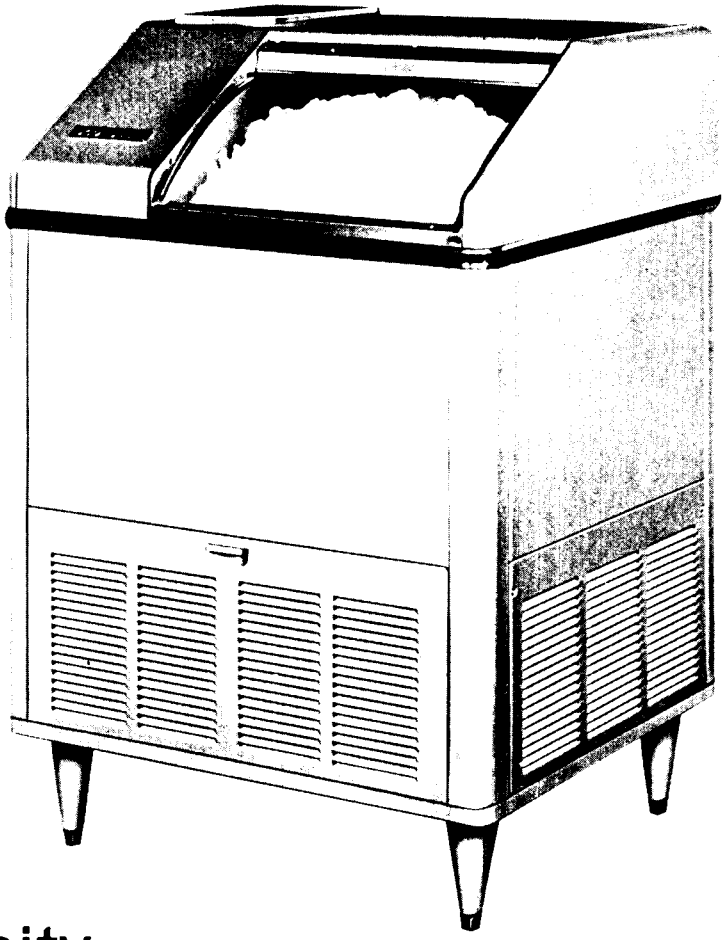

ice making capacity

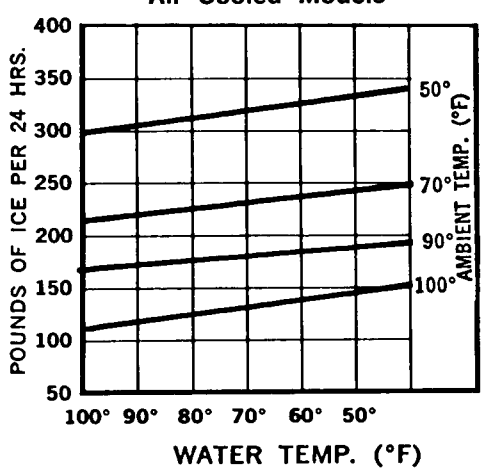

INSTALLATIONS

UNDER BAR INSTALLATIONS: Locate, if possible, so left end panel is accessible. Locate so proper circulation can be attained around the unit and behind it at least four inches.

KITCHEN INSTALLATIONS: As a rule, the kitchen is not the most practical place to install an air-cooled condensing unit, as grease is almost always present and makes cleaning of the condensing unit difficult. Do not locate near range or steam table or other heating devices that may be used in the kitchen.

STOREROOM INSTALLATIONS: Be sure storeroom is of adequate size and properly ventilated. A small, poorly ventilated room will greatly impair the efficiency of the unit. The storeroom must be kept above 50° in the winter months.

BASEMENT INSTALLATIONS: Locate machine in the coolest place. Locate machine in a dry place. Keep away from furnace and boiler room. Keep away from service chutes and runways; also coal and other dust of any kind. If the machine is set over a floor drain, block the machine up enough to level it. If there is any chance of basement flooding, block the machine up to eliminate any possible damage to the machine.

UNCRATING OF MACHINE: The complete machine comes in one crate. After the crate is removed, inspect for concealed damage. When installing the machine. Remove the bottom skids by removing all bolts Then check all refrigerant lines for rubbing or touching other surfaces. Also check for possible transportation damage.

PRE-INSTALLATION CLEANING: Before machine is in final location, remove warranty card and other information from machine compartment. Remove top service door, water reservoir cover, and packing under float. Then leave cover off for float adjustment after machine is installed.

SCOTSMAN SUPER FLAKERS

PREPARATION FOR INSTALLATION

1. Inspect complete unit cabinetry for shipping damage. Notify carrier of concealed damage claims.

2. Remove all service doors and panels.

3. Remove water reservoir cover and take out paper packing around float ball. Make sure plastic overflow standpipe is securely in place.

4. Remove leg packages in compartment base and install 4 legs in unit base sockets.

5. Remove water strainer from storage bin for installation on unit or in water supply line feeding unit.

6. Open electrical control box and prepare for hook up, use knock outs, cord connectors etc. Then check unit nameplate voltage against building source voltage and make sure they correspond. Caution - Improper voltage supplied to units will void your warranty protection.

7. Select unit location prior to hook up of water drain and electricals in accordance with local and national codes. Minimum room temperatures is 50° Fahrenheit. On air cooled models, select well ventilated location.

8. Remove warranty card and Users manual from storage bin, then wipe bin clean with damp cloth.

9. Fill out warranty card completely including model and serial numbers as taken from aluminum plate found behind front service panel and forward to Scotsman Factory using self mailing card.

10. Level unit with adjustable legs then call your authorized Scotsman distributor or dealer for proper installation, start up and check out.

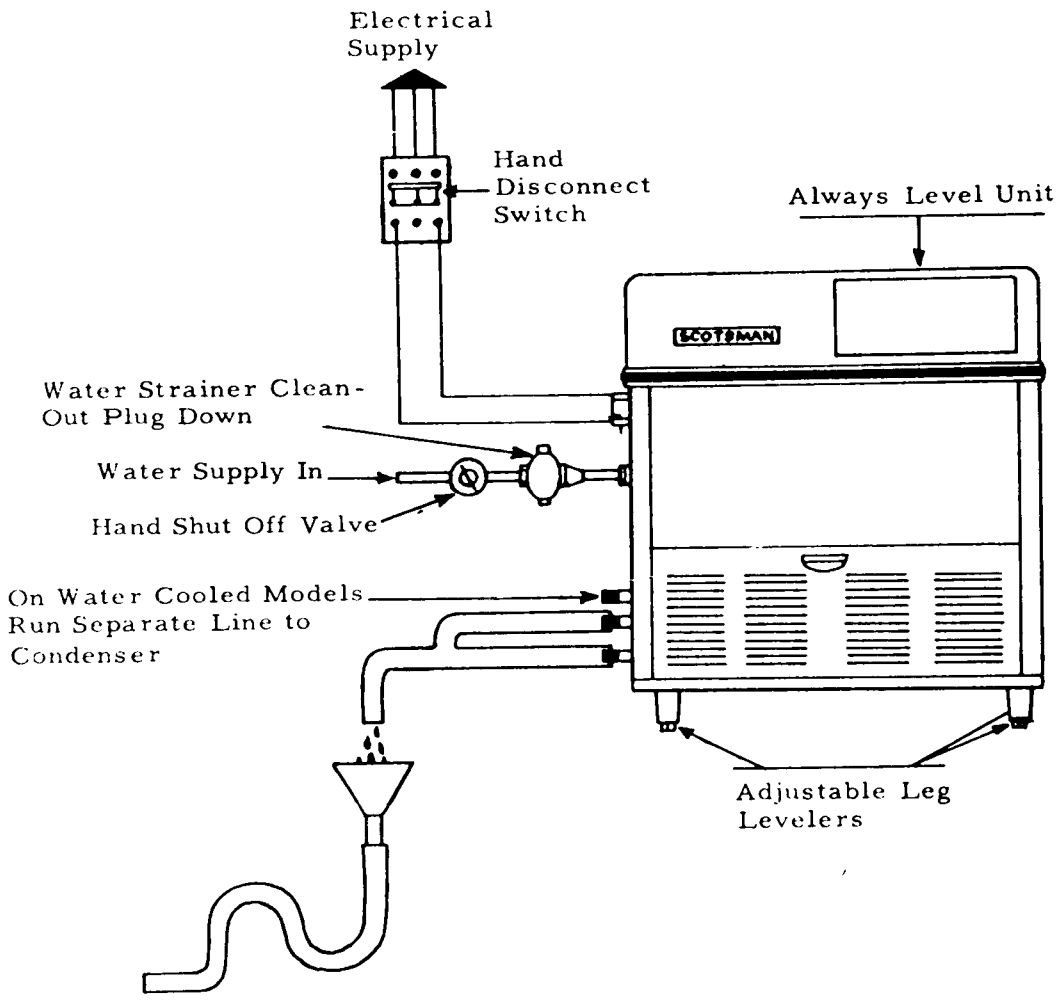

WATER SUPPLY. The recommended water supply line is 1/4 inch OD copper tubing. Connect to cold water supply line with regular plumbing fittings, with shut-off valve installed in an accessible place between supply line and machine. A water strainer must be installed with the unit and mounted with clean-out plug down. Locate the strainer next to the machine withthe arrow in the direction of the flow. Most plumbing codes also call for double check valves in the supply water line.

The water supply line connects to the 1/4 inch flare fitting on the machine. Water supply must be installed to conform with local code. In some cases a licensed plumber and/or a plumbing permit will be required.

DRAIN. The recommended drain from the bin is 5/8 inch OD copper tubing. Must be run to an open trapped and vented drain. If drain is a long run, allow a 1/4 inch pitch per foot. Drain must be installed to conform with local code.

INSTALLATION

ELECTRICAL CONNECTIONS:

SF-75WSJ
115 Volts, 60 Cycle, 1 Phase
15 Amp. Circuit

Be certain that the Super Flaker is on its own circuit and individually fused. The maximum allowable voltage variation should not exceed 10 per cent of the nameplate rating even under starting conditions. Low voltage can cause erratic operation and may be responsible for serious damage to the overload switch and motor windings.

All external wiring should conform to the National Underwriters and local Electrical Code requirements. Usually an electrical permit and the services of a licensed electrician will be required.

ELECTRICAL INSTALLATION:

SF-75WSJ

Compressor	1/4 HP	Tecumseh - catalog 43
	Voltage	115
	Amp. rating F.L.A.	4.5
	Watts input	450
	Cycle	60
	Phase	Single
Gear Drive Motor	1/10 HP	Queen Products
	Voltage	115
	Amp. rating	4.0
	Cycle	60
	Phase	Single Thermally Protected

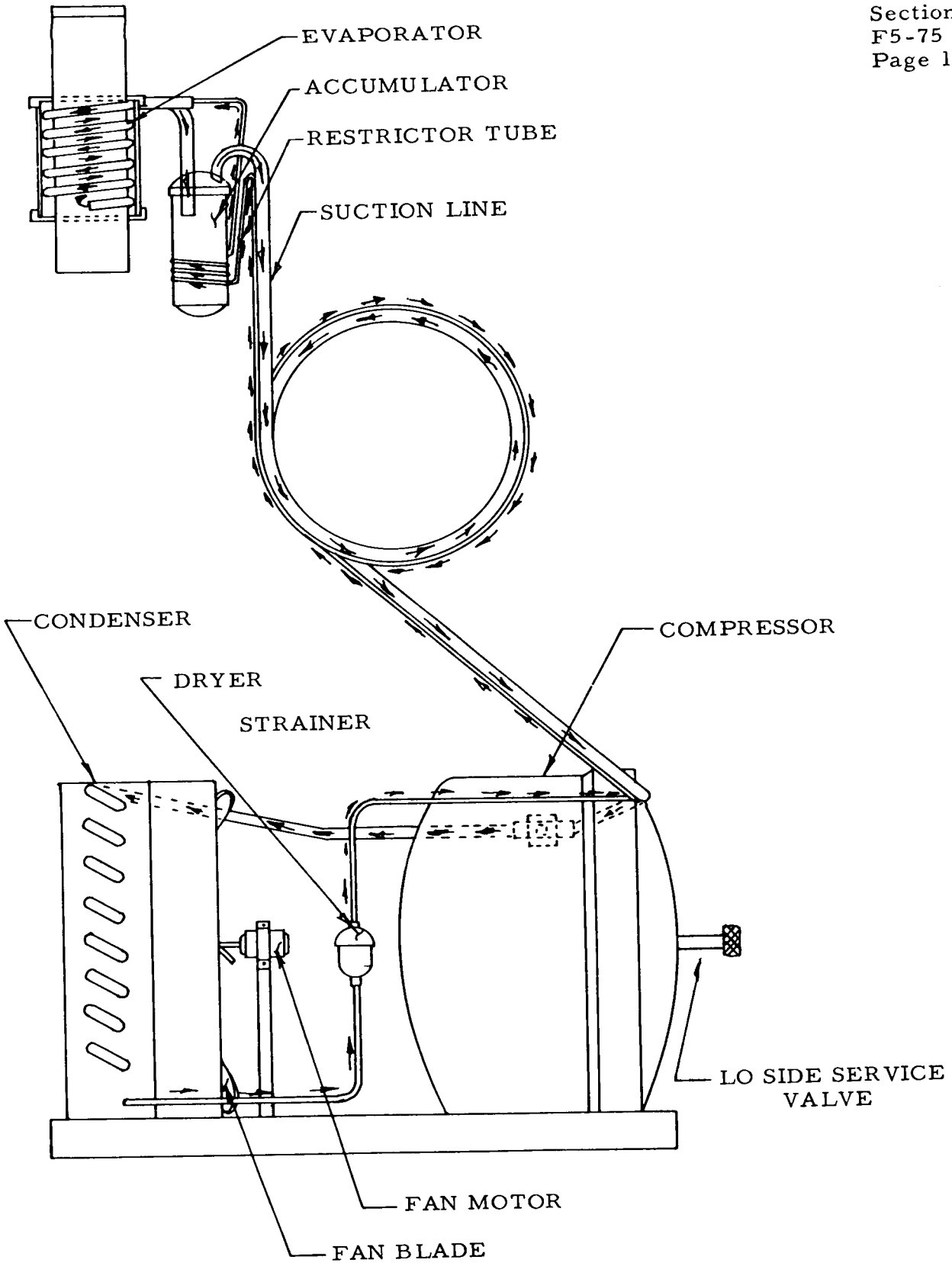

SF-75WSJ
REFRIGERATION CYCLE

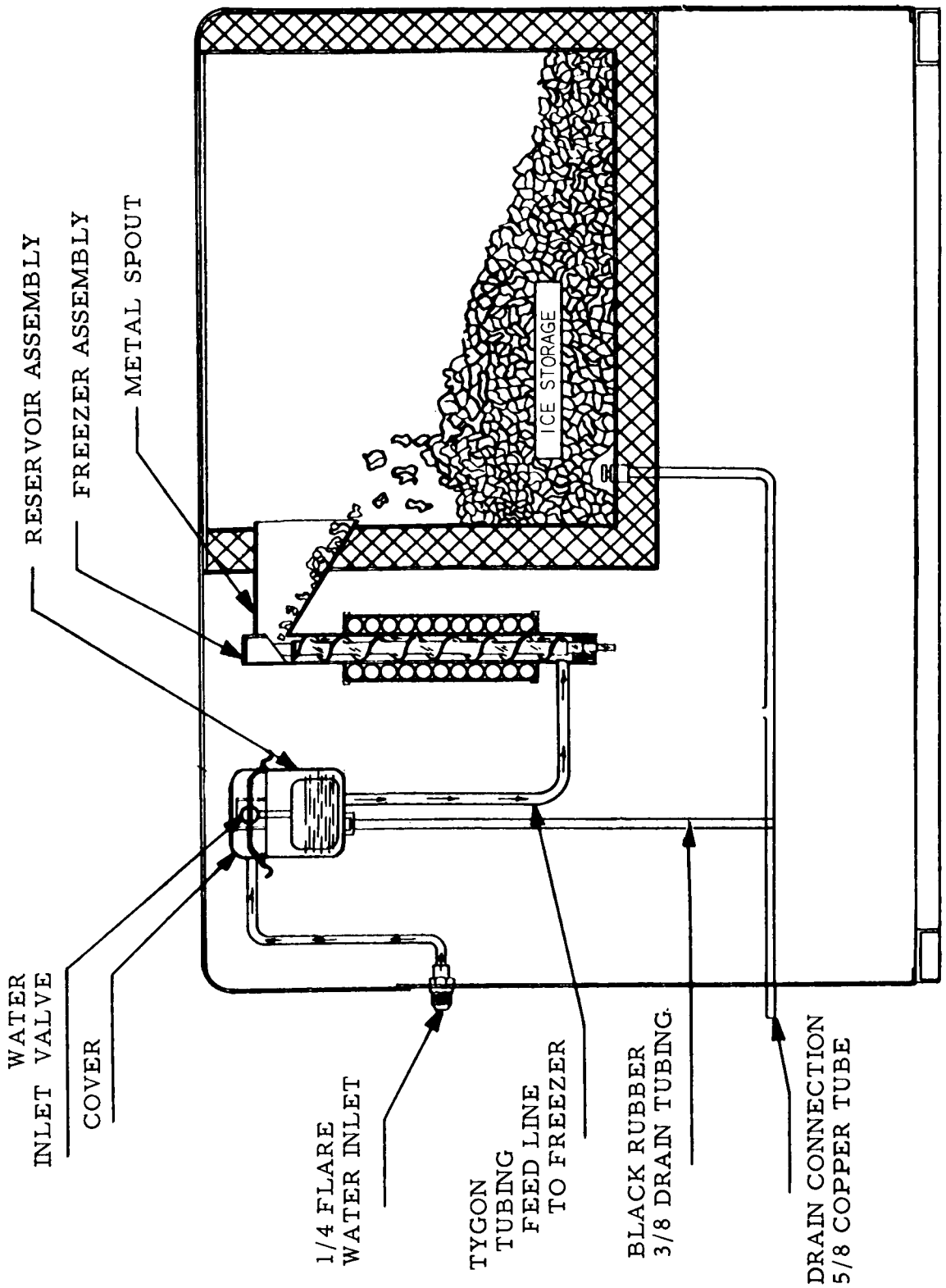

WATER SCHEMATIC

SF - 75WSJ

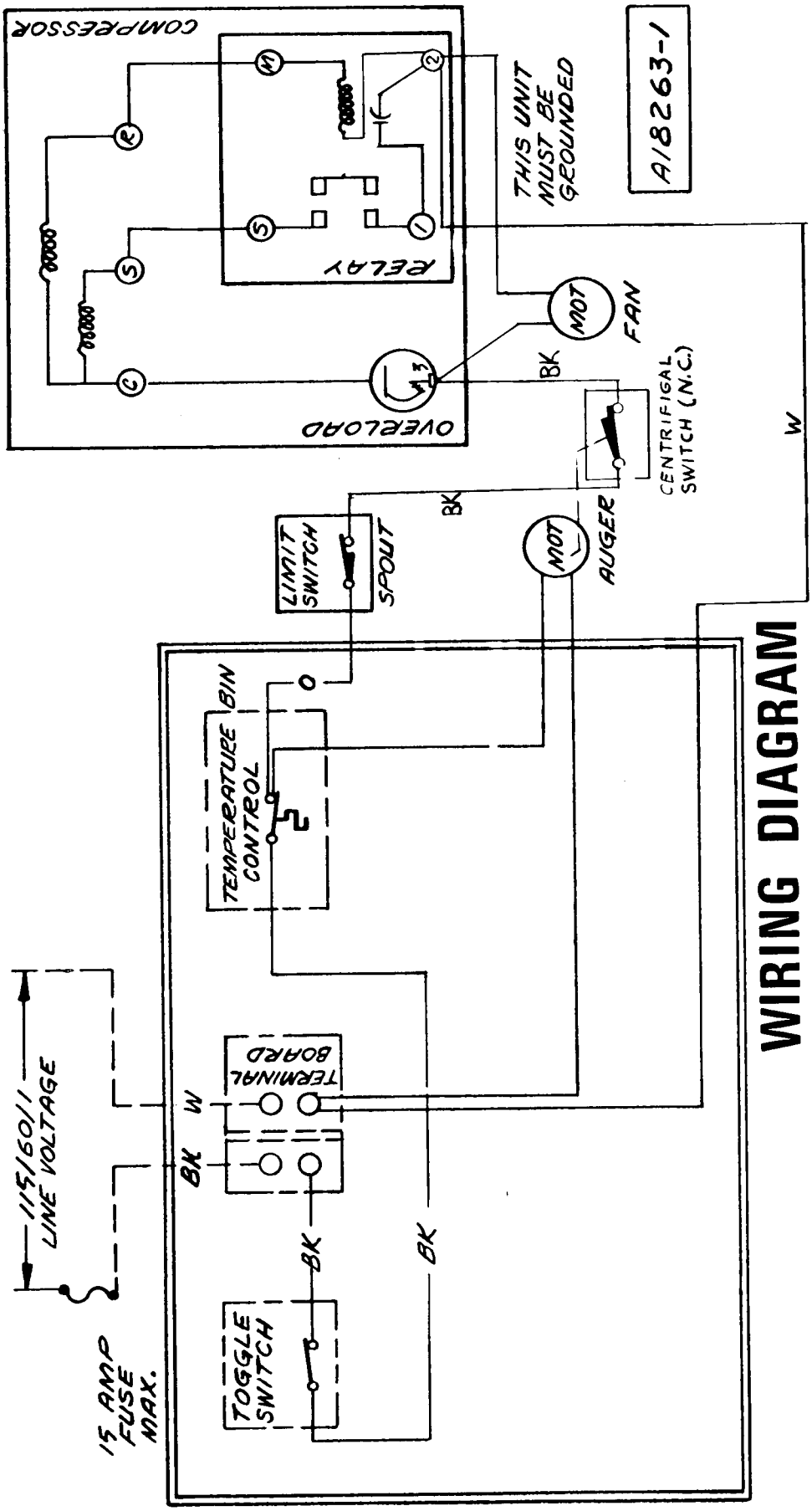

WIRING DIAGRAM

SF 75WSJ
115-60-1

FINAL CHECK LIST

1. Is the unit level? (IMPORTANT)
2. Have all electrical and piping connections been made?
3. Has the voltage been tested and checked against the nameplate rating?
4. Is the water supply valve open and the electric power on?
5. Is the water reservoir filled and shut off? All packing removed?
6. Have unit and bin been wiped clean?
7. Has owner been given the Operating Instruction Sheet, and has he been instructed on how to operate the machine?
8. Have the installation and warranty cards been filled out? This is the owner's protection.
9. Check all refrigerant and conduit lines to guard against vibration and possible failure.
10. Installed in a well ventilated room where ambient temperatures do not fall below 50° Fahrenheit.
11. Is unit installed with a minimum 4" air space around sides and back?

SERVICE

STARTING THE MACHINE: When the machine is placed and inspected as per instructions and all plumbing and electrical connections are completed and tested, turn on the water supply. Be sure the float cover is removed to check on the float operation and water level in the water reservoir. Be sure the water reservoir is filled before starting the machine. Water level should be 1/4 inch below the reservoir overflow.

When this is completed, turn on the manual switch on the front of the cabinet and the machine is in automatic operation. In two to three minutes ice will start dropping off the worm shaft and out the ice chute. Let the machine operate for at least 30 minutes and check for any excess noise other than the normal compressor noise. Test the ice storage control bulb by holding a handful of ice around the bulb until the machine shuts off. One minute should be normal for the control to function. Within minutes after the ice is removed, the bulb will warm up and the machine will automatically start up. The control is factory set and should not be reset until this test is made. Normal setting of this control should be approximately 35 degrees cut out, 45 degrees cut in.

Check low pressure setting at the time of start-up. The frost line should extend 8" out of the accumulator if properly charged with refrigerant and suction pressure will range between 15 and 16 PSI with 50° F. inlet water.

Explain the machine to the owner, showing him how the machine works and go over the owner's instruction sheet with him. Answer all the owner's questions about the machine, and do not leave with any doubt in the owner's mind about the machine, how to operate it or where to reach you should he need service on the machine. Call back the next day to check the machine again and answer any other questions the owner may have.

Service gauge connection is available on low side service valve. Purge free of any non-condensable gases before starting any test operation.

REFRIGERANT CHARGE: The below refrigerant charge is approximate. Charge so that the frost line extends 8" out of the accumulator after fifteen minutes of operation. Factory charge 21 oz. refrigerant 12. Low side pressure 14-16 P.S.I.

SERVICE

WATER SYSTEM: A water level is maintained in the water reservoir by a float operated valve. Water is piped from the water reservoir to the freezing chamber by a gravity feed line maintaining an equal water level. A removable overflow pipe is installed in the water reservoir for cleaning the reservoir as well as preventing damage should the inlet water valve fail.

The water reservoir is equipped with a 2 inch air gap to prevent back siphoning and meet all health codes.

The water level in the water reservoir is adjusted by bending float arm. The water level should be set 1/4 inch below the overflow pipe.

A water strainer must be installed in the supply line. Use strainer sent with machine.

ELECTRICAL SYSTEM: The super Flaker Model SF-75 is designed to work on standard electrical supply 115 volts, 60 cycle single phase.

Supply voltage should not vary more than plus or minus 10 percent over nameplate rating.

Special voltage requirements are available on special order. Therefore, always check nameplate for this information before checking electrical supply.

The electrical circuit consists of condensing unit, freezer gear motor, storage bin thermostat ON and Off switch and spout micro (safety) switch.

A. CONDENSING UNIT: The starting capacitor and starting relay are housed and fastened to the motor compressor.

B. GEAR MOTOR TO FREEZER: Models SF75"J" are equipped with a 1/10 horsepower direct drive gearmotor. A speed sensing switch mounted on top of the motor of the gear unit will open and stop the compressor when the RPM of the gearmotor is less than 900. At 1200 RPM it will close, starting the compressor.

In an actual operation any condition that may cause excessively hard ice and overloads within the freezer assembly, water interruptions, cold ambients, etc. is transmitted to the gearmotor reducing it's speed. When gearmotor slows down to approximately 900 RPM the speed sensing switch opens the electrical circuit to the compressor. The compressor stops and no more ice is produced, meanwhile the gearmotor continues to run, clearing the overload condition and gradually resumes full speed. At 1200 RPM gearmotor speed sensing switch closes compressor circuit causing the normal icemaking process to begin once more.

Any freeze up possibility is therby automatically cleared out by the gearmotor.

C. STORAGE BIN THERMOSTAT: Thermostat control body is located in electrical control box. The thermostat sensing tube is threaded into the ice storage bin where it automatically stops the icemaker when ice bin fills to sensing tube level and restarts icemaker when ice is removed. Factory settings are 35° cut out, 45° cut in.

Altitude correction begins at 2,000 feet, cut in and cut out screws should be adjusted equally, not more than 1/4 turn at a time.

D. MICRO SAFETY SWITCH: The micro switch is located in the top of the ice chute. The switch is operated by a pressure plate inside the ice chute. Ice backs up in the chute if the storage bin thermostat fails. Micro switch will shut off the condensing unit only, when operated.

E. ON-OFF SWITCH: A manual on-off switch is located in control box.

REMOVAL & INSTALLATION OF PARTS

CABINET TOP (HOOD)

1. Remove two back end screws of chrome strip.
2. Pull out tape concealing screws.
3. Remove balance of screws in chrome strip.
4. Lift off hood.

HOOD SERVICE DOOR, TOP

1. Remove screw from front edge.
2. Lift up and back to unhook pin.

CABINET SIDE SERVICE DOOR

1. Remove four screws on edges.
2. Lift out door.

CABINET FRONT SERVICE DOOR

1. Front door pulls out.

CABINET REAR SERVICE DOOR

1. Remove four screws on corners of rear service door.
2. Pull door out.

ICE STORAGE DOOR

1. Lift door up, slide back 6". Remove thumb screw that attaches safety lanyard to back of door.
2. Door will now slide out. Lift front edge slightly to clear hood lip.

ICE STORAGE DOOR FRAME

1. Remove six screws at bottom and sides.
2. Remove screw in frame back.
3. Frame will now lift out.

MOTOR COMPRESSOR

1. Remove gas charge .
2. Disconnect wiring from the compressor.
3. Loosen suction and discharge lines and cap off.
4. Remove the compressor hold-down nuts and lift compressor out of the unit.
5. Reverse steps 1 through 4 in replacing compressor.

FREEZER ASSEMBLY

1. In most instances, it will be faster to remove freezer by first removing cabinet top or hood. (See Removing and Installing Cabinet Parts.) Assembly can be changed if necessary through hood top panel.
2. Shut off water supply to unit, remove top and left side service panels.
3. Disconnect water inlet line at reservoir. Remove water supply tube at freezer and drain freezer.
4. Purge off refrigerant, unsweat suction line, disconnect capillary line at drier. Cap off all lines so no moisture can enter system.
5. Remove insulation pieces around spout, also the spout proper.
6. Remove 3 bolts holding fiber adapter base to gearmotor top cover, lift freezer out of cabinet.
7. Remove fiber adaptor spout front and back plates from old freezer and install on new replacement.
8. Re-install in reverse of above.

FREEZER WORM SHAFT

1. Turn unit off, before removing worm shaft.
2. Shut off water supply to unit.
3. Remove hood service doors.
4. Remove top and bottom straps around spout insulation pieces, remove pieces.
5. Remove two slotted head screws which fit through top chamber wall into ice breaker.
6. Tap spline coupling loose on bottom end of freezer worm shaft.
7. Complete worm shaft with ice breaker attached will now come out by lifting up on freezer cap pull ring. NOTE: Top half of water seal will come with worm shaft.
8. To remove ice breaker from shaft, first remove retainer ring in top of ice breaker.
9. Remove freezer cap and pull ring from ice breaker.
10. Remove cap screw holding shaft through bearing and pull worm shaft free from ice breaker and bearing.
11. If shaft is defective, remove water seal top half and put on new worm shaft before reassembling--when reassembling, by reversing above, put a small amount of Vaseline on shaft end. This will allow shaft to slide smoothly through rubber bottom half of water seal without tearing it.

WATER SEAL

1. To replace water seal, follow steps 1 through 7 under Worm Shaft Removal.
2. Remove 3 bolts holding freezer to fiber mounting adapter.
3. Lift freezer off adapter just high enough to allow bottom bearing and bottom half of water seal to be removed from bottom of freezer tube.
4. Lightly grease bottom half of new water seal and insert face up approximately 1/2" in bottom of freezer tube.
5. Insert bottom bearing in bottom of freezer tube, force approximately 1/8" past bottom tube end. This will allow the positioning ring on fiber adaptor to properly position freezer tube when tightening up the three mounting bolts.
6. After securing mounting bolts, put new top half of water seal on worm shaft the same way as the old seal was removed.
7. Carefully insert worm shaft assembly in freezer tube and into spline coupling on bottom.
8. Replace ice breaker screws, insulation pieces and unit is ready to resume operation.

SERVICE

STORAGE BIN THERMOSTAT:

1. Disconnect electrical supply.
2. Remove bin thermostat bulb from bin location along with its capillary tube.
3. Remove control box cover.
4. Disconnect two spade type electrical leads.
5. Loosen two screws in control mounting bracket.
6. Replace with new control and reassemble in reverse of above.
7. CAUTION: Always check new control power element charge before installation to assure receiving an operative control. A handful of ice on bulb will register an audible 'click' at cut off.

WATER RESERVOIR

1. Remove service panel in cabinet hood.
2. Turn off water supply and drain reservoir.
3. Remove 1/4 inch copper inlet water line.
4. Remove 1/2 inch plastic feed line to freezer.
5. Remove two screws holding reservoir bracket to wall.
6. Lift out reservoir.
7. To replace, reverse procedure.

SERVICE

MICRO SWITCH IN SPOUT

1. Remove hood service panel.
2. Remove insulation pieces around freezer spout.
3. Remove micro box cover, loosen two screws at rear of box holding switch in place, lift up.
4. Disconnect electric leads.
5. Reassemble with new micro switch.

MANUAL ON AND OFF SWITCH

1. Remove front service door.
2. Remove two screws holding switch to bracket.
3. Disconnect electrical leads from switch.
4. Remove switch.
5. To replace, reverse procedure.

FREEZER GEARMOTOR

1. The easiest way to change the gearmotor is to remove complete cabinet hood as explained earlier in this section. If necessary because of location you can change by removing chrome trim insert strip on cabinet left side. This will expose three flat head screws. Remove same.
2. Pull off left side service panel and look up on underside of left side cabinet panel: 4 screws, 2 on each side, secure this panel to cabinet. Remove these 4 screws and entire left cabinet side below hood is now open.
3. Remove the four wire leads (2 on micro switch on top of motor, 2 from motor into control box.)
4. Remove 3 bolts thru fiber adapter into gearmotor cover and the 4 bolts holding gearmotor to mounting base.
5. Lift freezer adapter assembly off gearmotor and pull gearmotor out thru left side.

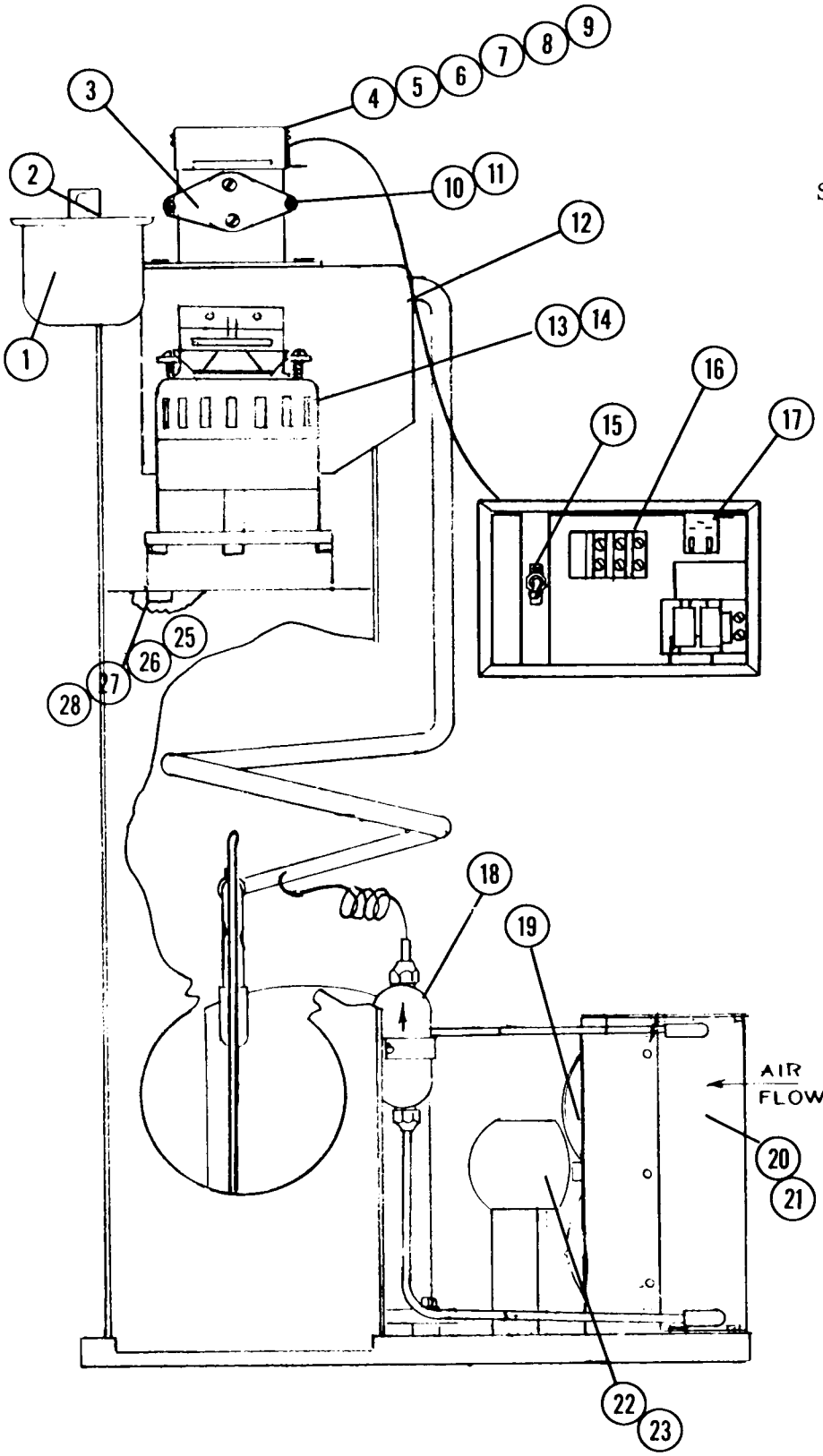

SF-75 J FLAKER CHASSIS

ITEM NO.	PART NO.	
1.	A-18256	Reservoir
2.	S-8138	Water Inlet Valve Assy.
3.	A-18340	Spout Plate
4.	12-1018	Spout Switch
5.	A-16357	Spout
6.	A-16360	Spout Pressure Plate
7.	A-14256	Knurled Nut
8.	2-560	"O" Ring
9.	A-14254	Spout Casting
10.	3-1403-53	Screws
11.	3-1417-7	Washers
12.	A-18295-2	Freezer
13.	A-18380-1	Gear Reducer Assy.
14.	A-13635	Spline Adapter
15.	12-426	Switch
16.	12-813-4	Terminal Board
17.	11-354	Temperature Control
18.	2-350	Drier
19.	18-231	Fan Blade
20.	A-15621	Condenser Shroud
21.	18-140	Condenser
22.	18-163-1	Fan Motor
23.	18-422	Fan Motor Mount
24.		
25.	A-18301	Shoulder Bolt (4)
26.	13-627	Grommet (4)
27.	3-1407-5	Washer (4)
28.	3-1407-9	Washer (4)

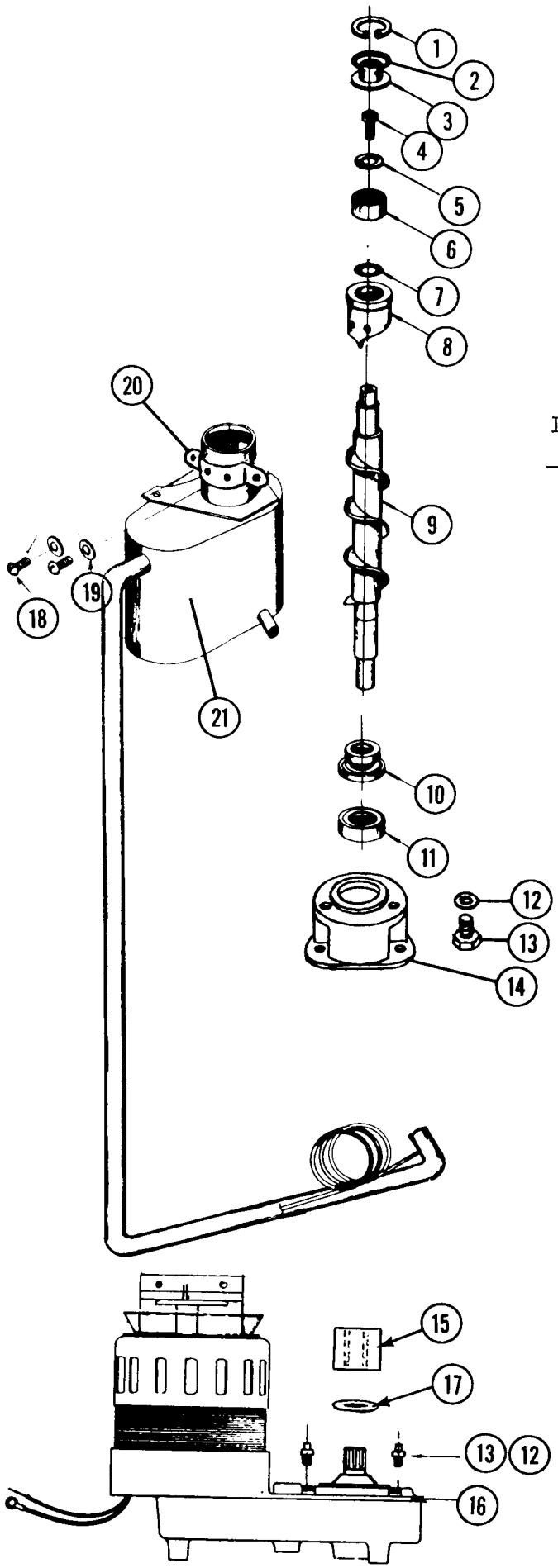

FREEZER ASSEMBLY
SF-75 "J" MODELS

ITEM NO.	PART NO.	NAME
1.	03-553	Snap Ring
2.	A-8162	Cap Hook
3.	A-7701	Cap
4.	3-758	Cap Screw
5.	A-7699	Washer
6.	2-547	Top Bearing
7.	2-386	"O" Ring
8.	A-9413	Breaker
9.	2-1313	Auger
10.	2-1300	Water Seal
11.	2-417	Lower Bearing
12.	3-1408-3	Washer
13.	3-1405-14	Screw
14.	2-1311	Adapter
15.	A-13635	Spline Adapter A3991S-002
16.	A-18380-1	Gear Reducer
17.	2-1347	Drip Shield
18.	3-1403-48	Screws
19.	3-1410-3	Washers
20.	A-18430	Spout Plate
21.	A-18294	Worm Tube-- Suction Line

A-18295-2 Freezer Complete
(Less items 12 thru 16)

SF-75 J FLAKER CHASSIS

ITEM NO.	PART NO.	NAME
1.	A-16360	Spout Pressure Plate
2.	A-16357	Spout (less plate)
3.	A-14975	Switch Box Assy.
4.	12-1018	Switch
5.	A-14256	Nut
6.	A-14254	Front Spout Casting
7.	13-679	"O" Ring
8.	3-1403-53	Screws
9.	3-1417-7	Washers
10.	A-18430	Spout Plate
11.	A-18256	Reservoir
12.	A-18295-2	Freezer
13.	A-18380-1	Gear Reducer
14.	A-18301	Shoulder Bolt (4)
15.	13-115	Grommet (4)
16.	3-1407-5	Washer (4)
17.	3-1407-9	Washer (4)
18.	16-560	Schader type lo side valve core
19.	18-108-1	Compressor 115/60/1
20.	18-108-25	Relay
21.	18-108-28	Capacitor
22.	18-108-30	Overload
23.	A-15070	Spout Insulation, left
24.	A-15071	Spout Insulation, right
25.	A-8736	Tin Straps (2)

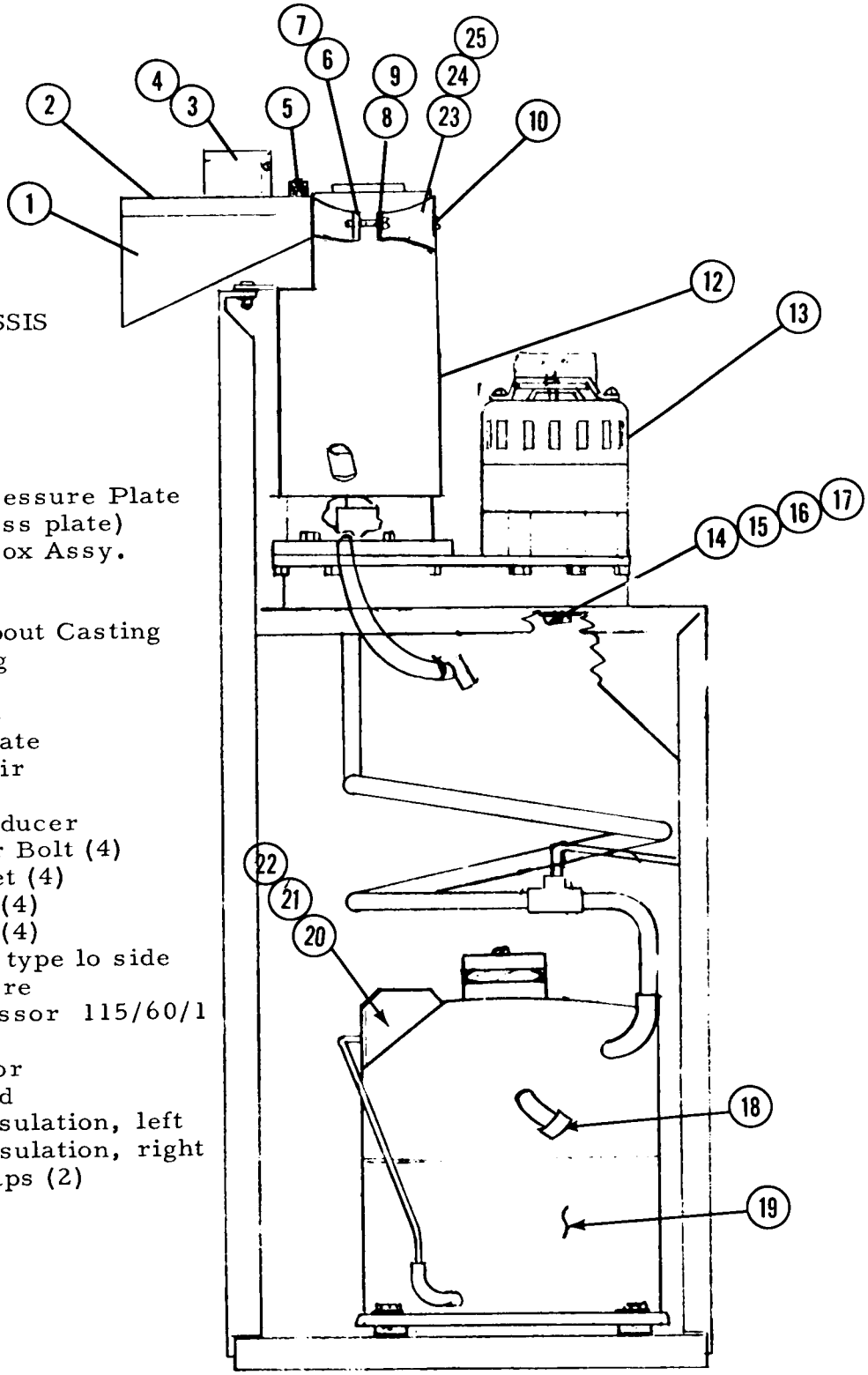

RESERVOIR ASSEMBLY SF-75 J

ITEM NO.	PART NO.	NAME
1.	A-16012	Reservoir Cover Ass'y
2.	2-1259	Float Pin
3.	2-1320	Water Deflector
4.	S-8772	Water Inlet
5.	S-6947	Valve Seat
6.	A-5777	Valve Seat Holder
7.	3-1001	Rivet
8.	A-12067	Float Ass'y (includes arm)
9.	S-7044	Nut
10.	A-12869	Inlet Water Bracket
11.	S-8138	Inlet Water Valve Ass'y (includes valve seat, holder and float assembly)
12.	S-6715	Stand Pipe
13.	A-13408	Reservoir Body Ass'y
14.	A-8055	Bracket Nut
	A-8351	Reservoir Complete (Less Cover)
15.	A-18418	Water Deflector

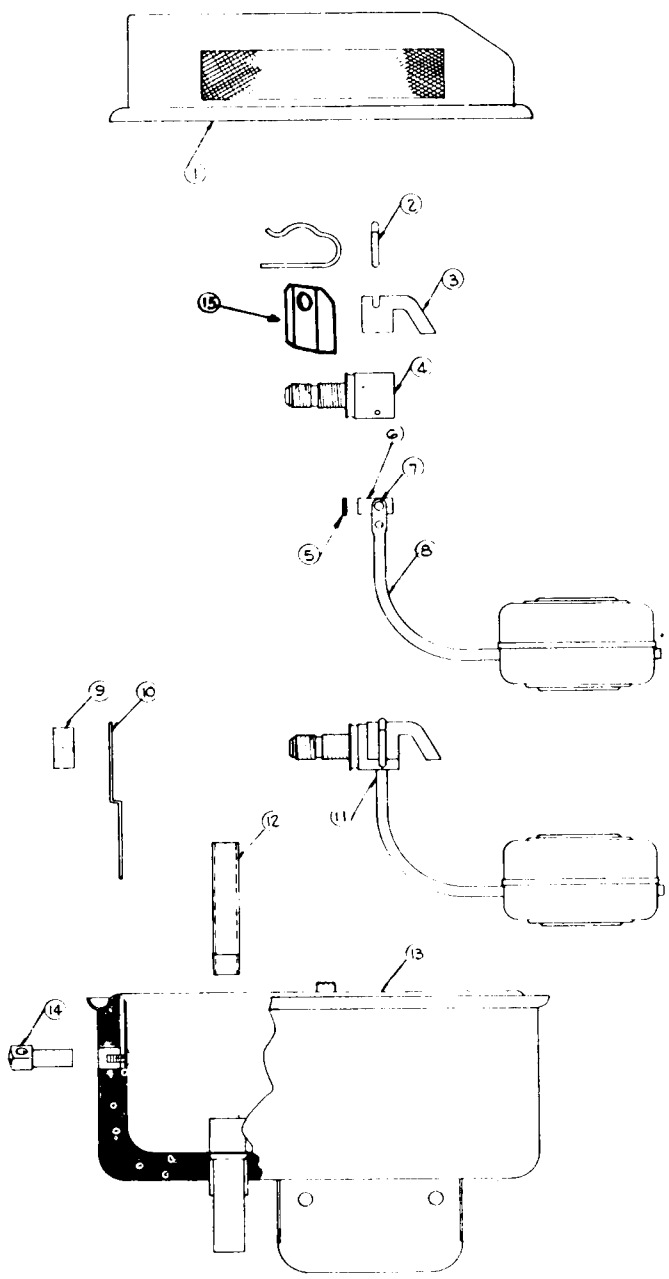

SF-75 J CASE AND HOOD ASSEMBLY

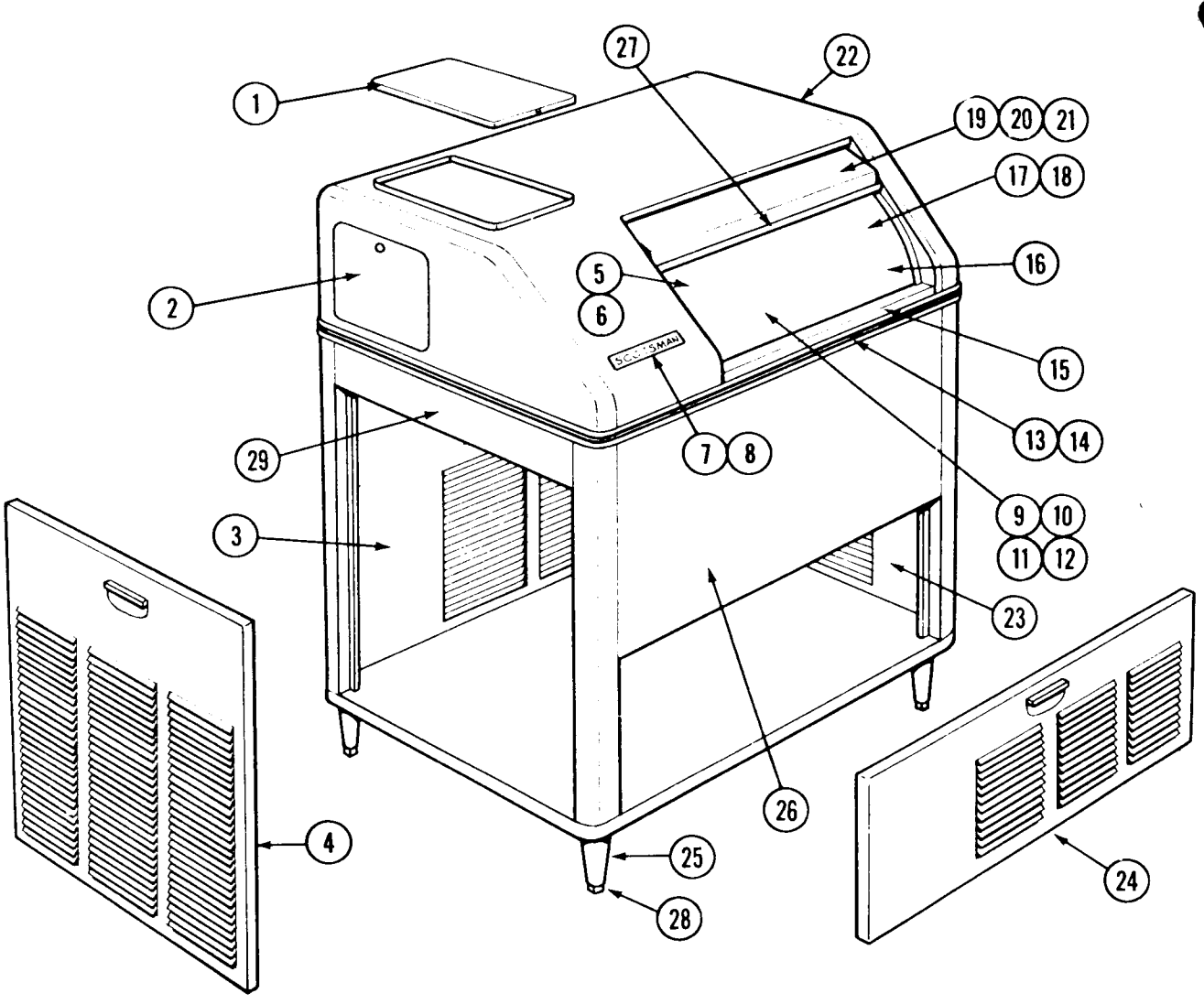

ITEM NO.	PART NO.	NAME
1.	A-6767	Top Door Assy.
2.	A-6530	Top Side Door
3.	A-16563	Back Door
4.	S-9405	Left Door
5.	2-1615	Bulb Holder *
6.	13-557	Grommets *
7.	15-156	Emblem
8.	3-271	Nuts
9.	A-18891	Storage Bin Assy.
10.	A-18088	Drain Assy. under bin See Item 16.
11.		Bottom Insulation *
12.		Insulation Layout *
13.	A-6510	Front Moulding
14.	15-324	Insert - order per foot
15.	A-16208	Door Track Assy. *
16.	A-18090	* Drain Fitting (female) in bin
17.	A-6448	Drain Strainer *
18.	2-530	"O" Ring * Fits Item 10
19.	A-15559	Door Assembly
20.	3-640	Door Glides *
21.	3-1195	Door Glides (hood) *
22.	A-15599	Hood Assembly
23.	A-16561	Right Door
24.	A-15789	Front Door
25.	A-15803	Leg
26.	A-18291	Case Assembly
27.	A-16209	Door Catch *
28.	8-522	Leg Leveler
29.	A-7714	Left Panel

* Not Shown
Add an "S" to panel Nos. for stainless steel.

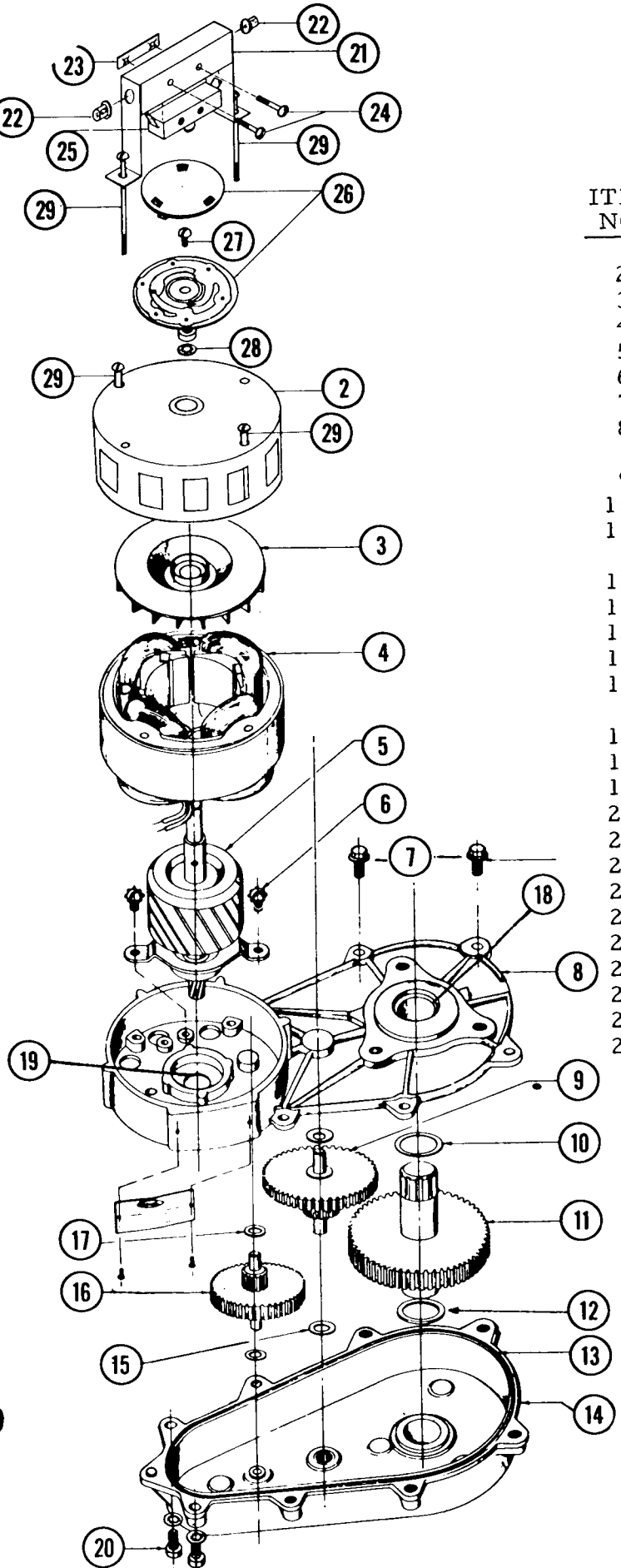

SF75J GEAR MOTOR ASSY.

ITEM NO.	PART NO.	NAME
2.	A-17047	Motor Housing
3.	A-16915	Cooling Fan
4.	12-1400-1	Stator Assy.
5.	A-16934-1	Rotor Assy.
6.	3-1245	Screws
7.	3-1251	Flange Screws
8.	A-16920	Gear Case Cover
9.	2-1521	Gear & Pinion
10.	3-1408-5	Washer
11.	2-1513	Gear & Output Shaft
12.	3-1408-4	Washer
13.	2-1505	"O" Ring
14.	A-16919	Gear Case Assy.
15.	3-1408-6	Washer
16.	2-1520	1st Gear & Pinion
17.	3-1408-7	Washer
18.	2-1503	Grease Seal
19.	2-1504	Grease Seal
20.	3-1252	Screw
21.	A19887	Switch Bracket
22.	12-1213-3	Snap Bushings
23.	3-886	Twin Speed Nut
24.	3-1403-9	Screws
25.	12-1544	Switch
26.	A19898	Synchro Snap Assy.
27.	3-1403-10	Screw
28.	3-1417-6	Washer
29.	3-1403-43	Motor Bolts

A-18380 Gear Motor Assy. Complete

Output Shaft turns at 10 RPM

SERVICE ANALYSIS

SYMPTOM	POSSIBLE CAUSE	CORRECTION
Jnit will not run	Blown Fuse	Replace fuse and check for cause of blown fuse.
	Thermostat set too high	Adjust thermostat. 35° cut-out and 45° cut-in.
	Loose electrical connection	Check wiring.
	Switch in OFF position	Turn switch to ON.
	Inoperative master switch	Replace switch.
Compressor cycles intermittently	Low voltage	Check for overloading.
	Dirty Condenser	Clean.
	Air circulation blocked	Move unit to correct.
	Inoperative condenser motor	Replace.
	Non-condensable gases in system	Purge off.
Making wet ice	Surrounding air temperature	Correct or move unit to cooler location
	Under or over-charge of refrigerant	Recharge with the proper amount.
	High water level in water reservoir	Lower to 1/4 inch below over-flow pipe.
	Faulty compressor	Repair or replace.
Low ice production	Loss of refrigerant, under or over-charge of refrigerant.	Check and recharge with proper amount of refrigerant.
	Dirty or plugged condenser	Clean condenser
	Low water level in water reservoir	Adjust to 1/4 inch below over-flow pipe.
	Partial restriction in capil-lary tube or drier	Moisture in system. Over-charge of oil in system. Re-move charge and drier. Re-place and recharge system.
	Inlet water strainer partially plugged.	Remove screen and clean.
	Corroded or stained worm shaft due to water condition	Remove worm shaft and clean.
Machine runs but makes no ice	Loss or under-charge of refrigerant	Check for leaks and recharge
	Drive gearmotor or drive coupling stripped.	Check. Repair and/or replac
	Water not entering freezing chamber	Plugged strainer or supply line. Check and clean. Air lock in gravity feed line. Check and remove air lock.
	Moisture in system	Check and remove charge and drier. Replace and recharge.
	Water seal leaking	Replace seal.
	Defective manual overload switch.	Replace switch.

SERVICE ANALYSIS

SYMPTOM	POSSIBLE CAUSE	CORRECTION
Water Leaks	Defective water seal	Replace
	Gravity feed line leaking	Check hose clamps
	'O' ring in spout casting leaking	Remove spout casting and install new 'O' ring
	Storage bin drain & connecting fittings	Check and repair.
	Water level in reservoir too high	Adjust to 1/4 inch below overflow pipe.
Excessive noise or chattering	Mineral or scale deposit on auger and inner freezing chamber walls.	Remove and manually polish auger, polish inner chamber walls of freezer barrel.
		For lighter concentrations use Scotsman Ice Machine Cleaner periodically.
	Low suction	Add gas to raise suction pressure.
	Intermittent water supply	Check & clean water strainer. Check gravity feed line for air lock. Remove air lock.
	Water level in reservoir too low	Adjust to 1/4 inch below overflow pipe.
	Gear motor loose on frame	Tighten.
	Gearmotor end-play or worn bearings.	Repair or replace.
Machine continues to run with full storage bin	Storage bin thermostat not properly set	Reset or replace. 35° cut-out, 45° cut-in Check operation with handful of ice.

MAINTENANCE INSTRUCTIONS - FLAKERS

THE FOLLOWING MAINTENANCE MUST BE ACCOMPLISHED TWO TIMES PER YEAR ON ALL SCOTSMAN SUPER FLAKERS. CALL YOUR AUTHORIZED SCOTSMAN SERVICE DEPART - MENT.

1. Check and clean water strainers and float valve. Depress float valve to insure full stream of water.
2. Check water level and machine level, keep water level below overflow, but as high as possible and still not run out of spout opening with machine off. Water droplets come out of spout with ice at all times. Adjust as required.
3. Clean reservoir and interior of freezer using SCOTSMAN Ice Machine Cleaner.
   A. If machine has been cleaned regularly and no problems such as dry ice or chatter are noticed, clean as per the following instructions:

   a. Set main switch to OFF.
   b. Remove all ice from storage bin.
   c. Turn off water supply or block float. Drain reservoir by removing overflow tube (gray plastic tube) in reservoir. Replace overflow tube.
   d. Set main switch to ON and pour cleaning solution into reservoir. Do not fill above overflow tube.
      Models SF1 & SF75--Use 4 oz. of Scotsman cleaner and 1 qt. hot water.
   e. Continue to make ice on solution until the solution is used up and reservoir is empty.
   f. Set main switch to Off. Remove overflow tube, wash and rinse reservoir, replace overflow tube, turn water on or remove float block.
   g. Turn MAIN SWITCH to ON. Let unit run for at least (15) minutes to flush out any cleaning fluid. Check ice for acid taste.-- run until ice tastes sweet.
   h. Turn MAIN SWITCH to OFF. Add hot water to ice bin, using this melt water, thoroughly wash and rinse all surfaces within the storage bin.
   i. Turn MAIN SWITCH to On. Replace Service Door. Unit is ready for normal operation.

MAINTENANCE INSTRUCTIONS (Continued)

NOTE: Cleaning requirements vary according to local water conditions. Visual inspection of the auger before and after cleaning will indicate best procedure to be followed in local areas.

4. Check high and low side pressures. On air-cooled models head pressures range between 130 and 145 PSI. Suction pressure should be above 12 PSI and will range up to 16 PSI depending upon water and ambient temperatures.
5. Check gearmotor operation. Normal running temperatures are in the area of 160° farenheit, which is hot to the touch. Check operation of centrifugal switch and the micro switch it actuates. When micro switch is actuated, compressor stops, gearmotor continues to run.
6. Check top bearing of freezing tube. Remove retainer ring around edge of stamped brass cap. If moisture is around bearing, wipe up and remove grease. Add new grease. Use Beacon No. 325. Replace cap and retainer ring.
7. Clean air-cooled condenser. Inform customer to clean frequently. Always shut off machine when cleaning.
8. Oil condenser fan motor when possible.
9. Check for refrigerant leaks and proper frost line. Should frost out of accumulator at least one-half way to compressor, and in some areas back to service valve.
10. Check for water leaks. Tighten drain line connections. Run water down bin drain line to make sure it is open.
11. Check quality of ice. Ice should be wet when formed, but will cure rapidly to normal hardness in bin.
12. Check thermostat and pressure plate cut off in spout. Micro switch cuts off only compressor. Bin thermostat should be set at 10° differential and should keep entire machine off at least twenty minutes in high ambients (longer in low) during normal operation. Settings are 35° cut out, 45° cut in.

PARTS LIST
SF-75WS"J"

ELECTRICAL COMPONENTS

Bin Thermostat	11-354
Micro Switch-Spout	12-1018
On/Off Switch	12-426
Terminal Board	12-813-4

CONDENSING UNIT (TECUMSEH 115/60/1 1/4HP)

Motor-Compressor	18-108-1
Dryer	2-350
Relay	18-108-25
Starting Capacitor	18-108-28
Overload	18-108-30
Fan Motor	18-163-1
Fan Motor Mount	18-422
Fan Blade	18-231
Fan Shroud	A-15621
Tire Type Service Valve	16-559
Tire Type Service Valve - core only	16-560

MISCELLANEOUS

Spring Clamp Pliers	50-46
Worm Tube Nut Wrench	A-8497
Ice Scoop	2-540
Ice Machine Cleaner - 8 oz. bottle	19-343
Grey Spray-On Touch-Up Paint	10-153
Tygon Tubing - 9/16" ID	5-179
Tygon Tubing - 1/2" ID	5-186
Rubber Tubing - 3/8" ID	13-79
Clamp (for 5-179)	2-536
Clamp (for 5-186)	2-536
Clamp (for 5/8 drain tube)	2-534
Clamp (for 11/16 drain tube - Green)	2-535
Retainer Ring Plier	50-637

PARTS LIST
SF-75 WS"J"

DRIVE CIRCUIT

Gearmotor assembly	A-18380-1
Spline Coupling	A-13635
Fiber Adaptor Bracket	2-1311
Rubber Drip Shield - Fits Gearmotor Shaft	2-1347
Sliding Door - Ice Storage	A-15559
Door Stop Lanyard	2-1736
Wing Screw to Door	3-1276
Pan Screw to Frame	3-1403

FREEZER ASSEMBLY COMPLETE

Freezer Assembly Complete	A-18295-2
Ice Breaker	A-9413
"O" Ring	2-386
Top Bearing	2-547
Cap Screw	3-758
Worm Tube Washer	A-7699
Worm Tube Cap	A-7701
Retainer Ring	3-553
Worm Shaft	2-1313
Water Seal	2-1300
Bearing, Bottom	2-417

PARTS LIST

SF-75WSJ

CABINET PARTS

Machine Case (less doors)	A-18291
Storage Bin Assembly	A-18891
Drain Assembly, Female	A-18090
Drain "O" Ring	2-530
Thermo Bulb Studs (2)	2-1615
Storage Drain Fitting (male)	A-18088
Case Hood Assembly (less doors)	A-15559
Door Slide Assembly	A-16208
Bin Drain Screen	A-6448
Sliding Door	A-15599
Door Glides (4)	3-640
Front Door	A-15789
Right Side Door	A-16561
Rear Door	A-16563
Left Side Door	S-9405
Hood Top Door Assembly	A-6767
Hood Side Door Assembly	A-6530
Rear Moulding Strip - 24"	A-6509
Front Moulding Strip - 87 1/4"	A-6510
Emblem	15-156
Leg	A-15803
Leg Leveler	8-522
Plywood Crate	1-650

WATER CIRCUIT

Water Reservoir Assembly Complete, less cover	A-8351
Water Inlet Valve	S-8138
Float Assembly	A-12067
Rubber Valve Seats	S-6947
Float Pin	2-1259
Water Deflector - Plastic	2-1320
Stand Pipe	S-6715
Reservoir Cover	A-16012
Water Strainer	16-162

TABLE OF CONTENTS

SF-8 MANUAL

	Page
FOREWORD	
TABLE OF CONTENTS	
SPECIFICATIONS	
How the SF-8 Flaker Works	1
Mechanical Specifications	2
Ice Capacity Chart and Photos	3-4
INSTALLATION	
Uncrating	5
Location	5
Bin Selection	6
Stands	6
Erection	6
Plumbing	7
Tower Application	7
Electrical Specifications	8
Wiring Diagram SF-8 (fig. #3)	9
Wiring Diagram SF-8 (fig. #4)	10
Check List	11
SERVICE	
Starting Machine	12
General	13
Refrigeration System	13
Refrigerant Charge	14
Water System	14
Electrical	15-16
Refrigeration Cycle SF-8 (fig. #5)	17
Water Cycle (fig. #6)	18
Water Cycle (water tower application) (fig. #7)	19
MAINTENANCE	
Freezer Assembly	20
Chassis Front View	21
Chassis Side View	22
Reservoir Assembly	23
Gear Reducer	24
Flexible Coupling Assembly	25
Case Assembly	26
Reducer Grease Substitute Chart	27
Service Analysis	28-29
Maintenance Instructions	30
Parts List	31-33

MECHANICAL SPECIFICATIONS

Input voltage	230/60/1	$\frac{208}{220}$ /60/3
Compressor	5 HP Suction Cooled	5 HP Suction Cooled
Condensor	Water Cooled	Water Cooled
Refrigerant	R-12	R-12
Refrigerant Control	Twin Capillary Tube	Twin Capillary Tube
Compressor Motor	230/60/1	$\frac{208}{220}$ /60/3
Worm Drive Motor	230/60/1	208/60/1
Amperage Rating Compressor Motor Worm Drive Motor	 19.5 Amps 2.5 Amps	 15.00 Amps. 2.5 Amps.
Reducer Drive Motors	1/3 HP	1/3 HP
Freezer-Auger Speed	4 RPM	4 RPM
Water Consumption to produce ice used by condensor	 22 gallons--1 hour Up to 8 gal. per minute	 22 gallons--1 hour Up to 8 gal. per minute
Ice Capacity	See chart	See chart
Storage Capacity	Use remote bin	Use remote bin
Approximate water pressure drop* condensor	Flow rate In GPM / Psi-Press. Drop 1.0 / 2.5 3 / 8.5 4.5 / 17.1 6 / 28.0	 Same Same Same Same
3/4" Water regulating valve	 1.5 3 / 2.0 4.5 / 4.6 6 / 10.0	 Same Same Same Same
Complete Unit wt.	1050 lbs.	Same
Shipping weight	1150 lbs.	Same

*NOTE: Above Pressure Drops for standard hook-up. Pressure Drop can be reduced by splitting circuits through condensor and compressor.

MECHANICAL SPECIFICATIONS

Input voltage	230/60/1	$\frac{208}{220}$ /60/3
Compressor	5 HP Suction Cooled	5 HP Suction Cooled
Condensor	Water Cooled	Water Cooled
Refrigerant	R-12	R-12
Refrigerant Control	Twin Capillary Tube	Twin Capillary Tube
Compressor Motor	230/60/1	$\frac{208}{220}$ /60/3
Worm Drive Motor	230/60/1	208/60/1
Amperage Rating Compressor Motor Worm Drive Motor	 19.5 Amps 2.5 Amps	 15.00 Amps. 2.5 Amps.
Reducer Drive Motors	1/3 HP	1/3 HP
Freezer-Auger Speed	4 RPM	4 RPM
Water Consumption to produce ice used by condensor	 22 gallons--1 hour Up to 8 gal. per minute	 22 gallons--1 hour Up to 8 gal. per minute
Ice Capacity	See chart	See chart
Storage Capacity	Use remote bin	Use remote bin
Approximate water pressure drop* condensor	Flow rate In GPM / Psi-Press. Drop 1.0 / 2.5 3 / 8.5 4.5 / 17.1 6 / 28.0	 Same Same Same Same
3/4" Water regulating valve	 1.5 3 / 2.0 4.5 / 4.6 6 / 10.0	 Same Same Same Same
Complete Unit wt.	1050 lbs.	Same
Shipping weight	1150 lbs.	Same

*NOTE: Above Pressure Drops for standard hook-up. Pressure Drop can be reduced by splitting circuits through condensor and compressor.

SCOTSMAN®

SUPER FLAKER
SF-8
SERIES
Continuous Flow

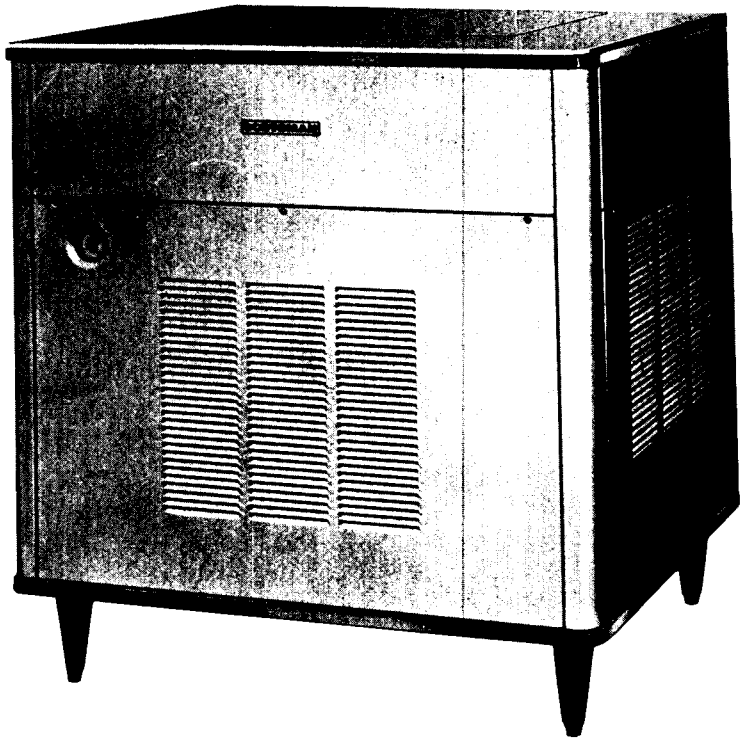

ice making capacity

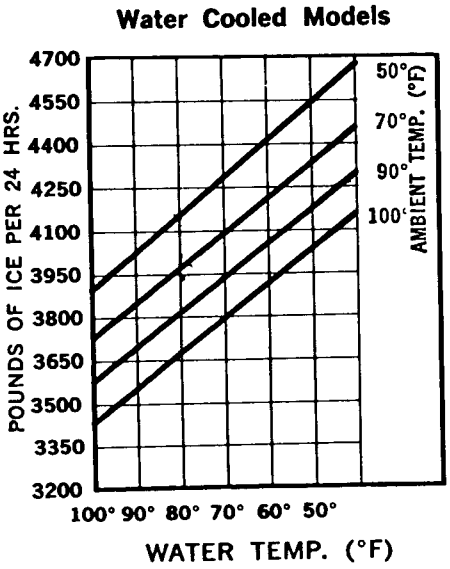

SPECIFICATIONS

SUPER FLAKER SF-8 SERIES (Cont. Flow)	MODEL SF-8WH	MODEL SF-8WH-SS
Daily capacity up to 4,500 lbs.	X	X
Water cooled condenser	X	X
Heavy duty 5 HP. Compressor	X	X
Heavy duty ⅓ HP. drive motors (2)	X	X
Standard 208-220 V, 60 cy, 3 ph	X	X
¼" water inlet, reservoir NPT	X	X
¾" water inlet, condenser NPT	X	X
¾" condensate drain NPT	X	X
¾" water outlet NPT		X
Stainless Steel Exterior	X	
Hammerloid grey exterior	X	X
42¼" height (with legs)	X	X
36 ¼" height (without legs)	X	X
44" width	X	X
32" depth	1050	1050
Approximate shipping weight		

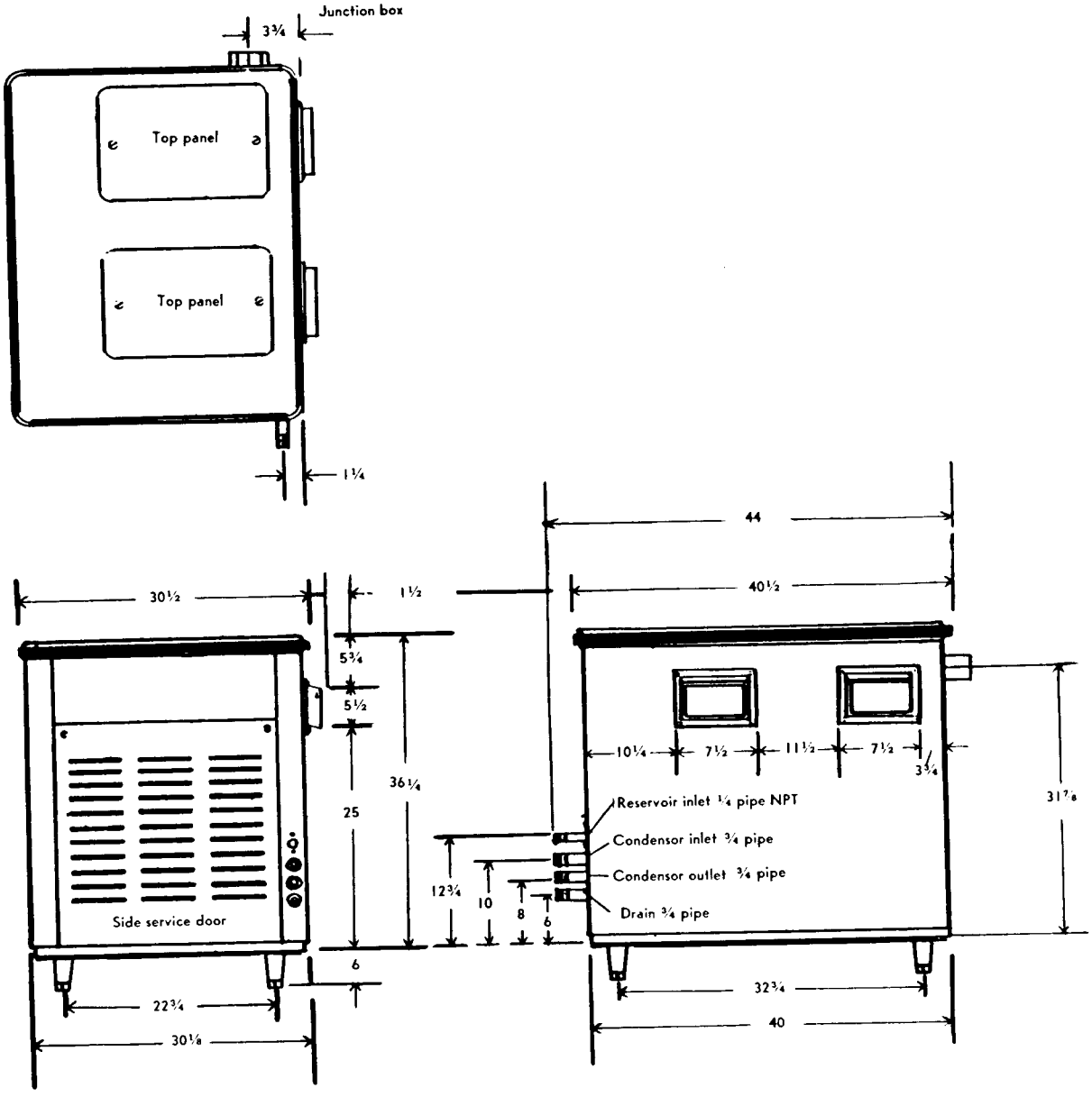

INSTALLATION

UNCRATING OF MACHINE

1. The complete machine comes in one crate. After the crate is removed, inspect for concealed damage. Remove the bottom skid by removing all bolts. Then cut all wires holding support packing from refrigerant line. Then loosen shipping bolts on the compressor. Be sure the compressor is floating free on spring mounts. Then check all refrigerant lines for rubbing or touching other surfaces. Also check for possible transportation damage.

2. Remove all service doors and panels.

3. Remove water reservoir cover and take out paper packing around float ball. Make sure plastic overflow standpipe is securely in place.

4. Remove leg packages in compartment base and install 4 legs in unit base sockets. Level unit with adjustable legs.

5. Loosen motor compressor hold down nuts until motor compressor rides freely on mounting springs.

6. Remove water strainer from storage package for installation in water supply line feeding unit.

7. Open electrical control box and prepare for hook up, use knock outs, cord connectors etc. Then check unit nameplate voltage against building source voltage and make sure they correspond. Caution--Improper voltage supplied to units will void your warranty protection.

8. Select unit location prior to hook up of water drain and electricals in accordance with local and national codes. Minimum room temperatures is 50° Fahrenheit.

9. Remove warranty card and service manual from storage bin. Fill out warranty card completely including model and serial numbers as taken from aluminum plate found behind front service panel and forward to Scotsman Factory, using self-mailing card.

INSTALLATION

1. Bins. Care should be exercised in proper bin selection. Too small a bin will give unsatisfactory performance. A bin should have a minimum of 1/2 of machines capacity per day, when the machine shuts off on thermostat. Make sure that users demands are met, by proper bin as well as by proper machine selection. Plan relative location of the machine, so as to enter the bin as close to the top as possible. An upper and a lower access door should be provided in all bins. Bins should also be higher than their width and length dimensions, so that the maximum ice can be stored in the mimimum cubic feet of space. A bin designed in this fashion, will be the most convenient to the user. Too large a bin can also cause trouble. Excessive melting of ice will occur if the bin is larger than required. Proper bin selection is important to the success of the ice machine installation.

2. Stands. A special stand should be built if the machine is located beside the bin. Care should be exercised in making the stand strong enough to support the weight. In designing the stand, plan for servicing of the machine from front, top and sides. It is also possible to locate the machine on top of the bin. Care should be used in selecting a bin that has been specially reinforced. Standard bins are usually not sufficiently reinforced for this purpose. An unsteady platform will cause excessive vibration. Specially built bins can provide proper support and allow for a servicing platform.

3. Erection. For elevations in excess of four feet, or in close quarters, chain falls should be used. Three men will usually be necessary, unless an easy installation is encountered. For locations under four feet the use of skid boards and rollers is practical.

4. Bin Thermostat. Locate the thermostat bulb as high as possible in the bin and still allow the machine to cut off before ice builds up in the chute. If this occurs, ice can stick in the chute, keeping the machine off, after there is a need for ice production. The capillary can usually enter through the chute opening. Keep the bulb and the capillary line away from shovels.

5. Ice Chutes. If the outlet of the machine is remote from the bin, a chute will be required. Stainless steel is an excellent material for this purpose where its cost is not prohibitive. Angles or ledges of less than 45° should not be used. Ice will cling to this surface and either melt excessively or jam in the chute. The sharper the drop the better. If straight down, do not insulate, unless necessary.

FOR INSTRUCTIONS TO REMOTE AIR COOLED CONDENSOR, CONTACT SERVICE DEPT.--QUEEN PRODUCTS DIV. KING-SEELY THERMOS CO. ALBERT LEA, MINNESOTA.

INSTALLATION

WATER SUPPLY

Separate water supplies are recommended.

A. Freezer or ice making supply water should be run through a hand shut off valve before entering unit. Freezer supply water connection is top connection in drain and hook up assembly. Has a 1/4" N.P.T. female pipe casting. This line also has factory installed water strainer internally mounted.

Connect to a good cold water supply with minimum 1/2" O.D. copper line for short run, 5/8" O.D. copper line for long runs. A check valve on this line will be required in some cities depending on local plumbing codes.

B. The condensor water supply line connects to the 3/4" female pipe casting on machine. Use care in connecting water line to the machine. Incoming water goes through the water regulating valve first and then to the water cooled condensor. Observe arrow on water regulating valve. Water supply must be installed to conform with local code. In some cases, a licensed plumber and/or a plumbing permit will be required.

If tower is used several precautions should be observed.

1. Leave water regulating valve in the system.
2. Separate the make-up water for the reservoir from the tower water. Only city water should be used for ice making.
3. Use 3/4" tower water lines or larger, depending on the length of run. Over 30 feet -- use 1" OD lines.
4. Notice: A tower can freeze in the wintertime and the Scotsman flaker will be in operation 12 months per year. An indoor tower and pump can be used with outdoor air ducted in and out, if the fan cycles on water temperature to prevent freezing. An indoor sump can be used. An auxiliary tower and city water hook-up will prove satisfactory in some climates. City water in the winter and tower water during the summer. Consult your tower and pump manufacturers for proper sizing. In no event should less than a nominal 3 to 4 ton tower, or less than a 3/4 HP high pressure tower pump be used.

DRAIN (when not re-used)

The recommended condensor waste is 3/4" OD copper tubing. Must be run to an open, trapped vented drain. If drain is a long run, allow a 1/4" pitch per foot. Drain must be installed to conform with local code. Condensor drain is a low pressure drain.

ELECTRICAL SPECIFICATIONS

ELECTRICAL INSTALLATION:

		SF-8	SF-8-3
Compressor	H.P.	5	5
	Voltage	230	208-220
	Amp. Rating	19.5	15.0
	Cycle	60	60
	Phase	Single	Three
Drive Motor	H.P.	1/3	1/3
	Voltage	230	208
	Amp. Rating	2.5	2.5
	Cycle	60	60
	Phase	Single	Single

ELECTRICAL CONNECTIONS:

SF-8	SF-8-3
230 Volts	208 Volts
60 Cycle, 1 Phase	60 Cycle, 3 Phase
30 Amp. Circuit	30 Amp. Circuit

Be certain that the Super Flakers are on their own circuit and individually fused. The maximum allowable voltage variation should not exceed 10 per cent of the nameplate rating even under starting conditions. Low voltage can cause erratic operation, and may be responsible for serious damage to the overload windings.

All external wiring should conform to National Underwriters and Local Electrical Code requirements. Usually an electrical permit and the services of a licensed electrician will be required.

Special voltage requirements are available on special order. Therefore, always check nameplate for this information before checking electrical current.

WIRING DIAGRAM SF-8

230/60/1

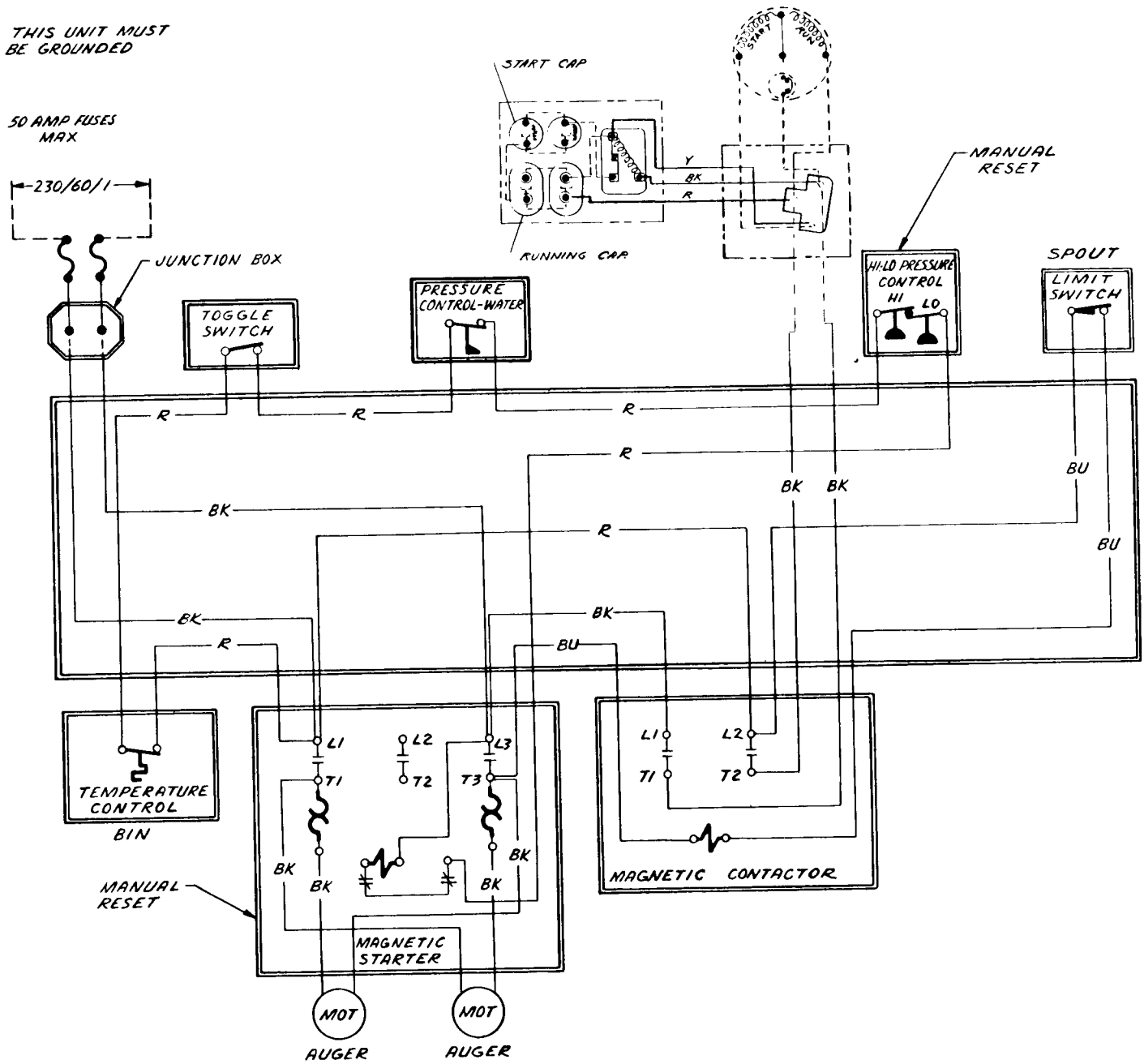

FIGURE # 3

WIRING DIAGRAM SF-8

208/220 /60/3

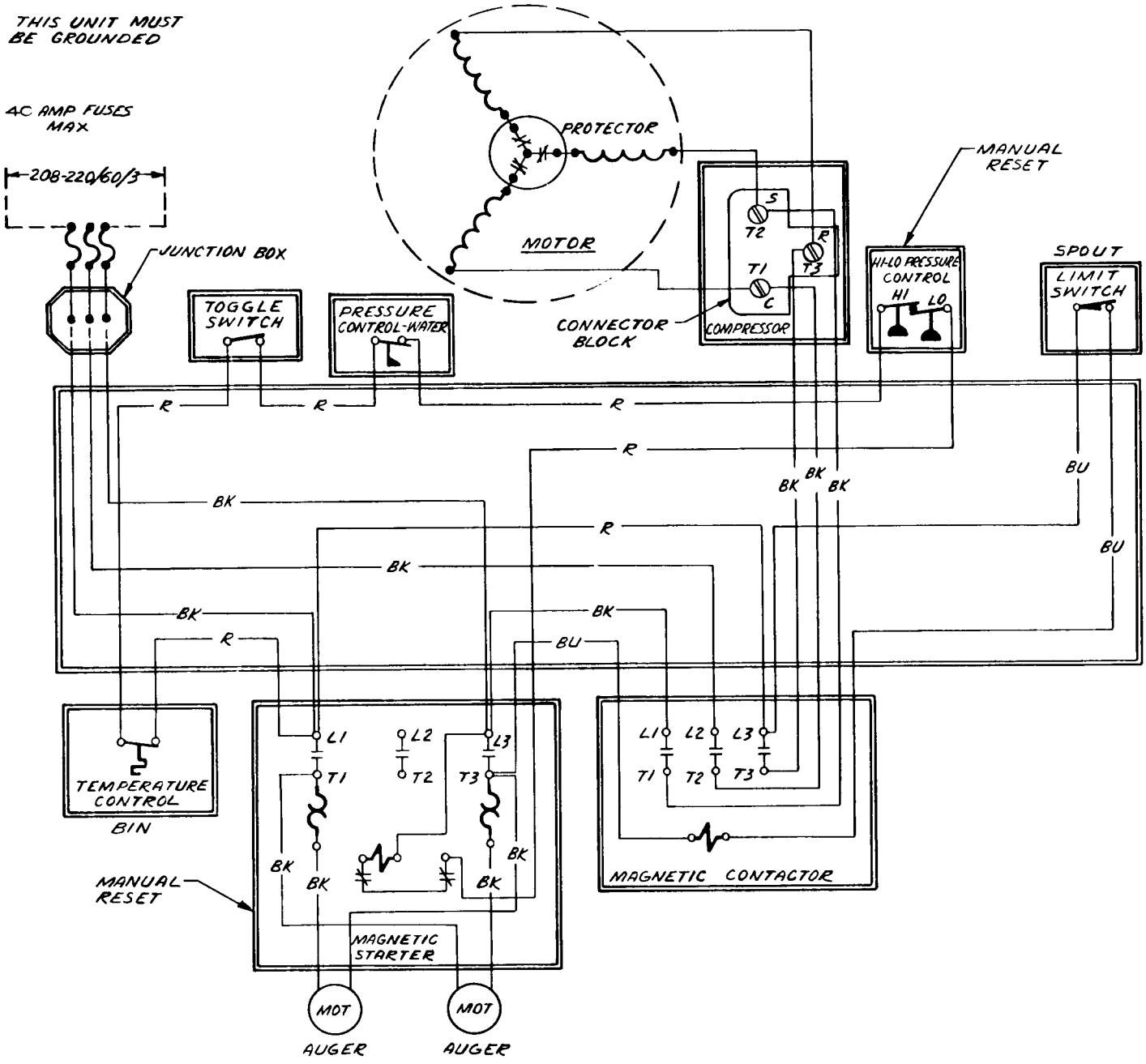

FIGURE # 4

INSTALLATION

FINAL CHECK LIST

1. Is the unit level? (IMPORTANT)
2. Have all electrical and piping connections been made?
3. Has the voltage been tested and checked against the nameplate rating?
4. Have the compressor hold-down bolts been loosened so the compressor rides freely on its mounting springs.
5. Is the water supply valve open and the electric power on?
6. Is the water reservoir filled and shut off?
7. Is the unit clean?
8. Has the owner been given the operating manual, and has he been instructed on how to operate the machine?
9. Have the installation and warranty cards been filled out? This is the owner's protection as well as the sellers.
10. Check all refrigerant and conduit lines to guard against vibration and possible failure.
11. Have you left your Business name and phone number in case of emergency calls?

SERVICE

STARTING THE MACHINE

When the machine is placed and inspected as per instructions, and all plumbing and electrical connections are completed and tested, turn on the water supply. Be sure the float cover is removed to check on the float operation and water level in the water reservoir. Be sure the water reservoir is filled before starting the machine. Water level should be 1/4 inch below the reservoir overflow pipe.

When this is completed, turn on the manual switch on the front of the cabinet and the machine is in automatic operation. In two or three minutes ice will start dropping off the worm shafts and out the ice chute. Let machine operate for at least 30 minutes, and check for any excess noise other than the normal compressor noise. Test the ice storage control bulb by holding a handful of ice around the bulb until machine shuts off -- one minute should be normal for the control to function. Within minutes after the ice is removed, the bulb will warm up and machine will automatically start up. The control is factory set, and should not be reset until this test is made. Normal setting of this control should be approximately 35 degrees cut-out, and 45 degrees cut-in.

Check pressure settings at time of start-up. Set head pressure at 135 psi. Frost line should extend approximately 18" out of evaporators if properly charged with refrigerant and suction pressure will be near 14 psi with 70° F. inlet water.

Explain the machine to the owner, showing him how the machine works, and go over the owner's instruction sheet with him. Answer all the owner's questions about the machine, and do not leave with any doubt in the owner's mind about the machine, how to operate it or where to reach you should he need service on the machine. Call back the next day to check the machine again, and answer any other questions the owner may have.

SERVICE

The Scotsman Super Flakers are well designed, ruggedly constructed, automatic Ice Machines. The Scotsman Super Flaker incorporates the simplest ice making principle ever developed and have proved to give years of trouble free service. However, like any refrigeration equipment, the better user and serviceman understand it, the better the machine will perform. This section of the manual is devoted to service.

GENERAL INFORMATION

All models of the Super Flaker work on the same principle. The vertical freezing chambers are kept full of water by gravity feed lines from the water reservoir located in the machine compartment. A constant water level is maintained in the water reservoir by a float operated inlet valve. The freezing chambers are refrigerated around the outside by copper wound evaporator coil fed by a capillary tube refrigeration system. Inside the freezing chambers are stainless steel augers driven by a motor through a gear reducer. Connected by couplings, augers revolve at 4 RPM, carrying ice from the inner section of the freezing chambers, and extrudes the ice upward thru the top of the chamber for deposit in the storage compartment.

REFRIGERATION SYSTEM (figure 5)

The Super Flaker model SF-8 is equipped with twin freezers and capillary tube systems, and is designed to operate at approximately 14 pounds suction pressure, 135 psi head pressure.

The freezing chambers on all models consist of an inner tube wrapped with a copper coil and enclosed by an outer shell. Refrigerant is fed in the wound evaporator at the top, traveling down through the coil, and out the bottom. The suction line is attached to the other tube and is not connected to the evaporator coil. The refrigerant travels back up the tube on the outside of the coil to the suction port, creating a highly efficient evaporator.

SERVICE

Service gauge connections are available on both high and low-side compressor service valves.

To install gauges to any of these connections, replace 1/8 inch IP plug with 1/8 inch MPT x 1/4 inch flare half union. Purge free of any non-condensable gases before attaching gauges.

REFRIGERANT CHARGE

The below refrigerant charge is approximate. When charging, set at 135 psi head pressure and charge so that frost line extends out of evaporators one half way to compressor after fifteen minutes of operation.

Model	Refrigerant Charge	Oil Level
SF-8	6 lb. R-12	Oil level should be kept at 1/3 way up sight glass. Do not fill over 1/2.

WATER SYSTEM (Figures 6 and 7)

All models incorporate water failure switches in case of interrupted water supply to freezer assemblies.

The water system consists of a water reservoir installed in the top front side of the machine between the twin freezer assemblies. A water level is maintained in the water reservoir by a float operated valve. The water is piped from water reservoir to the freezing chamber by a gravity feed line maintaining an equal water level. A removable overflow pipe is installed in the water reservoir for cleaning the reservoir as well as preventing damage should the inlet water valve fail.

The water reservoir is equipped with a 2 inch air gap to prevent back siphoning and meet all health codes.

The water level in the water reservoir is adjusted by bending float rod linkage adjustment. The water level should be set 1/4 inch below the overflow pipe.

A water strainer is internally mounted by the factory.

SERVICE

ELECTRICAL SYSTEM

The electrical circuit consists of condensing unit, drive motor, hi-low pressure cut-out, storage bin thermostat, "on" and "off" switch, micro (safety) switches, water failure switch and starter switches.

A. Condensing Unit.

The compressor terminal box houses the motor compressor terminal block, and the motor overload Klixon. To gain access to the terminal box, remove the two screws holding the bevelled metal cover. On the single phase models the starting capacitors, running capacitors and starting relays are housed and fastened to the unit base.

B. Drive Motors.

Model SF-8 Flakers are equipped with standard 5/8 inch shaft, 1/3 HP, capacitor start, induction motors. These motors turn counter clockwise and may be replaced with any standard make motor corresponding to the nameplate rating. (Be sure motor runs counter clockwise viewed from the shaft end.)

C. High-Low Pressure Cut-Out. Hand Reset.

Ranco control is located on the frame assembly. Factory settings cut-out 2 lbs.--cut in-27 lbs. on low pressure and 180 psi on high pressure. This control prevents operation at low refrigerant pressures. Shuts off entire unit in case of water failure to condensor.

D. Storage Bin Thermostat.

Bin control is located on frame assembly. Factory settings 35° cut-out--45° cut-in. This control shuts off complete machine when ice in storage bin builds up to control bulb.

SERVICE

E. Micro Safety Switch.

The micro switches are located in the top of the ice chutes. The switches are operated by a plate in top of the ice chute by the ice backing up in the chute should the storage bin thermostat fail. Either switch will shut off the condensing unit only, when operated.

F. Magnetic Starters.

One Allen Bradley three phase starter and one contactor are used on both the SF-8 and the SF-8-3 phase models. The contactor serves the motor compressor and the starter is used for the drive motor. Using 3 phase starters on the single phase motors allows for an extra set of contacts and relays to facilitate field repairs and helps with the stocking problem when both 3 phase and single phase units are used.

G. Couplings--Drive Motor to Gear Reducer.

Plastic high-speed couplings.

H. Water Failure Switch (Reverse Acting).

This switch used as a safety device when low or interrupted supply water conditions are encountered. Operates on pressure between supply line and feed line to water reservoir. Range is 12# on, 5# off. Cuts off complete unit.

I. Gear Reducers.

Winsmith Series (5) C.V.D. Double reduction-Overall reduction 441. Primary reduction 24.5 to 1--Secondary reduction 18 to 1/4 RPM on output shaft. Input (Hi speed) shaft size 5/8" with Keyway. Output (Slo speed) shaft size 1 1/4" with Keyway.

J. Water Cooled Condensor.

Halstead & Mitchell. Two section, 3 HP rating. Cleanable. Tube in tube counter flow design. Available with tower plates.

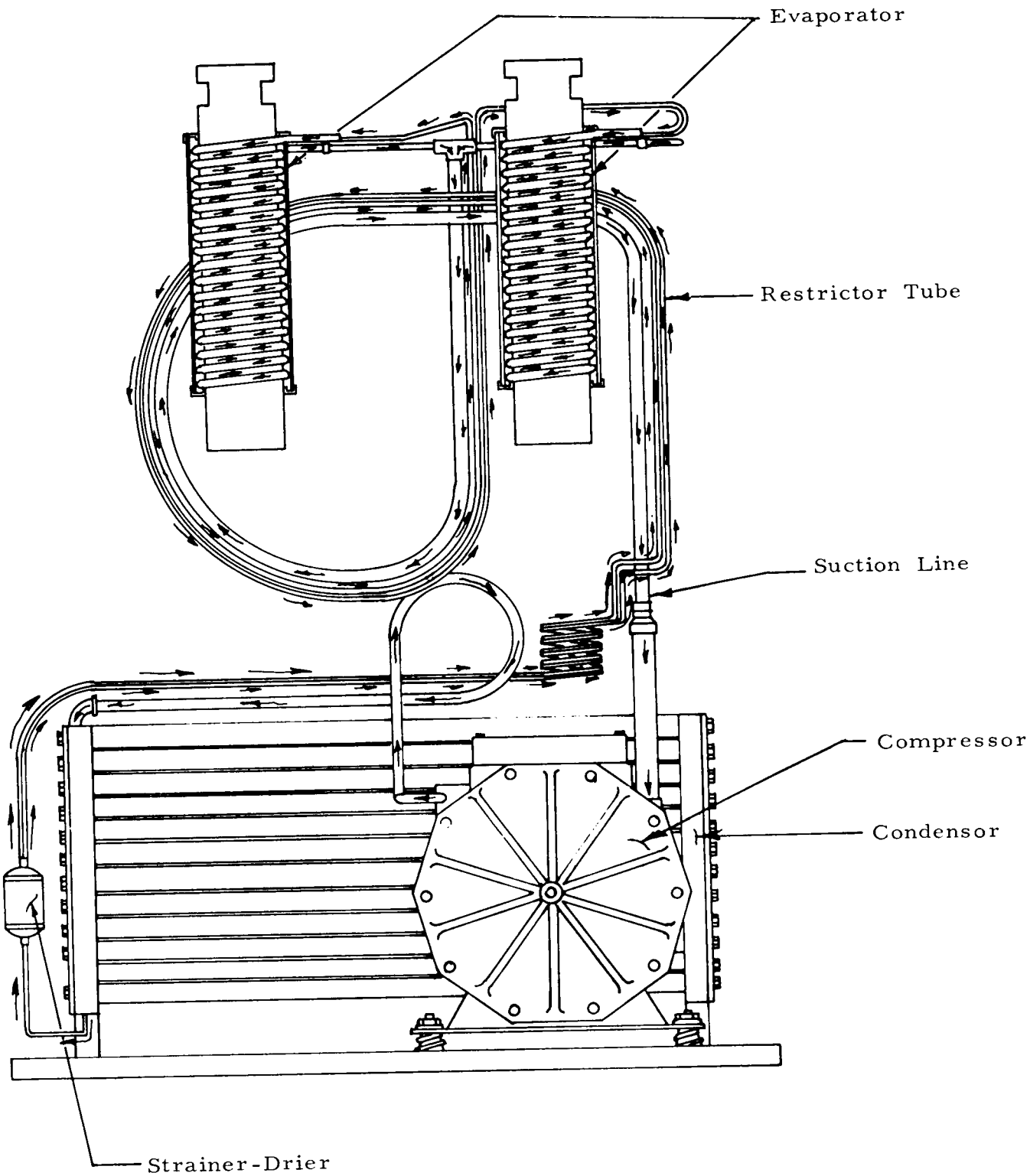

Figure 5.
REFRIGERATION CYCLE
SF-8

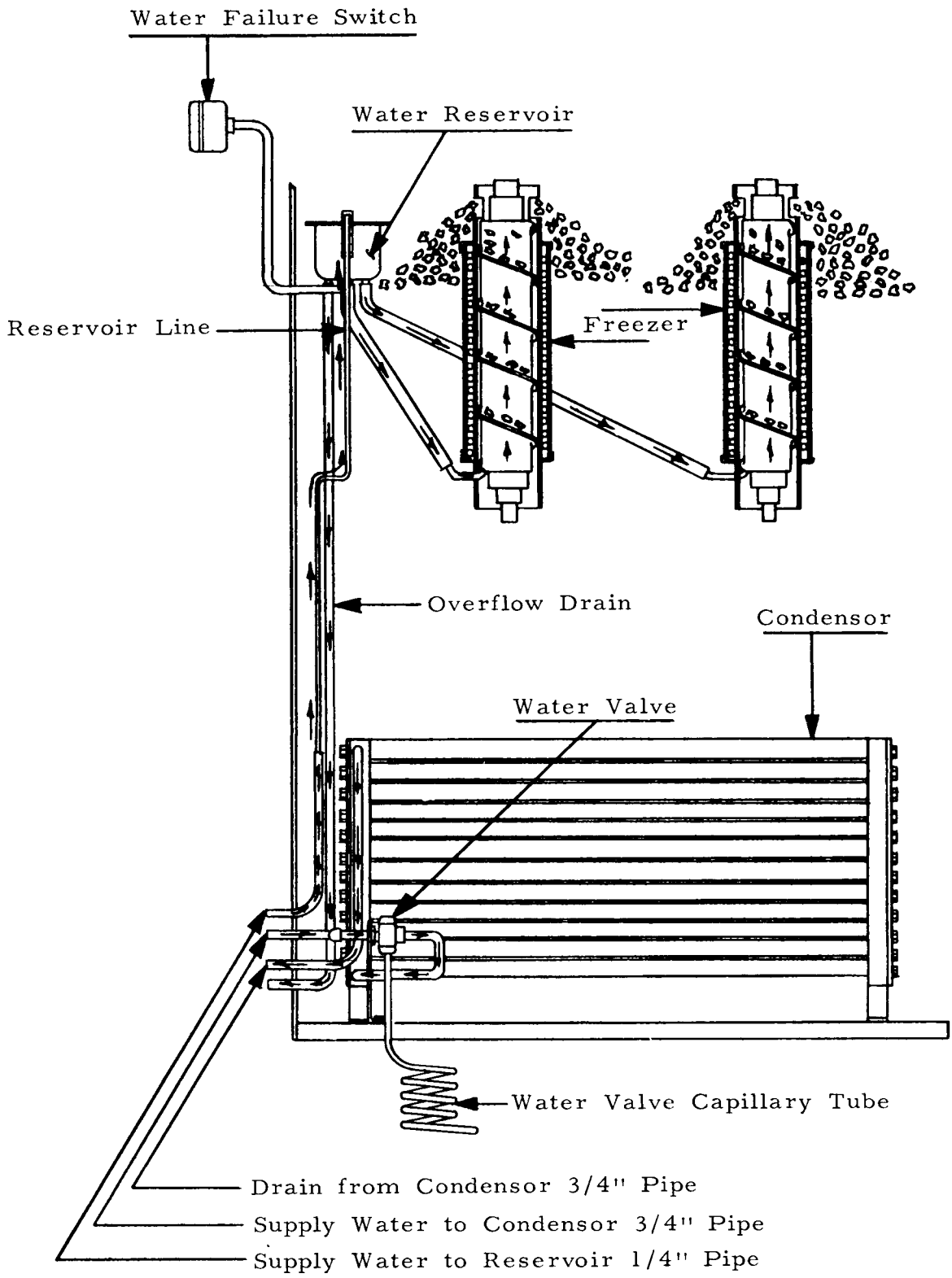

Figure 6.

WATER CYCLE

SF-8

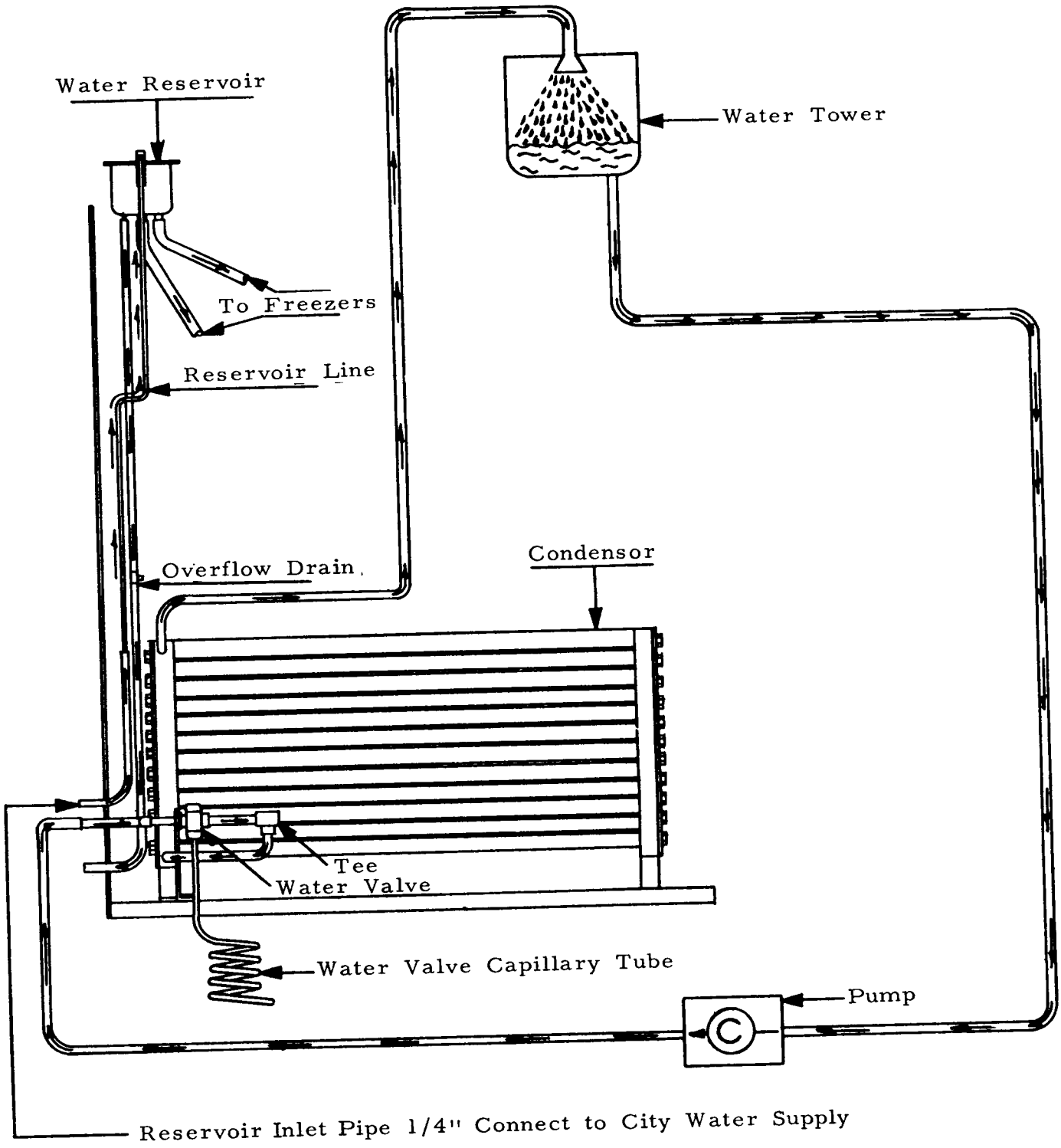

Figure 7.
SUGGESTED WATER CYCLE WITH TOWER
SF-8

water seal installation!
Dull Brass up
shiny side down
Against Rubber

FREEZER ASSEMBLY

SF-8

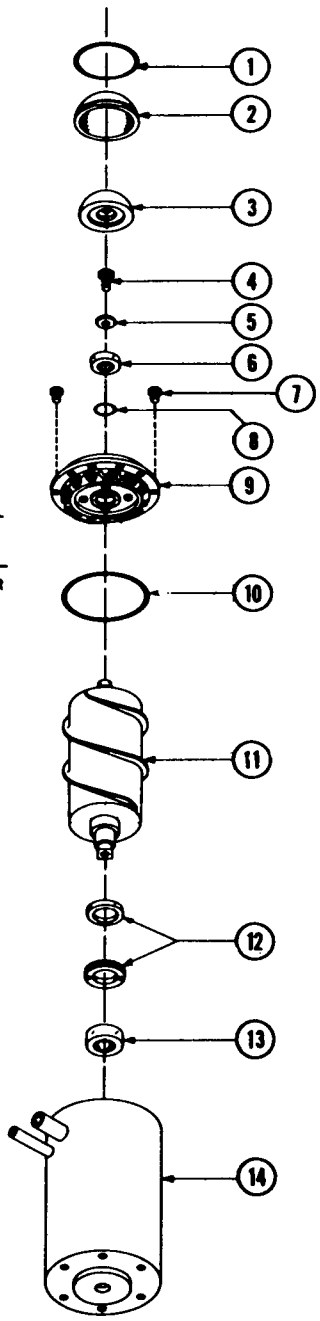

NOTE: ICE BREAKER HAS TEN HOLES AROUND CIRCUMFRENCE, SIX OF THESE ARE USED TO SECURE BREAKER TO FREEZER BARREL. THE FOUR REMAINING HOLES ARE THREADED AND ARE USED TO LIFT BREAKER AND WORM SHAFT UP. YOU REMOVE THE SIX HOLDING SCREWS, RE-INSERT (4) SCREWS INTO LIFTER OR THREADED HOLES, THESE HAVE NO BOTTOM ON BARREL AND BY EVENLY DRAWING THEM DOWN, ICE BREAKER AND WORM IS LIFTED UP.

NOTE: LOWER BEARING OR WATER SEAL CANNOT BE CHANGED FROM BOTTOM MUST BE PULLED OUT FROM ON TOP.

ITEM NO.	PART NO.	NAME
1.	2-991	'O' Ring 13-0017-18
2.	13-231	Rubber Cap
3.	A-9047	Styrofoam Cap
4.	3-715	Screw
5.	A-6273	Washer
6.	2-619	Top Bearing
7.	3-785	Screws (6 required)
8.	2-643	'O' Ring 13-0017-15
9.	A-8818	Ice Breaker
	A-11351	Ice Breaker (with bearing)
10.	2-778	'O' Ring 13-0017-17
11.	A-9006	Worm Shaft Assembly
12.	2-776	Water Seal
13.	2-775	Lower Bearing
14.	A-8858	Freezer Worm Tube
	A-8853	Complete Freezer Ass'y (all above parts assembled)
*	A-8818-1	Ice Breaker (large chunk)

SF-8 CHASSIS FRONT VIEW

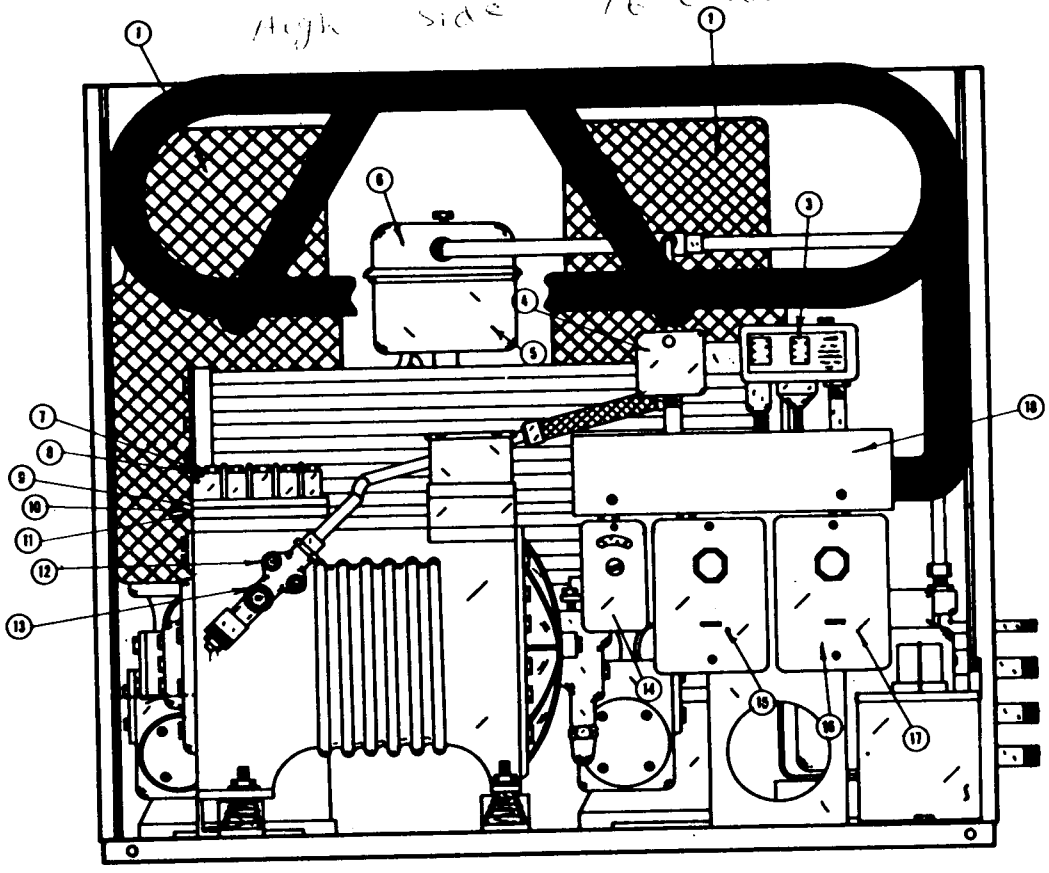

ITEM NO.	PART NO.	NAME
1.	A-16668	Spout Ass'y, less switch and press. plate.
3.	11-286	High-Low Pressure Control
4.	11-296	Water Failure Switch
5.	A-8868	Reservoir Assembly
6.	A-12870	Cover Assembly
7.	18-827	Valve Plate & Gasket Kit Assembly
8.	18-830	Cylinder Head
9.	18-828	Gasket, Cylinder Head
10.	18-829	Gasket, Valve Plate to Body
11.	18-831	Suction Valve Reed
12.	18-732	Discharge Service Valve
13.	18-736	Discharge Service Valve Gasket
14.	11-99	Bin Control
15.	12-468-28	Starter 230/60/1
	12-468	Starter 208/220/60/3
16.	12-831-2	Contactor 230-/60/1
	12-739-2	Contactor 208/220/60/3
17.	12-707	Heater (**)
18.	A-7667	Junction Box Cover

** State motor manuf. when ordering 12-707 overloads.

SF-8 CHASSIS SIDE VIEW

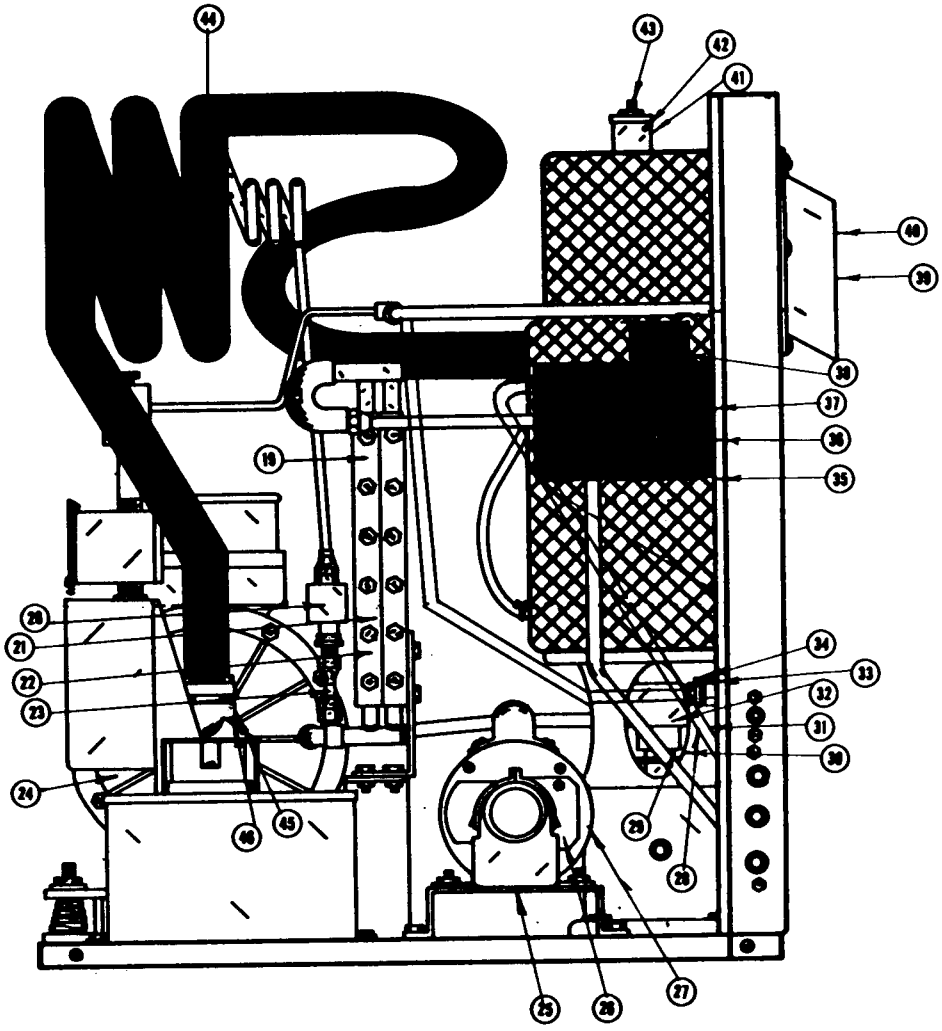

ITEM NO.	PART NO.	NAME
19.	~~18-821~~ 18-1424-01	Condenser
20.	2-822	Drier
21.	18-740	Condenser Gasket (6-hole) (*)
22.	18-741	Condenser Gasket Manifold (5-hole) (*)
23.	16-338	Connector
24.	18-823	Motor Compresser 230/60/1
25.	18-822	Motor Compresser 208/220/60/3
25.	A-8893	Motor Mount Ass'y (2 per unit)
26.	12-649-2	Drive Motor 230/60/1 (use 12-649-7 on 208/220/60/3)
27.	A-18341	Flexible Coupling (motor to reducer) (*) Plastic
28.	A-8895	Coupling Ass'y (reducer to worm shaft)
29.	3-385	Set Screw (coupling)
30.	13-152	Rubber Shield
31.	2-768	Gear Reducer
32.	A-6166	Coupling Key (*)
33.	16-162-1	Strainer
34.	11-295	Water Pressure Reg. (*)
35.	A-14252-30	Relay Bracket
36.	18-1901-20	Starting Capacitor (2 in parellel) (*)
37.	18-1902-28	Running Capacitor (2 in parellel) (*)
38.	18-1903-28	Relay 230/60/1
39.	A-16670	Pressure Plate, Spout (*)
40.	2-1321	Spring
41.	A-14241	Cover, Micro Box
42.	3-173	Screws (2 per unit)
43.	12-1018	Micro Switch
44.	A-8862	Suction Line Ass'y
45.	18-835	Suction Valve Gasket
46.	18-832	Suction Service Valve

(*) Not Shown

RESERVOIR ASSEMBLY
SF-8

ITEM NO.	PART NO.	NAME
1.	A-12870	Reservoir Cover
2.	2-1259	Valve Pin
3.	2-1320	Deflector
4.	A-8217	Inlet Valve
5.	3-1001	Rivet
6.	A-8054	Valve Seat Holder
7.	S-6947	Valve Seat
8.	S-7044	Nut
9.	A-12869	Bracket
10.	S-6715	Stand Pipe
11.	A-9101	Inlet Valve Assembly
12.	A-13413	Reservoir Body
13.	A-8055 A-8868	Bracket Nut Reservoir Complete (Less Cover)
14.	A-12073	Float Assy.

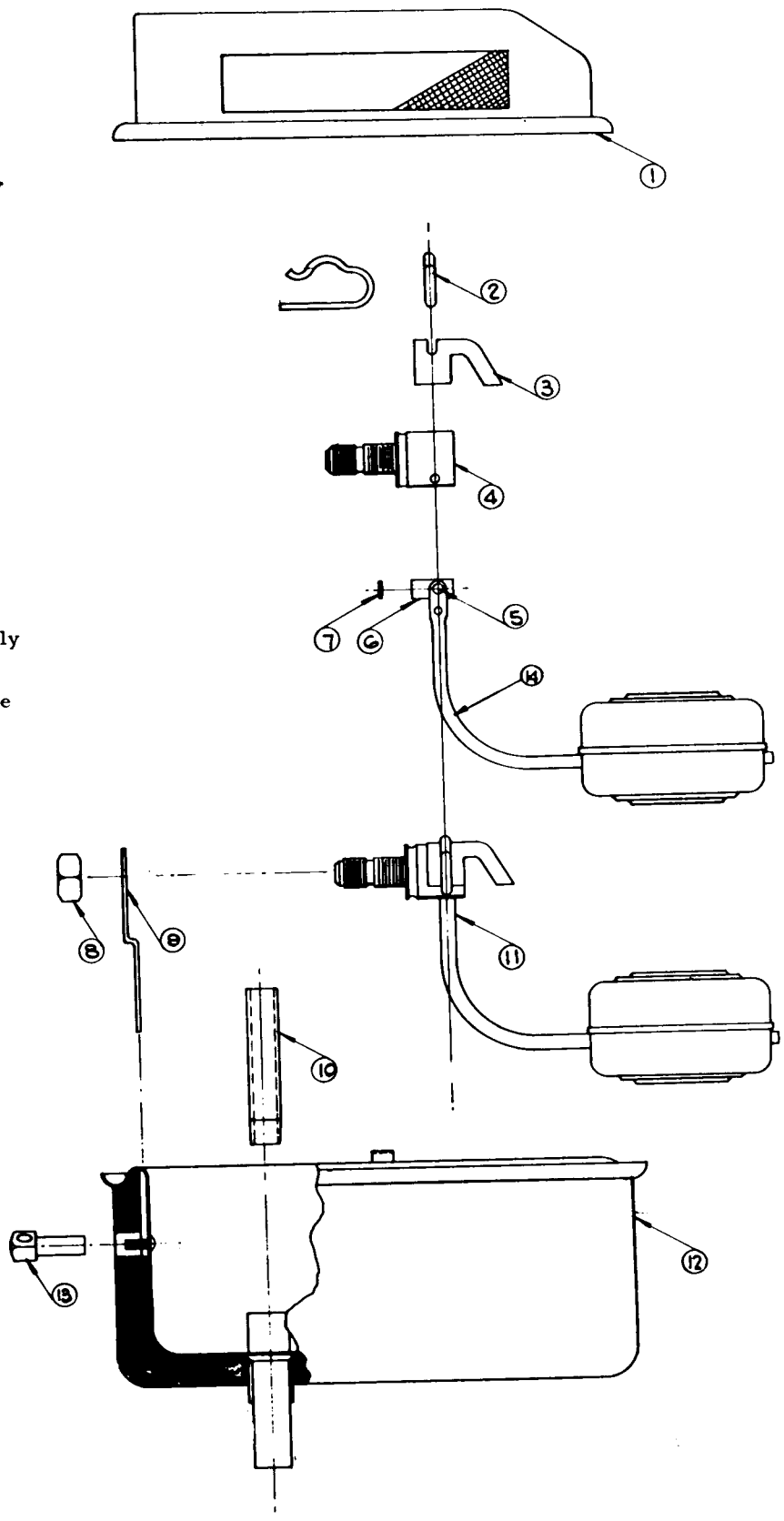

GEAR REDUCER SF-8

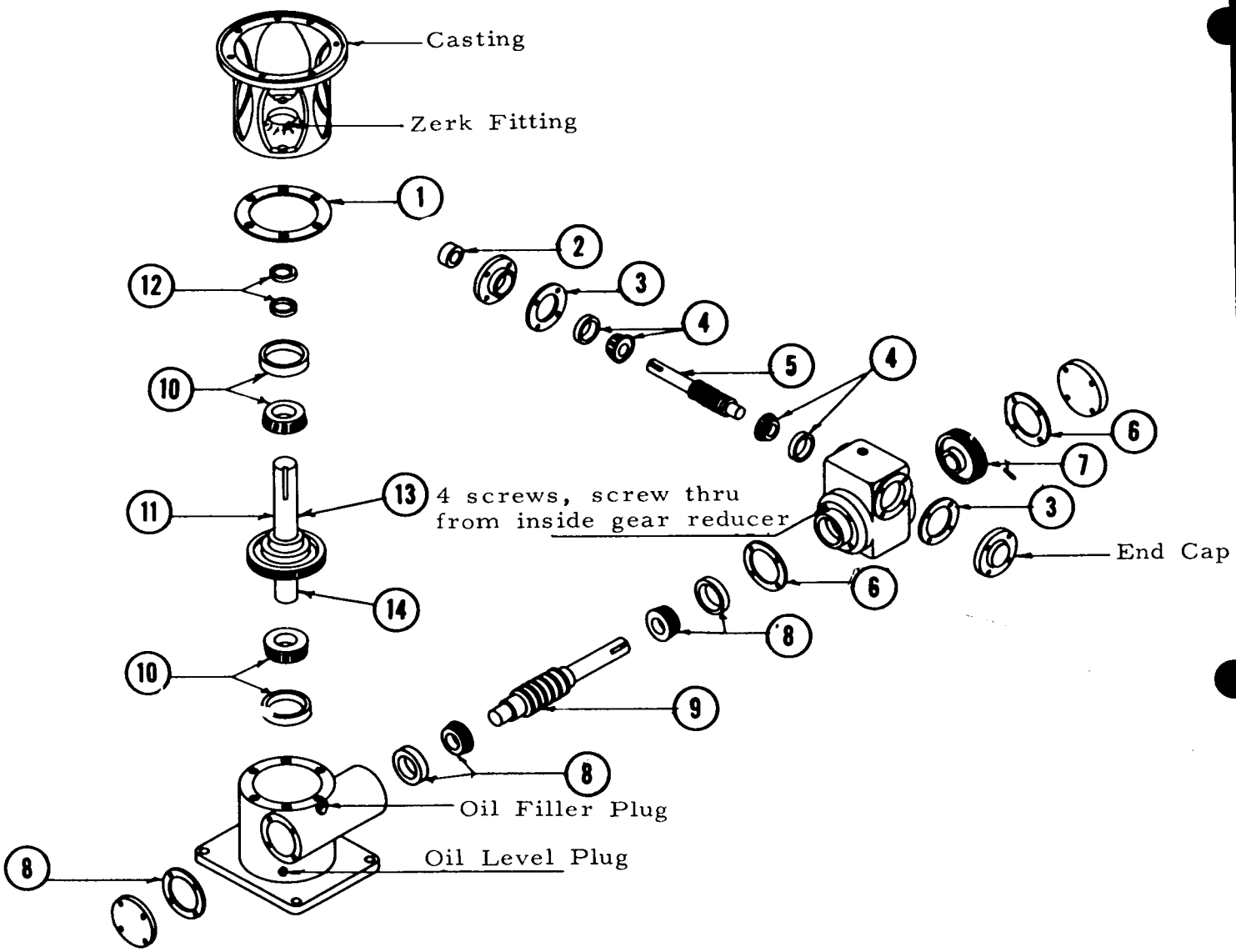

ITEM NO.	PART NO.	NAME
1.	2-768-28	Slow-Speed Cover Gasket
2.	2-768-20	High-Speed Oil Seal
3.	2-768-25	High-Speed Gasket
4.	2-768-24	High-Speed Bearing
5.	2-768-32	High-Speed Worm & Shaft, Integral
6.	2-768-27	Intermediate Gasket
7.	2-768-33	High-Speed Gear
8.	2-768-23	Intermediate Roller Bearing
9.	2-768-31	Intermediate Worm & Shaft, Integral
10.	2-768-22	Slow-Speed Bearing
11.	2-768-36	Slow-Speed Gear & Shaft Assembly
12.	2-768-21	Slow-Speed Oil Seal
13.	2-768-29	Slow-Speed Spacer (short)
14.	2-768-30	Slow-Speed Spacer (long)
	2-768	Complete Reducer

SF-8 — FLEXIBLE COUPLING ASSEMBLY

2 per unit, part #A-18341

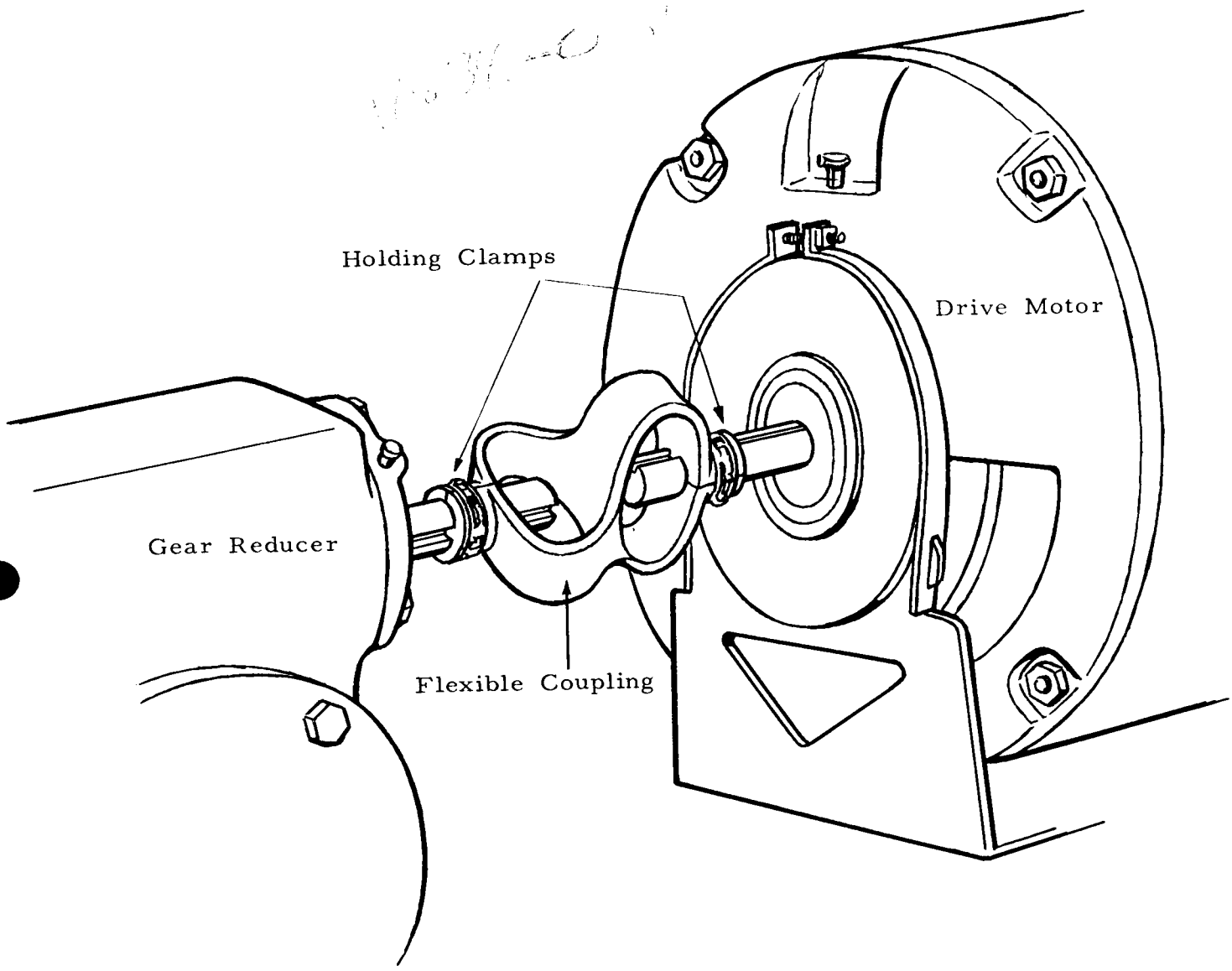

Flexible coupling allows larger tolerance of mis-alignment between drive motor and gear reducer shafts. Flexible coupling assembly is completely interchangeable with former metal coupling.

SF-8 CASE ASSEMBLY

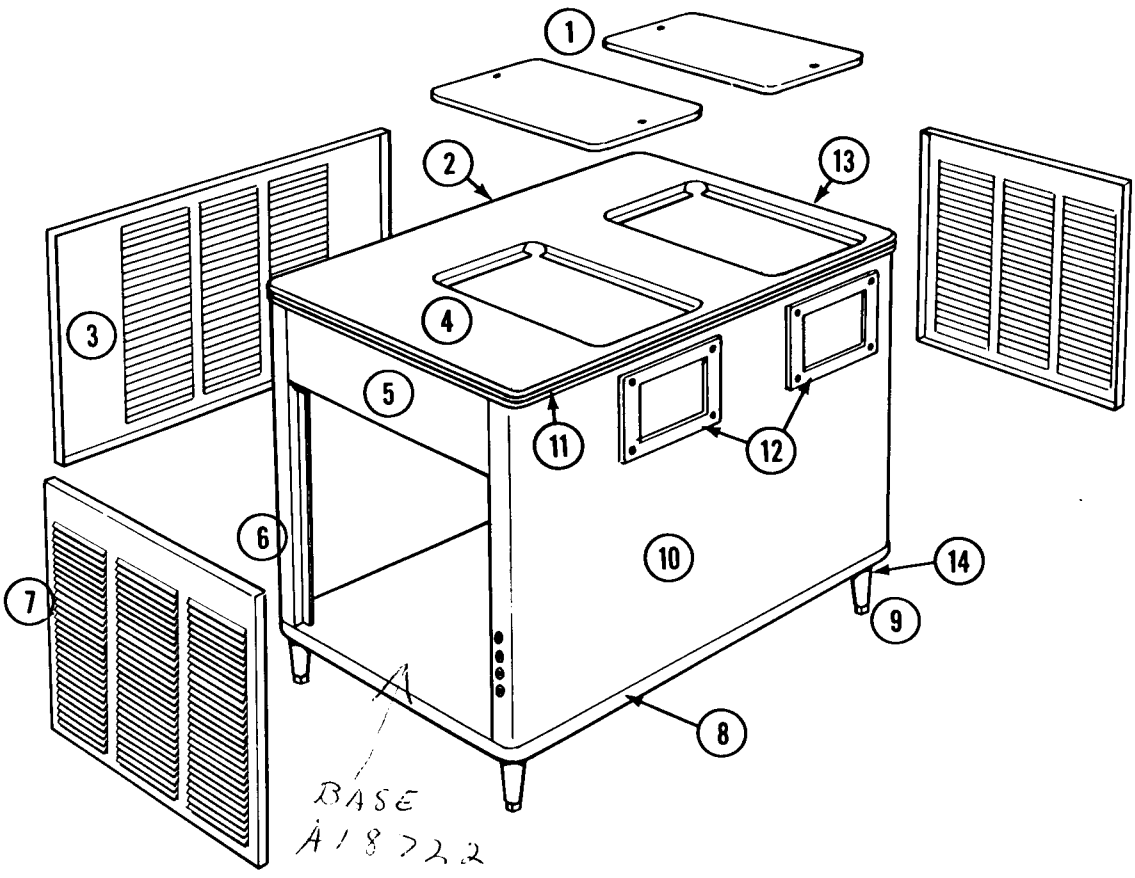

ITEM NO.	PART NO.	NAME
1.	S-6713	Door Panel, Top (2 reqd.)
2.	A-8909	Cab. Front Panel Ass'y (*)
3.	A-8912	Front Door Assembly
4.	A-17056	Cab. Top Assembly
5.	A-8904	Right Panel
6.	A-8916	Case Corner Assembly (2)
7.	A-8914	Side Door Ass'y (2 reqd.)
8.	A-8902-12	Bottom Trim (2 reqd.)
9.	A-15803	Leg (4 reqd.)
10.	A-8905	Cab. Back Panel Ass'y
11.	A-8902-11	Top Trim Strip
12.	13-591-1	Spout Frame (2 reqd.)
13.	A-17069	Left Panel (*)
14.	8-522-1	Levelers (4 reqd.)

* Not Shown

In answer to many field requests, we are pleased to release the following chart showing the companies whose porducts are acceptable substitutes for the 600W supplies by Winsmith as factory recommended.

Note the third column which most accurately represents the normal temperature operating range. Also the Alemite or Zerk fitting to bearing is greased with Mobilgrease BRB No. 1, or any good grade ball bearing grease as obtained from local service stations.

600W oils and equivalents are classified as industrial oils and most likely will be found in bulk plants rather than local service stations.

WORM GEAR REDUCERS

CB-CT-CV-CBD-CVD-CBX-CTX-CVX-DBI-TSR

Ambient Temperature °F	-30 to 15	16 to 50	51 to 110	111 to 165
Maximum Operating Temperature °F	150	185	225	225
Viscosity @ 210°F, SUS	40 to 90 (Optional)	90 to 125	125 to 190	190 to 350
Compounded with		3 to 10% Acidless Tallow or E.P. Base	3 to 10% Acidless Tallow or E.P. Base	3 to 10% Acidless Tallow or E.P. Base
AGMA Lubricant		#7 Compound	#8 Compound	
Cities Service Oil Co.	Pacemaker Oil #5	Optimus Oil #10	Optimus Oil #6	Optimus Oil #12
Fiske Bros. Refining Co.	#3Lubriplate	#8Lubriplate	#8Lubriplate	APG Lubriplat
Gulf Oil Corporation	Multipurpose Gear Lubricant	E.P. Lubricant #115	E.P. Lubricant #145	E.P. Lubricant #250
Shell Oil Company	Vitrea Oil 71	Valvata Oil #J 78	Valvata Oil #J 78	Valvata Oil #J 83
Sinclair Refining Co.	Duro Oil 160	#87 Heavy Duty Oil	#101 Super-Heat Valve Oil	#212 Super-Heat Valve Oil
Standard Oil Co.	Stanogear Compound #1	Stanogear Compound #4	Standard Worm Gear Oil	Calumet SH Cyclinder Oil
Sun Oil Company	Sunep 70	Sunep #110	Sunep #150	HV Cyl. Oil
Socony Mobil Oil Co., Inc.	Vactra Oil #1	Mobil Compound DD	Mobil Cylinder Oil #600W	Mobil Cylinder Oil # 600W
The Texas Company	Meropa Lub. #1	Meropa Lub. #3	Meropa Lub. #6	Meropa Lub. #6

SERVICE ANALYSIS

SYMPTOM	POSSIBLE CAUSE	CORRECTION
Unit will not run	Blown fuse	Replace fuse and check for cause of blown fuse.
	Thermostat set too high	Adjust thermostat. Set between 35° - 45°.
	Loose electrical connection	Check wiring
	Switch in OFF position	Turn switch to ON
	Inoperative master switch	Replace switch
	OFF on the hand reset low pressure control	Push hand reset.
	OFF on water failure switch	Check water supply
Compressor cycles intermittently	Low voltage	Check for overloading.
	Dirty condensor	Clean.
	Air circulation blocked	Move unit to correct.
	Non-condensable gases in system	Purge off.
Making wet ice	Surrounding air temperature above 100° F.	Correct or move unit to cooler location.
	Under or over-charge of refrigerant.	Recharge with proper amount.
	High water level in water reservoir	Lower to 1/4 inch below overflow pipe.
	Faulty compressor valve plate	Repair or replace.
Low ice production	Loss of refrigerant, under or over-charge of refrigerant	Check and recharge with proper amount of refrigerant.
	Dirty or plugged condensor	Clean condensor
	Low water level in water reservoir.	Adjust to 1/4 inch below overflow.
	Overcharge of oil in system	Check at oil sight glass. Lower to 1/2 sight glass.
	Partial restriction in capillary tube or drier	Moisture in system. Overcharge of oil in system. Remove charge and drier. Replace and recharge system.
	Inlet water strainer partially plugged	Remove screen and clean
	Corroded or stained worm shafts due to water condition.	Remove worm shafts and clean.

SERVICE ANALYSIS

SYMPTOM	POSSIBLE CAUSE	CORRECTION
Machine runs but makes no ice	Loss or under-charge of refrigerant	Check for leaks and recharge.
	Drive motor, gear reducer or drive coupling inoperative	Check. Repair or replace.
	Water not entering freezing chamber	Plugged strainer or supply line. Check and clean. Air lock in gravity feed line. Check and remove air lock.
	Moisture in system	Check and remove charge and drier. Replace and recharge.
	Water seal leaking	Replace seal.
	Defective manual overload switch	Replace switch
Water leaks	Defective water seal	Replace
	Gravity feed line leaking	Check hose clamps.
	Water level in reservoir too high	Adjust to 1/4 inch below overflow pipe.
Excessive noise or chattering	Mineral or scale deposit on auger and inner freezing chamber walls	Remove and manually polish auger, sand inner chamber walls of freezer barrel with approx. 100 grit paper. Use vertical strokes. For lighter concentrations use Scotsman Ice Machine Cleaner periodically.
	Low suction pressure	Add gas to raise suction pressure. Raise head pressure control setting.
	Intermittent water supply	Check and clean water strainer Check gravity feed line for air lock. Remove air lock.
	Water level in reservoir too low	Adjust to 1/4 inch below overflow pipe.
	Misaligned drive coupling	Repair or replace
	Gear reducer low on oil charge	Check oil level and refill to oil level plug.
	Gear reducer loose on frame	Tighten
	Drive motor end-play or worn bearings	Repair or replace
	Motor compressor not floating on springs	Loosen hold-down bolts.
Machine continues to run with full storage bin	Storage bin thermostat not properly set	Reset or replace, 45° in, 35° out.

MAINTENANCE INSTRUCTIONS — FLAKERS

THE FOLLOWING MAINTENANCE SHOULD BE ACCOMPLISHED TWO TIMES PER YEAR.

1. Check and clean water strainers and float valve. Depress float valve to insure full stream of water.
2. Check water level and machine level. Keep water below overflow, but as high as possible and still not run out of spout opening with machine off. Water droplets should come out of spout with ice at all times. Adjust as required.
3. Clean reservoir and interior of freezer assembly using SCOTSMAN Ice Machine Cleaner. One cleaning per year should be a manual cleaning: Stainless steel augers should be pulled and buffed to a mirror-like finish. Use buffing wheel and jewelers rouge. Inner freezer barrels should be sanded using vertical strokes. Use 100 grit paper.

NOTE: Cleaning requirements vary according to local water conditions. Visual inspection of the auger before and after cleaning will indicate best procedure to be followed in local areas.

4. Check high and low side pressures. On water cooled models, set pressure at 135 psi. Suction pressure should be above 12 psi and will range up to 16 psi depending upon water and ambient temperatures.
5. Set hand reset low pressure control to cut off in event of water supply interruption or low ambient temperature at approximately 5 psi.
6. Change oil in gear reducer. Use Mobiloil 600W or equivalent good grade of gear oil with a viscosity of 125 to 190. For unit with grease fittings use Mobilgrease BRB No. 1 or any good grade ball bearing grease. Particularly important when there is evidence that water has gotten into gear housing. Remove gear reducer to facilitate.
7. Oil drive motors. Use SAE #10 oil.
8. Check top bearing on freezers. Remove rubber 'O' Ring, rubber cap and styrofoam cap. If moisture is around bearing, wipe up and remove grease. Add new grease. Use beacon No. 325 or equivalent.
9. Check and adjust drive motor couplings.
10. Check for refrigerant leaks and proper frost line. Should frost out of accumulator at least one-half way to compressor, and in some areas back to service valve.
11. Check for water leaks. Tighten drain line connections.
12. Check quality of ice. Ice should be wet when formed, but will cure rapidly to normal hardness in the bin.
13. Check thermostat and pressure plate cut off. Micro switch cuts off only compressor. Bin thermostat should be set at 10° differential and should keep entire machine off at least twenty minutes in high ambients (longer in low) during normal operation.

PARTS LIST

SF-8

CABINET PARTS	SF-8
Cabinet Top Assembly	A-17056
Large Hood Top Doors	S-6713
Right Side Door	A-8914
Left Side Door	A-8914
Front Door	A-8912
Moulding Strip Top	A-8902-11
Moulding Strip Bottom	A-8902-12
SCOTSMAN Emblem	15-156
Legs for Raising Base	A-15803
Levelers	8-522-1
Plywood Crate	1-652
WATER CIRCUIT	
Water Reservoir Assembly, less cover	A-8868
Water Inlet Valve	A-9101
Rubber Valve Seat	S-6947
Float Arm and Float Assy.	A-12073
Valve Pin	2-1259
Plastic Water Deflector	2-1320
Standpipe	S-6715
Reservoir Cover Assembly	A-12870
Water Strainer, Supply Line	16-162-1
DRIVE CIRCUIT	
Gear Reducer	2-768
Gear Reducer Coupling to Drive Motor	A-18341
Gear Reducer Coupling (one piece) to freezer	A-8895
Coupling Key	A-6166
Allen Set Screw	3-385
Rubber Drip Shield--Gear Reducer Shaft	13-152
1/3 HP Drive Motor 230/60/1	12-649-2
208/60/1	12-649-7

PARTS LIST

SF-8

FREEZER ASSEMBLY, 2 Per Unit, One Side	A-8853
Screws--Ice Breaker--St. Steel	3-785
Ice Breaker	A-8818
Ice Breaker Cap--Rubber	13-231
'O' Ring--Cap	2-991
'O' Ring--Breaker	2-778
Top Bearing	2-619
'O' Ring Below Top Bearing	2-643
Styrofoam Cap	A-9047
Locking Cap Screw 1/2-20-1 Stainless	3-715
Washer--Brass	A-6273
Worm Shaft	A-9006
Water Seal	2-776
Lower Bearing	2-775
Suction Line Assembly	A-8862
Suction Line Vibration Eliminator 1 1/8"	16-326
Refrigerant Drier	2-822
Freezer, Worm Tube Only	A-8858
SPOUT ASSEMBLY	
Spout Assembly Less Switch and Press Plate	A-16668
Spout Pressure Plate	A-16670
Screws Stainless Steel Spout Hold Down	3-794
Spring for Spout Pressure Plate	2-1321

PARTS LIST

SF-8

ELECTRICAL COMPONENTS

Contactor, compressor 230/60/1	12-831-2
Bin Thermostat	11-99
A & B Starter	12-468
A & B Holding Coil only	12-466-5
Contactor, compressor 208-230/60/30	12-739-2
Overload Heater Drive Motor, state motor manuf. and voltage.	12-707
Water Failure Switch	11-296
Micro Switch for spout	12-1018
On-Off Toggle Switch	12-426

CONDENSING UNITS	SF-8	SF-8-3
Motor Compressor Only 5 HP	18-823	18-822
Valve Plate & Gasket Kit	18-827	18-827
Cylinder Head	18-830	18-830
Relay	18-1903-28	
Starting Capacitor (2 per unit)	18-1901-20	
Running Capacitor (per unit--2)	18-1902-28	
Condenser--Water Cooled	18-821	18-821
Terminal Assembly	18-834	18-834
Service Valve Gasket (Suction)	18-835	18-835
Service Valve Gasket (Discharge)	18-736	18-736
Plain Gasket--Water-cooled condenser	18-740	18-740
Manifold Gasket--Water-cooled condenser	18-741	18-741
Water Regulating Valve, Penn 3/4" NPT	11-295	11-295
Dual Pressure Control--Hand Reset	11-286	11-286
Vibration Eliminator 7/8" Discharge Line	16-260	16-260

MISCELLANEOUS

Ice Scoop	2-540
Ice Machine Cleaner--8 oz. bottle	19-343
Grey Spray-on Touch-up Paint	10-153
Upper Bearing Grease--Freezer Assy.--Pt. cans only	19-309
600W Gear Reducer Transmission Oil--Pt. cans only	19-359
Tygon Tubing (1/2" ID x 3/4" OD) Per Ft.	5-186
Rubber Tubing (3/8" ID) Per Ft. Black	13-79

TABLE OF CONTENTS

Page 2

Forward 1

Table of Contents 2

Specifications and Dimensions 3

Photagraphs and Ice Making Chart 4-5

Installation: 6

- Location 7
- Uncrating 7
- Preperation for Installation 8
- Setting Up Machine 8
- Placing Machine Section in Position 8
- Lifting Instruction Diagram 9
- Plumbing & Electrical Illustration 10
- Plumbing 11
- Water Treatment Water Supply 11
- Placing of Bin Thermostat Bulb 12
- Electrical 12
- Start Up 13
- Final Check List 14
- Wiring Diagram 230/60/1 Air Cooled 15
- Wiring Diagram 230/60/1 Water Cooled 16
- Wiring Diagram 208/220/60/3 Air Cooled 17
- Wiring Diagram 208/220/60/3 Water Cooled 18
- Wiring Diagram 208/60/1 Air Cooled 19
- Wiring Diagram 208/60/1 Water Cooled 20

Harvest Cycle 21-22

Freezing Cycle 23-24

Service Analysis 25-28

Components Parts:

- Complete Unit Front View 29
- Complete Unit Left Side View 30
- Complete Unit Top View W.C. 31
- Complete Unit Top View A.C. 32
- Control Box 33
- 3-Way Water Valve 34
- Drive Linkage 35
- Sump Pump 36
- Spray Tube Assy. 37
- Case Parts 38

Service:

- Removing & Replacing Components 39-40
- Functional Parts & Maintenence 41-44
- Maintenance and Cleaning Instructions 45
- B-700 Bin 46

THIS PAGE
INTENTIONALLY
LEFT BLANK

THIS PAGE
INTENTIONALLY
LEFT BLANK

SPECIFICATIONS

	SM1005A	SM1005W
Compressor	3 hp twin cylinder Semi Hermetic	3 twin cylinder Semi Hermetic
Condenser	Cleanable Air Cooled	Cleanable Water Cooled
Refrigerant	R12	R12
Refrigerant Charge	130 ounces	130 ounces
Refrigerant Control	Twin Capillary Tube	Twin Capillary Tube
Power Consumption	14.6 Amp., 3 Wire 230 V., 60 Hertz Single Phase	8.4 Amp., 3 Wire 230 V., 60 Hertz Single Phase
Water Consumption to Produce Ice	30.9 Gallons per hour	30.9 Gallons per Hour
Water used by Condenser		1 to 3 1/2 Gallons per minute. Varies With water temperature.
Companion Bin	B-700	B-700
Cube Size	Scotsman Medium cube	Scotsman Medium cube
Cubes Per Harvest	480	480
Average Operating Head Pressure	135-155 P.S.I.	140 P.S.I.
Average Operating Back Pressure	Varies 50-60 during off Cycle	5 P.S.I. End of Freezing Cycle

NOTE:

All Scotsman Super Cubers require neutral wire for secondary 115 volt components curcuit. 3 phase cubers require 4 wire service with neutral. Special voltages upon request.

* Model B-700 storage bins are not equipped with legs. Order leg package from Scotsman Sales Department.

SCOTSMAN®
ICE MACHINES

PRODUCT NAME:

SCOTSMAN® CUBER MODEL 1000 SERIES

MANUFACTURER:

QUEEN PRODUCTS DIVISION
KING-SEELEY THERMOS CO.
ALBERT LEA, MINNESOTA 56007

SHOWN 3 QTR. SIZE

Model SC1000 produces large cubes



Model SM1005 produces medium cubes

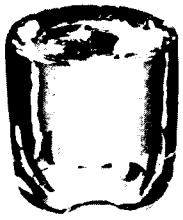

Model MM1010 produces small cubes



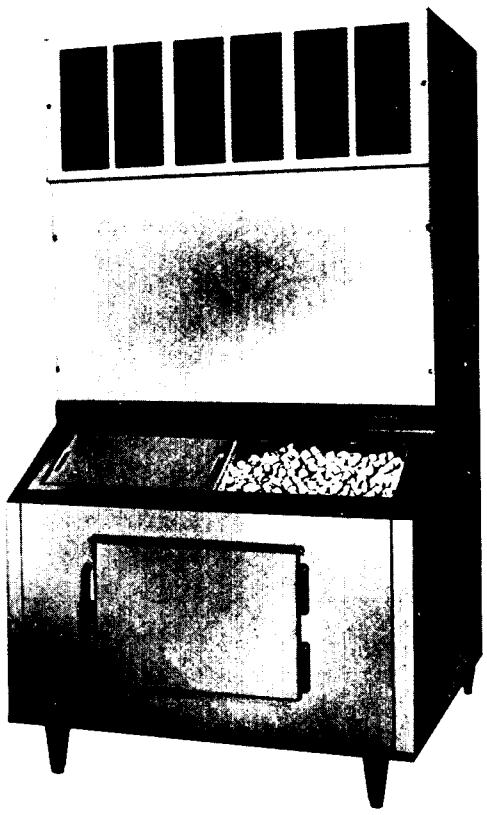

(ILLUSTRATED ON B700 BIN)

ice making capacity

Daily Ice Capacity is directly related to condenser air inlet temperature, water temperature, and age of machine.

NOTE: To keep your SCOTSMAN CUBER performing at it's maximum capacity, it is necessary to perform periodic maintenance as outlined on page 45 of this manual.

1000 Series

Capacity: Refer to production chart.
Storage Bin: B700 Stainless Steel Lined
Height: 49-1/4"
Width: 46-5/8"
Depth: 36-1/8"

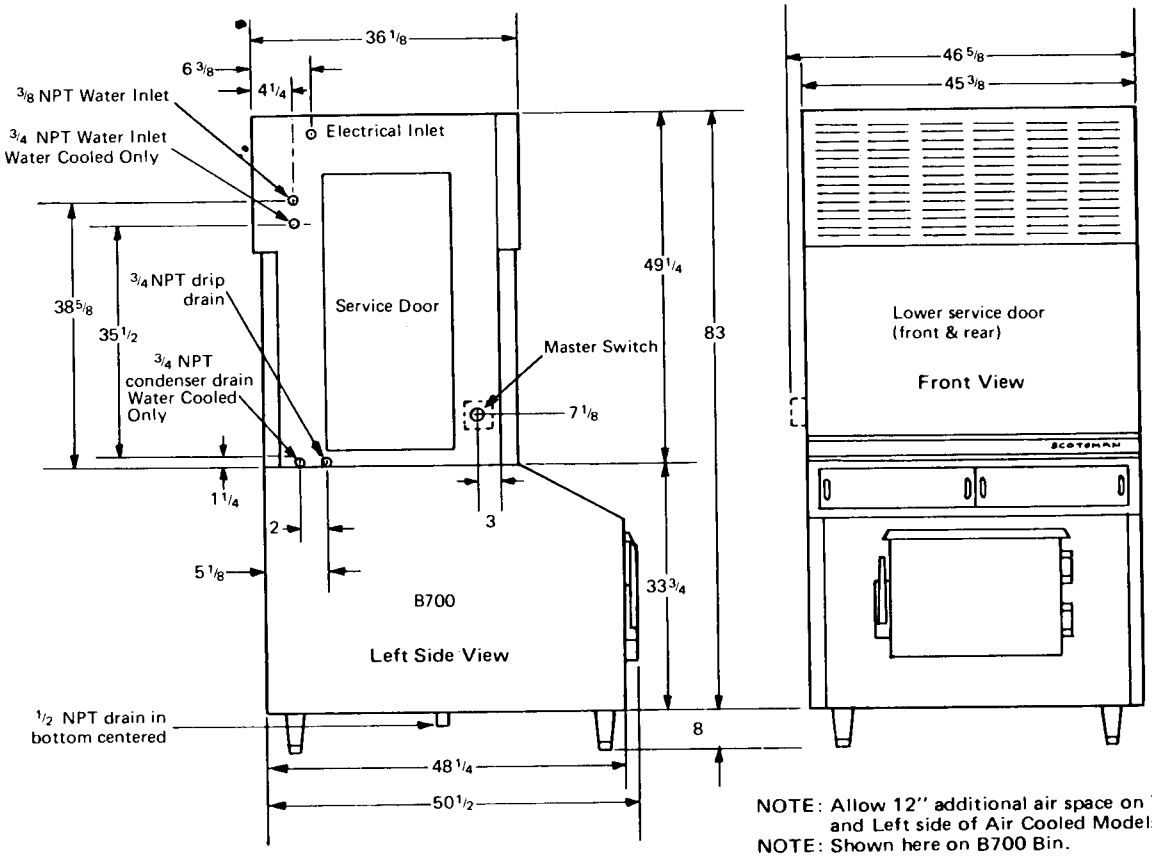

NOTE: Allow 12" additional air space on Top, Back and Left side of Air Cooled Models.
NOTE: Shown here on B700 Bin.

SPECIFICATIONS:

Model	Condensing Unit	Compressor Horsepower	Finish (P-painted) (SS-Stainless Steel)	Shipping Weight (lbs.)
SC1000HA	Air	3	P	915
SC1000HASS	Air	3	SS	915
SC1000WHA	Water	3	P	915
SC1000WHASS	Water	3	SS	915
SM1005HA	Air	3	P	915
SM1005HASS	Air	3	SS	915
SM1005WHA	Water	3	P	915
SM1005WHASS	Water	3	SS	915
MM1010HB	Air	3	P	915
MM1010HBSS	Air	3	SS	915
MM1010WHB	Water	3	P	915
MM1010WHBSS	Water	3	SS	915

Basic Electricals	Minimum Wire Sizes (w-wire) (g-gauge)			Total Amperages		
	SC 1000	SM 1005	MM 1010	SC 1000	SM 1005	MM 1010
Air Cooled						
115/230/60/1	3w 10g	3w 10g	3w 10g	23.1	23.1	23.1
115/208-220/60/3	4w 10g	4w 10g	4w 10g	20.1	20.1	20.1
Water Cooled						
115/230/60/1	3w 10g	3w 10g	3w 10g	20.9	20.9	20.9
115/208-220/60/3	4w 10g	4w 10g	4w 10g	17.9	17.9	17.9

Specifications subject to change without notice.

INSTALLATION LIMITATIONS

ELECTRICAL

1. Scotsman, like most manufacturers, purchases electrical motors that are rated to operate within 10% variance above or below nameplate ratings.

2. Improper voltages applied to Scotsman equipment can cause premature failures and burnouts. Failures of this type are not considered as factory fault or defect.

AMBIENT

WARNING — This machine is not designed for out door installations. This machine will not operate when air temperatures are below 50° F. or above100° F.

This unit was not fabricated nor intended to be installed outdoors.

WATER

3. Scotsman Ice Systems require 20 pounds flowing water pressure to operate satisfactorily. Pressures lower than 20 Pounds or interruptions in the water supply can cause serious mechanical damage to this product.

   This machine will not operate when water supply termperatures are below 40° F. or above 100° F.

INSTALLATION INSTRUCTIONS

The following installation instructions were written for use by an authorized tradesman only, not the user or customer. We suggest you call your local authorized Scotsman Service Agency for hook-up, start-up, and check out. He's listed under "Ice Making Machinery & Equipment" in your telephone book, yellow pages.

INSTALLATION

LOCATION OF THE ICE CUBE MACHINE

1. Select a location as convenient as possible for the user.
2. Accessible to the necessary electrical and plumbing connections
3. If possible, have a minimum space of 12 inches above top and from left end panel for service.
4. A minimum of 24 inches for convenience of the user in front of the machine.
5. Room temperature--minimum of 50 degrees, maximum of 100 degrees.

ALL INSTALLATIONS--Locate, if possible, so left end panel is accessible. Locate unit so proper circulation can be attained around the unit and behind it at least four inches. Provide plumbing and electrical connections so the unit can be moved out where the entire top can be removed and the unit can still be operated.

KITCHEN INSTALLATIONS--As a rule, the kitchen is not the most practical place to intall an air-cooled condensing unit, as grease is almost always present and makes cleaning the the condensing unit difficult. Do not locate near range or steam table or other heating devices that may be used in the kitchen.

STOREROOM INSTALLATIONS-- Be sure storeroom is of adequate size and prperly ventilated. A small, poorly ventilated room will greatly impair the efficiency of the unit. The storeroom must be kept above 50 degrees in the winter months.

BASEMENT INSTALLATION--Locate machine in the coolest place. Locate the machine in a dry place. Keep away from furnace and boiler room. Keep away from service chutes and runways, also coal or other dust of any kind. If the machine is set over a floor drain, block the machine up enough to eliminate any possible damage to the machine.

LOCATE THE MACHINE SO IT CAN BE SERVICED WHEN NECESSARY. ALLOW AT LEAST 12 INCHES OF SPACE AROUND THE MACHINE FOR CIRCULATING AIR.

UNCRATING

1. If possible, do not uncrate until equipment is in permanent location.
2. Storage bin and machine compartments are shipped in separate crates.
3. Remove hold-down bolts from skids.
4. Remove crate in usual manner for wood crating.

PREPARATION FOR INSTALLATION

1. Inspect complete unit cabinetry for shipping damage. Notify carrier of concealed damage claims.
2. Remove all service doors and panels.
3. Loosen motor compressor hold down nuts until motor compressor rides freely on mounting springs.

PREPARATION FOR INSTALLATION

5. Remove all masking tape and packing members from curtains and inner cube making compartments. Realign components such as sump pump or cube racks that may have shifted in transit.

6. Remove water strainer from compressor section for installation on unit or in water supply line feeding unit.

7. Open electrical control box and prepare for hook up. Use knock outs, cord connectors, etc. Then check unit nameplate voltage against building source voltage to make sure they correspond. Caution- Improper voltage applied to units will void your warranty protection.

8. Select unit location prior to hook up of water, drain and electric in accordance with local and national codes, minimum room temperatures 50° Fahrenheit. On air cooled models select well ventilated location.

9. Remove service manual from storage bin and wipe bin clean with damp cloth.

SETTING UP MACHINE

1. Be sure floor strength is capable of 2,000 pounds in an area of 46 inches by 50 inches.

2. If ceiling height permits, use 8 inch base legs for the storage bin which will make a more convenient height for the user and allow more fall from the storage bin drain.

3. Storage bin must be absolutely level. (**THIS IS IMPORTANT**)

PLACING MACHINE SECTION IN POSITION ON ICE STORAGE COMPARTMENT

1. Remove top and bottom doors on front and back of unit.

2. Extreme caution must be used to prevent damage to equipment or injury to the personnel.

3. Weld nuts for attaching carrying handles have been incorporated in each unit. Two in each corner of the front and back, these are 3/8" and spaced 4" x 44 5/32".

4. For carrying handles use 2 x 8's at least 6 feet. This allows 2 feet on each end for hand holds.

5. On the B-700 bin, care should be taken to avoid damaging rubber gasket around opening.

— LIFTING — INSTRUCTIONS

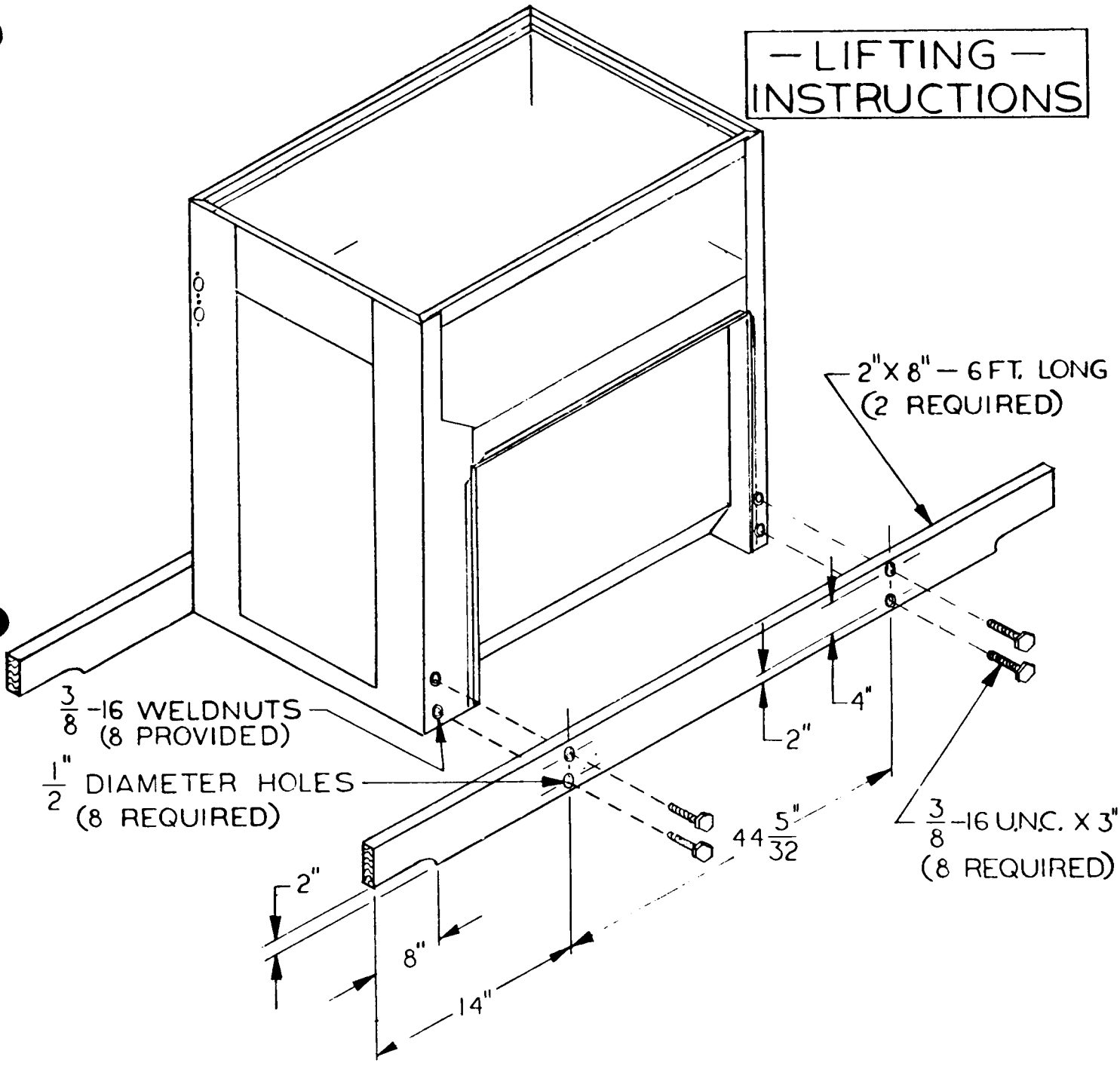

REMOVE DOORS. BOLT THE 2"X 8"S TO THE MACHINE BY MEANS OF EIGHT $\frac{3}{8}$ -16 U.N.C. CAP SCREWS INTO THE WELDNUTS PROVIDED IN THE FRAME.

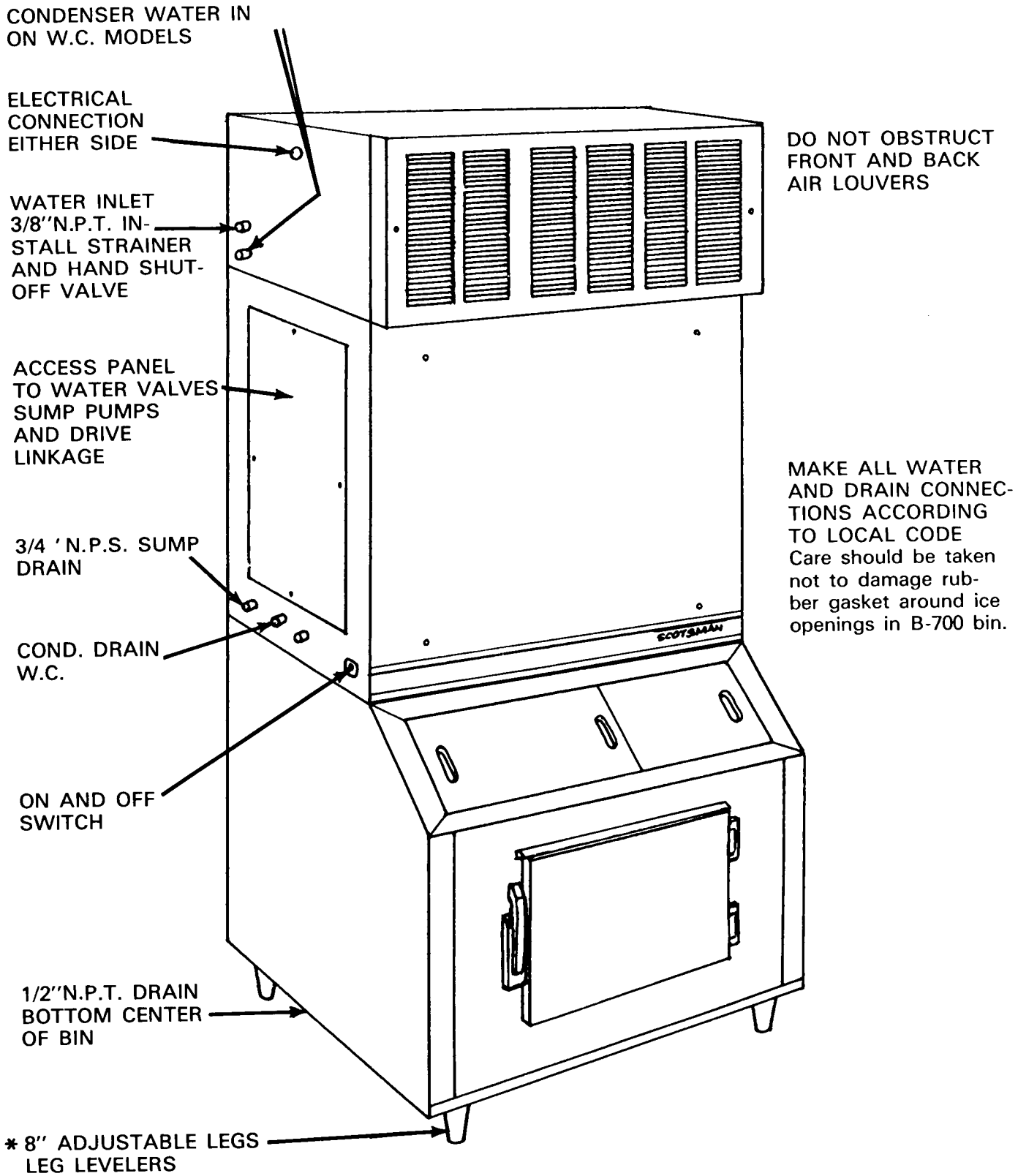

SM 1005 INSTALLATION ON B-700 BIN

*LEGS OPTIONAL

PLUMBING

1. Refer to Installation Diagram.
2. Water inlet should be 3/8" pipe or larger.
3. Strainer should be installed on outside of machine as close as possible to unit.
4. A shut-off valve either of globe or gate type should be installed next to strainer for the convenience of the service man.
5. (SM1005 is equipped with three separate drains so as to comply with all plumbing codes.)
6. Drain marked sump should be kept 3/4" in size with adequate fall which assures complete emptying of the sump tank at the end of the freezing cycle; and also with enough velocity to remove any sediment or solids which may have accumulated from the preceding batch of ice cubes.
7. Storage drain should be connected to open drain.
8. The drain from the condensor on W.C. units has a slight pressure NOTE: If outlet of connected drain is visable, it is helpful to the service man in checking condensor water valve.

WATER SUPPLY AND DRAIN CONNECTIONS

Page 5 shows recommended water piping connections and drain facilities for Model SM1005.

WATER SUPPLY

The cuber water supply line is 3/8"N.P.T. for all units. Connect to a cold water supply line with regular plumbing fittings with a shut-off valve installed in an accessible place between supply line and machine. The water strainer supplied with the unit should be mounted with clean-out plug down. Locate the strainer next to the machine and the arrow in the direction of the flow.

Use care in connecting up water line to the machine. Water supply must be installed to conform with local code.

DRAIN

The recommended drain 3/8"N.P.T. tubing. Sweat to drain connections. Must be run to open or trapped drain. If drain is a long run, allow a 1/4" pitch per foot. Drain must be installed to conform with local code. Run separate 1/2" bin drain.

WATER TREATMENT

1. In area where vast amounts of solids and impurities are present in the water supply, it may be necessary to use some type of filtering equipment on the water that is used in the actual manufacture of the ice and not for the condenser.
2. If above condition is true, it is suggested to diconnect water regulator from present location in machine compartment and connect it to a 3/8" OD copper line which may be run to the filtering equipment. (NOTE: If water softening equipment is available in building, connect 3/8" line in soft water ahead of heater.)
3. For water treatment over and above normal local impurities, consult Service Dept., Scotsman Queen Products, Albert lea, Minnesota.

PLACING OF BIN THERMOSTAT BULB IN STORAGE AREA

1. When mounting SM-1005 on B-700 2 holes for fastening thermo bulb are located on the back wall of the bin.
2. Control has 12 foot cap tube. This should be brought down right front of freezing chamber, under cuber close to right side.
3. Bulb cover, gasket, and 2 buttons are packed with cuber.
4. When mounting unit on custom-built Bin bulb should be mounted close to the bottom, back, right-hand corner of the cuber.
5. Bulb should always be mounted so as to not be damaged by scoops or shovels.

ELECTRICAL

1. **IMPORTANT:** An ice machine must be connected by competent electrician.
2. Refer to wiring diagram.
3. SM1005-4 (115-230/60/1) required 230 volt 3 wire, single phase system.
4. SM1005-9 (115-208, 220/60/3) requires 208-220 volt 4 wire, 3 phase system.
5. Compressor operates on higher voltages and component parts on 115 volts only. (Caution: In area where a wild phase is present in the system, it must be kept out of the low voltage circuit
6. Electrician should be instructed to install proper diconnect switch with a solid neutral.

ELECTRICAL CONNECTION AND CHARACTERISTICS

Standard Voltage 3 Wire 230/60/1

All external wiring should conform with National Underwriters' and local code requirements. Check the voltage on the line before connecting the machine.

Be Certain that the cubers are on their own circuit and individually fused. The maximum allowable voltage variation should not exceed 10% of the nameplate rating even under starting conditions. Low voltage can cause erratic operation, and may be responsible for serious damage to the overload switches and motor windings. Do Not install 230 volt units on 208 volt supply. If necessary, use boost-buck transformer to correct voltage.

208/220/60/3 3 phase 4 wire

Wire according to diagram on machine. All wiring to be done according to local, state and National codes.

MANUAL SWITCH

A manual switch is provided on left side of the unit for the convenience of the user when it is desired to shut the unit down for a period of time. When any electrical component parts are being removed or serviced, it is recommended that the line switch be put in the "OFF" position.
Manual switch is also located in control box for shutting off compressor while cleaning unit.

HIGH PRESSURE CONTROL W.C. MODELS

A high pressure control is provided to shut down the complete unit in case of extrmely high head pressures or interrupted water supply. Some models are equipped with a lock-out type, and the unit will remain off until the control is reset manually. (To reset, press down small plunger on top of control.) The high pressure control should be set at 185 pounds.

START UP

1. Make sure all service valves on the condensing unit are backseated and turned as far as possible to the left. Replace the valve caps after checking the valves.
2. Make sure that the flow of air is not impeded in any way over condenser on air-cooled models. Keep condenser clean, (Check and clean the condenser monthly.)
3. Turn on cube water supply at hand shut-off valve. Make sure water pressure does not exceed 50# p.s.i. pressure. If necessary, install water pressure regulator to reduce pressure to approximately 50 pounds.
4. Remove cover from control box, check for loose or frayed wire, then turn compressor switch to "on" position. Also on-off switch left side of unit.
5. Turn disc on time clock to the right just far enough for water solenoid valve to energize. Allow clock to take it through harvest cycle. This will be approximately 3 minutes. Dial pointer should be set on number 2 1/2. After the compressor starts, turn the dial completely around and send it through another harvest cycle.
   Do this serveral times. This will completely flush out machine of any dust that may have accumulated in shipment.
6. After the machine has been properly flushed, allow it to go into a freezing cycle--check for possible water leaks, check sump pump operation--should be running freely. Also note if jet tube travel is correct, and that none of the jets are plugged. Jet spray of water should hit the middle of the cup.
7. Time clock dial does not rotate at the end of the harvest cycle; it is started later by the cube size control located in the control box.
8. Freezing time will be approximately 25 minutes in a 70 degree ambient. (Longer if above, and shorter if below.
9. Watch first cube harvest and check to make sure that plastic curtain has not been damaged in shipment.
10. Check texture of cubes made: Partially cloudy cubes throughout suggest unit running short of water near end of freezing, or possibly an extremely bad water condition, which would indicate use of filtering or puitying equipment. Contact SCOTSMAN - Queen Products, Ice Machine Service Department, Albert Lea, Minnesota, For Further Details.
11. With unit on harvest cycle, take a handful of cubes made and hold on storage bin thermostat cover. Should cut unit off in one to two minutes--remove ice; unit should cut back on automatically. Thermostat is factory set at 35° out, 39° in.
12. Install gauges and check head and back pressures; on air-cooled models, head pressure after twenty minutes of freezing cycle at 70° ambient will be approxmately 150 pounds p.s.i. just before harvest cycle. Higher ambients will cause higher head pressure.
13. Remove gauges, replace control box cover and all service panels.

FINAL CHECK LIST

1. Is the unit level? **(IMPORTANT)** .
2. Have all elctrical and piping connections been made?
3. Has the voltage been tested and checked against the nameplate rating?
4. Have the compressor hold-down bolts been loosened so the compressor rides freely on its mounting springs.
5. Is the water supply valve open and the electric power on?
6. Is the water pressure adequate but not over 50# P.S.I.?
7. Is the unit clean?
8. Has the owner been given the operating manual, and has he been instructed on how to operate the machine?
9. Has the installation date been sent to the factory? This is the owner's protection as well as the sellers.
10. Check all the refrigerant and conduit lines to guard against vibration and possible failure.
11. Is there 12'' clearance behind and around unit for proper air circulation?
12. Is unit in a room where ambient temperatures are minimum 50° F. even in winter months?

WIRING DIAGRAM

SM1005A-4
Air Cooled

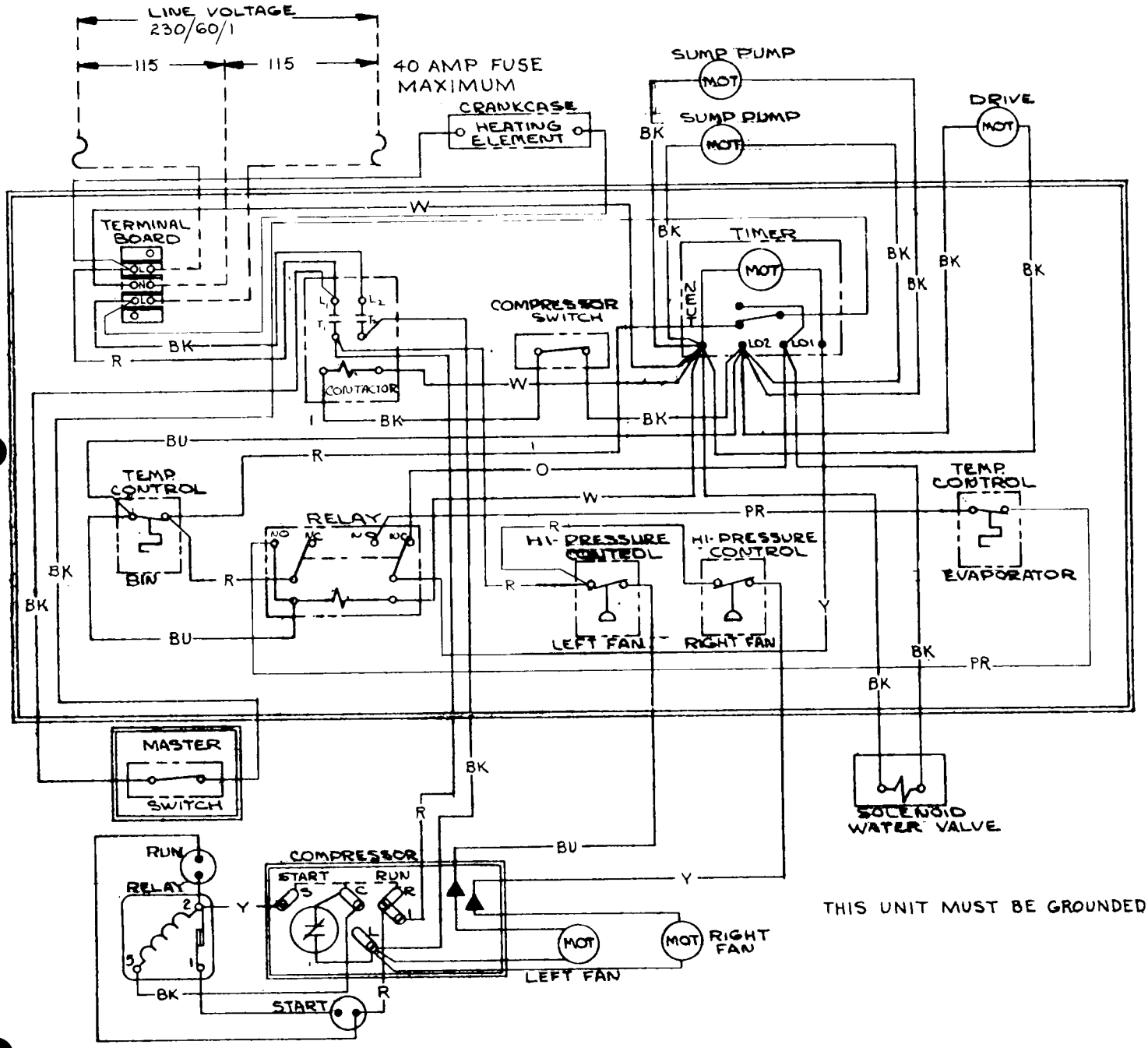

THIS UNIT MUST BE GROUNDED

WIRING DIAGRAM

SM1005WA-4
Water Cooled

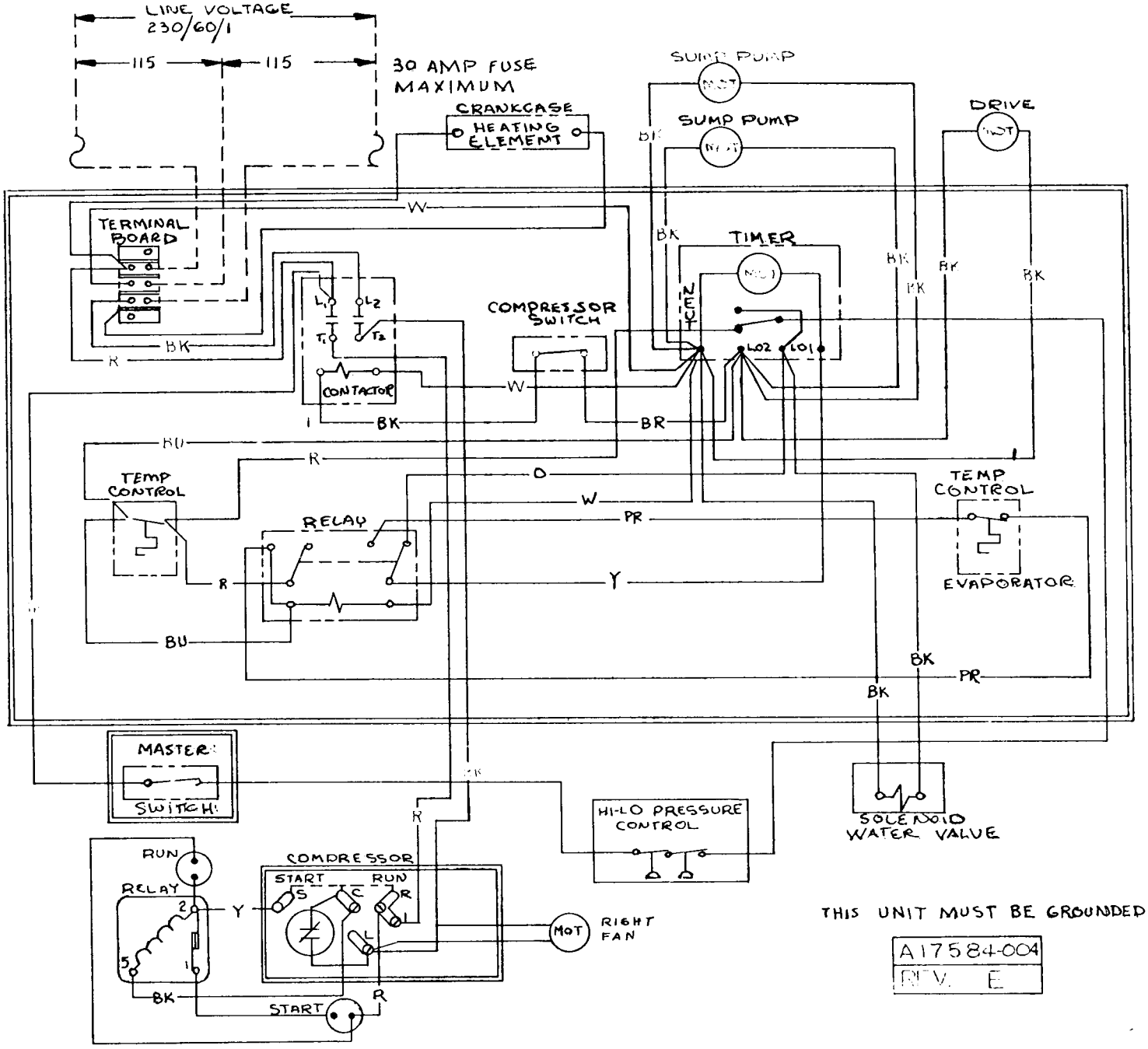

WIRING DIAGRAM

SM1005A-9
Air Cooled

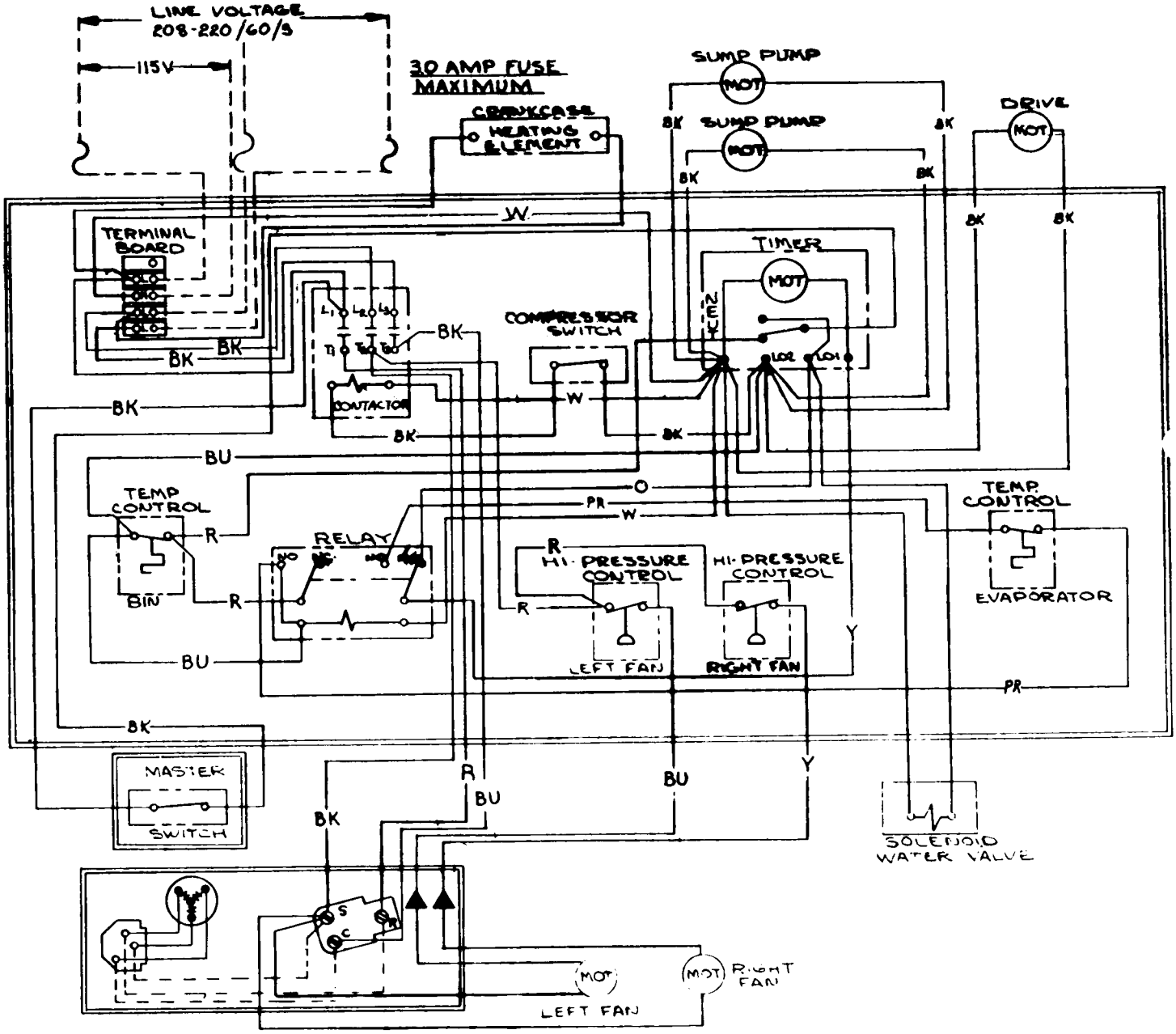

WIRING DIAGRAM

SM1005WA-9
Water Cooled

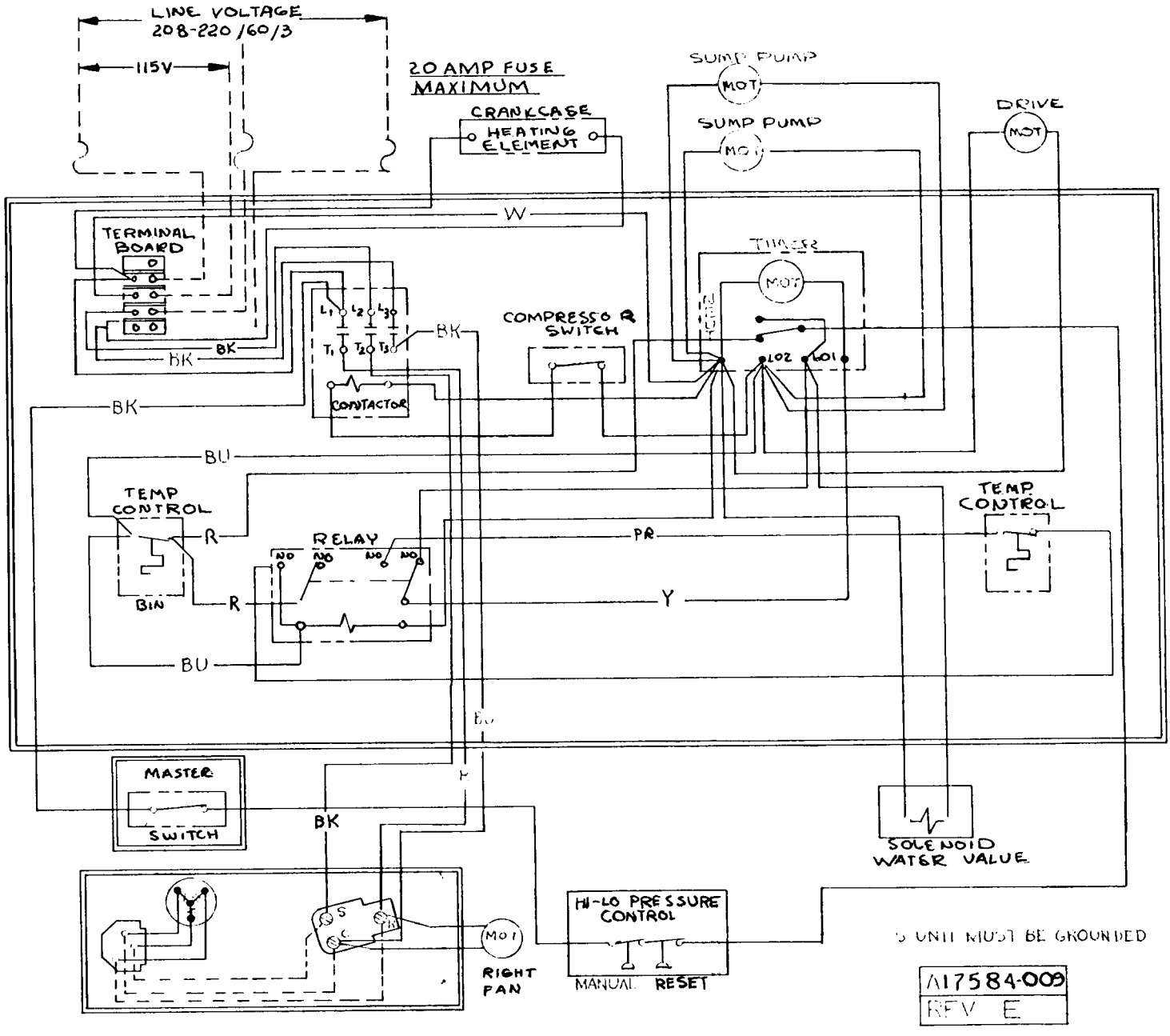

WIRING DIAGRAM
SM-1005 H-10
Air Cooled

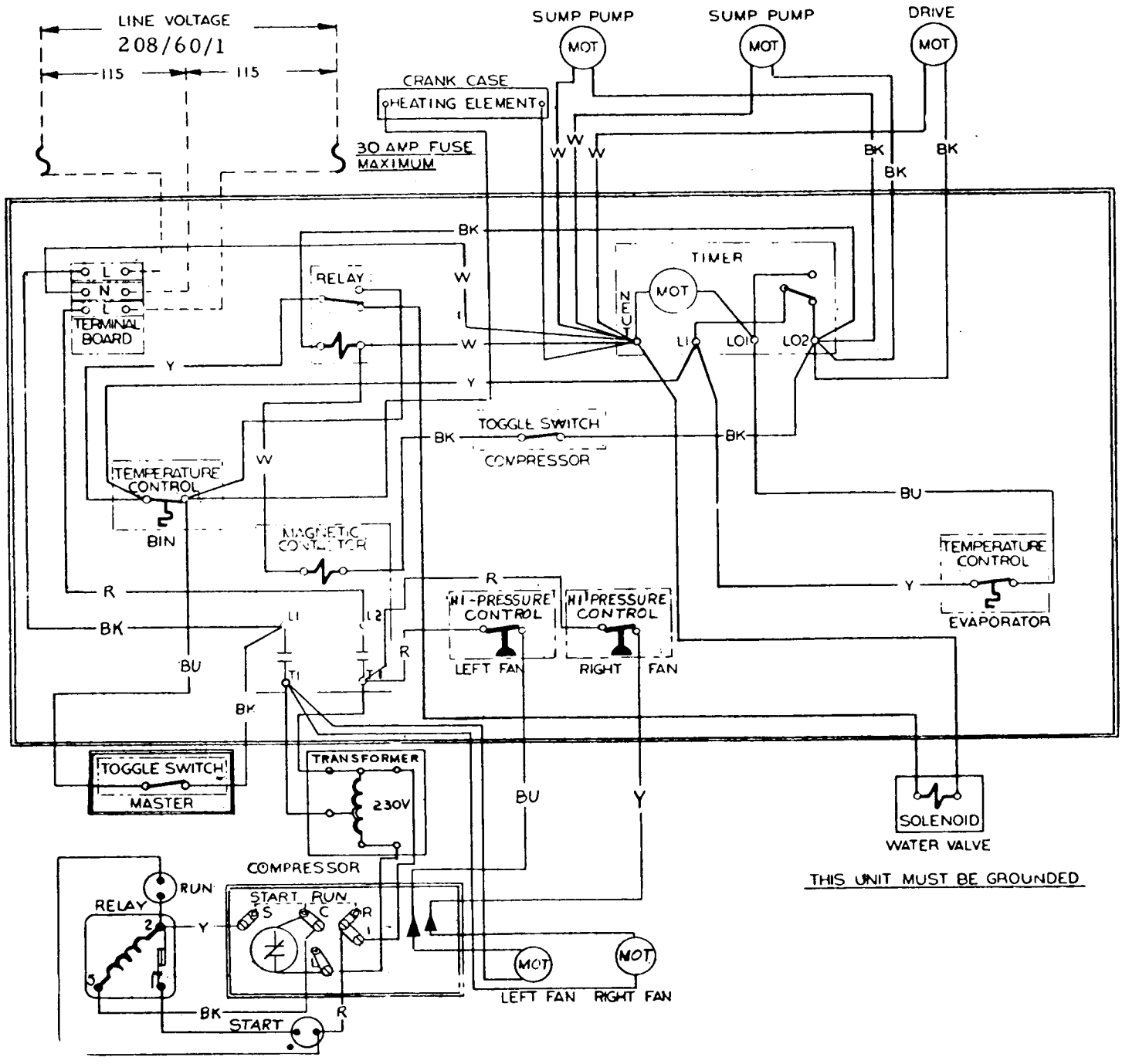

WIRING DIAGRAM

SM1005 WA-10
Water Cooled

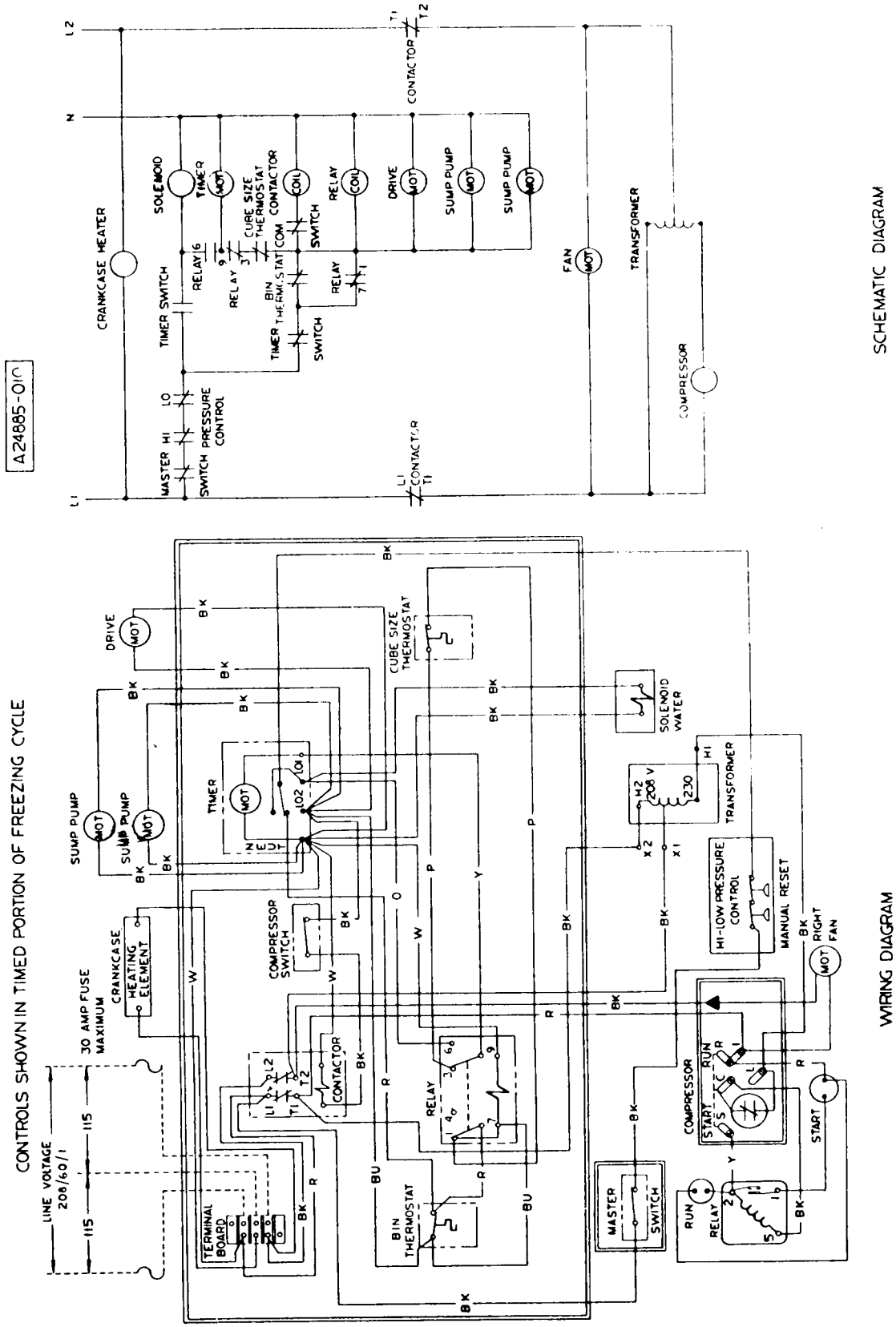

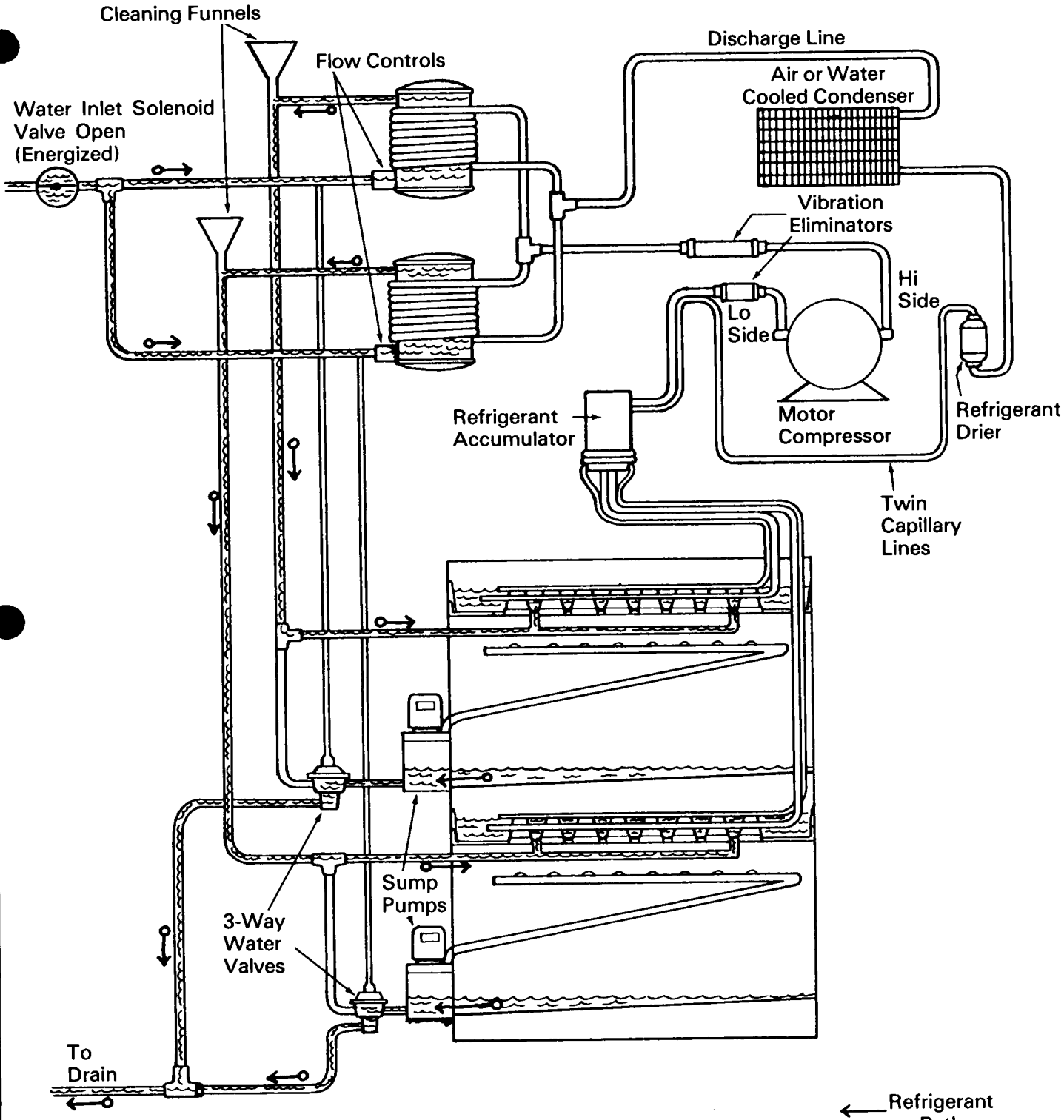

WATER-REFRIGERANT SCHEMATIC
SM1005
HARVEST CYCLE

HARVEST CYCLE

With master switch (on left side of unit) and compressor switch (in main control box) in the on position turn timer manually to the harvest position. This energizes water inlet solenoid valve allowing water to flow thru flow controls into heat exchanger tanks. This inlet water pressure forces water out of tanks and also actuates 3-way water valves which in turn allows water to flow into upper cavity of freezing chambers and surplus water from preceeding batch of ice cubes to go down the drain. The platen cavity is completely filled up to the overflow point, and continues to overflow while in the defrost cycle; the amount of this water running over the overflow pipe is controlled by the flow control device and the length of harvest time setting on the time clock; overflow water goes down the drain also. Meanwhile, cubes being released from the cups drop by gravity into cube chute, through curtained opening into storage bin. At completion of harvest cycle, micro-switch on the timer now drops points holding defrost components in cycle and switches to freezing cycle set of contacts. Clock motor now stops and will not start until cube size control closes once more. As the new freezing cycle starts, note that our inlet solenoid closes. Since water enters heat exchanger tank on bottom and flows out through top, this insures full tank for the next cycle. The chilled water from the upper cavity flows by gravity through the water valve to the sump tank and reservoir. This water is used produce the next batch of cubes.

Models SM-1005 cubers have ice cube discharge chutes tapered to both front and back of unit. During a harvest, 1/2 of the cubes fall into bin through back or rear discharge chute, 1/2 through front discharge chute.

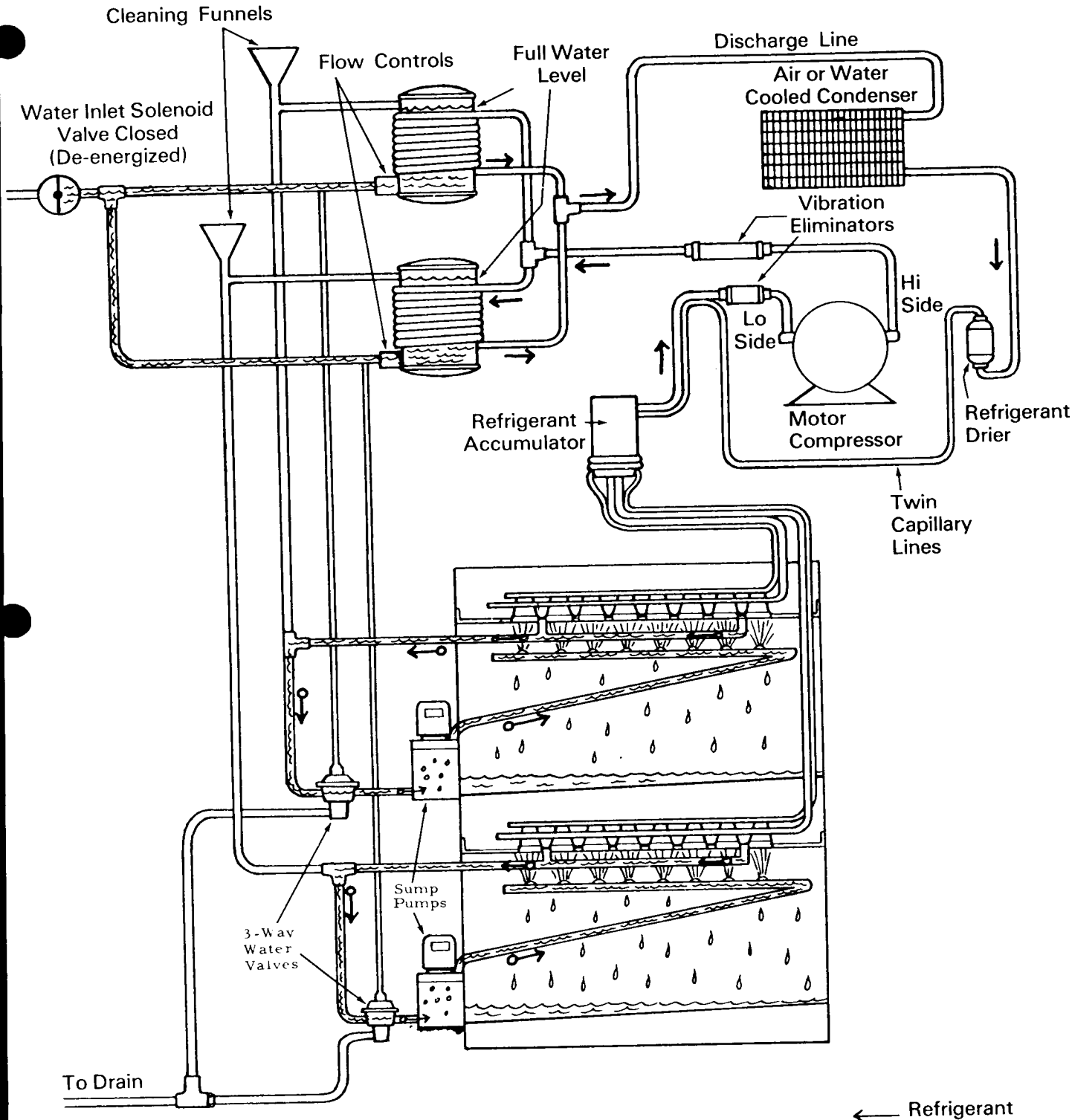

WATER-REFRIGERANT SCHEMATIC
Models SM1005
freezing cycle

FREEZING CYCLE

As the freezing cycle starts, electrically the components operating are the compressor and fan motors, recirculating water pumps and the sprayer tube drive motor.

The refigerant curcuit which equalized at about 50 pounds gauge during the "off" or harvest cycle, thru the capillary refrigerant control, now rises rapidly to 135 - 150 pounds head pressure. The suction or low side pressure starting at 50 pounds pulls down fairly quickly to about 25 pounds at which point the ice cubes are starting to form a thin shell in cube cups. Continuing from 25 pounds slowly on down towards the finished cube pressure of approximately 4 pounds takes an average of 20 - 25 minutes.

During this portion of the freezing cycle the electrical brain is the reverse acting, cube size thermostat. This thermostat electrically is holding the freezing cycle components "live". When the ice cubes are about 3/4 formed, the decreasing suction pressure and temperature, activated the temperature sensing bulb of the reverse acting, cube size control, closing its contacts. This does not interrupt the freezing cycle, the closing of the cube size thermostat contacts electrically transfers the finishing of the freezing cycle to the finishing clock motor or timer as it is sometimes called. One full revolution of the timers dial is 15 minutes however of the total 15 minutes only, 3 minutes are used for the defrost or harvest cycle.

This means then that after the cube size contacts close they activate the timer motor. This control takes over and continues freezing cycle for another 12 minutes with timer dial now turing. When the 12 minutes are completed, and offset in the timer dial allows a micro switch with activating arm riding on that cam to drop into the slot electrically stopping the freezing cycle and starting the 3 minutes harvest cycle - The clock motor continues thru harvest cycles. A notch on the timer dial now lifts micro switch arm up on dial, electrically stopping harvest cycle and starts back into a new freezing cycle.

NOTE:
Harvest water is used to make the next batch of ice, therefore on initial start up the unit must be in a defrost cycle. This can be done manually operating the timer.

SERVICE ANALYSIS

Symptom	Possible Cause	Suggested Correction
1. Unit will not run	Power off	Check main switch, fuses and wiring.
	Manual switch in off position	Check
	High pressure control locked out.	Reset. (Water cooled models)
	Ambient temperature of room too low.	Must be above 50°.
	Bin controls set too high.	Set approximately 35° cut out, 39° cut in.
2. Compressor cycles intermittently.	Low voltage	Check with volt meter.
	Air in system causing high head.	Purge system.
	Shortage of refrigeranct	Check frost line and operating pressure.
3. Cubes small. (short cycle)	Cube size control not properly set.	Set control to colder
	Moisture in system	Purge charge, evacuate, change dryer. & re-charge.
	Short of water because too low setting on water supply.	Increase pressure, new lines or larger lines.
	Lower drain valve in sump tank leaking.	Flush or remove and clean.
	Sump tank stand pipe not properly seated.	Check and re-seat.
4. Cubes small. (long cycle)	Shortage of refrigerant	Check frost line and charge as required. Check for system leaks.

SERVICE ANALYSIS

Symptom	Possible Cause	Suggested Correction
5. Cubes too large. (slow defrost)	Very small shortage of refrigerant.	Check frost line, charge as required
	Cube size control set too low.	Reset to warmer setting.
6. Cubes cloudy	Drain valve and sump tank leaking, loosing water.	Check during freeze cycle Jet tubes plugged, clean all jets
	Curtains damaged or binding	Repair or replace
	Restriction in incoming water	Check at strainer and flow controls
	Screen plugged on bottom of sump pumps.	Remove and clean
7. Irregular cubes. (some clear, some cloudy)	Clogged jets in jet tubes	Remove and clean.
	Cube slides interfering with jets	Adjust
8. Improper harvest	Time clock not set properly	Reset on 2 1/2 Minutes.
	Incoming water restricted.	Check water lines, etc.
	Solenoid valve leaking. (Hot water tank)	Check during freeze cycle
	Head pressure too low	Adjust regulator on water cooled units
		Check fan cycling on air cooled units.

SERVICE ANALYSIS

Symptom	Possible Cause	Suggested Correction
8. Improper harvest (Cont'd.)	Machine not level. (Allow water to stand in upper cavities and freeze.)	Level machine.
9. High head pressure	Over-charge of refrigerant.	Purge
	Air in system	Purge
	Defective water regulating valve.	Replace
	Burned out or stuck fan motor(s) air cooled	Replace or oil as needed
	Water valve improperly adjusted	Readjust to desired head. Water cooled models 135# p.s.i.
	Incoming water restricted.	Check screens, lines, etc.
10. High suction	Dirty or plugged condenser. Air cooled.	Blow condenser clean
	Ineffiecient Compressor	Check with gauges and replace valve plate if necessary
	Overcharge of refrigerant.	Check frost line and high back pressures purge off excess.
11. Low suction pressure.	Restricted dryer.	Check back pressure and replace drier if necessary
	Moisture in system.	Blow charge, replace drier evacuate system and recharge per nameplate specs.

SERVICE ANALYSIS		
Symptom	**Possible Cause**	**Suggested Correction**
11. Low suction pressure. (Cont'd.)	Extreme shortage of refrigerant.	Add refrigerant. Check and correct system leaks.
	Ambient temperatures too low. Air cooled	Increase ambient to minimum 50° F.
12. Unit noisy.	Hold-down bolts on compressor not loosened.	Turn up until unit is free.
	Refrigerant lines vibrating.	Straighten
	Compressor short of oil.	Check oil level. Proper level 1 1/2 inches below crankcase port, or 1/2 of sight glass bullseye on compressor.
	High head pressures.	Check with gauges. Purge if necessary.
	Shroud touching fan blades on air cooled models.	Reposition shroud

SM 1005
Front View

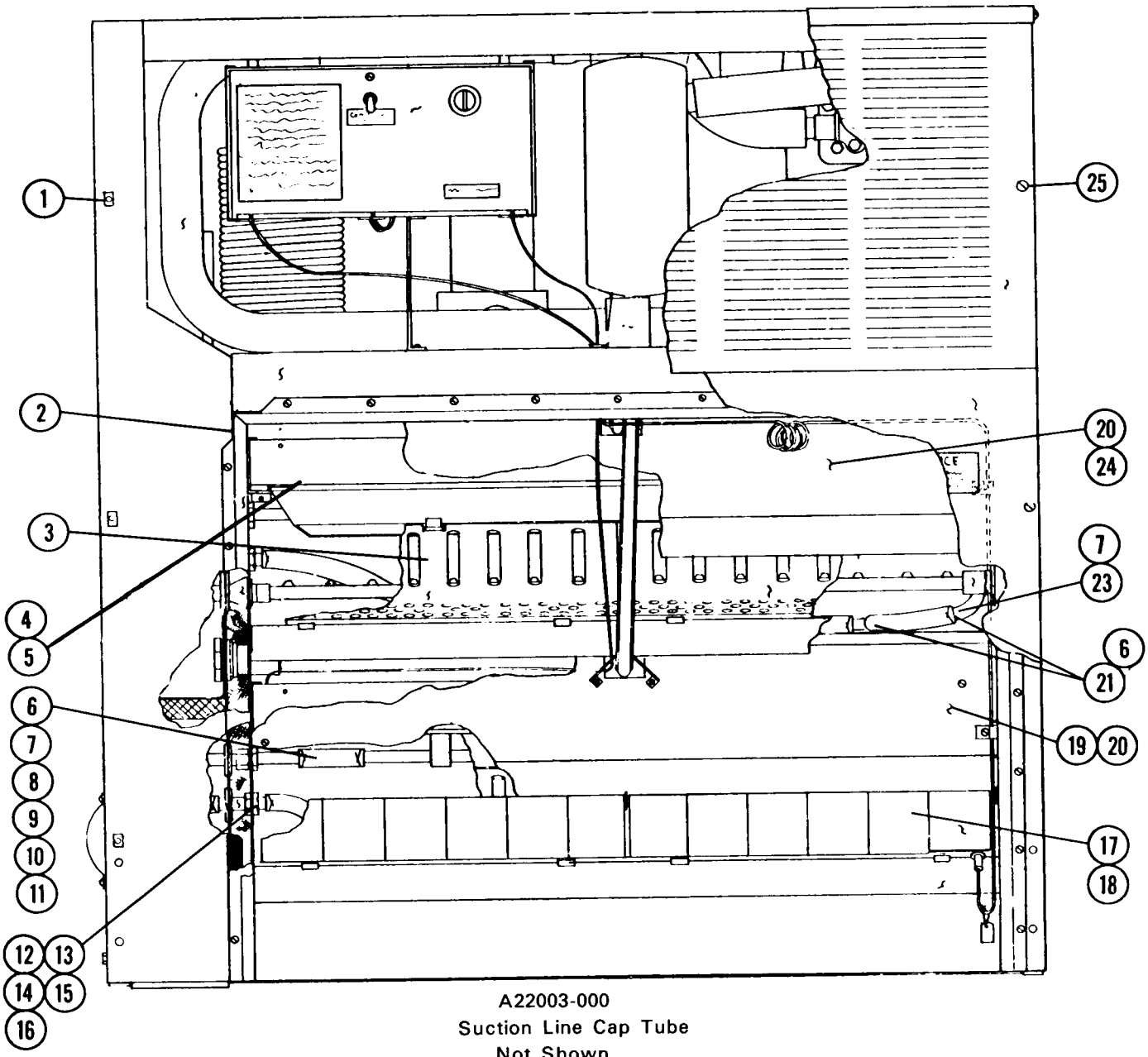

A22003-000
Suction Line Cap Tube
Not Shown

ITEM NO.	PART NO.	NAME
1.	03-1029-00	Nut (2 reqd.)
2.	A18165-000	Door Gasket (2 reqd.)
3.	A21003-000	Chutes (8 reqd.)
4.	A20934-000	Platen & Cup Assy. (2 reqd.
5.	13-0691-00	Rubber Cupholder only (2 reqd.)
6.	13-0674-07	Tygon 3/4" I.D. Per Foot
7.	02-1358-00	Hose Clamps 3/4"
8.	A18004-000	Inlet Water Assy.
9.	13-0617-02	"O" Ring
10.	13-0327-00	Grommet
11.	A13796-000	Inlet, Inner Assy.
12.	A18174-000	Inlet, Spray Bar
13.	A18172-000	Nut, Inlet Tube
14.	A18173-000	"O" Ring Nut
15.	13-0617-05	"O" Ring.
16.	13-0169-00	Grommet
17.	A17243-00	Curtain Assy. (4 reqd)
18.	03-0727-00	Thumb Screw (curtain)
19.	A17604-000	Face Plate, Lower
20.	03-1404-10	S.S. Screws 03-1404-10
21.	02-0536-01	Hose Clamps
22.		TEE 5/8x5/8x3/4
23.	13-0674-06	Tygon Tube 5/8" Per ft.
24.	A17603-000	Face Plate, Upper
25.	03-1418-22	Screws (12 reqd.)
		IN PACKAGE
	A19555-000	Bulb Cover
	13-0590-00	Gasket
	A16108-000	Bulb Holder Buttons

SM 1005

Left Side View

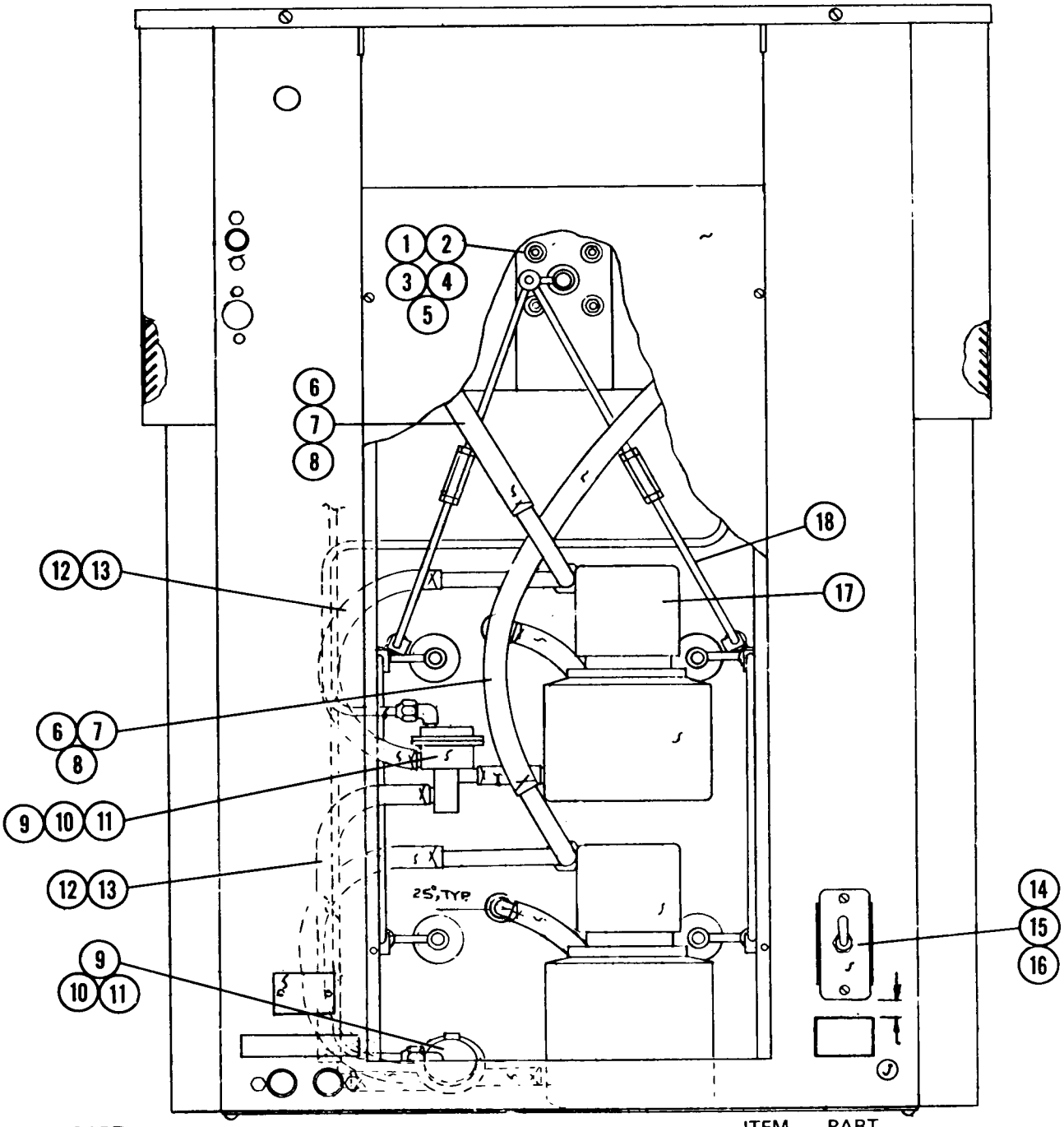

ITEM NO.	PART NO.	NAME
1.	A23372-001	Drive Motor
2.	13-0100-00	Grommet (4 reqd.)
3.	03-1403-22	Screw (4 reqd.)
4.	03-1406-03	Nut (4 reqd.)
5.	03-1407-05	Washer (8 reqd.)
6.	13-0674-07	Hose 3/8" I.D. per foot
7.	02-1358-01	Hose Clamps 3/4"
8.		Tank Outlet
9.	A19722-000	3 way Water Valve
10.	03-1403-28	Screws (4 reqd.)
11.	03-1417-05	Lockwashers (4 reqd.)
12.	02-0536-00	Hose Clamp
13.	03-0674-16	Tygon Hose 7/16 per ft.
14.	12-0426-00	Switch
16.	03-1403-17	Screw
17.	12-1395-01	Sump Pump
	A17569-000	Drive Linkage Complete

SM 1005, WATER COOLED

Top View

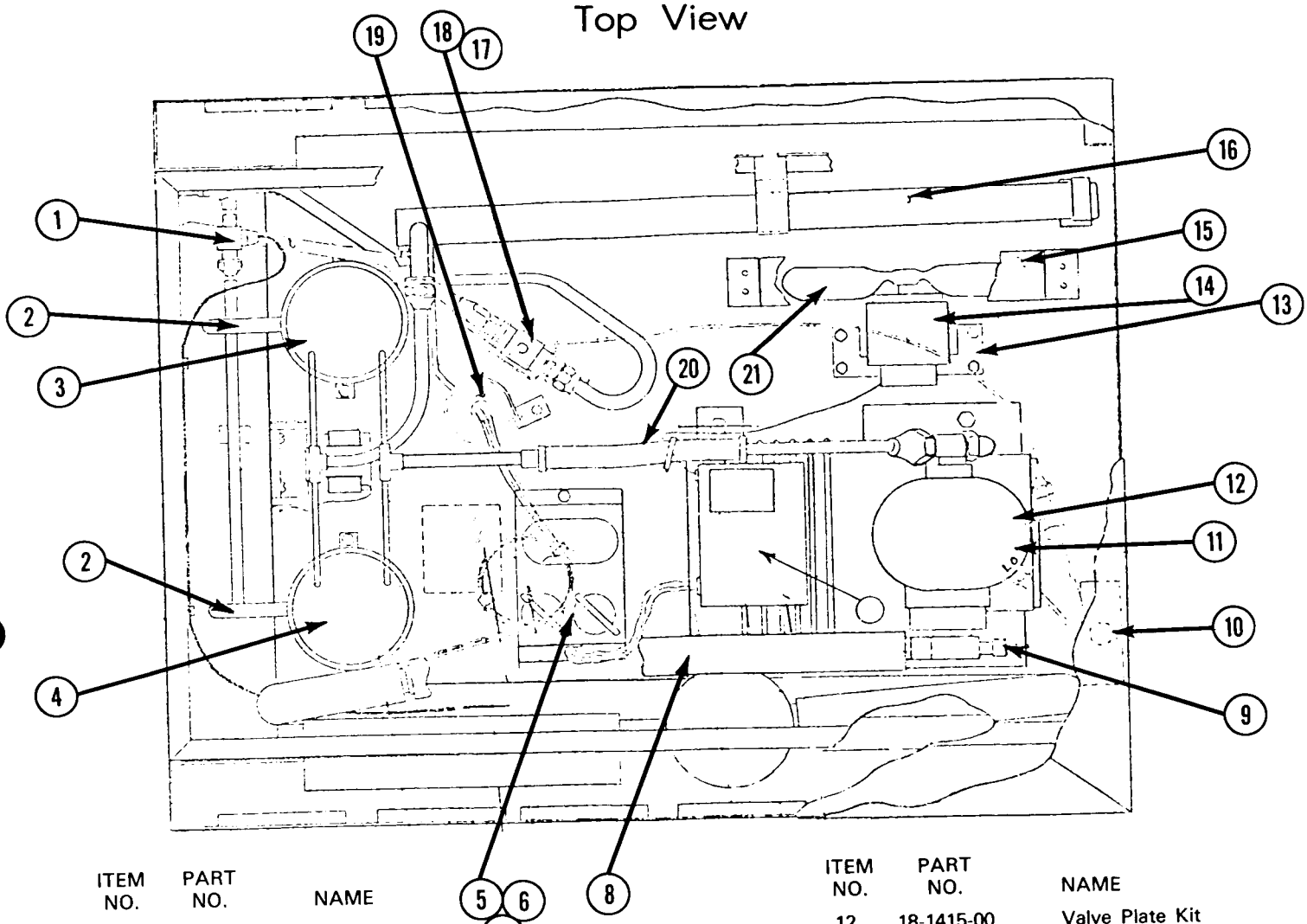

ITEM NO.	PART NO.	NAME
1.	120621G1	Solenoid Valve
2.	A21237-002	Flow Control
3.	A17836-000	Rear Water Tank
4.	A17837-000	Front Water Tank
5.	18-1901-27	Starting Capacitor
6.	187405-00	Overload
7.	18-1903-26	Relay
8.	16-0326-00	Flexible Line
9.	18-1410-00	Suction Service Valve
10.	11-0286-00	HI-LO Press Control
11.	18-1400-02	Compressor 115/230/60/1
	18-1400-03	Compressor 115/208/220/60/3
	18-1400-02	Compressor 115/208/60/1

ITEM NO.	PART NO.	NAME
12.	18-1415-00	Valve Plate Kit
13.	18-1421-00	Fan Bracket
14.	18-0788-02	Fan Motor 115/230/60/1
	18-0788-07	Fan Motor 115/208/220/60/3
15.	A24927-001	Fan Shroud
16.	18-1422-00	Condenser
17.	11-0198-01	Water Regulating Valve
18.	A18500-000	Regulator Bracket
19.	02-0822-00	Dryer
20.	16-024700	Vibration Eliminator
21.	18-0787-00	Fan Blade

SM 1005, AIR COOLED
Top View

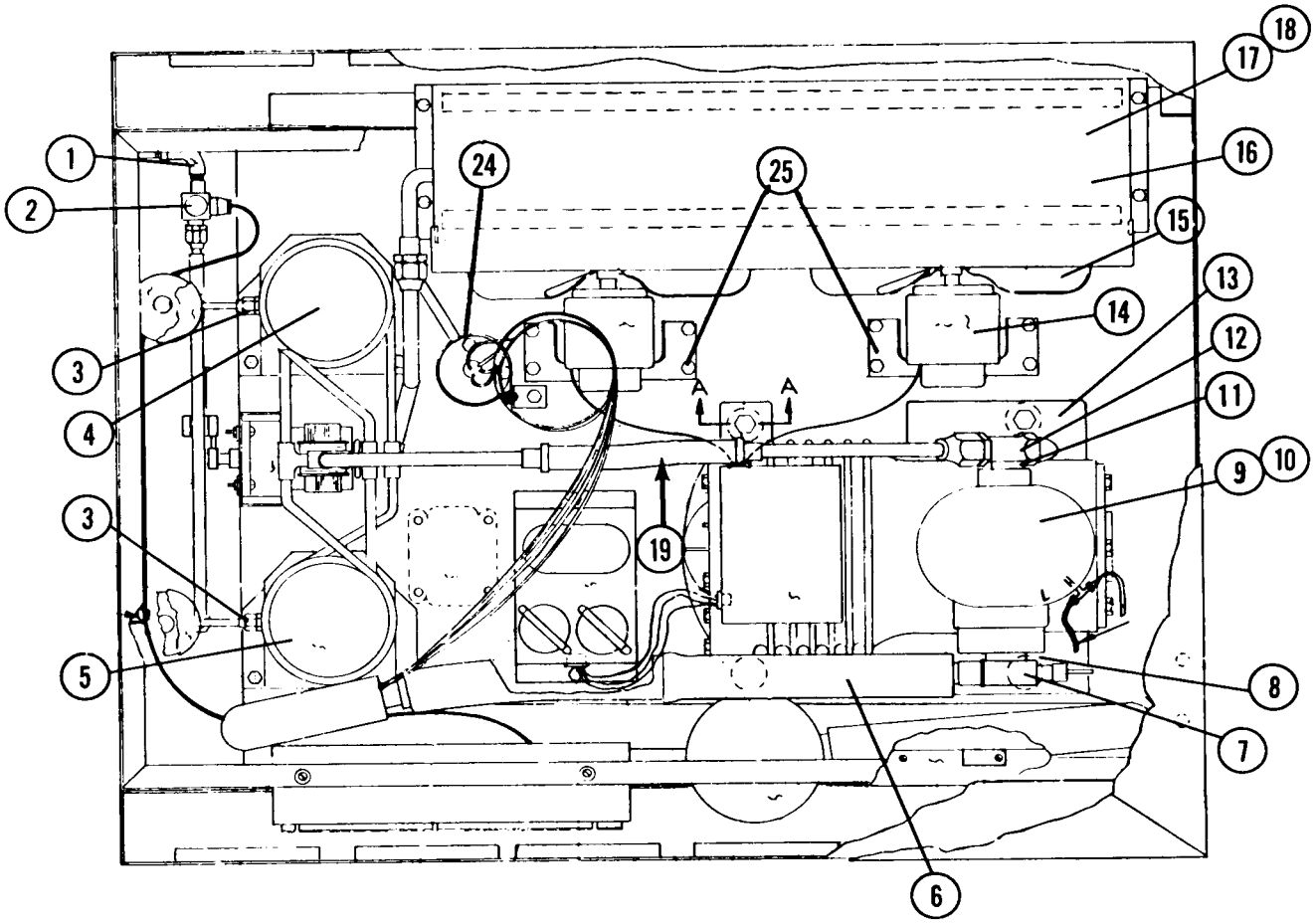

ITEN NO.	PART NO.	NAME
1.		Street Elbow
2.	12-0621G1	Solenoid Valve
3.	A21237-01	Flow Control
4.	A17836-000	Rear Water Tank
5.	A17837-000	Front Water Tank
6.	16-0326-00	Flexible Line
7.	18-1410-00	Suction Serv. Valve
8.	18-0736-00	Suction Serv. Valve Gasket
9.	18-1400-02	Compressor 230/60/1
	18-1400-03	Compressor 208/230/60/1
10.	18-1411-00	Valve Plate Kit
11.	18-1411-00	Discharge Serv. Valve

ITEM NO.	PART NO.	NAME
12.	18-0242-00	Discharge Valve Gasket
13.	18-1929-01	Crank Case Heater*
14.	18-0788-02	Fan Motor
15.	18-0787-00	Fan Blade
16.	18-0399-01	Condensor
17.	A13860-000	Shroud Assy.
18.	03-1404-15	Shroud Fasteners (6)
19.	16-0247-00	Vibration Eliminator
20.	18-1405-00	Overload
21.	19-1901-26	Starting Capacitor
22.	18-1902-20 (2 reqd.)	Running Capacitor 13/52
23.	18-1903-26	Relay
24.	02-0822-00	Dryer
25.	18-1421-00	Fan Motor Bracket

(*) Not Shown

CONTROL BOX ASSEMBLY

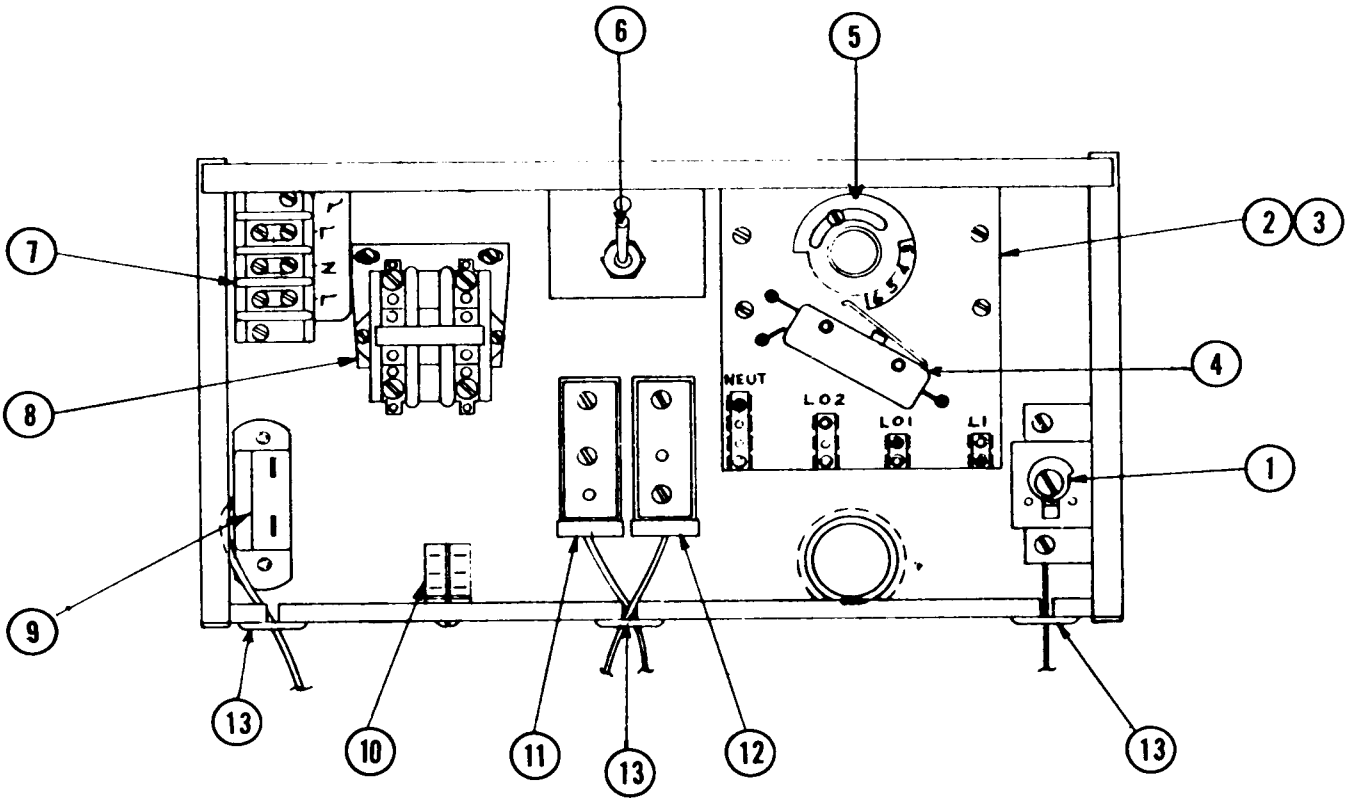

PART NO.	ITEM NO.	NAME
1.	11-0370-00	Cube Size Control
2.	A19070-021	Timer Motor Only*
3.	A25923-00	Timer Assembly Complete
4.	12-1480-06	Micro Switch
5.	02-1651-00	Cam Assembly
6.	12-0426-00	Switch
7.	12-0813-00	Terminal Block
8.	12-0820-01	Contactor 230 V 60 Cy 1 Ph
9.	11-0353-01	Bin Thermostat
10.	12-1645-00	Relay
11.	11-0342-00	Left Fan Control } Air Cooled
12.	11-0343-00	Right Fan Control } Models Only
13.	13-0124-00	Grommet
8.	12-0739-01	Contactor 208-220V 60 Cy 3 Ph *

* Not Shown

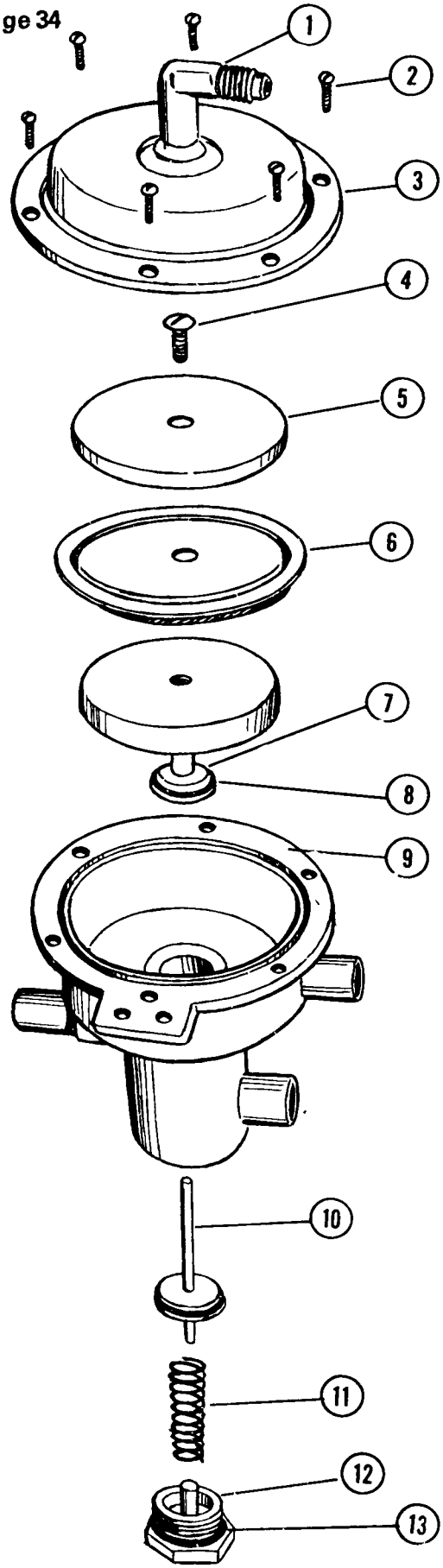

3-WAY WATER VALVE
SM 1005

ITEM NO.	PART NO.	NAME
1.	16-0190-00	Elbow
2.	03-1403-06	Screws
3.	A18192-000	Valve Cover
4.	13-1506-01	Screw
5.	A18312-000	Diaphram Cover
6.	13-0606-00	Rolling Diaphram
7.	A17941-000	Plunger Assy.
8.	13-0617-01	"O" Ring
9.	A17947-000	Valve Body
10.	A17942-000	Plunger Assy.
11.	02-1545-00	Spring
12.	A17937-000	Valve Cap Bottom
13.	13-0617-02	"O" Ring
	A19722-000	Valve Complete

SM 1005 LINKAGE ASSEMBLY, H MODELS
A-17569-00

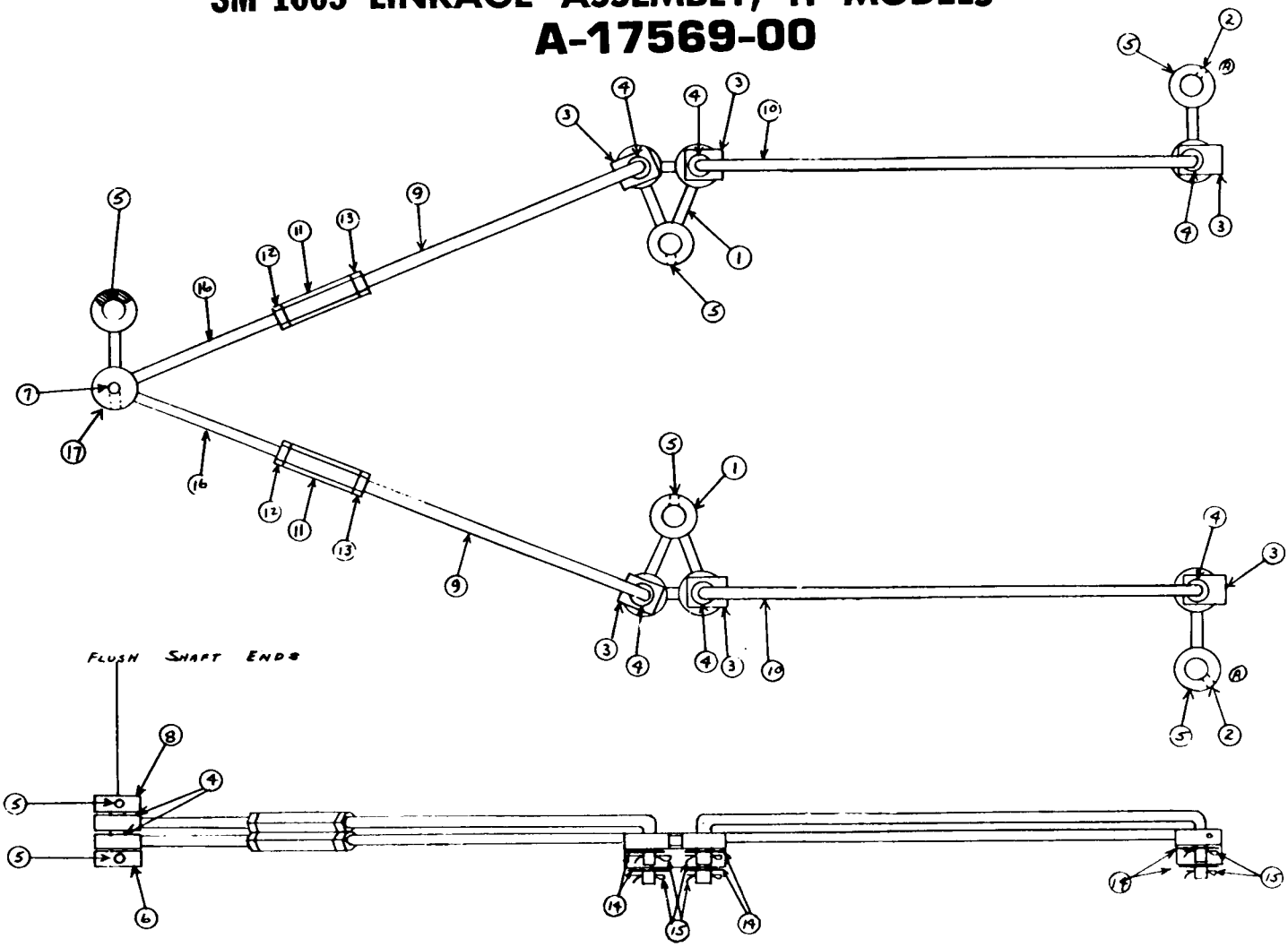

ITEM NO.	PART NO.	NAME
1.	A17233-000	Double Drive Arm
2.	A17232-000	Drive Arm
3.	S07558-000	Bearing Clip
4.	02-0654-01	Bearing
5.	03-0431-00	Set Screw
6.	A18948-000	Motor Drive Arm
7.	A13849-000	Shaft
8.	A13848-000	Arm End
9.	S07938-000	Right Linkage
10.	A17568-000	Lower Linkage
11.	S07936-000	Linkage Coupling
12.	S07937-000	Left Linkage Nut
13.	03-1407-05	Washer
14.	03-0396-01	Cotter Pin
15.	A13850-000	Linkage Upper Assy.
16.	A18948-000	Motor Drive Arm

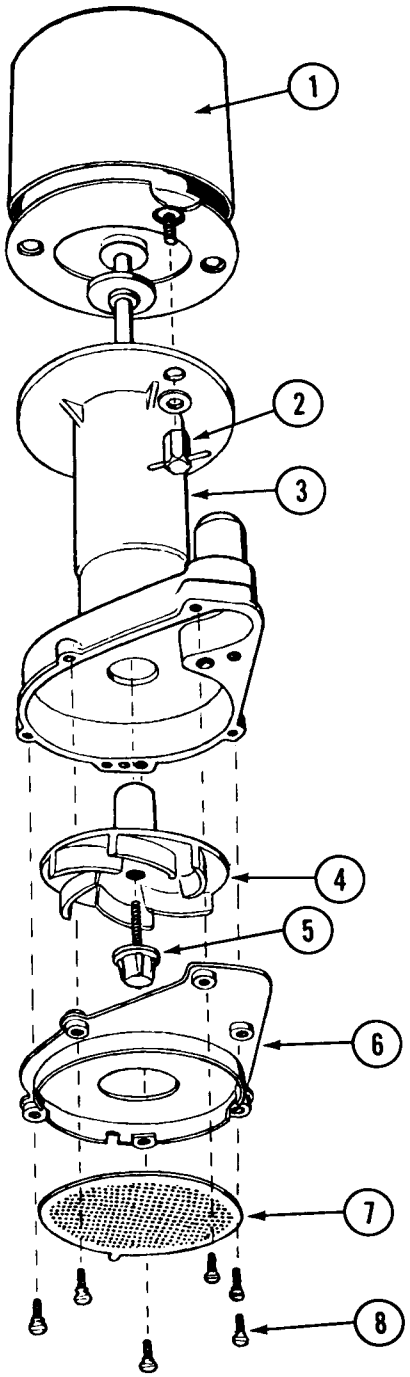

SUMP PUMP SM1005

ITEM NO.	PART NO.	NAME
1.	12-1395-32	Motor Only
2.	12-1351-32	Wing Hex Nuts
3.	12-1351-30	Pump Body
4.	12-1351-21	Impellar and Spring
5.	12-1351-31	Impellar Screw and Gasket
6.	12-1351-27	Bottom Inlet Plate
7.	12-1351-26	Inlet Screen
8.	12-1351-29	Wing Screws
	12-1395-01	Complete Pump

SM1005 SPRAY TUBE AND SPRAY TUBE DRIVE ASSEMBLY

4 per Unit

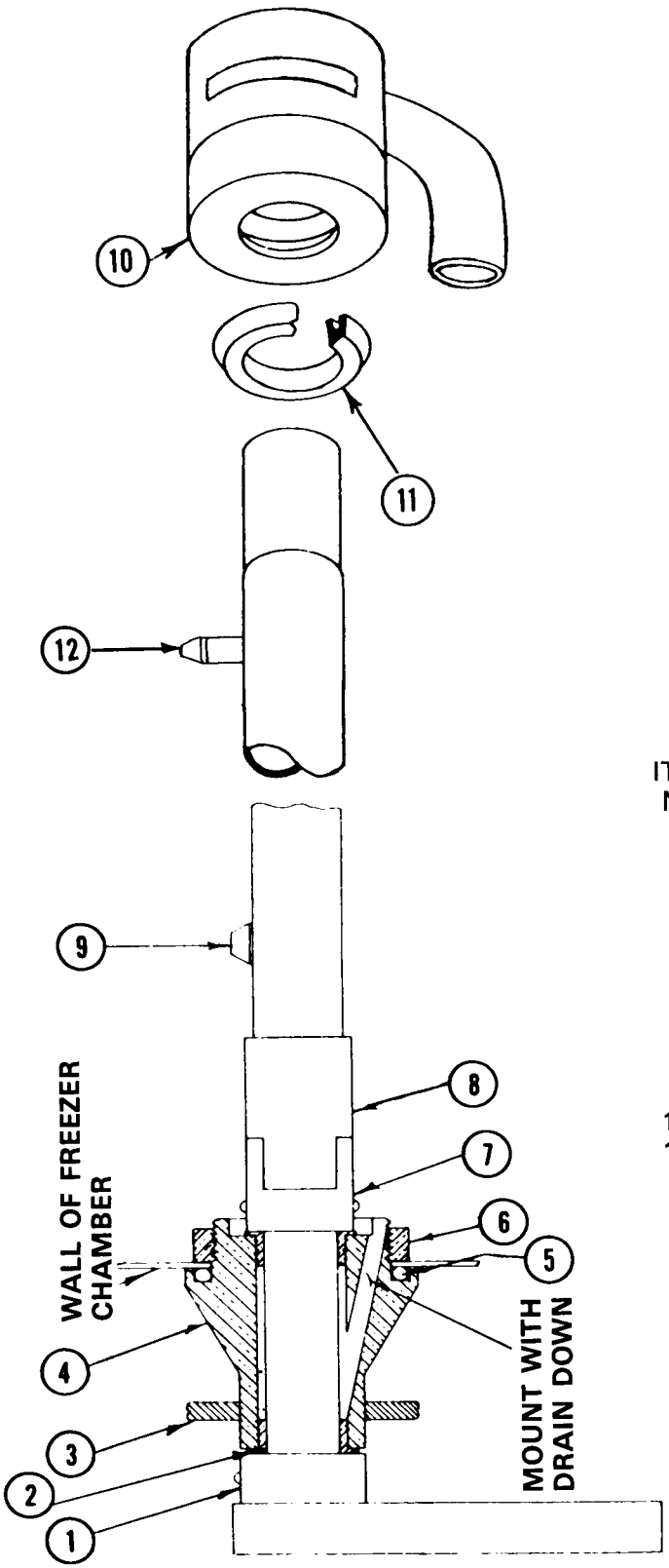

ITEM NO.	PART NO.	NAME
1.	S07130-000	Collar
2.	02-0438-00	Flange Bearing
3.	13-0169-00	Frommet
4.	S08887000	Drive Bearing Support
5.	13-0617-33	"O" Ring
6.	S07635-000	Nut
7.	A13837-000	Driving Journal Assy.
8.	A17563-000	Sprayer Tube
9.	02-1803-000	Jet
10.	A16963-000	End Bearing Assy.
11.	13-0168-00	"U" Cup

SM 1005 CASE PARTS
Air and Water Cooled

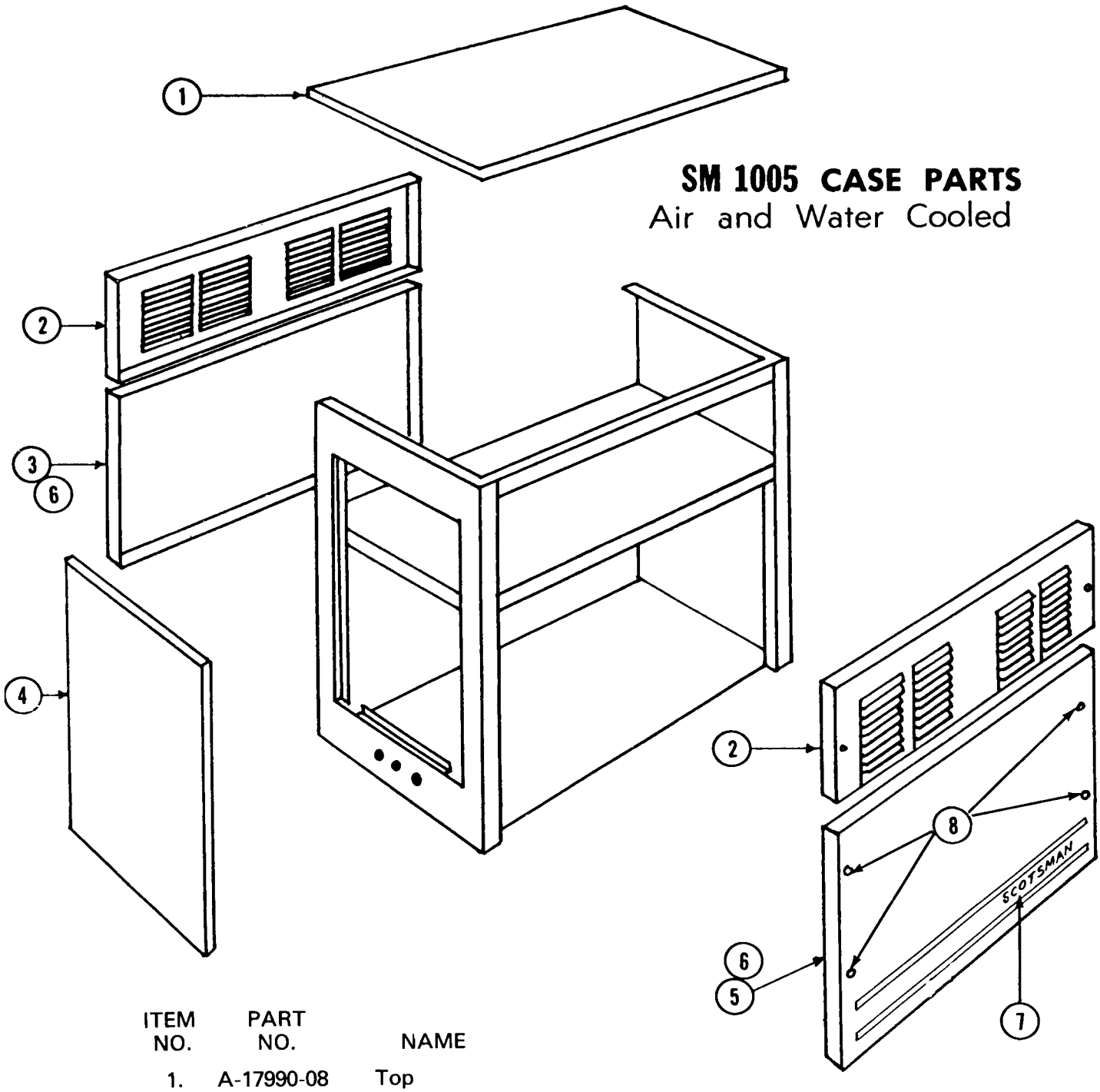

ITEM NO.	PART NO.	NAME
1.	A-17990-08	Top
2.	A17988-08	Upper Door
3.	A-17684-02	Rear Lower Door
4.	A-17710-08	Left Door
5.	A-17663-000	Front Lower Door
6.	02-1548-00	Plastic Door Liner
7.	15-0474-01	Emblem Decal
8.	03-1418-22	Screws (26 Reqd)

SERVICE-COMPLETE UNIT

ALL STEPS LISTED BELOW SHOULD ONLY BE STARTED WHEN WATER AND ELECTRICAL SUPPLY ARE OFF TO PREVENT ACCIDENTS.

TO REMOVE SUMP PUMP

1. Remove left access panel. (4 screws)
2. Loosen hose clamp on sump pump discharge tube.
3. Pull sump pump out.
4. Pull wire from pump to control box.
5. Replace pump in reverse of above. Note: Always try new pump in shop before putting on the job.

TO REMOVE DRIVE MOTOR

1. Remove left side panel.
2. Loosen set screw on drive journal arm to motor.
3. Take 4 nuts loose on mounting bracket to motor, including the four rubber grommets.
4. Pull electrical cord from control box receptacle.
5. Install new motor in reverse of above.
6. Check and adjust spray bar travel as required.

TO REMOVE SPRAY TUBE ASSEMBLY

1. Remove lower front door.
2. Remove plastic curtain and cube chutes.
3. Lift right end of spray bar out of holder. This loosens spray bar, also the tygon tubing connection and elbow.
4. Pull tygon tubing and stationary elbow off this end of spray tube. (Has rubber O-Ring sealer).

TOREMOVEWATER INLET SOLENOID/FLOW CONTROL

1. Remove cabinet top.
2. Pull electrical leads from spade terminals on top of solenoid.
3. Loosen the 3/8'' S.A.E. flare nut on outlet side of valve.
4. Unscrew entire valve body assembly from its pipe fitting on inlet side.
5. Replace in reverse of above.

TO REPLACE MOTOR COMPRESSOR VALVE PLATE

1. Install compound gauge in suction service valve port and close suction service valve by turning valve stem all the way in (Front seated).
2. Operate motor compressor until gauge reading reaches zero. Turn off unit.
4. Loosen all head bolts and tap lightly with rubber-faced or plastic hammer to break loose.
5. Remove head, defective valve plate and any gasket material that may have stuck to head or compressor body.
6. Install new valve plate with all new gaskets as provided, tightening each head bolt a little at a time until all are snug.
7. Remove port gauge plug from discharge valve and crack open suction side letting gas purge off trapped air from head. Install hi side gauge in this port, back up both service valve stems and check around valve plate for Refrigerant leaks.
8. Start unit, noting head and back pressures. If normal, let run until compressor gets warm. Tighten all head bolts once more, and again check for leaks.

SERVICE COMPLETE UNIT (Continued)

TO REPLACE THE COMPRESSOR

1. Front seat both suction service valve and discharge service valve on the compressor.
2. Disconnect the wiring from the compressor.
3. Remove the bolts holding the service valve to the motor compressor body.
4. Remove the compressor hold-down nuts and lift the compressor out of the unit.
5. Reverse steps 1 through 4 in replacing the compressor.
6. Check the compressor for oil before connecting the oil lines. Should be 2 inches down from the top of the oil plug hole, or 1/2 of sight glass.
7. Remove the gauge port plug from the discharge service valve. Crack the suction service valve slightly, allowing some gas to escape out the gauge port of the discharge valve. When you have thoroughly purged the compressor, replace the plug and open all valves. It may be necessary to charge the unit because some of the gas was lost when the defective compressor was removed. Check and charge if necessary.

TO REPLACE SILENT 3-WAY WATER VALVES

1. Remove left side access panel
2. Remove 2 screws from mounting bracket.
3. Remove top 1/4" flare fitting.
4. Remove 3 hose clamps.
5. Replace in reverse.

FUNCTIONAL PARTS AND MAINTENANCE

PART NAME: Relay Ameco or Potter Brumfield 2 P.D.T.

NUMBER: 12-1645-00

FUNCTION: Relay is used as a by-pass on the bin thermostat when it tries to cut unit off on a full bin of cubes during a freezing cycle. This insures full cubes every time a harvest occurs and prevents short cycling on bin thermostat.

SETTING: Factory set.

REPAIRABLE: No. Replace when inoperative.

MAINTENANCE: Check electrical connections and blow points free of lint or dirt.

PART NAME: Temperature Control Storage Bin.....Cutler Hammer

NUMBER: 11-0353-01

FUNCTION: To automatically cut machine off when ice level in storage bin reaches thermobulb. Automatically starts machine when ice level in bin falls below bulb location.

SETTING: These controls have adjustable differential. Setting on range dial should be 35° out, 39° in.

REPAIRABLE: No. Replace when inoperative. If out of warranty it can be sent in through your local refrigeration supply dealers and relaced for a small percentage of original cost.

MAINTENANCE: Check capillary for cracks or worn spots due to vibration..

Hold a small handfull of ice on thermostat bulb to check operation of control. Tighten electrical connections.

PART NAME: Inlet Water Solenoid

NUMBER: 12-0621-G1

FUNCTION: During freezing cycle this valve is closed, keeps water from entering heat exchanger tank and also from leaking out of tank.

During harvest or defrost cycle this valve opens and allows inlet water to pass to flow control orfice and thence to push warm water out of heat exchanger tank into back of cups molds, performing the defrost.

SETTING: Factory set.

REPAIRABLE: Yes

MAINTENANCE: Flush control each six months.

FUNCTIONAL PARTS AND MAINTENANCE

PART NAME: Drive Motor

NUMBER: A23392-001

FUNCTION: This motor is used to drive the linkage mechanism which in turn drives the oscillating jet spray tubes, this provides a constant spray movement to all the inverted cube molds and by so doing also aerates the water producing clear, solid Scotsman Cubes.

SETTING: No setting on motor.

REPAIRABLE: Yes--to some extent. Not recommended although front bearings and windings could possibly be replaced by electric motor shop. Normally replace out of warranty motors.

MAINTENANCE: Drive linkage should be inspected to insure free movement with no binding or drag on drive motor.

PART NAME: Time-Finishing Clock Manufactured by Queen Products Div.

NUMER: A25923-001

FUNCTION: Heart of cyclematic control system is the reverse acting cube size control, No. 11-370, and the time clock it actuates. All electrical components are connected to the time clock terminal board and are shunted by means of a double pole single throw micro-switch to either the freezing cycle or harvest cycle. Micro-switch is in turn actuated by a plastic cam that is directly connected to the electric timer clock motor. Timer has 15 minute cycle, 12 minutes on freezing cycle after being cut on by lo temperature control and 3 minutes on defrost cycle.

The cam assembly on the timer consists of two plastic discs which can be adjusted to lengthen or shorten the defrost cycle.

SETTING: Normal setting for defrost is on No. 2 1/2 which is 3 minutes..

REPAIRABLE: Yes, Micro-switch, part No. 12-1480-00, Timer motor, part No. A19070-021 and cam Ass'y part No. 02-1651-00 are replaceable.

MAINTENANCE: Check all electrical connections, Blow contact point free of dust, dirt, etc.

FUNCTIONAL PARTS AND MAINTENANCE

PART NAME:	Reverse Acting Cube Size Control
NUMBER:	11-0370-00
FUNCTION:	Reverse acting temperature control, closes on temperature decrease, opens on temperature rise. Control determines length of freezing cycle and by the same token, the cube size. A lower setting on control will produce larger cubes, a higher setting, smaller cubes. This control actuates time clock motor, Part No. A-25923-00 which then takes over balance of freezing cycle and also defrost period.
SETTING:	Turn dial clockwise to lower setting.
REPARIABLE:	No. Replace when inoperative.
MAINTENANCE:	Check electrical connections. Blow points free of dust, dirt, lint, etc.
PART NAME:	Sump Pump
NUMBER:	2 per unit 12-1395-01
FUNCTION:	Recirculating pump used to pump supply water in sump tank to jet tubes during freezing cycle.
SETTING:	Factory set.
REPAIRABLE:	Motor only available part no. 12-1395-32
MAINTENANCE:	Flush out sump tank and sump pump intake with Scotsman ice machine cleaner.

FUNCTIONAL PARTS AND MAINTENANCE

PART NAME:	Control Hi-Pressure Penn
NUMBER:	11-0342-06
FUNCTION:	To control one condenser fan motor between pressures of 170 lbs. and 150 lbs.
SETTING:	Factory set.
REPAIRABLE:	No.
MAINTENANCE:	None.
PART NAME:	Control Hi-Pressure Penn
NUMBER:	11-0343-00
FUNTION:	To control one condenser fan motor between pressures of 155 lbs. and 135 lbs.
SETTING:	Factory set.
REPAIRABLE:	No
MAINTENANCE:	None
PART NAME:	3 way valve
NUMBER:	A-19722-000
FUNCTION:	To route water for freezing and harvest cycles. Incoming water pressure during harvest flexes rubber diaphram against valve stem assy. which opens and closes necessary ports. Stem is spring loaded for return to position during freezing cycle.
SETTING:	None
REPAIRABLE:	Yes, diaphram, "O" ring and spring replacable.
MAINTENANCE:	Flush during maintenance cleaning.

MAINTENANCE INSTRUCTION FOR SCOTSMAN CUBERS

THE FOLLOWING MAINTENANCE MUST BE ACCOMPLISHED TWO (2)TIMES PER YEAR ON ALL SCOTSMAN CUBERS. CALL YOU AUTHORIZED SCOTSMAN SERVICE DEPARTMENT.

1. Clean air-cooled condenser. This is to be done frequently with the machine shut off.
2. Clean evaporator, sump tank and screen, using Scotsman Ice Machine Cleaner or equivalent..
3. Remove jet tube and manually clean jets by unscrewing jets.
4. Check curtain assembly.
5. Tighten all electrical connections.
6. Tighten all bolts.
7. Check water supply. Clean and flush flow control. Clean water strainer
8. Oil jet tubes drive motor three (3) places. Use SAE 20 oil-2 oil sups, 1 crank case screw covered opening.
9. Oil condenser fan motor. Punch sealed cap or remove screws where possible.
10. Check for refrigeration leaks.
11. Check for water leaks. Tighten drain line connections.
12. Check size and condition of cubes. Adjust as required. See Service Analysis Section.
13. Check bin thermostat setting. Factory set as 35° out, 39° in.

CLEANING INSTRUCTIONS FOR SCOTSMAN ICE MACHINES MODELS SC1000 AND SM1005

1. Remove front access doors.
2. Locate control box with time clock knob protruding thru cover
3. Put unit through a harvest cycle manually. This may be done by turning the time clock knob clockwise until the arrow on the knob is pointing to the hole in the control box cover.
4. Locate the two funnels which are directly under the top cover on the left end of the machine. Remove the metal covers from the funnels. Immediately after the arrow and the hole are lined up as descreibed in Step #3, pour 24 ounces of "Scotsman Ice Machine Cleaner" into each funnel.
5. Let unit finish cube harvest cycle and start into freezing cycle. This will be approximately 5 minutes after step #3. At this time turn off the compressor switch.
6. Let unit operate normally for 10-15 minutes into the freezing cycle. No ice will be made because the motor compressor is not in operation.
7. At the end of this time put the unit through 2 or 3 harvest cycles manually to allow fresh make up water to clean out remaining solution. Each time waiting approximately 5 minutes after the arrow and the hole are lined up until the next harvest cycle is done manually.
8. Turn the compressor switch back on.
9. Check each new batch of cubes until they are clear and until acid taste has been removed from cubes.
10. Put hot water in storage bin to melt the cubes and thereby clean the drains with the same solution that has just cleaned the unit.
11. Use a damp cloth to wipe off curtains and inside of storage bin.
12. Replace all access doors.
13. Unit is now ready for continued automatic operation.

B-700 STORAGE BIN FOR SM 1005 CUBER

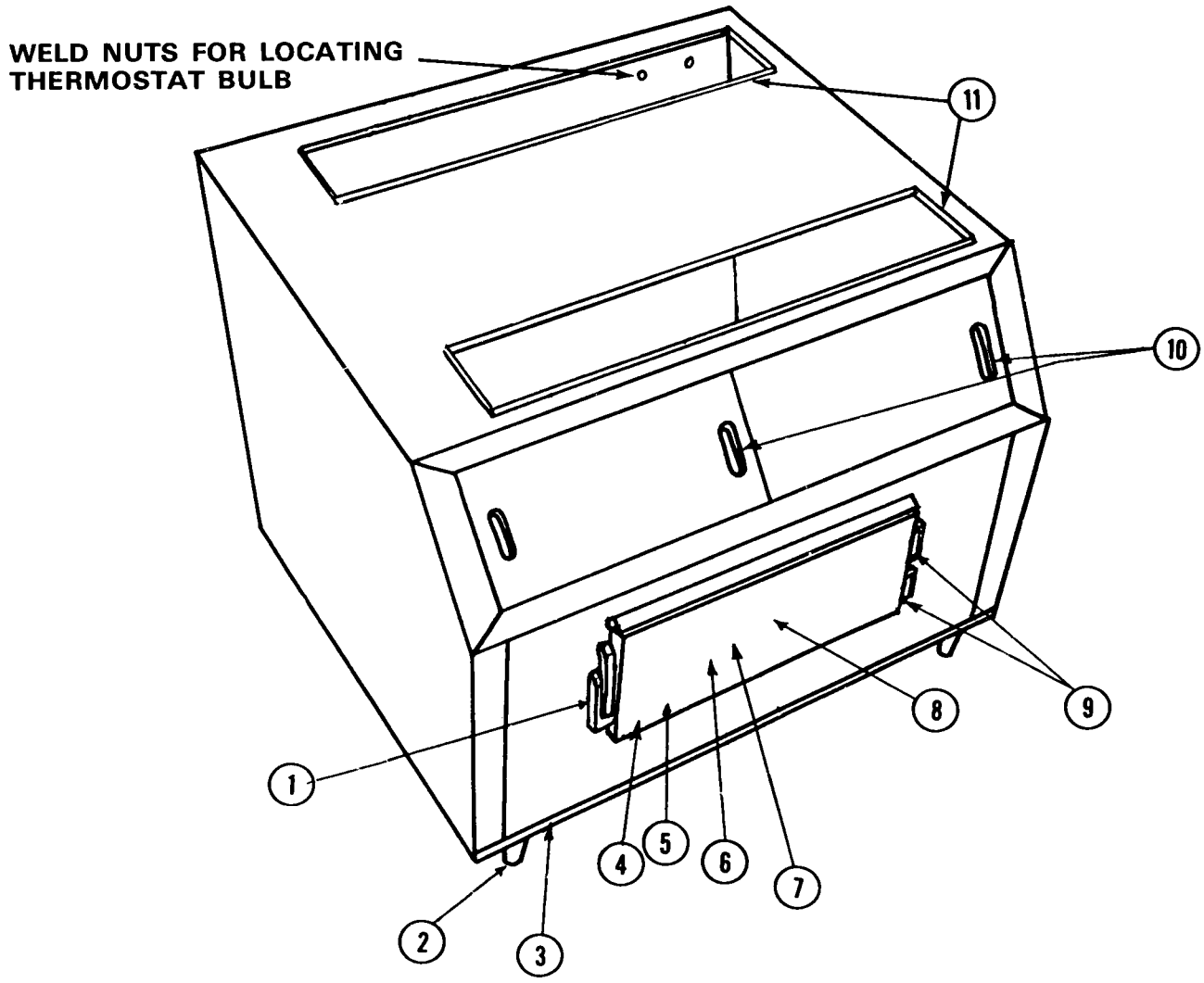

ITEM NO.	PART. NO.	NAME
1.	02-1568-00	Latch & Strike
2.	KLP2	Leg (4 reqd) - Optional - Not With Bin
3.	NOT AVAILABLE	Moulding
4.	A15114-000	Baffle*
5.	A17342-000	Spill Door*
6.	02-1000-00	Door Liner*
7.	13-264-00	Door Gasket*
8.	A18300-05	Door Assy. Complete with Harware--grey
9.	A18300-002	Door Assy. Stainless Steel
9.	02-1569-00	Hinges
10.	02-1529-00	Sliding door Plastic 2/unit
* Not Shown	A-18770-000	Sliding Door Stainless Steel
11.	02-1544-000	Gasket

TABLE OF CONTENTS

Foreward	1
Table of Contents	2
Photograph and Ice Making Capacity	3
Specifications and Dimensions	4-5
Selecting Location:	
Location	6
Uncrating	6
Preparation for Installation	6-7
Installation	7-8
Water Supply and Drain	8
Electrical Connection and Characteristics	8
Wiring Diagrams	
Air Cooled	9
Water Cooled	10
Diagram Plumbing Connections	11
Final Check List	12
Start-up	13-14
Cycle of Operation:	
Harvest Cycle	15-16
Freezing Cycle	17-18
Service Analysis Charts	19-20
Exploded Views - Component Parts:	
Sump Pump	21
Water Valve Assembly	22
Control Box	23
Complete Unit (End View)	24
Complete Unit (Front View)	25
Case Parts	26
Condensing Unit (Air Cooled)	27
Condensing Unit (Water Cooled)	28
Service Information	
Drive Linkage	29
Spray Bar Ass'Y.	30
Functional Parts and Maintenance	31
Service Complete Unit	32
Maintenance Instructions	33
Parts List	34-35

THIS PAGE
INTENTIONALLY
LEFT BLANK

THIS PAGE
INTENTIONALLY
LEFT BLANK

SCOTSMAN®

SUPER CUBER

SM-105

SERIES

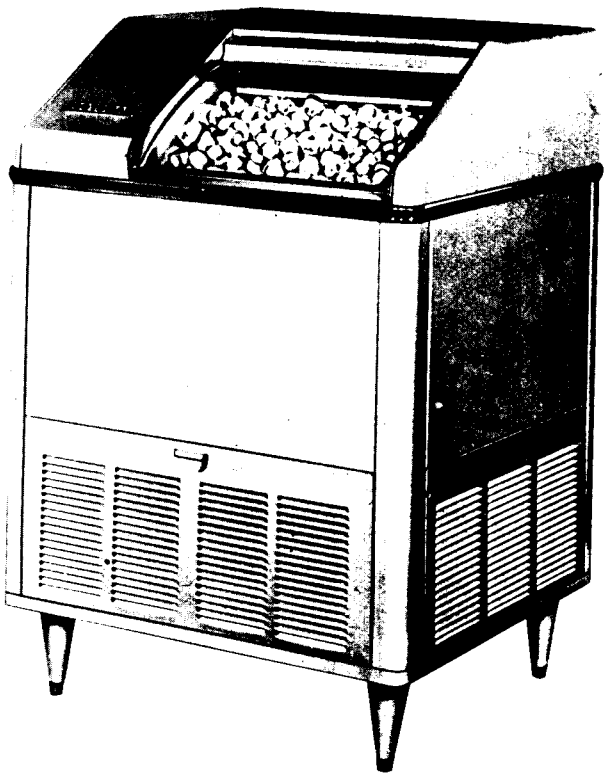

ice making capacity

Air Cooled Models

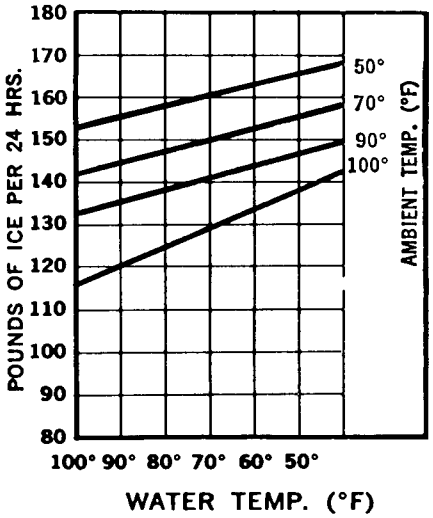

Water Cooled Models

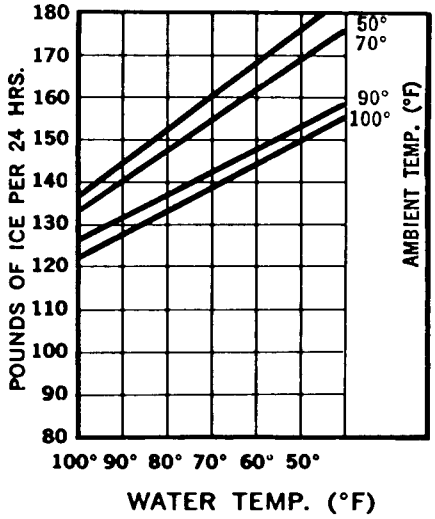

SPECIFICATIONS

SUPER CUBER SM105 **SERIES**	SM-105J	SM-105WJ	SM-105J-SS	SM105WJSS
CONDENSER, Air Cooled	X		X	
CONDENSER, Water Cooled		X		X
WATER DRAIN, Condenser - 5/8" O.D.		X		X
FINISH, Hammerloid Grey	X	X		
FINISH, Stainless Steel			X	X
SHIPPING WEIGHT	319	325	326	330

DAILY CAPACITY up to 150 lbs.
STORAGE BIN CAPACITY (Self-Contained) 50 lbs.
COMPRESSOR 1/2 H.P.
ELECTRICAL 115 V, 60 CY, 1 PH
WATER INLET, 3/8" SAE Flare
WATER DRAIN, Bin - 5/8" O.D.

STORAGE BIN, Stainless Steel
HEIGHT (with legs) - 45 1/4" to 46"
HEIGHT (without legs) - 39 1/4"
WIDTH - 34 1/8"
DEPTH - 24 1/2"

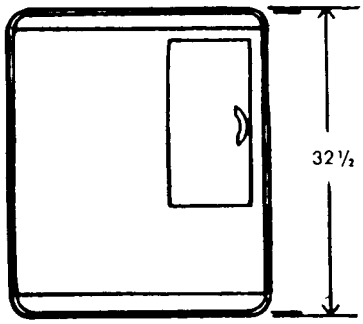

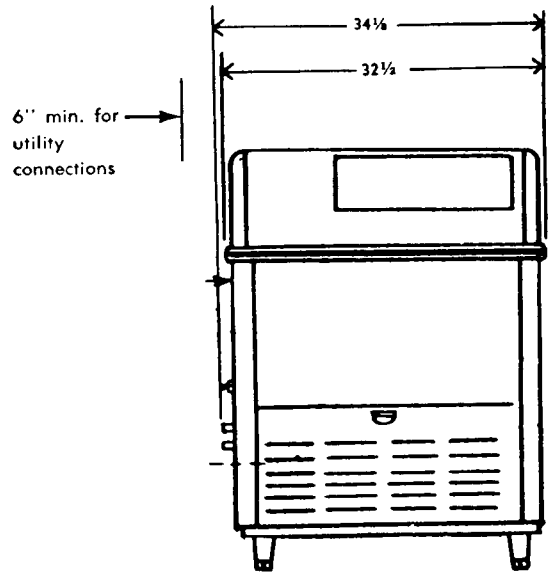

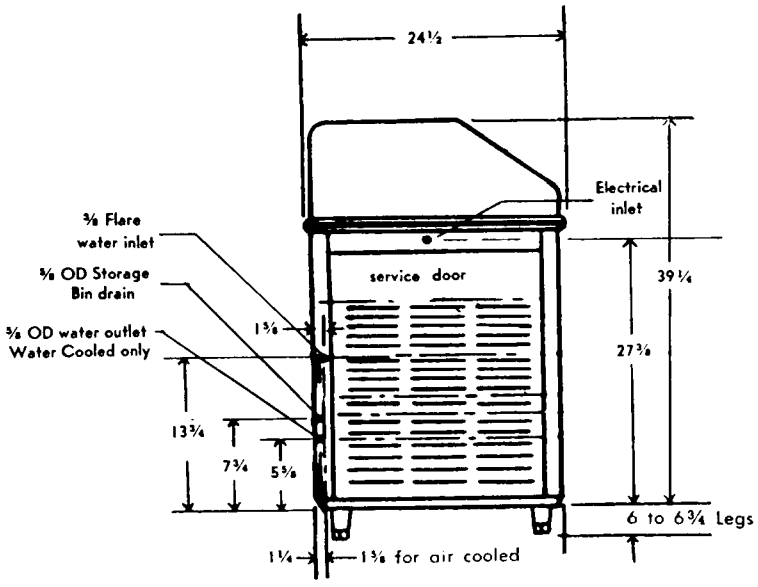

SPECIFICATIONS

	SM105J-1	SM105WJ-1
Compressor - Copeland	RSF-0050-1AA	Same
Volts & Hertz	115 v-60	115 v-60
Amperes	11.2	11.2
Fan - Wattage	7.0	None
Sump Pump Amperes	2	2
Spray Bar Motor - Wattage	35	35
Defrost - Warm Water Heated By	Hot Gas	Hot Gas
Total Power Consumption - Amperes	13	13
Refrigerant Type	Refrige-rant 12	Refrige-rant 12
Refrigerant Charge	28 ounces	28 ounces
Cubes Per Harvest	60 Full size Medium cubes	60 Full Size Medium cubes
Water Consumption to Produce Ice	5 Quarts per hour	5 Quarts per hour
Water Used by the Condensing Unit		45 Gallons per hour. Average-Varies with Water Temperature

DIMENSIONS

Height with 6" Legs	46"	46"
Height-Less 6" Legs	39 1/4"	39 1/4"
Width	34 1/8"	34 1/8"
Depth	24 1/2"	24 1/2"

Weight	Shipping	Net
SM105J	319	265
SM105WJ	325	271
SM105J-SS	326	271
SM105WJ-SS	330	275

INSTALLATION

UNCRATING OF MACHINE

1. The complete machine comes in one crate. After the crate is removed, inspect for concealed damage. Remove the bottom skid by removing all bolts. Then cut all wires holding support packing from refrigerant line. Be sure the compressor is snug on rubber mounts. Then check all refrigerant lines for rubbing or touching other surfaces. Also check for possible transportation damage.

2. Remove all service doors and panels.

3. Remove leg package in compartment base and install 4 legs in unit base sockets. Level unit with adjustable legs.

4. Remove protective shipping tape from bin door, freezer curtain.

5. Remove water strainer from storage package for installation in water supply line feeding unit.

6. Open electrical control box and prepare for hook up, use knock outs, cord connectors, etc. Then check unit name plate voltage against building source voltage and make sure they correspond. Caution - improper voltage supplied to units will void your warranty protection.

7. Make sure suction service valve on the condensing unit is fully back seated. Replace the valve cap after checking. All models are shipped with valve back seated. Not necessary on units equipped with Schrader Valves.

8. Make sure that the flow of air is not impeded in any way over condenser on air-cooled models. Keep condenser clean. (Check and clean the condenser monthly.)

9. Operating room temperatures are minimum 50° F. and maximum 100° F.

10. Have the installation and warranty cards been filled out sent to the factory to insure warranty protection?

LOCATION OF THE ICE CUBE MACHINE

UNDER BAR INSTALLATIONS - Locate, if possible, so left end panel is accessible. Locate unit so proper circulation can be attained around the unit and behind it at least four inches. Provide plumbing and electrical connections so the unit can be moved out where the entire top hood can be removed and the unit can still be operated.

KITCHEN INSTALLATION - As a rule, the kitchen is not the most practical place to install an air-cooled condensing unit, as grease is almost always present and makes cleaning of the condensing unit difficult. Do not locate near range or steam table or other heating devices that may be used in the kitchen.

STOREROOM INSTALLATIONS - Be sure storeroom is of adequate size and properly ventilated. A small, poorly ventilated room will greatly impair the efficiency of the unit. The storeroom must be kept above 50 degrees in the winter months.

BASEMENT INSTALLATIONS - Locate machine in the coolest place. Locate the machine in a dry place. Keep away from furnace and boiler room. Keep away from service chutes and runways, also coal or other dust of any kind. If the machine is set over a floor drain, block the machine up enough to eliminate any possible damage to the machine.

LOCATE THE MACHINE SO IT CAN BE SERVICED WHEN NECESAARY. ALLOW AT LEAST FOUR INCHES OF SPACE AROUND THE MACHINE FOR CIRCULATING AIR.

IMPORTANT: ADJUST LEVELER LEGS. MACHINE MUST BE LEVEL.

INSTALLATION

WATER SUPPLY AND DRAIN CONNECTIONS

WATER SUPPLY

The recommended water supply line is 3/8" OD copper tubing. Connect to a cold water supply line with regular plumbing fittings with a shut-off valve installed in an accessible place between supply line and machine. The water strainer supplied with the unit should be mounted with clean-out plug down. Locate the strainer next to the machine and the arrow in the direction of the flow, as per Page 11. A3/8" male flare connection on left corner post provides easy access.

The water supply should be installed to conform with local code.

DRAIN

The recommended drain; is 5/8" OD copper tubing. Sweat to drain connection (See Page 11). Must be run to open or trapped drain. If drain is a long run, allow a 1/4" pitch per foot. Drain must be installed to conform with local code.

ELECTRICAL CONNECTIONS AND CHARACTERISTICS

SM105	110-115 V, 60 Cycle	Single Phase, 13 Amps.

All external wiring should conform with National and local code requirements. Check the voltage on the line before connecting the machine. Model SM105 requires 110-115 volts, 60 cycle, single phase.

The SM105 should be wired to a 20 Amp. circuit. Be certain that the Super Cubers are on their own circuit and individually fused. The maximum allowable voltage variation should not exceed 10% of the nameplate rating even under starting conditions. Low voltage can cause erratic operation, and may be responsible for serious damage to the overload switches and motor windings.

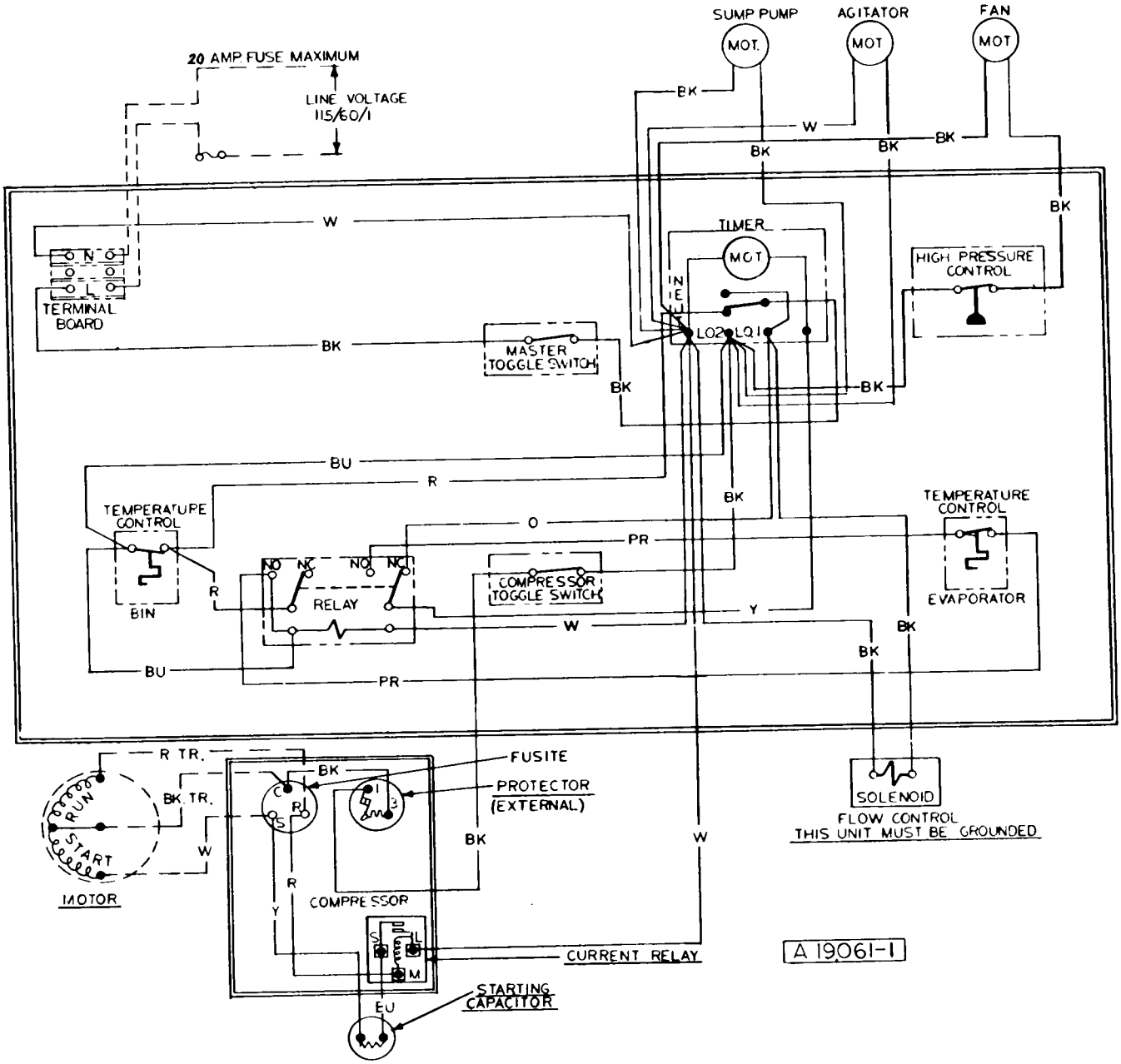

Title: Wiring Diagram
SM105-1
115-60-1
Air Cooled

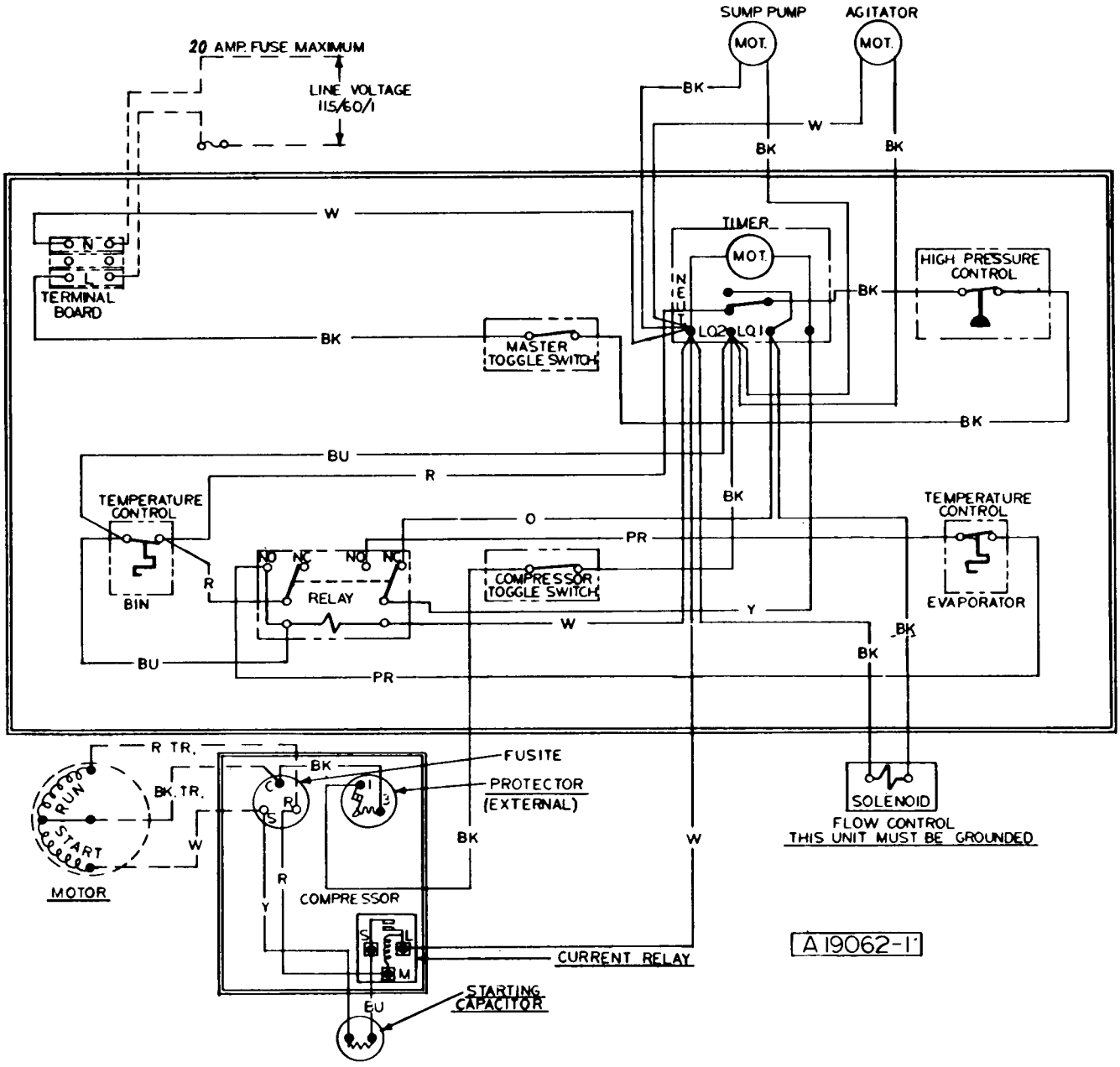

Title: Wiring Diagram
SM105WJ-1
115-60-1
Water Cooled

INSTALLATION PRACTICE

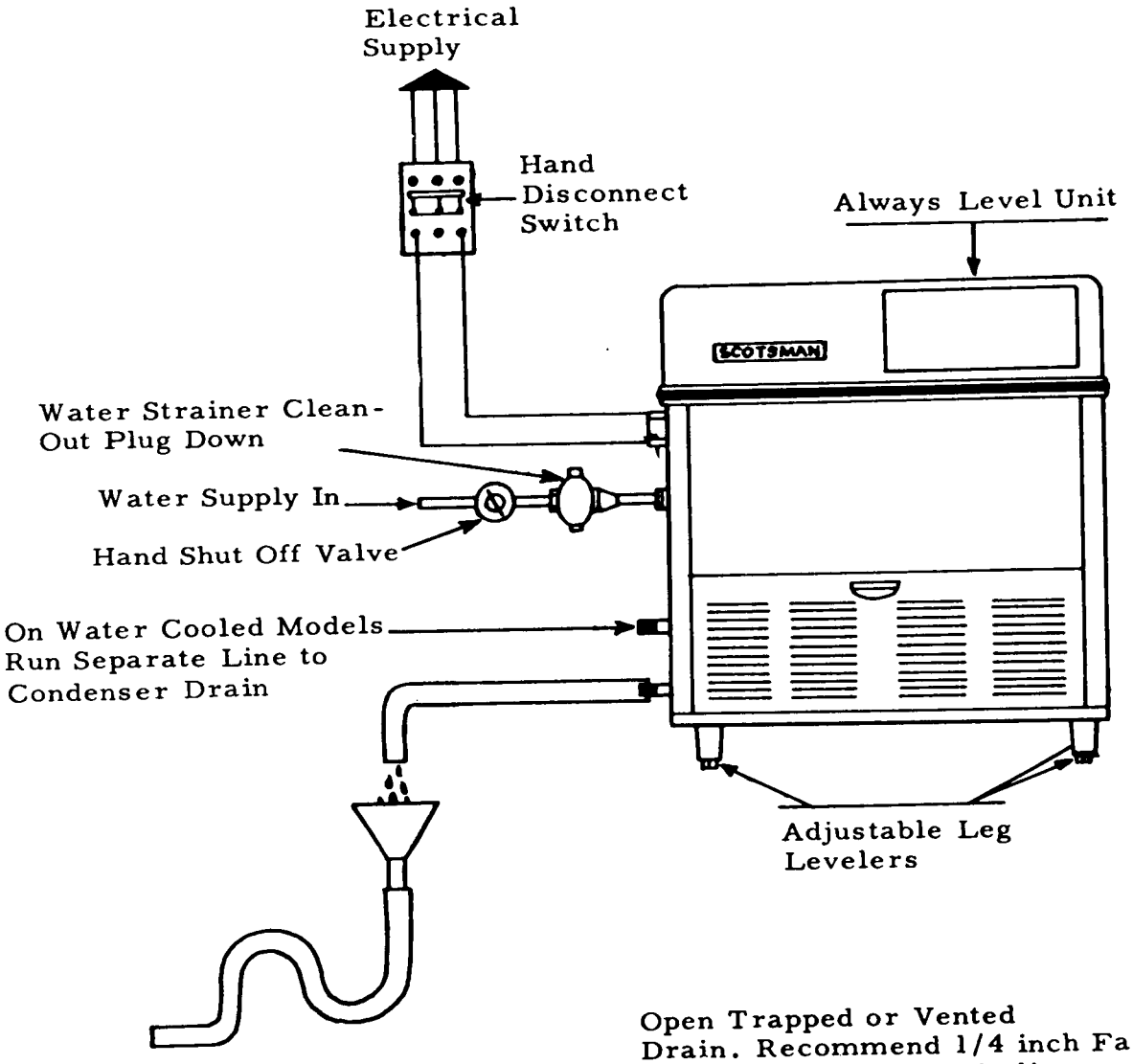

Open Trapped or Vented Drain. Recommend 1/4 inch Fall per foot of run on drain lines.

FINAL CHECK LIST

1. Is the unit level? (IMPORTANT)
2. Have all electrical and piping connections been made?
3. Has the voltage been tested and checked against the nameplate rating?
4. Have the compressor hold-down bolts been checked to insure the compressor is snug to its mounting pads?
5. Is the water supply valve open and the electric power properly hooked up?
6. All masking tape removed from doors, panels and inner freezer curtain?
7. Is the unit clean? Has storage bin been wiped clean with cold water cloth?
8. Has the owner been given the operating manual, and has he been instructed on how to operate the machine?
9. Have the installation and warranty cards been filled out? Check for correct model and serial numbers from serial plate on unit then promptly mail card to factory.
10. Check all refrigerant and conduit lines to guard against vibrations and possible failure.
11. Is there 4" clearance behind and around unit for proper air circulation?
12. Is unit in a room where ambient temperatures are minimum 50° F. even in winter months?
13. Has water supply pressure been checked to insure at least a minimum pressure of 20 pounds?

INSTALLATION - START UP

1. Remove lower front, and left side service doors to facilitate start up and check out.

2. Make sure water supply is turned on, then check timer finishing clock in main control box making sure the micro switch arm is resting down in offset slot in the cam (harvest position). If adjustment is necessary, turn timer knob clockwise into harvest position.

3. Inspect components in electrical control box, check for loose or frayed wire, then turn both manual switches to "on" position. All cubers have two manual on-off switches. One is for motor compressor only during cleaning operation, one is master switch for complete unit.

4. When both switches are thrown "on", water inlet solenoid will be energized allowing water to enter cuber, thru warm water tank, 3 way water valve and up into front side of freezer cup section. This will "fill" icemaker for the freezing cycle- Check operation of spray bar drive motor thru left side service door.

5. Allow clock to carry unit through harvest cycle. This will be Approximately three minutes. Dial pointer should be set on Number 2 1/2. After the compressor starts, turn the dial completely around and send it through another harvest cycle. Do this several times. This will completely flush out machine of any dust that may have accumulated in shipment.

6. After machine has been properly flushed, allow it to go into a freezing cycle-check for possible water leaks, check sump pump operation - should be running freely. Also note if jet tube operation is correct, and that none of the jets are plugged.

7. Time clock dial does not rotate at the end of the harvest cycle; it is started later by the cube size thermostat control located in the control box.

8. Freezing time will be approximately 22minutes in a 70 degree ambient. (Longer if above, and shorter if below.) Average complete cycle time is 25 minutes.

9. Watch first cube harvest and check to make sure that plastic curtain sections have not been damaged in shipment. Also that curtains do not swing back into freezer and catch on cube racks.

10. Check size of cubes made: If too small, after a second cycle, adjust cube size control to lower or colder setting - until desired cube size is reached. Normal cube size is with a 3/8" depression in crown.

INSTALLATION

11. Check texture of cubes made: Partially cloudy cubes throughout suggest unit running short of water near end of freezing, or possibly an extremely bad water condition, which would indicate use of filtering or purifying equipment. Contact SCOTSMAN - Queen Products, Div., Ice Machine Service Department, Albert Lea, Minnesota, for futher details.

12. With unit on harvest cycle, take a handful of cubes made and hold on storage bin thermostat cover. Should cut unit off at end of harvest cycle. Remove ice, unit should cut back on automatically in 3 or 4 minutes. Thermostat is factory set at 35 degrees out, 39 degrees in.

13. Install gauges and check head and back pressure: air-cooled models, head pressure after twenty minutes of freezing cycle at 70° ambient will be approximately 125 pounds PSI. The back pressure starts out at approximately 50 pounds PSI and gradually pulls down to approximately 4 pounds PSI just before harvest cycle. Higher ambients and dirty condenser will cause higher pressures. Water-cooled models have water regulating valves factory set at 135 pounds PSI: check reading and adjust if necessary. Back pressure will operate the same as on air-cooled models.

14. Remove gauges, replace control box cover and all service panels.

15. Instruct owner on how to operate and clean machine.

HARVEST CYCLE

At the end of the freezing cycle the time clock operated switch opens compressor, sump pump and fan motor circuit, and closes circuit to time clock motor and solenoid operated inlet water valve. Inlet water pressure at bottom of hot water tank now forces heated water out the top of tank through warm water tubing and into front side of evaporator cup section. At the same time the surplus water from the preceding batch of ice cubes goes through three way water valve and off to drain. Water from the hot water tank flows into the rubber platen holding the evaporator cups and by conduction on back of cups causes the formed ice cubes to defrost or drop out. The platen-evaporator cavity is normally filled to the overflow level in 2 or 2 1/2 minutes. The amount of water running over the overflow pipe is controlled by the size of the flow control orifice and the length of the harvest time setting on the time clock past the overflow point. Overflow water goes down the drain also.

Meanwhile, cubes released drop by gravity to the inclined cube chute and thru the curtained opening into ice storage bin. At the completion of harvest cycle, the micro-switch on the timer now drops points holding defrost components in cycle and switches to freezing cycle set of contacts. Timer completes harvest cycle when microswitch arm lifts out of rear cam slot. Timer clock motor now stops and will not start again until cube size thermostat control closes once more. Electrically harvest cycle components cease, freezing cycle components start up. Chilled defrost water from the upper cavity now flows by gravity back through the three way water valve into freezer sump or reservior pan. Here water is picked up by the water pump and continually recirculated through sprayer tube to produce the next batch of cubes.

HARVEST CYCLE SM105-J

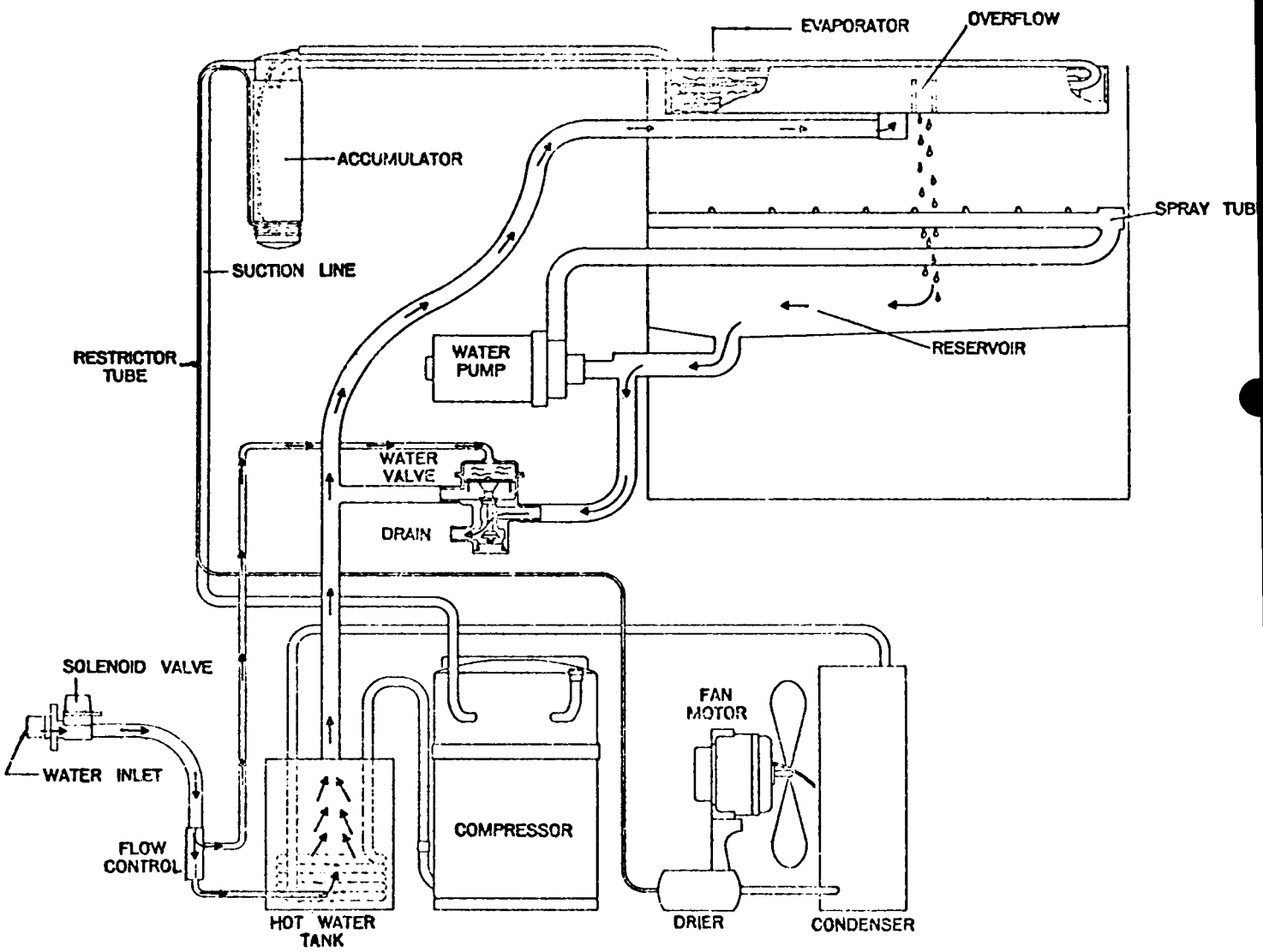

FREEZING CYCLE

As the freezing cycle starts, electrically the components operating are the compressor and fan motor, recirculating water pump and the sprayer tube drive motor.

The refrigerant curcuit which equalized at about 50 pounds gauge during the "off" or harvest cycle, thru the capillary refrigerant control, now rises rapidly to 125 - 135 pounds head pressure. The suction or low side pressure starting at 50 pounds pulls down fairly quickly to about 25 pounds at which point the ice cubes are starting to form a thin shell in cube cups. Continuing from 25 pounds slowly on down towards the finished cube pressure of approximately 5 pounds takes an average of 20-25 minutes.

During this portion of the freezing cycle the electrical brain is the reverse acting, cube size thermostat. This thermostat electrically is holding the freezing cycle components "live". When the ice cubes are about 3/4 formed, the decreasing suction pressure and temperature, activated the temperature sensing bulb of the reverse acting, cube size control, closing its contacts. This does not interrupt the freezing cycle, the closing of the cube size thermostat contacts electrically transfers the finishing of the freezing cycle to the finishing clock motor or timer as it is sometimes called. One full revolution of the timers dial is 15 minutes however of the total 15 minutes only, 3 minutes are used for the defrost or harvest cycle.

This means then that after the cube size contacts close they activate the timer motor. This control takes over and continues freezing cycle for another 12 minutes with timer dial now turning. When the 12 minutes are completed, an offset in the timer dial allows a micro switch with activating arm riding on that cam to drop into the slot electrically stopping the freezing cycle and starting the 3 minutes harvest cycle - The clock motor continues thru harvest cycles. A notch on the timer dial now lifts micro switch arm up on dial, electrically stopping harvest cycle and starts back into a new freezing cycle.

FREEZING CYCLE SM105-J

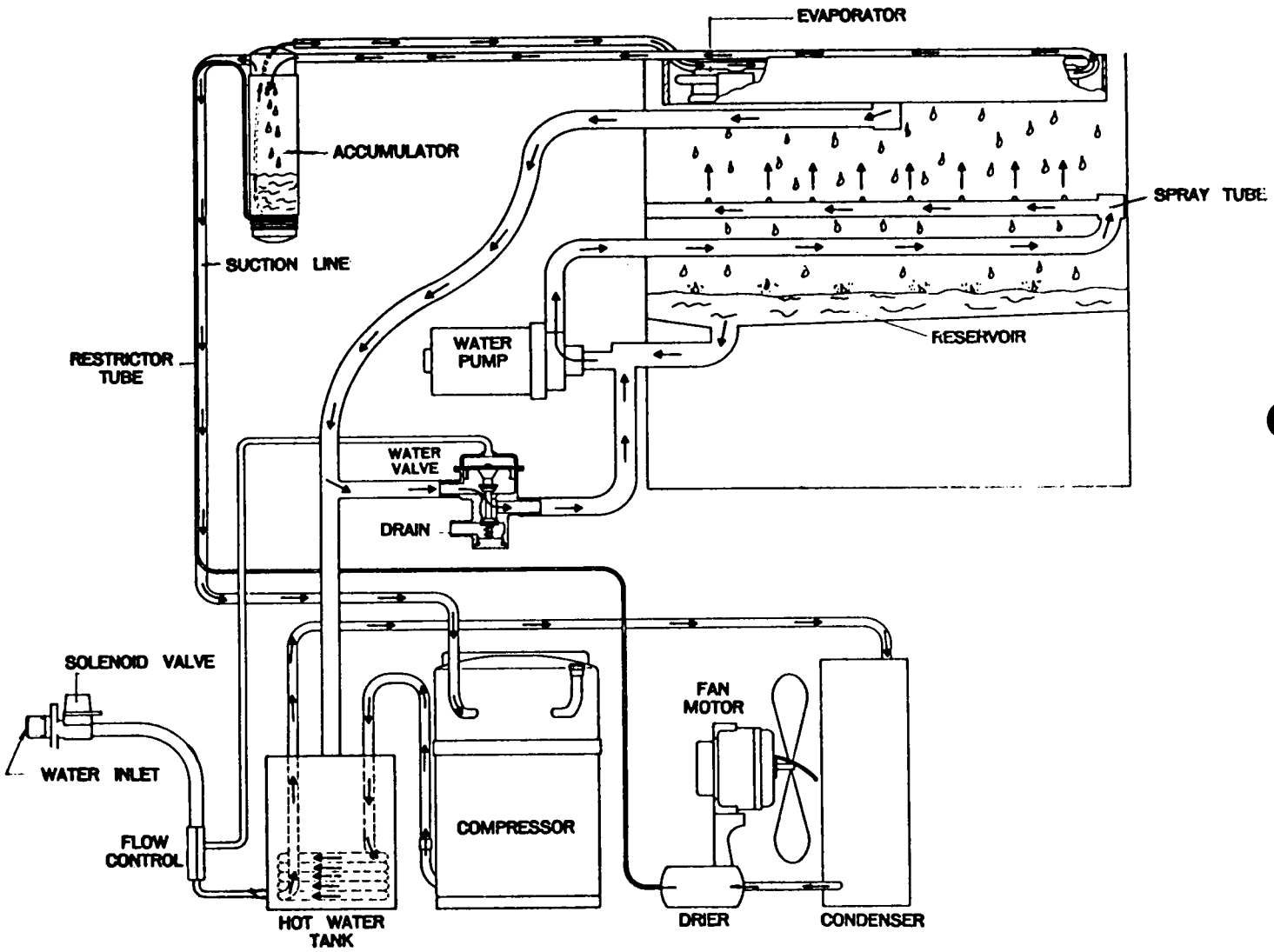

SERVICE ANALYSIS

SYMPTOM	POSSIBLE CAUSE	SUGGESTED CORRECTION
Unit will not run.	Blown fuse	Replace fuse & check for cause of blown fuse.
	Bin thermostat set too high	Adjust thermostat. Set between 35° out to 39 degrees in.
	Switch in Off position	Turn switch to On position.
	Inoperative master switch	Replace switch
	Timer contacts open	Replace timer micro-switch.
Compresser cycles intermittently	Low voltage	Check circuit for overloading. Check voltage at the supply to the building. If low, contact the power company.
	Dirty condenser	Clean with vacuum cleaner, air or stiff brush. (Do NOT use wire brush.)
	Air circulation blocked	Allow sufficient air space all around unit.
	Inoperative condenser fan motor	Check to see if defective. If defective, replace.
	Non-condensable gases in system	Purge the system.
Cubes too small	Cube size control set too high	Lower the setting. Turn towards colder.
	Partially restricted capillary tube.	Blow charge, add new gas & drier. After exacuating system with suction pump.
	Moisture in system	Same as above.
	Shortage of water	See remedies for shortage of water.
	Shortage of refrigerant	Check for leaks and recharge.
Cloudy cubes	Shortage of water	See remedies for shortage of water.
	Dirty water supply	Use water softener or water filter.
	Restricted drain on pump	Clean pump strainer.
	Accumulated impurities	Use SCOTSMAN Ice Machine Cleaner.
Poor harvests	Too short defrost time	Check and adjust harvest cycle. Timer should be set at 2 1/2.
	Restriction in incoming water	Check water feed line strainer and flow reducing valve. To give greater water flow increasing defrost time.
	Insufficient quantity of hot water	Cold ambient - must be 50° minimum faulty fan control on aircooled models.
	Solenoid valve not opening the water valve	Solenoid binding or burned out. Replace.
	Air vent holes in upper cube cups plugged	Clean out holes.

SERVICE ANALYSIS

SYMPTOM	POSSIBLE CAUSE	SUGGESTED CORRECTION
Shortage of water	Water spraying out through curtains	Replace broken curtains if any broken.
	Three-Way water valve leaking	Check the valve for foreign matter. Check valve seats and replace if necessary.
	Water entering hot water tank too slowly	Check pressure at source-20# required. Dirt in solenoid and flow control- blow out.
		Partial restrictions in water strainer. Clean Strainer.
Irregular size cubes and some cloudy	Some jets plugged	Clean jets.
	Shortage of water	See Shortage of Water
	Unit not level	Water overflowing air vent holes on low side burning cubes. Level as required.
Cubes too large	Cube size control turned too cold	Turn setting on cube size control dial towards warmer
Decreased ice capacity	Inefficient compressor	Replace .
	Leaky water valve	Replace or repair.
	High head pressure	Dirty condenser. Clean. Bad fan motor. Replace.
	Non-condensable gas in the system:	purge the system.
	Poor Air circulation or excessively hot location	relocate the unit, or provide for ventilation by cutting openings;
	Overcharge of refrigerant	Correct the charge. Purge off slowly.
	Partially restricted cap tube	Purge & replace charge and drier
Hole washed inside cube	Water over the top of the cube cups during harvest	Level unit.

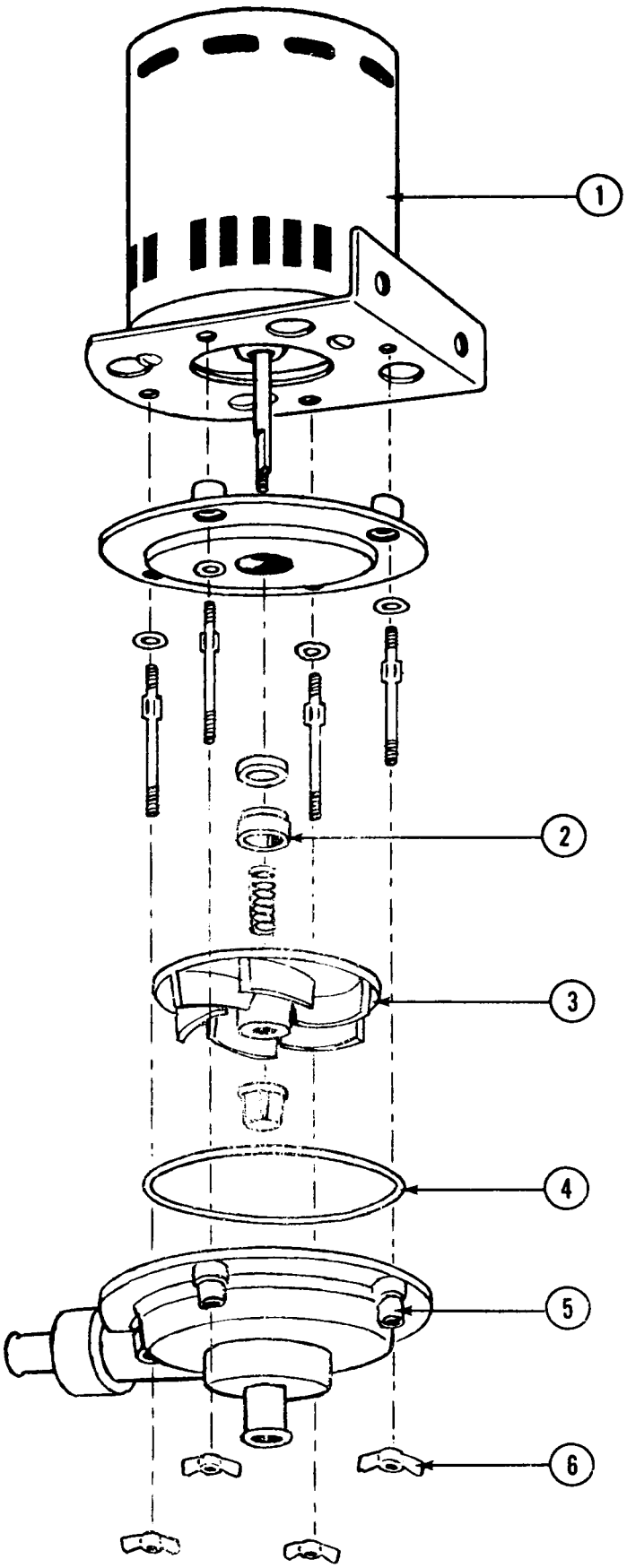

SUMP PUMP ASSEMBLY
PART NO. 12-1532-1B

ITEM NO.	PART NO.	NAME
1.	12-1532-51	Motor only
2.	12-1532-57	Water Seal
3.	12-1532-58	Impeller
4.	12-1532-60	O-Ring
5.	12-1532-61	Outlet Housing
6.	12-1532-62	Wing Nuts

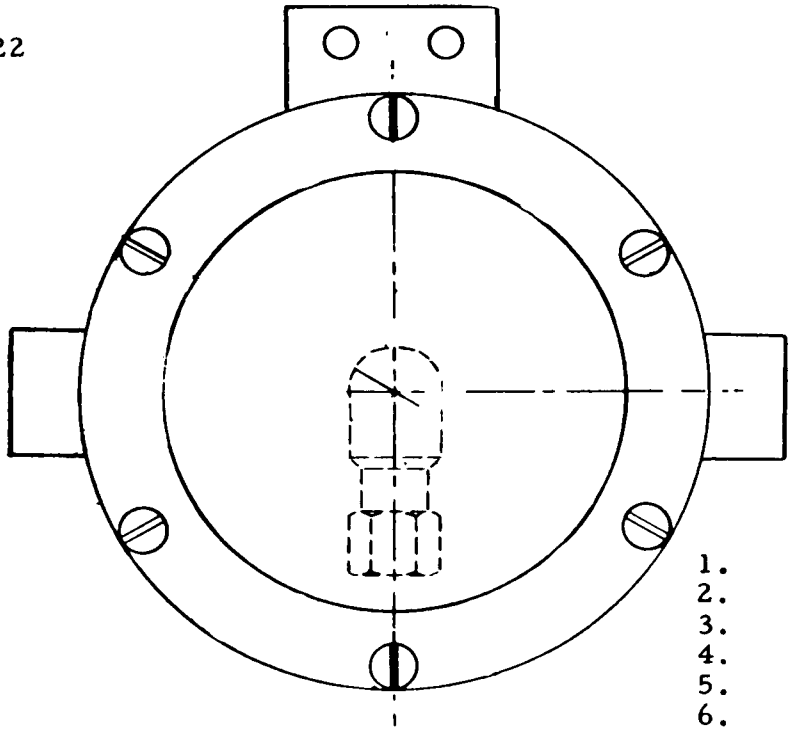

WATER VALVE ASSEMBLY
A-19722-1

1.	13-617-2	O-Ring
2.	A-17937	Valve Cap Bottom
3.	2-1545	Spring
4.	13-617-1	O-Ring
5.	A-17942	Lower Plunger Rod
6.	3-1403-6	Screws (6)
7.	A-18192	Valve Top Cover
8.	3-1403-27	Screw
9.	A-17941	Upper Plunger
10.	13-606	Rubber Diaphragm
11.	A-18312	Diaphragm Cover
12.	A-17947	Valve Body

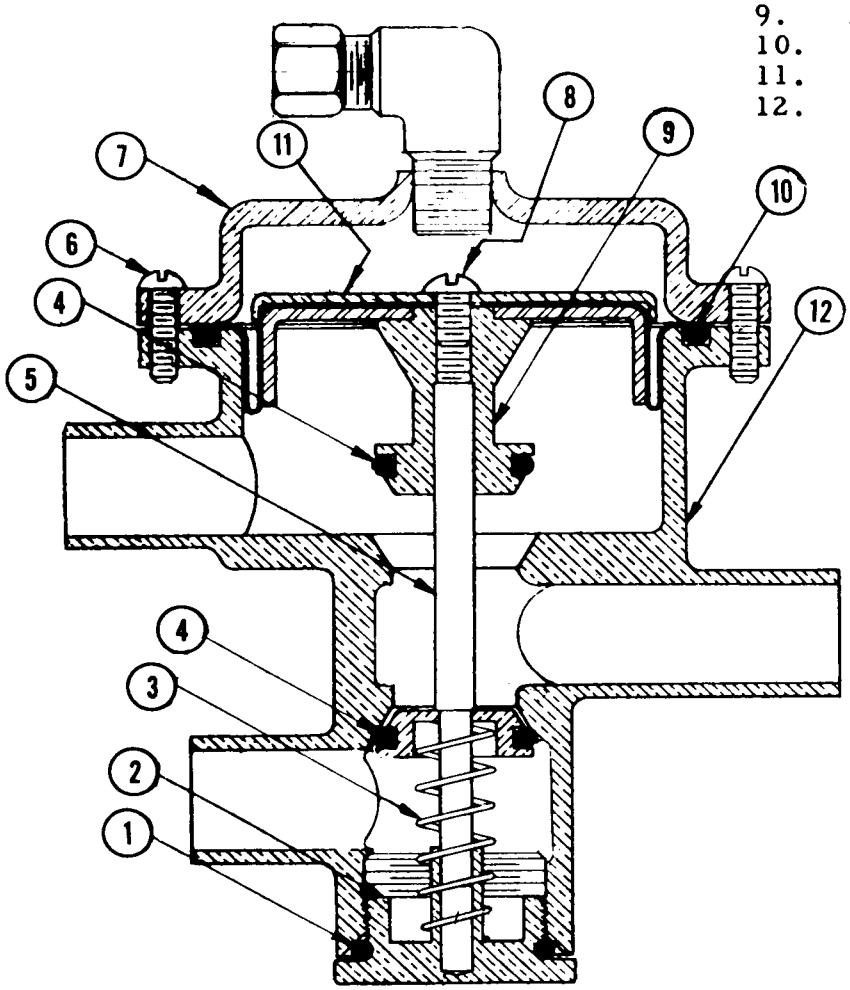

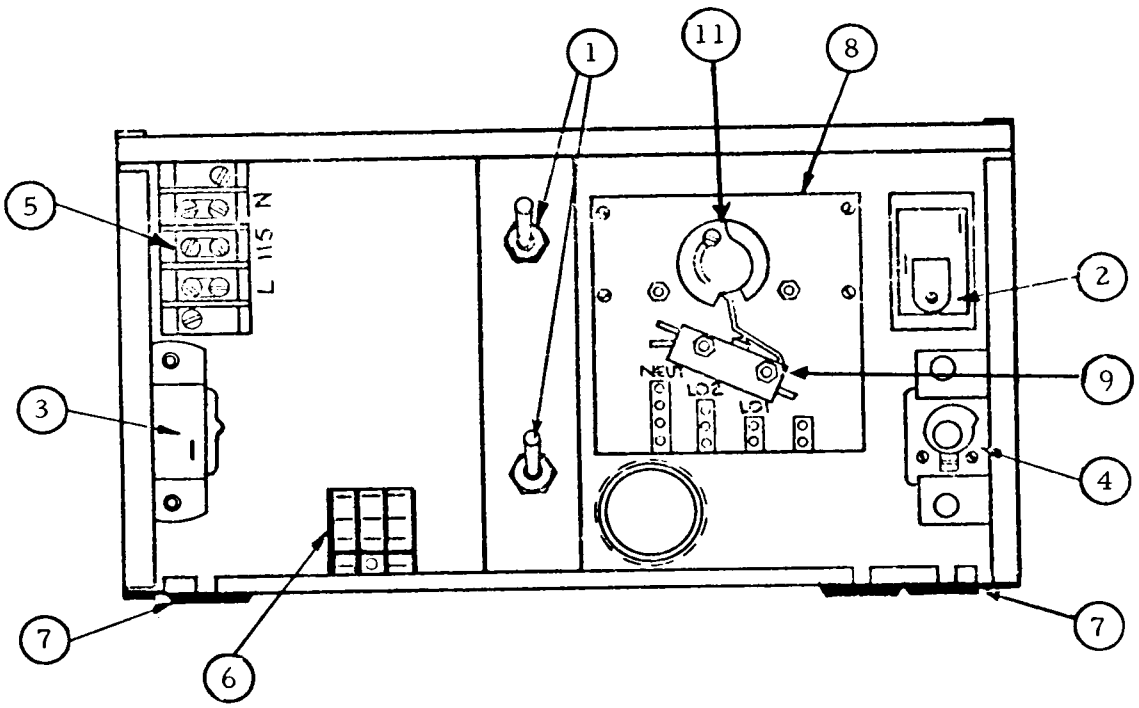

CONTROL BOX ASSEMBLY

ITEM No.	PART NO.	NAME
1.	12-426-1	Switches
2.	11-352	Head Pressure Control - Air Cooled Only
2.	11-397	High Head Pressure Control- Water Cooled Only
3.	11-353	Bin Control
4.	11-351	Cube Size Control
5.	12-813	Terminal Block
6.	12-1645	Relay
7.	13-124	Grommets
8.	A-21038-1	Timer Assy.
9.	12-1480	Timer Micro Switch
*10.	12-1478-1	Timer Motor Only
11.	2-1651	Cam Assy.

* Not Shown

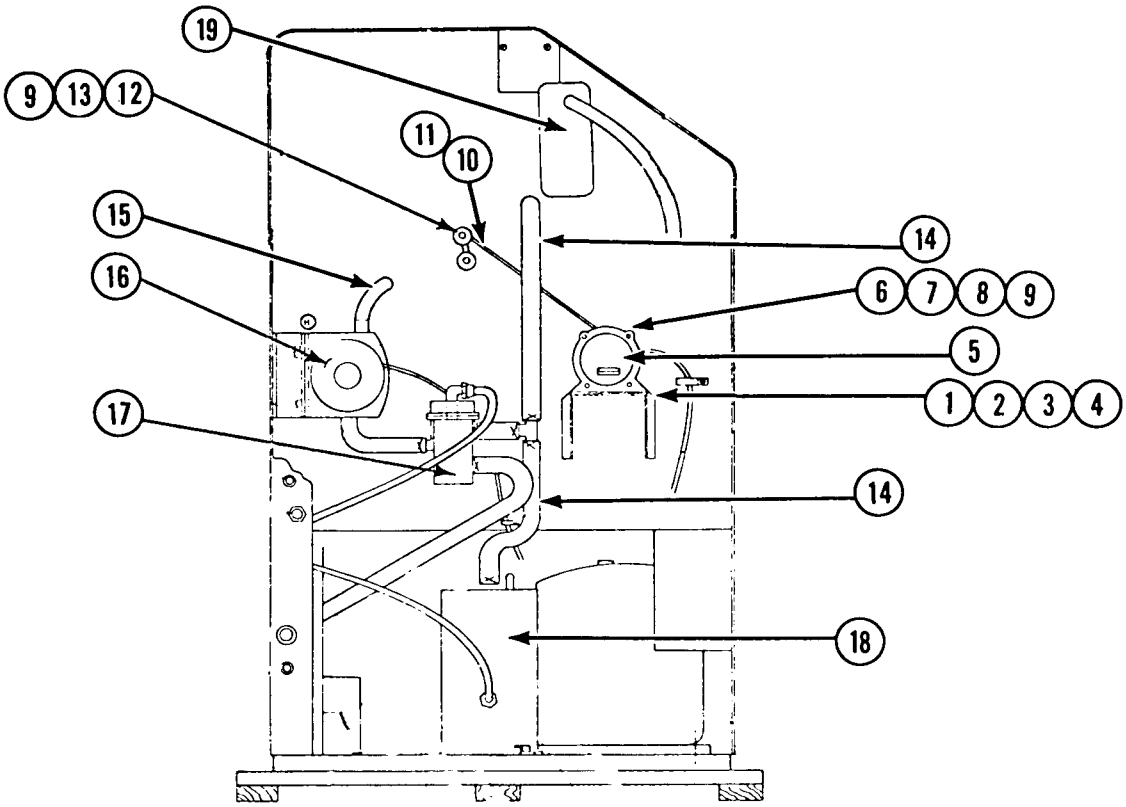

CABINET VIEW - LEFT SIDE

ITEM NO.	PART NO.	NAME
1.	3-1403-28	Machine Screw
2.	3-1406-6	Nut
3.	3-1407-4	Washer
4.	3-1417-5	Lock Washer
5.	12-1346-1	Drive Motor
6.	S-7128	Driven Arm
7.	A-7033	Bearing
8.	S-7558	Bearing Clip
9.	3-431	Set Screw
10.	S-7132	Linkage Rod
11.	A-6726	Linkage Complete w/arms
12.	A-6462	Driven Arm
13.	S-7130	Collar
14.	13-674-6	Tggon Tubing per ft.
15.	13-674-9	Tggon Tubing per ft.
16.	12-1532-1B	Water Pump
17.	A-19722	Water Valve
18.	A19026	Defrost Water Tank
19.	A-20098	Freezer and Suction Line Ass'y.

SM105J COMPLETE UNIT

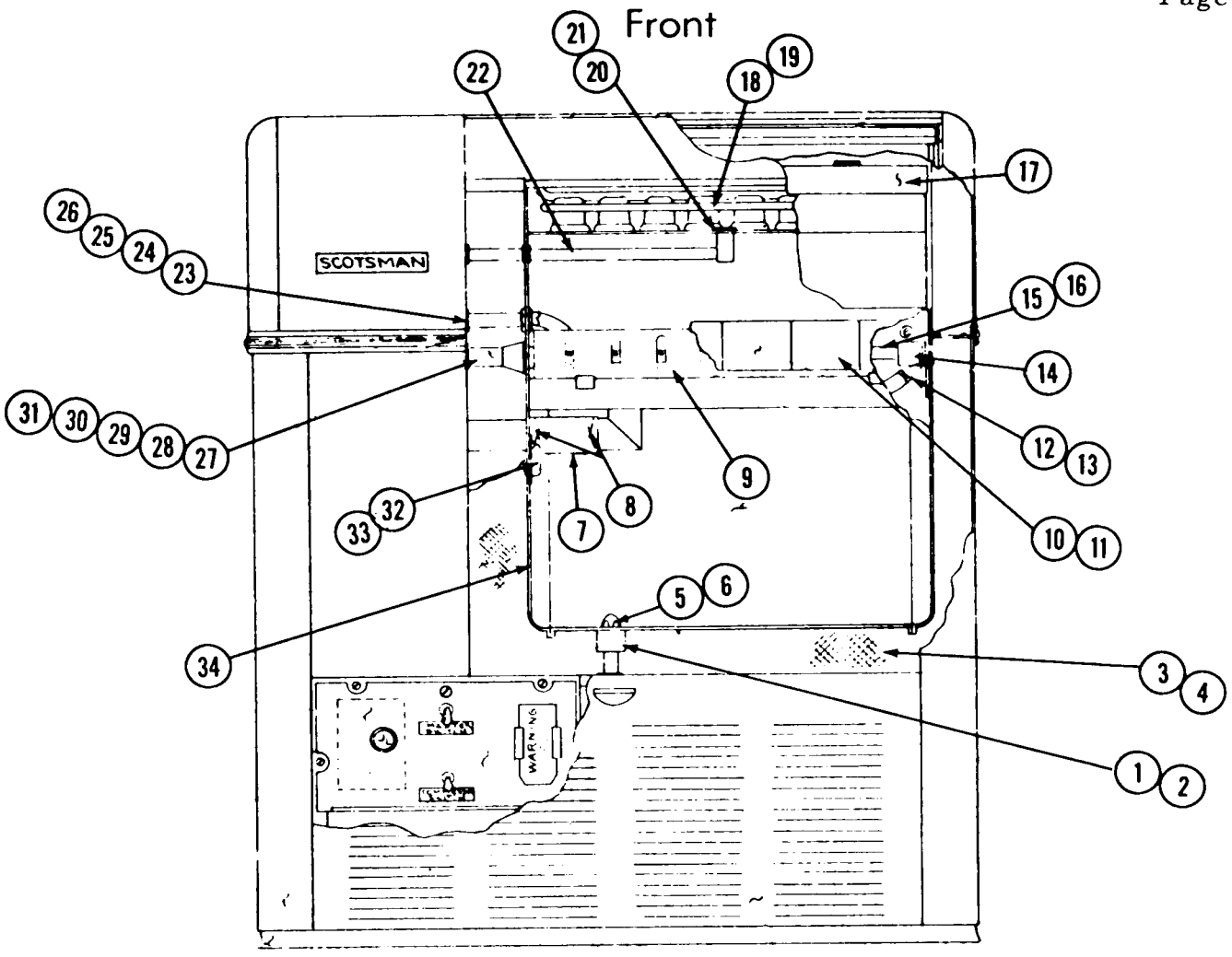

ITEM NO.	PART NO.	NAME	ITEM NO.	PART NO.	NAME
1.	A-18102	Storage Drain Fitting	18.	A-20098	Freezer Suction Line Assy.
2.	2-530	"O" Ring	19.	13-638	Rubber Cupholder
3.	A-15721-1	Insulation Bottom	20.	S-7434	Adapter
4.	A-16246	Insulation Layout	21.	3-1409-3	Fiber Washer
5.	A-18090	Drain Fitting (Male)	22.	A-16437	Inlet Tube
6.	A-6448	Drain Strainer	23.	A-16970	Inlet Tube
7.	5-170-2	Tygon Hose	24.	2-541	"O" Ring
8.	2-537-1	Clamps (2 required)	25.	S-9965	"O" Ring Nut
9.	A-20099	Cube Chute	26.	13-125	Grommet
10.	A-16465	Curtain Ass'y	27.	S-8887	Drive Bearing Support
11.	3-727	Thumb Screws (2)	28.	S-7639	Drive Journal Ass'y
12.	2-1338-2	Clamp	29.	S-7635	Nut
13.	13-674-5	Tygon Tube	30.	3-1409-8	Fiber Washer
14.	A-16963	End Bearing	31.	13-169	Grommet
15.	A-20094	Sprayer Tube	32.	A-19555	Bulb Cover
16.	2-1803-1	Jets	33.	13-590	Bulb Gasket
17.	2-1489	Plastic Insul. Cover	34.	A-18889	Storage & Resv. Assy.

SM105J CASE AND HOOD ASSY.

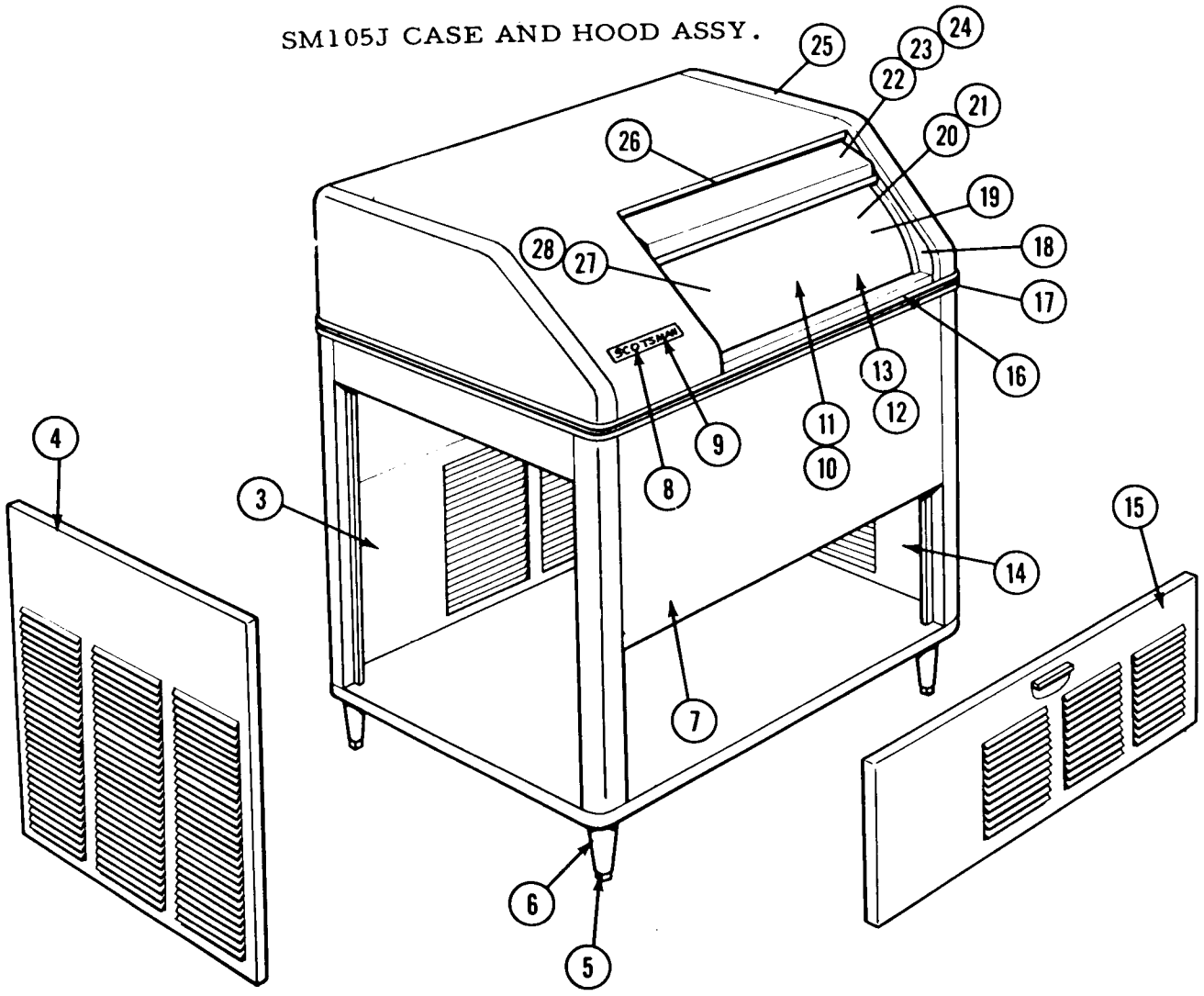

ITEM NO.	PART NO. GRAY	S.S.	NAME
1.	2-530		"O" Ring Drain*
2.	A-6448		Drain Strainer*
3.	A-16563	A-16563-2	Back Door
4.	S-9405	S-9405-S	Left Door
5.	8-522	8-522-1	Leg Leveler
6.	A-15803	A-15803-1	Leg
7.	A-18842	A-18842-1	Case Assy
8.	15-156		Emblem
9.	3-271		Speed Nuts*
10.	A-18102		Storage Drain Assy*
11.	A-18090		Drain Fitting Male*
14.	A-16561	A-16561-2	Right Door
15.	A-15789	A-15789-2	Front Door
16.	15-324		Plastic Insert (per foot)
17.	A-6510		Moulding Strip, Front
18.	A-16208		Door Track
19.	A-18889		Storage Bin Assy*
20.	A-19555		Bulb Cover*
21.	13-590		Bulb Gasket*
22.	2-1735	A-15559	Sliding Door
23.	3-640		Door Blides (Door)
24.	3-1195		Door Glides (Hood)
25.	A-19238	A-19238-1	Hood Assy
26.	2-1736		Door Lanyard

* Not Shown

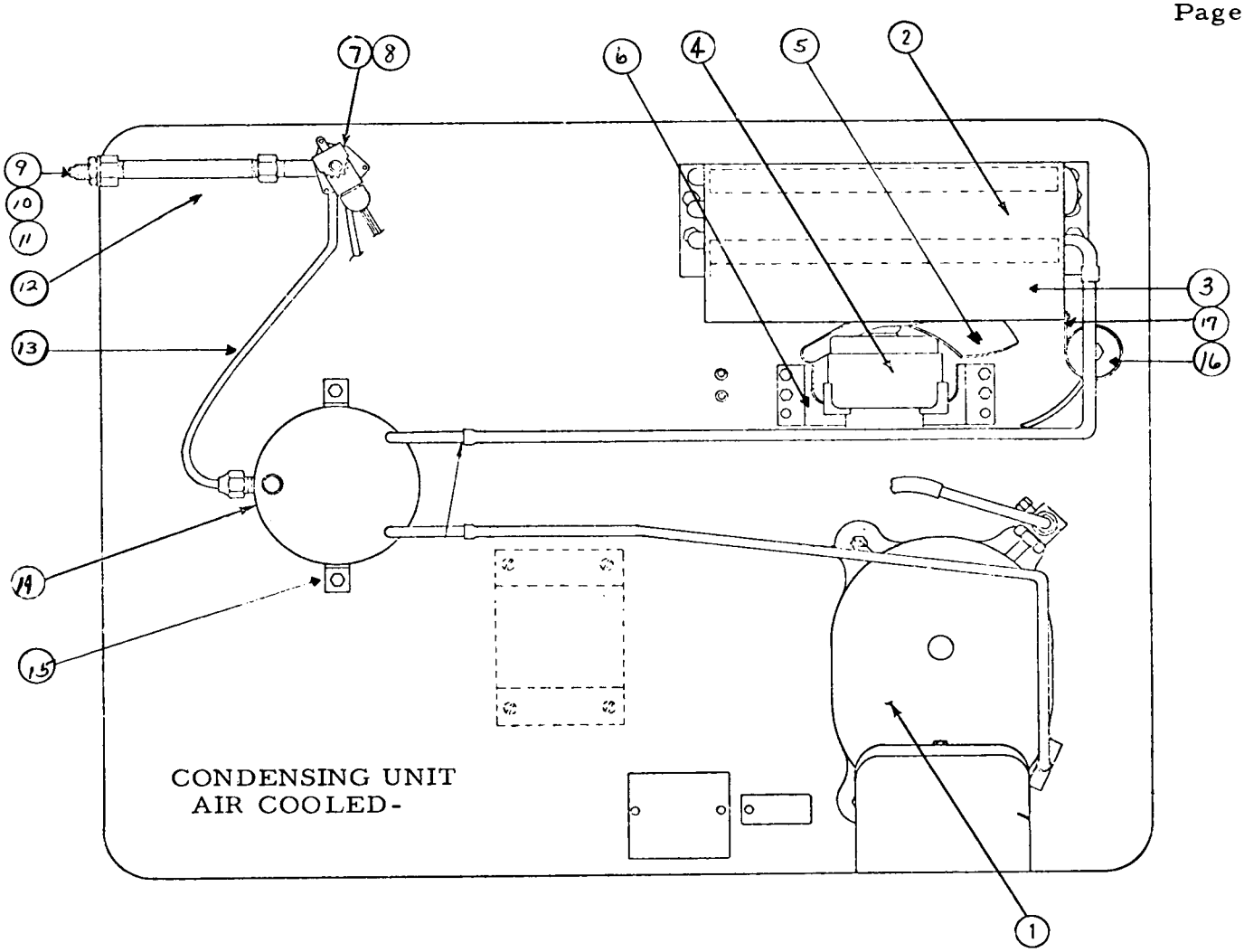

ITEM NO.	PART NO.	NAME
1.	18-2201-1	Motor Compressor 115/60/1
	18-2201-25	Klixon (overload)*
	18-2201-26	Compressor Relay*
	18-2201-29	Start Capacitor*
2.	18-234	Condenser
3.	A-18229	Condenser Shroud
4.	12-1575-1	Fan Motor
	12-1573-8	Lead Wire (Fan Motor)*
5.	18-231	Fan Blade
6.	18-422	Fan Motor Bracket
7.	12-1434-1	Water Solenoid Valve
8.	A-19788-4	Water Flow Control*
9.	A-19239	Inlet Water Fitting
10.	16-526	Brass Nipple,
11.	16-540	Coupling
12.	A-18696	Inlet Water Assy Complete
13.	5-397-1	Nylon Water Line per ft.
14.	A-19026	Defrost Water Tank
15.	A-1-233	Water Tank Bracket
16.	2-350	Drier
17.	A-19386	Drier Brace

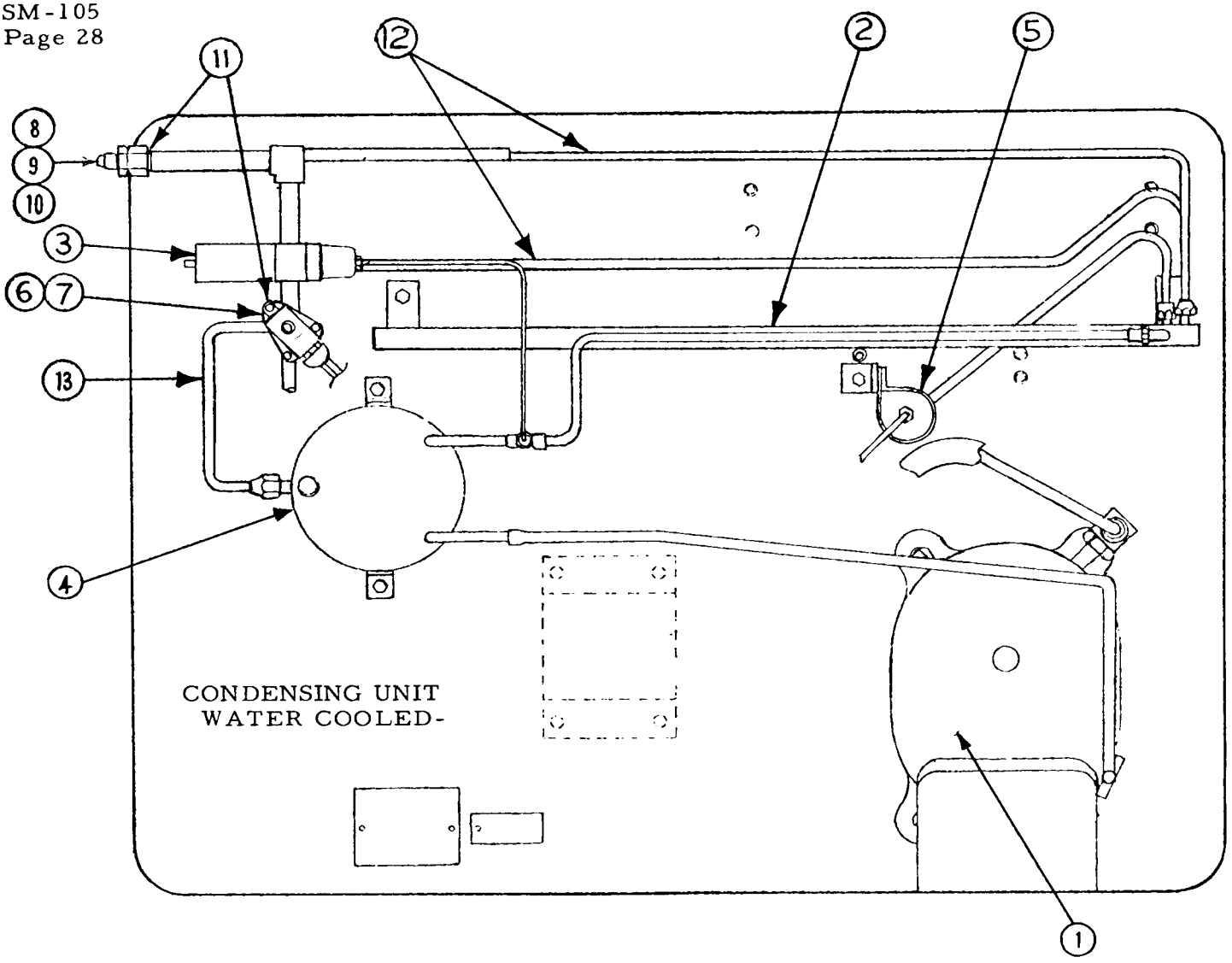

ITEM NO.	PART NO.	NAME
1.	18-2201-1	Motor Compressor 115/60/1
	18-2201-25	Klixon (overload)*
	18-2201-26	Compressor Relay*
	18-2201-29	Start Capacitor
2.	18-368	Condenser
3.	11-198	Water Regulator Valve
4.	A-19026	Defrost Water Tank
5.	2-350	Drier
	A-19386	Drier Brace
6.	12-1434-1	Water Solenoid Valve
7.	A-19788-4	Water Flow Control*
8.	A-19239	Inlet Water Fitting
9.	16-527	Brass Nipple
10.	16-537	Brass Tee
11.	A-18696-1	Inlet Water Assy Complete
12.	5-397-2	Nylon Water Line per ft.- 3/8"
13.	5-397-1	Nylon Water Line per ft.- 1/4"

* Not Shown

COMPLETE DRIVE LINKAGE

Part No. A-6726

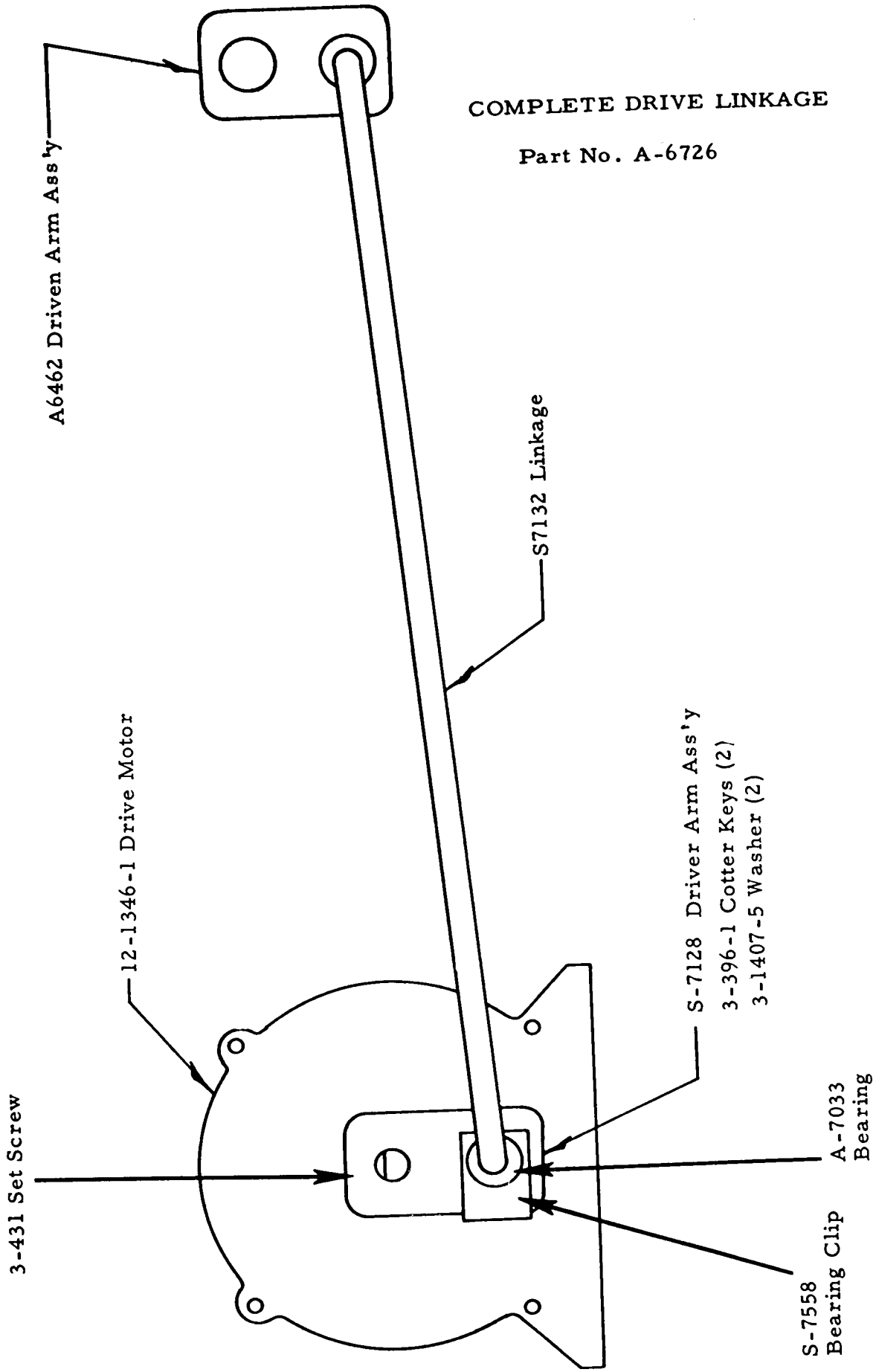

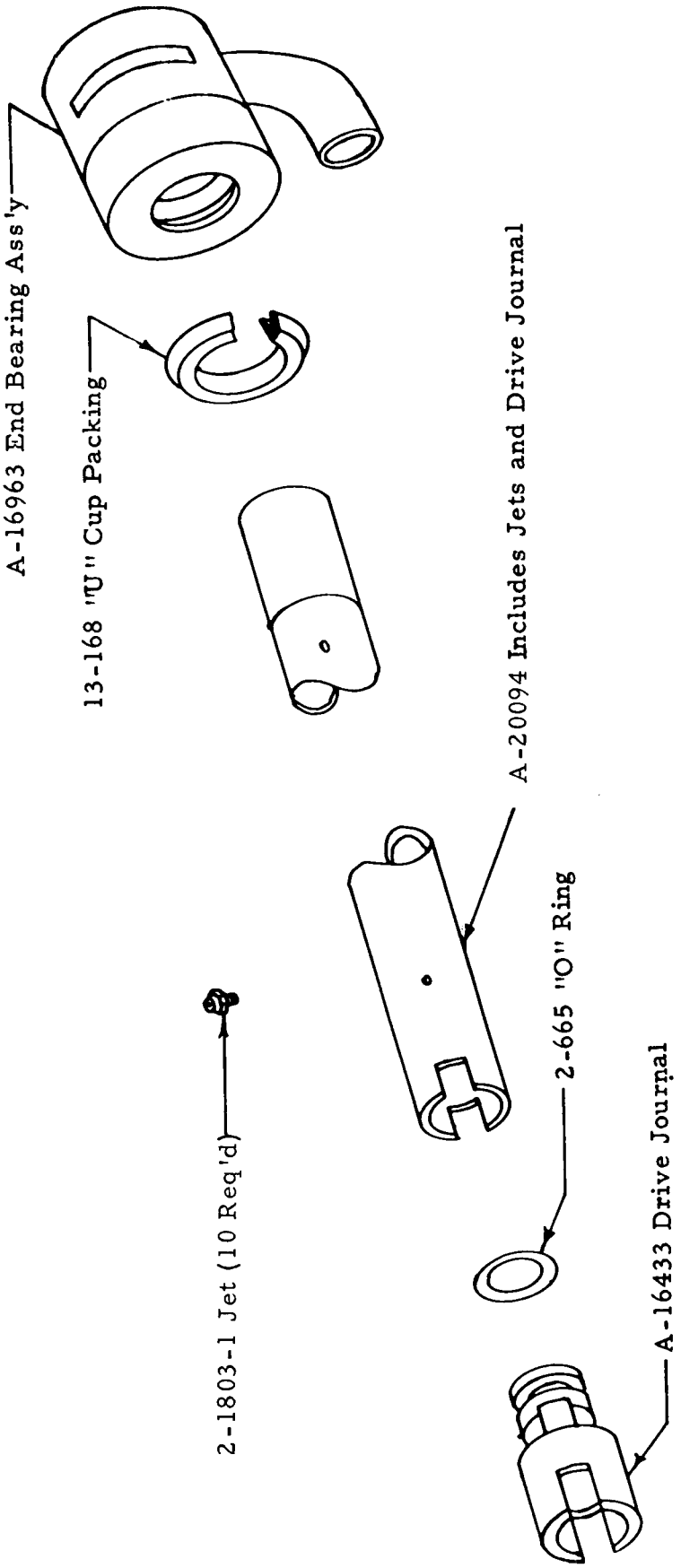

SPRAYER TUBE ASSEMBLY

FUNCTIONAL PARTS
DESCRIPTION

11-352	Fan cycle - head pressure control Robert Shaw #A P 20-1066 120# 140# Range Automatic reset - SPST Nonadjustable
11-353	Bin Thermostat Cutler Hammer #9530 N 213 Cut Off 35° cut in 39° Adjustable calibrate for altitude over 2,000 ft.
11-357	High pressure Cut off - Water cooled models Robert Shaw #A P 21-2048 Control opens 190# P.S.I. Manual re-set - Adjustable
11-351	Cube size thermostat Rance All-387 Reverse acting, closes on temperature Decrease - Has adjustment dial
12-1645	Relay 115/60/1 Ameco or Potter Bumfield 2 P.D.T. By passes Thermostat during freeze cycle.
18-699-3	Water cooled condenser W.C. models only Packless #QVWC-37 3/4 H.P. rating - upright tank type
12-1532-1B	Water recirculating, sump pump Hartell Inc. 3000 RPM - shaded pole, thermally protected motor - 1/25 H.P. 115/60/1
18-2201-1	Motor compressor 115/60/1 Copeland refrigeration - Copelaweld RSF-0050-1AA 2 Pole, 3500 RPM Hermetic for use with refrigerant R-12
A-21038-1	Finishing Clock or Timer Manufactured by Queen Products Div. 2-1651 Knob cam assembly 12-1480 Micro switch.
12-1434-1	Water inlet solenoid Detroit Controls Corp. #S-30-A 115/60/1 coil - Nylon body 1/4" MPT inlet & outlet No flow control. Also American Standard Control #SSV-20206

SERVICE - COMPLETE UNIT

ALL STEPS LISTED BELOW SHOULD ONLY BE STARTED WHEN WATER AND ELECTRICAL SUPPLY ARE OFF TO PREVENT ACCIDENTS.

To remove cabinet top or hood.

1. Remove two back end screws in rear moulding strip.
2. Pull out black insert tape concealing screws.
3. Remove balance of screws in moulding strips.
4. Lift hood straight up.

To remove Sump Pump.

1. Remove left side service panel.
2. Disconnect hose clamps and hoses on pump ports.
3. Remove electrical lead to control box.
4. Remove 2 screws in pump mounting bracket.

To remove Agitator Motor on SM105

1. Remove left side service panel
2. Disconnect wires at the control box terminal board.
3. Loosen the Allen set screw on driver crank arm and remove the drive arm.
4. Remove the four hold-down screws and remove the motor.

To remove the jet tube assembly on Model SM105

1. Remove the plastic curtain assembly.
2. Remove the cube rack.
3. Lift the right end of the jet tube straight up and slide the other end out of the driving slot.

To remove Three Way Water Valve

1. Remove left side service door.
2. Remove all hose clamps to water valve.
3. Remove upper water line connection to elbow on top valve housing.
4. Loosen two nut and bolt assemblies holding valve to mounting bracket. Valve now drops free.
5. Replace in reverse of above.

To replace Storage Bin Door

1. Lift door up and slide back as you normally would to remove ice from bin.
2. Remove screw at center rear edge of door where it is attached to lanyard.
3. Pull door straight out.
4. Install repaired or new door in reverse of step number 2 above.

MAINTENANCE INSTRUCTION FOR SCOTSMAN SUPER CUBERS

THE FOLLOWING MAINTENANCE MUST BE ACCOMPLISHED TWO (2) TIMES PER YEAR ON ALL SCOTSMAN SUPER CUBERS. CALL YOUR AUTHORIZED SCOTSMAN SERVICE DEPARTMENT.

1. Clean air-cooled condenser; This is to be done frequently with the machine shut off.
2. Clean water system and evaporator, sump tank and screen, using Scotsman Ice Machine Cleaner or equivalent.
3. Remove jet tube and manually clean jets by unscrewing jets.
4. Check curtain assembly.
5. Tighten all electrical connections.
6. Tighten all bolts.
7. Check water supply. Check water pressure flow through flow control. Clean water strainer.
8. Oil jet tubes drive motor three(3) places. Use SAE 20 oil - 3 oil cups.
9. Oil Condenser fan motor. Punch sealed cap or remove screws where possible.
10. Check for refrigeration leaks with halide torch.
11. Check for water leaks. Tighten drain line connections.
12. Check size and condition of cubes. Adjust as required. See Service Analysis
13. Section.
    Check bin thermostat setting. Factory set at 35° out, 39° in.

CLEANING INSTRUCTIONS FOR SCOTSMAN ICE MACHINES MODELS MM110J, SC100J and SM105J

1. Remove front access door.
2. Locate control box with time clock knob protruding through cover.
3. Start unit through a harvest cycle manually. This may be done by turning time clock knob clockwise until the snap of the timer microswitch is heard.
4. Let unit finish cube harvest cycle and start into freezing cycle. This will be approximately 5 minutes after Step #3 has been completed. At this time turn the compressor switch off, the lower of the two switches in the control box.
5. Locate the sump reservoir which is in the storage bin area and directly behind the ice discharge chute. This discharge chute is covered by a series of white plastic curtains which are free to swing out into the storage bin. Pour 4 ounces (half bottle) of "Scotsman Ice Machine Cleaner" into the sump reservoir.
6. Locate insulation panel which is directly above platen. Lift insulation panel, pour the remaining 4 ounces of "Scotsman Ice Machine Cleaner" into platen.
7. Let unit operate normally for 10 to 15 minutes into the freezing cycle. No ice will be made because the motor compressor is not in operation.
8. At the end of this time put the unit through 2 or 3 harvest cycles manually to allow fresh make up water to clean out remaining solution. Each time waiting approximately 5 minutes after the loud snap until the nest harvest cycle is done manually.
9. Turn the compressor switch back on.
10. Check each new batch of cubes until they are clear and until acid tast has been removed from cubes.
11. Put hot water in storage bin to melt the cubes and thereby clean the drains with the same solution that has just cleaned the unit.
12. Use a damp cloth to wipe off curtains and inside of storage bin.
13. Replace all access doors.
14. Unit is now ready for continued automatic operation.

PARTS LIST SM105

CABINET PARTS

		S. S. Finish
2-1736	Sliding Door Lanyard	
A-19238	Case hood assembly, less doors	A-19238-1
A-16208	Door slide track	
15-156	Emblem	
A-6509	Moulding strip - rear	
A-6510	Moulding strip - front	
A-15789	Cabinet front service	A-15789-2
A-16561	Cabinet right side service door	A-1656-2
A-16563	Cabinet rear service door	A-16563-2
2-1735	Sliding Door	A-15559
S-9405	Cabinet left side service door	S-9405-S

CONTROL BOX - ELECTRICAL COMPONENTS

12-813	Terminal Block
A-21038-1	Timer Assembly
12-1480	Timer Micro-switch
11-351	Cube size control
12-426-1	On-Off switches (2)
11-353	Bin thermostat
12-1645	Complete cube relay
11-352	Fan cycle control A.C.
11-357	H. Pressure control

CONDENSING UNITS AND REFRIGERANT CIRCUIT

	AIR-COOLED	WATER-COOLED
Freezer Cup and Platen only	A-20097	Same
Freezer and H X assembly complete	A-20098	Same
Drier - Refrigerant	2-350	Same
Motor compressor 115/60/1	18-2201-1	Same
Relay	18-2201-26	Same
Starting capacitor	18-2201-29	Same
Fan motor	18-1575-1	None
Fan blade	18-321	None
Condenser	18-334	18-699-3
Shroud for condenser	A-18229	
Klixon overload	18-2201-25	Same
Tire type valve cap	16-563	Same
Tire type valve core	16-560	Same
Rubber cube cup holder	S-9251	Same
Plastic curtain rod assembly	A-16465	Same
Water Regulating Valve	None	11-198

4. HOT WATER CONDENSER TANK

A-19026	Hot water tank complete - Air & Water cooled.

5. WATER VALVE

A-19722	Complete Valve
13-617-2	O-Ring
A-17937	Valve Cap Bottom
2-1545	Compression Spring
13-617-1	O-Ring
A-17942	Lower Plunger
3-1403-6	Cover Screws (6)
A-18192	Valve Cover
A-17941	Upper Plunger
13-606	Rubber Diaphram
A-18312	Diaphram Cover
A-17947	Valve Body

6. WATER CIRCUIT

12-1434-1	Inlet water solenoid
16-162	Inlet water strainer
A-19788-4	Inlet water flow control
12-1532-1B	Sump pump assembly
A-20094	Sprayer tube assembly
2-1803-1	Sprayer tube jet only

7. DRIVE MOTOR AND LINKAGE

12-1346-1	Drive Motor
A-6726	Drive Linkage assembly
A-6462	Driver Arm Assembly
S-7132	Linkage Rod
S-7128	Driver Arm Assembly
S-8887	Drive Bearing Support
S-7639	Driving Journal

8. STORAGE BIN AND COMPONENTS

2-530	"O" Ring
A-18090	Storage Bin Drain Assembly, Male
A-6448	Drain, strainer
A-18102	Storage Bin Drain Ass'y, Female
A-19555	Bin Thermostat Bulb Cover
13-590	Bin Thermostat Bulb Gasket
A-20099	Cube Chute
A-16465	Curtain Assembly

9. MISCELLANEOUS

2-540	Ice Scoop
15-324	Plastic trim insert-per ft.
1-657	Packing crate
12-1532-51	Sump Pump motor only
19-343	Scotsman Ice Machine Cleaner
5-397-2	Nylon tube (per foot) 3/8"
5-379-1	Nylon tube (per foot) 1/4"

TABLE OF CONTENTS

WARRANTY 1
TO THE USER 2
TABLE OF CONTENTS 3
SPECIFICATIONS 4
DIMENSIONS 5
DIMENSIONS FOR BUILT-IN INSTALLATIONS 6
INSTALLATION 7
SM18PW-1 INSTALLATION INSTRUCTIONS 8
DRAIN INSTALLATION INSTRUCTIONS 9
DRAIN INSTALLATION DIAGRAMS 10
START-UP PROCEDURES 11
CLEANING INSTRUCTIONS 12
WATER FLOW DIAGRAM (FREEZING CYCLE) 13
WATER FLOW DIAGRAM (HARVEST CYCLE) 14
WATER FLOW DIAGRAM (SM18PW-1) 15

EXPLODED VIEWS

BIN INSERT 16
WATER FLOW VALVE 17
WATER PUMP 18
CONTROL BOX 19
CABINET 20
INTERNAL COMPONENTS 21

WIRING DIAGRAMS

SM18W-1 WIRING DIAGRAM 22
SM18PW-1 WIRING DIAGRAM 22

MAINTENANCE INSTRUCTIONS

CABINET REMOVAL 23
TIMER MOTOR 24
BIN THERMOSTAT REPLACEMENT 24
WATER PUMP REPLACEMENT 25
WATER FLOW VALVE REPLACEMENT 25
WATER FLOW VALVE ADJUSTMENT 26
INLET WATER SOLENOID REPLACEMENT 26
CONDENSER TANK REPLACEMENT 26
INSTRUCTIONS FOR CHANGING DECORATOR PANELS 27
WINTER STORAGE INSTRUCTIONS 28

SERVICE INFORMATION

SERVICEMAN'S INFORMATION 29
SERVICE CHECK LIST 30-32
SERVICE INSTRUCTIONS (Water Flow in Freezer) 33
SERVICE ANALYSIS 34-36
CUSTOMER INFORMATION 37
ACCESSORY PARTS 38

THIS PAGE
INTENTIONALLY
LEFT BLANK

THIS PAGE
INTENTIONALLY
LEFT BLANK

THIS PAGE
INTENTIONALLY
LEFT BLANK

SCOTSMAN®



MODEL SM-18

HOME ICE CUBE MAKER

Size: 15" wide 20-1/2" deep 33-1/8" high.

Weight: 85 pounds

Cabinet: Steel

Finish: Baked on enamel

Color: Sandalwood, micomatte

Storage Bin: Polyethylene

Door: Swings to right

Door Latch: Magnetic Gasket 4 Sides

Lower Compartment Panel:
Removable by pulling outward at top.

SPECIFICATIONS

Power Consumption:	3.0 Amperes
Wire Size:	18 Gauge
Fuse Size — Maximum:	15 Amperes
Refrigerant Metering Device:	Capillary Tube
Cubes per Harvest:	8
Harvest Means:	Warm Water
Compressor Make: Compressor Specs:	Danfoss 1/8 H.P. 115/60/1
Compressor Model:	411L0052
Cycle Time:	24 minutes
Refrigerant Charge:	5 oz. R-12.

Requirements:
Power: 115 volts - 60 Hertz Single Phase
Water: 1/4" cold water line
Drain: Required for water Outlet.

MODEL SM-18

Daily Ice Capacity is directly related to condenser water temperature, ambient temperature, and age of machine. Under normal conditions the SM-18 will make up to 18 pounds of ice in 24 hours.

To keep your SCOTSMAN HOME ICEMAKER performing at it's maximum capacity, it is necessary to perform periodic maintenance as outlined on page 12 of this manual.

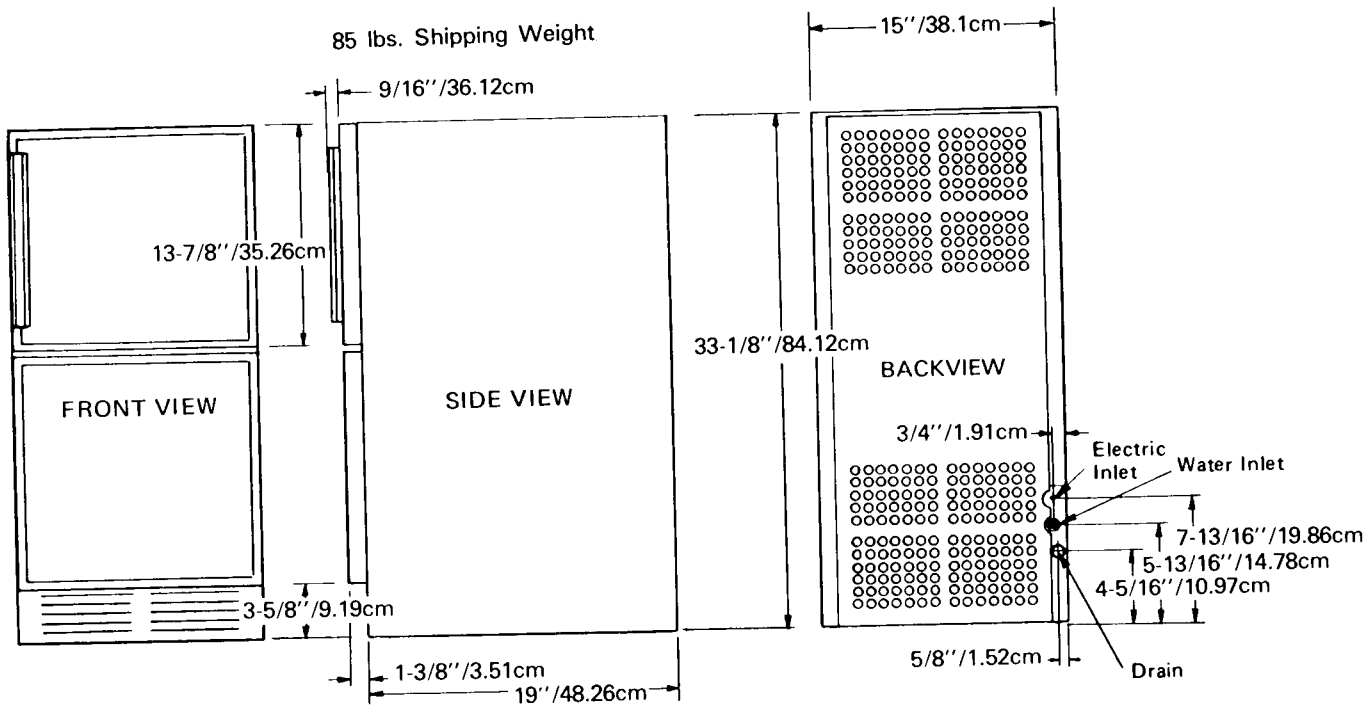

DIMENSIONAL DRAWING FOR BUILT-IN INSTALLATIONS

NOTE: AS SOME SERVICE PROCEDURES REQUIRE ACCESS TO THE ENTIRE UNIT, IT IS **IMPORTANT** TO ALLOW ENOUGH SPACE TO REMOVE THE MACHINE FROM THE INSTALLATION. PLEASE KEEP THIS IN MIND WHILE INSTALLING YOUR SM18W-1 HOME ICE CUBE MAKER.

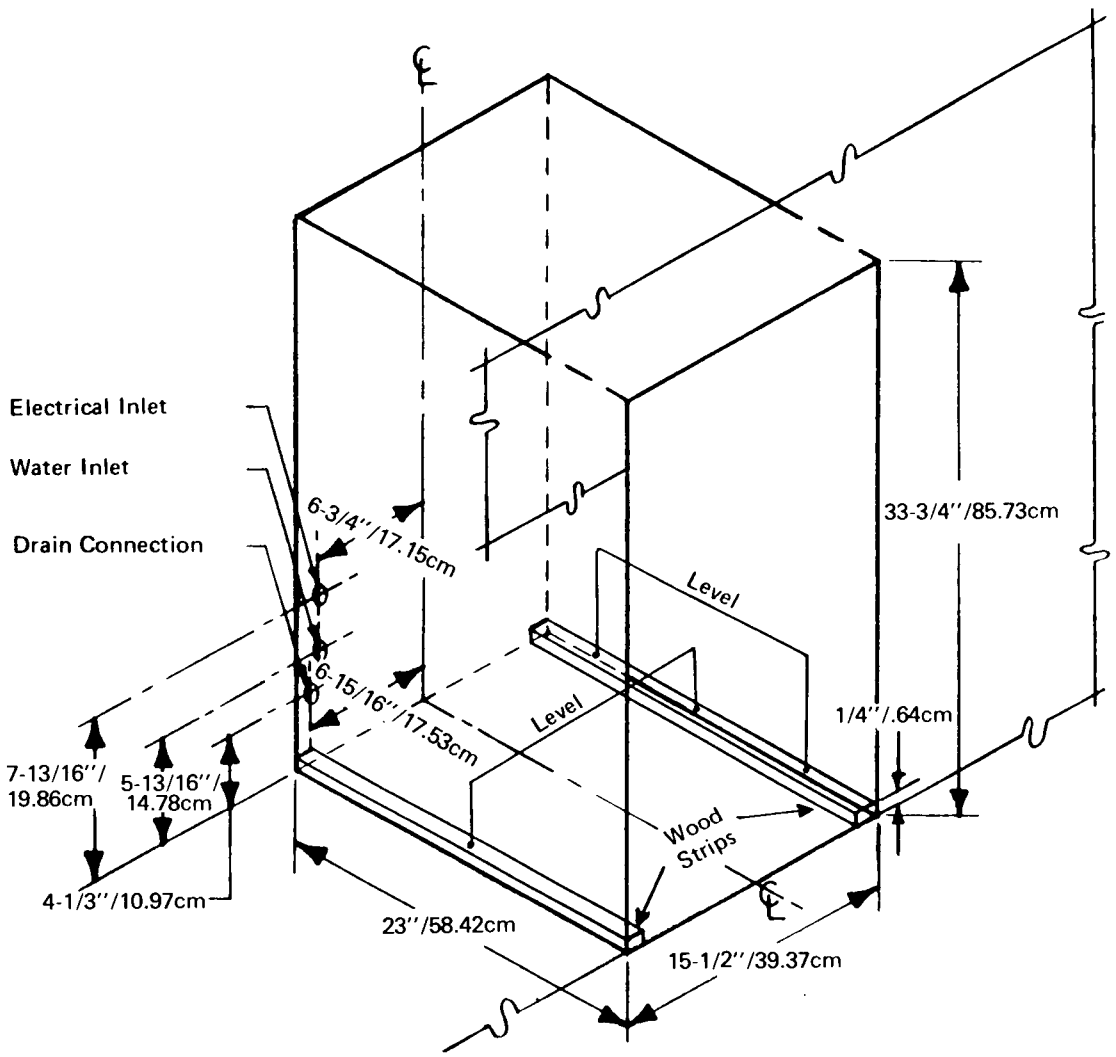

MODEL SM-18 RECESSED

To recess the Model SM-18 into a cabinet, provide an opening 33-3/4 inches high, 15-1/2 inches wide and 23 inches deep.

The above dimensions allow 4 inches at the back of the Ice Maker for electric cord, water line and drain line.

Requirements: For either recessed or freestanding installation.
Power: 115 volts, 60 cycle, single phase
Water: 1/4 inch flare connector provided on the Ice Maker.
Drain: Installation of an adequate drain is necessary. See page 9 and 10 for complete instructions.

INSTALLATION — READ CAREFULLY

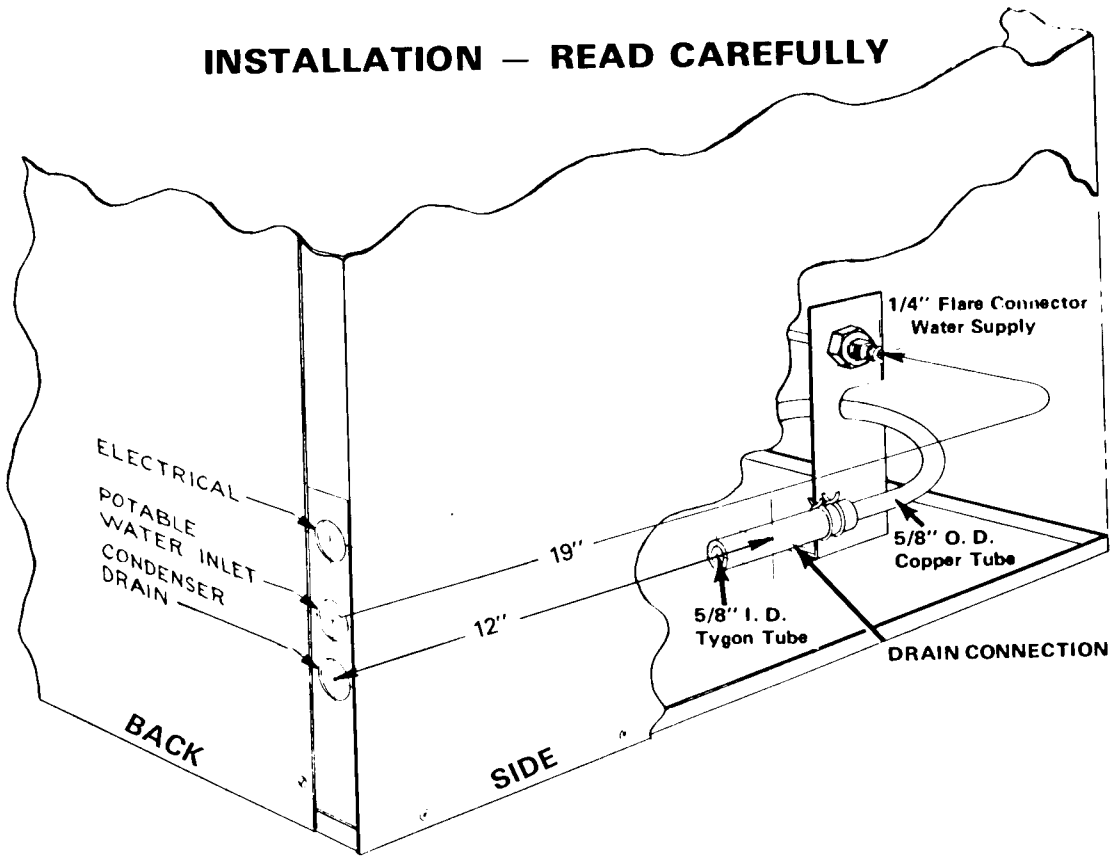

STEP ONE: Locate the unit on a solid level floor or base with access to electrical power, a water supply and a drain. Level, if necessary as shown on page 6.

STEP TWO: Remove the front panel, located below the ice storage door, by pulling outward on the top of the panel. This exposes the water and drain line connections.

STEP THREE: The ice maker should be on a separate electrical circuit. It is suggested an electrician be contacted to insure this circuit has a maximum fusing of 15 amps and is properly grounded. Low voltage from overloaded circuits can cause premature failure of cuber electrical components. A solid ground wire from cuber frame or grounding screw to an "earth" ground such as a cold water line should also be installed.
NOTE: Failure to ground the unit properly may result in an electrical shock hazard which could cause severe or fatal shock injury.

STEP FOUR: A 1/4 inch flare connector is provided at the front of the icemaker for the cold water supply. The supply line should not be smaller than 1/4 inch O.D. copper. A shut off valve conveniently located in the water line is recommended. The water supply line should be directed thru the opening in the back of the icemaker marked "Potable Water Inlet." as shown in the above drawing.

STEP FIVE: INSTALLATION OF UNIT DRAIN.
Instructions for proper drain hookup are contained on page 9 and 10 of this manual. Any parts which malfunction due to improper drain installation will not be eligible for one year parts exchange program.

NOTE: For under counter installation, allow approximately 19 inches of 1/4 inch water line and 12 inches of drain line (measured from the back of the ice maker) to direct thru the openings at the rear. Final connections are to be made after icemaker is in position.

INSTALLATION INSTRUCTIONS — SM18PW-1
(With Condensate Pump)

The Model SM18PW-1 Home Ice Maker is equipped with a condensate pump. THIS MAKES YOUR ICE MAKER ADAPTABLE TO INSTALLATIONS WHERE A GRAVITY DRAIN IS NOT AVAILABLE. Follow the instructions listed below carefully to insure proper operation.

1. Run the 3/8" I.D. flexible plastic tubing from the rear of the machine to your drain location.

2. Check chart below for max. length of drain line and lift.

3. Start the machine according to the instructions in the Service Manual.

4. The pump is equipped with a safety switch which will stop the ice-maker if the pump malfunctions and the reservoir is not pumped out. This safety switch is connected to the control box by the yellow cord.

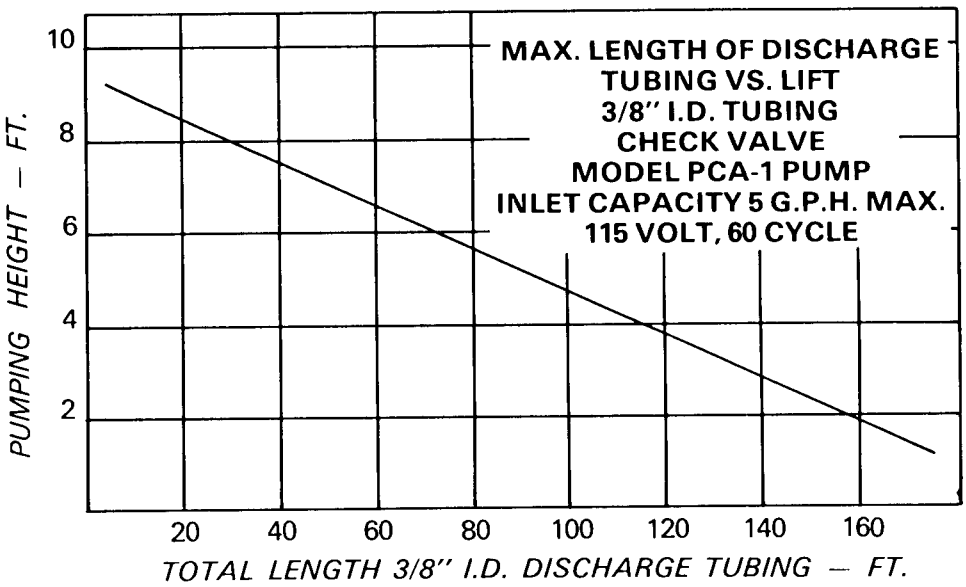

HOW TO USE THE CHART

The chart provides a simple ratio between the amount of vertical lift (head) in your installation compared to the maximum length of discharge tubing (run) needed. Figures derived assume an inlet capacity of five gallons per hour maximum. It is also assumed that 3/8" I.D. Flexible plastic tubing will be used.

NOTE: A relatively short pumping cycle is normal for a unit of this type. This in no way denotes a defective unit nor is short cycling harmful to the unit as long as the check valve is functional.

WARNING: DO NOT REMOVE FLUTED PLASTIC FITTING AND/OR CHECK VALVE FROM THE PUMP. REMOVAL OF EITHER WILL AUTOMATICALLY VOID THE WARRANTEE.

It can easily be seen, then, that, with a head (vertical rise) of 6', (for example) the maximum total length of discharge tubing to be used on the "run" (vertical plus horizontal) would be slightly less than 70'.

DRAIN INSTALLATION

IMPORTANT: To insure a properly functioning machine an adequate drain is necessary. Two different drain installations are acceptable. These are as follows:

1. Where a drain exists which is not higher than the opening in the back of the ice maker labeled "Condenser Drain", a gravity drain is adequate. At no time can the drain tube be raised higher than the cabinet hole. If the drain tube is run thru the floor behind the unit, provide a 7/8" hole at least 2-1/2 inches behind the back panel of the machine. This will prevent a kink from forming in the line. Proper drain installation requires the use of 5/8" OD copper tube or 5/8" I.D. flexible plastic tubing. It is important to insure that the plastic tubing does not kink. Allow 1/4" pitch per foot on drain lines over 4 ft. long. DO NOT plumb the drain line into the sewer in any air tight manner. It is extremely important to provide an air gap between the unit drain and any external drain. This prevents sewer gas from backing into the unit and also eliminates most air locks. An air lock will cause water to back up into the bin and melt the ice stored there.

SPK 18H INSTALLATION INSTRUCTIONS

Mounting Instructions:

1. Remove the 5/8" O.D. hook shaped drain tube completely from the unit by disconnecting the two hose clamps just below the bin drain.
2. Connect the large tee (5/8" x 5/8" x 5/8") with 7" long drain tube and elbow to tubes from which drain tube was removed. Secure with hose clamps at all joints. See sketch for details regarding part descriptions.
3. Place pump to the immediate right of water inlet supporting bracket in the front of the unit with the pump discharge tube end nearest the front. The water inlet tube must be dismounted from the bracket and allowed to be self supported above the pump. Elbow from drain tube should be placed in tank inlet.
4. Connect long and short discharge tubes (3/8" I.D.) to small tee and connect short tube to pump discharge. To small diameter leg of tee, connect 1/4" I.D. tube from condenser outlet. Secure all joints with hose clamps. Run long discharge tube out the back of the unit.

Auxiliary Safety Switch Wiring Instructions:

1. Disconnect electrical supply.
2. Remove Black (BLK) wire connecting on-off toggle switch to bin temperature control.
3. Connect leads from safety switch (yellow cord) to the terminals of the toggle switch and temperature control from which black wire was removed. Inspect terminals to insure proper spacing between terminals and also between terminals and control box. Adjust if necessary.

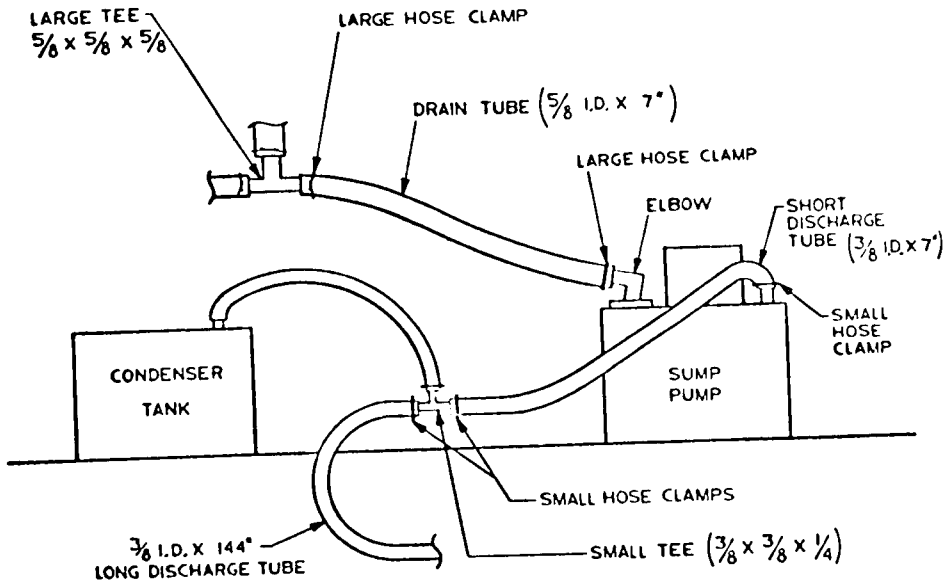

DRAIN INSTALLATION

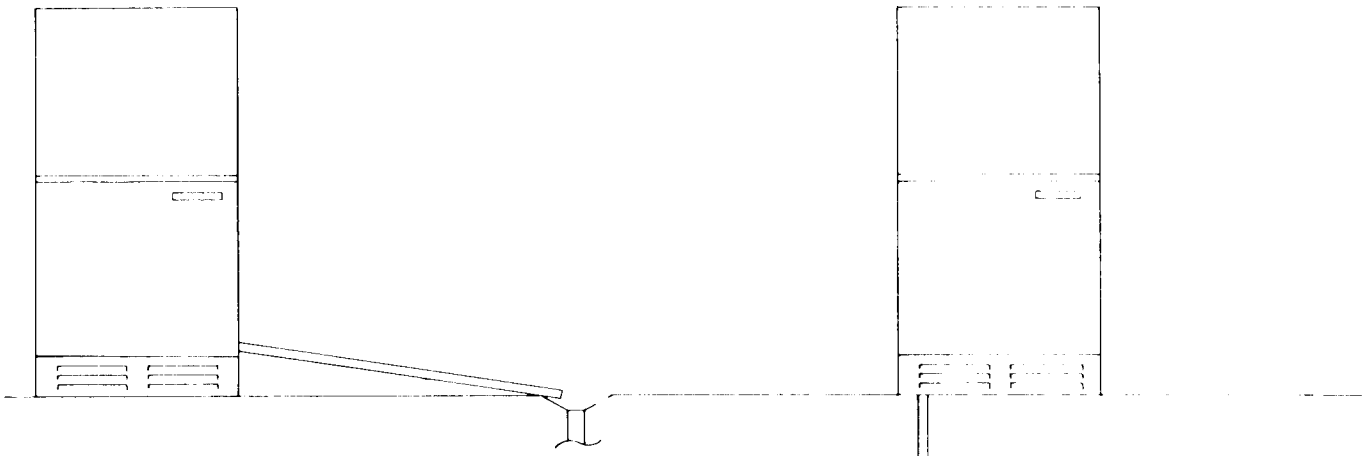

NOTE: THE INSTALLATION SHOWN BELOW IS ONLY ACCEPTABLE WHEN THE SPK-18H PUMP IS USED. THIS PUMP IS AVAILABLE AS A KIT FOR FIELD INSTALLATION OR FACTORY INSTALLED IN THE MODEL SM18PW-1.

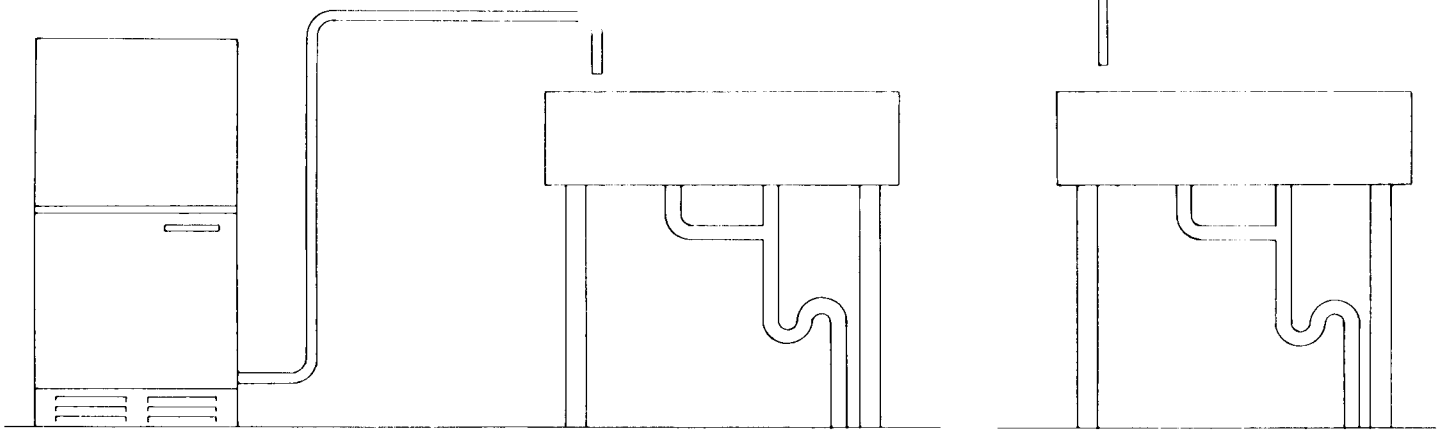

NOTE: SCOTSMAN DOES NOT SUGGEST THE INSTALLATION OF ANY DRAIN LINE RUN DIRECTLY OUTSIDE TO A LAWN, DRIVEWAY, FLOWER BED, ETC. CONNECT THE UNIT DRAIN TO AN EXISTING DRAIN LINE ACCORDING TO THE DRAIN INSTALLATION INSTRUCTIONS.

START-UP PROCEDURE

WARNING: NEVER RUN THE UNIT WITHOUT THE WATER TURNED ON. THIS COULD DAMAGE THE MACHINE.

1. Turn on the cold water supply to the machine.

2. Turn on the electrical power.

3. Push the lever of the Off-On switch to your left. The machine will now automatically produce ice in about thirty minutes.

In normal operation the compressor will operate approximately 22 minutes to freeze a batch of cubes. It will then remain off for about 2 minutes while the ice cubes are falling from the freezer to the storage bin. The compressor will then automatically start and the cycles will be repeated until the storage bin has filled.

The normal storage bin capacity is 26 pounds of ice (about 700 cubes) or when the cubes touch the thermostat capillary tube on the right hand side of the bin. The bin is considered full when cubes are ten inches above the bottom of the bin. When the machine is initially installed, the unit will operate continuously for approximately 36 to 48 hours or until the ice storage bin has been filled. Once the storage bin has been filled, the unit will cycle on the bin control to maintain a full bin of ice.

When the cuber is first started it may be necessary for the unit to complete two cycles (about 48 minutes) before usable ice is produced.

This is due to the lack of water in the system for making cubes.

If cubes are required the first cycle it will be necessary to take the following steps:

1. Push lever of the ON-OFF switch to the OFF position. Disconnect electrical power.
NOTE: Failure to Disconnect the electrical power may result in severe or fatal shock injury.

2. Remove control box cover.

3. Revolve the cam on the timer motor clockwise until the micro switch plunger is positioned in the "V" slot of the metal cam or on the lobe of the plastic cam.

4. Replace control box cover.

5. Reconnect electrical power.

6. Lift plastic curtain and pour three cups of water into the plastic reservoir.

7. Push lever of the ON-OFF switch to the ON position.

NOTE: The metal cam assembly on the timer motor consists of two discs which can be adjusted to lengthen or shorten the harvest cycle by releasing the locking nut and moving the outside disc to increase or decrease the slot opening. The normal setting for the harvest cycle is No. 2, which is two minutes. The unit is in the harvest cycle when the plunger on the micro switch is in the slot between the metal discs. The plastic cam is not adjustable. When making adjustments, power should be disconnected.

To check the cuber for proper operation, follow the steps in the Service Check List on pages 30, 31, and 32.

CLEANING AND CARE

Cabinet Exterior:

Clean with warm water and soap. Waxing is not required but is permissible on metal parts. Do not apply wax on the rubber gasket around the door opening or on plastic parts.

Machine Compartment:

Do not attempt to clean this area unless the off-on switch is turned off — lever pushed to the right. Use a vacuum cleaner or dust cloth but clean carefully to avoid damage to wires and delicate parts. DO NOT REMOVE the cover on the control box unless the power supply is disconnected. **NOTE:** Failure to disconnect the electrical power prior to removing the control box cover may result in severe or fatal shock injury.

Storage Bin:

Use only warm water and soap. The chemicals in some cleaning agents will damage plastic.

Freezing Unit and Water System:

All water contains some minerals and impurities, scale, iron etc. Cleaning schedule should be timed accordingly. The following procedure should be used to clean the interiors of the freezer, tanks and water lines.

1. Remove all cubes from the storage bin.

2. With the unit operating and the water spraying from the jets behind the plastic curtain (freezing cycle), slowly pour three (3) ounces of Scotsman Ice Machine Cleaner into the trough or reservoir below the jets. (See page 13 for location of reservoir).

3. Let the machine operate in the normal manner for one hour, then wait for a harvest cycle (when the cubes fall out of the freezer and into the storage bin.)

At this time turn the machine off. (See off-on switch on page 13).

4. Pour a gallon of warm water over the cubes that have been made during the cleaning cycle. This will melt the cubes and clean the drain.

5. Dispose of any surplus cubes that are left in the storage bin.

6. Use a gallon or more of clean, cold water and flush out the interior surfaces of the freezer and storage bin.

7. Wipe all the interior surfaces and turn machine on for normal operation.

8. Scotsman Ice Machine Cleaner is a mild food grade acid. Ordinary care in its use is adequate. All cubes made with this solution should be discarded as they have an acidulent taste.

CAUTION: Contains phosphoric and Hydroxyacetic acids. These compounds are corrosive and may cause burns. If swallowed DO NOT induce vomiting. Give large amounts of water or milk. Call physician immediately. In case of external contact, flush with water. Keep out of reach of children.

SM18W-1

OUTLINE OF REFRIGERATION AND WATER SYSTEM

FREEZING CYCLE

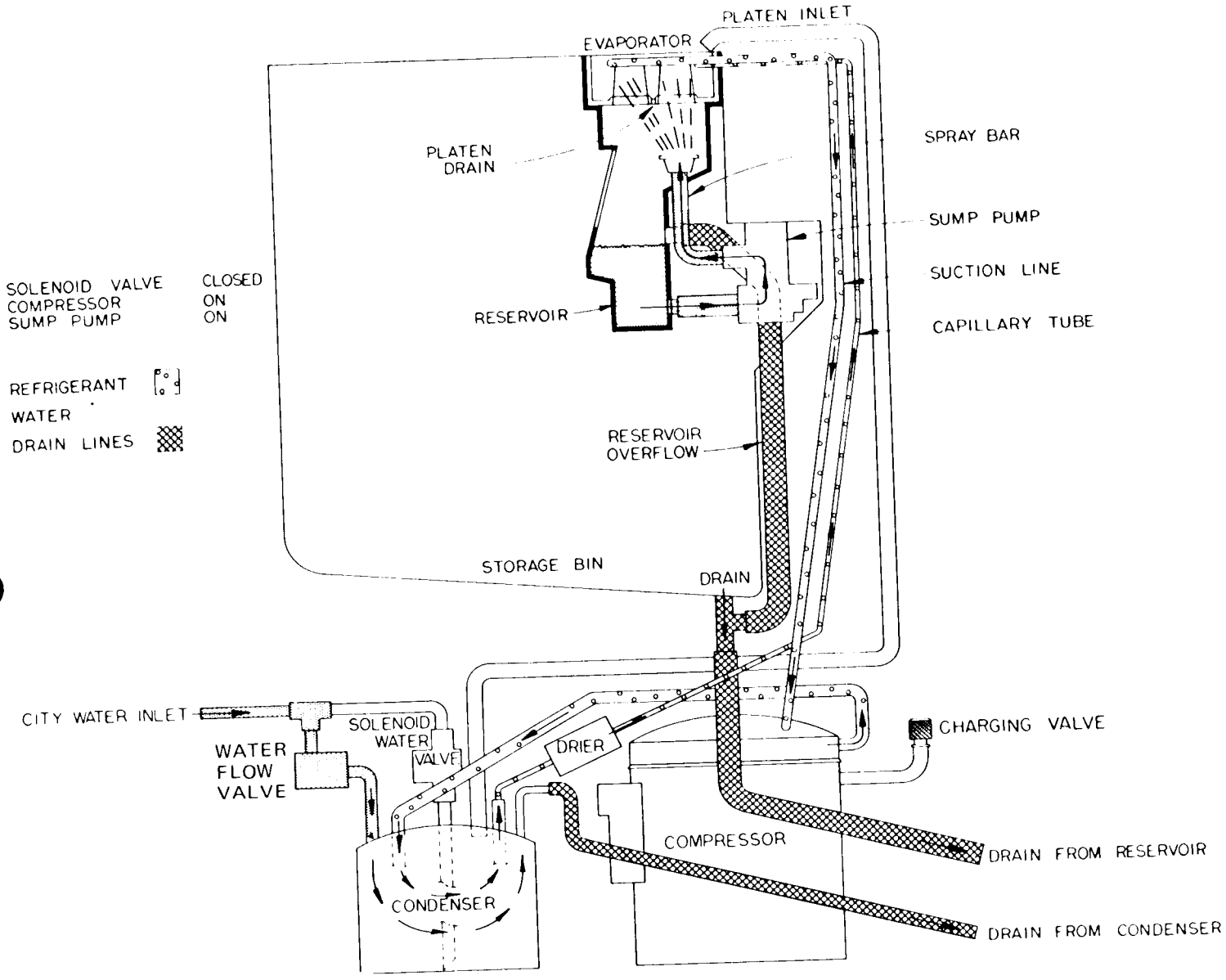

1. Solenoid Water Valve is closed preventing fresh (city) water from entering Condenser which also stops the flow of water from the Condenser into the top of the Evaporator.

2. Water that has drained from the Evaporator (Platen) into the Reservoir is now pumped into the Spray Jet and sprayed to the underside of the Evaporator to make ice cubes.

3. The cold water that entered the Condenser is now the medium used for condensing hot refrigerant into a liquid. This water becomes warm and is used in the next harvest cycle to release the cubes.

SM18W-1

OUTLINE OF REFRIGERATION AND WATER SYSTEM

HARVEST CYCLE

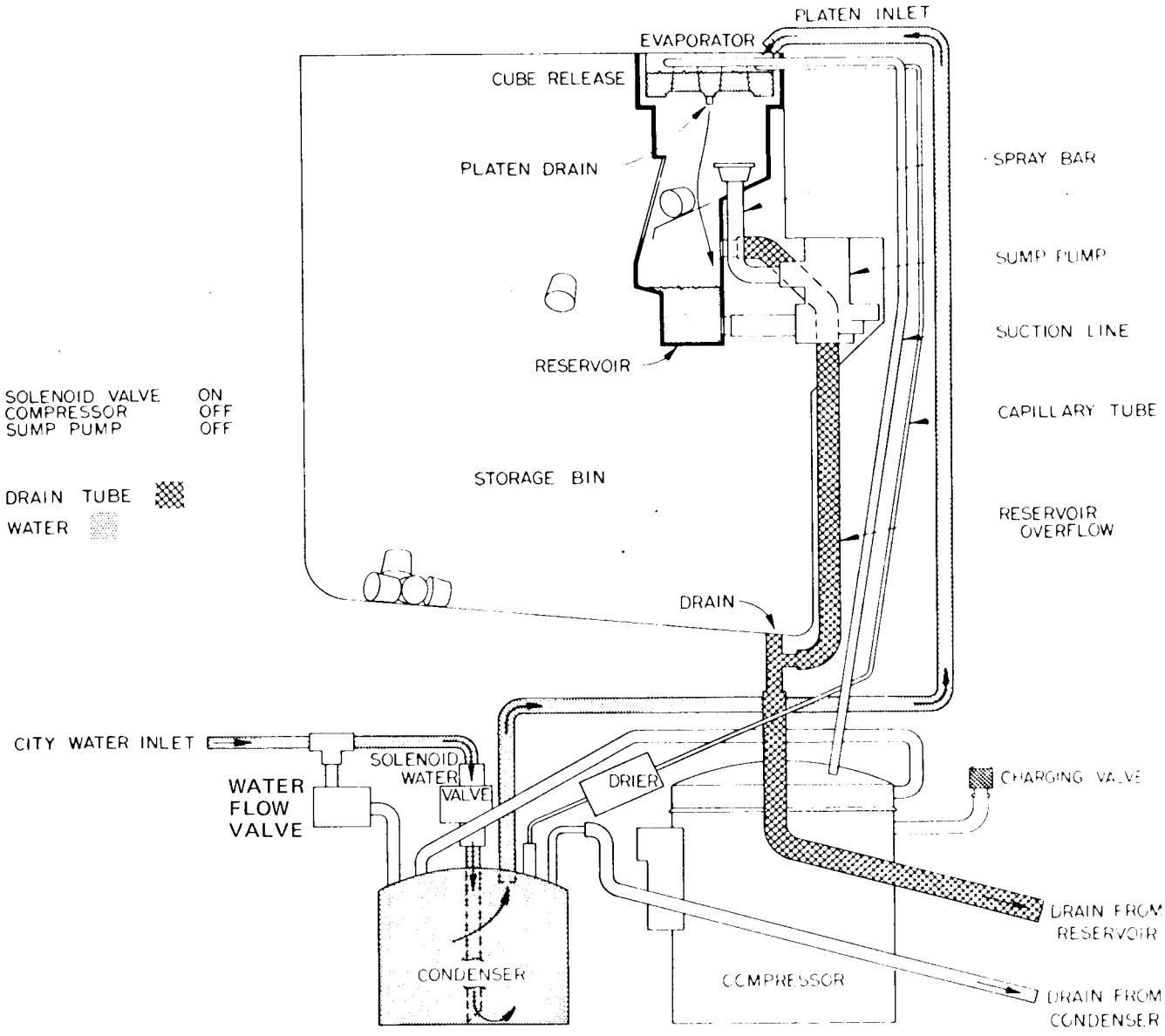

1. An electrically operated solenoid Water Valve allows fresh potable water to enter the Condenser. The incoming cold water forces the hot water from the top of the Condenser into the Evaporator. The hot water releases the cubes to free fall into a storage bin. In the Evaporator there is a water holding vessel, that also holds the cups in place, that is called the Platen. In this Platen there is a small hole. As water comes into the Platen, water is also slowly being released from the Platen thru this small hole. The water from the Evaporator (Platen) is collected in the Reservoir. There is an overflow tube in the Reservoir to control the quantity of water to be stored. The water in the Reservoir is being saved for the next cycle (FREEZING) to be used in making ice cubes.

SM18PW-1 (With Condensate Pump)

OUTLINE OF REFRIGERATION AND WATER SYSTEM

HARVEST CYCLE

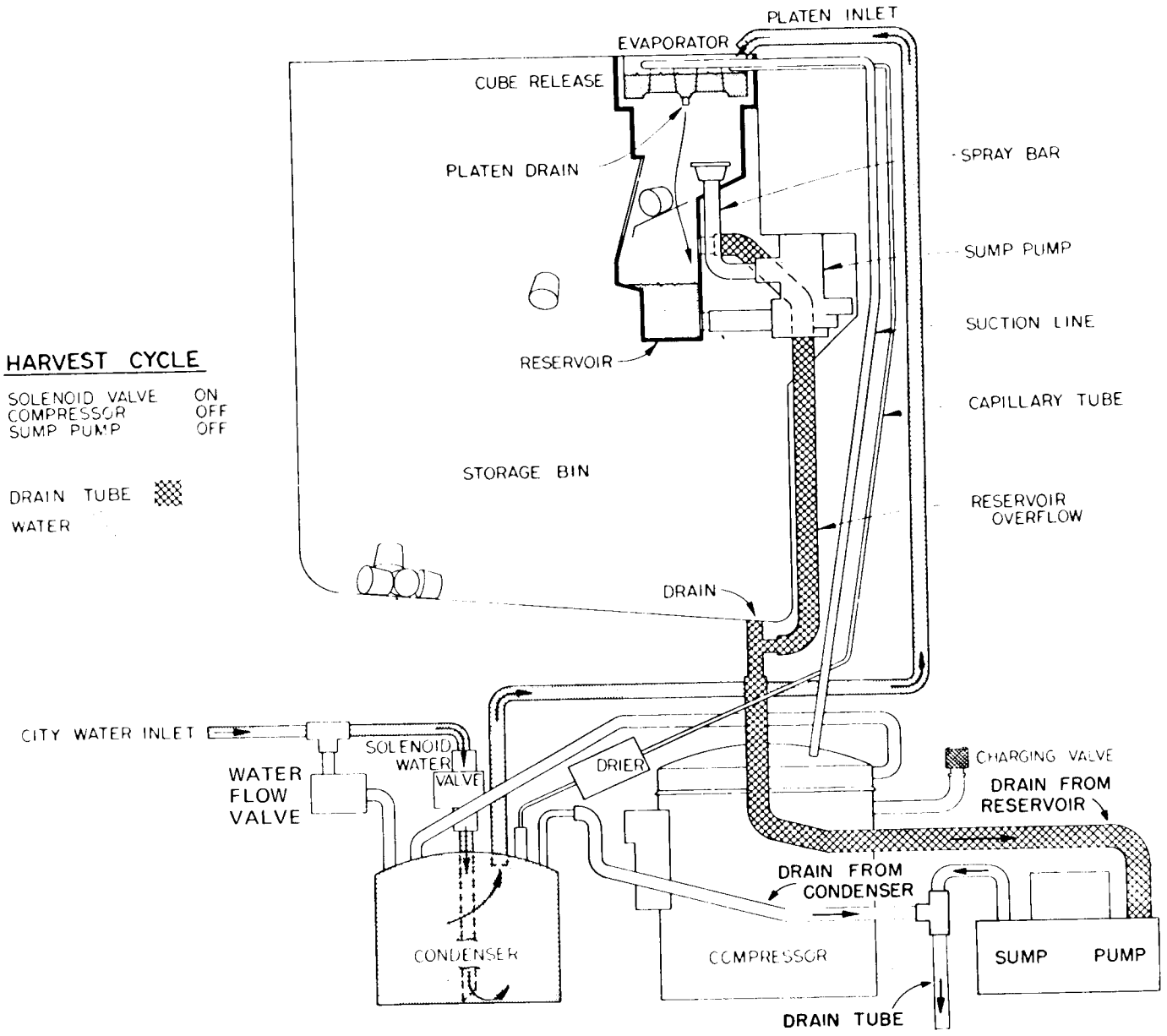

1. The operation of the SM18PW-1 (with condensate pump) is identical to the standard SM18W-1 except for the final drain sequence. Instead of relying on a gravity drain, this unit collects the drain water in the condensate pump. When enough water is collected, a float switch activates the pump motor. This water is pumped to wherever the drain line is installed.

2. After the water is pumped out of the sump the float switch shuts off the motor. The pump will normally operate several times during harvest and a few times during the early part of the freezing cycle.

3. The pump is equipped with a safety switch which will stop the icemaker if the pump malfunctions and the reservoir is not pumped out. This safety switch is connected to the control box by the yellow cord.

4. See page 8 for installation instructions for the SM18PW-1.

BIN INSERT ASS'Y

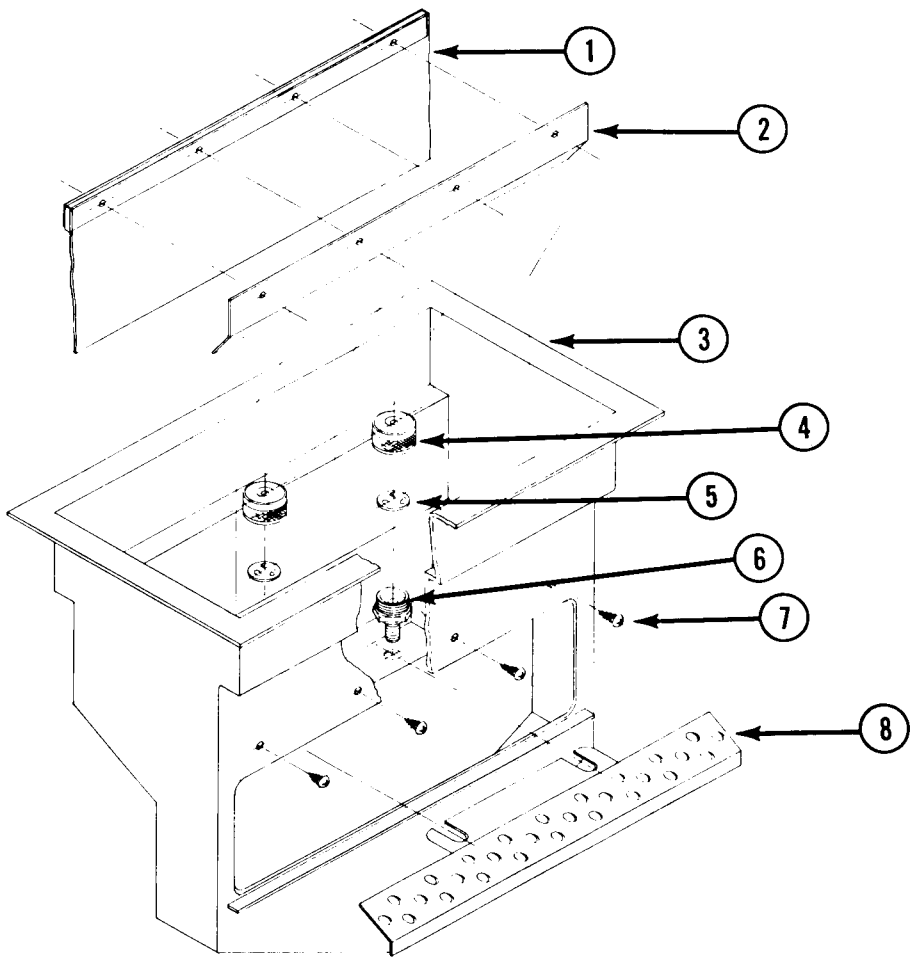

ITEM NO.	PART NO.	DESCRIPTION
1.	2-2053-01	Curtain
2.	A24155-1	Curtain Stiffner
3.	2-1923	Bin Insert
4.	2-1841	Jet Top
5.	A9543	Spinner
6.	2-1840	Spray Jet
7.	3-1404-16	Screws
8.	A-22518	Cube Chute

WARNING: When removing jet top (4), be careful not to drop the small spinner (5). If dropped into the sump, the spinner may damage the water pump.

NOTE: The unit will not make ice properly if the spinners are not in place.

BIN INSERT ASS'Y

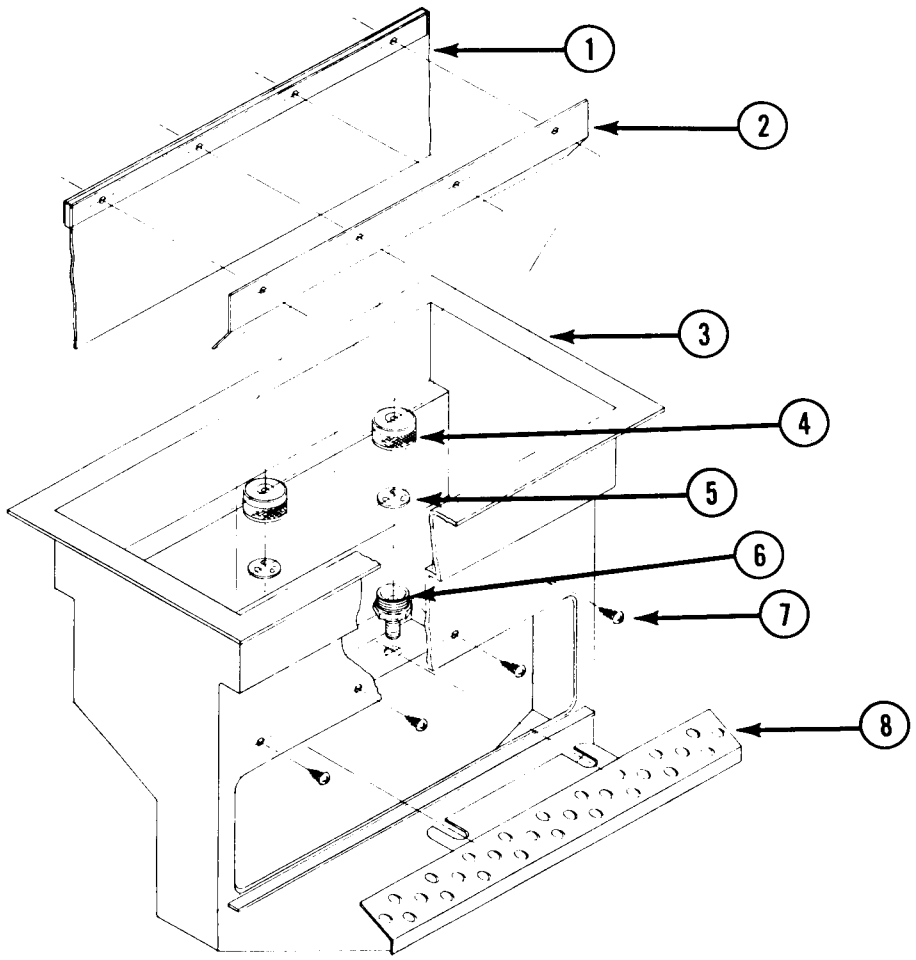

ITEM NO.	PART NO.	DESCRIPTION
1.	2-2053-01	Curtain
2.	A24155-1	Curtain Stiffner
3.	2-1923	Bin Insert
4.	2-1841	Jet Top
5.	A9543	Spinner
6.	2-1840	Spray Jet
7.	3-1404-16	Screws
8.	A-22518	Cube Chute

WARNING: When removing jet top (4), be careful not to drop the small spinner (5). If dropped into the sump, the spinner may damage the water pump.

NOTE: The unit will not make ice properly if the spinners are not in place.

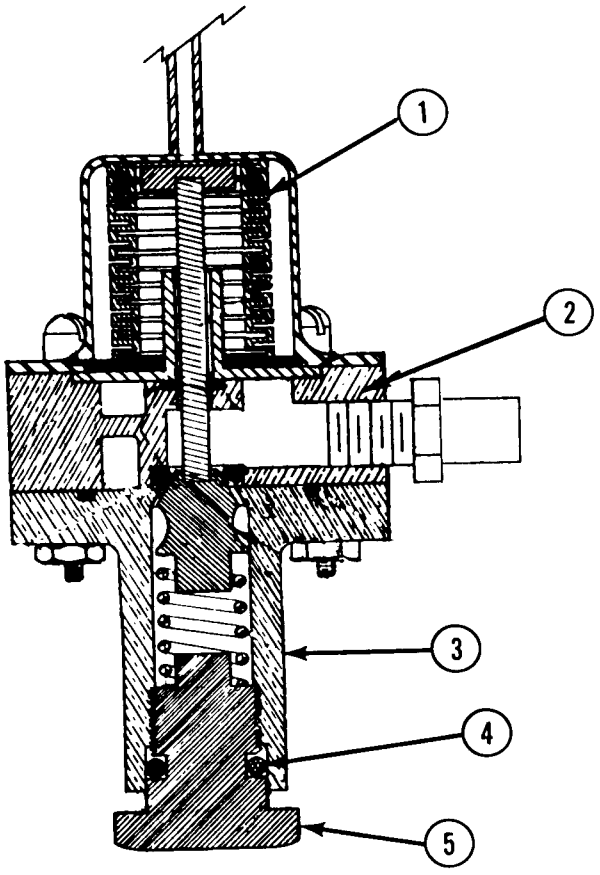

WATER FLOW VALVE

A19180

ITEM NO.	PART NO.	DESCRIPTION
1.	A-19382	Bellows Assembly
2.	2-1656	Upper Housing
3.	2-1657	Lower Housing
4.	13-617-10	O-Ring
5.	2-1654	Adjustment Nut

WATER FLOW VALVE SERVICE INFORMATION

This page has a cut-away view of the water flow valve showing the location of each part of the valve and also lists the part numbers.

Four screws are used to hold brass bellows assembly to the plastic body. By removing these screws the entire valve can be disassembled.

Damage can result to the valve if the fittings are tightened too severely. A good grade thread sealer should be used and the fitting tightened only enough to prevent water leakage. Any time the water flow valve has been disassembled or repaired, it must be readjusted to its proper setting as follows:

Wait approximately 15 minutes of the second freezing cycle, then check the temperature of the discharge water leaving the small black drain line on the condenser tank. The temperature of the discharge water should be 104 degrees fahrenheit. If the temperature is higher, turn the adjustment nut, item number 5 counterclockwise to decrease the discharge water temperature. If the discharge water temperature is less than 104 degrees Fahrenheit, turn the adjustment nut clockwise to increase the temperature.

One full turn of the adjustment nut will change the temperature of this discharge water approximately 12 to 16 degrees Fahrenheit.

If a water leak should occur around the adjustment nut, it can be corrected by removing the adjustment nut and "O" Ring from the valve and applying a light coating of rubber lubricant to the "O" Ring.

This valve is spring loaded, therefore the four screws holding the valve should be loosened before installing the adjustment nut in the plastic valve body.

A-22536-21 WATER PUMP COMPLETE

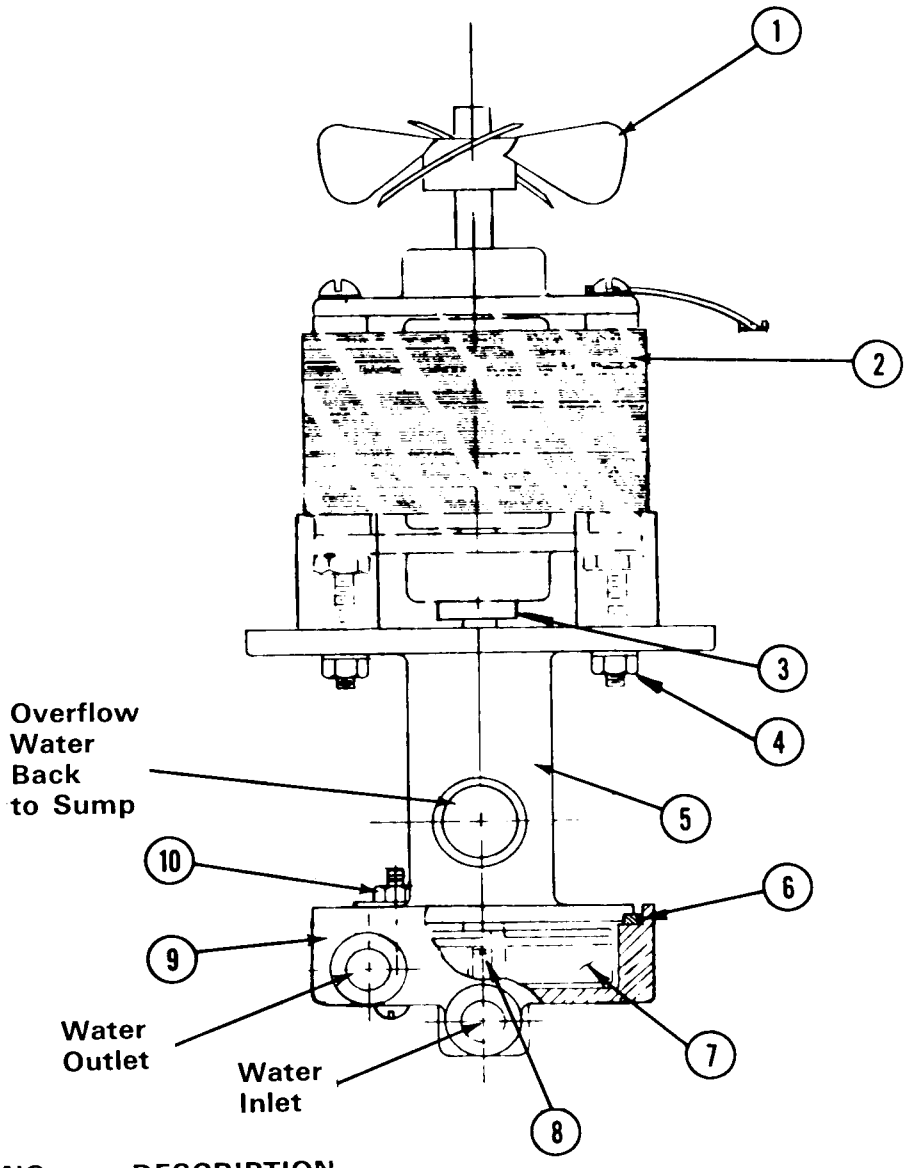

ITEM NO.	PART NO.	DESCRIPTION
1.	2-1719	Fan Blade
2.	12-1714-1	Motor
3.	13-690	Rubber Washer
4.	3-1417-14	Lockwasher
	3-1406-2	Nut
5.	2-1711	Water Pump Body
6.	13-617-7	O-Ring
7.	2-1712	Impeller
8.	3-1417-14	Lockwasher
	3-1403-5	Screw
9.	2-1710	Pump Base
10.	3-1403-60	Screw
	3-1408-23	Washer
	3-1406-2	Nut

ITEM NO.	PART NO.	DESCRIPTION
*11.	13-687	Gasket, Water Pump (Installed Between Pump & Bin)
*12.	A20564-1	Water Pump Tube
*13.	A20564-2	Water Pump Tube
*14.	A20565-1	Water Pump Tube

* Not Shown

CONTROL BOX ASSEMBLY

(115/60/1)

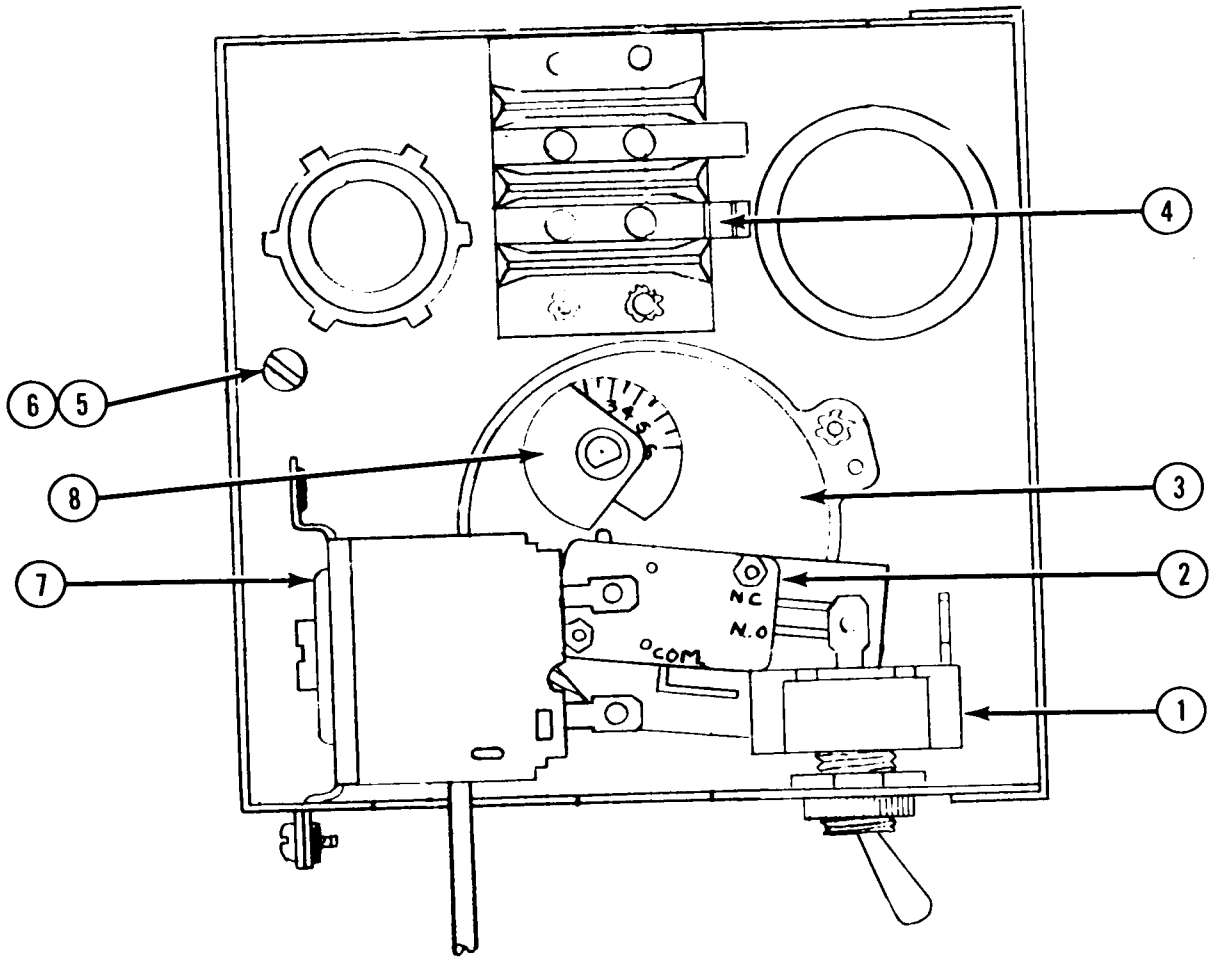

ITEM NO.	PART NO.	DESCRIPTION
1.	12-426-1	Toggle Switch
2.	12-1721-50	Micro Switch
3.	12-1713-1	Timer Assembly Complete Switch & Cam Included
4.	12-1444	Terminal Board
5.	3-1403-5	Ground Screw
6.	3-1417-14	Ground Washer
7.	11-366	Bin Thermostat
8.		Cam Assembly, Shown in harvest cycle position.

NOTE: The bin thermostat (7) is only an automatic "ON" and "OFF" switch. Adjusting this control WILL NOT affect the size or quality of the cubes.

CABINET PARTS

(Sandalwood Finish)

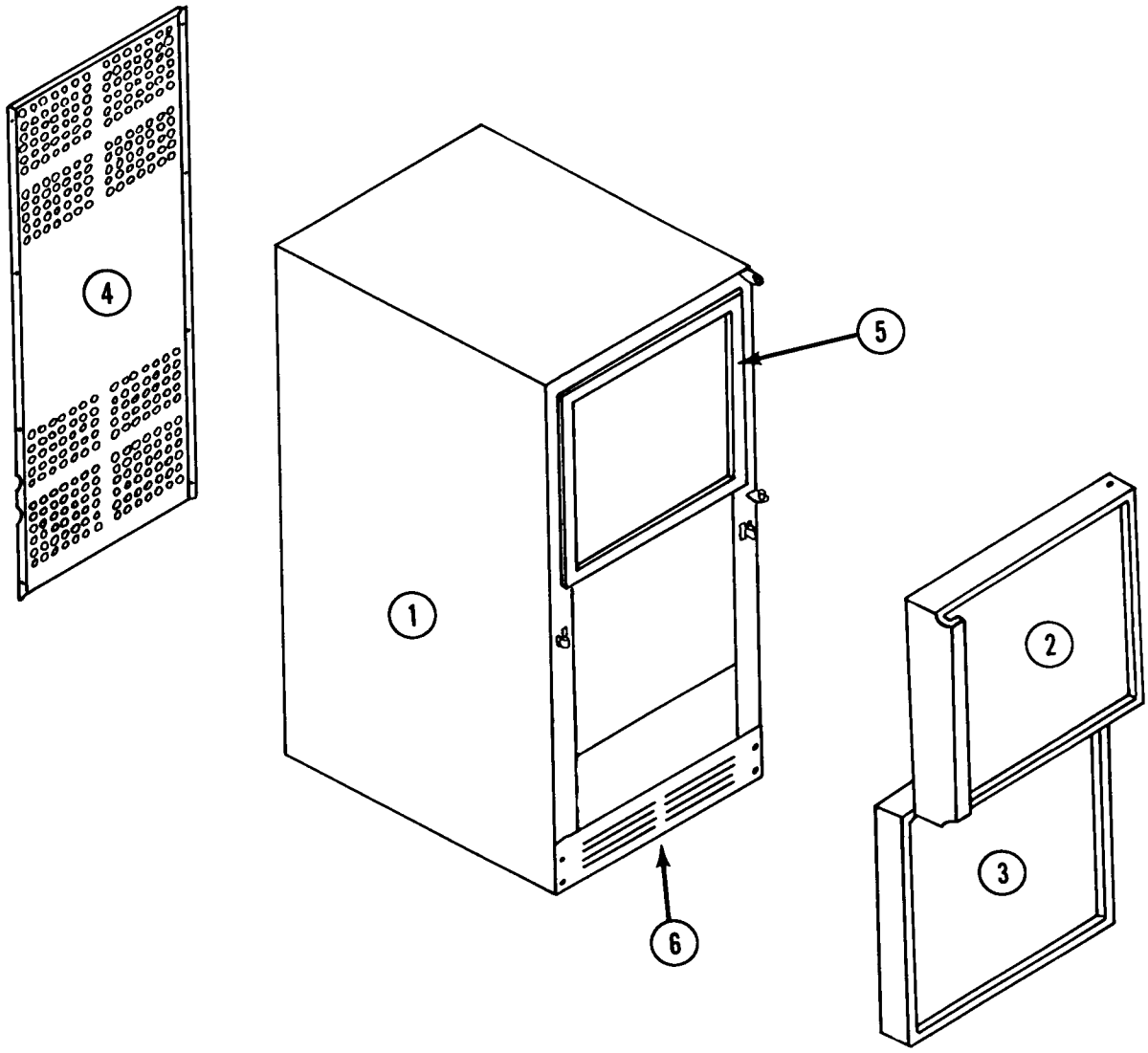

ITEM NO.	PART NO.	NAME
1.	A-18592	Cabinet Assembly
2.	A-24289-1	Access Door Complete
3.	A23586-1	Front Service Door
4.	A18595	Rear Service Panel
5.	13-634	Gasket (magnetic)
6.	A18767	Kick Plate

INTERNAL COMPONENTS

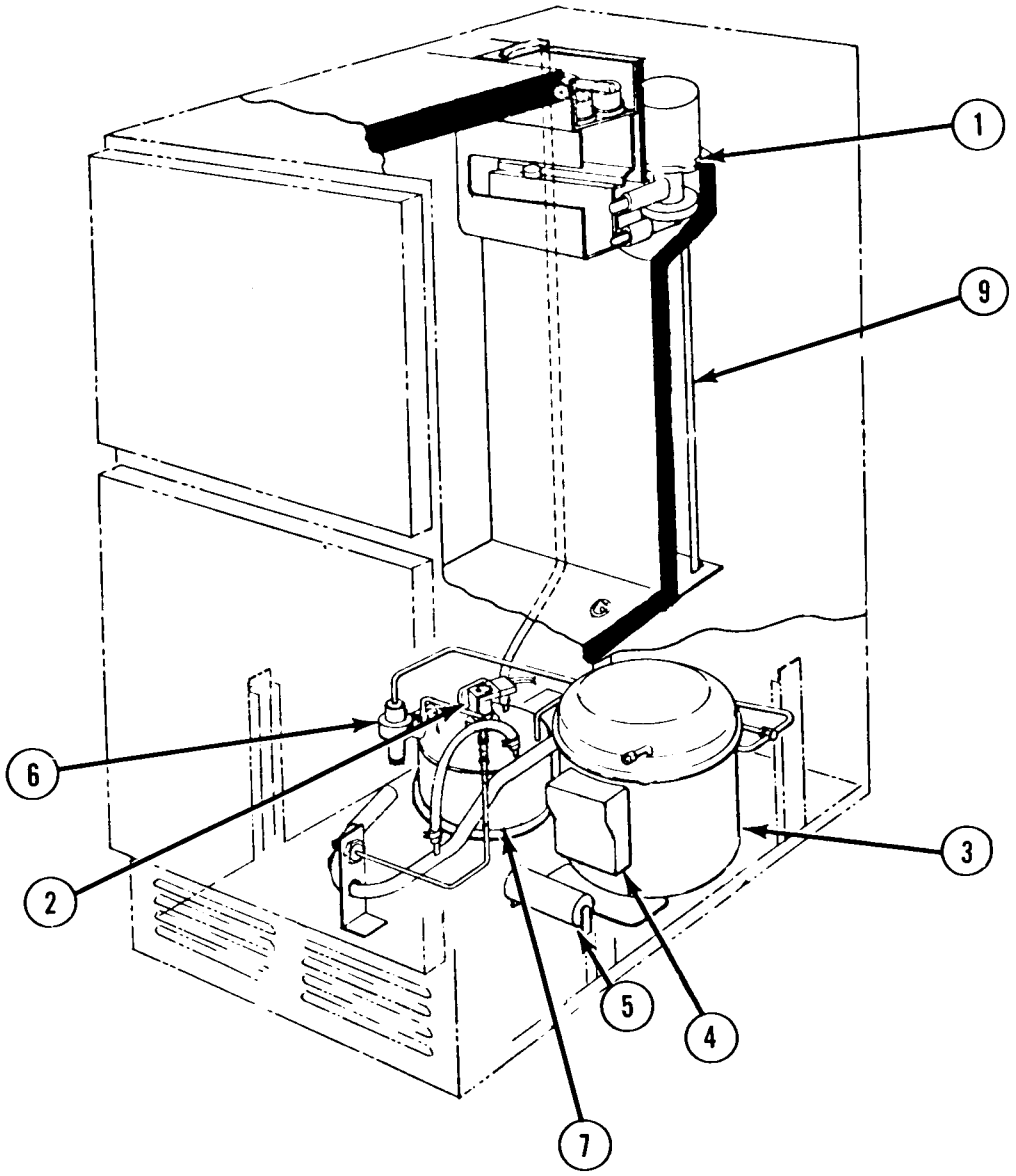

ITEM NO.	PART NO.	DESCRIPTION
1.	A-22536-21	Water Pump Assy. 115 V - 50/60 hertz
2.	12-1434-2	Water Solenoid 115 V - 50/60 hertz
3.	18-2150-1	Compressor 115 V - 50/60 hertz
4.	18-2150-7	Compressor Junction Box
5.	18-2151-1	Capacitor 115 V - 50/60 hertz
6.	A19180	Water Flow Valve
7.	A19272	Condenser
8.	2-831	Drier (Replacement differs from originals)
9.	A23013	Storage Bin
*10.	13-635	Rubber Cup Holder
*11.	A19319	Evaporator Assy Complete
*12.	2-1667	Evaporator Cover Plastic
*13.	A19588	Top Insulation

NOTE: If special voltages are used, please specify in electrical parts orders.

* Not Shown

SM-18W-1
WIRING DIAGRAM
(115/60/1)

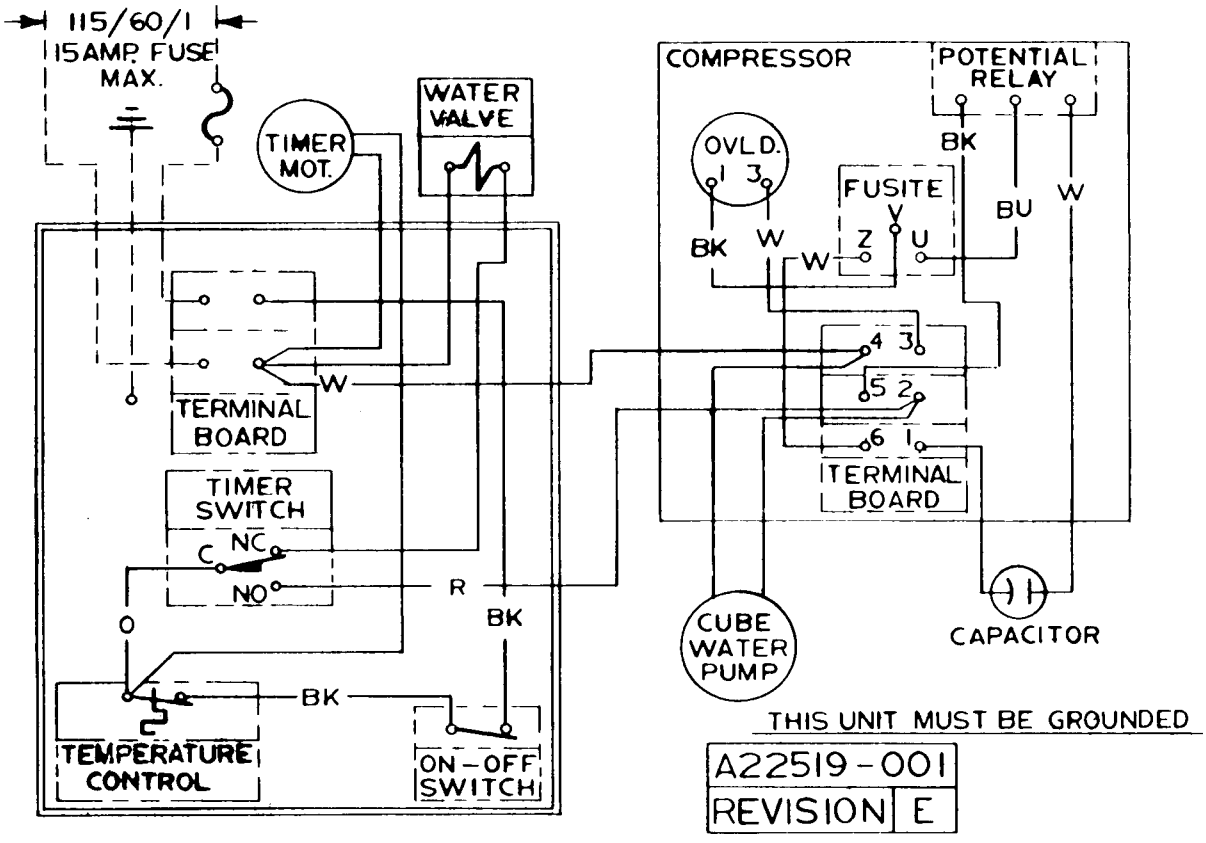

WIRING DIAGRAM
SM18PW-1
(With Condensate Pump)
(115/60/1)

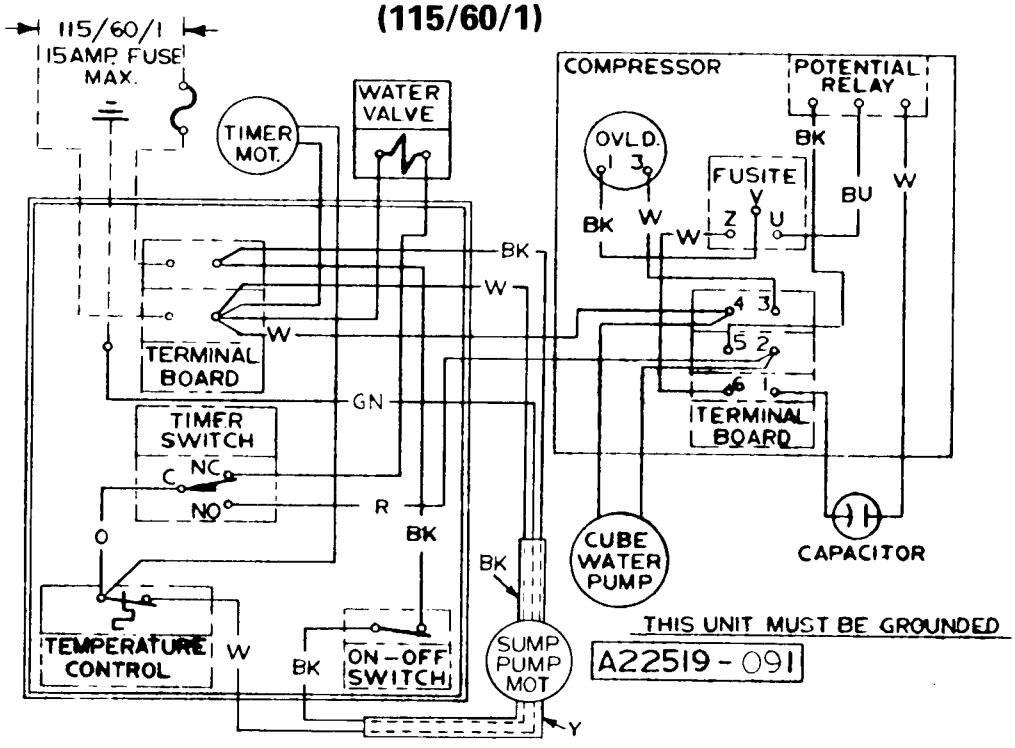

MAINTENANCE INSTRUCTIONS

WARNING: DISCONNECT ELECTRICAL AND WATER SUPPLY BEFORE SERVICING MACHINE. FAILURE TO DISCONNECT ELECTRICAL POWER MAY RESULT IN SEVERE OR FATAL SHOCK INJURY.

Cabinet Removal.

1. Remove lower door by pulling forward at both top corners.

2. Remove upper door by taking out the hinge screw at the top right hand corner and lifting up and forward.

3. Remove 8 screws (2 on each side) from under the door gasket. It is not necessary to remove the gasket from the cabinet.

4. Remove the 4 screws in the kickplate.

5. Remove the 9 screws in the back panel. Also remove the 4 screws in the brace behind the water pump.

6. Remove the 6 screws (3 on each side) from the lower edge of the cabinet.

7. Remove the cabinet by lifting straight up.

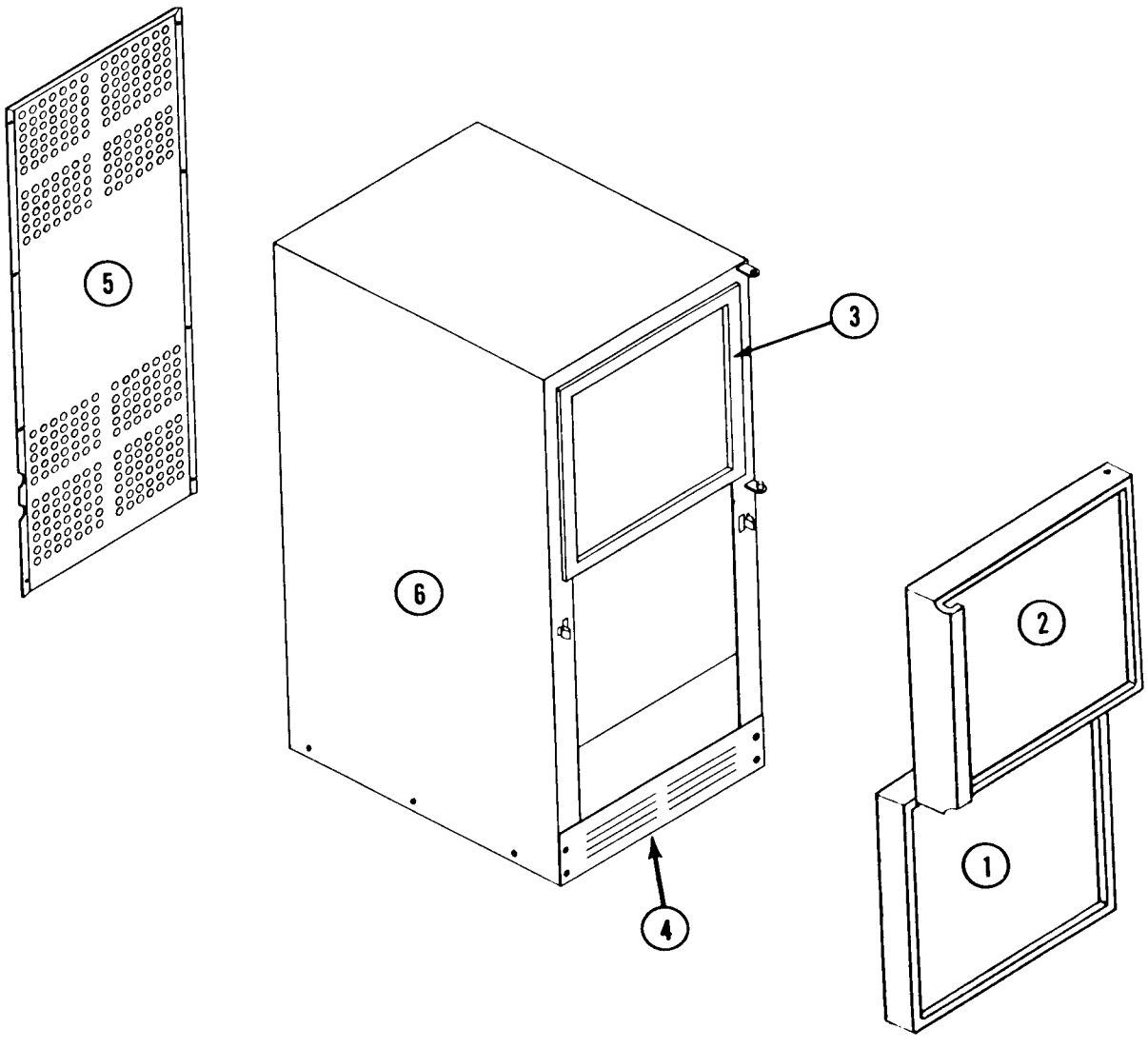

TIMER MOTOR REPLACEMENT

WARNING: DISCONNECT THE ELECTRICAL SUPPLY BEFORE SERVICING MACHINE. FAILURE TO DISCONNECT ELECTRICAL POWER MAY RESULT IN SEVERE OR FATAL SHOCK INJURY.

1. Remove lower service panel.

2. Push the toggle switch to the "OFF" position.

3. Remove the control box cover.

4. The timer motor is riveted to the control box. To remove it, you must drill out these rivets.

5. Remove the electrical connections from the malfunctioning timer and replace them on the new part.

6. Mount the new timer motor in the control box with sheet metal screws.

7. Check the timer motor for proper operation. The machine should make ice for 22 minutes and harvest for 2 minutes. These times are $\pm$ 15 seconds.

NOTE: A bad micro-switch may be replaced without changing timer motors. Remove the small mounting nuts and electrical connections. Install the new micro-switch and check for proper operation.

BIN THERMOSTAT REPLACEMENT

WARNING: DISCONNECT THE ELECTRICAL POWER BEFORE SERVICING MACHINE. FAILURE TO DISCONNECT ELECTRICAL POWER MAY RESULT IN SEVERE OR FATAL SHOCK INJURY.

1. Follow steps 1 thru 7 for cabinet removal. (see p. 23)

2. Remove the two pieces of tape-on insulation from the capillary tube on the right hand side of the bin.

3. Push the end of the capillary tube through the hole into the bin.

4. Pull the tube out of the bin through the forward hole.

5. Remove the mounting screw holding the thermostat to the control box.

6. Remove the spade connections and replace them on the new control.

7. Remount the new thermostat in the control box and position the capillary tube.

8. Re-assemble the machine and check the operation of the thermostat by placing an ice cube against the capillary tube. Holding ice against the capillary tube will shut the unit off. Warming the capillary tube with your hand will turn the unit back on.
NOTE: The capillary tube should run parallel and 1/4" away from the bin wall for proper operation.
IMPORTANT: The bin thermostat is not eligible for warranty replacement if the capillary tube has been cut.

WATER PUMP REPLACEMENT

WARNING: DISCONNECT ELECTRICAL SUPPLY BEFORE SERVICING MACHINE. FAILURE TO DISCONNECT ELECTRICAL POWER MAY RESULT IN SEVERE OR FATAL SHOCK INJURY.

1. Follow steps 1 thru 7 for Cabinet Removal. (see p. 23)

2. Remove the two water pump electrical leads from terminals in compressor junction box.

3. Remove 3 hose clamps and hoses from behind bin insert.

4. Remove the 2 screws which hold the water pump in place.

5. Lift out the pump and pull the wire leads out of the protective conduit. NOTE: Attach a cord to the leads before removing them from the control box. After the leads are pulled thru the conduit, the cord can be used to pull the new leads thru.

6. To install the replacement pump, follow previous steps in reverse. WARNING: Do not kink the three water tubes. Any obstruction will cause rapid failure of motor.

WATER FLOW VALVE REPLACEMENT

WARNING: DISCONNECT ELECTRICAL AND WATER SUPPLY BEFORE SERVICING MACHINE. FAILURE TO DISCONNECT ELECTRICAL POWER MAY RESULT IN SEVERE OR FATAL SHOCK INJURY.

1. Follow steps 1 thru 7 for cabinet removal. (see p. 23)

2. Slowly release the refrigerant by loosening the high side flare nut on the flow valve capillary tube.

3. Separate the valve from the water inlet and outlet lines by removing the compression nuts.

4. Install the new valve and evacuate the refrigeration system. NOTE: Use a good grade thread sealer and do not over tighten. Too much pressure on the fittings will crack the valve.

5. Recharge the machine with the proper amount of refrigerant listed on the serial number plate.

6. If it is necessary to adjust the replacement valve, see the following procedures for the proper method before making this adjustment.
NOTE: If the bellows is in good condition on the malfunctioning valve, it is not necessary to release your present refrigerant charge. Simply remove the screws holding the bellows to the plastic body and leave the old bellows attached to the machine. Then attach the plastic body of the new valve and replace the water lines according to the previous instructions. By using this method, it is not necessary to evacuate or recharge the refrigerant system.

WATER FLOW VALVE ADJUSTMENT

1. Set the timer in the control box to the harvest position. To do this, turn the brass cam clockwise until the plunger on the micro switch is in the V-shaped slot on the cam. NOTE: USE A 1/4" NUT DRIVER TO TURN CAM.

2. Connect the electrical and water supply to the machine. Push the toggle switch in the control box to the "ON" position.

3. Wait until approximately 15 minutes of the SECOND cycle has passed.

4. At this time, check the condenser water outlet temperature. This must be done near the end of the freeze cycle by disconnecting the 1/4" plastic water line at the copper drain tube.

5. This temperature should be approximately 104 degrees Fahrenheit. If the water is below 104 degrees, turn the adjustment nut located on the bottom of the water flow valve clockwise. If the temperature is higher, turn the nut counter-clockwise.

6. One full turn of this adjustment nut will change the water temperature approximately 12 degrees.

INLET WATER SOLENOID REPLACEMENT

WARNING: DISCONNECT ELECTRICAL AND WATER SUPPLY BEFORE SERVICING MACHINE. FAILURE TO DISCONNECT ELECTRICAL POWER MAY RESULT IN A SEVERE OR FATAL SHOCK INJURY.

1. Follow steps 1 thru 7 for cabinet removal. (see p. 23)

2. Disconnect the electrical leads by lifting the protective rubber cap on top of the solenoid and removing the two spade clips.

3. Remove the water inlet line from the valve.

4. Unscrew the valve from the condenser tank.

5. Reverse the previous steps to replace the valve. (Use a good grade thread sealing compound or tape)

CONDENSER TANK REPLACEMENT

WARNING: DISCONNECT THE ELECTRICAL AND WATER SUPPLY BEFORE SERVICING MACHINE. FAILURE TO DISCONNECT ELECTRICAL POWER MAY RESULT IN SEVERE OR FATAL SHOCK INJURY.

1. Follow steps 1 thru 7 for cabinet removal. (see P 23)

2. Remove the inlet and outlet water fittings from the water flow valve.

3. Follow steps 2 thru 4 for inlet water solenoid removal. (see above)

4. Remove the rubber plug from the lower back portion of tank to drain the water.

5. Remove the 1/4" plastic hose from the condenser outlet line located on the top right side of the tank.

6. Slowly release the refrigerant from the system.

7. Cut the refrigerant lines at the condenser tank.

8. Remove the two screws holding the tank to the base of the machine.

9. Lift out tank and mount the replacement.

10. Solder the refrigerant lines and evacuate the system.

11. Replace components by reversing the appropriate steps.

12. Recharge the machine with the proper amount of refrigerant listed on the serial number plate.

NOTE: In most cases, it is easier to repair a small leak than to replace the entire tank.

INSTRUCTIONS FOR CHANGING DECORATOR PANELS

1. Door must be removed from machine prior to disassembly.

2. To simplify reassembly and protect door from damage, place tape around back side of door as indicated by drawing. Do not remove tape until door has been reassembled and is ready to be reinstalled on the machine.

3. Remove two screws from back of panel "A". Do not remove two lower screws E. Lower panels do not have screw E.

4. Lift handle from door applying even pressure on both sides exercising care so that handle is removed perpendicular to sides "B". DO NOT FOLD SIDES OF DOOR DOWN. DO NOT DISASSEMBLE DOOR PAST THIS POINT.

5. Set handle aside being careful not to misplace corner gussets "C".

6. Insert 1/4" thick decorator panel into channel in front of door "D". Panel size: Upper panel 13-7/16 x 14-5/8. Lower panel 14-5/8 x 14-5/8. Note the vinyl wood grain panel can be replaced with stainless steel or other metal panel by simply sliding the original panel out and replacing with new panel. In the case of the lower service door, the rubber like sealant must be removed from panel.

7. Reassemble door in reverse manner removing tape AFTER two screws "A" have been replaced.

8. Re-install door on machine.

NOTE: Lower door is disassembled in same manner.

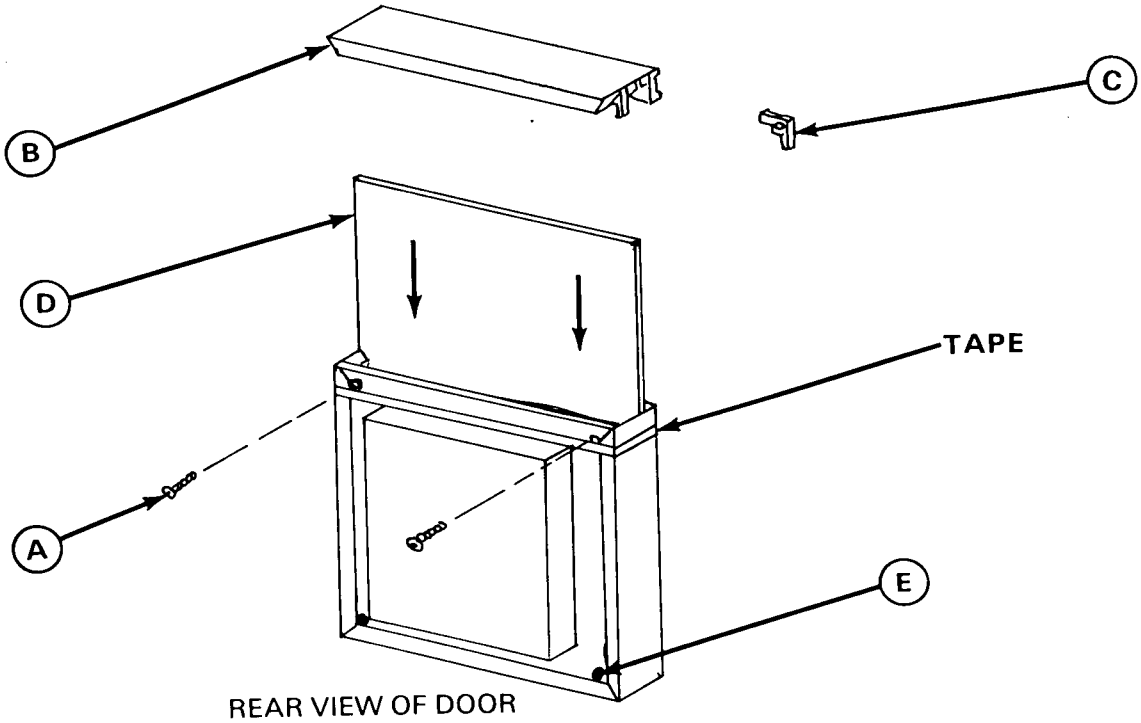

REAR VIEW OF DOOR

For Winter Storage or when Temperatures May Fall Below Freezing

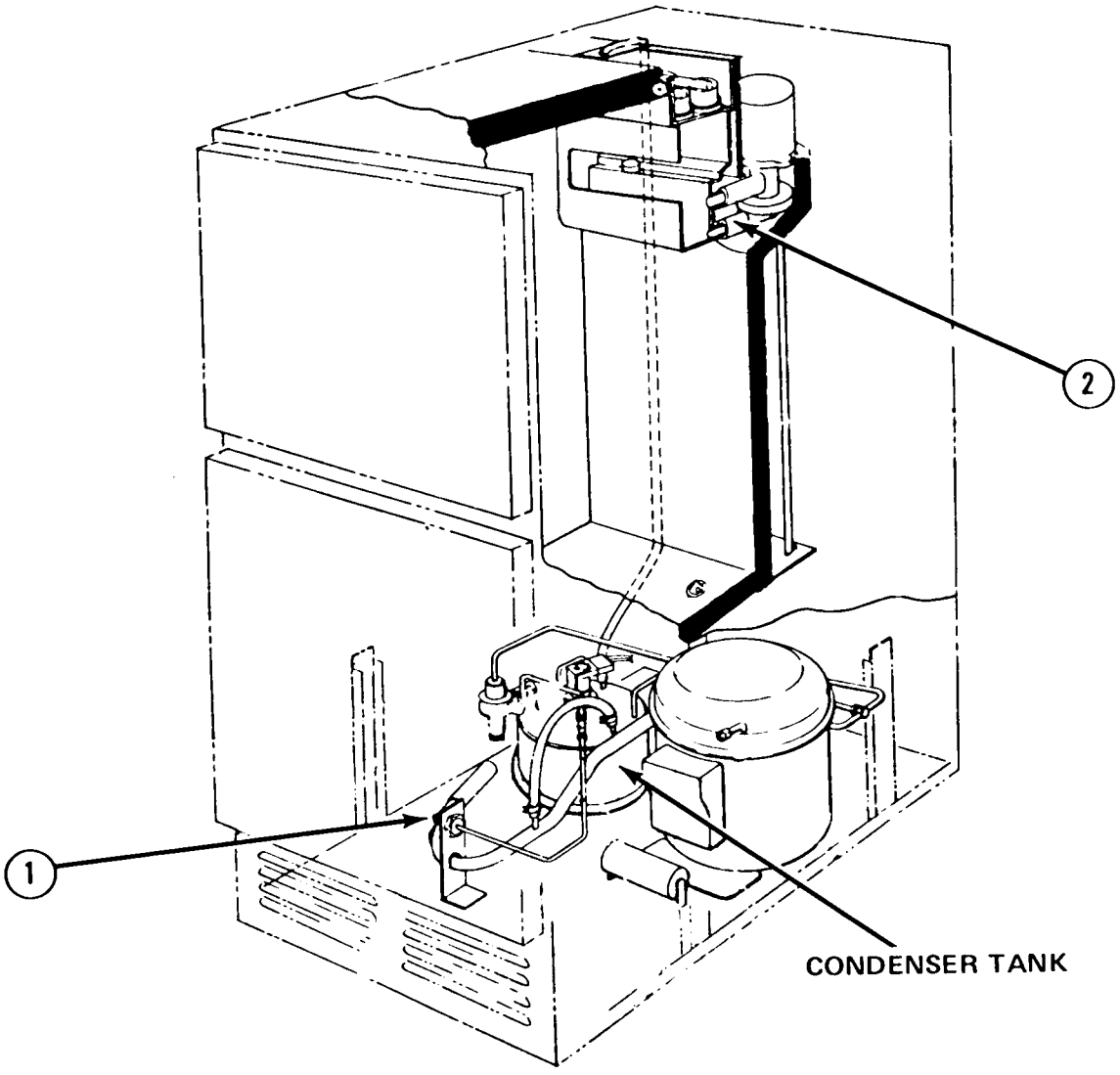

1. Allow unit to operate until it is in the freezing portion of the cycle.
2. Turn the on-off switch to off.
3. Turn off water supply and disconnect water line from machine.
4. Remove rear access panel.
5. To drain the condenser tank, remove the rubber cap at the bottom rear of the tank.
6. Turn the on-off switch to on.
7. With the machine running during the freeze cycle, blow air into the water inlet fitting, item no. 1. Air should blow thru to the machine drain and expell the water from the condenser tanks coil. Do not allow machine to operate more than 3 minutes with water supply shut off. Do not do this during the harvest cycle.
8. Remove the lower hose from the water reservoir, item no. 2.
9. Shut machine off. Unit is now ready for storage.

SERVICEMAN'S INFORMATION

Models SM-18 Ice Cube Makers have been designed for ease of service and maintenance.

Average head pressure is 135 lb. gauge at the start of the freezing cycle. It gradually pulls down to 125 lb. at end of cycle. Cuber is water cooled and the water regulating valve is factory set to maintain 135 lb. head pressure setting. Should you find it necessary to increase or decrease the head pressure setting, this is easily accomplished by turning the adjustment nut on the bottom side of the water flow valve. See Item No. 6 on Page 21. Clockwise to increase - Counterclockwise to decrease head pressure.

Suction pressure at the start of the freezing cycle will be around 50 lb. gauge, since the compressor is shut off during the harvest or defrost cycle. The capillary tube refrigerant control allows the system to equalize during this time, therefore both gauges would read the same. After one minute of the freezing cycle, head pressure climbs to 135 lb. gauge, suction pressure pulls down gradually from 50 lb. to approximately 5 lb. at end of freezing cycle.

Within the Condenser there are two (2) tubes soldered together in parallel. One tube leads from the Compressor, coiled within the condenser, to the Evaporator. The other tube is connected to a Pressure actuated valve, coiled within the Condenser, and out to a drain source.

If the pressure should build up to a certain limit within the Refrigeration Circuit, the water flow valve (Page 17) will open and allow a small quantity of cold (city) water to circulate, to bring the pressure down, and be released as waste water.

RECAP:
Cold potable (city) water enters a water tight container, the Condenser. The water within this container (Condenser) is heated because it is used as the cooling medium in the Condenser. This water is forced by entry of new cold potable water into the Evaporator where this hot water releases the cubes. The same water is allowed to escape the Evaporator (Platen) thru a small drain hole into the Platen. The same water, used as a condensing medium and cube release is now pumped thru a spray jet to make ice cubes.

The same water is used three different times (Condensing medium, cube release and to make ice cubes). All we do is change the temperature of the same quantity of water to suit the needs for adequate refrigeration.

An independent water circuit, completely isolated from the potable water circuit, is used as an auxiliary Condenser coolant if the need arises.

SM18W-1
SERVICE CHECK LIST

This check list is designed to provide a step-by-step method of diagnosing common service problems encountered while servicing the SM18W-1 Scotsman Home Ice Maker. Water leaks or electrical short circuits should be obvious and repairable prior to following this check list. FOR YOUR CONVENIENCE, A SERVICE DATA SHEET IS PROVIDED WITH THIS CHECK LIST. PLEASE FILL IN THE REQUIRED INFORMATION.

NOTE: It is not necessary to remove the control box cover when following these procedures. Always disconnect the electrical power before taking the cover off.

1. Start the unit. The unit must complete two cycles (48 minutes) prior to checking steps six and seven. This is the time required to stabilize the refrigerant system.

2. Check the water spray through both jets. Clean or replace jet tops and spinners. The unit will not make ice properly if the spinners are not in place. Plugged jets will cause cloudy, partial cubes.

3. Check the curtain to insure it hangs properly. If water leaks by the curtain, the sump will run dry and cause cloudy, partial cubes.

4. Check the water pump hoses for leaks or kinks.

5. Time the complete freezing cycle. List the times on the Data Sheet.

6. Approximately 15 minutes after the beginning of the freezing cycle, check the temperature of the compressor suction line. This is the top 1/4" copper line soldered to the back of the compressor housing. The line should be cool to the touch, approximately 50° . If the line is too cold, an overcharge of refrigerant is indicated. A warmer temperature will mean the unit is undercharged and indicate a possible refrigerant leak which must be repaired.

7. Also, check the temperature of the condenser discharge water at this 15 minute point in the freezing cycle. To check this water temperature disconnect the 1/4" plastic line from the copper drain tube. The temperature of the water at this time should be 104 degrees. If the water temperature is higher, loosen the adjustment nut on the bottom of the water flow valve. Turn the nut "IN" if the water temperature is lower than 104 degrees. One full turn of this adjustment nut will vary the temperature approximately 12-16 degrees.

8. As you near the end of the freezing cycle, recheck the spray jets. A water leak is indicated if both jets do not provide a full spray completely through the freezing cycle.

9. Be sure to note the elapsed time at the end of the freezing cycle. The unit should freeze ice for 22 minutes and harvest for 2 minutes.

10. As the unit begins to harvest, lift the curtain and observe the right hand side of the freezing chamber. Within 1 to 3 seconds you should see a small 1/8" diameter flow of water falling into the chamber. One of two possibilities is indicated if this small stream of water fails to appear at the proper time. Either the unit is not getting water because of restriction in the line, or the hole is plugged. A plugged hole will cause clear, partial cubes.

    NOTE: If the hole is plugged you must remove the cabinet and clean the top of the freezer assembly.

11. Between 15 to 25 seconds after the unit begins the harvest cycle, a large stream of water should appear next to the small one. This is the overflow tube which maintains the proper level of water during harvest. The unit is receiving an adequate supply of water if this tube overflows at the proper time.

12. Approximately 3 minutes after the beginning of the next freezing cycle, raise the curtain and check for water flowing through the small 1/8" hole. If this stream of water is still running, the electric solenoid is struck open. This will cause clear, partial cubes and can be corrected by replacing the solenoid.

13. During the latter part of the harvest cycle, check the bottom of the bin for water backing up through the drain fitting. If this water appears, the drain line is plugged, kinked or improperly installed. This water will melt all of the ice produced and the bin will remain empty until the drain is corrected.

14. Check the bin thermostat by placing an ice cube against the silver capillary tube on the right side of the storage bin. The unit should shut off within a few seconds. Now warm the capilary tube with your hand. The unit should start operating again.

15. Inspect the cubes that are dropped into the bin during the last harvest cycle. There should be eight full size, clear cubes. The cubes appear to be cracked internally. These cracks are due to the temperature change occuring during harvest and will disappear after a short time in the storage bin.

The procedure listed above should give a clear indication of the type of service required to correct a problem on an SM18W-1, Scotsman Home Ice Maker. If you have further questions, contact the address listed below.

Consumer Service Department
Scotsman Ice Systems
505 Front Street
Albert Lea, Minnesota 56007
Phone: 507/373-3961

SERVICE DATA SHEET

1. Did you clean the spray jets? _____yes _____no
2. Did you clean or replace the spinners? _____yes _____no
3. Are both jets spraying a full, even cone? _____yes _____no
4. Is the curtain in good condition and hanging properly? _____yes _____no
5. Starting time of the freezing cycle. _____
6. Finish time of the freezing cycle. _____
7. Total length of the freezing cycle. (Line 6 - Line 5) _____
8. Is the compressor running? _____yes _____no
9. Is the water pump running? _____yes _____no
10. What temperature is the condenser discharge water at 15 minutes into the freezing cycle? _____
11. What temperature is the suction line at 15 minutes into the freezing cycle?
    _____Cool _____Frosted _____Warm
12. Did water flow through the 1/8" hole in 1-3 seconds? _____yes _____no
13. Did water overflow the larger hole in 15-25 seconds? _____yes _____no
14. Did water stop flowing through 1/8" hole 3 minutes after the beginning of the next freezing cycle? _____yes _____no
15. Did the unit harvest eight full size cubes? _____yes _____no
16. Are the cubes clear? _____yes _____no
17. Does any water back up through the bin drain during the harvest cycle?
    _____yes _____no
18. Does the unit shut off when a cube is held against the silver capillary tube in the bin?
    _____yes _____no

SERVICE INSTRUCTIONS

(Water flow in freezer)

This is an overflow hole. 15-25 seconds after the unit goes into the harvest cycle, water should spill out thru this hole.

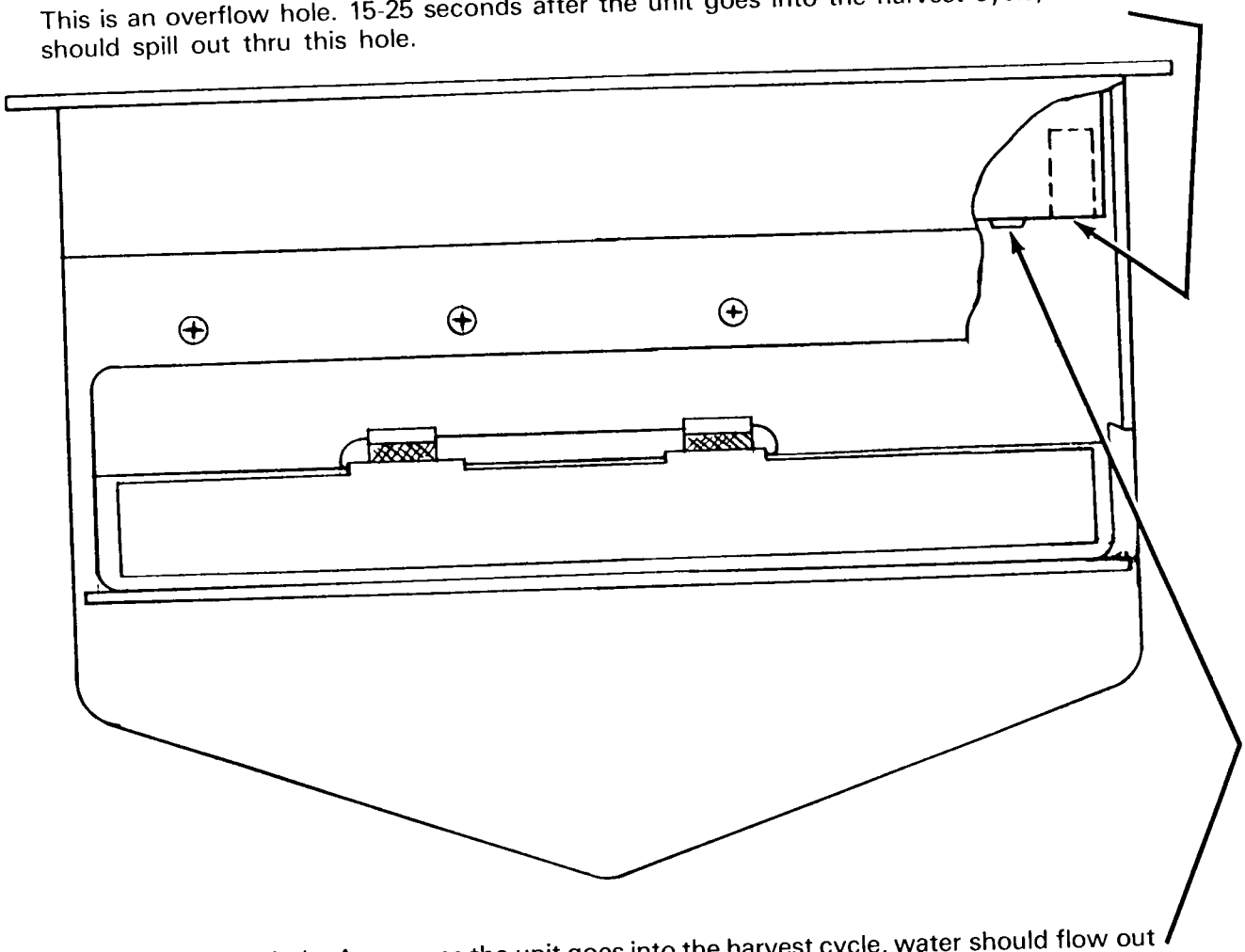

This is a dribbler hole. As soon as the unit goes into the harvest cycle, water should flow out thru this hole. This is a straight stream of water thru and orifice approximately 1/8" in diameter and will continue about 3 minutes into the freeze cycle.

Shut off the unit approximately 3 minutes after the end of the Harvest Cycle. If water is still draining thru the dribbler hole, it is an indication that the inlet water solenoid is stuck open. Replace or clean the solenoid to return the unit to proper operation.

SERVICE ANALYSIS

SYMPTOM	POSSIBLE CAUSE	CORRECTION
Machine does not make ice	Fuse In Power Line Blown	Check fuses in the house fuse box. Other loads on the same line may have caused fuse to blow. Use a 15 amp circuit and fuse.
	On-Off Switch In Off Position	The lever of the switch should be pushed to your left for "on" position.
	Water Supply Turned Off	Slightly loosen water connection in the front of the machine. If no water is present the water supply has been turned off.
	Timer does not run	Check cam for rotation of clock.
	Wiring broken or connection off	Check electrical circuitry.
	Solenoid on defrost tank may be defective	Check for power to solenoid coil.
	Compressor does not run	Any of the following may be the cause. Starting relay, overload, capacitor or defective compressor.
	Water pump not operating	Clean or replace pump.
	Bin thermostat not operating correctly	Check thermostat by warming with hand and cooling with ice cube. Replace if necessary.
Low ice capacity	High Room Or Water Temperature	Provide ventilation to the unit. Decrease temperature as much as possible. If water supply pipe to the machine is very warm have plumber check installation.
	Unit connected to hot water line	Connect to cold water line.
	High head pressure	Defective water valve. Check for inadequate water supply. Air in the system-purge. Adjust water flow valve.
	Leaky water valves	Clean, repair or replace valves.
	Partially restricted capillary tube	Purge or replace charge and drier.

SERVICE ANALYSIS

SYMPTOM	POSSIBLE CAUSE	CORRECTION
Cubes too large	Timer too slow or stops	Replace timer motor.
	Timer switch defective	Replace switch.
	Cam on timer loose	Tighten cam Locking nut.
Machine noisy during harvest cycle.	Excessive incoming water pressure	Install pressure regulator in incoming water line. Set water pressure at 25 lbs.
Cubes cloudy	Spray Jets Dirty	Clean (see page 12).
	Shortage Of Water	Check water supply for partially closed valves or supply line, low water pressure, (See instructions under "Cuber Runs Short of Water") or plastic curtain not hanging properly.
	Machine Not Level	Level.
	Dirty water supply	Connect water supply to water softener and/or filter.
	Accumulation Of Dirt In Water System	Clean with Scotsman Ice Machine Cleaner.
Cubes too small	Restricted Capillary Tube	Purge and recharge. If necessary replace capillary tube.
	Moisture & air in system	Purge - recharge - replace drier. Use 2-831 drier.
	Shortage of water	Check water supply (See if Cuber runs out of water)
	Shortage of refrigerant	Charge unit properly. (See serial number plate for correct charge)
	Unit connected to hot water line	Connect to cold water.
Cuber runs short of water	Water Sprays Out Curtains	Clean spray jets. Be sure plastic curtain hangs properly.
	Water valves leaking	Check and repair valves if necessary.
	Water enters hot water line too slowly	Clean water lines.
	Water leaking from pump hoses.	Check clamp and hoses. Replace if necessary.

SERVICE ANALYSIS

SYMPTOM	POSSIBLE CAUSE	CORRECTION
Compressor cycles intermittently	Low voltage	Minimum voltage to be 10% less than normal rating.
	Water line plugged to condenser	Clean.
	Insufficient water supply	Check water lines (see if Cuber runs short of water)
	Water valve sticking or defective	Clean and replace
	Air in the system	Purge and recharge.
Cubes pile up in freezer	Curtain or cube chute out of place or improperly installed.	Check position of curtain and chute. Correct or replace.
Poor harvest cycle.	Too short defrost time	Check timer - replace if necessary. Adjust timer switch.
	Water temperature too low	Check incoming water temperature. Should not be less than 50 degrees F.
	Restriction in incoming water	Clean water lines.
	Water valve sticking, not opening, or out of adjustment.	Clean, replace or adjust valve.
	Air vent holes in ice cups plugged	Clean small holes in top of the cups. See page 12 on cleaning.
Excessive Bin Meltage	Drain line plugged	Clear line of obstruction.
	Drain not installed properly. Line does not have proper gravity flow so water backs up into bin.	See instructions on page 9 and 10 for proper installation instructions.
Cubes burned (too large grooves melted in the sides of the cubes)	Machine not level	Level properly.
	Overflow tube restricted.	Remove cabinet and clean platen assembly.

CUSTOMER INFORMATION

The information below answers the most frequently asked questions concerning the operation of the SM18 Home Ice Maker. Please take the time to read this page completely.

1. NORMAL OPERATION: The SM18 runs on a 24 minute cycle controlled by a time clock in the control box. The unit makes ice for 22 minutes and uses the remaining 2 minutes to defrost the cubes and drop them into the storage bin. 8 cubes are produced during each cycle. When the unit runs 24 hours, it will complete 60 cycles for a total of 480 cubes.

2. BIN MELTAGE: The ice storage bin is not refrigerated. The cubes remain separated rather than frozen into large chunks because the bin temperature remains slightly above freezing. To prevent rapid melting of the ice the storage bin is completely covered with a layer of molded foam insulation approximately 2" thick. The unit will run about 2 hours everyday to replace bin meltage plus the length of time necessary to replace the days ice consumption.

3. EXCESSIVE BIN MELTAGE: If the unit is making ice properly but the bin remains almost empty, the drain is not operating correctly. Any type of trap, kink or air lock in the drain line will cause water to back up into the storage bin at irregular intervals. This water will melt all or part of the ice supply in the bin. This situation can occur after the initial installation or after the unit has been moved for relocation, cleaning, service, etc. To correct the problem, check the drain to insure it is installed according to the instructions in this manual.

4. WATER CONSUMPTION: In tests at the factory and in the home, the SM18 has used approximately 1 gallon of water per batch of ice. The unit produces a batch of cubes every 24 minutes or 60 batches per 24 hours. This means that the unit will use approximately 60 gals. of water per day while running constantly. However, the unit automatically shuts off when the bin fills with ice so running time will vary from day to day. Water consumption will depend on the length of running time but will average about 15-20 gallons per day over a 7 day week. Comparitively, a dishwasher uses 15 gals. per batch, a clothes washer uses 45-55 gals. per batch and a commode uses 5 - 7-1/2 gals. per flush.

ACCESSORY PARTS AVAILABLE

NOTE: TWO 1/4" PIPE THREAD X 1/4" COMPRESSION FITTINGS ARE REQUIRED FOR INSTALLATION. P/N 11-621-3.

Water Pressure Regulator Part No. 11-200.

Installation of a pressure regulator in the incoming water line will minimize any objectional or excessive noise emitted during the harvest cycle. This valve comes preset from the factory at 25 lbs. Excessive water pressure will not harm the machine, however, it may be the cause of objectional noises.

Water Strainer Part No. 16-162

Installation of a water strainer in an easily accessible area will greatly simplify service if a machine is installed on a water supply system that may have sand or sediment in the water. The machine comes equipped with a strainer screen in the water solenoid valve which is adequate for the majority of installations, however, if sand or sediment could be a problem, installation of this water strainer from a service standpoint is highly recommended. The diagram below shows the direction of water flow. The cleaning plug must be in a wnward position slanting up into the incoming water. Notice the arrow stamped on each strainer to show correct flow direction.

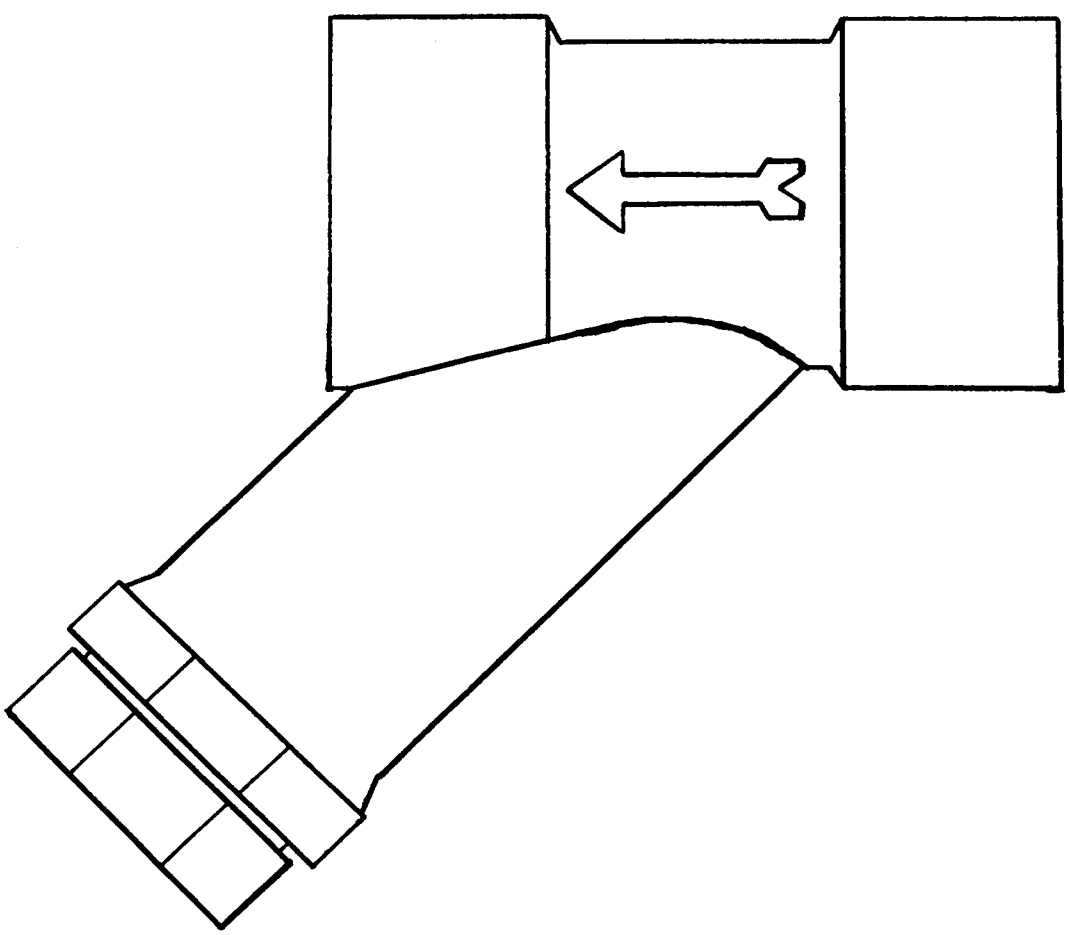

SCOTSMAN

HOME ICE CUBE MACHINES

MANUFACTURER'S LIMITED WARRANTY

Scotsman warrants to the original purchaser-user that any consumer product of its manufacture bearing the name Scotsman will be free from defect in material and/or workmanship, and that if properly installed and serviced in accordance with the Service Manual furnished with the product it will perform adequately under normal use.

This product warranty shall be effective for a period of one year from the date of original installation if such installation is reported on Scotsman's warranty registration form returned to the factory at the time of installation, or for a period of 15 months from the date of shipment from the factory if the warranty registration form has not been returned (provided the foregoing warranty periods will be extended within the Continental United States for an additional four years as to the motor compressor part). This warranty is applicable only in the United States and Canada.

Scotsman's obligation is limited strictly to replacing without charge, or to repairing any part or parts that shall be found to be defective in material and/or workmanship during the warranty period. Charges for labor (except labor performed in the Scotsman factory to repair defective parts) are not covered. No part or assembly which has been subject to accident, alteration or misuse, or which is not installed or serviced in accordance with the Service Manual furnished with the product, or which is from a machine on which the serial number has been altered or removed, shall be covered by this warranty.

To obtain performance of any warranty obligation, the original purchaser must provide purchase information (including date of installation and model and serial numbers) to the person from whom the product was purchased, or to any authorized dealer or distributor of Scotsman consumer products whose name and address appears in the local Yellow Pages telephone directory or is obtained from Scotsman's Consumer Service Department. The purchaser will be billed for any costs involved in connection with repair or replacement, and a credit will be issued to the purchaser for such costs to the extent and subject to the limitations herein provided at such time as confirmation is made by Scotsman's Consumer Service Department that said product is still within the warranty period.

Scotsman assumes no liability for incidental or consequential damages of any kind or for any damages resulting in whole or in part from misuse or inadequate maintenance of the product or any part thereof. Some states do not allow the exclusion or limitation of incidental or consequential damages, so the above limitation may not be applicable.

THIS WARRANTY IS IN LIEU OF ALL OTHER EXPRESS WARRANTIES OR GUARANTEES OF ANY KIND. IMPLIED WARRANTIES, INCLUDING MERCHANTABILITY OR FITNESS, ARE LIMITED TO THE DURATION OF THE EXPRESS WARRANTY CONTAINED HEREIN. Some states do not allow limitations on how long an implied warranty will last, so the above limitation may not be applicable.

This warranty grants specific legal rights, and other rights may also be granted which vary from state to state.

SCOTSMAN CONSUMER SERVICE DEPARTMENT
QUEEN PRODUCTS DIVISION
KING-SEELEY THERMOS CO.
505 Front Street
Albert Lea, Minnesota 56007
Telephone 507 / 373-3961
TWX 910-565-2173

Printed in U.S.A.

THIS PAGE
INTENTIONALLY
LEFT BLANK

THIS PAGE
INTENTIONALLY
LEFT BLANK

TO THE USER

Your Scotsman Home Ice Cube Machine is a product carefully engineered and quality constructed to provide you with many years of faithful performance and a minimum of maintenance costs.

Produced by the world's leading manufacturer of automatic ice making equipment, your Scotsman Ice Cube Machine incorporates the same reliable systems already proven over years of actual operation by thousands of users.

Many of you will have an opportunity to see and use clear, solid, slow melting Scotsman Cubes for the first time. You will quickly compare the clear, glass-like quality of your Scotsman cubes to the type produced by your home refrigerator, freezer. By comparison, cubes made in trays in your refrigerator are very white or cloudy, they also melt faster than clear ice.

A brief explanation shows why.

First, all water contains some mineral deposits such as iron, calcium, etc. In various degrees. These deposits do not freeze. Therefore, when you freeze water in refrigerator trays, these minerals do not freeze but are trapped inside the ice cubes, contributing to their cloudiness.

In your Scotsman Home Ice Cube Machine the water to make ice is continually moved or circulated by a small electric pump that sprays the water under gentle pressure into the inverted cube molds. As water hits these cold refrigerated molds, only the water freezes, building gradually into a full cube. The minerals or impurities fall back down into a reservoir or sump area where they are flushed down the drain at the end of each freezing or ice making cycle.

This manual also contains information regarding the various working systems and helpful hints on the care and maintenance of your ice machine.

We would like to suggest you take the time now to briefly review this manual, and if you have any further questions regarding the care or operation of your ice machine, contact:

CONSUMER SERVICE DEPARTMENT
SCOTSMAN ICE SYSTEMS
Albert Lea, Minnesota 56007
Phone: 507/373-3961

P.S. Whenever writing, please be sure to include the model and serial numbers of your ice cube machine.

SCOTSMAN®



MODELS DC30A & SM18A HOME ICE CUBE MACHINE

SPECIFICATIONS

Size: 15" wide 20-1/2" deep 33-1/8" high.

Weight: 85 pounds

Cabinet: Steel

Finish: Baked on enamel

Color: Appliance White/ Sandalwood
Storage Bin: Polyethylene

Door: Swings to right

Door Latch: Magnetic Gasket 4 Sides

Lower Compartment Panel:
Removable by pulling outward at top.

Power Rating	5.0 Amperes
Wire Size:	18 Gauge
Fuse Size — Maximum:	15 Amperes
Refrigerant Metering Device:	Capillary Tube
Cubes per Harvest:	8
Harvest Means:	Hot Gas
Compressor Make:	Danfoss
Compressor Specs:	1/8 H.P. 115/60/1
Refrigerant Charge:	5-1/2 oz. R-12.

Requirements:
Power: 115 volts - 60 Hertz Single Phase
Water: 1/4" cold water line
Drain: Required for water Outlet.

Daily Ice Capacity is directly related to inlet water temperature, ambient temperature, and age of machine. Under normal conditions the unit will make up to 30 pounds of ice in 24 hours.

To keep your SCOTSMAN HOME ICE CUBE MACHINE performing at it's maximum capacity, it is necessary to perform periodic maintenance as outlined on page 12 of this manual. **The unit should be cleaned at least twice a year. Some water conditions will require more frequent cleaning.**

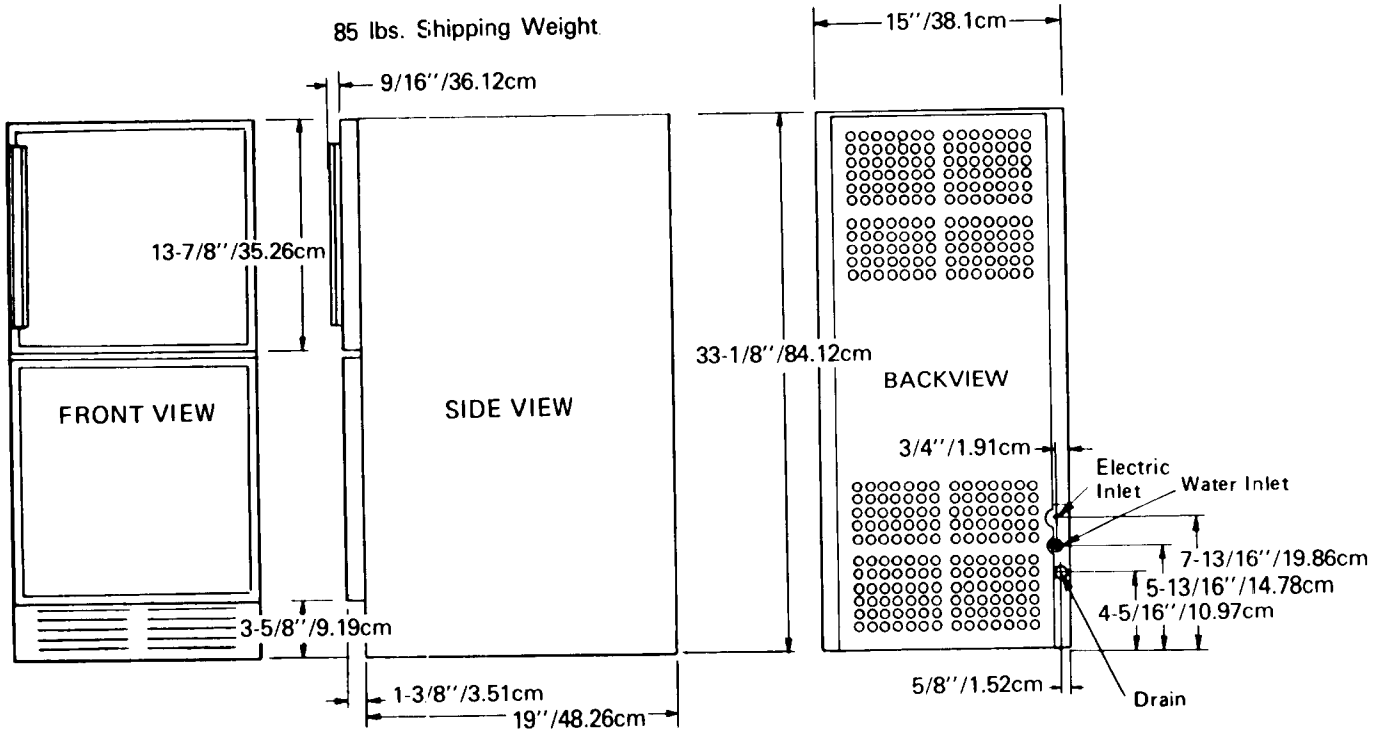

DIMENSIONAL DRAWING FOR BUILT-IN INSTALLATIONS

NOTE: AS SOME SERVICE PROCEDURES REQUIRE ACCESS TO THE ENTIRE UNIT, IT IS **IMPORTANT** TO ALLOW ENOUGH SPACE TO REMOVE THE MACHINE FROM THE INSTALLATION. PLEASE KEEP THIS IN MIND WHILE INSTALLING YOUR HOME ICE CUBE MACHINE.

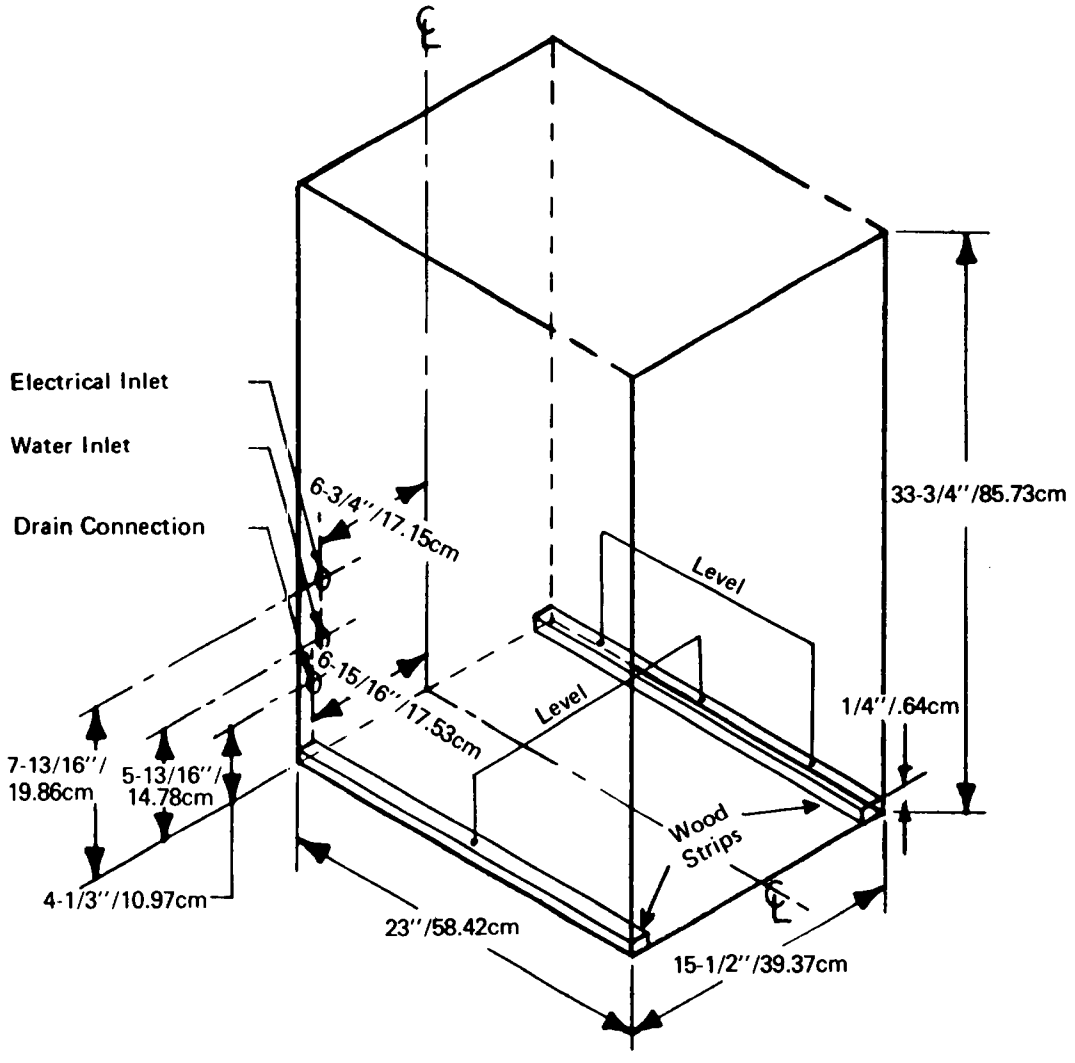

To recess the ice machine into a cabinet, provide an opening 33-3/4 inches high, 15-1/2 inches wide and 23 inches deep.

The above dimensions allow 4 inches at the back of the ice machine for electric cord, water line and drain line.

Requirements: For either recessed or freestanding installation.
Power: 115 volts, 60 cycle, single phase.
Water: 1/4 inch flare connector provided on the Ice Machine.

Drain: Installation of an adequate drain is necessary. See pages 9, 10 and 11 for complete instructions.

INSTALLATION INSTRUCTIONS

STEP ONE — LOCATION

Place the unit on a solid, level floor or base with access to electrical power, a water supply and a drain. Level, if necessary, as shown in the drawing for built-in installations. The bottom of the unit must be 1/4" above the floor or floor covering in front of the cabinet, wall, etc. Adequate space must be left at the sides and top of the opening for removal of the unit.

STEP TWO — ELECTRICAL POWER SUPPLY

The ice machine should be on a separate electrical circuit. It is suggested an electrician be contacted to insure this circuit has a **MAXIMUM FUSING OF 15 AMPS** and is properly grounded. Low voltage from overload circuits can cause premature failure of cuber electrical components. A solid ground wire from cuber frame or grounding screw to an "earth" ground should also be installed.

NOTE: FAILURE TO GROUND THE UNIT PROPERLY MAY RESULT IN AN ELECTRICAL SHOCK HAZARD WHICH COULD CAUSE SEVERE OR FATAL SHOCK INJURY.

STEP THREE — WATER SUPPLY

A 1/4 inch flare connector is provided at the front of the ice machine for the cold water supply. The supply line should not be smaller than 1/4 inch O.D. copper. A shut off valve conveniently located in the water line is recommended. The water supply line should be directed thru the opening in the back of the ice machine marked "Potable Water Inlet."

For under counter installation, allow approximately 19 inches of 1/4 inch water line and 12 inches of drain line (measured from the back of the ice maker) to direct thru the openings at the rear. Final connections are to be made after ice machine is in position.

NOTE: DO NOT USE A SELF-PIERCING TAP LINE VALVE. THIS TYPE OF VALVE DOES NOT PROVIDE SUFFICIENT WATER VOLUME OR PRESSURE FOR PROPER OPERATION AND THE SMALL OPENING PLUGS RAPIDLY WITH MINERAL DEPOSITS.

STRAINERS AND FILTERS

Scotsman recommends the installation of a Water Strainer, Part Number 16-0162-00, on all units. Use two fittings, Part Number 16-0621-03, to install strainer. Local water conditions may require the use of an adequate filter in the water supply line to prevent extensive damage caused by sediment build-up. Unit or component failure due to the lack of proper strainer of filter installation is not eligible for warranty coverage.

NOTE: EXCESSIVE NOISE DURING THE HARVEST CYCLE IS USUALLY CAUSED BY HIGH WATER PRESSURE. THIS SITUATION CAN BE CORRECTED BY THE INSTALLATION OF A WATER PRESSURE REGULATOR, PART NUMBER 11-0200-00. USE TWO FITTINGS, PART NUMBER 16-0621-03.

STEP FOUR — DRAIN INSTALLATION

Where a drain exists which is not higher than the opening in the back of the ice machine labeled "Condenser Drain", a gravity drain is adequate. At no time can the drain tube be raised higher than the cabinet hole. If the drain tube is run thru the floor behind the unit, provide a 7/8" hole at least 2-1/2 inches behind the back panel of the machine. This will prevent a kink from forming in the line. Proper drain installation requires the use of 5/8" OD copper tube or 5/8" I.D. flexible plastic tubing. It is important to insure that the plastic tubing does not kink. Allow 1/4" pitch per foot on drain lines over 4 feet long. DO NOT plump the drain line into the sewer in any air tight manner. It is extremely important to provide an air gap betwen the unit drain and any external drain. This prevents sewer gas from backing into the unit and also eliminates most air locks. An air lock or improper drain installation will cause water to back up into the bin and melt the ice stored there.

NOTE: IF A GRAVITY DRAIN IS NOT AVAILABLE, USE THE SPK18H CONDENSATE PUMP KIT. COMPLETE INSTRUCTIONS FOR THIS INSTALLATION ARE INCLUDED WITH THE KIT.

IMPORTANT NOTE

The Ice Machine is equipped with an air cooled condenser which is designed to "breath" through the front of the unit. Cool air is drawn into the right side of the kickplate and the warm air is exhausted through the left side. If the kickplate is blocked in any way or if the condenser is dirty, ice production will be drastically reduced. It is extremely important to clean the condenser regularly and insure adequate air space in front of the kickplate. Unit or component failures due to a dirty condenser or blocked kickplate are not eligible for warranty coverage.

START-UP PROCEDURE

WARNING: NEVER RUN THE UNIT WITHOUT THE WATER TURNED ON. THIS COULD DAMAGE THE MACHINE.

1. Turn on the cold water supply to the machine.
2. Turn on the electrical power.
3. Push the lever of the Off-On switch to your right. The machine will now automatically produce ice in about thirty minutes.

The normal storage bin capacity is 26 pounds of ice (about 700 cubes) or when the cubes touch the thermostat capillary tube on the right hand side of the bin. The bin is considered full when cubes are ten inches above the bottom of the bin. When the machine is initially installed, the unit will operate continuously for approximately 36 to 48 hours or until the ice storage bin has been filled. Once the storage bin has been filled, the unit will cycle on the bin control to maintain a full bin of ice.

DRAIN INSTALLATION

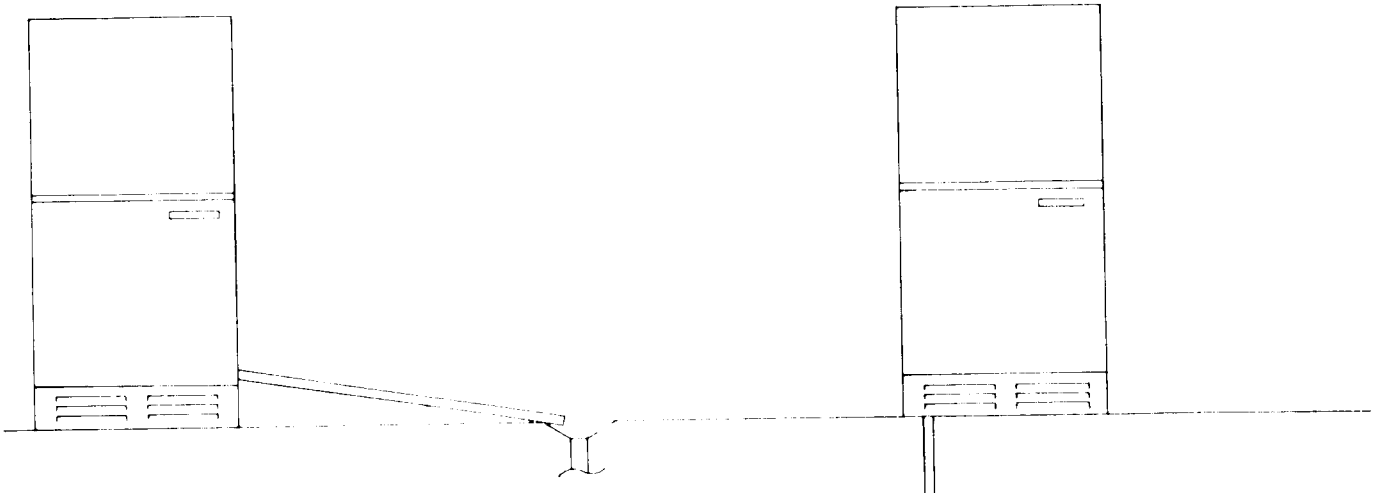

NOTE: THE INSTALLATION SHOWN BELOW IS ONLY ACCEPTABLE WHEN THE SPK-18H PUMP IS USED. THIS PUMP IS AVAILABLE FACTORY INSTALLLED OR AS A KIT FOR FIELD INSTALLATION.

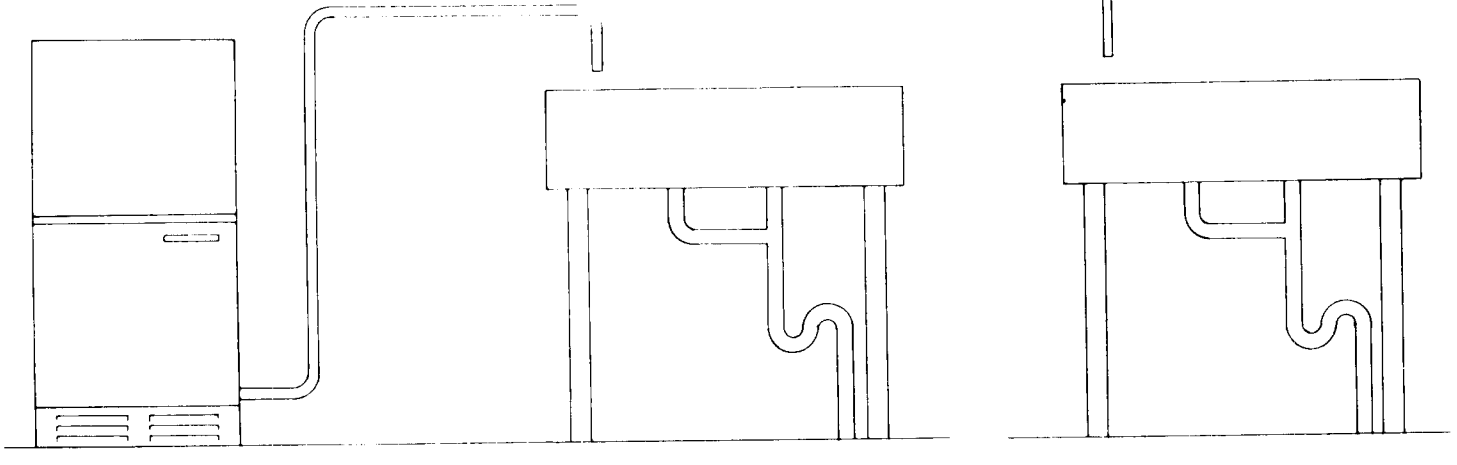

NOTE: SCOTSMAN DOES NOT SUGGEST THE INSTALLATION OF ANY DRAIN LINE RUN DIRECTLY OUTSIDE TO A LAWN, DRIVEWAY, FLOWER BED, ETC. CONNECT THE UNIT DRAIN TO AN EXISTING DRAIN LINE ACCORDING TO THE DRAIN INSTALLATION INSTRUCTIONS.

INSTALLATION INSTRUCTIONS
(With Drain Water Pump)

The Model SM18PA-1 or DC30PA Home Ice Maker is equiped with a condensate pump. THIS MAKES YOUR ICE MAKER ADAPTABLE TO INSTALLATIONS WHERE A GRAVITY DRAIN IS NOT AVAILABLE. Follow the instructions listed below carefully to insure proper operation.

1. Run the 3/8" I.D. flexible plastic tubing from the rear of the machine to your drain location.

2. Check chart below for max. length of drain line and lift.

3. Start the machine according to the instructions in the Service Manual.

4. The pump is equipped with a safety switch which will stop the ice-maker if the pump malfunctions and the reservoir is not pumped out. This safety switch is connected to the control box by the yellow cord.

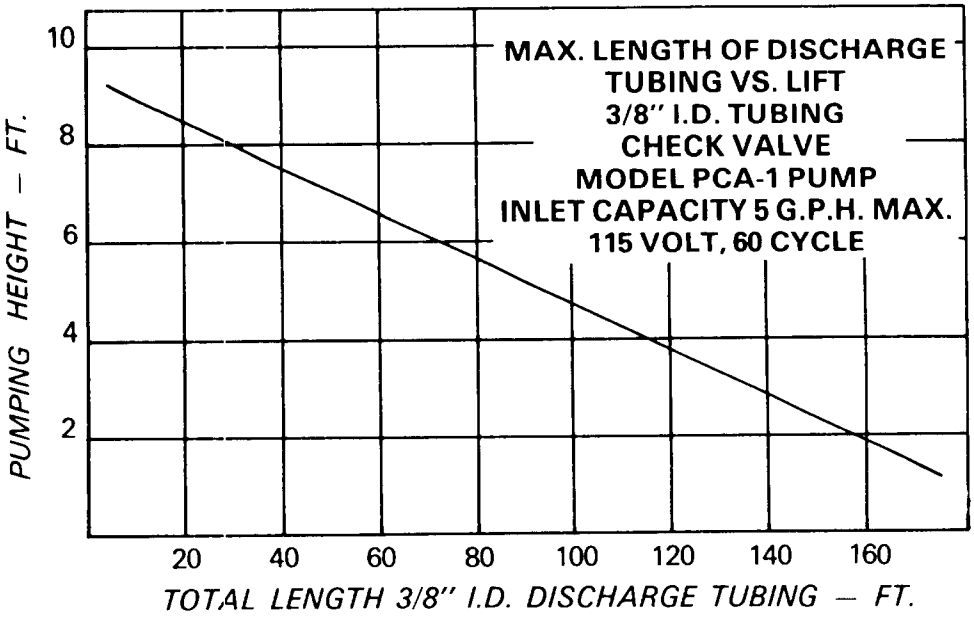

HOW TO USE THE CHART

The chart provides a simple ratio between the amount of vertical lift (head) in your installation compared to the maximum length of discharge tubing (run) needed. Figures derived assume an inlet capacity of five gallons per hour maximum. It is also assumed that 3/8" I.D. Flexible plastic tubing will be used.

NOTE: A relatively short pumping cycle is normal for a unit of this type. This in no way denotes a defective unit nor is short cycling harmful to the unit as long as the check valve is functional.

WARNING: DO NOT REMOVE FLUTED PLASTIC FITTING AND/OR CHECK VALVE FROM THE PUMP. REMOVAL OF EITHER WILL AUTOMATICALLY VOID THE WARRANTEE.

It can easily be seen, then, that, with a head (vertical rise) of 6', (for example) the maximum total length of discharge tubing to be used on the "run" (vertical plus horizontal) would be slightly less than 70'.

DRAINWATER PUMP INSTALLATION INSTRUCTIONS

1. Secure pump to utility bracket located in left rear corner of machine.
2. Leave original black drain tube (1-1/2" long) as is connected to brass bin drain tube.
3. Rotate original 5/8" x 5/8" plastic elbow so it points towards left rear corner of machine.
4. Leave original black drain tube (4" long) as is connected to original 5/8" x 5/8" plastic elbow.
5. Remove original 5/8" x 5/8" x 5/8" plastic tee and rotate into position shown.
6. Use original black drain tube (2" long) from end of original drain assembly and place on plastic tee and insert into pump.
7. Reconnect reservoir overflow tube to unused leg of plastic tee.
8. Attach 3/8" I.D. tygon tubing (144" long) supplied with pump kit to pump outlet port and route tubing through hole in rear of machine.

AUXILIARY SAFETY SWITCH WIRING INSTRUCTIONS

1. Disconnect electrical supply.
2. Remove Black (BLK) wire connecting on-off toggle switch to bin temperature control.
3. Connect leads from safety switch (yellow cord) to the terminals of the toggle switch and temperature control from which black wire was removed. Inspect terminals to insure proper spacing between terminals and also between terminals and control box. Adjust if necessary.

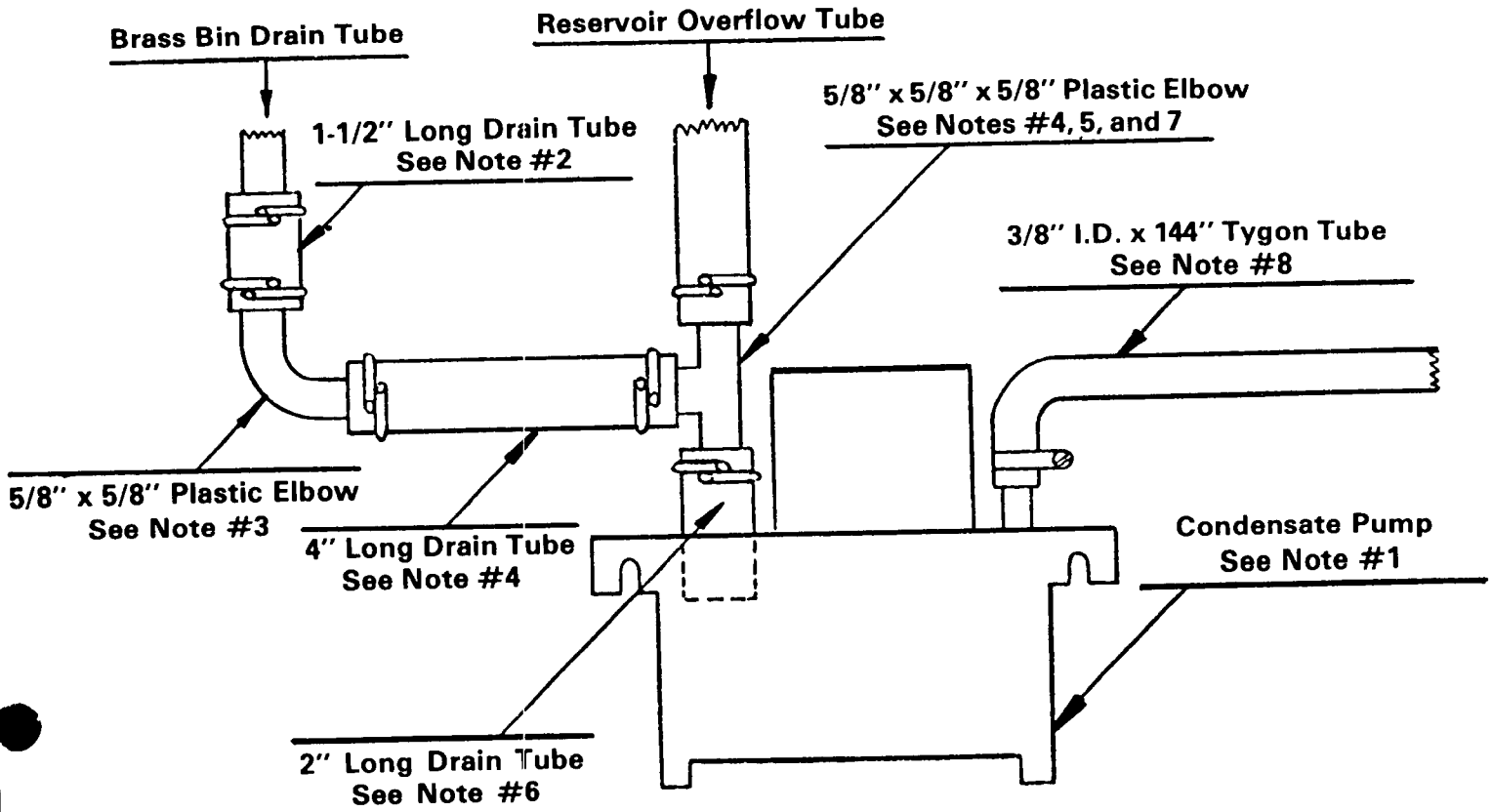

CLEANING AND CARE

Cabinet Exterior:

Clean with warm water and soap. Waxing is not required but is permissible on metal parts. Do not apply wax on the rubber gasket around the door opening or on plastic parts.

Machine Compartment:

IT IS VERY IMPORTANT TO CLEAN THE CONDENSER REGULARLY. A DIRTY OR BLOCKED CONDENSER WILL DRASTICALLY REDUCE ICE PRODUCTION.

Do not attempt to clean this area unless the off-on switch is turned off — lever pushed to the left. Use a vacuum cleaner to remove dust from the front of the condenser. DO NOT REMOVE THE COVER ON THE CONTROL BOX UNLESS THE POWER SUPPLY IS DISCONNECTED. **NOTE:** Failure to disconnect the electrical power prior to removing the control box cover may result in severe or fatal shock injury.

Storage Bin:

Use only warm water and soap. The chemicals in some cleaning agents will damage plastic.

Freezing Unit and Water System:

All water contains some minerals and impurities, scale, iron, etc. Cleaning schedule should be timed accordingly. The following procedure should be used to clean the interiors of the freezer, tanks and water lines.

1. Remove all cubes from the storage bin.

2. With the unit operating and the water spraying from the jets behind the plastic curtain (freezing cycle), slowly pour three (3) ounces of Scotsman Ice Machine Cleaner into the trough or reservoir below the jets.

3. Let the machine operate in the normal manner for one hour, then wait for a harvest cycle (when cubes fall out of the freezer and into the storage bin.)

At this time turn the machine off.

4. Pour a gallon of warm water over the cubes that have been made during the cleaning cycle. This will melt the cubes and clean the drain.

5. Dispose of any surplus cubes that are left in the storage bin.

6. Use a gallon or more of clean, cold water and flush out the interior surfaces of the freezer and storage bin.

7. Wipe all interior surfaces and turn machine on for normal operation.

8. Scotsman Ice Machine Cleaner is a mild food grade acid. Ordinary care in its use is adequate. All cubes made with this solution should be discarded as they have an acidulent taste.

CAUTION: Contains phosphoric and Hydroxyacetic acids. These compounds are corrosive and may cause burns. If swallowed DO NOT induce vomiting. Give large amounts of water or milk. Call physician immediately. In case of external contact, flush with water. Keep out of reach of children.

BIN INSERT ASS'Y

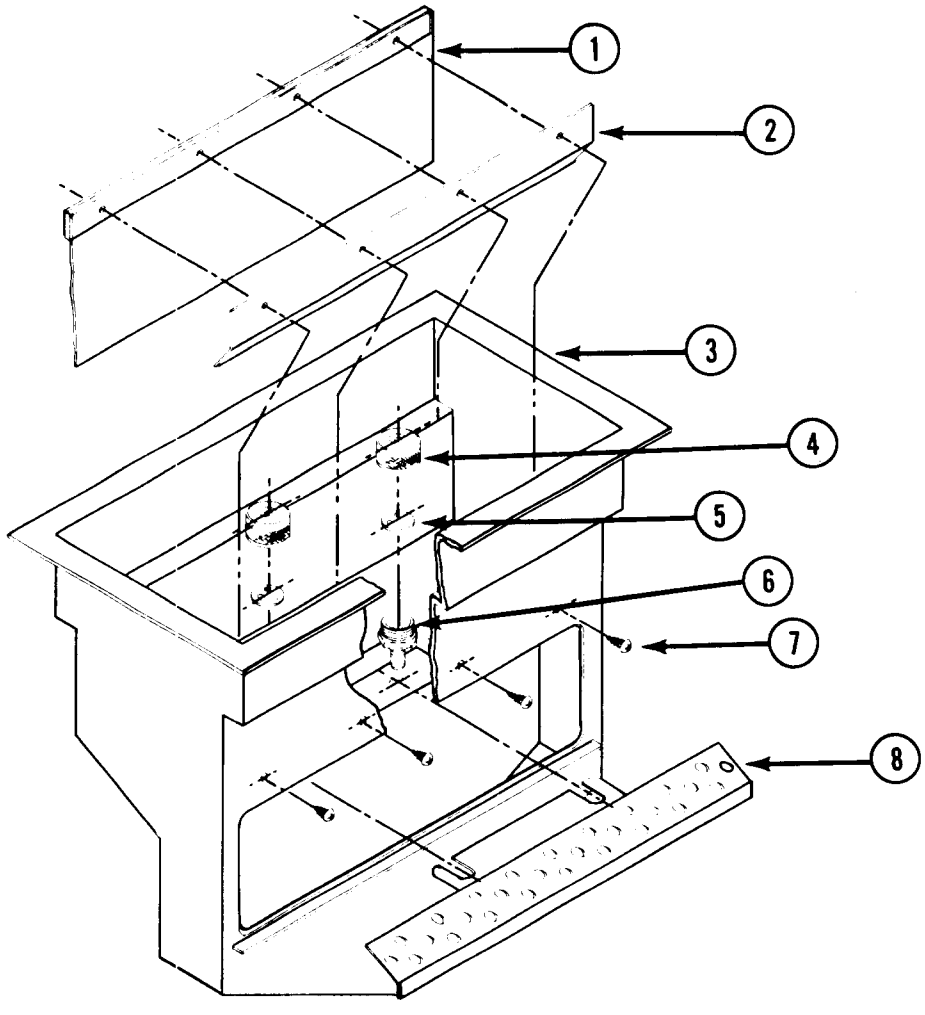

ITEM NO.	PART NO.	DESCRIPTION
1.	02-2053-01	Curtain
2.	A24155-001	Curtain Stiffner
3.	02-1923-00	Bin Insert
4.	02-1841-00	Jet Top
5.	A09543-000	Spinner
6.	02-1840-00	Spray Jet
7.	03-1404-16	Screws
8.	A22518-000	Cube Chute

WARNING: When removing jet top (4), be careful not to drop the small spinner (5). If dropped into the sump, the spinner may damage the water pump.

NOTE: The unit will not make ice properly if the spinners are not in place.

A-22536-21 WATER PUMP COMPLETE

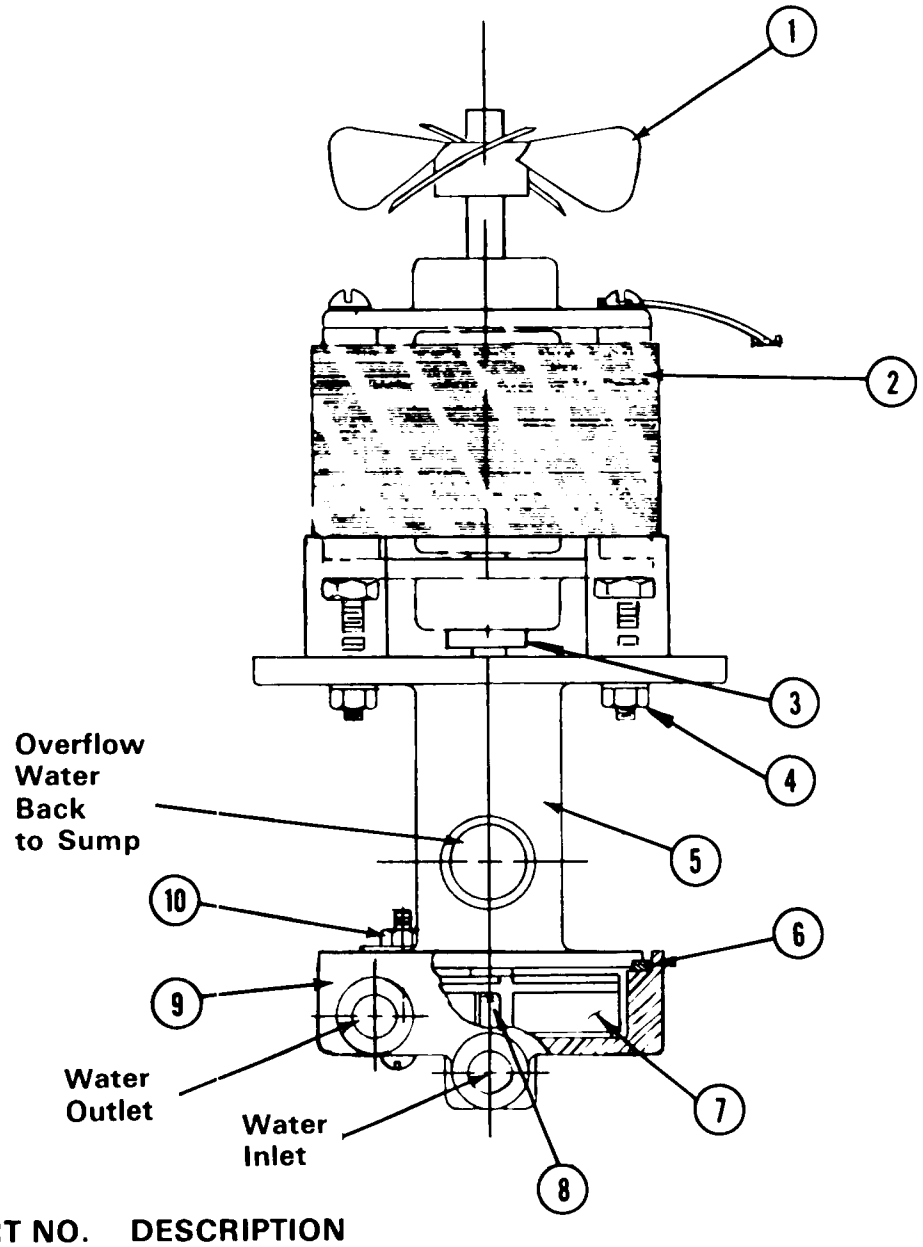

ITEM NO.	PART NO.	DESCRIPTION
1.	02-1719-00	Fan Blade
2.	12-1714-01	Motor
3.	13-0690-00	Rubber Washer
4.	03-1417-14	Lockwasher
	03-1406-02	Nut
5.	02-1711-00	Water Pump Body
6.	13-0617-07	O-Ring
7.	02-1712-00	Impeller
8.	03-1417-14	Lockwasher
	03-1403-05	Screw
9.	02-1710-00	Pump Base
10.	03-1403-60	Screw
	03-1408-23	Washer
	03-1406-02	Nut

ITEM NO.	PART NO.	DESCRIPTION
*11.	13-0687-00	Gasket, Water Pump (Installed Between Pump & Bin)
*12.	13-0688-01	Water Tube, order Feet Required
*13.	13-0688-01	Water Tube, order Feet Required
*14.	13-0688-02	Water Tube, order Feet Required

*Not Shown

CABINET PARTS

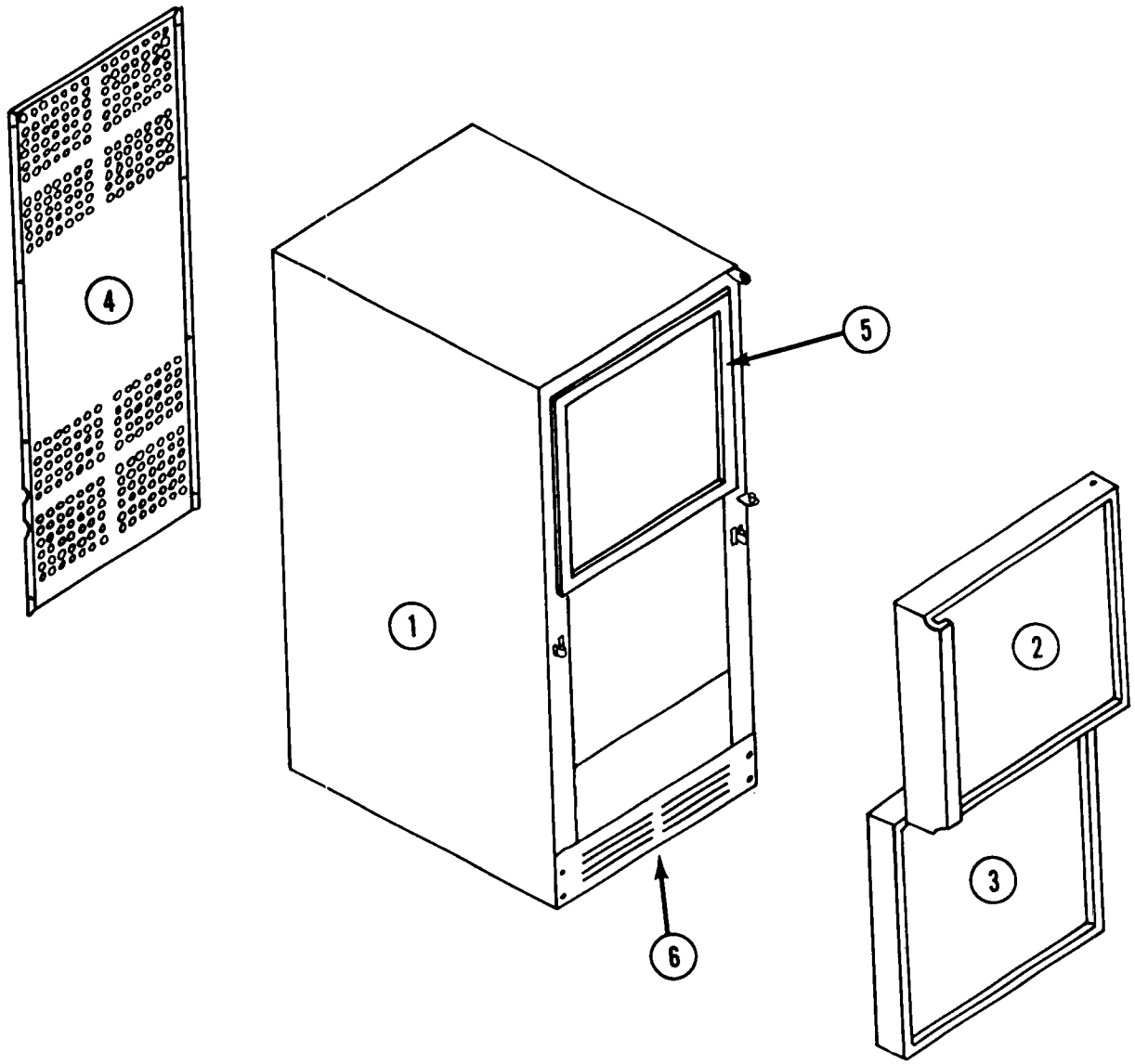

ITEM NO.	PART NO.	DESCRIPTION
1.	A18592-022	Cabinet Assembly (White)
	A18592-020	Cabinet Assembly (Sandal Wood)
2.	A24289-001	Access Door Complete
3.	A23586-001	Front Service Door
4.	A18595-000	Rear Service Panel
5.	13-0634-00	Gasket (magnetic)
6.	02-2243-01	Kick Plate

CONTROL BOX ASSEMBLY
(115/60/1)

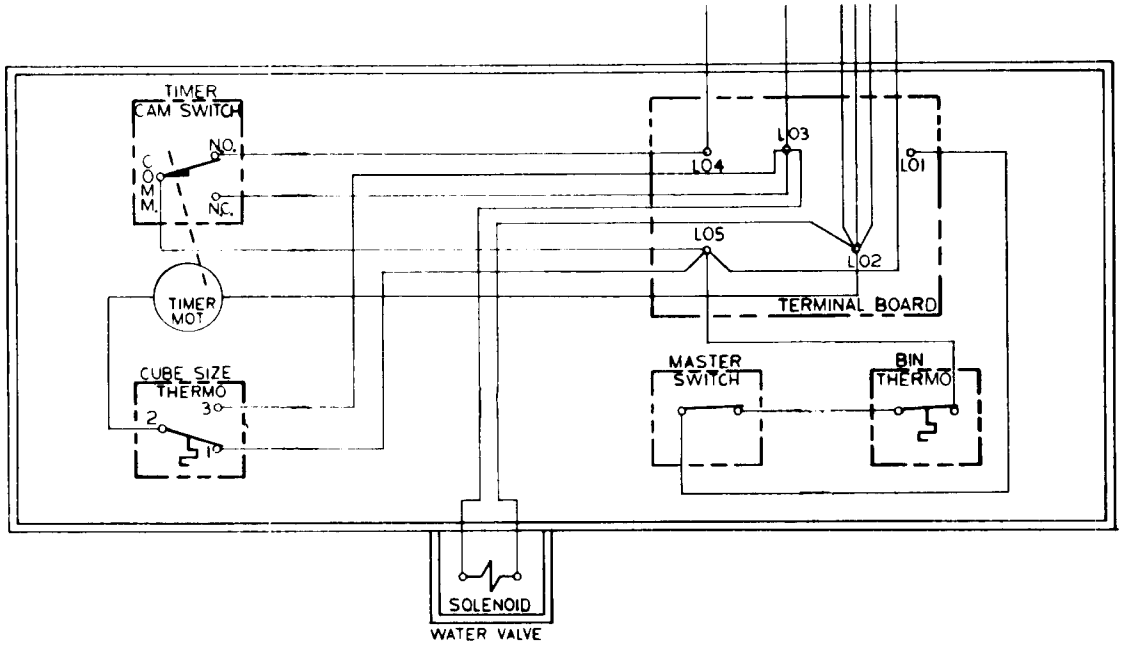

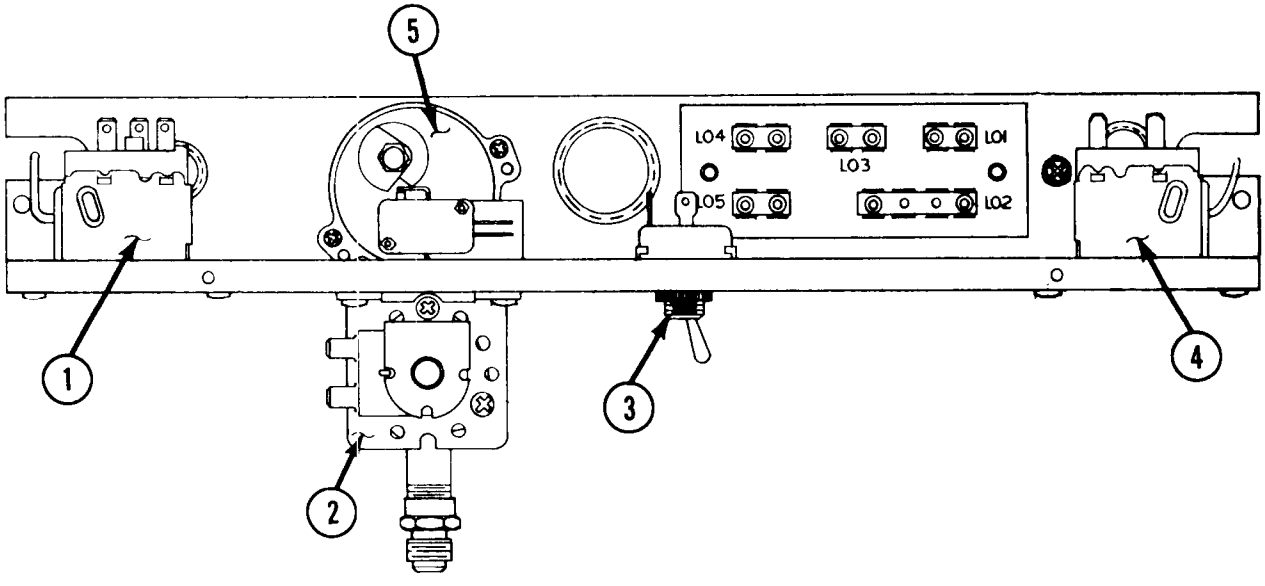

ITEM NO.	PART NO.	DESCRIPTION
1.	11-0395-01	Cube Size Control
2.	12-1646-02	Water Solenoid
	16-0672-01	Nylon Valve Fitting
3.	12-0426-01	Master Switch
4.	11-0366-00	Bin Thermostat
5.	12-1980-01	Timer

INTERNAL COMPONENTS

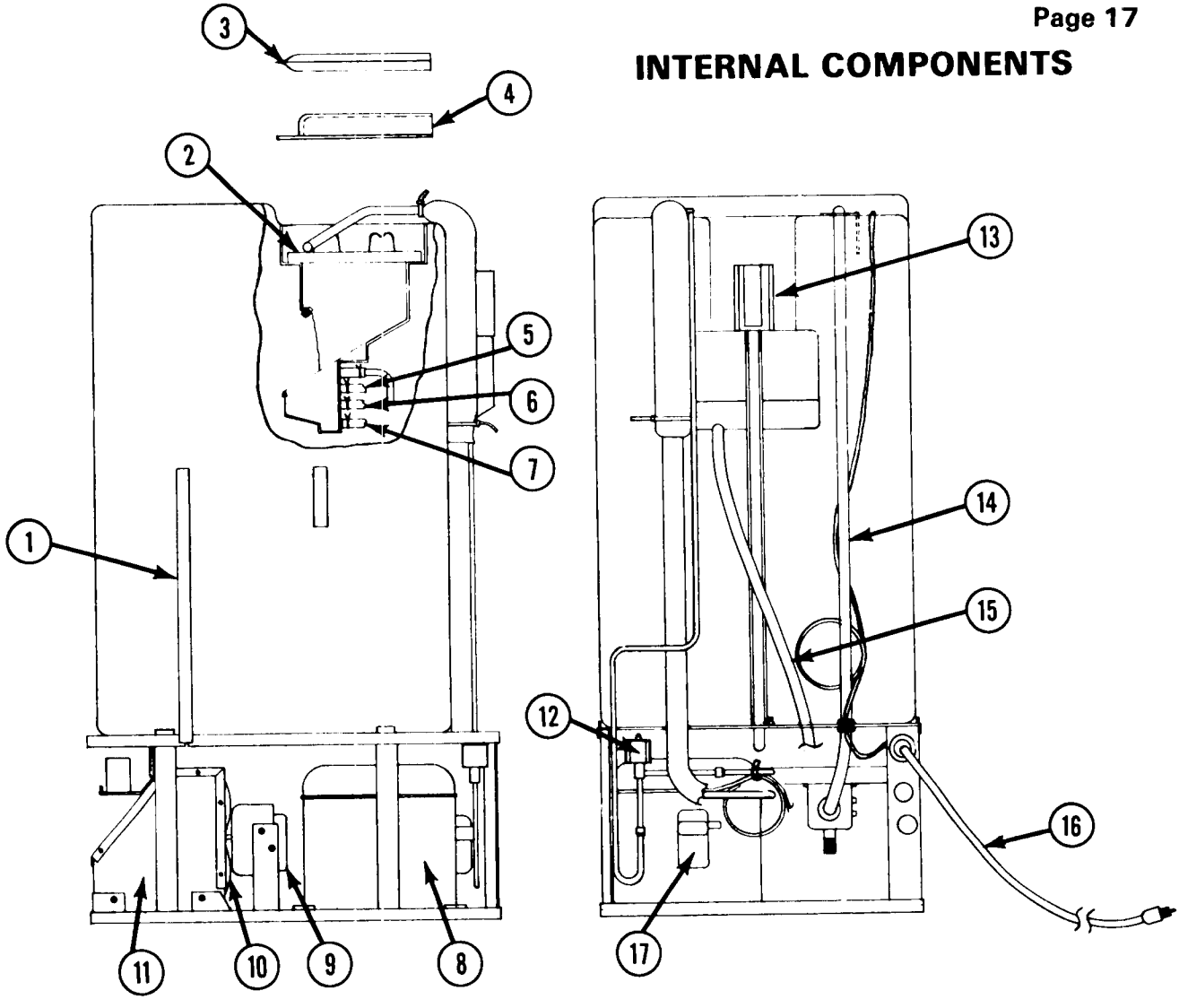

ITEM NO.	PART NO.	DESCRIPTION
1.	02-1634-01	Storage Bin
2.	A26115-020	Evaporator
	A26127-020	Evaporator Assembly Complete (Includes evaporator, cap. tube and suction line).
3.	A19588-000	Insulation
4.	02-2274-01	Cover
5.	13-0688-02	Water Tube (Order Number of Feet Required)
6.	13-0688-01	Water Tube (Order Number of Feet Required)
7.	13-0688-01	Water Tube (Order Number of Feet Required)
8.	18-2150-01	Compressor
9.	12-2015-01	Fan Motor
10.	18-3710-01	Fan Blade
11.	18-3708-01	Condenser
12.	12-2008-01	Hot Gas Valve Coil
	12-2009-01	Hot Gas Valve Clamp
	12-2010-01	Hot Gas Valve Body
13.	A22536-021	Water Pump
14.	13-0674-01	Tubing (order number of feet required)
15.	13-0674-04	Tubing (order number of feet required)
16.	12-1638-07	Electrical Cord
17.	18-2150-21	Starting Device
	18-2150-24	Cover
	02-1918-00	Drier (Not Shown)

WIRING DIAGRAM
(SM18A AND DC30A)
(115/60/1)

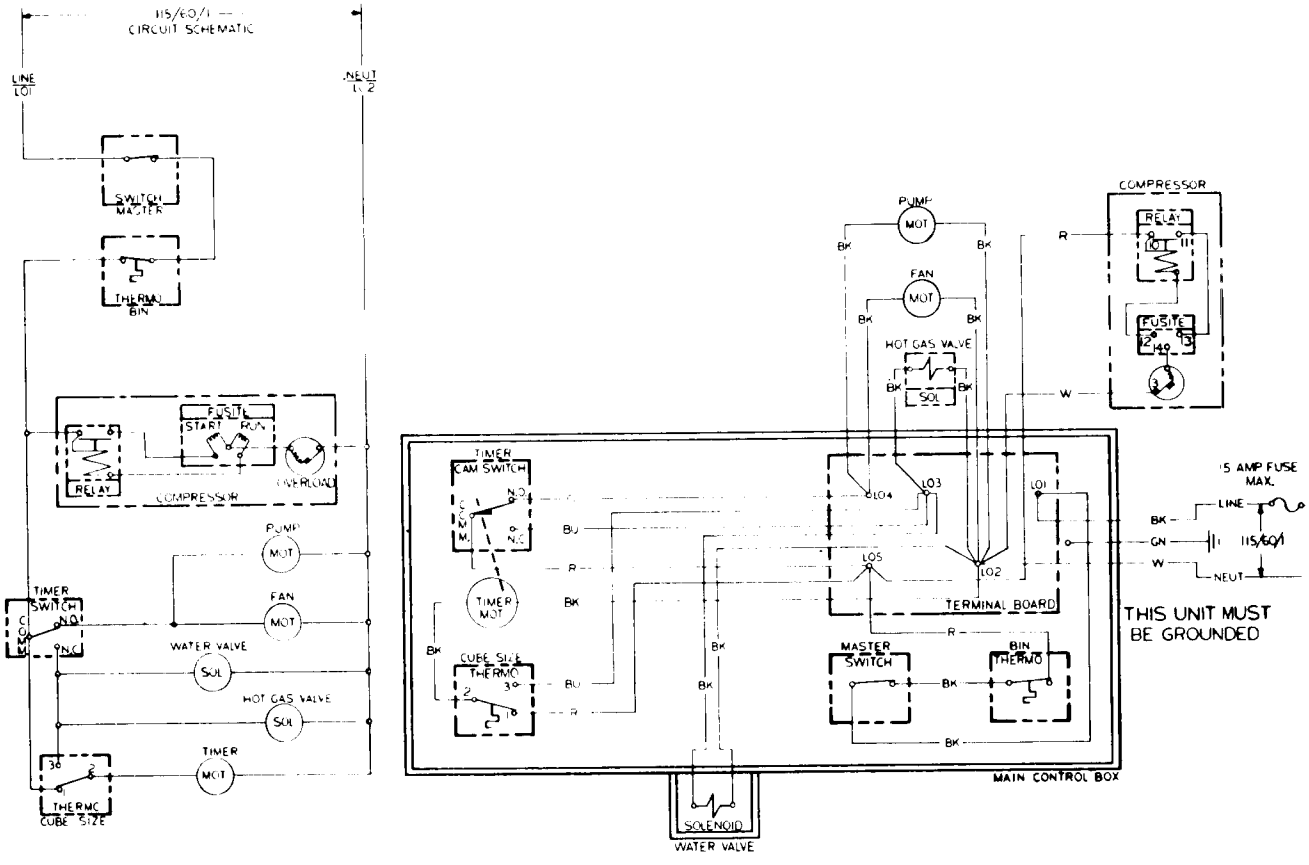

ALL CONTROLS SHOWN IN TIMED PORTION OF FREEZING CYCLE

A26304-001

WIRING DIAGRAM
FOR DRAINWATER PUMP MODEL
(SM18PA AND DC30PA)
(115/60/1)

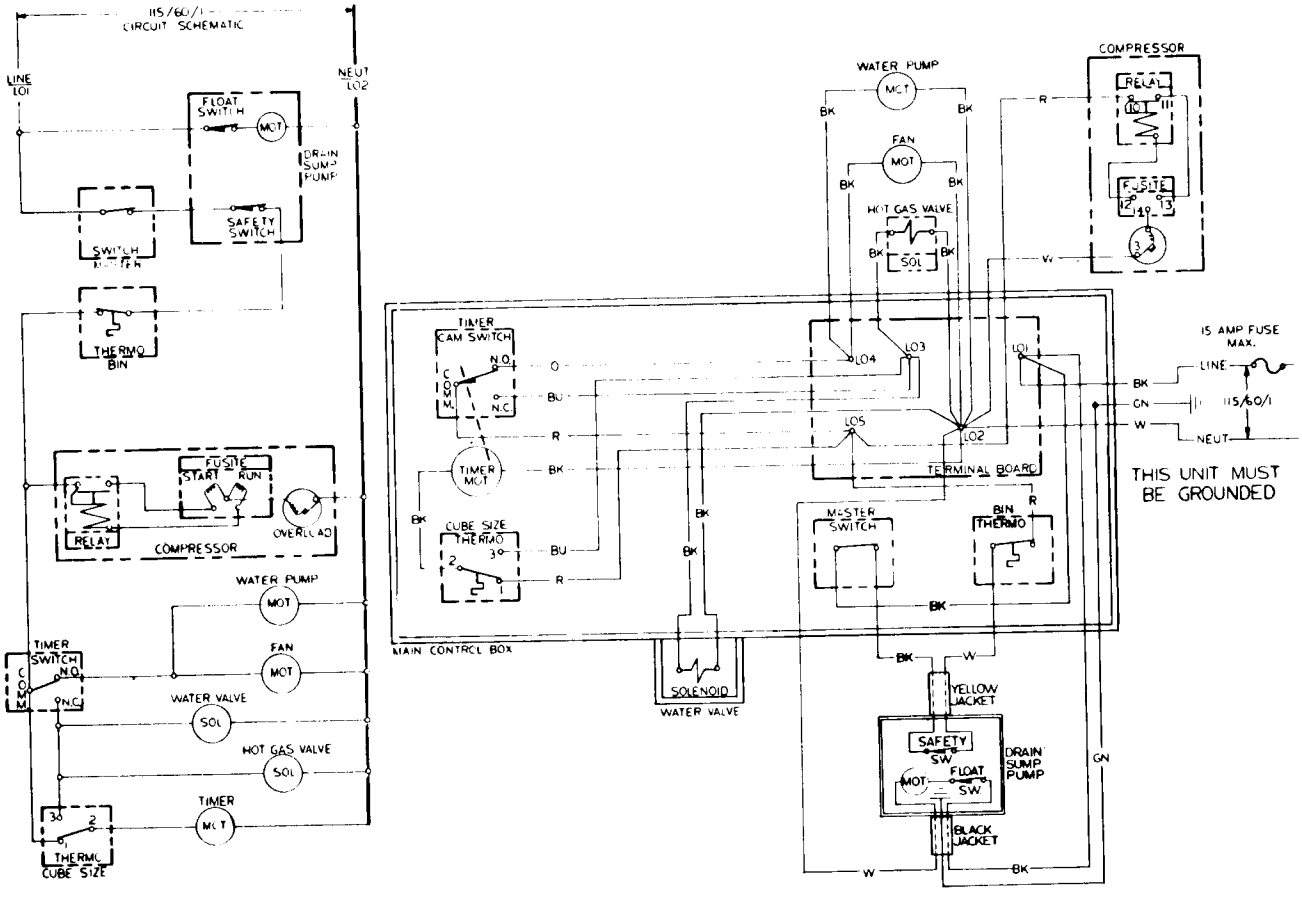

ALL CONTROLS SHOWN IN TIMED PORTION OF FREEZING CYCLE

A26304-091

MAINTENANCE INSTRUCTIONS

WARNING: DISCONNECT ELECTRICAL AND WATER SUPPLY BEFORE SERVICING MACHINE. FAILURE TO DISCONNECT ELECTRICAL POWER MAY RESULT IN SEVERE OR FATAL SHOCK INJURY.

Cabinet Removal.

1. Remove lower door by pulling forward at both top corners.

2. Remove upper door by taking out the hinge screw at the top right hand corner and lifting up and forward.

3. Remove 8 screws (2 on each side) from under the door gasket. It is not necessary to remove the gasket from the cabinet.

4. Remove the 4 screws in the kickplate.

5. Remove the 9 screws in the back panel. Also remove the 4 screws in the brace behind the water pump.

6. Remove the 6 screws (3 on each side) from the lower edge of the cabinet.

7. Remove the cabinet by lifting straight up.

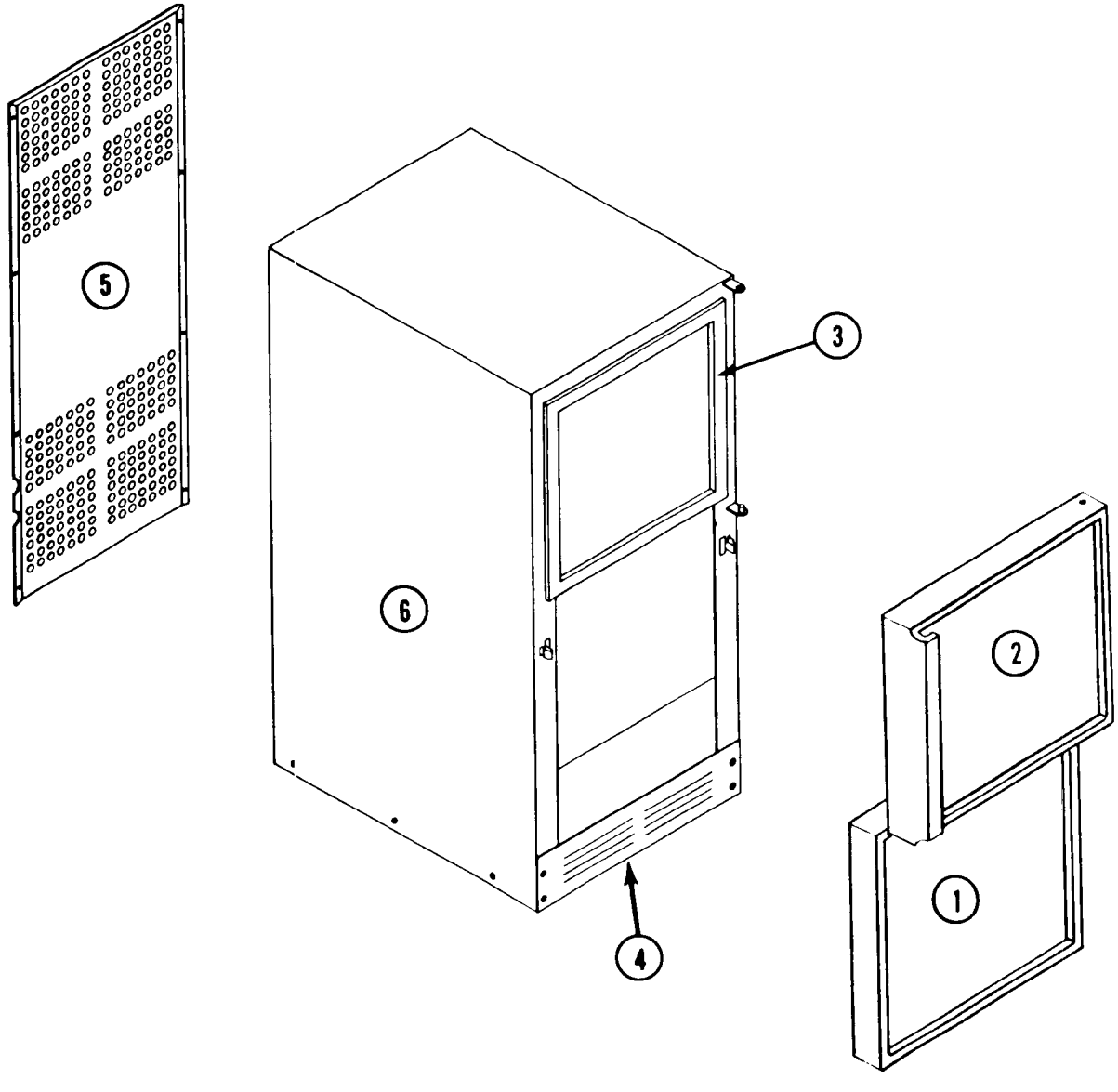

TIMER MOTOR REPLACEMENT

WARNING: DISCONNECT THE ELECTRICAL SUPPLY BEFORE SERVICING MACHINE. FAILURE TO DISCONNECT ELECTRICAL POWER PAY RESULT IN SEVERE OR FATAL SHOCK INJURY.

1. Remove lower service panel.

2. Push the toggle switch to the "OFF" position.

3. Remove the control box cover.

4. Remove mounting screws from timer.

5. Remove the electrical connections from the malfunctioning timer and replace them on the new part.

6. Mount the new timer motor in the control box.

7. Check the timer motor for proper operation.

NOTE: THE TIMER MOTOR **WILL NOT** RUN UNTIL THE CUBE SIZE CONTROL, PART NUMBER 11-0395-01, SUPPLIES POWER TO IT DURING THE LATTER PART OF THE FREEZING CYCLE. (SEE SERVICEMAN'S INFORMATION).

BIN THERMOSTAT REPLACEMENT

WARNING: DISCONNECT THE ELECTRICAL POWER BEFORE SERVICING MACHINE. FAILURE TO DISCONNECT ELECTRICAL POWER MAY RESULT IN SEVERE OR FATAL SHOCK INJURY.

1. Follow steps 1 thru 7 for cabinet removal.

2. Remove the two pieces of tape-on insulation from the capillary tube on the right hand side of the bin.

3. Push the end of the capillary tube through the hole into the bin.

4. Pull the tube out of the bin through the forward hole.

5. Remove the mounting screw holding the thermostat to the control box.

6. Remove the spade connections and replace them on the new control.

7. Remount the new thermostat in the control box and position the capillary tube.

8. Re-assemble the machine and check the operation of the thermostat by placing an ice cube against the capillary tube. Holding ice against the capillary tube will shut the unit off. Warming the capillary tube with your hand will turn the unit back on.

NOTE: The capillary tube should run parallel and 1/4" away from the bin wall for proper operation.

IMPORTANT: The bin thermostat is not eligible for warranty replacement if the capillary tube has been cut.

WATER PUMP REPLACEMENT

WARNING: DISCONNECT ELECTRICAL SUPPLY BEFORE SERVICING MACHINE. FAILURE TO DISCONNECT ELECTRICAL POWER MAY RESULT IN SEVERE OR FATAL SHOCK INJURY.

1. Follow steps 1 thru 7 for Cabinet Removal.

2. Remove 3 hose clamps and hoses from behind bin insert.

3. Remove the 2 screws which hold the water pump in place.

4. Lift out.

4. Cut the wire leads as close to the pump body as possible. Lift out the pump.

5. To install the replacement pump, follow previous steps in reverse. WARNING: Do not kink the three water tubes. Any obstruction will cause rapid failure of motor.

6. Cut replacement wires approximately 6 inches from motor and use wire nuts to reconnect.

ADJUSTING CUBE SIZE CONTROL

1. TO INCREASE CUBE SIZE, turn the adjustment knob clockwise. This will set the control to activate the timer at a colder evaporator temperature which will lengthen the freezing cycle and produce a larger cube.

2. TO DECREASE CUBE SIZE, turn the adjustment knob counter-clockwise. This will set the control to activate the timer at a warmer evaporator temperature which will shorten the freezing cycle and produce a smaller cube.

3. The adjustment knob should be turned a few degrees in the desired direction and the results check on the next batch of ice.

INLET WATER SOLENOID REPLACEMENT

WARNING: DISCONNECT ELECTRICAL AND WATER SUPPLY BEFORE SERVICING MACHINE. FAILURE TO DISCONNECT ELECTRICAL POWER MAY RESULT IN A SEVERE OR FATAL SHOCK INJURY.

1. Disconnect the electrical leads by removing the plug from the solenoid.

2. Remove the water inlet line and water tubing from the valve.

3. Remove mounting screws and solenoid from unit.

4. Reverse the previous steps to replace the valve.

INSTRUCTIONS FOR CHANGING DECORATOR PANELS

1. Door must be removed from machine prior to disassembly.

2. To simplify reassembly and protect door from damage, place tape around back side of door as indicated by drawing. Do not remove tape until door has been reassembled and is ready to be reinstalled on the machine.

3. Remove two screws from back of panel "A". Do not remove two lower screws E. Lower panels do not have screw E.

4. Lift handle from door applying even pressure on both sides exercising care so that handle is removed perpendicular to sides "B". DO NOT FOLD SIDES OF DOOR DOWN. DO NOT DISASSEMBLE DOOR PAST THIS POINT.

5. Set handle aside being careful not to misplace corner gussets "C".

6. Insert 1/4" thick decorator panel into channel in front of door "D". Panel size: Upper panel 13-7/16 x 14-5/8. Lower panel 14-5/8 x 14-5/8. Note the vinyl wood grain panel can be replaced with stainless steel or other metal panel by simply sliding the original panel out and replacing with new panel. In the case of the lower service door, the rubber like sealant must be removed from panel.

7. Reassemble door in reverse manner removing tape AFTER two screws "A" have been replaced.

8. Re-install door on machine.

NOTE: Lower door is disassembled in same manner.

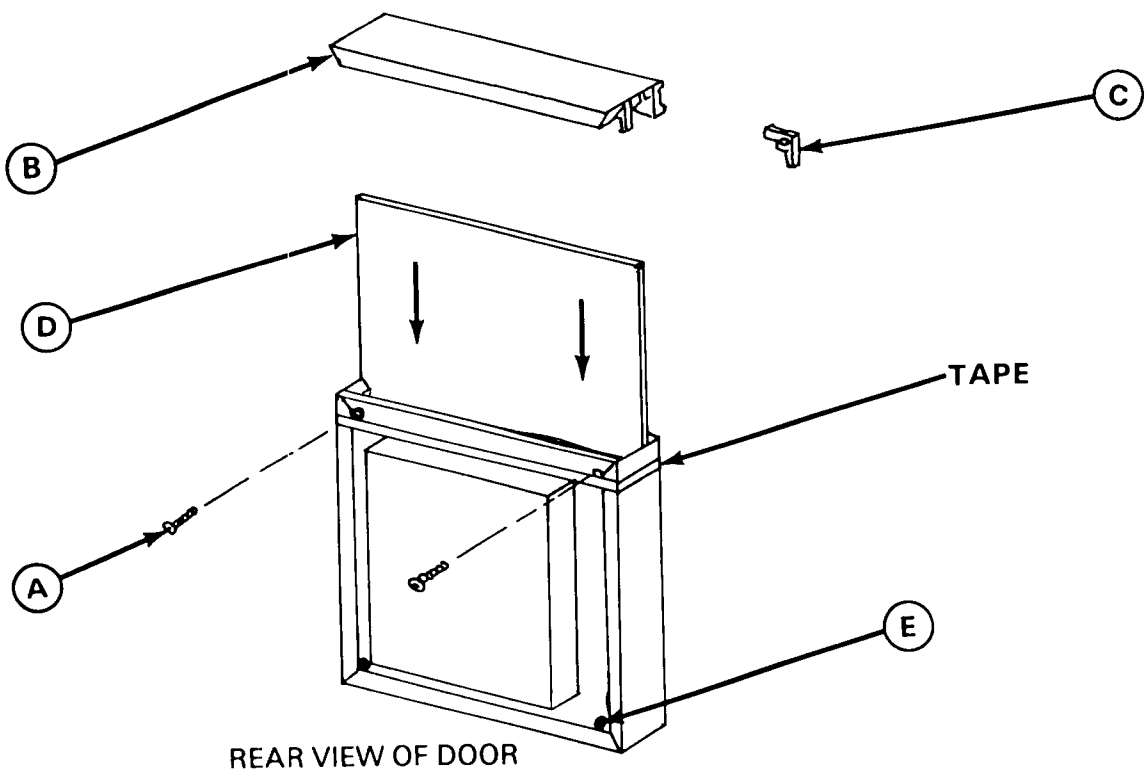

REAR VIEW OF DOOR

SERVICEMAN'S INFORMATION

The DC30A and SM18A are AIR-COOLED. They are designed to operate in a wide range of ambient conditions through the combined reactions of the CUBE SIZE CONTROL and TIMER. This is explained below.

1. The CUBE SIZE CONTROL senses evaporator temperature. At the start of a freezing cycle, the evaporator is warm and the CUBE SIZE CONTROL is open so power IS NOT supplied to the TIMER MOTOR. This means that the unit is making ice but the TIMER MOTOR IS NOT running.

2. During the latter part of the freezing cycle, the CUBE SIZE CONTROL senses the desired temperature, and closes the circuit to the TIMER MOTOR.

3. Once the TIMER MOTOR is energized, it will complete the ice making cycle and initiate the harvest or defrost cycle according to the position of the cam.

4. The cubes are harvested or defrosted by re-directing the flow of the hot refrigerant gas through the evaporator. The warm evaporator ejects the cubes and resets the CUBE SIZE CONTROL in proper position to start the next ice making cycle.

5. When the TIMER MOTOR rotates to the end of the defrost or harvest cycle, the CUBE SIZE CONTROL takes over the electrical circuit and power is cut to the TIMER MOTOR. The TIMER MOTOR IS NOW DE-ACTIVATED AND DOES NOT run until the CUBE SIZE CONTROL again activates it during the latter part of the freezing cycle.

6. See ADJUSTING CUBE SIZE CONTROL for complete instructions.

SERVICE ANALYSIS

SYMPTOM	POSSIBLE CAUSE	CORRECTION
Machine does not make ice.	Fuse in Power Line Blown	Check fuses in the house fuse box. Other loads on the same line may have caused fuse to blow. Use a 15 amp circuit and fuse.
	On-Off Switch in Off Position	The lever of the switch should be pushed to your left for "on" position.
	Water Supply Turned Off	Slightly loosen water connection in the front of the machine. If no water is present the water supply has been turned off.
	Timer does not run.	Check cam for rotation of clock.
	Wiring broken or connection off	Check electrical circuitry.
	Compressor does not run	Any of the following may be the cause. Starting relay, overload, or defective compressor.
	Water pump not operating	Clean or replace pump.
	Bin thermostat not operating correctly	Check thermostat by warming with hand and cooling with ice cube. Replace if necessary.
Low ice capacity.	High Room or Water Temperature	Provide ventilation to the unit. Decrease temperature as much as possible. If water supply pipe to the machine is very warm have plumber check installation.
	Unit connected to hot water line	Connect to cold water line.
	High head pressure	Dirty condenser. Clean.
	Leaky water valves	Clean, repair or replace valves.
Cubes too large.	Timer too slow or stops	Replace timer motor.
	Cube Size control set improperly	Check and adjust for proper operation.
	Timer switch defective	Replace switch.
	Cam on timer loose	Tighten cam locking nut.

SERVICE ANALYSIS

SYMPTOM	POSSIBLE CAUSE	CORRECTION
Machine noisy during harvest cycle.	Excessive incoming water pressure	Install pressure regulator in incoming water line. Set water pressure at 25 pounds.
Cubes cloudy.	Spray Jets Dirty	Clean (see page 12).
	Shortage of Water	Check water supply for partially closed valves or supply line, low water pressure, (See instructions under "Cuber Runs Short of Water") or plastic curtain not hanging properly.
	Machine not level	Level.
	Dirty water supply	Connect water supply to water softener and/or filter.
	Accumulation of dirt in water system	Clean with Scotsman Ice Machine Cleaner.
Cubes too small.	Restricted Capillary Tube	Purge and recharge. If necessary replace capillary tube.
	Moisture and air in system	Purge - recharge - replace drier. Use 2-831 drier.
	Shortage of water	Check water supply (See if Cuber runs out of water).
	Shortage of refrigerant	Charge unit properly. (See serial number plate for correct charge).
	Cube size control set improperly	Check and adjust for proper operation.
Cuber runs short of water.	Water sprays out curtains	Clean spray jets. Be sure plastic curtain hangs properly.
	Water valves leaking	Check and repair valves if necessary.
	Water leaking from pump hoses	Check clamp and hoses. Replace if necessary.
Compressor cycles intermittently.	Low voltage	Minimum voltage to be 10% less than normal rating.
	Air in the system	Purge and recharge.

SERVICE ANALYSIS

SYMPTOM	POSSIBLE CAUSE	CORRECTION
Cubes pile up in freezer.	Curtain or cube chute out of place or improperly installed.	Check position of curtain and chute. Correct or replace.
Poor harvest cycle.	Too short defrost time	Check timer - replace if necessary. Adjust timer switch.
	Restriction of incoming water	Clean water lines.
	Water valve sticking, not opening, or out of adjustment.	Clean, replace or adjust valve.
	Air vent holes in ice cups plugged	Clean small holes in top of the cups. See page 12 on cleaning.
Excessive bin meltage.	Drain line plugged	Clear line of obstruction.
	Drain not installed properly. Line does not have proper gravity flow so water backs up into bin.	See instructions for proper installation procedure.

ACCESSORY PARTS AVAILABLE

NOTE: TWO 1/4" PIPE THREAD X 1/4" COMPRESSION FITTINGS ARE REQUIRED FOR INSTALLATION. P/N 16-0621-03.

Water Pressure Regulator Part No. 11-0200-00.

Installation of a pressure regulator in the incoming water line will minimize any objectional or excessive noise emitted during the harvest cycle. This valve comes preset from the factory at 25 lbs.

Water Strainer Part No. 16-0162-00.

Installation of a water strainer in an easily accessible area will greatly simplify service if a machine is installed on a water supply system that may have sand or sediment in the water. The machine comes equipped with a strainer screen in the water solenoid valve which is adequate for the majority of installations, however, if sand or sediment could be a problem, installation of this water strainer from a service standpoint is highly recommended. The diagram below shows the direction of water flow. The cleaning plug must be in a downward position slanting up into the incoming water. Notice the arrow stamped on each strainer to show correct flow direction.

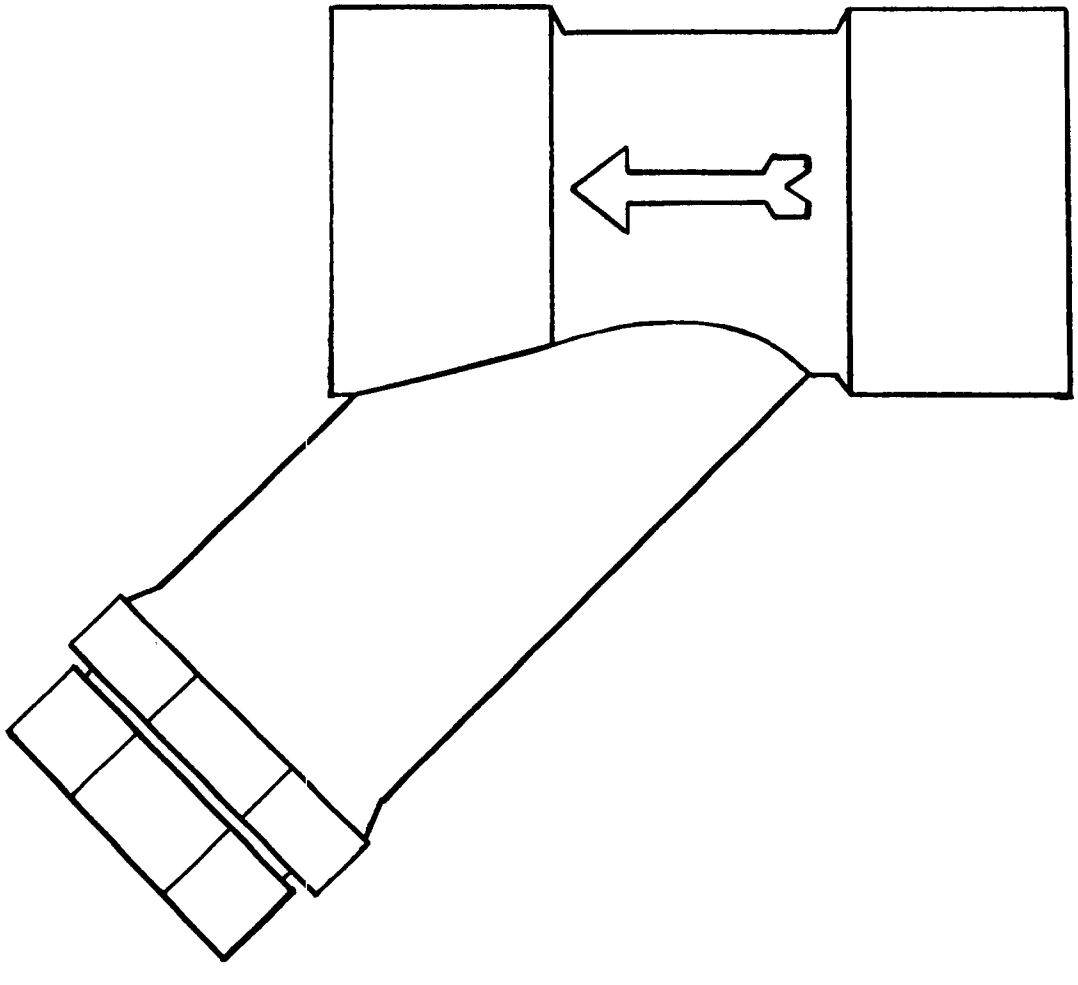

TABLE OF CONTENTS

Table of Contents 1
Photograph and Ice Making Capacity 2
Specifications and Dimensions 3-4
Selecting Location:
- Uncrating 5
- Location 6
- Preparation for Installation 6

Installation — Water Drain 7
Wiring Diagrams:
- Air Cooled 8
- Water Cooled 9

Diagram Installation Practice 10
Final Check List 11
Start-Up 12-13
Cycle of Operation:
- Harvest Cycle 13-14
- Freezing Cycle 15-16

Service Analysis Charts 17-18
Exploded Views — Component Parts:
- Sump Pump 19
- Control Box 20
- Complete Unit (Top View W.C.) 21
- Complete Unit (End View) 22
- Complete Unit (Top View A.C.) 23
- Case Parts 24
- Compressor Assembly — Air and Water 25
- Water Valve 26
- Freezer Assembly 27-28
- Drive Linkage and Spray Bar 29
- Functional Parts and Maintenance 30
- Service Complete Unit 31

Maintenance Instructions 32

All specifications within this manual are subject to change without notice.

THIS PAGE
INTENTIONALLY
LEFT BLANK

SCOTSMAN®
SUPER CUBER
SM-205 SERIES

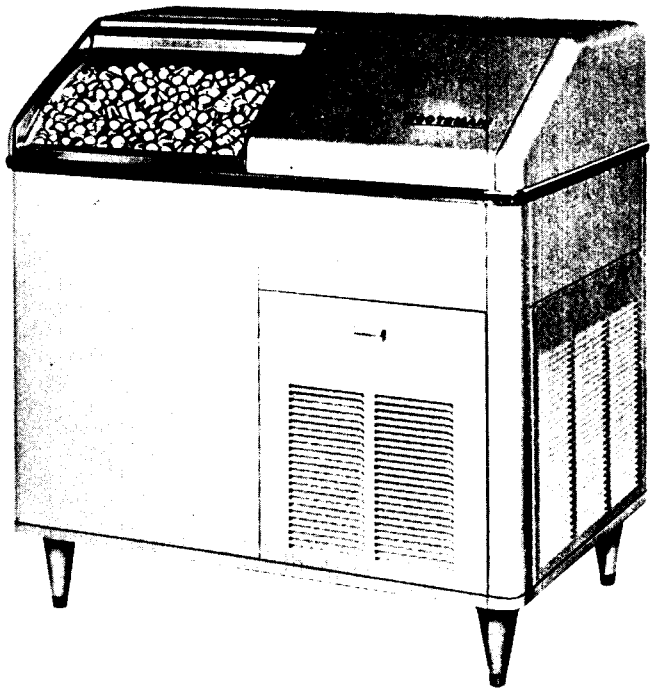

ICE MAKING CAPACITY:

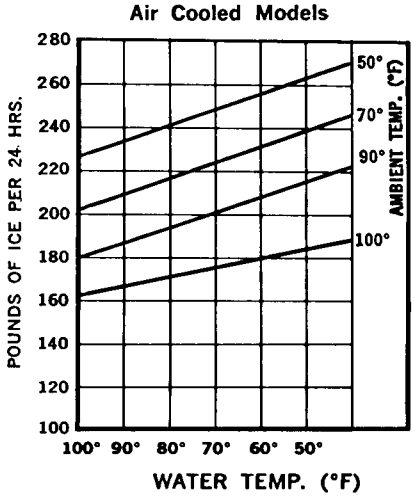

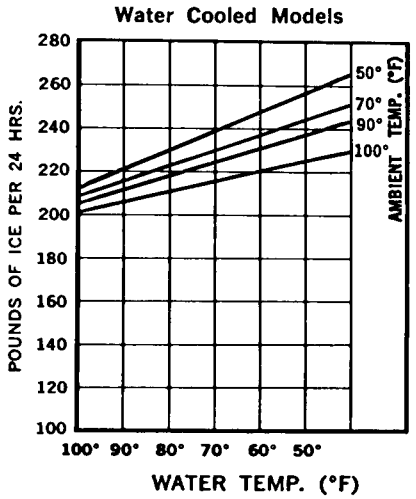

SPECIFICATIONS

SUPER CUBER SM-205 SERIES	MODEL SM-205J	MODEL SM-205WJ	MODEL SM-205J-SS	MODEL SM-205WJ-SS
CONDENSER, Air Cooled	X		X	
CONDENSER, Water Cooled		X		X
COMPRESSOR 3/4 HP	X	X	X	X
FINISH, Hammerloid Grey	X	X		
FINISH, Stainless Steel			X	X
SHIPPING WEIGHT	380	380	385	385

STANDARD ELECTRICALS	MINIMUM WIRE SIZE	TOTAL AMPERAGE
115/60/1	2 wire 12 gauge	16.9 Amperes

CAPACITY: Refer to Production Chart
STORAGE BIN: (self-contained) 150 lbs.
Stainless Steel Lined
DEPTH: 24-1/2"
WIDTH: 44-1/4"
HEIGHT: (with legs) 45-1/4" to 46"
HEIGHT: (without legs) 39-1/4"

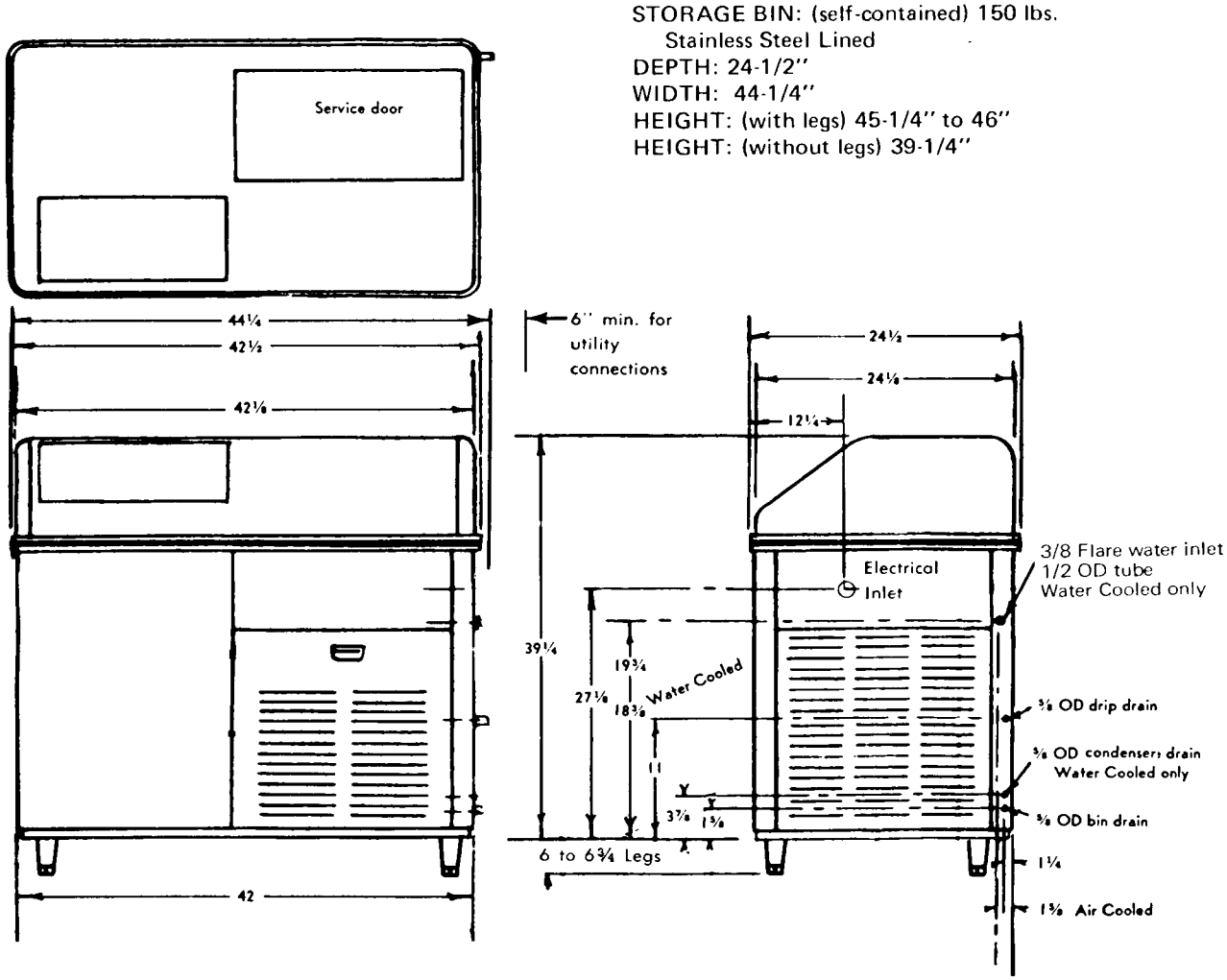

SPECIFICATIONS

	Air Cooled	Water Cooled
Water Pressure (minimum)	20 pounds	Same
Refrigerant Control	Capillary Tube	Same
Compressor 3/4 H.P.	Copelaweld 115/60/1	Same
Condenser	Air Cooled	Water Cooled
Refrigerant	Refrigerant 12	Same
Refrigerant Charge	20 ounces	20 ounces
Power Consumption	17.25 Amperes	17 Amperes
Cubes per Harvest	102 Compact Cubes	Same
Water Consumption to Produce Ice	2 Gal. per hour	Same
Dimensions		
Height - with 6" legs	45-1/4"	45-1/4"
Height - less 6" legs	39-1/4"	39-1/4"
Width	44-1/4"	44-1/4"
Depth	24-1/2"	24-1/2"
Weights		
Uncrated	385 lbs.	385 lbs.
Crated	405 lbs.	405 lbs.

INSTALLATION

UNCRATING OF MACHINE

1. The complete machine comes in one crate. After the crate is removed, inspect for concealed damage. Remove the bottom skid by removing all bolts. Then cut all wires holding support packing from refrigerant line. Be sure the compressor is snug on mounts. Then check all refrigerant lines for rubbing or touching other surfaces. Also check for possible transportation damage.

2. Remove all service doors and panels.

3. Remove leg package in compartment base and install 4 legs in unit base sockets.

4. Remove protective shipping tape from bin door, freezer curtain.

5. Remove water strainer from storage package for installation in water supply line feeding unit.

6. Open electrical control box and prepare for hook up, use knock outs, cord connectors, etc. Then check unit name plate voltage against building source voltage and make sure they correspond. Caution – improper voltage supplied to units will void your warranty protection.

7. Make sure suction service valve on the condensing unit is fully back seated. Replace the valve cap after checking. All models are shipped with valve back seated.

8. Make sure that the flow of air is not impeded in any way over condenser on air-cooled models. Keep condenser clean. (Check and clean the condenser monthly.)

9. Operating room temperatures are minimum 50° F. and maximum 100° F.

10. Remove Warranty card and Users Manual from storage bin and wipe bin clean with damp cloth.

11. Fill out warranty card completely including model and serial numbers as taken from aluminum plate found behind front service panel and forward to Scotsman factory using self mailing card.

12. Level unit with adjustable legs, call authorized Scotsman distributor or dealer for proper installation, start up and check.

LOCATION OF THE ICE CUBE MACHINE

UNDER BAR INSTALLATIONS – Locate, if possible, so left end panel is accessible. Locate unit so proper circulation can be attained around the unit and behind it at least four inches. Provide plumbing and electrical connections so the unit can be moved out where the entire top hood can be removed and the unit can still be operated.

KITCHEN INSTALLATION – As a rule, the kitchen is not the most practical place to install an air-cooled condensing unit, as grease is almost always present and makes cleaning of the condensing unit difficult. Do not locate near range or steam table or other heating devices that may be used in the kitchen.

STOREROOM INSTALLATIONS – Be sure storeroom is of adequate size and properly ventilated. A small, poorly ventilated room will greatly impair the efficiency of the unit. The Storeroom must be kept above 50 degrees in the winter months.

BASEMENT INSTALLATIONS – Locate machine in the coolest place. Locate the machine in a dry place. Keep away from furnace and boiler room. Keep away from service chutes and runways, also coal or other dust of any kind. If the machine is set over a floor drain, block the machine up enough to eliminate any possible damage to the machine.

LOCATE THE MACHINE SO THAT IT CAN BE SERVICED WHEN NECESSARY. ALLOW AT LEAST FOUR INCHES OF SPACE AROUND THE MACHINE FOR CIRCULATING AIR.

IMPORTANT: ADJUST LEVELER LEGS. MACHINE MUST BE LEVEL.

ELECTRICAL CONNECTIONS AND CHARACTERISTICS

115 volts, 60 cycle, single phase	Air Cooled	Water-cooled
Compressor	14.0 Amperes	14.0 Amperes
Sump Motor	1.32 Amperes	1.32 Amperes
Fan-Air Cooled Models.	.75 Amperes	None
Spray Bar Motor	.6 Amperes	.6 Amperes
TOTAL – FULL LOAD AMPERES	16.67 Amperes	15.92 Amperes

This unit should be wired to a 20 Amp. circuit. Be certain that the Super Cubers are on their own circuit and individually fused. The maximum allowable voltage variation should not exceed 10 per cent of the nameplate rating even under starting conditions. Low voltage can cause erratic operation, and may be responsible for serious damage to the overload switches and motor windings.

All external wiring should conform with National State and local code requirements. Check the voltage on the line before connecting the machine.

ELECTRICAL CONNECTIONS

12 Gauge wire will be adequate for short runs. For runs exceeding 50 feet, go to next heavier gauge. NOTE: All Scotsman cubers require a neutral wire and a solid earth ground wire.

WATER SUPPLY AND DRAIN CONNECTIONS

WATER SUPPLY – Air Cooled Models

The recommended water supply line is 3/8" OD copper tubing for air-cooled units. Connect to a cold water supply line with regular plumbing fittings with a shut-off valve installed in an accessible place between supply line and machine. The water strainer supplied with the unit should be mounted with clean-out plug down. Locate the strainer next to the machine and the arrow in the direction of the flow.

A 3/8" male flare fitting is provided on right rear corner for convenience in hook up.

WATER SUPPLY – Water Cooled Models

Water cooled models have same inlet water supply as the air cooled models. An additional 5/8" condenser water drain is added, however.

When choosing the water supply for this cuber, consideration should be given to:

A. Length of run.
B. Water clarity and purity.
C. Adequate supply pressures.

Since water is the most important single ingredient in producing ice, you cannot over emphasize the three items mentioned above. Low water pressure (below 20 pounds) may cause malfunction of the three way water valve. Water containing excessive minerals will tend to produce cloudy colored cubes and scale build up on parts in the water system.

Heavily clorinated water can be controlled using charcoal or carbon filters.

WIRING DIAGRAM
Air Cooled

115/60/1

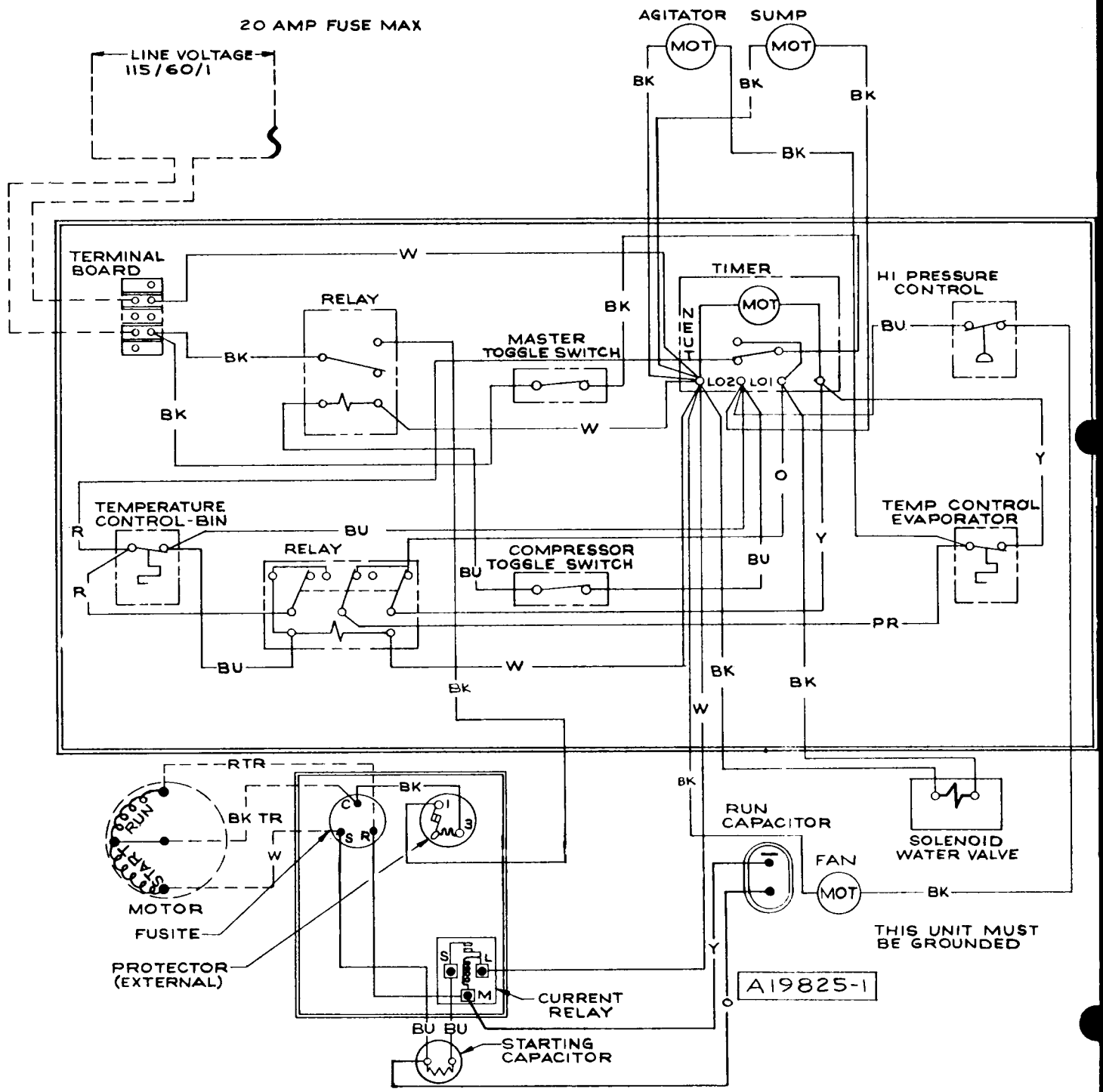

WIRING DIAGRAM
Water Cooled

115/60/1

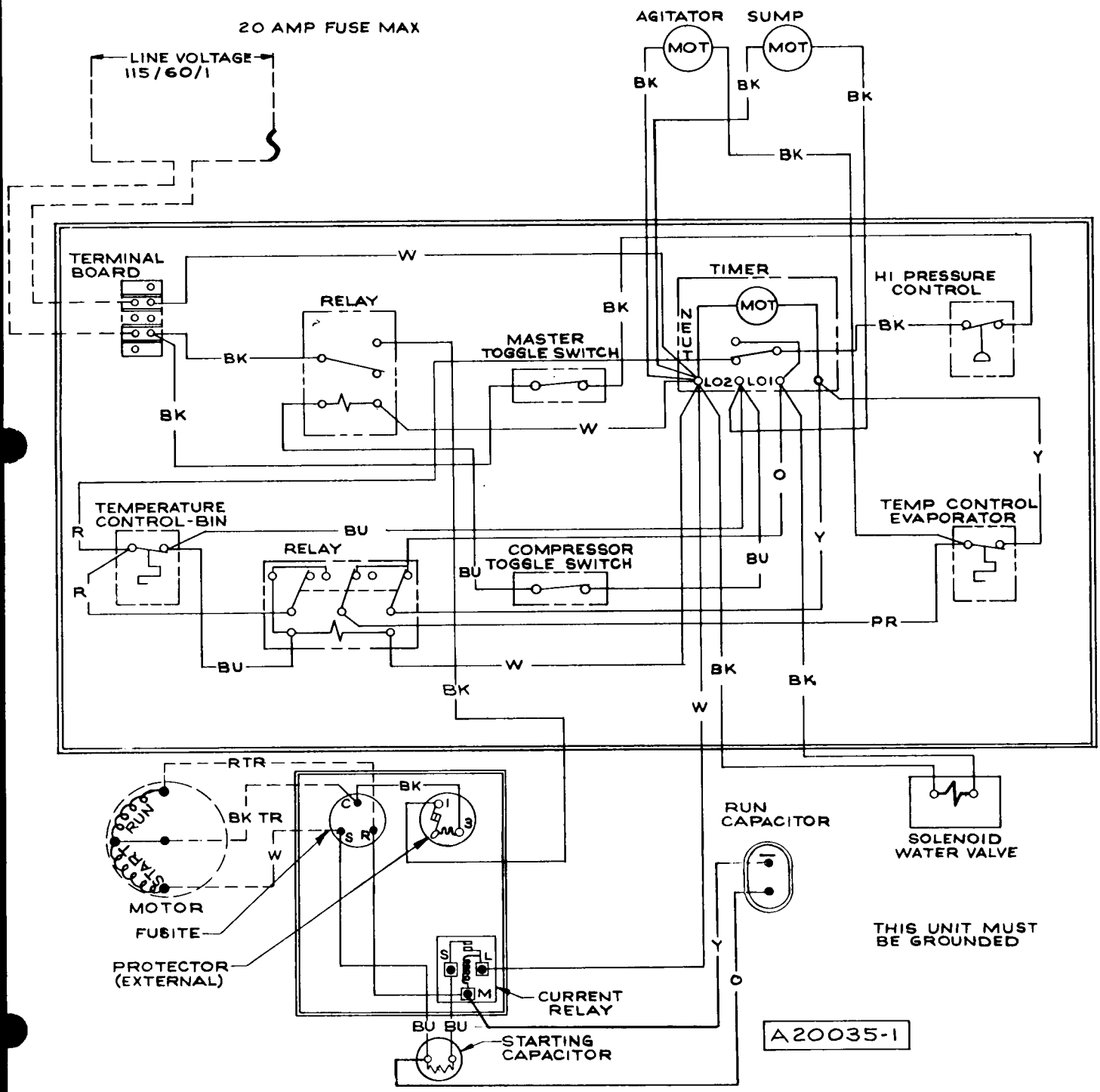

INSTALLATION PRACTICE

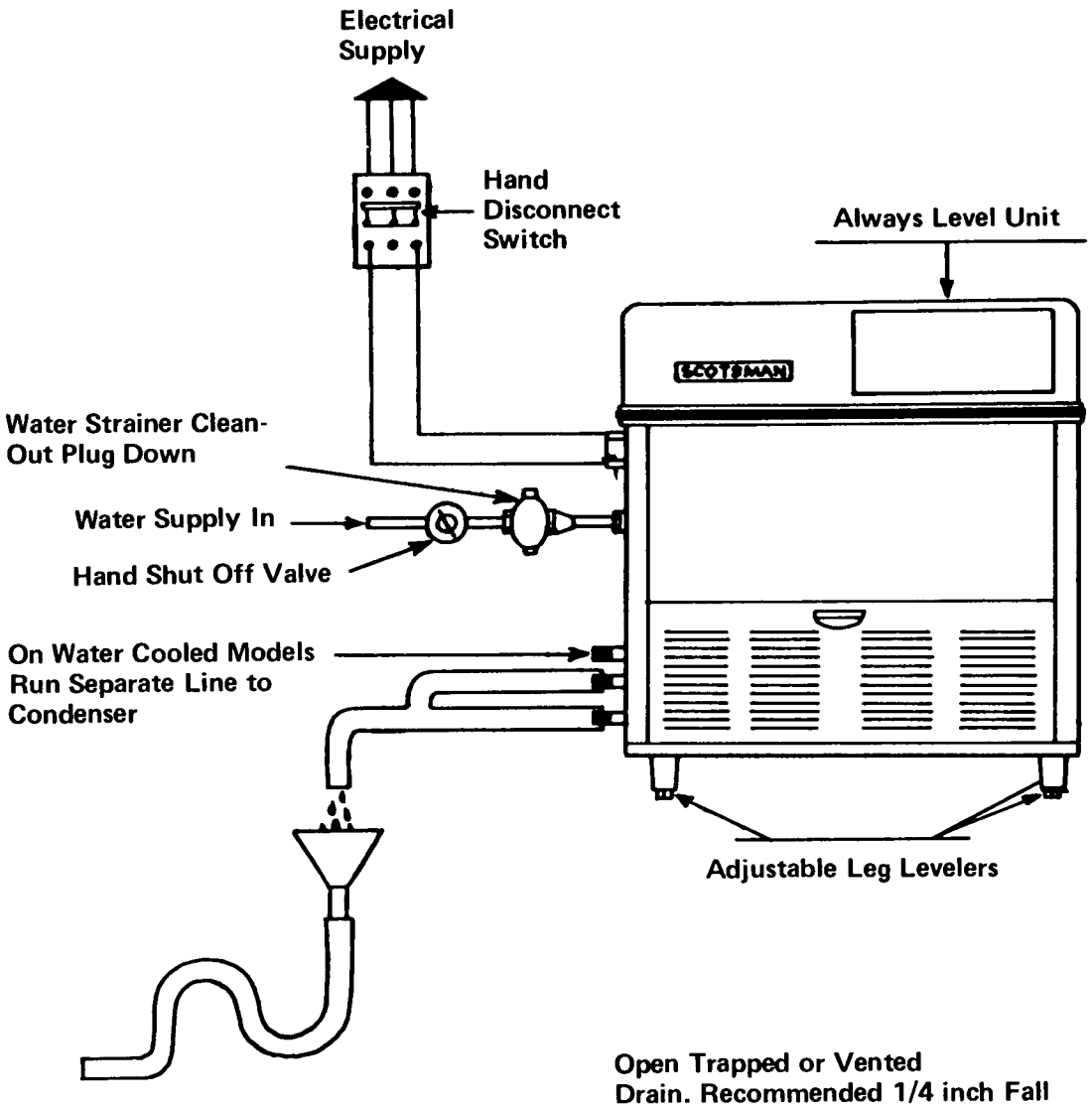

FINAL CHECK LIST

1. Is the unit level? (IMPORTANT)
2. Have all electrical and piping connections been made?
3. Has the voltage been tested and checked against the nameplate rating?
4. Have the compressor hold-down bolts been checked to insure the compressor is snug to its mounting pads?
5. Is the water supply valve open and the electric power properly hooked up?
6. All masking tape removed from doors, panels and inner freezer curtain?
7. Is the unit clean? Has storage ben been wiped clean with cold water cloth?
8. Has the owner been given the operating manual, and has he been instructed on how to operate the machine?
9. Have the installation and warranty cards been filled out? Check for correct model and serial numbers from serial plate on unit then promptly mail card to factory.
10. Check all refrigerant and conuit lines to guard against vibrations and possible failure.
11. Is there 4" clearance behind and around unit for proper air circulation?
12. Is unit in a room where ambient temperatures are minimum 50° F. even in winter months?
13. Has water supply pressure been checked to insure at least a minimum pressure of 20 pounds?

INSTALLATION – START UP

1. Remove hood (top) service panel and lower front, right side service doors to facilitate start up and check out.

2. Make sure water supply is turned on, then check timer finishing clock in main control box making sure the micro switch roller is resting down in offset slot in the cam (harvest position). If adjustment is necessary, turn timer knob clockwise into harvest position.

3. Inspect components in electrical control box, check for loose or frayed wire, then turn both manual switches to "on" position. All cubers have two manual on-off switches. One is for motor compressor only during cleaning operation, one is master switch for complete unit.

4. When both switches are thrown "on", water inlet solenoid will be energized allowing water to enter cuber, thru warm water tank, 3 way water valve and up into back side of freezer cup section. This will "fill" icemaker for the freezing cycle - Check operation of spray bar drive motor thru hood top panel. Spray bar motor should be running during harvest cycle.

5. Allow clock to carry unit through harvest cycle. This will be approximately three minutes. Dial pointer should be set on Number 3-1/2. After the compressor starts, turn the dial completely around and send it through another harvest cycle. Do this several times. This will completely flush out machine of any dust that may have accumulated in shipment.

6. After machine has been properly flushed, allow it to go into a freezing cycle - check for possible water leaks, check sump pump operation - should be running freely. Also note if jet tube operation is correct, and that none of the jets are plugged.

7. Time clock dial does not rotate at the end of the harvest cycle; it is started later by the cube size thermostat control located in the control box.

8. Freezing time will be approximately 20 minutes in a 70 degree ambient. (Longer if above, and shorter if below.) Average complete cycle time is 25 minutes.

9. Watch first cube harvest and check to make sure that plastic curtain sections have not been damaged in shipment. Also that curtains do not swing back into freezer and catch on spray bar.

10. Check size of cubes made: If too small, after a second cycle, adjust cube size control to lower or colder setting - until desired cube size is reached. Normal cube size is with a 1/4" depression in crown.

11. Check texture of cubes made: Partially cloudy cubes throughout suggest unit running short of water near end of freezing, or possibly an extremely bad water condition, which would indicate use of filtering or purifying equipment. Contact SCOTSMAN - Queen Products, Div., Ice Machine Service Department, Albert Lea, Minnesota, for further details.

INSTALLATION

12. With unit on harvest cycle, take a handful of cubes made and hold on storage bin thermostat cover. Should cut unit off at end of harvest cycle. Remove ice, unit should cut back on automatically in 3 or 4 minutes. Thermostat is factory set at 35 degrees out, 39 degrees in.

13. Install gauges and check head and back pressure: air-cooled models, head pressure after twenty minutes of freezing cycle at 70° ambient will be approximately 125 pounds PSI. The back pressure starts out at approximately 50 pounds PSI and gradually pulls down to approximately 4 pounds PSI just before harvest cycle. Higher ambients and dirty condenser will cause higher pressures. Water-cooled models have water regulating valves factory set at 135 pounds PSI: check reading and adjust if necessary. Back pressure will operate the same as on air-cooled models.

14. Remove gauges, replace control box cover and all service panels.

15. Instruct owner on how to operate and clean machine.

HARVEST CYCLE

At the end of the freezing cycle the time clock operated switch opens compressor, sump pump and fan motor circuit, and closes circuit to time clock motor, spray drive motor and solenoid operated inlet water valve. Inlet water pressure at bottom of hot water tank now forces heated water out the top of tank through warm water tubing and into back side of evaporator cup section. At the same time the surplus water from the preceding batch of ice cubes goes through three way water valve and off to drain. Water from the hot water tank flows into the rubber platen holding the evaporator cups and by conduction on back of cups causes the formed ice cubes to defrost or drop out. The platen-evaporator cavity is normally filled to the overflow level in 2 or 2-1/2 minutes. The amount of water running over the overflow pipe is controlled by the size of the flow control orifice and the length of the harvest time setting on the time clock past the overflow point. Over-flow water goes down the drain also.

Meanwhile, cubes released drop by gravity and are mechanically ejected thru curtained opening into ice storage bin by sprayer tube which is being actuated by drive motor. At the completion of harvest cycle, the micro-switch on the timer now drops points holding defrost components in cycle and switches to freezing cycle set of contacts. Timer completes harvest cycle when micro-switch roller lifts out of rear cam slot. Timer clock motor now stops and will not start again until cube size thermostat control closes once more. Electrically harvest cycle components cease, freezing cycle components start up. Chilled defrost water from the upper cavity now flows by gravity back through the three way water valve into freezer sump or reservoir pan. Here water is picked up by the water pump and continually recirculated through sprayer tube to produce the next batch of cubes.

HARVEST CYCLE – Water Circuit

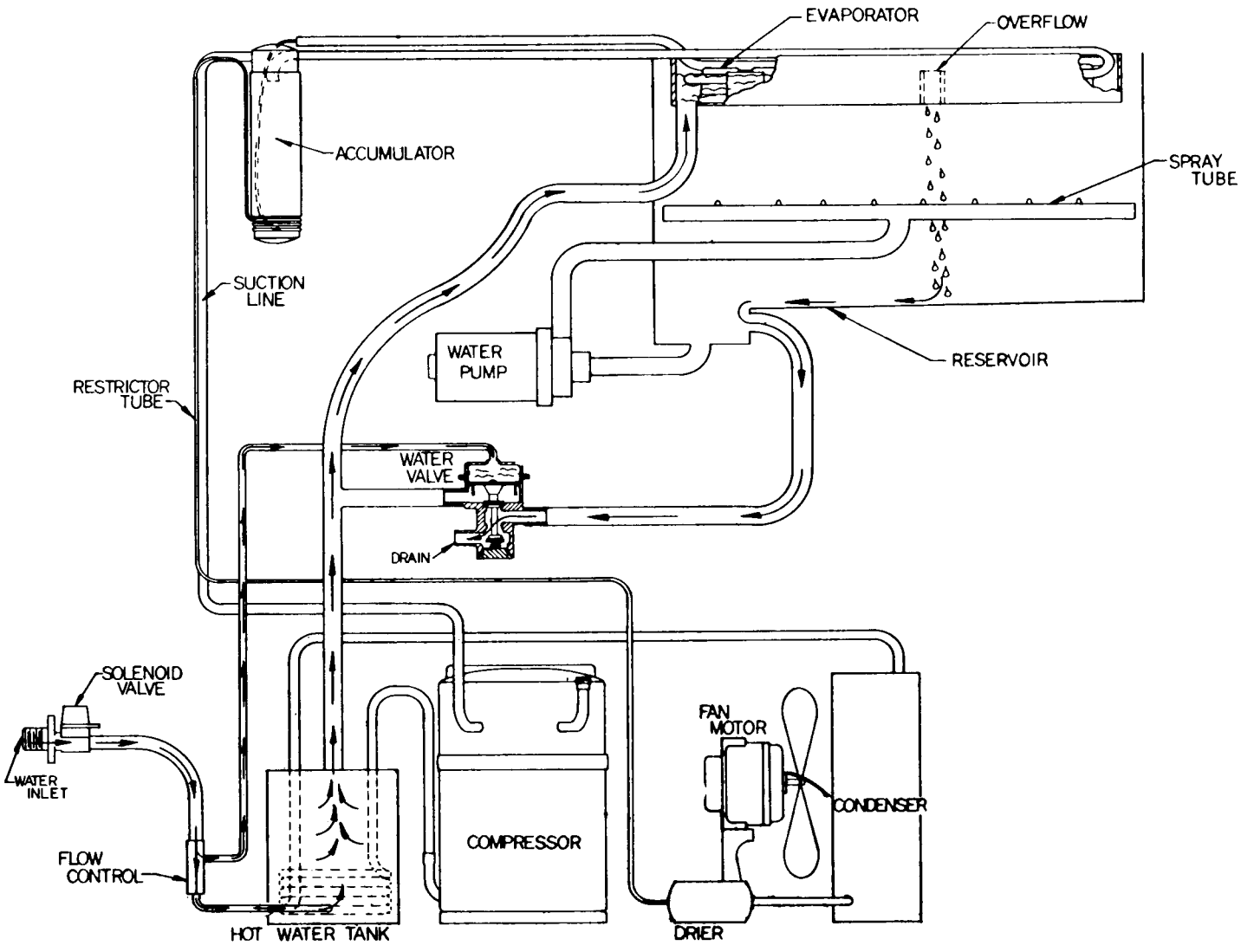

FREEZING CYCLE

As the freezing cycle starts, electrically the components operating are the compressor and fan motor, recirculating water pump and the sprayer tube drive motor.

The refrigerant curcuit which equalized at about 50 pounds gauge during the "off" or harvest cycle, thru the capillary refrigerant control, now rises rapidly to 125 - 135 pounds head pressure. The suction or low side pressure starting at 50 pounds pulls down fairly quickly to about 25 pounds at which point the ice cubes are starting to form a thin shell in cube cups. Continuing from 25 pounds slowly on down towards the finished cube pressure of approximately 5 pounds takes an average of 20-25 minutes.

During this portion of the freezing cycle the electrical brain is the reverse acting, cube size thermostat. This thermostat electrically is holding the freezing cycle components "live". When the ice cubes are about 3/4 formed, the decreasing suction pressure and temperature, activate the temperature sensing bulb of the reverse acting, cube size control, closing its contacts. This does not interrupt the freezing cycle, the closing of the cube size thermostat contacts electrically transfers the finishing of the freezing cycle to the finishing clock motor or timer as it is sometimes called. One full revolution of the timers dial is 12 minutes as is noted by the numerals on the dial however of the total 12 minutes on the timer dial, 3 minutes are used for the defrost or harvest cycle.

This means then that after the cube size contacts close they activate the timer motor. This control takes over and continues freezing cycle for another 9 minutes with timer dial now turning. When the 9 minutes are completed, an offset in the timer dial allows a micro switch with activating arm riding on that cam to drop into the slot electrically stopping the freezing cycle and starting the 3 minutes harvest cycle - The clock motor continues thru harvest cycles. A notch on the timer dial now lifts micro switch arm up on dial, electrically stopping harvest cycle and starts back into a new freezing cycle.

FREEZING CYCLE

Water & Refrigerant Circuit

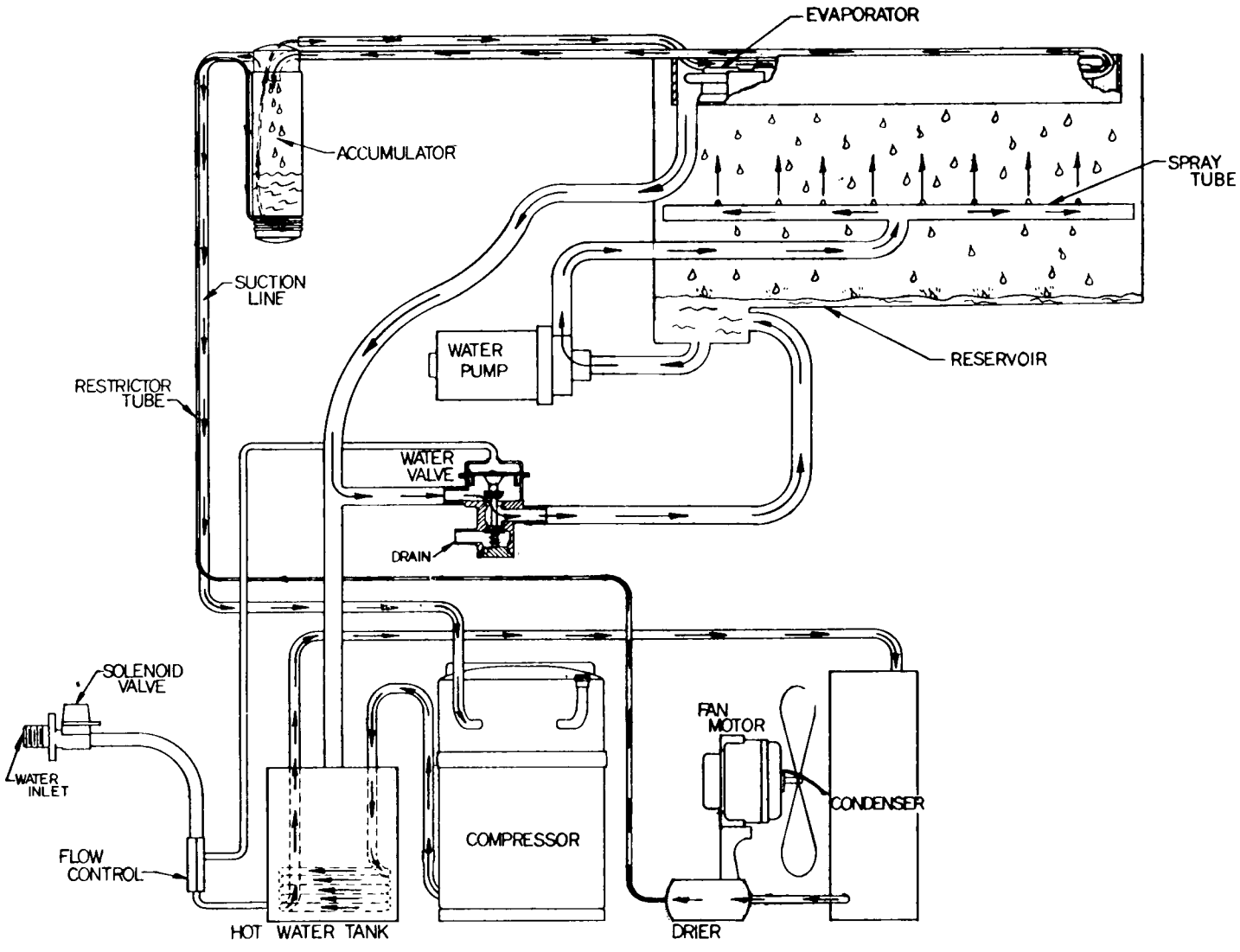

SERVICE ANALYSIS

SYMPTOM	POSSIBLE CAUSE	SUGGESTED CORRECTION
Irregular size cubes and some cloudy	Some jets plugged	Clean jets.
	Shortage of water	See Shortage of Water.
	Unit not level	Water overflowing air vent holes on low side burning cubes. Level as required.
Cubes too large	Cube size control turned too cold	Turn setting on cube size control dial towards warmer
Decreased ice capacity	Inefficient compressor	Replace.
	Leaky water valve	Replace or repair.
	High head pressure	Dirty condenser. Clean. Bad fan motor. Replace.
	Non-condensable gas in the system;	Purge the system.
	Poor Air circulation or excessively hot location	Relocate the unit, or provide for ventilation by cutting openings.
	Overcharge of refrigerant	Correct the charge. Purge off slowly.
	Partially restricted cap tube	Purge & replace charge and drier
Hole washed inside cube	Water over the top of the cube cups during harvest.	Level unit.
Poor harvests	Too short defrost time	Check and adjust harvest cycle. Timer should be set at 2-1/2.
	Restriction in incoming water	Check water feed line strainer and flow reducing valve. To give greater water flow increasing defrost time.
	Insufficient quantity of hot water	Cold ambient - must be 50° minimum faulty fan control on air cooled models.
	Solenoid valve not opening the water valve	Solenoid binding or burned out. Replace.
	Air vent holes in upper cube cups plugged	Clean out holes.

SYMPTOM	POSSIBLE CAUSE	SUGGESTED CORRECTION
Unit will not run.	Blown fuse	Replace fuse & check for cause of blown fuse.
	Bin thermostat set too high	Adjust thermostat. Set between 35° out to 39° in.
	Switch in Off position	Turn switch to On position.
	Inoperative master switch	Replace switch
	Timer contacts open	Replace timer micro-switch
Compresser cycles intermittently	Low voltage	Check circuit for overloading. Check voltage at the supply to the building. If low, contact the power company.
	Dirty condenser	Clean with vacuum cleaner, air or stiff brush. (Do NOT use wire brush.)
	Air circulation blocked	Allow sufficient air space all around unit.
	Inoperative condenser fan motor	Check to see if defective. If defective, replace.
	Non-condensable gases in system.	Purge the system.
Cubes too small	Cube size control set too high	Lower the setting. Turn towards colder.
	Partially restricted capillary tube.	Blow charge, add new gas & drier. After evacuating system with suction pump.
	Moisture in system	Same as above.
	Shortage of water	See remedies for shortage of water.
	Shortage of refrigerant	Check for leaks and recharge.
Cloudy cubes	Shortage of water	See remedies for shortage of water.
	Dirty water supply	Use water softener or water filter.
	Restricted drain on pump	Clean pump strainer.
	Accumulated impurities	Use SCOTSMAN Ice Machine Cleaner
Shortage of water	Water spraying out through curtains	Replace broken curtains if any broken.
	Three-Way water valve leaking	Check the valve for foreign matter. Check valve seats and replace if necessary.
	Water entering hot water tank too slowly	Check pressure at source - 20 lb. required. Dirt in solenoid and flow control - blow out. Partial restrictions in water strainer. Clean Strainer.

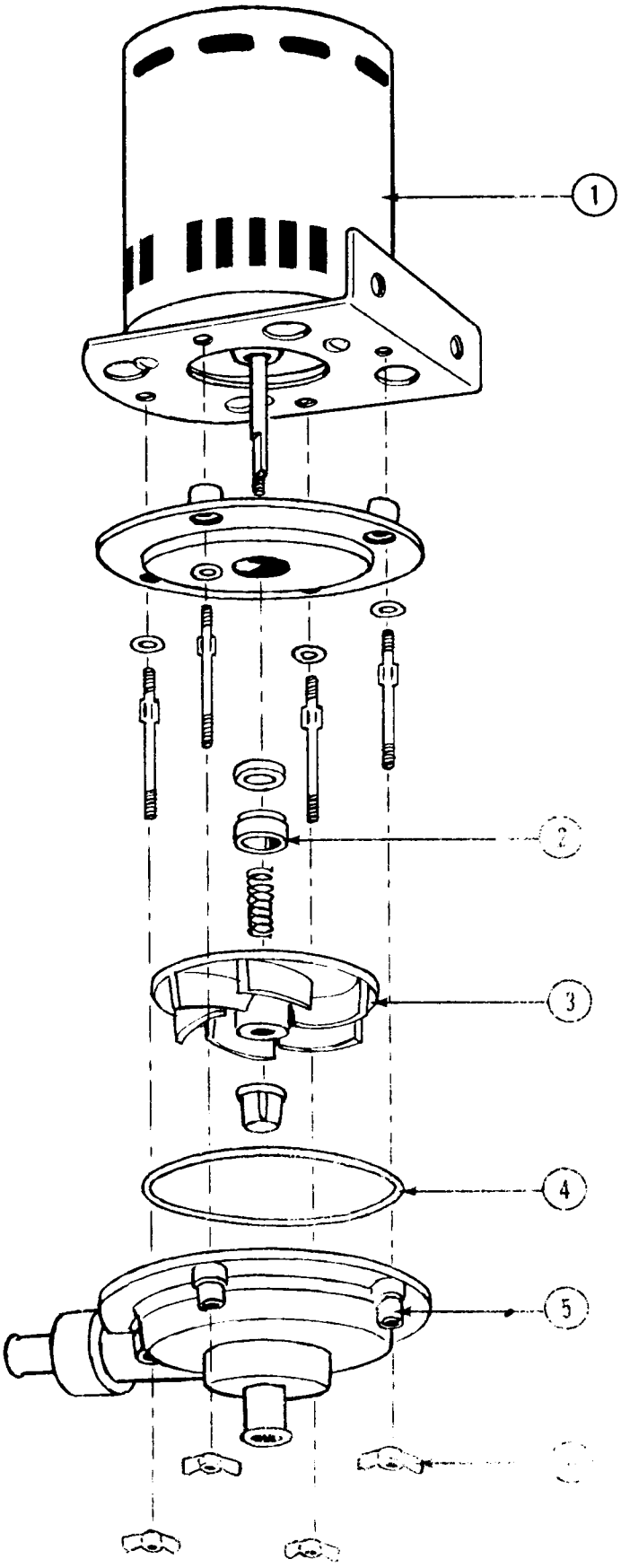

SUMP PUMP ASSEMBLY
PART NO. 12-1532-1

1.	12-1532-51	Motor only
2.	12-1532-57	Water Seal
3.	12-1532-58	Impeller
4.	12-1532-60	O-Ring
5.	12-1532-61	Outlet Housing
6.	12-1532-62	Wing Nuts

REPLACING SEAL ON GPPS UNITS

1. Remove Wing nuts on housing, remove housing.
2. Remove impeller by holding impeller down and backing off impeller nut.
3. Remove the 4 No. 8-32 studs holding pump base to mounting plate.
4. Lift base off plate. Seal will slide off at same time.
5. Remove ceramic seal part and rubber cup from base plate.
6. Install new ceramic part and cup in base. Make sure cup does not "roll" and that ceramic is in firmly. Be careful not to scratch ceramic face.
7. Re-assemble base to mounting plate with the 4 studs, keeping motor shaft centered in ceramic.
8. Lightly lubricate "O" ring in carbon seal member. Use a nonpetroleum base lubricant. Do not use motor oil or 3 in one oil. This has deteriorating effect on the plastic.
9. Carefully slide carbon seal member down shaft until face contacts ceramic seat. Drop spring over shaft.
10. Engage tip of spring in slot on back of carbon. Hold motor shaft stationery and rotate spring and carbon member until top spring tip is directly on opposite side of shaft from flat.
11. Put impeller on shaft. Spring tip should engage slot in bottom of impeller to provide drive for seal.
12. Hold impeller flat against base plate. Screw on impeller nut until tips on bottom of nut touch tips of impeller hub. Back off slightly until impeller snaps up, the tips of impeller locating between the tips of the nut. This prevents impeller from backing off shaft, and automatically provides clearance between impeller and base plate.
13. Replace pump housing, making sure "O" ring is in position on base plate.
14. Replace 4 Wing nuts.

CONTROL BOX
115/60/1

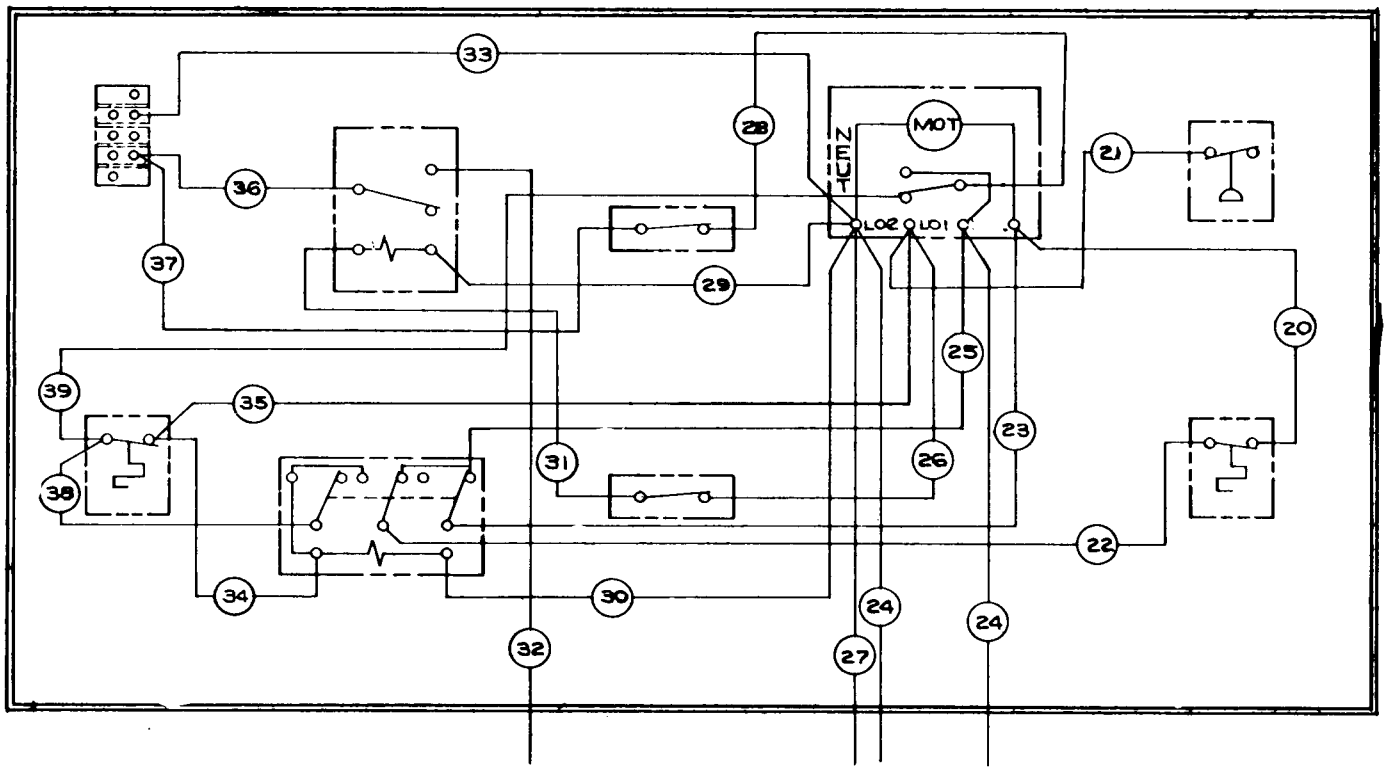

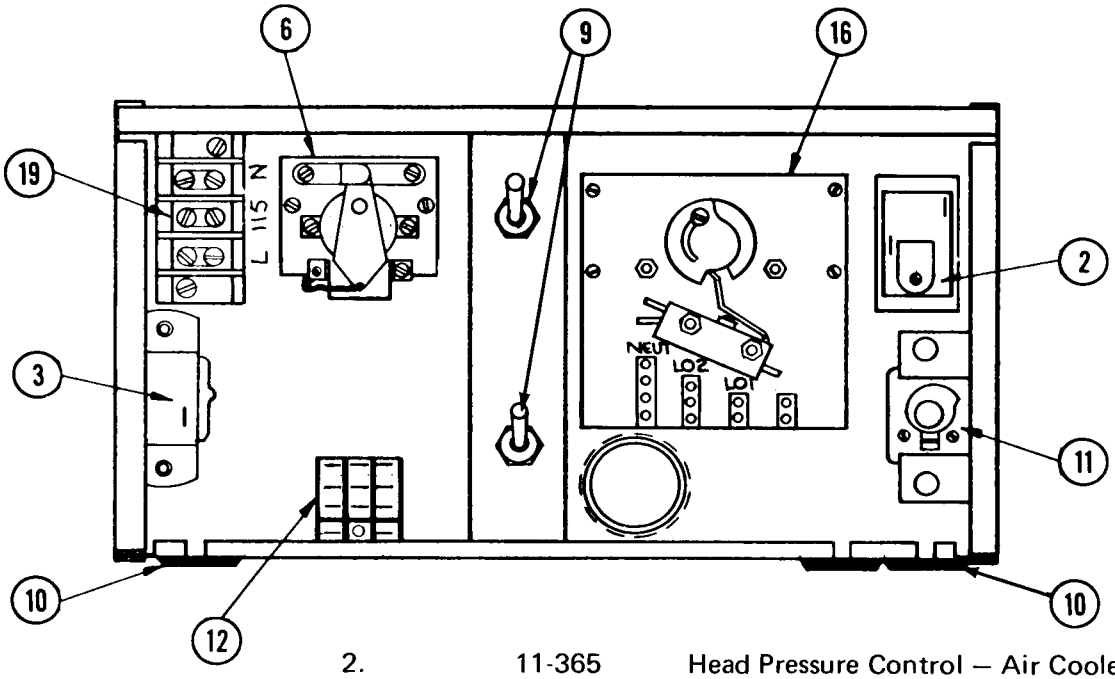

2.	11-365	Head Pressure Control – Air Cooled Only
2.	11-357	Head Pressure Control – Water Cooled Only
3.	11-353	Bin Thermostat
6.	12-419	Relay
9.	12-426-1	Switches
10.	13-124	Grommet
11.	11-345	Cube Size Thermostat
12.	12-1598	Complete Cycle Relay
16.	A-21038-1	Timer
19.	12-813	Terminal Block

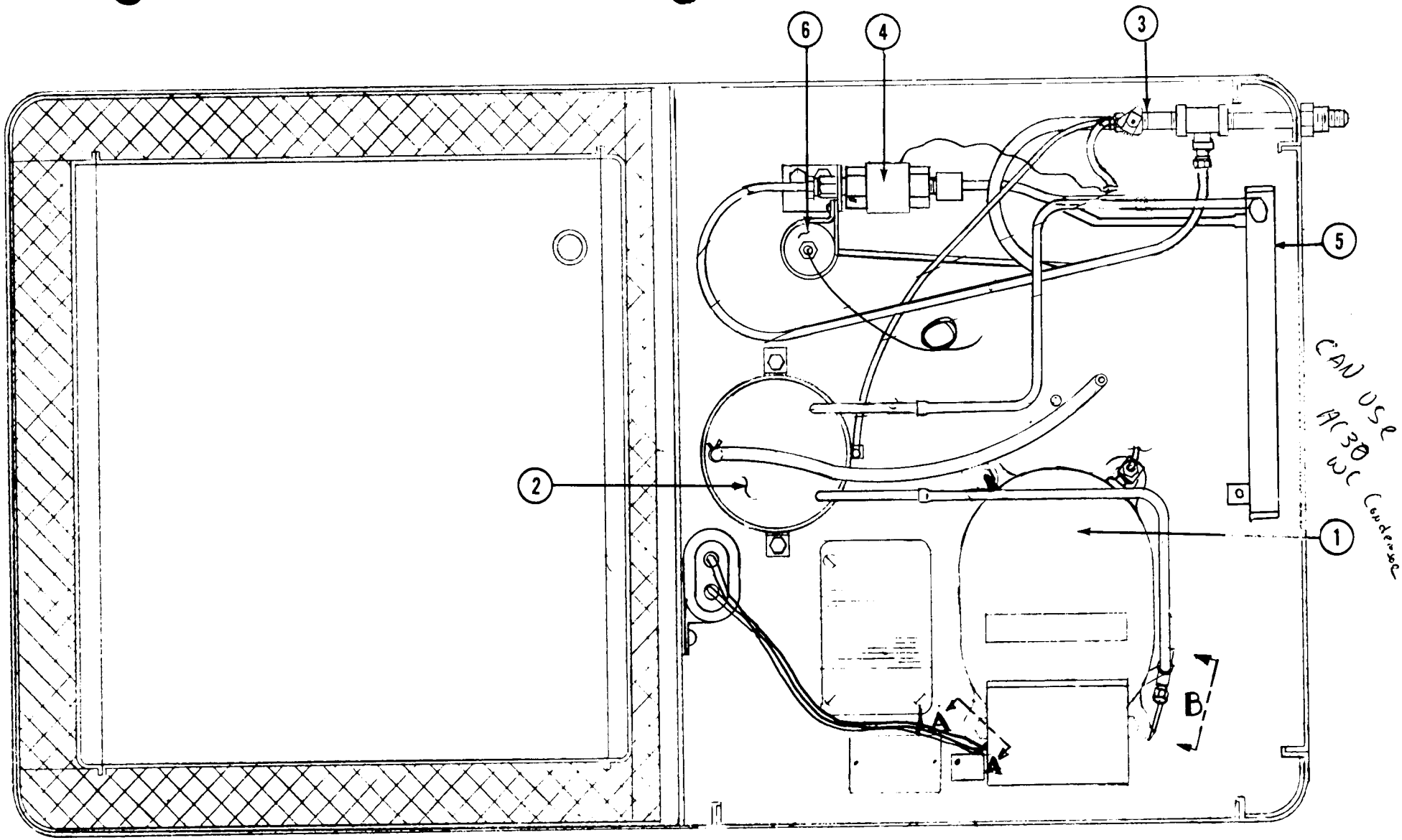

CABINET TOP VIEW

SM-205WJ

1.	18-2430	Motor Compressor
2.	A-20161	Warm Water Tank
3.	12-1434-1	Inlet Water Solenoid
4.	11-198	Water Regulating Valve
5.	18-354	Water Cooled Condenser
6.	2-544	Refrigerant Drier

CABINET FRONT – END VIEWS

1.	2-1741	Drain Top
2.	2-1742	Drain Bottom
3.	2-932	Hose Clamps (2)
4.	2-785	Spring
5.	13-617-11	O-Ring
6.	13-674-8	Tubing – Order by foot
7.	12-1532-1	Water Pump
8.	12-675-1	Agitator Motor
11.	A17954-1	Three Way Water Valve
12.	A-19555	Bulb Cover
13.	13-590	Cover Gasket
14.	A-16108	Holder Buttons (2)

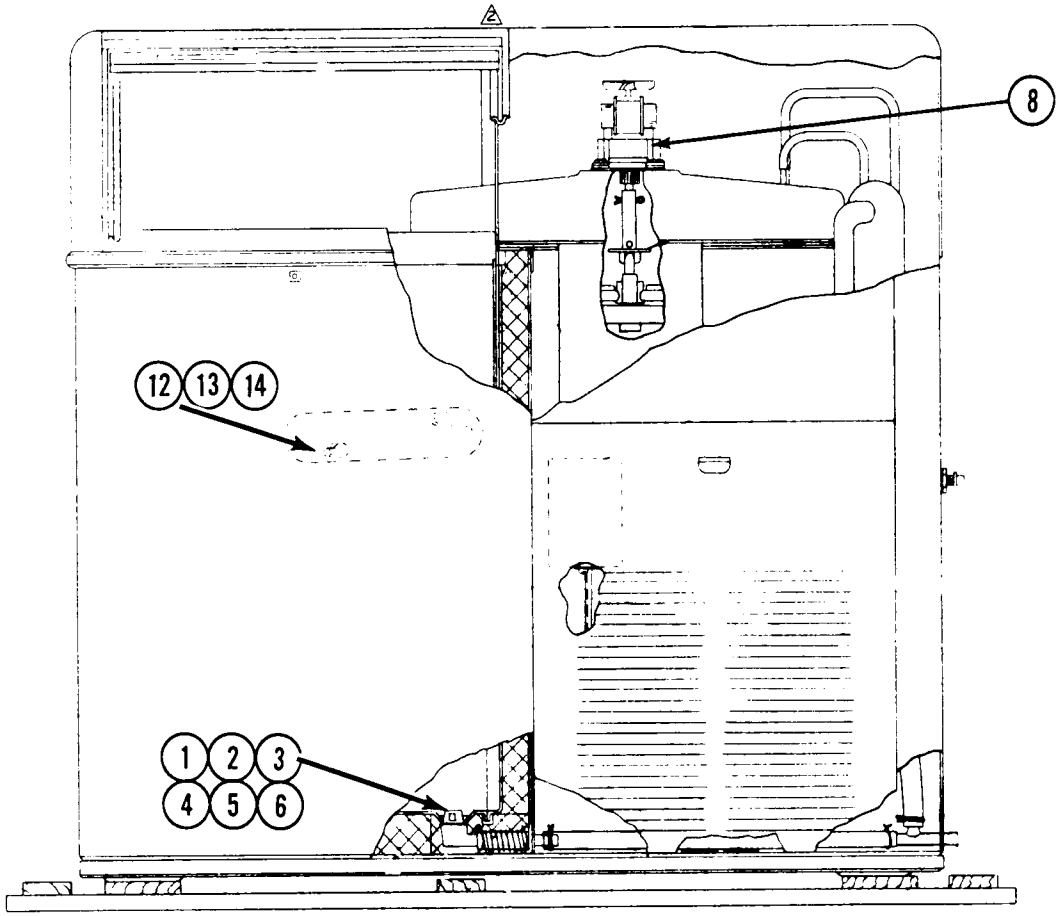

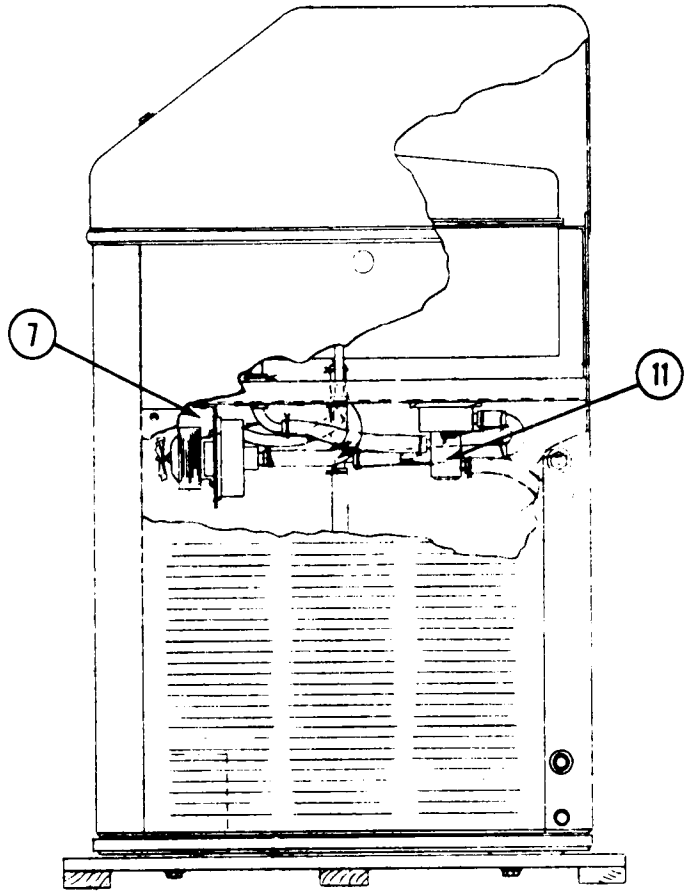

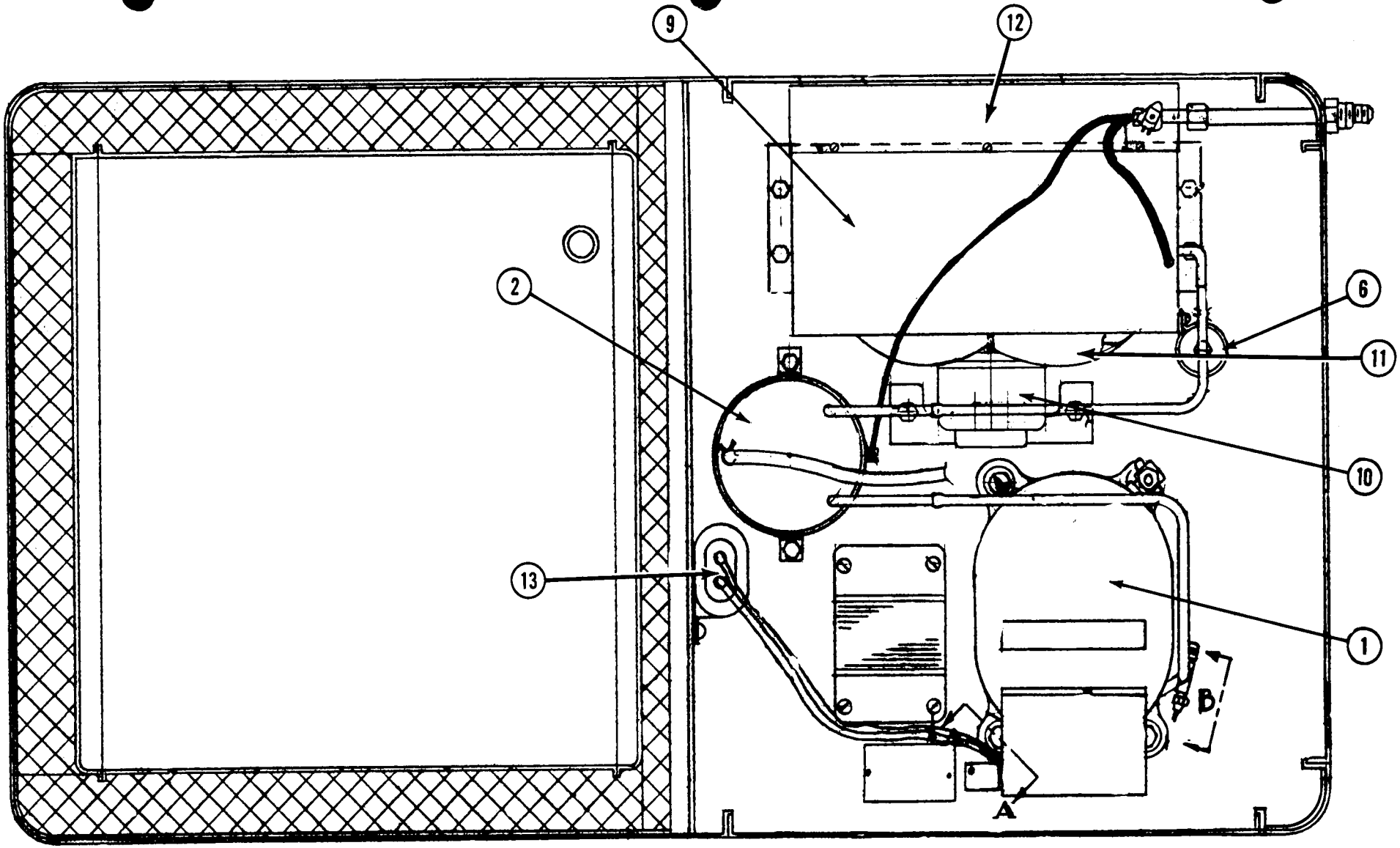

CABINET TOP VIEW

1.	18-2430	Motor Compressor
2.	A-20161	Warm Water Tank
6.	2-544	Refrigerant Drier
9.	18-334	Air Cooled Condenser
10.	12-1681-1	Fan Motor
11.	18-625	Fan Blade
12.	A-21355	Shroud Extension
13.	18-1902-17	Running Capacitor

CASE PARTS

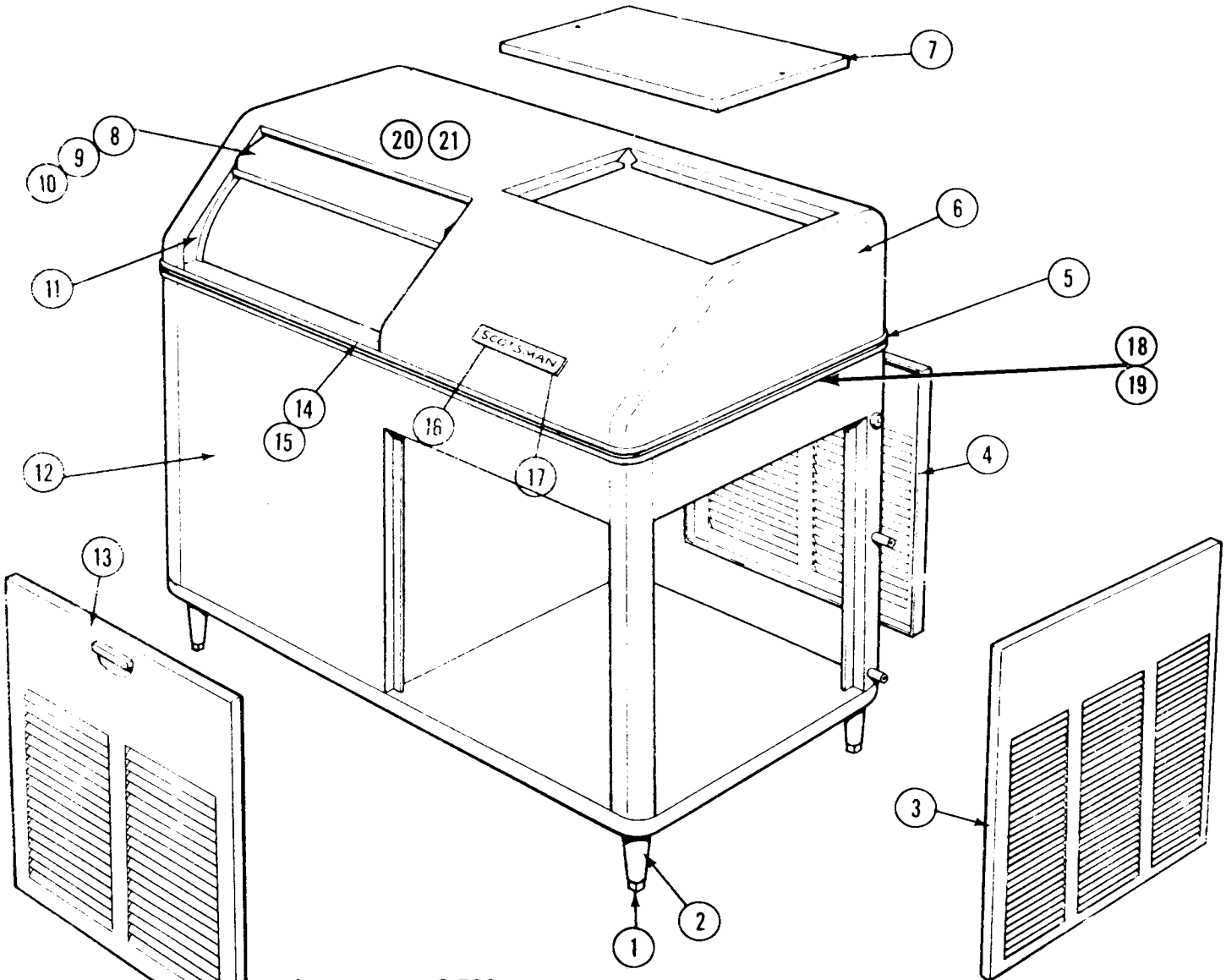

1.	8-522	Leg Levelers
2.	A-15803	Leg
3.	S-6840	Side Door
4.	A-8739	Back Door
5.	A-5862	Rear Moulding Strip
6.	A-19852	Hood (less doors)
7.	A-7676	Top Door
8.	A-15559	Sliding Door
9.	3-640	Door Glide
10.	2-1616	Door Catch
11.	A-16208	Door Track
12.	A-19520	Case Ass'y (less doors)
13.	A-15866	Front Door
14.	A-5863	Moulding Strip
15.	15-324	Plastic Insert - per foot
16.	15-156	Emblem
17.	3-271	Speed Nuts
18.	3-1507	"U" Type speed nuts 18/unit*
19.	3-1419-7	Screws for 3-1507*
20.	2-1736	Cable Stop*
21.	3-1276	Wing Screw*

* Not Shown

Add letter "S" to parts for stainless steel finish

MOTOR COMPRESSOR
Air and Water
115/60/1 3500 RPM

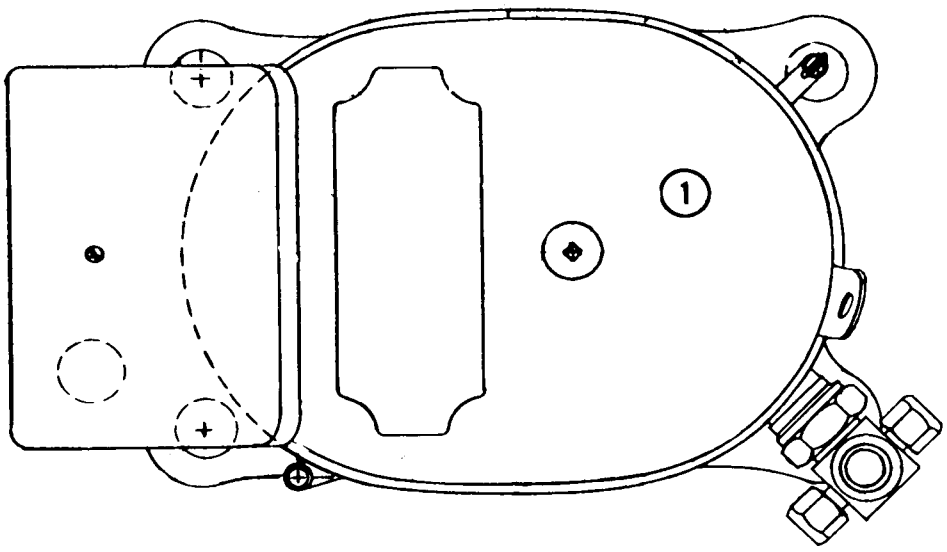

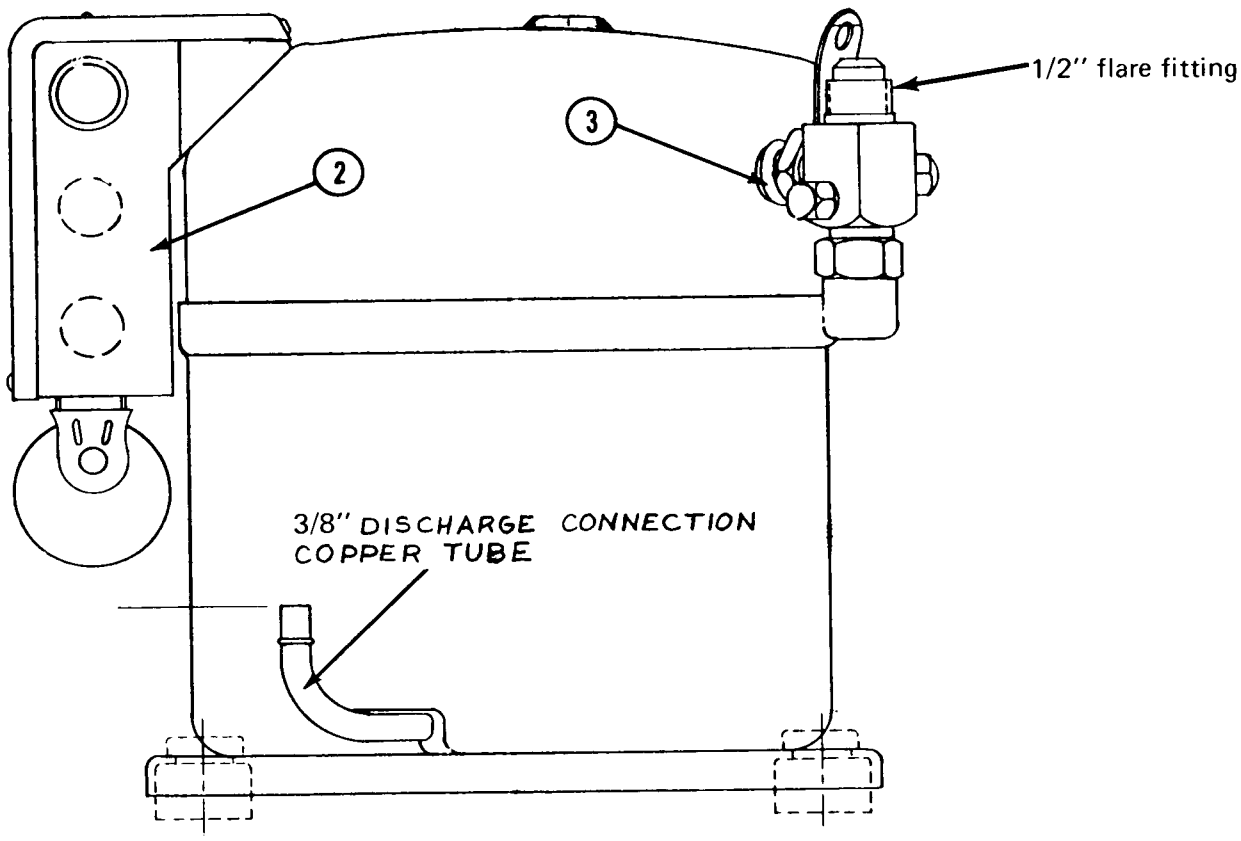

*On base — not shown.

1.	18-2430	Compressor Only Copelaweld Model RSL2-0075-1AA
2.	18-2400-25	Compressor Overload
	18-2410	Relay
	18-2420	Capacitor - Start
3.	18-2201-30	Suction Valve
	*18-1902-17	Capacitor - Run
	18-2300-29	Service Valve Seal

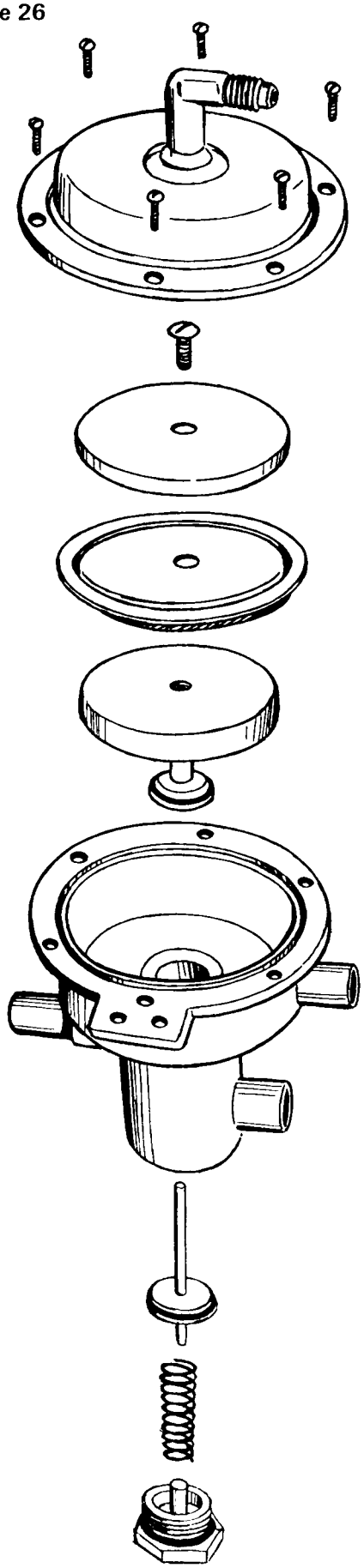

WATER VALVE ASSEMBLY
A- 17954-1

1.	13-617-2	O-Ring
2.	A-17937	Valve Cap Bottom
3.	2-1545	Spring
4.	13-617-1	O-Ring
5.	A-17942	Lower Plunger Rod
6.	3-1403-6	Screws (6)
7.	A-17953	Valve Top Cover
8.	3-1506-1	Screw
9.	A-17941	Upper Plunger
10.	13-606	Upper Diaphragm
11.	A-18312	Diaphragm Cover
12.	A-17947	Valve Body

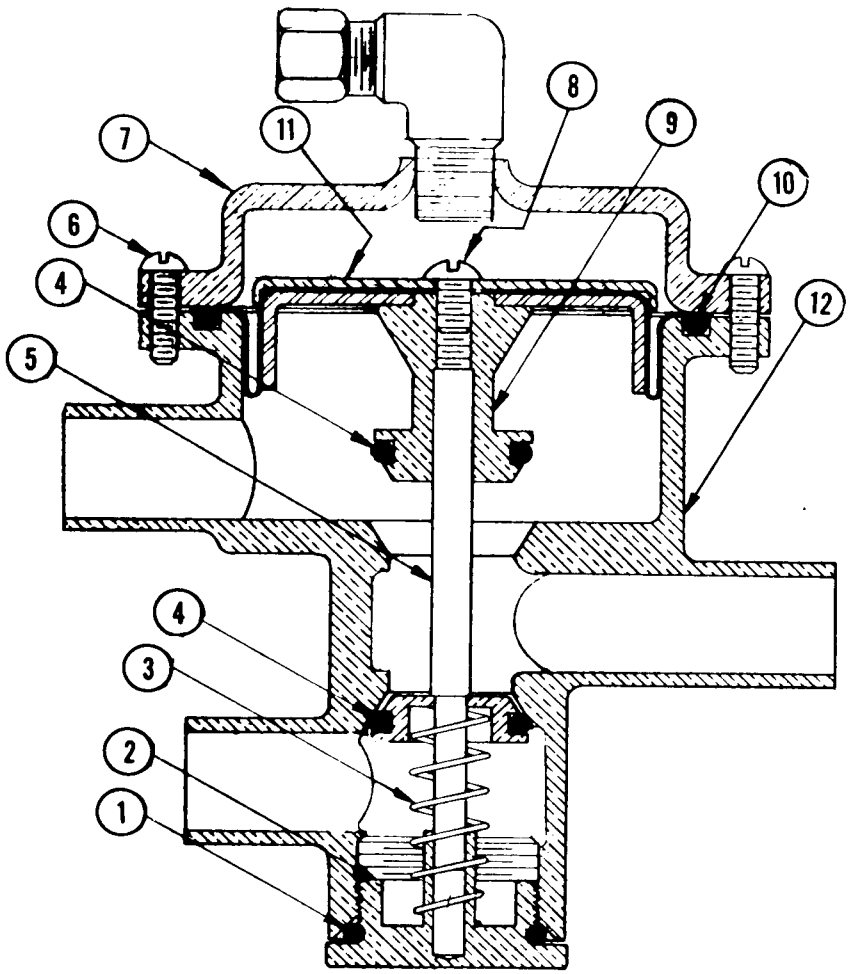

SM-205J FREEZER ASSY

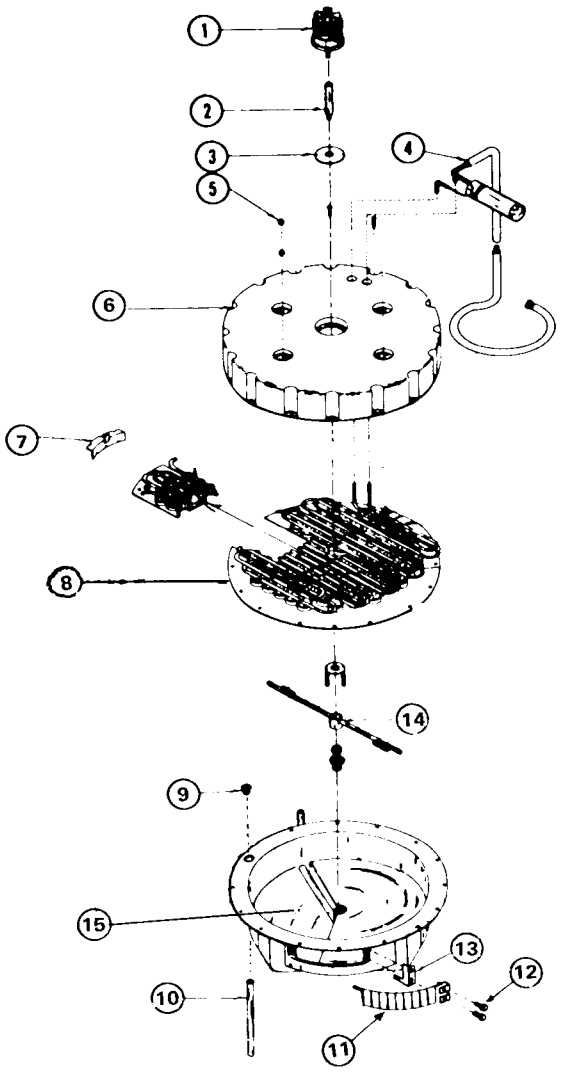

ITEM NO.	PART NO.	NAME
1.	12-675-1	Drive Motor
2.	A-6084	Drive Shaft
3.	13-176	Drive Motor Gasket
4.	A-19833	Suction Line, Cap Tube Assy
5.	3-1513	Nut (4 required)
6.	A-22439	Freezing Chamber Top
7.	A-20169	Water Baffle
8.	13-660	Rubber Cup Holder
9.	S-7434	Adaptor
10.	A-16238	Hot Water Tube
11.	A-19541	Curtain Assy.
12.	S-7234	Cap Nuts (2 required)
13.	S-7730	Cube Stopper
14.	A-18361	Spray Bar
15.	2-1672	Plastic Inner Bottom

Complete Freezer in crate, less item No. 1, 2, 3.

A-22440-2

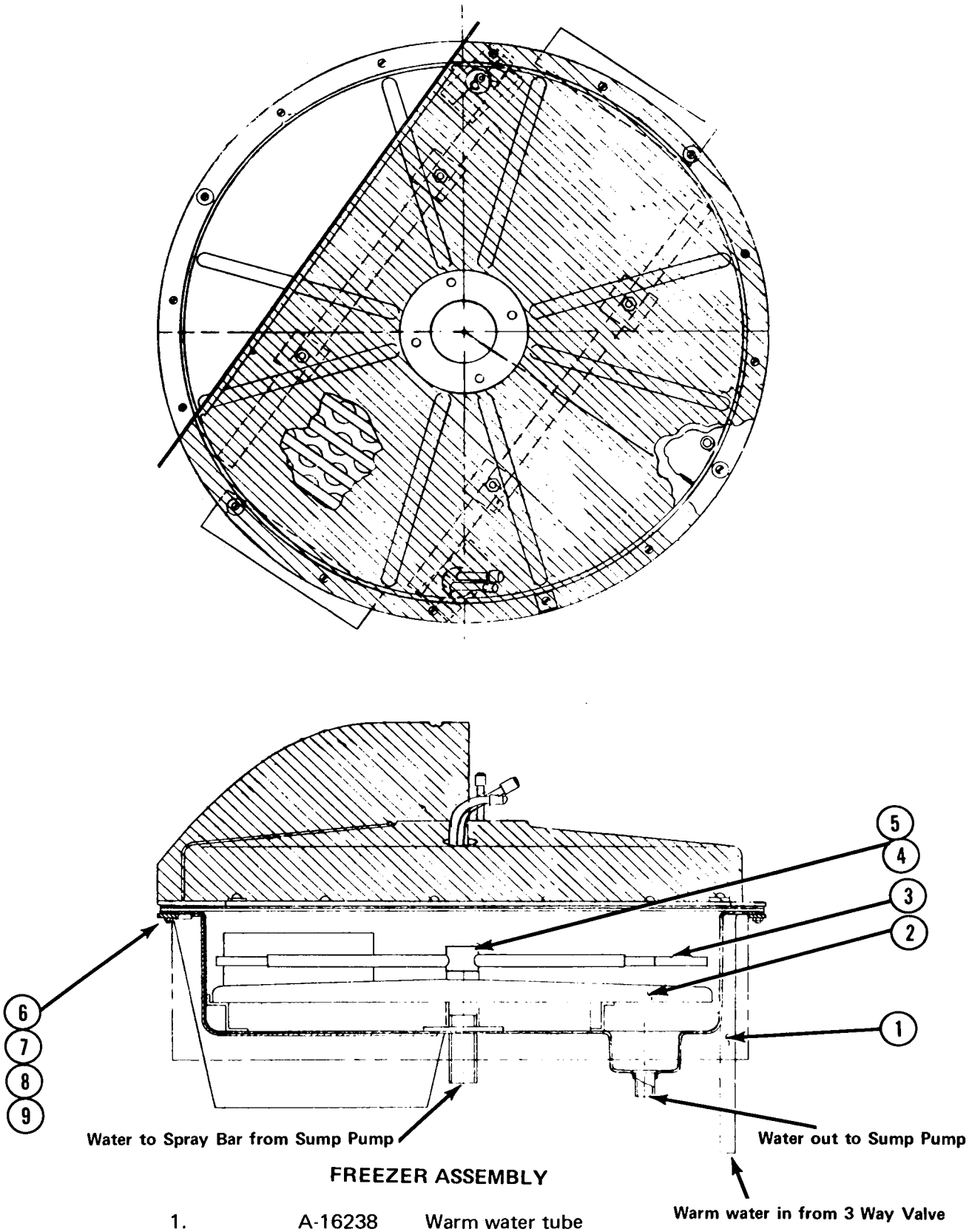

FREEZER ASSEMBLY

1.	A-16238	Warm water tube
2.	2-1672	Plastic Inner Pan
3.	A-18361	Spray Bar, Complete
4.	A-19508	Jet Bearing Shaft
5.	2-433	O-Ring
6.	3-1403-31	Screw 16/unit
7.	3-1406-6	Nut 16/unit
8.	3-1417-5	Washer 16/unit
9.	A-5839	Bolt Reinforcement Plate 8/unit

DRIVE LINKAGE AND SPRAY BAR

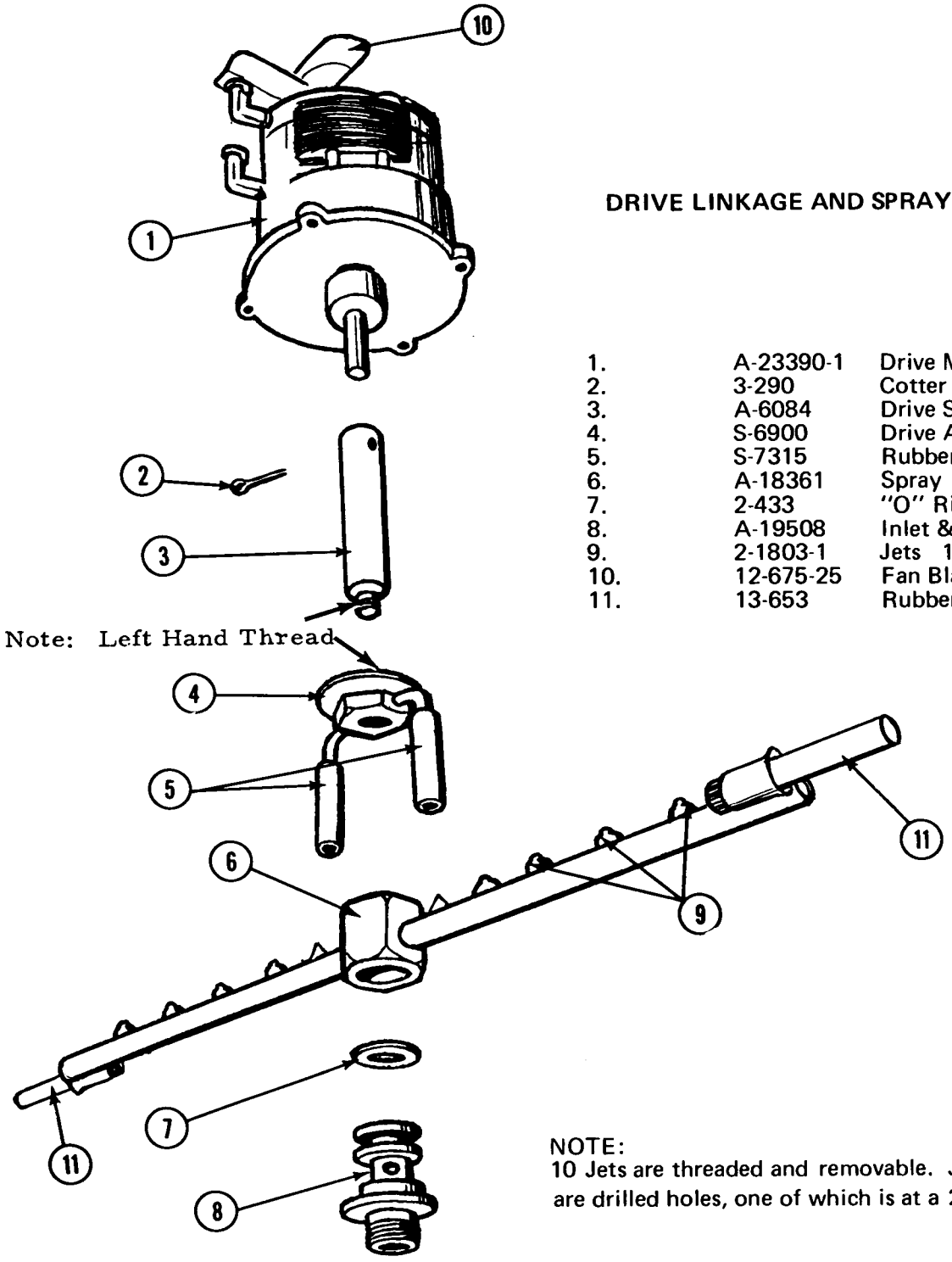

1.	A-23390-1	Drive Motor
2.	3-290	Cotter Key
3.	A-6084	Drive Shaft
4.	S-6900	Drive Arm
5.	S-7315	Rubber Covers
6.	A-18361	Spray Bar, Complete
7.	2-433	"O" Ring
8.	A-19508	Inlet & Bearing Assy.
9.	2-1803-1	Jets 10/units
10.	12-675-25	Fan Blade
11.	13-653	Rubber Spray Bar Tips

NOTE:
10 Jets are threaded and removable. Jets in end pieces are drilled holes, one of which is at a 20° angle.

FUNCTIONAL PARTS DESCRIPTION

11-365	Fan cycle - head pressure control Robert Shaw No. A P 20-1066 120 lb. 140 lb. Range Automatic reset - SPST Nonadjustable
11-353	Bin Thermostat Cutler Hammer No 9530 N 213 Cut Off 35° cut in 39° Adjustable calibrate for altitude over 2000 ft.
11-357	High pressure Cut off — Water Cooled models Robert Shaw No. A P 21-2048 Control opens 190 lb. P.S.I. Manual re-set - Adjustable
12-419	Relay - (by passes thermostat during freezing cycle) Potter - Brumfield No. PR5AY 115/60/1 - SPDT Rated 25 amps
11-345	Cube size thermostat Ranco A11-377 Reverse acting, closes on temperature Decrease - Has adjustment dial
12-1598	Relay 115/60/1 Ameco or Potter Bumfield 3 PDT No. KU-14A-15 Holds cuber drive motor thru Harvest cycle
18-354	Water cooled condenser W.C. models only Halstead-Mitchell No. EL-75
12-1532-1	Water recirculating, sump pump Hartell Inc. 3000 RPM - shaded pole, thermally protected motor - 1/25 H.P. 115/60/1
18-2430	Motor compressor 115/60/1 Copeland refrigeration - Copelaweld RSL2-0075-1AA 2 Pole, 3500 RPM Hermetic for use with refrigerant R-12
A-21038-1	Finishing Clock or Timer 2-1721-51 Knob assembly 2-1721-50 Micro switch.
12-1434-1	Water inlet solenoid Detroit Controls Corp. No. S-30-A 115/60/1 coil - Nylon body 1/4" MPT inlet & outlet No flow control. Also American Standard Control No. SSV-20206
18-1902-17	Running Capacitor Copeland Refrigeration No. 014-0001-00 10 Microfarad rating

SERVICE – COMPLETE UNIT

ALL STEPS LISTED BELOW SHOULD ONLY BE STARTED WHEN WATER AND ELECTRICAL SUPPLY ARE OFF TO PREVENT ACCIDENTS.

To remove cabinet top or hood.

1. Remove two back end screws in rear moulding strip.
2. Pull out black insert tape concealing screws.
3. Remove balance of screws in moulding strips.
4. Lift hood straight up.

To remove Sump Pump.

1. Remove lower right side service panel.
2. Disconnect hose clamp on goose neck.
3. Remove electrical lead to control box.
4. Remove 2 screws in pump mounting bracket.

To remove Drive motor

1. Remove hood top panel.
2. Disconnect electrical cord connectors from motor coil.
3. Reach in through curtained opening and remove drive fork from drive shaft attached to motor. Note drive fork has left hand thread.
4. Remove 4 screws holding drive motor to freezer dome and pull drive motor shaft out.

To remove the Jet Tube assembly

1. Reach in through storage bin sliding door and remove two brass thumb screws holding plastic curtain closed.
2. Open curtain on hinge and reach hand into opening, feeling for spray bar.
3. Follow spray bar to center hub, turn spray bar so one end points towards curtain opening. Now lift straight up on spray bar and out, after spray bar comes off center hub.

To remove Three Way Water Valve

1. Remove lower front right side service door.
2. Remove all hose clamps to water valve.
3. Remove upper water line connection to elbow on top valve housing.
4. Loosen two nut and bolt assemblies holding valve to mounting bracket. Water valve now drops free.
5. Replace in reverse of above.

To replace Storage Bin Door

1. Lift door up and slide back as you normally would to remove ice from bin.
2. Remove screw at center rear edge of door where it is attached to lanyard.
3. Pull door straight out.
4. Install repaired or new door in reverse of step number 2 above.

MAINTENANCE INSTRUCTION FOR SCOTSMAN SUPER CUBERS

THE FOLLOWING MAINTENANCE SHOULD BE SCHEDULED EACH (6) SIX MONTHS ON ALL SCOTSMAN SUPER CUBERS. CALL YOUR AUTHORIZED SCOTSMAN SERVICE DEPARTMENT.

1. Clean air-cooled condenser; This is to be done frequently with the machine shut off.
2. Clean water system and evaporator, sump tank and screen, using Scotsman Ice Machine Cleaner or equivalent.
3. Remove jet tube and manually clean jets by unscrewing jets.
4. Check curtain assembly.
5. Tighten all electrical connections.
6. Tighten all bolts.
7. Check water supply. Check water pressure flow through flow control. Clean water strainer.
8. Oil jet tubes drive motor three (3) places. Use SAE 20 oil - 3 oil cups.
9. Oil Condenser fan motor. Punch sealed cap or remove screws where possible.
10. Check for refrigeration leaks with halide torch.
11. Check for water leaks. Tighten drain line connections.
12. Check size and condition of cubes. Adjust as required. See Service Analysis Section.
13. Check bin thermostat setting. Factory set at 35° out, 39° in.

PROCEDURE FOR USE OF SCOTSMAN ICE MACHINE CLEANER

1. Remove lower front access door.
2. Locate control box with time clock knob protruding thru cover.
3. Put unit through a harvest cycle manually. This may be done by turning time clock knob clockwise until a loud snap is heard.
4. Let unit finish cube harvest cycle and start into freezing cycle. This will be approximately 5 minutes after the loud snap in Step No. 3 is heard. At this time turn the compressor switch off, the lower of the two switches in the control box.
5. Locate the sump reservoir which is in the storage bin area and directly behind the ice discharge chute. This discharge chute is covered by a series of white plastic curtains which are free to swing out into the storage bin. Pour 4 ounces (half bottle) of "Scotsman Ice Machine Cleaner" into the sump reservoir.
6. Let unit operate normally for 10-15 minutes into the freezing cycle. No ice will be made because the motor compressor is not in operation.
7. At the end of this time put the unit through 2 or 3 harvest cycles manually to allow fresh make up water to clean out remaining solution. Each time waiting approximately 5 minutes after the loud snap until the next harvest cycle is done manually.
8. Turn the compressor switch back on.
9. Check each new batch of cubes until they are clear and until acid taste has been removed from cubes.
10. Put hot water in storage bin to melt the cubes and thereby clean the drains with the same solution that has just cleaned the unit.
11. Use a damp cloth to wipe off curtains and inside of storage bin.
12. Replace lower front access door.
13. Unit is now ready for continued automatic operation.

TABLE OF CONTENTS
SM-210

Foreward	1
Table of Contents	2
Photograph and Ice Making Capacity	3
Specifications and Dimensions	4-5
Selecting Location:	
Location	6
Uncrating	6
Preparation for Installation	6-7
Installation	7-8
Water Supply and Drain	11-12
Electrical Connection and Characteristics	8
Wiring Diagrams:	
Air Cooled	9
Water Cooled	10
Diagram Plumbing Connections	11
Diagram Installation Practice	12
Final Check List	13
Start-Up	14-15
Cycle of Operation:	
Harvest Cycle	16
Freezing Cycle	17
Service Analysis Charts	18-19
Exploded Views - Component Parts:	
Sump Pump	20
Control Box	21
Complete Unit (End View)	22
Complete Unit (Front View)	23
Case Parts	24
Hot Water Tank	25
Condensing Unit (Air Cooled)	26
Condensing Unit (Water Cooled)	27
Water Valve	28
Evaporator Assy	29
Service Information	
Installation of Water Valve Kit	30
Water Valve Assembled	31
Drive Linkage and Spray Bar	32
Functional Parts and Maintenance	33-35
Service Complete Unit	36-38
Maintenance Instructions	38
Parts List	39-40

THIS PAGE
INTENTIONALLY
LEFT BLANK

THIS PAGE
INTENTIONALLY
LEFT BLANK

SCOTSMAN®

SUPER CUBER

SM-210

SERIES

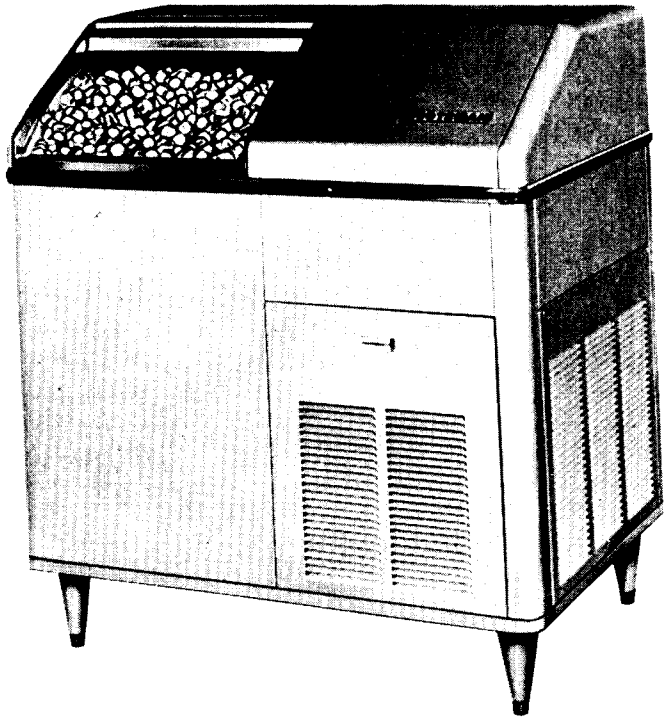

ice making capacity

Water Cooled Models

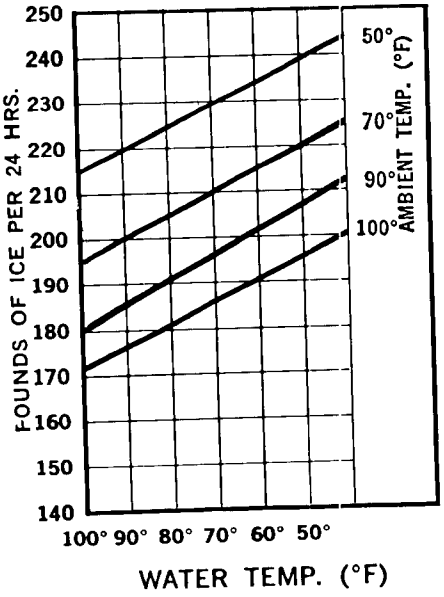

Air Cooled Models

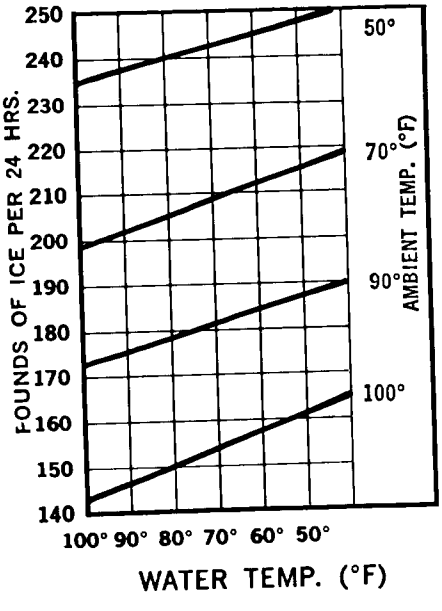

SPECIFICATIONS

SUPER CUBER SM-210 SERIES	MODEL SM210H	MODEL SM210WH	MODEL SM-210H-SS	MODEL SM210WH-SS
Daily capacity up to 225 lbs.	X	X	X	X
Self-contained 150 lb. capacity storage bin	X	X	X	X
Air cooled condenser	X		X	
Water cooled condenser		X		X
Heavy duty ½ HP. Compressor	X	X	X	X
Standard 115 V, 60 cy, 1 ph, AC—	X	X	X	X
¼" water inlet SAE Flare	X		X	
½" water condenser inlet OD Copper		X		X
⅝" OD copper condensate drain	X	X	X	X
⅝" OD copper storage bin drain	X	X	X	X
⅝" water outlet Copper	X	X	X	X
Hammerloid grey exterior	X	X		
Stainless steel exterior			X	X
Stainless steel lined storage bin	X	X	X	X
45 ¼" high (with legs)	X	X	X	X
39 ¼" high (without legs)	X	X	X	X
44 ¼" wide	X	X	X	X
24 ½" depth	X	X	X	X
Approximate shipping weight	420	420	420	420

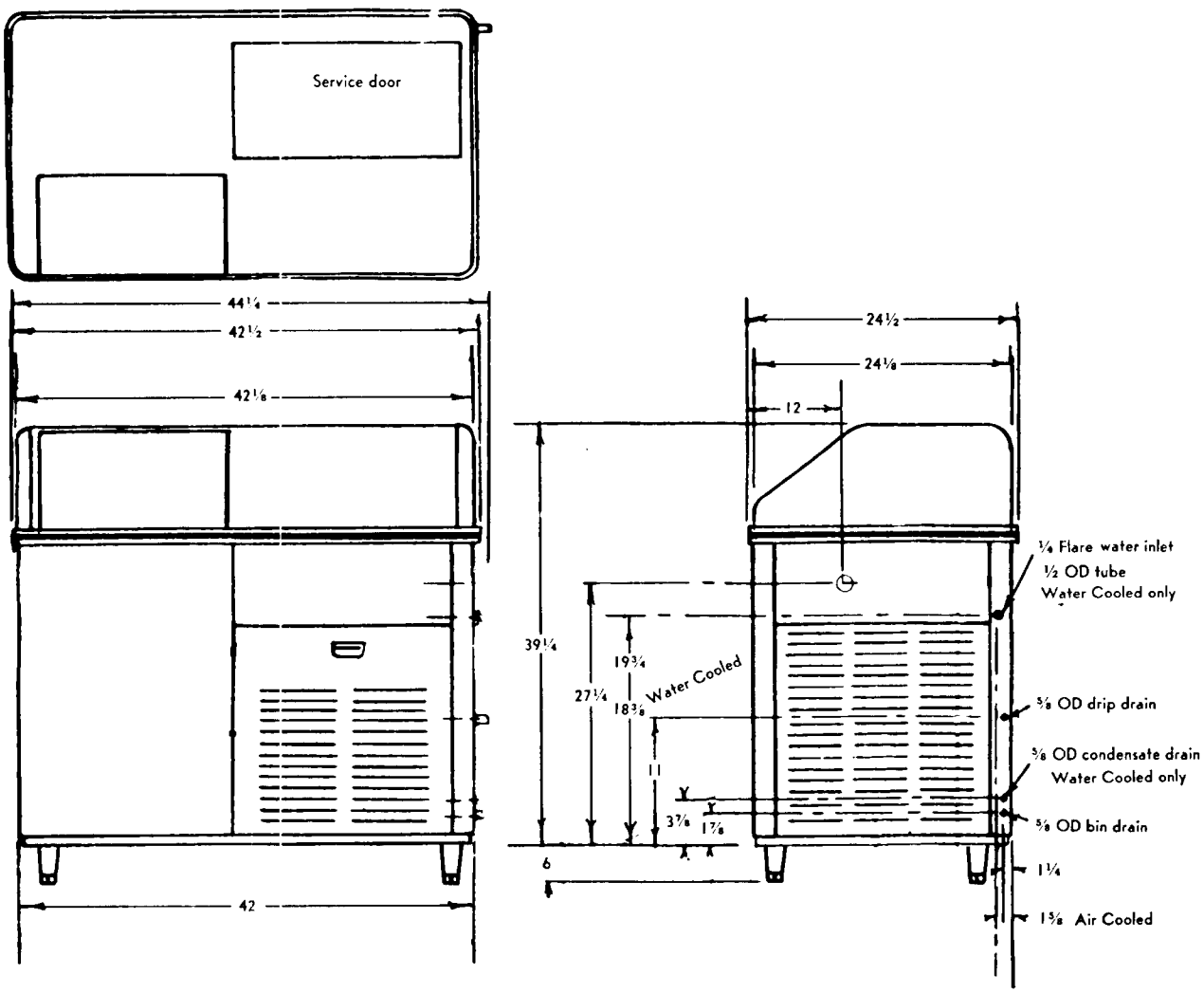

SPECIFICATIONS

	MODEL SM-210	MODEL SM-210
Compressor 1/2 H.P.	115/60/1	115/60/1
Condenser	Air Cooled	Water Cooled
Refrigerant	Refrigerant 12	Refrigerant 12
Refrigerant Charge	24 ounces	24 ounces
Power Consumption	17 Amperes	17 Amperes
Cubes per Harvest	102 Compact sized cubes	102 Compact sized cubes
Water Consumption to Produce Ice	2 Gallons per Hour	2 Gallons per Hour
Water Used by the Condensing Unit		30 Gallons per Hour Average - Varies with Water Temperature.
DIMENSIONS		
Height-with 6" Legs	45 1/4"	45 1/4"
Height-Less 6" Legs	39 1/4"	39 1/4"
Width	44 1/4"	44 1/4"
Depth	24 1/2"	24 1/2"
WEIGHTS		
Uncrated	400 lbs.	400 lbs.
Crated	420 lbs	420 lbs

INSTALLATION

UNCRATING OF MACHINE

1. The complete machine comes in one crate. After the crate is removed, inspect for concealed damage. Remove the bottom skid by removing all bolts. Then cut all wires holding support packing from refrigerant line. Then loosen shipping bolts on the compressor. Be sure the compressor is floating free on spring mounts. Then check all refrigerant lines for rubbing or touching other surfaces. Also check for possible transportation damage.

2. Remove all service doors and panels.

3. Remove leg packages in compartment base and install 4 legs in unit base sockets. Level unit with adjustable legs.

4. Loosen motor compressor hold down nuts until motor compressor rides freely on mounting springs.

5. Remove water strainer from storage package for installation in water supply line feeding unit.

6. Open electrical control box and prepare for hook up, use knock outs, cord connectors etc. Then check unit name plate voltage against building source voltage and make sure they correspond. Caution--Improper voltage supplied to units will void your warranty protection.

7. Make sure all service valves on the condensing unit are open and turned as far as possible to the left. Replace the valve caps after checking the valves. All Models are shipped with valves back seated.

8. Make sure that the flow of air is not impeded in any way over condenser on air-cooled models. Keep condenser clean. (Check and clean the condenser monthly.)

9. Operating room temperatures are minimum 50° F. and maximum 100° F.

10. Have the installation and warranty cards been filled out and sent to factory to insure warranty protection?

LOCATION OF THE ICE CUBE MACHINE

UNDER BAR INSTALLATIONS--Locate, if possible, so left end panel is accessible. Locate unit so proper circulation can be attained around the unit and behind it at least four inches. Provide plumbing and electrical connections so the unit can be moved out where the entire top hood can be removed and the unit can still be operated.

KITCHEN INSTALLATIONS--As a rule, the kitchen is not the most practical place to install an air-cooled condensing unit, as grease is almost always present and makes cleaning of the condensing unit difficult. Do not locate near range or steam table or other heating devices that may be used in the kitchen.

STOREROOM INSTALLATIONS--Be sure storeroom is of adequate size and properly ventilated. A small, poorly ventilated room will greatly impair the efficiency of the unit. The storeroom must be kept above 50 degrees in the winter months.

INSTALLATION

BASEMENT INSTALLATIONS--Locate machine in the coolest place. Locate the machine in a dry place. Keep away from furnace and boiler room. Keep away from service chutes and runways, also coal or other dust of any kind. If the machine is set over a floor drain, block the machine up enough to eliminate any possible damage to the machine.

LOCATE THE MACHINE SO IT CAN BE SERVICED WHEN NECESSARY. ALLOW AT LEAST FOUR INCHES OF SPACE AROUND THE MACHINE FOR CIRCULATING AIR.

IMPORTANT: ADJUST LEVELER LEGS. MACHINE MUST BE LEVEL.

Remove water reservoir cover and take out paper packing around float ball, make sure overflow standpipe is securely in place.

Remove water strainer from storage bin for installation on unit or in water supply line feeding unit.

Remove 3/4" flat shipping slug between 3 way water valve stem and body. Replace rear service panel.

Remove all masking tape and packing members from curtains and inner cube making compartments. Re-align components such as sump pump that may have shifted in transit.

INSTALLATION

WATER SUPPLY AND DRAIN CONNECTIONS

Pages 11 & 12 show recommended water piping connections and drain facilities for Model SM-210 and SM-210W.

WATER SUPPLY

The recommended water supply line is 1/4" OD copper tubing for air-cooled units. Connect to a cold water supply line with regular plumbing fittings with a shut-off valve installed in an accessible place between supply line and machine. The water strainer supplied with the unit should be mounted with clean-out plug down. Locate the strainer next to the machine and the arrow in the direction of the flow, as per Page 12.

The water supply line connects to the 1/4" OD soft copper tubing (See Figures Page 12). Use care in connecting up water line to the machine. Water supply must be installed to conform with local code.

Water connections for the SM-210W water-cooled units is 1/2" OD copper tubing one connection on cabinet for both make-up water and condenser water.

DRAIN

The recommended drain; is 5/8" OD copper tubing. Sweat to drain connection (See Page 12). Must be run to open or trapped drain. If drain is a long run, allow a 1/4" pitch per foot. Drain must be installed to conform with local code.

ELECTRICAL CONNECTIONS AND CHARACTERISTICS

SM-210	110-115 V, 60 Cycle	Single Phase, 17 Amps.

All external wiring should conform with National Underwriters' and local code requirements. Check the voltage on the line before connecting the machine. Model SM-210 requires 110-115 volts, 60 cycle, single phase.

The SM-210 should be wired to a 20 Amp. circuit. Be certain that the Super Cubers are on their own circuit and individually fused. The maximum allowable voltage variation should not exceed 10 % of the nameplate rating even under starting conditions. Low voltage can cause erratic operation, and may be responsible for serious damage to the overload switches and motor windings.

WIRING DIAGRAM

SM-210

Air Cooled

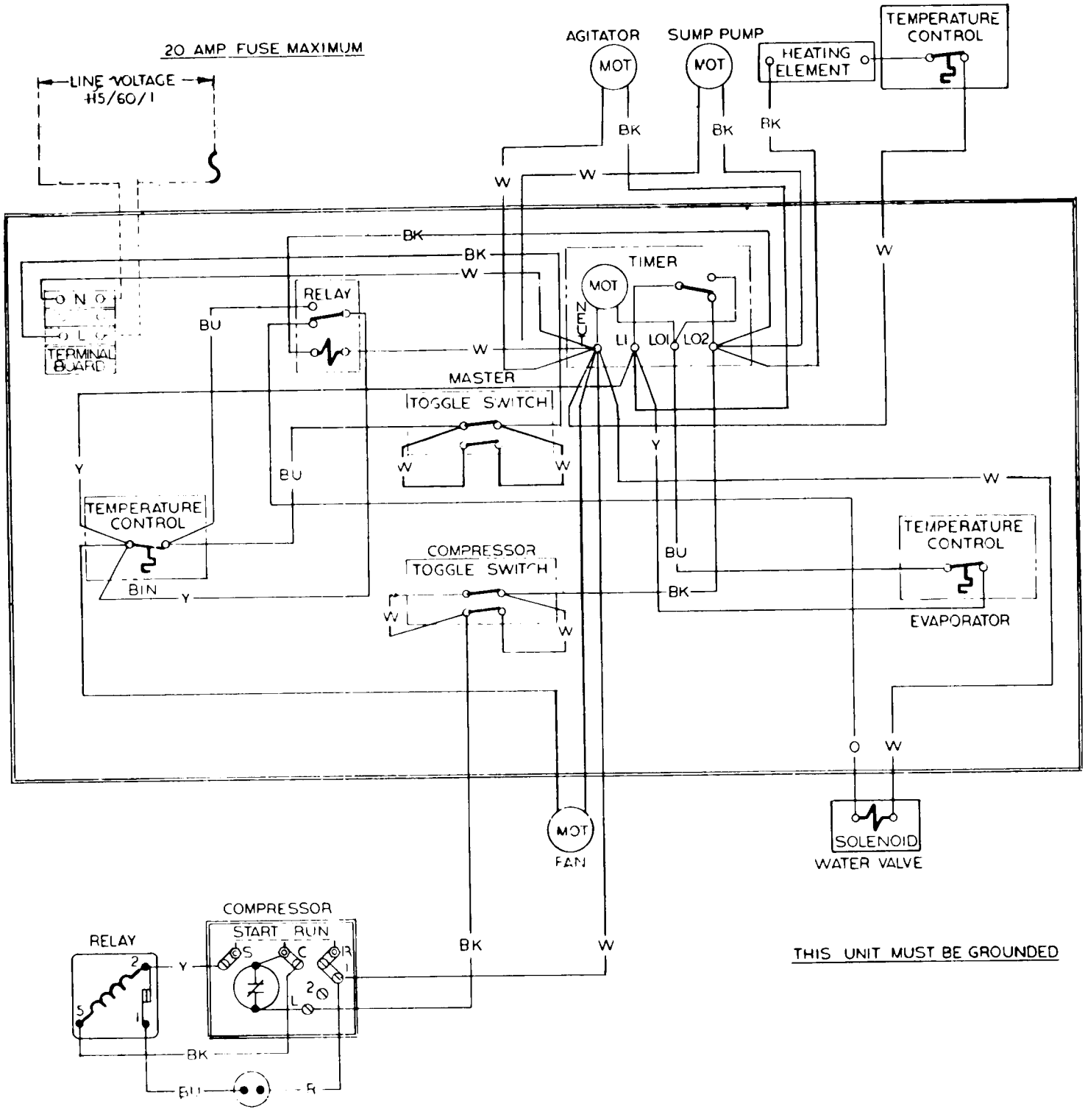

WIRING DIAGRAM

SM-210

Water Cooled

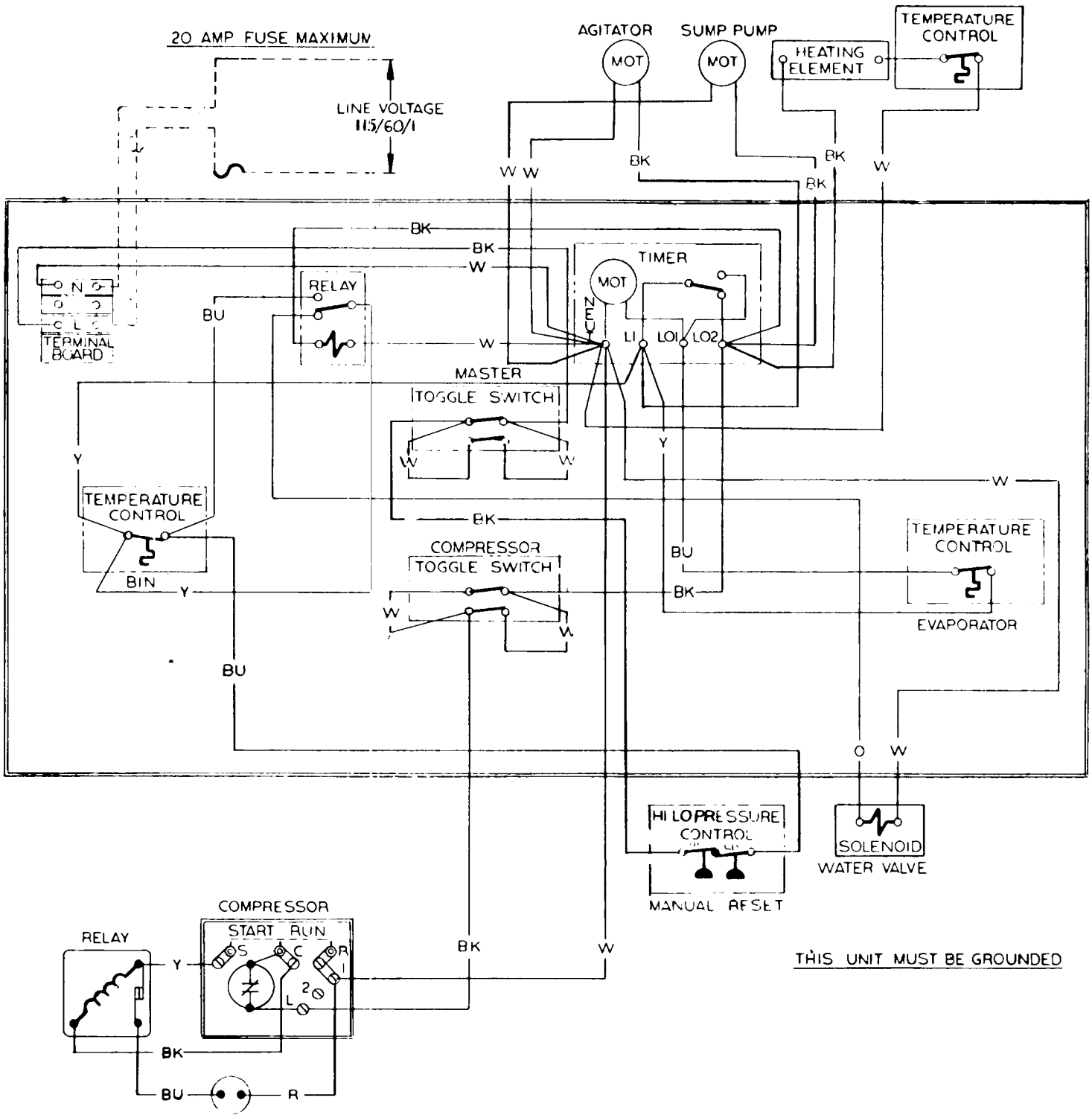

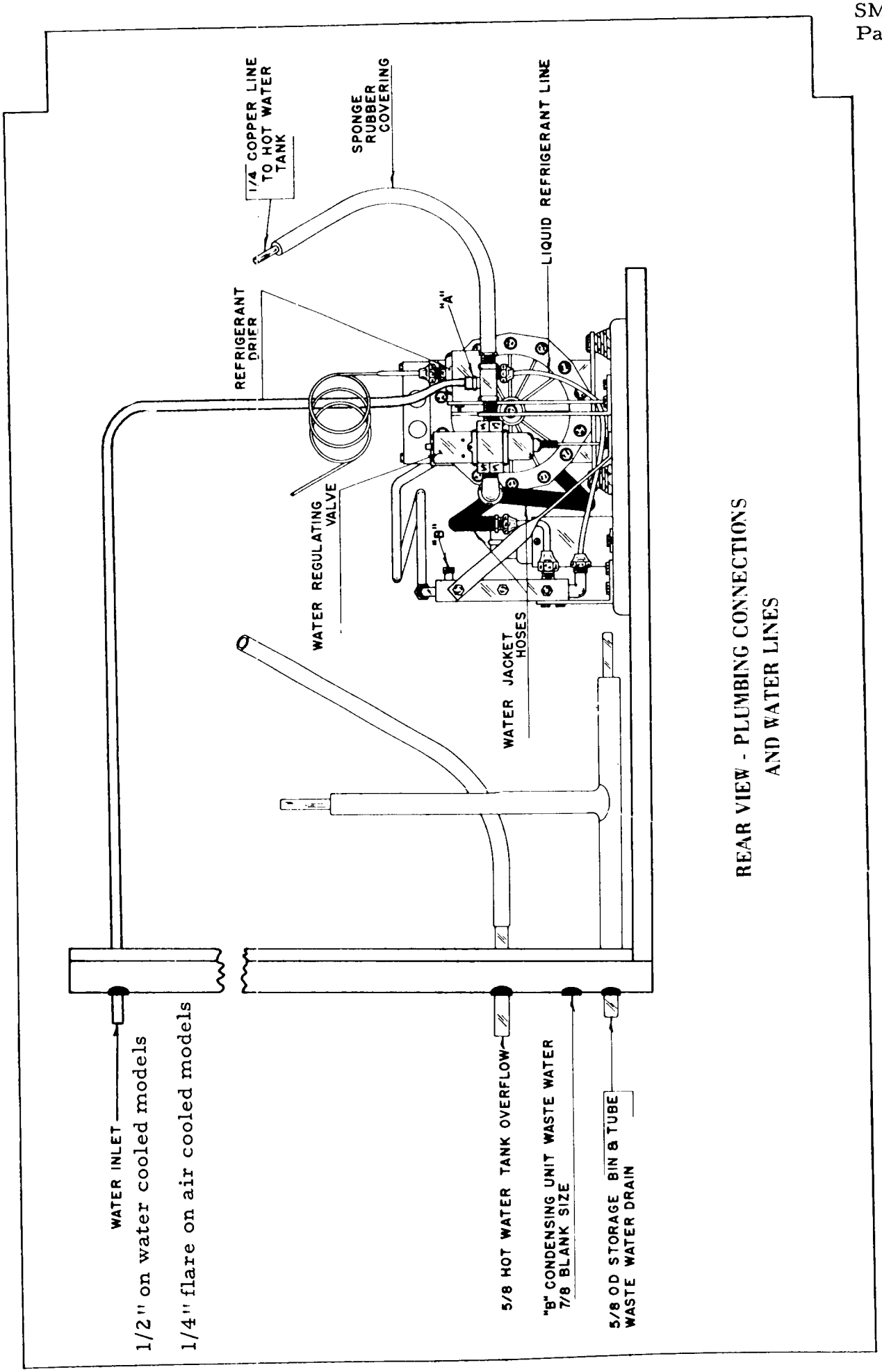

REAR VIEW - PLUMBING CONNECTIONS AND WATER LINES

INSTALLATION PRACTICE

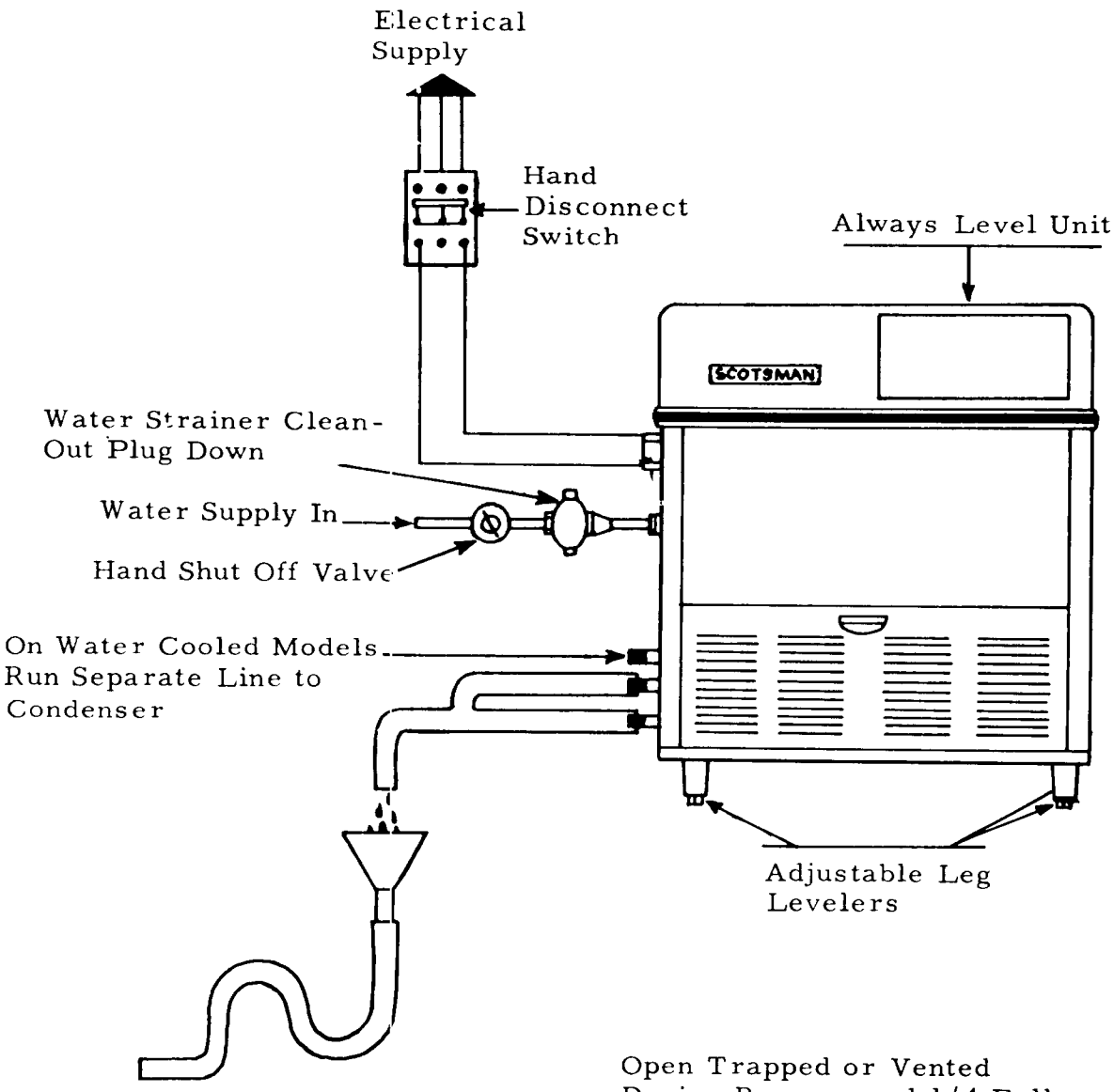

FINAL CHECK LIST

1. Is the unit level? (IMPORTANT)
2. Have all electrical and piping connections been made?
3. Has the voltage been tested and checked against the nameplate rating?
4. Have the compressor hold-down bolts been lossened so the compressor rides freely on its mounting springs.
5. Is the water supply valve open and the electric power on?
6. Is the water reservoir filled and shut off? Paper removed and float adjusted.
7. Is the unit clean?
8. Has the owner been given the operating manual, and has he been instructed on how to operate the machine?
9. Have the installation and warranty cards been filled out? This is the owner's protection as well as the sellers.
10. Check all refrigerant and conduit lines to guard against vibrations and possible failure.
11. Is there 4" clearance behind and around unit for proper air circulation?
12. Is unit in a room where ambient temperatures are minimum 50° F. even in winter months?

INSTALLATION

START UP

1. On all water cooled models, turn on water supply to water-cooled condenser and check for leaks in connections made.

2. Turn on cube supply at hand shut-off valve. Make sure hot water tank fills to overflow, if it does not, adjust timer lever to 3 1/2 minute setting. NOTE: Unit has built-in water flow control set to reduce flow rate to approximately .45 gallons per minute.

3. Check electrical circuit. 17 Amps. Do not connect with other appliances into one ordinary wall outlet: 115 volts required.
4. Inspect components in electrical control box, check for loose or frayed wire, then turn both manual switches to "on" position. NOTE: All "H" model cubers have two manual on-off switches. One is for motor compressor only during cleaning operation, one is master switch for complete unit.

5. Turn disc on time clock to the right just far enough for water solenoid valve to energize. Allow clock to take it through harvest cycle. This will be approximately two minutes. Dial pointer should be set on Number 3 1/2. After the compressor starts, turn the dial completely around and send it through another harvest cycle. Do this several times. This will completely flush out machine of any dust that may have accumulated in shipment.

6. After machine has been properly flushed, allow it to go into a freezing cycle - check for possible water leaks, check sump pump operation - should be running freely. Also note if jet tube travel is correct, and that none of the jets are plugged. Jet spray of water should hit the middle of the cups.

7. Time clock dial does not rotate at the end of the harvest cycle; it is started later by the cube size control located in the control box.

8. Freezing time will be approximately 25 minutes.in a 70 degree ambient. (Longer if above, and shorter if below.) Average complete cycle time is 30 minutes.

9. Watch first cube harvest and check to make sure that plastic curtain has not not been damaged in shipment.

10. Check size of cubes made: If too small, after a second cycle, adjust cube size control to lower or colder setting - until desired cube size is reached.

INSTALLATION

11. Check texture of cubes made: Partially cloudy cubes throughout suggest unit running short of water near end of freezing, or possibly an extremely bad water condition, which would indicate use of filtering or purifying equipment. Contact SCOTSMAN - Queen Products, Div., Ice Machine Service Department, Albert Lea, Minnesota, for futher details.

12. With unit on harvest cycle, take a handful of cubes made and hold on storage bin thermostat cover. Should cut unit off in one or two minutes - remove ice: unit should cut back on automatically. Thermostat is factory set at 35 degrees out, 39 degrees in.

13. Install gauges and check head and back pressure: air-cooled models, head pressure after twenty minutes of freezing cycle at 70° ambient will be approximately 125 pounds PSI. The back pressure starts out at approximately 50 pounds PSI and gradually pulls down to approximately 4 pounds PSI just before harvest cycle. Higher ambients and dirty condenser will cause higher pressures. Water-cooled models have water regulating valves factory set at 125 pounds PSI: check reading and adjust if necessary. Back pressure will operate the same as on air-cooled models.

14. Remove gauges, replace control box cover and all service panels.

15. Instruct owner on how to operate and clean machine.

HARVEST CYCLE
SM-210

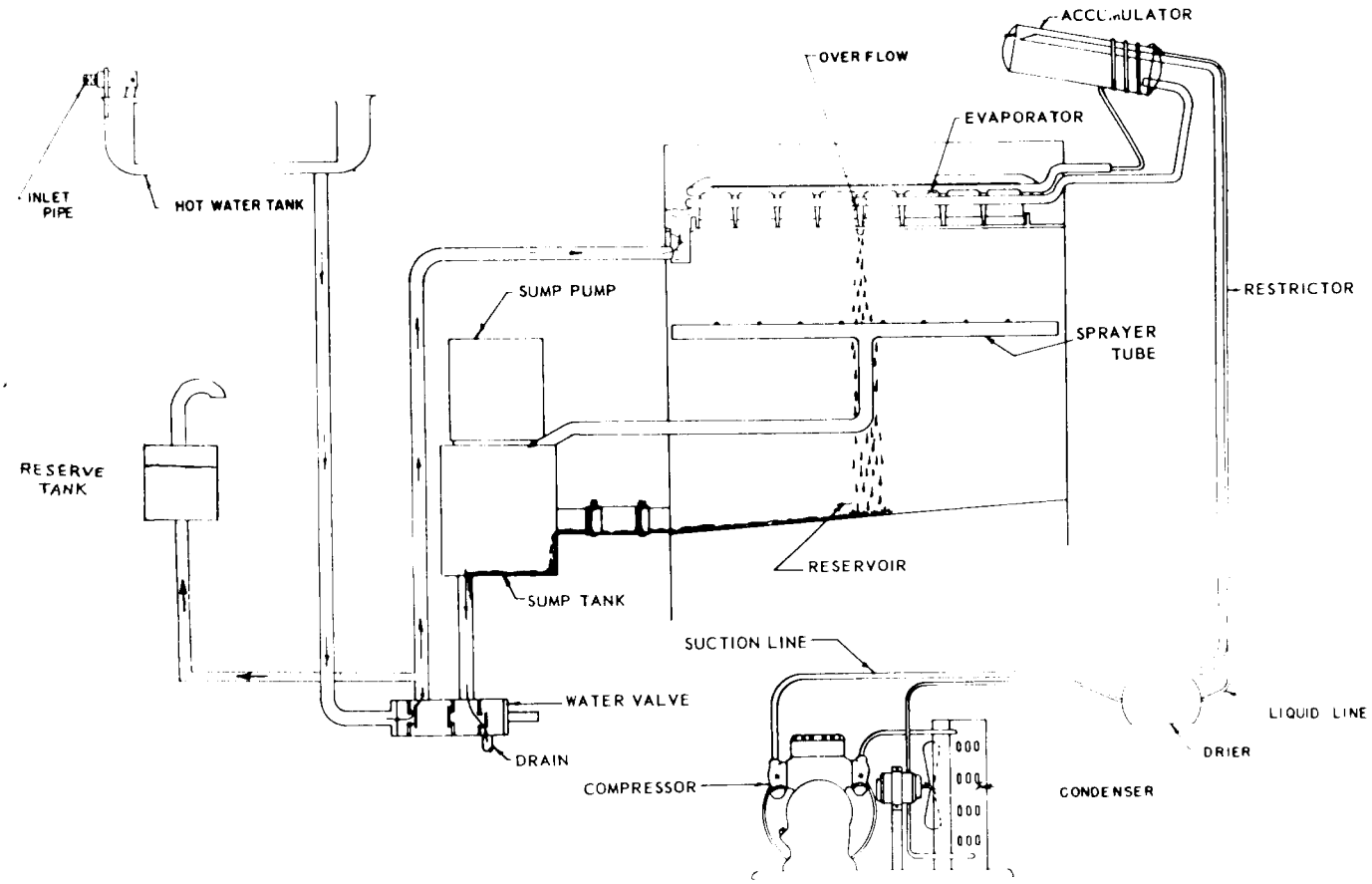

At the end of the freezing cycle the time clock operated switch opens compressor, sump pump and heater element circuit, and closes circuit to time clock motor, drive motor and solenoid operated water valve. At this time, the water valve allows heated water in hot water tank to flow by gravity through solenoid operated valve, and into the upper cavity of the freezing chamber, and, at the same time allows the surplus water from the preceding batch of ice cubes to go down the drain. The hot water from the water tank flows into the rubber platen holding the cups and by conduction on back of cups causes cubes to defrost. The platen cavity is completely filled up to the overflow point, and continues to overflow while in the defrost cycle; the amount of this water running over the overflow pipe is controlled by the size of the flow control orifice and the length of harvest time setting on the time clock; overflow water goes down the drain also. Meanwhile, cubes being released from the cups drop by gravity and are mechanically ejected through curtained opening into storage bin by jet tube which is actuated by drive motor. At completion of harvest cycle, the micro-switch on the timer now drops points holding defrost components in cycle and switches to freezing cycle set of contacts. Clock motor now stops and will not start until cube size control closes once more. The freezing cycle starts and the water valve allows the hot water tank to refill. The chilled water from the upper cavity flows by gravity through the water valve along with water from reserve tank, into the sump tank. Here it is picked up by the sump pump and this water is used to produce the next batch of cubes.

FREEZING CYCLE
SM-210

Water Circuit - Refrigerant

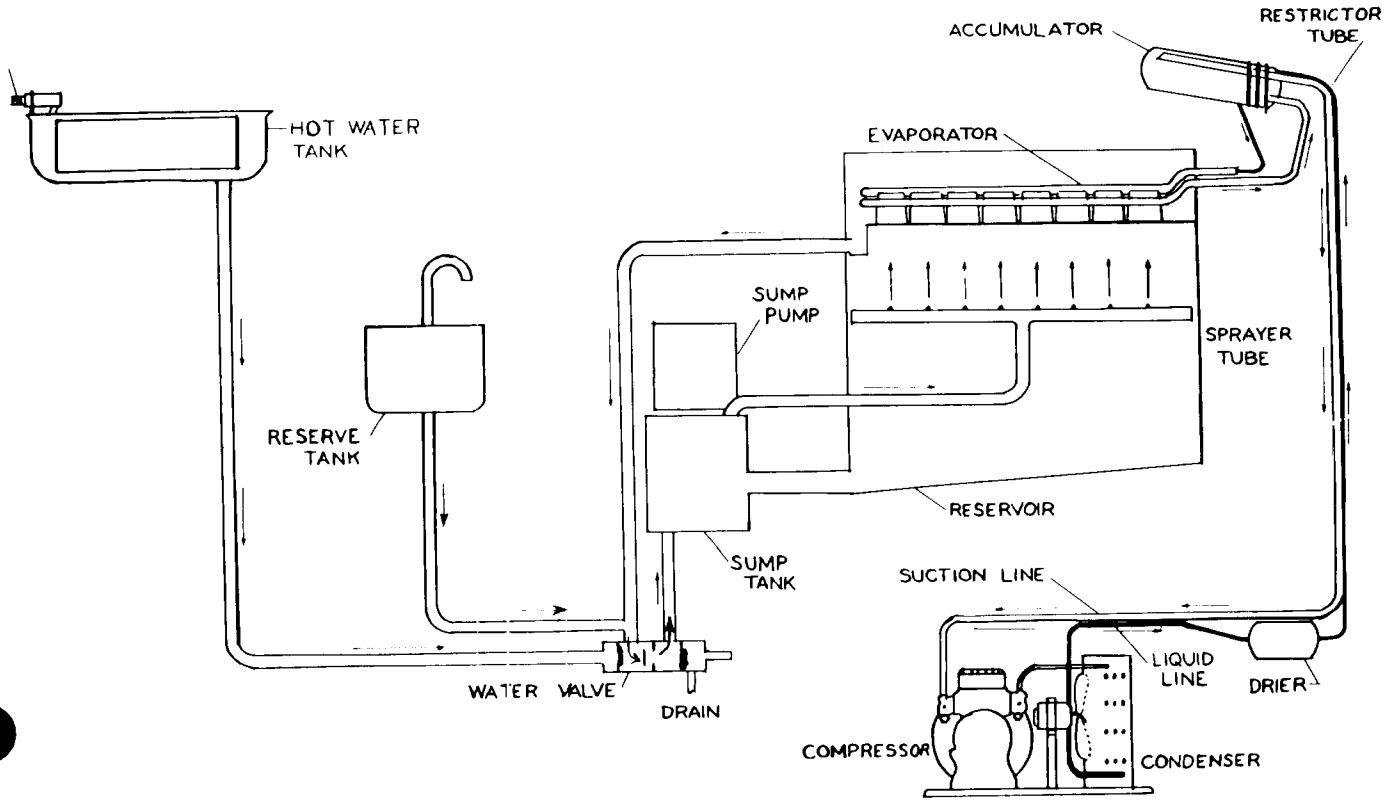

At the start of the freezing cycle, reservoir and sump tank contain enough water to make a complete batch of ice cubes, plus approximately an extra pint. When time clock closes load circuit, it starts the compressor, sump pump and heater element in hot water tank. At the same time, it opens the circuit to clock motor. (Clock motor does not run first part of freezing cycle---This is approximately 25 minutes.) This timer has a single pole double throw micro-switch for carrying and directing current. After a predetermined amount of ice is frozen, the cube size or reverse acting temperature control closes, actuating the time clock motor circuit which continues the freezing cycle approximately 9 more minutes. (After clock motor starts, freezing will be 12 minutes less defrost time setting.

Harvest water is used to produce the next batch of ice, therefore on the initial start up it is necessary to have the unit in a harvest cycle. This can be done by manually turning timer to harvest position.

SERVICE ANALYSIS

SYMPTOM	POSSIBLE CAUSE	SUGGESTED CORRECTION
Shortage of water	Water spraying out through curtains	Replace broken curtains if any broken.
	Three-Way water valve leaking	Check the valve for foreign matter. Check valve seats and replace if necessary.
	Water entering hot water tank too slowly	Check pressure at source-20# required. Dirt in solenoid and flow control- blow out.
		Partial restrictions in water strainer. Clean Strainer.
Irregular size cubes and some cloudy	Some jets plugged	Clean jets.
	Shortage of water	See Shortage of Water
	Unit not level	Water overflowing air vent holes on low side burning cubes. Level as required.
Cubes too large	Cube size control set low	Raise setting on cube size control.
Decreased ice capacity	Inefficient compressor	Replace .
	Leaky water valve	Replace or repair.
	High head pressure	Dirty condenser. Clean. Bad fan motor. Replace. Non-condensable gas in the system: purge the system. Too hot a location with poor circulation:
		relocate the unit, or provide for ventilation by cutting openings; Overcharge of refrigerant. Correct the charge.
	Partially restricted cap tube	Purge & replace charge and drier
Hole washed inside cube	Water over the top of the cube cups during harvest	Level unit.

SERVICE ANALYSIS

SYMPTOM	POSSIBLE CAUSE	SUGGESTED CORRECTION
Unit will not run.	Blown fuse	Replace fuse & check for cause of blown fuse.
	Bin thermostat set too high	Adjust thermostat. Set between 35° out to 39 degrees in.
	Switch in Off position	Turn switch to On position.
	Inoperative master switch	Replace switch
	Timer contacts open	Replace timer Micro-switch
Compresser cycles intermittently	Low voltage	Check circuit for overloading. Check voltage at the supply to the building. If low, contact the power company.
	Dirty condenser	Clean with vacuum cleaner, air or stiff brush. (Do NOT use wire brush.)
	Air circulation blocked	Allow sufficient air space all around unit.
	Inoperative condenser fan motor	Check to see if defective. If defective, replace.
	Non-condensable gases in system	Purge the system.
Cubes too small	Cube size control set too high	Lower the setting. Turn towards colder.
	Partially restricted capillary	Blow charge, add new gas & drier.
	Moisture in system	Replace the dryer.
	Shortage of water	See remedies for shortage of water.
	Shortage of refrigerant	Check for leaks and recharge.
Cloudy cubes	Shortage of water	See remedies for shortage of water.
	Dirty water supply	Use water softener or water filter.
	Restricted drain on pump	Clean pump strainer.
	Accumulated impurities	Use SCOTSMAN Ice Machine Cleaner.
Poor harvests	Too short defrost time	Check and adjust harvest cycle. Timer should be set at 3 1/2.
	Restriction in incoming water	Check water feed line strainer and flow reducing valve. To give greater water flow increasing defrost time.
	Insufficient quantity of hot water	Cold ambient - must be 50° minimum faulty fan control on air cooled models.
	Solenoid valve not opening the water valve	Solenoid binding or burned out. Replace.
	Air vent holes in upper cube cups plugged	Clean out holes.

SM-210

SUMP PUMP

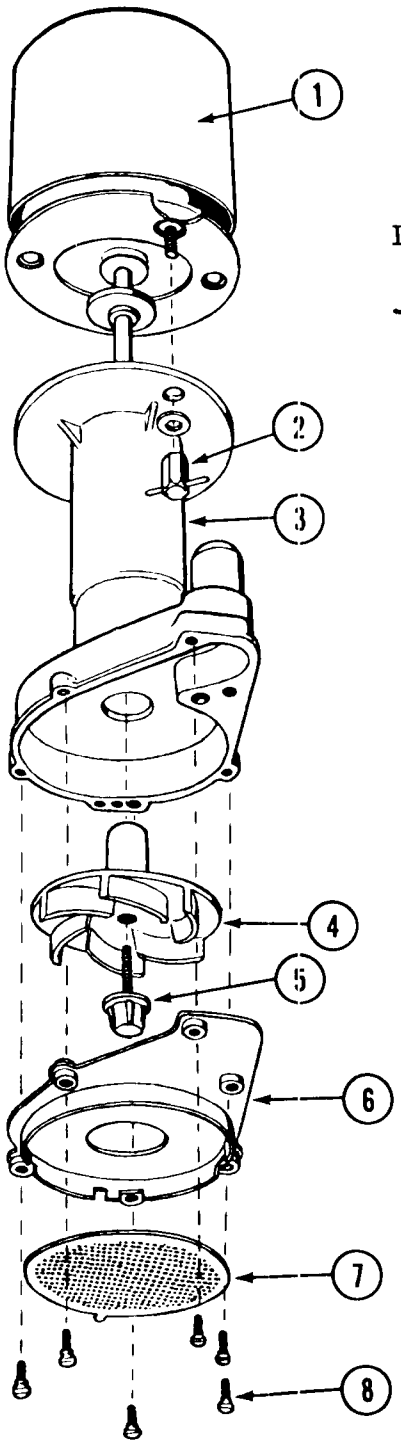

ITEM NO.	PART NO.	NAME
1.	12-1351-22	Motor Only
2.	12-1351-32	Wing Hex Nuts
3.	12-418-30	Pump Body
4.	12-1351-21	Impellar and Spring
5.	12-1351-31	Impellar Screw and Gasket
6.	12-1351-27	Bottom Inlet Plate
7.	12-1351-26	Inlet Screen
8.	12-1351-29	Wing Screws
	12-418-1	Complete Pump

SM-210 CONTROL BOX ASSY

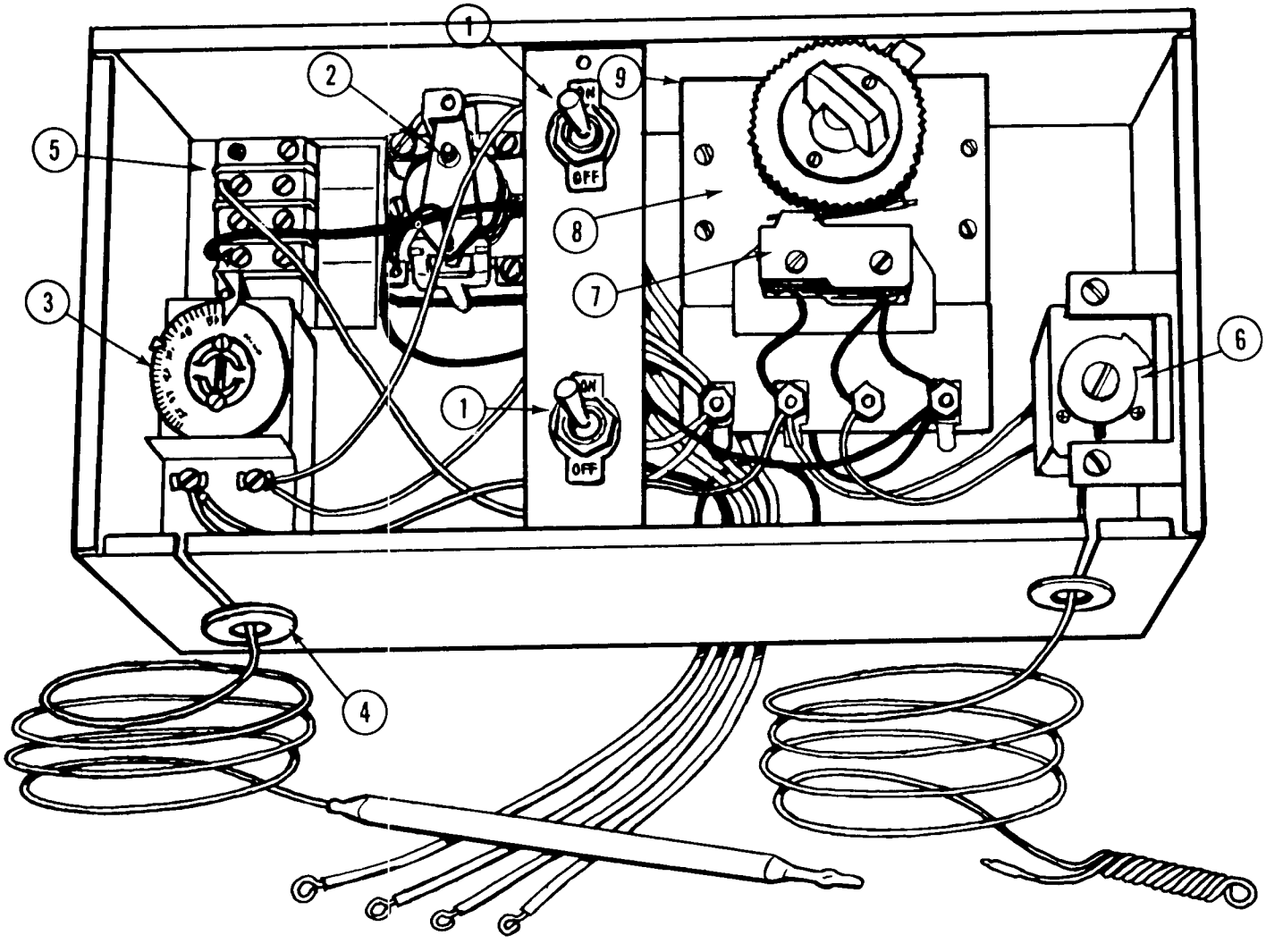

ITEM NO.	PART NO.	NAME
1.	12-537	Switches
2.	12-419	Relay
3.	11-99-1	Bin Control
4.	13-124	Grommets
5.	12-313	Terminal Block
6.	11-345	Cube Size Control
7.	12-645-20	Timer Micro-Switch only
8.	12-645-1	Timer
9.	12-367	Timer Motor only

SM-210
COMPLETE UNIT

(Right Side)

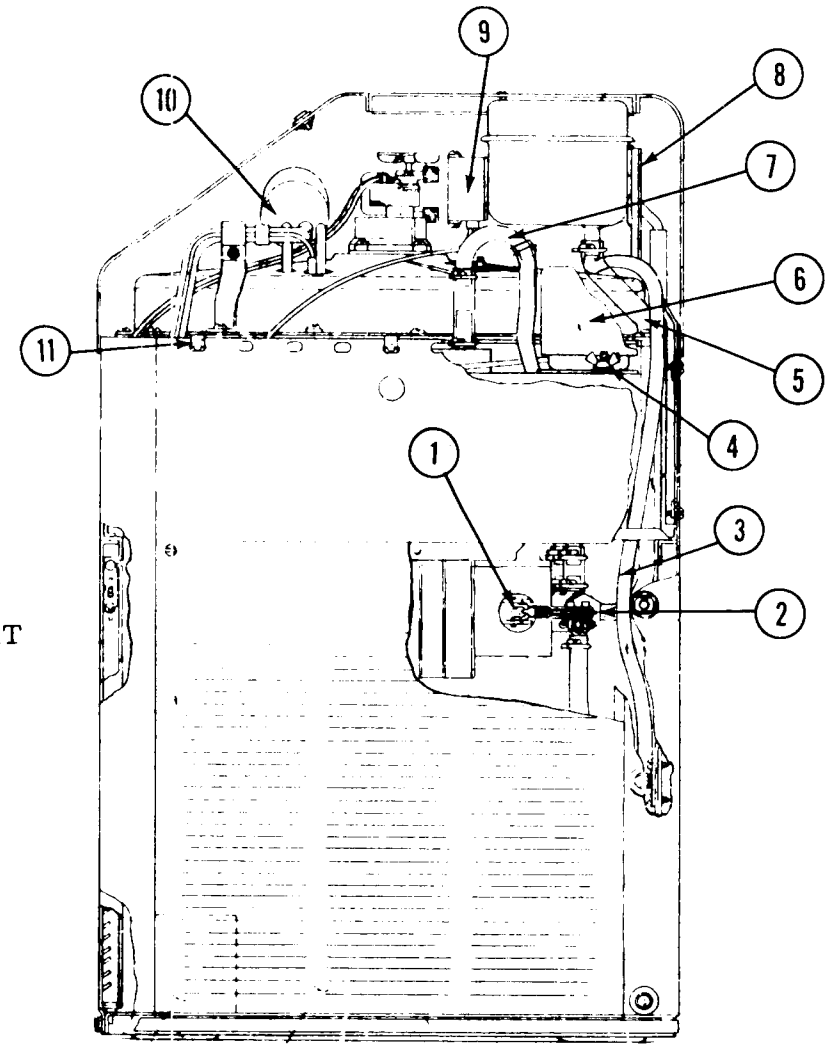

ITEM NO.	PART NO.	NAME
1.	12-248-1	Solenoid
2.	A-13460	Complete Valve
3.	13-79	Rubber Drain Tube per ft.
4.	3-552	Wing Nut
5.	5-179	Tygon Tube per ft.
6.	12-418-1	Sump Pump
7.	A-17080	Elbow
8.	A-6742	Hot Water Tank Bracket
9.	A-6480	Thermo Box Cover
10.	S-9508	Suction & Acc. Assy
11.	3-449	Speednuts (18)

SM-210
COMPLETE UNIT

(Front)

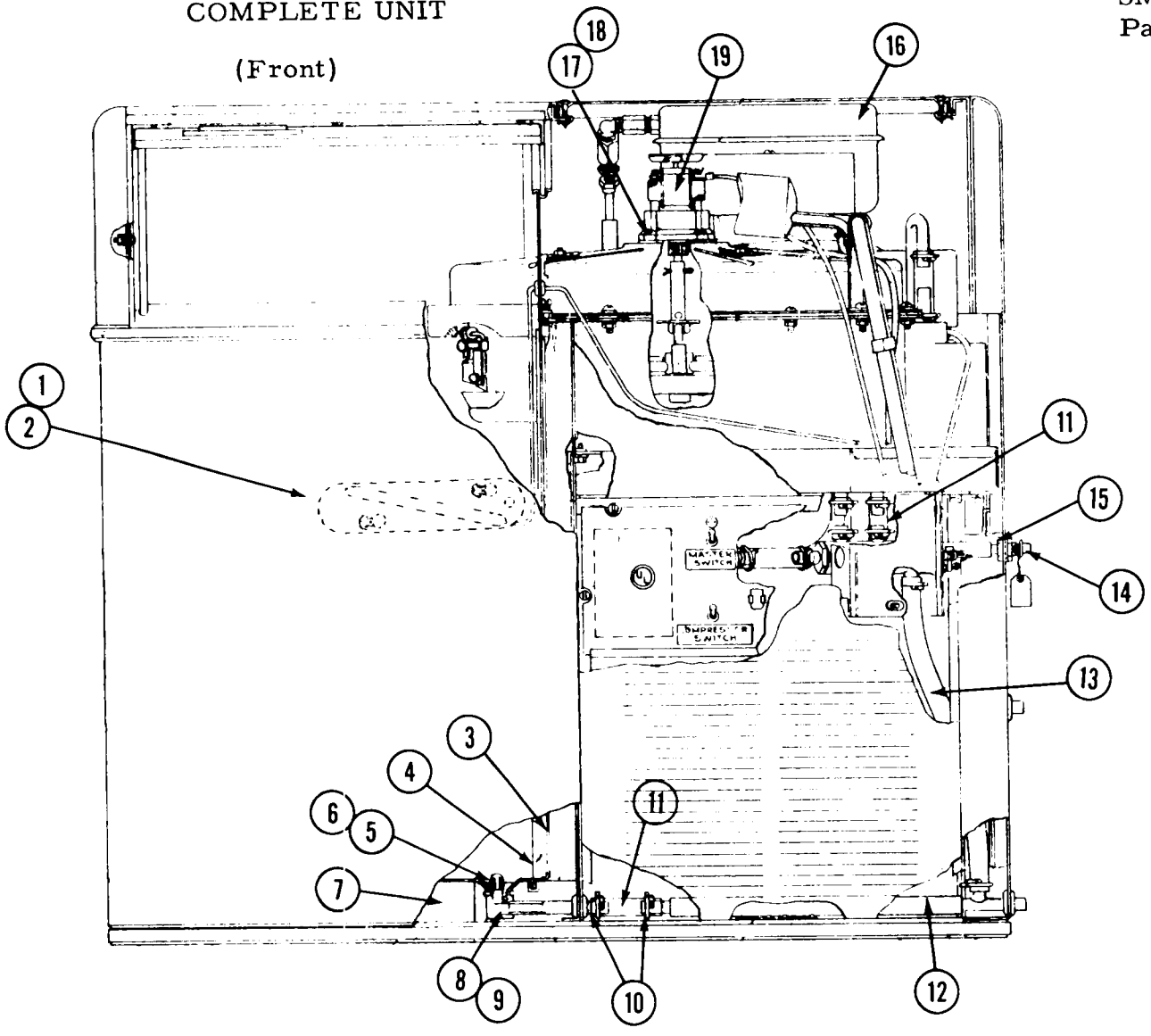

ITEM NO.	PART NO.	NAME
1.	A-15759	Bulb Cover
2.	13-590	Bulb Gasket
3.	A-15743	Insulation Layout
4.	A-15705	Storage Bin
5.	A-6448	Strainer
6.	A-18090	Drain Fitting (Male)
7.	A-15721-2	Bottom Insulation
8.	A-18103	Drain Ass'y
9.	2-530	"O" Ring
10.	2-1338	Hose Clamp
11.	5-179	Tygon Tube per ft.
12.	A-16174	Drain Assy
13.	13-567	Drain Tube per ft.
14.	A-9755	Inlet Water Tube
15.	S-7044	Nut
16.	A-12870	Tank Cover
17.	13-176	Drive Motor Gasket
18.	3-1211	Screw (4)
19.	12-675-1	Drive Motor

SM-210 CASE PARTS

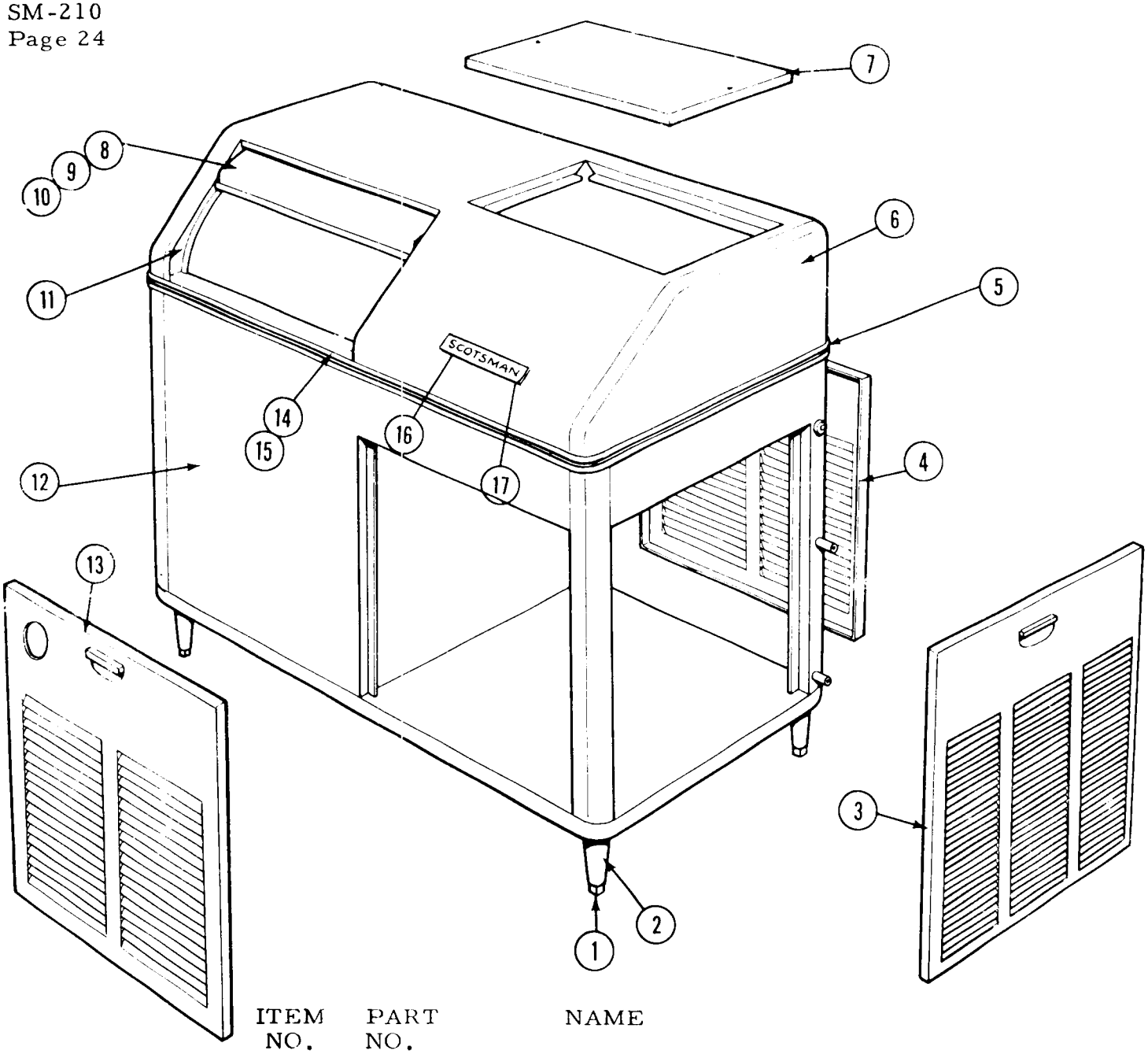

ITEM NO.	PART NO.	NAME
1.	8-522	Leg Levlers
2.	A-15803	Leg
3.	S-6840	Side Door
4.	A-8739	Back Door
5.	A-5862	Rear Moulding Strip
6.	A-15603	Hood (less doors)
7.	S-6849	Top Door
8.	A-15559	Sliding Door
9.	3-640	Door Glide
10.	2-1616	Door Catch
11.	A-16208	Door Track
12.	A-16177	Case Ass'y (less doors)
13.	A-15866	Front Door
14.	A-5863	Moulding Strip
15.	15-324	Plastic Insert
16.	15-156	Emblem
17.	3-271	Speed Nuts

SM-210
HOT WATER TANK

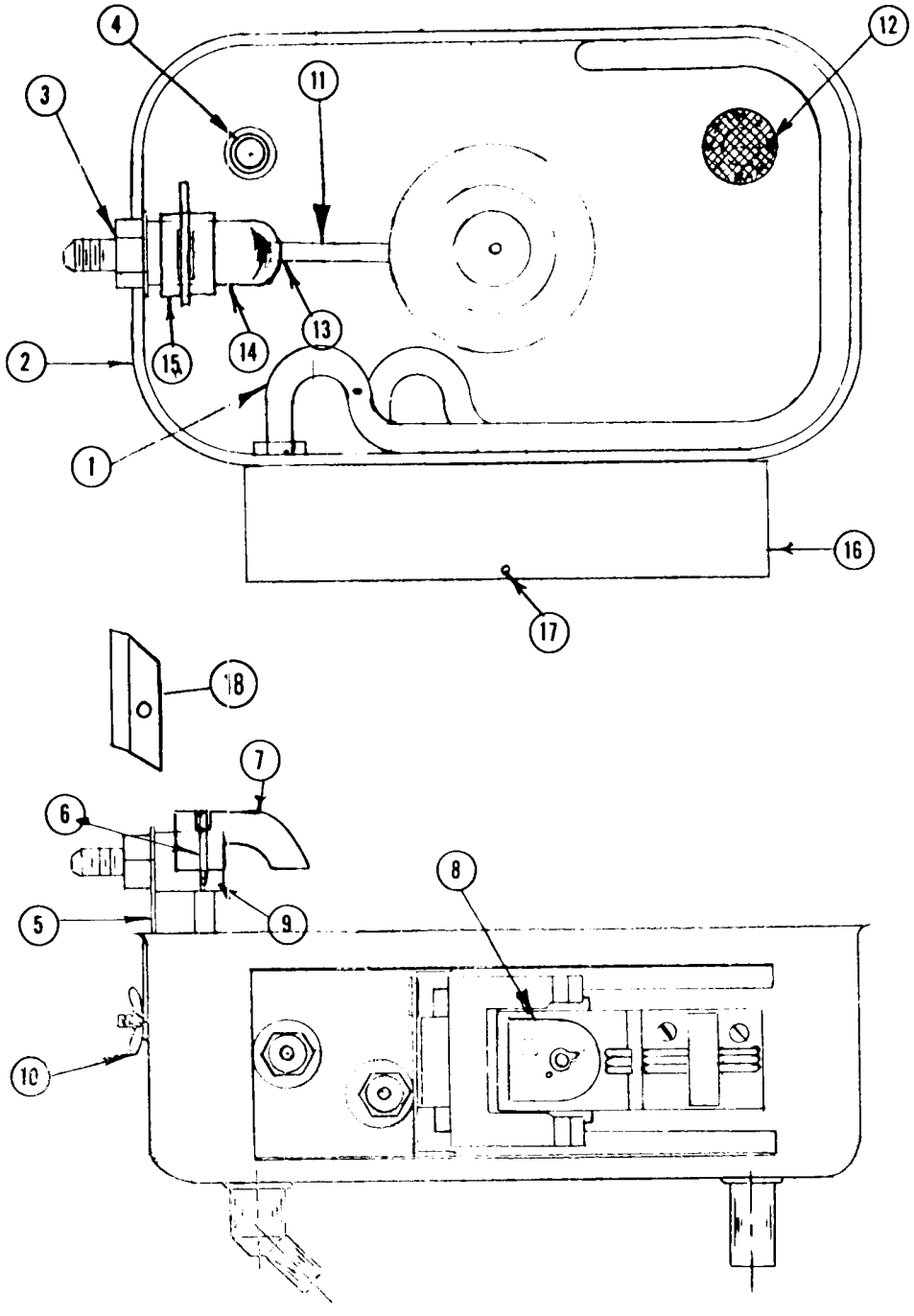

ITEM NO.	PART NO.	NAME
1.	12-356	Heating Element
2.	A-6467	Hot Water Tank Only
3.	S-7044	Nut
4.	A-6477	Stand Pipe
5.	A-12869	Inlet Water Bracket
6.	2-1259	Valve Pin
7.	2-1320	Water Deflector, Plastic
8.	12-246	Thermo Disc
9.	A-6771	Water Inlet Valve Ass'y. (complete with float)
10.	3-255	Wing Nut
11.	A-12068	Float Ass'y (includes arm)
12.	A-5998	Screen
13.	A-5777	Valve Seat Holder (*)
14.	S-6947	Valve Seat (*)
15.	3-1001	Rivet, Stainless Steel (*)
16.	A-6480	Thermostat Box Cover
17.	3-129	Screw
18.	A-18418	Water Deflector
19.	A-9754	Hot Water Tank Complete (less cover)

SM-210
CONDENSING UNIT
1/2 HP Air Cooled, Copeland

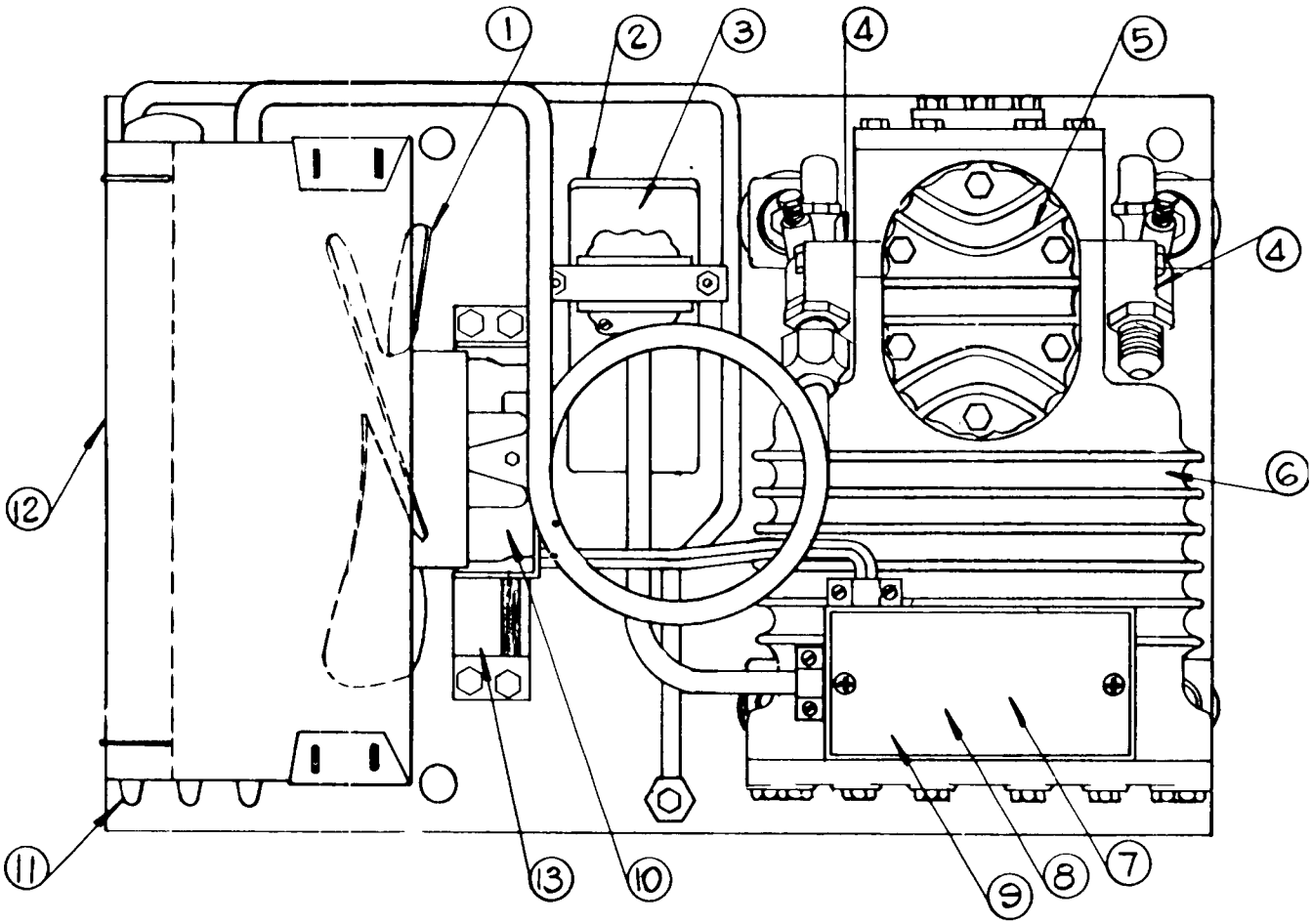

ITEM NO.	PART NO.	NAME
1.	18-363	Fan Blade
2.	18-1901-7	Starting Capacitor
3.	18-1903-4	Relay
4.	18-337	Suction, Service Valve (18-237 Discharge Valve)
5.	18-326	Valve Plate & Gasket Kit Assembly (*)
6.	18-325	Motor Compressor 115/60/1
7.	18-347	Overload Klixon (*)
8.	18-241	Treminal Assembly (*)

Note:
Not available as a complete mounted ass'y

ITEM NO.	PART NO.	NAME
9.	18-270	Terminal Board (*)
10.	18-333-1	Fan Motor
11.	18-354	Condenser
12.	A-12111	Shroud
13.	18-388	Fan Motor Bracket

NOTE: Overload Not Used On Units That Are Inherent Protected. If Possible Use Copeland Part No. When Ordering Capacitors & Relays

CONDENSING UNIT

½ HP Water Cooled, Copeland

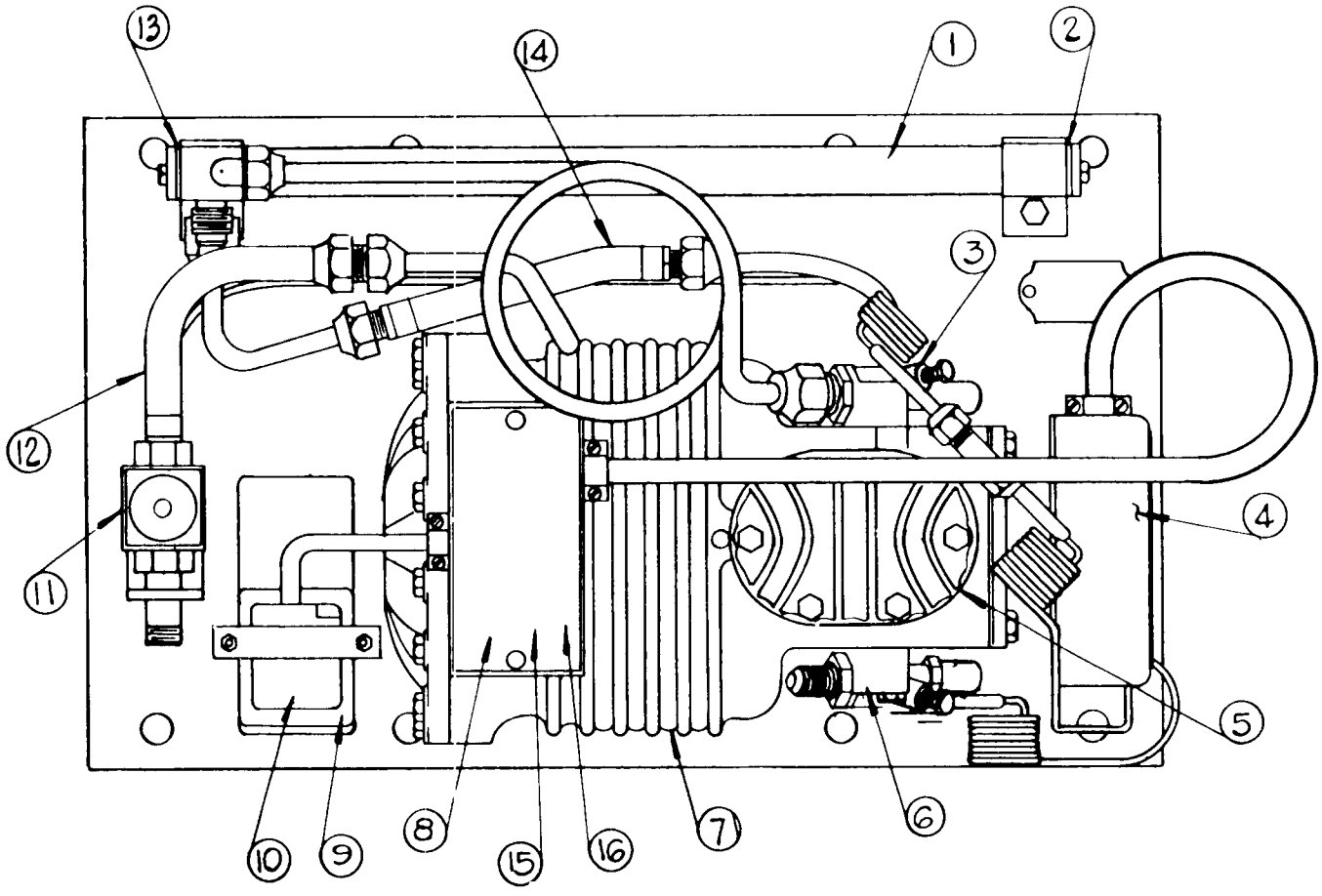

ITEM NO.	PART NO.	NAME
1.	18-368	Condenser
2.	18-262	Plain Gasket
3.	18-237	Discharge Service Valve
4.	11-286	High Pressure Control
5.	18-326	Valve Plate & Gasket Kit Assembly (*)
6.	18-337	Suction Service Valve
7.	18-355	Motor Compressor 115/60/1
8.	18-347	Klixon Overload (*)
9.	18-1901-7	Starting Capacitior
10.	18-1903-4	Relay

ITEM NO.	PART NO.	NAME
11.	11-198-00	Water Valve
12.	18-260	Compressor to Valve Water Hose
13.	18-263	Manifold Gasket
14.	18-261	Compressor to Condener Water Hose
15.	18-270	Terminal Board (*)
16.	18-241	Terminal Assembly (*)

If Possible Use Copeland Part No When Ordering Capacitors & Relays.

(*) Not Shown

Note:

Not available as a complete mounted assembly.

SM-210

3 WAY WATER VALVE

ITEM NO.	PART NO.	NAME
1.	S-6926	Valve Inlet Cap
2.	13-148	Rubber Valve Seat (3 per unit)
3.	A-8139-20	All items covered by No. 3 are included in repair kit.
4.	3-165	Machine Screw
5.	12-248-1	Solenoid
6.	S-8995	Solenoid Pin
7.	2-420	Spring
8.	S-6928	Arm Support Ass'y
9.	3-396-1	Cotter Keys (2 required)
10.	S-7973	Pins (2 required)
11.	S-6932	Valve Arm
12.	A-12545	Valve Body
13.	3-88	Washer (4 required)
14.	3-61	Nut (4 required)
15.	S-6925	Valve Packing Gland
16.	2-557	Valve Stem Guide
17.	2-419	Compr. Spring
18.	S-6924	Valve Seat Washer
19.	2-418	Spring
20.	2-424	Packing
21.	S-6931	Packing Washer
22.	3-570	Fiber Washer
	A-13460	Complete Valve

Note:

Complete A-8139-20 kit will be substituted on orders for stem only.

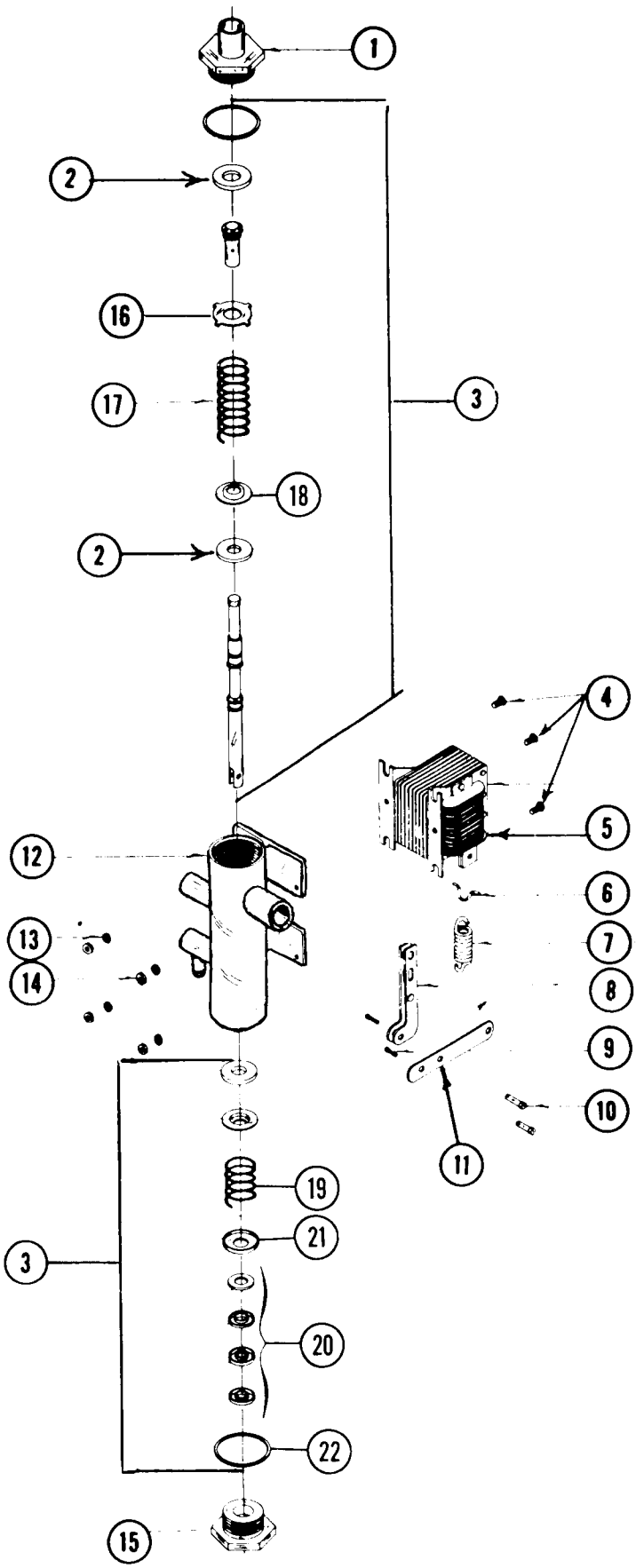

SM-210 H FREEZER ASSY

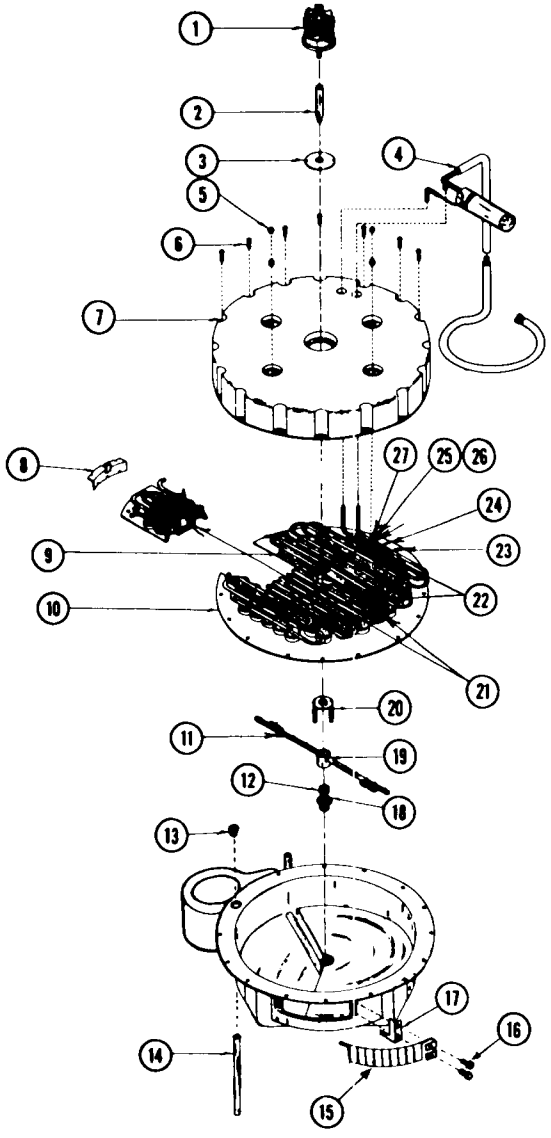

ITEM NO.	PART NO.	NAME
1.	12-675-1	Drive Motor
2.	A-6084	Drive Shaft
3.	13-176	Drive Motor Gasket
4.	S-9506	Suction Line, Cap Tube Assy
5.	3-357	Nut (4 required)
6.	3-10	Screws (16 required)
7.	A-15711	Freezing Chamber Top
8.	A-12472	Water Baffle
9.	A-16120	Platen Ass'y
10.	13-288	Rubber Cup Holder
11.	S-6907	Jets (8 required)
12.	S-6909	Jet Bearing Shaft
13.	S-7434	Adapter
14.	A-16238	Hot Water Tube
15.	A-15807	Curtain Ass'y
16.	S-7234	Cap Nut
17.	S-7730	Cube Stopper
18.	2-433	"O" Ring
19.	S-6903	Spray Bar
20.	S-6900	Drive Arm
21.	A-12435	Spacer (2 required)
22.	A-9011	Spacer (2 required)
23.	A-12437	"I" Bolt (4 required)
24.	A-12436	Coil Clamp (4 required)
25.	S 6866	Rubber Insul. (4 reqd.)
26.	3-547	Screw (4 required)
27.	3-73	Nut (4 required)

INSTRUCTIONS FOR INSTALLING A8139-20 VALVE REPAIR KIT

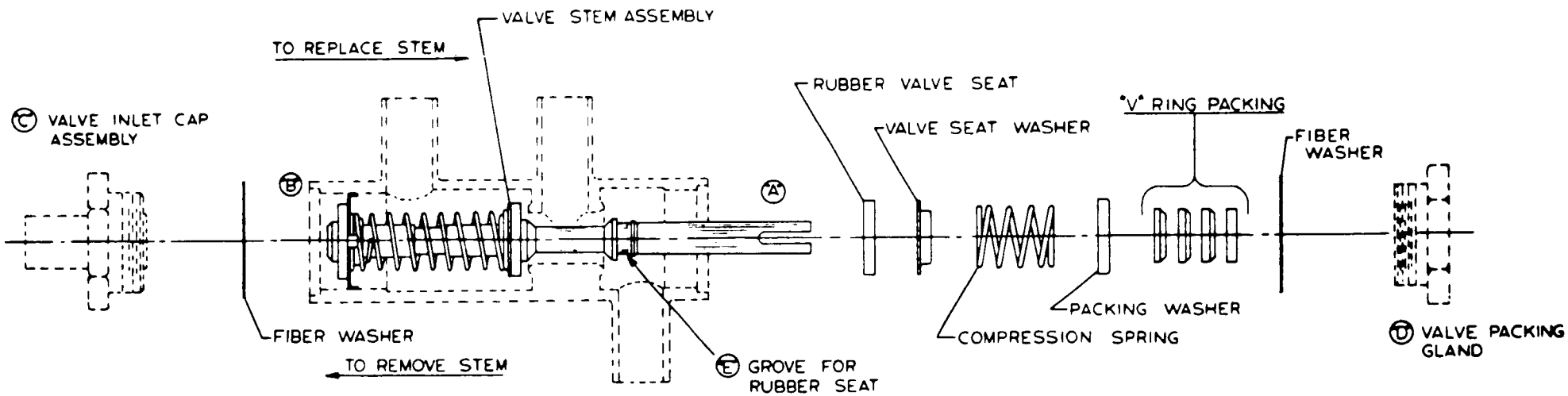

1. REMOVE COTTER KEY AND STAINLESS STEEL PIN (NOT SHOWN) FROM VALVE STEM END "A".
2. REMOVE "C" VALVE INLET CAP ASSEMBLY AND "D" VALVE PACKING GLAND FROM VALVE BODY.
3. REMOVE VALVE STEM ASSEMBLY AS SHOWN.
4. CLEAN THE INSIDE OF THE VALVE BODY.
5. INSERT ASSEMBLED PORTION OF VALVE KIT (VALVE STEM ASSEMBLY), AS SHOWN, THRU END "B".
6. SCREW "C", VALVE INLET CAP, TO VALVE BODY (BE SURE TO INSERT NEW FIBER WASHER) TO POSITION OR SECURE VALVE STEM ASSEMBLY IN VALVE BODY.
7. ASSEMBLE IN SEQUENCE PARTS SHOWN IN DIAGRAM AND PACKED LOOSE IN THE KIT.
   NOTE: USE ½" COPPER TUBE OR EQUIVALENT OVER STEM END "A" TO PUSH RUBBER VALVE SEAT INTO GROOVE "E".
8. SCREW "D", VALVE PACKING GLAND, TO BODY. (BE SURE TO INSTALL NEW FIBER WASHER).
9. ASSEMBLE STAINLESS STEEL PIN AND COTTER KEY TO END "A"

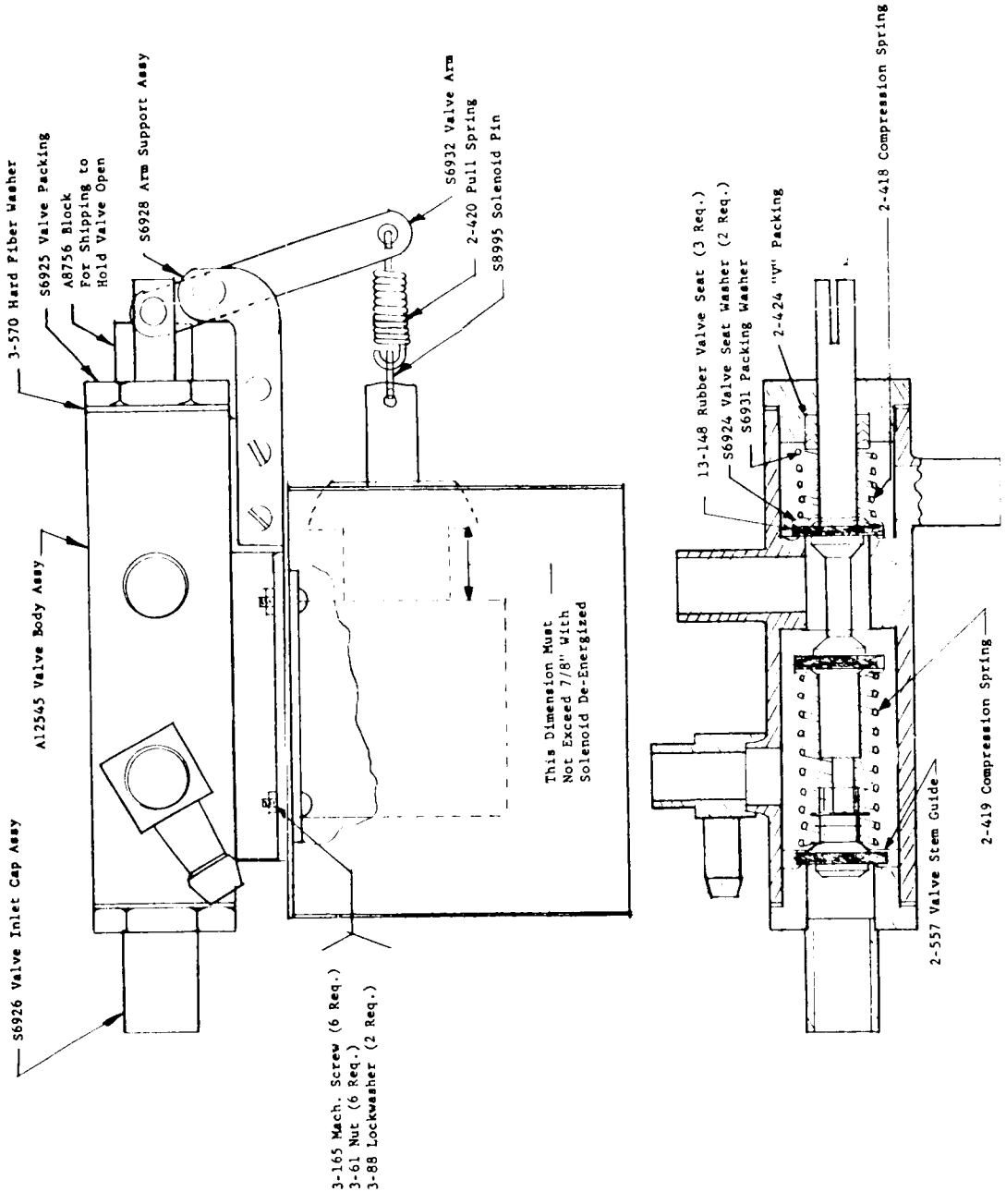

WATER VALVE ASSEMBLED

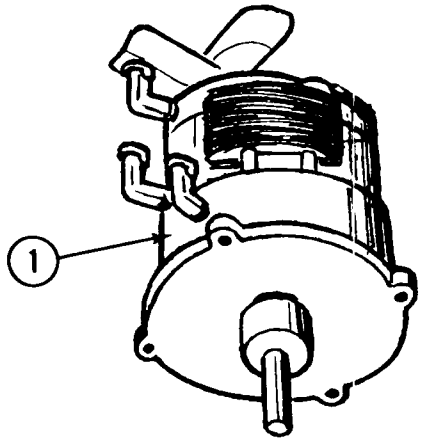

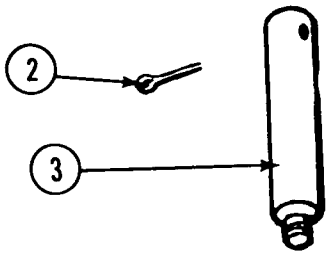

Note: Left Hand Thread

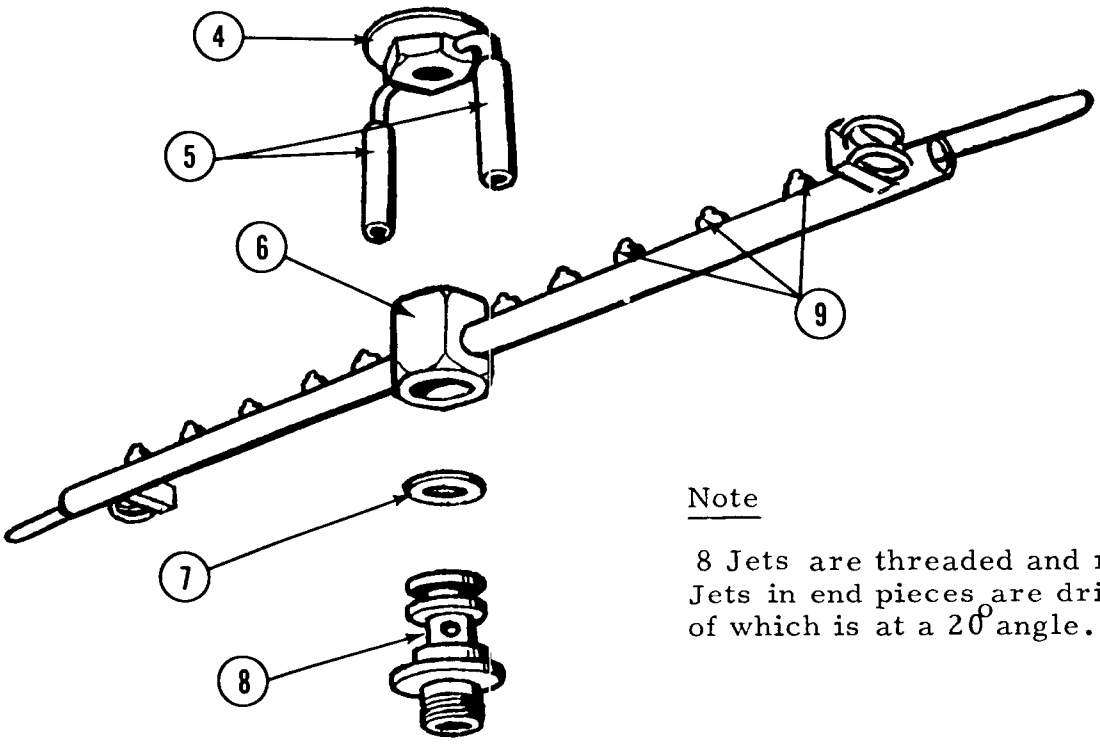

DRIVE LINKAGE AND SPRAY BAR
SM-210

Item no.	Part no.	Name
1.	12-675-1	Drive Motor
2.	3-290	Cotter Ket
3.	A-6084	Drive Shaft
4.	S-6900	Drive Arm
5.	S-7315	Rubber Covers
6.	S-6903	Spray Bar
7.	2-433	"O" Ring
8.	S-6909	Inlet & Bearing Assy
9.	S-6907	Jets

Note

8 Jets are threaded and removeable. Jets in end pieces are drilled holes, one of which is at a 20° angle.

FUNCTIONAL PARTS AND MAINTENANCE

PART NAME: Relay

NUMBER: 12-419

FUNCTION: Relay is used as a by-pass on the bin thermostat when it tries to cut unit off on a full bin of cubes during a freezing cycle. This insures full cubes every time a harvest occures and prevents short cycling on bin thermostat.

SETTING: Factory set.

REPAIRABLE: No. Replace when inoperative.

MAINTENANCE: Check electrical connections and blow points free of lint or dirt.

PART NAME: Temperature Control Storage Bin White Rodgers Type 1604-31

NUMBER: 11-99-1

FUNCTION: To automatically cut machine off when ice level in storage bin reaches thermobulb. Automatically starts machine when ice level in bin falls below bulb location.

SETTING: Most of these controls have adjustable differential. Setting on range dial should be 35° cut out, 39° cut in.

REPAIRABLE: No. Replace when inoperative. If out of warranty it can be sent in through your local refrigeration supply dealer and repaired or replaced for a small percentage of original cost.

MAINTENANCE: Remove cover, check points for corrosion or arcing every 6 months. Blow control free of bugs dirt, etc. Check capillary for cracks or worn spots due to vibration.

Hold a small handful of ice on thermostat bulb to check operation of control. Tighten electrical connections.

PART NAME: Water valve with solenoid

NUMBER: A-13460-Water valve only
A-8140-Solenoid &Mounting Hardware
12-248-1 Solenoid only

FUNCTION: This water valve is electrically operated by a solenoid. Valve proper has three valve seats and four water ports. This valve is the heart of the water control system. During freezing cycle it uses two upper openings to circulate water between sump tank and sump pump plus excess overflow water caught in reserve tank. Closes off openings to hot water and drain tube. During defrost period, electrically operated solenoid pulls seats back from hot water supply and drain but closes center port to direct hot water to top of platen. Hot water goes up into freezer through first top opening to defrost cubes while water used in freezing cycle and left in sump tank drains through second top opening and out through drain opening.

SETTING: None. Factory set.

REPAIRABLE: Yes, All components are replaceable including valve seats, gaskets, V-packing, solenoids, etc.

MAINTENANCE: Valve and entire unit should be cleaned with ice machine cleaner every six months. In many localities heavy scale accumulation will lodge in valve and hold rubber seats open. This will either let warm water seep into sump freezer supply and cause long freezing cycle or else it will let sump freezer supply seep down drain and cause shortage of cube supply water. This results in short cycles, partial cubes and cloudy cubes. Manually flushing valve will also help in many cases.

FUNCTIONAL PARTS AND MAINTENANCE

PART NAME: Agitator Drive Motor Merkle Korff

NUMBER: 12-675-1

FUNCTION: This motor is used to drive the linkage mechanism which in turn drives the oscillating jet spray tubes. This provides a constant spray movement to all the inverted cube molds and by so doing also aerates the water producing clear solid Scotsman cubes.

SETTING: No settings on motor.

REPAIRABLE: Yes-to some extent. Not recommended although front bearings and windings could possibly be replaced by electric motor shop. Normally replace out of warranty motors.

MAINTENANCE: Oil every six months or less as use indicates. Use SAE 20 oil. There are three oil cups on the motor and gear case to add oil. Drive linkage should be inspected to insure free movement with no binding or drag on drive motor.

PART NAME: Timer

NUMBER: 12-645-1

FUNCTION: Heart of the cyclematic control system is the temperature control Part No. 11-351 and the time clock it actuates. All electrical components are connected to the time clock terminal board and are shunted by means of a single pole, double throw micro-switch to either the freezing cycle or harvest cycle. Micro-switch is actuated by two metal cams that are directly connected to the electric timer clock motor. Timer has a 12 minute cycle, 9 1/2 minutes on defrost cycle. Time clock face has numerals to 7 on half the face. Each numeral represents a one minute period. Face also has a lever beneath it which can be moved to lengthen or shorten defrost period.

SETTING: Normal setting for defrost is 2 1/2 minutes.

REPAIRABLE: Yes. Micro-Switch only, Part No. 12-645-20 is replacable as well as timer clock motor only, Part No. 12-367.

MAINTENANCE: Check all electrical connections, blow contact points free of dust, dirt, etc.

FUCTIONAL PARTS AND MAINTENANCE

PART NAME: Reverse Acting Temperature Control

NUMBER: 11-345

FUNCTION: Reverse acting temperature control, closes on temperature decrease, opens on temperature rise. Control determines length of freezing cycle and by the same token, the cube size. A lower setting on control will produce larger cubes, a higher setting, smaller cubes. This control actuates time clock motor, which then takes over balance of freezing cycle and also defrost period.

SETTING: Control is adjustable with screw driver on off-set cam.

REPAIRABLE: No, Replace when inoperative.

MAINTENANCE: Check electrical connections. Blow points free of dust, dirt, lint, etc.

PART NAME: Solenoid

NUMBER: 12-248-1

FUNCTION: Solenoid is mounted directly on water valve body. Adequate stops are present in the housing of the solenoid but may require bending or adjusting. An electrically operated solenoid which is used to open and close the water valve through mechanical linkage. Solenoid is a continuous duty type.

SETTING: Solenoid itself requires no adjustment, however, linkage should be adjusted so that solenoid can make positive contact when energized and core will leave field when de-energized.

REPAIRABLE: No. Replace when inoperative.

MAINTENANCE: Solenoid proper requires no maintenance, but care should be exercised to insure proper voltage to coil to avert burn-outs. Mechanical linkage can be oiled and adjusted to prevent drag on solenoid. Many solenoid burn-outs are caused indirectly such as a sticking time clock which will keep solenoid energized for long periods of time.

PART NAME: Sump pump

NUMBER 12-418-1

FUNCTION: Recirculating pump used to pump supply water in sump tank to jet tubes during freezing cycle.

SETTING: Factory set

REPAIRABLE: Yes. Motors rewound, impeller blades replaced. Generally out of warranty pumps are replaced by motor only part no. 12-1351-22.

MAINTENANCE: None. Grease seal ball bearing permanently lubricated

SERVICE - COMPLETE UNIT

ALL STEPS LISTED BELOW SHOULD ONLY BE STARTED WHEN WATER AND ELECTRICAL SUPPLY ARE OFF TO PREVENT ACCIDENTS.

To remove cabinet top or hood.

1. Remove two back end screws in rear moulding strip.
2. Pull out black insert tape concealing screws.
3. Remove balance of screws in moulding strips.
4. Lift hood straight up.

To remove Sump Pump.

1. Remove hood top panel.
2. Disconnect hose clamp on goose neck.
3. Remove electrical lead to control box.
4. Loosen 2 wing nuts and washer. This disengages pump cover.

To remove Drive Motor

1. Remove hood top panel.
2. Disconnect electrical cord in control box
3. Reach in through curtained opening and remove drive fork from drive shaft attached to motor. Note drive fork has left hand thread.
4. Remove 4 screws holding drive motor to freezer dome and pull drive motor shaft out.

To remove the Jet Tube assembly

1. Reach in through storage bin sliding door and remove two brass thumb screws holding plastic curtain closed.
2. Open curtain on hinge and reach hand into opening, feeling for spray bar.
3. Follow spray bar to center hub, turn spray bar so one end points towards curtain opening. Now lift straight up on spray bar. then out after spray bar comes off center hub.

To remove Water Inlet Valve to hot water tank.

1. Remove hood top panel.
2. Remove hot water tank cover.
3. Loosen 1/4" SAE flare nut to water inlet valve.
4. Loosen hex sided brass nut holding valve to bracket.
5. Remove and replace water inlet valve.

To remove complete Hot Water Tank

1. Remove complete hood.
2. Remove the two hose clamps to drain lines.
3. Loosen 1/4" SAE flare nut to inlet valve.
4. Disconnect lead wire to control box, lift up from bracket clips and out.

To change hot water tank Heating Element

1. Remove top hood service panels.
2. Remove hot water tank cover.
3. Drain all water from hot water tank.
4. Remove stainless steel thermostat cover.
5. Remove lock nut from each element prong.
6. Install new element, fill tank and check operation. Should heat water to 140°F.

SERVICE - COMPLETE UNIT

To remove solenoid-Operated Three Way Water Valve

1. Remove lower front and right side service doors.
2. Remove all hose clamps to solenoid operated water valve.
3. Remove upper and lower hex head cap screws holding valve housing to frame.
4. Drop entire assembly down, unplug cord to solenoid at solenoid, loosen solenoid nut and bolt assemblies holding solenoid to brass valve proper.
5. Replace in reverse of above.

To replace Storage Bin Door

1. Lift door up and slide back as you normally would to remove ice from bin.
2. Pull door straight out.
3. Install repaired or new door in reverse of step number 2 above.

To replace Motor Compressor Valve Plate

1. Install compound gauge in suction service valve port and close suction service valve by turning valve stem all the way in. (Front seated)
2. Operate motor compressor until gauge reading reaches zero. Turn off unit.
3. Front seat discharge service valve.
4. Loosen all head bolts and tap head lightly with rubber-faced or plastic hammer to break loose.
5. Remove head, defective valve plate and any gasket material that may have stuck to head or compressor body.
6. Install new valve plate with all new gaskets as provided, tightening each head bolt a little at a time until all are snug.
7. Remove port gauge plug from discharge valve and crack open suction side letting gas purge off trapped air from head. Install hi side gauge in this port, back up both service valve stems and check around valve plate for refrigerant leaks.
8. Start unit, noting head & back pressures. If normal, let run until compressor gets warm. Tighten all head bolts once more, and again check for leaks.

To replace the Compressor

1. Front seat both suction service valve and discharge service valve on the compressor.
2. Disconnect the wiring from the compressor
3. Remove the bolts holding the service valve to the motor compressor body.
4. Remove the compressor hold-down nuts and lift the compressor out of the unit. unit.
5. Reverse steps 1 through 4 in replacing the compressor.
6. Check the compressor for oil before connecting the oil lines. Should be 2 inches down from the top of the oil plug hole or not over 1/2 of sight class
7. Remove the gauge port plug from the discharge service valve. Crack the suction service valve slightly, allowing some gas to escape out the gauge port of the discharge valve. When you have thoroughly purged the compressor, replace the plug and open all valves. It may be necessary to charge the unit because some of the gas was lost when the defective compressor was removed. Check & charge if necessary.

MAINTENANCE INSTRUCTION FOR SCOTSMAN SUPER CUBERS

THE FOLLOWING MAINTENANCE MUST BE ACCOMPLISHED TWO (2) TIMES PER YEAR ON ALL SCOTSMAN SUPER CUBERS. CALL YOUR AUTHORIZED SCOTSMAN SERVICE DEPARTMENT.

1. Clean air-cooled condenser; This is to be done frequently with the machine shut off.
2. Clean hot water tank and evaporator, sump tank and screen, using Scotsman Ice Machine Cleaner or equivalent.
3. Remove jet tube and manually clean jets by unscrewing jets.
4. Check curtain assembly.
5. Tighten all electrical connections.
6. Tighten all bolts.
7. Check water supply. Check water pressure flow through flow control. Clean water strainer.
8. Oil jet tubes drive motor three(3) places. Use SAE 20 oil - 3 oil cups.
9. Grease plunger on water solenoid valve with high temp grease. -OPTIONAL
10. Oil Condenser fan motor. Punch sealed cap or remove screws where possible.
11. Check for refrigeration leaks with halide torch.
12. Check for water leaks. Tighten drain line connections.
13. Check size and condition of cubes. Adjust as required. See Service Analysis Section.
14. Check bin thermostat setting. Factory set at 35° out, 39° in.

PROCEDURE FOR USE OF SCOTSMAN ICE MACHINE CLEANER IN SCOTSMAN ICE MACHINES

1. Remove front access door
2. Locate control box with time clock knob protruding thru cover.
3. Put unit through a harvest cycle manually. This may be done by turning time clock knob clockwise until a loud snap is heard.
4. Let unit finish cube harvest cycle and start into freezing cycle. This will be approximately 5 minutes after the loud snap in Step #3 is heard. At this time turn the compressor switch off, the lower of the two switches in the control box.
5. Locate the hot water tank which is directly under the top access door. Remove door. Remove the hot water tank cover by pulling up around the edge until it snaps off. Pour 4 ounces (half bottle) of "Scotsman Ice Machine Cleaner" into the hot water tank.
6. Locate the sump reservoir which is in the storage bin area and directly behind the ice discharge chute. This discharge chute is covered by a series of white plastic curtains which are free to swing out into the storage bin. Pour 4 ounces (half bottle) of "Scotsman Ice Machine Cleaner" into the sump reservoir.
7. Let unit operate normally for 10-15 minutes into the freezing cycle. No ice will be made because the motor compressor is not in operation.
8. At the end of this time put the unit through 2 or 3 harvest cycles manually to allow fresh make up water to clean out remaining solution. Each time waiting approximately 5 minutes after the loud snap until the next harvest cycle is done manually.
9. Turn the compressor switch back on.
10. Check each new batch of cubes until they are clear and until acid taste has been removed from cubes.
11. Put hot water in storage bin to melt the cubes and thereby clean the drains with the same solution that has just cleaned the unit.
12. Use a damp cloth to wipe off curtains and inside of storage bin.
13. Replace all access doors.
14. Unit is now ready for continued automatic operation.

PARTS LIST SM-210

1. CABINET PARTS

A-15603	Case hood assembly, less doors
S-6849	Hood top door
A-16208	Door slide
15-156	Emblem
A-5862	Moulding strip - rear
A-5863	Moulding strip - front
A-15866	Cabinet right side front service
S-6840	Cabinet right side service door
A-8739	Cabinet rear service door
A-15559	Sliding Door

2. CONTROL BOX - ELECTRICAL COMPONENTS

12-645-1	Timer Assembly
12-645-20	Timer micro-switch
11-345	Cube size control
12-537	On-Off switch
11-99-1	Bin thermostat
12-419	Complete cube relay

3. CONDENSING UNITS AND REFRIGERANT CIRCUIT

	AIR - COOLED	WATER - COOLED
Freezer Cup and platen only	A-16120	
Freezer and H X assembly complete kit	A-15788-25	Same
Suction H X and accumulator line	S-9508	Same
Drier	2-544	Same
Motor compressor 115/60/1	18-325	18-355
Valve plate and gasket kit	18-326	Same
Relay	18-1903-4	Same
Starting capacitor	18-1901-7	18-1901-7
Fan motor	18-333-1	
Fan blade	18-363	
Condenser	18-334	18-354
Shroud for condenser	A-12111	
Klixon overload	18-347	Same
Replaceable terminal assembly	18-241	Same
Terminal board	18-270	Same
Compressor to water valve hose		18-260
Compressor to condenser hose		18-261
Plain gasket for 18-259		18-262
Manifold gasket for 18-259		18-263
Manual re-set dual pressure control		11-286
Water regulating valve		11-198

PARTS LIST - SM-210

4. HOT WATER TANK

A-9754	Hot water tank complete - s.s., less cover
A-6467	Hot water tank only - - - s.s.
A-6477	Standpipe
A-6771	Water inlet valve
S-6947	Rubber seat for valve
A-5998	Drain Screen
A-12068	Float Assembly
12-246	Thermostat
12-356	Rod type heating element
A-12870	Hot water tank cover

5. WATER VALVE

A-13460	3-Way water valve less solenoid
A-8140	Solenoid & mounting hardware
13-148	Replacement rubber valve seats
2-424	V-packing
2-418	Compression spring 1 inch
2-419	Compression spring 2 1/2 inches
2-420	Solenoid pull spring 1 1/2 inches
S-8995	Solenoid pull key

6. WATER CIRCUIT

16-162	Inlet water strainer
A-13346-4	Inlet water flow control
12-418-1	Sump pump assembly
5-6903	Sprayer tube assembly
S-6907	Sprayer tube jet only
S-7730	Rubber, cube stopper
S-6909	Jet bearing hub
A-12489	Reserve Tank

7. DRIVE MOTOR AND LINKAGE

12-675-1	Drive motor
A-6084	Drive shaft
S-6900	Drive fork
13-176	Drive motor gasket

8. STORAGE BIN AND COMPONENTS

A-15705	Storage bin
A-18090	Storage bin drain assembly
A-6448	Drain, strainer
A-15759	Bin thermostat bulb cover
13-590	Bin thermostat bulb gasket
A-15807	Curtain assembly

9. MISCELLANEOUS

2-540	Ice Scoop
15-324	Plastic trim insert-per ft.
1-657	Packing crate
12-1351-22	Sump Pump motor only
19-343	Scotsman Ice Machine Cleaner

TABLE OF CONTENTS

SM 45H

	Page
Forword	1
Table of Contents	2
Photograph and Ice Making Capacity	3
Specifications and Dimensions	4-5
Complete Cabinet Layout	6
Selecting Location	
Location	7
Uncrating Machine	7
Preparation for Installation	7-8
Installation	8
Water Supply	8
Drains	8-9
Start Up	9
Wiring Diagram 115/60/1	10
Final Check List	11
How It Works	12
Refrigerant Cycle	
Harvest Cycle	12-13
Freezing Cycle	14-15
Service Analysis	16-17
Exploded Views of Component Parts	
Control Box	18
Reservoir Assembly	19
3 Way Water Valve	20
Complete Unit (Less Case Front)	21
Complete Unit	22
Service Information	
Removal and Installation of Cabinet Parts	23
Removal and Replacement of Functional Parts	
Spray Bar	23
Sump Pump	23
Bin Thermostat	23
Cube Size Control	24
Motor Compressor	24
3 Way Valve	24
Functional Parts and Maintenance	25-26
Maintenance Instructions	27
Parts List	28

THIS PAGE
INTENTIONALLY
LEFT BLANK

THIS PAGE
INTENTIONALLY
LEFT BLANK

SCOTSMAN®

SUPER CUBER
SM-45
SERIES
Storage Type

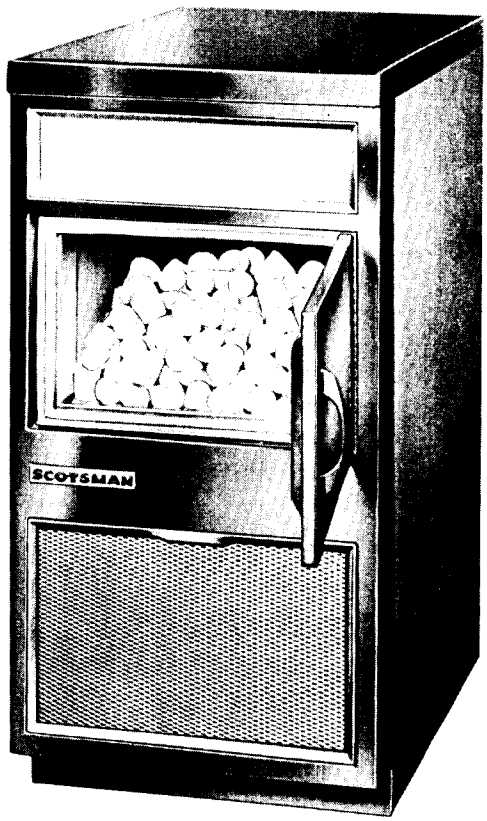

ice making capacity

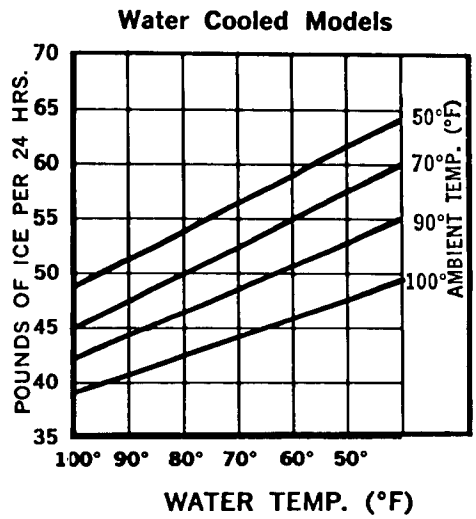

SPECIFICATIONS

Model SM-45WH

Daily capacity up to 50 lbs.
Self-contained 35 lb. capacity storage bin
Water cooled condenser
Heavy duty 1/4 HP. compressor
Standard 115 V, 60 cy, 1 ph, AC
¼" flare water inlet
⅝" OD condenser drain
Hammerloid grey exterior on sides
Removable top is 1 ¼" high—

Use for under counter installation
Stainless steel exterior front and top
Stainless steel storage bin

Height	36"
Width	18"
Depth	25"
Approximate shipping weight	175 lb.
Approximate net weight	155 lb.

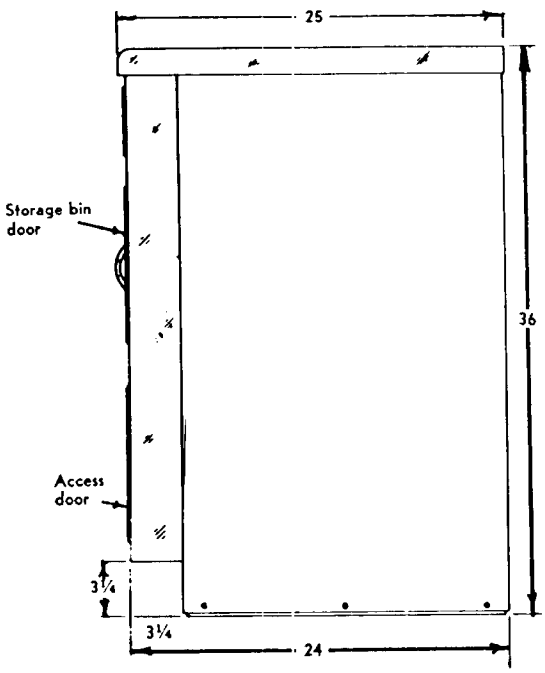

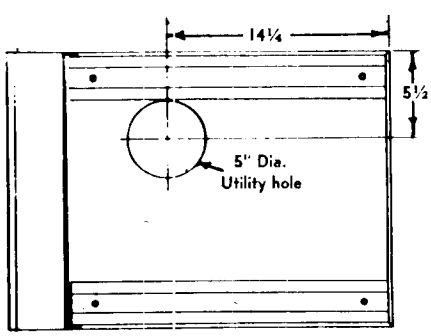

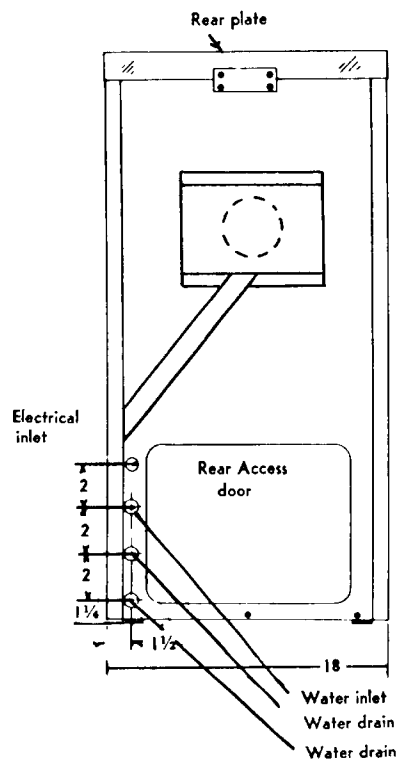

MECHANICAL SPECIFICATIONS

	Model SM 45W
Compressor	115/60/1, 1/4 H.P.
Condenser - Receiver	Water Cooled
Refrigerant	Refrigerant 12
Refrigerant Charge	16 ounces
Power Consumption Total	5.0 Amperes
Water Consumption to Produce Ice	5 Quarts per Hour
Water Used by the Condensing Unit	5 Gallons per Hour Inlet - Varies with Water Temperature.
Flow Control Rate - Water Inlet Line	.40 Gallons per Hour
Flow Control Rate - Defrost Valve	.25 Gallons per Minute.
Ice Cubes Per Harvest	24 Compact Cubes

DIMENSIONS	
Height	36"
Width	18"
Depth	25"

WEIGHTS	
Uncrated	155 lbs.
Crated	175 lbs.

SM-45
COMPLETE CASE ASSY.

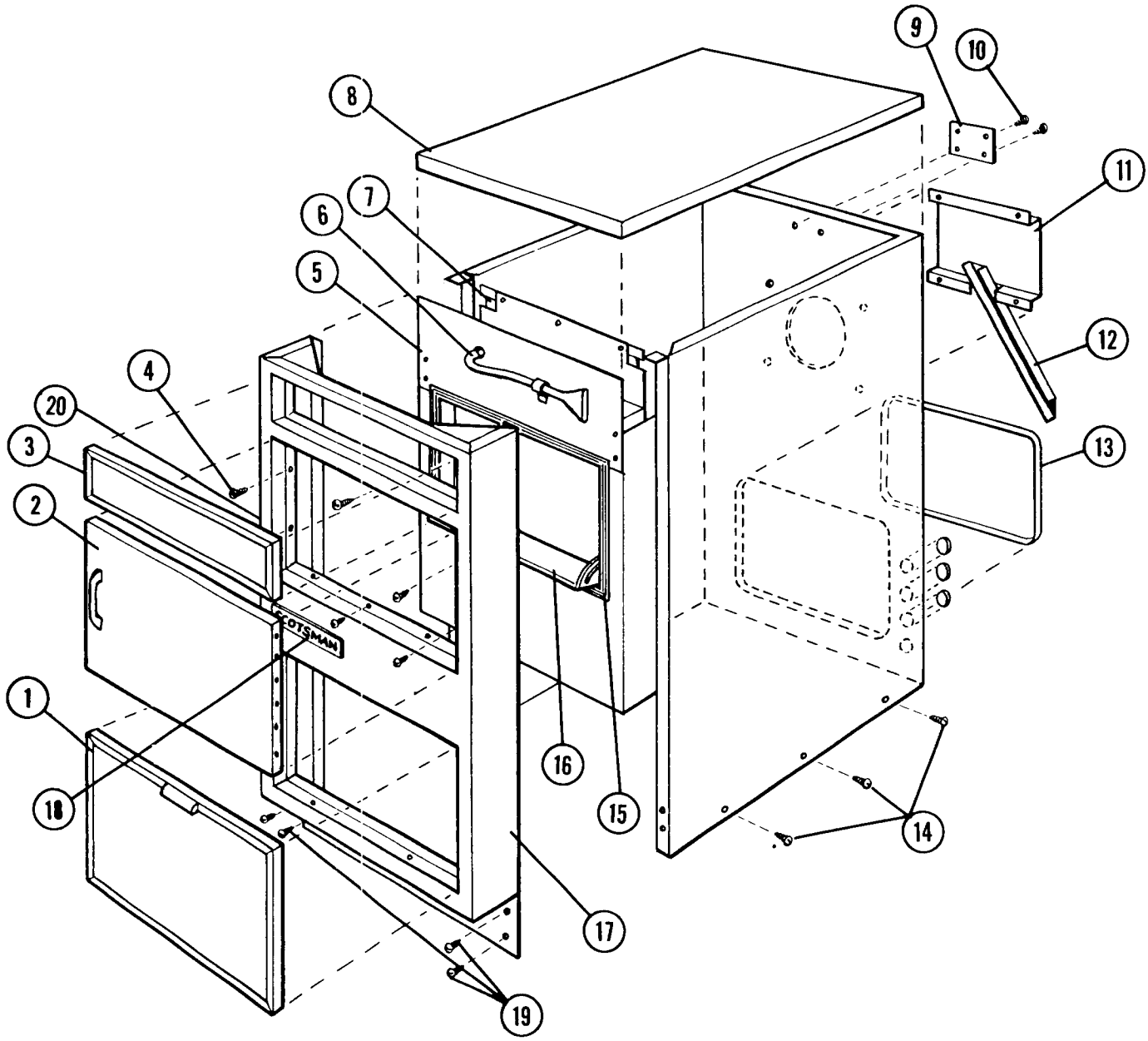

ITEM NO.	PART NO.	NAME	ITEM NO.	PART NO.	
1.	A-9456	Lower Door	11.	A-17980	Baffle
2.	A-17415	Access Door	12.	A-17982	Wire Raceway
3.	A-14993	Top Door	13.	A-7676	Rear Door
4.	3-633	Screws	14.	3-04	Screws
5.	A-14997	Top Front	15.	13-615	Door Gasket
6.	13-335	Funnel	16.	A-14999	Spill Door
7.	A-17153	Top Storage Front	17.	A-14996	Case Front
8.	A-9465	Cabinet Top	18.	15-156	Emblem
9.	A-9410	Top Clip	19.	3-753	Screws
10.	3-972	Screws	20.	A-10103	Door Strike

LOCATION OF THE ICE CUBE MACHINE

UNDER BAR INSTALLATIONS - Locate unit so proper circulation can be attained around the unit and behind it at least four inches. Provide plumbing and electrical connections so the unit can be moved out where the entire top hood can be removed.

STOREROOM INSTALLATIONS - Be sure storeroom is of adequate size and properly ventilated. A small, poorly ventilated room will greatly impair the efficiency of the unit. The storeroom must be kept above 50 degrees in the winter months.

BASEMENT INSTALLATIONS - Locate machine in the coolest place. Locate the machine in a dry place. Keep away from furnace and boiler room. Keep away from service chutes and runways, also coal or other dust of any kind. If the machine is set over a floor drain, block the machine up enough to eliminate any possible damage to the machine.

LOCATE THE MACHINE SO IT CAN BE SERVICED WHEN NECESSARY.

ALLOW AT LEAST FOUR INCHES OF SPACE AROUND THE MACHINE FOR

CIRCULATING AIR, WHERE POSSIBLE.

UNCRATING OF MACHINE

1. Remove shipping carton.
2. Remove four bolts in wood skid.
3. Remove skid and install four leveling legs, use skid bolts for legs.

PREPARATION FOR INSTALLATION

1. Inspect complete unit cabinetry for shipping damage. Notify carrier of concealed damage claims.
2. Remove all service doors and panels.
3. Remove all masking tape and packing members from curtains and inner cube making compartments. Re-align components such as sump pump or cube racks that may have shifted in transit.
4. Open electrical control box and prepare for hook up. Use knock outs, cord connectors, etc. Then check unit nameplate voltage against building source voltage to make sure they correspond. Caution - Improper voltage applied to units will void your warranty protection.
5. Select unit location prior to hook up of water, drain and electric in accordance with local and national codes, minimum room temperatures 50° Fahrenheit. On air cooled models select wall ventilation location.
6. Remove warranty card and Users manual from storage bin and wipe bin clean with damp cloth.
7. Fill out warranty card completely including model and serial numbers as taken from aluminum plate found behind front service panel and forward to Scotsman factory using self-mailing card.

INSTALLATION

WATER SUPPLY AND DRAIN CONNECTIONS

There are four knockouts located in back right hand corner. For electrical, drain, and water inlet see page 6.

1. Open bin door and remove lower service panel to facilitate following steps.
2. Remove packing and holding wires, all points visible around sump tank and masking tape on each of the two curtains.
3. Clean out the storage bin, check all refrigeration and control capillary lines for wear or vibration noise.

WATER SUPPLY

4. The recommended water supply line is 1/4" OD copper tubing. Connect to a cold water supply line with regular plumbing fittings. Use care in connecting up water line to the machine. Water supply must be installed to conform up with local code. One connection is made inside of cabinet for both make up water and condensor water. Strainer is factory installed on flexible water inlet line.

CONDENSER DRAIN

5. The recommended drain is 5/8" OD copper tubing. Connect to drain connections. Must be run to open or trapped drain. If drain is a long run, allow a 1/4" pitch per foot. Drain must be installed to conform with local code.

BIN DRAIN

6. 5/8" tygon tubing from bottom of bin protrudes into lower machine section. Run to open drain.
7. Turn on water supply and check for water leak at connections made.
8. SM 45 110-115 V. 60 Cycle Single Phase 5.0 Amps.
   All external wiring should conform with National Underwriters' and local code requirements. Check the voltage on the line before connecting the machine.

   Where possible, put the Super Cuber on it's own circuit and individual fuse. The maximum allowable voltage variation should not exceed 10% of the name-plate rating even under starting conditions. Low voltage can cause erratic operation, and may be responsible for serious damage to the overload switches and motor windings.

   Important: Now level up unit.

START-UP

1. Remove cover from control box, check for loose or frayed wire, then turn both manual switchs to "on" position.
2. Turn disc on time clock to the right just far enough for water solenoid valve to energize. Allow clock to take it through harvest cycle. This will be approximately three minutes. (Figures on dial do not represent minutes, merely points of indication.) Dial pointer should be set on 3 1/2. After the compressor starts, turn the dial completely around and send it through another harvest cycle. This will completely flush out machine of any dust that may have accumulated in shipment.
3. After machine has been properly flushed, allow it to go into a freezing cycle - check for possible water leaks, check sump pump operation - should be running freely. Also note if jet tubes spray correctly and that none of the jets are plugged.
4. Time clock dial does not rotate at the end of the harvest cycle; it is started later by the cube size control located in the control box.
5. Freezing time will be approximately 30 minutes in a 70 degree ambient. (Longer if above, and shorter if below.) After 25 minutes of the freezing cycle, check water off condenser with a thermometer. (Should be approximately 100-104 degrees at this time.) If temperature is not correct, adjust water valve accordingly.
6. Watch first cube harvest and check to make sure that plastic curtains have not been damaged in shipment.
7. Check size of cubes made; if too small after a second complete cycle, adjust cube size control to lower or colder setting until desired cube size is reached.
8. Check texture of cubes made: partially cloudy cubes throughout suggest unit running short of water near end of freezing, or possibly and extremely bad water condition, which would indicate use of filtering or purifying equipment. Contact SCOTSMAN - Queen Products, Ice Machine Service Department, Albert Lea, Minnesota, for further details.
9. With unit on harvest cycle, take a handful of cubes made and hold on storage bin thermostat cover. Should cut unit off in one to two minutes - remove ice: unit should cut back on automatically. Thermostat is factory set at 35 degrees out, 40 degrees in.
10. Install gauges and check head and back pressures: Head pressure after twenty minutes of freezing cycle at 70 degrees ambient will be approximately 135 pounds PSI. The back pressure starts out at approximately 50 pounds PSI and gradually pulls down to approximately 4 pounds PSI just before harvest cycle. Higher ambients will cause higher head pressures.

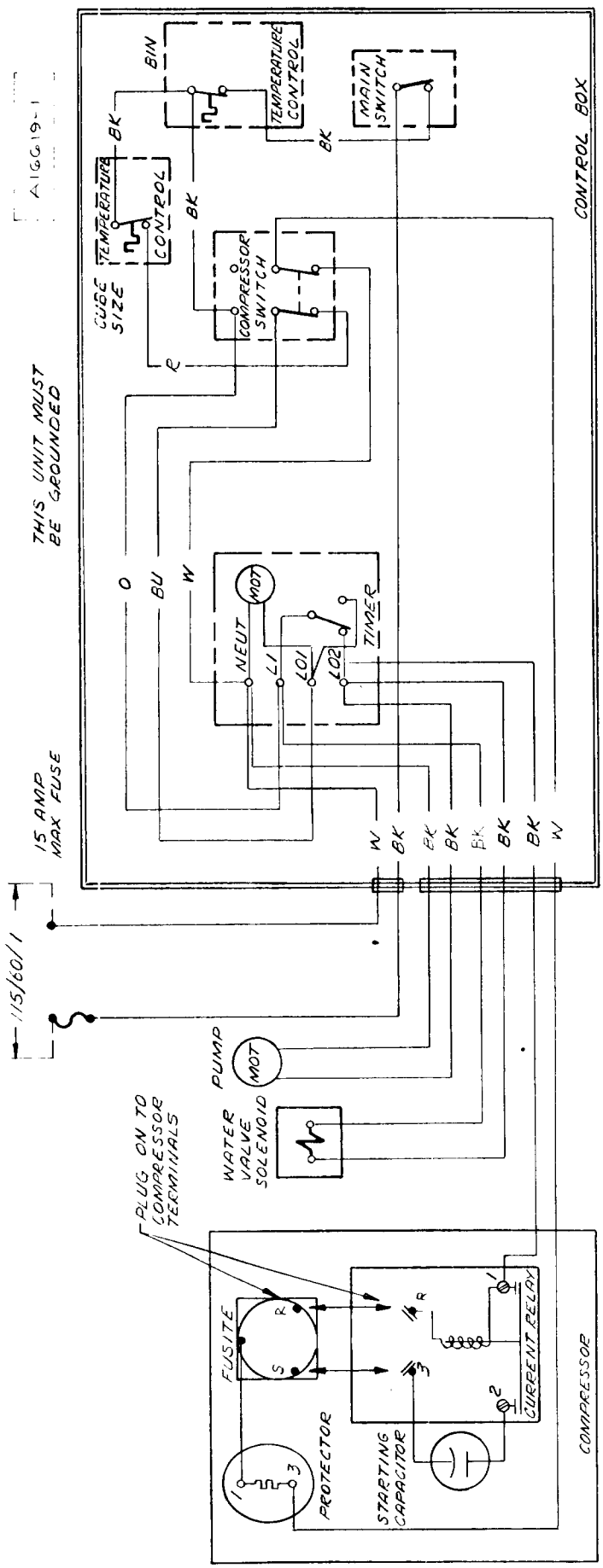

WIRING DIAGRAM

SM-45W WATER COOLED
115/60/1

FINAL CHECK LIST

1. Is the unit level? (IMPORTANT)
2. Have all electrical and piping connections been made?
3. Has the voltage been tested and checked against the nameplate rating?
4. Is the water supply valve open and the electric power on?
5. Is the unit clean?
6. Has the owner been given the operating manual, and has he been instructed on how to operate the machine?
7. Have the installation and warranty cards been filled out? This is the owner's protection as well as the sellers.
8. Check all refrigerant and conduit lines to guard against vibrations and possible failure.
9. Is there 4" clearance behind and around unit for proper air circulation?
10. Is unit in a room where ambient temperatures are minimum 50° F. even in winter months?

HOW IT WORKS

REFRIGERANT CYCLE

Following the water and refrigerant cycle on page 13, note that refrigerant gas is pumped out of the discharge line of the motor compressor and enters coil which is soldered externally to the water cooled condenser. From here our gas condenses to a liquid and enters a tee in the liquid line, thence thru a drier and directly into the capillary refrigerant control.

Refrigerant is now metered into the serpentine coils which are soldered to the cube cups on back and along sides and is taken back to compressor thru the suction and accumulator line.

HARVEST CYCLE

At the end of the freezing cycle the time clock operated cam opens compressor, sump pump circuit and closes circuit to time clock motor, and solenoid operated water valve. At this time, the water valve allows heated water in heat exchanger tank to flow by inlet water pressure through solenoid operated valve, and into the upper cavity of the freezing chamber, and, at the same time allows the surplus water from the preceding batch of ice cubes to go down the drain. The hot water from the heat exchanger flows into the rubber platen holding the cups and by conduction on back of cups causes cubes to defrost. The platen cavity is completely filled up to the overflow point, and continues to overflow while in the defrost cycle; the amount of this water running over the overflow pipe is controlled by the setting on the flow control and the length of harvest time setting on the time clock; overflow water goes down the drain also. Meanwhile, cubes being released from the cups drop by gravity into the cube chute, through curtained opening and into storage bin. At completion of harvest cycle, the micro switch on the timer shaft now drops points holding defrost components in cycle and switches to freezing cycle set of contacts. Clock motor now stops and will not start until cube size control closes once more. The freezing cycle starts and the water valve allows the hot water tank to refill. The chilled water from the upper cavity flows by gravity through the water valve to the sump tank and reservoir. This water is used to produce the next batch of cubes.

Note: A .25 G.P.M. flow control is located at the outlet of the 3 way water valve to meter the correct amount of water into the platen during the harvest. See page 13.

HARVEST CYCLE

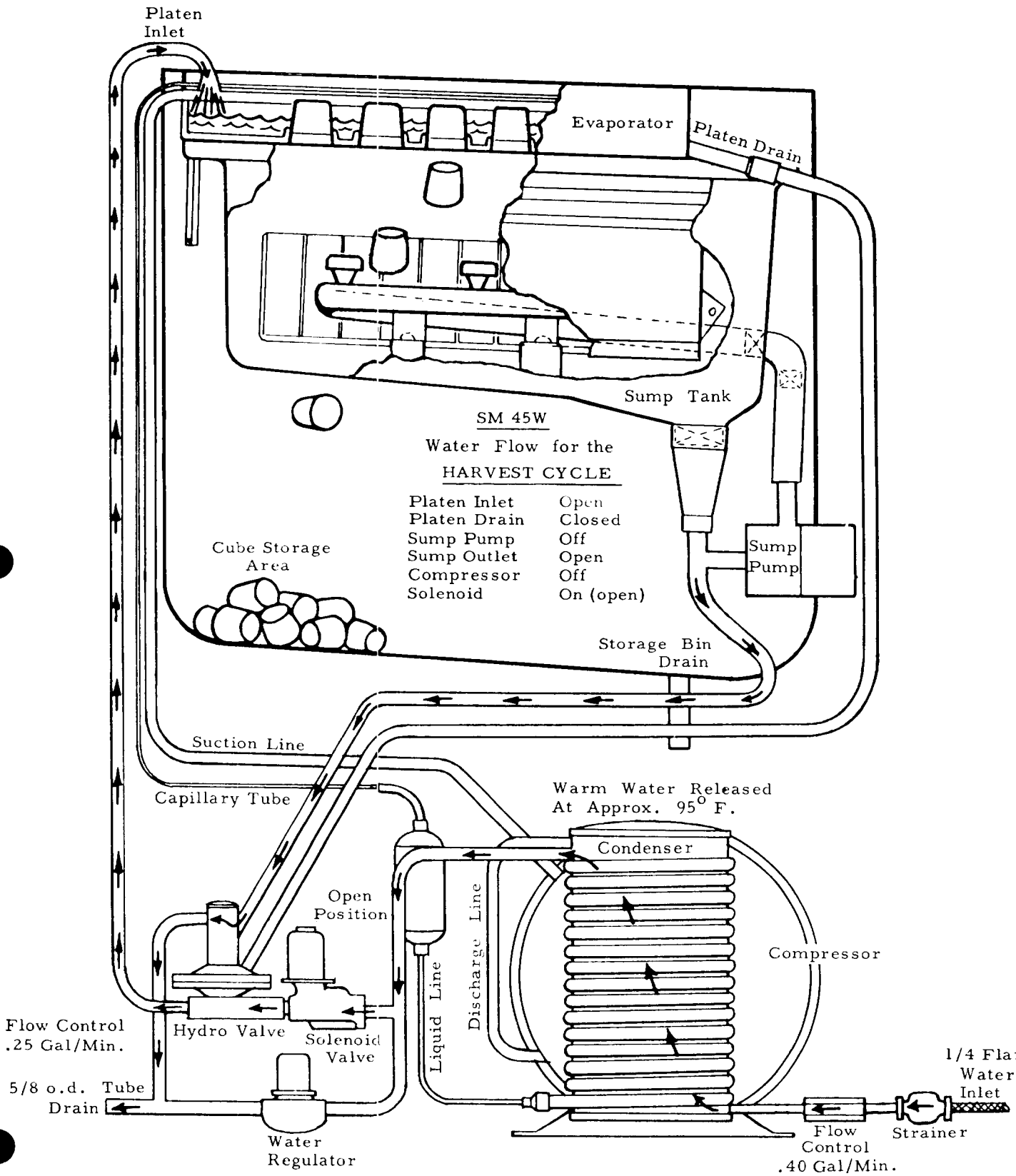

FREEZING CYCLE

During the freezing cycle, water is trapped in heat exchanger tank. Here it picks up heat from the compressor discharge line which is coiled and soldered externally to its outer circumference. A water regulating valve which is head pressure actuated is located in the outlet of the tank to maintain the water temperature.

A .40 Gallon per minute flow control is located in the water inlet line to assist the water regulator in modulating in extreme high water pressure conditions.

All water used by the cuber enters first thru the water supply inlet and goes directly into the condenser receiver. During a normal freezing cycle, water then goes to a tee to the water regulating valve which is on the leaving side of the condenser water circuit and down the drain. At the start of the freezing cycle, reservoir and sump tank contain enough water to make a complete batch of ice cubes, plus approximately an extra cup. When time clock closes load circuit, it starts the compressor, sump pump. At the same time, it opens the circuit to the clock motor. (Clock motor does not run first part of freezing cycle--this is approximately 20 minutes.) This timer has a single pole, double throw micro switch arrangement for carrying and directing current. After a predetermined amount of ice is frozen, the cube size or reverse acting temperature switch closes, actuating the time clock motor circuit which continues the freezing cycle approximately 9 more minutes. (After clock motor starts, freezing time will be 12 minutes less defrost time setting.)

Harvest water is used to produce the next batch of ice, therefore on the initial start up it is necessary to have the unit in a harvest cycle. This can be done by manually turning timer to harvest position.

FREEZING CYCLE

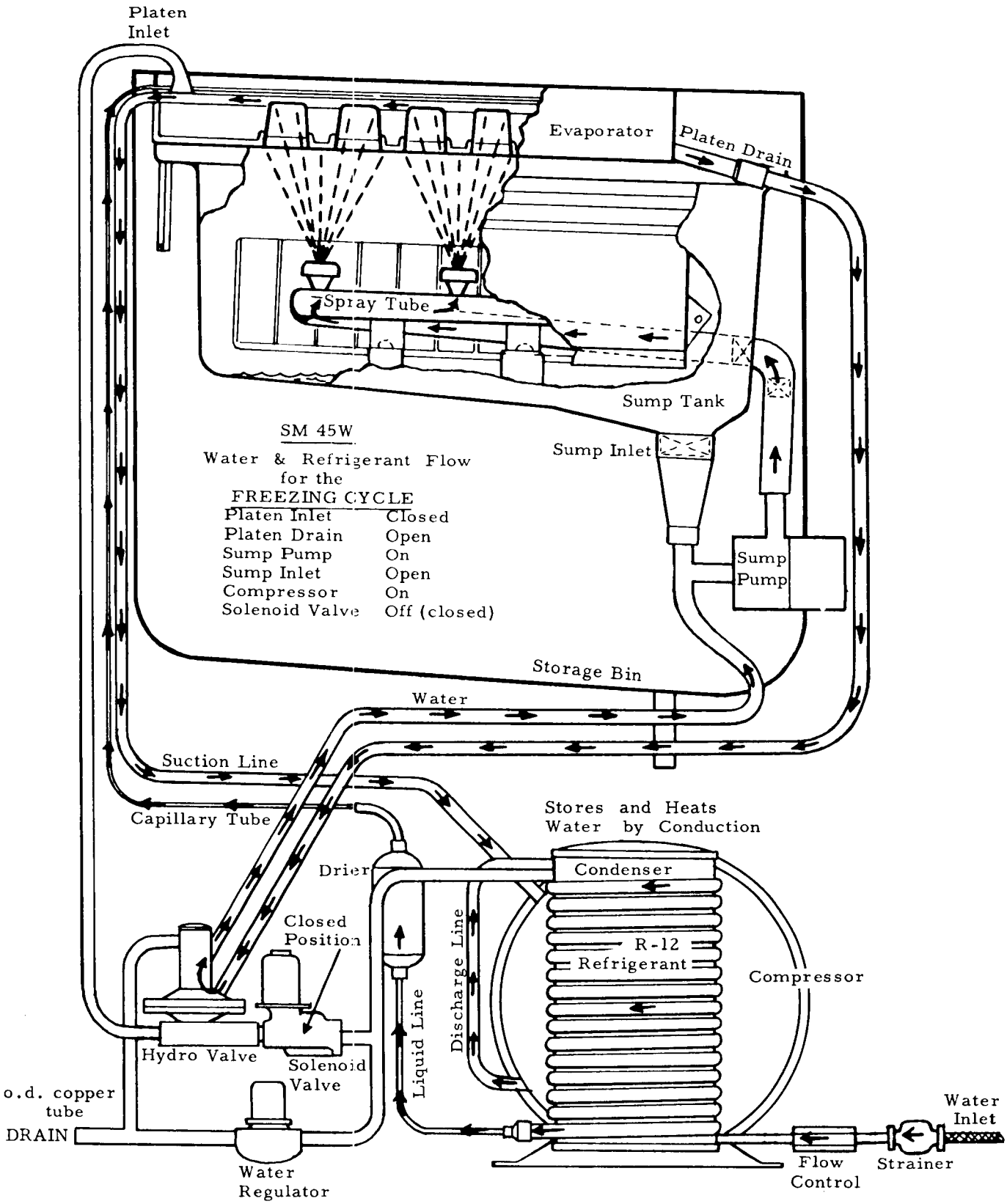

SM 45W

Water & Refrigerant Flow for the FREEZING CYCLE

Platen Inlet	Closed
Platen Drain	Open
Sump Pump	On
Sump Inlet	Open
Compressor	On
Solenoid Valve	Off (closed)

SERVICE ANALYSIS

SYMPTOM	POSSIBLE CAUSE	SUGGESTED CORRECTION
Unit will not run	Blown fuse	Replace fuse and check for cause of blown fuse.
	Bin thermostat set too high	Adjust thermostat. Set between 35 to 40 degrees.
	Switch in off position	Turn switch to on position.
	Inoperative master switch	Replace switch.
	Timer micro-switch open	Replace.
Compressor cycles intermittently	Low voltage	Check circuit for overloading. Check voltage at the supply to the building. If low, contact the power company.
	Dirty condenser - Air cooled models only	Clean with vacuum cleaner, air or stiff brush. (Do NOT use wire brush).
	Air circulation blocked	Allow sufficient air space all around unit.
	Non-condensable gases in system.	Purge the system.
Cubes too small	Cube size control set too high	Lower the setting. Turn towards colder.
	Partially restricted capillary	Blow charge, add new gas and drier.
	Moisture in system	Replace the dryer.
	Shortage of water	See remedies for Shortage of Water.
	Shortage of refrigerant	Check for leaks and recharge.
Cloudy cubes	Shortage of water	See remedies for Shortage of Water.
	Dirty water supply	Use water softener or water filter.
	Accumulated impurities	Use SCOTSMAN Ice Machine Cleaner.
Poor harvest	Too short defrost time	Check and adjust harvest cycle. Timer should be set at 3 1/2.
	Water temperature too low	Temperature of the water in hot water tank too low. Should be between 100-105 degrees. Reset water regulating valve.
	Restriction in incoming water	Check water feed line strainer. Clean to give greater water flow.
		Flow control plugged up.
	Solenoid control not opening the water valve	Solenoid binding or burned out. Replace, also check flow control orifice.
	Air vent holes in upper cube cups plugged	Clean out holes.

SERVICE ANALYSIS

SYMPTOM	POSSIBLE CAUSE	SUGGESTED CORRECTION
Shortage of water	Water spraying out through curtains	Replace broken curtains if any broken
	Water entering hot water tank too slowly	Building pressure too low
		Partial restriction in water strainer
		Clean strainer
Irregular size cubes and some cloudy	Some jets plugged	Clean jets
	Shortage of water	See shortage of water
	Unit not leveled	Water overflowing air vent holes on low side burning cubes. Level as required.
	Sump pump motor binding	Replace.
Cubes too large	Cube size control set too low	Raise setting on cube size control.
	Inefficient compressor	Replace
	Timer micro-switch stuck together.	Replace micro-switch only.
Decreased Ice Capacity	Leaky water valve	Replace or repair
	High head pressure	Dirty condenser. Clean.
		Non-Condensable gas in the system: purge the system. Too hot a location with poor circulation: relocate the unit, or provide for ventilation by cutting openings.
		Overcharge of refrigerant. Correct the charge.
	Partially restricted cap tube	Purge and replace charge and drier.
Hole washed inside cube	Water over the top of the cube cups during harvest	Level unit.

SM-45H CONTROL BOX

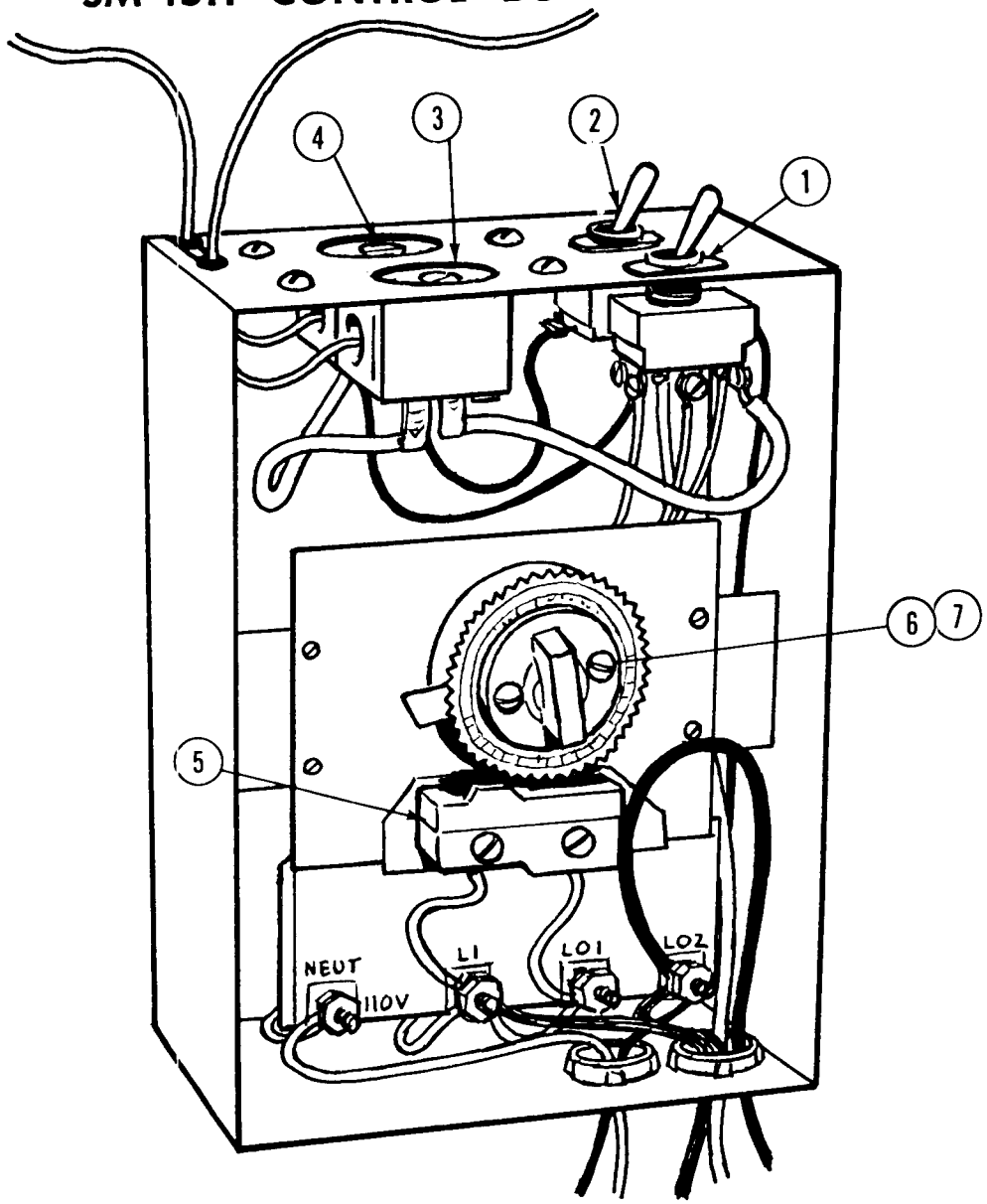

ITEM NO.	PART NO.	NAME
1	12-1214	Compressor Switch
2	12-426	Main Switch
3	11-345	Cube Size Control
4	11-311	Bin Control
5	12-645-20	Timer Micro Switch
6	12-645-1	Complete Timer
7	12-367	Timer Motor only

RESERVOIR ASSY SM-45H

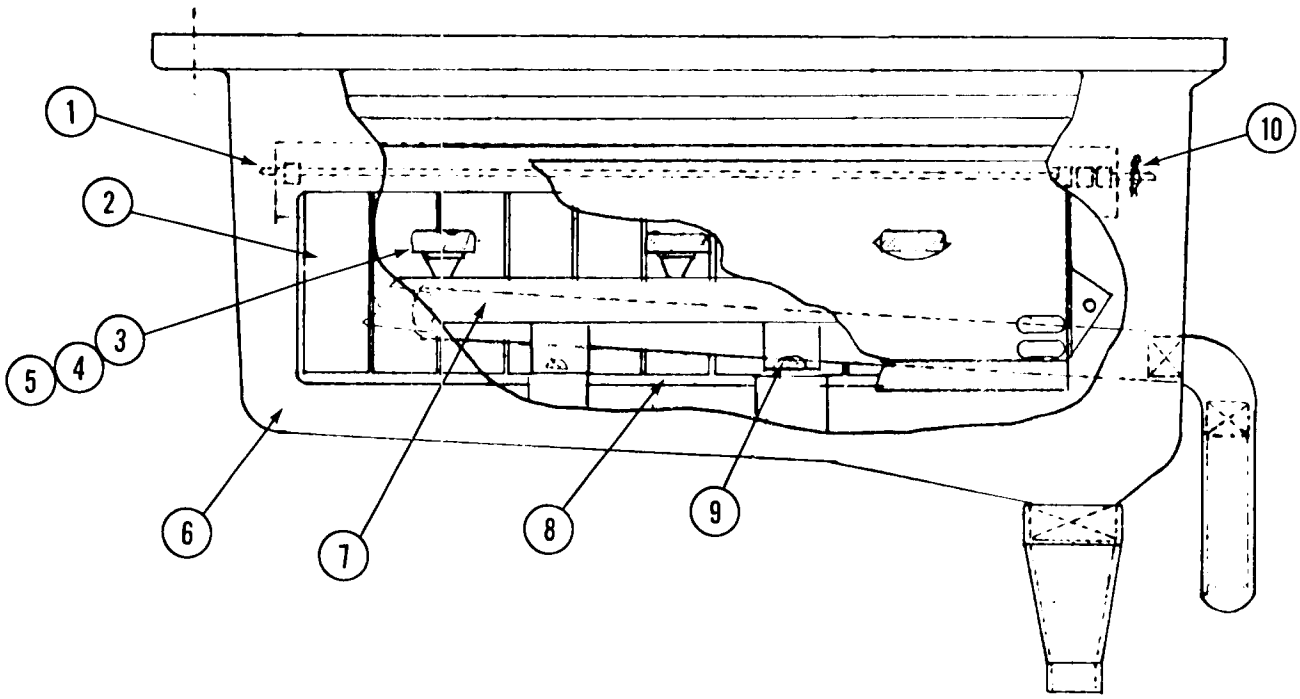

Item No.	Part No.	Name
1.	A-17968	Curtain Rod
2.	2-465	Curtains (22 Per Unit)
3.	13-292	Jet Caps, Rubber
4.		6 required
4.	A-12345	Jet Top 6 required
5.	A-9543	Spinners 6 required
6.	A-17967	Sump Tank (includes Curtains)
7.	A-16991	Spray Bar Ass'y
8.	A-15440	Cube Chute
9.	3-551	Screws 3 required
10.	3-1087	Cotter Pin

SILENT 3WAY VALVE
Used Thru "H" Models

Item No.	Part No.	Name
1	A-12376	Cap Assy
2	2-1170	"O" Ring
3	2-418	Spring
4	2-1312	"O" Ring
5	A-12372	Plunger
6	2-1171	Catch
7	3-224	Screws "6" Reqd.
8	A-12368	Valve Top Assy
* 9	13-345	Diaphragm
10	12-621-25	Flow Control only
11	A-12373	Valve Base Assy
12	12-621-1	Solenoid Valve w/flow control
13	16-282	Tee
14	A-12367	Valve Complete (less Solenoid a/fittings)

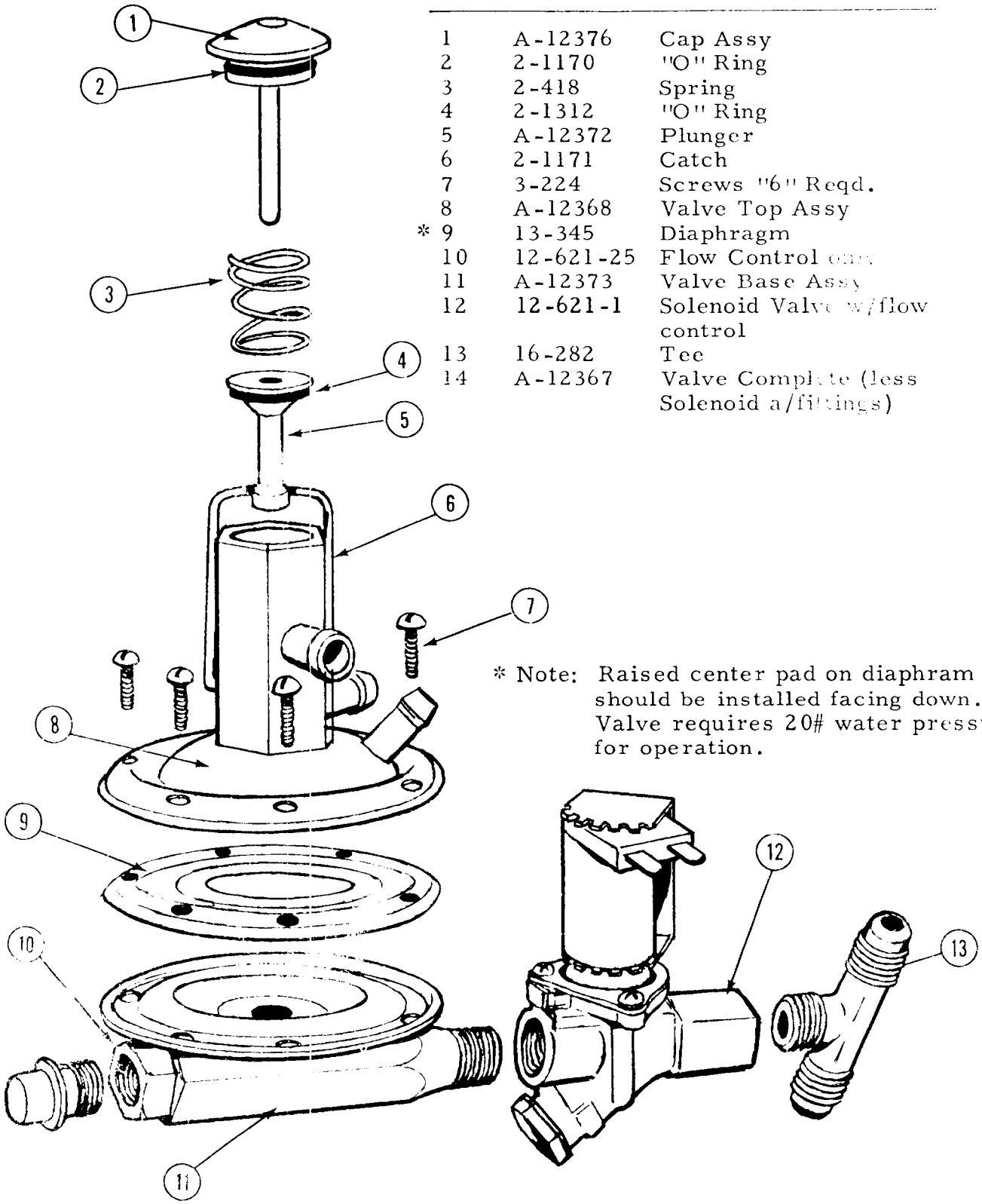

* Note: Raised center pad on diaphram should be installed facing down. Valve requires 20# water pressure for operation.

SM-45H LESS FRONT

Front View

Right Side Cutaway View

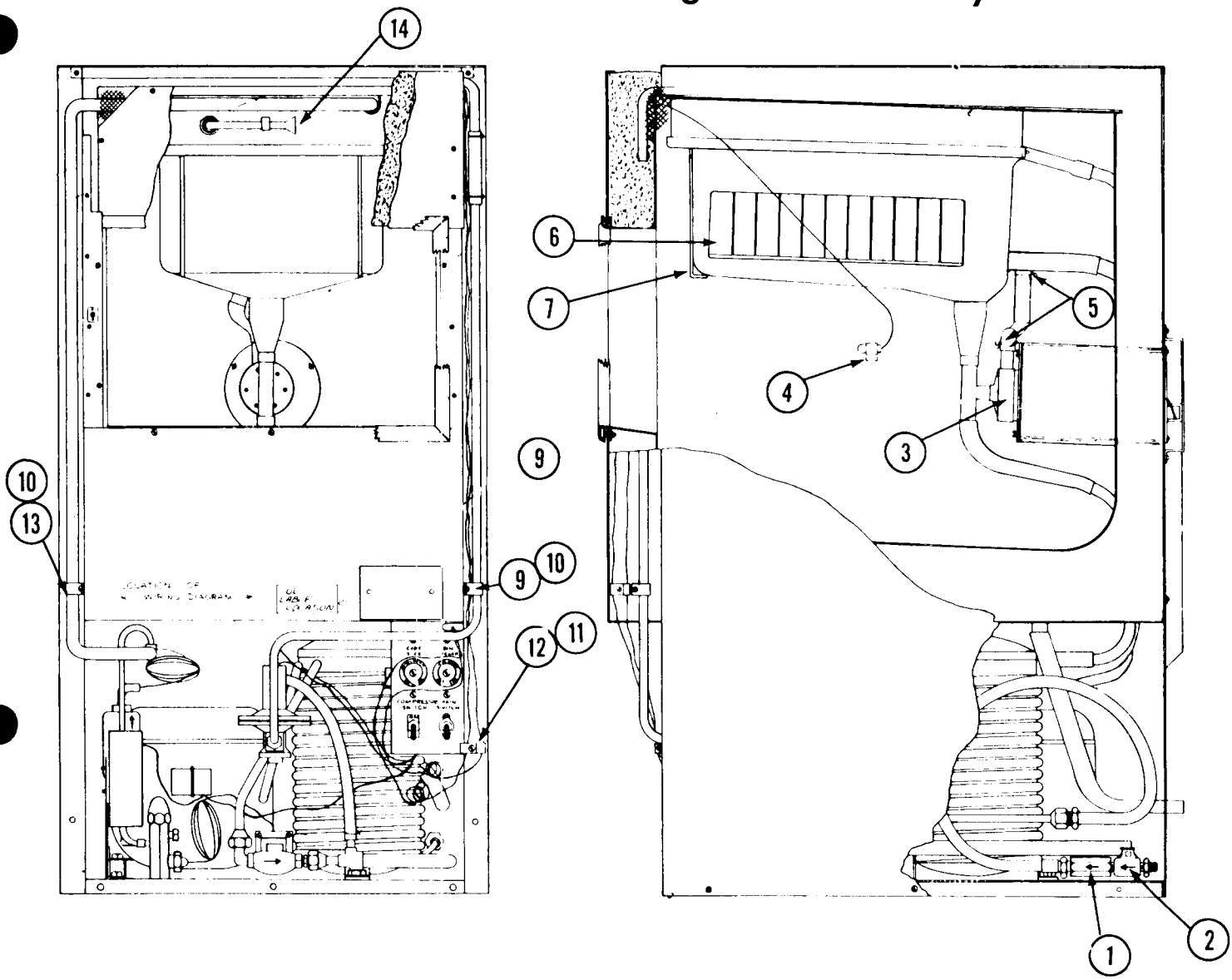

Item No.	Part No.	Name
1	A-13346-4	Flow Control
2	16-162	Strainer
3	12-1379-1	Sump Pump
4	13-398	Bulb Grommet
5	2-534-1	Clamps
6	A-17251	Sump Tank Assy
7	A-12354	Extension Nuts
8	13-615	Door Gasket
9	2-1299	Clamp
10	3-129	Screw
11	2-1306	Clamp
12	3-128	Screw
13	2-1092	Clamp
14	13-335	Funnel

SM-45H COMPLETE UNIT

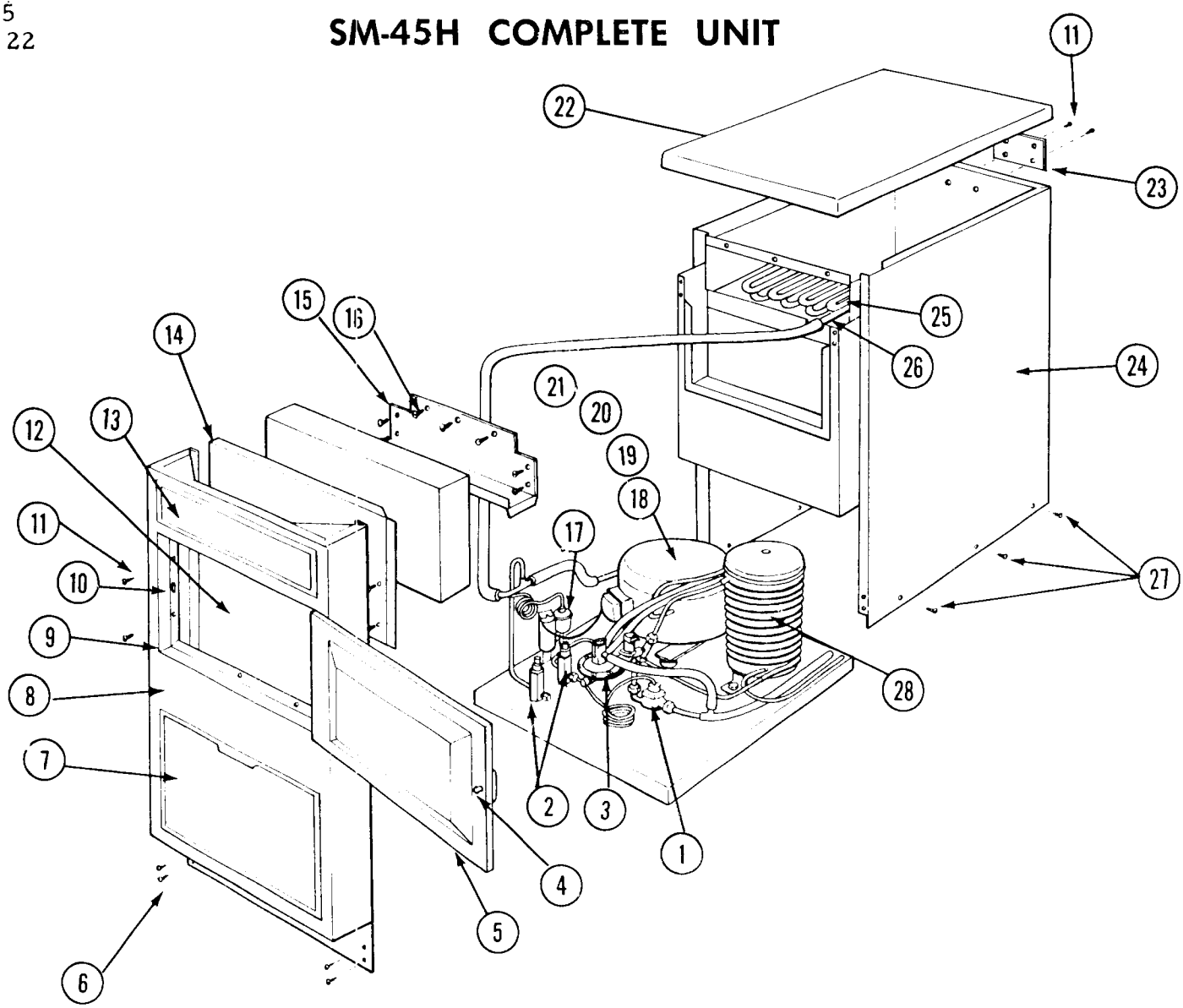

Item No.	Part No.	Name
1	11-314	Water Reg. Valve
2	18-138	Service Valve
3	A-12367	3Way Valve
4	A-10103	Door Strike
5	A-17415	Door Assembly
6	3-753	Screws
7	A-9456	Lower Door
8	A-14996	Case Door
9	13-615	Door Gasket
10	2-836	Door Catch
11	3-124	Screw
12	A-14999	Spill Door *
13	A-14993	Top Door
14	A-14997	Top Front

Item No.	Part No.	Name
15	A-17153	Top Front Storage
16	3-972	Screws
17	2-831	Drier
18	18-1200-1	Compressor
19	18-1206	Relay
20	18-1207	Capacitor
21	18-1210	Overload
22	A-9465	Cabinet Top
23	A-9410	Top Clip
24	A-17041	Cabinet Assy
25	A-17276	Evaporator Assy
26	13-291	Rubber Cup Holder
27	3-04	Screws
28	A-18554	Condenser

* Not Shown

SERVICE-COMPLETE UNIT

Removal and Installation of Cabinet Parts

CABINET TOP (HOOD)

1. To remove cabinet top, it is first necessary to remove two rear plate screws. See page 6.
2. After screws are removed, pull top forward until side clips are free.
3. Lift off hood.

CABINET LOWER SERVICE DOOR

1. Front door pulls out, pull out and up.

ICE STORAGE DOOR

1. Remove pin thru center of hinge.
2. Door now is free-lift off.

CABINET FRONT

1. Remove top (hood).
2. See cabinet panel assembly layout drawing on page 6.
3. Remove all screws at bottom and sides of ice storage door frame.
4. Remove four screws at bottom front under lip or 90 degree edge.
5. Front will now lift out.

REMOVAL AND REPLACEMENT OF FUNCTIONAL PARTS

In order to work on the spray bar, it will be necessary to work from the front of the cabinet. This work can be done thru the storage bin door.

Spray bar is located inside of plastic sump tank. To remove tank first disconnect all hose connections to tank and two plated extension nuts located in front of sump tank. See page 21, item 7. Now lower front of tank until it clears stainless steel freezer frame. Push tank lightly forward until it drops off pins protruding from back of freezer frame.

TO REMOVE SUMP PUMP- See page 21, item 3.

1. Disconnect complete unit electrically. Remove lower front access door, cover from control box, and disconnect pump leads from timer.
2. On back of case remove covers from pump motor well and wire protector.
3. Thru front ice access door remove 3 wing bolts and pump assembly can now be removed.
4. Replace in reverse being sure that rubber gasket is put on new pump.

TO REMOVE BIN THERMOSTAT

Study first page 6 "Complete Unit". It will be necessary to remove cabinet front before removing bin thermostat.

Now remove control box cover and then loosen two screws holding bin thermostat to front control box. This will loosen control, pull down and remove two electrical connections.

Next, up in storage bin on the left side wall is a clip holding end of bin thermal bulb, pull out thermal bulb and its capillary away from cabinet.

Replace in reverse order.

TO REPLACE CUBE SIZE CONTROL

First study Page 6 "Complete Unit". It will be necessary to remove cabinet front, top front, and top front storage before removing cube size control. Now remove screw in front of freezer frame, allowing frame to slide forward to release pigtail on cappilary tube. Remove cover from control box, loosen two screws holding control, and remove electrical connection.

Replace in reverse.

FUNCTIONAL PARTS - BASE COMPARTMENT

Functional parts in the base compartment would consist of the motor compressor, compressor relay, water regulating valve, complete solenoid valve and manual on-off switch. All of these parts with the exception of the motor compressor can be worked on by merely removing lower service door.

TO REPLACE MOTOR COMPRESSOR

First remove front panels. Now remove 3 screws on either side of cabinet base.

Pull assembly out to expose motor compressor. Pump unit down, then purge off excess refrigerant. Remove electrical relay from clamp holder. This relay is manually pushed on over compressor terminals, pull off the same way.

Now loosen the four bolts holding the compressor to base and lift out. Replace with new compressor in reverse of above.

SILENT 3-WAY WATER VALVE

Working parts of valve can be replaced without removing complete valve from unit. By removing 6 screws, (Item no. 7, page 20) complete top of valve including diaphram can be removed. Plunger, "O" Rings, return spring, or diaphram can now be replaced.

Complete valve and solenoid can be removed by disconnecting 3 flare nut connections and unpluging electrical cord.

FUNCTIONAL PARTS AND MAINTENANCE

PART NAME: Reverse Acting Temperature Control Ranco Type A 11-377

NUMBER: 11-345

FUNCTION: Reverse acting temperature control, closes on temperature decrease, opens on temperature rise. Control determines length of freezing cycle and by the same token, the cube size. A lower setting on control will produce larger cubes, a higher setting, smaller cubes. This control actuates time clock motor. Part No. 12-645-1, which then takes over balance of freezing cycle and also defrost period.

SETTING: Control is adjustable with a screw driver on an offset cam.

REPAIRABLE: No. Replace when inoperative.

MAINTENANCE: Check electrical connections. Blow free of dust, dirt, lint etc.

PART NAME: Timer

NUMBER: 12-645-1

FUNCTION: Heart of the cyclematic control system is the temperature control Part No. 11-345 and the time clock it actuates. All electrical components are connected to the time clock terminal board and are shunted by means of a single pole double throw micro-switch arrangement to either the freezing cycle or harvest cycle. Contact points are in turn actuated by two metal cams that are directly connected to the electrical time clock motor. Timer has a 12 minute cycle, 8 1/2 minutes on freezing cycle after being cut on by temperature control and 3 1/2 minutes on defrost cycle. Time clock face has numerals to 7 on half of face. Each numeral represents a one minute period. Face also has a lever beneath it which can be moved to lengthen or shorten defrost period.

SETTING: Normal setting for defrost is 3 1/2 minutes.

REPAIRABLE: Yes. Micro-switch, Part No. 12-645-20 are replaceable as well as timer clock motor only, Part No. 12-367.

MAINTENANCE: Check all electrical connections, blow contact points free of dust, dirt, etc.

PART NAME: Bin Thermostat Ranco Type A-10-2012

PART NUMBER: 11-311

FUNCTION: To automatically cut unit off when cubes in bin reach control capillary location and start up again automatically when cubes removed.

SETTING: Factory set - In 40° - Out 35° - There is adjustabe dial on face, colder turn to right -54" capillary.

REPAIRABLE: No.

MAINTENANCE: None.

PART NAME:	Water regulating valve - H. & H. "Little Giant".
PART NUMBER:	11-314
FUNCTION:	To maintain constant head pressures by regulating amounts of incoming water thru water cooled condenser.
SETTING:	135 pounds P.S.I. on head pressure gauge and about 104° leaving water off condenser.
REPAIRABLE:	No - you can flush out however.
MAINTENANCE:	None.
PART NAME:	Complete water solenoid Detroit Controls Type TAH 8161 S-25
PART NUMBER:	12-621-1
FUNCTION:	Passes measured amount of defrost water to freezer during harvest cycle - stops flow during freezing cycle.
SETTING:	Factory Set - Pass 1/4 gallon per minute.
REPAIRABLE:	No.
MAINTENANCE:	None.
PART NAME:	Sump pump March AC-82-T (115-60)
PART NUMBER:	~~12-1379-1~~ A23194-000
FUNCTION:	To continuously re-circulate water from sump tank, thru stationery jets, up into bottom of cube cups.
SETTING:	None required.
REPAIRABLE:	No.
MAINTENANCE:	None.
PART NAME:	Hermetic Motor Compressor [illegible]/1 - Copeland 1/4 H.P.
PART NUMBER:	18-1200-1
FUNCTION:	Circulates and retrieves refrigerant throughout entire system.
SETTING:	None required.
REPAIRABLE:	No.
MAINTENANCE:	Keep clean and free of dust, grease, etc.

CUBER MAINTENANCE INSTRUCTIONS

THE FOLLOWING MAINTENANCE MUST BE ACCOMPLISHED TWO TIMES PER YEAR ON ALL SCOTSMAN SUPER CUBERS.

1. Clean water tank and evaporator, sump tank and screen, using SCOTSMAN ice Machine Cleaner.
2. Remove jet tube and manually clean jets by dismantalling same.
3. Check curtain assembly.
4. Tighten all electrical connections.
5. Tighten all bolts.
6. Check water supply. Clean water strainer.
7. Check for refrigeration leaks with halide torch.
8. Check for water leaks. Tighten drain line connections.
9. Check size and condition of cubes. Adjust as required.
10. Check bin thermostat setting. Factory set at approximately 35° out, 39° in.

PROCEDURE FOR USE OF SCOTSMAN ICE MACHINE CLEANER IN SCOTSMAN ICE MACHINES.

1. Place COMPRESSOR SWITCH to 'OFF'.
2. Remove ice cubes from storage bin.
3. Mix 8 ounces of SCOTSMAN CLEANER in a quart of hot water. Pour this solution through rubber funnel. See page 6
4. Rotate TIMER knob clockwise (toward you) until you hear the sound of running water.
5. Allow unit to operate for at least 45 minutes.
6. Mix 1 ounce of SCOTSMAN CLEANER in a pint of hot water. Wash all surfaces in storage bin. Thoroughly rinse all surfaces of bin with clean water.
7. Place COMPRESSOR SWITCH to 'ON'. Unit is in normal operation.

SM-45 H PARTS LIST

Main Control Box

Part No.	Name
12-1214	Compressor Switch
12-426	Main Switch
11-345	Cube Size Control
11-311	Bin Control
12-645-1	Timer
12-645-20	Micro-switch Timer
12-367	Timer Motor

Silent 3 Way Water Valve

A-12367	Complete Valve
A-12376	Cap Assembly
2-1170	"O" Ring
2-418	Spring
2-1312	"O" Ring
A-12372	Plunger
2-1171	Catch
3-224	Screws
A-12368	Valve Top Ass'y.
13-345	Diaphram
A-12373	Valve Base Ass'y.

Case Parts

A-9465	Cabinet Top
A-17415	Ice Access Door
A-10103	Door Strike
A-9456	Lower Door
A-14996	Case Front
A-14999	Spill Door
A-14993	Top Door

Reservoir Assembly

A-17967	Sump Tank (Includes Curtains)
A-17968	Curtain Rods (2 reqd.)
2-465	Curtains (22 reqd.)
A-16991	Spray Bar
13-292	Jet Caps (Rubber-6 reqd)
A-12345	Jet Top (6 reqd.)
A-9543	Spinners (6 reqd.)
A-15440	Cube Chutes
3-1087	Cotter Pin (curtain)

Misc. Electrical

Part No.	Name
12-1379-1	Sump pump
18-1200-1	Compressor
18-1206	Relay
18-1207	Capacitor
12-621-1	Solenoid Valve (with flow control)
12-621-25	Flow Control Only 25 G.P.M.

Misc. Parts

16-162	Strainer
A-13346-4	Flow Control (.40 G.P.M.)
13-398	Bulb Grommet
A-12354	Extension Nuts
2-1299	Clamp
13-615	Door Gasket
13-335	Funnel
11-314	Water Regulating Valve
18-138	Service Valve
2-831	Drier
A-17276	Evaporator Ass'y.
13-291	Rubber Cup Holder
A-18554	Condensor

TABLE OF CONTENTS
SM 45J

Foreword	1
Table of Contents	2
Photograph and Ice Making Capacity	3
Specifications and Dimensions	4-5
Installation Practice	6
Selecting Location	
Location	7
Uncrating Machine	7
Preparation for Installation	8
Installation	9
Water Supply	9
Drains	9
Start Up	10
Final Check List	11
Wiring Diagram 115/60/1	12
How It Works - Introduction	13
Water Cycles	
Harvest Cycle	14
Freezing Cycle	15
Condenser Circuit	16
Refrigerant Cycles	
Freezing Cycle	17
Harvest Cycle	18
Service Information	
Functional Parts and Maintenance	19-20
Removal and Replacement of Functional Parts	21-22
Parts Views - Drawings	
Reservoir	23
Cabinet - Chassis	24
Case Assembly	25
Complete Unit	26
Condensing Unit	27
Sump Pump	28
Service Analysis	29-30
Maintenance	31
Parts List	32

THIS PAGE
INTENTIONALLY
LEFT BLANK

THIS PAGE
INTENTIONALLY
LEFT BLANK

SCOTSMAN®

SUPER CUBER
SM-45
SERIES
Storage Type

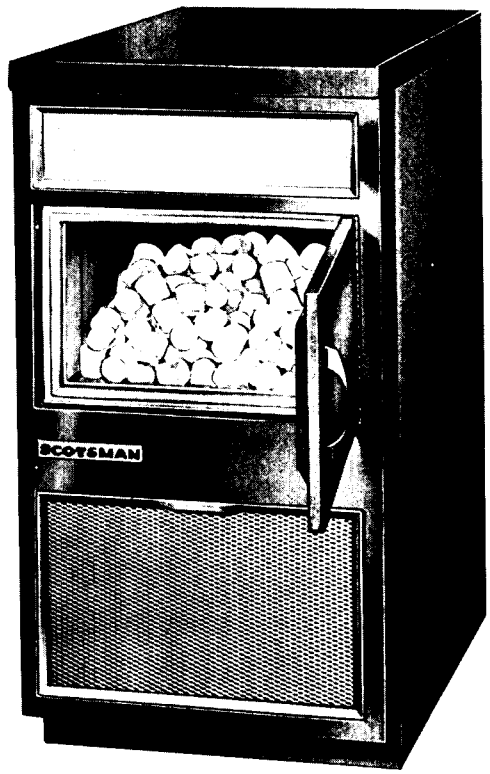

ice making capacity

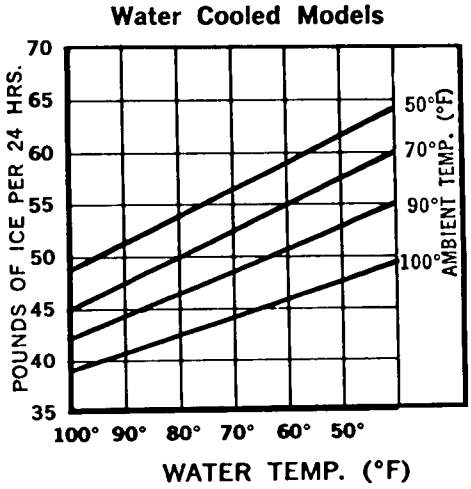

SCOTSMAN®

SUPER CUBER
SM-45
SERIES
Storage Type

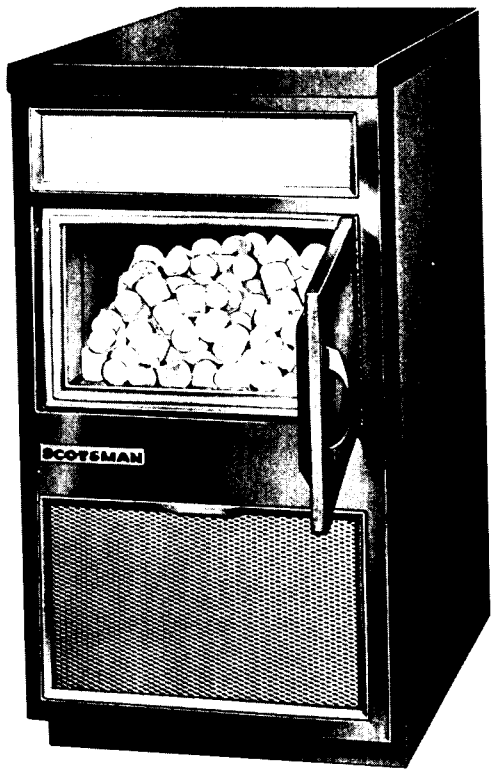

ice making capacity

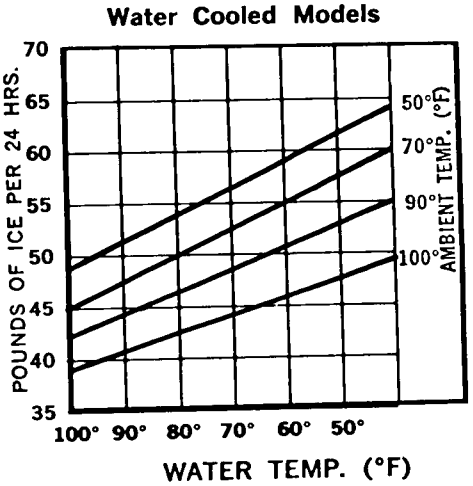

MECHANICAL SPECIFICATIONS

	Model SM 45 J
Compressor	115/60/1, 1/4 H.P.
Condenser - Receiver	Water Cooled
Refrigerant	Refrigerant 12
Refrigerant Charge	16 ounces
Power Consumption Total	5.0 Amperes
Water Consumption to Produce Ice	5 Quarts per Hour
Water Used by the Condensing Unit	5 Gallons per Hour Inlet - Varies with Water Temperature.
Flow Control Rate - Water Inlet Line	.40 Gallons per Hour
Flow Control Rate - Defrost Valve	.25 Gallons per Minute.
Ice Cubes Per Harvest	24 Compact Cubes
DIMENSIONS	
Height	36"
Width	18"
Depth	25"
WEIGHTS	
Uncrated	155 lbs.
Crated	160 lbs.

INSTALLATION PRACTICE

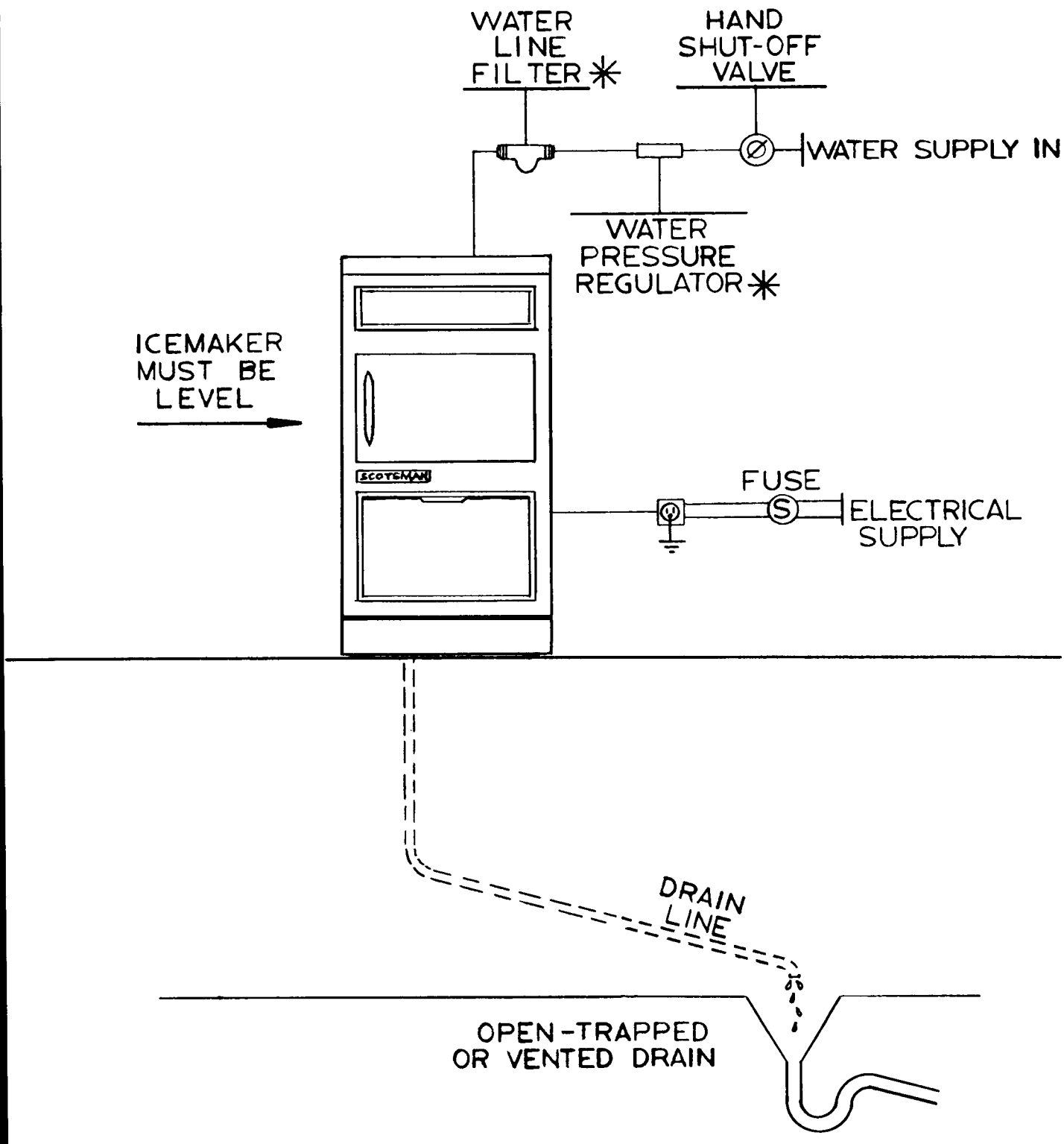

* REGULATOR AND FILTER ARE ACCESSORY ITEMS TO BE INSTALLED AS CONDITIONS WARRANT

LOCATION OF THE ICE CUBE MACHINE

UNDER BAR INSTALLATIONS - Locate unit so proper circulation can be attained around the unit and behind it at least four inches. Provide plumbing and electrical connections so the unit can be moved out for service if necessary.

STOREROOM INSTALLATIONS - Be sure storeroom is of adequate size and properly ventilated. A small, poorly ventilated room will greatly impair the efficiency of the unit. The storeroom must be kept above 50 degrees in the winter months.

BASEMENT INSTALLATIONS - Locate machine in the coolest place. Locate the machine in a dry place. Keep away from furnace and boiler room. Keep away from service chutes and runways, also coal or other dust of any kind. If the machine is set over a floor drain, block the machine up enough to eliminate any possible damage to the machine.

LOCATE THE MACHINE SO IT CAN BE SERVICED WHEN NECESSARY.

ALLOW AT LEAST FOUR INCHES OF SPACE AROUND THE MACHINE FOR

CIRCULATING AIR.

UNCRATING OF MACHINE

1. Remove shipping carton.
2. Remove bolts in wood skid.
3. Remove skid, check sealing gasket on base.

PREPARATION FOR INSTALLATION

1. Inspect complete unit cabinetry for shipping damage. Notify carrier of concealed damage claims.
2. Remove all service doors and panels.
3. Remove all masking tape and packing members from curtains and inner cube making compartments. Re-align components such as sump pump or cube racks that may have shifted in transit.
4. Open electrical control box and prepare for hook up. Use knock outs, cord connectors, etc. Then check unit nameplate voltage against building source voltage to make sure they correspond. Caution - Improper voltage applied to units will void your warranty protection.
5. Select unit location prior to hook up of water, drain and electric in accordance with local and national codes, minimum room temperatures 50° Fahrenheit. Maximum room 100° Fahrenheit.
6. Remove warranty card and Users manual from storage bin and wipe bin clean with damp cloth.
7. Fill out warranty card completely including model and serial numbers as taken from aluminum plate found behind front service panel and forward to Scotsman factory using self-mailing card.

INSTALLATION

WATER SUPPLY AND DRAIN CONNECTIONS

There are four knockouts located in back right hand corner. For electrical, drain, and water inlet see page 4.

1. Open bin door and remove lower service panel to facilitate following steps.
2. Remove packing and holding wires, all points visible around sump tank and masking tape on each of the two curtains.
3. Clean out the storage bin, check all refrigeration and control capillary lines for wear or vibration noise.

WATER SUPPLY

4. The recommended water supply line is 1/4" OD copper tubing. Connect to a cold water supply line with regular plumbing fittings. Use care in connecting up water line to the machine. Water supply must be installed to conform with local code. One connection is made inside of cabinet for both make up water and condensor water. Strainer is factory installed on flexible water inlet line.

CONDENSER DRAIN

5. The recommended drain is 5/8" OD copper tubing. Connect to drain connections. Must be run to open or trapped drain. If drain is a long run, allow a 1/4" pitch per foot. Drain must be installed to conform with local code.

BIN DRAIN

6. 5/8" tygon tubing from bottom of bin protrudes into lower machine section. Run to open drain.
7. Turn on water supply and check for water leak at connections made.
8. Models SM-45WJ cubers require minimum 20 pounds water pressure to operate properly. Water pressure in excess of 80 pound gauge may cause a vibration, chatter or squeal in water lines, install water pressure regulator set at 40 pounds to correct.

Important: Now level up unit.

INSTALLATION

ELECTRICAL SUPPLY

Standard models SM-45WJ Scotsman Cubers operate on 115 volts, 60 cycle, single phase electrical supply.

Whenever possible your Super Cuber should be hooked up to a separate circuit, individually fused for best performance. Maximum fuse size - 15 amps.

The maximum allowable voltage variation should not exceed 10% above or below nameplate ratings even under starting conditions. Low voltage can cause erratic operation and may be responsible for serious damage to the overload switches and motor windings.

Normal running amperage will be in the range of 4.5 amperes. Higher values will be normal at start of each freezing cycle, less at the end of the freezing cycle.

Motor Compressor	1/4 HP	4.5 Amps
Sump Pump	67 Watts	1.2 Amps

All external wiring should conform with National Underwriters, State and local codes.

START-UP

1. Remove cover from control box, check for loose or frayed wire, then turn both manual switchs to "on" position.
2. Turn disc on time clock to the right just far enough for water solenoid valve to energize. Allow clock to take it through harvest cycle. This will be approxmately three minutes. Dial pointer should be set on 3. After the compressor starts, turn the dial completely around and send it through another harvest cycle. This will completely flush out machine of any dust that may have accumulated in shipment.
3. After machine has been properly flushed, allow it to go into a freezing cycle - check for possible water leaks, check sump pump operation - should be running freely. Also note if jet tubes spray correctly and that none of the jets are plugged.
4. Time clock dial does not rotate at the end of the harvest cycle; it is started later by the cube size control located in the control box.
5. Freezing time will be approximately 30 minutes in a 70 degree ambient. (Longer if above, and shorter if below.) After 25 minutes of the freezing cycle, check water off condenser with a thermometer. (Should be approximately 100-104 degrees at this time.) If temperature is not correct, adjust water valve accordingly.
6. Watch first cube harvest and check to make sure that plastic curtains have not been damaged in shipment.
7. Check size of cubes made; if too small after a second complete cycle, adjust cube size control to lower or colder setting until desired cube size is reached.
8. Check texture of cubes made: partially cloudy cubes throughout suggest unit running short of water near end of freezing, or possibly and extremely bad water condition, which would indicate use of filtering or purifying equipment. Contact SCOTSMAN - Queen Products, Ice Machine Service Department, Albert Lea, Minnesota, for further details.
9. With unit on harvest cycle, take a handful of cubes made and hold on storage bin thermostat cover. Should cut unit off in one to two minutes - remove ice: unit should cut back on automatically. Thermostat is factory set at 35 degrees out, 40 degrees in.
10. Install gauges and check head and back pressures: Head pressure after twenty minutes of freezing cycle at 70 degrees ambient will be approximately 135 pounds PSI. The back pressure starts out at approximately 50 pounds PSI and gradually pulls down to approximately 4 pounds PSI just before harvest cycle. Higher ambients will cause higher head pressures.

FINAL CHECK LIST

1. Is the unit level? (IMPORTANT)
2. Have all electrical and piping connections been made?
3. Has the voltage been tested and checked against the nameplate rating?
4. Is the water supply valve open and the electric power on?
5. Is the unit clean?
6. Has the owner been given the operating manual, and has he been instructed on how to operate the machine?
7. Have the installation and warranty cards been filled out? This is the owner's protection as well as the sellers.
8. Check all refrigerant and conduit lines to guard against vibrations and possible failure.
9. Is there 4" clearance behind and around unit for proper air circulation?
10. Is unit in a room where ambient temperatures are minimum 50° F. even in winter months?
11. Is there at least 20 pounds pressure in water supply to insure proper operation of cuber?

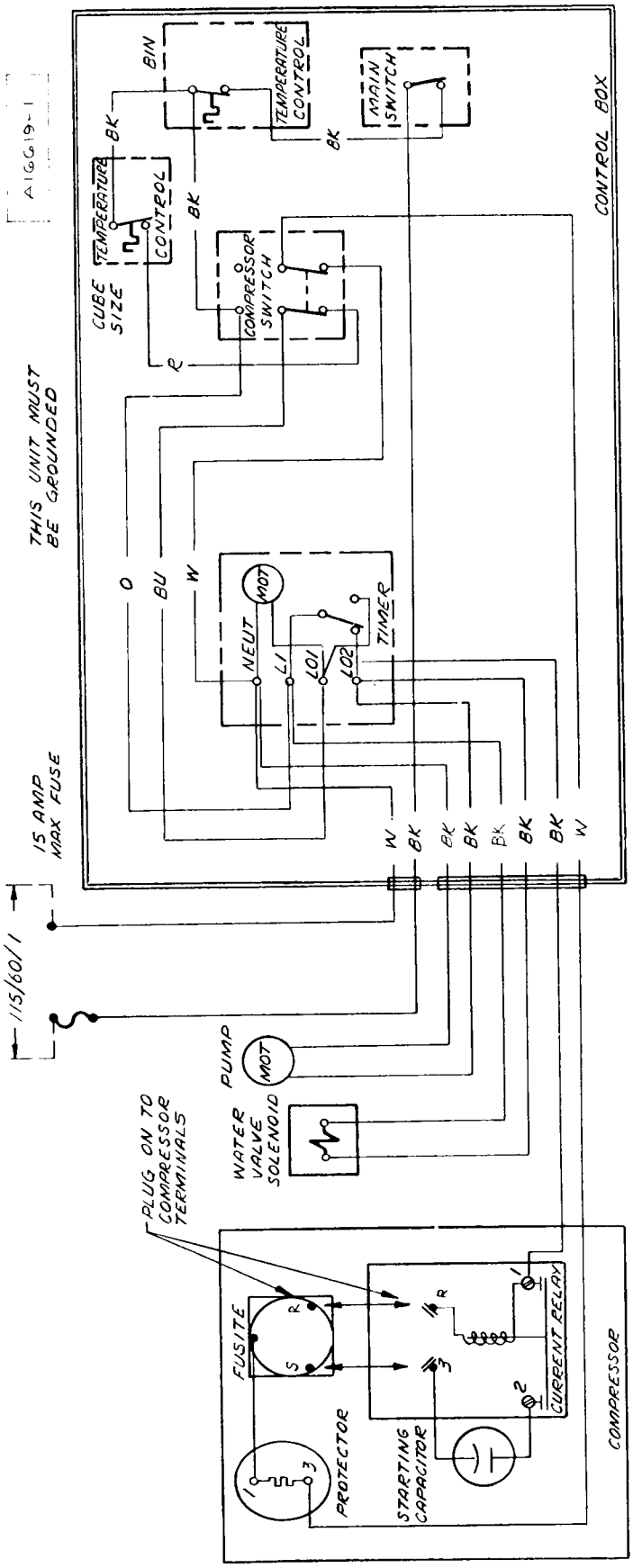

WIRING DIAGRAM

SM-45J WATER COOLED
115/60/1

INTRODUCTION
SM-45 J MODELS

Models SM-45 WJ incorporate several design changes over previous SM-45WH models.

A newly designed water system eliminates the 3 way water valve and is explained in following pages.

Likewise a new warm water condenser system is utilized in the "J" models.

As is explained on page 14 the harvest cycle depends on a given amount of water passing thru the electrically operated water solenoid on top of the tank. The amount of water is regulated by a flow control on the outlet side of this valve, rate is approximately .25 gallons per minute. Minimum water pressure necessary to operate this circuit is 20 pounds.

Figure 10 points out a "dribbler hole" thru rubber platen base that controls overflow water and also leaks water out of the platen cavity and into sump reservoir for the freezing cycle. It is extremely important that the Scotsman Cuber be perfectly level to utilize the action of this "dribbler hole".

Outside cabinetry, panels, doors etc. remain the same as on former models SM-45WH.

HARVEST CYCLE - SM-45WJ

This new water circuit will : Eliminate the Hot Water Tank
Eliminate the '3' Way Water Valve
Use the same water as a condensing medium, to release cubes and water to make cubes.

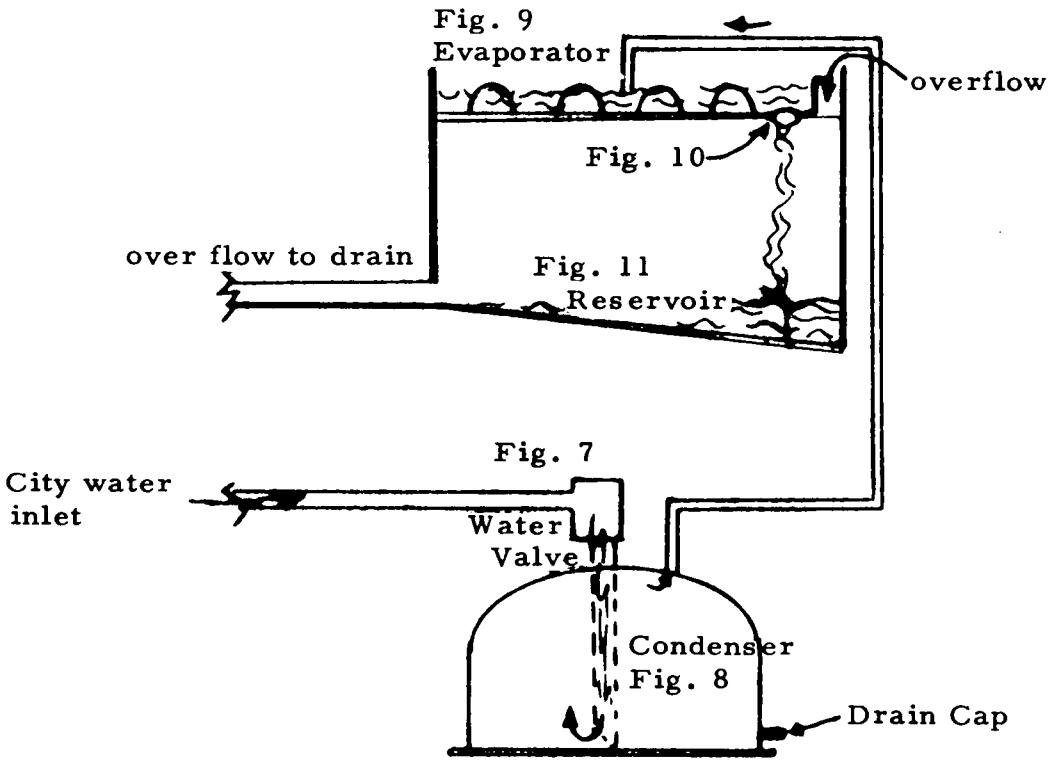

1. An electrically operated solenoid Water Valve (Fig. 7) allows fresh potable water to enter the Condenser (Fig. 8). The incoming cold water forces the hot water from the top of the Condenser (Fig. 8) into the Evaporator (Fig. 9). The hot water releases the cubes to free fall into a storage bin. In the Evaporator there is a water holding vessel, that also holds the cups in place, that is called the Platen. In this Platen there is a small hole. As water comes into the Platen, water is also slowly being released from the Platen thru this small hole (Fig. 10). The use of this small hole or 'dribbler' hole eliminates the use of the 3 way Water Valve. The water from the Evaporator (Platen) is collected in the Reservoir (Fig 11). There is an overflow tube in the Reservoir to control the quantity of water to be stored. The water in the Reservoir is being saved for the next cycle (FREEZING) to be used in making ice cubes.

FREEZING CYCLE - SM-45 WJ

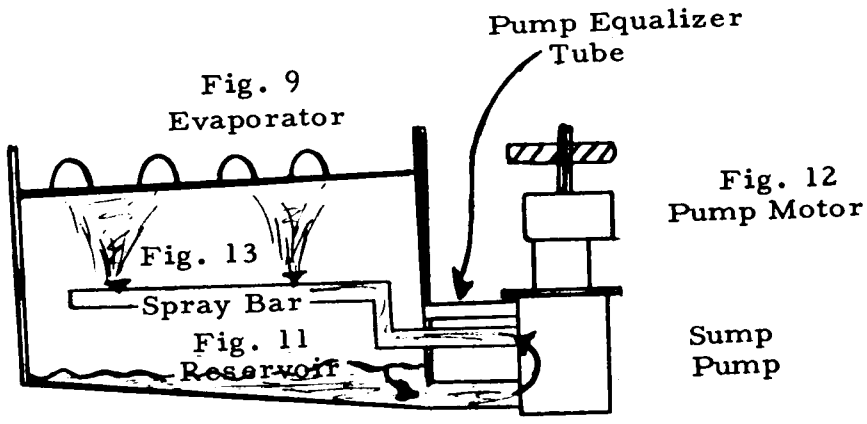

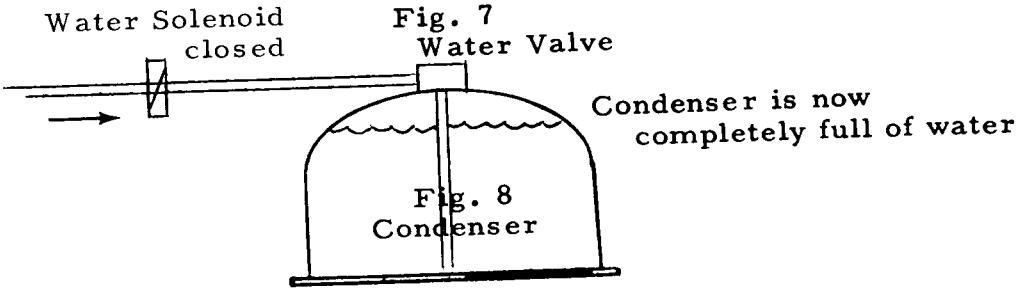

1. Solenoid Water Valve (Fig. 7) is closed preventing fresh (city) water from entering Condenser (Fig. 8) which also stops the flow of water from the Condenser into the top of the Evaporator.

2. Water that has 'dribbled' from the Evaporator (Platen) into the Reservoir is now pumped (Fig. 12) into the Spray Bar (Fig. 13) and sprayed to the underside of the Evaporator (Fig. 9) to make ice cubes.

3. The cold water that entered the Condenser (Fig. 8) is now the medium used for condensing hot refrigerant into a liquid. This also heats the water for the next cycle (HARVEST) to be used to release the cubes.

4. By using the water in the condenser, and as a heat transfer medium, we now can eliminate the use of the Hot Water Tank

Additional Condenser Cooling Circuit - SM-45WJ

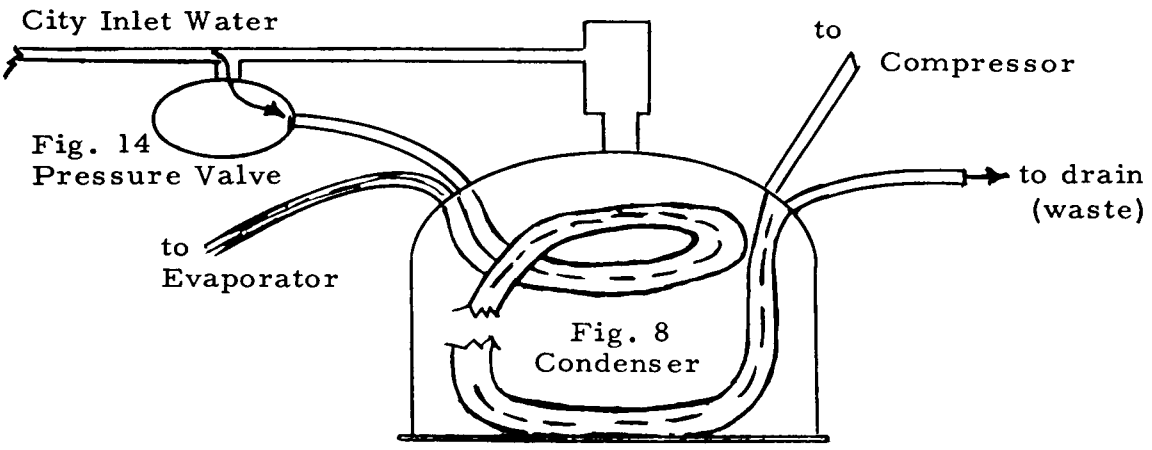

1. Within the Condenser (Fig. 8) there are two (2) tubes soldered together in parallel. One tube leads from the Compressor, coiled within the Condenser, to the Evaporator. The other tube is connected to a Pressure actuated valve, coiled within the Condenser, and out to a drain source.

   If the pressure should build up to a certain limit within the Refrigeration Circuit, the Pressure Valve (Fig. 14) will open and allow a small quantity of cold (city) water to circulate, to bring the pressure down, and be released as waste water independent and separate from the potable water circuit.

RECAP: Cold potable (city) water enters a water tight container, Condenser Fig. 8 The water within this container (Condenser) is heated because it is used as the cooling medium in the Condenser. This water is forced (by entry of new cold potable (city) water into the Evaporator where this hot water releases the cubes. The same water is allowed to escape the Evaporator (Platen) thru a small 'dribbler' hole into the Reservoir. The same water used as a condensing medium and cube release is now pumped thru a spray bar to make ice cubes.

The same water is being used three different times (Condensing medium, Cube release and to make ice cubes). All we are doing is changing the temperature of the same quantity of water to suit the needs for adequate refrigeration.

An independent water circuit, completely isolated from the potable water circuit, is used as an axillary Condenser coolant if the need so arises.

OUTLINE OF REFRIGERATION AND WATER SYSTEM

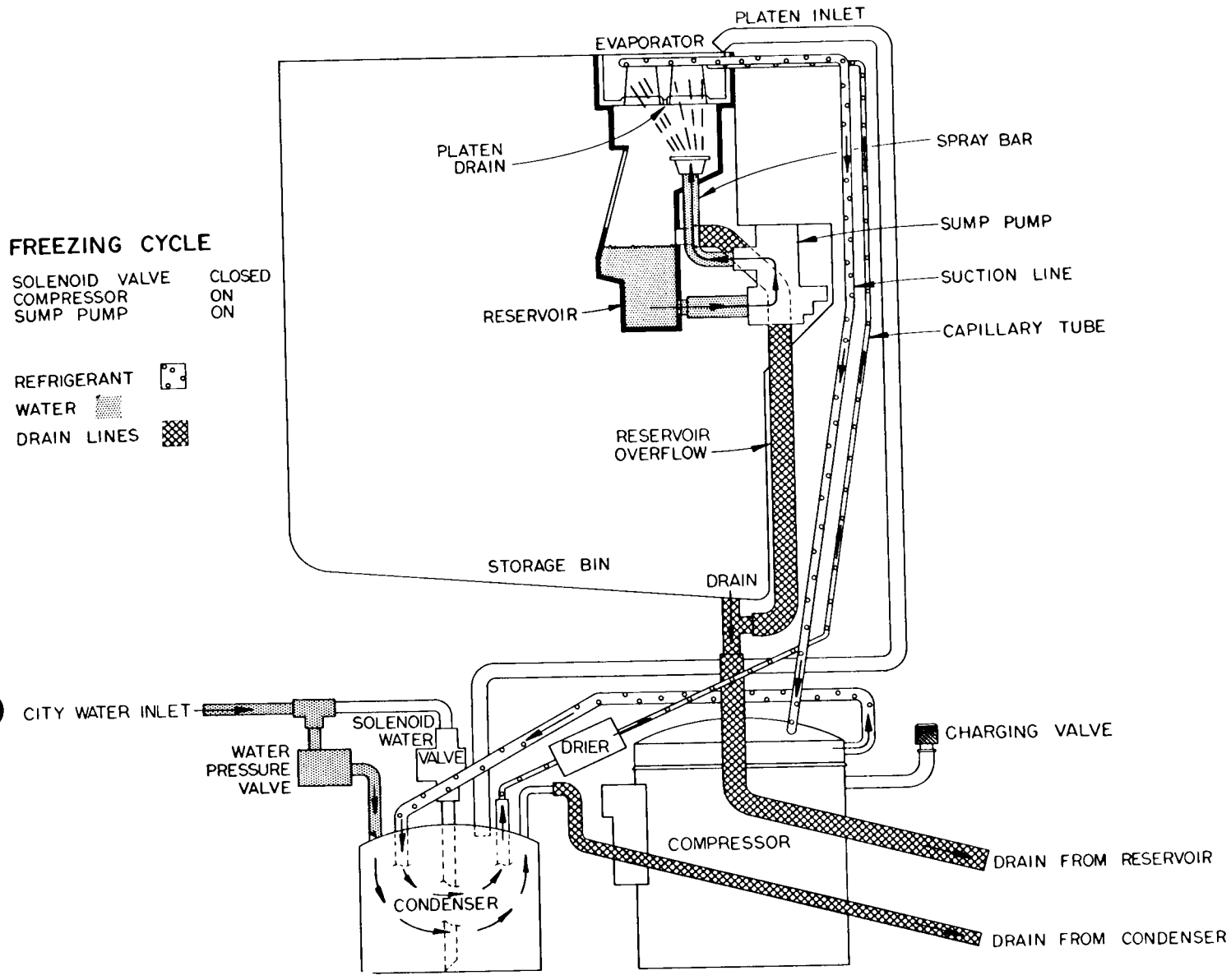

1. Solenoid Water Valve is closed preventing fresh (city) water from entering Condenser which also stops the flow of water from the Condenser into the top of the Evaporator.

2. Water that has drained from the Evaporator (Platen) into the Reservoir is now pumped into the Spray Jet and sprayed to the underside of the Evaporator to make ice cubes.

3. The cold water that entered the Condenser is now the medium used for condensing hot refrigerant into a liquid. This also heats the water for the next cycle (HARVEST) to be used to release the cubes.

OUTLINE OF REFRIGERATION AND WATER SYSTEM

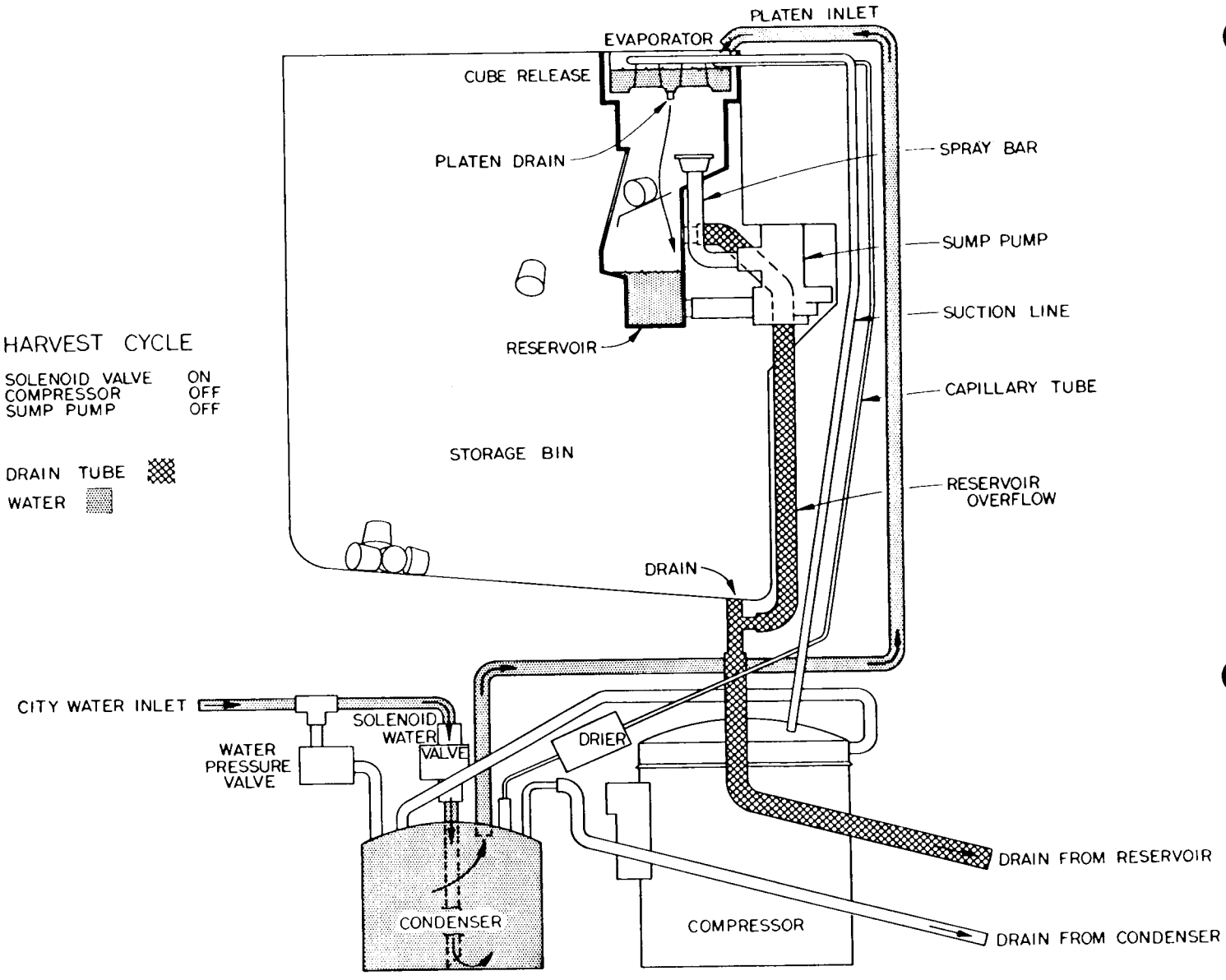

1. An electrically operated solenoid Water Valve allows fresh potable water to enter the Condenser. The incoming cold water forces the hot water from the top of the Condenser into the Evaporator. The hot water releases the cubes to free fall into a storage bin. In the Evaporator there is a water holding vessel, that also holds the cups in place, that is called the Platen. In this Platen there is a small hole. As water comes into the Platen, water is also slowly being released from the Platen thru this small hole. The use of this small hole or 'dribbler' hole eliminates the use of a Water Valve. The water from the Evaporafor (Platen) is collected in the Reservoir. There is an overflow tube in the Reservoir to control the quantity of water to be stored. The water in the Reservoir is being saved for the next cycle (FREEZING) to be used in making ice cubes.

FUNCTIONAL PARTS AND MAINTENANCE

PART NAME: Reverse Acting Temperature Control Ranco Type A 11-377

NUMBER: 11-345

FUNCTION: Reverse acting temperature control, closes on temperature decrease, opens on temperature rise. Control determines length of freezing cycle and by the same token, the cube size. A lower setting on control will produce larger cubes, a higher setting, smaller cubes. This control actuates time clock motor. Part No. A-19070-1, which then takes over balance of freezing cycle and also defrost period.

SETTING: Control is adjustable with a screw driver on an offset cam.

REPAIRABLE: No. Replace when inoperative.

MAINTENANCE: Check electrical connections. Blow free of dust, dirt, lint etc.

PART NAME: Timer

NUMBER: A-19070-1

FUNCTION: Heart of the cyclematic control system is the temperature control Part No. 11-345 and the time clock it actuates. All electrical components are connected to the time clock terminal board and are shunted by means of a single pole double throw micro-switch arrangement to either the freezing cycle or harvest cycle. Contact points are in turn actuated by two cams that are directly connected to the electrical time clock motor. Timer has a 12 minute cycle, 8 1/2 minutes on freezing cycle after being cut on by temperature control and 3 1/2 minutes on defrost cycle. Time clock face has numerals on face. Each numeral represents a one minute period. Face is adjustable and can be moved to lengthen or shorten defrost period.

SETTING: Normal setting for defrost is 3 1/2 minutes.

REPAIRABLE: Yes. Micro-switch, Part No. 12-1480 is replaceable as well as timer clock motor only, Part No. 12-1478-1 and plastic knob-cam assembly, Part No. 2-1651.

MAINTENANCE: Check all electrical connections, blow contact points free of dust, dirt, etc.

PART NAME: Bin Thermostat Ranco Type A-10-2012

PART NUMBER: 11-311

FUNCTION: To automatically cut unit off when cubes in bin reach control capillary location and start up again automatically when cubes removed.

SETTING: Factory set - In 40° - Out 35° - There is adjustable dial on face, colder turn to right -54" capillary.

REPAIRABLE: No.

MAINTENANCE: None.

PART NAME:	Water regulating valve - H. & H. "Little Giant".
PART NUMBER:	11-314
FUNCTION:	To maintain constant head pressures by regulating amounts of incoming water thru water cooled condenser.
SETTING:	135 pounds P.S.I. on head pressure gauge and about 104° leaving water off condenser.
REPAIRABLE:	No - you can flush out however.
MAINTENANCE:	None.
PART NAME:	Inlet water solenoid Dole Valve K-20247 Detroit Controls Type S30A.
PART NUMBER:	12-1434-2
FUNCTION:	Passes measured amount of defrost water to freezer during harvest cycle - stops flow during freezing cycle.
SETTING:	Factory Set - Pass 1/4 gallon per minute.
REPAIRABLE:	No.
MAINTENANCE:	None.
PART NAME:	Sump pump March AC-S2-T (115-60)
PART NUMBER:	12-1379-1
FUNCTION:	To continuously re-circulate water from sump tank, thru stationary jets, up into bottom of cube cups.
SETTING:	None required.
REPAIRABLE:	No.
MAINTENANCE:	None.
PART NAME:	Hermetic Motor Compressor 115/60/1 - Copeland 1/4 H.P. 3500 RPM
PART NUMBER:	18-1205
FUNCTION:	Circulates and retrieves refrigerant throughout entire system.
SETTING:	None required.
REPAIRABLE:	No.
MAINTENANCE:	Keep clean and free of dust, grease, etc.

SERVICE-COMPLETE UNIT

Removal and Installation of Cabinet Parts

CABINET TOP (HOOD)

1. To remove cabinet top, it is first necessary to remove two rear plate screws. See page 25.
2. After screws are removed, pull top forward until side clips are free.
3. Lift off hood.

CABINET LOWER SERVICE DOOR

1. Front door pulls out, pull out and up.

ICE STORAGE DOOR

1. Remove pin thru center of hinge.
2. Door now is free-lift off.

CABINET FRONT

1. Remove top (hood).
2. See cabinet panel assembly layout drawing on page 25.
3. Remove all screws at bottom and sides of ice storage door frame.
4. Remove four screws at bottom front under lip or 90 degree edge.
5. Front will now lift out.

REMOVAL AND REPLACEMENT OF FUNCTIONAL PARTS

In order to work on the spray bar, it will be necessary to work from the front of the cabinet. This work can be done thru the storage bin door.

Spray bar is located inside of plastic sump tank. To remove tank first disconnect all hose connections to tank and two plated extension nuts located in front of sump tank. See page 24, item 11. Now lower front of tank until it clears stainless steel freezer frame. Push tank lightly forward until it drops off pins protruding from back of freezer frame.

TO REMOVE SUMP PUMP- See page 24, item A-B.

1. Disconnect complete unit electrically. Remove lower front access door, cover from control box, and disconnect pump leads from timer.
2. On back of case remove covers from pump motor well and wire protector.
3. Thru front ice access door remove 3 wing bolts and pump assembly can now be removed.
4. Replace in reverse being sure that rubber gasket is put on new pump.

TO REMOVE BIN THERMOSTAT

Study first page 25 "Complete Unit". It will be necessary to remove cabinet front before removing bin thermostat.

Now remove control box cover and then loosen two screws holding bin thermostat to front control box. This will loosen control, pull down and remove two electrical connections.

Next, up in storage bin on the left side wall is a clip holding end of bin thermal bulb, pull out thermal bulb and its capillary away from cabinet.

Replace in reverse order.

TO REPLACE CUBE SIZE CONTROL

First study Page 25 "Complete Unit". It will be necessary to remove cabinet front, top front, and top front storage before removing cube size control. Now remove screw in front of freezer frame, allowing frame to slide forward to release pigtail on cappilary tube. Remove cover from control box, loosen two screws holding control, and remove electrical connection.

Replace in reverse.

FUNCTIONAL PARTS - BASE COMPARTMENT

Functional parts in the base compartment would consist of the motor compressor, compressor relay, water regulating valve, complete solenoid valve and manual on-off switch. All of these parts with the exception of the motor compressor can be worked on by merely removing lower service door.

TO REPLACE MOTOR COMPRESSOR

First remove front panels, Now remove 3 screws on either side of cabinet base.

Pull assembly out to expose motor compressor. Pump unit down, then purge off excess refrigerant. Remove electrical relay from clamp holder. This relay is manually pushed on over compressor terminals, pull off the same way.

Now loosen the four bolts holding the compressor to base and lift out. Replace with new compressor in reverse of above.

RESERVOIR ASSEMBLY SM-45J

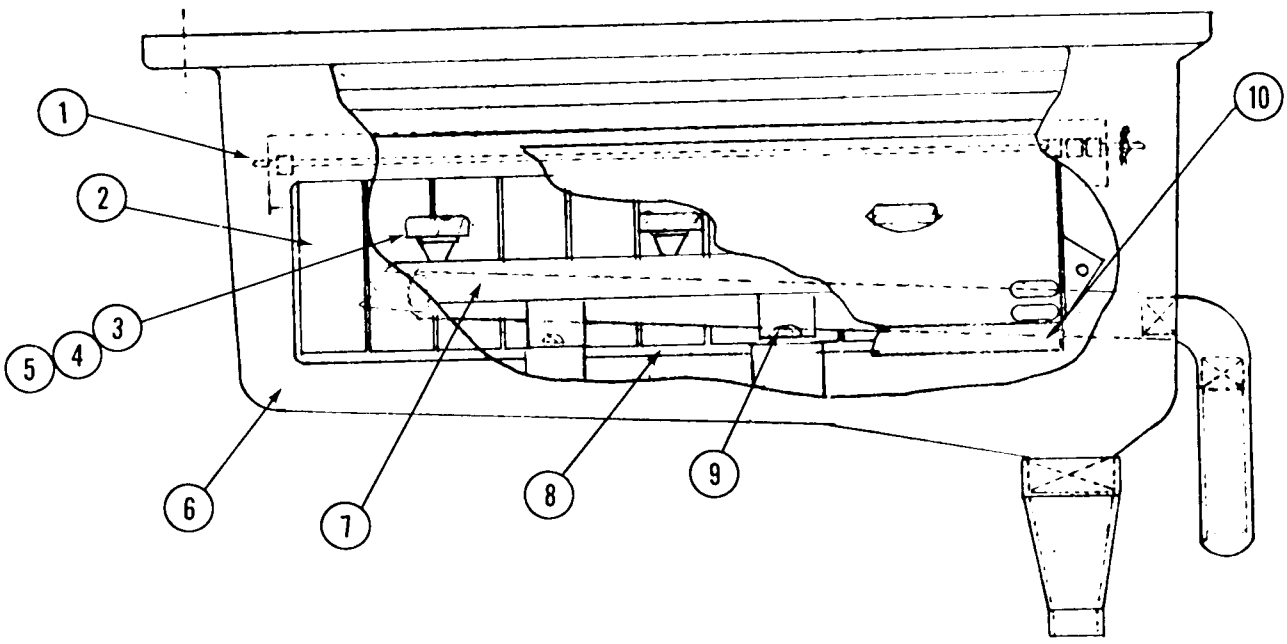

Item No.	Part No.	Name
1.	A-17968	Curtain Rod
2.	2-1796	Curtains (2 Per Unit)
3.	13-292	Jet Caps, Rubber 6 required
4.	A-12345	Jet Top 6 required
5.	A-9543	Spinners 6 required
6.	A-19197	Sump Tank (includes Curtains)
7.	A-16991	Spray Bar Ass'y
8.	A-20567	Cube Chute
9.	3-1404-9	Screws 3 required
10.	2-1092-3	Hose Clamps

Cabinet Assembly

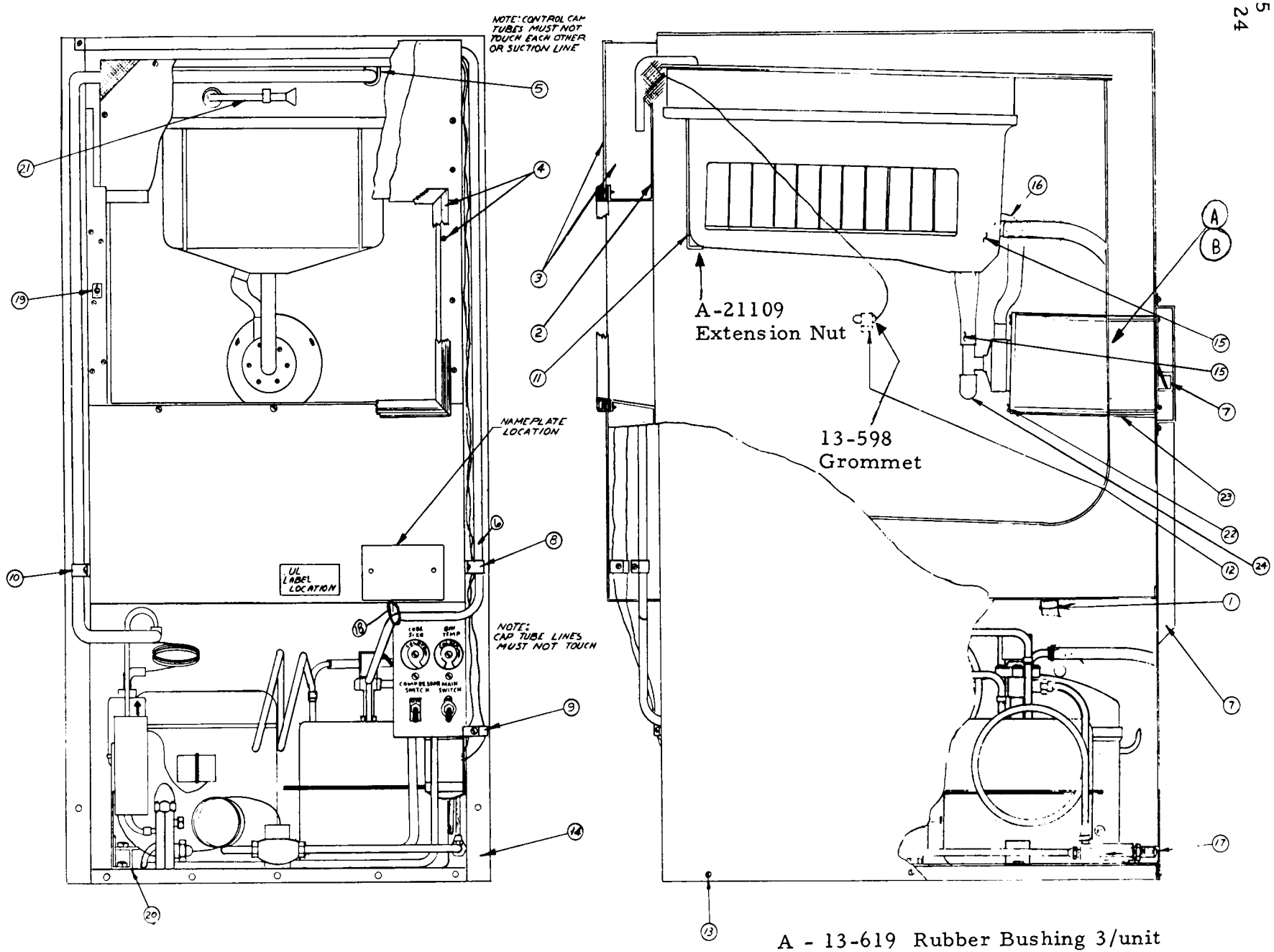

A - 13-619 Rubber Bushing 3/unit
B - 13-620 Rubber Gasket

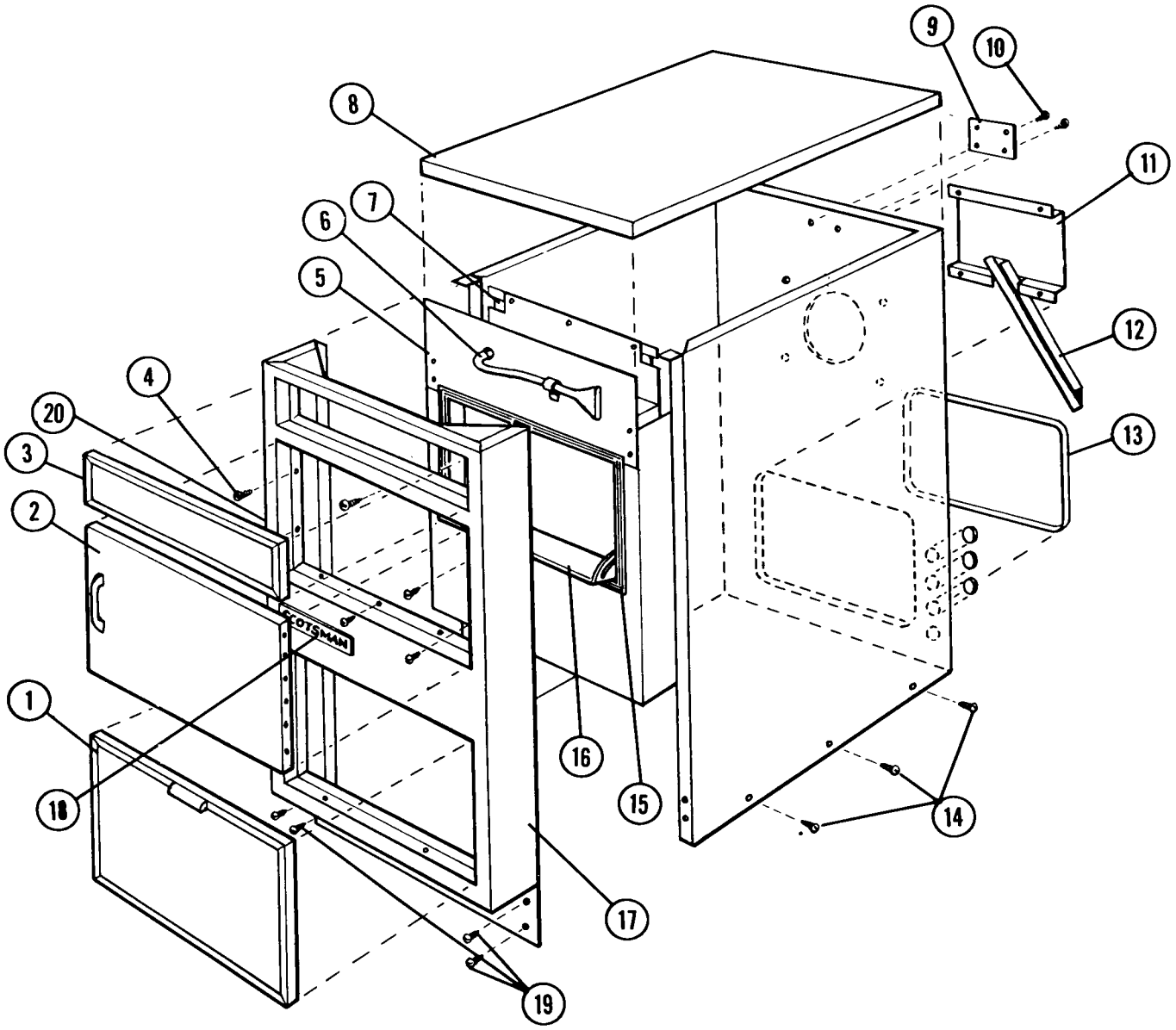

ITEM NO.	PART NO.	NAME
1.	A-9456	Lower Door
2.	A-17415	Access Door
3.	A-14993	Top Door
4.	3-1404-10	Screws
5.	A-14997	Top Front
6.	13-335	Funnel
7.	A-17153	Top Storage Front
8.	A-9465	Cabinet Top
9.	A-9410	Top Clip
10.	3-1404-7	Screws
11.	A-17980	Baffle
12.	A-17982	Wire Raceway
13.	A-21061	Rear Door
14.	3-1403-26	Screws
15.	13-615	Door Gasket
16.	A-14999	Spill Door
17.	A-14996	Case Front
18.	15-494	Emblem
19.	3-1403-29	Screws
20.	A-10103	Door Strike

SM-45J COMPLETE UNIT

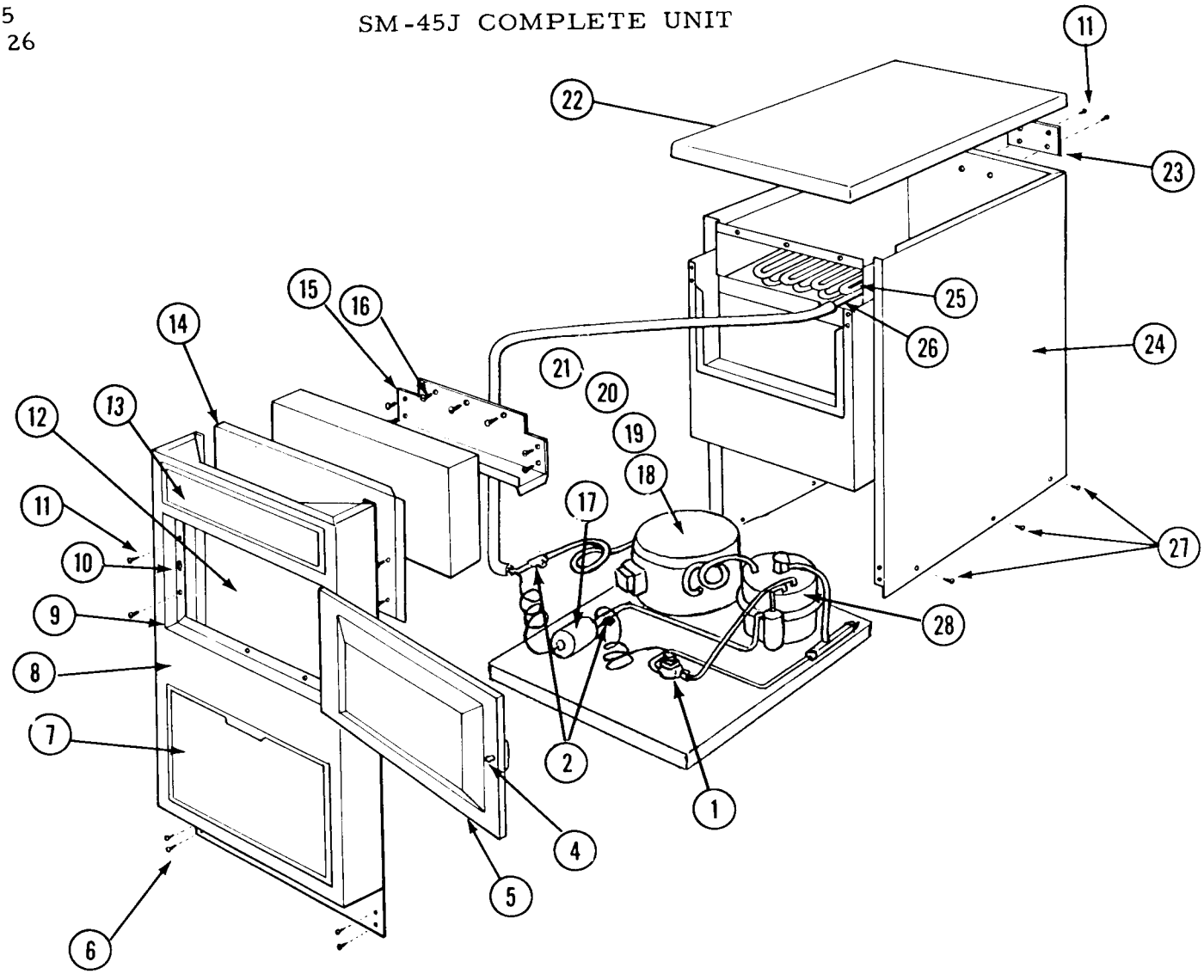

Item No.	Part No.	Name
1	11-314	Water reg. Valve
2		Service Valves
4	A-10103	Door Strike
5	A-17415	Door Assembly
6	3-1403-29	Screws
7	A-9456	Lower Door
8	A-14996	Case Door
9	13-615	Door Gasket
10	2-836	Door Catch
11	3-1404-10	Screw
12	A-14999	Spill Door*
13	A-14993	Top Door
14	A-14997	Top Front
15	A-17153	Top Front Storage
16	3-1404-7	Screws
17	2-831	Drier
18	18-1200-1	Compressor
19	18-1206	Relay
20	18-1207	Capacitor
21	18-1210	Overload
22	A-9465	Cabinet Top
23	A-9410	Top Clip
24	A-17041	Cabinet Assy
25	A-19214	Evaporator Assy
26	13-651	Rubber Cup Holder
27	3-1403-26	Screws
28	A-19178	Condenser

* Not Shown

CONDENSING UNIT
SM-45WJ

Item No.	Part No.	Name
1	A-19178	Warm Water Condenser
2	A-19230-4	Water Flow Control .40 G.P.M.
3	2-1752-5	Refrigerant Drier
4	2-1727	Hose Clamps
5	12-1434-2	Valve
6	11-314	Water Regulating Valve
7	16-560	Valve Core - Hi Side
8	16-563	Valve Cap - Low Side
9	18-1205	Motor Compressor
	18-1206	Compressor Relay
	18-1207	Compressor Capacitor
	18-1210	Compressor Overload

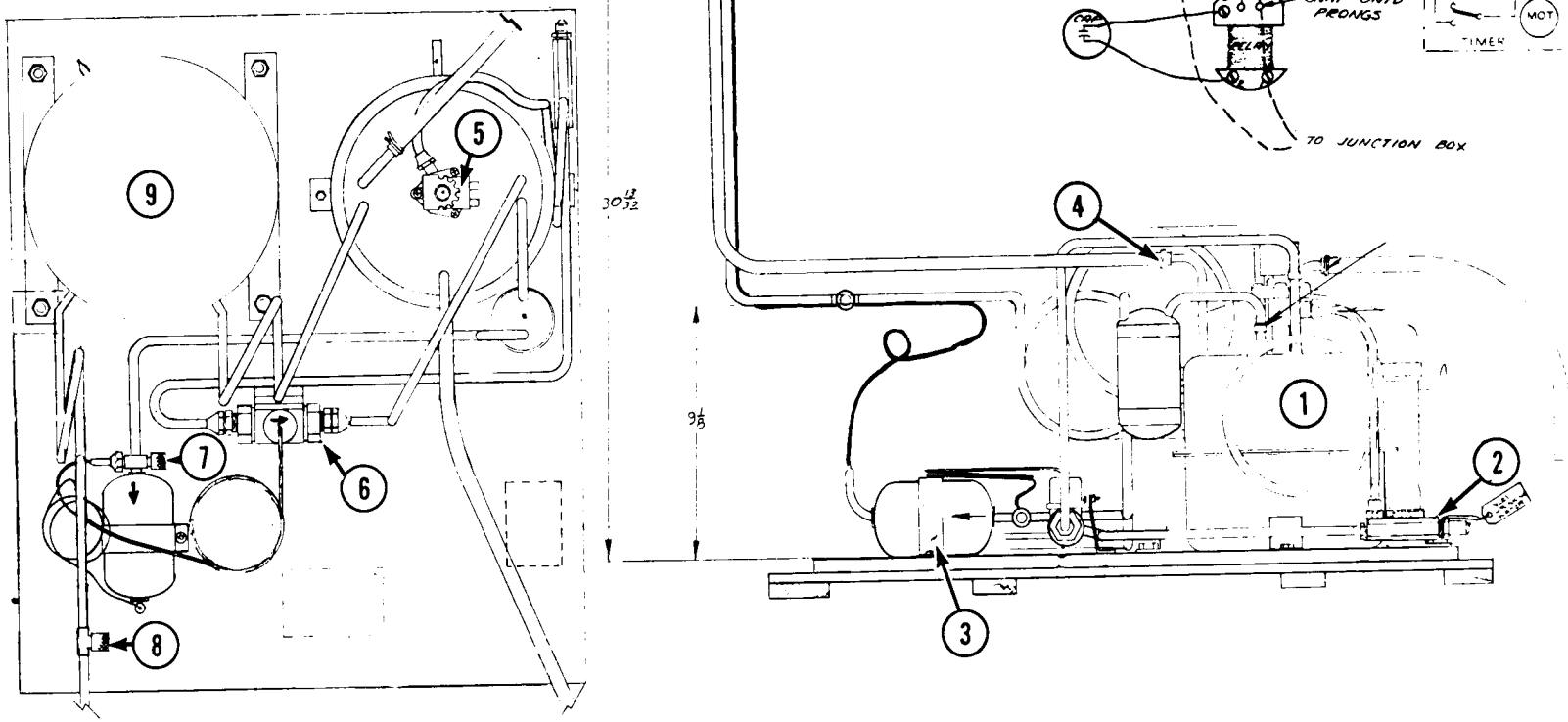

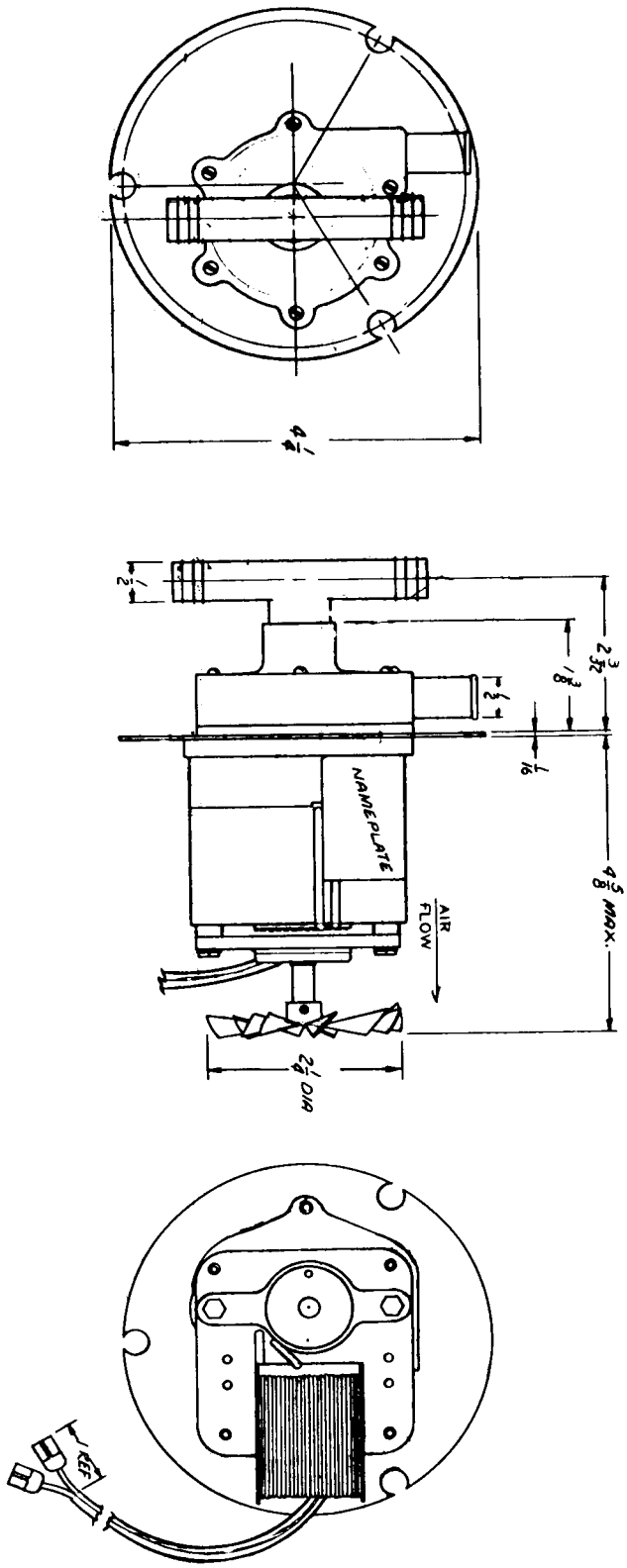

SUMP PUMP 12-1379
115/60/1

SERVICE ANALYSIS

SYMPTOM	POSSIBLE CAUSE	SUGGESTED CORRECTION
Shortage of water	Plugged "dribbler" hole in rubber cup holder	Clean out dribbler hole, flush system with ice machine cleaner, thru rubber funnel.
	Water spraying out through curtains	Replace broken curtains if any broken
	Plugged flow control	Flush out
	Water entering hot water tank too slowly	Building pressure below 20#
		Partial restriction in water strainer
		Clean strainer
Irregular size cubes and some cloudy	Some jets plugged	Clean jets
	Shortage of water	See shortage of water
	Unit not level	Water overflowing air vent holes on low side burning cubes. Level as required.
	Sump pump motor binding	Replace.
Cubes too large	Cube size control set too low	Raise setting on cube size control towards warmer.
	Timer micro-switch stuck together.	Replace micro-switch only.
Decreased Ice Capacity	Leaky water valve	Replace or repair
	High head pressure	Non-Condensable gas in the system: purge the system. Too hot a location with poor circulation: relocate the unit, or provide for ventilation by cutting openings.
		Overcharge of refrigerant. Correct the charge.
	Partially restricted cap tube	Purge and replace charge and drier.
Hole washed inside cube	Water over the top of the cube cups during harvest	Level unit.

SERVICE ANALYSIS

SYMPTOM	POSSIBLE CAUSE	SUGGESTED CORRECTION
Unit will not run	Blown fuse	Replace fuse and check for cause of blown fuse.
	Bin thermostat set too high	Adjust thermostat. Set between 35 to 40 degrees.
	Switch in off position	Turn switch to on position.
	Inoperative master switch	Replace switch.
	Timer micro-switch open	Replace.
Compressor cycles intermittently	Low voltage	Check circuit for overloading. Check voltage at the supply to the building. If low, contact the power company.
	Air circulation blocked	Allow sufficient air space all around unit.
	Non-condensable gases in system.	Purge the system.
Cubes too small	Cube size control set too high	Lower the setting. Turn towards colder.
	Partially restricted capillary	Blow charge, add new gas and drier.
	Moisture in system	Replace the dryer.
	Shortage of water	See remedies for Shortage of Water.
	Shortage of refrigerant	Check for leaks and recharge.
Cloudy cubes	Shortage of water	See remedies for Shortage of Water.
	Dirty water supply	Use water softener or water filter.
	Accumulated impurities	Use SCOTSMAN Ice Machine Cleaner.
Poor harvest	Too short defrost time	Check and adjust harvest cycle. Timer should be set at 3 1/2.
	Water temperature too low	Temperature of the water in hot water tank too low. Should be between 100-105 degrees. Reset water regulating valve.
	Restriction in incoming water	Check water feed line strainer. Clean to give greater water flow.
		Flow control plugged up.
	Solenoid control not opening the water tank.	Solenoid binding or burned out. Replace, also check flow control orifice.
	Air vent holes in upper cube cups plugged	Clean out holes.

CUBER MAINTENANCE INSTRUCTIONS

THE FOLLOWING MAINTENANCE MUST BE ACCOMPLISHED TWO TIMES PER YEAR ON ALL SCOTSMAN SUPER CUBERS.

1. Clean water tank and evaporator, sump tank and screen, using SCOTSMAN ice Machine Cleaner.
2. Remove jet tube and manually clean jets by dismantalling same.
3. Check curtain assembly.
4. Tighten all electrical connections.
5. Tighten all bolts.
6. Check water supply. Clean water strainer.
7. Check for refrigeration leaks with halide torch.
8. Check for water leaks. Tighten drain line connections.
9. Check size and condition of cubes. Adjust as required.
10. Check bin thermostat setting. Factory set at approximately 35° out, 39° in.

PROCEDURE FOR USE OF SCOTSMAN ICE MACHINE CLEANER IN SCOTSMAN ICE MACHINES.

1. Place COMPRESSOR SWITCH to 'OFF'.
2. Remove ice cubes from storage bin.
3. Mix 8 ounces of SCOTSMAN CLEANER in a quart of hot water. Pour this solution through rubber funnel. See page 25, item 6.
4. Rotate TIMER knob clockwise (toward you) until you hear the sound of running water.
5. Allow unit to operate for at least 45 minutes.
6. Mix 1 ounce of SCOTSMAN CLEANER in a pint of hot water. Wash all surfaces in storage bin. Thoroughly rinse all surfaces of bin with clean water.
7. Place COMPRESSOR SWITCH to 'ON'. Unit is in normal operation.

SM-45 J PARTS LIST

Main Control Box

Part No.	Name
12-1214	Compressor Switch
12-426	Main Switch
11-345	Cube Size Control
11-311	Bin Control
A-19070-1	Timer
12-1480	Micro-switch Timer
12-1478-1	Timer Motor
2-1651	Plastic Cam-Knob

Misc. Parts

16-162	Strainer
A-13346-4	Flow Control (.40 G.P.M.)
13-398	Bulb Grommet
A-21109	Extension Nuts
2-1299	Clamp
13-615	Door Gasket
13-335	Funnel
11-314	Water Regulating Valve
16-560	Service Valve Core
2-831	Drier
A-19214	Evaporator Assy.
13-651	Rubber Cup Holder
A-19178	Condensor
1-453	Carton
2-540	Ice Scoop
19-343	Ice Machine Cleaner (8 oz. bottle)

Case Parts

A-9465	Cabinet Top
A-17415	Ice Access Door
A-10103	Door Strike
A-9456	Lower Door
A-14996	Case Front
A-14999	Spill Door
A-14993	Top Door

Misc. Electrical

Part No.	Name
12-1379-1	Sump pump
18-1200-1	Compressor
18-1206	Relay
18-1207	Capacitor
12-1434-2	Solenoid Valve (with flow control - 25 G.P.M.)

TABLE OF CONTENTS

FORWORD	1
TABLE OF CONTENTS	2
HOW IT WORKS	3
SPECIFICATION AND DIMENSIONS	4-5
PHOTOGRAPH AND ICE MAKING CHART	6
SELECTING LOCATION	
Location	7
Uncrating	7
Preparation for Installation	7
Setting up Machine	8
Placing Machine Section in Place	8
Installing Crusher	8
Plumbing	8-9
Electrical	9
Start Up	10
Wiring Diagram 230/60/1 AC	11
Wiring Diagram 230/60/1 WC	12
Wiring Diagram 208/60/1 AC	13
Wiring Diagram 208/60/1 WC	14
Diagram Plumbing Connections	15
Final Check List	16
CYCLE OF OPERATION	
Harvest cycle	17
Freezing cycle	18
SERVICE ANALYSIS CHARTS	19-22
EXPLODED VIEWS OF COMPONENT PARTS	
Sump Pump	23
Control Box	24
Drive Linkage, Spray Bars	25
Front View, Complete Unit	26
Top View, Air Cooled	27
Top View, Water Cooled	28
Air Cooled Case Assy	29
Water Cooled Case Assy	30
Hot Water Tank and Water Valve Assy	31
Spray Bar and Bearing Assy	32
Drain Valve Assembly	33
SERVICE INFORMATION	
Water Valve Adjustment	34
Removing & Replacing Component Parts	35-36
Functional Part & Maintenance	37-42
Maintenance Instructions	43-44
Part List	45-46

THIS PAGE
INTENTIONALLY
LEFT BLANK

THIS PAGE
INTENTIONALLY
LEFT BLANK

HOW IT WORKS

Scotsman models SM-505 now provide the user with the Scotsman compact cube. By comparison with the regular Scotsman model SC-500 cuber, whose cabinet it resembles, models SM-505 produce 240 cubes versus 160 regular sized cubes in the SC-500 cuber series. For practical purposes we can say the compact cube is 2/3 the size of regular Scotsman cubes.

Other features of interest are as follows:

1. Both air and water cooled models use the same model, 2 pole, hi-speed compressor in single phase electricals.
2. Hot water for defrost heated electrically.
3. Plastic curtains secured with thumb screws.
4. Cube chutes fabricated from stainless steel sheets rather than former plated rod types.
5. Spray bars made of special plastic with drilled holes acting as jet spray nozzles.
6. Automatic defrost and freezing cycles actuated by thermostatic temperature control.
7. Spray bar motor oscillates at 40 RPM.
8. Defrost setting on finishing clock is 2 1/2 minutes.
9. New style finishing clock has enclosed micro switch and offset adjustable cams to carry and direct electrical current thru defrost cycle.
10. All evaporator surfaces are tin dipped.
11. The SM-505 is available as standard in the -4 (230/60/1) or the -10 (208/60/1). The 208 volt unit is obtained by the addition of a transformer.

SPECIFICATIONS

	SM-505H	SM-505 WH
Compressor *	1 hp twin cylinder	1 hp twin cylinder
Condenser	Cleanable Air Cooled	Cleanable Water Cooled
Refrigerant	R12	R12
Refrigerant Charge	53 ounces	51 ounces
Refrigerant Control	Twin Capillary Tube	Twin Capillary Tube
Power Consumption	10 Amp., 3 Wire 230 V., 60 Cycle Single Phase	10 Amp., 3 Wire 230 V., 60 Cycle Single Phase
Water Consumption to Produce Ice	4 1/2 Gallons per hour	4 1/2 Gallons per hour
Water Used by Condenser		1 to 3 1/2 Gallons per minute. Varies with water temperature.
Ice Capacity	See Chart. Page 6	See Chart. Page 6
Companion Bins	B-400 B-650 B-1250	Same Same Same
Cube Size	Scotsman Compact cube	Same
Cubes Per Harvest	240	240

Note: All Scotsman Super Cubers require neutral wire for secondary 115 volt component circuit: 3 phase cubers require 4 wire service with neutral. Special voltages upon request.

* Single phase units use 2 pole, hi speed copelaweld full hermetic.

Three phase units use 4 pole, semi-hermetic copelamatics.

SPECIFICATIONS

SUPER CUBER SM-505 SERIES	MODEL SM-505H	MODEL SM505WH	MODEL SM-505H-SS	MODEL SM-505WH-SS
Daily capacity up to 500 lbs.	X	X	X	X
400 lb., 650 lb. or 1250 lb. storage unit	X	X	X	X
Air cooled condenser	X		X	
Water cooled condenser		X		X
Heavy duty 1 H.P. Compressor	X		X	
Heavy duty 1 H.P. Compressor		X		X
*Standard 115-230 V, 60 cy, 1 ph, 3 wire	X	X	X	X
¼" water inlet NPT	X	X	X	X
¾" overflow drain NPT	X	X	X	X
½" drain on B650H bin NPT				
¾" sump drain NPT	X	X	X	X
¾" condenser drain NPT	X		X	
Hammerloid grey exterior	X	X		
Stainless steel exterior			X	X
Stainless steel lined storage bin	X	X	X	X
98 5/8" to 99 3/8" height (with legs) and B650H Bin	X	X	X	X
90 5/8" height (without legs) and B650H Bin	X	X	X	X
111 5/8" to 112 3/8" height (with crusher with legs) & B650H C55H	X	X	X	X
103 5/8" height (with crusher without legs) and B650H C55H	X	X	X	X
46 3/8" width including bin	X	X	X	X
34 1/8" Overall depth including bin (water cooled)		X		X
39 1/8" Overall depth including bin (air cooled)		X	X	X
Shipping weight	540	522	548	530

*Neutral wire required

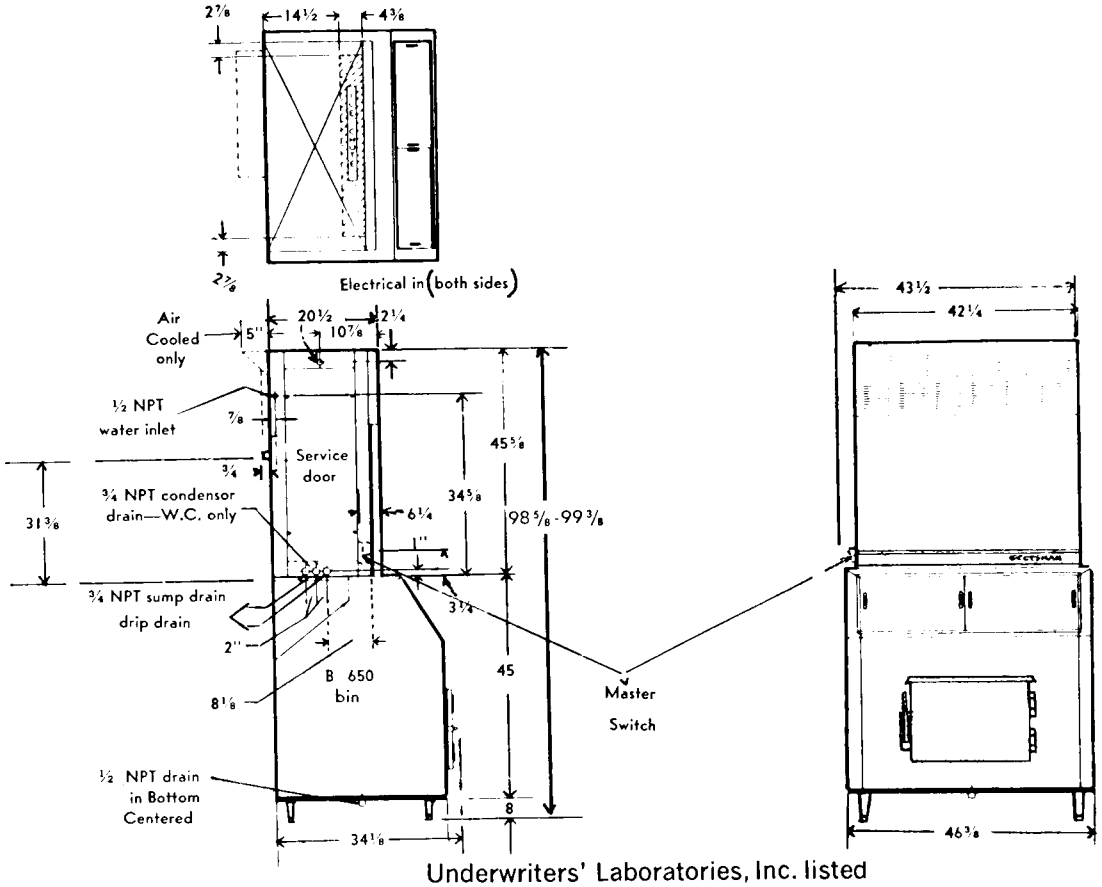

Underwriters' Laboratories, Inc. listed

Specifications subject to change without notice.

SCOTSMAN®

SUPER CUBER
SM-505
SERIES

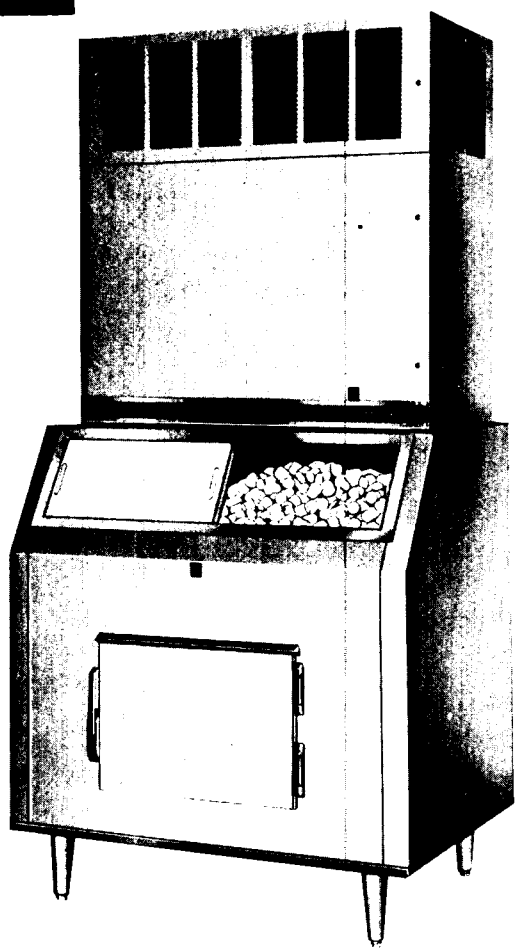

SCOTSMAN ICE MACHINES ARE APPROVED BY THE NATIONAL SANITATION FOUNDATION.

ice making capacity

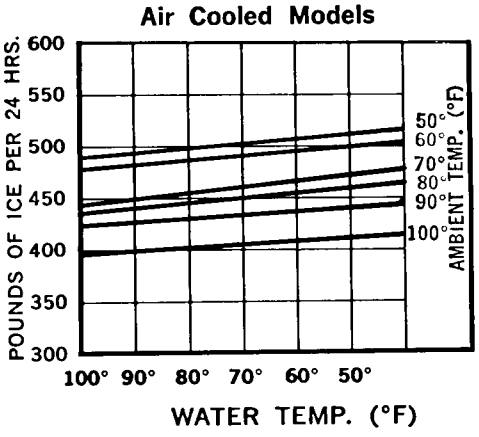

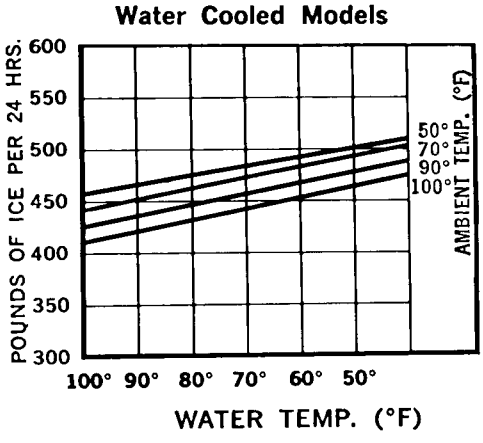

INSTALLATION

LOCATION

1. Select a location as convenient as possible for the user.
2. Accessible to the necessary electrical and plumbing connections.
3. If possible, have minimum space of 12 inches above top and from left end panel for service.
4. A minimum of 24 inches for the convenience of the user in front of the machine.
5. Room temperatures--minimum of 50 degrees, maximum of 100 degrees.

UNCRATING

1. If possible, do not uncrate until equipment is in permanent location.
2. Storage bin and machine compartments are shipped in separate crates.
3. Remove hold-down bolts from skids.
4. Remove crate in usual manner for wood crating.
5. Remove warranty card and Users manual from storage bin and wipe bin clean with damp cloth.
6. Fill out warranty card completely including model and serial numbers as taken from aluminum plate found behind front service panel and forward to Scotsman factory using self-mailing card.

PREPARATION FOR INSTALLATION

1. Inspect complete unit cabinetry for shipping damage. Notify carrier of concealed damage claims
2. Remove all service doors and panels.
3. Remove water reservoir cover and take out paper packing around float ball, make sure plastic overflow standpipe is securely in place. Adjust water level, by bending float arm, to the highest possible elevation without running over overflow standpipe.
4. Remove leg package from bin and install 4 legs in base sockets of bin.
5. Loosen motor compressor hold down nuts until motor compressor rides freely on mounting springs. Only on semi-hermetic compressors.
6. Remove all masking tape and packing members from curtains and inner cube making compartments. Re-align components such as sump pump or cube racks that may have shifted in transit.
7. Remove water strainer from machine section for installation on unit or in water supply line feeding unit.
8. Open electrical control box and prepare for hook up. Use knock outs, cord connectors, etc. Then check unit nameplate voltage against building source voltage to make sure they correspond. Caution - Improper voltage applied to units will void your warranty protection.

SETTING UP MACHINE

1. Be sure floor strength is capable of 1,000 pounds in an area of 29 inches by 42 inches.
2. If ceiling height permits, use 8 inch base legs for the storage bin which will make a more convenient height for the user and allow more fall from the storage bin drain.
3. Storage bin must be absolutely level. (This is important).

PLACING MACHINE SECTION IN POSITION ON ICE STORAGE COMPARTMENT

1. Remove front top service door and large front service door to facilitate handling.
2. Extreme caution must be used to prevent damage to the equipment or injury to the personnel.
3. If at all possible, use Carrying Handles. Have four men available at this installation.
4. If handles are not available, place 2 x 4's or other available shims at all four corners which allows clearance for fingers.
5. Place 2 x 4's lengthwise across storage bin a short distance in from front and back which will allow clearance for fingers when section is set in place.
6. Each man should take a position at corners of machine section using one hand to lift with and other hand to steady machine. (CAUTION--all four men should be instructed to lift together so as not to tip unit over.)
7. After machine is in position on 2 x 4's on bin section, tilt machine forward and backward to remove 2 x 4's.
8. Place machine section in exact position on storage compartment gasket.
9. Bolt two back tie straps to hold machine section in place.

WHEN INSTALLING C-55H CRUSHER

1. Unpack crusher and check electrical connections to make sure it is in proper running condition.
2. Place crusher in exact position on storage bin.
3. Bolt two back tie straps to hold crusher section in place on bin.
4. Follow steps under paragraph, "Placing Machine Section in position on Ice Storage Compartment."

PLUMBING

1. Refer to Installation Diagram page 15.
2. Water inlet should be 3/8 inch pipe or larger.
3. Strainer should be installed on outside of machine as close as possible to unit.
4. A shut-off valve either of globe or gate type should be installed next to strainer for convenience of the service man.
5. SM-505 is equipped with three separate drains so as to comply with all plumbing codes. Drain marked drip pan drain is to catch any condensation that may come from the unit and must have fall as it flows by gravity. Bin has own centered, bottom drain.
6. Drain marked sump should be kept 3/4 inch in size with adequate fall which assures complete emptying of the sump tank at the end of the freezing cycle; and also with enough velocity to remove any sediment or solids which may have accumulated from the preceding batch of ice cubes.
7. Storage drain should be connected to open drain.
8. On water cooled models the drain from the condenser has slight pressure. (NOTE: If outlet of connected drain is visible, it is helpful to the service man in checking condenser water valve.)

9. Air cooled models SM-505 do not use condenser drain connection since refrigerant cooling medium is air rather than water.
10. In areas where vast amounts of solids and impurities are present in the water supply, it may be necessary to use some type of filtering equipment on the water that is used in the actual manufacture of the ice and not for the condenser.
11. If above condition is true, it is suggested to disconnect water line from present location in machine compartment and connect it to a 1/4 inch OD copper line which may be run to the filtering equipment. (Note: if water softening equipment is available in building, connect 1/4 inch line in soft water ahead of heater.)
12. For water treatment over and above normal local impurities, consult Service Dept., Scotsman Queen Products, Albert Lea, Minnesota.

ELECTRICAL

1. IMPORTANT. An ice machine must be connected by a competent electrician.
2. Refer to wiring diagrams, pages 11-14 for proper voltage hookup in accordance with voltage stamped on complete unit serial plate.
3. Compressor motor operates on high voltage only and all component parts operate on 110 volts only. (CAUTION. In areas where a wild phase is present in their system, it must be kept out of component circuit.) Note: Part #2-1455-20 Heating Element Requires 230V.
4. Electrician should be instructed to install proper disconnect switch of a three pole variety with solid neutral.
5. Select proper amperage load and fuses per diagrams on pages 11-14 whose voltage corresponds to unit voltage.

MANUAL SWITCH

A manual switch is provided at bottom of left side of icemaker for the convenience of the user when it is desired to shut the unit down for a period of time. When any electrical component parts are being removed or serviced, it is recommended that the line switch be put in the "OFF" position.

DUAL PRESSURE CONTROL WATER COOLED

A high pressure control is provided to shut down the complete unit in case of extremely high head pressures or interrupted water supply. Some models are equipped with a lock-out type, and the unit will remain off until the control is reset manually. (To reset, press down small plunger on top of control.) The high pressure control should be set at 190 pounds.

The low pressure control is provided as an added safety precaution in case of a broken or leaking refrigerant line. This prevents drawing in air or moisture. The setting of the low pressure control should be zero pounds cut-out and 32 pounds cut-in.

START - UP

1. Make sure all service valves on the condensing unit are open and turned as far as possible to the left. Replace the valve caps after checking the valves. All models are shipped with valves open.
2. Make sure that the flow of air is not impeded in any way over condenser on air-cooled models. Keep condenser clean. (Check and clean the condenser monthly).
3. On all water-cooled models, turn on water supply to water-cooled condenser and check for leaks in connections made.
4. Turn on cube supply at hand shut-off vlave. Make sure hot water tank fills to proper level, if it does not, adjust level to 1/4" below overflow pipe by bending float rod.
5. NOTE: Unit has built-in flow control set to approximately .4 gallons per minute.
6. Check electrical circuit for proper voltage from building source. Do not connect with other appliances.
7. Remove cover from control box, check for loose or frayed wire, then turn manual switch to "on" position. Note: All models have motor compressor only switch in control box.
8. Turn disc on time clock to the right just far enough for water solenoid valve to energize. Allow clock to take it through harvest cycle. This will be approximately three minutes. (Figures on dial represent minutes).
9. Dial pointer should be set on Number 2 1/2. After the compressor starts, turn the dial completely around and send it through another harvest cycle. Do this several times. This will completely flush machine of any dust that may have accumulated in shipment.
10. After machine has been properly flushed, allow it to go into a freezing cycle--check for possible water leaks, check sump pump operation--should be running freely. Also note if jet tube travel is correct, and that none of the jets are plugged.
11. Time clock dial does not rotate at the end of the harvest cycle; it is started later by the cube size control located in the control box.
12. Freezing time will be approximately 30 minutes in a 70 degree ambient. (Longer if above, and shorter if below). After 25 minutes of the freezing cycle, check water in float chamber with a thermometer. (Should be approximately 130-140 degrees at this time.) If temperature is not correct adjust thermostat.
13. Watch first harvest and check to make sure that plastic curtains have not been damaged in shipment.
14. Check size of cubes made: If too small after a second complete cycle; adjust cube size control to lower or colder setting.
15. Check texture of cubes made; partially cloudy cubes throughout suggest unit running short of water near end of freezing, or possibly an extremely bad water condition, which would indicate use of filtering or purifying equipment. Contact SCOTSMAN -- Queen Products, Service Department, Albert Lea, Minnesota, for further details.
16. With unit on harvest cycle, take a handful of cubes made and hold on storage bin thermostat cover. Should cut unit off in one to two minutes. Remove ice: unit should cut back on automatically. Thermostat is factory set at 35° out, 39° in.
17. Replace all panels and service doors.

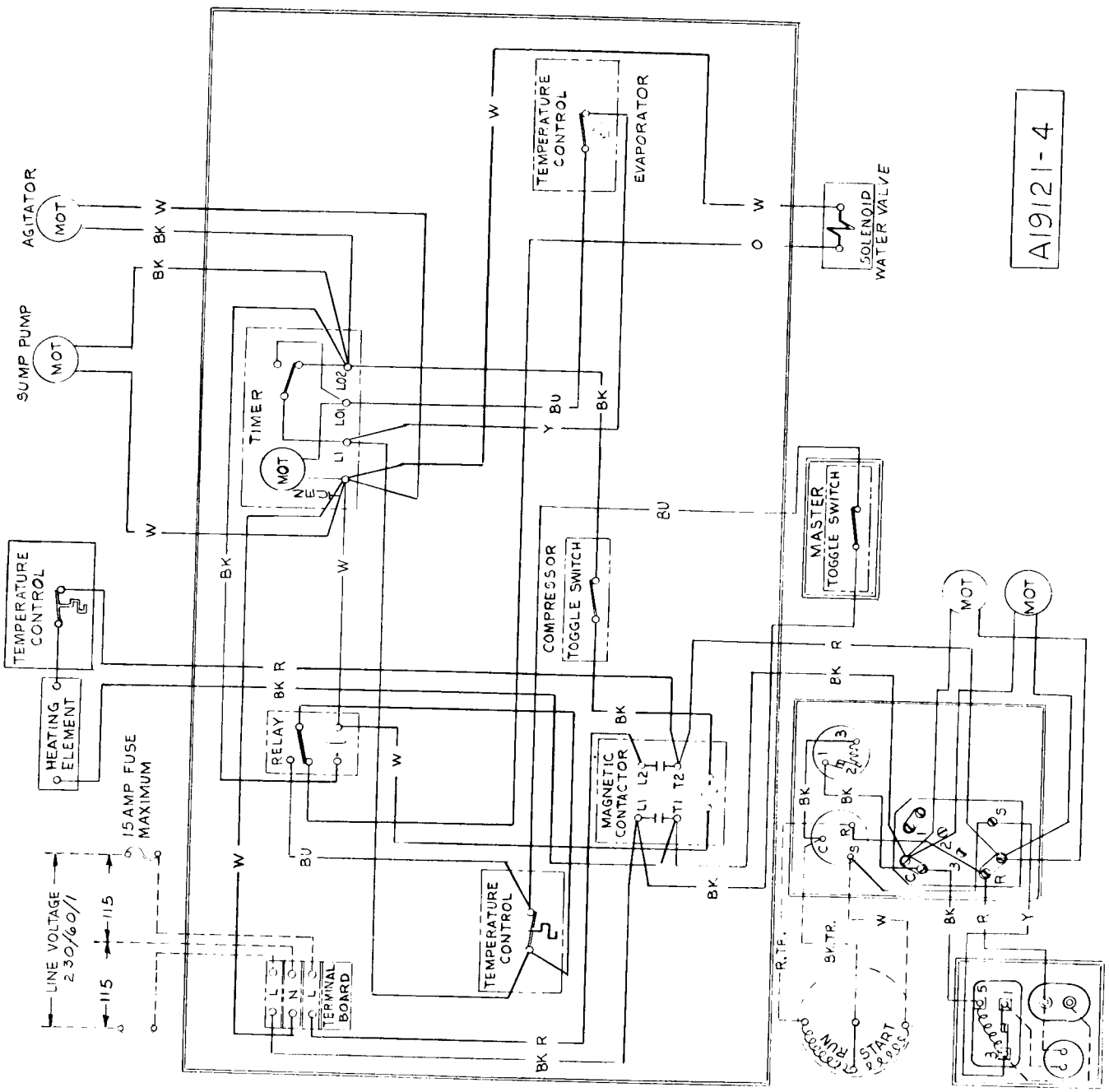

SM-505
WIRING DIAGRAM

230/60/1 AIR COOLED

A-19121-4

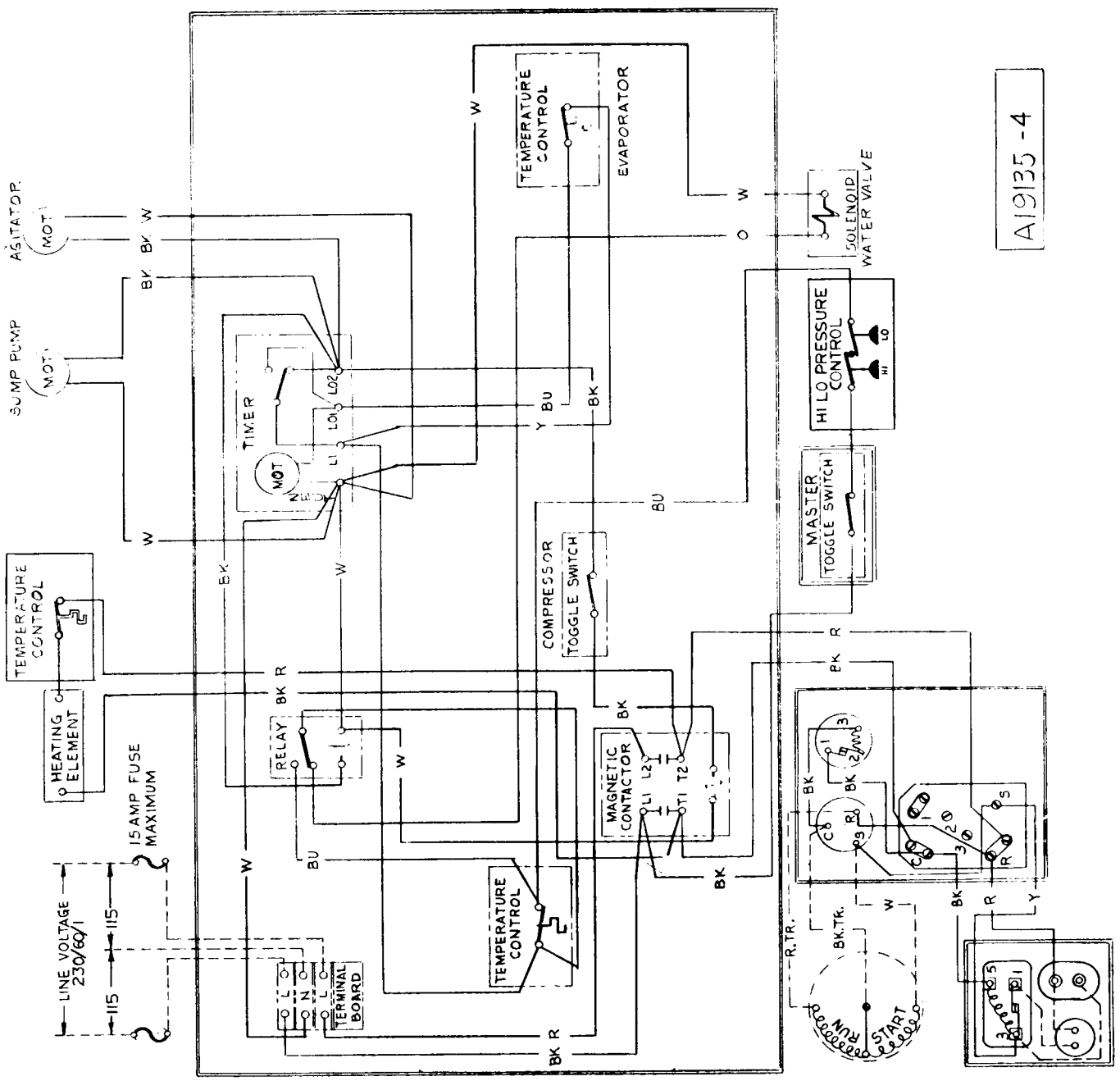

SM-505
WIRING DIAGRAM
230/60/1 WATER COOLED
A-19135-4

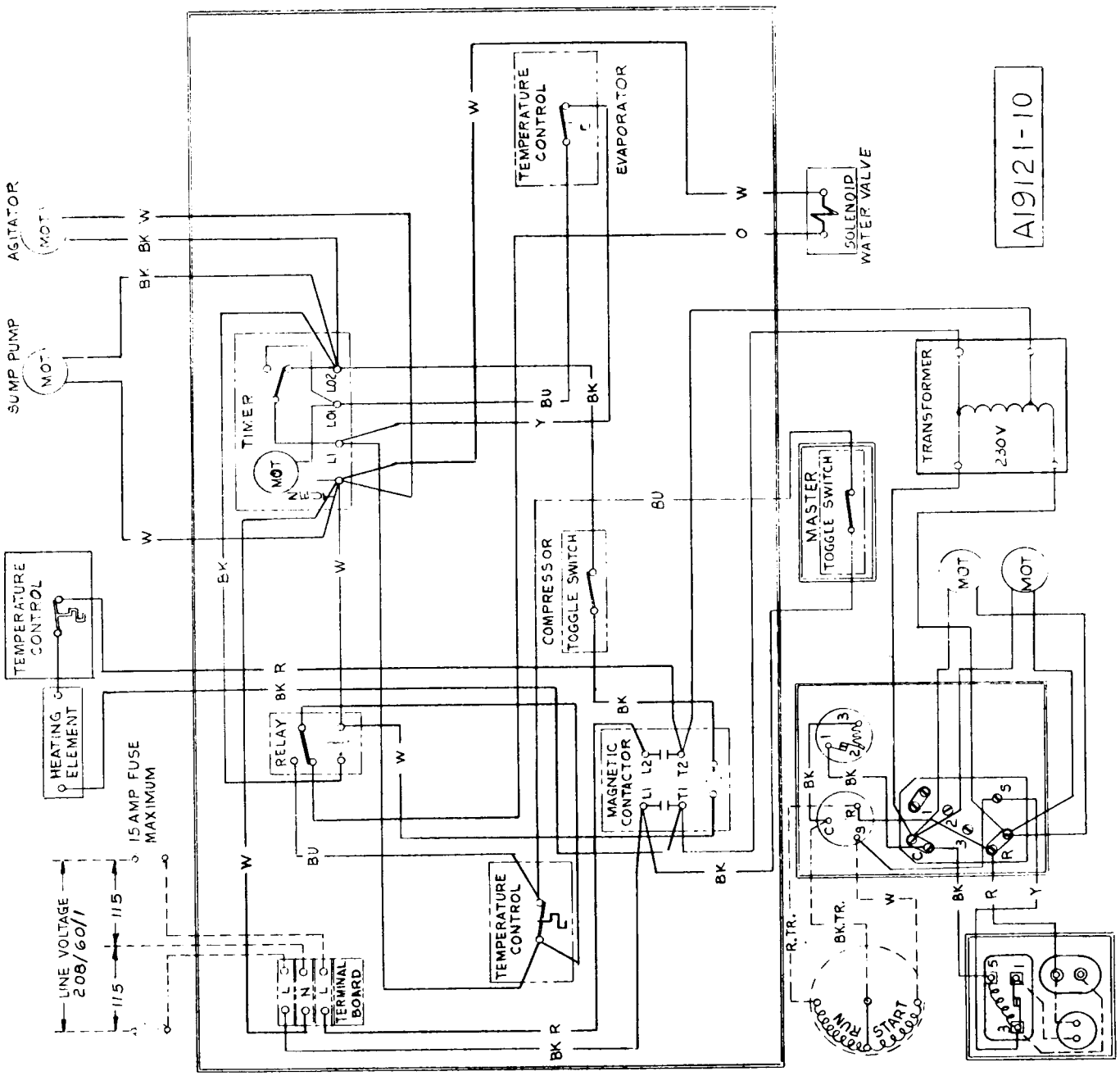

SM-505
WIRING DIAGRAM

208/60/1 AIR COOLED
A-19121-10

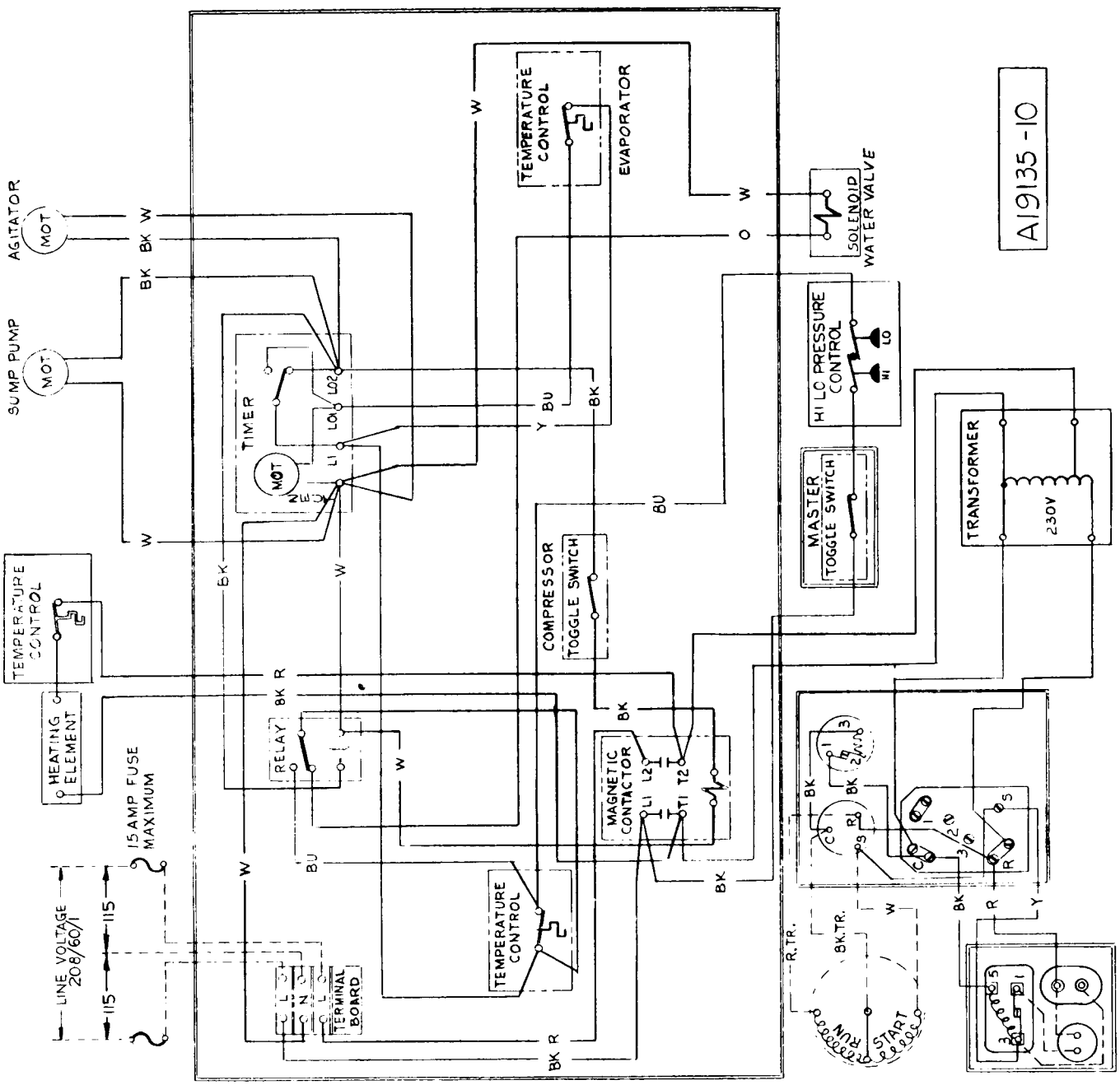

SM-505
WIRING DIAGRAM

208/60/1 WATER COOLED
A-19135-10

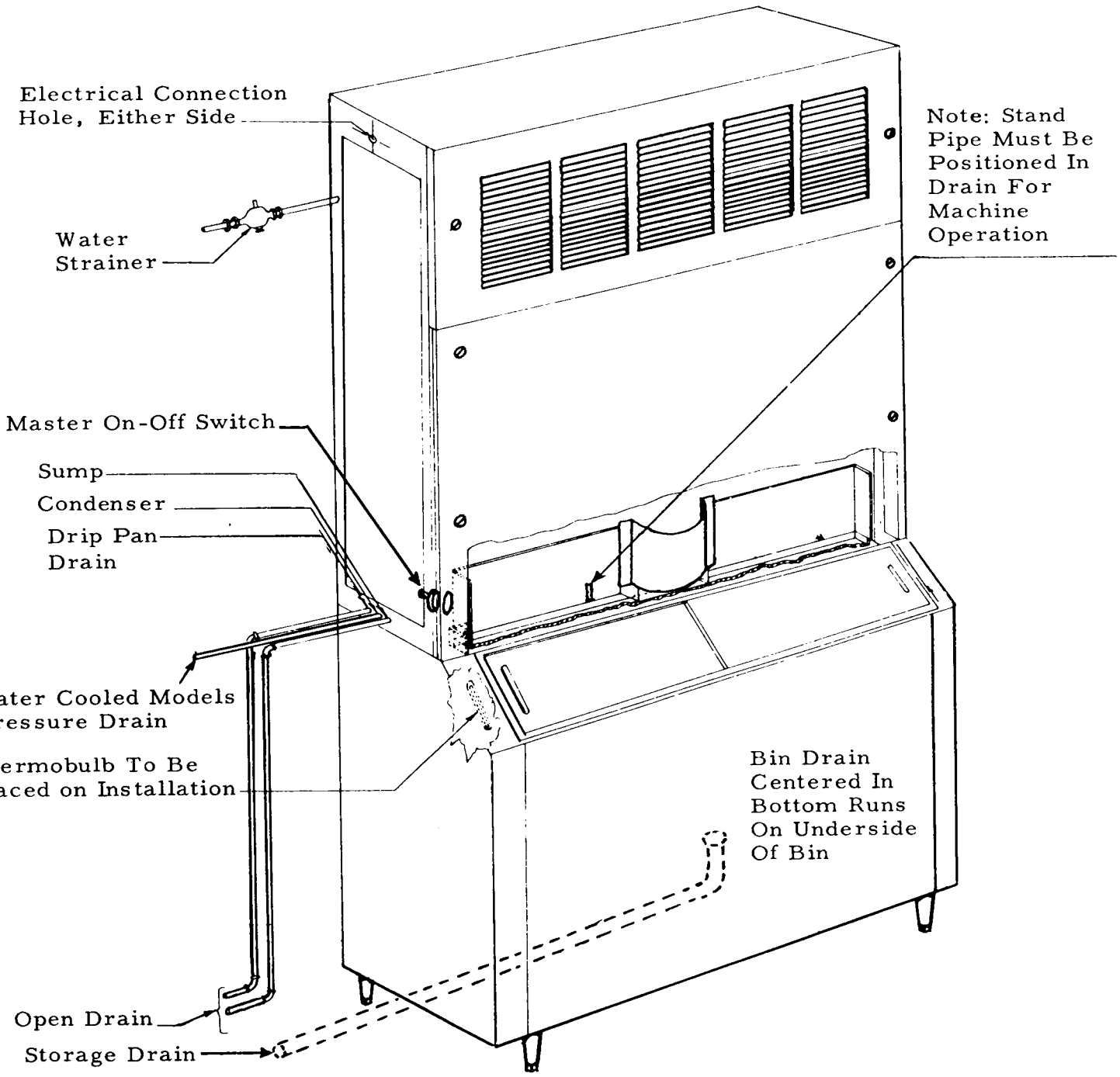

NOTE: Hand shut off valve to be located ahead of water strainer.
Air cooled models do not use condenser or pressures drain.

SM-505 INSTALLATION
WITH B-400 SERIES BIN

INSTALLATION

FINAL CHECK LIST

1. Is the machine level? (Important)
2. Have all electrical and plumbing connections been made and checked?
3. Is the water supply valve open and the electrical power on?
4. Has the voltage been load-tested and checked against nameplate voltage?
5. Have the compressor hold-down bolts been loosened so that the compressor rides freely on its mounting springs? Applies to semi-hermetics only.
6. Has float been checked and set in hot water tank for proper water level?
7. Turn machine on and test heater and thermostat. After 20 minutes of freezing cycle, check water in float tank (should be approximately 130 to 140 degrees by this time). If temperature is not correct, adjust thermostat.
8. Operate machine for at least two complete cycles.
9. Is the machine quiet in operation?
10. Have the installation and warranty cards been filled out?
11. Has the owner been instructed on how to operate the machine?
12. Is the machine clean?
13. Check the storage bin thermostat for proper setting of approximately 35 degrees cut out, 39 degrees cut in.
14. Head pressure average 135 # P.S I.
15. Back or suction pressure equalize with head during harvest cycle. During start of freeze cycle starts at about 60# P S I gradually pulls down to 3-5 # P S I end of freezing cycle.

HARVEST CYCLE

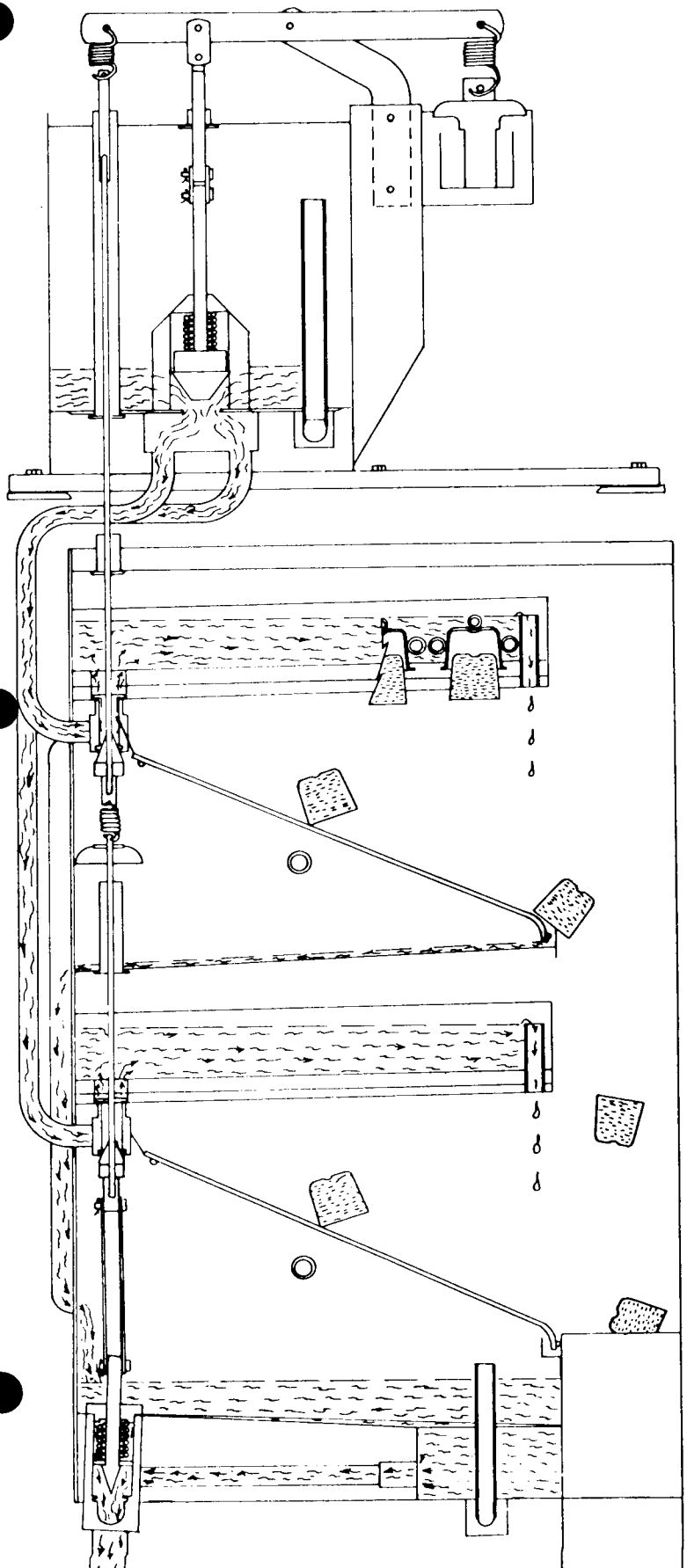

At the end of the freezing cycle the hot water from the water tank flows into the rubber platen holding the cups and by conduction on back of cups causes cubes to defrost. The platen cavity is completely filled up to the overflow point, and continues to overflow while in the defrost cycle; the amount of this water running over the overflow pipe is controlled by the flow control and the length of harvest time setting on the time clock; overflow water goes down the drain also. Meanwhile, cubes being released from the cups drop by gravity onto cube chute, then through curtained opening into storage bin. At completion of harvest cycle, the micro-switch on the timer shaft now drops points holding defrost components in cycle and switches to freezing cycle set of contacts. Clock motor now stops and will not start until cube size control closes once more. The freezing cycle starts and the water valve allows the hot water tank to refill. The chilled water from the upper cavity flows by gravity through the water valve to the sump tank and reservoir. This water is used to produce the next batch of cubes.

FREEZING CYCLE

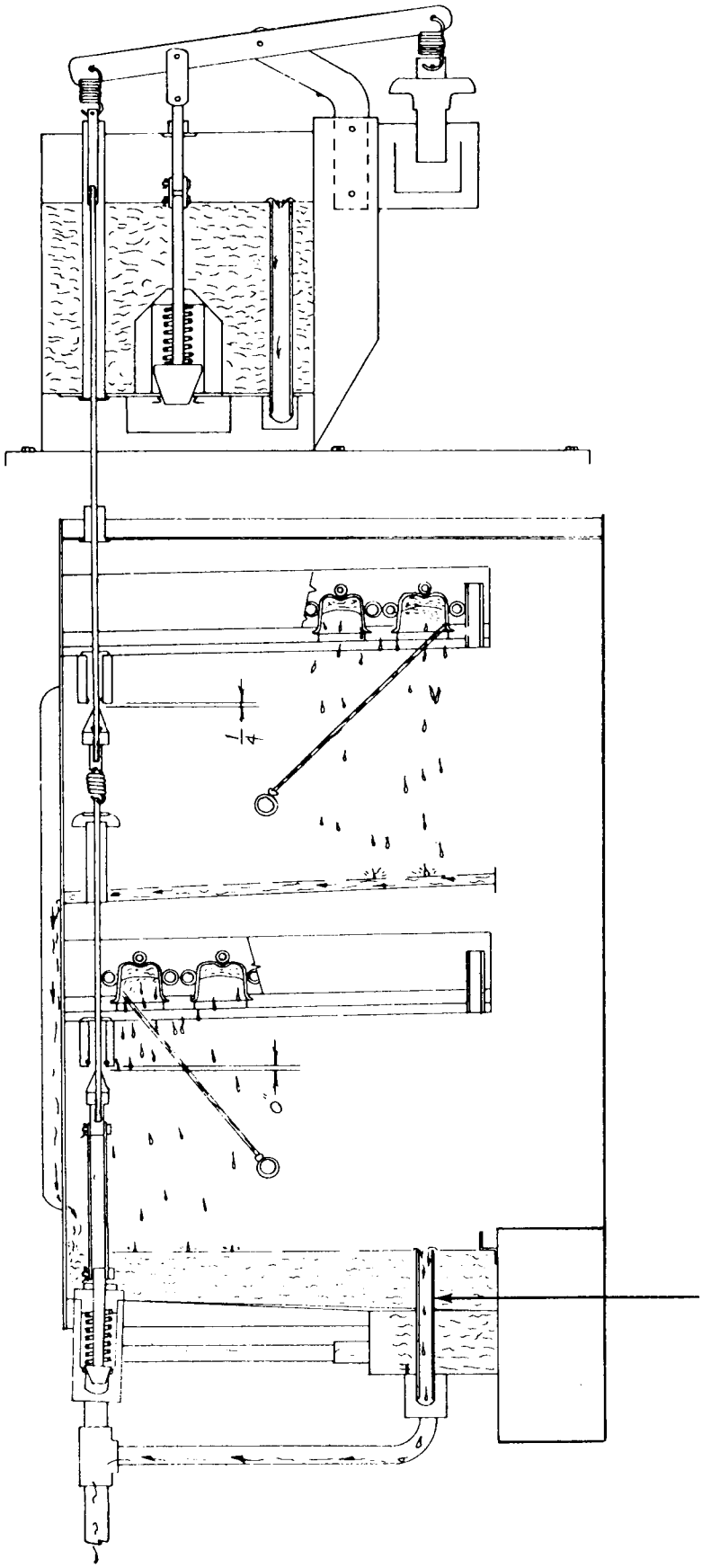

At the start of the freezing cycle, reservoir and sump tank contain enough water to make a complete batch of ice cubes, plus approximately an extra quart. When time clock closes load circuit, it starts the compressor, sump pump and heater element in hot water tank. At the same time it opens the circuit to clock motor. (Clock motor does not run first part of freezing cycle- - this is approximately 9 1/2 minutes) This timer has a single pole, double throw micro-switch for carrying and directing current. After a predetermined amount of ice is frozen, the cube size or reverse acting temperature switch closes, actuating the time clock motor circuit which continues the freezing cycle approximately 9 1/2 more minutes. (After clock motor starts, freezing time will be 12 minutes less defrost time setting.) At the end of the 9 1/2 minute period, time clock operated switch opens compressor, sump pump and heater element circuit, and closes circuit to time clock motor and solenoid operated water valve. At this time, the water valve allows heated water in hot water tank to flow by gravity through solenoid valve, and into the upper cavity of the freezing chamber, and, at the same time allows the surplus water from the preceding batch of ice cubes to go down the drain.

NOTE: Harvest water is used to make next batch of ice, therefore on initial start up it is necessary to have unit in a harvest cycle. This can be done by manually turning timer dial. Average cycle time is 30-35 minutes.

SERVICE ANALYSIS

Symptom	Possible Cause	Suggested Correction
1. Unit will not run.	Power off. Blown fuse.	Check main switch, fuses and wiring
	Manual switch in off position.	Turn manual switch to "on"
	High pressure control locked out.	Reset and check for cause of control off.
	Ambient temperature of room too low.	Must be above 50° Farenheit.
	Bin thermostat set too high.	Set approximately 35° cut out, 39° cut in.
2. Compressor cycles intermittently.	Low voltage.	Check with volt meter. Notify power company if 10% over or under nameplate rating.
	Air in system causing high head.	Purge system. Evacuate and re-charge.
	Shortage of refrigerant.	Check frost line, should be cool but not frost on suction service valve.
3. Cubes small. (short cycle)	Cube size control not properly set.	Set control to colder setting
	Moisture in system.	Change dryer and refrigerant.
	Short of water.	Flow control plugged.
		Clean out - install filter in supply line.
	Lower drain valve in sump tank leaking.	Flush or remove and clean. Replace rubber O-ring seat.
	Sump tank stand pipe not properly seated.	Check and re position.
4. Cubes small. (long cycle)	Shortage of refrigerant.	Check frost line and add refrigerant. Refer to name-plate for correct amount of refrigerant.

SERVICE ANALYSIS

Symptom	Possible Cause	Suggested Correction
5. Cubes too large. (slow defrost)	Very small shortage of refrigerant.	Check frost line. Add refrigerant slowly.
	Water valves not holding in hot water tank.	Hold float closed and check during freeze cycle.
	Cube size control set too cold.	Reset to warmer setting on adjustable cam.
6. Cubes cloudy.	Drain valve and sump tank leaking.	Check during freeze cycle.
	Curtains damaged or binding.	Repair or replace.
	Restriction in incoming water.	Check at float in hot water tank and flow control.
	Screen plugged on bottom of sump pump.	Remove and clean.
7. Irregular cubes. (some clear, some cloudy)	Clogged jets in jet tubes.	Remove and clean. Use care not to elongate jet holes in plastic tubes.
	Cube slides interfering with jets.	Adjust so that jet streams center in cube rack slots.
8. Improper harvest.	Time clock not set properly.	Reset on No. 2 1/2 with adjustable cam.
	Drain valves in hot water tank leaking which prevents water from coming up to temperature.	Inspect and repair. Check rubber O-ring seat under tapered plunger.
	Incoming water restricted.	Check water lines, etc.
	Float valve leaking. (Hot Water Tank)	Check during freeze cycle, float valve should fill tank to 1/4" below overflow pipe then shut water supply off. Replace rubber seat if leak continues.

SERVICE ANALYSIS

Symptom	Possible Cause	Suggested Correction
8. Improper harvest. (Cont'd.)	Stand pipe not properly seated, in hot water tank.	Remove cover and check.
	Machine not level. (Allow water to stand in upper cavities and freeze.)	Level machine.
	Burned out heating element in hot water tank.	Replace.
9. High head pressure.	Over-charge of refrigerant.	Purge.
	Air in system.	Purge.
	Defective water regulating valve.	Replace.
	Burned out or stuck fan motor(s) air cooled.	Replace or oil as needed.
	Water regulating valve improperly adjusted.	Readjust to desired head 135# water cooled models.
	Incoming water restricted.	Check screens, lines, etc.
10. High suction.	Dirty or plugged condenser. Air cooled.	Blow condenser clean.
	* Inefficient compressor. valve plate.	Check with gauges and replace if necessary.
	Moisture in refrigerant system.	Purge refrigerant, replace dryer, and re-charge.
	Shortage of refrigerant.	Check frost line, add refrigerant until cool suction service valve is felt.
	Overcharge of refrigerant.	Purge.
11. Low suction pressure.	Moisture in system.	Purge charge, evacuate, replace dryer, and re-charge to nameplate charge.

* Refers to 3 phase units with semi-hermetic compressors.

SERVICE ANALYSIS

Symptom	Possible Cause	Suggested Correction
11. Low Suction pressure. (Cont'd.)	Extreme shortage of refrigerant.	Add refrigerant.
	Ambient temperatures too low. Air cooled.	Increase ambient to minimum 50°F.
12. Water leaking from plastic tubing in upper left hand corner above cube discharge openings.	Float level set too high in hot water tank.	Readjust. Bend float arm to hold water level 1/2" below overflow.
	Float valve leaking.	
	Water-logged float ball.	
13. Unit noisy.	* Hold-down bolts on compressor not loosened.	Turn up until unit is free, floating on mounting springs.
	Refrigerant lines vibrating.	Straighten.
	* Compressor short of oil.	Check oil level. Proper level 1 1/2 inches below crankcase port or 1/2 of sight glass.
	High head pressures.	Check with gauges. Normal head pressure is 135-150#. Purge if necessary.
	Shroud touching fan blades on air cooled models.	Reposition shroud.

* Refers to 3 phase units with semi-hermetic compressors.

SM-505 H SUMP PUMP

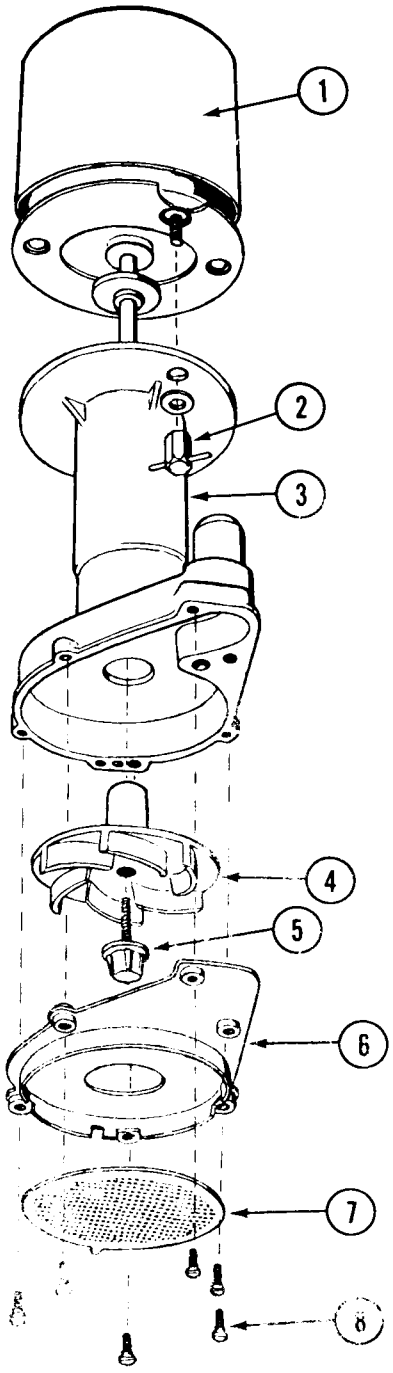

ITEM NO.	PART NO.	NAME
1.	12-1351-22	Motor Only
2.	12-1351-32	Wing Hex Nuts
3.	12-418-30	Pump Body
4.	12-1351-21	Impellar and Spring
5.	12-1351-31	Impellar Screw and Gasket
6.	12-1351-27	Bottom Inlet Plate
7.	12-1351-26	Inlet Screen
8.	12-1351-29	Wing Screws
	12-418A-1	Complete Pump

SM-505 H CONTROL BOX ASSY

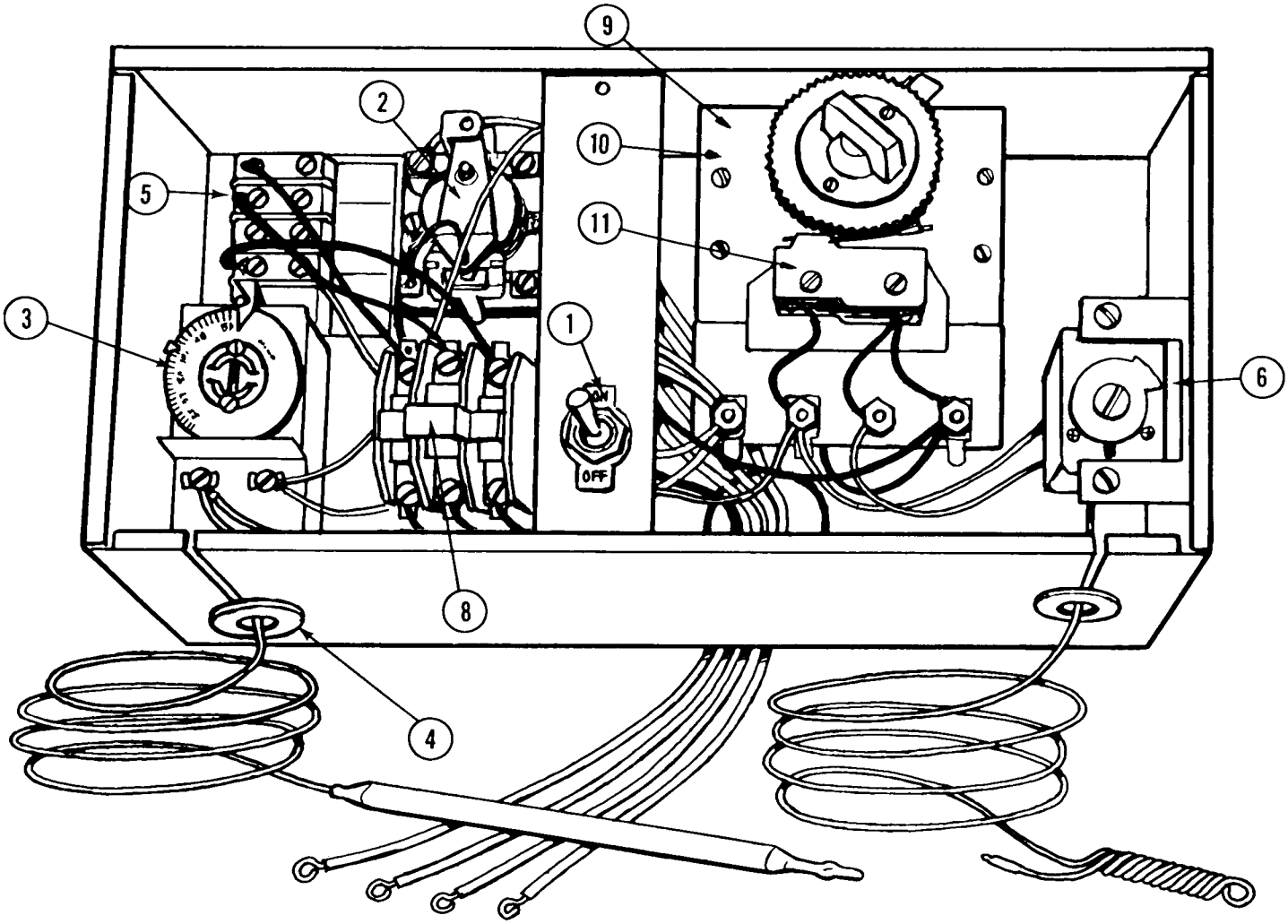

ITEM NO.	PART NO.	NAME
1.	12-426	Switch- Compressor only
2.	12-419	Relay
3.	11-99-1	Bin Control
4.	13-124	Grommet
5.	12-813	Terminal Block
6.	11-345-1	Cube Size Control
7.	12-820-1	Contactor 115/230/60/1
	12-739-1	Contactor 115/208-220/60/3
8.	12-645-1	Timer
9.	12-367	Timer Motor only
10.	12-645-20	Micro-Switch

SM-505 DRIVE LINKAGE

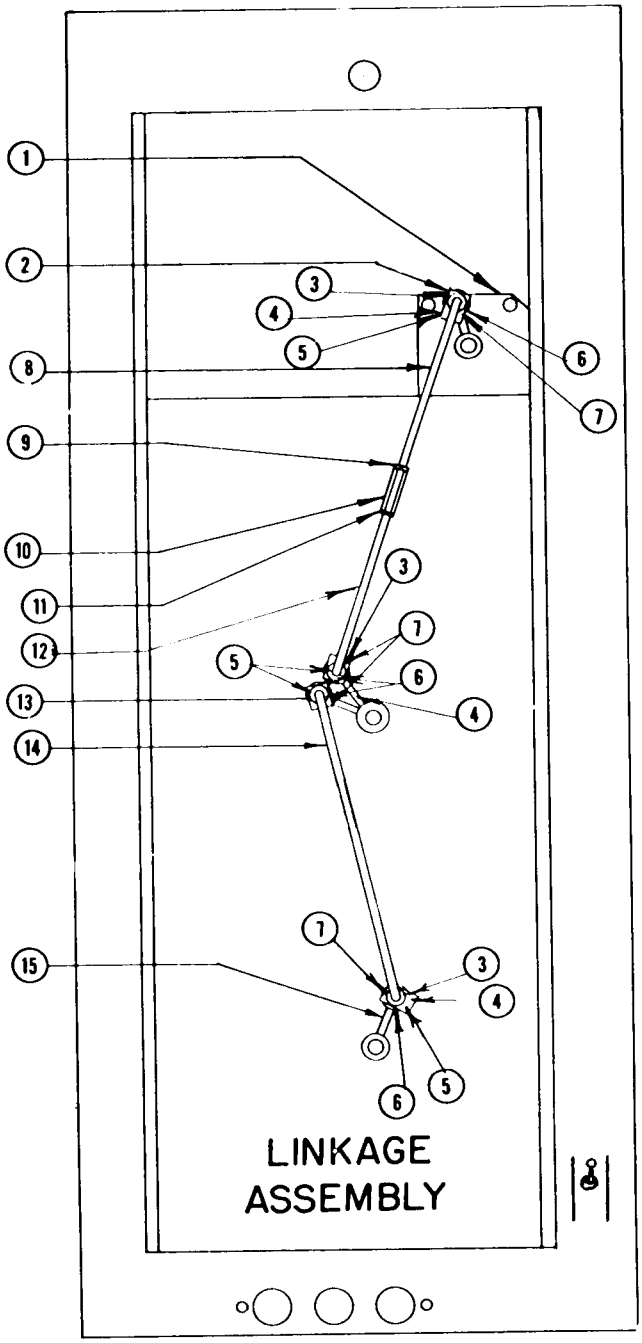

ITEM NO.	PART NO.	NAME
1.	12-1383-1	Drive Motor
2.	S-9666	Driver Arm
3.	S-7558	Bearing Clip
4.	3-431	Set Screw
5.	3-75	Washer
6.	3-396-1	Cotter Key S.S.
7.	A-7033	Bearing
8.	S-7940	Upper Linkage (left)
9.	S-7937	Linkage Nut (left)
10.	S-7936	Linkage Coupling
11.	3-357	Nut (right)
12.	S-7938	Linkage (right)
13.	A-17233	Double Driver Arm
14.	A-17234	Lower Linkage
15.	A-17232	Driver Arm
16.	12-426	Switch-Master On-Off
	A-17230	Linkage Complete (less motor.)

↗

A17230-000

Most Parts are obsolete
But you can order
the whole assy.

MM-510 H AIR AND WATER COOLED

Front View

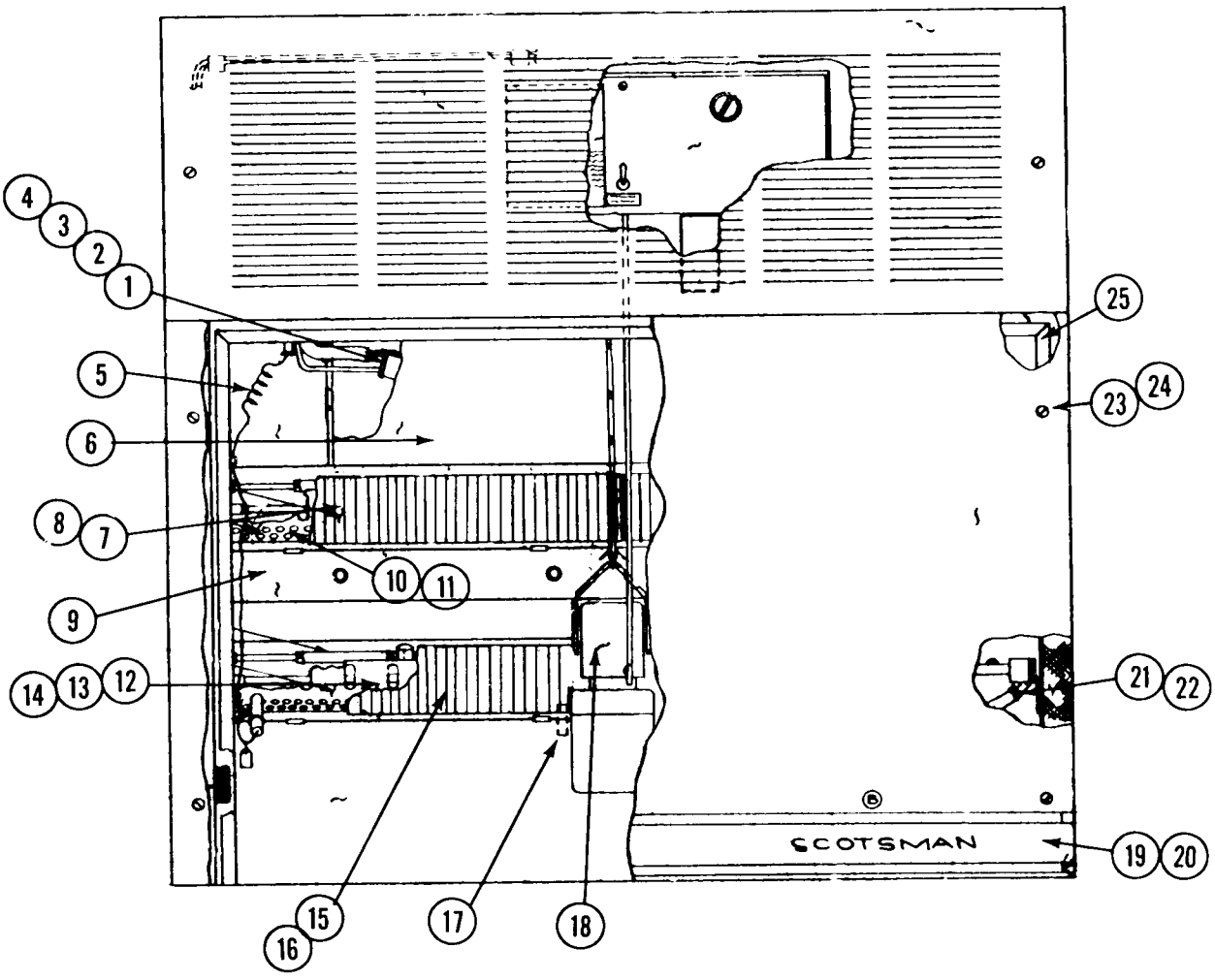

ITEM NO.	PART NO.	NAME
1.	A-18958	Freezer Complete
2.	A-18951	Left Cup Ass'y (2 required)
3.	A-18952	Right Cup Ass'y (2 required)
4.	13-638	Rubber Cup holder (4 required)
5.	A-18311	Upper Face Plate
6.	S-9805	Accumulator Cover
7.	A-17243	Upper Curtain Ass'y
8.	3-727	Thumb.Nut
9.	A-16662	Lower Face Plate
10.	A-18955	Upper Cube Chute (Right)
11.	A-18956	Upper Cube Chute (Left)
12.	A-18953	Cube Chute (Right)
13.	A-18954	Cube Chute (Left)
14.	A-18935	Cube Deflector
15.	A-16778	Left Curtain Ass'y
16.	A-16777	Right Curtain Ass'y
17.	A-17521	Stand Pipe
18.	12-418A-1	Sump Pump
19.	15-474	Emblem Decal
20.	A-5720-9	Moulding Trim (2 required)
21.	2-1338-1	Hose Clamp (4 required)
22.	5-171	Tygon Tube Per Ft.
23.	3-1029	Nut (6 required)
24.	3-789	Screw (6 required)
25.	A-17256	Door Gasket

In Package:

*	A-16108	Buttons
	13-590	Bulb Gasket
	A-15759	Bulb Cover

SM-505 H AIR COOLED

Top View

WITH SEMI-HERMETIC SHOWN

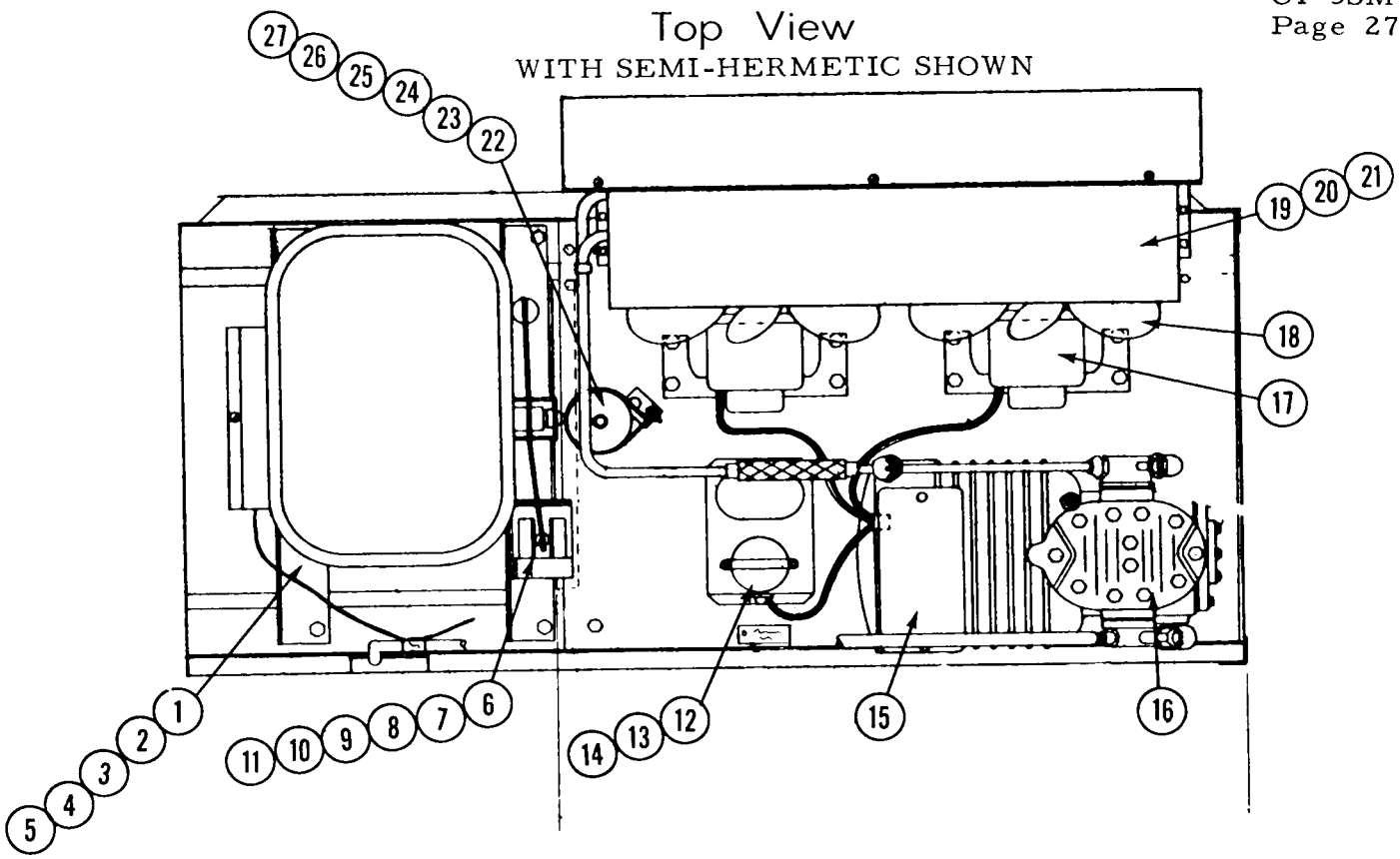

ITEM NO.	PART NO.	NAME
1.	12-1383-1	Drive Motor*
2.	13-100	Grommets (4 required) *
3.	3-50	Screws (4 required) *
4.	3-70	Nut (4 required)
5.	3-1021	Washer (8 required) *
6.	12-1396-1	Solenoid
7.	A-18276	Solenoid Mount
8.	3-1284	Elastic Stop Nut *
9.	13-625	Grommet *
10.	13-298	Washer, Rubber *
11.	3-499	Screw *
12.	18-1901-30	Start Capacitor
13.	18-1902-29	Run Capacitor
14.	18-1903-29	Relay
15.	18-2300-25	Overload
16.	18-2300-4	Compressor 230/60/1
	18-2300-4	Compressor 208/60/1
17.	18-559	Fan Motor
18.	18-625	Fan Blade
19.	A-17329	Shroud
20.	2-784	Shroud Fastener (6 required)
21.	18-624	Condensor
22.	3-75	Washer
23.	3-11	Screw
24.	3-60	Nut
25.	2-677	Dryer
26.	A-6355	Dryer Bracket
27.	A-9388	Dryer Brace

* Not Shown

Note: Items 12 thru 15 are for 208 or 230/60/1 units.

SM-505 H WATER COOLED

Top View

WITH SEMI-HERMETIC SHOWN

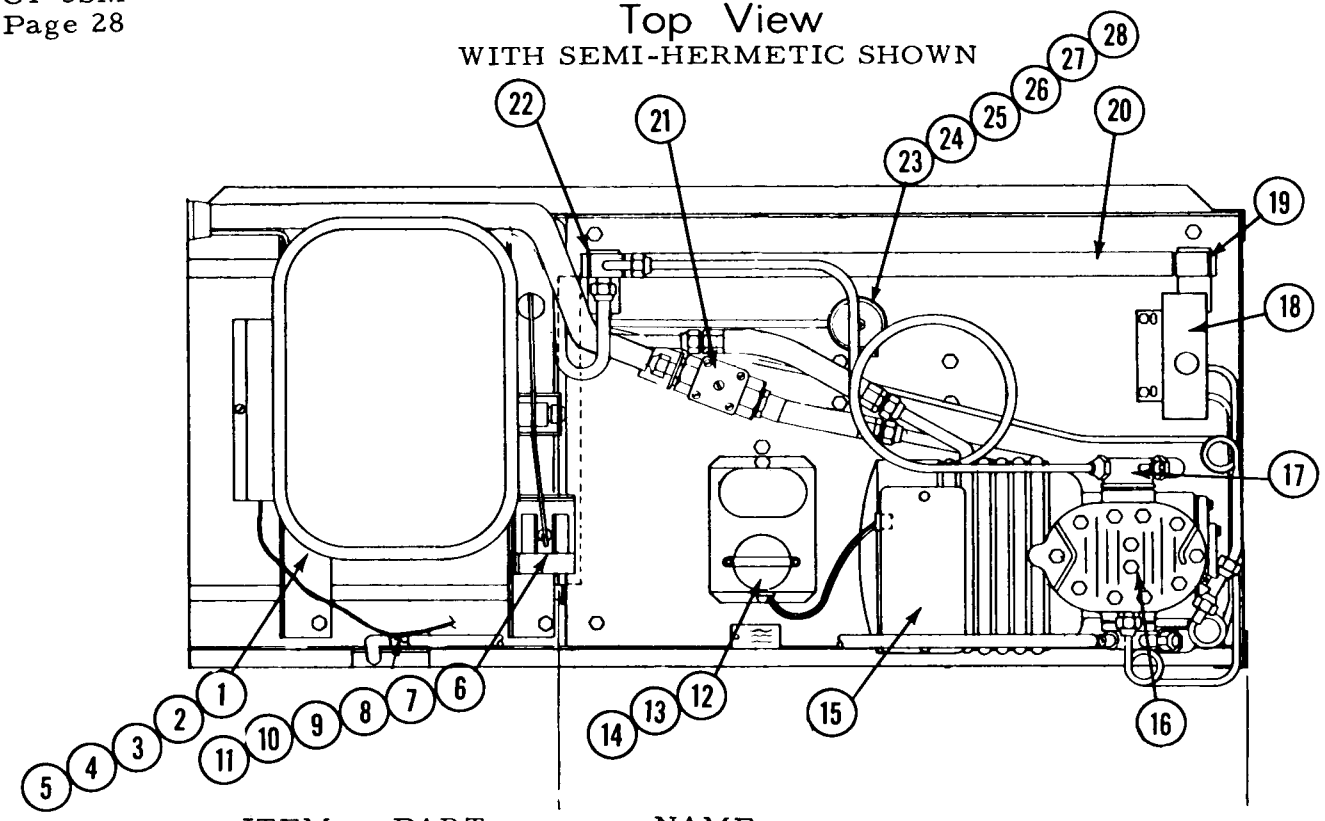

ITEM NO.	PART NO.	NAME
1.	12-1383-1	Drive Motor
2.	13-100	Grommet (4 required) *
3.	3-50	Screws *
4.	3-70	Nut *
5.	3-1021	Washers *
6.	12-1396-1	Solenoid
7.	A-18276	Solenoid Mount
8.	3-1284	Elastic Stop Nut
9.	13-625	Grommet
10.	13-298	Washer, Rubber
11.	3-499	Screw
12.	18-1901-30	Start Capacitor
13.	18-1902-29	Run Capacitor
14.	18-1903-29	Relay
15.	18-2300-25	Overload
16.	18-2300-2	Compressor 230/60/1
	18-2300-2	Compressor 208/60/1
17.	18-138	Service Valve
18.	11-286	Hi-Lo Pressure Control
19.	18-548	Condensor Gasket
20	18-599	Condensor
21.	11-198	Water Regulator
22.	18-549	Manifold Gasket
23.	3-75	Washer
24.	3-11	Screw
25.	3-60	Nut
26.	2-677	Dryer
27.	A-6355	Dryer Bracket
28.	A-9388	Dryer Brace

(*) Not Shown

Note: Items 12 thru 15 are for 208 or 230/60/1 units.

SM-505 AIR COOLED CASE ASSEMBLY

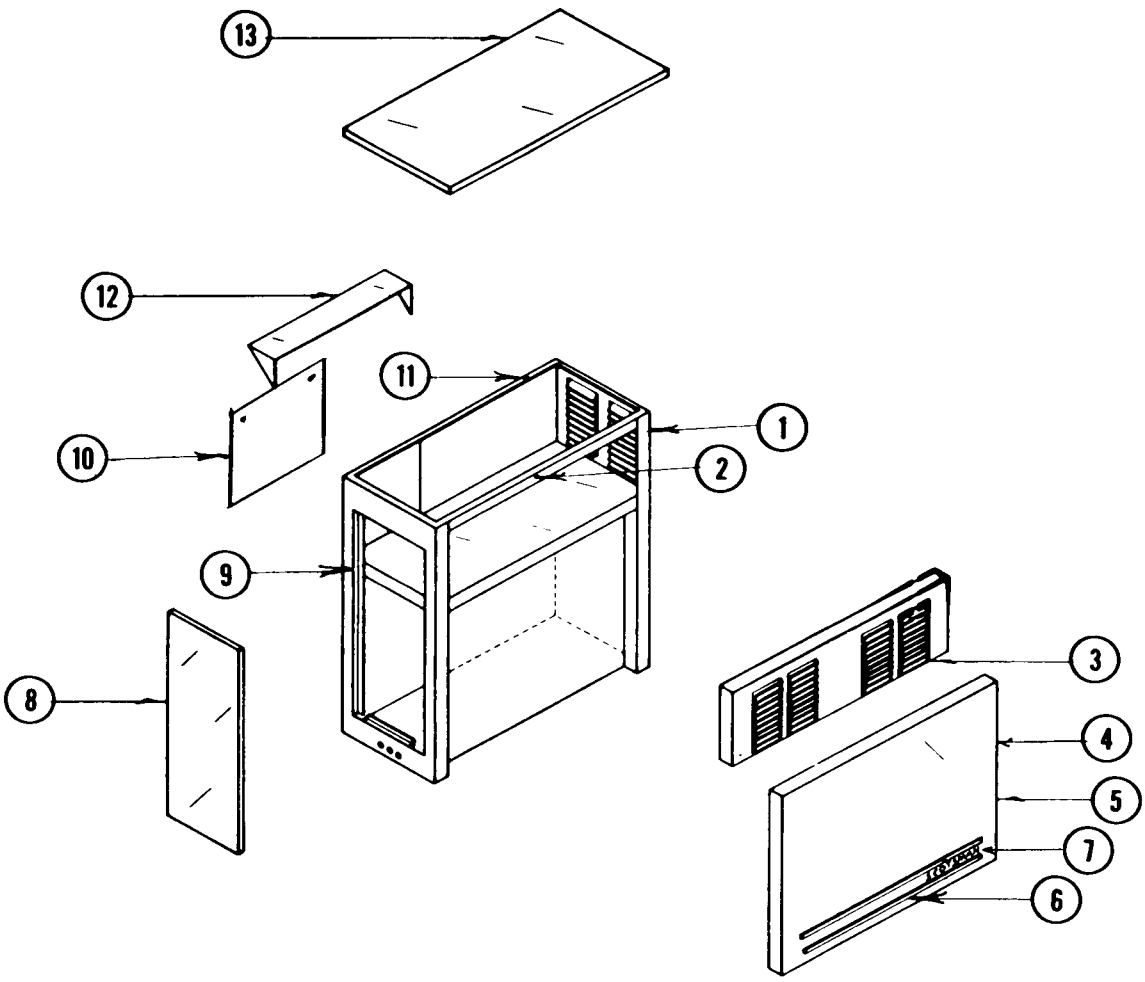

ITEM NO.	PART NO.	NAME
1.	A-8490	Right Side Panel
2.	A-17238	Top Channel
3.	A-16875	Upper Door Front
4.	A-17571	Door Gasket
5.	A-17352	Front Lower Door Assembly Complete
6.	A-5720-9	Moulding Strip
7.	15-474	Emblem Decal
8.	A-17211	Left Side Door
9.	A-17210	Left Side Panel Assy
10.	A-8495	Back Assembly
11.	A-8483	Top Back Ass'y
12.	A-8521	Shroud Top
13.	A-5694	Top Panel

SM-505 WATER COOLED CASE ASSEMBLY

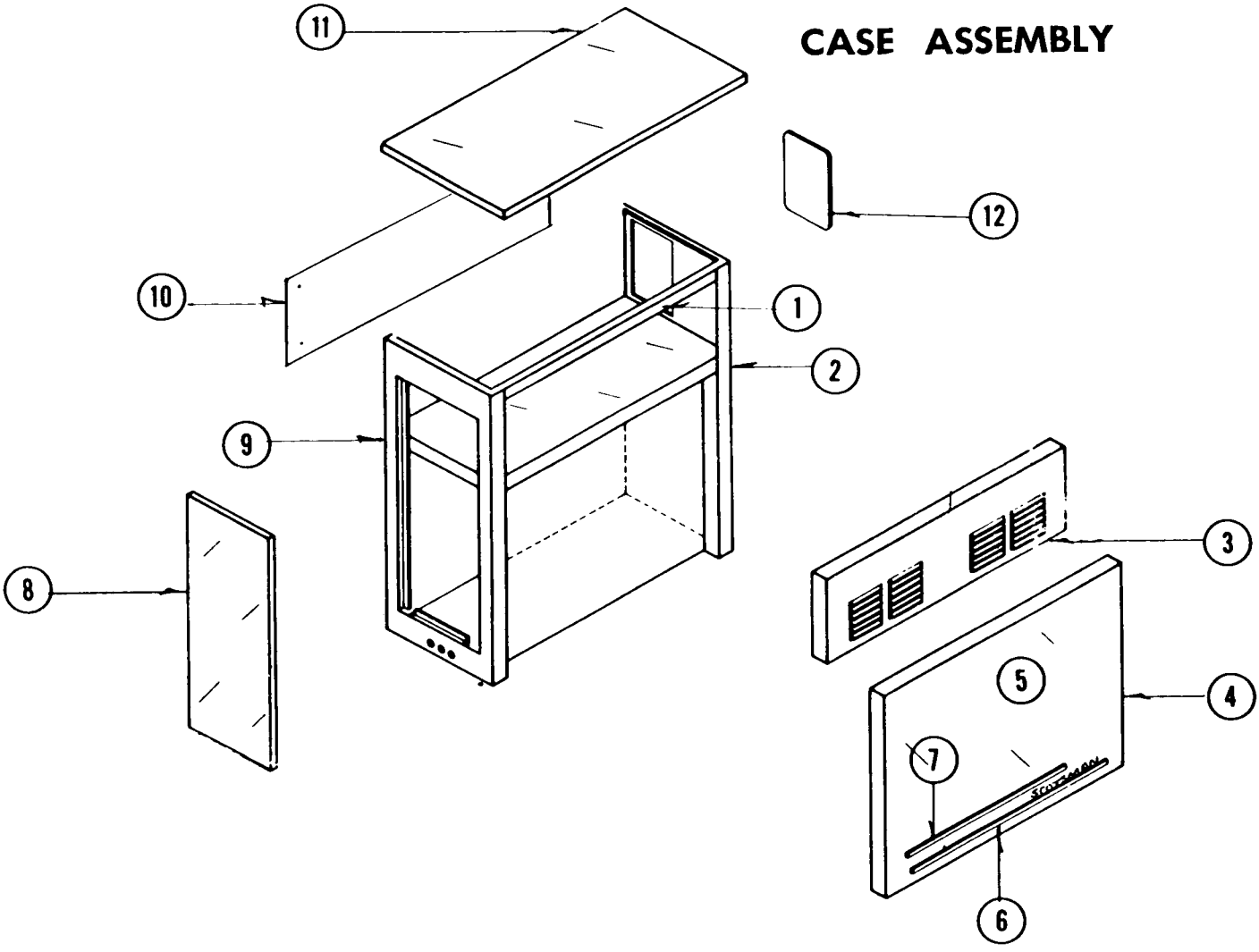

ITEM NO.	PART NO.	NAME
1.	A-17238	Top Channel Ass'y
2.	A-9323	Right Side Panel
3.	A-16875	Upper Door Ass'y
4.	A-17352	Front Lower Door
5.	A-17571	Door Gasket-Rear Bottom
6.	A-5720-9	Moulding Strip 2/unit
7.	15-474	Emblem Decal
8.	A-17211	Left Side Door
9.	A-17210	Left Side Panel Ass'y
10.	A-9321	Back Assembly
11.	A-5694	Top Panel
12.	A-5693	Right Side Panel Door

SM-505 HOT WATER TANK AND WATER VALVE ASSEMBLIES

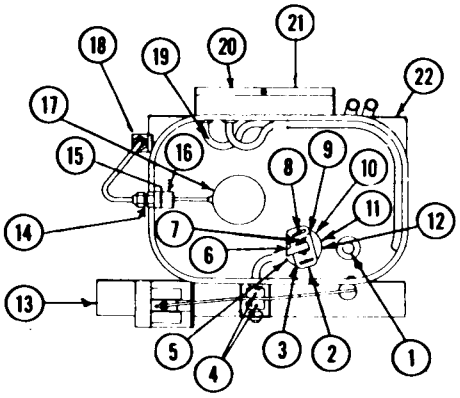

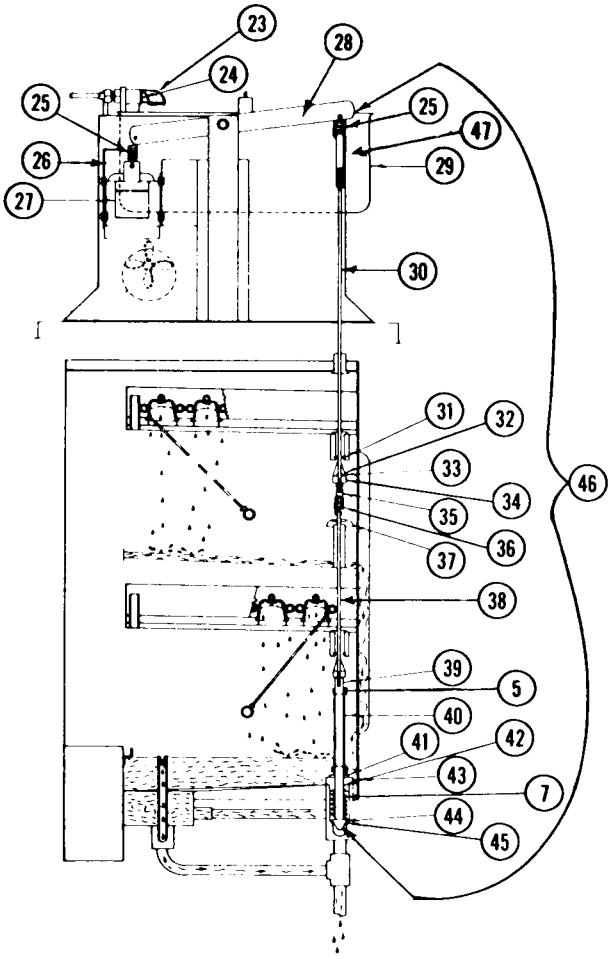

ITEM NO.	PART NO.	NAME	LIST PRICE
1.	A-8610	Stand Pipe	
2.	A-16973	Valve Plunger	
3.	A-8188	Plunger Link (SS) (2 reqd)	
4.	3-774	Roll Pins (2 required	
5.	S-7974	Stainless Pins (2 required)	
6.	3-396-1	Cotter Pins SS (2 required)	
7.	2-419	Compression Spring	
8.	3-255	Wing Nuts (2 required)	
9.	A-8182	Valve Seat Ass'y	
10.	A-8186	Drain Ass'y	
11.	2-543	'O' Ring	
12.	2-530	'O' Ring (drain Ass'y	
13.	A-8175	Right Bracket	
14.	A-6771	Water Inlet Valve Ass'y	
15.	A-5777	Valve Seat Holder	
16.	S-6947	Rubber Valve Seat	
17.	A-12068	Float & Arm Ass'y	
18.	A-13346-4	Flow Control	
19.	12-1455	Heating Element	
20.	12-246	Thermostat (*)	
21.	A-6480	Thermo Disc Cover	
22.	A-8173	Left Bracket	
23.	2-1320	Plastic Deflector	
24.	2-1259	Valve Pin	
25.	2-420	Spring	
27.	12-1396-1	Solenoid	
28.	A-8763	Lever Ass'y & Arm	
29.	A-8171	Hot Water Tank Sub	
30.	A-8199	Valve Rod	
31.	2-541	'O' Ring	
32.	S-8949	Valve Guide	
33.	2-545	'O' Ring	
34.	S-8948	Lock Nut	
35.	S-8946	Valve Nut	
36.	2-549	Spring	
37.	A-18355	Deflector Ass'y	
38.	S-8951	Lower Rod	
39.	S-8950	Lower Valve Nut	
40.	S-8953	Lower Valve Link (2)	
41.	S-8578	Drain Nut Stop	
42.	S-8942	Valve Guide Ass'y	
43.	S-7891	Nut	
44.	S-6924	Valve Seat Washer (2 required)	
45.	2-541	'O' Ring	
46.	A-8332	Water Valve Linkage Assembly	
47.	S-8943	Upper Valve Rod	
	A-18036-1	Hot Water Tank Complete	

* Not Shown

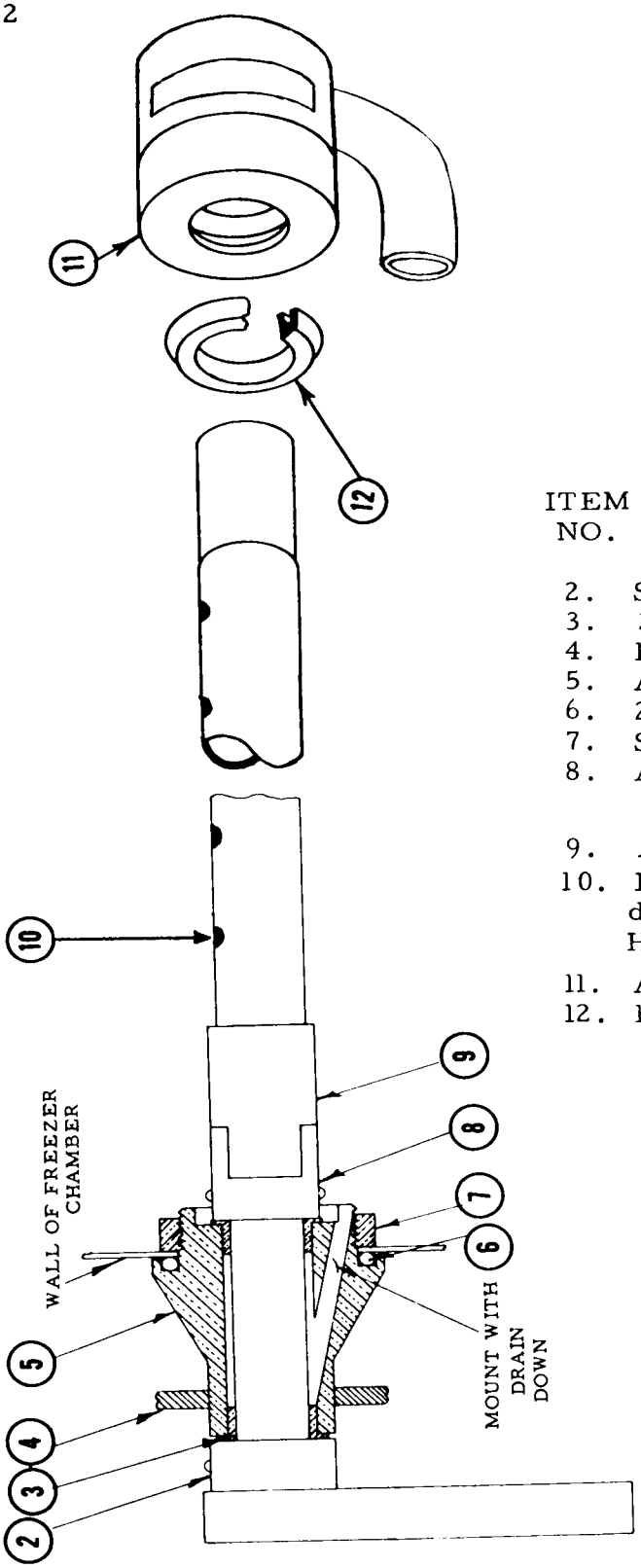

SM-505 SPRAY BAR
2 per unit

ITEM NO.	PART NO.	NAME
2.	S-7130	Collar
3.	2-438	Flange Bearing
4.	13-169	Grommet
5.	A-5660	Drive Bearing Support
6.	2-610	"O" Ring
7.	S-7635	Nut
8.	A-5679	Driving Journal Ass'y
9.	A-18933	Sprayer Tube
10.	Plastic spray bars have 20 drilled holes instead of jets. Holes are .078 diameter.	
11.	A-16929	End Bearing Ass'y.
12.	13-588	"U" Cup

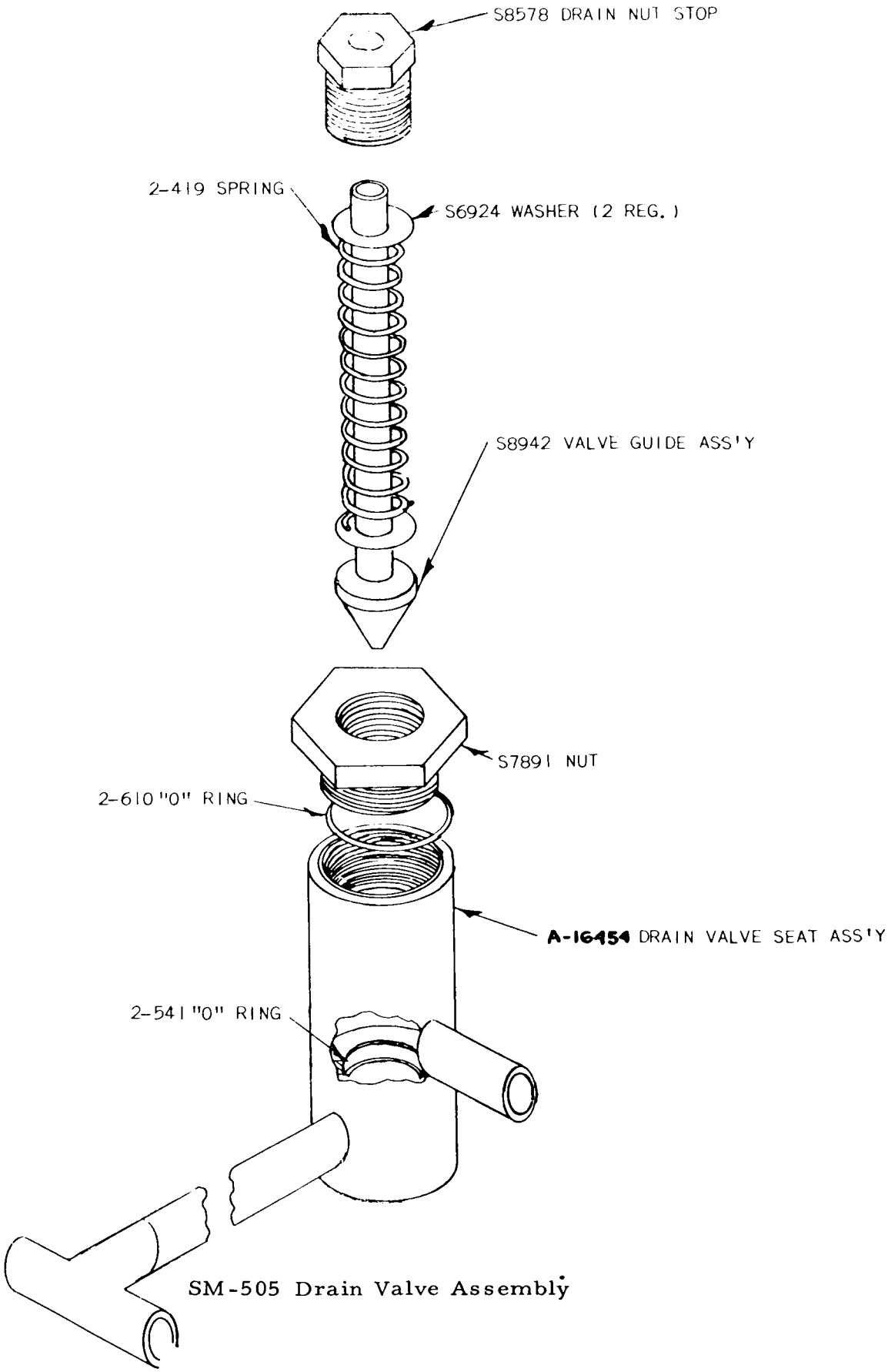

SM-505 Drain Valve Assembly

SM-505
WATER VALVE ASSEMBLY
LINKAGE AND ADJUSTMENT

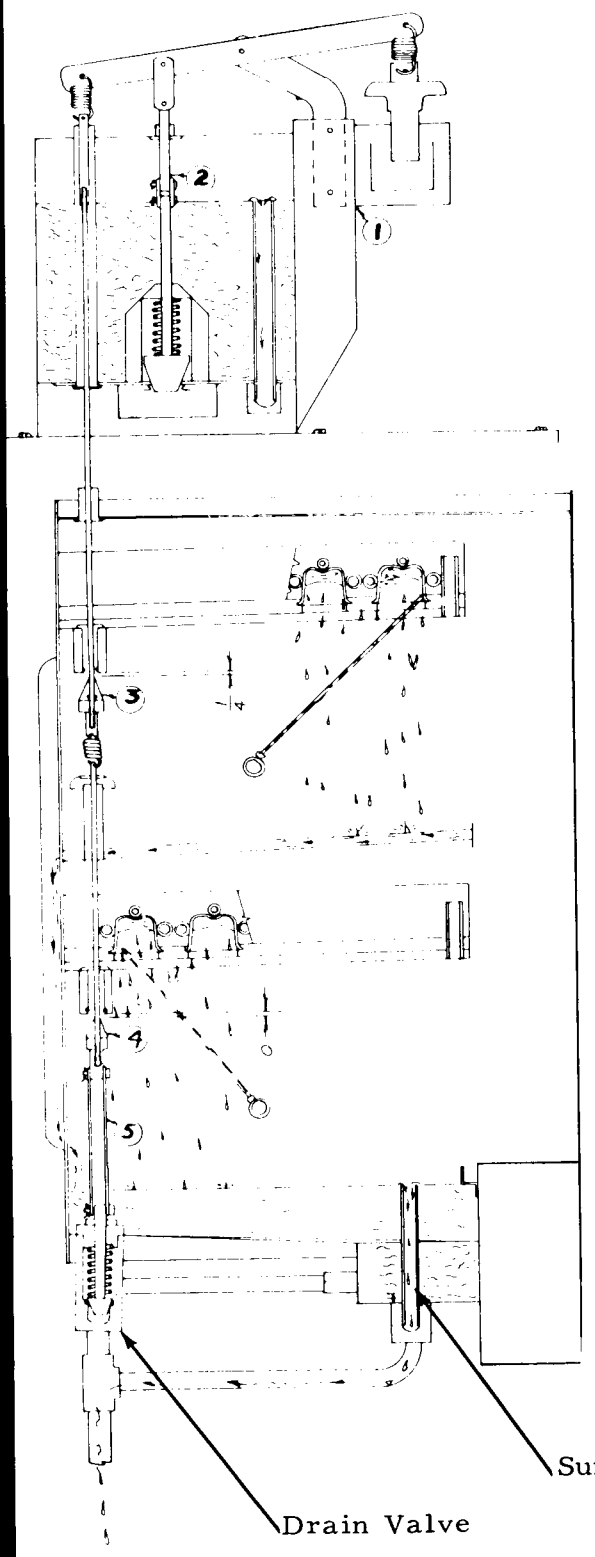

INSTRUCTIONS -- WATER VALVE ADJUSTMENT

Adjust solenoid at Point 1 up or down to the point where linkage at Point 2 is free and valve is closed in hot water tank with solenoid open wide.

Adjust valve at Point 3 to 1/4 inch distance from end of valve guide (S-9849) to valve seat (solenoid wide open).

Adjust valve at Point 4 to 0 inch distance from end of valve guide (S-8949) to valve seat (solenoid wide open).

Linkage at Point 5 adjusted to be free.

With solenoid closed, valve in hot water tank should be open about 3/8 inch or more. Valve at Points 3 and 4 should be closed. Spring at Point 3 should be stretched about 1/4 inch. Valve at Point 5 should be open about 3/8 inch.

Trouble -- Hot water tank valve not opening wide enough. Solenoid should be adjusted lower so to obtain full travel of solenoid.

SERVICE

REMOVING AND REPLACING COMPONENT PARTS

Capillary Tubes

These controls are an integral part of the suction line, being soldered to it along most of its entirety. 2 per unit.

To Replace the Compressor

1. Remove top panel and top front door
2. Release refrigerant charge by opening low side valve port.
3. Remove suction line at flare connection and sweat.
4. Disconnect the wiring from the compressor.
5. Remove the compressor hold-down nuts and lift the compressor out out of the unit.
6. Reverse steps 1 through 4 in replacing the compressor.
7. Evacuate unit with vacuum pump and recharge with refrigerant 12.

SERVICE

REMOVING AND REPLACING COMPONENT PARTS

To Remove Sump Pump

1. Put line switch in "Off" position.
2. Disconnect motor leads from terminals marked sump pump in control box.
3. Loosen cord connector and pull motor leads free.
4. Remove splash cover from sump and lift out pump.
5. Disconnect hoses.
6. To replace, reverse procedure.

To Remove Jet Tubes

1. Remove curtains from cube discharge openings.
2. Remove cube slides.
3. Push jet tube up at right end of tube, and bring forward far enough to acquire space to pull left end of tube out of drive mechanism.
4. Now remove stationary elbow coupling from right end of jet tube. Jet tube is now free, can be cleaned from right end opening.
5. To replace, reverse procedure. (Be sure to replace bearing on end of jet tube.) Check O-Ring in right side elbow.

To Adjust Linkage on Jet Tubes

1. Remove access panel.
2. Loosen lock nuts on turn buckles. (Note. One lock nut has left hand thread, the other right.)
3. Adjust turn buckle for desired linkage. (Note. Check at cube discharge opening with flashlight to be sure jet sprays are hitting front and back cups.)
4. Caution. Be sure to tighten lock nuts after adjustment has been made.

To Remove Jet Tube Drive Motor

1. Disconnect motor leads on terminals marked drive motor in control box.
2. Loosen connector and remove leads from control box.
3. Loosen Allen head set screw in drive arm.
4. Remove drive arm.
5. Remove motor hold-down bolts. (Note. For easy removal of hold-down bolts, remove access panel.)

To Remove Large End Panels

1. Remove concealed screws under door gasket.
2. Remove screws from top and back panels.
3. Pull panels loose from rear of machine.
4. Pull forward and remove. (Note. All insulation used in this machine is in sections in a solid form and can be removed readily to repair water leaks, or any other trouble that might develop.

FUNCTIONAL PARTS & MAINTENANCE

PART NAME:	Jet Tube Assembly.
PART NUMBER:	A-18933 2 per unit
PART FUNCTION:	This tube acts as the water distributor for the ice cube cups. Each tube has 20 jets over its length with each jet feeding one row of cups from front to back. Supply water is forced into the jet tubes by the sump pump and is directed upward in a continuous stream. Drive motor through drive linkage forces these tubes back and forth over a 20° arc which covers all cube cups.
PART SETTINGS:	Factory set. Occasionally the spray tube travel will be either too far forward or back missing the first or last row of cups as the case may be. This can be corrected by adjusting the nuts provided on the drive linkage.
PART REPAIRABLE:	No, jets not replaceable, clean openings with 5/64" drill.
PART MAINTENANCE:	Check inlet supply elbow to make sure O-ring there is not worn letting water leak at this point. All jets should be cleaned also. By running Scotsman Ice Machine Cleaner through unit this step will eliminate hand cleaning. Partially plugged jets will produce cloudy or partial cubes. Wholly plugged jet will not produce a cube in cube cups it normally covers.
PART NAME:	Sump Pump.
PART NUMBER:	12-418A-1
PART FUNCTION:	Recirculating Pump used to pump supply water in sump tank to jet tubes during freezing cycle.
PART SETTINGS:	Factory set.
PART REPAIRABLE:	Yes. Motors rewound, impeller blades replaced. Motors only are also available for this pump, Part No. 12-1351-22.
PARTS MAINTENANCE:	Cleaning a stuck motor with carbon tetrachloride or equivalent will re-activate the majority of the motors returned for this reason.

FUNCTIONAL PARTS & MAINTENANCE

PART NAME:	Agitator Drive Motor 40 RPM Merkle Korff
PART NUMBER:	12-1383-1
PART FUNCTION:	This motor is used to drive the linkage mechanism which in turn drives the osxillating jet spray tubes. This provides a constant spray movement to all the inverted cube molds and by so doing also aerates the water producing clear, solid Scotsman cubes.
PART SETTINGS:	No settings on motor, however, there are adjustable mounts which allow for moving motor slightly to position correctly.
PART REPAIRABLE:	Yes, to some extent. Bearings, windings, etc., may be replaced in electric motor shops. Normally replace.
PART MAINTENANCE:	Proper care in oiling with SAE 20 every six months or less as use indicates. There are two oil cups on the motor and a gear case hex head screw which has to be removed to change or add oil in gear case proper. Drive linkage should be inspected to insure free movement and no binding or drag on drive motor.
PART NAME:	Spray Tube Drive Linkage
PART NUMBER:	A-17230
PART FUNCTION:	To connect and transmit mechanically, drive motor power to jet tubes assembly. Consists of 3 arms fastened one each to the two jet tubes and one drive motor. Arms are connected by a two piece rod which has an adjustment nut in the middle to correct spray tube travel.
PART SETTINGS:	Factory set. Linkage should be adjusted so that there is no drag on drive motor and also to insure spray tube travel across all cube cups.
PART REPAIRABLE:	Yes. All components replaceable.
PART MAINTENANCE:	Check linkage for binding or worn spots. Tighten set screws holding arms to spray tubes and drive motor.

PART NAME: Hot water tank complete.

PART NUMBER: A-18036-1

PART FUNCTION: Tank serves dual purpose, stores correct amount of incoming supply water for next freezing cycle and also heats it electrically for use in defrosting preceding batch of cubes. Water inlet valve and float ball maintain correct water level. Thermostat and heating element maintain constant hot water temperature. 135°F.

PART SETTINGS: Factory set. Water float level has adjustment arm. Water level should be maintained 1/4" below overflow pipe. Thermostat governing temperature, of heating element has a scale and pointer which is factory set 135°F.

PART REPAIRABLE: Yes. All components of tank are replaceable. Water inlet valve. A-6771, heating element part No. 12-1455-20 and thermostat Part No. 12-246 are easily changed.

PART MAINTENANCE: Periodic cleaning with Scotsman Ice Machine Cleaner will dissolve accumulated scale on inlet valve seat, heating element and side walls of hot water tank. This in turn prevents excess loss due to leaky inlet valve and more efficient operation of heating element.

PART NAME: Water Valve Assembly

PART NUMBER: A-8332

PART USAGE: Used on all models.

PART FUNCTION: This portion of water valve extends thru unit from top to bottom and is actuated by the 12-1396-1 solenoid. During defrost periods it positions one seat to each freezer assembly and shunts hot water to those trays while also opening bottom drain valve. During freezing cycle seats to freezers drop down as does bottom drain seat, closing off drain water. This assembly made in sections which can be dismantled from inside.

PART SETTINGS: Entire valve can be adjusted either individually on each seat and drain seat or as a whole by taking up top rod adjustment to solenoid.

PART REPAIRABLE: Yes. All components in valve linkage available from factory stock.

PART MAINTENANCE: Care should be exercised in seeing that seats to platens or freezer trays, close fully during defrost and that hot water drain in tank opens 3/4" letting defrost water leave tank. Linkage when in defrost position will allow the 12-1396-1 actuating solenoid to fully close and when in freezing cycle to fully open. Seats, rods and springs in valve linkage should be checked for adjustment and wear every six months.

FUNCTIONAL PARTS & MAINTENANCE

PART NAME: Solenoid

PART NUMBER: 12-1396-1

PART FUNCTION: An electrically operated solenoid which is used to open and close the water valve through mechanical linkage. Solenoid is a continuous duty type.

PART SETTINGS: Solenoid itself requires no adjustment, however, linkage should be adjusted so that solenoid can make positive contact when energized and core will leave field when de-energized. Adjust linkage so that solenoid travels approximately 3/4" to close when energized.

PART REPAIRABLE: No. Replace when in-operative.

PART MAINTENANCE: Solenoid proper requires no maintenance but care should be exercised to insure proper voltage to coil to avert burn-outs. Mechanical linkage can be oiled and adjusted to prevent drag on solenoid. Many solenoid burn-outs are caused indirectly such as a sticking time clock which will keep solenoid energized for long periods of time.

PART NAME: Relay Potter and Brumfield Type PR5AX

PART NUMBER: 12-419

PART FUNCTION: Relay is used as a by-pass on the bin thermostat when it tries to cut unit off on a full bin of cubes during a freezing cycle. This insures full cubes every time a harvest occurs and prevents short cycling on bin thermostat.

PART SETTINGS: Factory set.

PART REPAIRABLE: No. Replace when in-operative.

PART MAINTENANCE: Check electrical connections and blow points clear of lint or dirt.

FUNCTIONAL PARTS & MAINTENANCE

PART NAME:	Reverse Acting Temperature Control
PART NUMBER:	11-345-1
PART FUNCTION:	Reverse acting temperature control, closes on temperature decrease, opens on temperature rise. Control determines length of freezing cycle and by the same token, the cube size. A lower setting on control will produce larger cubes, a higher setting, smaller cubes. This control actuates time clock motor, Part No. 12-645-1, which then takes over balance of freezing cycle (10 minutes) and also defrost period 2 1/2 minutes.
PART SETTINGS:	Adjustable by screw driver slot.
PART REPAIRABLE:	No. Replace when inoperative.
PART MAINTENANCE:	Check electrical connections. Blow points free of dust, dirt, lint, etc.
PART NAME:	Contactor
PART NUMBER:	12-820-1
PART FUNCTION:	Across the line contactor used to provide protection for hi voltage compressor only. Contactor is wired so any of the controls in pilot circuit such as bin thermostat will cause contactor holding coil to drop contact points when actuated. There are no overloads or resets on this control.
PART SETTINGS:	Factory set, no adjustments necessary.
PART REPAIRABLE:	No. Replace
PART MAINTENANCE:	Check control for loose electrical connections and blow free of any dust, dirt, etc.

FUNCTIONAL PARTS & MAINTENANCE

PART NAME:	Temperature Control Storage Bin. White Rodgers Type 1604-40
PART NUMBER:	11-99-1
PART FUNCTION:	To automatically cut machine off when ice level in storage bin reaches thermostat bulb. Automatically starts machine when ice level in bin falls below bulb location.
PART SETTINGS:	Most of these controls have differential being 4°F. Settings are 35° cut out and 39° cut in.
PART REPAIRABLE:	No. Replace when inoperative. If out of warranty it can be sent in through your local refrigeration supply dealer and repaired or replaced for a small percentage of original cost.
PART MAINTENANCE:	Remove cover, check points for corrosion or arcing every six months. Blow control free of bugs, dirt, etc. Check capillary for cracks or worn spots due to vibration. Hold small handful of ice on thermostat bulb to check operation of control. Tighten electrical connections.
PART NAME:	Timer. Automatic Electric.
PART NUMBER:	12-645-1
PART USAGE:	Heart of the cyclematic control system is the cube size temperature control Part No. 11-345-1 and the time clock it actuates. All electrical components are connected to the time clock terminal board and are shunted by means of a micro-switch to either the freezing cycle or harvest cycle. Micro-switch is in turn actuated by two metal cans that are directly connected to the electric timer clock motor. Timer has a 12 minute cycle, 9 1/2 minutes on freezing cycle after being cut on by low temperature control and 2 1/2 minutes on defrost cycle. Time clock face has numerals to 12 on the face. Each numeral represents a minute period. Face also has a lever beneath it which can be moved to lengthen or shorten defrost period.
PART SETTINGS:	Normal setting for defrost is on No. 2 1/2 which is 2 1/2 minutes.
PART REPAIRABLE:	Yes. Micro-switch, Part No. 12-645-1 are replaceable as well as timer clock motor only Part No. 12-367.
PART MAINTENANCE:	Check all electrical connections, blow contact points free of dust, dirt, etc.

MAINTENANCE INSTRUCTIONS FOR SCOTSMAN SUPER CUBERS

THE FOLLOWING MAINTENANCE MUST BE ACCOMPLISHED TWO (2) TIMES PER YEAR ON ALL SCOTSMAN SUPER CUBERS.

1. Clean air-cooled condenser. This is to be done frequently with the machine shut off. Air cooled models.
2. Clean hot water tank and evaporator, sump tank and screen, using Scotsman Ice Machine Cleaner or equivalent.
3. Remove jet tube and manually clean jets. Use 5/64" drill.
4. Check curtain assemblies. Replace any broken sections.
5. Tighten all electrical connections.
6. Tighten all bolts.
7. Check water supply. Clean and flush flow control. Clean water strainer.
8. Oil jet tubes drive motor three (3) places. Use SAE 20 oil--2 oil cups, 1 crankcase screw covered opening.
9. Oil sump pump motor. Necessary to remove pump on some models. Use SAE 20 oil. Note: Some pumps are ball bearing style, they have no oilers hence need no oiling.
10. Oil condenser fan motor. Punch sealed cap or remove screws where possible.
11. Check for refrigeration leaks with halide torch.
12. Check for water leaks. Tighten drain line connections.
13. Check size and condition of cubes. Adjust as required. See Service Analysis Section.
14. Check bin thermostat setting. Factory set at 35° out, 39° in.

PROCEDURES FOR USE OF SCOTSMAN ICE MACHINE CLEANER IN SCOTSMAN ICE MACHINE.

1. Remove front access doors.
2. Locate control box with time clock knob protruding thru cover.
3. Put unit through a harvest cycle manually. This may be done by turning time clock knob clockwise until a loud snap is heard.
4. Let unit finish cube harvest cycle and start into freezing cycle. This will be approximately 5 minutes after the loud snap in Step #3 is heard. At this time turn off the compressor switch.
5. Locate the hot water tank which is directly behind the top access door. Remove the hot water tank cover by pulling up around the edge until it snaps off. Pour 16 ounces, of "Scotsman Ice Machine Cleaner" into

6. Locate the sump reservoirs which are directly behind the ice discharge chutes. The discharge chutes are covered by a series of white plastic curtains which are free to swing out into the storage bin. Pour 8 ounces, of "Scotsman Ice Machine Cleaner" into each sump reservoir at both the upper and lower levels.

7. Let unit operate normally for 10-15 minutes into the freezing cycle. No ice will be made because the motor compressor is not in operation.

8. At the end of this time put the unit through 2 or 3 harvest cycles manually to allow fresh make up water to clean out remaining solution. Each time waiting approximately 5 minutes after the loud snap until the next harvest cycle is done manually.

9. Turn the compressor switch back on.

10. Check each new batch of new cubes until they are clean and until acid taste has been removed from cubes.

11. Put hot water in storage bin to melt the cubes and thereby clean the drains with the same solution that has just cleaned the unit.

12. Use a damp cloth to wipe off curtains and inside of storage bin.

13. Replace all access doors.

14. Unit is now ready for continued automatic operation.

DESCRIPTION	
CASE PARTS	
Scotsman Emblem	15-474
Left Side Door	A-17211
Bulb Cover	A-15759
Bulb Gasket	13-590
Adaptor Plug (Freezer Assembly)	S-7434
Right Side Panel, W.C.	A-9323
Right Side Panel, A.C.	A-8490
Left Side Panel	A-17210
Back Panel, W.C.	A-9321
Back Panel, A.C.	A-8495
Drive Bearing Support	A-5660
Top Panel	A-5694
Center Cube Deflector	A-18935
Upper Cube Chute, Left	A-18956
Upper Cube Chure, Right	A-18955
Lower Cube Chute, Left	A-18954
Lower Cube Chute, Right	A-18953
Right Side Panel, W.C.	A-5693
Shroud Top, A.C.	A-8521
Upper Curtain Assembly	A-17243
Lower Curtain Assembly, Right	A-16680
Lower Curtain Assembly, Left	A-16679
Door Nut, 6 reqd.	3-1029
Door Screws, 6 reqd.	3-789
Upper Door Assembly	A-16875
Front Door Liner Assembly	2-1536
Lower Front Door Assembly	A-17352
Upper Face Plate Assembly	A-18311
Lower Face Plate Assembly	A-16662
Bulb Holder Buttons	A-16108
Cube Tray Assembly, 2 reqd.	A-18957
Left Cup Assembly 2/unit Upper & Lower	A-18951
Right Cup Assembly 2/unit Upper & Lower	A-18952
Rubber Cup Holder 4/unit	13-638
Accumulator Cover	S-9805
Door Gasket	A-17250

For stainless steel case parts add -S to Part No.

DESCRIPTION	
ELECTRICAL	
Temperature Control (W-R)	11-99-1
Timer	12-645-1
Control, Cube Size	11-345-1
Relay (Bin Thermostat)	12-419
Drive Motor	12-1383-1
Sump Pump	12-418A-1
Contactor	12-820-1
Terminal Block	12-813
Toggle Switch (On/Off)	2/unit 12-426

COND. UNIT	
Dryer	2-677
Relay - Compressor	18-1903-29
Motor Compressor-- 208 or 230/60/1, W.C.	18-2300-2
Water Cooled Condenser	18-599
Water Regulating Valve	11-198
Starting Capacitor	18-1901-30
Running Capacitor	18-1902-29
Overload	18-2300-25
Plain Condenser Gasket	18-548
Manifold Condenser Gasket	18-549
(2 per unit) Fan Motor	18-559
(2 per unit) Fan Blades	18-625
(2 per unit) Fan Motor Bracket	18-636
Condenser, Air Cooled	18-624
Vibration Eliminator	16-317
Motor Compressor, 230/60/1, A.C.	18-2300-4
Motor Compressor, 208/60/1, A.C.	18-2300-4
Dual Pressure Control W.C. Models	11-286

WATER VALVE

DESCRIPTION	
Upper Valve Rod	S-8943
Rubber Valve Seat "O" Ring	2-541
Rubber Valve Seat "O" Ring	2-530
Middle Valve Rod	A-8199
Valve Nut	S-8946
Middle Valve Spring	2-549
Lower Valve Rod	S-8951
Lower Valve Link	S-8953
Spring (Drain Valve Seat Assembly)	2-419

WATER CIRCUIT	
Spray Tube Assembly	A-18933
Inlet Pipe Assembly (Upper)	A-5858
Inlet Pipe Assembly (Lower)	A-5857
End Bearing Assembly	A-16929
Overflow Pipe (Sump)	A-17521
Strainer	16-207
"U" Cup	13-588

DRIVE MOTOR & LINKAGE	
Single Driven Arm Assembly	A-17232
Double Driven Arm Assembly	A-17233
Linkage Coupling	S-7936
Lingage Rod, Lower	A-17234
Left Linkage Rod	S-7940
Linkage Rods, Right	S-7938
Complete Drive Linkage Assembly	A-17230
Driver Arm Assembly	S-9666
Set Screw	3-431
Drive Motor	12-1383-1
Left Linkage Nut	S-7937
Right Lock Nut (Two required)	3-357
Driving Journal Assembly	A-5679
Drive Motor Grommets	13-100
Bearing, Oil Lite	A-7033

DESCRIPTION	
Water Valve Assembly Complete	A-8332
Valve Seat Washer	S-6924
Valve Lever	A-8763
Valve Plunger	A-16973
Valve Link	A-8188
Drain Valve Seat Assembly	A-8182
Drain Valve Guide	S-8942
Valve Guide Assembly	S-8949
Short Pin (Water Valve) S.S.	S-7974
Roll Pin	3-774
Water Deflector Cup	A-18355
Spring (Solenoid & Water Valve)	2-420

HOT WATER TANK	
Long Pin (Solenoid)	S-2186
Water Inlet Valve	A-6771
Valve Seat	S-6947
Nut (Inlet Valve)	S-7044
Hot Water Tank Assembly	A-18036-1
Standpipe Overflow	A-8610
Hot Water Tank Cover	A-13385
Compression Spring (Hot Water Tank)	2-419
Float Assembly	A-12068
Drain Screen, Water Tank	A-16378
Valve Spring	2-419
Wing Nut	3-255
Right Bracket Support	A-8175
Left Bracket Support	A-8173
Hot Water Tank	A-8171
Heating Element	12-1455-20
O Ring	2-530
Solenoid	12-1396-1
Flow Control	A-13346-4
Thermostat	12-246
Thermo Disc Cover	A-6480
Plastic Water Deflector	2-1320
Solenoid Mount	A-18275
Elastic Stop Nut, 4 reqd.	3-1284
Grommet, 4 reqd.	13-625
Washers, 4 reqd.	13-298
Screws	3-499