TABLE OF CONTENTS

SD-3 & SD-4

	Page
Foreward	
Table of Contents	1
Model SD-3 Specifications	2
Model SD-3 Installation Dimensions	3
Model SD-4 Specifications	4
Model SD-4 Installation Dimensions	5
Description	6
Drink Dispenser General Specifications	7
Installation	8-10
SD-3 Assembly—Less Hood and Service Panels	11
SD-3 Cabinet Parts	12
SD-4 Assembly—Less Hood and Service Panels	13
SD-4 Cabinet Parts	14
ICE MAKER SECTION	15-18
Substitutes for 600 W Oil in Winsmith Gear Reducers	19
Worm Gear Reducers	20
Winsmith Gear Reducer (3TC) (Line Drawing)	21
Maintenance Instructions - Dispensers	22
SD-4 Freezer Assembly Line Drawing	23
SD-3 Freezer Assembly	24
Syrup Tank Hook-up	25
SD-3 & SD-4 Wiring Diagram (Air Cooled)	26
SD-4 Wiring Diagram (Water Cooled)	27
Service Analysis Chart	28-31
Carbonation	32-33
Temperature & Pressure Effects (Line Drawing)	34
Effect of Pressure	35-37
CARBONATOR SECTION	38-41
Line Drawing	42
Water & CO_2 Schematic	43
Principle of Operation	44-45
Carbonator Pump — Motor	46
Carbonated Water, Cooling Drawing	47
Cleaning of Cold Plates SD-3 & SD-4	48-49
Service Analysis Chart	50-51
DISPENSER SECTION	52
Dispenser Replacement Parts — How They Work	53-56
Line Drawing — Manifold	57
Parts List SD-3 & SD-4	58-62

THIS PAGE
INTENTIONALLY
LEFT BLANK

SCOTSMAN®

DRINK DISPENSER SD-3 SERIES

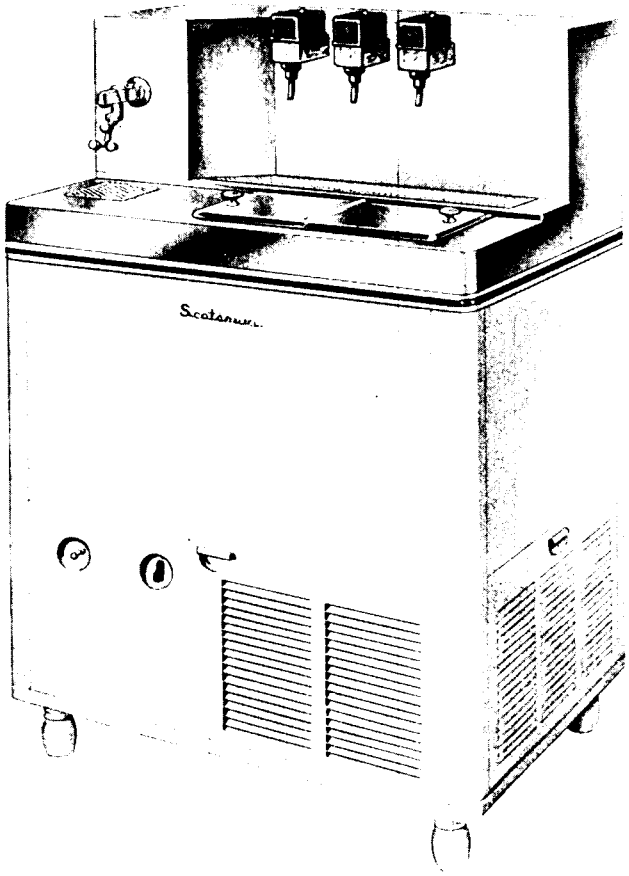

ice making capacity

Air Cooled Models

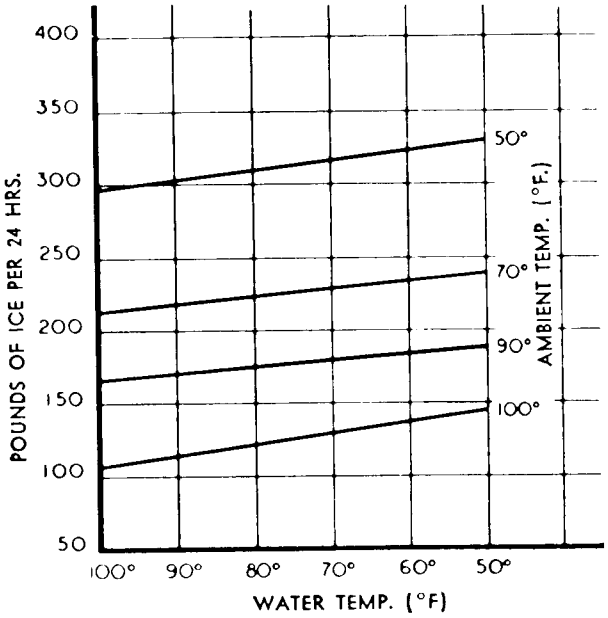

SPECIFICATIONS

COMBINATION ICE MACHINE AND DRINK DISPENSER	MODEL SD3	MODEL SD3 SS
Daily capacity up to 225 lbs.	X	X
Stainless steel bin liner	X	X
Air cooled condenser	X	X
Heavy duty ¼ HP. Compressor	X	X
Standard 115 V, 60 cy, 1 ph, AC—Optionals page 22	X	X
⅜" water inlet SAE Flare	X	X
¼" CO^2 inlet SAE Flare	X	X
3 product inlets ¼" SAE Flare	X	X
⅝" bin drain OD	X	X
⅞" condensate drain OD	X	X
Hammerloid grey exterior	X	
Stainless steel exterior		X
Stainless steel lined storage bin	X	X
48 ⅞" height (with legs)	X	X
44 ⅞" height (without legs)	X	X
34" width	X	X
24 ½" depth	X	X
Approximate shipping weight 450 lbs.	X	X

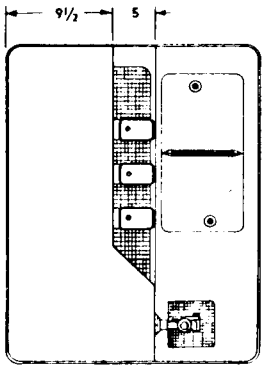

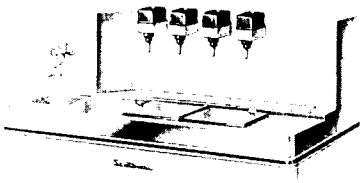

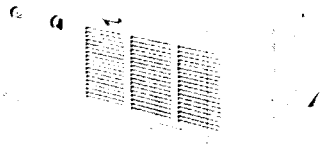

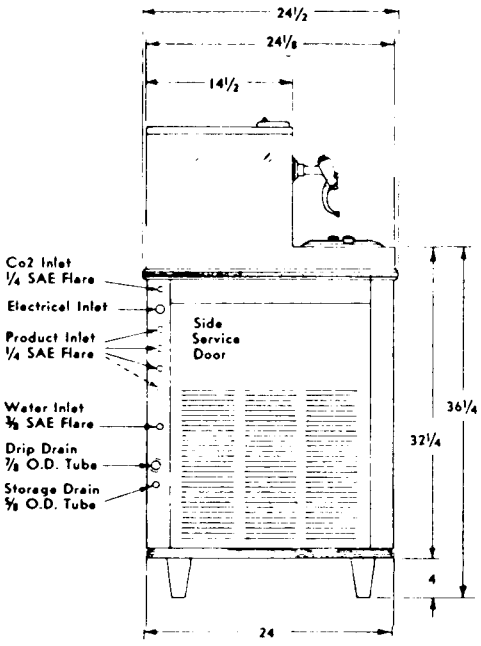

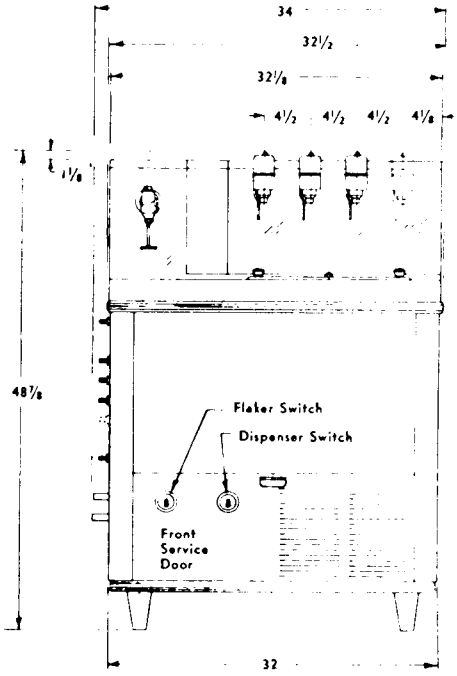

SCOTSMAN®

DRINK DISPENSER SD-4 SERIES

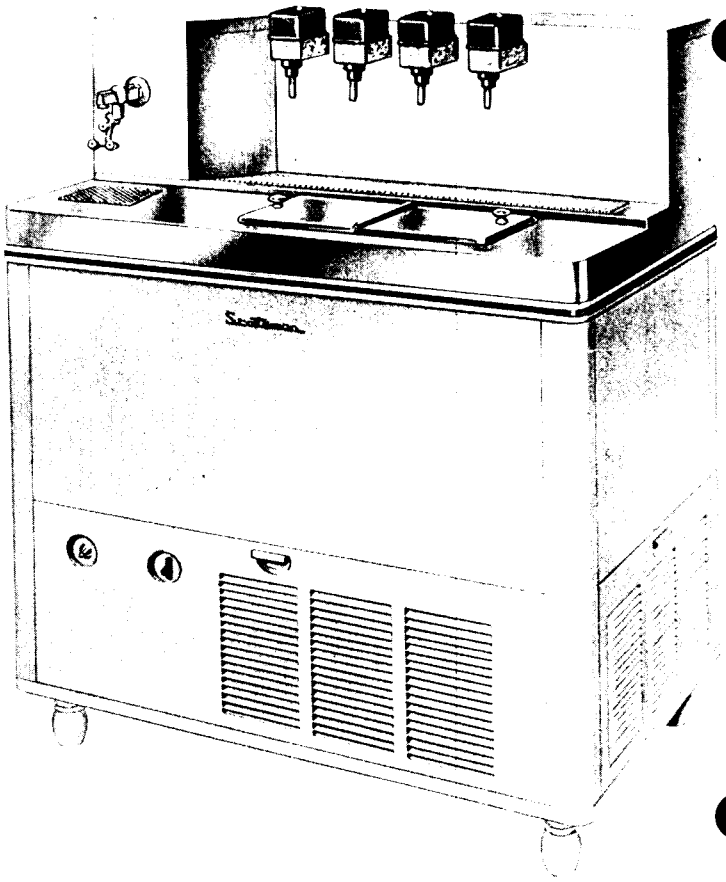

ice making capacity

Air Cooled Models

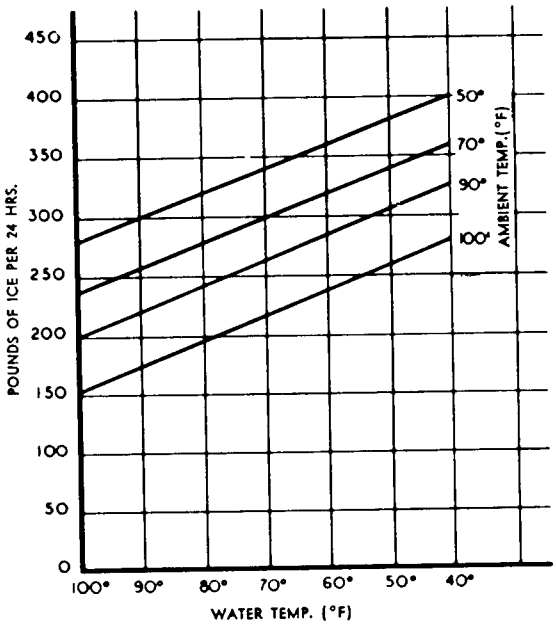

Water Cooled Models

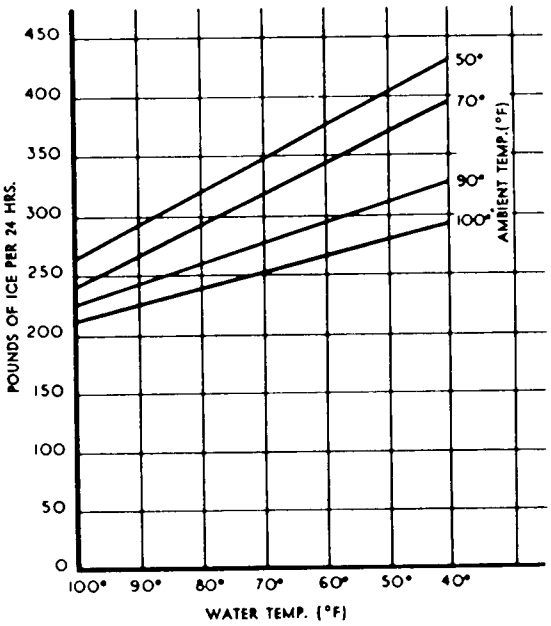

SPECIFICATIONS

COMBINATION ICE MACHINE AND DRINK DISPENSER	MODEL SD4	MODEL SD4W	MODEL SD4-SS	MODEL SD4W-SS
Daily capacity up to 350 lbs.	X	X	X	X
Stainless steel bin liner				
Air cooled condenser	X		X	
Water cooled condenser		X		X
Heavy duty ⅓ HP. Compressor	X	X	X	X
Standard 115 V, 60 cy, 1 ph, AC—Optionals page 22	X	X	X	X
⅜" water inlet SAE Flare	X		X	
⅜" water inlet NPT		X		X
4 product inlets ¼" SAE Flare	X	X	X	X
¼" CO^2 inlet SAE Flare	X	X	X	X
⅞" water condensate drain ID	X	X	X	X
⅝" bin drain OD				
½" ID water outlet tube		X		X
Hammerloid grey exterior	X	X		
Stainless steel exterior			X	X
48 ⅞" height (with legs)	X	X	X	X
44 ⅞" height (without legs)	X	X	X	X
40" width	X	X	X	X
24 ½" depth	X	X	X	X
Approximate shipping weight	512	516	512	516

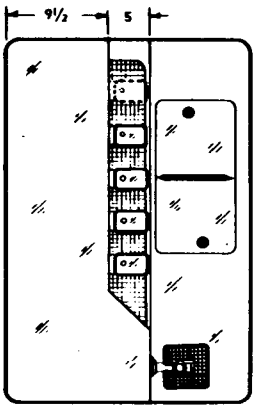

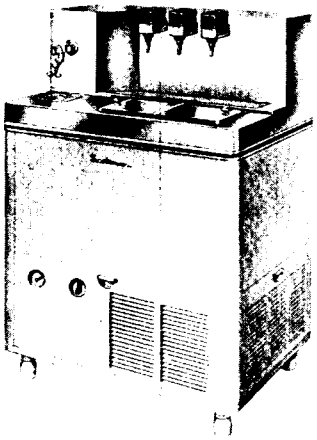

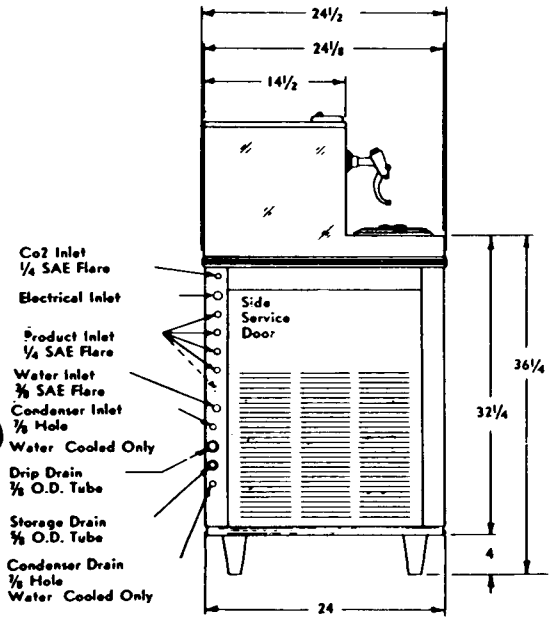

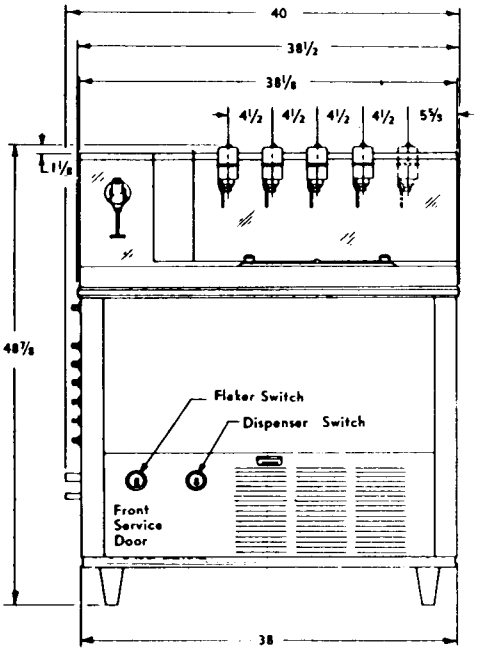

DESCRIPTION

The SCOTSMAN AUTOMATIC DRINK DISPENSER is designed for drug stores, restaurants, cafeterias, ball parks, drive-ins, amusement parks, theatres--in fact, any place where crowds gather and seek ice cold, thirst quenching refreshments in a hurry. The continuous flow dispensers, together with the concealed SCOTSMAN crushed ice maker, is designed for peak periods of traffic.

ATTRACTIVE COMPACT CABINET

Silver grey hammerloid finish with chrome trim, rounded corners, and removable panels for easy access to mechanical parts. Hood assembly of stainless steel attractively designed for front or back counter installation.

SEALED REFRIGERATION SYSTEM

Provides quiet, efficient operation of the machine. Compressor motor is spring mounted and the worm motor is rubber mounted for quiet operation.

SELF-CONTAINED STORAGE BIN

Stores its own ice supply in a heavily insulated, stainless steel storage bin with handy access door opening in hood-counter.

STANDARD OVER-ALL DIMENSIONS

Allows automatic drink dispenser to be installed in harmony with existing counter equipment.

HOW IT WORKS

The unit is completely automatic; water is circulated through a self-contained carbonator which guarantees a ready, abundant supply of perfect carbonated water at all times. Maximum cooling of both carbonated and non-carbonated water is then accomplished by using both a pre-cooling sweet water coil and a cooling carbonated water coil in the bottom of the ice bin. The continuous flow type dispenser allows the mixture of a set amount of syrup and carbonated water. A manual switch starts the ice machine and from then on ice is produced automatically in small uniform pieces. When the storage bin fills, a bin thermostat automatically shuts the machine off and causes it to start up again when ice is removed from the storage bin.

POST MIX SYRUP SYSTEM

Unquestionably the finest most efficient and economically designed drink producing system. Electronic, post mix valves assure a perfect beverage every time.

DRINK DISPENSER

General Specifications

ELECTRICAL RATING	SD-3	SD-4
Voltage	115 60/1	115 60/1
Amperage - Total	13.6	16.1
No. of Motors	3	3
HP - Largest Motor - Compressor	1/3	1/2
Amperage - Largest Motor	4.9	7.4
PLUMBING AND CO_2		
Water Inlet	3/8" Flare S.A.E.	3/8" Flare S.A.E.
Drain Overflow	7/8" O.D. Cu.	7/8" O.D. Cu.
Drain - Storage	5/8" O.D. Cu.	5/8" O.D. Cu.
CO_2 Connections	1/4" Flare	1/4" Flare
Product Inlet Connections	(3) 1/4" S.A.E. Male-Flare	(4) 1/4" S.A.E. Male Flare
ICE MAKER SECTION		
Compressor	1/4 HP	1/3 HP
Condenser	Air Cooled	Air or Water Cooled
Refrigerant	R-12	R-12
Refrigerant Control	Capillary tube	Capillary tube
Standard Voltage Characteristics	115, 60, 1	115, 60, 1
Drive Motor - Freezer	1/4 HP	1/4 HP
Ice Making Capacity	*225 lbs. per day	* 350 lbs. per day
Storage Capacity - (Normal Operating)	65 lbs.	85 lbs.
CARBONATOR SECTION		
Drive Motor Carbonator Pump	1/4 HP	1/4 HP
Pump Capacity	80 gph	80 gph
Switch-Pump Up	Electrodes in Tank	Electrodes in Tank
Voltage Characteristics	115, 60, 1	115, 60, 1
Cold Plates	17½" x 19½"	17½" x 19½"
Control - Pump Operation	Liquid Level-Relay	Liquid Level-Relay
DISPENSER SECTION		
Number of Electronic Heads	3	4
Number of Water Fillers	1	1
Number of Soda Arms - Optional	-	-
Syrup Capacity - Optional - Use 3 or 5 Gallon Tanks on each product line.		
Syrup Feed	Low Pressure CO_2	Low Pressure CO_2

* At 70° ambient and 50° water temperature. See capacity curves for exact amounts.

INSTALLATION

UNCRATING OF MACHINE

The entire unit comes in one crate. Remove crate by pulling nails driven through sides of crate into the bottom pallette. A nail puller is best suited here. Lift crate up and off. Next remove four bolts through bottom of pallette in machine base. Inspect for concealed damage. Remove box containing legs from lower machinery compartment. Remove compressor hold down bolts so it is floating free. Install legs as required.

PRE-INSTALLATION CLEANING

Before machine is in final location, remove warranty card and other information from machine and ice storage compartments. Remove hood service cover and water reservoir cover. Remove packing from float. Leave open to observe float adjustment after machine is installed.

NECESSARY ACCESSORIES - NOT FURNISHED

Your Scotsman Ice and Drink Dispenser is a complete unit at point of use, however, you will require a tank of CO_2 gas, a hi-lo gas pressure regulator, your 3 or 5 gallon remote style syrup tanks and the flexible product lines to connect the tanks to CO_2 and to the connections on the unit left side. Below are the names of two companies that furnish these items.

Bastian Blessing Co.
4201 W. Peterson
Chicago, Illinois

Kenco Products Corp.
Englewood, New Jersey

LOCATION

Select the location before delivering the unit to the job. The following points should be considered.

1. Convenience- Place the unit where it is practical to give speedy service. It can be located either in a back bar or in a front bar. It is designed to fit into a standard soda fountain line-up or it can be used as an individual counter unit. Keep in mind that the dispenser can serve a double function of providing crushed ice as well as carbonated beverages.

INSTALLATION

2. Servicing - Provisions should be made even in a line-up for access to the left end (viewed from serving side). Provide flexible plumbing and electrical lines so the unit can be moved out and serviced or allow provisions for a minimum of 18" at left end of unit.

3. Install only in room where temperature does not go below 50° F. or above 100° F.

PLUMBING

The recommended water supply line is 3/8" O.D. tubing for both SD-3 and SD-4. A 3/8" flare fitting is provided on the machine for water inlet. Connect to cold water supply line using a shut-off valve installed in an accessible place between supply and machine. A water strainer should be installed between the shut-off valve and the unit with the clean-out plug down and the arrow in the direction of flow. Most plumbing codes call for double check valves in this inlet water line. A wire mesh strainer is provided on the pump inlet connections as a protection against large particles of rust, scale, etc., which may be loosened in the water pipe at time of installation. This strainer will not prevent fine particles from damaging the pump, therefore, a good filter is recommended in any installation and is absolutely essential when the supply water contains solids. Maximum water supply pressure must be at least 20 pounds below operating CO_2 pressure. If supply pressure exceeds this, carbonator may flood. Install a water pressure regulator in the water supply line and adjust as required.

On water cooled models a separate connection to the unit will be required. Connections are made into a 3/8" water regulating valve located inside the machine compartment. Observe arrow on water regulating valve. Water supply must be installed to conform with local plumbing codes. In some cases a licensed plumber and/or a plumbing permit will be required.

Drains are brought out of the cabinet on the left side and are 5/8" O.D. and 7/8" copper. They can be sagely tied together below the floor level. 7/8" copper drain lines will be adequate in most instances. Care should be taken to allow no traps in the drain lines. If a level run of more than three feet is required, clean-out provisions should be made.

ELECTRICAL

Rating

SD-3	SD-4
115 volts	115 volts
60 cycle, single phase	60 cycle, single phase
20 amp circuit	30 amp circuit
Use No. 12 wire for runs under 50 feet.	Use No. 10 wire for runs under 50 feet.

INSTALLATION

Be certain the SCOTSMAN DISPENSER is on its own circuit and individually fused. Separate switches are located in the front of the dispenser allowing the carbonator and the ice maker to operate independently of each other. All internal wiring is completed.

All external wiring should conform to National Underwriters and local electrical code requirements. An electrical permit and the services of a licensed electrician will usually be quired.

START-UP

When the machine is placed and inspected as per instructions and all plumbing and electrical connections are completed and tested, turn on the water supply. Be sure water reservoir is filled before starting ice maker. Water level should be 1/4 inch below the reservoir overflow. Connect CO_2. Check rotation of pump.

Check all internal water connections for leaks. Start carbonator by turning on left switch.

Install gauges and check refrigerant pressures at time of start-up. Flare connections can work loose during shipment. Add refrigerant as required - see ice maker section. Turn on the right manual switch in front of cabinet and machine is in automatic operation. In two or three minutes ice will start dropping off the worm shaft and out the ice chute. Let the machine operate for at least 30 minutes or until ice covers the bottom plate. Check for any excess noise in carbonator or ice maker.

Test the ice storage control bulb by holding a handful of ice around the bulb until the machine shuts off. One minute should be normal for the control to function. Within minutes after the ice is removed, the bulb will warm up and the machine will automatically start up. The control is factory set and should not be reset until this test is made. Normal setting of this control should be approximately 38 degrees cut-out and 45 degrees cut-in to prevent short cycling.

Check hand reset low pressure control setting. This safety device should normally be set 8 to 10 p s i below normal suction pressure to prevent cutting off when the compressor first starts up and still provide safety in case of interruption in water supply, shortage of refrigerant, low ambient or any other cause of abnormally low suction pressures on Models SD-4 only.

Adjust dispenser heads to give correct proportions of syrup and carbonated water. See dispenser section. Do not set until ice covers cold plates.

Explain the machine to the owner, showing him how the machine works and go over the owner's operating instructions. Answer all the owner's questions about the machine, and do not leave with any doubt in the owner's mind about the machine, how to operate it or where to reach the service man in case of need. Call back the next day to check the machine again and and answer any other questions the owner may have.

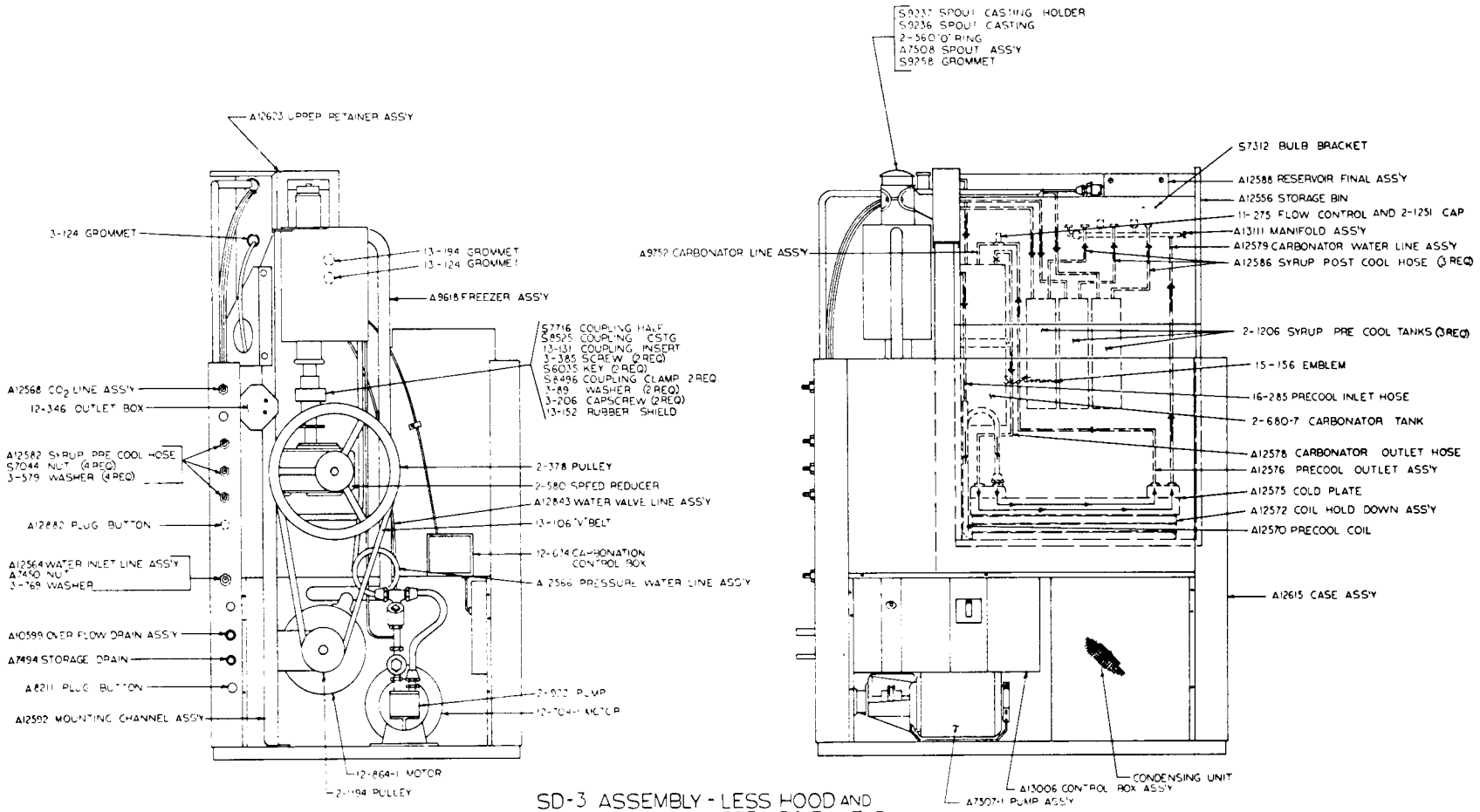

SD-3 ASSEMBLY - LESS HOOD AND SERVICE PANELS

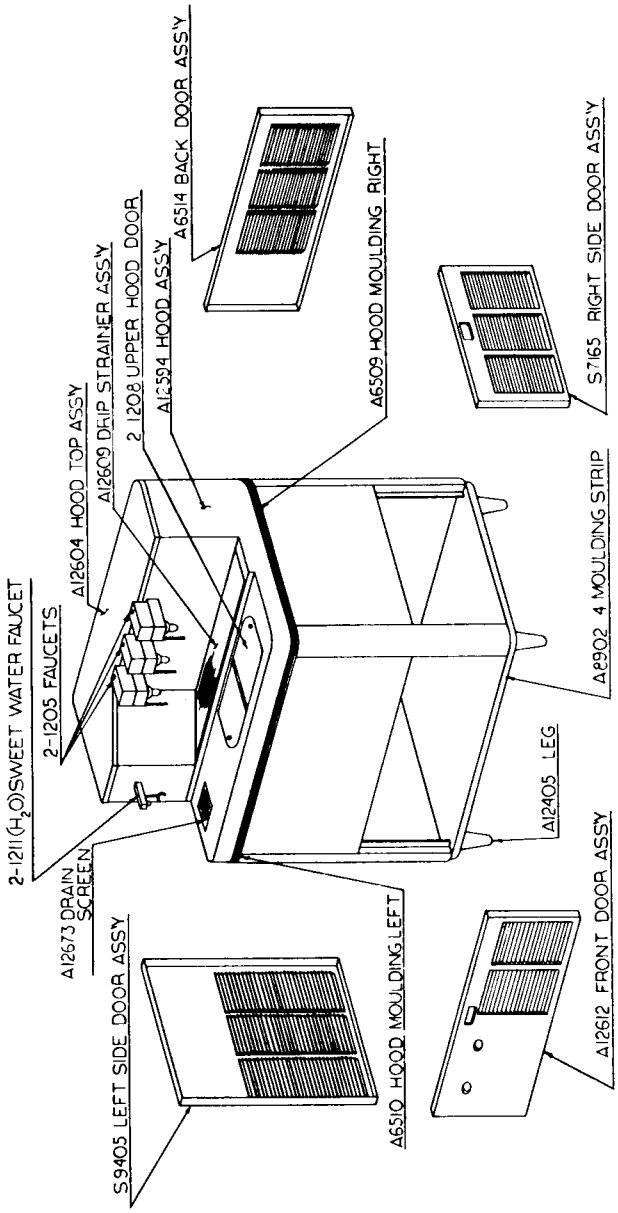

SD 3 CABINET PARTS

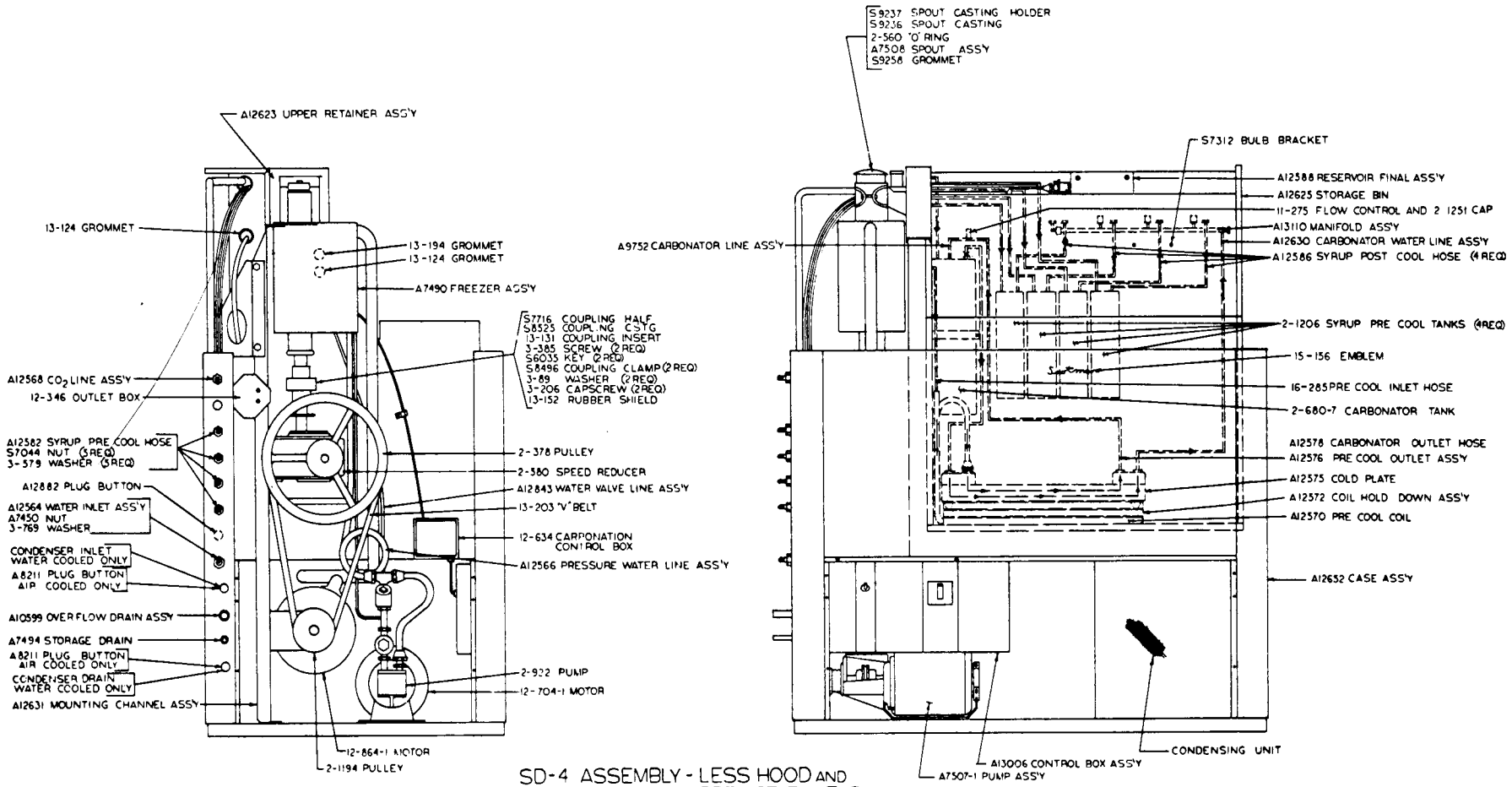

SD-4 ASSEMBLY - LESS HOOD AND SERVICE PANELS

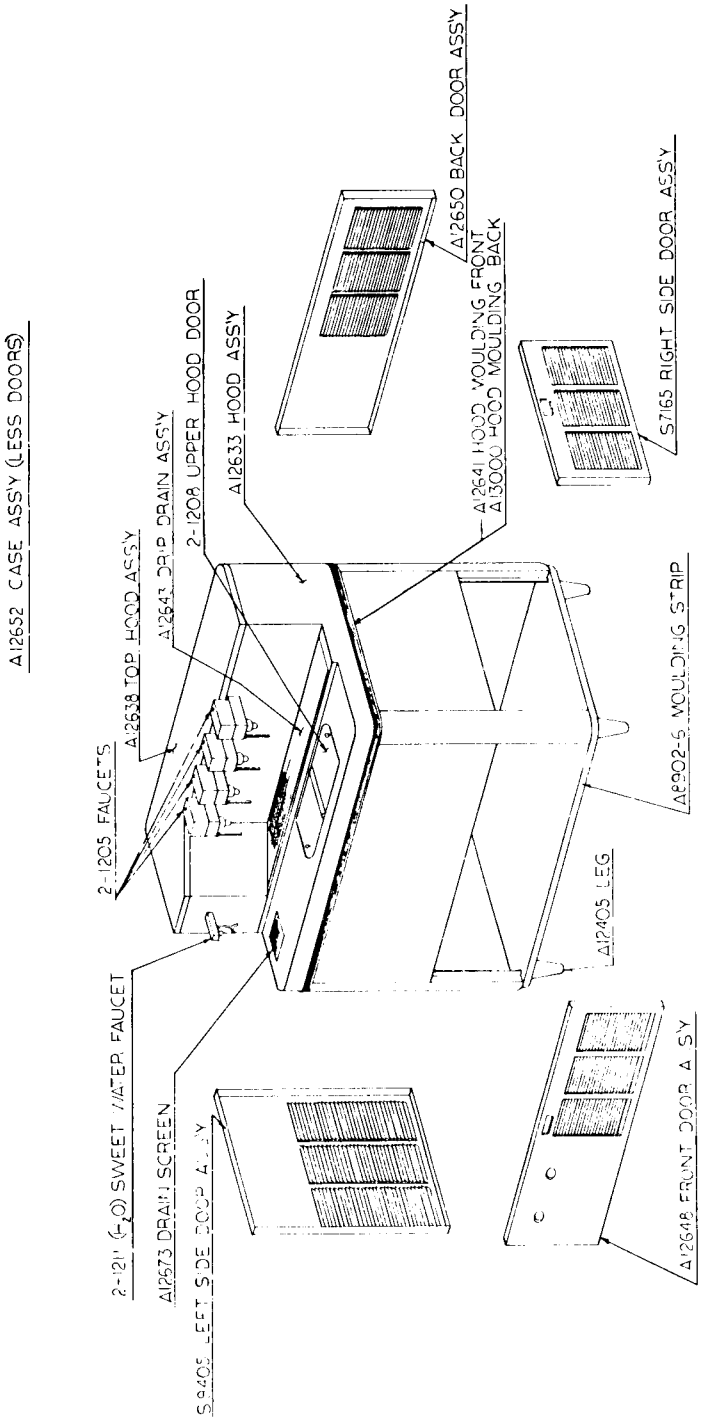

SD 4 CABINET PARTS

ICE MAKER SECTION

HOW IT WORKS

Water in the constant level float reservoir is fed to the bottom end of a freezing cylinder and turns to ice on the inside of this cylinder. The stainless steel auger inside of this evaporator is driven by a motor through a V belt and gear reduction drive. Ice is carried upward by the action of this auger and extruded past the ice breaker at the top of the cylinder.

A manual switch starts the machine and from then on ice is produced automatically in small uniform pieces of ice. When the storage bin fills, a thermostat shuts the machine off and causes it to start up again when ice is taken from the storage compartment.

The ice maker section operates independently of the carbonator section although it is built into the same cabinet.

MECHANICAL SPECIFICATIONS	SD-3	SD-4
Compressor	Bendix-Westinghouse BCL-25	Copeland HK-33I
Refrigerant	24 oz. F-12	26 oz. F-12
Refrigerant Control	Capillary tube, accumulator, heat exchanger type.	Capillary tube, accumulator, heat exchanger type.
Drive Motor	Resilient base, frame 48, CCW rotation, capacitor start.	Resilient base, frame 48, CCW rotation, capacitor start.
Gear Reducer	Winsmith 3CT Final Output 12 R.P.M.	Winsmith 3CT Final Output 12 R.P.M.

ELECTRICAL SPECIFICATIONS		
Compressor Motor	Hermetic	Semi-Hermetic
Voltage	115 V	115 V
Horsepower	1/4	1/3
Amperage Rating	4.9	7.4
Cycles	60	60
Phase	Single	Single
Drive Motor		
Voltage	115 V	115 V
Horsepower	1/4	1/4
Amperage Rating	4.5	4.5
Cycle	60	60
Phase	Single	Single

SERVICE - CONDENSING UNIT

Service gauge connections are available on both high and low-side service valves.

To install gauges to any of these connections, replace 1/8 inch IP plug with 1/8 inch MPT x 1/4 inch flare half union. Purge free of any non-condensable gases before starting any test operation.

PRESSURE SETTINGS

Check pressure settings at the time of start-up. On the water cooled models set the head pressure at 135 p s i. Some air cooled models use the reverse acting head pressure control and should be set on approximately 15 p s i differential, and to cut-in at 130 and out at 145 p s i head pressure. The frost line should extend at least 8 inches out of the accumulator if properly charged with refrigerant and suction pressure will range between 14 and 16 p s i with 50° F. inlet water.

REFRIGERANT CHARGE

The below refrigerant charge is approximate. When charging, set at 135 p s i head pressure and charge so that the frost line extends out of the accumulator after fifteen minutes of operation. Frost out of accumulator at least 8 inches and preferably 1/2 way to the compressor for best capacity and performance.

MODEL	FREON CHARGE	OIL LEVEL
SD-3 - air	24 oz. F-12	Oil level should be kept at 1/3 way up sight glass. Do not fill over 1/2.
SD-4 - air	24 oz. F-12	
SD-4 - water	24 oz. F-12	

WATER SYSTEM

A water level is maintained in the water reservoir by a float operated valve. Water is piped from the water reservoir to the freezing chamber by a gravity feed line maintaining an equal water level. A removable overflow pipe is installed in the water reservoir for cleaning the reservoir as well as preventing damage should the inlet water valve fail.

The water reservoir is equipped with a 2 inch air gap to prevent back siphoning and meet all health codes.

The water level in the water reservoir is adjusted by the float linkage adjustment. The water level should be set 1/4 inch below the overflow pipe. A condensate drip pan is connected to the drain circuit to automatically dispose of condensate moisture.

A water strainer must be installed in the supply line.

ELECTRICAL SYSTEM

The Dispenser model SD-3 and SD-4 are designed to work on standard voltage.

SD-3	115 volts	60 cycle	Single Phase
SD-4	115 volts	60 cycle	Single Phase

Special voltage requirements are available on special order. Therefore, always check nameplate for this information before checking electrical supply.

Nameplate voltage should not vary more than plus or minus 10 percent.

The electrical circuit consists of condensing unit, drive motor, hand reset combination or low pressure cut-out, storage bin thermostat, "on" and "off" switch, micro (safety) switches and head pressure control kit.

A. CONDENSING UNIT

The compressor terminal box houses the motor compressor terminal block, and the motor overload Klixon. To gain access to the terminal box, remove the two screws holding the beveled metal cover. The starting capacitors, running capacitors and starting relays are housed and fastened to the unit base.

B. DRIVE MOTOR - FREEZER

Model SD-3 and SD-4 Icemakers are equipped with standard 1/2 inch shaft, 1/4 HP, capacitor start, induction motors. These motors turn counter clockwise and may be replaced with any standard make motor corresponding to the nameplate rating. (Be sure motor runs counter clockwise viewed from the shaft end.)

C. HIGH-LOW PRESSURE CUT-OUT (Used on water cooled models only.)

Ranco control is located on the frame assembly. Factory settings cut-out 5 lbs. on low pressure and 180 p s i on high pressure. This control prevents operation at abnormal pressures.

D. LOW PRESSURE CUT-OUT (Hand reset on all air cooled models.)

Ranco control is located on the frame assembly. Factory settings cut-out at 5 p s i. Safety device to cut off machine and keep it off in case of water supply failure, loss of refrigerant, low ambient temperature or other causes of low pressure.

E. STORAGE BIN THERMOSTAT

White Rodgers control located on frame assembly. Factory settings 38° cut-out, 45° cut-in. This control shuts off complete machine when ice in storage bin builds up to control.

ICE MAKER SECTION

F. MICRO SAFETY SWITCH

The micro switch is located in the top of the ice chute. The switch is operated by ice pressure backing up in the chute should the storage bin thermostat fail. Micro switch will shut off the condensing unit only, when operated.

G. ON-OFF SWITCH

A General Electric on-off switch with built-in thermal overload protection to prevent drive motor failures is used. A 5 amp. heater element is standard on 115 volt drive motors.

H. HEAD PRESSURE CONTROL KIT - AIR COOLED MODELS ONLY

A Penn reverse acting high pressure control is used and connected electrically to the fan motor. As the head pressure drops below the cut out setting, the control opens allowing the current to pass entirely through a resistor in the line feeding the fan motor. This slows the shaded pole motor down to approximately 1/4 speed thus increasing the head pressure. When head pressure builds up to the setting on the top of control scale the control cuts in and full voltage again flows directly to the fan motor allowing it to operate at full speed.

I. DRIVE MOTOR - CARBONATOR PUMP

Models SD-3 and SD-4 dispensers use a 1/4 H.P., split phase, 48 frame motor, 1/2" drive shaft with flat for set screw and counter clockwise when viewed from shaft end.

PS-3-57
April-25-57

TO: ALL DISTRIBUTORS AND DEALERS

SUBJECT: ACCEPTABLE SUBSTITUTES FOR 600W OIL IN WINSMITH GEAR REDUCERS

In answer to many field requests, we are pleased to release the following chart showing the companies whose products are acceptable substitutes for the 600W supplies by Winsmith as factory recommended.

Note the third column which most accurately represents the normal temperature operating range. Also the Alemite or Zerk fitting to bearing is greased with Mobilgrease BRB No. 1, or any good ball bearing grease as obtained from local service stations.

600W oils and equivalents are classified as industrial oils and most likely will be found in bulk plants rather than local service stations.

SCOTSMAN-QUEEN PRODUCTS
Service Department
Ice Machine Division

WORM GEAR REDUCERS

CB-CT-CV-CBD-CTD-CVD-CBX-CTX-CVX-DBI-TSR

Ambient Temperature °F	-30 to 15	16 to 50	51 to 110	111 to 165
Maximum Operating Temp. °F	150	185	225	225
Viscosity @ 210°F, SUS	40 to 90 (Optional)	90 to 125	125 to 190	190 to 350
Compounded with		3 to 10% Acidless Tallow or E. P. Base	3 to 10% Acidless Tallow or E. P. Base	3 to 10% Acidless Tallow or E. P. Base
AGMA Lubricant		#7 Compound	#8 Compound	
Cities Service Oil Co.	Pacemaker Oil # 5	Optimus Oil # 10	Optimus Oil # 6	Optimus Oil # 12
Fiske Bros. Refining Co.	#3 Lubriplate	Lubriplate # 8	Lubriplate # 8	Lubriplate APG
Gulf Oil Corporation	Multipurpose Gear Lubricant	E. P. Lubricant #115	E. P. Lubricant #145	E. P. Lubricant #250
Shell Oil Company	Vitrea Oil 71	Valvata Oil #J 78	Valvata Oil #J 78	Valvata Oil #J 83
Sinclair Refining Co.	Duro Oil 160	#87 Heavy Duty Oil	#101 Super-Heat Valve Oil	#212 Super-Heat Valve Oil
Standard Oil Co.	Stanogear Compound # 1	Stanogear Compound # 4	Standard Worm Gear Oil	CalumetSH Cylinder Oil
Sun Oil Company	Sunep 70	Sunep # 110	Sunep # 150	HV Cyl. Oil
Socony Mobil Oil Co., Inc.	Vactra Oil # 1	Mobil Compound DD	Mobil Cylinder Oil #600W	Mobil Cylinder Oil #600W
The Texas Company	Meropa Lub. # 1	Meropa Lub. # 3	Meropa Lub. # 6	Meropa Lub. # 6

WINSMITH GEAR REDUCER (3CT)
QUEEN PART NO. 2-580
USED ON ALL MODELS SD-3—SD-4

NOTE: BOTH HIGH & SLOW SPEED BEARINGS, OIL SEALS & GASKETS ARE INCLUDED IN THE A-6397 GEAR REDUCER REPAIR KIT.

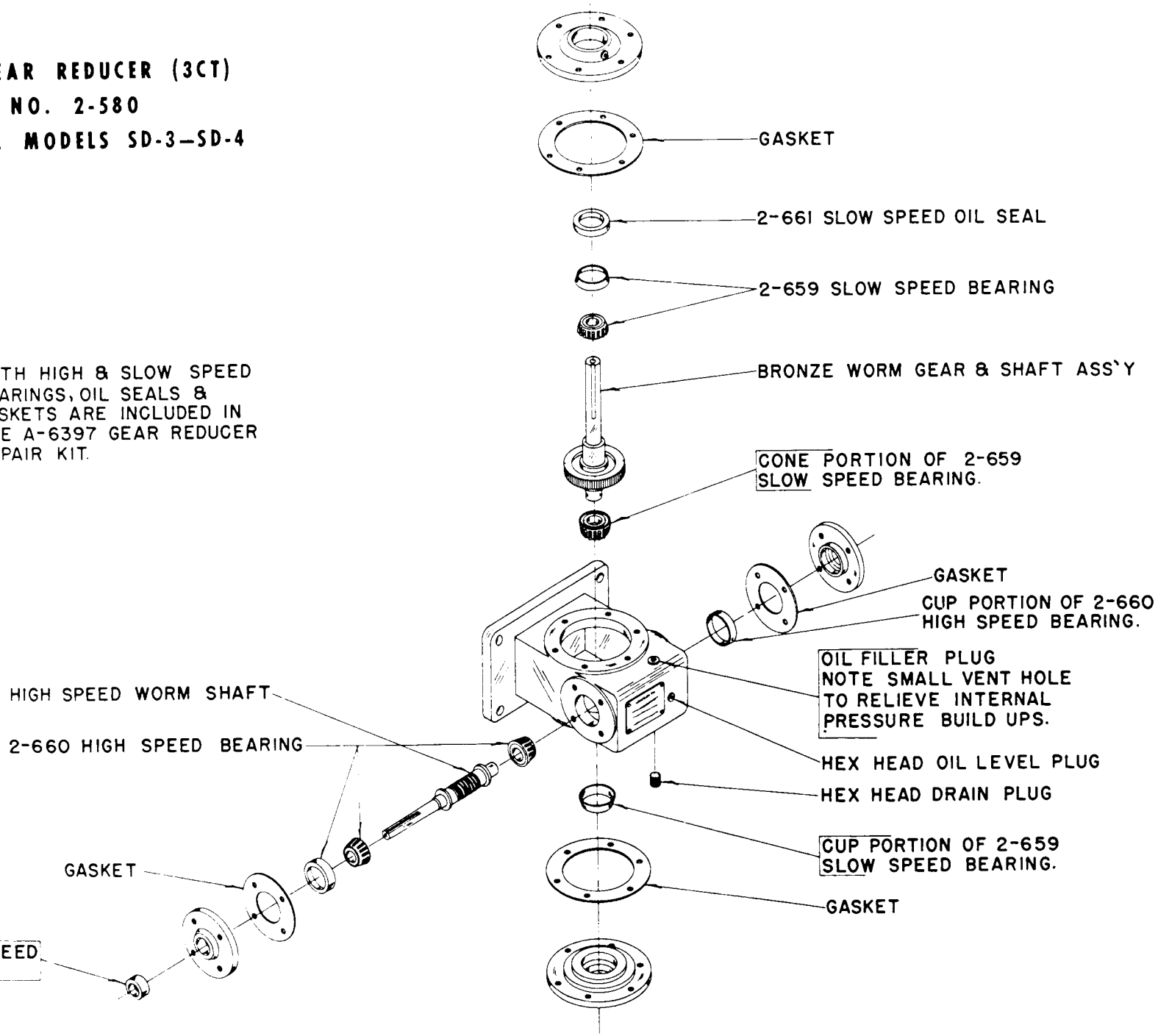

MAINTENANCE INSTRUCTIONS - DISPENSERS

THE FOLLOWING MAINTENANCE MUST BE ACCOMPLISHED TWO TIMES PER YEAR ON ALL SCOTSMAN DISPENSERS. CALL YOUR AUTHORIZED SCOTSMAN SERVICE DEPARTMENT.

1. Check and clean water strainers and float valve. Depress float valve to insure full stream of water.

2. Check water level and machine level. Keep water level below overflow, but as high as possible and still not run out of spout opening with machine off. Water should come out of spout with ice at all times. Adjust as required.

3. Clean reservoir and interior of freezer assembly using *SCOTSMAN* Ice Machine Cleaner.

   A. If machine has been cleaned regularly and no problems such as dry ice or chatter are noticed, clean by making ice from solution of 8 oz. of cleaner to 1 gallon of water.

   B. If heavy mineral deposits on auger and walls, or sediment at inlet to freezer are encountered, clean by pouring strong solution (½ acid- ½ water) into reservoir and operate drive motor only for agitation. Allow ½ hour or longer as required. Drain by disconnecting tygon at water inlet to freezer.

***NOTE:** Cleaning requirements vary according to local water conditions. Visual inspection of the auger before and after cleaning will indicate best procedure to be followed in local areas.*

4. Check high and low side pressures. On air-cooled models set head pressure between 130 and 145 P S I on R.A. high pressure control. On water cooled models, set pressure at 135 P S I. Suction pressure should be above 12 P S I and will range up to 16 P S I depending upon water and ambient temperatures.

5. Set hand reset low pressure control to cut off in event of water supply interruption or low ambient temperature at approximately 5 P S I.

6. Change oil in gear reducer. Use Mobiloil 600 W or equivalent good grade of gear oil with a viscosity of 125 to 190. For unit with grease fittings use Mobilgrease BRB No. 1 or any good grade ball bearing grease. Particularly important when there is evidence that water has gotten into gear housing. Remove gear reducer to facilitate.

7. Oil drive motor. Use SAE 20 oil.

8. Check top bearing of freezing tube. Remove retainer ring around edge of stamped brass cap. If moisture is around bearing, wipe up and remove grease. Add new grease. Use Beacon No. 325. To replace cap, reverse above.

9. Check and adjust belt tension.

10. Clean air cooled condenser. Inform customer to clean frequently. Always shut off machine when cleaning.

11. Oil condenser fan motor when possible.

12. Check for refrigerant leaks and proper frost line. Should frost out of accumulator at least one-half way to compressor, and in some areas back to service valve.

13. Check for water leaks. Tighten drain line connections. Run water down bin drain line to make sure it is open.

14. Check quality of ice. Ice should be wet when formed, but will cure rapidly to normal hardness in the bin.

15. Check thermostat and pressure plate cut off. Micro switch cuts off only compressor. Bin thermostat should be set at 10° differential and should keep entire machine off at least twenty minutes in high ambients *(longer in low)* during normal operation.

16. See cleaning of cold plate in carbonator section in this manual.

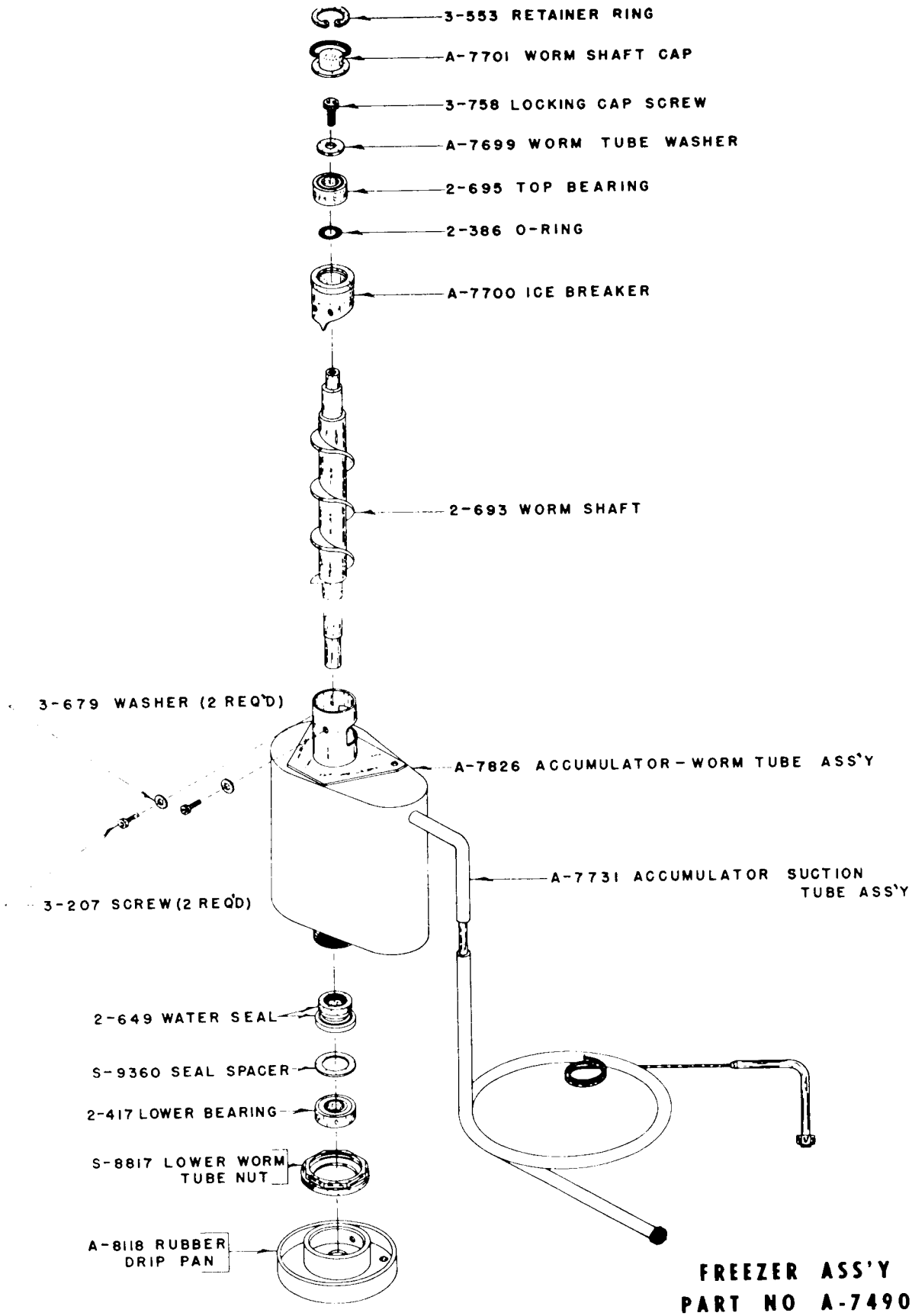

FREEZER ASS'Y
PART NO A-7490

USED ON

SD-4

BEGINING WITH SERIAL 76-35256

SD-3
FREEZER ASS'Y
PART #A-9618

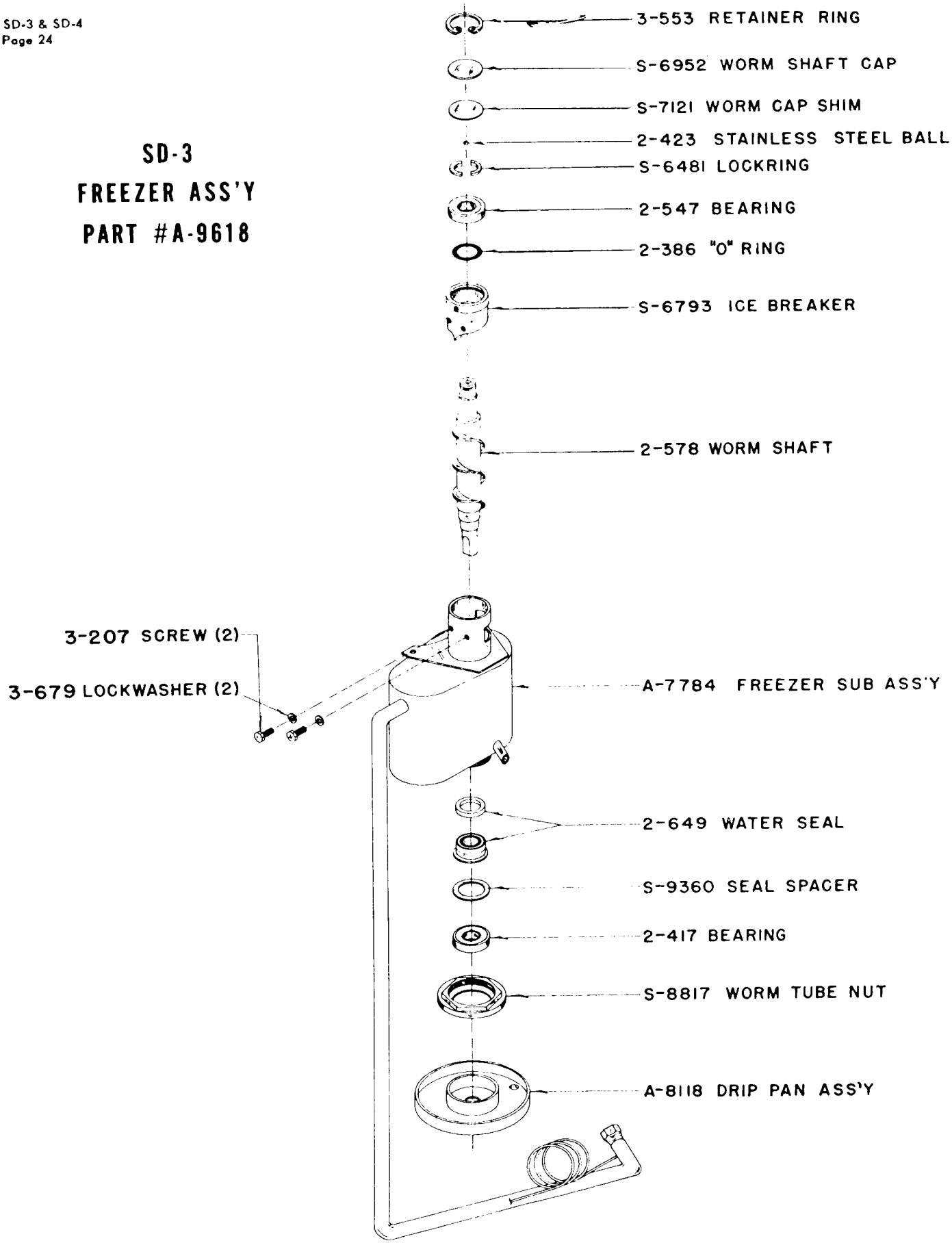

INSTALLATION INSTRUCTION

1. Uncrate and remove all bolts from bottom skids.
2. Loosen shipping bolt on compressor and allow to float free on spring mounts.
3. Remove legs from carton and install on base as desired.
4. Level machine.
5. Connect plumbing- Use 3/8 inch copper water inlet line and connect to 3/8 inch flare fitting provided at left of cabinet. Install strainer provided. Use licensed or qualified plumber in accordance with local codes.
6. Connect CO_2- Carbonator will not operate unless CO_2 is connected. Adjust high pressure regulator to 100 lbs. and low pressure regulator to 20 lbs.
7. Connect product lines and syrup tanks.
8. Check all refrigerant lines, product lines, water lines and CO_2 lines for rubbing or touching other surfaces.
9. Remove packing under float in water resevoir.
10. Refrigerant valves shipped open. Check all other valves.
11. Start ice maker first and cover cold plates in bottom of storage bin with ice before starting carbonator.
12. Fill syrup tanks with syrup.
13. Remove warranty card and other information from machine compartments
    IMPORTANT: Fill out warranty card immediately and send in as directed.
14. For adjustments call your authorized S C O T S M A N servicing dealer or distributor.

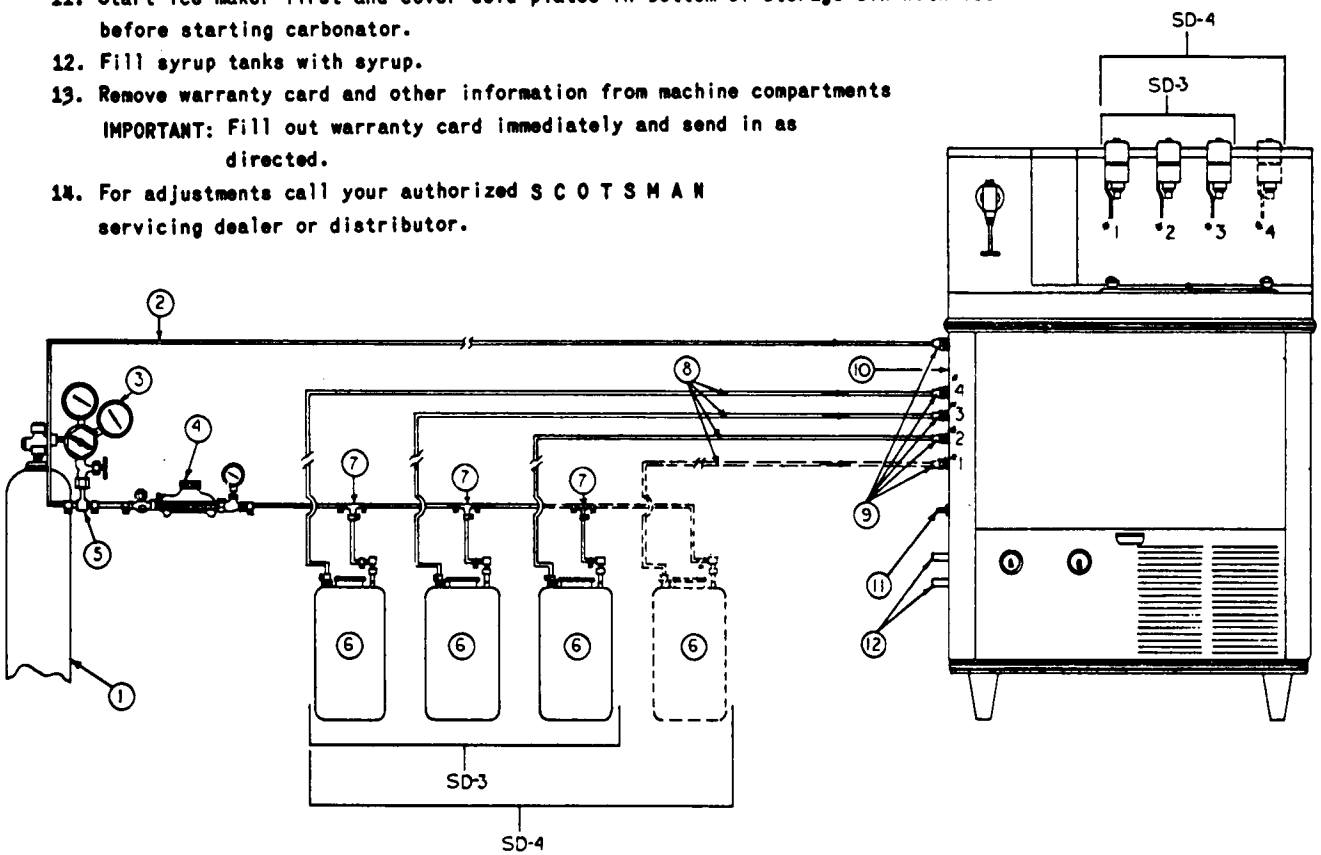

CODE

1. CO_2 CYLINDER
2. CO_2 LINE (COPPER, STAINLESS STEEL OR PLASTIC)
3. HIGH PRESSURE CO_2 REGULATOR FOR CARBONATOR
4. LOW PRESSURE CO_2 REGULATOR FOR SYRUP TANKS
5. BRANCH TEE
6. SYRUP TANKS
7. TEE
8. PRODUCT LINES STAINLESS STEEL OR PLASTIC)
9. 1/4 S.A.E. FLARE FITTING
10. ELECTRICAL INLET
11. WATER INLET 3/8 S.A.E. FLARE FITTING
12. DRAINS

TYPICAL POST MIX CARBONATED BEVERAGE SYSTEM
APPLICABLE TO THE SD-3 OR SD-4

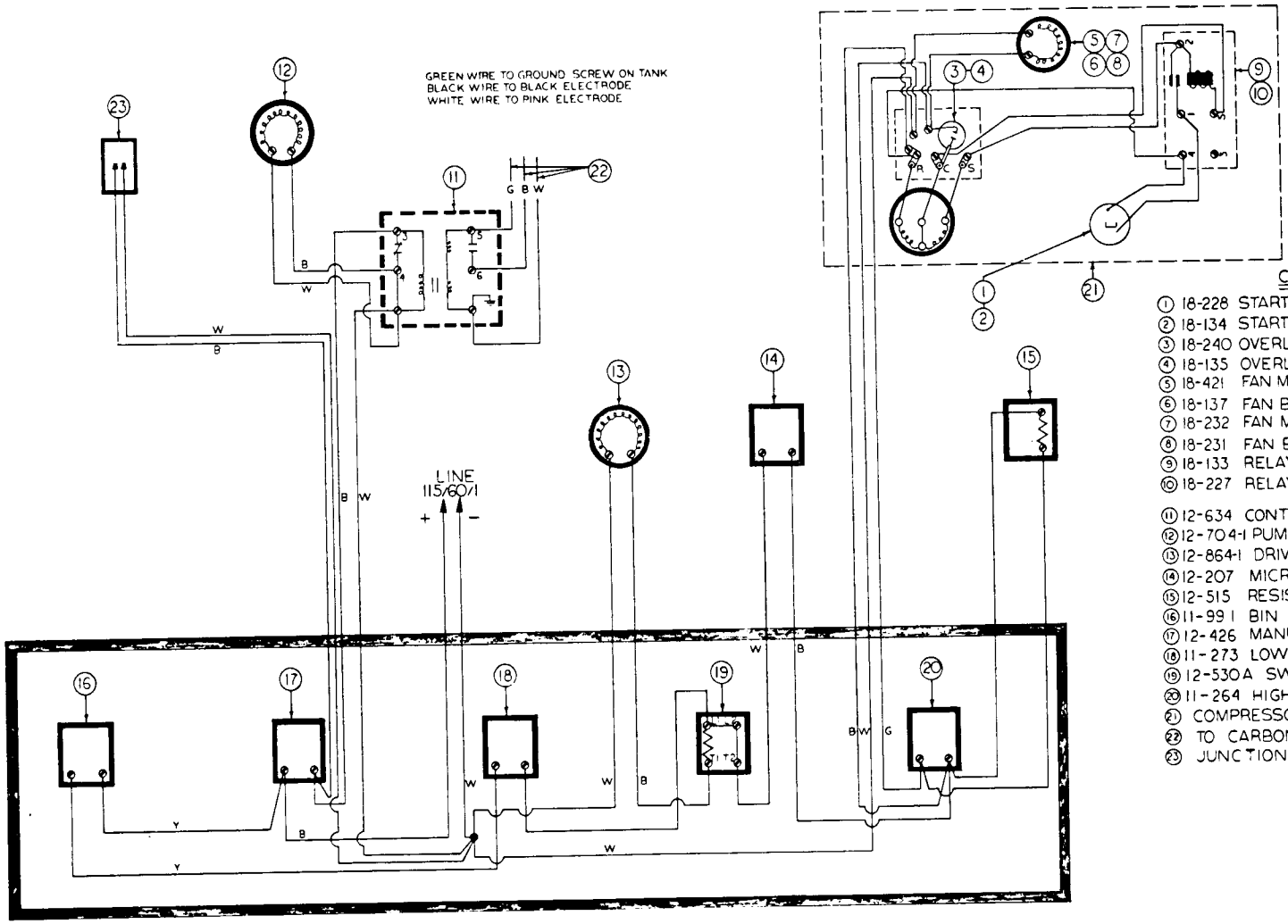

CODE

1. 18-228 STARTING CAPACITOR SD-4
2. 18-134 STARTING CAPACITOR SD-3
3. 18-240 OVERLOAD KLIXON SD-4
4. 18-135 OVERLOAD KLIXON SD-3
5. 18-421 FAN MOTOR SD-3
6. 18-137 FAN BLADE SD-3
7. 18-232 FAN MOTOR SD-4
8. 18-231 FAN BLADE SD-4
9. 18-133 RELAY SD-3
10. 18-227 RELAY SD-4
11. 12-634 CONTROL BOX FOR CARBONATOR
12. 12-704-1 PUMP MOTOR
13. 12-864-1 DRIVE MOTOR
14. 12-207 MICRO SWITCH
15. 12-515 RESISTOR
16. 11-991 BIN CONTROL
17. 12-426 MANUAL CARBONATOR SWITCH
18. 11-273 LOW PRESSURE CONTROL
19. 12-530A SWITCH-ICEMAKER
20. 11-264 HIGH PRESSURE CONTROL
21. COMPRESSOR
22. TO CARBONATOR
23. JUNCTION BOX

WIRING DIAGRAM
SD-3 AND SD-4
(AIR COOLED)

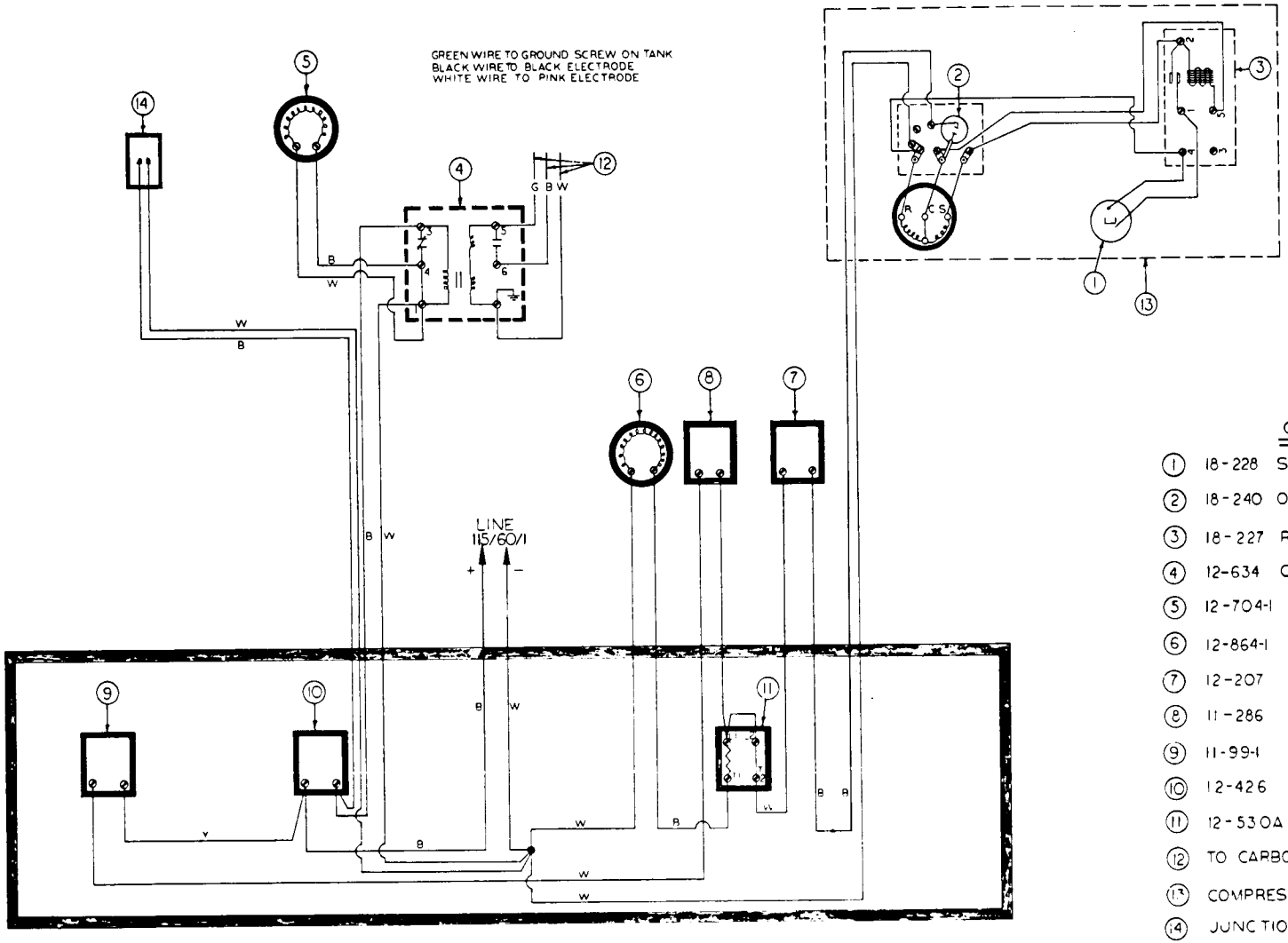

CODE

1. 18-228 STARTING CAPACITOR
2. 18-240 OVERLOAD KLIXON
3. 18-227 RELAY
4. 12-634 CONTROL BOX FOR CARBONATOR
5. 12-704-1 PUMP MOTOR
6. 12-864-1 DRIVE MOTOR
7. 12-207 MICRO SWITCH
8. 11-286 HIGH-LOW SWITCH
9. 11-99-1 BIN CONTROL
10. 12-426 MANUAL CARBONATOR SWITCH
11. 12-530A SWITCH ICEMAKER
12. TO CARBONATOR
13. COMPRESSOR
14. JUNCTION BOX

WIRING DIAGRAM
SD-4
(WATER COOLED)

ICE MAKER SECTION

Service Analysis Chart

COMPLAINT	POSSIBLE CAUSE	CORRECTION
Low ice production.	Loss of refrigerant. Under or over-charge of refrigerant.	Check and recharge with proper amount of refrigerant.
	Drive motor weak.	Replace.
	Dirty or plugged condenser.	Clean condenser.
	Low water level in water reservoir.	Adjust to 1/4 inch below spout opening.
	Overcharge of oil in system.	Check at oil hole and lower to 1 1/2 inch from top of hole or 1/3 full on crankcase sight glass.
	Partial restriction in capillary tube or drier.	Moisture in system. Overcharge of oil in system. Remove charge by blowing back through cap tube. Replace and recharge.
	Inlet water strainer partially plugged.	Remove screen and clean.
	Corroded or strained worm shaft due to water condition.	Remove worm shaft and clean, or use Scotsman Ice Machine Cleaner. See Maintenance Section.
	Slipping drive belt.	Adjust belt tension or replace worn belt.
	Defective gear reducer.	Check reducer driven shaft to freezer shaft. Should rotate at 12 R P M. Replace if worn.
Machine runs but makes no ice.	Loss or undercharge of refrigerant.	Check for leaks and recharge.
	Drive motor, belts, gear reducer on drive coupling inoperative.	Gear reducer and worm turn at 12 R P M. Check. Repair or replace.
	Pulleys loose on shafts.	Tighten, repair or replace.

ICE MAKER SECTION

Service Analysis Chart

COMPLAINT	POSSIBLE CAUSE	CORRECTION
Machine runs but makes no ice. (Cont.)	Water not entering freezing chamber.	Plugged strainer or supply line. Check and clean. Air lock in gravity feed line. Check and remove air lock.
	Moisture in system.	Check and remove charge and drier. Replace and recharge.
	Water seal leaking.	Replace seal. See section on maintenance.
	Defective manual overload switch.	Replace switch.
Water leaks.	Defective water seal.	Replace. See section on maintenance.
	Gravity feed line leaking.	Check hose clamps.
	'O' ring in spout casting leaking.	Remove spout casting and install new 'O' ring.
	Storage bin drain and connecting fittings.	Check and repair. Tighten fitting - replace 'O' ring.
	Water level in reservoir too high.	Adjust to 1/4 inch below overflow pipe.
Excessive noise or chattering.	Scale or mineral build-up on inside of freezer.	Clean with Scotsman Ice Machine Cleaner. See section on maintenance.
	Mineral deposit or scale on auger and cylinder walls.	Ice sticking and jamming inside. Clean with Ice Machine Cleaner or remove auger and polish.
	Low suction pressure.	Raise suction pressure. Adjust head pressure control to recommended setting or balance refrigerant charge.
	Intermittent water supply.	Check and clean water strainer. Check gravity feed line for air lock. Remove air lock.
	Water level in reservoir too low.	Adjust to 1/4 inch below overflow pipe, or raise reservoir.
	Mis-aligned coupling or worn insert.	Repair or replace.

ICE MAKER SECTION

Service Analysis Chart

COMPLAINT	POSSIBLE CAUSE	CORRECTION
Unit will not run.	Blown fuse in line.	Replace fuse and check for cause of blown fuse.
	Bin thermostat set too high.	Adjust thermostat. Set at 38° cut-out, 45° cut-in.
	Loose electrical connection.	Check wiring.
	Switch in 'Off' position.	Turn switch on.
	Inoperative master switch.	Replace switch or thermal overload.
	Off on manual reset low pressure control.	Reset.
Compressor cycles intermittently.	Low Voltage.	Check for overloading.
	Dirty condenser.	Clean.
	Air circulation blocked.	Move unit to correct.
	Inoperative condenser motor.	Replace.
	Non-condensable gases in system.	Purge off.
	Bin thermostat differential too small causing short cycling.	Widen differential 38° cut-out, 45° cut-in.
Making wet ice.	Surrounding air temperature too high.	Correct or move unit.
	Under or over-charge of refrigerant.	Recharge with proper amount. Should frost out of accumulator at least 8".
	High water level in water reservoir.	Lower to 1/4 inch below over-flow pipe.
	Back pressure too high.	Overcharge of refrigerant, Faulty compressor or high head pressure. Lower as indicated.
	Faulty compressor or valve plate.	Repair or replace.

ICE MAKER SECTION

Service Analysis Chart

COMPLAINT	POSSIBLE CAUSE	CORRECTION
Excessive noise or chattering. (Cont.)	Low ambient temperature.	Set head pressure and resultant back pressure higher, or move to heated space.
	Gear reducer low on oil charge.	Check oil level and refill to oil level plug.
	Gear reducer loose on frame.	Tighten.
	Pulleys worn or loose on shaft.	Repair or replace.
	Belt cracked or worn.	Replace belt.
	Drive motor end-play or worn bearings.	Repair or replace.
	Motor compressor not floating on springs.	Loosen hold-down bolts.
Machine continues to run with full storage bin.	Storage bin thermostat not properly set or is defective.	Reset or replace. Reset to 38° cut out 45° cut in.

OPERATIONAL TABLE

AVERAGE VALUES

Refrigerant Head Pressure 135 #

Refrigerant Back Pressure 15#

Auger Speed in RPM 11.5

Refrigerant Control - Capillary Tube

Refrigerant R-12

Continuous ice ejection with small drops of water occasionally issued.

Electrical motors check to 75% rated amperage with amprobe.

Suction line flare nut at compressor cool, not frosted.

Compressor oil level shows 1/2 bullseye with compressor off.

CARBONATION

"THE LIFE OF THE DRINK"

No other single element in the Bottling Industry occupies the unique position of Carbonic gas. It is the foundation on which the industry has been built. The Sparkle of lively bubbles which attract the eye and enhance the taste is called "carbonation."

This important element is too often taken for granted. It deserves greater attention--proper and uniform carbonation is as important a taste element in bottled beverages as the flavors themselves.

The information and suggestions on the next few pages are offered to encourage more exact control for obtaining greater uniformity in carbonation.

SOME FACTS ABOUT CO_2

Carbonic Anhydride, Carbonic Gas, or Carbon Dioxide, as it is variously termed, has the chemical symbol CO_2. It is under normal conditions a colorless, odorless gas, one and one-half times heavier than air. Chemically it is the combustion product of the element Carbon. It occurs in nature as the result of all types of combustion.

Carbonated Water has been found in natural springs in many parts of the world. Such springs have been known for centuries and have been highly regarded for beverage purposes.

Many of the desirable characteristics of carbonated beverages are due to the carbonic gas contained in them. It is therefore most important to determine the proper amount of carbonation such beverages should contain and having done that to provide the necessary control to insure uniformity of the product in this respect at all times.

–PROPERTIES–

Color	None
Odor	Pungent
Latent Heat	120 BTU lb. at 0°F.
Critical Pressure	1,055 LBS. sq. in.
Critical Temperature	87.8°F.
Pressure in drums at 70°	839 lbs. sq. in.
1 lb. CO_2	8.50 Cu. ft. at atmospheric pressure and 50°F.
Solid CO_2 (Dry Ice)	110°F.

THE HISTORY OF CARBON DIOXIDE

Carbon dioxide has the distinction of being the first gas discovered. In the early part of the seventeenth century, Von Helmont, a Belgian, prepared it by burning wood and by treating mineral carbonates with acid. Black later discovered that carbon dioxide can combine with caustic alkalis and suggested the name "Fixed Air." It was not until 1781 that its real nature was demonstrated by Lavoisier--"Father of modern Chemistry."

The gas was first obtained in a liquid form by Faraday in 1834. But, of course, these were only laboratory scale experiments. It is claimed that a Prof. Vence of Montpelier, France, made the first soda water in 1750 by mixing a little soda and acid in a bottle of water. This is the orgin, no doubt, of the name "soda water."

The History of Carbon Dioxide

Joseph Priestly, another famous chemist, also made several artificially carbonated waters and in 1772 published a pamphlet entitled "Directions for Impregnating water with Fixed Air in Order to Communicate to it the Peculiar Spirit and Virtues of Pyrmont Water.

This was the beginning of great interest in the manufacture of artificial mineral waters. In England, after Priestly had shown the way, ginger beer came into popularity and later carbonated beverages made with sweet syrups as we know them today.

In America, Philadelphia claims the honor of having the first "soda water" manufacturer. Be that as it may, we find that by the middle of the 19th century, as the demand for CO_2 increased, many investigators were busy devising better and cheaper methods of preparing the gas for beverage purposes. While some of the gas then used was obtained from breweries, much was also obtained from the action of sulphuric acid (vitriol) on marble chips, or carbonate of soda.

Nearly every soft drink manufacturer had his own gas generating outfit and incorporated CO_2 into his beverages by agitation within closed vessels. Needless to say, aside from the cost involved, these operations were not only inefficient, but dangerous to a high degree.

In 1888 Jacob Baur, the founder of the liquid Corporation, conceived the idea of producing carbonic gas for coke gas, compressing it to a liquid state and marketing it in steel cylinders.

In May of 1889, the first cylinder of Red Diamond Gas was shipped from Liquid's first plant at 437 Illinois Street, Chicago. The company was then known as "The Liquid Carbonic Acid Manufacturing Company."

The convenience and economy of Carbonic Gas in cylinders was recognized by the industry and soon replaced the use of generator gas entirely.

CARBONATION AND THE FACTORS WHICH GOVERN IT

Carbonated water is largely a mechanical mixture of CO_2 and water and the term "carbonated water" is usually understood to mean water that contains gas to its capacity.

This capacity varies with pressure and temperature. The amount of gas water will absorb increases directly with the pressure. The amount of gas water will absorb also increases as the temperature decreases.

Therefore, any measure of the actual gas content of carbonated water will depend on the two factors--pressure and temperature.

The unit of measure that has been adopted as standard is "the volume."

One volume is the amount of gas that water will absorb at atmospheric pressure and at 60° Fahrenheit.

A volume of gas occupies the same space as does the water by which it is absorbed.

The pressure gauge on the carbonator or on the regulator or on the volume testing apparatus, does not show atmospheric pressure. This means that zero on the gauge is atmospheric pressure which is approximately fifteen pounds per square inch at sea level.

EFFECT OF TEMPERATURE 1

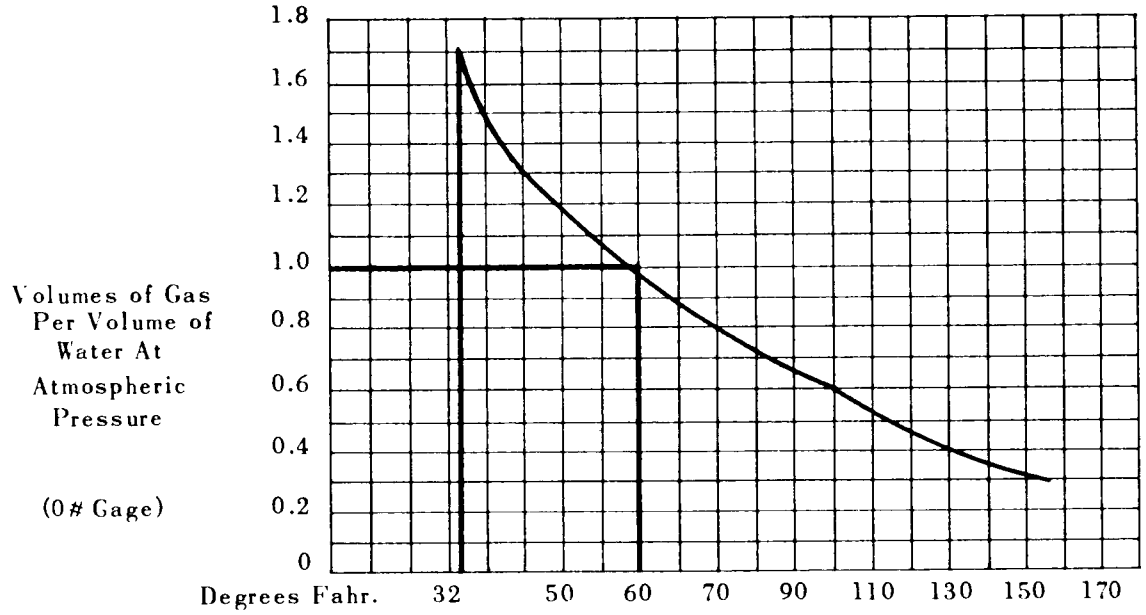

Chart No. 1 shows the effect of temperature change on the amount of gas water will absorb.

The pressure you will note, is constant--namely, atmospheric or 0 lbs. gauge. As the temperature of the water is lowered, the amount of gas it will absorb increases, until at 60°F. it is one volume. Note that from 60° to 150° the slope of the curve changes gradually, from 60° to 32° F., however, the curve changes more abruptly, and for each 10° difference in temperature, a decided increase in gas absorption is apparent, until at 32°, or slightly above the freezing point, we find that 1.7 volumes of gas is absorbed by the water at atmospheric pressure. From this curve it will be apparent that the cooler the water is, the more gas it will absorb.

EFFECT OF PRESSURE 2

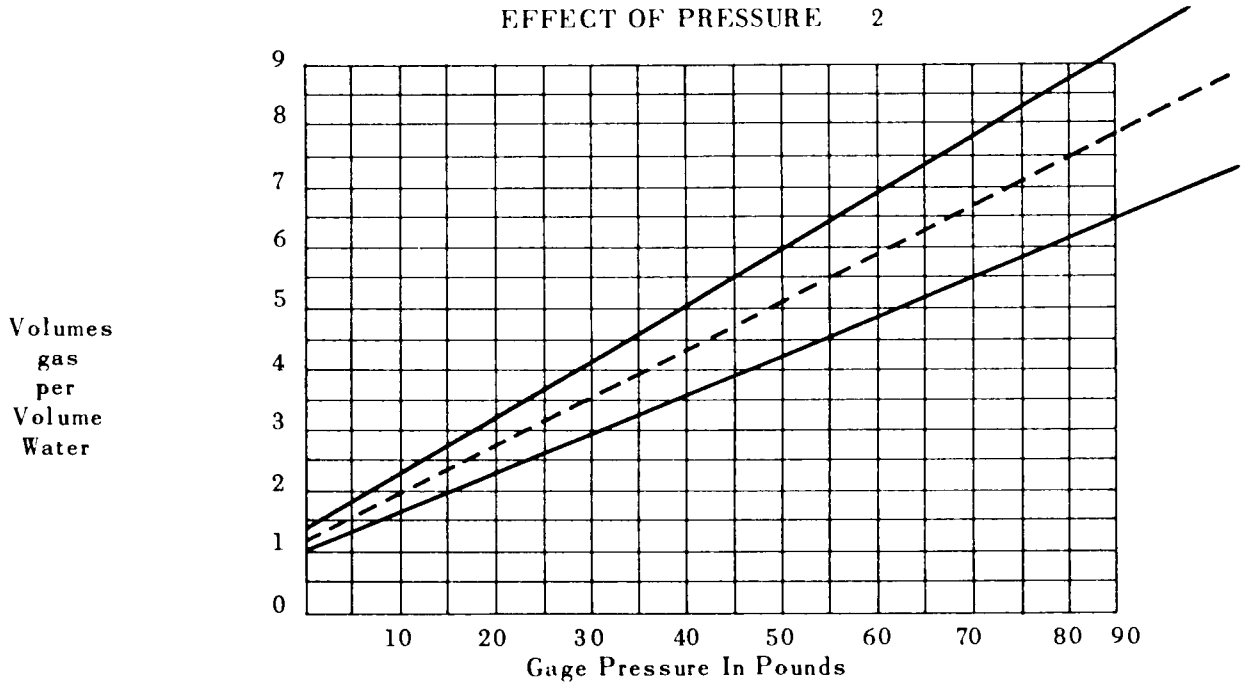

EFFECT OF PRESSURE

Chart No. 2 shows the effect of increasing pressures, temperature being constant, on the amount of gas water will absorb. You will note that the chart is a straight line, of the same slope throughout, indicating that as the pressure is increased, the gas volumes increase. Furthermore, the "gas volume" increase is directly proportional to the pressure. To illustrate--at 0 lbs. gauge and 60°F. we find that the water will absorb one volume of gas, at 15 lbs. increase in pressure, water at 60° will absorb one additional volume of gas. If the temperature of the water is 45°, then, for every 15 lbs. increase in pressure, the water will absorb 1.3 volumes of gas.

FOR A UNIFORM BEVERAGE
Control Carbonation

Carbonation is an important taste ingredient of your beverage. One of the vital attributes of any beverage is uniform taste--bottle after bottle. There are four elements that influence the taste of a beverage.--

1. FLAVOR 2. SWEETNESS 3. CARBONATION 4. TEMPERATURE

All but the final temperature of your drink are susceptible to direct control at your plant. Flavor and sweetness standards should be and probably are definitely established by means of exact formulas.

Carbonation standards should also be established for each flavor in your line--Sparkling water, ginger ales, and other "mixers" should be in the "high carbonation" bracket--the highest carbonation practically obtainable is the ideal to be sought for.

Cola drinks, root beer and other low acid drinks are in the next bracket usually carbonated to 3 or 3½ volumes--

Some bottlers prefer fruit drinks, especially Orange--at a lower carbonation. Determine a standard of carbonation for each flavor that you consider best for your market.

Set up definite instructions for maintaining these standards, just as you maintain standard formulas for the sugar flavor, acid and other ingredients.

FLAVOR	CARBONATION STANDARD
Root Beer	3½ Volumes

Having determined the carbonation standards, it is important that all concerned know how to control the factors that will enable you to maintain them.

HOW TO PRODUCE UNIFORM BEVERAGES

Bottlers know the importance of developing the proper formula for a beverage. They fully realize that for any bottled beverage to achieve popular favor, it must be right--in flavor, in taste, and in gas content.

How To Produce Uniform Beverages

The development of the proper formula for a beverage is, of course, an essential step in establishing that beverage in popular favor. To keep its popularity, the beverage must be the same from day to day and month to month. The formula must be followed exactly and the beverage produced in just the same manner. This means that perfect control of variable factors is necessary to assure uniformity.

The number of volumes of gas in a finished beverage has a definite relationship to the taste of the beverage. Correct carbonation means a sparkling, pungent, thirst-quenching beverage that completely satisfies the consumer. Low carbonation leaves the beverage with a flat, insipid taste which is unsatisfactory. Finished beverages should be checked at frequent intervals to assure proper carbonation in the bottle.

The amount of sugar in a beverage determines, with a given acid content, its sweetness. The sugar also has another important function in the beverage. Sugar makes the "body" of the beverage and "body" is a necessary background for any flavor. A change in the body changes the taste of the beverage even though the same flavor is used. High quality extracts are, of course, a necessity.

Control of sugar content of the beverage is very important. It depends on the beaume of syrup used and the throw used. Variation in syrup density changes the finished beverage if the throw remains the same. Variation in the throw will also change the beverage if the syrup density is unchanged. By checking the beaume of the finished beverage a control is established where it does the most good.

Uniform finished beveraged can be made only by positive control over such variable factors in beverage production.

Check the density of your syrup with a beaume scale.

Check the actual throw in the bottle by measuring individual sample bottles.

Check the final result by using the finished drink tester on the completed beverage.

Check the carbonation in the finished beverage.

KNOW YOUR WATER

Water that is satisfactory for drinking purposes is generally satisfactory for carbonating. There are very few exceptions to this rule.

The water used for carbonating must be clean. That means free from suspended matter of all kinds including water organisms which may be too small to see except under a microscope.

All water should be properly filtered and it is advisable to use an activated carbon unit after the filter. The ideal set up is to follow the activated carbon unit with a paper filter. This will prevent particles of the carbon coming through with the water.

Chemical composition of the water does not affect carbonation within the limits of potable water. If enough material were in solution to interfere with carbonation, it would not be possible to use the water for drinking purposes.

Organic matter in solution can cause trouble if present in excessive quantities but this trouble is removed by activated carbon.

Know Your Water

It may be necessary to treat water chemically in some cases. Hardness can be removed by chemical treatment and that is sometimes advisable to prevent scale formation on machinery, particularly on soaker parts. Alkalinity can be reduced by chemical treatment and that is advisable if the alkalinity is high enough to affect the taste of the water or if it is sufficient to neutralize too much of the acid in the beverage. If objectionable material is present in the raw water, that may require chemical treatment.

Such treatment, properly handled, does not affect carbonation and it does not change the necessity for proper filtration. Chemical treatment should be followed by filtration.

FOES OF CARBONATION AND HOW TO COMBAT THEM

AIR

Too much air in the water interferes with proper carbonation and also causes the CO_2 gas to leave the water more quickly when the bottle of finished beverage is opened. It is therefore important to to reduce the amount of air present to the minimum.

Some air is present in the raw water supply. More may be added in the mechanical handling of the water. When such water reaches the carbonator, the CO_2 gas tends to drive it out of the water. If steps are not taken to remove it, this air will accumulate in the carbonator and much of it will be carried through in the water and into the finished beverage. That is why all liquid carbonators have an automatic air snift.

CARBONATOR SECTION

HOW IT WORKS

Most of the cold drinks served at a soda fountain are carbonated. Therefore, nothing is more important to the successful operation of a fountain than cold, properly carbonated water to make drinks sparkling, full flavored and fully satisfying in quality.

Water is carbonated by combining it with carbonic acid gas (CO_2). This is done in a sealed chamber by forcing gas from a drum through a pressure regulating valve into the water in this chamber. As the carbonated water is used from this chamber, it is replaced by a high pressure water pump. The operation of this pump is controlled by an automatic switch device which senses the water level.

Two conditions must be maintained in order to induce and hold carbonic gas in water. They are:

1. Pressure
2. Adequate refrigeration or cooling.

In the SCOTSMAN DISPENSER, pressure is supplied by the gas drum and is present throughout the system and keeps the water carbonated. Without adequate cooling, however, carbonation escapes rapidly after the water leaves the faucet and is no longer under pressure. Soft drinks should be dispensed at 40° F. or below. The colder the water the greater the carbonation. With the use of ice a temperature of 32° F. can be reached and held without the danger of freezing as is true with mechanical refrigeration systems. Thus, less CO_2 is used to achieve the same degree of carbonation in a drink.
CO_2 is used to achieve the same degree of carbonation in a drink.

THE GAS DRUM - Source of carbonation

Drums for carbonic acid gas are made of drawn steel tubing and are built to withstand great pressure. As delivered, they contain liquid gas reduced to liquid form by tremendous compression.

Each one is equipped with a safety valve set to blow out before internal pressure can explode the drum itself. Once this valve "pops off", the contents of a drum will escape. Drums, therefore, should always be stored in a cool place to keep the liquid from expanding and increasing pressure inside the gas drum.

Drums are classified by weight. They come, as a rule, in two sizes: 20-lb. drums and 50-lb. drums. These weights refer to the compressed liquid contents and are in addition to the tare weight usually indicated on the head of each drum.

CARBONATOR SECTION

THE REGULATOR GAUGE–ACCESSORY ITEM, NOT INCLUDED WITH DISPENSER

The regulator in the carbonating system is mounted at the outlet of the gas drum. The regulator reduces and controls the pressure of carbonic acid gas before it enters the carbonator . The regulator gauge indicates gas pressure at the regulator outlet valve.

TESTING REGULAR GAUGE - SEE ILLUSTRATION ON FOLLOWING PAGES

The regulator gauge should be tested every time a gas drum is changed and at least once every 60 to 90 days. Follow this procedure:

1. Close the drum head valve (clockwise).
2. Close the regulator outlet valve (clockwise).
3. Loosen the regulator coupling nut.
4. Turn regulator adjusting key clockwise until gas pressure in regulator is released and the needle on the regulator gauge drops to "0". Turn this adjusting key counter-clockwise until it is loose and free.
5. Tighten regulator coupling nut and open drum head valve slowly. (The regulator outlet valve remains closed.)
6. Check the reading of the needle on the gauge. If it remains at "0", the regulator is in good condition. If the needle rises but does not register more than 15 pounds pressure, the regulator is working satisfactorily within acceptable limits. If the needle creeps to 30 pounds pressure or more, the regulator needs immediate repair.

HOW TO FIND AND STOP GAS LEAKS

Whenever a fresh drum of CO_2 gas is connected to the carbonating system, open the drum valve until the regulator gauge reaches maximum pressure (approximately 120 to 125 lbs.) and then close drum valve.

If the needle of the gauge on the regulator continues to drop, there is a leak in the system. Due to some absorption of gas in the water in the carbonator, the needle may drop a few pounds, but it should then come to a stop if there is no leak.

If a leak is found by this method, proceed to locate it as follows:

You can test the carbonation system for gas leaks by applying shaving soap lather with a shaving brush to all joints, connections, and valves. If there is a leak, bubbles will appear.

If gas is escaping at the stem of the drum head valve, open valve all the way. Usually this closes a leak through the packing around valve stem. Also tighten packing nut to keep gas from escaping through packing.

CARBONATOR SECTION

Make sure that the regulator coupling nut and regulator valve coupling are tight and that both contain a good fiber washer.

Make sure that the water back-pressure check valve is functioning properly.

Sometimes it is difficult to detect a leak in the regulator gauge. In checking here apply the lather generously, and watch closely.

If a leak occurs near either end of a hose, cut off the defective end and refasten hose with clamps. Otherwise, replace hose.

OPERATION

Rotate pump coupling by hand to insure free operation of pump. Turn on CO_2 gas cylinder and adjust high pressure side to approximately 85 # P.S.I. This pressure goes to carbonator tank.

Adjust the low side pressure gauge to 20 # P.S.I. This pressure is fed to your syrup or product tanks through flexible tubing and serves to push the product up to the post mix points of use.

Open several electric valves for one-half minute to blow all air out of carbonator. Close valves, turn on water supply and turn on power supply to pump motor. When pump stops, open valves again until full stream of water is obtained. Draw several glasses of water and note pump operation. Pump will operate after approximately 14 ounces of carbonated water have been drawn. (If required carbonator can be purged of air by pulling up relief valve stem).

The carbonator will operate satisfactorily on CO_2 pressures from 60 to 120 pounds. Set regulator at 85 lbs. for maximum gas economy or adjust to suit requirements of the valve used.

The system is completely automatic in operation, and requires no attention except maintaining CO_2 supply, and periodic servicing of water supply line filter.

IMPORTANT: Insufficient water supply will cause noisy operation and eventual damage to pump. If strainer and filter are clear and line valves open, noisy pump operation indicates insufficient water supply.

WARNING: If the installation is idle and exposed to freezing temperatures, disconnect water supply line and blow all water out of carbonator tank. Either drain pump or fill it with a solution of one-part glycerine and one-part water.

CARBONATOR SECTION

CONTROL LEVEL SWITCH

The new carbonator tank made by Bastian-Blessing is operated by a control box or relay through two electrodes - one long and one short. When water level reaches short electrode, it shuts off pump - then when water level falls below the long electrode, the pump is automatically started up by means of the control box or relay.

HOW TO CHANGE A GAS DRUM - NEXT PAGE - SINGLE REGULATOR IS SHOWN

1. Close drum head valve (A) (clockwise).
2. Close regulator outlet valve (B) (clockwise).
3. Disconnect regulator from drum by removing regulator coupling nut (C). Gauge should drop to "0".
4. If gauge does not drop to "0", turn regulator key (D) clockwise to allow all gas to escape from the body of the regulator through the main connection.
5. Turn regulator key (D) counter-clockwise until it is free and loose and regulator is closed.
6. Put full drum in place of one being replaced. Couple regulator coupling nut (C) to new gas drum, first making certain that there is a good fiber washer at the connection.
7. Open drum head valve (A) all the way, turning it as far as it will go to bring packing up tight against the shoulder of the valve stem.
8. Turn regulator key (D) clockwise slowly until standard operating pressure, as indicated on the gauge, is reached. Unless you have a low pressure carbonator the standard operating pressure is 100 lbs., depending on the manufacturer's recommendation.
9. Open regulator outlet valve (B) slowly and release gas to carbonator. As pressure equalizes, open this valve all the way.

WASHERS: In gas connections and lines under high pressure, use fiber washers only. In lines carrying liquids or subject to relatively low pressures, rubber or leather washers should be used.

Keep gas turned on at all times to insure uniform well-carbonated water.

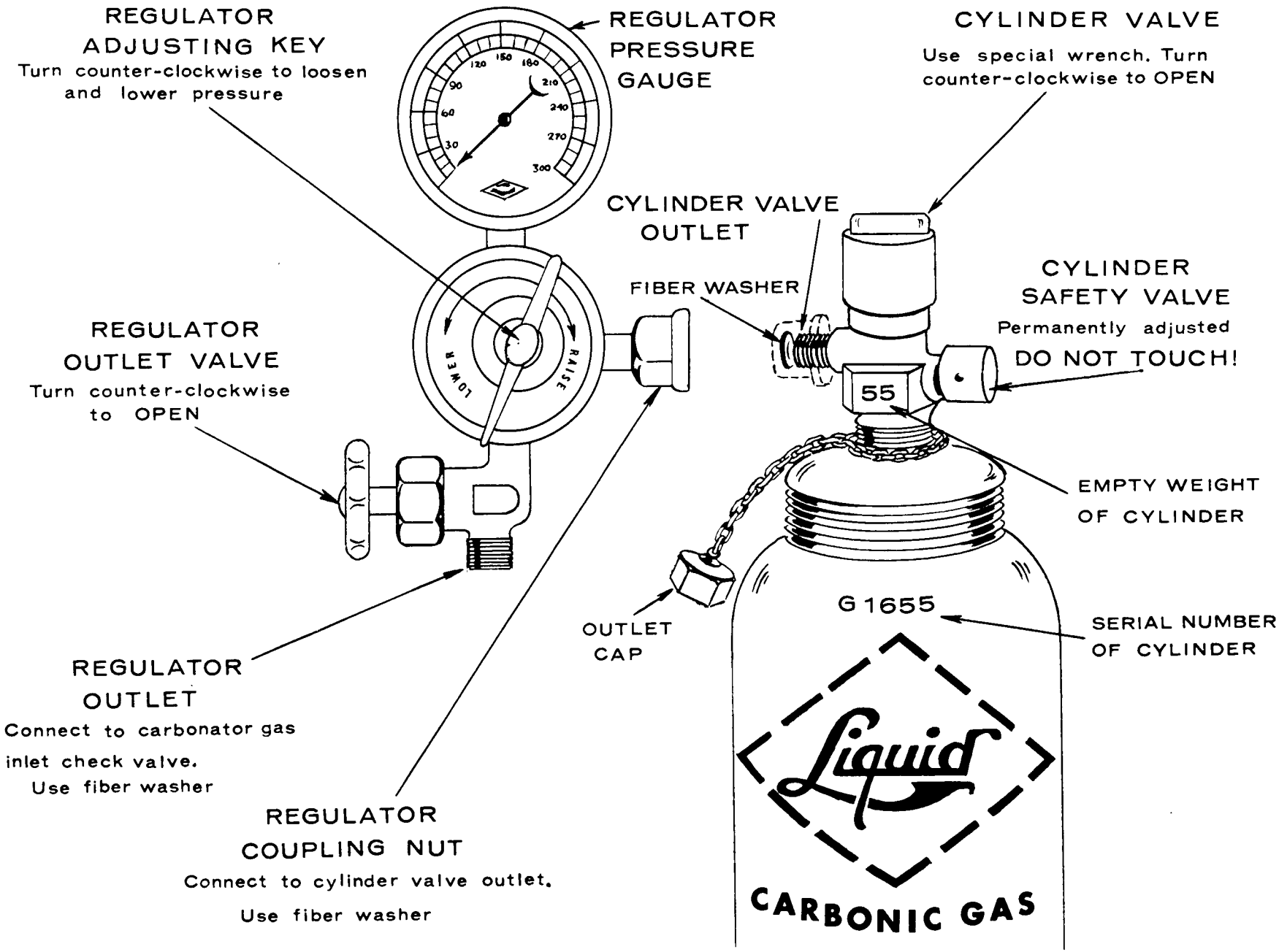
REGULATOR ADJUSTING KEY
Turn counter-clockwise to loosen and lower pressure
REGULATOR PRESSURE GAUGE
CYLINDER VALVE
Use special wrench. Turn counter-clockwise to OPEN
CYLINDER VALVE OUTLET
FIBER WASHER
CYLINDER SAFETY VALVE
Permanently adjusted
DO NOT TOUCH!
REGULATOR OUTLET VALVE
Turn counter-clockwise to OPEN
LOWER
RAISE
55
EMPTY WEIGHT OF CYLINDER
G 1655
SERIAL NUMBER OF CYLINDER
OUTLET CAP
REGULATOR OUTLET
Connect to carbonator gas inlet check valve.
Use fiber washer
REGULATOR COUPLING NUT
Connect to cylinder valve outlet.
Use fiber washer
Liquid
CARBONIC GAS

DISPENSING SCHEMATIC

SD-3 & SD-4

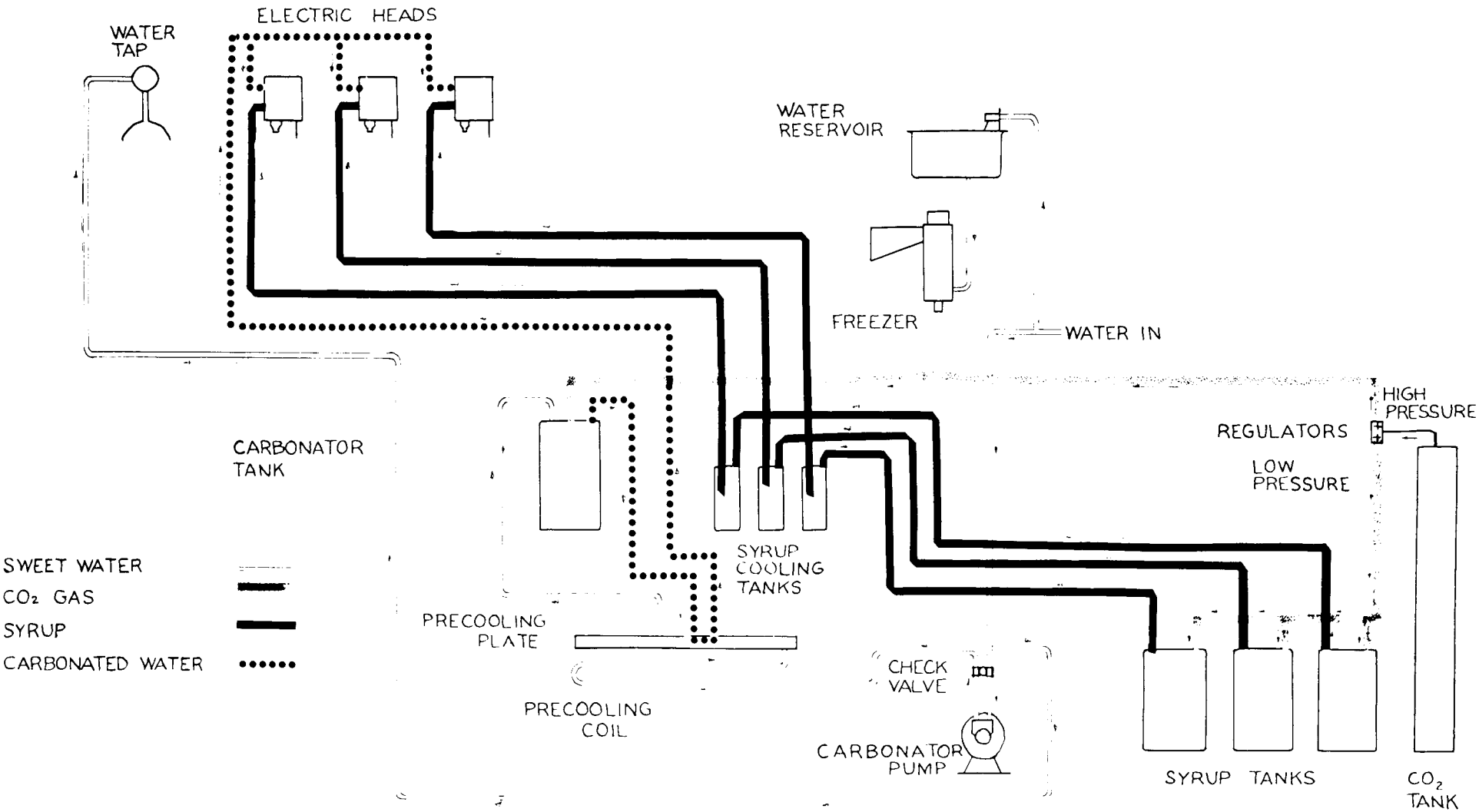

PRINCIPLE OF OPERATION

The operation of controlling liquid levels by means of electrodes is simple, accurate and positive. A combination of a matched relay and transformer, integrally mounted and connected to one or more insulated electrodes, arranged to contact the liquid surface at predetermined levels, actuates the opening and closing of electrical contacts on the relay, which may be used to control a motor, motorized valve, solenoid valve, alarm or other device.

Figures 1 and 2 illustrate the basic principle of operation in its simplest form. A relay with a single normally open load contact, a transformer, an electrode and liquid container are shown. In Figure 1, the liquid is not touching the electrode, hence the electrode circuit is open and no current flows through the relay coil to energize the relay and close the load contact. If the liquid

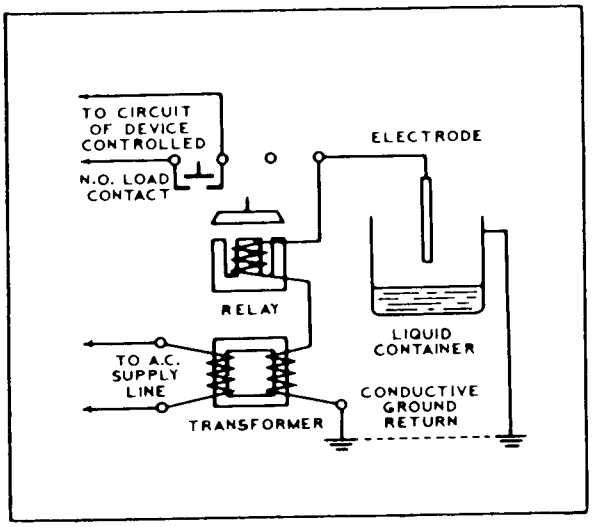

Figure 1

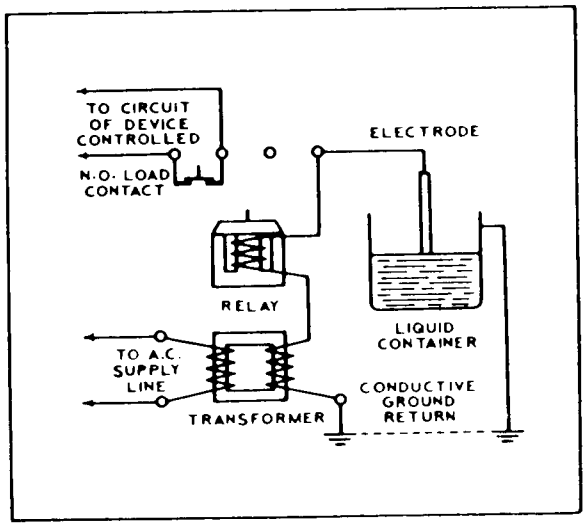

Figure 2

level rises until it touches the electrode, as shown in Figure 2, the liquid provides a conductive path between the electrode and liquid container, closing the circuit through the transformer secondary and relay coil. Thus, the relay is energized and operates to close the normally open load contact. It is evident that the liquid acts as a switch in the electrode circuit and the relay, with its load contact, responds to the position of the liquid level in relation to the electrode.

The control system just described, with one normally open load contact, is used as a high level alarm or low level cutoff. If a normally closed load contact replaces the normally open contact shown, the device then becomes a low level alarm or high level cutoff.

In a pumping operation it is desirable to start the pump at one level and stop at another. The control illustrated in Figures 1 and 2 would not be satisfactory for pumping service since the pump would start and stop rapidly as the liquid contacted and receded from the tip of the electrode. In order to obtain a pumping range a second electrode of greater length is connected to the first electrode through a normally open contact on the relay. This additional contact is known as a "holding contact", since it holds the electrode circuit closed through the long electrode after the level has fallen below the short electrode.

There are two pumping operations; pump down or lowering the level as in emptying a sump, and pump up or raising the level, as when filling a boiler or storage tank. The use of two electrodes and holding contact for controlling pump down and pump up operations is illustrated in in Figures 3 and 4, respectively.

In Figure 3, for pump down operation, the load contact is normally open. When the liquid touches the upper electrode the relay is closed, thus closing the load and holding contacts. The pump will start and although the liquid level immediately recedes from the high electrode, the relay will reamin closed by means of the circuit thru the low electrode and holding contact. This

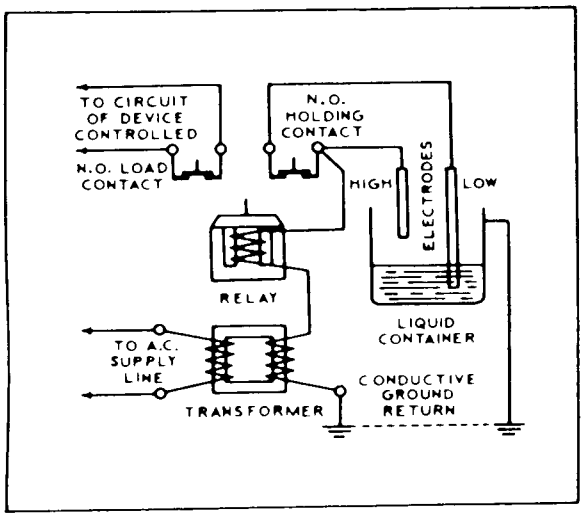

Figure 3

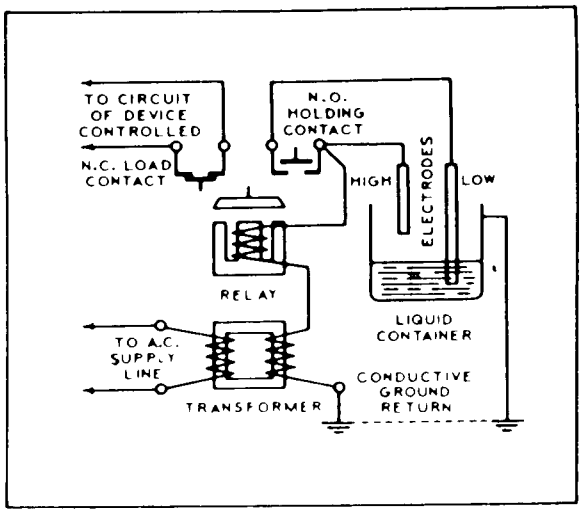

Figure 4

condition is maintained until the liquid recedes from the low electrode when the relay releases to open the load and holding contacts. As the liquid again rises, no action will occur when the low electrode is immersed because the holding contact to the low electrode is open. However, when the level reaches the high electrode, electrical contact is established and the relay closes to repeat the pumping cycle.

In Figure 4, for the pump up operation, the load contact is normally closed. When the liquid touches the high electrode the relay is closed, thus opening the normally closed load contact and closing the normally open holding contact. The pump will stop and although the liquid recedes from the high electrode, the relay will remain closed by means of the circuit thru the low electrode and holding contact. This condition is maintained until the level recedes from the low electrode, when the relay releases to close the load contact and open the holding contact. As the liquid again rises, by operation of the pump, no action will occur when the low electrode is immersed because the holding contact to the low electrode is open. However, when the level reaches the high electrode, electrical contact is established and the relay closes to stop the pump.

Where liquids are confined in non-metallic liquid containers the ground terminal on the control is connected either to a permanently submerged metallic object in the liquid container or to an additional "ground" electrode of length equal to or greater than the longest other electrode in the control system.

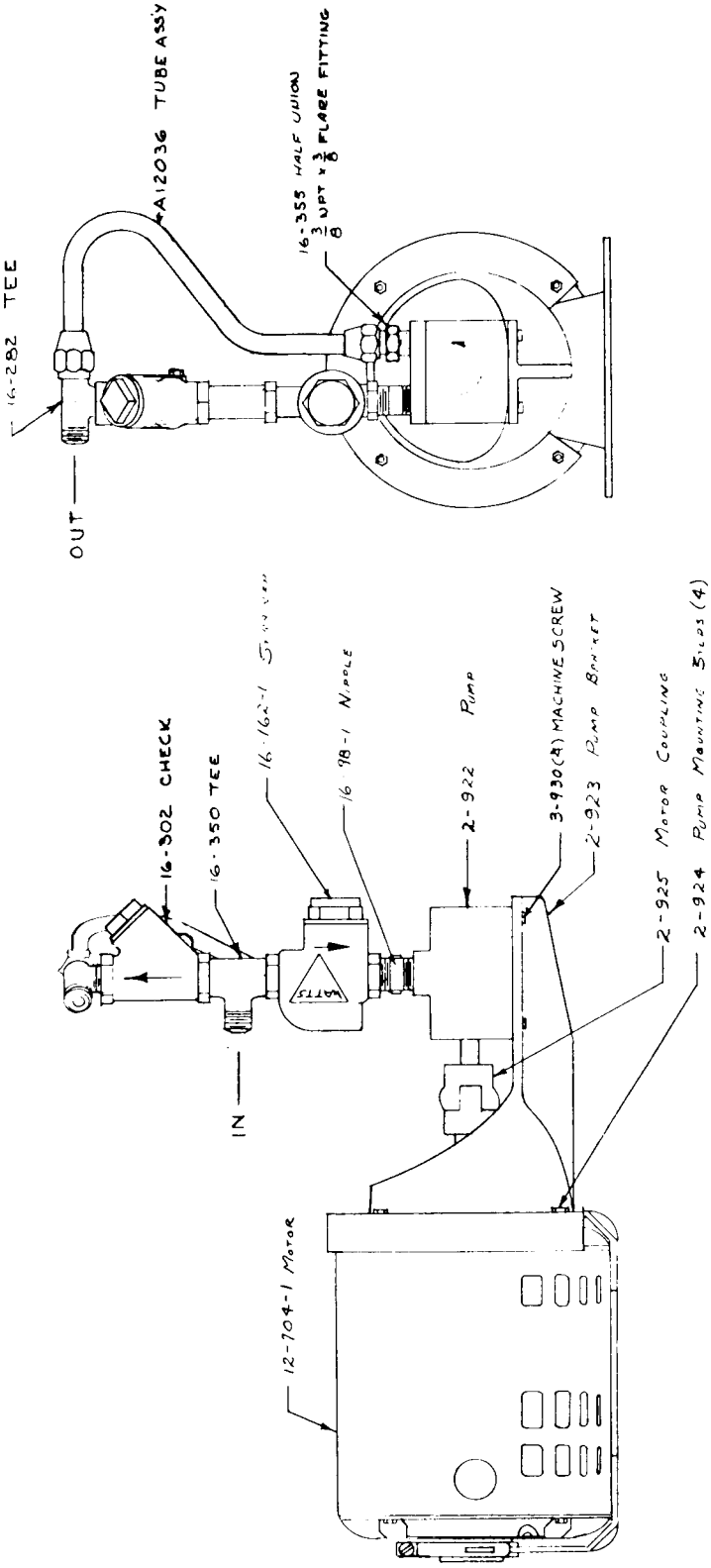

CARBONATOR PUMP, MOTOR, ASSEMBLY

SD-3, SD-4

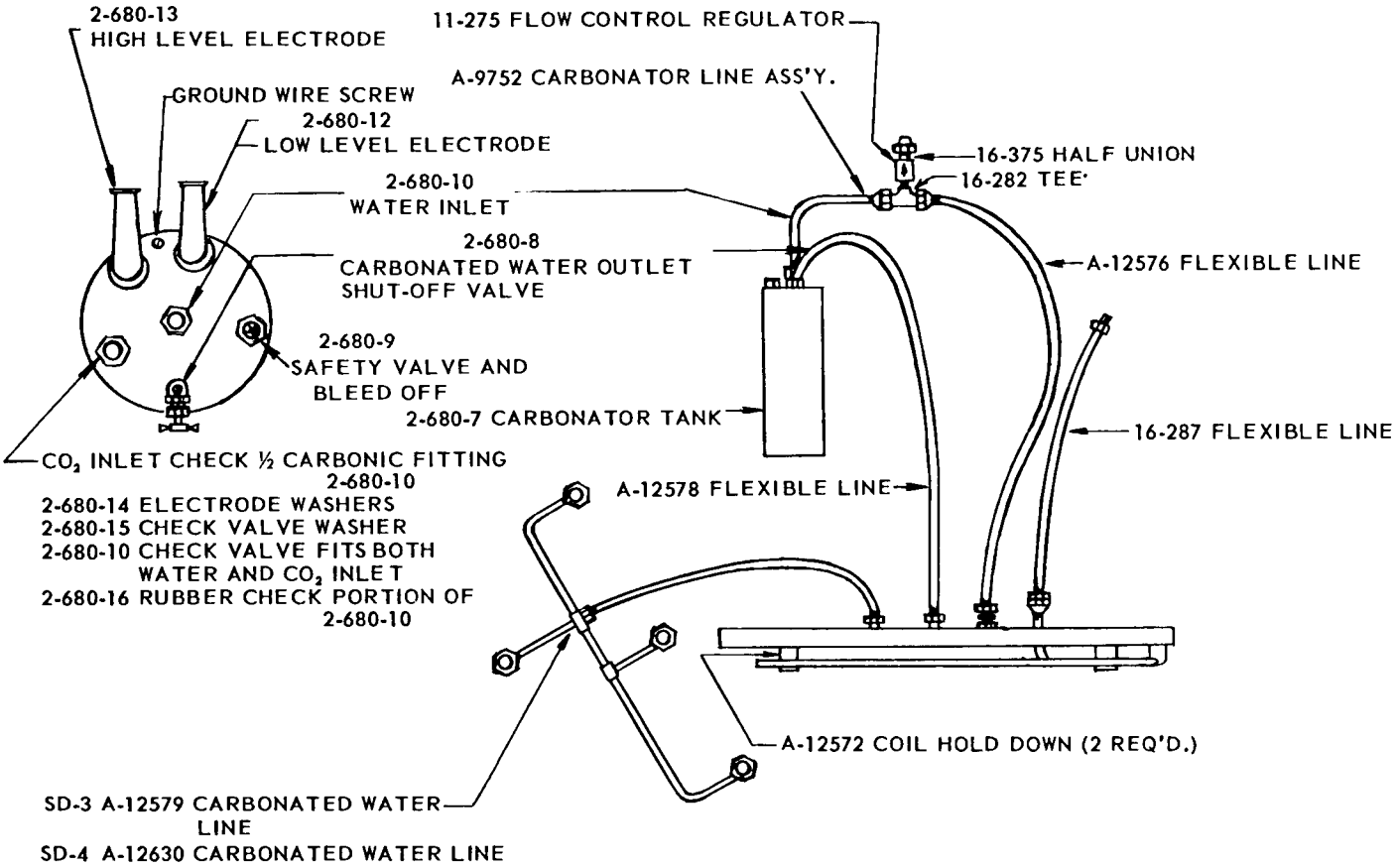

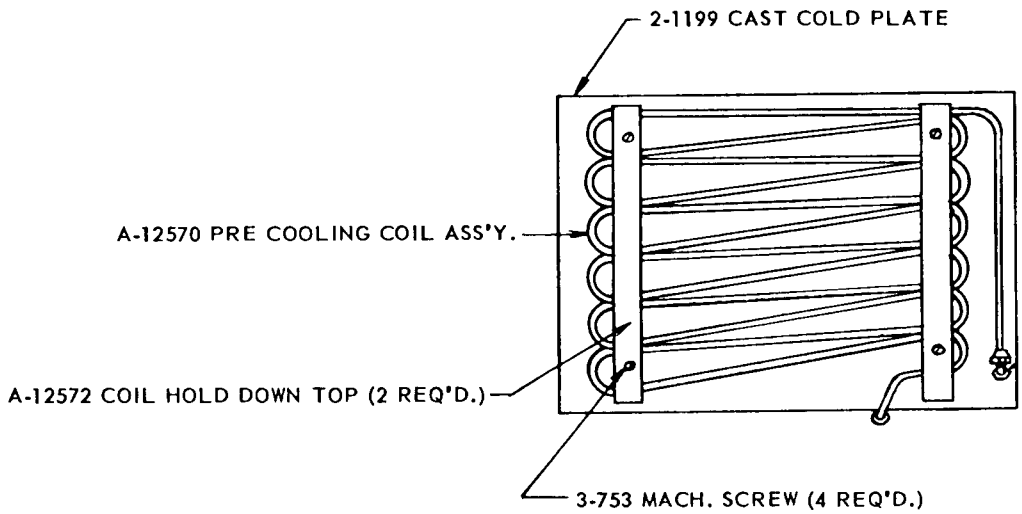

CARBONATED WATER COOLING
SD-3, SD-4

SUBJECT: CLEANING OF COLD PLATES SD-3 AND SD-4

Gentlemen:

There are several important items concerning the SD-1 and SD-2 Scotsman Drink Dispensers that have cropped up periodically through the years and for this reason, we are consolidating some of the more common complaints experienced as well as the solutions necessary.

Because of the similarity of the SD-3s and SD-4s in the manner of producing carbonated water, these problems and solutions apply equally well to these new models.

PROBLEM	SOLUTION
Lack of, or inadequate carbonation	Make sure CO_2 regulator is working and set at 95 to 115 pounds gauge
Leak in line from CO_2 bottle to carbonator tank	Repair
Trapped air or foreign gases in tank	Bleed off
Carbonated Water Throughout system	Excessive pressure on CO_2, reduce to 85 to 95 pounds
Leaking rubber check valve on Bastian-Blessing	Replace Rubber check valve only Part No. 2-680-16
Foaming Drinks	Dispensing nozzel too far from cup downfall causes foaming
	Not enough ice for cooling on plate
	Warm Syrup
Missing Bin Stand Pipe	Replace - Must hold head of water for pre-cooling coil
Algae Growth on bottom of cold plate and pre-cooling coil.	Requires a complete cleaning of cold plates and the bin, should be accomplished once per year, minimum
	Most common, bin stand pipe removed or misplaced in bottom of bin below cold plate

This growth not only is unsanitary but retards the cooling effect of water entering the pre-cooling coil and then the second half of the post-cooling coil, producing warm carbonated water and subsequently foaming and warm beverages.

Remove all ice from the large aluminum cold plate and tilt the cold plate up. This will disclose the bottom pre-cooling coil which is tinned copper attached to the bottom of the coil and you will note a tremendous amount of growth if this plate has not been cleaned recently. This could be cleaned off with a brush and hot water and a small amount of Scotsman ice machine cleaner and then the entire bin and cold plate completely washed down with a warm soda water mixture to neutralize any acid effects.

Then replace the stand pipe in the drain to keep a head of cold water on the pre-cooling coil, reposition the plate and lay flat in the bin.

Numerous complaints have been received regarding the quality of the drinks that have been traced to this cause and it is well to instruct the user to have this service performed at least once per year if not every six months, or on your regular Scotsman Planned Maintenance calls.

Service Department
SCOTSMAN
QUEEN PRODUCTS DIVISION
OF KING-SEELEY THERMOS CO.
505 Front Street
Albert Lea, Minnesota

CARBONATOR SECTION

Service Analysis Chart

COMPLAINT	POSSIBLE CAUSE	CORRECTION
No carbonated water.	Water supply shut off. Air-bound water pump. Worn pump checks. Clogged water inlet screen. Clogged filter.	Re-establish source. Vent pump. Replace. Clean. Clean. Replace cartridge.
Flat carbonated water.	Gas drum empty or low. Gas turned off. Regulator gauge set too low. Gas line closed by smashed washer. Agitator sprocket or pulleys loose. Water pressure too high (over 50 lbs)	Connect full drum. Turn on gas. Increase gas pressure. Replace fiber washer. Tighten. Adjust if possible or install pressure reducer.
Metallic taste.	Block-tin lining damaged. Carbonated water backing up into city water line. Carbonated water line connected by mistake to brass or copper water coils instead of block tin.	Repair lining. Clean water back-pressure check valve, replace washer. Make proper connection.
Carbonated water off taste.	Oil, dirt or grease inside carbonator. Tainted gas.	Clean carbonator. Sniff gas at drum head to determine if drum should be replaced.
Milky carbonated water.	Air in carbonator. Pump sucking air.	Vent carbonator. Adjust pump packing.
Carbonator fills with water.	Water pressure too high. Gas pressure too low. Gas drum empty.	Adjust if possible, or install pressure reducer. Set regulator key to deliver proper gas pressure. Replace.
Carbonated water backs up into city water line.	Dirty or worn back-pressure check valve.	Clean or replace valve seats.
Carbonator runs but only CO_2 gas comes out with syrup.	Pump running backwards.	Reverse rotation of motor by interchanging leads inside motor.

CARBONATOR SECTION

Service Analysis Chart

COMPLAINT	POSSIBLE CAUSE	CORRECTION
Excessive pumping.	Closed water supply valve.	Open valve.
	Water supply (building or city) shut off.	Re-establish source.
	Automatic switch out of order.	Check switch, replace if necessary.
	Water inlet screen clogged.	Remove and clean screen.
	Pump inlet or check valve out of order.	Repair or replace.
	Swollen washers in hose couplings obstruct flow of water.	Replace washers.
Carbonator pounds when running.	Air in pump.	Vent pump.
	Water inlet screen plugged.	Remove and clean.
	Scale in pipe.	Remove scale.
	Undetermined.	Try installing a short length of hose in water line to carbonator- this will cushion and absorb shock of water hammer.

SAFETY FIRST - Prevent accidents - Always turn off power before working on carbonator.

DISPENSER SECTION

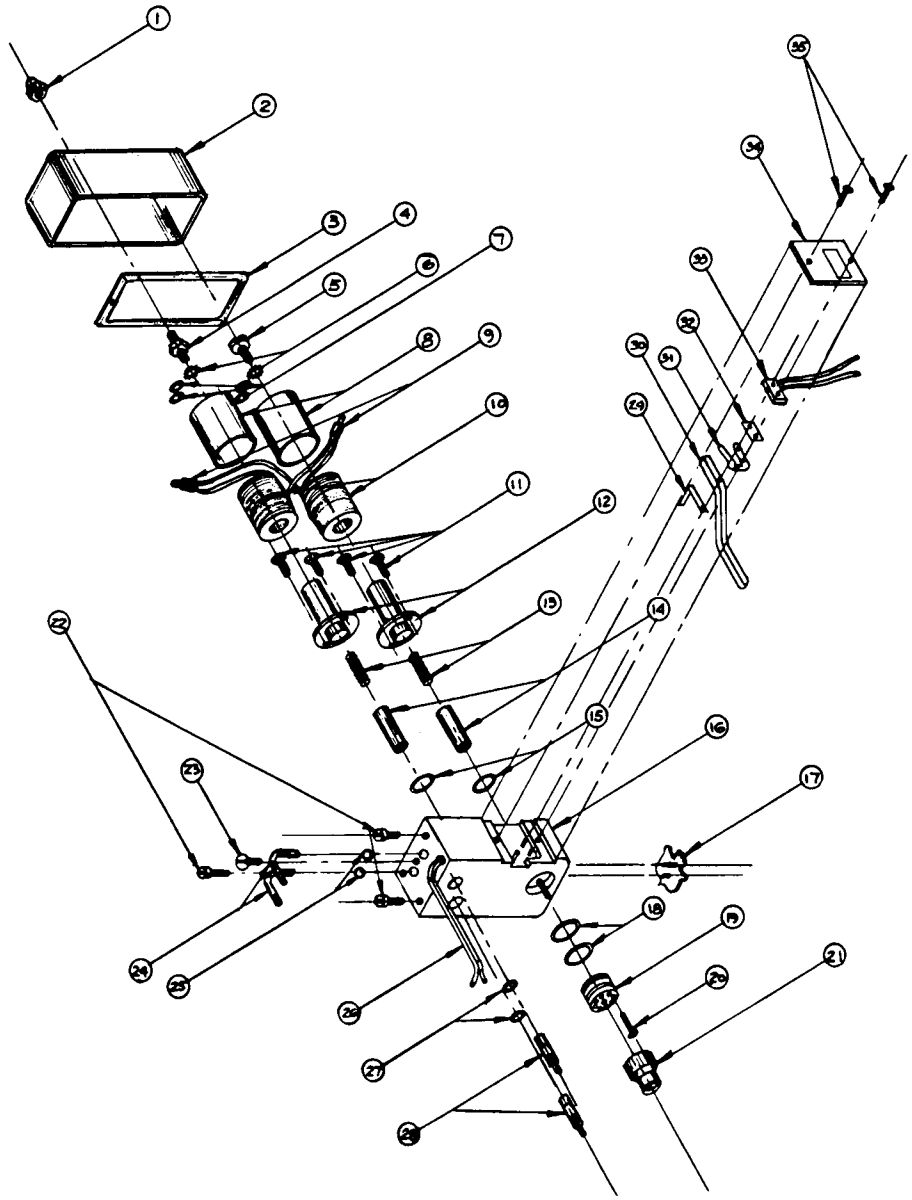

NOTES:

1 - MC-29 THRU MC-35

2 - MC-20 THRU MC-22

3 - MC-41, MC42 & MC43.

	NO.	PART NO.	DESCRIPTION
	35	MC-12	SCREW, SWITCH COVER
	34	MC-11	PLATE, SWITCH COVER
	33	MC-9	MICRO-SWITCH
	32	MC-8	INSULATOR, MICRO-SWITCH
	31	MC-7	ACTUATOR, MICRO-SWITCH
	30	MC-10	LEVER, ACTUATING
	29	MC-46	GROUNDING STRAP
	28	MC-2	STEM, METERING
	27	MC-3	"O" RING, METERING STEM
	26	MC-13	SERVICE CORD
	25	MC-39	"O" RING, INLET FITTING
3	24	MC-43	INLET FITTING
	23	MC-38	SCREW, RETAINER
	22	MC-37	SCREW, MOUNTING
	21	MC-40	SPOUT
	20	MC-6	SCREW, DIFFUSER
	19	MC-4	DIFFUSER
	18	MC-5	"O" RING, DIFFUSER
	17	MC-47	McCANN CREST
	16	MC-1	BASE, FAUCET
	15	MC-14	"O" RING, PLUNGER HOUSING
	14	MC-15	PLUNGER, SOLENOID
	13	MC-16	SPRING, SOLENOID PLUNGER
	12	MC-17	HOUSING, PLUNGER
	11	MC-19	SCREW, PLUNGER HOUSING
2	10	MC-20	COIL, SOLENOID
	9	MC-44	NUTS, STA-KON WIRE
	8	MC-23	HOUSING, COIL
	7	MC-24	GROMMET, COIL HOUSING
	6	MC-26	LOCKWASHER, SOLENOID VALVE STEM
	5	MC-27	SCREW, SOLENOID VALVE STEM
	4	MC-25	STUD, SOLENOID VALVE STEM
	3	MC-28	GASKET, COVER
1	2	MC-29	COVER, TOUCH-O-MATIC
	1	MC-36	ACORN NUT, COVER

TOUCH-O-MATIC FAUCET
MODEL NO. TMC-10

McCANN'S
ENGINEERING AND MFG. CO.
430 W. CYPRESS ST., GLENDALE, CALIF.

I. PRINCIPLE OF OPERATION

When the operator presses a glass against the main actuating lever (30) of the faucet, this lever in turn depresses the actuating button on the electric Micro-switch (33). The switch then completes the circuit, allowing electricity to flow immediately to both solenoid valve coils (10). With the coils energized, they immediately act as electro magnets by creating a magnetic force that raises the plungers (14) located in the center of the coils. When these two plungers are in a raised position, syrup and water are then permitted to flow through an orofice, into the spout (21) (mixing chamber) and finally end up in the operators glass blended perfectly.

II. METHOD OF SANITIZING OR CLEANING FAUCET

The faucet need not be dismantled in order to be cleansed. All that is required is simply fill a spare syrup tank with your cleaning agent, connect it to the syrup line to the desired faucet and flush it through faucet and syrup system with CO_2 pressure. A clean water rinse may be accomplished in the same manner.

The faucet spout should be removed and cleaned weekly.

III. POWER SOURCE

Our standard Touch-O-Matic Faucet is supplied with 115 Volt A.C. - 60 Cycle coils. However, they can be supplied with various voltages. Naturally each faucet is clearly marked regarding its required voltage, the coil housing (8) is also marked accordingly. The coil itself is color coded to identify its voltage as follows:

RED	LEADS indicate	- 115 VAC	- 60 Cycle	
BLACK	LEADS indicate	- 12 VAC	- 60 Cycle	
YELLOW	LEADS indicate	- 12 VDC	-	
BLUE	LEADS indicate	- 6 VDC		

IV. METHOD OF DISMANTLING SOLENOID VALVE

1. Remove screw (5) and lock washer from plunger housing.
2. Remove coil housing (8).
3. Remove coil (10) by lifting only, do not cut wires.
4. Remove the 2 screws (11) from plunger housing base.
5. Remove plunger housing (12), lift straight up.
6. Remove plunger spring (13).
7. Remove plunger (14).

TO REASSEMBLE - REVERSE PROCEDURE.

NOTE!! Before removing a faucet from a dispenser or fountain, or before dismantling a solenoid valve that is mounted on a fountain, be sure to turn off the CO_2 pressure to the syrup tank and carbonator. Also, bleed off the CO_2 pressure on the syrup tank and carbonator, if there are no shut-off valves on the fountain.

V. SERVICE TIPS

1. When the 2 screws (11) that fasten the plunger housing (12) to the plastic valve base (16) are replaced, they should be screwed down all the way. In other words, be sure that the large stainless washer on the plunger housing (12) is pressed firmly against the plastic. If one screw was all the way in and the other was only half way in (for example), the plunger in the housing might "cock" and cause dripping - Caution - these screws do not have to be extra tight, just snug down.

2. When reassembling solenoid, with plunger spring (13), place in plunger (14), allow the plunger housing (12) to be placed over the plunger and spring and held together, thus preventing the plunger spring from falling out while assembling.

3. There is a difference between the Touch-O-Matic Non-Carbonated (NC) and the Carbonated faucet. The Non-Carbonated faucets are marked NC on the underside of the faucet. The NC faucet is designed for plain water. Since this pressure could vary from 10 to 100 psi at various locations throughout the same city, we arrived at a medium flow of water. On this faucet, we use a 3/16" orifice which will pass a sufficient amount of water at 10 psi. This faucet can work on pressure up to 50 psi, but no higher or the plunger will fail to open occasionally.

   The Carbonated faucet will operate on pressures up to 125 psi, by using a smaller 1/8" orifice.

4. RECOMMENDED OPERATING PRESSURES

   10 to 20 psi on syrup - average 15 psi.
   80 to 120 psi on carbonated water - average 100 psi.

5. RATE OF FLOW AND PROPER BLENDING

   The fastest rate of flow recommended for the Touch-O-Matic Faucet is 2 ounces per second of finished drink. In other words, a 6 ounce finished drink should take at least 3 seconds to pour. If a faster pour is used, the carbonation in the drink would be reduced.

   The typical blend used, is 1 ounce of syrup and 5 ounces of water for a finished 6 ounce drink. However, this may vary with the brand of syrup used, therefore check with your syrup supplier.

   To increase flow of syrup or water, turn metering screw out (counter-clockwise) and inward (clockwise) to decrease flow. These adjustments are sensitive and should be treated as such, by not turning more than an eighth of a turn at a time.

6. When replacing Spring Actuator (31) on micro-switch, pull switch straight out evenly. If switch is raised unevenly, it will bind and make it difficult to remove. When replacing switch, be sure to have actuating button of switch at top position not at the bottom. This will insure longer life of the actuating spring.

TROUBLE SHOOTING

I. SPOUT DIFFICULTIES	CORRECTION
a. Spout is difficult to remove.	Lubricate "O" ring on diffuser (19) with mutton tallow or pure white vasoline (small amount.)
b. Spout comes off too easily.	Remove spout and clean both spout and "O" ring on diffuser, then dry with cloth.
II. NOISY SOLENOID VALVE	
a. Dirt or particles in back of plunger.	Operate faucet several times to flush out, or remove plunger and clean.
III. MAIN ACTUATOR PRESSED IN, SYRUP DELIVERED, BUT NO WATER	
a. Water pressure too high.	Reduce pressure. See if it is a NC faucet being used as a carbonated.
b. Coil defective or bad connection. (Rear coil)	Check connections and or replace coil.
IV. MAIN ACTUATOR PRESSED IN, WATER DELIVERED, BUT NO SYRUP	
a. Coil defective or bad connection.	Check connections and or replace coil.
V. MAIN ACTUATOR PRESSED IN, NO WATER OR SYRUP IS DELIVERED	
a. Defective switch.	Replace switch.
b. Actuating spring bent.	Replace or repair spring actuator.
c. Actuating spring broken.	Replace spring actuator.
VI. INLET FITTINGS SHOW LEAKAGE (24)	
a. Nicked or cut "O" ring.	Replace "O" ring.
b. Dirt on "O" ring.	Clean "O" ring.
c. Worn "O" ring.	Replace "O" ring.

VII. METER STEM SHOWS LEAKAGE (28)

Same steps as VI.

VIII. PLUNGER HOUSING SHOWS LEAKAGE (12)

Same steps as VI.

IX. FAUCET DRIPS SYRUP OR WATER WHEN NOT IN OPERATION

a. Dirt or foreign matter on plunger rubber seat (14)	Operate faucet several times to flush out, or remove plunger from solenoid valve and clean.
b. Nick or cut in rubber seat of plunger.	Replace plunger. *(Factory exchange)
c. Broken or defective plunger spring (13).	Replace spring.

X. FAUCET ALLOWS DRINK TO BE DISPENSED WHEN NOT OPERATED

a. Defective switch	Replace switch.

*Plungers with worn out or defective rubber seats may be exchanged with the factory. The exchange price will be half price of the cost of a new plunger.

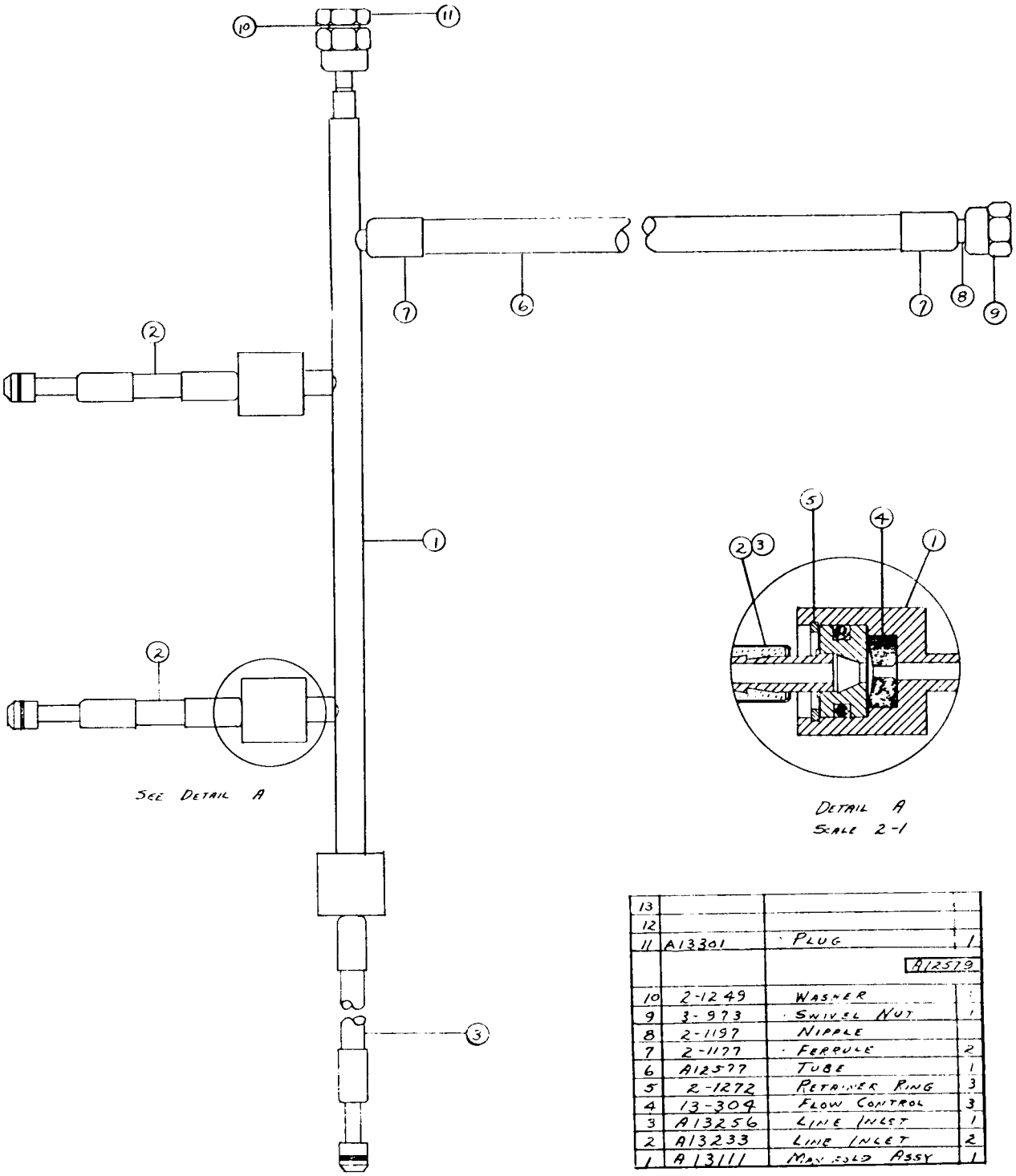

13			
12			
11	A13301	PLUG	1
		A12579	
10	2-1249	WASHER	
9	3-973	SWIVEL NUT	1
8	2-1197	NIPPLE	
7	2-1177	FERRULE	2
6	A12577	TUBE	1
5	2-1272	RETAINER RING	3
4	13-304	FLOW CONTROL	3
3	A13256	LINE INLET	1
2	A13233	LINE INLET	2
1	A13111	MANIFOLD ASSY	1

CARBONATED WATER MANIFOLD ASSEMBLY

PARTS LIST

DESCRIPTION	PART NO. SD-3	PART NO. SD-4
CABINET PARTS		
Case Assembly	A-12615-30	A-12652-30
Front Door Assembly	A-12612-30	A-12648-30
Right Side Door Assembly	S-7165	Same
Rear Door Assembly	A-6514	A-12650-30
Left Side Door Assembly	S-9405	S-9405
Emblem	S-3188	Same
Moulding Strip Case Bottom 2/Unit	A-8902-4	A-8902-6
Legs	A-12405	Same
Hood Assembly - No Top	A-12594	A-12633
Hinged Bin Door Assembly	2-1208	Same
Hood Top Assembly	A-12604	A-12638
Moulding Strip Back 24"	A-6509	A-13000
Moulding Strip Front 87 1/4	A-6510	A-12641
Moulding Insert (Black)	A-3640 Order by Foot	Same
Drip Tray Grill Syrup	A-12609	A-12643
Drip Tray Grill Water	A-12673	A-12673
Storage Bin Assembly	A-12556	A-12625
Storage Drain Fitting (Male)	A-7657	Same
"O" Ring	2-530	Same
Storage Drain Assembly	A-6446	Same
Storage Drain Fitting (Female)	A-6447	Same
Bin Standpipe Strainer	A-7445	Same
Grommet	13-125	Same
Grommet	13-194	Same
Grommet	13-124	Same
Bulb Bracket	S-7312	Same
CO_2 AND WATER CIRCUIT		
Water Inlet Line Assembly	A-12564	Same
Plastic Clip, Water Line	2-631	Same
Pressure Water Line Assembly	A-12566	Same
Water CO_2 Line Assembly (Outlet)	A-12578	Same
Carbonator Line Assembly	A-9752	A-9752
Glass Filler Line Assembly	A-12843	Same
Carbonator Water Line Ass'y.	A-12568	Same
Reservoir Assembly Final	A-12588	Same
Water Inlet Valve	S-8138	Same
Valve Seat	S-6947	Same
Cotter Key	3-550	Same
Float Rod, with Float Ball	A-12509	A-12509
Valve Cover	A-5801	Same
Nut	S-7044	Same
Standpipe Assembly	S-6715	Same

PARTS LIST

DESCRIPTION	PART NO. SD-3	PART NO. SD-4
FREEZER ASSEMBLY		
Spout thru Bin/Grommet	S-9258	Same
Spout Casting Holder	S-9237	S-9237
Brass Screw, Casting Plate to Spout 1/4 x 20 x 5/8	3-207	Same
Spout Casting	S-9236	Same
"O" Ring	2-560	Same
Spout Assembly	A-7508	Same
Compression Spring	2-492	Same
Micro-Switch	12-207	Same
Brass Machine Screw 1/4 - 20 x 1 - 1/4"	3-671	Same
Freezer Assembly	A-9618	A-7490
Lift Hook	None	A-8162
Freezer Brass Cap	S-6952	A-7701
Bearing (Upper)	2-547	2-695
Worm Tube Washer	None	A-7699
Spacer Washer	S-7121	A-6273
Locking Cap Screw	S-6481	3-758
Retaining Ring	3-553	Same
Ice Breaker	S-6793	A-7700
"O" Ring	2-386	2-386
Worm Shaft	2-578	2-693
Water Seal	2-649	2-649
Seal Spacer	S-9360	Same
"O" Ring	None	2-647
Bearing (Lower)	2-417	Same
Worm Tube Nut	S-8817	S-8817
Drip Pan Assembly (Rubber)	13-213	13-213
Steel Ball - Shaft End	2-423	
CARBONATOR ASSEMBLY		
Pre-Cooling Coil Assembly - Tinned Tubing	A-12570	Same
Cast Cold Plate	2-1199	Same
Coil Hold Down	A-12572	Same
Flexible Line (Pre-Cool Out)	A-12576	Same
Flexible Line 3/8" female flare (Pre-Cool In)	16-287	Same
Carbonated Water Header Complete	A-12579	A-12630
Stainless Steel Manifold	A-13111	A-13110
Manifold O-Ring	13-306	13-306
Valve Body O-Ring	2-1204	2-1204
Flow Control Regulator - Sweet Water	11-275	Same
Flow Control Regulator - Carbonated Water	13-304	Same
Heater Elements for 12-530A	12-708	Same
Pumps - Carbonator B&B	2-922	Same
Pump Adaptor to Motor B&B	2-923	Same
1/4 HP Motor - Carbonator	12-704-1	Same
Couplings Motor to Carbonator	2-925	Same
Water Outlet Line - Carbonator Pump	A-12036	Same
Tee - 3/8 x 3/8" flare x 3/8 NPT	16-282	Same
Check Valve	16-302	Same
Retainer Rings	2-1272	Same
Water Strainer (Watts)	16-162-1	Same

DESCRIPTION	PART NO. SD-3	PART NO. SD-4
CARBONATOR TANK ASSEMBLY B&B		
Carbonator Tank Complete	2-680-7	Same
Soda Outlet Valve	2-680-8	Same
Safety-Pure Valve	2-680-9	Same
Check Valve Complete Soda or Water	2-680-10	Same
Electrode Long	2-680-12	Same
Electrode Short	2-680-13	Same
Electrode Washer	2-680-14	Same
Check Valve Washer	2-680-15	Same
Rubber Check (For 2-680-10)	2-680-16	Same
CARBONATOR PUMP RELAY AND CONTROL BOX		
Relay Box Assembly	12-634	Same
Relay Coil (4800-39AC)	12-634-1	Same
Primary Coil (1850-32TAC767)	12-634-2	Same
Secondary Coil (5000-36AC-362)	12-634-3	Same
PRE-COOL SYRUP TANKS		
Syrup Pre-Cool Hose (Tank-In)	A-12582	Same
Syrup Post-Cool Hose (Tank-Out)	A-12586	Same
Syrup Pre-Cool Tanks (St. Steel)	2-1206	Same
Washer	2-685-19	Same
Syrup Tank Support	A-12885	A-12885
COMPLETE VALVES		
*Touch-O-Matic Valve (TMC-10)	2-1205	Same
Glass Filler Valve Sweet Water	2-1211	Same
REPAIR PARTS		
Flavor Medallion Set	2-1250	Same
DRIVE ASSEMBLY		
Drive Motor	12-864-1	Same
Pulley (3 1/4) Drive Motor	2-1194	Same
Set Screw	3-385	Same
V Belt	13-106	13-203
Pulley (10") Gear Reducer	2-378	Same
Gear Reducer	2-580	Same
Coupling (Gear Reducer, Half)	S-7716	Same
Insert - Rubber	13-131	Same
Coupling (Freezer Half)	S-8525	Same
Clamp 2 Per Coupling	S-8496	Same

*All repair parts for Touch-O-Matic Dispensing Valves should be ordered direct from supplier. McCanns Mfg. Co., 430 W. Cypress, Glendale 4, California.

DESCRIPTION	PART NO. SD-3	PART NO. SD-4
DRIVE ASSEMBLY		
Cap Screw 2 Per Coupling	3-206	Same
Set Screw	3-385	Same
Key	S-6035	Same
Rubber Shield	13-152	Same
ELECTRICAL COMPONENTS		
Switch, Manual (Ice Maker)	12-530A	Same
Switch Overload Heater	12-708	Same
Switch, Manual (Carbonator)	12-426	Same
Bin Control, White Rodgers	11-99-1	Same
Low Pressure Control	11-273	Same
Control Box Cover	A-12555	Same
Dual Pressure Control, water cooled models	11-220	Same
Penn Water Regulating Valve, water cooled models	11-198	Same
Head Pressure Control } Air Cooled Models	11-264	Same
Resistor for 11-264 } Air Cooled Models	12-515	12-515
ACCESSORY ITEMS		
Ice Machine Cleaner 8 oz. bottle	19-343	Same
Ice Scoop - Plastic	2-540	Same
Water Filter	2-1027	Same
Touch Up Paint (Grey Sprayon)	10-153	Same
Plywood Crate	1-576	1-578
Hose Clamp Fits 5/8" Hose	2-534	2-534
Hose Clamp Fits 3/4" Hose	2-693	Same
Hose Clamp Fits 7/8" Hose	2-536	Same
Hose Clamp Fits 1-1/8" Hose	2-932	Same
CONDENSING UNITS		
Motor Compressor Only 115/60/1 Air Cooled	18-132	18-221
Valve Plate and Gasket Kit	None	18-222
Relay	18-133	18-227
Starting Capacitor	18-134	18-228
Condenser Fan Only	18-137	18-231
Condenser Motor Only	18-421	18-232
Mounting Bracket, Condenser Fan Motor	None	18-233
Air Cooled Condenser	18-140	18-234
Condenser Shroud	18-141	18-235
Klixon Thermal Overload	18-135	18-240
Electrical Terminal Assembly, includes three complete terminals & board		18-241
Motor Compressor Only 115/60/1 Water Cooled		18-257
Valve Plate and Gasket Kit		18-222
Cylinder Head		18-271
Relay (115/60/1)		18-227
Starting Capacitor (115/60/1)		18-228
Water Cooled Condenser		18-259

DESCRIPTION	PART NO. SD-3	PART NO. SD-4
CONDENSING UNITS		
Water Cooled Condenser Gasket - Plain End		18-262
Water Cooled Condenser Gasket - Manifold End		18-263
Klixon Thermal Overload 115/60/1		18-240
Electrical Terminal Assembly, Includes 3 Complete Terminals & Board		18-241
Compressor to Water Valve Hose Assembly		18-260
Compressor to Condenser Hose Assembly		18-261
Water Regulating Valve - Penn		11-198
Ranco Hi-Lo Dual Pressure Control		11-286
Refrigerant Drier	2-350	2-350
REPAIR PARTS FOR GEAR REDUCER		
Slo-Speed Shaft and Worm Gear	2-580-20	Same
Hi-Speed Shaft and Worm Gear	2-580-21	Same
Bearing and Seal Repair Kit	A-6397	A-6397
Pint 600W Oil	19-359	19-359