SCOTSMAN

HOME ICE CUBE MACHINES

MANUFACTURER'S LIMITED WARRANTY

Scotsman warrants to the original purchaser-user that any consumer product of its manufacture bearing the name Scotsman will be free from defect in material and/or workmanship, and that if properly installed and serviced in accordance with the Service Manual furnished with the product it will perform adequately under normal use.

This product warranty shall be effective for a period of one year from the date of original installation if such installation is reported on Scotsman's warranty registration form returned to the factory at the time of installation, or for a period of 15 months from the date of shipment from the factory if the warranty registration form has not been returned (provided the foregoing warranty periods will be extended within the Continental United States for an additional four years as to the motor compressor part). This warranty is applicable only in the United States and Canada.

Scotsman's obligation is limited strictly to replacing without charge, or to repairing any part or parts that shall be found to be defective in material and/or workmanship during the warranty period. Charges for labor (except labor performed in the Scotsman factory to repair defective parts) are not covered. No part or assembly which has been subject to accident, alteration or misuse, or which is not installed or serviced in accordance with the Service Manual furnished with the product, or which is from a machine on which the serial number has been altered or removed, shall be covered by this warranty.

To obtain performance of any warranty obligation, the original purchaser must provide purchase information (including date of installation and model and serial numbers) to the person from whom the product was purchased, or to any authorized dealer or distributor of Scotsman consumer products whose name and address appears in the local Yellow Pages telephone directory or is obtained from Scotsman's Consumer Service Department. The purchaser will be billed for any costs involved in connection with repair or replacement, and a credit will be issued to the purchaser for such costs to the extent and subject to the limitations herein provided at such time as confirmation is made by Scotsman's Consumer Service Department that said product is still within the warranty period.

Scotsman assumes no liability for incidental or consequential damages of any kind or for any damages resulting in whole or in part from misuse or inadequate maintenance of the product or any part thereof. Some states do not allow the exclusion or limitation of incidental or consequential damages, so the above limitation may not be applicable.

THIS WARRANTY IS IN LIEU OF ALL OTHER EXPRESS WARRANTIES OR GUARANTEES OF ANY KIND. IMPLIED WARRANTIES, INCLUDING MERCHANTABILITY OR FITNESS, ARE LIMITED TO THE DURATION OF THE EXPRESS WARRANTY CONTAINED HEREIN. Some states do not allow limitations on how long an implied warranty will last, so the above limitation may not be applicable.

This warranty grants specific legal rights, and other rights may also be granted which vary from state to state.

SCOTSMAN CONSUMER SERVICE DEPARTMENT
QUEEN PRODUCTS DIVISION
KING-SEELEY THERMOS CO.
505 Front Street
Albert Lea, Minnesota 56007
Telephone 507 / 373-3961
TWX 910-565-2173

Printed in U.S.A.

THIS PAGE
INTENTIONALLY
LEFT BLANK

THIS PAGE
INTENTIONALLY
LEFT BLANK

TO THE USER

Your Scotsman Home Ice Cube Machine is a product carefully engineered and quality constructed to provide you with many years of faithful performance and a minimum of maintenance costs.

Produced by the world's leading manufacturer of automatic ice making equipment, your Scotsman Ice Cube Machine incorporates the same reliable systems already proven over years of actual operation by thousands of users.

Many of you will have an opportunity to see and use clear, solid, slow melting Scotsman Cubes for the first time. You will quickly compare the clear, glass-like quality of your Scotsman cubes to the type produced by your home refrigerator, freezer. By comparison, cubes made in trays in your refrigerator are very white or cloudy, they also melt faster than clear ice.

A brief explanation shows why.

First, all water contains some mineral deposits such as iron, calcium, etc. In various degrees. These deposits do not freeze. Therefore, when you freeze water in refrigerator trays, these minerals do not freeze but are trapped inside the ice cubes, contributing to their cloudiness.

In your Scotsman Home Ice Cube Machine the water to make ice is continually moved or circulated by a small electric pump that sprays the water under gentle pressure into the inverted cube molds. As water hits these cold refrigerated molds, only the water freezes, building gradually into a full cube. The minerals or impurities fall back down into a reservoir or sump area where they are flushed down the drain at the end of each freezing or ice making cycle.

This manual also contains information regarding the various working systems and helpful hints on the care and maintenance of your ice machine.

We would like to suggest you take the time now to briefly review this manual, and if you have any further questions regarding the care or operation of your ice machine, contact:

CONSUMER SERVICE DEPARTMENT
SCOTSMAN ICE SYSTEMS
Albert Lea, Minnesota 56007
Phone: 507/373-3961

P.S. Whenever writing, please be sure to include the model and serial numbers of your ice cube machine.

SCOTSMAN®

MODELS DC30A & SM18A HOME ICE CUBE MACHINE

SPECIFICATIONS

Size: 15" wide 20-1/2" deep 33-1/8" high.

Weight: 85 pounds

Cabinet: Steel

Finish: Baked on enamel

Color: Appliance White/ Sandalwood

Storage Bin: Polyethylene

Door: Swings to right

Door Latch: Magnetic Gasket 4 Sides

Lower Compartment Panel:
Removable by pulling outward at top.

Power Rating	5.0 Amperes
Wire Size:	18 Gauge
Fuse Size — Maximum:	15 Amperes
Refrigerant Metering Device:	Capillary Tube
Cubes per Harvest:	8
Harvest Means:	Hot Gas
Compressor Make:	Danfoss
Compressor Specs:	1/8 H.P. 115/60/1
Refrigerant Charge:	5-1/2 oz. R-12.

Requirements:
Power: 115 volts - 60 Hertz Single Phase
Water: 1/4" cold water line
Drain: Required for water Outlet.

Daily Ice Capacity is directly related to inlet water temperature, ambient temperature, and age of machine. Under normal conditions the unit will make up to 30 pounds of ice in 24 hours.

To keep your SCOTSMAN HOME ICE CUBE MACHINE performing at it's maximum capacity, it is necessary to perform periodic maintenance as outlined on page 12 of this manual. **The unit should be cleaned at least twice a year. Some water conditions will require more frequent cleaning.**

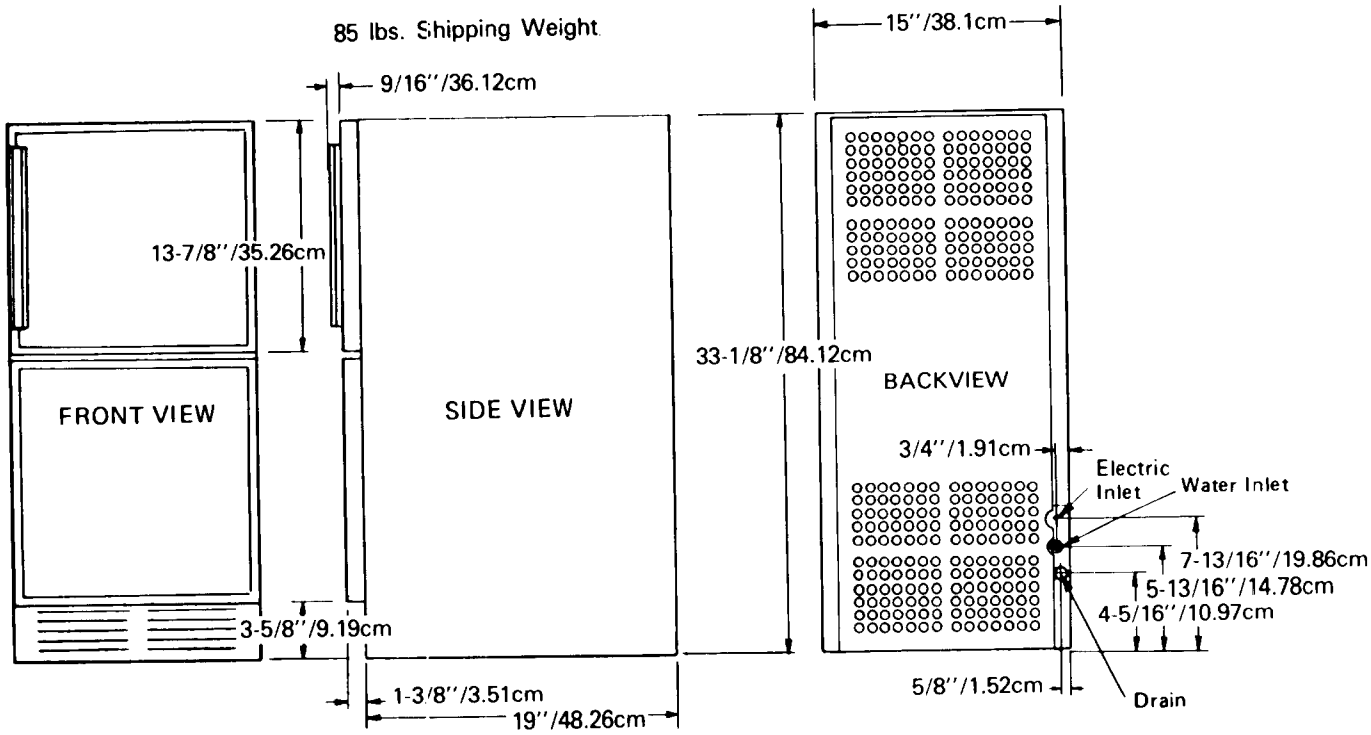

DIMENSIONAL DRAWING FOR BUILT-IN INSTALLATIONS

NOTE: AS SOME SERVICE PROCEDURES REQUIRE ACCESS TO THE ENTIRE UNIT, IT IS **IMPORTANT** TO ALLOW ENOUGH SPACE TO REMOVE THE MACHINE FROM THE INSTALLATION. PLEASE KEEP THIS IN MIND WHILE INSTALLING YOUR HOME ICE CUBE MACHINE.

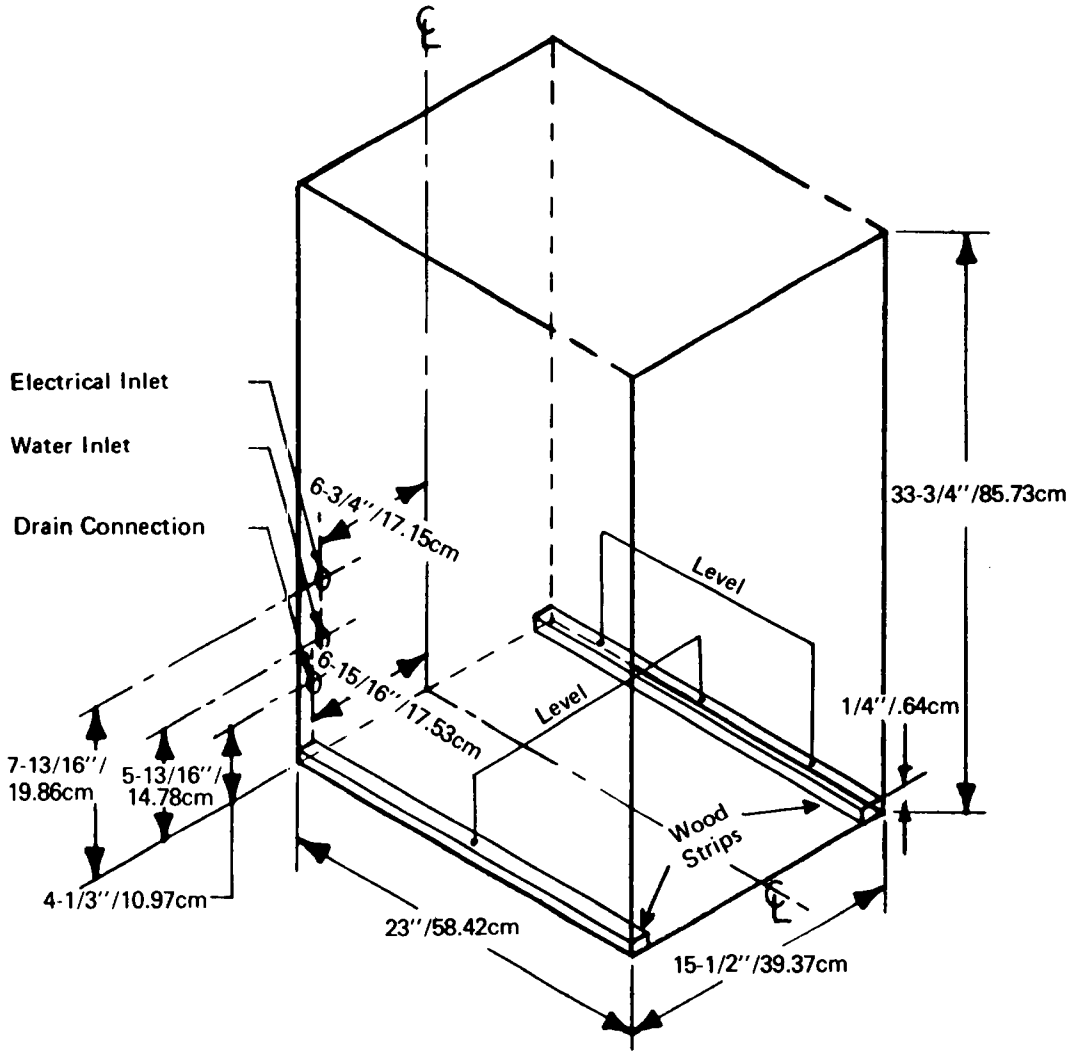

To recess the ice machine into a cabinet, provide an opening 33-3/4 inches high, 15-1/2 inches wide and 23 inches deep.

The above dimensions allow 4 inches at the back of the ice machine for electric cord, water line and drain line.

Requirements: For either recessed or freestanding installation.
Power: 115 volts, 60 cycle, single phase.
Water: 1/4 inch flare connector provided on the Ice Machine.

Drain: Installation of an adequate drain is necessary. See pages 9, 10 and 11 for complete instructions.

INSTALLATION INSTRUCTIONS

STEP ONE — LOCATION

Place the unit on a solid, level floor or base with access to electrical power, a water supply and a drain. Level, if necessary, as shown in the drawing for built-in installations. The bottom of the unit must be 1/4" above the floor or floor covering in front of the cabinet, wall, etc. Adequate space must be left at the sides and top of the opening for removal of the unit.

STEP TWO — ELECTRICAL POWER SUPPLY

The ice machine should be on a separate electrical circuit. It is suggested an electrician be contacted to insure this circuit has a **MAXIMUM FUSING OF 15 AMPS** and is properly grounded. Low voltage from overload circuits can cause premature failure of cuber electrical components. A solid ground wire from cuber frame or grounding screw to an "earth" ground should also be installed.

NOTE: FAILURE TO GROUND THE UNIT PROPERLY MAY RESULT IN AN ELECTRICAL SHOCK HAZARD WHICH COULD CAUSE SEVERE OR FATAL SHOCK INJURY.

STEP THREE — WATER SUPPLY

A 1/4 inch flare connector is provided at the front of the ice machine for the cold water supply. The supply line should not be smaller than 1/4 inch O.D. copper. A shut off valve conveniently located in the water line is recommended. The water supply line should be directed thru the opening in the back of the ice machine marked "Potable Water Inlet."

For under counter installation, allow approximately 19 inches of 1/4 inch water line and 12 inches of drain line (measured from the back of the ice maker) to direct thru the openings at the rear. Final connections are to be made after ice machine is in position.

NOTE: DO NOT USE A SELF-PIERCING TAP LINE VALVE. THIS TYPE OF VALVE DOES NOT PROVIDE SUFFICIENT WATER VOLUME OR PRESSURE FOR PROPER OPERATION AND THE SMALL OPENING PLUGS RAPIDLY WITH MINERAL DEPOSITS.

STRAINERS AND FILTERS

Scotsman recommends the installation of a Water Strainer, Part Number 16-0162-00, on all units. Use two fittings, Part Number 16-0621-03, to install strainer. Local water conditions may require the use of an adequate filter in the water supply line to prevent extensive damage caused by sediment build-up. Unit or component failure due to the lack of proper strainer of filter installation is not eligible for warranty coverage.

NOTE: EXCESSIVE NOISE DURING THE HARVEST CYCLE IS USUALLY CAUSED BY HIGH WATER PRESSURE. THIS SITUATION CAN BE CORRECTED BY THE INSTALLATION OF A WATER PRESSURE REGULATOR, PART NUMBER 11-0200-00. USE TWO FITTINGS, PART NUMBER 16-0621-03.

STEP FOUR — DRAIN INSTALLATION

Where a drain exists which is not higher than the opening in the back of the ice machine labeled "Condenser Drain", a gravity drain is adequate. At no time can the drain tube be raised higher than the cabinet hole. If the drain tube is run thru the floor behind the unit, provide a 7/8" hole at least 2-1/2 inches behind the back panel of the machine. This will prevent a kink from forming in the line. Proper drain installation requires the use of 5/8" OD copper tube or 5/8" I.D. flexible plastic tubing. It is important to insure that the plastic tubing does not kink. Allow 1/4" pitch per foot on drain lines over 4 feet long. DO NOT plump the drain line into the sewer in any air tight manner. It is extremely important to provide an air gap betwen the unit drain and any external drain. This prevents sewer gas from backing into the unit and also eliminates most air locks. An air lock or improper drain installation will cause water to back up into the bin and melt the ice stored there.

NOTE: IF A GRAVITY DRAIN IS NOT AVAILABLE, USE THE SPK18H CONDENSATE PUMP KIT. COMPLETE INSTRUCTIONS FOR THIS INSTALLATION ARE INCLUDED WITH THE KIT.

IMPORTANT NOTE

The Ice Machine is equipped with an air cooled condenser which is designed to "breath" through the front of the unit. Cool air is drawn into the right side of the kickplate and the warm air is exhausted through the left side. If the kickplate is blocked in any way or if the condenser is dirty, ice production will be drastically reduced. It is extremely important to clean the condenser regularly and insure adequate air space in front of the kickplate. Unit or component failures due to a dirty condenser or blocked kickplate are not eligible for warranty coverage.

START-UP PROCEDURE

WARNING: NEVER RUN THE UNIT WITHOUT THE WATER TURNED ON. THIS COULD DAMAGE THE MACHINE.

1. Turn on the cold water supply to the machine.
2. Turn on the electrical power.
3. Push the lever of the Off-On switch to your right. The machine will now automatically produce ice in about thirty minutes.

The normal storage bin capacity is 26 pounds of ice (about 700 cubes) or when the cubes touch the thermostat capillary tube on the right hand side of the bin. The bin is considered full when cubes are ten inches above the bottom of the bin. When the machine is initially installed, the unit will operate continuously for approximately 36 to 48 hours or until the ice storage bin has been filled. Once the storage bin has been filled, the unit will cycle on the bin control to maintain a full bin of ice.

DRAIN INSTALLATION

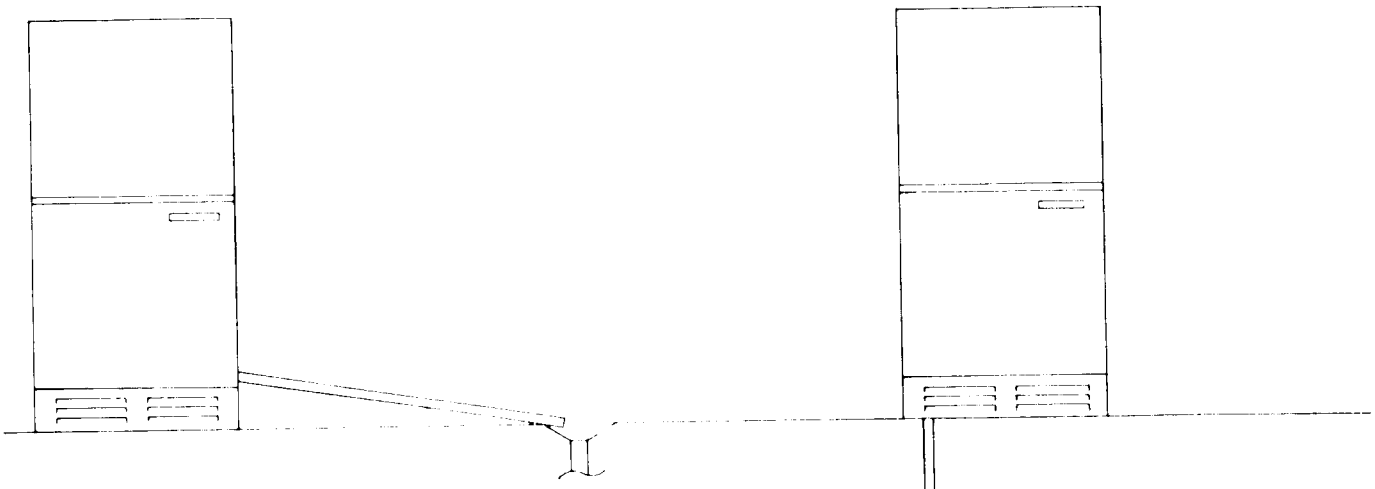

NOTE: THE INSTALLATION SHOWN BELOW IS ONLY ACCEPTABLE WHEN THE SPK-18H PUMP IS USED. THIS PUMP IS AVAILABLE FACTORY INSTALLLED OR AS A KIT FOR FIELD INSTALLATION.

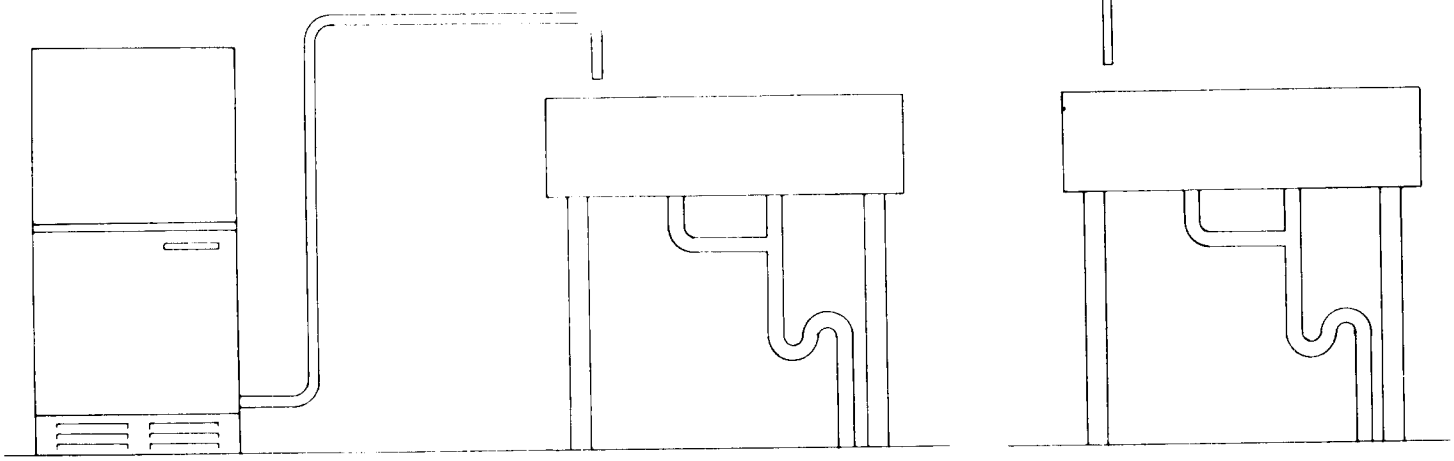

NOTE: SCOTSMAN DOES NOT SUGGEST THE INSTALLATION OF ANY DRAIN LINE RUN DIRECTLY OUTSIDE TO A LAWN, DRIVEWAY, FLOWER BED, ETC. CONNECT THE UNIT DRAIN TO AN EXISTING DRAIN LINE ACCORDING TO THE DRAIN INSTALLATION INSTRUCTIONS.

INSTALLATION INSTRUCTIONS

(With Drain Water Pump)

The Model SM18PA-1 or DC30PA Home Ice Maker is equiped with a condensate pump. THIS MAKES YOUR ICE MAKER ADAPTABLE TO INSTALLATIONS WHERE A GRAVITY DRAIN IS NOT AVAILABLE. Follow the instructions listed below carefully to insure proper operation.

1. Run the 3/8" I.D. flexible plastic tubing from the rear of the machine to your drain location.

2. Check chart below for max. length of drain line and lift.

3. Start the machine according to the instructions in the Service Manual.

4. The pump is equipped with a safety switch which will stop the ice-maker if the pump malfunctions and the reservoir is not pumped out. This safety switch is connected to the control box by the yellow cord.

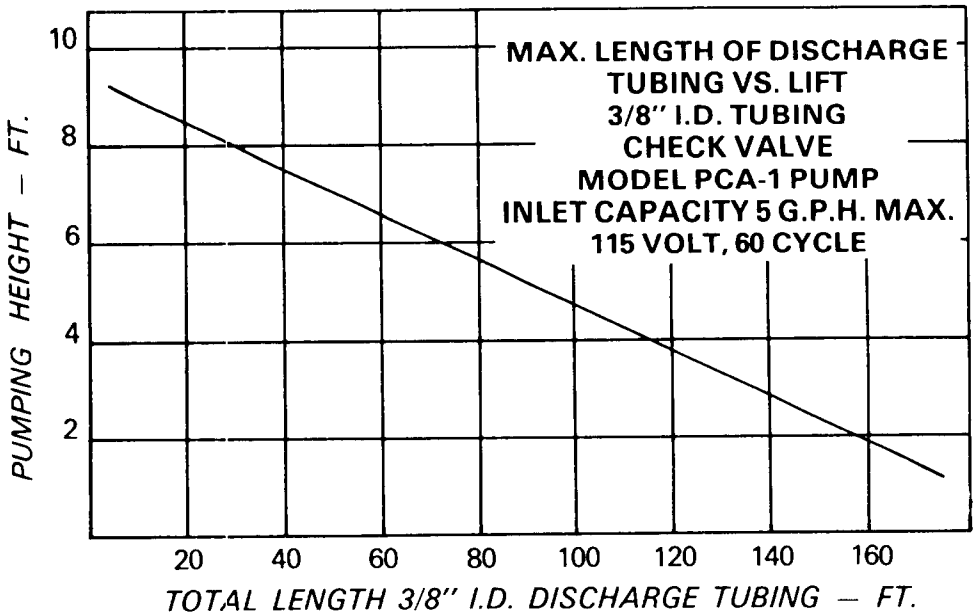

HOW TO USE THE CHART

The chart provides a simple ratio between the amount of vertical lift (head) in your installation compared to the maximum length of discharge tubing (run) needed. Figures derived assume an inlet capacity of five gallons per hour maximum. It is also assumed that 3/8" I.D. Flexible plastic tubing will be used.

NOTE: A relatively short pumping cycle is normal for a unit of this type. This in no way denotes a defective unit nor is short cycling harmful to the unit as long as the check valve is functional.

WARNING: DO NOT REMOVE FLUTED PLASTIC FITTING AND/OR CHECK VALVE FROM THE PUMP. REMOVAL OF EITHER WILL AUTOMATICALLY VOID THE WARRANTEE.

It can easily be seen, then, that, with a head (vertical rise) of 6', (for example) the maximum total length of discharge tubing to be used on the "run" (vertical plus horizontal) would be slightly less than 70'.

DRAINWATER PUMP INSTALLATION INSTRUCTIONS

1. Secure pump to utility bracket located in left rear corner of machine.
2. Leave original black drain tube (1-1/2" long) as is connected to brass bin drain tube.
3. Rotate original 5/8" x 5/8" plastic elbow so it points towards left rear corner of machine.
4. Leave original black drain tube (4" long) as is connected to original 5/8" x 5/8" plastic elbow.
5. Remove original 5/8" x 5/8" x 5/8" plastic tee and rotate into position shown.
6. Use original black drain tube (2" long) from end of original drain assembly and place on plastic tee and insert into pump.
7. Reconnect reservoir overflow tube to unused leg of plastic tee.
8. Attach 3/8" I.D. tygon tubing (144" long) supplied with pump kit to pump outlet port and route tubing through hole in rear of machine.

AUXILIARY SAFETY SWITCH WIRING INSTRUCTIONS

1. Disconnect electrical supply.
2. Remove Black (BLK) wire connecting on-off toggle switch to bin temperature control.
3. Connect leads from safety switch (yellow cord) to the terminals of the toggle switch and temperature control from which black wire was removed. Inspect terminals to insure proper spacing between terminals and also between terminals and control box. Adjust if necessary.

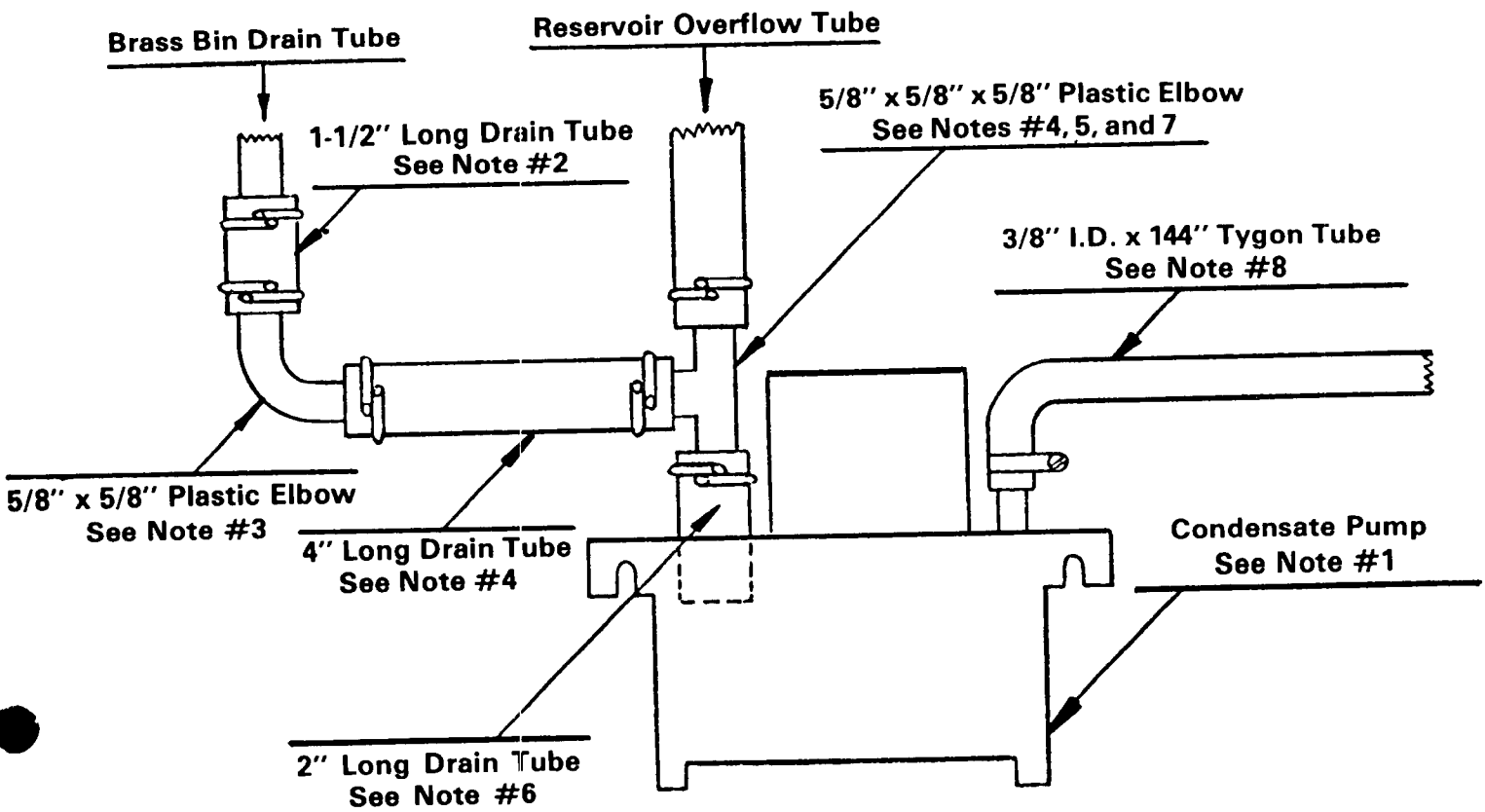

CLEANING AND CARE

Cabinet Exterior:

Clean with warm water and soap. Waxing is not required but is permissible on metal parts. Do not apply wax on the rubber gasket around the door opening or on plastic parts.

Machine Compartment:

IT IS VERY IMPORTANT TO CLEAN THE CONDENSER REGULARLY. A DIRTY OR BLOCKED CONDENSER WILL DRASTICALLY REDUCE ICE PRODUCTION.

Do not attempt to clean this area unless the off-on switch is turned off — lever pushed to the left. Use a vacuum cleaner to remove dust from the front of the condenser. DO NOT REMOVE THE COVER ON THE CONTROL BOX UNLESS THE POWER SUPPLY IS DISCONNECTED. **NOTE:** Failure to disconnect the electrical power prior to removing the control box cover may result in severe or fatal shock injury.

Storage Bin:

Use only warm water and soap. The chemicals in some cleaning agents will damage plastic.

Freezing Unit and Water System:

All water contains some minerals and impurities, scale, iron, etc. Cleaning schedule should be timed accordingly. The following procedure should be used to clean the interiors of the freezer, tanks and water lines.

1. Remove all cubes from the storage bin.

2. With the unit operating and the water spraying from the jets behind the plastic curtain (freezing cycle), slowly pour three (3) ounces of Scotsman Ice Machine Cleaner into the trough or reservoir below the jets.

3. Let the machine operate in the normal manner for one hour, then wait for a harvest cycle (when cubes fall out of the freezer and into the storage bin.)

At this time turn the machine off.

4. Pour a gallon of warm water over the cubes that have been made during the cleaning cycle. This will melt the cubes and clean the drain.

5. Dispose of any surplus cubes that are left in the storage bin.

6. Use a gallon or more of clean, cold water and flush out the interior surfaces of the freezer and storage bin.

7. Wipe all interior surfaces and turn machine on for normal operation.

8. Scotsman Ice Machine Cleaner is a mild food grade acid. Ordinary care in its use is adequate. All cubes made with this solution should be discarded as they have an acidulent taste.

CAUTION: Contains phosphoric and Hydroxyacetic acids. These compounds are corrosive and may cause burns. If swallowed DO NOT induce vomiting. Give large amounts of water or milk. Call physician immediately. In case of external contact, flush with water. Keep out of reach of children.

BIN INSERT ASS'Y

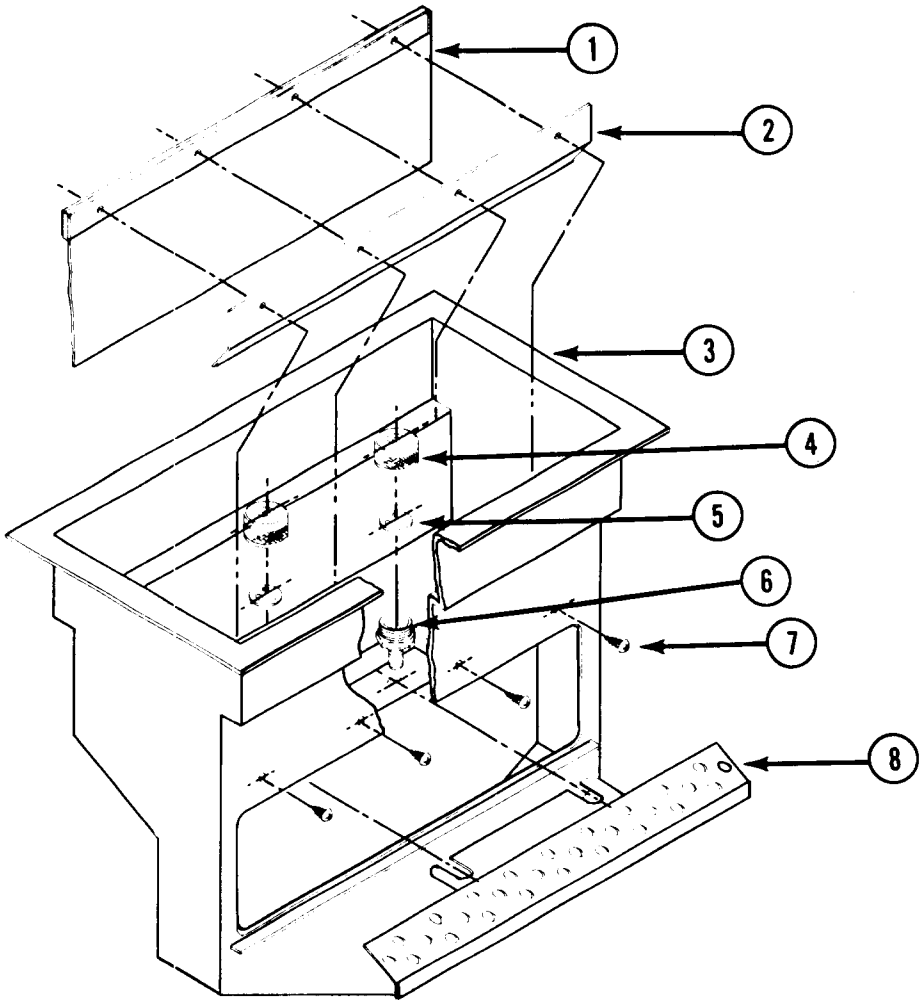

ITEM NO.	PART NO.	DESCRIPTION
1.	02-2053-01	Curtain
2.	A24155-001	Curtain Stiffner
3.	02-1923-00	Bin Insert
4.	02-1841-00	Jet Top
5.	A09543-000	Spinner
6.	02-1840-00	Spray Jet
7.	03-1404-16	Screws
8.	A22518-000	Cube Chute

WARNING: When removing jet top (4), be careful not to drop the small spinner (5). If dropped into the sump, the spinner may damage the water pump.

NOTE: The unit will not make ice properly if the spinners are not in place.

A-22536-21 WATER PUMP COMPLETE

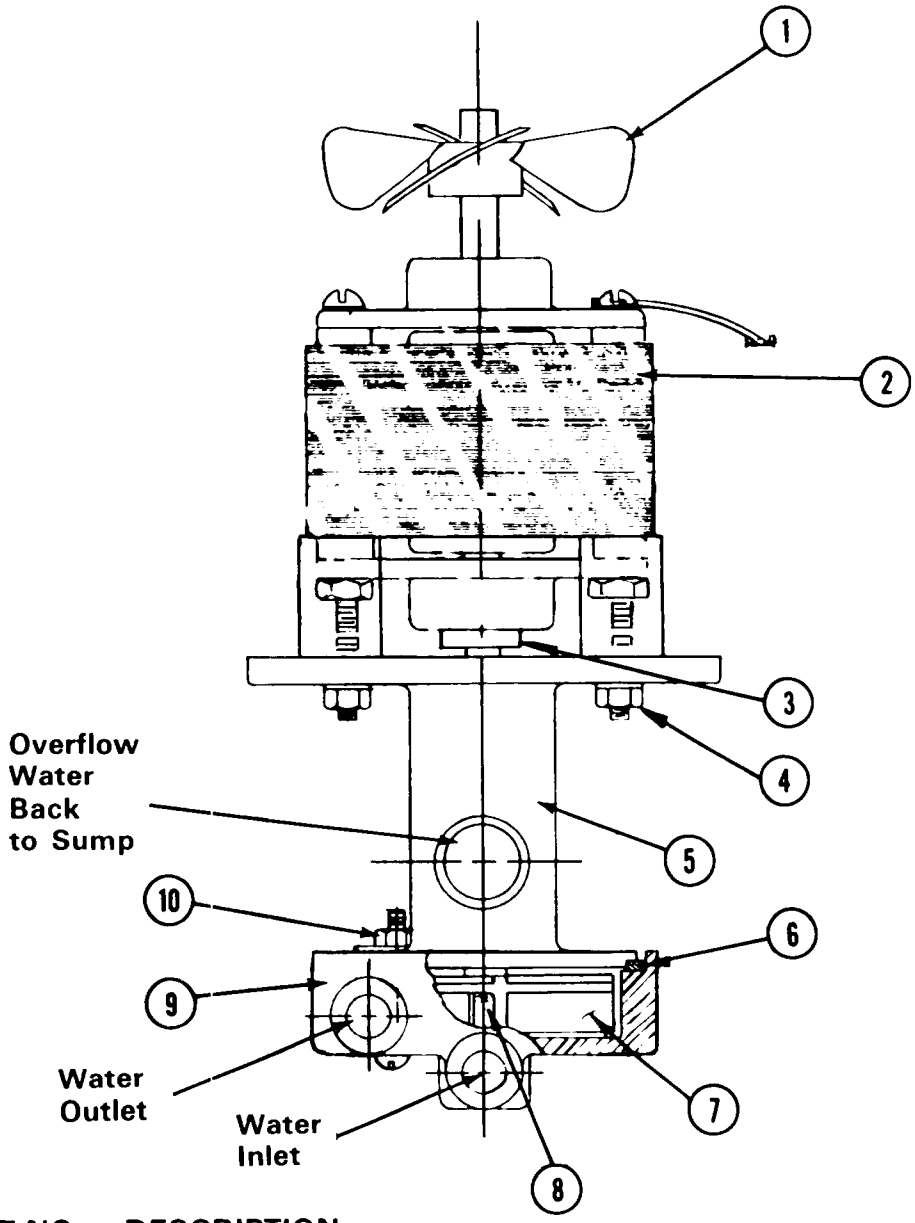

ITEM NO.	PART NO.	DESCRIPTION
1.	02-1719-00	Fan Blade
2.	12-1714-01	Motor
3.	13-0690-00	Rubber Washer
4.	03-1417-14	Lockwasher
	03-1406-02	Nut
5.	02-1711-00	Water Pump Body
6.	13-0617-07	O-Ring
7.	02-1712-00	Impeller
8.	03-1417-14	Lockwasher
	03-1403-05	Screw
9.	02-1710-00	Pump Base
10.	03-1403-60	Screw
	03-1408-23	Washer
	03-1406-02	Nut

ITEM NO.	PART NO.	DESCRIPTION
*11.	13-0687-00	Gasket, Water Pump (Installed Between Pump & Bin)
*12.	13-0688-01	Water Tube, order Feet Required
*13.	13-0688-01	Water Tube, order Feet Required
*14.	13-0688-02	Water Tube, order Feet Required

*Not Shown

CABINET PARTS

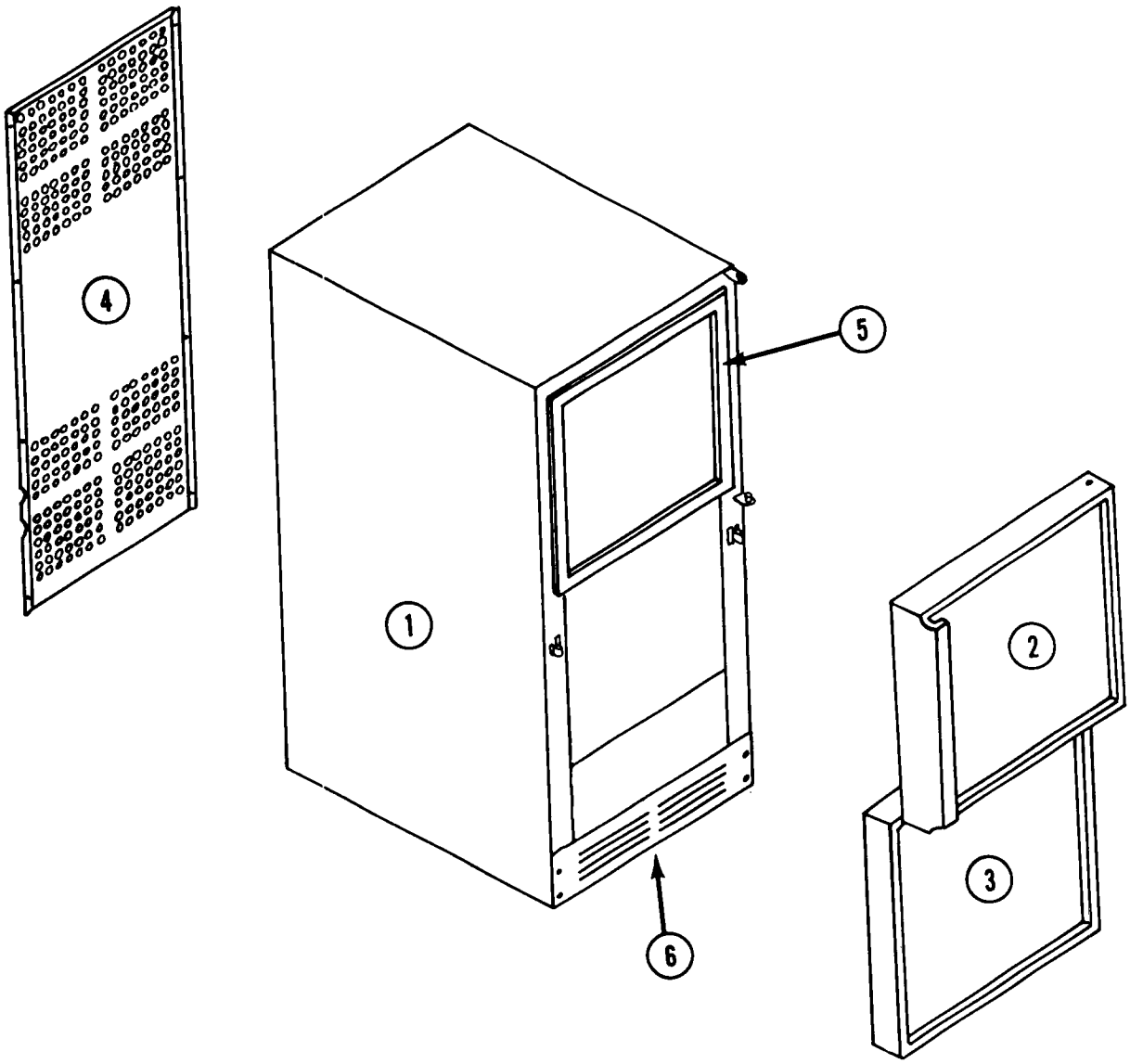

ITEM NO.	PART NO.	DESCRIPTION
1.	A18592-022	Cabinet Assembly (White)
	A18592-020	Cabinet Assembly (Sandal Wood)
2.	A24289-001	Access Door Complete
3.	A23586-001	Front Service Door
4.	A18595-000	Rear Service Panel
5.	13-0634-00	Gasket (magnetic)
6.	02-2243-01	Kick Plate

CONTROL BOX ASSEMBLY
(115/60/1)

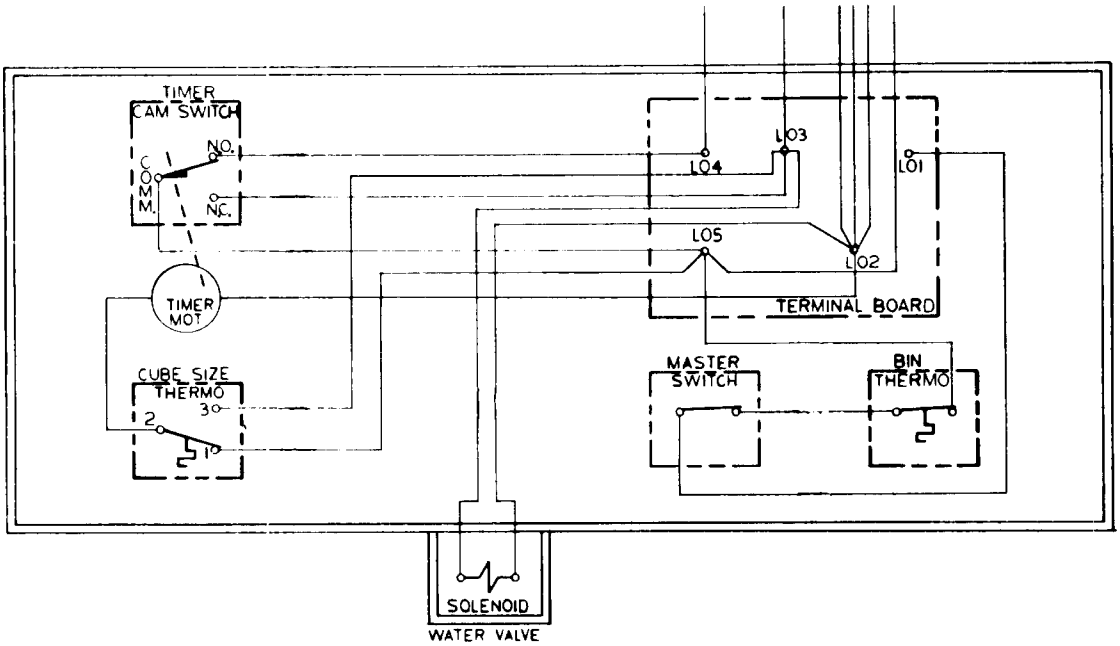

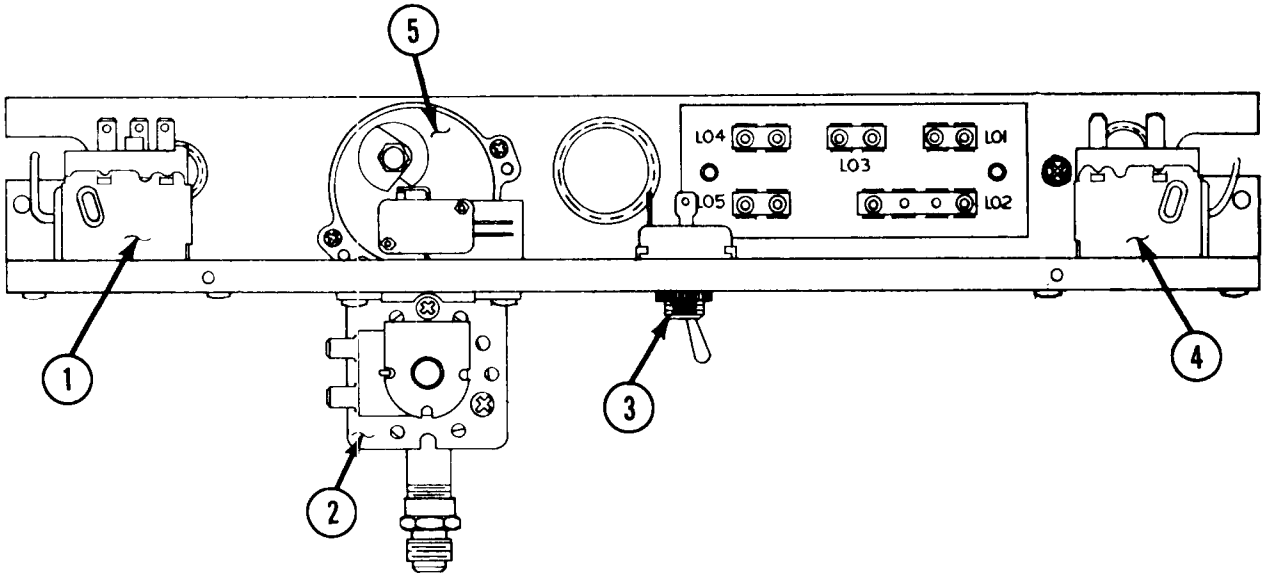

ITEM NO.	PART NO.	DESCRIPTION
1.	11-0395-01	Cube Size Control
2.	12-1646-02	Water Solenoid
	16-0672-01	Nylon Valve Fitting
3.	12-0426-01	Master Switch
4.	11-0366-00	Bin Thermostat
5.	12-1980-01	Timer

INTERNAL COMPONENTS

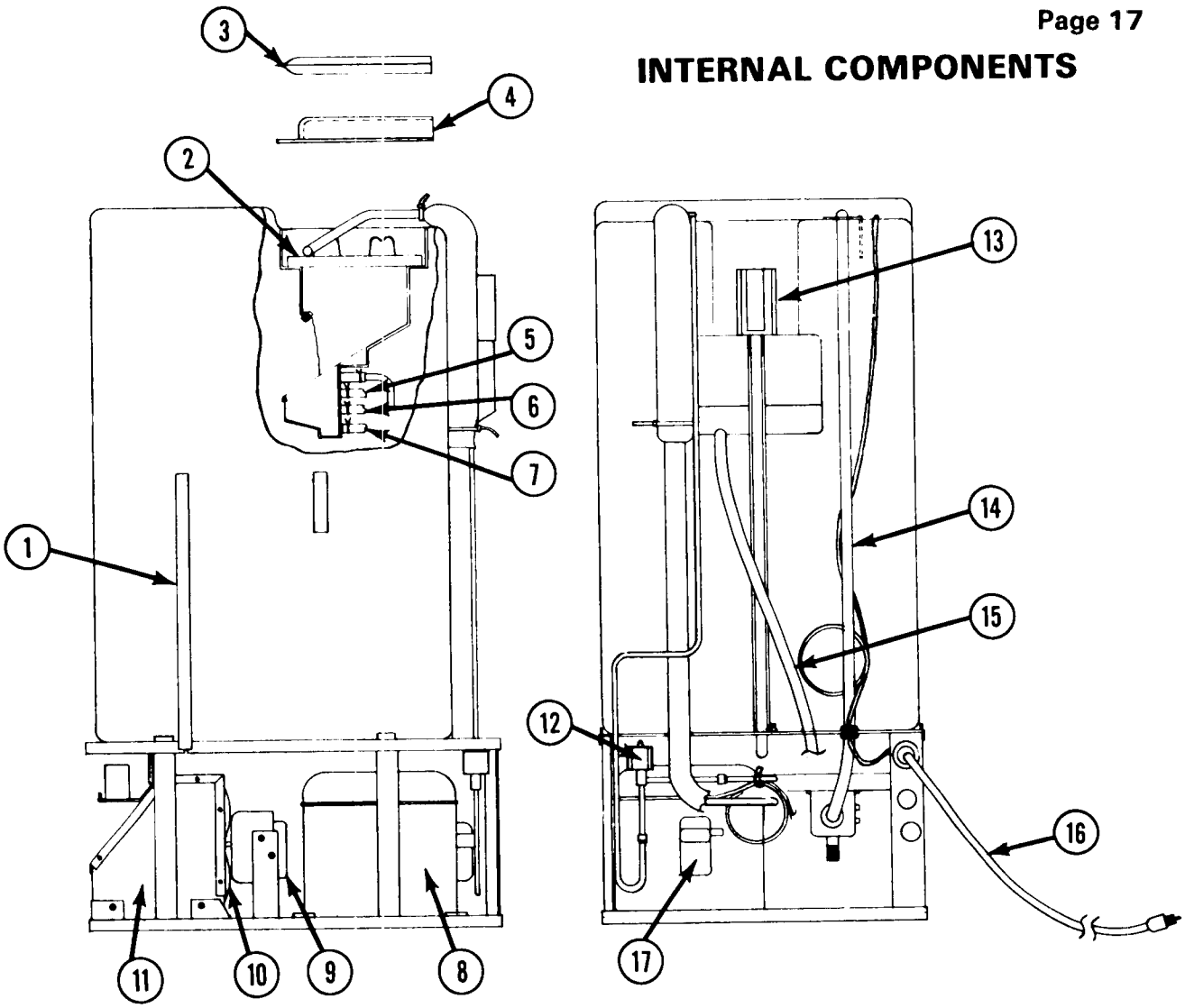

ITEM NO.	PART NO.	DESCRIPTION
1.	02-1634-01	Storage Bin
2.	A26115-020	Evaporator
	A26127-020	Evaporator Assembly Complete (Includes evaporator, cap. tube and suction line).
3.	A19588-000	Insulation
4.	02-2274-01	Cover
5.	13-0688-02	Water Tube (Order Number of Feet Required)
6.	13-0688-01	Water Tube (Order Number of Feet Required)
7.	13-0688-01	Water Tube (Order Number of Feet Required)
8.	18-2150-01	Compressor
9.	12-2015-01	Fan Motor
10.	18-3710-01	Fan Blade
11.	18-3708-01	Condenser
12.	12-2008-01	Hot Gas Valve Coil
	12-2009-01	Hot Gas Valve Clamp
	12-2010-01	Hot Gas Valve Body
13.	A22536-021	Water Pump
14.	13-0674-01	Tubing (order number of feet required)
15.	13-0674-04	Tubing (order number of feet required)
16.	12-1638-07	Electrical Cord
17.	18-2150-21	Starting Device
	18-2150-24	Cover
	02-1918-00	Drier (Not Shown)

WIRING DIAGRAM
(SM18A AND DC30A)
(115/60/1)

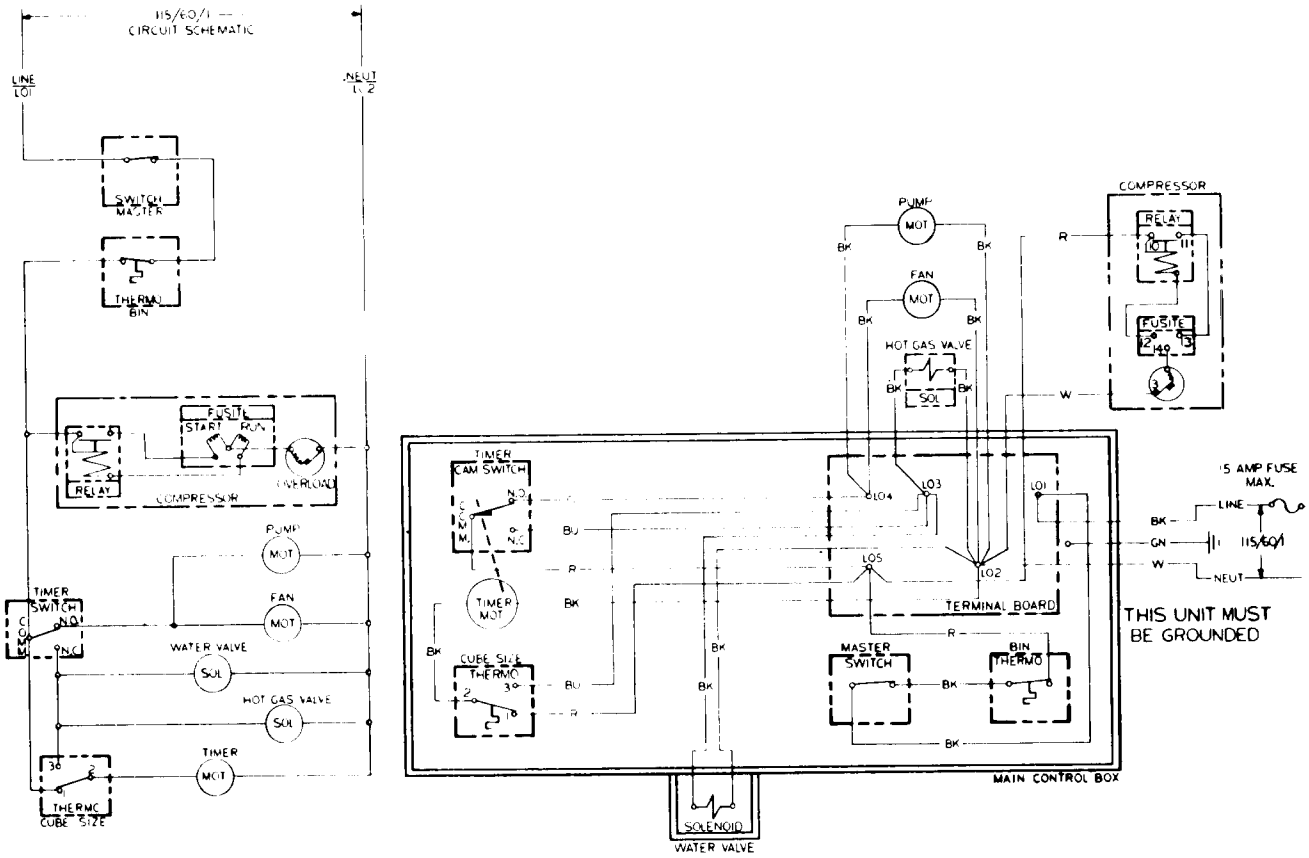

ALL CONTROLS SHOWN IN TIMED PORTION OF FREEZING CYCLE

A26304-001

WIRING DIAGRAM FOR DRAINWATER PUMP MODEL (SM18PA AND DC30PA) (115/60/1)

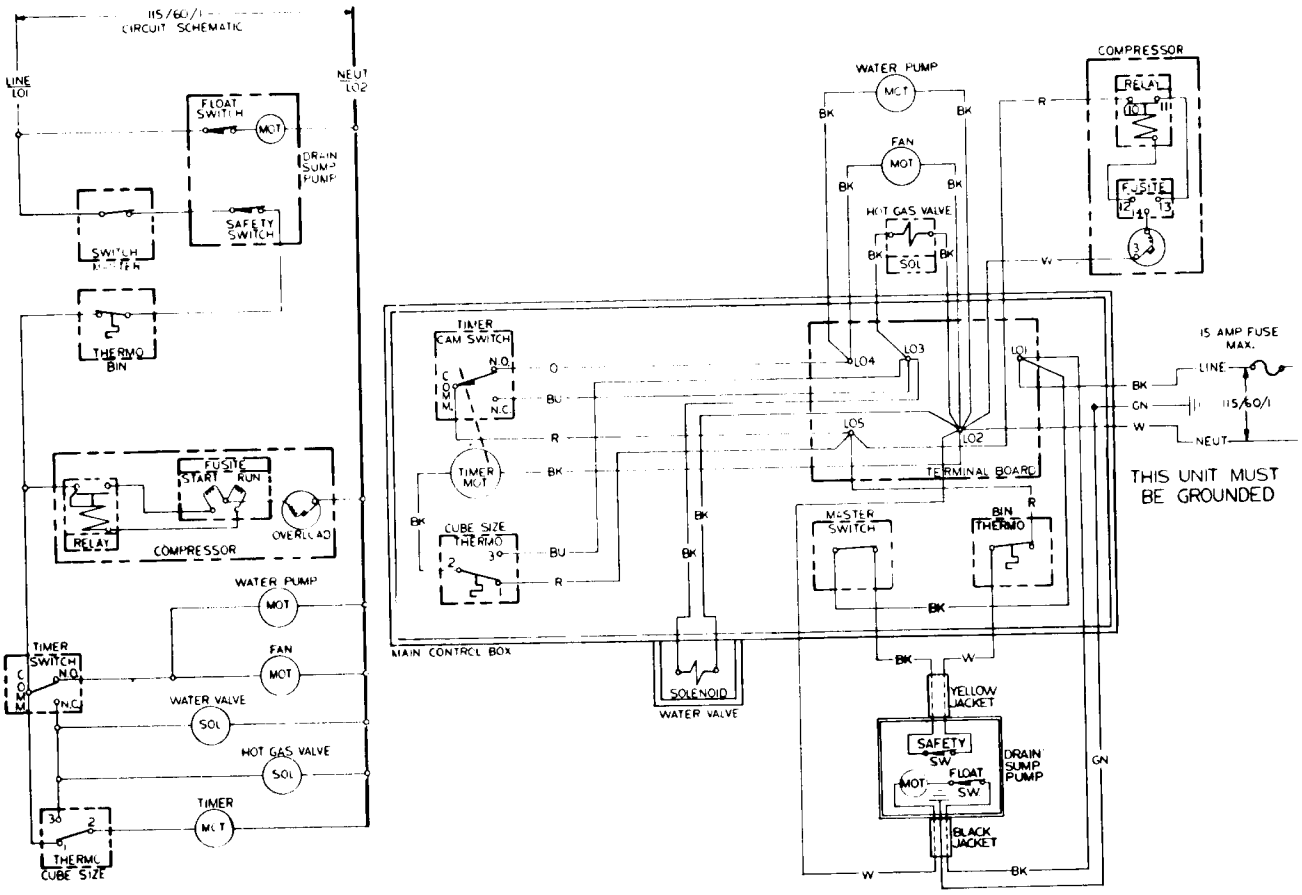

ALL CONTROLS SHOWN IN TIMED PORTION OF FREEZING CYCLE

A26304-091

MAINTENANCE INSTRUCTIONS

WARNING: DISCONNECT ELECTRICAL AND WATER SUPPLY BEFORE SERVICING MACHINE. FAILURE TO DISCONNECT ELECTRICAL POWER MAY RESULT IN SEVERE OR FATAL SHOCK INJURY.

Cabinet Removal.

1. Remove lower door by pulling forward at both top corners.

2. Remove upper door by taking out the hinge screw at the top right hand corner and lifting up and forward.

3. Remove 8 screws (2 on each side) from under the door gasket. It is not necessary to remove the gasket from the cabinet.

4. Remove the 4 screws in the kickplate.

5. Remove the 9 screws in the back panel. Also remove the 4 screws in the brace behind the water pump.

6. Remove the 6 screws (3 on each side) from the lower edge of the cabinet.

7. Remove the cabinet by lifting straight up.

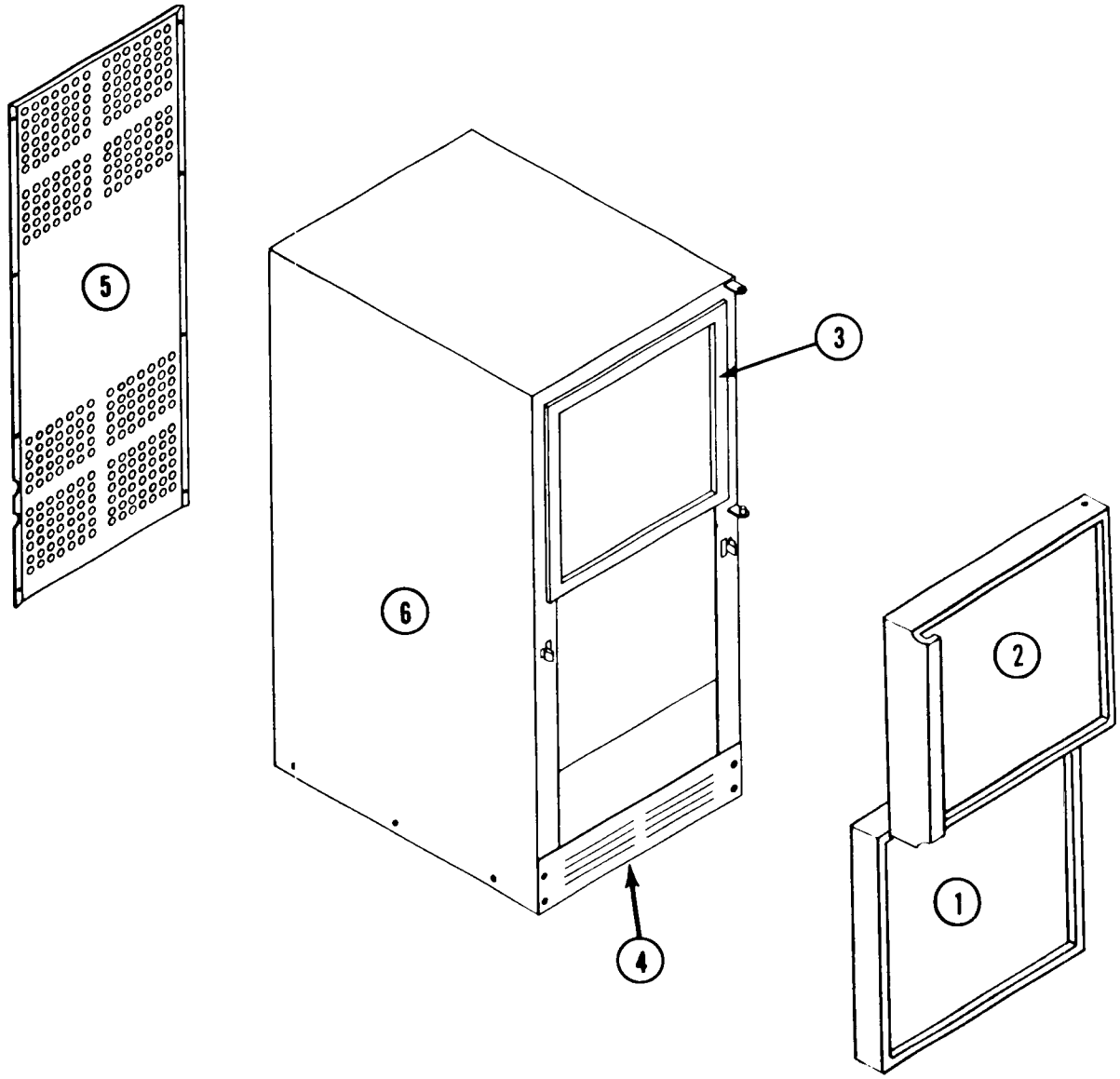

TIMER MOTOR REPLACEMENT

WARNING: DISCONNECT THE ELECTRICAL SUPPLY BEFORE SERVICING MACHINE. FAILURE TO DISCONNECT ELECTRICAL POWER PAY RESULT IN SEVERE OR FATAL SHOCK INJURY.

1. Remove lower service panel.

2. Push the toggle switch to the "OFF" position.

3. Remove the control box cover.

4. Remove mounting screws from timer.

5. Remove the electrical connections from the malfunctioning timer and replace them on the new part.

6. Mount the new timer motor in the control box.

7. Check the timer motor for proper operation.

NOTE: THE TIMER MOTOR **WILL NOT** RUN UNTIL THE CUBE SIZE CONTROL, PART NUMBER 11-0395-01, SUPPLIES POWER TO IT DURING THE LATTER PART OF THE FREEZING CYCLE. (SEE SERVICEMAN'S INFORMATION).

BIN THERMOSTAT REPLACEMENT

WARNING: DISCONNECT THE ELECTRICAL POWER BEFORE SERVICING MACHINE. FAILURE TO DISCONNECT ELECTRICAL POWER MAY RESULT IN SEVERE OR FATAL SHOCK INJURY.

1. Follow steps 1 thru 7 for cabinet removal.

2. Remove the two pieces of tape-on insulation from the capillary tube on the right hand side of the bin.

3. Push the end of the capillary tube through the hole into the bin.

4. Pull the tube out of the bin through the forward hole.

5. Remove the mounting screw holding the thermostat to the control box.

6. Remove the spade connections and replace them on the new control.

7. Remount the new thermostat in the control box and position the capillary tube.

8. Re-assemble the machine and check the operation of the thermostat by placing an ice cube against the capillary tube. Holding ice against the capillary tube will shut the unit off. Warming the capillary tube with your hand will turn the unit back on.

NOTE: The capillary tube should run parallel and 1/4" away from the bin wall for proper operation.

IMPORTANT: The bin thermostat is not eligible for warranty replacement if the capillary tube has been cut.

WATER PUMP REPLACEMENT

WARNING: DISCONNECT ELECTRICAL SUPPLY BEFORE SERVICING MACHINE. FAILURE TO DISCONNECT ELECTRICAL POWER MAY RESULT IN SEVERE OR FATAL SHOCK INJURY.

1. Follow steps 1 thru 7 for Cabinet Removal.

2. Remove 3 hose clamps and hoses from behind bin insert.

3. Remove the 2 screws which hold the water pump in place.

4. Lift out.

4. Cut the wire leads as close to the pump body as possible. Lift out the pump.

5. To install the replacement pump, follow previous steps in reverse. WARNING: Do not kink the three water tubes. Any obstruction will cause rapid failure of motor.

6. Cut replacement wires approximately 6 inches from motor and use wire nuts to reconnect.

ADJUSTING CUBE SIZE CONTROL

1. TO INCREASE CUBE SIZE, turn the adjustment knob clockwise. This will set the control to activate the timer at a colder evaporator temperature which will lengthen the freezing cycle and produce a larger cube.

2. TO DECREASE CUBE SIZE, turn the adjustment knob counter-clockwise. This will set the control to activate the timer at a warmer evaporator temperature which will shorten the freezing cycle and produce a smaller cube.

3. The adjustment knob should be turned a few degrees in the desired direction and the results check on the next batch of ice.

INLET WATER SOLENOID REPLACEMENT

WARNING: DISCONNECT ELECTRICAL AND WATER SUPPLY BEFORE SERVICING MACHINE. FAILURE TO DISCONNECT ELECTRICAL POWER MAY RESULT IN A SEVERE OR FATAL SHOCK INJURY.

1. Disconnect the electrical leads by removing the plug from the solenoid.

2. Remove the water inlet line and water tubing from the valve.

3. Remove mounting screws and solenoid from unit.

4. Reverse the previous steps to replace the valve.

INSTRUCTIONS FOR CHANGING DECORATOR PANELS

1. Door must be removed from machine prior to disassembly.

2. To simplify reassembly and protect door from damage, place tape around back side of door as indicated by drawing. Do not remove tape until door has been reassembled and is ready to be reinstalled on the machine.

3. Remove two screws from back of panel "A". Do not remove two lower screws E. Lower panels do not have screw E.

4. Lift handle from door applying even pressure on both sides exercising care so that handle is removed perpendicular to sides "B". DO NOT FOLD SIDES OF DOOR DOWN. DO NOT DISASSEMBLE DOOR PAST THIS POINT.

5. Set handle aside being careful not to misplace corner gussets "C".

6. Insert 1/4" thick decorator panel into channel in front of door "D". Panel size: Upper panel 13-7/16 x 14-5/8. Lower panel 14-5/8 x 14-5/8. Note the vinyl wood grain panel can be replaced with stainless steel or other metal panel by simply sliding the original panel out and replacing with new panel. In the case of the lower service door, the rubber like sealant must be removed from panel.

7. Reassemble door in reverse manner removing tape AFTER two screws "A" have been replaced.

8. Re-install door on machine.

NOTE: Lower door is disassembled in same manner.

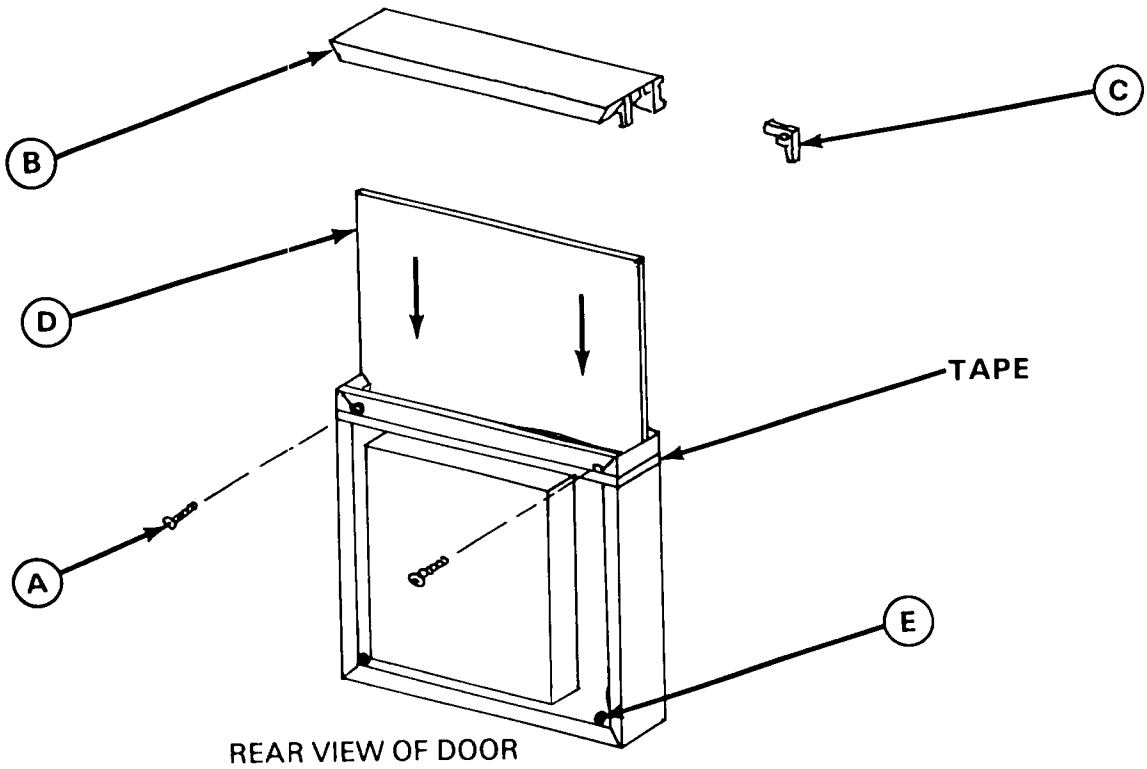

REAR VIEW OF DOOR

SERVICEMAN'S INFORMATION

The DC30A and SM18A are AIR-COOLED. They are designed to operate in a wide range of ambient conditions through the combined reactions of the CUBE SIZE CONTROL and TIMER. This is explained below.

1. The CUBE SIZE CONTROL senses evaporator temperature. At the start of a freezing cycle, the evaporator is warm and the CUBE SIZE CONTROL is open so power IS NOT supplied to the TIMER MOTOR. This means that the unit is making ice but the TIMER MOTOR IS NOT running.

2. During the latter part of the freezing cycle, the CUBE SIZE CONTROL senses the desired temperature, and closes the circuit to the TIMER MOTOR.

3. Once the TIMER MOTOR is energized, it will complete the ice making cycle and initiate the harvest or defrost cycle according to the position of the cam.

4. The cubes are harvested or defrosted by re-directing the flow of the hot refrigerant gas through the evaporator. The warm evaporator ejects the cubes and resets the CUBE SIZE CONTROL in proper position to start the next ice making cycle.

5. When the TIMER MOTOR rotates to the end of the defrost or harvest cycle, the CUBE SIZE CONTROL takes over the electrical circuit and power is cut to the TIMER MOTOR. The TIMER MOTOR IS NOW DE-ACTIVATED AND DOES NOT run until the CUBE SIZE CONTROL again activates it during the latter part of the freezing cycle.

6. See ADJUSTING CUBE SIZE CONTROL for complete instructions.

SERVICE ANALYSIS

SYMPTOM	POSSIBLE CAUSE	CORRECTION
Machine does not make ice.	Fuse in Power Line Blown	Check fuses in the house fuse box. Other loads on the same line may have caused fuse to blow. Use a 15 amp circuit and fuse.
	On-Off Switch in Off Position	The lever of the switch should be pushed to your left for "on" position.
	Water Supply Turned Off	Slightly loosen water connection in the front of the machine. If no water is present the water supply has been turned off.
	Timer does not run.	Check cam for rotation of clock.
	Wiring broken or connection off	Check electrical circuitry.
	Compressor does not run	Any of the following may be the cause. Starting relay, overload, or defective compressor.
	Water pump not operating	Clean or replace pump.
	Bin thermostat not operating correctly	Check thermostat by warming with hand and cooling with ice cube. Replace if necessary.
Low ice capacity.	High Room or Water Temperature	Provide ventilation to the unit. Decrease temperature as much as possible. If water supply pipe to the machine is very warm have plumber check installation.
	Unit connected to hot water line	Connect to cold water line.
	High head pressure	Dirty condenser. Clean.
	Leaky water valves	Clean, repair or replace valves.
Cubes too large.	Timer too slow or stops	Replace timer motor.
	Cube Size control set improperly	Check and adjust for proper operation.
	Timer switch defective	Replace switch.
	Cam on timer loose	Tighten cam locking nut.

SERVICE ANALYSIS

SYMPTOM	POSSIBLE CAUSE	CORRECTION
Machine noisy during harvest cycle.	Excessive incoming water pressure	Install pressure regulator in incoming water line. Set water pressure at 25 pounds.
Cubes cloudy.	Spray Jets Dirty	Clean (see page 12).
	Shortage of Water	Check water supply for partially closed valves or supply line, low water pressure, (See instructions under "Cuber Runs Short of Water") or plastic curtain not hanging properly.
	Machine not level	Level.
	Dirty water supply	Connect water supply to water softener and/or filter.
	Accumulation of dirt in water system	Clean with Scotsman Ice Machine Cleaner.
Cubes too small.	Restricted Capillary Tube	Purge and recharge. If necessary replace capillary tube.
	Moisture and air in system	Purge - recharge - replace drier. Use 2-831 drier.
	Shortage of water	Check water supply (See if Cuber runs out of water).
	Shortage of refrigerant	Charge unit properly. (See serial number plate for correct charge).
	Cube size control set improperly	Check and adjust for proper operation.
Cuber runs short of water.	Water sprays out curtains	Clean spray jets. Be sure plastic curtain hangs properly.
	Water valves leaking	Check and repair valves if necessary.
	Water leaking from pump hoses	Check clamp and hoses. Replace if necessary.
Compressor cycles intermittently.	Low voltage	Minimum voltage to be 10% less than normal rating.
	Air in the system	Purge and recharge.

SERVICE ANALYSIS

SYMPTOM	POSSIBLE CAUSE	CORRECTION
Cubes pile up in freezer.	Curtain or cube chute out of place or improperly installed.	Check position of curtain and chute. Correct or replace.
Poor harvest cycle.	Too short defrost time	Check timer - replace if necessary. Adjust timer switch.
	Restriction of incoming water	Clean water lines.
	Water valve sticking, not opening, or out of adjustment.	Clean, replace or adjust valve.
	Air vent holes in ice cups plugged	Clean small holes in top of the cups. See page 12 on cleaning.
Excessive bin meltage.	Drain line plugged	Clear line of obstruction.
	Drain not installed properly. Line does not have proper gravity flow so water backs up into bin.	See instructions for proper installation procedure.

ACCESSORY PARTS AVAILABLE

NOTE: TWO 1/4" PIPE THREAD X 1/4" COMPRESSION FITTINGS ARE REQUIRED FOR INSTALLATION. P/N 16-0621-03.

Water Pressure Regulator Part No. 11-0200-00.

Installation of a pressure regulator in the incoming water line will minimize any objectional or excessive noise emitted during the harvest cycle. This valve comes preset from the factory at 25 lbs.

Water Strainer Part No. 16-0162-00.
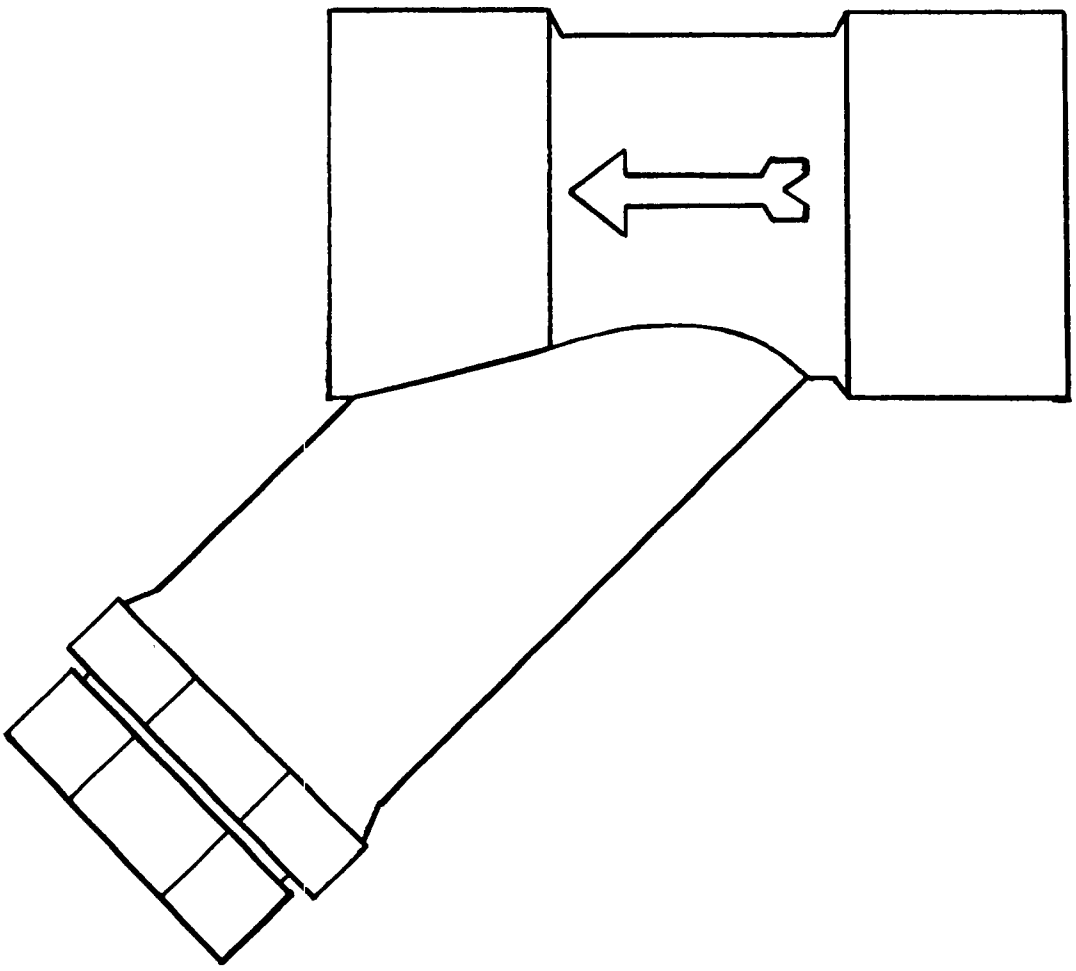
Installation of a water strainer in an easily accessible area will greatly simplify service if a machine is installed on a water supply system that may have sand or sediment in the water. The machine comes equipped with a strainer screen in the water solenoid valve which is adequate for the majority of installations, however, if sand or sediment could be a problem, installation of this water strainer from a service standpoint is highly recommended. The diagram below shows the direction of water flow. The cleaning plug must be in a downward position slanting up into the incoming water. Notice the arrow stamped on each strainer to show correct flow direction.