Scotsman®
Ice Systems

Installation and User's Manual for Modular Flake and Nugget Ice Machines

Prodigy Plus A Series Models with R290

NH0422X, NS0422X, FS0522X, NH0622X, NS0622X, FS0822X,

NH0922X, NS0922X, FS1222X, NH1322X, NS1322X, FS1522X

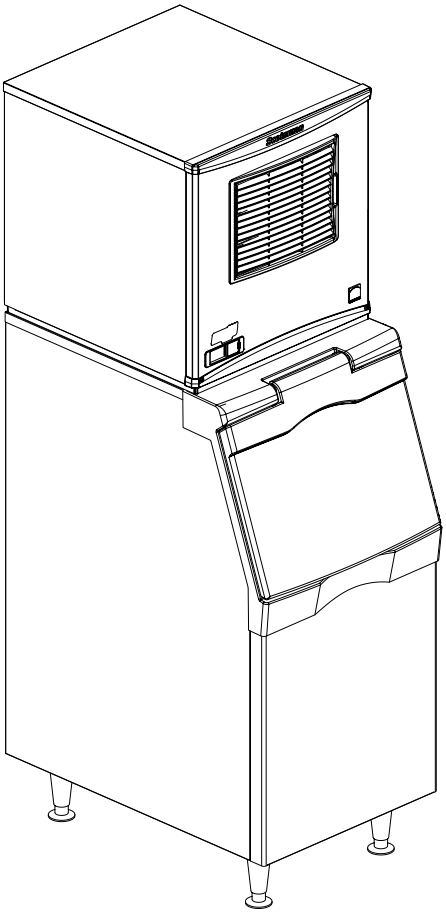

Air Cooled and Water Cooled

Safety Information

Important Safety Information. Make sure to read through fully to avoid severe injury or death.

WARNING

R290 Refrigerant is Flammable.
Flame can cause burns or property damage
Keep away from sources of fire

This ice machine contains **FLAMMABLE** refrigerant and improper use can result in fire or explosion. Do not use cigarettes, vapes, or cellphones near pipes or cables, as it can be a source of ignition or spark.

This ice machine must not be installed next to equipment with an open ignition source (ie. open flames, an operating gas appliance, or electric heater). Do not store explosive substances such as aerosol cans with a flammable propellant in this appliance.

WARNING: Do not use electrical appliances inside the food/ice storage compartments unless they are of the type recommended by the manufacturer.

WARNING: In order to reduce flammability hazards the installation of this appliance must only be carried out by a suitably qualified person.

This appliance must be installed according to the safety standard for refrigeration systems presented in ANSI/ASHRAE 15.

Do not install next to anything that continuously vibrates, avoiding excessive vibrations or pulsations.

Install in a well ventilated environment and ensure ventilation and outlets are not obstructed.

Properly secure electrical wiring and cabling for the machine to minimize wear, vibrations, corrosion, excessive pressure, sharp edges, or other adverse environmental effects that could cause damage to wiring over time.

Keep fire extinguisher nearby in case of emergencies.

WARNING: Do not damage the refrigerating circuit

Use a Scotsman recommended technician certified to repair R290 equipment.

Install ONLY Scotsman factory service parts. Use of non-OEM parts can be dangerous due to the design changes needed to safely use R290 refrigerant.

WARNING: Cancer and Reproductive Harm. Visit www.P65Warnings.ca.gov for details.

This appliance is not intended for use by persons (including children) with reduced physical, sensory or mental capabilities, or lack of experience and knowledge, unless they have been given supervision or instruction concerning the use of the appliance by a person responsible for their safety.

Children should be supervised to ensure that they do not play with the appliance.

Caution: This equipment should only be used on ice bins without electrical components or bins designed to be used with flammable refrigerants.

Safety Information, continued

WARNING: Do not use means to accelerate the defrosting process or to clean, other than those recommended by the manufacturer. The appliance shall be stored in a room without continuously operating ignition sources

Do not pierce or burn.

Be aware that refrigerants may not contain an odor.

All installation, service, maintenance and decommissioning to be carried out by technicians certified to handle FLAMMABLE REFRIGERANTS.

Install in a well-ventilated environment and ensure ventilation and outlets are not obstructed.

When breaking into the refrigerant circuit to make repairs – or for any other purpose conventional procedures shall be used. However, for flammable refrigerants it is important that best practice be followed, since flammability is a consideration. The following procedure shall be adhered to:

a) safely remove refrigerant following local and national regulations;
b) purge the circuit with inert gas;
c) evacuate;
d) purge with inert gas;
e) open the circuit by cutting or brazing.

The refrigerant charge shall be recovered into the correct recovery cylinders if venting is not allowed by local and national codes. For appliances containing flammable refrigerants, the system shall be purged with oxygen-free nitrogen to render the appliance safe for flammable refrigerants. This process might need to be repeated several times. Compressed air or oxygen shall not be used for purging refrigerant systems. For appliances containing flammable refrigerants, refrigerants purging shall be achieved by breaking the vacuum in the system with oxygen-free nitrogen and continuing to fill until the working pressure is achieved, then venting to atmosphere, and finally pulling down to a vacuum. This process shall be repeated until no refrigerant is within the system. When the final oxygen-free nitrogen charge is used, the system shall be vented down to atmospheric pressure to enable work to take place. Ensure that the outlet for the vacuum pump is not close to any potential ignition sources and that ventilation is available.

Ensure that the leak detection equipment being used is suitable for use with FLAMMABLE REFRIGERANT; i.e., non-sparking, adequately sealed or intrinsically safe.

Minimum Installation Area by Model in meters²

Model Number	Minimum Area m2
FS0522WX-1, NH0422WX-1, NS0422WX-1	6.1
FS0822WX-1, NS0622WX-1, NH0622WX-1	7.1
FS0522AX-1, NH0422AX-1, NS0422AX-1, FS1222WX-32, NS0922WX-32, NH0922WX-32	8.1
FS0822AX-1, NS0622AX-1, NH0622AX-1	8.8
FS1222WX-32, NS0922AX-32, NH0922WX-1, NS0922AX-1, NH0922AX-1	9.4
NS1322WX-32, NH1322WX-32	13.5
NS1322AX-32, NH1322AX-32	16.2

WARNING: This appliance shall be stored in an area where the room size corresponds to the room area as specified for operation. Please see the table above for the minimum allowed area of installation.

WARNING: This appliance should be stored in a room without continuously operating open flames (for example an operating gas appliance) or other potential ignition sources (for example an operating electric heater, hot surfaces).

Introduction

This ice machine is the result of years of experience with flaked and Scotsman Nugget Ice® ice machines. The latest in electronics has been coupled with the time tested Scotsman flaked ice system to provide reliable ice making and the features needed by customers. The features include easily accessible air filters, simple conductivity water level sensing, evaporator clearing at shut down, photo-eye sensing bin control and the ability to add options.

WARNING: Cancer and Reproductive Harm
www.P65Warnings.ca.gov

Contents

Installation: 2
Location: 3
NH0422X, NS0422X, FS0522X, NH0622X, NS0622X, F0822X Cabinet Layout 4
NH0922X, NS0922X, FS1222X, NH1322X, NS1322X, FS1522X Cabinet Layout 5
Unpacking & Install Prep 6
Water - Air or Water Cooled. 7
Electrical - All Models 8
Electrical - All Models Continued 9
Water 10
Final Check List 11
Initial Start Up and Maintenance 12
Maintenance: Scale Removal and Sanitation 13
Maintenance: Scale Removal and Sanitation Continued 14
Options 15
What to Do Before Calling for Service. 16
Decommissioning 17

Installation:

This machine is designed to be used indoors, in a controlled environment. Operation outside the limits listed here will void the warranty.

Air temperature limits

	Minimum	Maximum
Ice maker	50°F.	100°F.
Remote condenser	-20ºF.	120°F.

Water temperature limits

	Minimum	Maximum
All models	40°F.	100°F.

Water pressure limits (potable)

	Maximum	Minimum
All models	20 psi	80 psi

Water pressure limit to water cooled condenser is 150 PSI

Voltage limits

	Minimum	Maximum
115 volt	104	126
208-230 60 Hz	198	253

Minimum conductivity (RO water)

- 10 microSiemens / CM

Water Quality (ice making circuit)

- Potable, that meets federal and state stands for consumption.

The quality of the water supplied to the ice machine will have an impact on the time between cleanings and ultimately on the life of the product. Water can contain impurities either in suspension or in solution. Suspended solids can be filtered out. In solution or dissolved solids cannot be filtered, they must be diluted or treated. Water filters are recommended to remove suspended solids. Some filters have treatment in them for dissolved solids.

Scale inhibitors are not recommended for use with the Nugget ice machines. Scale inhibitors will make the ice softer and melt faster. This can also can lead to ice dispensing issues if the ice is being dispensed via beverage dispenser.

Check with a water treatment service for a recommendation.

RO water. This machine can be supplied with Reverse Osmosis water, but the water conductivity must be no less than 10 microSiemens/cm.

Potential for Airborne Contamination

Installing an ice machine near a source of yeast or similar material can result in the need for more frequent sanitation cleanings due to the tendency of these materials to contaminate the machine.

Most water filters remove chlorine from the water supply to the machine which contributes to this situation. Testing has shown that using a filter that does not remove chlorine, such as the Scotsman Aqua Patrol, will greatly improve this situation.

Warranty Information

The warranty statement for this product is provided separately from this manual. Refer to it for applicable coverage. In general warranty covers defects in material or workmanship. It does not cover maintenance, corrections to installations, or situations when the machine is operated in circumstances that exceed the limitations printed above.

This is a commercial model, if installed in a residence some commercial service companies may not be able to service it on site.

Fill out the Warranty Registration by using the attached warranty and mailing it in, or scan the QR code to be taken to the Scotsman warranty website:

Location:

While the machine will operate satisfactorily within the listed air and water temperature limits, it will produce more ice when those temperatures are nearer the lower limits. Avoid locations that are hot, dusty, greasy, or confined. Air-cooled models need plenty of room air to vent and must be open in the front. Air-cooled models must have at least six inches of space at the back and must also have at least six inches of space on the sides for air discharge; however, more space will allow better performance. Ensure that the front and sides of the machine are accessible. If an ignition source is present in the proposed installation area, 12 inches of space at the back is needed (when installing the 1322 and 1522, 18 inches of space are required in the back), and 39.4 inches of space on either side of the machine is required to maintain a safe distance from the nearest ignition source.

Airflow

Air flows into the front of the cabinet and out the back. The air filters are on the outside of the front panel and are easily removed for cleaning.

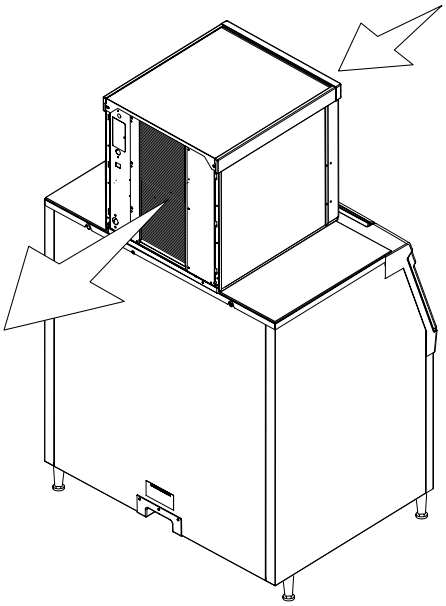

Airflow

Options

Ice is made until it fills the bin enough to block an infrared light beam inside the base of the machine. A field installed kit is available to adjust the maintained ice level lower. The kit number is KVS.

The standard controller has excellent diagnostic capabilities and communicates to the user through the AutoAlert light panel, seen through the front panel. Field installed kits are available that can log data and provide additional information when the front panel is removed. The kit numbers are KSBU and KSB-NU. See page 21.

Bin compatibility

All models have the same footprint: 22 inches wide by 24 inches deep. Confirm available space when replacing a prior model.

Bin & adapter list:

- B322S – no adapter needed
- B330P or B530P or B530S – Use KBT27
- B842S – KBT39
- B948S – KBT38 for single unit
- B948S – KBT38-2X for two units side by side
- BH1100, BH1300 and BH1600 upright bins include filler panels to accommodate a single 22 inch wide ice machine. No adapter is needed.

Dispenser compatibility

Only nugget ice models may be used with ice dispensers. Flaked ice is not dispensable.

- IOD150 – use KBT82 and KNUGAGT
- IOD200 – use KBT83, KNUGAGT and KVS
- IOD250 – use KBT83, KNUGAGT and KVS

See sales literature for other brand model ice and beverage dispenser applications.

Other Bins & Applications:

Note the drop zone and ultrasonic sensor locations in the illustrations on the next pages.

Scotsman ice systems are designed and manufactured with the highest regard for safety and performance. They meet or exceed UL60335-2-89.

Scotsman assumes no liability of responsibility of any kind for products manufactured by Scotsman that have been altered in any way, including the use of any part and/or other components not specifically approved by Scotsman.

Scotsman reserves the right to make design changes and/or improvements at any time. Specifications and design are subject to change without notice.

NH0422X, NS0422X, FS0522X, NH0622X, NS0622X, F0822X Cabinet Layout

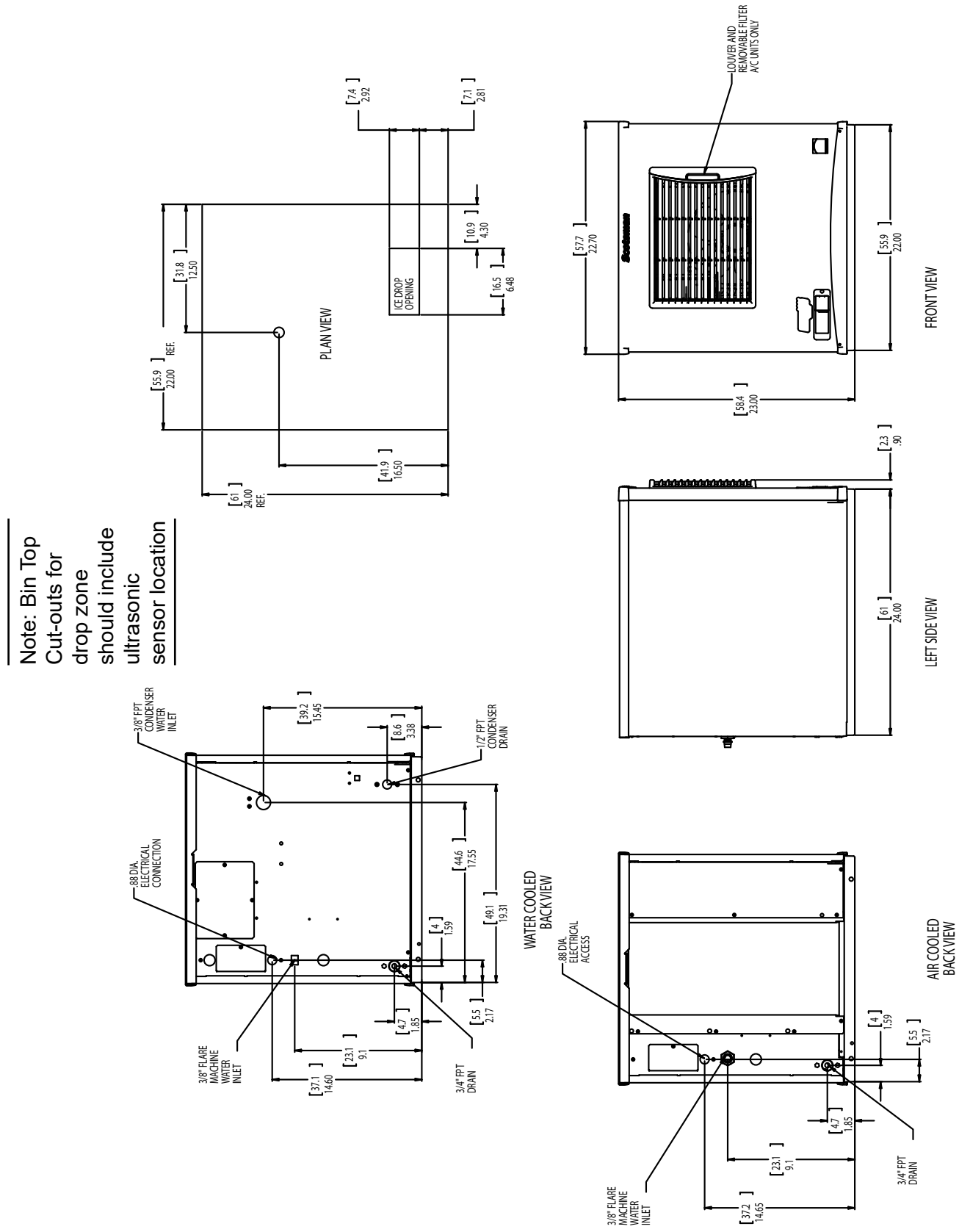

NH0922X, NS0922X, FS1222X, NH1322X, NS1322X, FS1522X Cabinet Layout

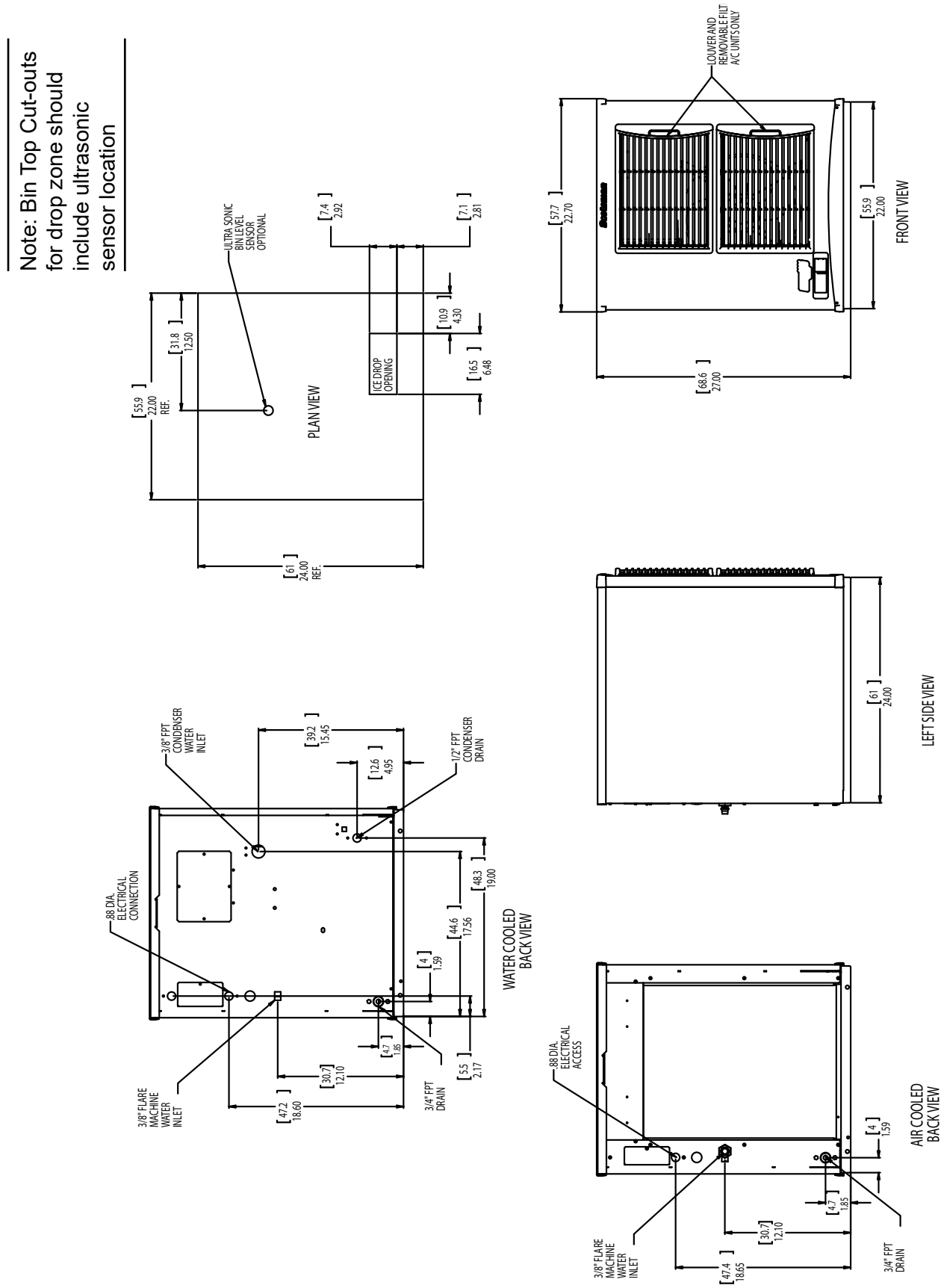

Unpacking & Install Prep

Remove the carton from the skid. Check for hidden freight damage, notify the carrier immediately if any is found. Retain the carton for the carrier's inspection.

The machine is not bolted to the skid. If strapped remove the strap.

Place on Bin or Dispenser

If reusing an existing bin, be sure that the bin is in good shape and that the gasket tape on the top is not torn up. Water leaks, not covered by warranty, could result from a poor sealing surface. If installing a remote or a remote low side, a new bin is recommended due to the high cost to the user of replacing an old bin when a remote system is on top.

Install the correct adapter, following the directions supplied with that adapter.

Hoist the machine onto the adapter.

Note: The machine is heavy! Use of a mechanical lift is recommended.

Position the machine on the bin or adapter. Secure with straps from the hardware bag packed with the machine, or those supplied with the adapter.

Remove any plastic covering the stainless steel panels.

Remove any packaging, such as tape or foam blocks, that may be near the gear reducer or ice chute.

Level the bin and ice machine front to back and left to right by using the bin leg levelers.

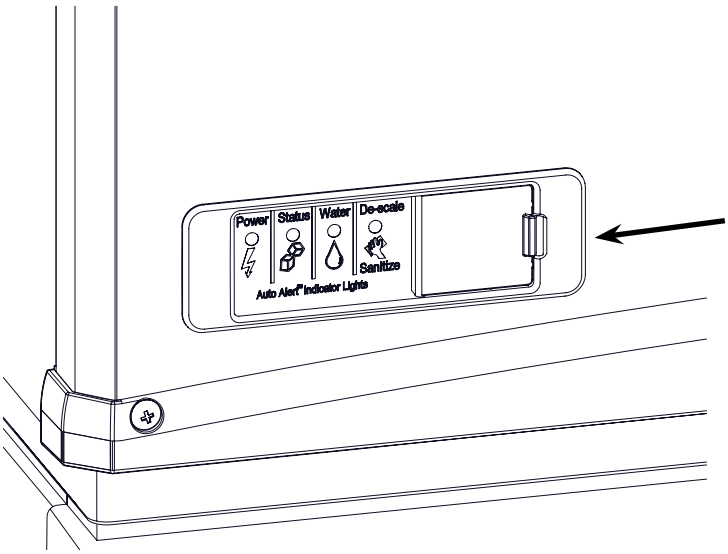

Panel Removal

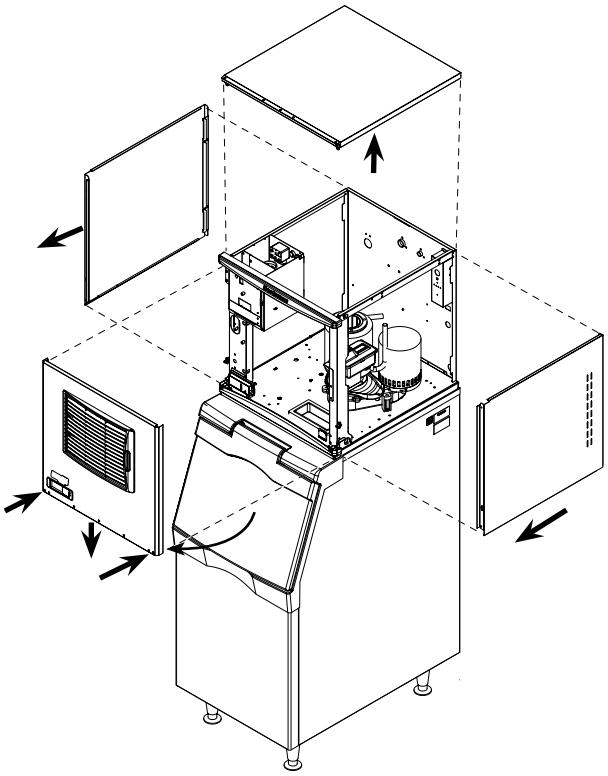

1. Locate and loosen the two screws at the bottom of the front panel.

2. Pull the front panel out at the bottom until it clears.

3. Lower the front panel down and off the machine.

4. Remove two screws at the front of the top panel. Lift up the front of the top panel, push the top panel back an inch, then lift to remove.

5. Locate and loosen the screw holding each side panel to the base. Left side panel also has a screw holding it to the control box.

6. Pull the side panel forward to release it from the back panel.

Control Panel Door

The door can be moved to allow access to the on and off switches.

Water - Air or Water Cooled

The water supply for ice making must be cold, potable water. There is a single 3/8” male flare potable water connection on the back panel. Water cooled models also have a 3/8” FPT inlet connection for the water cooled condenser. Chilled water can also be used for this connection.

Backflow

The design of the float valve and reservoir prevents potable water backflow by means of a 1" air gap between the reservoir's maximum water level and the float valve water inlet orifice.

Drain

There is one 3/4” FPT condensate drain fitting at the back of the cabinet. Water cooled models also have a 1/2” FPT discharge drain connection on the back panel.

Attach Tubing

Connect the potable water supply to the potable water fitting, 3/8” OD copper tubing or the equivalent is recommended.

Water filtration is recommended. If there is an existing filter, change the cartridge.

Connect the water cooled water supply to the condenser inlet.

Note: Do NOT filter water to the water cooled condenser circuit.

Drains - use rigid tubing: Connect the drain tube to the condensate drain fitting. Vent the drain.

Connect the water cooled condenser drain tube to the condenser outlet. Do not vent this drain.

Do not Tee ice machine drains into the drain tube from the ice storage bin or dispenser. Back ups could contaminate and / or melt the ice in the bin or dispenser. Be sure to vent the bin drain.

Follow all local and national codes for tubing, traps and air gaps.

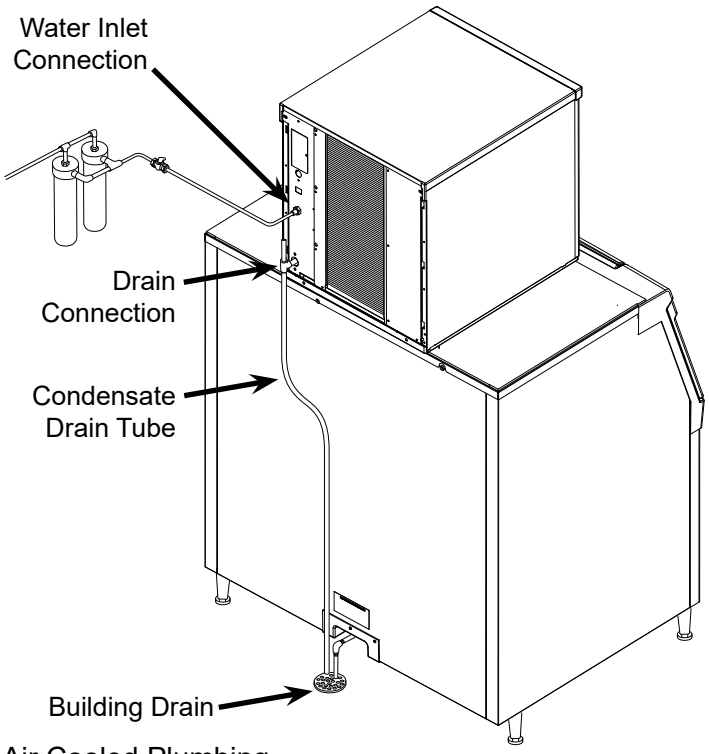

Air Cooled Plumbing

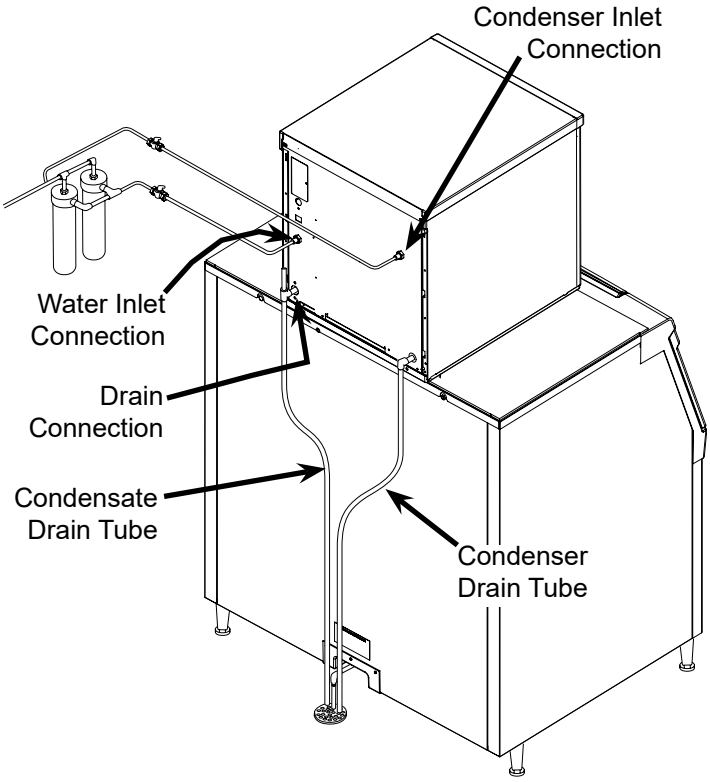

Water Cooled Plumbing

Electrical - All Models

The machine does not include a power cord, one must be field supplied or the machine hard wired to the electrical power supply.

The junction box for the power cord is on the back panel. See the next page.

Refer to the dataplate on the machine for minimum circuit ampacity and determine the proper wire size for the application. The dataplate (on the back of the cabinet) also includes the maximum fuse size.

Connect electrical power to wires inside the junction box in the back of the cabinet. Use a strain relief and connect a ground wire to the ground screw.

Do not use an extension cord. Follow all local and national codes.

This unit must be on a separate power supply. Check the dataplate for the voltage, ampacity and maximum fuse size and per the dataplate use fuses or HACR circuit breakers.

This ice machine should be installed on a dedicated circuit with a properly sized HACR-rated breaker or fuse. No other devices or appliances should be connected to the same circuit with the ice machine. Installing a unit on a shared circuit can cause product malfunctions or damage to the unit. The proper circuit size can be found on the unit data tag listed as “MAX FUSE OR HACR TYPE CIRCUIT BREAKER”. Never allow the fuse size to exceed the maximum fuse size listed on the data tag.

The use of a ground fault circuit interrupter (GFCI) or arc-fault circuit interrupter (ARCI) can lead to nuisance trips and is not recommended for use on most appliances including our equipment.

If local codes or other specifications require the use of ground fault circuit interrupters, a properly rated HACR GFCI or ARCI circuit breaker should be used. An outlet type GFCI or ARCI is not recommended for ice machines and other refrigeration equipment due to more frequent nuisance trips of the GFCI or ARCI.

Always check with your local electrical inspector about the specific code requirements in your area for GFCI or ARCI breakers and GFCI or ARCI receptacles.

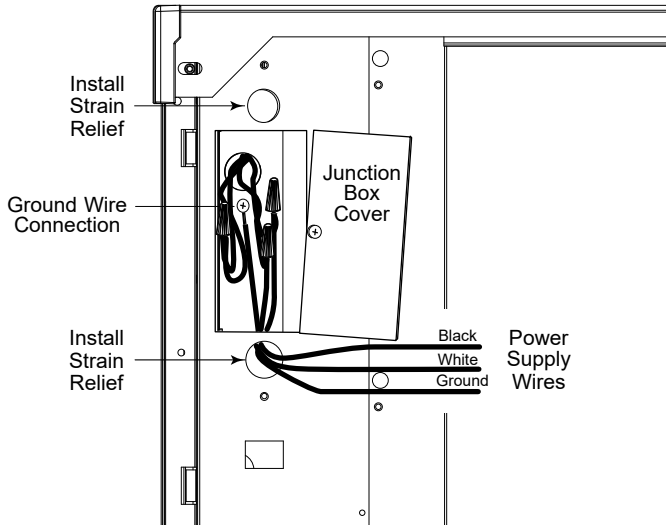

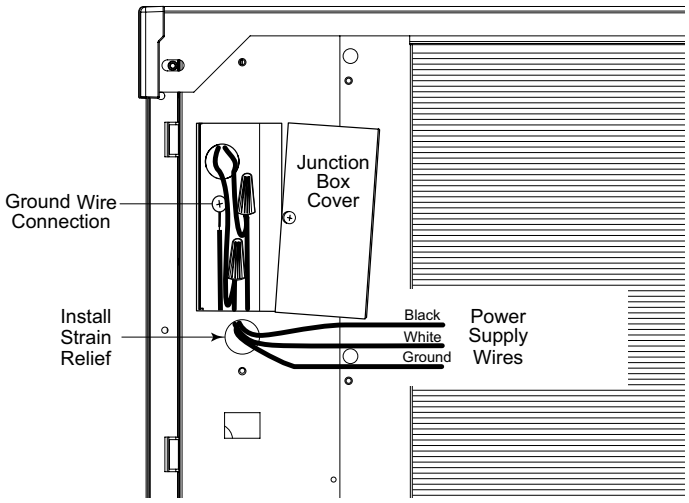

The junction box is on the back panel.

Electrical - All Models Continued

Model	Series	Dimensions w” x d” x h”	Voltage Volts/Hz/ Phase	Condenser Type	Refrigerant type	Min Circuit Ampacity	Max Fuse Size or HACR Type Circuit Breaker
NH0422AX-1	A	22 x 24 x 23	115/60/1	Air	R290	11.1	15
NS0422AX-1	A	22 x 24 x 23	115/60/1	Air	R290	11.1	15
FS0522AX-1	A	22 x 24 x 23	115/60/1	Air	R290	11.1	15
NH0422WX-1	A	22 x 24 x 23	115/60/1	Water	R290	10.3	15
NS0422WX-1	A	22 x 24 x 23	115/60/1	Water	R290	10.3	15
FS0522WX-1	A	22 x 24 x 23	115/60/1	Water	R290	10.3	15
NH0622AX-1	A	22 x 24 x 23	115/60/1	Air	R290	14.8	20
NS0622AX-1	A	22 x 24 x 23	115/60/1	Air	R290	14.8	20
FS0822AX-1	A	22 x 24 x 23	115/60/1	Air	R290	14.8	20
NH0622WX-1	A	22 x 24 x 23	115/60/1	Water	R290	13.2	15
NS0622WX-1	A	22 x 24 x 23	115/60/1	Water	R290	13.2	15
FS0822WX-1	A	22 x 24 x 23	115/60/1	Water	R290	13.2	15
NH0922AX-32	A	22 x 24 x 27	208-230/60/1	Air	R290	10.6	15
NS0922AX-32	A	22 x 24 x 27	208-230/60/1	Air	R290	10.6	15
FS1222AX-32	A	22 x 24 x 27	208-230/60/1	Air	R290	10.6	15
NH0922WX-32	A	22 x 24 x 27	208-230/60/1	Water	R290	9.5	15
NS0922WX-32	A	22 x 24 x 27	208-230/60/1	Water	R290	9.5	15
FS1222WX-32	A	22 x 24 x 27	208-230/60/1	Water	R290	9.5	15
NH0922AX-1	A	22 x 24 x 27	115/60/1	Air	R290	24.0	30
NS0922WX-1	A	22 x 24 x 27	115/60/1	Water	R290	25.0	30
NH1322AX-32	A	22 x 24 x 27	208-230/60/1	Air	R290	17.8	20
NH1322WX-32	A	22 x 24 x 27	208-230/60/1	Water	R290	16.6	20
NS1322AX-32	A	22 x 24 x 27	208-230/60/1	Air	R290	17.8	20
NS1322WX-32	A	22 x 24 x 27	208-230/60/1	Water	R290	16.6	20
FS1522AX-32	A	22 x 24 x 27	208-230/60/1	Air	R290	17.8	20

Water

The water supply for ice making must be cold, potable water. There is a single 3/8” male flare potable water connection on the back panel.

Backflow

The design of the float valve and reservoir prevents potable water backflow by means of a 1" air gap between the reservoir's maximum water level and the float valve water inlet orifice.

Drain

There is one 3/4” FPT condensate drain fitting at the back of the cabinet.

Attach Tubing

1. Connect the potable water supply to the potable water fitting, 3/8” OD copper tubing or the equivalent is recommended.
2. Change the cartridge on the existing water filter (if any present).
3. Connect the drain tube to the condensate drain fitting. Use rigid tubing.
4. Vent the drain tubing between the ice machine and the building drain.

Do not Tee ice machine drains into the drain tube from the ice storage bin or dispenser. Back ups could contaminate and / or melt the ice in the bin or dispenser. Be sure to vent the bin drain.

Follow all local and national codes for tubing, traps and air gaps.

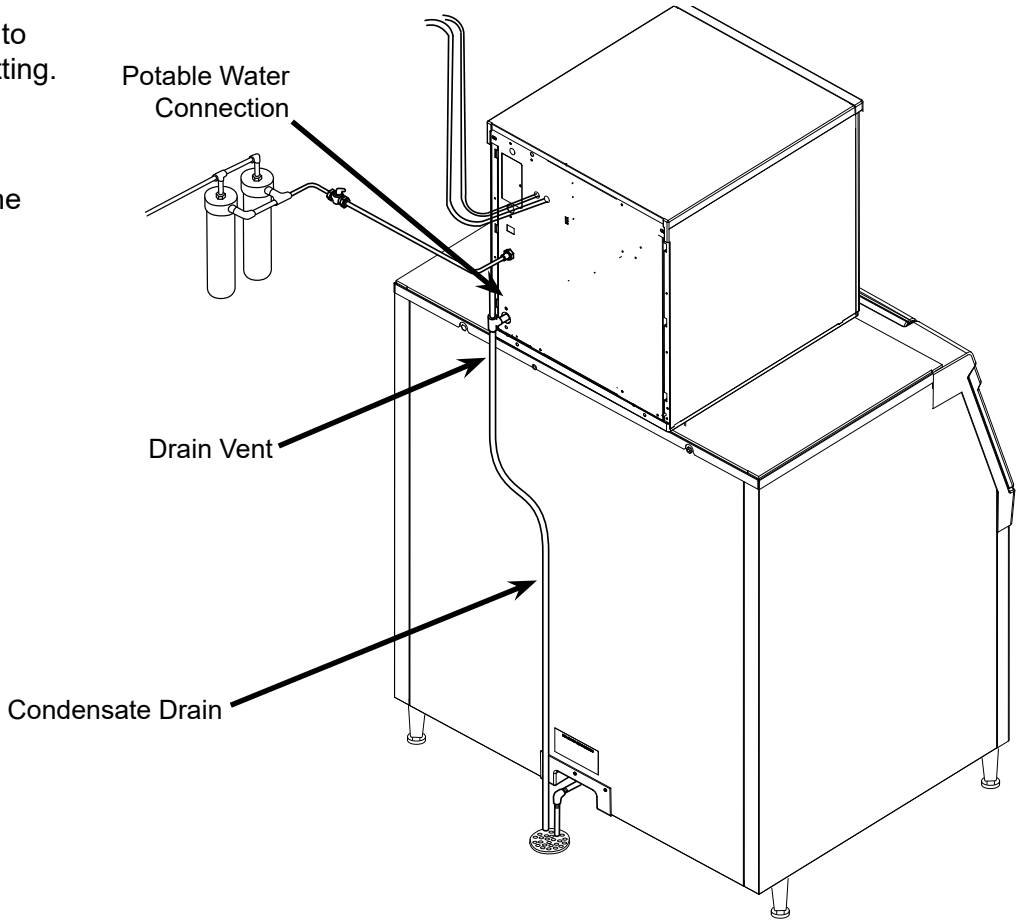

Final Check List

After connections:

1. Wash out the bin. If desired, the interior of the bin could be sanitized.
2. Locate the ice scoop (if supplied) and have it available for use when needed.

Final Check List:

1. Is the unit located indoors in a controlled environment?
2. Is the unit located where it can receive adequate cooling air?
3. Has the correct electrical power been supplied to the machine?
4. Have all the water supply connections been made?
5. Have all the drain connections been made?
6. Has the unit been leveled?
7. Have all unpacking materials and tape been removed?
8. Has the protective covering on the exterior panels been removed?
9. Is the water pressure adequate?
10. Have the drain connections been checked for leaks?
11. Has the bin interior been wiped clean or sanitized?
12. Have any water filter cartridges been replaced?
13. Have all required kits and adapters been properly installed?

Control and Machine Operation

Once started, the ice machine will automatically make ice until the bin or dispenser is full of ice. When ice level drops, the ice machine will resume making ice.

ATTENTION! - During startup, you may observe frost forming on the compressor. This is normal and is due to the high efficiency refrigerant used in the machine. The frost should dissipate a few minutes after startup. Please contact Scotsman tech support if it does not.

Caution: Do not place anything on top of the ice machine, including the ice scoop. Debris and moisture from objects on top of the machine can work their way into the cabinet and cause serious damage. Damage caused by foreign material is not covered by warranty.

There are four indicator lights at the front of the machine that provide information on the condition of the machine: **Power, Status, Water, De-scale & Sanitize.**

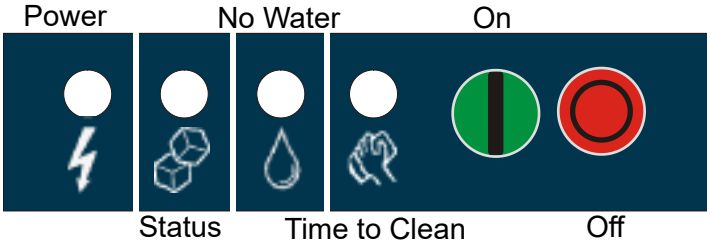

Note: If the De-Scale & Sanitize light is ON, following the cleaning process will clear the light for another cleaning time internal.

Two button switches are at the front – On and Off. To switch the machine OFF, push and release the Off button. The machine will shut off at the end of the next cycle. To switch the machine ON, push and release the On button. The machine will go through a start up process and then resume ice making.

Lower Light and Switch Panel

This user accessible panel provides important operational information and duplicates the lights and switches on the controller. It also allows access to the On and Off buttons that operate the ice machine.

Sometimes access to the switches should be limited to prevent unauthorized operation. For that purpose a fixed panel is shipped in the hardware package. The fixed panel cannot be opened.

To install the fixed panel:

1. Remove the front panel and remove the bezel.
2. Spread the bezel frame open and remove original door, insert fixed panel into bezel. Be sure it is in the closed position.
3. Return bezel to panel and install panel on unit.

Initial Start Up and Maintenance

1. Turn the water supply on.
2. Confirm voltage and switch on electrical power.
3. Push and release the On button. The machine will start in about two minutes.
4. Soon after starting, air cooled models will begin to blow warm air out the back of the cabinet and water cooled models will drain warm water from the condenser drain tube. Remote models will be discharging warm air from the remote condenser. After about 5 minutes, ice will begin to drop into the bin or dispenser.
5. Check the machine for unusual rattles. Tighten any loose screws, be sure no wires are rubbing moving parts. Check for tubes that rub. Remote models check brazed connections for leaks, retighten as needed.
6. Scan the QR code found behind the front panel door and complete the warranty registration online or fill out and mail the included warranty registration card
7. Notify the user of the maintenance requirements and whom to call for service.

Maintenance

This ice machine needs five types of maintenance:

- Air cooled and remote models need their air filters or condenser coils cleaned regularly.
- All models need scale removed from the water system.
- All models require regular sanitization.
- All models require sensor cleaning.
- All models require a top bearing check.

Maintenance Frequency:

Air filters: At least twice a year, but in dusty or greasy air, monthly.

Scale removal. At least twice a year, in some water conditions it might be every 3 months. The yellow De-Scale & Sanitize light will switch on after a set period of time as a reminder. The default time period is 6 months of power up time.

Sanitizing: Every time the scale is removed or as often as needed to maintain a sanitary unit.

Sensor Cleaning: Every time the scale is removed.

Top bearing check: At least twice a year or every time the scale is removed. During the course of normal operation, some material buildup on top of the bearing is normal and should be wiped away during maintenance.

Maintenance: Air filters

1. Pull air filter(s) from panel.
2. Wash the dust and grease off the filter(s).
3. Return it(them) to their original position(s).

Do not operate the machine without the filter in place except during cleaning.

Maintenance: Air cooled condenser

If the machine has been operated without a filter the air cooled condenser fins will need to be cleaned.

They are located under the fan blades. The services of a refrigeration technician will be required to clean the condenser.

Maintenance: Exterior Panels

The front and side panels are durable metal. Fingerprints, dust and grease will require cleaning with a good quality stainless steel cleaner

Note: If using a sanitizer or a cleaner that contains chlorine on the panels, after use be sure to wash the panels with clean water to remove chlorine residue.

Maintenance: Water filters

If the machine has been connected to water filters, check the cartridges for the date they were replaced or for the pressure on the gauge. Change cartridges if they've been installed more than 6 months or if the pressure drops too much during ice making.

Maintenance: Scale Removal and Sanitation

Note: Following this procedure will reset the de-scale and sanitize light.

Preparing to Clean:

1. Remove both the front and right panels.
2. Push and release the OFF button.
3. Remove ice from bin or dispenser.
4. Remove the ice chute cover.
5. Remove the water reservoir cover.
6. Turn the water supply to the float valve off by turning the knob 1/4 turn CCW.
7. Drain the water reservoir and evaporator into a bucket using the vent tube. Return the vent tube to it's original collar bracket.
8. Using a small cup for precise pouring, add hot (100-120°F) water into the reservoir until water comes out of the top of the evaporator at the extruder, about 1qt (varies slightly by model).
9. Let hot water warm evaporator for 2-5 minutes and then drain the system (refer to step 7)
10. Loosen the thumb screw and raise the water reservoir from the "Make Ice" position to the "Clean" position.

⚠WARNING	Ice machine scale remover contains acids. Acids can cause burns. If concentrated cleaner comes in contact with skin, flush with water. if swallowed, do NOT induce vomiting. Give large amounts of water or milk. Call Physician immediately. Keep out of the reach of children.
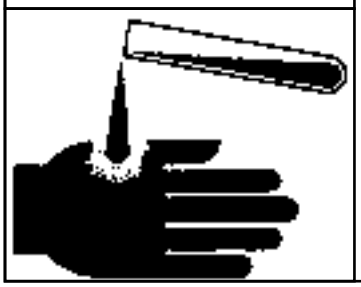	

Scale Removal:

11. Prepare a solution of 16oz. Scotsman Clear One scale remover and 16oz. 95-115 °F. potable water.
12. Using a small cup for precise pouring, add the scale remover solution into the reservoir until the solution comes out of top of the evaporator at the extruder, about 1qt (varies slightly by model).
13. Push and release the Clean button: C is displayed and the Time to Clean light blinks. The auger will turn and circulate the scale remover for 30 minutes before shutting off. No ice is made during the cleaning cycle.
14. Lower the water reservoir back to the "Make Ice" position. Drain the water reservoir and evaporator into a bucket using the vent tube.
15. Perform a rinse of the system: turn the water supply to the float valve back on and allow the evaporator to fill. Once full, turn the water supply at the float valve off and drain the system using the vent tube. Return the vent tube to it's original collar bracket.

Sanitize:

16. Loosen the thumb screw and raise the water reservoir from the "Make Ice" position to the "Clean" position.
17. Prepare a solution of sanitizer. Mix 4 oz. of locally approved sanitizer and 2.5 gallons of 95-115 °F. potable water to create a 200 ppm solution.
18. Using a small cup for precise pouring, add the sanitizer solution into the reservoir until the solution comes out of top of the evaporator at the extruder, about 1qt (varies slightly by model). Reserve any excess sanitizer.
19. Allow the sanitizer to soak while steps 20-24 are completed, or at least 60 seconds.

Continued on next page:

Maintenance: Scale Removal and Sanitation Continued

Remove Internal Parts for Cleaning:

20. Remove the ice sweep, upper ice chute, lower ice chute, and bin eyes for additional cleaning. The reservoir cover and chute cover were already removed and should also be cleaned.
21. Prepare a solution of 4oz. Scotsman Clear One scale remover and 16oz. 95-115 °F. potable water. Using a nylon brush, scrub each part with scale remover and rinse, excluding the bin eyes.
22. Using the leftover sanitizing solution and a nylon brush, scrub each part, excluding the bin eyes.
23. Gently wipe down the bin eyes with scale remover, rinse, and dry thoroughly (important).
24. Return all parts to their original position.

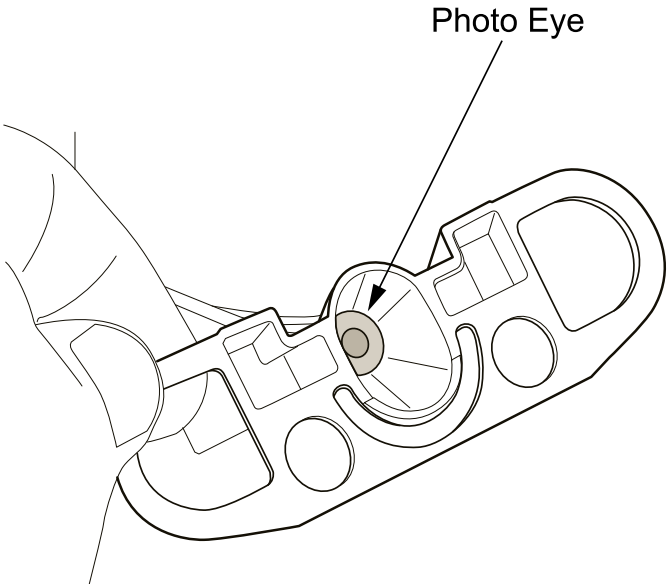

Note: Eye holders must be mounted properly. They snap into a centered position and are properly located when the wires are routed to the back and the left eye is the one with 2 wires at the connector.

Finish Cleaning Process:

25. Lower the water reservoir back to the “Make Ice” position. Drain the water reservoir and evaporator into a bucket using the vent tube.
26. Perform a rinse of the system: turn the water supply to the float valve back on and allow the evaporator to fill. Once full, turn the water supply at the float valve off and drain the system using the vent tube. Return the vent tube to it’s original collar bracket.
27. Switch the water supply to the ice machine on and check for leaks as the system fills.
28. Push and release the ON button.
29. Allow the unit to make ice for at least 5 minutes while washing the inside of the ice storage bin with sanitizing solution. Discard or melt all ice made during this step.
30. Return the right and front panels to their original position and secure with the original screws.

Change De-Scale Notification Interval:

This feature is accessible only from standby

(Status Light Off).

1. Press and hold Clean button for 3 seconds.

This starts the Time to Clean Adjustment State and displays the current time to clean setting.

2. Press the clean button repeatedly to cycle through the 4 possible settings:

0 (disabled), 4 months, 6 months (default), 1 year

3. Push Off to confirm the selection.

Vari-Smart

Optional adjustable ice level control (KVS). When this option is present there is an adjustment post and an additional indicator light to the right of the four indicator lights mentioned earlier.

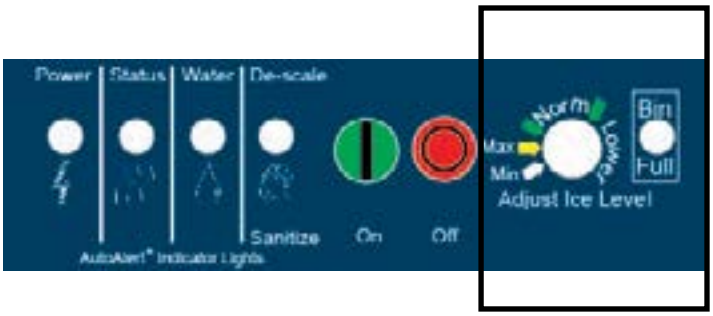

The ultrasonic ice level control allows the user to control the point that the ice machine will stop making ice before the bin or dispenser is full.

Reasons for this include:

- Seasonal changes in ice used
- Planning to sanitize the bin
- Faster turnover for fresher ice
- Certain dispenser applications where maximum ice level is not desired

Use of adjustable ice level control

There are several positions the ice level can be set to, including Off or Max (knob and label indicators lined up), where it fills the bin until the standard bin control shuts the machine off. See the kit's instructions for complete details including special instructions for dispenser applications.

Rotate the adjustment post to the desired ice level.

The machine will fill up to that level and when it shuts off the indicator light next to the adjustment post will be On.

Note: The maximum fill position is when the arrow on the knob points to the arrow on the label.

What to Do Before Calling for Service

Normal Operation:

Ice

The machine will make either flaked or nugget ice, depending upon the model. The ice will be produced continuously until the bin is full. It is normal for a few drops of water to occasionally fall with the ice.

Heat

On remote models most heat is exhausted at the remote condenser, the ice machine should not generate significant heat. Water cooled models also put most of the heat from ice making into the discharge water. Air cooled models will generate heat, and it will be discharged into the room.

Noise

The ice machine will make noise when it is in ice making mode. The compressor and gear reducer will produce sound. Air cooled models will add fan noise. Some ice making noise could also occur. These noises are all normal for this machine.

Reasons the machine might shut itself off:

• Lack of water.

• Does not make ice

• Auger motor overload

• High discharge pressure.

• Low refrigeration system pressure.

Check the following:

1. Has the water supply to the ice machine or building been shut off? If yes, the ice machine will automatically restart within minutes after water begins to flow to it.

2. Has power been shut off to the ice machine? If yes, the ice machine will automatically restart when power is restored.

3. Has someone shut the power off to the remote condenser while the ice machine still had power? If yes, the ice machine may need to be manually reset.

To Manually Reset the machine.

• Open the switch door

• Push and release the Off button.

• Push and release the On button.

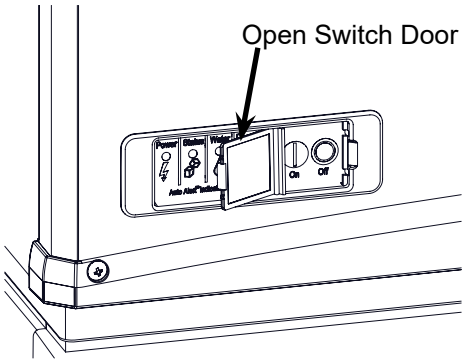

To Shut the Machine Off:

Push and hold the Off button for 3 seconds or until the machine stops.

	Indicator Lights & Their Meanings			
	Power	**Status**	**Water**	**De-Scale & Sanitize**
Steady Green	Normal	Normal	-	-
Blinking Green	Self Test Failure	Switching on or off. When Smart-Board used, machine attention recommended.	-	-
Blinking Red	-	Diagnostic shut down	Lack of water	-
Yellow	-	-	-	Time to descale and sanitize
Blinking Yellow	-	-	-	In Cleaning Mode
Light Off	No power	Switched to Off	Normal	Normal

Decommissioning

Only qualified technicians familiar with R290 refrigerant should decommission a machine, as special tools and containers are required for the removal, transportation, and disposal of this highly flammable substance.

Work shall be undertaken under a controlled procedure so as to minimise the risk of a flammable gas or vapour being present while the work is being performed.

- Before attempting the procedure:
  - All maintenance staff and others working in the local area shall be instructed on the nature of work being carried out. Work in confined spaces shall be avoided.
  - The area shall be checked with an appropriate refrigerant detector prior to and during work, to ensure the technician is aware of potentially toxic or flammable atmospheres. Ensure that the leak detection equipment being used is suitable for use with all applicable refrigerants, i.e., nonsparking, adequately sealed, or intrinsically safe.
  - If any hot work is to be conducted on the refrigerating equipment or any associated parts, appropriate fire extinguishing equipment shall be available on hand. A dry chemical or CO2 fire extinguisher should be adjacent to the charging area.
  - No person carrying out work in relation to a REFRIGERATING SYSTEM which involves exposing any pipe work shall use any sources of ignition in such a manner that it may lead to the risk of fire or explosion. All possible ignition sources, including cigarette smoking, should be kept sufficiently far away from the site of installation, repairing, removing and disposal, during which refrigerant can possibly be released to the surrounding space. Prior to work taking place, the area around the equipment shall be surveyed to make sure that there are no flammable hazards or ignition risks. “No Smoking” signs shall be displayed.
  - Ensure that all protective gear is present and used throughout the procedure.
  - Make sure recovery equipment and containers are available and ready for use. All containers used for recovery must be rated for R290 refrigerant and must be labeled as such.
  - Weigh any refrigerant prior to reclaiming.
- Maintain safety through standard operating procedures as outlined on page 20 of this document. Be sure to follow local, state, and federal guidelines for proper disposal.
- Do not fill containers more than 80% and do not exceed the pressure limits of the container. Make sure the machine to be decommissioned is in satisfactory working order and that the electrical components of the machine are properly sealed to prevent ignition.
- Recovered refrigerant should not be charged into another refrigerating system or mixed in another container.
- Make sure to safely transport the refrigerant in line with standard operating procedures.
- All recovered refrigerant must be returned to refrigerant supplier for proper disposal.
- If compressor or compressor oils are removed ensure it has been removed to an acceptable level so the flammable refrigerant does not remain in the lubricant.
- In addition to conventional charging procedures, the following requirements shall be followed:
  - Ensure that contamination of different refrigerants does not occur when using charging equipment. Hoses or lines shall be as short as possible to minimise the amount of refrigerant contained in them.
  - Cylinders shall be kept in an appropriate position according to the Instructions.

- Ensure that the REFRIGERATING SYSTEM is earthed prior to charging the system with refrigerant.
- Label the system when charging is complete (if not already).
- Extreme care shall be taken not to overfill the REFRIGERATING SYSTEM.

- Prior to recharging the system, it shall be pressure-tested with the appropriate purging gas. The system shall be leak-tested on completion of charging but prior to commissioning. A follow up leak test shall be carried out prior to leaving the site

- Before carrying out this decommissioning procedure, it is essential that the technician is completely familiar with the equipment and all its detail. It is recommended good practice that all refrigerants are recovered safely. Prior to the task being carried out, an oil and refrigerant sample shall be taken in case analysis is required prior to re-use of recovered refrigerant. It is essential that electrical power is available before the task is commenced.
  - Become familiar with the equipment and its operation.
  - Isolate the system electrically.
  - Before attempting the procedure, ensure that:
    - mechanical handling equipment is available, if required, for handling refrigerant cylinders;
    - all personal protective equipment is available and being used correctly;
    - the recovery process is supervised at all times by a competent person;
    - recovery equipment and cylinders conform to the appropriate standards.
  - Pump down refrigerant system, if possible.
  - If a vacuum is not possible, make a manifold so that refrigerant can be removed from various parts of the system.
  - Make sure that cylinder is situated on the scales before recovery takes place.
  - Start the recovery machine and operate in accordance with instructions.
  - Do not overfill cylinders (no more than 80 % volume liquid charge).
  - Do not exceed the maximum working pressure of the cylinder, even temporarily.
  - When the cylinders have been filled correctly and the process completed, make sure that the cylinders and the equipment are removed from site promptly and all isolation valves on the equipment are closed off.
  - Recovered refrigerant shall not be charged into another REFRIGERATING SYSTEM unless it has been cleaned and checked.

- Equipment shall be labelled stating that it has been de-commissioned and emptied of refrigerant. The label shall be dated and signed. For appliances containing FLAMMABLE REFRIGERANTS, ensure that there are labels on the equipment stating the equipment contains FLAMMABLE REFRIGERANT.

- When removing refrigerant from a system, either for servicing or decommissioning, it is recommended good practice that all refrigerants are removed safely. When transferring refrigerant into cylinders, ensure that only appropriate refrigerant recovery cylinders are employed. Ensure that the correct number of cylinders for holding the total system charge is available. All cylinders to be used are designated for the recovered refrigerant and labelled for that refrigerant (i.e., special cylinders for the recovery of refrigerant). Cylinders shall be complete with pressure-relief valve and associated shut-off valves in good working order. Empty recovery cylinders are evacuated and, if possible, cooled before recovery occurs. The recovery equipment shall be in good working order with a set of

instructions concerning the equipment that is at hand and shall be suitable for the recovery of all appropriate refrigerants including, when applicable, FLAMMABLE REFRIGERANTS. In addition, a set of calibrated weighing scales shall be available and in good working order.

- Hoses shall be complete with leak-free disconnect couplings and in good condition. Before using the recovery machine, check that it is in satisfactory working order, has been properly maintained and that any associated electrical components are sealed to prevent ignition in the event of a refrigerant release. Consult manufacturer if in doubt. The recovered refrigerant shall be returned to the refrigerant supplier in the correct recovery cylinder, and the relevant waste transfer note arranged. Do not mix refrigerants in recovery units and especially not in cylinders. If compressors or compressor oils are to be removed, ensure that they have been evacuated to an acceptable level to make certain that FLAMMABLE REFRIGERANT does not remain within the lubricant. The evacuation process shall be carried out prior to returning the compressor to the suppliers. Only electric heating to the compressor body shall be employed to accelerate this process. When oil is drained from a system, it shall be carried out safely.

SCOTSMAN ICE SYSTEMS

101 Corporate Woods Parkway

Vernon Hills, IL 60061

800-726-8762

www.scotsman-ice.com

17-3850-01 Rev.C