Scotsman® Ice Systems

PRODIGY

N0422 – 400 lb Nugget Ice Machine

Prodigy® Nugget Ice Machine

Shown on ID150 dispenser.

Features

Scotsman Nugget Ice® was created with the consumer in mind. It's soft, chewable form make it a favorite for all types of beverages. The ice displaces more liquid than cubed ice, lowering syrup costs per cup.

Prodigy Nugget Ice Machines are highly efficient, using up to 50% less water and 15 % less energy than cube ice machines.

AutoAlert™ indicator lights constantly communicate about operating status and actually signal your staff when it's time to descale, sanitize and more - making upkeep practically foolproof.

Preventative maintenance is simplier than ever with easily-removed panels allowing clear access to internal components and a diagnostic code display insuring the right fix the first time. Reusable air filter is easily removable from the outside.

An optional advanced feature Smart-Board™ provides NAFEM data protocol and additional operational data that can be displayed on-screen or transmitted remotely, resulting in early alert and fast diagnosis of operating issues.

An optional Vari-Smart™ ultrasonic ice level control sensor allows you the flexibility to program ice levels, for up to 7 days, keeping just the right amount of freshly made ice in the bin.

Industry leading 3 year parts and labor warranty.

24 Hour Volume Production

Air Cooled		
70˚F/21˚C 50˚F/10˚C lb/kg	Air Water	90˚F/32˚C 70˚F/21˚C lb/kg
420/191		310/141

Water Cooled		
70˚F/21˚C 50˚F/10˚C lb/kg	Air Water	90˚F/32˚C 70˚F/21˚C lb/kg
455/206		360/163

c UL us

NSF

NAFEM DATA PROTOCOL COMPLIANT

CERTIFIED ISO 9001:2008

agion Nature's antimicrobial

Modular Bin & Dispenser Options

Model Number	Dimensions W" x D" x H"	Application Capacity lb/kg	AHRI Certified Bin Capacity lb/kg	Finish	Ship Weight lb/kg
B322S	22 x 34 x 44**	370/168	290/132	SS	140/64
B530P*	30 x 34 x 44**	536/244	420/191	Poly	150/68
B530S*	30 x 34 x 44**	536/244	420/191	SS	110/50
ID150*	22 x 30 x 35.625	150/68		SS	150/68
ID200*	30 x 30 x 35.625	200/91		SS	195/89
ID250*	30 x 30 x 39.625	250/114		SS	200/91

*Contact Scotsman for bin top requirements. **Add 6" H for bin legs

Bin: B530S

Dispenser: ID200

Nugget Ice

The Original Chewable Ice™!
Soft ice ideal for fountain beverages and blended drinks.

Warranty

- 3 years parts and labor on all components.
- 5 years parts on the compressor.

Warranty valid in North, South & Central America.
Contact factory for warranty in other regions.

Scotsman Ice Systems · 775 Corporate Woods Parkway · Vernon Hills, IL 60061
1-800-SCOTSMAN
Fax: 847-913-9844
E-mail: customer.relations@scotsman-ice.com
www.scotsman-ice.com

N0422 – 400 lb Nugget Ice Machine

Scotsman®
Ice Systems

Revit drawings available at
www.scotsman-ice.com

N0422 – 400 lb Nugget Ice Machine

* Installation Note: Allow 6" minimum space at back for utility connections.

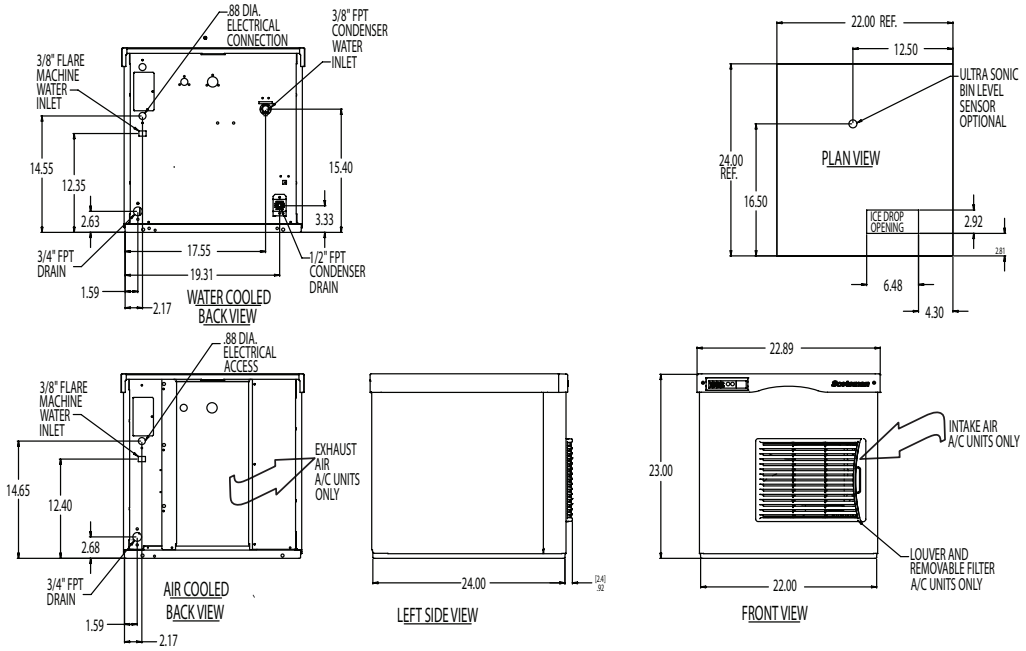

Specifications

Model Number	Condenser Unit	Basic Electrical Volts/Hz/Phase	Max. Fuse Size or HACR Circuit Breaker (amps)	Circuit Wires	Min. Circuit Ampacity	Energy Consumption kWh/100 lb (45.4 kg) 90˚F(32˚C)/70˚F(21˚C)	Water Usage Gallons/100 lb (liters/45.4 kg) Potable 90˚F(32˚C)/ 70˚F(21˚C)	Condenser 90˚F(32˚C)/ 70˚F(21˚C)
N0422A-1	Air	115/60/1	20	2	15.2	6.3	12.0/45.5	-
N0422W-1	Water	115/60/1	20	2	14.4	4.9	12.0/45.5	88/333.6

All Models

Dimensions (W x D x H):

Unit:
22.9" x 24" x 23"
(58.2 x 61.0 x 58.4 cm)

Shipping Carton:
25.5" x 27.5" x 28.5"
(64.8 x 69.9 x 72.4 cm)

Shipping Weight:
172 lb/78 kg

BTU per hour:
5,000

Refrigerant:
R-404A

Accessories

Model Number	Description
KVS	Vari-Smart™ Ice Level Control - Program ice bin levels to match ice needs.
KSBU	Smart-Board™ Advanced Control - Use additional operational data for fast diagnosis.
KSBU-N	Smart-Board™ Advanced Control with Network - Network capable.
KPFSA223	Side Air Flow Kit for 23" Tall Prodigy Flaker and Nugget
KPAS	Prodigy Advanced Sustainability kit- Includes KVS and KSBU-N

* Scotsman recommends all ice machines have water filtration. See Scotsman Sanitation Matrix for details.

Operating Requirements

	Minimum	Maximum
Air Temperatures	50°F (10°C)	100°F (38°C)
Water Temperatures	40°F (4.4°C)	100°F (38°C)
Remote Cond. Temps	-20°F (-29°C)	120°F (49°C)
Water Pressures	20 PSIG (1.4 bar)	80 PSIG (5.5 bar)
Electrical Voltage	-10%	+10%

Specifications and design are subject to change without notice.

Scotsman Ice Systems · 775 Corporate Woods Parkway · Vernon Hills, IL 60061
1-800-SCOTSMAN
Fax: 847-913-9844
E-mail: customer.relations@scotsman-ice.com
www.scotsman-ice.com

© 2013 Scotsman Ice Systems.

SIS-SS-PRD-N0422
01-13