MDT5N25 & MTD5N40 SERVICE PARTS

This parts list contains the service parts and wiring diagrams for this model. Check the model number of the machine requiring the parts to be sure that this is the correct parts list.
MDT5N25s & MDT5N40s have been made in 115 volt, 60 Hz and 230 volt 50 Hz.
Model numbers for the 115 volt models include:
MDT5N25A-1A and MDT5N25W-1A
MDT5N40A-1A and MDT5N40W-1A
MDT5N25A-1B and MDT5N25W-1B
MDT5N40A-1B and MDT5N40W-1B
Model numbers for the 230 volt models include:
MDT5N25A-6A and MDT5N25W-6A.
MDT5N40A-6A and MDT5N40W-6A
MDT5N25A-6B and MDT5N25W-6B.
MDT5N40A-6B and MDT5N40W-6B.
B series units have different water cooled condensers.

J series have different compressors from A or B series but the same water cooled condensers as the B series:
MDT5N25A-1J and MDT5N25W-1J
MDT5N40A-1J and MDT5N40W-1J
MDT5N25A-1J and MDT5N25W-1J
MDT5N40A-1J and MDT5N40W-1J
MDT5N25A-6J and MDT5N25W-6J
MDT5N40A-6J and MDT5N40W-6J
MDT5N25A-6J and MDT5N25W-6J
MDT5N40A-6J and MDT5N40W-6J
The two compressors are not interchangeable.

TABLE OF CONTENTS

Cabinet Assembly . . . . . Page 2
Air Cooled Refrigeration . . . . . Page 4
Water Cooled Refrigeration . . . . . Page 5
Ice Dispensing . . . . . Page 6
Evaporator . . . . . Page 7
Gearmotor Assembly . . . . . Page 8
Control Box . . . . . Page 9
Water System . . . . . Page 10
Wiring Diagrams . . . . . Page 11

MDT5N25 & MTD5N40 SERVICE PARTS

Cabinet

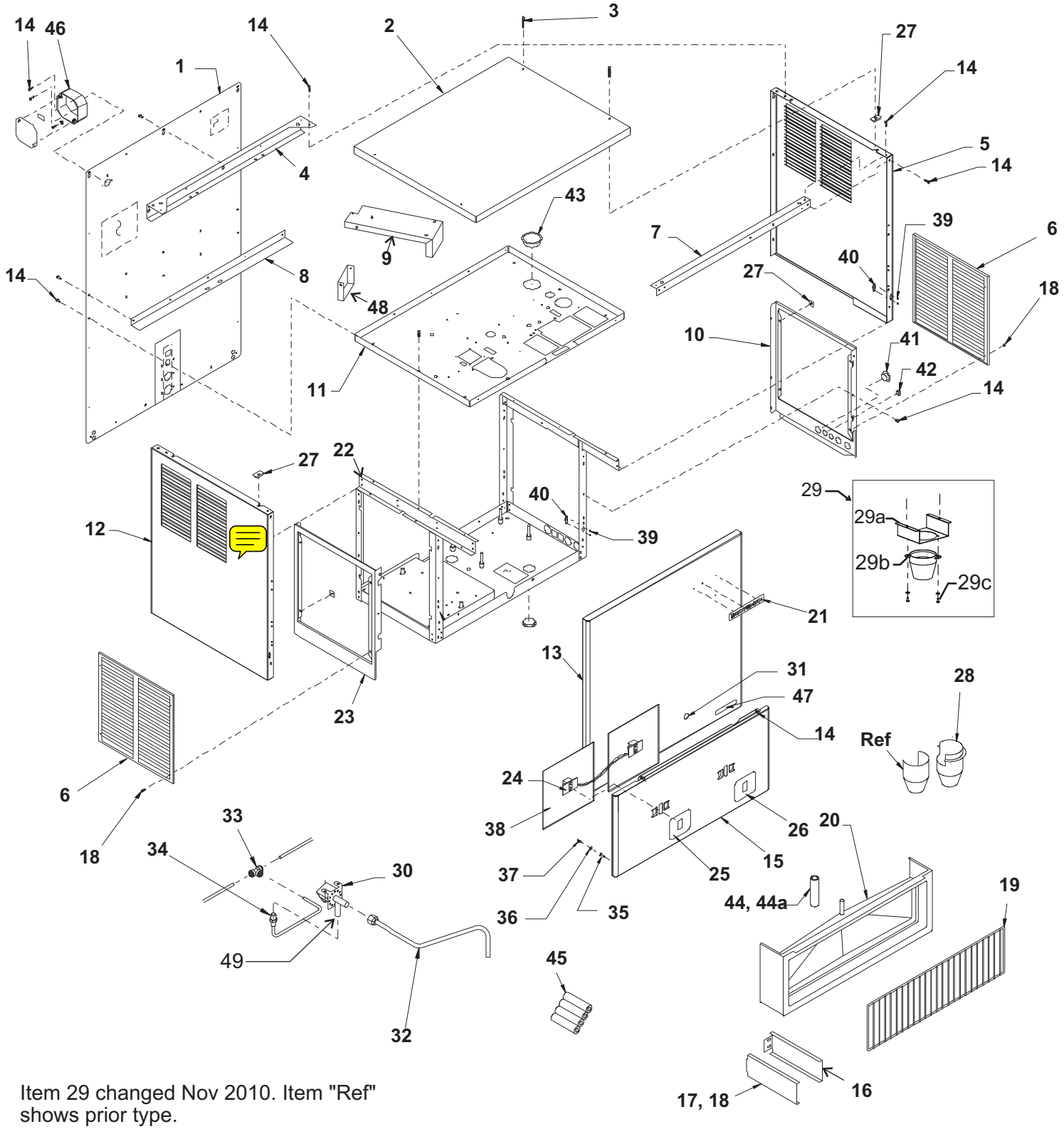

Item 29 changed Nov 2010. Item "Ref" shows prior type.

MDT5N25 & MTD5N40 SERVICE PARTS
Cabinet

MDT5N25

ITEM NUMBER	PART NUMBER	DESCRIPTION
1	A32954-002	Back Panel, stainless
2	A37769-001	Top Panel, stainless
3	03-1419-16	Panel screw
4	A32938-015	Hanger Brace
5	A37768-022	Rt. side panel, stainless
6	A33113-002	Service panel, stainless
7	A32939-015	Front Brace
8	A32940-015	Support angle
9	A32949-015	Gearmotor Support
10	A32953-002	Rt. side lower, stainless
11	A32956-015	Upper plate assembly
12	A37768-021	Lt. side panel, ss
13	A37770-021	Up front panel, stainless
14	03-1531-01	Screw
15	A37790-021	Splash panel with labels
16	A34917-015	RH sink support
17	A34917-015	LH sink support
18	03-1645-01	Screw
19	02-2951-01	Grill
20	02-2944-20	Sink, gray
21	15-0808-01	Emblem
22	A32958-001	Lower frame assy
23	A32952-002	Lt side lower, stainless
24	12-2495-21	Touch free sensors
25	17-2830-01	Ice label, grey
26	17-2830-02	Water label, grey
27	03-1423-06	Speed nut
28	02-3365-01	Water chute
29	A39845-021	Ice Chute kit - for prior units
29a	A39845-001	Bracket
29b	02-3944-01	Chute
29c	03-1531-01	Screw
30	12-1646-01	Solenoid Assembly (115v)
	12-1646-06	Solenoid (230v)
31	12-2391-01	Key lock sw, Gov. Units only
32	A36762-001	Water line
33	16-1040-01	Tee union
34	16-1046-01	Connector
35	03-1734-01	Insert
36	03-1417-27	Lock washer
37	03-1733-01	Ball stud
38	19-0644-01	Insulation pad
39	no number	Rivet
40	03-1733-02	Retainer
41	02-1874-05	Hole plug
42	02-1874-07	Hole plug
43	no number	Bushing
44	13-0079-01	Hose, order 1
44a	02-2814-06	Hose clamp
45	A32235-001	Leg for Gov. Units
46	12-0346-00	Junction box
47	15-0803-01	Touch-Free label
48	Part of item 9	
49	16-0643-00	Inlet adapter (half union)

MDT5N40

ITEM NUMBER	PART NUMBER	DESCRIPTION
1	A33112-002	Back Panel, stainless
2	A37769-001	Top Panel, stainless
3	03-1419-16	Panel screw
4	A32938-015	Hanger Brace
5	A37787-022	Rt. side panel, stainless
6	A33113-002	Service panel, stainless
7	A32939-015	Front Brace
8	A32940-015	Support angle
9	A33107-015	Gearmotor Support
10	A32953-002	Rt. side lower, stainless
11	A32956-015	Upper plate assembly
12	A37787-021	Lt. side panel, ss
13	A37788-021	Up front panel, stainless
14	03-1531-01	Screw
15	A37790-021	Splash panel with labels
16	A34917-015	RH sink support
17	A34917-015	LH sink support
18	03-1645-01	Screw
19	02-2951-01	Grill
20	02-2944-20	Sink, gray
21	15-0808-01	Emblem
22	A32958-001	Lower frame assy
23	A32952-002	Lt side lower, stainless
24	12-2495-21	Touch free sensors
25	17-2830-01	Ice label, grey
26	17-2830-02	Water label, grey
27	03-1423-06	Speed nut
28	02-3365-01	Water chute
29	A39845-021	Ice Chute kit - for prior units
29a	A39845-001	Bracket
29b	02-3944-01	Chute
29c	03-1531-01	Screw
30	12-1646-01	Solenoid Assembly (115v)
	12-1646-06	Solenoid (230v)
31	12-2391-01	Key lock, Gov. units only
32	A36762-001	Water line
33	16-1040-01	Tee union
34	16-1046-01	Connector
35	03-1734-01	Insert
36	03-1417-27	Lock washer
37	03-1733-01	Ball stud
38	19-0644-01	Insulation pad
39	no number	Rivet
40	03-1733-02	Retainer
41	02-1874-05	Hole plug
42	02-1874-07	Hole plug
43	no number	Bushing
44	13-0079-01	Hose, order 1
44a	02-2814-06	Hose clamp
45	A32235-001	Leg for Gov. Units
46	12-0346-00	Junction box
47	15-0803-01	Touch-Free label
48	Part of item 9	
49	16-0643-00	Inlet adapter (half union)

MDT5N25 & MTD5N40 SERVICE PARTS
Air Cooled Refrigeration

ITEM NUMBER	PART NUMBER	DESCRIPTION
1	02-4406-01	Insulation
2	11-0488-21	Thermo Expansion Valve
3	A39817-021	Suction Line for N25
	A39819-021	Suction Line for N40
4	A33194-020	Evaporator
5	03-1405-41	Screw
6	18-8720-21	Compressor, 115v, 60 Hz
	18-5700-50	Overload for 115v comp.
	18-8720-26	Compressor, 230v, 50 Hz
	18-5700-55	Overload for 230v comp.
J Series Compressor	18-8948-21	Compressor, 115/60
	18-8948-50	Overload for 115 v comp
	18-8948-22	Compressor, 230/50
	18-8948-51	Overload for 230 v comp
7	03-1406-10	Hex nut
8	02-3319-02	Dryer
9	18-2200-27	Mounting Sleeve
10	18-2200-28	Mounting Grommet
11	18-8850-01	Fan Motor, 115v 60 Hz
	18-8736-06	Fan motor, 230v, 50 Hz
12	02-3359-01	Fan Bracket
13	11-0485-22	Hi Press. Cut Out
14	18-8859-01	Fan Blade
15	A33110-015	Fan Shroud
16	18-8847-01	Condenser
17	03-1645-01	Screw
18	16-0832-20	Access valve
	16-0832-02	Stem cap
	16-0832-03	Port cap
Access valve change, November 2007		
18a1	16-1137-01	Access valve seat
18a2	16-1139-01	Core
18a3	16-1140-01	Cap

A thru H series compressor

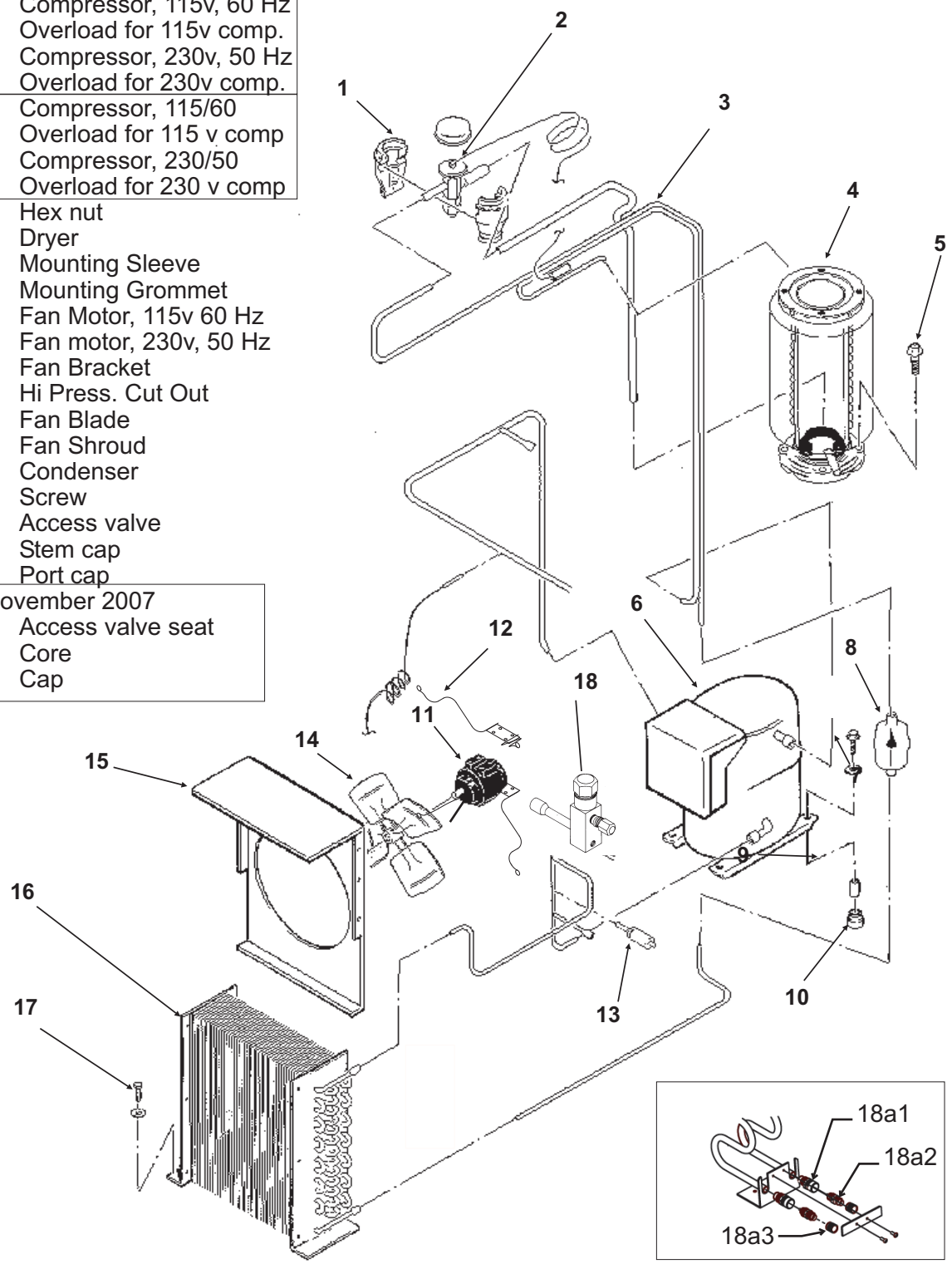

MDT5N25 & MTD5N40 SERVICE PARTS
Water Cooled Refrigeration

ITEM NUMBER	PART NUMBER	DESCRIPTION
1	02-4406-01	Insulation
2	11-0488-21	Thermo Exp. Valve
3	A39817-021	Suction Line for N25
	A39819-021	Suction Line for N40
4	A33194-020	Evaporator
5	03-1405-41	Screw
6	02-3319-02	Dryer
7	03-1406-10	Hex Nut
8	18-2200-27	Mounting Sleeve
9	18-2200-28	Mounting Grommet
10	18-8720-21	Compressor, 115v 60 Hz
	18-5700-50	Overload for 115v comp.
	18-8720-26	Compressor, 230v, 50 Hz
	18-5700-55	Overload for 230v comp.
J Series Compressor	18-8948-21	Compressor, 115/60
	18-8948-50	Overload for 115 v comp
	18-8948-22	Compressor, 230/50
	18-8948-51	Overload for 230 v comp
11	16-0832-20	Access valve
12	11-0485-22	High Press. Cut Out
13	11-0608-21	Water Reg. Valve
14	16-1154-22	Adaptor kit
15	16-1154-23	Adaptor kit
16	03-1405-17	Screw
17	03-1410-03	Lock washer
18	18-3305-25	Condenser for A series
	18-8871-21	B - J series condenser
Access valve change, November 2007		
16a1	16-1137-01	Access valve seat
16a2	16-1139-01	Core
16a3	16-1140-01	Cap

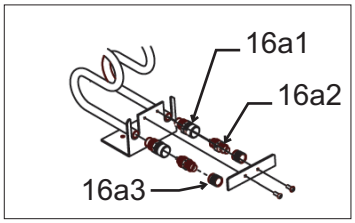

MDT5N25 & MTD5N40 SERVICE PARTS

Ice Dispensing

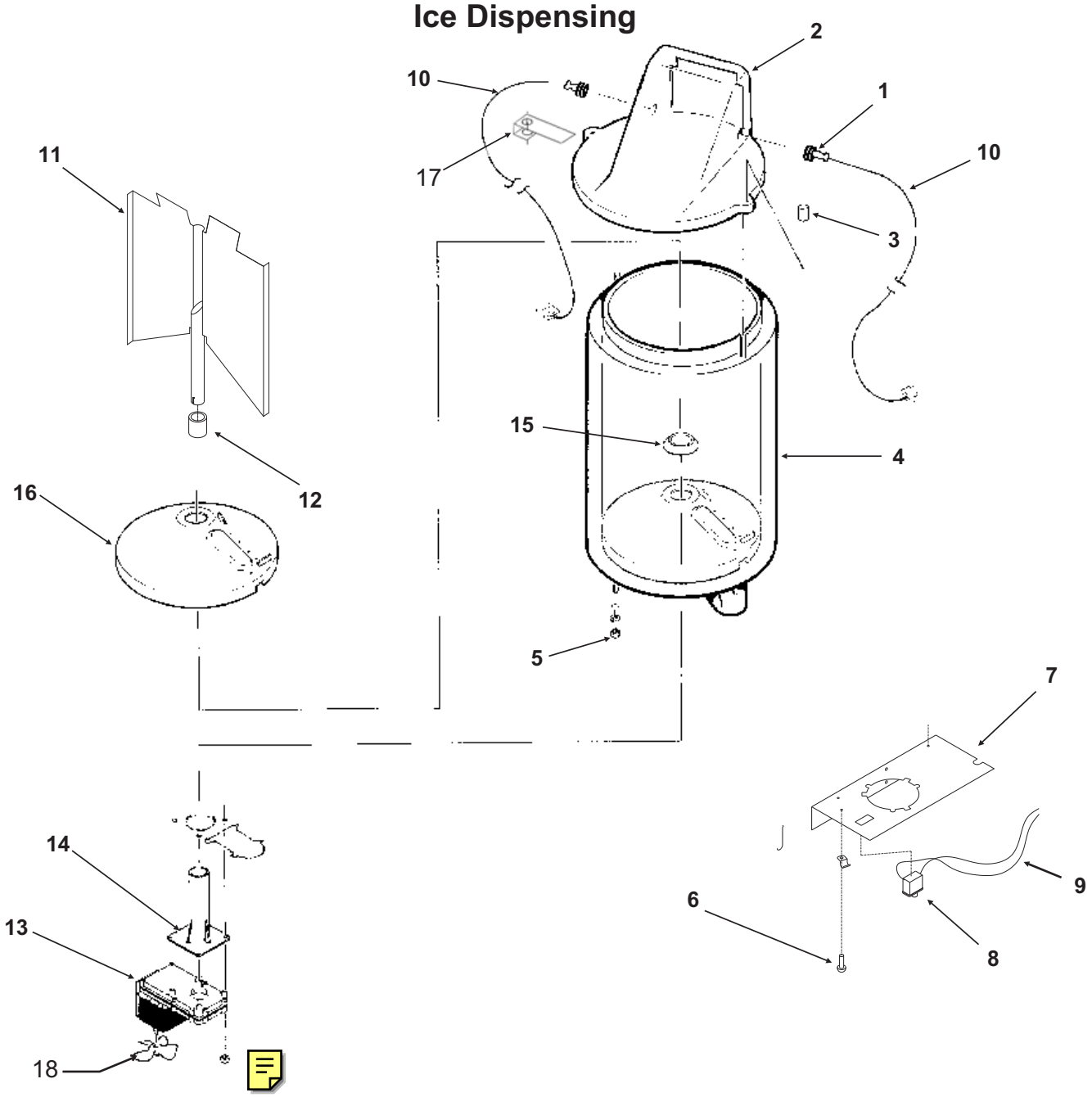

ITEM NUMBER	PART NUMBER	DESCRIPTION
1	13-0866-01	Grommet, Bin Control
2	A34493-023	Bin top
3	A38033-001	SS clip
	03-0255-00	Wing Nut
4	A34496-001	MDT5N25 Storage Bin
	A34496-002	MDT5N40 Storage Bin
5	03-1406-09	Hex nut
	03-1410-03	Lock washer
6	03-1531-01	Screw
7	A37803-001	Valve plate
8	12-2501-01	Switch (Touch Free off)
9	no number	Wires
10	A37710-021	Ice Level Sensor (set)

ITEM NUMBER	PART NUMBER	DESCRIPTION
11	A37268-001	MDT5N25 Bin vane (inc. #12)
	A37267-001	MDT5N40 Bin vane (inc. #12)
12	02-3327-01	Bearing
13	12-2677-21	Bin Drive Motor (115v)
	12-2677-26	Bin Drive Motor (230v)
14	02-1971-00	Bracket
15	13-0747-00	Water Shed
16	A32657-001	Bin Bottom
17	A38033-001	Bin top bracket
18	12-0675-25	Fan blade

MDT5N25 & MTD5N40 SERVICE PARTS

Evaporator

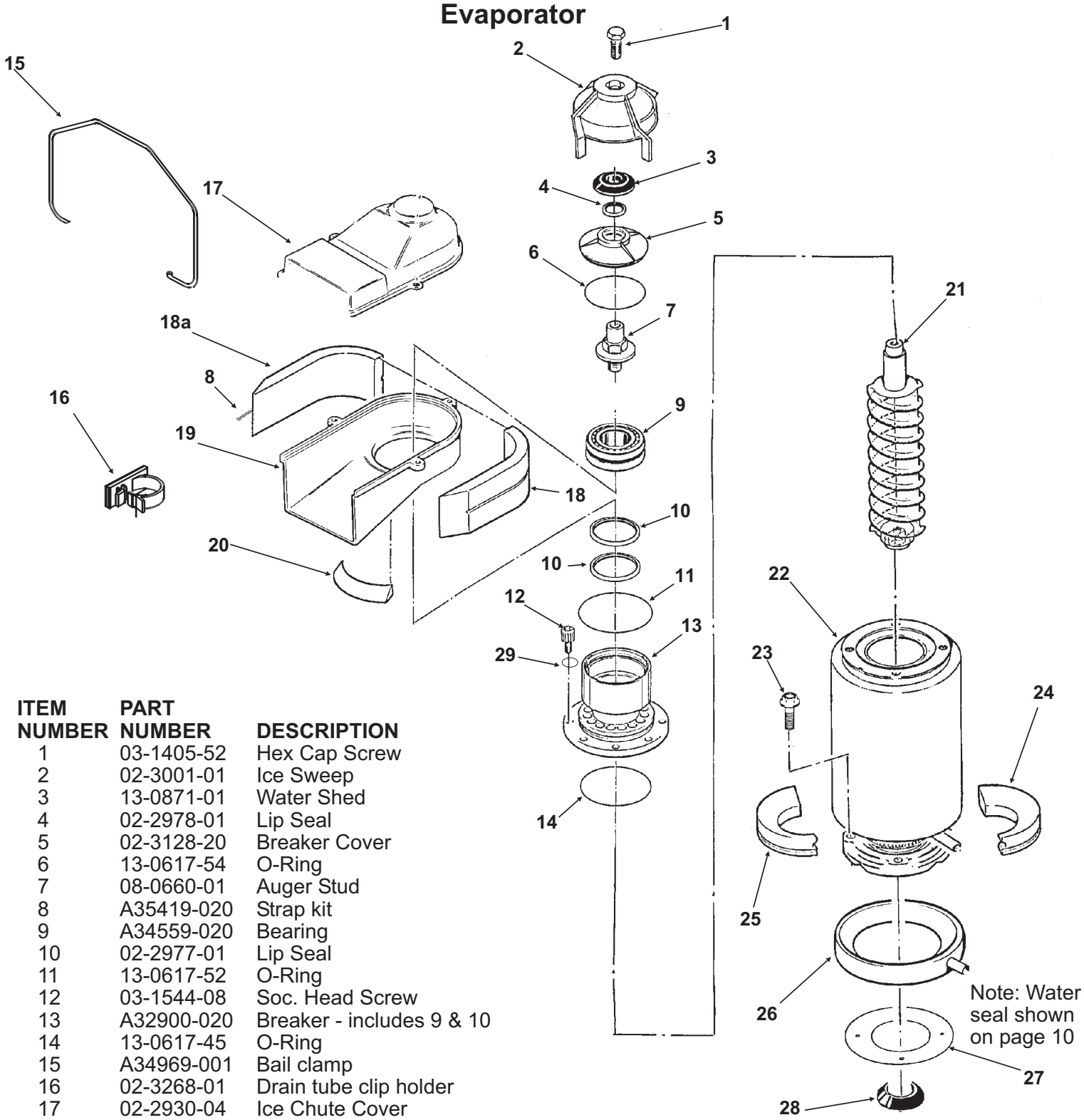

ITEM NUMBER	PART NUMBER	DESCRIPTION
1	03-1405-52	Hex Cap Screw
2	02-3001-01	Ice Sweep
3	13-0871-01	Water Shed
4	02-2978-01	Lip Seal
5	02-3128-20	Breaker Cover
6	13-0617-54	O-Ring
7	08-0660-01	Auger Stud
8	A35419-020	Strap kit
9	A34559-020	Bearing
10	02-2977-01	Lip Seal
11	13-0617-52	O-Ring
12	03-1544-08	Soc. Head Screw
13	A32900-020	Breaker - includes 9 & 10
14	13-0617-45	O-Ring
15	A34969-001	Bail clamp
16	02-3268-01	Drain tube clip holder
17	02-2930-04	Ice Chute Cover
18	A32963-001	Insulation top (1/2)
18a	A32963-002	Insulation top (1/2)
19	02-2943-01	Ice Chute Body
20	A33102-001	Insulation Collar Inside
21	A38071-021	Auger
22	A33194-020	Evaporator
23	03-1405-41	Screw
24	02-4358-01	Insulation wrap
25	same as item 24, use 1 per unit	
26	02-3837-01	Drip Pan
27	13-0704-00	Drip Pan Gasket
28	02-4663-01	Water Shed
29	03-1408-26	Washer

MDT5N25 & MTD5N40 SERVICE PARTS

Gearmotor Assembly

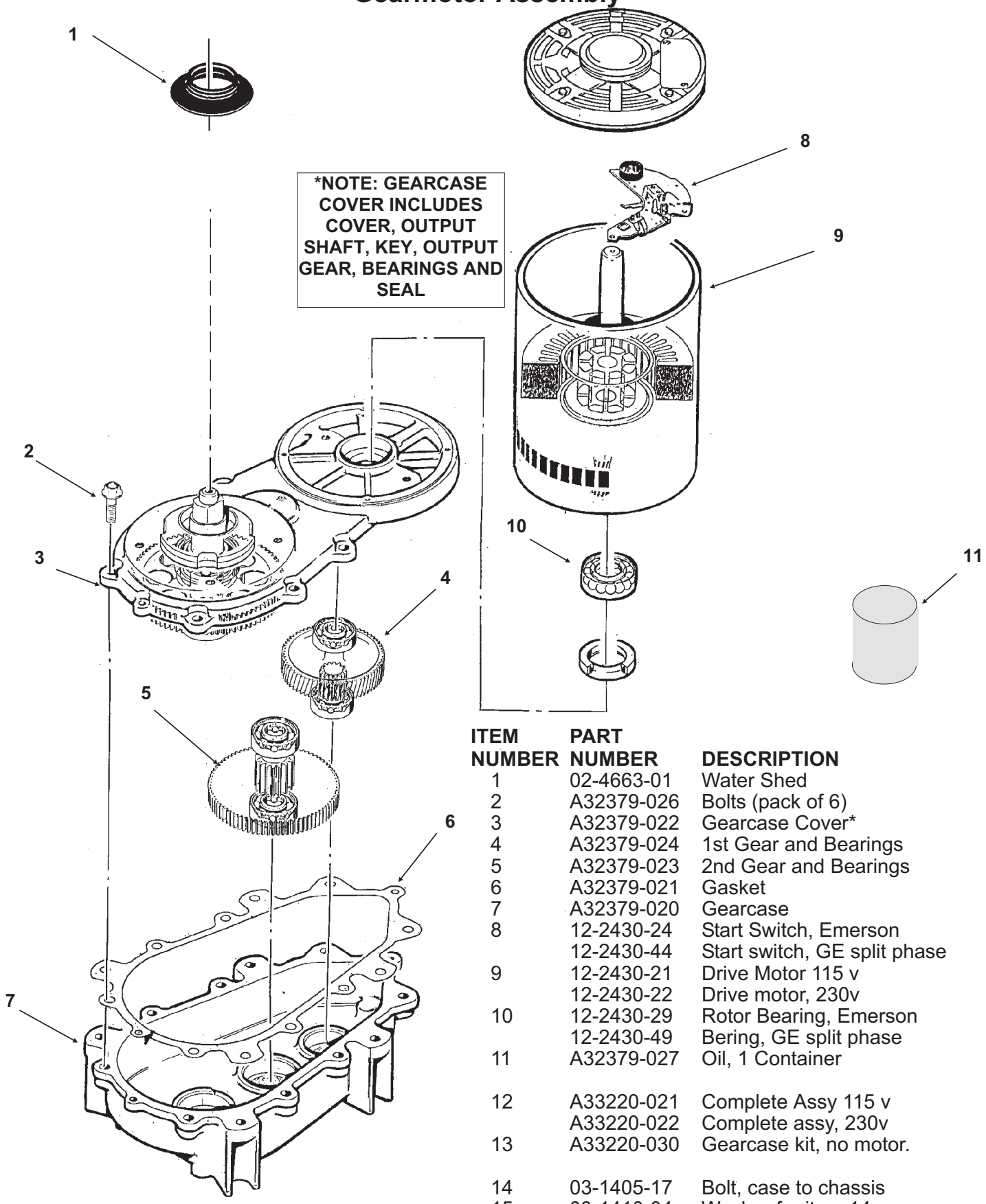

ITEM NUMBER	PART NUMBER	DESCRIPTION
1	02-4663-01	Water Shed
2	A32379-026	Bolts (pack of 6)
3	A32379-022	Gearcase Cover*
4	A32379-024	1st Gear and Bearings
5	A32379-023	2nd Gear and Bearings
6	A32379-021	Gasket
7	A32379-020	Gearcase
8	12-2430-24	Start Switch, Emerson
	12-2430-44	Start switch, GE split phase
9	12-2430-21	Drive Motor 115 v
	12-2430-22	Drive motor, 230v
10	12-2430-29	Rotor Bearing, Emerson
	12-2430-49	Bering, GE split phase
11	A32379-027	Oil, 1 Container
12	A33220-021	Complete Assy 115 v
	A33220-022	Complete assy, 230v
13	A33220-030	Gearcase kit, no motor.
14	03-1405-17	Bolt, case to chassis
15	03-1410-04	Washer for item 14

MDT5N25 & MTD5N40 SERVICE PARTS
Control Box

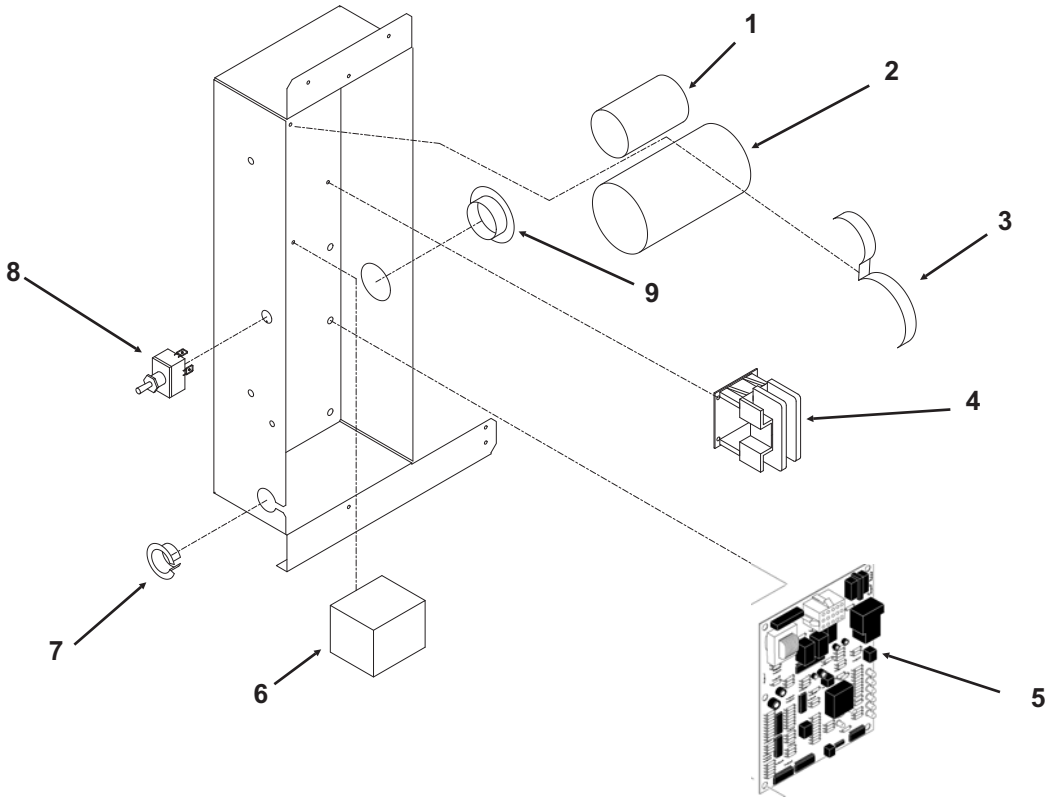

ITEM NUMBER	PART NUMBER	DESCRIPTION
1	18-1902-68	Run capacitor, 115v, 60 Hz, A - H series
	18-1902-64	Run capacitor, 115/60, J series
	18-1902-65	Run capacitor, 230/50, J series
2	18-1901-49	Start Capacitor, 115v 60 Hz, A- H series
	18-2200-35	Start capacitor, 230v. 50 Hz, A-H series
	18-1901-65	Start capacitor, 115/60, J series
	18-1901-66	Start capacitor, 230/50, J series
	18-2200-38	Cap for start capacitor
3	A36141-001	Capacitor strap
4	12-2469-03	Contactor, 115v, 60 Hz
	12-2469-02	Contactor, 230v, 50 Hz
5	12-2843-21	60 Hz (115v) circuit board
	12-2843-26	50 Hz (230v) circuit board
5a	12-2499-01	Standoff for circuit board
6	18-1903-44	Potential Relay, 115v, 60 Hz, all series
	18-1903-54	Potential Relay, 230v, 50 Hz, all series
7	12-1213-10	Bushing
8	12-2637-01	Switch
9	12-1213-12	Bushing

Not shown

10	A36146-001	Control box cover
11	12-2491-01	Harness, AC
	12-2491-02	Harness, WC

MDT5N25 & MTD5N40 SERVICE PARTS
Water System

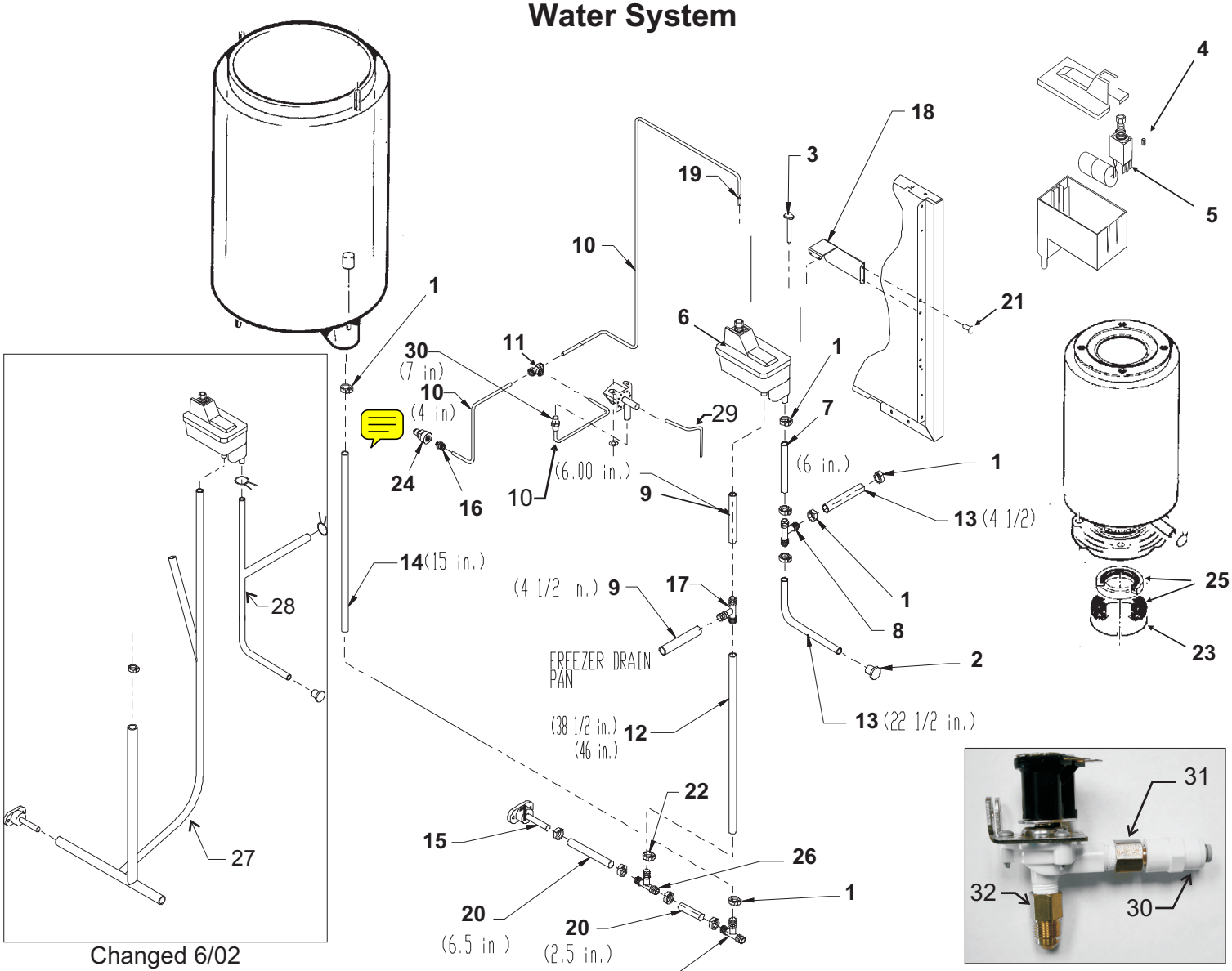

Changed 6/02

ITEM NUMBER	PART NUMBER	DESCRIPTION
1	02-2814-08	Clamp
2	13-0840-01	Plug
3	A33101-022	Water Level Sensor
4	02-3266-03	Plunger/seat
5	02-3266-02	Float valve - top inlet
	02-3371-02	Float valve elbow inlet
6	02-3266-01	Reservoir, top inlet
	02-3371-01	Reservoir, elbow inlet
7	13-0674-06	Tubing
8	16-0670-01	Tee
9	13-0079-03	Tubing
10	13-0895-01	Plastic tubing, order by foot
11	16-1040-01	Tee union
12	13-0079-03	Drain Tube, MDT5N25 req. 39", MDT5N40 req. 46"
13	13-0674-06	Tubing
14	13-0079-01	Bin Drain Tube, req. 15"
15	02-3692-21	Drain Casting
16	16-1039-01	Male connector
17	16-0670-02	Tee
18	A37804-001	Reservoir bracket
19	16-0871-01	Brass insert
20	13-0679-01	Drain tube
21	03-1531-01	Screw
22	02-2814-07	Clamp
23	A32777-001	Retaining Ring
24	16-0835-01	Inlet fitting for plastic
25	02-0929-23	Water Seal
26	16-0670-04	Tee
27	02-3901-01	MDT5N40 drain tube, replaces items 9, 12, 20, 26, 17 and 8
	A38259-001	MDT5N25 drain tube, replaces items 9, 12, 20, 26, 17 and 8
28	A38260-001	Reservoir inlet tubing replaces items 13, 8 and 7
29	A36762-001	Water tube (SS) w/nut
30	16-1046-01	Female connector (to hose)
31	16-0643-00	Inlet adapter
32	16-0605-00	Outlet adapter

MDT5N25 & MTD5N40 SERVICE PARTS

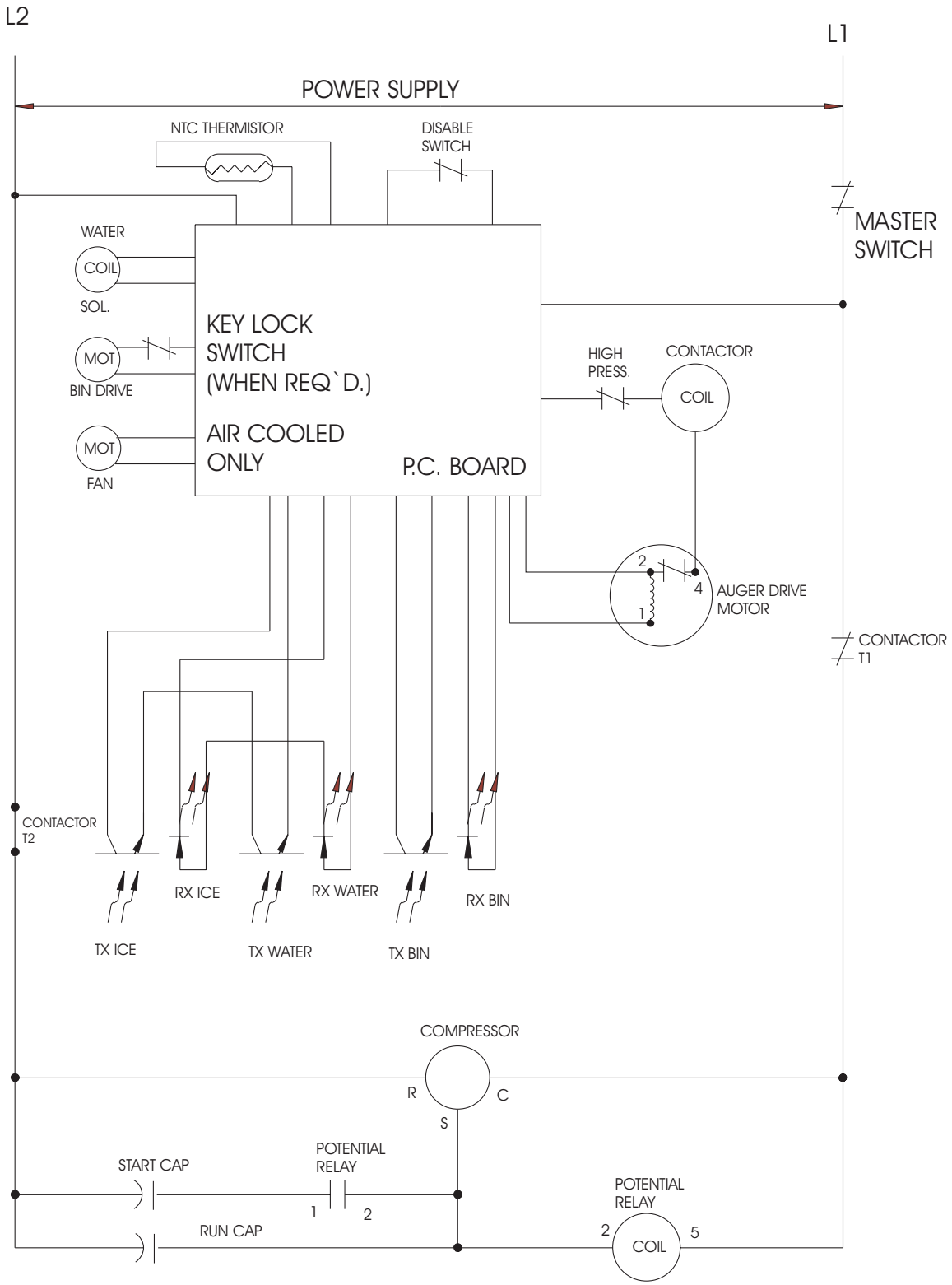

USE COPPER CONDUCTORS ONLY.
THIS UNIT MUST BE GROUNDED.
ALL CONTROLS SHOWN IN NORMAL ICE MAKING MODE WITH ALL DISPENSING SYSTEMS IN OPERATION.

MDT5N25 & MTD5N40 SERVICE PARTS

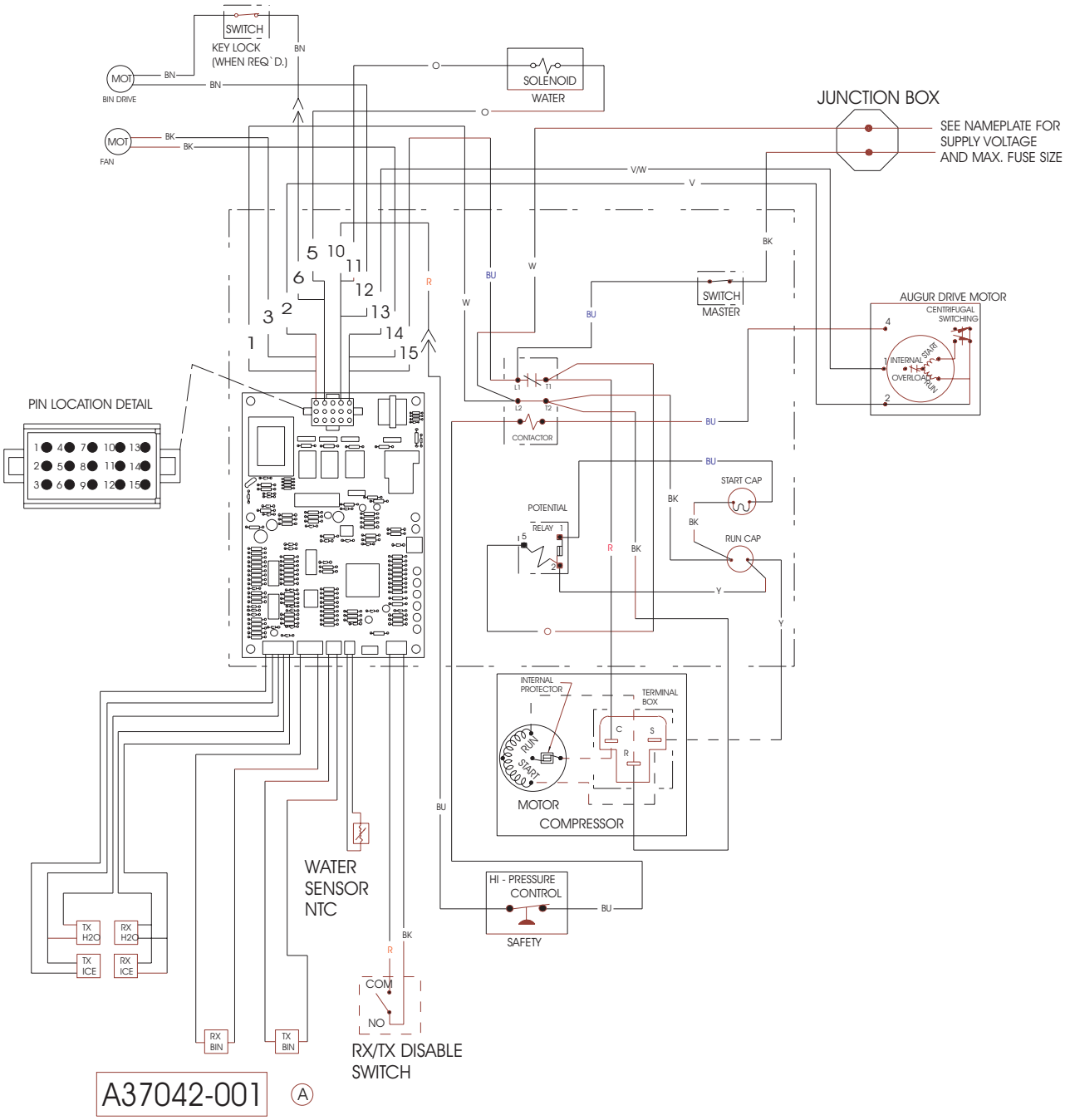

MDT5N25 & MTD5N40 SERVICE PARTS

Wiring Diagram 230/50/1

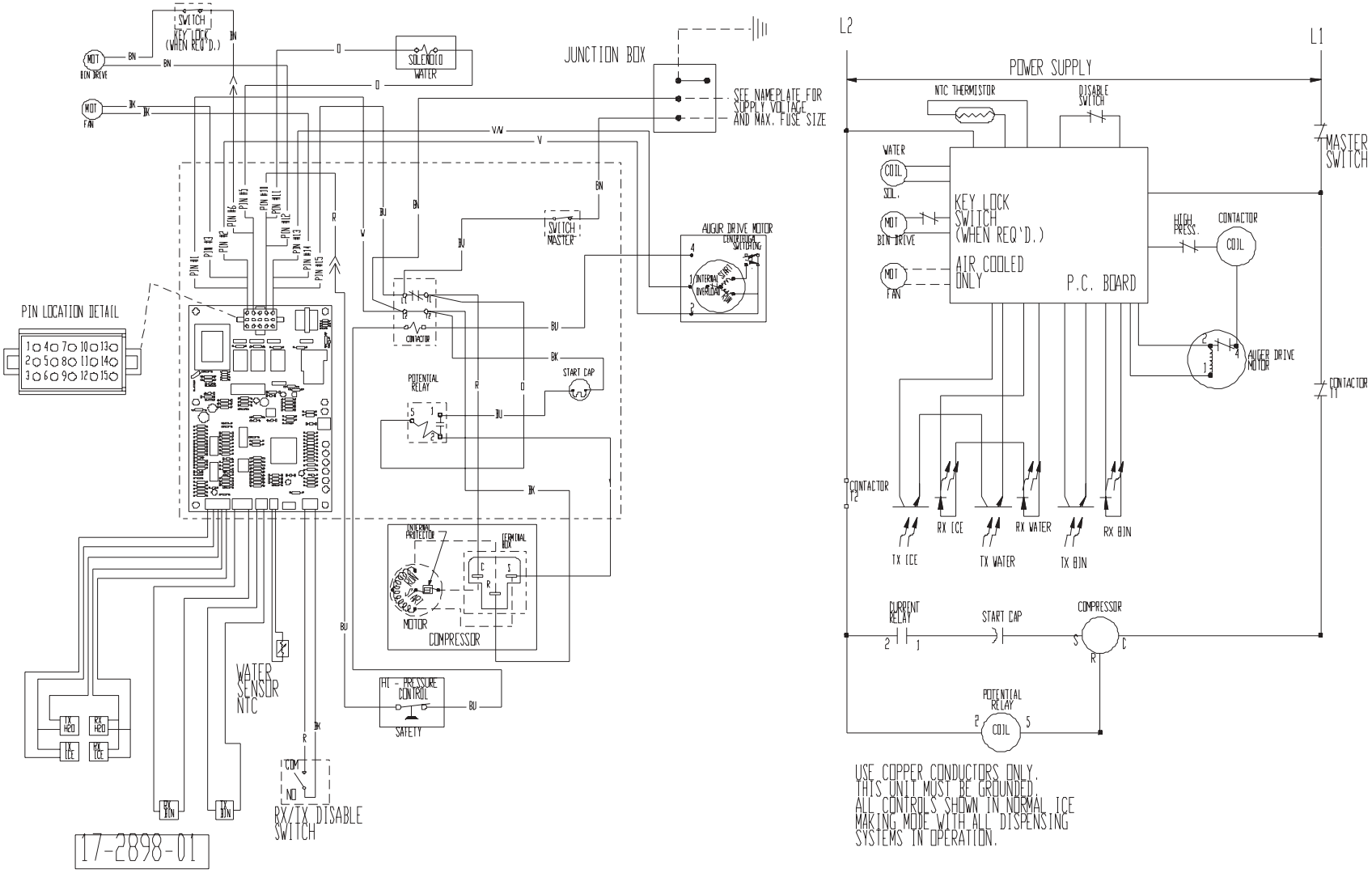

USE COPPER CONDUCTORS ONLY.
THIS UNIT MUST BE GROUNDED.
ALL CONTROLS SHOWN IN NORMAL ICE MAKING MODE WITH ALL DISPENSING SYSTEMS IN OPERATION.