Scotsman Ice Systems

PRODIGY®

C2648 – 2600 lb Cube Ice Machine

Prodigy® Modular Cube Ice Maker

PRELIMINARY

Shown on BH1300BB bin with optional KLP8S legs.

Features

Prodigy® cubers use significantly less energy and water than other cube ice machines, exceeding California and Federal energy efficiency regulations.

AutoAlert™ indicator lights constantly communicate about operating status and actually signal your staff when it's time to descale, sanitize, and more—making upkeep practically foolproof.

The patented WaterSense adaptive purge control delivers maximum reliability by reducing scale buildup for a longer time between cleanings.

Preventative maintenance is simpler than ever with easily-removed panels allowing clear access to internal components and a diagnostic code display insuring the right fix the first time.

All external panel components are crafted for optimal aesthetic appeal through superior fit and finish.

An optional advanced feature Smart-Board™ provides NAFEM data protocol and additional operational data that can be displayed on-screen or transmitted remotely, resulting in early alert and fast diagnosis of operating issues.

An optional Vari-Smart™ ultrasonic ice level control sensor allows you flexibility to program ice levels, for up to 7 days, keeping just the right amount of freshly made ice in the bin.

24 Hour Volume Production

	Remote		
	70˚F/21˚C 50˚F/10˚C lb/kg	Air	Water	AHRI 90˚F/32˚C 70˚F/21˚C lb/kg
C2648MR-3A	2570/1168		2256/1025
C2648SR-3A	2570/1168		2224/1011

Modular Bin Options

* Stainless Steel with Galvanized Back & Bottom.

Model Number	Dimensions W" x D" x H"	AHRI Certified Bin Capacity lb/kg	Application Capacity lb/kg	Finish	Ship Weight lb/kg
BH1600BB	60 x 34 x 62	1375/624	1755/796	SS w/ GBB*	370/168
BH1600SS	60 x 34 x 62	1375/624	1755/796	SS	370/168

c UL us

NSF

ENERGY STAR

CERTIFIED ISO 9001:2008

AHRI CERTIFIED www.ahridirectory.org Automatic Commercial Ice-Makers AHRI Standard 810

agion Nature's antimicrobial

NAFEM DATA PROTOCOL COMPLIANT

Bin: BH1600SS

Cube Ice

Small Cube
⅞" x ⅞" x ⅜"
(2.22 x 2.22 x .95 cm)

Medium Cube
⅞" x ⅞" x ⅞"
(2.22 x 2.22 x 2.22 cm)

Common ice form, ideal for mixed drinks.

Warranty

- 3 years parts and labor on all components.
- 5 years parts and labor on the evaporator.
- 5 years parts on the compressor and condenser.

Warranty valid in North, South & Central America.
Contact factory for warranty in other regions.

Scotsman Ice Systems · 775 Corporate Woods Parkway · Vernon Hills, IL 60061
1-800-SCOTSMAN
Fax: 847-913-9844
E-mail: customer.relations@scotsman-ice.com
www.scotsman-ice.com

C2648 – 2600 lb Cube Ice Machine

Scotsman®
Ice Systems

Revit drawings available at
www.scotsman-ice.com

REVIT BY Scotsman Ice Systems

C2648 – 2600 lb Cube Ice Machine

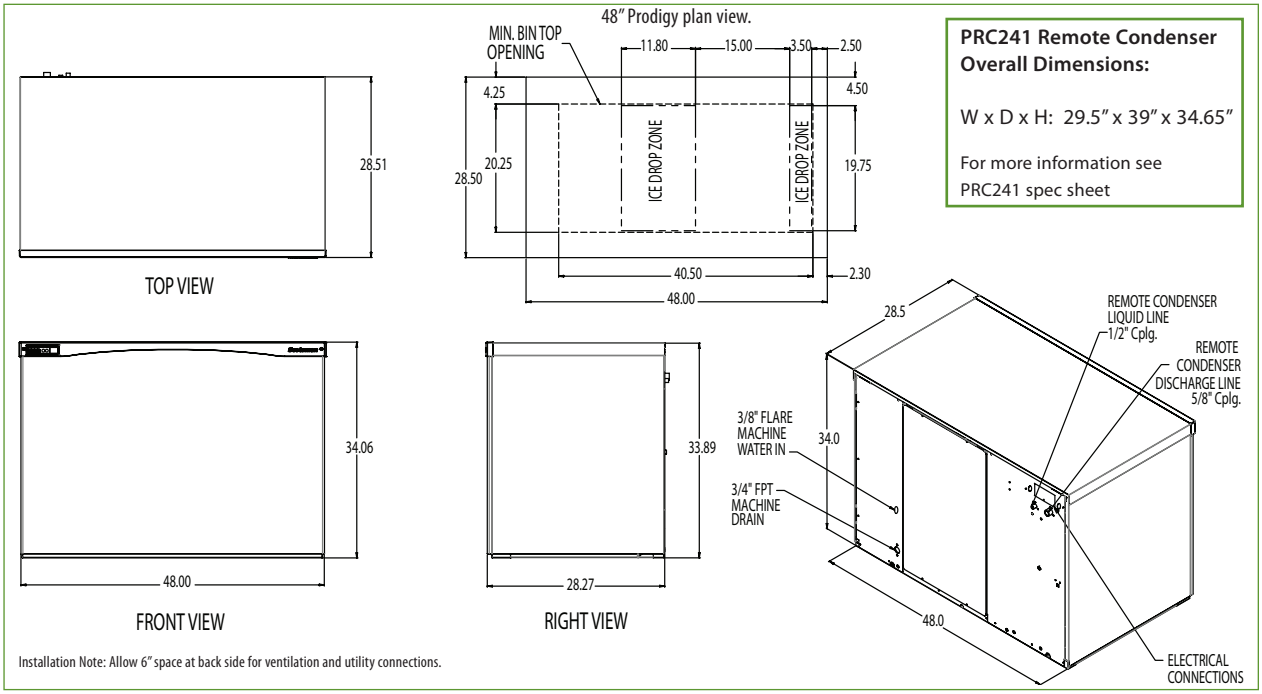

PRC241 Remote Condenser Overall Dimensions:

W x D x H: 29.5" x 39" x 34.65"

For more information see PRC241 spec sheet

Installation Note: Allow 6" space at back side for ventilation and utility connections.

Specifications

Model Number* Cube Size: medium or small	Condenser Unit	Basic Electrical Volts/Hz/Phase	Max. Fuse Size or HACR Circuit Breaker (amps)	Circuit Wires	Min. Circuit Ampacity	Energy Consumption kWh/100 lb (45.4 kg) 90˚F(32˚C)/70˚F(21˚C)	Water Usage Gallons/100 lb (liters/45.4 kg) Potable 90˚F(32˚C)/ 70˚F(21˚C)	Water Usage Gallons/100 lb (liters/45.4 kg) Condenser 90˚F(32˚C)/ 70˚F(21˚C)
med. C2648MR-3	Remote	208-230/60/3	30	3	21.6	4.34	17.0/64.4	-
sm. C2648SR-3	Remote	208-230/60/3	30	3	21.6	4.50	17.7/67.1	-

= ENERGY STAR®

All Models

Dimensions (W x D x H):
Unit:
48" x 28.5" x 34"
(121.9 x 72.39 x 86.36 cm)
Shipping Carton:
53.75" x 32.75" x 40"
(136.5 x 83.2 x 101.6 cm)
Shipping Weight:
430 lb / 195 kg
BTUs per hour:
31,600

Accessories

Model Number	Description
KVS	Vari-Smart™ Ice Level Control - Program ice bin levels to match ice needs.
KSBU	Smart-Board™ Advanced Control - Use additional operational data for fast diagnosis.
KSBU-N	Smart-Board™ Advanced Control with Network - Network capable.
PRC241-32	Remote Condenser for C2648xR, 208-230/60/1
RTEL25	Line set, Precharged, R-404A, 25ft.
RTEL40	Line set, Precharged, R-404A, 40ft.
RTEL75	Line set, Precharged, R-404A, 75ft.

* Scotsman recommends all ice machines have water filtration. See Scotsman Water Filter Spec Sheet for details.

Operating Requirements

	Minimum	Maximum
Air Temperatures	50°F (10°C)	100°F (38°C)
Water Temperatures	40°F (4.4°C)	100°F (38°C)
Remote Cond. Temps	-20°F (-29°C)	120°F (49°C)
Water Pressures	20 PSIG (1.4 bar)	80 PSIG (5.5 bar)
Electrical Voltage	-5%	+10%

Specifications and design are subject to change without notice.

Scotsman Ice Systems · 775 Corporate Woods Parkway · Vernon Hills, IL 60061
1-800-SCOTSMAN
Fax: 847-913-9844
E-mail: customer.relations@scotsman-ice.com
www.scotsman-ice.com

© 2012 Scotsman Ice Systems.