ID150, ID200 and ID250 Service Parts

This is the parts list for ice dispensers, models ID150, ID200 and ID250.

Check voltage of unit parts are being ordered for to be sure of obtaining the correct part.

Table of Contents

Cabinet & Dispenser Parts, ID150 . . . . . Page 2

Cabinet & Dispenser Part Numbers, ID150 . . . . . Page 3

Cabinet & Dispenser Parts, ID200 and ID250 . . . . . Page 4

Cabinet & Dispenser Part Numbers, ID200 and ID250 . . . . . Page 5

Rotary Solenoid . . . . . Page 6

Electrical Box, ID150 . . . . . Page 7

Electrical Box, ID200 and ID250 . . . . . Page 8

Schematic Diagram . . . . . Page 9

ID150, ID200 and ID250 Service Parts

Cabinet & Dispenser Parts, ID150

Adapter Parts:

R620042921- baffle used on KBT40, no hardware needed

*R620042928 - baffle used on KBT42

*Use 2 each of hardware R620701903, R620701901, and R620701902 to attach the baffle.

KBT42 manual fill door: R52944

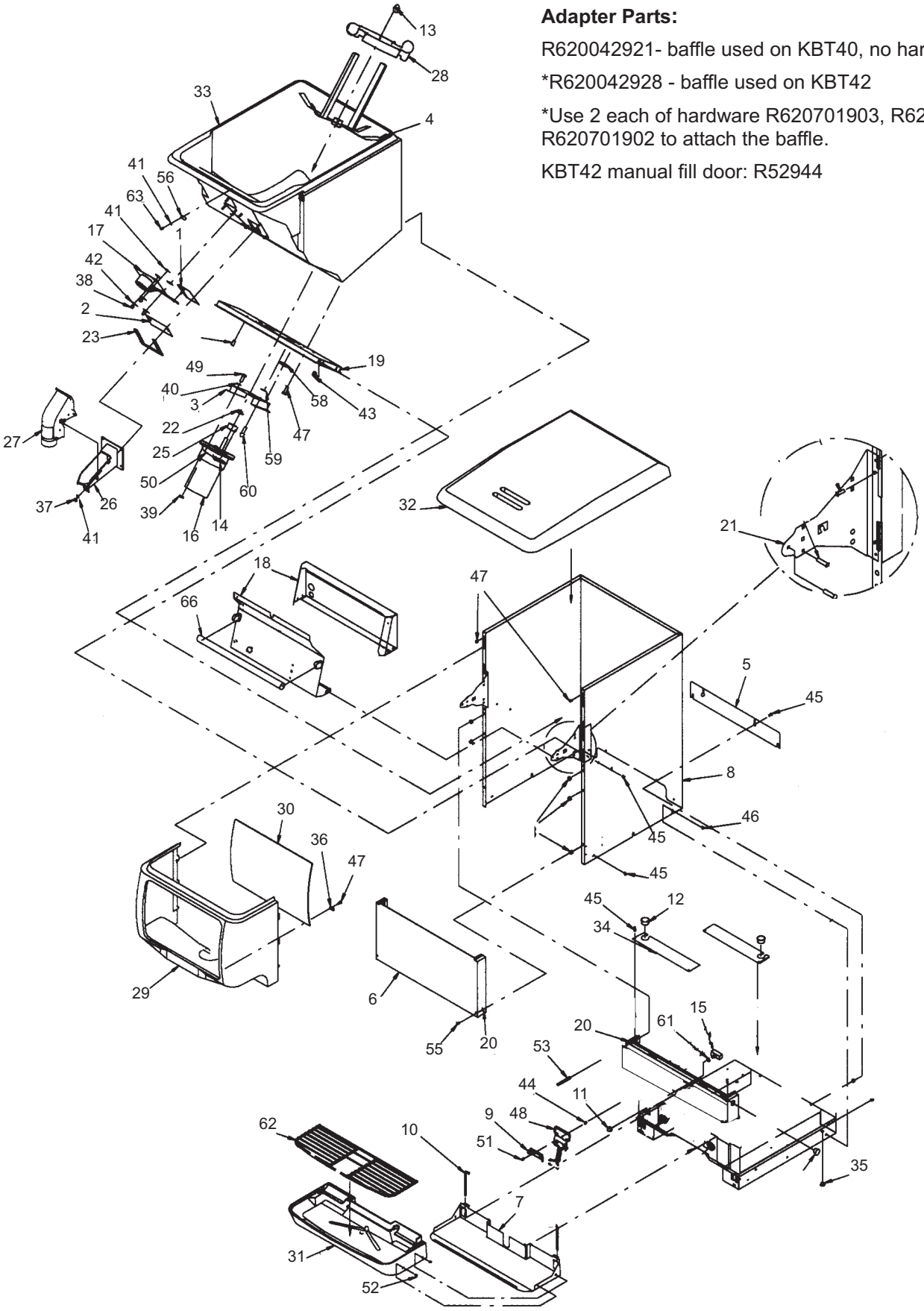

ID150, ID200 and ID250 Service Parts

Cabinet & Dispenser Part Numbers, ID150

Item No.	Part No.	Description
1	R21491	Gate Slide
2	R22081R	Gate Restrictor
3	R29303R	Plate, Motor Mounting
4	R15346	Agitator Assy
5	R29483	Cover, Rear Wrapper
6	R629080206	Lower Panel (F/Drip Tray)
7	R15199	Extension Assy, Drip Tray
8	R29313	Wrapper (ED 150)
9	R27107	Retainer, Lever, Ice Dispense
10	R10145	Pin, Drip Tray Mounting
11	R31007	Boot, Switch
12	R50767	Snap Bushing
13	R15087	Retainer, Agitator
14	R30794	Agitator Motor Heater, 120 V
	R32826	Agitator Motor Heater, 230 V
15	R30895	Dispense switch
16	R620307901	Agitator Motor, 120 Volt
	R620307902	Agitator Motor, 220-240 Volt
17	R32954	Solenoid Assembly, 120 Volt
	R33409	Solenoid Assembly, 230 Volt
18	R620303301	Electrical Box Ass'y, 120 V
	R620303302	Electrical Box Ass'y, 230 V
19	R29304	Bracket, Motor Mounting
20	R71010	Washer, Captivating No. 8
21	R620019701	Hinge, Gusset
22	R51859	Seal, Agitator Motor Shaft
23	R51891	Gasket, Gate
*24	R51908	Plug (120 Volt Models Only)
25	R52876	Gasket, Motor Shaft
26	R620500901	Ice Chute
27	R53168	Cover, Ice Chute
28	R53227	Agitator Disk
29	R52999	Merchandiser, Gray (150)
	R15756	Merchandiser, S.S. (150)
30	R52877	Panel, Plexiglass, Inner (150)
31	R629087531	Drip Tray, Gray. Includes items 7 and 10
32	R53019	Lid, Dispenser, Gray
33	R52926	Hopper Assy., Foamed
34	R15437	Baffle
35	R52967	Plug
36	R52972	Clip, White
37	R70016	Hex Nut, No. 10-32
38	R70017	Hex Nut, No. 10-32, Nyloc
39	R70018	Hex Nut, 1/4-20
40	R70048	Washer, .255 I.D.
41	R70056	Washer, No. 10, .219 I.D.
42	R70067	Washer, .218 I.D.
43	R70076	Hex Nut, No. 8-32
44	R70104	Insert, Threaded, No. 8-32
45	R70171	Machine Screw, Phil
46	R70178	Machine Screw, Phil
47	R70204	Sheet Metal Screw, Phil
48	R15500	Lever, Cup Dispense
49	R70260	Machine Screw, Phil Rd Hd,
50	R70341	Spring, Motor Heater
51	R620701601	Thread Forming Screw, Phil
52	R70478R	Clip, Push On
53	R70555	Machine Screw, Phil
54	R70750	Hose Clamp, Worm
*55	R71006	Machine Screw, Phil
56	R53299	Clip, Black
*57	R71011	Leg
58	R70992	Receptacle, 1/4 Turn
59	R70993	Retainer, 1/4 Turn
60	R70994	Stud Wing Head, 1/4 Turn
61	R70847	Spacer, Switch
62	R71036	Cup Rest
63	R71089	Shoulder Screw, No. 8-32
*64	R51288	Adapter, 1" Barb x 3/4 MPT
*65	R50952	Adapter, 3/4 Soc x 3/4 FPT
66	R32622	Bulb, 18" daylight

* Not shown

ID150, ID200 and ID250 Service Parts

Cabinet & Dispenser Parts, ID200 and ID250

Adapter Parts:

R620042921 - baffle used on KBT40, no hardware needed

R620042913 - baffle used on KBT41, no hardware needed

*R620042927 - baffle used on KBT43, 44, and 46.

*Use 2 each of hardware R620701903, R620701901, and R620701902 to attach the baffle.

KBT46, KBT43 and KBT46 manual fill door: R53003

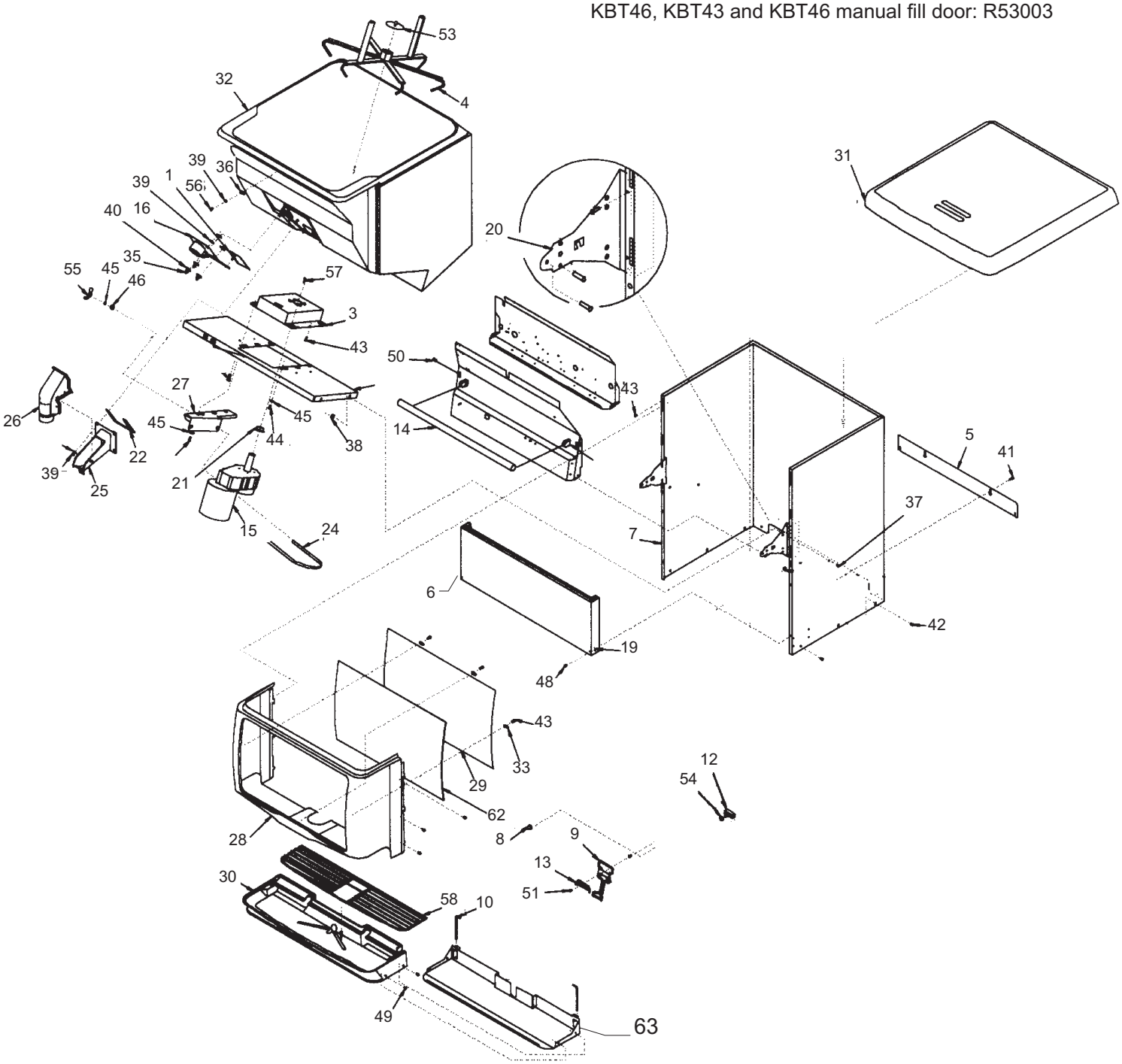

ID150, ID200 and ID250 Service Parts

Cabinet & Dispenser Part Numbers, ID200 and ID250

Item No.	Part No.	Description
1	R21491	Slide, Gate
*2	R22081R	Restrictor, Gate
3	R29541R	Plate, Motor Mount
4	R29694	Agitator
5	R29555	Cover, Rear Wrapper
6	R629080208	Panel, Lower Front
7	R629088543	Cabinet - ID200
	R629088544	Cabinet - ID250
8	R31007	Boot, Switch
9	R15500	Dispense Lever, Short
10	R10145	Pin, Drip Tray
*11	R30794	Agitator Motor Heater 115 V
12	R30895	Dispense Switch
13	R27107	Retainer, Ice Dispense lever
14	R31928	Bulb, Fluorescent
15	R33387	Agitator Motor 120 Volt
	R33404	Agitator Motor 220-240 Volt
16	R32954	Solenoid Ass'y 120 Volt
	R33409	Solenoid Ass'y 220-240 Volt
17	R620302501	Elec Box Ass'y, 120V ID 200
	R620302502	Elec Box Ass'y, 120V ID 250
	R620310201	Elec Box Ass'y, 230V ID 200
	R620310202	Elect Box Ass'y, 230V ID 250
18	R29542	Bracket, Motor Mount
19	R71010	Washer, Captivating No. 8
20	R620019701	Hinge Gusset
21	R53199	Seal, Motor
22	R1891	Gasket, Gate
*23	R51908	Plug
24	R71025	Strap, Motor
25	R620500901	Ice Chute
26	R53168	Ice Chute Cover
27	R15132	Motor Mount
28	R53001	Merchandiser, Gray (ID250)
	R53000	Merchandiser, Gray, (ID200)
	R15754	Merchandiser, S.S., (ID250)
	R15755	Merchandiser, S.S., (ID200)
29	R52950	Panel, Inner (250)
	R52949	Panel, inner (200)
30	R629087535	Drip Tray, Gray, Insulated, includes items 10 and 63
31	R53018	Lid, Dispenser, Gray
32	R53292	Hopper Ass'y, Insul (ID250)
	R53290	Hopper Ass'y, Insul (ID200)
33	R52972	Tab, Retaining
34	R70016	Hex Nut, No. 10-32
35	R70017	Hex Nut, No. 10-32, Nyloc
36	R53299	Tab, Retaining
37	R70242	Screw, No. 10-32 By 3/8-In.
38	R70015	Hex Nut, No. 10-32, Keps
39	R0056	Washer, No. 10
40	R70067	Washer,
41	R70171	Screw, No. 8-32 By 3/8-In.
42	R70178	Screw, No. 8-32 By 1/2-In.
43	R70204	Screw, No. 8 By 1/2-In. Long
44	R71033	Screw, 3/8-16 By 3/4-In. Long
45	R70068	Washer
46	R71061	Washer,
47	R70341	Spring, Motor Heater
48	R71006	Screw, No. 8-32 By 1 1/8-In.
49	R70478R	Clip, Push-on
50	R620022801	Brace, Reflector
51	R620701601	Sheet Mtl Screw, #10 x 1/2.
*52	R71011	Leg
53	R15087	Retainer, Agitator
54	R70847	Spacer, Switch
55	R71059	Wing Nut, 3/8-16
56	R71089	Shoulder Screw, No. 8-32
57	R71028	Shoulder Screw, 1/4-20
58	R71039	Cup Rest
*59	R51288	Adapter, 1-In. Barb By ¾ MPT (For Drip Tray Drain)
*60	R50952	Adapter, 3/4 Soc By 3/4 FPT (For Drip Tray Drain)
*61	R70750	Hose Clamp (For Drip Tray Drain)
62	see Sales	Graphic, ID200
	see Sales	Graphic, ID250
63	R620028702	Drip tray extension

* Not shown

ID150, ID200 and ID250 Service Parts

Rotary Solenoid

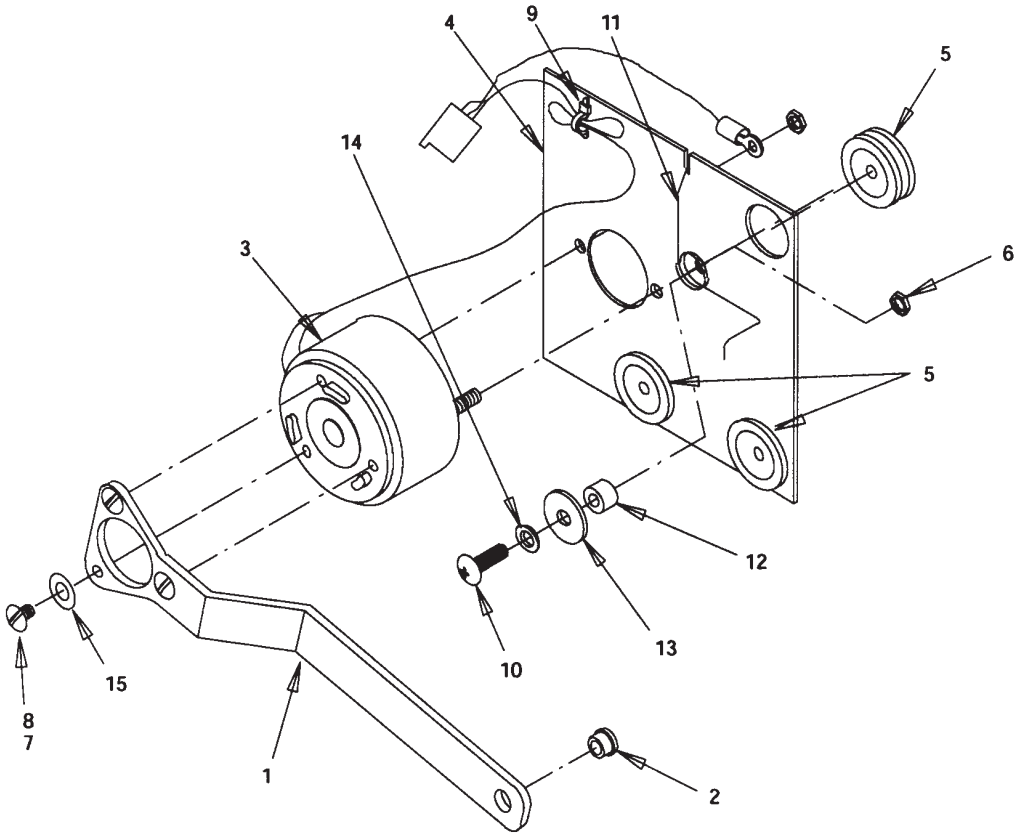

Item No	Part number	Description
1	R28173	Arm, Gate Lift
2	R50754	Bearing, Gate Arm
3	R32957	Solenoid, 120 Volts
	R33397	Solenoid, 220-240 Volts
4	R28172	Plate, Solenoid Mounting
5	R50752	Isolator
6	R70015	Hex Nut, No. 10-32
7	no number	Locktite
8	R70162	Screw, No. 8-32 By 1/4-In. Long
9	R50705	Tie Cable
10	R70165	Screw, No. 8-32 By 5/8-In. Long
11	R71007	Spring, Solenoid Arm
12	R51348	Spacer
13	R70067	Washer, .218 I.D. By .875 O.D.
14	R70057	Lockwasher, No. 10
15	R70052	Flatwasher, No. 8

ID150, ID200 and ID250 Service Parts

Electrical Box, ID150

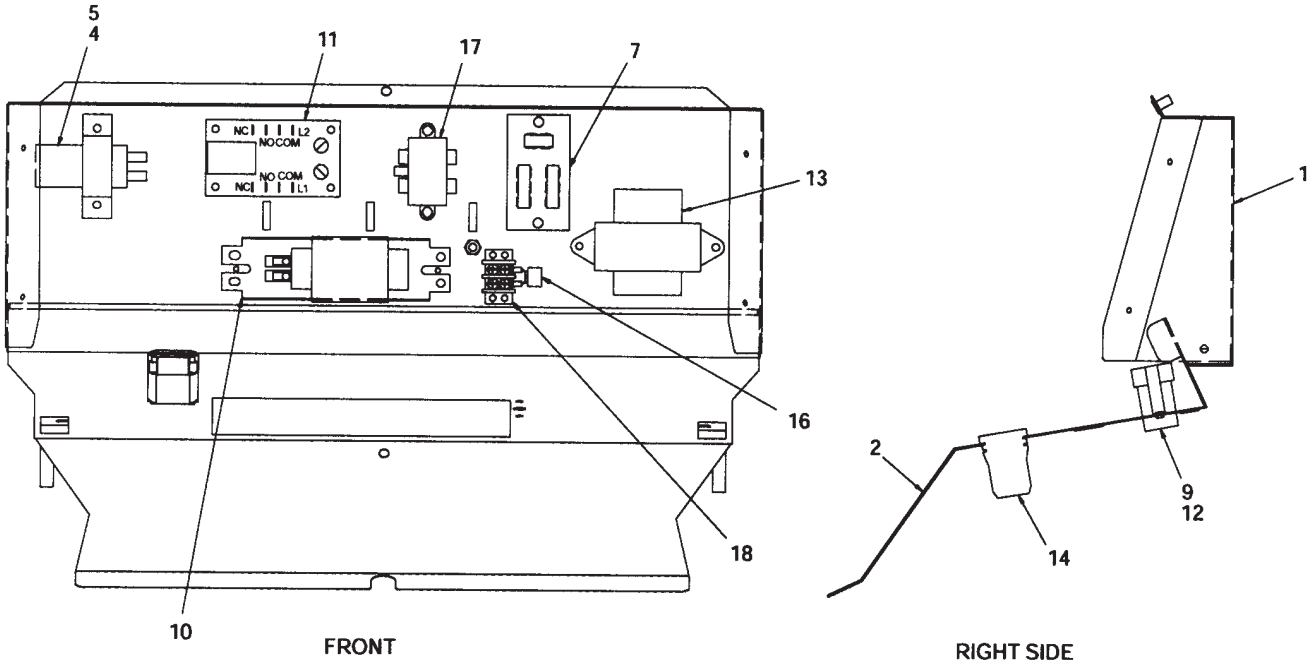

Item

No	Part number	Description
1	R620019001	Electrical Box (ID 150)
2	R620019101	Reflector, Panel (ID 150)
3	Not Used	
4	R30514	Clamp, Capacitor, 120 Volts
	R20308102	Clamp, Capacitor, 220-240 Volts
5	R30774	Capacitor, 120 Volt
	R620308101	Capacitor, 220-240 Volt
6	Not Used	
7	R31107	Terminal Board
8	Not Used	
9	R31620	Starter
10	R31621	Ballast, 120 Volt
	R33662	Ballast, 220-240 Volt
11	R620314803	Timer, Agitation, 120 Volt
	R620314802	Timer, Agitation, 220-240 Volt
12	R620302201	Socket, Starter
13	R32682	Transformer, 120 Volts
	R32829R	Transformer, 220-240 Volts
14	R620302101	Lampholder

Not Shown:

R33162	Relay, Start, 120 Volts
R620306601	Relay, Start, 230 Volts
R620304601	Varistor, 230 Volts
R620307301	Filter, 230 Volts

ID150, ID200 and ID250 Service Parts

Electrical Box, ID200 and ID250

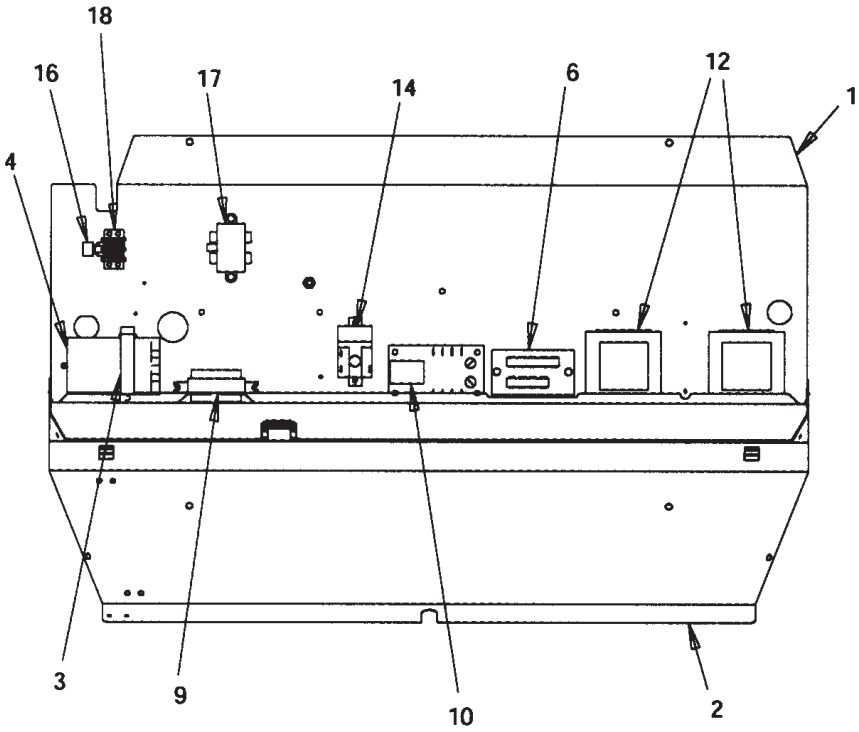

FRONT

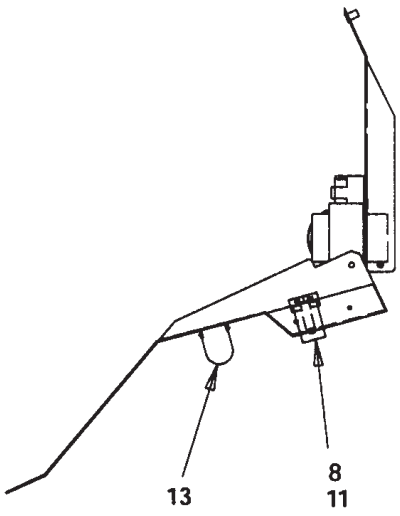

RIGHT SIDE

Item No	Part number	Description
1	R620022001	Electrical Box (ID250)
	R620020902	Electrical Box (ID200)
2	R620022101	Reflector Panel (ID250)
	R620020901	Reflector Panel (ID200)
3	R620021101	Clamp, Capacitor
4	R33160R	Capacitor, Agitator Motor
5	R30995	Power Cord, 120 Volts
	R620302901	Power Cord, 230 Volts
6	R30960	Terminal Board, 120 Volts
	R31107	Terminal Board, 230 Volts
7	Not Used	
8	R31620	Starter
9	R31621	Ballast, 120 Volts
	R33662	Ballast, 230 Volts
10	R620314803	Agitation Timer, 120 Volts
	R620314802	Agitation Timer, 230 Volts
11	R620302201	Socket, Starter
12	R32682	Transformer, 120 Volts
	R32829R	Transformer, 230 Volts
13	R620302101	Lampholder
14	R33162	Relay, Start, 120 Volts
	R620306601	Relay, Start, 230 Volts
15	Not Used	
16	R620304601	Varistor, 230 Volts
17	R620307301	Filter, 230 Volts
18	R32244	Terminal Strip, 230 Volts

Schematic Diagram

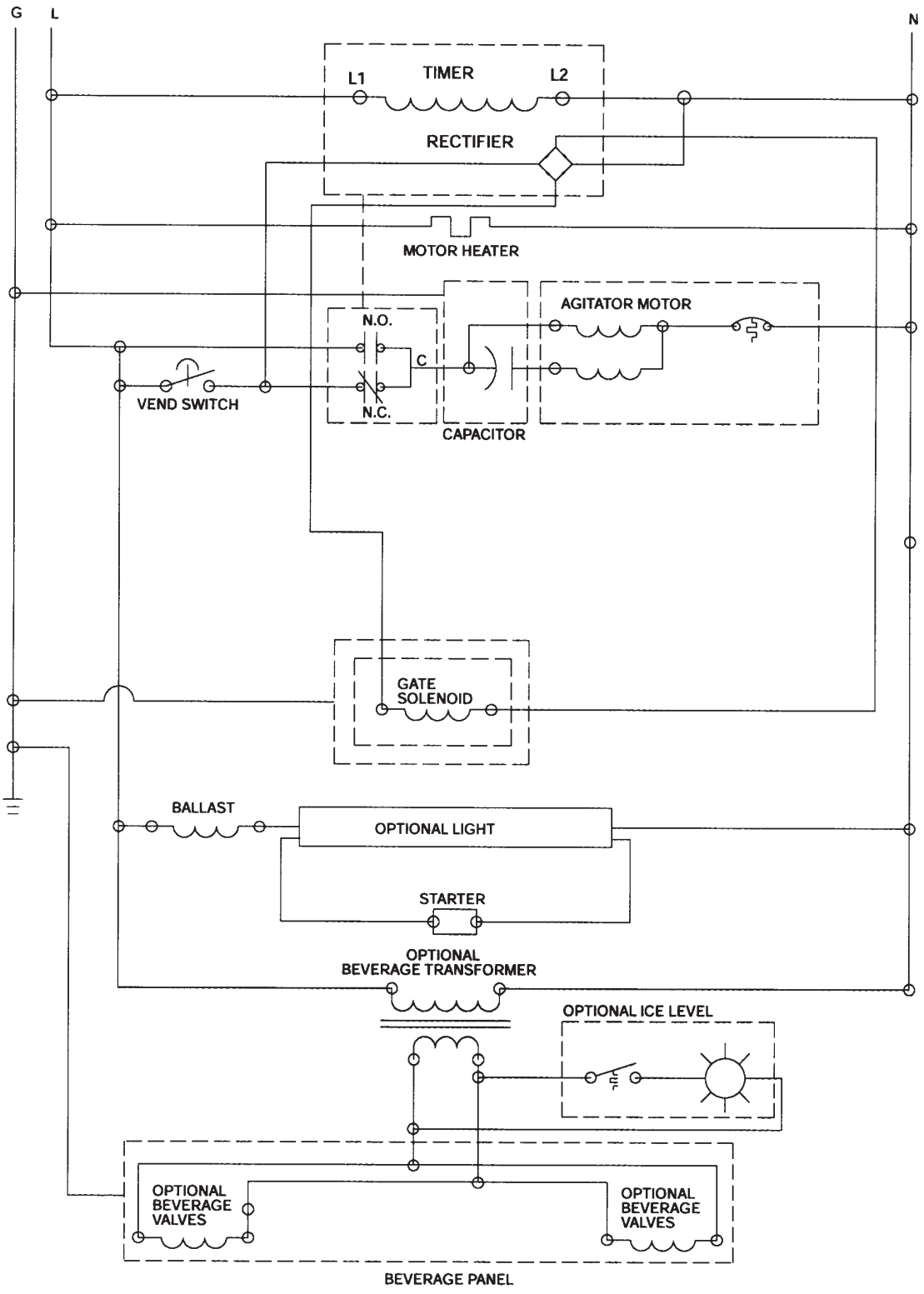

FIGURE 8. WIRING SCHEMATIC (120 V UNIT)