FM1202 SERVICE PARTS

This parts list contains the service parts and wiring diagrams for this model. Check the model number in question to be sure that it is applicable to this parts list.

TABLE OF CONTENTS

Cabinet 2

Air Cooled Refrigeration 3

Water Cooled Refrigeration 4

Water System 5

Gearmotor 6

Evaporator 7

Control Box 8

Wiring Diagrams 9

FM1202 SERVICE PARTS

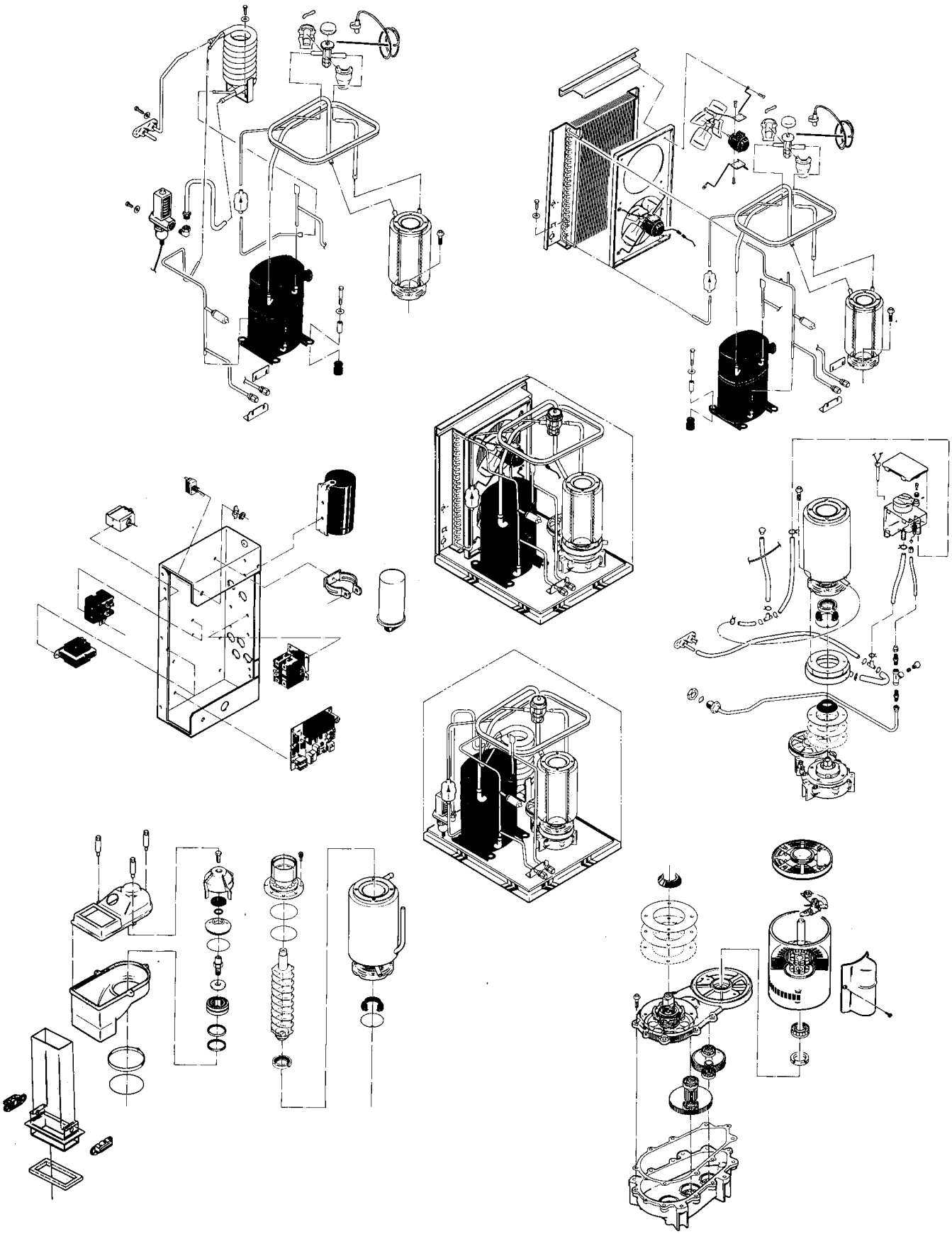

FM1202 SERVICE PARTS
Cabinet Assembly

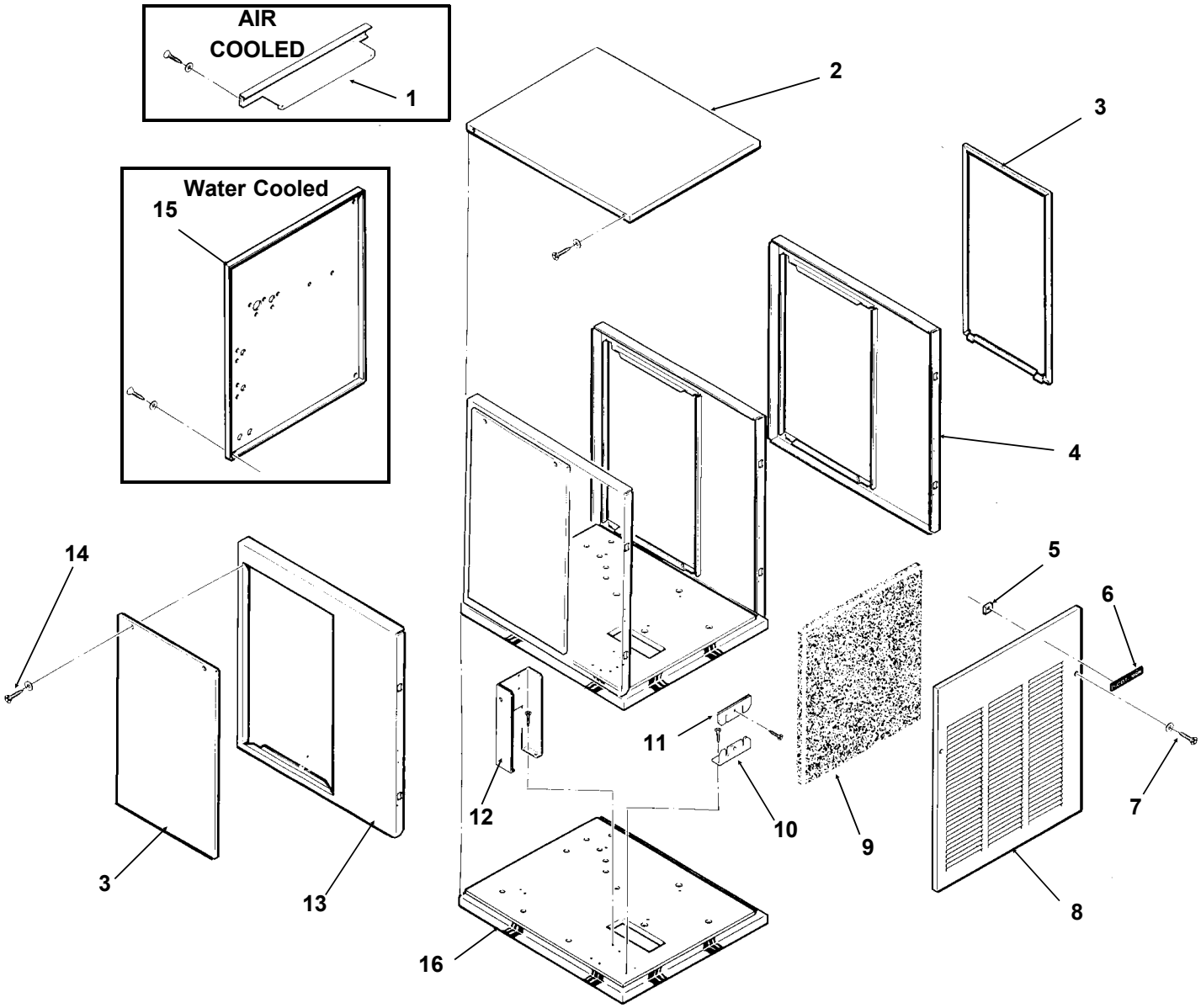

ITEM NUMBER	PART NUMBER	DESCRIPTION	ITEM NUMBER	PART NUMBER	DESCRIPTION
1	A33233-001	Condenser Support	9	02-2976-01	Filter Assembly
2	A33256-001	Top Panel, Painted	10	03-1660-01	Filter clip
	A33256-002	Top Panel, S.S.	11	A34348-001	Ft. brace
3	A34038-001	Service Panel, Painted	12	A34039-001	Control Box Support
	A34038-002	Service Panel, S.S.	13	A32435-001	Left Side Panel, Painted
4	A33292-001	Right Side Panel, Painted		A32435-002	Left Side Panel, S.S.
	A33292-002	Right Side Panel, S.S.	14	03-1404-12	Screw
5	03-0271-00	Speed Clip	15	A33252-001	Rear Panel, Water Cooled Painted Only
6	15-0711-01	Emblem			
7	03-1419-08	Screw			
8	A33255-001	Front Panel, Painted	16.	A34042-001	Base
	A33255-002	Front Panel, S.S.			

FM1202 SERVICE PARTS
Air Cooled Refrigeration

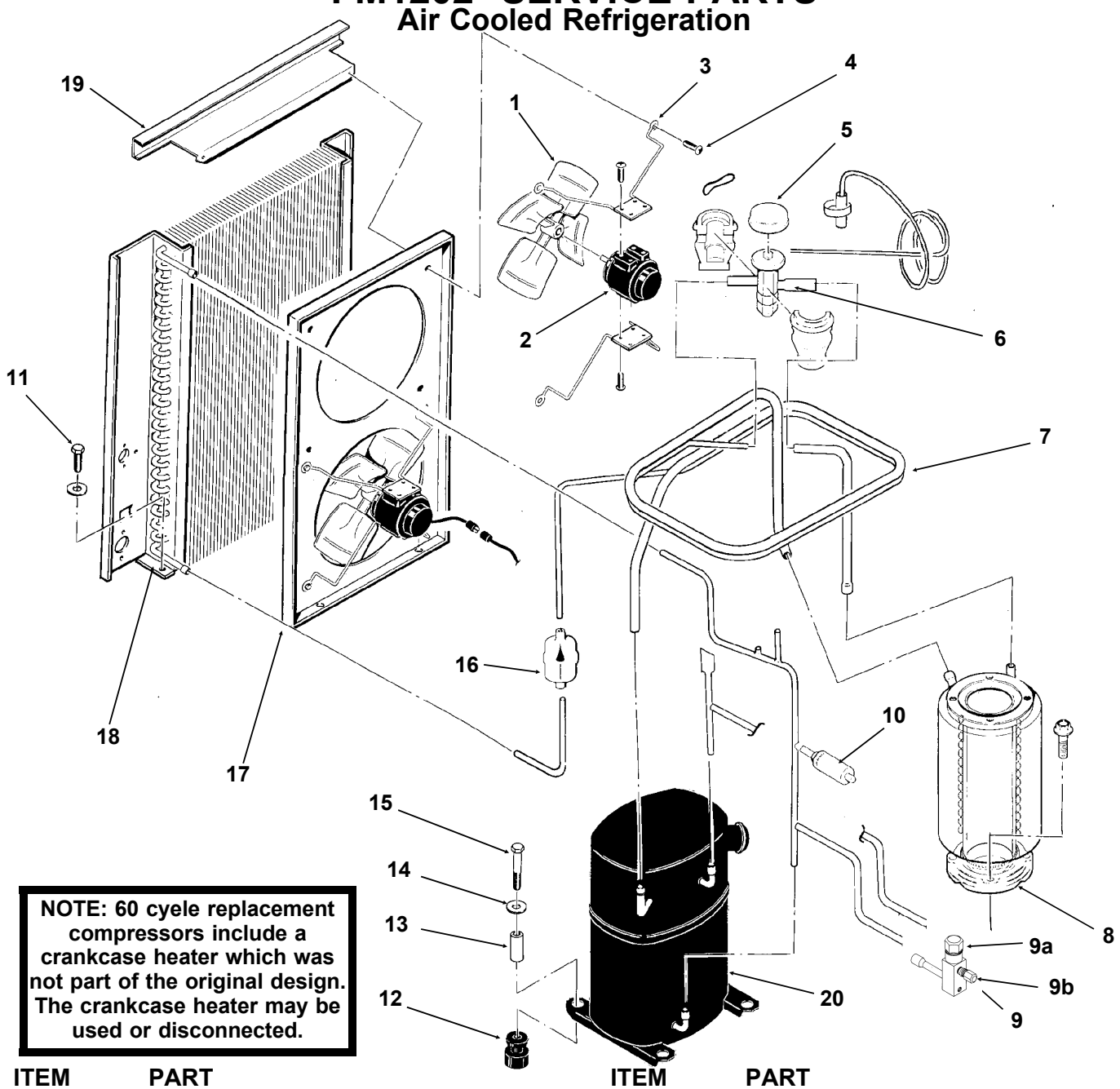

NOTE: 60 cyele replacement compressors include a crankcase heater which was not part of the original design. The crankcase heater may be used or disconnected.

ITEM NUMBER	PART NUMBER	DESCRIPTION
1	18-3815-01	Fan Blade
2	12-1576-02	Fan Motor
3	02-2378-01	Fan Bracket
4	03-1531-01	Screw
5	A32961-020	Insulation Kit (3 piece)
6	11-0477-20	Thermo Expansion Valve
7	A35566-001	Suction Line
8	A32890-020	Evaporator
9	16-0832-20	Access valve
9a	16-0832-02	Stem cap
9b	16-0832-03	Core cap
10	11-0446-27	Hi Pressure Cut Out
11	03-1645-01	Screw

ITEM NUMBER	PART NUMBER	DESCRIPTION
12	18-6800-01	Grommet
13	18-2300-27	Sleeve
14	03-1407-07	Washer
15	03-1405-20	Cap Screw
16	02-3319-02	Dryer
17	A33231-001	Fan Shroud
18	18-8717-01	Condenser
19	A33233-001	Condenser Mount
20	18-8716-23	Compressor 208-230/60/1
	18-8716-25	Compressor 200-230/60/3
	18-8716-26	Compressor 220-240/50/1
	(18-8716-06 for 50 cycle only)	

all compressors have internal overloads
18-8716-23, 18-8716-25 have crankcase heaters

FM1202 SERVICE PARTS
Water Cooled Refrigeration

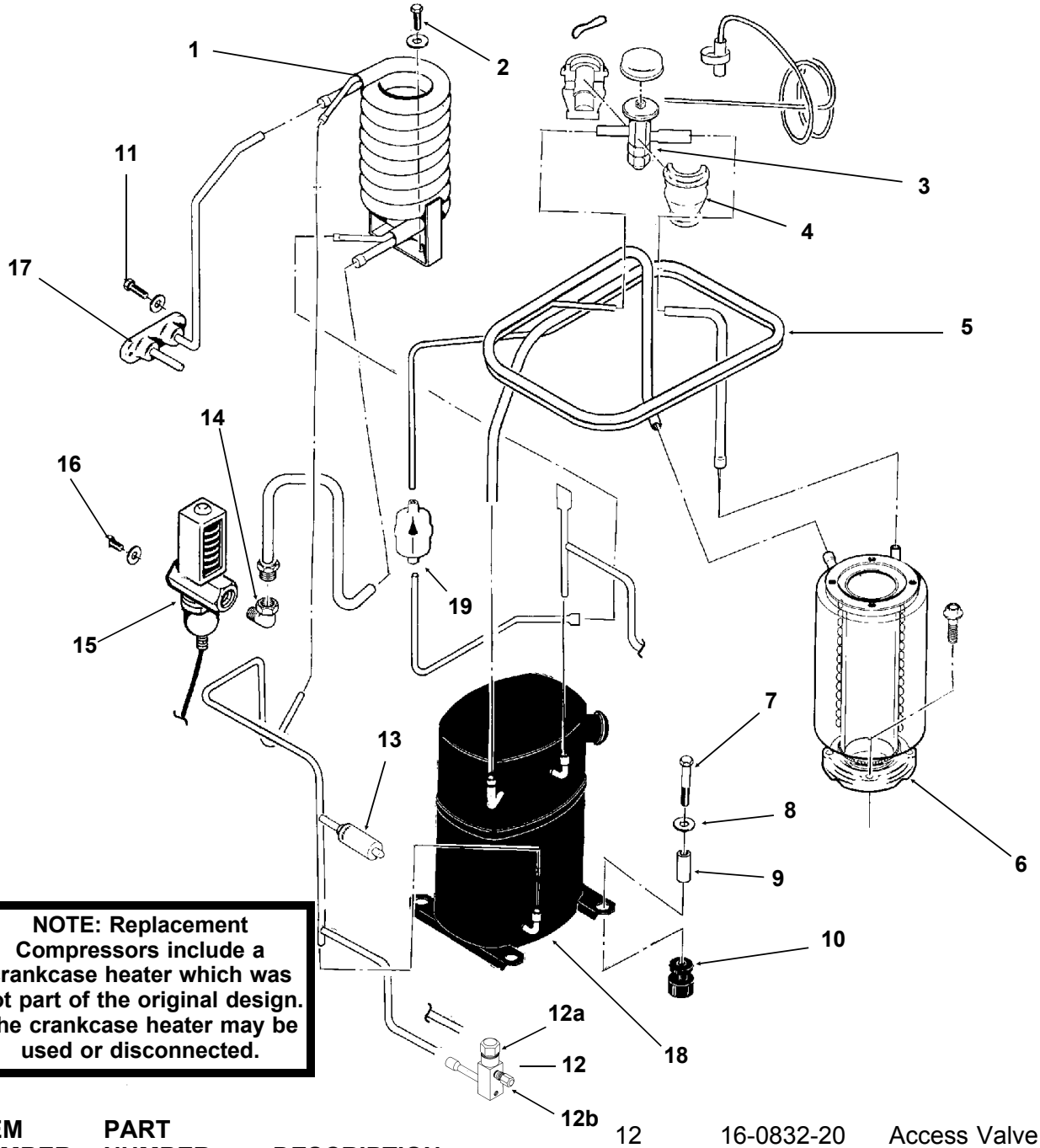

NOTE: Replacement Compressors include a crankcase heater which was not part of the original design. The crankcase heater may be used or disconnected.

ITEM NUMBER	PART NUMBER	DESCRIPTION
1	18-8718-25	Condenser
2	03-1645-01	Screw
3	11-0477-20	Thermo Expansion Valve
4	A32961-020	Insulation Kit (3 piece)
5	A35566-001	Suction Line
6	A32890-020	Evaporator
7	03-1405-20	Cap Screw
8	03-1407-07	Washer
9	18-2300-26	Sleeve
10	18-6800-01	Grommmet
11	03-1645-01	Screw
12	16-0832-20	Access Valve Complete
12a	16-0832-02	Stem cap
12b	16-0832-03	Core cap
13	11-0446-27	Hi Pressure Cut Out
14	16-0401-02	Elbow
15	11-0424-01	Water Reg. Valve
16	03-1403-14	Screw
17	A34044-001	Drain Assembly
18	18-8716-23	Compressor 208-230/60/1
	18-8716-25	Compressor 200-230/60/3
	18-8716-26	Compressor 220-240/50/1
(all have internal overloads & 18-8716-23, 18-8716-25 have crankcase heaters)		
19	02-3319-02	Dryer

FM1202 SERVICE PARTS
Water System

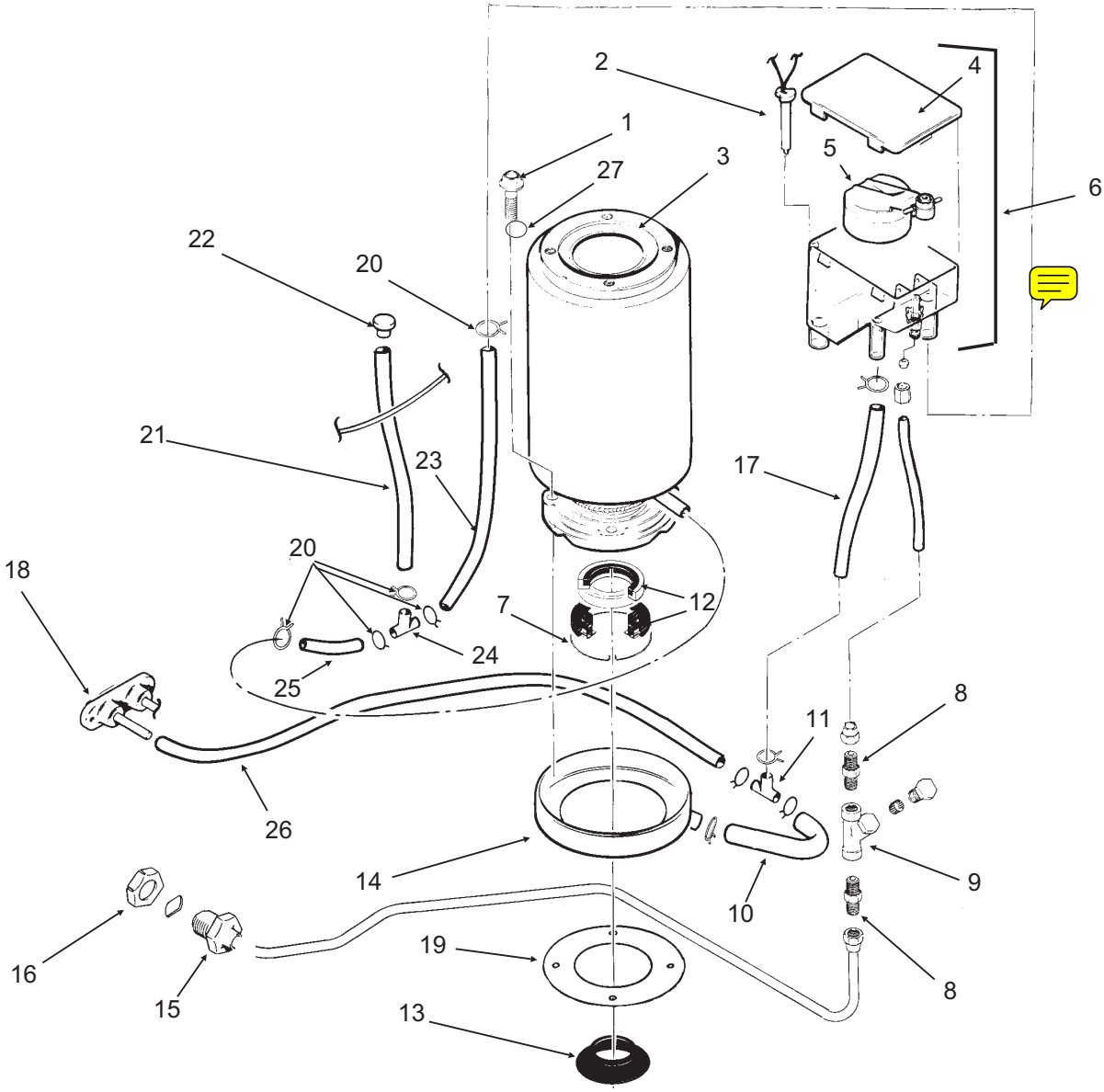

ITEM NUMBER	PART NUMBER	DESCRIPTION
1	03-1405-41	Cap Screw
2	A33101-022	Water Level Sensor
3	A32890-020	Evaporator
4	02-2936-01	Res. Cover
5	A32907-001	Float Assembly with pin
	housing seal, rubber seat, insert & float	
	02-3190-01	Rubber seat
6	A32929-020	Reservoir Assy Complete
7	A32777-001	Retaining Ring for seal
8	16-0791-01	Half Union
9	16-0162-00	Strainer
10	13-0079-03	Tube, 3.2" req.
11	16-0670-02	Tee
12	02-0929-23	Water Seal
13	02-4663-01	Water Shed

ITEM NUMBER	PART NUMBER	DESCRIPTION
14	A32050-001	Drip Pan
15	A27318-001	Water Inlet Fitting
16	03-1394-01	Pal Nut
17	13-0079-03	Res. Overflow, 8" req.
18	A34045-001	Drain Casting, air cooled
19	13-0704-00	Gasket
20	02-2814-08	Clamps
21	13-0674-06	Evap. Drain, 14" req.
22	13-0840-01	Plug
23	13-0674-06	Evap. Inlet Tube, 5" req.
24	16-0670-01	Tee
25	A33203-001	Tube, Preformed
26	13-0079-03	Drain Tube, 24" req.
27.	03-1417-13	Lockwasher

FM1202 SERVICE PARTS
Gearmotor

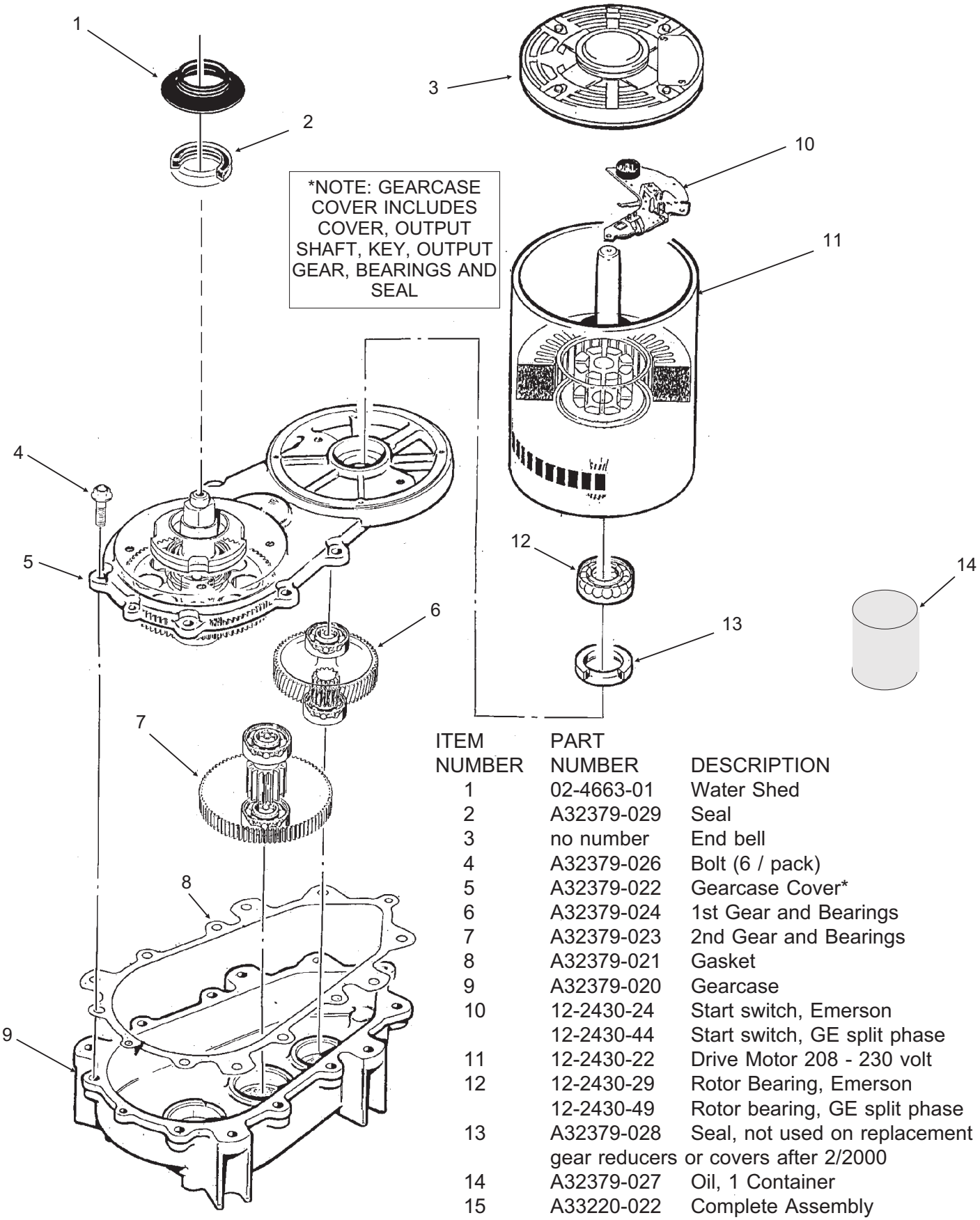

ITEM NUMBER	PART NUMBER	DESCRIPTION
1	02-4663-01	Water Shed
2	A32379-029	Seal
3	no number	End bell
4	A32379-026	Bolt (6 / pack)
5	A32379-022	Gearcase Cover*
6	A32379-024	1st Gear and Bearings
7	A32379-023	2nd Gear and Bearings
8	A32379-021	Gasket
9	A32379-020	Gearcase
10	12-2430-24	Start switch, Emerson
	12-2430-44	Start switch, GE split phase
11	12-2430-22	Drive Motor 208 - 230 volt
12	12-2430-29	Rotor Bearing, Emerson
	12-2430-49	Rotor bearing, GE split phase
13	A32379-028	Seal, not used on replacement gear reducers or covers after 2/2000
14	A32379-027	Oil, 1 Container
15	A33220-022	Complete Assembly 208-230 volt
	A33220-030	Gears, oil & cases. No motor.

FM1202 SERVICE PARTS
Evaporator

Not Illustrated:
Bail Clamp, pn A34969-001

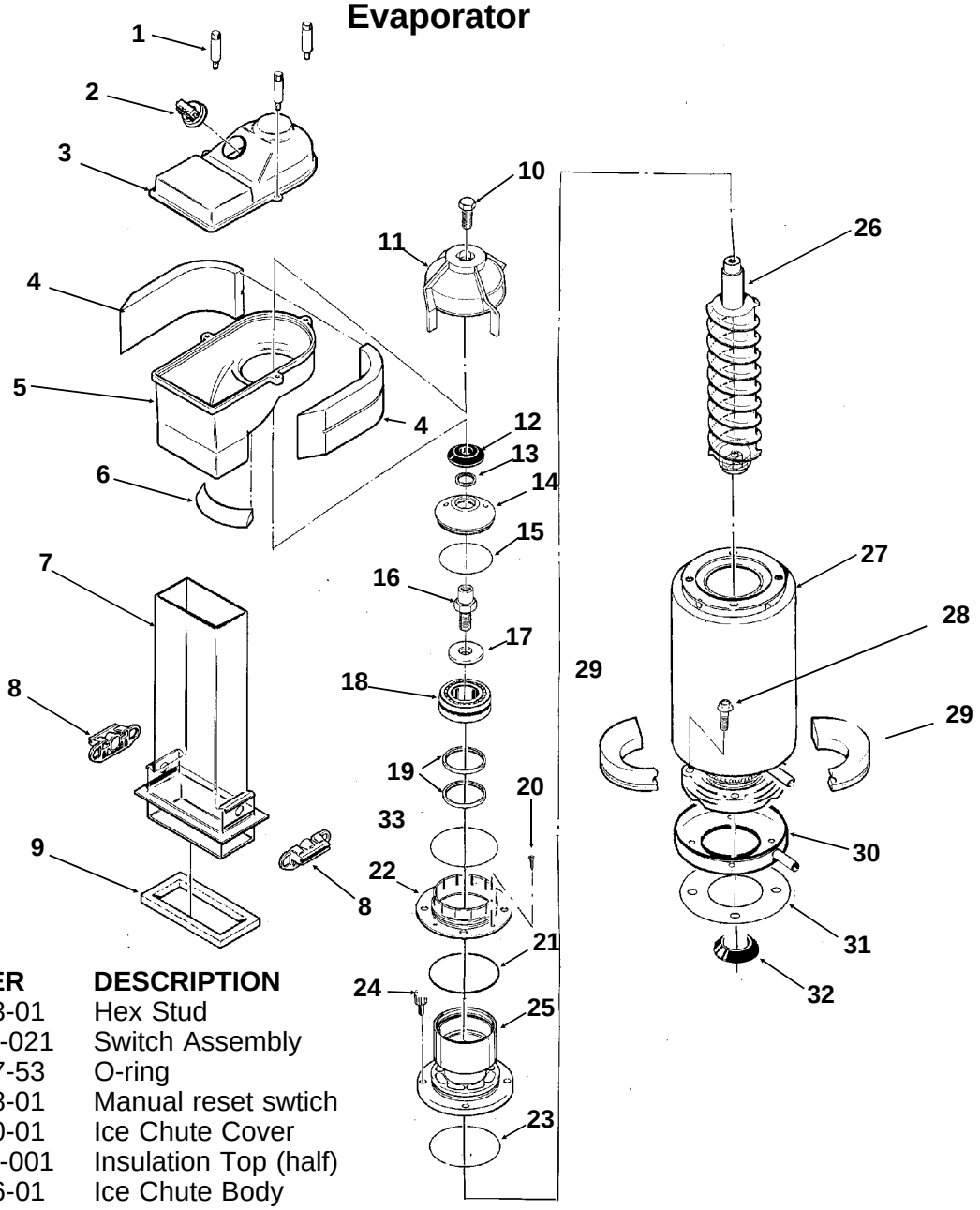

ITEM NUMBER	PART NUMBER	DESCRIPTION
1.	02-2933-01	Hex Stud
2.	A32891-021	Switch Assembly
	13-0617-53	O-ring
	12-2398-01	Manual reset swtich
3.	02-2930-01	Ice Chute Cover
4.	A32963-001	Insulation Top (half)
5.	02-2926-01	Ice Chute Body
6.	A33102-001	Insulation Collar Inside
	A35419-020	Strap kit
7.	02-2929-01	Ice Chute Lower
8.	A37708-021	Ice level sensors (set of 2)
9.	A32930-001	Chute Gasket
10.	03-1405-52	Hex Cap Screw
11.	02-3001-01	Ice Sweep
12.	13-0871-01	Water Shed
13.	02-2978-01	Lip Seal
14.	02-3128-20	Breaker Cover
15.	13-0617-54	O-Ring
16.	08-0660-01	Auger Stud, includes item 17
17.	no number	Thrust Washer, part of #16
18.	A34559-020	Bearing
19.	02-2977-01	Lip Seal
20.	03-1405-27	Screw
21.	13-0617-52	O-Ring
22.	02-2916-01	Slotted Collar
23.	13-0617-45	O-Ring
24.	03-1544-08	Soc. Head Screw
25.	A34505-020	Breaker (Divider) (includes 18 & 19)
26.	A38071-022	Auger
27.	A32890-020	Evaporator
28.	03-1405-41	Cap Screw
29	A32962-001	Insulation Bot. (half)
	A32962-002	Insulation (half)
30	A32050-001	Drip Pan
31.	13-0704-00	Drip Pan Gasket
32	13-0868-01	Water shed
33.	13-0617-49	o-ring

FM1202 SERVICE PARTS
Control Box

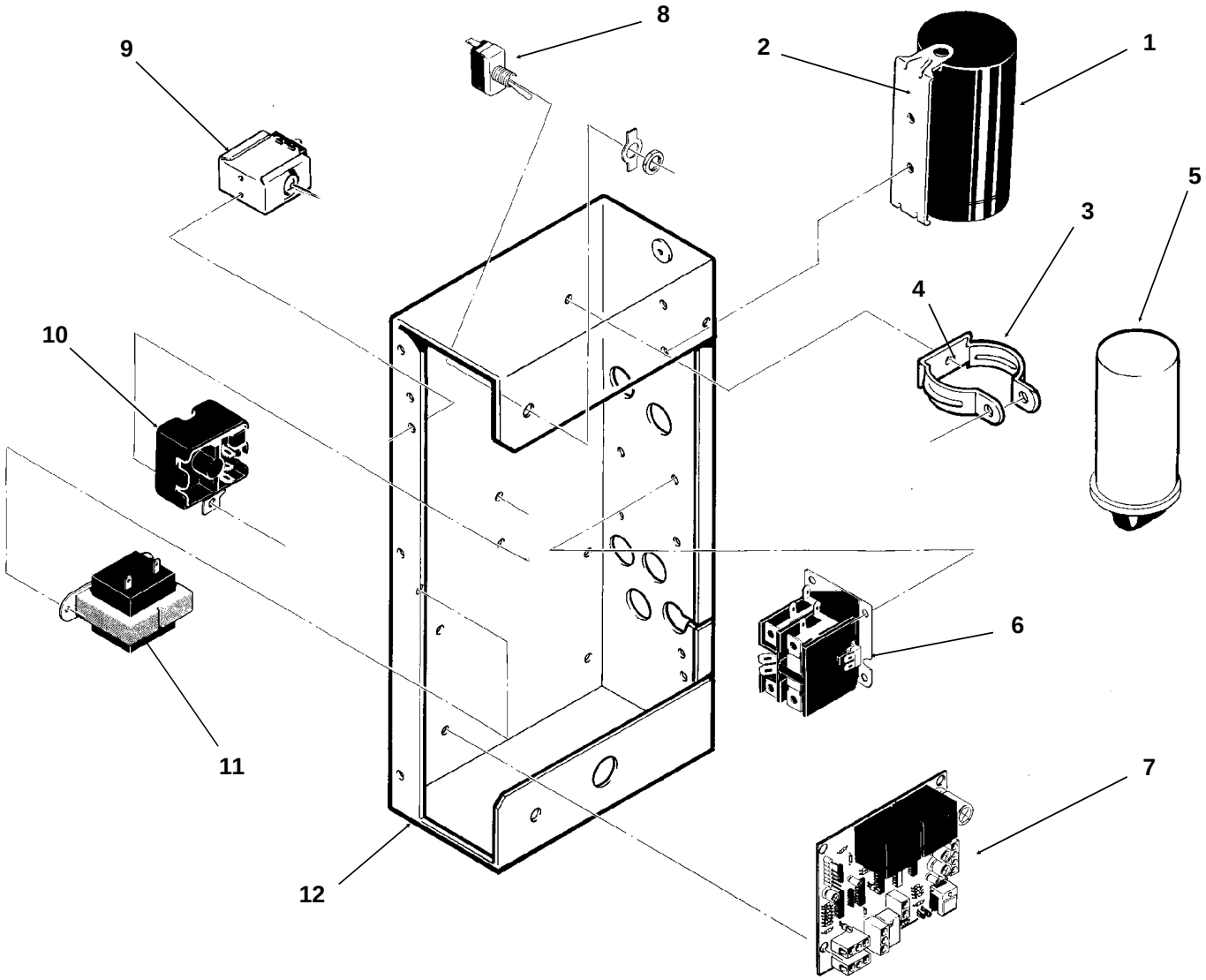

ITEM NUMBER	PART NUMBER	DESCRIPTION
1	18-1901-15	Start Capacitor, all 60 Hz
	18-1901-23	Start Capacitor, 50 Hz
	18-2200-38	Start Capacitor Cap.
2.	18-2200-39	Start Capacitor Bracket
	03-1638-04	Screw
	03-1417-15	Lockwasher
3.	A32872-001	Run Cap Bracket
	03-1652-02	Bolt
	03-0255-04	Wing Nut
4.	03-1638-03	Screw
5.	18-1902-53	Run capacitor, all
6.	12-2048-02	Single Phase Contactor
	12-0739-02	Three phase contactor

ITEM NUMBER	PART NUMBER	DESCRIPTION
7	A37750-021	Circuit Board
8.	12-0426-01	Master Switch
9.	11-0447-20	Low Pressure Control
10	18-1903-33	Potential Relay, 60 Hz
	18-1903-46	Potential relay, 50 Hz
11.	12-2285-22	Transformer
12	no number	Control Box
NOT ILLUSTRATED		
13.	12-2337-02	3 Pin Plug Assy
	(Safety Circuit to Circuit Board)	
14.	12-2340-01	4 Pin Plug Assy
	(Transformer to Circuit Board)	
15.	A34055-001	Control Box Cover

Note: HZ means Cycles, 50 Hz is 50 cycle, the model number ends in a -6 for 50 Hz models.

FM1202 SERVICE PARTS

AIR AND WATER COOLED, 208-230/60/1

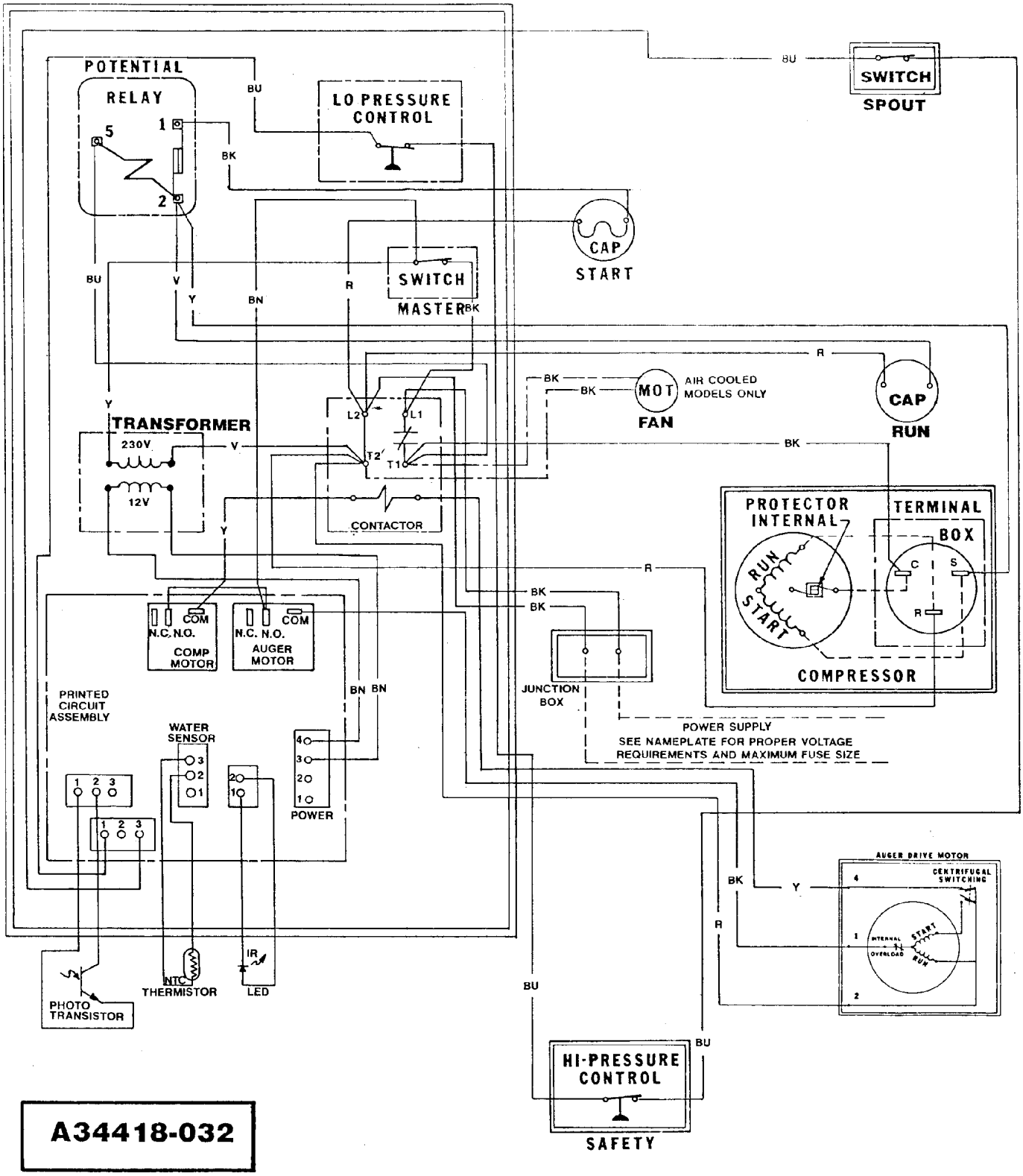

A34418-032

FM1202 SERVICE PARTS

AIR AND WATER COOLED, 208-230/60/1

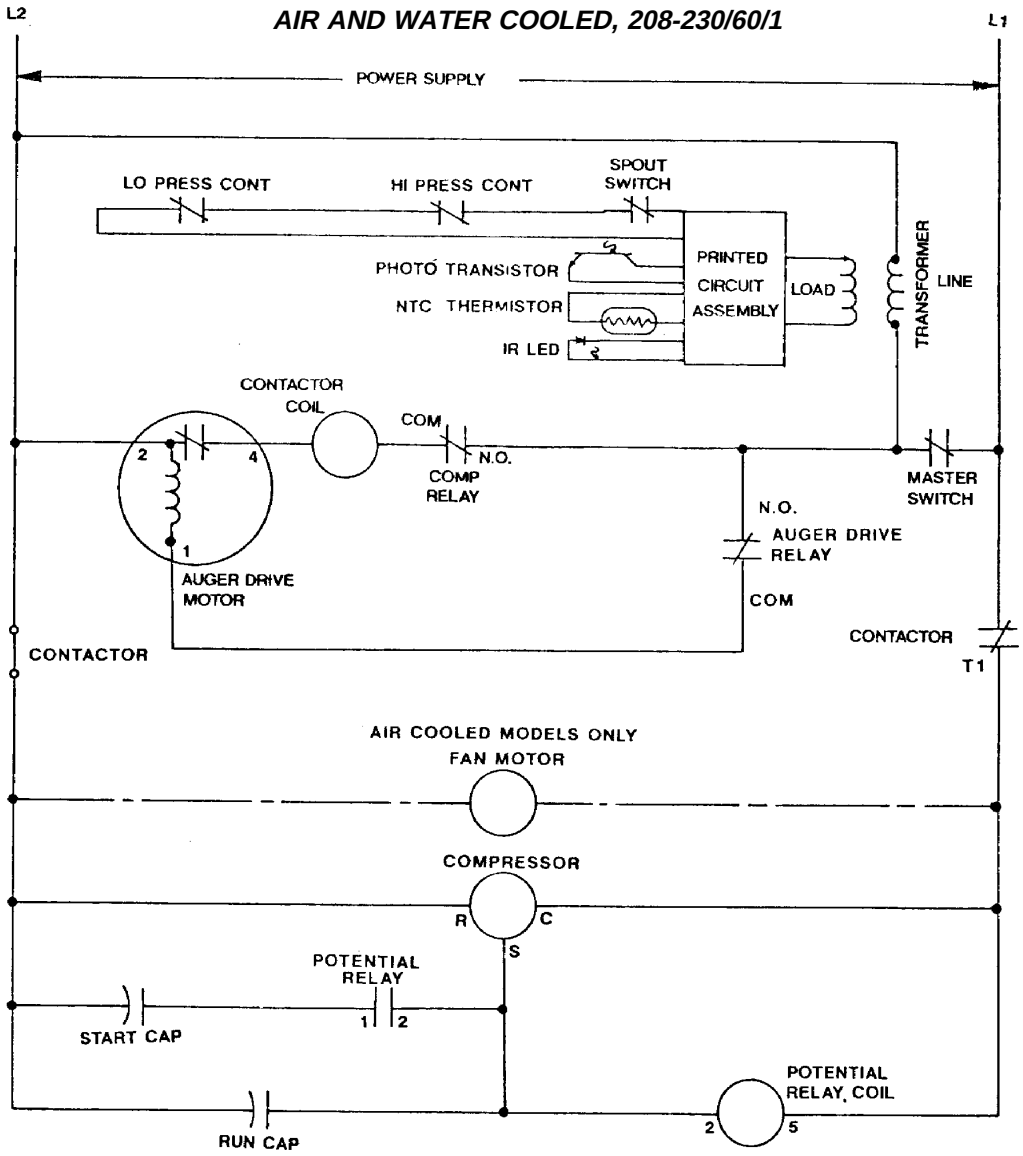

USE COPPER CONDUCTORS ONLY
ALL CONTROLS SHOWN IN NORMAL ICEMAKING MODE
THIS UNIT MUST BE GROUNDED

FM1202 SERVICE PARTS

AIR AND WATER COOLED, 208-230/60/3

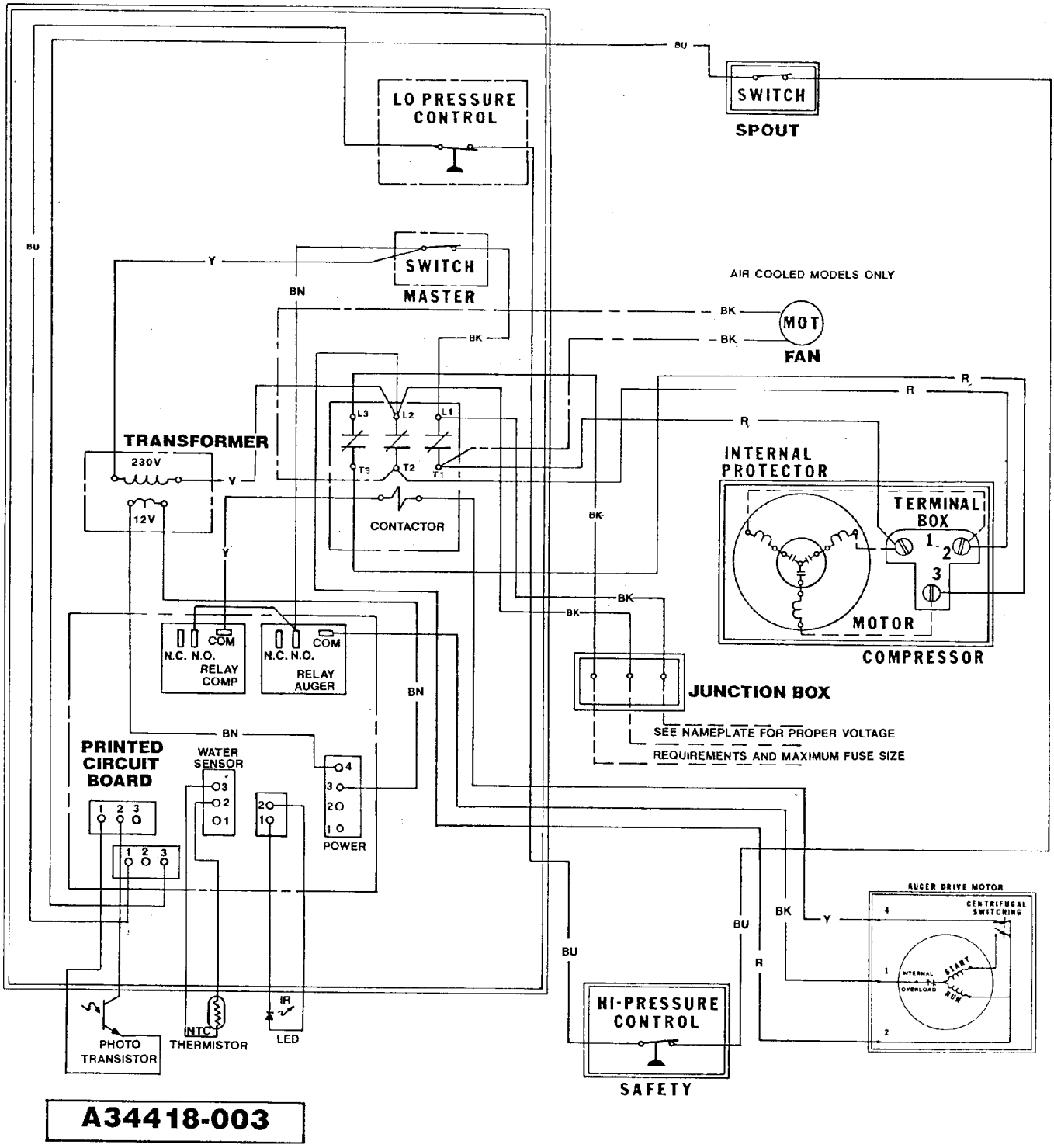

FM1202 SERVICE PARTS

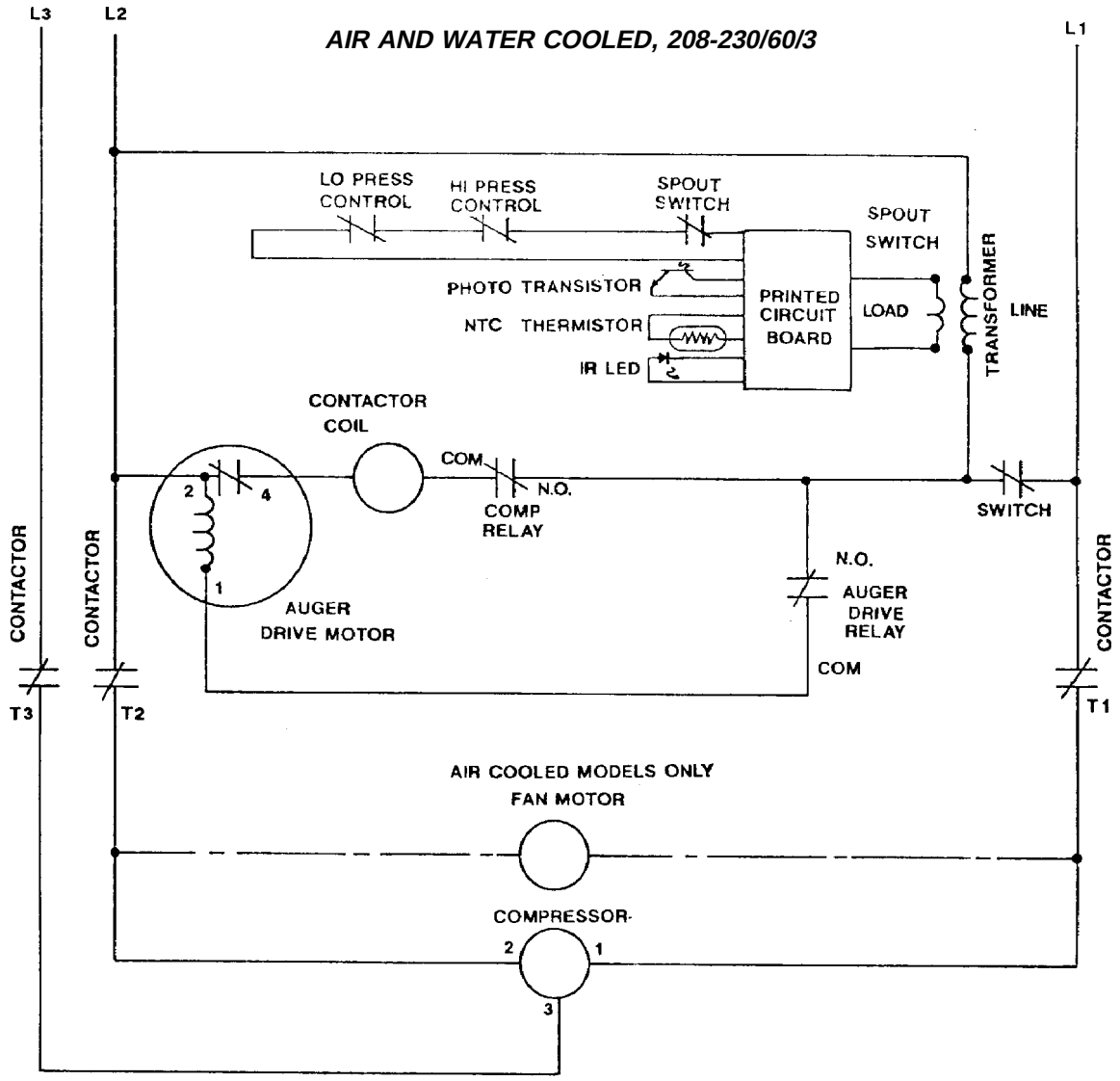

USE COPPER CONDUCTORS ONLY
ALL CONTROLS SHOWN IN NORMAL ICEMAKING MODE
THIS UNIT MUST BE GROUNDED